KINGSTON SOLAR LP
Sol-Luce Kingston Solar PV Energy Project
MODIFICATIONS DOCUMENT

Prepared by Dillon Consulting

MAY 2015

Table of Contents

Page

1. Introduction 1
2. Overview of the Minor Amendment 2
3. Proponent Contact Information 3
4. Project Size and Layout 3
5. Ministry of Natural Resources and Forestry 4
6. Ministry of Tourism, Culture and Sport 4
7. DSTATCOM Inverter System 4
8. Neutral Grounding Reactor (NGR) 5
9. Supporting Documentation 5
10. Environmental Effects 7
11. Amendments to the REA Submission Package (*REA dated September 27, 2013*) 7
12. Summary 8

List of Appendices

Appendix A: REA # 1016-97YHC7

Appendix B: Project Layout

Appendix C: Agency Correspondence

Appendix D: Revised Noise Study Report

Appendix E: Revised Stormwater Management Report

Appendix F: Notice of REA Amendment

1 Introduction

On April 2, 2014, Kingston Solar GP Inc., operating as the general partner of Kingston Solar LP (KSLP) was issued a Renewable Energy Approval (REA) [**REA#: 1016-97YHC7**] to develop and operate a 100-megawatt (MWac) ground-mount solar photovoltaic (PV) project to be known as the Sol-Luce Kingston Solar PV Energy Project (see **Appendix A**).

The Project, called the Sol-Luce Kingston Solar PV Energy Project, is generally bounded by Highway 38 to the east, Mud Lake Road/County Road 19 to the west, Quabbin Road to the north, and Highway 401 to the south. The proposed project falls within two municipalities: the City of Kingston to the east and Loyalist Township to the west. The Project will consist of solar modules, inverters, step-up transformers, electrical collector lines, a transformer substation, DSTATCOM, neutral ground reactor and fixed reactor banks, transmission line access roads and construction staging areas.

Kingston Solar LP is seeking a technical change amendment to the REA issued for the Sol-Luce Kingston Solar PV Energy Project (REA # 1016-97YHC7). This amendment is for technical changes (as described below) that have been required by the Independent Electricity System Operator (IESO) and Hydro One Networks Inc. (HONI). The proposed changes also reflect the final design of the facility. The changes include the addition of two (2) DSTATCOM units (a 10 MVAR and a 8.75 MVAR) with fixed reactor banks (FRB) and addition of a Neutral Grounding Reactor (NGR), inclusion of manufacturer-specified transformer noise data, and a reduction in the number of Medium Voltage Power Platforms (MVPPs) from 78 to 66, resulting in a smaller project footprint. For clarity, all components remain within the approved project location boundary. This report outlines the proposed amendments and any potential impacts that may be anticipated to the natural environment and neighbouring landowners.

To avoid confusion, this report focuses on the final design as prepared by H.B. White Canada Corporation (H.B. White). To review the preliminary design as submitted to the MOECC as part of the REA application, please visit the project website at: http://www.samsungrenewableenergy.ca/kingston.

2 Overview of the Minor Amendment

The basis for this technical change amendment is the addition of new electrical equipment, consisting of two (2) DSTATCOM units with fixed reactor banks and one (1) Neutral Grounding Reactor (NGR) as required based on consultation with IESO and HONI during detailed design. In addition, the number of MVPPs has decreased from 78 to 66, resulting in a decreased project footprint. The locations of the remaining 66 MVPPs remain within 10 m of the coordinates specified in Schedule B of the REA.

The purpose of using the DSTATCOM units with fixed reactor banks is to ensure stability of the Hydro One electric grid by maintaining high MVAR (reactive power) output when system voltages are depressed. The purpose of the NGR is to limit the maximum fault current to a value which will not damage the equipment in the power system.

Through consultation with the MOECC in May 2015, it is expected that the proposed changes described in this Modifications Document represent a reduction in overall environmental effects of the project (see **Appendix C** for agency correspondence). As such, the proposed changes constitute a technical change amendment.

This Modifications Document provides details the following proposed changes:

- Addition of two (2) DSTATCOM units with fixed reactor banks (FRB);
- Addition of a Neutral Grounding Reactor (NGR);
- Manufacturer-specified transformer noise data for the substation transformers
- Reduction in number of previously approved MV stations from 78 to 66 stations resulting in a revised Noise Study Report and Stormwater Management Report;
- Minor changes to the site layout.

3 Proponent Contact Information

In addition to the technical changes outlined above, Kingston Solar LP is also requesting an administrative change to the Project, specifically a change in address for the owner/operator (Kingston Solar LP). The new address is provided in the project contact information, below.

Should there be any questions about these technical changes or the project, please contact:

Full Name of Company:	*Kingston Solar LP*
Address:	*181 University Avenue, Suite 300, Toronto, Ontario M5H 3M7*
Telephone:	*416-975-8800 Ext. 601*
Fax:	*416-975-8900*
Prime Contact:	*Mr. David Oxtoby*
Email:	*doxtoby@carbonfree.com*

4 Project Size and Layout

The nameplate capacity of the project as outlined in the REA application has been maintained at 100 MW alternating current (AC). The Project will consist of approximately 465,000 solar photovoltaic (PV) modules. Solar PV panels (approximately 300 watts each) will be mounted on the racks and the panels and racks will be aligned in rows. In addition to the modules, MVPPs, a main substation, and underground cabling will be installed to convert DC to AC current and boost the voltage for connection to the grid. To accommodate modifications incorporated as part of this technical change amendment, minor changes to the site layout will be required. The number of MVPPs has been reduced from 78 to 66 to reflect the final design parameters for a total nameplate capacity of 100 MW AC. The original REA application included design parameters which accommodated an overbuild for a total capacity of approximately 120 MW AC. These changes are expected to reduce the overall environmental impact of the project. A comparison figure showing the previously approved layout and the revised layout is provided in **Appendix B**.

5 Ministry of Natural Resources and Forestry

Further consultation with the Ministry of Natural Resources and Forestry (MNRF) was not warranted for the proposed technical changes. As the final design for the project does has a smaller footprint and not exceed the original project location boundary, no amendments to the Natural Heritage Assessment are required. However, the MNRF has been circulated as part of the stakeholder notification process. Any correspondence received in response from the MNRF will be subsequently forwarded to the MOECC.

6 Ministry of Tourism, Culture and Sport

Similar to the above, the technical changes described in this report do not require amendments to either the Cultural Heritage or Archaeological Assessments completed and reviewed by the Ministry of Tourism, Culture and Sport (MTCS). The project location did not increase and the project area was studied and commented on in the original REA submission. Minor changes in the location of project components, installation methods or equipment specifications will not change the results of information presented in relation to cultural heritage or archaeological resources for this project. The MTCS has been circulated as part of the stakeholder consultation that there are proposed technical change amendments to this project. Any correspondence received from the MTCS will subsequently be forwarded to the MOECC.

7 DSTATCOM Inverter System

The proposed modifications to the Sol-Luce Kingston Solar PV Energy Project will include the addition of two (2) Distributed STATic COMpensator (DSTATCOM) inverter systems with fixed reactor banks (FRBs), which will maintain high mVAR output at depressed system voltages. Since the DSTATCOM can maintain constant current over its operating voltage range, the mVAR output of the system is linearly proportional to the system voltage. The DSTATCOM also has a short-term transient current rating, which allows it to provide even more mVAR to assist in the recovery of depressed voltages.

One of the DSTATCOM inverter systems includes eight (8) inverters and the other one includes seven (7) inverters, all of which are mounted in a self-standing frame and are enclosed in steel containers (DSTATCOM container). There are also four (4) transformers. Each inverter has its own controls, circuit breaker and a small AC filter used to eliminate any high-frequency harmonic voltages in the output of the pulse-width modulation (PWM) waveform coming from

the inverter. Each inverter is connected to a 2.5 MVA pad-mounted transformer (a total of four transformers per DSTATCOM inverter system). For this project, the DSTATCOM units will have a total rating of 18.75 MVAR (one unit at 10 MVAR and another at 8.75 MVAR).

8 Neutral Grounding Reactor (NGR)

The single NGR added to the component layout will form an inductive element in the electrical circuit of the project. Due to natural behavior of an inductor, NGRs are used for limiting the maximum fault current to a value which will not damage the equipment in the power system, yet allow sufficient flow of fault current to operate protective relays to clear the fault. For this project, the NGR consists of a single phase (single coil) reactor that will be mounted near the substation transformer, within the substation yard.

9 Supporting Documentation

9.1 Noise Study Report

The proponent has prepared a revised *Noise Study Report (NSR)* based on the technical changes discussed above. The revised NSR indicates that KSLP will be in compliance with the applicable MOECC noise criteria, provided that the following mitigation measures are implemented:

- Acoustic louvers are installed at thirteen (13) inverter enclosures; and
- A 6m-high "U" shaped barrier wall be installed at the substation transformer. The wall will eliminate the line of sight between the substation transformer and the receptors to the south, southeast and southwest, and will be open to the north. Additional details about the noise barrier wall are presented in Appendix D.

Based on a comparison of the mapping of the 40 dBA threshold, there is no change to the overall noise impact at the receptors. The complete revised *Noise Study Report* is presented in **Appendix D.**

9.2 Stormwater Management Report

The proponent has prepared a revised *Stormwater Management Report* based on the final design of the project and the technical changes discussed in this report. For the purpose of the Stormwater Management Report, the project location was split into 6 zones: Zone 1 and 2 to

the west; Zone 3 in the centre of the site; Zone 4 and 5 in the northeast; and Zone 6 in the southeast portion of the project site.

A variety of methods will be employed to manage runoff on the site. Swales of various will be used to convey stormwater runoff along access roads and through the solar panel racks. Culverts will convey stormwater runoff under site access roads. Rock crossings will be installed to convey stormwater runoff across site access roads in areas where culverts are impractical. Riprap apron flow spreaders will be installed at the outlets of culverts, rock crossings and other areas of concentrated flow in order to help minimize erosion. The 30m setback from adjacent watercourses, wetlands and woodlands will provide a natural buffer between the proposed development and natural features.

Multiple temporary erosion mitigation and sediment control measures are recommended during construction, and include:

- temporary silt fences;
- temporary construction entrance(s) will be installed in all vehicle areas adjacent to paved roads;
- construction will be phased to limit soil exposure time, where possible;
- groundwater encountered during excavation will be diverted to well-vegetated land at least 30m from any sensitive receiving body;
- culverts will be installed during dry conditions, when possible;
- disturbed areas will be stabilized by seeding, mulching or other equivalent measures;
- sediment buildup will be removed and disposed of off-site; and
- inspections will occur on a weekly basis, as well as before and after large precipitation events.

Permanent control measures include the installation of riprap outlet protection on all culverts and rock crossings, flow spreaders where swale flows exit, and stabilization of disturbed areas with gravel or permanent seeding once work is completed. The complete Stormwater Management Report is provided in **Appendix E**.

10 Environmental Effects

There are no additional potential environmental effects resulting from the proposed technical change amendment that were not previously anticipated in the *Project Description Report*, *Design and Operations Report*, *Construction Plan Report, Natural Heritage Assessment, Water Assessment and Water Body Report* or *Decommissioning Plan Report* as submitted as part of the original REA application. Mitigation measures proposed to reduce or eliminate potential negative effects to the natural and human environments are documented in the *Construction Plan Report, Design and Operations Report, Water Assessment and Water Body Report* and *Natural Heritage Assessment Reports* provided with the original application.

11 Amendments to the REA Submission Package (*REA dated April 2, 2014*)

Based on the amended REA submission to the MOECC approved on April 2, 2014, the following table outlines which reports in the submission would be affected by the proposed technical changes. For each proposed change listed in this Modifications Document, associated revisions to the reporting documentation are outlined. Changes to the *Noise Study Report* and *Stormwater Management Report* are addressed in the preceding sections.

Proposed Change	Report	Section Affected
Addition of two (2) DSTATCOM inverter systems	Project Description Report	Section 3.4 (Facility Components); Section 3.4.2 (Ancillary Components)
	Construction Plan Report	Section 3.6 (Installation of Substation including the Operations and Maintenance Building); Section 3.8 (Materials Brought on Site)
	Design and Operations Report	Section 3.3.3 (Substation); Appendix A
	Decommissioning Plan Report	Section 3.3.1 (Above-ground Structure Decommissioning)
Addition of a single Neutral Ground Reactor (NGR)	Project Description Report	Section 3.4 (Facility Components); Section 3.4.2 (Ancillary Components)

Proposed Change	Report	Section Affected
	Construction Plan Report	Section 3.6 (Installation of Substation including the Operations and Maintenance Building); Section 3.8 (Materials Brought on Site)
	Design and Operations Report	Section 3.3.3 (Substation); Appendix A
	Decommissioning Plan Report	Section 3.3.1 (Above-ground Structure Decommissioning)
Reduction in the number of MVPPs from 78 to 66 stations	Project Description Report	Section 4.6.2
	Design and Operations Report	Appendix A
Manufacturer-specified transformer noise data for the substation transformers	Design and Operations Report	Substation Transformer Specification Sheet
Minor changes to the site layout	Project Description Report	Figure 1-2 (Project Location)
	Construction Plan Report	Figure 1-2 (Project Location); Appendix A (Site Layouts)
	Decommissioning Plan Report	Figure 1-2 (Project Location)
	Design and Operations Report	Appendix A (Site Layouts)
	Natural Heritage Assessment/EIS Report	Section 5.1; Figures 1-2a-f (Project Location); Figure 3-3 (Woodlands); Figure 3-4 (Wetlands)

12 Summary

Our view is that the aforementioned amendments to the Sol-Luce Kingston Solar PV Energy Project constitute improvements in operational efficiency which stand to benefit neighbouring residents and the environment. None of the amendments will create any potential negative environmental effects to natural features or neighbouring residents for which mitigation was not already proposed in the original REA submission. A Notice of REA Amendment and covering

letter outlining the proposed changes were distributed to all project stakeholders during the week of June 1, 2015 and published in The Kingston Whig-Standard and The Kingston/Frontenac EMC newspaper during the week of June 1, 2015. A copy of the letter and notice are included in **Appendix F.**

Appendix A: REA #1016-97YHC7

Ontario

Ministry of the Environment
Ministère de l'Environnement

RENEWABLE ENERGY APPROVAL

NUMBER 1016-97YHC7
Issue Date: April 2, 2014

Kingston Solar GP Inc. operating as the general partner of
Kingston Solar LP
55 Standish Court, 9th Floor
Mississauga, Ontario
L5R 4B2

Project Location: Unity Road and Mud Lake Road
North and south of Unity Road and Mud Lake Road
City of Kingston, Loyalist Township, County of Lennox and Addington

You have applied in accordance with Section 47.4 of the Environmental Protection Act for approval to engage in a renewable energy project in respect of a Class 3 solar facility consisting of the following:

-- the construction, installation, operation, use and retiring of a Class 3 solar facility with a total name plate capacity of 100 megawatts (MW).

For the purpose of this renewable energy approval, the following definitions apply:

1. "Acoustic Assessment Report" means the report included in the Application and entitled "KINGSTON SOLAR LP, Sol-Luce Kingston Solar PV Energy Project, REVISED NOISE STUDY REPORT", dated March 19, 2014, prepared by Dillon Consulting, and signed by Amir A. Iravani, Ph.D., Dillon Consulting on March 19, 2014;

2. "Act" means the *Environmental Protection Act* , R.S.O 1990, c.E.19, as amended;

3. "Adverse Effect" has the same meaning as in the Act;

4. "Application" means the application for a Renewable Energy Approval dated September 18, 2012, and signed by Jeong Tack Lee, President, Kingston Solar LP, on behalf of Kingston Solar GP Inc. and all supporting documentation submitted with the application, including amended documentation submitted up to the date this approval is issued;

5. "Approval" means this Renewable Energy Approval issued in accordance with Section 47.4 of the Act, including any schedules to it;

6. "A-weighting" means the frequency weighting characteristic as specified in the International Electrotechnical Commission (IEC) Standard 61672, and intended to approximate the relative sensitivity of the normal human ear to different frequencies (pitches) of sound. It is denoted as "A";

7. "A-weighted Sound Pressure Level" means the Sound Pressure Level modified by application of an A-weighting network. It is measured in decibels, A-weighted, and denoted "dBA";

8. "Class 1 Area" means an area with an acoustical environment typical of a major population centre, where the background sound level is dominated by the activities of people, usually road traffic, often referred to as "urban hum";

9. "Class 2 Area" means an area with an acoustical environment that has qualities representative of both Class 1 and Class 3 Areas:

   (a) sound levels characteristic of Class 1 during daytime (07:00 to 19:00 or to 23:00 hours);

   (b) low evening and night background sound level defined by natural environment and infrequent human activity starting as early as 19:00 hours (19:00 or 23:00 to 07:00 hours);

   (c) no clearly audible sound from stationary sources other than from those under impact assessment.

10. "Class 3 Area" means a rural area with an acoustical environment that is dominated by natural sounds having little or no road traffic, such as the following:

   (a) a small community with less than 1000 population;

   (b) agricultural area;

   (c) a rural recreational area such as a cottage or a resort area; or

   (d) a wilderness area.

11. "Company" means Kingston Solar GP Inc. operating as the general partner of Kingston Solar LP and includes its successors and assignees;

12. "Decibel" means a dimensionless measure of Sound Level or Sound Pressure Level, denoted as dB;

13. "Director" means a person appointed in writing by the Minister of the Environment pursuant to section 5 of the Act as a Director for the purposes of section 47.5 of the Act;

14. "District Manager" means the District Manager of the appropriate local district office of the Ministry where the Facility is geographically located;

15. "Equipment" means the inverters, transformers, and one (1) transformer substation, and associated ancillary equipment identified in this Approval and as further described in the Application, to the extent approved by this Approval;

16. "Equivalent Sound Level" is the value of the constant sound level which would result in exposure to the same total A-weighted energy as would the specified time-varying sound, if the constant sound level persisted over an equal time interval. It is denoted L_{eq} and is measured in dB A-weighting (dBA);

17. "Facility" means the renewable energy generation facility, including the Equipment, as described in this Approval and as further described in the Application, to the extent approved by this Approval;

18. "Ministry" means the ministry of the government of Ontario responsible for the Act and includes all officials, employees or other persons acting on its behalf;

19. "Noise Control Measures" means measures to reduce the noise emissions from the Facility and/or Equipment including, but not limited to, barriers, silencers, acoustical louvres, hoods and acoustical treatment, described in the Acoustic Assessment Report and Schedule C of this Approval;

20. "Noise Receptor" has the same meaning as in O. Reg. 359/09;

21. "O. Reg. 359/09" means Ontario Regulation 359/09 "Renewable Energy Approvals under Part V.0.1 of the Act" made under the Act;

22. "Point of Reception" has the same meaning as in Publication NPC-205 or Publication NPC-232, as applicable, and is subject to the same qualifications described in those documents;

23. "Publication NPC-104" means the Ministry Publication NPC-104, "Sound Level Adjustments", August 1978;

24. "Publication NPC-205" means the Ministry Publication NPC-205, "Sound Level Limits for Stationary Sources in Class 1 & 2 Areas (Urban)", October 1995;

25. "Publication NPC-232" means the Ministry Publication NPC-232, "Sound Level Limits for Stationary Sources in Class 3 Areas (Rural)", October 1995;

26. "Sound Level" means the A-weighted Sound Pressure Level;

27. "Sound Level Limit" is the limiting value described in terms of the one hour A-weighted Equivalent Sound Level L_{eq};

28. "Sound Power Level" means is ten times the logarithm to the base of 10 of the ratio of the sound power (Watts) of a noise source to standard reference power of 10^{-12} Watts;

29. "Sound Pressure" means the instantaneous difference between the actual pressure and the average or barometric pressure at a given location. The unit of measurement is the micro pascal (μPa);

30. "Sound Pressure Level" means twenty times the logarithm to the base 10 of the ratio of the effective pressure (μPa) of a sound to the reference pressure of 20 μPa;

31. "UTM" means Universal Transverse Mercator coordinate system.

You are hereby notified that this approval is issued to you subject to the terms and conditions outlined below:

TERMS AND CONDITIONS

A - GENERAL

A1. The Company shall construct, install, use, operate, maintain and retire the Facility in accordance with the terms and conditions of this Approval and the Application and in accordance with the following schedules attached hereto:

(a) Schedule A - Facility Description
(b) Schedule B - Coordinates of the Equipment and Noise Specifications
(c) Schedule C – Noise Control Measures

A2. Where there is a conflict between a provision of this Approval and any document submitted by the Company, the conditions in this Approval shall take precedence. Where there is a conflict between one or more of the documents submitted by the Company, the document bearing the most recent date shall take precedence.

A3. The Company shall ensure a copy of this Approval is:

(1) accessible, at all times, by Company staff operating the Facility and;

(2) submitted to the clerk of each local municipality and upper-tier municipality in which the Facility is situated.

A4. If the Company has a publicly accessible website, the Company shall ensure that the Approval and the Application are posted on the Company's publicly accessible website within five (5) business days of receiving this Approval.

A5. The Company shall, at least six (6) months prior to the anticipated retirement date of the entire Facility, or part of the Facility, review its Decommissioning Plan Report to ensure that it is still accurate. If the Company determines that the Facility cannot be decommissioned in accordance with the Decommissioning Plan Report, the Company shall provide the Director and District Manager a written description of plans for the decommissioning of the Facility.

A6. The Company shall, at least six (6) months prior to the anticipated retirement date of the entire Facility, or part of the Facility, contact the Ministry responsible for agriculture in Ontario at that time to discuss its plans for the decommissioning of the Facility, and follow any directions provided by that ministry in respect of the Company's plans to restore the project location to its previous agricultural capacity.

A7. The Facility shall be retired in accordance with the Decommissioning Plan Report and any directions provided by the Director or District Manager.

A8. The Company shall provide the District Manager and the Director at least ten (10) days written notice of the following:

(1) the commencement of any construction or installation activities at the project location; and

(2) the commencement of the operation of the Facility.

B - EXPIRY OF APPROVAL

B1. Construction and installation of the Facility must be completed within three (3) years of the later of:

(1) the date this Approval is issued; or

(2) if there is a hearing or other litigation in respect of the issuance of this Approval, the date that this hearing or litigation is disposed of, including all appeals.

B2. This Approval ceases to apply in respect of any portion of the Facility not constructed or installed before the later of the dates identified in Condition B1.

C - NOISE PERFORMANCE LIMITS

C1. The Company shall ensure that:

(1) the Sound Levels from the Equipment, at the Points of Reception identified in the Acoustic Assessment Report, comply with the Sound Level Limit of 40 dBA as described in Publication NPC-232, subject to adjustment for tonality as described in Publication NPC-104;

(2) the Equipment is constructed and installed at either of the following locations:

(a) at the locations identified in Schedule B of this Approval; or

(b) at a location that does not vary by more than 10 metres from the locations identified in Schedule B of this Approval and provided that,

i) the Equipment will comply with Condition C1 (1), and

ii) all setback prohibitions established under O. Reg. 359/09 are complied with.

(3) the Equipment complies with the noise specifications set out in Schedule B of this Approval; and

(4) all of the Noise Control Measures are fully implemented prior to the commencement of the operation of the Facility.

C2. If the Company determines that some or all of the Equipment cannot be constructed in accordance with Condition C1 (2), prior to the construction and installation of the Equipment in question, the Company shall apply to the Director for an amendment to the terms and conditions of the Approval.

C3. Within three (3) months of the completion of the construction of the Facility, the Company shall submit to the Director a written confirmation signed by an individual who has the authority to bind the Company that the UTM coordinates of the "as constructed" Equipment comply with the requirements of Condition C1 (2).

D - GROUNDWATER MONITORING

D1. The Company shall implement the groundwater sampling and monitoring program described in the report included in the Application and entitled Water Well Survey Program, Sol-Luce Kingston Solar PV Energy Project, Kingston, Ontario, dated September 6, 2012 and prepared by Dillon Consulting Limited.

D2. The Company shall report the summary of the results of the groundwater sampling and monitoring program on an annual basis to the District Manager.

E - TEMPORARY SEDIMENT AND EROSION CONTROL

E1. The Company shall install and maintain temporary sediment and erosion control measures during construction and conduct inspections once every two (2) weeks and after rain events greater than 10 mm. The inspections and maintenance of the temporary sediment and erosion control measures shall continue until they are no longer required, and at which time they shall be removed and all disturbed areas reinstated properly.

E2. The Company shall maintain records of inspections and maintenance which shall be made available for inspection by the Ministry, upon request. The record shall include the name of the inspector, date of inspection, and the remedial measures, if any, undertaken to maintain the temporary sediment and erosion control measures.

F - STORMWATER MANAGEMENT

F1. The Company shall employ best management practices for stormwater management during construction, installation, use, operation, maintenance and retiring of the Facility, as described in the Construction Plan Report included in the Application and prepared by AMEC Americas Limited.

F2. Within six (6) months of the completion of the construction of the Facility, the Company shall provide the District Manager with a written description of post-construction stormwater management conditions.

G - WATER TAKING ACTIVITIES

G1. The Company shall not take more than 50,000 litres of water on any day by any means during the construction, installation, use, operation, maintenance and retiring of the Facility.

H - SEWAGE WORKS OF THE TRANSFORMER SUBSTATION SPILL CONTAINMENT FACILITY

H1. The Company shall design and construct a transformer substation oil spill containment facility which meets the following requirements:

(1) the spill containment facility serving the transformer substation shall have a minimum volume equal to the volume of transformer oil and lubricants plus the volume equivalent to providing a minimum 24-hour duration, 50-year return storm capacity for the stormwater drainage area around the transformer under normal operating conditions. This containment area shall have:

(a) an impervious floor with walls usually of reinforced concrete or impervious plastic liners, sloped toward an outlet / oil control device, allowing for a freeboard of 0.25 metres terminating approximately 0.30 metres above grade to prevent external stormwater flows from entering the facility. The facility shall have a minimum of 300mm layer of crushed stoned (19mm to 38mm in diameter) within, all as needed in accordance to site specific conditions and final design parameters; or

(b) a permeable floor with impervious plastic walls and around the transformer pad; equipped with subsurface drainage with a minimum 50mm diameter drain installed on a sand layer sloped toward an outlet for sample collection purposes; designed with an oil absorbent material on floor and walls, and allowing for a freeboard of 0.25 metres terminating approximately 0.30 metres above grade to prevent external stormwater flows from entering the facility. The facility's berm shall be designed as needed in accordance to site specific conditions and the facility shall have a minimum 300mm layer of crushed stoned (19mm to 38mm in diameter) on top of the system, as needed in accordance to site specific conditions and final design parameters.

(2) the spill containment facility shall be equipped with an oil detection system; it also shall have a minimum of two (2) PVC pipes (or equivalent material) 50mm diameter to allow for visual inspection of water accumulation. One pipe has to be installed half way from the transformer pad to the vehicle access route;

(3) the spill containment facility shall have appropriate sewage appurtenances as necessary, such as but not limited to: sump, oil/grit separator, pumpout manhole, level controllers, floating oil sensors, etc., that allows for batch discharges or direct discharges and for proper implementation of the monitoring program described under Condition H4; and

(4) the Company shall have a qualified person on-site during construction to ensure that the system is installed in accordance with the approved design and specifications.

H2. The Company shall:

(1) within six (6) months after the completion of the construction of the transformer substation spill containment facility, provide to the District Manager an engineering report and as-built design drawings of the sewage works for the spill containment facility and any stormwater management works required for it, signed and stamped by an independent Professional Engineer licensed in Ontario and competent in electrical and environmental engineering. The engineering report shall include the following;

(a) as-built drawings of the sewage works for the spill containment facility and any stormwater management works required for it;

(b) a written report signed by a qualified person confirming the following:

(i) on-site supervision during construction
(ii) in case of a permeable floor systems: type of oil absorbent material used (for mineral-based transformer oil or vegetable-based transformer oil, make and material's specifications)
(ii) use of stormwater best management practices applied to prevent external surface water runoff from entering the spill containment facility, and
(iv) confirm adequacy of the installation in accordance with specifications.

(c) confirmation of the adequacy of the operating procedures and the emergency procedures manuals as it pertains to the installed sewage works.

(d) procedures to provide emergency response to the site in the form of pumping and clean-up equipment within 24 hours after an emergency has been identified. Such response shall be provided even under adverse weather conditions to prevent further danger of material loss to the environment.

(2) as a minimum, the Company shall check the oil detection systems on a monthly basis and create a written record of the inspections;

(3) ensure that the effluent is essentially free of floating and settle-able solids and does not contain oil or any other substance in amounts sufficient to create a visible film, sheen or foam on the receiving waters;

(4) immediately identify and clean-up all losses of oil from the transformer;

(5) upon identification of oil in the spill containment facility, take immediate action to prevent the further occurrence of such loss;

(6) ensure that equipment and material for the containment, clean-up and disposal of oil and materials contaminated with oil are kept within easy access and in good repair for immediate use in the event of:

(a) loss of oil from the transformer,
(b) a spill within the meaning of Part X of the Act, or
(c) the identification of an abnormal amount of oil in the effluent.

(7) in the event of finding water accumulation in the PVC pipes at the time of inspection, as per Condition H4, the Company shall: (a) for impervious floors, inspect the sewage appurtenances that allow drainage of the concrete pit; or (b) for permeable systems, replace the oil absorbent material to ensure integrity of the system performance and design objectives.

(8) for permeable floor systems, the Company shall only use the type of oil specified in the design, i.e. mineral-based transformer oil or vegetable-based transformer oil. If a change is planned to modify the type of oil, the Company shall also change the type of the oil absorbent material and obtain approval from the Director to amend this Approval before any modification is implemented.

H3. The Company shall design, construct and operate the sewage works such that the concentration of the effluent parameter named in the table below does not exceed the maximum Concentration Objective shown for that parameter in the effluent, and shall comply with the following requirements:

Effluent Parameters	**Maximum Concentration Objective**
Oil and Grease	15mg/L

(1) notify the District Manager as soon as reasonably possible of any exceedance of the maximum concentration objective set out in the table above;

(2) take immediate action to identify the cause of the exceedance; and

(3) take immediate action to prevent further exceedances.

H4. Upon commencement of the operation of the Facility, the Company shall establish and carry out the following monitoring program for the sewage works:

(1) the Company shall collect and analyze the required set of samples at the sampling points listed in the table below in accordance with the measurement frequency and sample type specified for the effluent parameter, oil and grease, and create a written record of the monitoring:

Effluent Parameters	Measurement Frequency and Sample Points	Sample Type
Oil and Grease	Quarterly, i.e. four times over a year, relatively evenly spaced having a minimum two (2) of these samples taken within 48 hours after a 10mm rainfall event.	Grab

(2) in the event of an exceedance of the maximum concentration objective set out in the table in Condition H3, the Company shall:

(a) increase the frequency of sampling to once per month, for each month that effluent discharge occurs, and

(b) provide the District Manager, on a monthly basis, with copies of the written record created for the monitoring until the District Manager provides written direction that monthly sampling and reporting is no longer required; and

(3) if over a period of twenty-four (24) months of effluent monitoring under Condition H4, there are no exceedances of the maximum concentration set out in the table for Concentration Objective, the Company may reduce the measurement frequency of effluent monitoring to a frequency as the District Manager may specify in writing, provided that the new specified frequency is never less than annual.

H5. The Company shall comply with the following methods and protocols for any sampling, analysis and recording undertaken in accordance with Condition H4:

(1) Ministry of the Environment publication "Protocol for the Sampling and Analysis of Industrial/ Municipal Wastewater", January 1999, as amended from time to time by more recently published editions, and

(2) the publication "Standard Methods for the Examination of Water and Wastewater", 21st edition, 2005, as amended from time to time by more recently published editions.

I - NATURAL HERITAGE AND PRE- AND POST-CONSTRUCTION MONITORING

GENERAL

I1. The Company shall implement the commitments made in the Natural Heritage Assessment and Environmental Impact Study, dated June 2012, prepared by AMEC Environment & Infrastructure, and NHA Environmental Impact Study Addendum, dated December 13, 2013, prepared by Dillon Consulting Limited, and included in the Application.

PRE- AND POST-CONSTRUCTION MONITORING – SIGNIFICANT WILDLIFE HABITAT

I2. Where identified, the Company shall implement the pre- and post-construction monitoring described in the Natural Heritage Assessment and Environmental Impact Study, dated June 2012, prepared by AMEC Environment & Infrastructure, and NHA Environmental Impact Study Addendum, dated December 13, 2013, prepared by Dillon Consulting Limited, described in Condition I1.

REPORTING AND REVIEW OF RESULTS

I4. Where identified, the Company shall report, in writing, the results of the pre- and post-construction monitoring described in Condition I2, to the Director and the Ministry of Natural Resources in accordance with reporting identified in the Natural Heritage Assessment and Environmental Impact Study, dated June 2012, prepared by AMEC Environment & Infrastructure, and NHA Environmental Impact Study Addendum, dated December 13, 2013, prepared by Dillon Consulting Limited.

I5. The pre- and post-construction monitoring report(s) described in Condition I4 shall be submitted to the Director and the Ministry of Natural Resources within ten (10) days of its completion.

I6. The Company shall post the following documents on the Company's website, if the Company has a website, within ten (10) days of completion of the documents:

(1) the pre- and post-construction monitoring report(s) described in Condition I4.

J - ENDANGERED SPECIES ACT REQUIREMENTS

J1. The Company shall ensure that any necessary authorizations under the *Endangered Species Act, 2007* have been obtained prior to the commencement of construction of the Facility in areas that support habitat for endangered or threatened species.

K - ARCHAEOLOGICAL RESOURCES

K1. The Company shall implement all of the recommendations, if any, for further archaeological fieldwork and for the protection of archaeological sites found in the consultant archaeologist's report included in the Application, and which the Company submitted to the Ministry of Tourism, Culture and Sport in order to comply with clause 22 (2) (b) of O. Reg. 359/09.

K2. Should any previously undocumented archaeological resources be discovered, the Company shall:

(1) cease all alteration of the area in which the resources were discovered immediately;

(2) engage a consultant archaeologist to carry out the archaeological fieldwork necessary to further assess the area and to either protect and avoid or excavate any sites in the area in accordance with the *Ontario Heritage Act* , the regulations under that act and the Ministry of Tourism, Culture and Sport's *Standards and Guidelines for Consultant Archaeologists* ; and

(3) notify the Director as soon as reasonably possible.

L - COMMUNITY LIAISON COMMITTEE

L1. Within three (3) months of receiving this Approval, the Company shall make reasonable efforts to establish a Community Liaison Committee. The Community Liaison Committee shall be a forum to exchange ideas and share concerns with interested residents and members of the public. The Community Liaison Committee shall be established by:

(a) publishing a notice in a newspaper with general circulation in each local municipality in which the project location is situated; and

(b) posting a notice on the Company's publicly accessible website, if the Company has a website to notify members of the public about the proposal for a Community Liaison Committee and invite residents living within a one (1) kilometer radius of the Facility that may have an interest in the Facility to participate on the Community Liaison Committee.

L2. The Company may invite other members of stakeholders to participate in the Community Liaison Committee, including, but not limited to, local municipalities, local conservation authorities, Aboriginal communities, federal or provincial agencies, and local community groups.

L3. The Community Liaison Committee shall consist of at least one Company representative who shall attend all meetings.

L4. The purpose of the Community Liaison Committee shall be to:

(a) act as a liaison facilitating two way communications between the Company and members of the public with respect to issues relating to the construction, installation, use, operation, maintenance and retirement of the Facility;

(b) provide a forum for the Company to provide regular updates on, and to discuss issues or concerns relating to, the construction, installation, use, operation, maintenance and retirement of the Facility with members of the public; and

(c) ensure that any issues or concerns resulting from the construction, installation, use, operation, maintenance and retirement of the Facility are discussed and communicated to the Company.

L5. The Community Liaison Committee shall be deemed to be established on the day the Director is provided with written notice from the Company that representative Community Liaison Committee members have been chosen and a date for a first Community Liaison Committee meeting has been set.

L6. If a Community Liaison Committee has not been established within three (3) months of receiving this Approval, the Company shall provide a written explanation to the Director as to why this has not occurred.

L7. The Company shall ensure that the Community Liaison Committee operates for a minimum period of two (2) years from the day it is established. During this two (2) year period, the Company shall ensure that the Community Liaison Committee meets a minimum of two (2) times per year. At the end of this two (2) year period, the Company shall contact the Director to discuss the continued operation of the Community Liaison Committee.

L8. The Company shall ensure that all Community Liaison Committee meetings are open to the general public.

L9. The Company shall provide administrative support for the Community Liaison Committee including, at a minimum:

(a) providing a meeting space for Community Liaison Committee meetings;

(b) providing access to resources, such as a photocopier, stationery, and office supplies, so that the Community Liaison Committee can:

(i) prepare and distribute meeting notices;

(ii) record and distribute minutes of each meeting; and

(iii) prepare reports about the Community Liaison Committee's activities.

L10. The Company shall submit any reports of the Community Liaison Committee to the Director and post it on the Company's publicly accessible website, if the Company has a website.

M - EQUESTRIAN FACILITIES

M1. Prior to the commencement of construction of the Facility, the Company shall, in consultation with the nearby equestrian facilities, prepare a Construction Plan, which shall include reasonable mitigation measures to address impacts on the nearby equestrian facilities.

M2. If a Construction Plan has not been prepared prior to the commencement of construction of the Facility, the Company shall provide a written explanation to the District Office as to why this has not occurred.

N - TRAFFIC MANAGEMENT PLANNING

N1. Prior to the commencement of construction of the Facility, the Company shall prepare a Traffic Management Plan and provide it to the City of Kingston, Loyalist Township and County of Lennox and Addington.

N2. Within three (3) months of having provided the Traffic Management Plan to the City of Kingston, Loyalist Township and County of Lennox and Addington, the Company shall make reasonable efforts to enter into a Road Users Agreement with the City of Kingston, Loyalist Township and County of Lennox and Addington.

N3. If a Road Users Agreement has not been signed with the City of Kingston, Loyalist Township and County of Lennox and Addington within three (3) months of having provided the Traffic Management Plan to the City of Kingston, Loyalist Township and County of Lennox and Addington, the Company shall provide a written explanation as to why this has not occurred.

O - OPERATION AND MAINTENANCE

O1. Prior to the commencement of the operation of the Facility, the Company shall prepare a written manual for use by Company staff outlining the operating procedures and a maintenance program for the Equipment that includes as a minimum the following:

(1) routine operating and maintenance procedures in accordance with good engineering practices and as recommended by the Equipment suppliers;

(2) emergency procedures;

(3) procedures for any record keeping activities relating to operation and maintenance of the Equipment; and

(4) all appropriate measures to minimize noise emissions from the Equipment.

O2. The Company shall;

(1) update, as required, the manual described in Condition O1; and

(2) make the manual described in Condition O1 available for review by the Ministry upon request.

O3. The Company shall ensure that the Facility is operated and maintained in accordance with the Approval and the manual described in Condition O1.

P - RECORD CREATION AND RETENTION

P1. The Company shall create written records consisting of the following:

(1) an operations log summarizing the operation and maintenance activities of the Facility;

(2) within the operations log, a summary of routine and Ministry inspections of the Facility; and

(3) a record of any complaint alleging an Adverse Effect caused by the construction, installation, use, operation, maintenance or retirement of the Facility.

P2. A record described under Condition P1(3) shall include:

(1) a description of the complaint that includes as a minimum the following:

(a) the date and time the complaint was made;

(b) the name, address and contact information of the person who submitted the complaint;

(2) a description of each incident to which the complaint relates that includes as a minimum the following:

(a) the date and time of each incident;

(b) the duration of each incident;

(c) the wind speed and wind direction at the time of each incident;

(d) the ID of the Equipment involved in each incident and its output at the time of each incident;

(e) the location of the person who submitted the complaint at the time of each incident; and

(3) a description of the measures taken to address the cause of each incident to which the complaint relates and to prevent a similar occurrence in the future.

P3. The Company shall retain, for a minimum of five (5) years from the date of their creation, all records described in Condition P1, and make these records available for review by the Ministry upon request.

Q - NOTIFICATION OF COMPLAINTS

Q1. The Company shall notify the District Manager of each complaint within two (2) business days of the receipt of the complaint.

Q2. The Company shall provide the District Manager with the written records created under Condition P2 within eight (8) business days of the receipt of the complaint.

Q3. If the Company receives a complaint related to groundwater, the Company shall contact the District Manager within one (1) business day of the receipt of the complaint to discuss appropriate measures to manage any potential groundwater issues.

R - CHANGE OF OWNERSHIP

R1. The Company shall notify the Director in writing, and forward a copy of the notification to the District Manager, within thirty (30) days of the occurrence of any of the following changes:

(1) the ownership of the Facility;

(2) the operator of the Facility;

(3) the address of the Company;

(4) the partners, where the Company is or at any time becomes a partnership and a copy of the most recent declaration filed under the *Business Names Act* , R.S.O. 1990, c.B.17, as amended, shall be included in the notification; and

(5) the name of the corporation where the Company is or at any time becomes a corporation, other than a municipal corporation, and a copy of the most current information filed under the *Corporations Information Act* , R.S.O. 1990, c. C.39, as amended, shall be included in the notification.

SCHEDULE A

Facility Description

The Facility shall consist of the construction, installation, operation, use and retiring of the following:

(a) Seventy (70) unit blocks of photovoltaic (PV) modules or panels, each containing one (1) cluster consisting of two (2) 800 kW inverters and one (1) 34.5 kV/1.6-MVA transformer, and eight (8) unit blocks of PV modules or panels, each containing one (1) cluster consisting of one (1) 800 kW inverter and one (1) 34.5 kV/0.8-MVA transformer, with a total name plate capacity of up to approximately 100 megawatts (AC); and

(b) associated ancillary equipment, systems and technologies including, but not limited to, one (1) transformer substation, on-site access roads, below and above grade cabling, and below and above grade distribution and transmission lines,

all in accordance with the Application.

SCHEDULE B

Coordinates of the Equipment and Noise Specifications

Table B1: Coordinates of the Equipment are listed below in UTM, Z17-NAD83 projection

Source ID	Maximum Sound Power Level (dBA)	Easting (m)	Northing (m)	Source Description
S_12_1_I	100.3	370241	4907365	Inverter Cluster #1: 1.6 MW
S_12_1_T	68.7	370236	4907365	Inverter Transformer #1: 1.6 MW
S_12_2_I	100.3	370091	4907340	Inverter Cluster #2: 1.6 MW
S_12_2_T	68.7	370086	4907340	Inverter Transformer #2: 1.6 MW
S_12_3_I	100.3	370202	4907134	Inverter Cluster #3: 1.6 MW
S_12_3_T	68.7	370207	4907134	Inverter Transformer #3: 1.6 MW
S_12_4_I	89.0	370255	4906972	Inverter Cluster #4: 1.6 MW
S_12_4_T	68.7	370250	4906972	Inverter Transformer #4: 1.6 MW
S_14A_1_I	89.0	368669	4907930	Inverter Cluster #5: 1.6 MW
S_14A_1_T	68.7	368664	4907930	Inverter Transformer #5: 1.6 MW
S_14A_10_I	89.0	368162	4907974	Inverter Cluster #6: 1.6 MW
S_14A_10_T	68.7	368157	4907974	Inverter Transformer #6: 1.6 MW
S_14A_11_I	89.0	368336	4907840	Inverter Cluster #7: 1.6 MW
S_14A_11_T	68.7	368331	4907840	Inverter Transformer #7: 1.6 MW
S_14A_12_I	100.3	368343	4907668	Inverter Cluster #8: 1.6 MW
S_14A_12_T	68.7	368338	4907668	Inverter Transformer #8: 1.6 MW
S_14A_13_I	100.3	368351	4907479	Inverter Cluster #9: 1.6 MW
S_14A_13_T	68.7	368346	4907479	Inverter Transformer #9: 1.6 MW
S_14A_14_I	100.3	368357	4907344	Inverter Cluster #10: 1.6 MW
S_14A_14_T	68.7	368352	4907344	Inverter Transformer #10: 1.6 MW
S_14A_2_I	89.0	368678	4907713	Inverter Cluster #11: 1.6 MW
S_14A_2_T	68.7	368673	4907713	Inverter Transformer #11: 1.6 MW
S_14A_3_I	100.3	368687	4907506	Inverter Cluster #12: 1.6 MW
S_14A_3_T	68.7	368682	4907506	Inverter Transformer #12: 1.6 MW
S_14A_4_I	100.3	368695	4907317	Inverter Cluster #13: 1.6 MW
S_14A_4_T	68.7	368690	4907317	Inverter Transformer #13: 1.6 MW
S_14A_5_I	89.0	368656	4907147	Inverter Cluster #14: 1.6 MW
S_14A_5_T	68.7	368661	4907147	Inverter Transformer #14: 1.6 MW
S_14A_6_I	100.3	368484	4907209	Inverter Cluster #15: 1.6 MW
S_14A_6_T	68.7	368489	4907209	Inverter Transformer #15: 1.6 MW

SCHEDULE B

Coordinates of the Equipment and Noise Specifications

Table B1 (continued): Coordinates of the Equipment are listed below in UTM, Z17-NAD83 projection

Source ID	Maximum Sound Power Level (dBA)	Easting (m)	Northing (m)	Source Description
S_14A_7_I	100.3	368520	4907479	Inverter Cluster #16: 1.6 MW
S_14A_7_T	68.7	368515	4907479	Inverter Transformer #16: 1.6 MW
S_14A_8_I	100.3	368510	4907704	Inverter Cluster #17: 1.6 MW
S_14A_8_T	68.7	368505	4907704	Inverter Transformer #17: 1.6 MW
S_14A_9_I	89.0	368501	4907930	Inverter Cluster #18: 1.6 MW
S_14A_9_T	68.7	368496	4907930	Inverter Transformer #18: 1.6 MW
S_14B_1_I	100.3	368168	4907839	Inverter Cluster #19: 1.6 MW
S_14B_1_T	68.7	368163	4907839	Inverter Transformer #19: 1.6 MW
S_14B_2_I	100.3	368175	4907668	Inverter Cluster #20: 1.6 MW
S_14B_2_T	68.7	368170	4907668	Inverter Transformer #20: 1.6 MW
S_14B_3_I	100.3	368184	4907470	Inverter Cluster #21: 1.6 MW
S_14B_3_T	68.7	368179	4907470	Inverter Transformer #21: 1.6 MW
S_14B_4_I	100.3	367957	4907579	Inverter Cluster #22: 1.6 MW
S_14B_4_T	68.7	367952	4907579	Inverter Transformer #22: 1.6 MW
S_14B_5_I	100.3	367950	4907759	Inverter Cluster #23: 1.6 MW
S_14B_5_T	68.7	367945	4907759	Inverter Transformer #23: 1.6 MW
S_14B_6_I	100.3	367942	4907930	Inverter Cluster #24: 1.6 MW
S_14B_6_T	68.7	367937	4907930	Inverter Transformer #24: 1.6 MW
S_14C_1_I	100.3	367747	4907417	Inverter Cluster #25: 1.6 MW
S_14C_1_T	68.7	367752	4907417	Inverter Transformer #25: 1.6 MW
S_14C_2_I	100.3	367669	4907587	Inverter Cluster #26: 1.6 MW
S_14C_2_T	68.7	367674	4907587	Inverter Transformer #26: 1.6 MW
S_19_1_I	89.0	365849	4906817	Inverter Cluster #27: 1.6 MW
S_19_1_T	68.7	365844	4906817	Inverter Transformer #27: 1.6 MW
S_19_2_I	89.0	365970	4906655	Inverter Cluster #28: 1.6 MW
S_19_2_T	68.7	365975	4906655	Inverter Transformer #28: 1.6 MW
S_19_3_I	100.3	365821	4906637	Inverter Cluster #29: 1.6 MW
S_19_3_T	68.7	365816	4906637	Inverter Transformer #29: 1.6 MW
S_19_5_I	97.3	365801	4906394	Inverter Cluster #30: 0.8 MW
S_19_5_T	69.6	365796	4906394	Inverter Transformer #30: 0.8 MW

SCHEDULE B

Coordinates of the Equipment and Noise Specifications

Table B1 (continued): Coordinates of the Equipment are listed below in UTM, Z17-NAD83 projection

Source ID	Maximum Sound Power Level (dBA)	Easting (m)	Northing (m)	Source Description
S_2_1_I	100.3	370225	4908848	Inverter Cluster #31: 1.6 MW
S_2_1_T	68.7	370230	4908848	Inverter Transformer #31: 1.6 MW
S_2_2_I	100.3	370320	4908704	Inverter Cluster #32: 1.6 MW
S_2_2_T	68.7	370325	4908704	Inverter Transformer #32: 1.6 MW
S_20_1_I	100.3	365584	4906625	Inverter Cluster #33: 1.6 MW
S_20_1_T	68.7	365589	4906625	Inverter Transformer #33: 1.6 MW
S_21_1_I	97.3	364686	4906355	Inverter Cluster #34: 0.8 MW
S_21_1_T	69.6	364681	4906355	Inverter Transformer #34: 0.8 MW
S_21_2_I	100.3	364717	4906166	Inverter Cluster #35: 1.6 MW
S_21_2_T	68.7	364722	4906166	Inverter Transformer #35: 1.6 MW
S_21_3_I	100.3	364759	4906066	Inverter Cluster #36: 1.6 MW
S_21_3_T	68.7	364764	4906066	Inverter Transformer #36: 1.6 MW
S_21_4_I	100.3	364821	4905922	Inverter Cluster #37: 1.6 MW
S_21_4_T	68.7	364826	4905922	Inverter Transformer #37: 1.6 MW
S_21_5_I	97.3	364930	4905785	Inverter Cluster #38: 0.8 MW
S_21_5_T	69.6	364925	4905785	Inverter Transformer #38: 0.8 MW
S_21_6_I	100.3	365008	4905559	Inverter Cluster #39: 1.6 MW
S_21_6_T	68.7	365003	4905559	Inverter Transformer #39: 1.6 MW
S_21_7_I	100.3	365035	4905378	Inverter Cluster #40: 1.6 MW
S_21_7_T	68.7	365040	4905378	Inverter Transformer #40: 1.6 MW
S_22_1_I	100.3	364678	4905894	Inverter Cluster #41: 1.6 MW
S_22_1_T	68.7	364673	4905894	Inverter Transformer #41: 1.6 MW
S_22_2_I	97.3	364782	4905647	Inverter Cluster #42: 0.8 MW
S_22_2_T	69.6	364777	4905647	Inverter Transformer #42: 0.8 MW
S_23_1_I	89.0	364448	4906039	Inverter Cluster #43: 1.6 MW
S_23_1_T	68.7	364443	4906039	Inverter Transformer #43: 1.6 MW
S_23_2_I	100.3	364481	4905840	Inverter Cluster #44: 1.6 MW
S_23_2_T	68.7	364476	4905840	Inverter Transformer #44: 1.6 MW
S_23_3_I	100.3	364566	4905641	Inverter Cluster #45: 1.6 MW
S_23_3_T	68.7	364561	4905641	Inverter Transformer #45: 1.6 MW

SCHEDULE B

Coordinates of the Equipment and Noise Specifications

Table B1 (continued): Coordinates of the Equipment are listed below in UTM, Z17-NAD83 projection

Source ID	Maximum Sound Power Level (dBA)	Easting (m)	Northing (m)	Source Description
S_23_4_I	100.3	364662	4905414	Inverter Cluster #46: 1.6 MW
S_23_4_T	68.7	364657	4905414	Inverter Transformer #46: 1.6 MW
S_23_5_I	97.3	364735	4905244	Inverter Cluster #47: 0.8 MW
S_23_5_T	69.6	364730	4905244	Inverter Transformer #47: 0.8 MW
S_24_1_I	89.0	365313	4904994	Inverter Cluster #48: 1.6 MW
S_24_1_T	68.7	365318	4904994	Inverter Transformer #48: 1.6 MW
S_24_2_I	100.3	365168	4905045	Inverter Cluster #49: 1.6 MW
S_24_2_T	68.7	365163	4905045	Inverter Transformer #49: 1.6 MW
S_25A_1_I	100.3	369091	4910370	Inverter Cluster #50: 1.6 MW
S_25A_1_T	68.7	369086	4910370	Inverter Transformer #50: 1.6 MW
S_25A_10_I	89.0	369182	4908507	Inverter Cluster #51: 1.6 MW
S_25A_10_T	68.7	369187	4908507	Inverter Transformer #51: 1.6 MW
S_25A_11_I	89.0	369174	4908481	Inverter Cluster #52: 1.6 MW
S_25A_11_T	68.7	369179	4908481	Inverter Transformer #52: 1.6 MW
S_25A_2_I	97.3	369028	4910180	Inverter Cluster #53: 0.8 MW
S_25A_2_T	69.6	369023	4910180	Inverter Transformer #53: 0.8 MW
S_25A_3_I	100.3	369211	4909991	Inverter Cluster #54: 1.6 MW
S_25A_3_T	68.7	369216	4909991	Inverter Transformer #54: 1.6 MW
S_25A_4_I	100.3	369219	4909793	Inverter Cluster #55: 1.6 MW
S_25A_4_T	68.7	369224	4909793	Inverter Transformer #55: 1.6 MW
S_25A_5_I	100.3	369227	4909595	Inverter Cluster #56: 1.6 MW
S_25A_5_T	68.7	369232	4909595	Inverter Transformer #56: 1.6 MW
S_25A_6_I	100.3	369235	4909397	Inverter Cluster #57: 1.6 MW
S_25A_6_T	68.7	369240	4909397	Inverter Transformer #57: 1.6 MW
S_25A_7_I	100.3	369242	4909199	Inverter Cluster #58: 1.6 MW
S_25A_7_T	68.7	369247	4909199	Inverter Transformer #58: 1.6 MW
S_25A_8_I	100.3	369251	4909001	Inverter Cluster #59: 1.6 MW
S_25A_8_T	68.7	369256	4909001	Inverter Transformer #59: 1.6 MW
S_25A_9_I	100.3	369258	4908857	Inverter Cluster #60: 1.6 MW
S_25A_9_T	68.7	369263	4908857	Inverter Transformer #60: 1.6 MW

SCHEDULE B

Coordinates of the Equipment and Noise Specifications

Table B1 (continued): Coordinates of the Equipment are listed below in UTM, Z17-NAD83 projection

Source ID	Maximum Sound Power Level (dBA)	Easting (m)	Northing (m)	Source Description
S_25B_1_I	97.3	368975	4910359	Inverter Cluster #61: 0.8 MW
S_25B_1_T	69.6	368980	4910359	Inverter Transformer #61: 0.8 MW
S_25B_10_I	89.0	369045	4908605	Inverter Cluster #62: 1.6 MW
S_25B_10_T	68.7	369050	4908605	Inverter Transformer #62: 1.6 MW
S_25B_2_I	100.3	368982	4910180	Inverter Cluster #63: 1.6 MW
S_25B_2_T	68.7	368987	4910180	Inverter Transformer #63: 1.6 MW
S_25B_3_I	100.3	368989	4909991	Inverter Cluster #64: 1.6 MW
S_25B_3_T	68.7	368994	4909991	Inverter Transformer #64: 1.6 MW
S_25B_4_I	100.3	368997	4909793	Inverter Cluster #65: 1.6 MW
S_25B_4_T	68.7	369002	4909793	Inverter Transformer #65: 1.6 MW
S_25B_5_I	100.3	369005	4909595	Inverter Cluster #66: 1.6 MW
S_25B_5_T	68.7	369010	4909595	Inverter Transformer #66: 1.6 MW
S_25B_6_I	100.3	369013	4909397	Inverter Cluster #67: 1.6 MW
S_25B_6_T	68.7	369018	4909397	Inverter Transformer #67: 1.6 MW
S_25B_7_I	100.3	369021	4909199	Inverter Cluster #68: 1.6 MW
S_25B_7_T	68.7	369026	4909199	Inverter Transformer #68: 1.6 MW
S_25B_8_I	100.3	369029	4909001	Inverter Cluster #69: 1.6 MW
S_25B_8_T	68.7	369034	4909001	Inverter Transformer #69: 1.6 MW
S_25B_9_I	100.3	369037	4908803	Inverter Cluster #70: 1.6 MW
S_25B_9_T	68.7	369042	4908803	Inverter Transformer #70: 1.6 MW
S_3_1_I	100.3	370016	4909146	Inverter Cluster #71: 1.6 MW
S_3_1_T	68.7	370011	4909146	Inverter Transformer #71: 1.6 MW
S_3_2_I	100.3	370014	4908857	Inverter Cluster #72: 1.6 MW
S_3_2_T	68.7	370009	4908857	Inverter Transformer #72: 1.6 MW
S_3_3_I	100.3	370019	4908694	Inverter Cluster #73: 1.6 MW
S_3_3_T	68.7	370014	4908694	Inverter Transformer #73: 1.6 MW
S_3_4_I	100.3	369981	4908514	Inverter Cluster #74: 1.6 MW
S_3_4_T	68.7	369986	4908514	Inverter Transformer #74: 1.6 MW
S_4_1_I	100.3	369280	4909397	Inverter Cluster #75: 1.6 MW
S_4_1_T	68.7	369275	4909397	Inverter Transformer #75: 1.6 MW

SCHEDULE B

Coordinates of the Equipment and Noise Specifications

Table B1 (continued): Coordinates of the Equipment are listed below in UTM, Z17-NAD83 projection

Source ID	Maximum Sound Power Level (dBA)	Easting (m)	Northing (m)	Source Description
S_4_2_I	100.3	369287	4909199	Inverter Cluster #76: 1.6 MW
S_4_2_T	68.7	369282	4909199	Inverter Transformer #76: 1.6 MW
S_4_3_I	100.3	369294	4909001	Inverter Cluster #77: 1.6 MW
S_4_3_T	68.7	369289	4909001	Inverter Transformer #77: 1.6 MW
S_4_4_I	97.3	369318	4908858	Inverter Cluster #78: 0.8 MW
S_4_4_T	69.6	369313	4908858	Inverter Transformer #78: 0.8 MW
S_Substation	111.9	369426	4908792	Transformer Substation: 110 MW

Table B2: Maximum Sound Power Spectrum (dB Lin) of Inverter Cluster (0.8 MW)

Inverter Cluster (0.8 MW)	Octave Band Centre Frequency (Hz)							
	63	125	250	500	1000	2000	4000	8000
Lw (dB Lin)	89.1	86.7	88.2	88.3	82.7	86.4	95.0	84.4

Table B3: Maximum Sound Power Spectrum (dB Lin) of Inverter Cluster (1.6 MW)

Inverter Cluster (1.6 MW)	Octave Band Centre Frequency (Hz)							
	63	125	250	500	1000	2000	4000	8000
Lw (dB Lin)	92.1	89.7	91.2	91.3	85.7	89.4	98.0	87.4

Table B4: Maximum Sound Power Spectrum (dB Lin) of Inverter Transformer (0.8 MW)

Inverter Transformer (0.8 MW)	Octave Band Centre Frequency (Hz)							
	63	125	250	500	1000	2000	4000	8000
Lw (dB Lin)	72.2	74.2	69.2	69.2	63.2	58.2	53.2	46.2

Table B5: Maximum Sound Power Spectrum (dB Lin) of Inverter Transformer (1.6 MW)

Inverter Transformer (1.6 MW)	Octave Band Centre Frequency (Hz)							
	63	125	250	500	1000	2000	4000	8000
Lw (dB Lin)	71.3	73.3	68.3	68.3	62.3	57.3	52.3	45.3

Table B6: Maximum Sound Power Spectrum (dB Lin) of Transformer Substation

Transformer Substation	Octave Band Centre Frequency (Hz)							
	63	125	250	500	1000	2000	4000	8000
Lw (dB Lin)	114.5	116.5	111.5	111.5	105.5	100.5	95.5	88.5

Note: Each Sound Power Level value in all the above tables corresponds to the combined output of all the identified equipment in each cluster, including the 5 decibel (dB) adjustment for tonality as prescribed in Publication NPC-104.

SCHEDULE C

Noise Control Measures

Acoustic Barrier

One (1) three-sided 5.6 metres high acoustic barrier, positioned as per Table 4 and Figure 4 in the Acoustic Assessment Report. The acoustic barrier shall be continuous without holes, gaps and other penetrations, and having surface mass at least 20 kilograms per square metres.

Acoustic Enclosure

In accordance with Section 5.4 of the Acoustic Assessment Report, each of the inverter clusters S_12_4_I, S_14A_1_I, S_14A_10_I, S_14A_11_I, S_14A_2_I, S_14A_5_I, S_14A_9_I, S_19_1_I, S_19_2_I, S_23_1_I, S_24_1_I, S_25A_10_I, S_25A_11_I, S_25B_10_I shall be encased in an acoustic enclosure with acoustic louvers for the openings., capable of providing the following values of Insertion/Transmission-Loss in 1/1 octave frequency bands:

Acoustic Enclosure Specifications, [dB]

Name	Octave Band Centre Frequency (Hz)							
	63	125	250	500	1000	2000	4000	8000
Acoustic Enclosure	0	4	4	6	10	17	12	0

The reasons for the imposition of these terms and conditions are as follows:

1. Conditions A1 and A2 are included to ensure that the Facility is constructed, installed, used, operated, maintained and retired in the manner in which it was described for review and upon which Approval was granted. These conditions are also included to emphasize the precedence of conditions in the Approval and the practice that the Approval is based on the most current document, if several conflicting documents are submitted for review.

2. Conditions A3 and A4 are included to require the Company to provide information to the public and the local municipality.

3. Conditions A5, A6 and A7 are included to ensure that final retirement of the Facility is completed in an aesthetically pleasing manner, in accordance with Ministry standards, and to ensure long-term protection of the health and safety of the public and the environment.

4. Condition A8 is included to require the Company to inform the Ministry of the commencement of activities related to the construction, installation and operation of the Facility.

5. Condition B is intended to limit the time period of the Approval.

6. Condition C1 is included to provide the minimum performance requirement considered necessary to prevent an Adverse Effect resulting from the operation of the Equipment and to ensure that the noise emissions from the Equipment will be in compliance with applicable limits set in Publication NPC-232.

7. Conditions C2 and C3 are included to ensure that the Equipment is constructed, installed, used, operated, maintained and retired in a way that meets the regulatory setback prohibitions set out in O. Reg. 359/09.

8. Conditions D. E, F, G, H, I, J, M and N are included to ensure that the Facility is constructed, installed, used, operated, maintained and retired in a way that does not result in an Adverse Effect or hazard to the natural environment or any persons.

9. Condition K is included to protect archaeological resources that may be found at the project location.

10. Condition L is included to ensure continued communication between the Company and the local residents.

11. Condition O is included to emphasize that the Equipment must be maintained and operated according to a procedure that will result in compliance with the Act, O. Reg. 359/09 and this Approval.

12. Condition P is included to require the Company to keep records and provide information to the Ministry so that compliance with the Act, O. Reg. 359/09 and this Approval can be verified.

13. Condition Q is included to ensure that any complaints regarding the construction, installation, use, operation, maintenance or retirement of the Facility are responded to in a timely and efficient manner.

14. Condition R is included to ensure that the Facility is operated under the corporate name which appears on the application form submitted for this Approval and to ensure that the Director is informed of any changes.

NOTICE REGARDING HEARINGS

In accordance with Section 139 of the Environmental Protection Act, within 15 days after the service of this notice, you may by further written notice served upon the Director, the Environmental Review Tribunal and the Environmental Commissioner, require a hearing by the Tribunal.

In accordance with Section 47 of the Environmental Bill of Rights, 1993, the Environmental Commissioner will place notice of your request for a hearing on the Environmental Registry.

Section 142 of the Environmental Protection Act provides that the notice requiring the hearing shall state:

1. The portions of the renewable energy approval or each term or condition in the renewable energy approval in respect of which the hearing is required, and;
2. The grounds on which you intend to rely at the hearing in relation to each portion appealed.

The signed and dated notice requiring the hearing should also include:

3. The name of the appellant;
4. The address of the appellant;
5. The renewable energy approval number;
6. The date of the renewable energy approval;
7. The name of the Director;
8. The municipality or municipalities within which the project is to be engaged in;

This notice must be served upon:

The Secretary* Environmental Review Tribunal 655 Bay Street, 15th Floor Toronto, Ontario M5G 1E5	AND	The Environmental Commissioner 1075 Bay Street, 6th Floor Suite 605 Toronto, Ontario M5S 2B1	AND	The Director Section 47.5, *Environmental Protection Act* Ministry of the Environment 2 St. Clair Avenue West, Floor 12A Toronto, Ontario M4V 1L5

*** Further information on the Environmental Review Tribunal's requirements for an appeal can be obtained directly from the Tribunal at: Tel: (416) 314-4600, Fax: (416) 314-4506 or www.ert.gov.on.ca**

Under Section 142.1 of the Environmental Protection Act, residents of Ontario may require a hearing by the Environmental Review Tribunal within 15 days after the day on which notice of this decision is published in the Environmental Registry. By accessing the Environmental Registry at www.ebr.gov.on.ca , you can determine when this period ends.

Approval for the above noted renewable energy project is issued to you under Section 47.5 of the Environmental Protection Act subject to the terms and conditions outlined above.

DATED AT TORONTO this 2nd day of April, 2014

Vic Schroter, P.Eng.
Director
Section 47.5, *Environmental Protection Act*

SR/

c: District Manager, MOE Kingston - District
Jose De Armas, Kingston Solar LP

Appendix B: Project Layout

Sol-luce Kingston Solar PV Energy Project

Figure 1
Comparison of Preliminary and Final Project Layouts

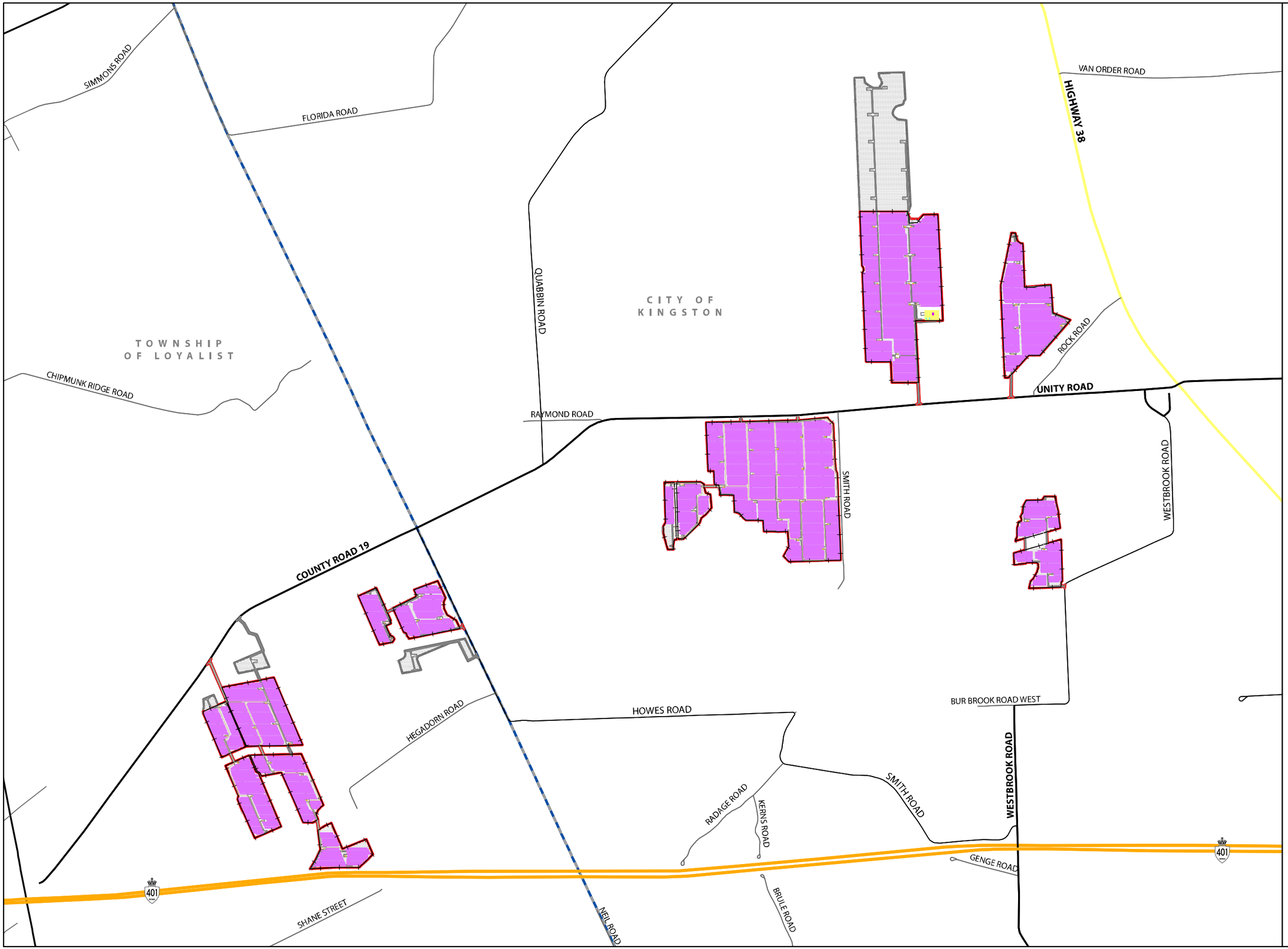

- Freeway
- Expressway / Highway
- Arterial Road
- Collector Road
- Local Road
- Project Location
- Municipal Boundary

Final Project Components

- Fence
- Access Road
- Solar Panel
- DSTATCOM
- Medium Voltage Power Platform
- Substation Transformer, Noise Barrier, and Neutral Grounding Reactor
- Substation Yard

Preliminary Project Components

- Access Roads
- Fence
- Inverters
- SolarPanels
- Preliminary Project Location

N
W E
S

1:25,000

0 200 400 600 m

DILLON CONSULTING

Created By: GM
Checked By: JLP
Date Created: 9/17/2013
Date Modified: 3/13/2015
File Path:I:\GIS\138504 Kingston Solar REA Amendment\Mapping\

Sol-luce Kingston Solar PV Energy Project

Figure 6
Predicted Noise Level Contours at 1.5m Height

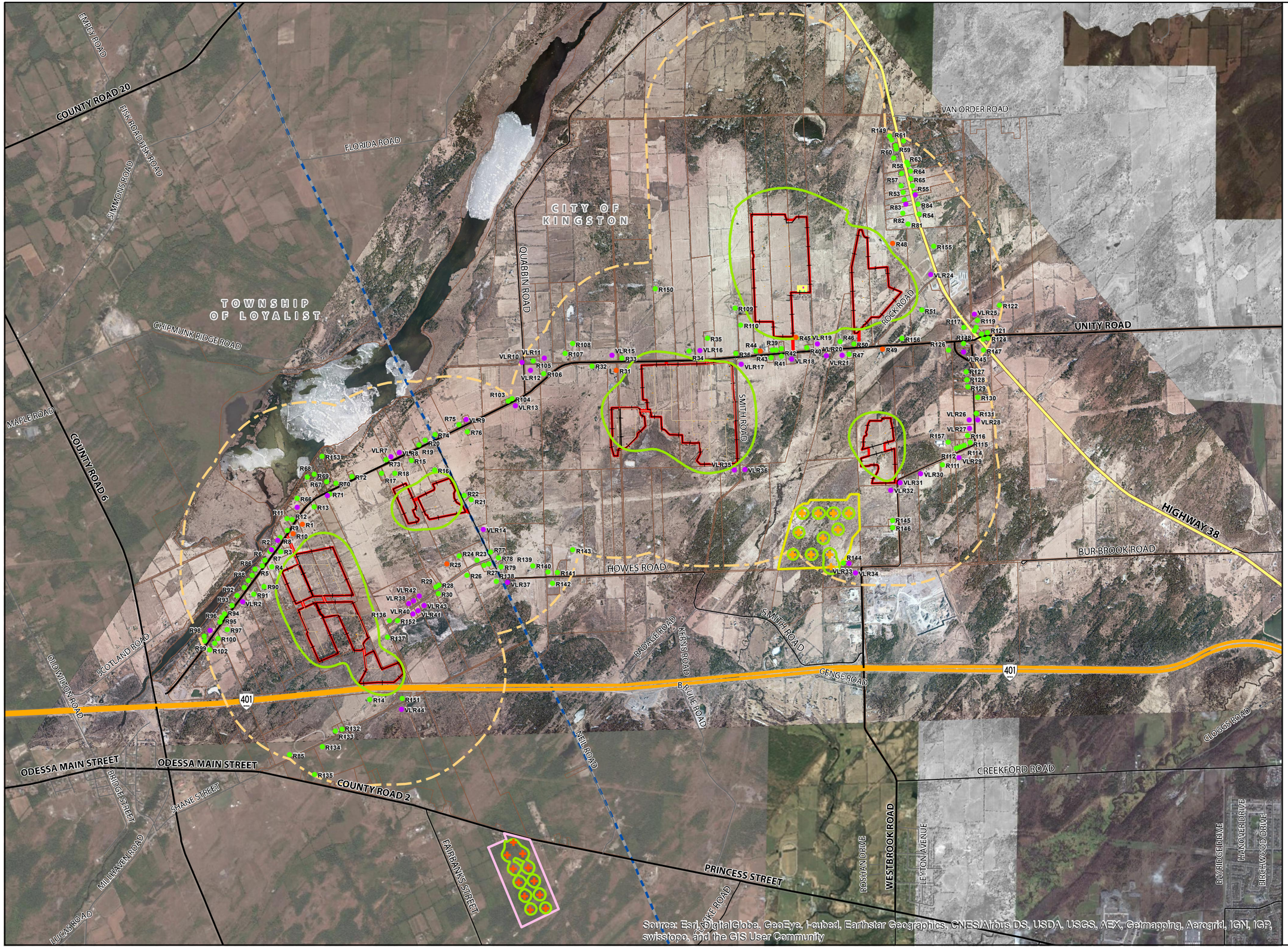

- Non-Participating Noise Receptor
- Participating Noise Receptor
- Vacant Lot Receptor
- Kingston Gardiner Hwy2 Noise Source
- SunE Westbrook Noise Source
- 40 dBA Noise Contour at 1.5 m Height
- Kingston Gardiner Hwy 2 South Solar Farm
- SunE Westbrook Solar Farm
- 1000 m Project Setback
- Fence
- Access Road
- DSTATCOM
- Medium Voltage Power Platform
- Substation Transformer, Noise Barrier, and Neutral Grounding Reactor
- Substation Yard
- Freeway
- Expressway / Highway
- Arterial Road
- Collector Road
- Local Road
- Project Boundary
- Parcel Boundary

N W E S

1:35,000

0 200 400 600 m

DILLON CONSULTING

Created By: GM
Checked By: JLP
Date Created: 9/17/2013
Date Modified: 5/21/2015
File Path:I:\GIS\138504 Kingston Solar REA Amendment\Mapping\Noise Assessment\

Sol-luce Kingston Solar PV Energy Project

Figure 7
Predicted Noise Level Contours at 4.5m Height

- Non-Participating Noise Receptor
- Participating Noise Receptor
- Vacant Lot Receptor
- Kingston Gardiner Hwy2 Noise Source
- SunE Westbrook Noise Source
- 40 dBA Noise Contour at 4.5 m Height
- Kingston Gardiner Hwy 2 South Solar Farm
- SunE Westbrook Solar Farm
- 1000 m Project Setback
- Fence
- Access Road
- DSTATCOM
- Medium Voltage Power Platform
- Substation Transformer, Noise Barrier, and Neutral Grounding Reactor
- Substation Yard
- Freeway
- Expressway / Highway
- Arterial Road
- Collector Road
- Local Road
- Project Boundary
- Parcel Boundary

N
W E
S

1:35,000

0 200 400 600 m

DILLON CONSULTING

Created By: GM
Checked By: JLP
Date Created: 9/17/2013
Date Modified: 5/21/2015
File Path:I:\GIS\138504 Kingston Solar REA Amendment\Mapping\Noise Assessment\

Source: Esri, DigitalGlobe, GeoEye, i-cubed, Earthstar Geographics, CNES/Airbus DS, USDA, USGS, AEX, Getmapping, Aerogrid, IGN, IGP, swisstopo, and the GIS User Community

Sol-luce Kingston Solar PV Energy Project

Figure 4
Predicted Noise Level Contours at 1.5m Height

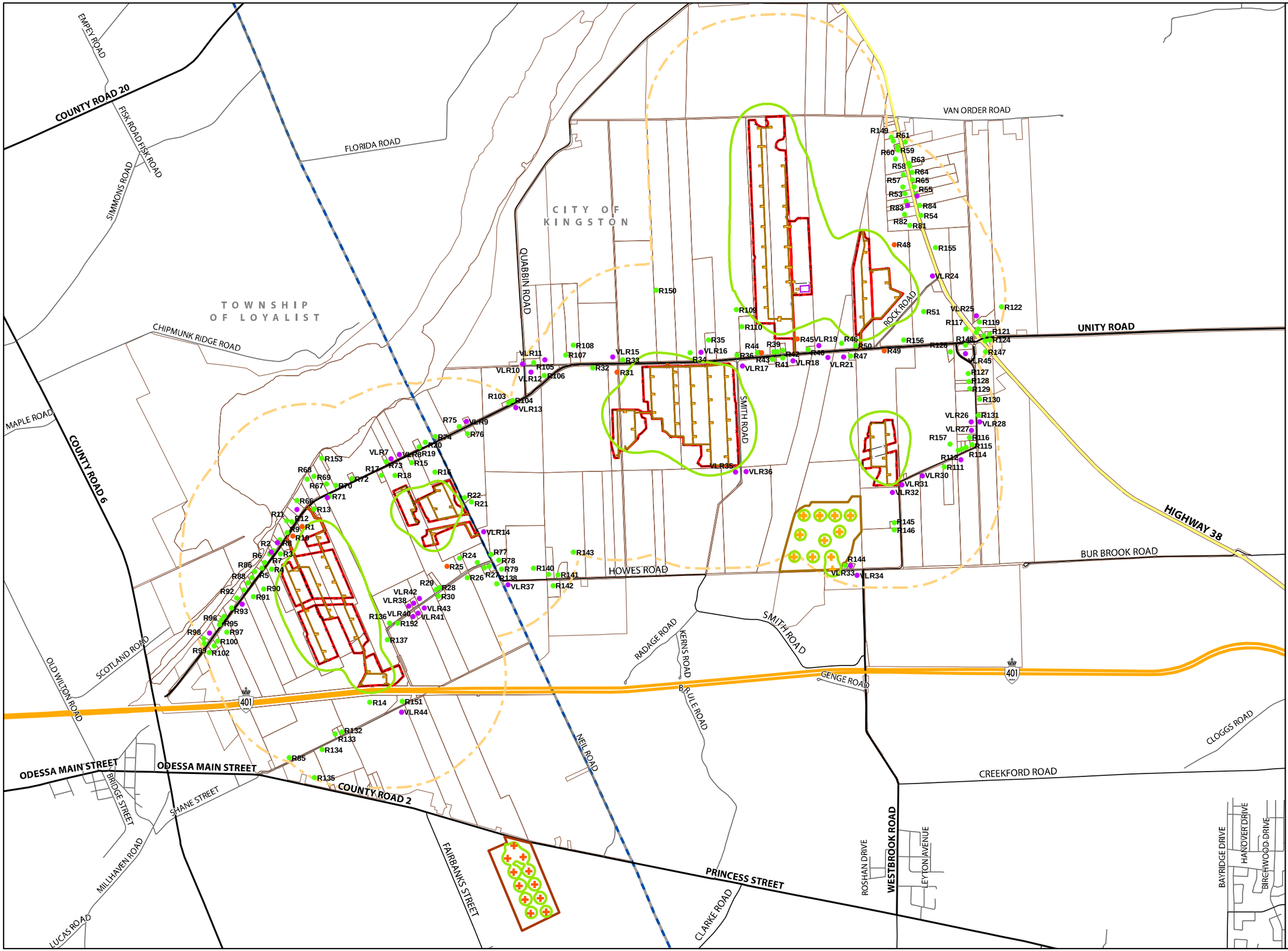

- Non-Participating Noise Receptor
- Participating Noise Receptor
- Vacant Lot Receptor
- Kingston Gardiner Hwy2 Noise Source
- SunE Westbrook Noise Source
- 40 dBA Noise Contour at 1.5 m Height
- Kingston Gardiner Hwy 2 South Solar Farm
- SunE Westbrook Solar Farm
- 1000 m Project Setback
- Freeway
- Expressway / Highway
- Arterial Road
- Collector Road
- Local Road
- Project Boundary
- Parcel Boundary

N W E S

1:35,000

0 200 400 600 m

DILLON CONSULTING

Created By: GM
Checked By: JLP
Date Created: 9/17/2013
Date Modified: 12/12/2013
File Path:I:\GIS\138504 Kingston Solar REA Amendment\Mapping\Noise Assessment\

Sol-luce Kingston Solar PV Energy Project

Figure 4
Predicted Noise Level Contours at 4.5m Height

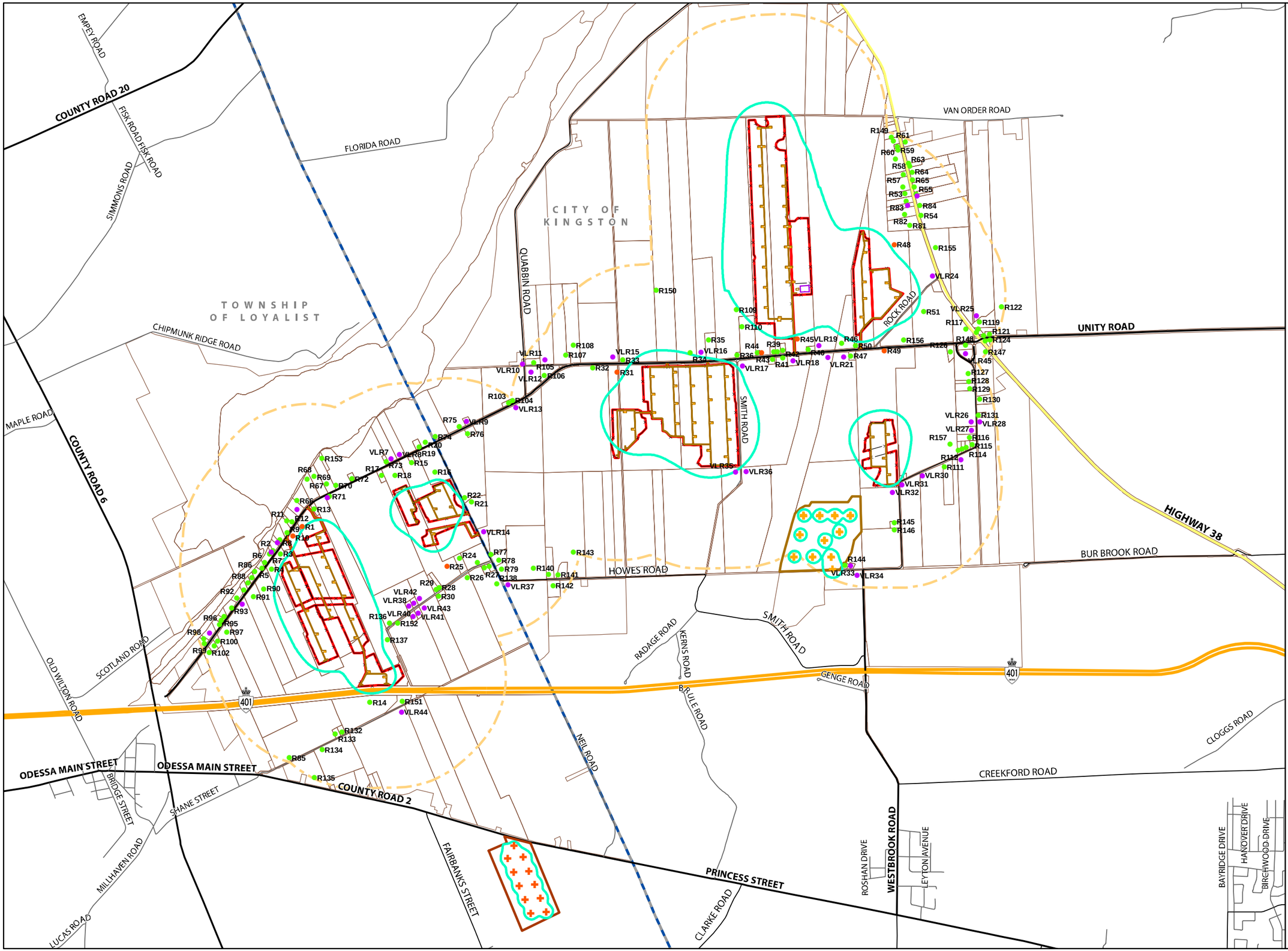

- Non-Participating Noise Receptor
- Participating Noise Receptor
- Vacant Lot Receptor
- Kingston Gardiner Hwy2 Noise Source
- SunE Westbrook Noise Source
- 40 dBA Noise Contour at 4.5 m Height
- Kingston Gardiner Hwy 2 South Solar Farm
- SunE Westbrook Solar Farm
- 1000 m Project Setback
- Freeway
- Expressway / Highway
- Arterial Road
- Collector Road
- Local Road
- Project Boundary
- Parcel Boundary

N W E S

1:35,000

0 200 400 600 m

DILLON CONSULTING

Created By: GM
Checked By: JLP
Date Created: 9/17/2013
Date Modified: 12/12/2013
File Path:I:\GIS\138504 Kingston Solar REA Amendment\Mapping\Noise Assessment\

Appendix C: Agency Correspondence

Bellamy, Megan <mbellamy@dillon.ca>

Notice of Technical Change Amendment - Kingston Solar

1 message

Bellamy, Megan <mbellamy@dillon.ca> 25 May 2015 at 10:48
To: sarah.paul@ontario.ca
Cc: David Oxtoby <doxtoby@carbonfree.com>, "Clairissa Myschowoda (MNR)" <clairissa.myschowoda@ontario.ca>, "Woeller, Kathy (MNR)" <kathy.woeller@ontario.ca>, andrea.williams@ontario.ca, "Keyvani, Mohsen (ENE)" <Mohsen.Keyvani@ontario.ca>, Amir Iravani <airavani@dillon.ca>, Michael Seasons <mseasons@dillon.ca>

Good Morning Sarah,

On behalf of Kingston Solar LP, please find attached as copy of the Notice of Amendment Letter for the Sol-Luce Kingston Solar PV Energy Project (REA #: 1016-97YHC7). A hard copy has been sent to you by courier as well. A Modifications Document providing further details on the proposed technical changes will follow shortly.

Thank you,
Megan

Megan Bellamy, M.R.E.M.
Associate
Dillon Consulting Limited
235 Yorkland Blvd Suite 800
Toronto, Ontario, M2J 4Y8
T - 416.229.4646 ext. 2423
F - 416.229.4692
MBellamy@dillon.ca
www.dillon.ca

Please consider the environment before printing this email

KSLP Technical Change Letter to MOECC_Final.pdf
127K

KINGSTON
SOLAR LP

Kingston Solar LP
181 University Ave Suite 300
Toronto, Ontario M5H 3M7
Canada

Ms. Sarah Paul
Director, Environmental Approvals Branch
Ministry of the Environment and Climate Change
2 St. Clair Avenue West, Floor 12A
Toronto, ON M4V 1L5

May 25, 2015

RE: SOL-LUCE KINGSTON SOLAR PV ENERGY PROJECT REA AMENDMENT LETTER

Dear Ms. Paul,

Kingston Solar LP is proposing to develop, construct and operate the Sol-Luce Kingston Solar PV Energy Project, with a nameplate capacity of 100 MW AC. A Renewable Energy Approval (REA) application was submitted for this project in September 2012. The REA application was subsequently amended during the MOECC's technical review to accommodate visual and landscape setback requirements from the City of Kingston and Loyalist Township. The application was re-submitted to the MOECC in January of 2014.

A REA was granted by the Ministry of the Environment (MOE) on April 2, 2014 (REA Number: **1016-97YHC7**).

This letter provides an overview of amendments proposed for the Sol-Luce Kingston Solar PV Energy Project, which we believe to be a technical change amendment under REA. We are seeking confirmation that the following potential amendments are considered technical changes by the MOECC. Upon confirmation, it is anticipated that a formal Modifications Document for the Project will be submitted for review to the MOECC. We understand the review and acceptance of this letter will take between 2-3 business days.

The project modifications incorporated in this amendment include: addition of two (2) DSTATCOM units and two (2) supporting fixed reactor banks, the addition of one (1) Neutral Ground Reactor (NGR), and changes to site layout, including the removal of 12 Medium Voltage Power Platforms (MVPP), for a total reduction from 78 MV Stations to 66. As a result of engineering improvements (specifically, the decrease in the number of MVPPs), the footprint of the project location has decreased. For clarity, all project components remain within the permitted REA boundary.

The REA application submitted to the MOECC in January of 2014 accommodated an over-build of approximately 120 MW AC, to allow for operational flexibility during detailed design. The final design for the construction of the Project reflects a layout with a total nameplate capacity of 100

MW AC, hence the reduction in the total number of MVPPs. The remaining MVPPs remain in the locations outlined in Schedule B of the REA.

Further consultation with the Ministry of Natural Resources and Forestry (MNRF) was not warranted for the proposed technical changes. As the final design for the project does not exceed the original project location boundary, no amendments to the Natural Heritage Assessment are required. The MNRF has been copied on this letter. Any correspondence received in response from the MNRF will be subsequently forwarded to the MOECC.

Similar to the above, the technical changes described in this report do not require amendments to either the Cultural Heritage or Archaeological Assessments completed and reviewed by the Ministry of Tourism, Culture and Sport (MTCS). The extent of the project location did not change and the project area was studied and commented on in the original REA submission. The locations of the project components, installation methods or equipment specifications would not change the results or information presented related to cultural heritage or archaeological resources for this project. The MTCS has been copied on this letter. Any correspondence received in response from the MTCS will be subsequently forwarded to the MOECC.

We trust the above contains sufficient information to confirm that the proposed changes to the above referenced REA are considered minor technical changes. If additional information or clarification is required, please do not hesitate to contact me.

Sincerely,

Mr. David Oxtoby

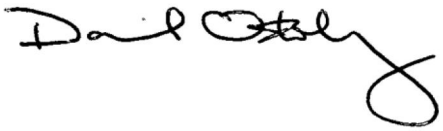

Kingston Solar LP
181 University Ave, Suite 300
Toronto, Ontario M5H 3M7
Phone: 416-975-8800 x601
Fax: 416-975-8900
doxtoby@carbonfree.com

Attachments: Figure 1: Comparison of Project Component Layout

Copies to: Mohsen Keyvani, Director, Section 47.5, *Environmental Protection Act* (MOECC)
Kathy Woeller, Regional Land Use Planning Supervisor (MNRF)
Clairissa Myschowoda, Renewable Energy Coordinator (MNRF)
Andrea Williams, Archaeology Review Officer (MTCS)

Sol-luce Kingston Solar PV Energy Project

Figure 1
Comparison of Preliminary and Final Project Layouts

SIMMONS ROAD
FLORIDA ROAD
VAN ORDER ROAD
HIGHWAY 38
TOWNSHIP OF LOYALIST
CHIPMUNK RIDGE ROAD
CITY OF KINGSTON
QUABBIN ROAD
ROCK ROAD
UNITY ROAD
RAYMOND ROAD
SMITH ROAD
WESTBROOK ROAD
COUNTY ROAD 19
HEGADORN ROAD
HOWES ROAD
BUR BROOK ROAD WEST
RADAGE ROAD
KERNS ROAD
SMITH ROAD
WESTBROOK ROAD
GENGE ROAD
401
SHANE STREET
NEILROAD
BRULE ROAD

Freeway
Expressway / Highway
Arterial Road
Collector Road
Local Road
Project Location
Municipal Boundary

Final Project Components

Fence
Access Road
Solar Panel
DSTATCOM
Medium Voltage Power Platform
Substation Transformer, Noise Barrier, and Neutral Grounding Reactor
Substation Yard

Preliminary Project Components

Access Roads
Fence
Inverters
SolarPanels
Preliminary Project Location

N
W E
S
1:25,000
0 200 400 600 m

DILLON CONSULTING

Created By: GM
Checked By: JLP
Date Created: 9/17/2013
Date Modified: 3/13/2015
File Path:I:\GIS\138504 Kingston Solar REA Amendment\Mapping\

Ministry of the Environment and Climate Change

Environmental Approvals Branch

135 St. Clair Avenue West
1st Floor
Toronto ON M4V 1P5
Tel.: 416 314-8001
Fax: 416 314-8452

Ministère de l'Environnement et de l'Action en matière de changement climatique

Direction des autorisations environnementales

135, avenue St. Clair Ouest
Rez-de-chaussée
Toronto ON M4V 1P5
Tél : 416 314-8001
Téléc. : 416 314-8452

Ontario

May 27, 2015

David Oxtoby
Kingston Solar LP
181 University Avenue, Suite 300
Toronto, ON M5H 3M7

Dear Mr. Oxtoby,

The Ministry of the Environment and Climate Change (MOECC) is in receipt of Kingston Solar LP's May 25, 2015 letter to the Director with respect to proposed amendments to Renewable Energy Approval (REA) No.: 1016-97YHC7 for the Sol-Luce Kingston Solar PV Energy Project.

In reviewing the May 25, 2015 letter, the MOECC referred to Chapter 10, "Making Changes to Renewable Energy Approval (REA) Projects" in the *Technical Guide to Renewable Energy Approvals*, in order to assist in determining the type of change and next steps.

The MOECC understands that the proposed changes consist of the addition of two DSTATCOM units and two supporting fixed reactor banks; the addition of one neutral ground reactor; and changes to the site layout, including the removal of twelve Medium Voltage Power Platforms (MVPP's). The letter indicates that the footprint of the project location has decreased and all components remain within the permitted boundary.

The letter also states that further consultation with the Ministry of Natural Resources and Forestry (MNRF) and the Ministry of Tourism, Culture and Sport (MTCS) are not warranted for the proposed changes. Based on the brief description of the proposed changes in the May 25 2015 letter, the MOECC concurs that comments from MNRF and MTCS are likely not required; however, if any comments are provided by MNRF and MTCS subsequent to this letter that may require additional study(ies) by Kingston Solar LP, it may result in the MOECC adjusting the determination of the type of change. Please ensure you continue to copy MNRF and MTCS on any further correspondence on this project going forward.

The proposed changes as described in the May 25, 2015 letter do not have the potential to result in increased environmental effects that are significant. Therefore, the MOECC agrees with Kingston Solar LP's determination that the proposed changes are technical changes.

Proponents proposing technical changes should provide a notice of project change(s) in the form approved by the Director. The notice of proposed change(s) must include the following information:

- Renewable Energy Approval number;
- IESO Reference Number;
- Name and contact information of the applicant;

- A brief description of the project;
- A map identifying the project location;
- A description of the proposed change(s) and the rationale for the change(s); and
- A description of where information and documentation regarding the proposed change(s) can be located.

The notice must be published and circulated in accordance with subsection 16.0.1(3)(1) or 32.3(1)(1) and 32.3(1)(2), as applicable, of O. Reg. 359/09.

This notification constitutes the minimum requirement, and proponents are encouraged to give copies of the notice to other potentially interested persons or groups, including those that attended public meetings or submitted comments regarding the project. Please also ensure that you provide the MOECC with a copy of the notice, and information on how it was distributed, and to whom.

Kingston Solar LP must make all revised reports/studies in respect of the proposed change(s) and any new reports/studies (i.e., a Modification Document) prepared in respect of the proposed change(s) available to the public on your website.

Once the notification requirements have been completed, you may submit a formal REA amendment application to the MOECC. When the MOECC receives the REA amendment application (including all revised documents) we will screen the application to ensure that it includes all of the information the MOECC requires to process the amendment.

The MOECC has also noticed that the address for Kingston Solar LP as referenced in the May 25, 2015 letter is different than that issued in the Approval. As per Condition R1 of the Approval, the Company must notify the Director within 30 days of the occurrence of an address change. If the address of the Company has changed, please include this as part of your REA Amendment Application.

Finally, please ensure that you submit both a hard copy and an electronic copy of your application, along with the $300 application fee when submitting.

When the MOECC has made a decision to either approve or not approve the amendment, an Information Notice will be posted on the Environmental Registry (EBR) to inform interested stakeholders.

Yours sincerely,

Sarah Raetsen

Sarah Raetsen
Senior Program Support Coordinator
MOECC, Environmental Approvals Branch

cc. Mohsen Keyvani, Supervisor – Team 5, MOECC, Environmental Approvals Branch
Jim Beal, Renewable Energy Coordinator, MNRF
Andrea Williams, Archaeology Review Officer, MTCS

Appendix D: Revised Noise Study Report

KINGSTON SOLAR LP
Sol-Luce Kingston Solar PV Energy Project
REVISED NOISE STUDY REPORT

Prepared by Dillon Consulting

MAY 2015

Table of Contents

Page

1. Introduction 1
2. The Proponent....2
3. Overview of Noise Study....5
   - 3.1 Summary of Acoustic Environment & Applicable Noise Limits....5
   - 3.2 Statement of Compliance....5
4. Facility Description 6
   - 4.1 Operating Hours of Facility....9
   - 4.2 Site Plan Identifying All Significant Sources 9
5. Noise Source Summary....11
   - 5.1 Noise Source Summary Table....11
   - 5.2 Noise Source Specifications....15
   - 5.3 Source Power/Capacity Ratings....16
   - 5.4 Noise Control Description & Acoustical Specifications....16
6. Point of Reception Noise Impact Analysis 20
   - 6.1 Land Use Zoning Plan 20
   - 6.2 Scaled Area Location Plan 20
   - 6.3 Points of Reception (PORs) List and Description 20
7. Procedure for Assessing Noise Impacts at Each POR 31
   - 7.1 Method Selection Factors 31
   - 7.2 Ambient Determination 31
   - 7.3 Parameter/Assumptions for Calculations 31
   - 7.4 Point of Reception Noise Impact Tables 33
8. Acoustic Assessment Summary....41
   - 8.1 Acoustic Assessment Summary Table....41
   - 8.2 Rationale for Selecting Applicable Noise Guideline Limits 52
     - 8.2.1 Acoustic Environment....52
     - 8.2.2 Predictable Worst Case Operating Scenario....52
9. Conclusion....53
10. Closure 54
11. References....55

List of Figures

Figure 1: General Location of Sol-Luce Kingston Solar PV Energy Project in Ontario 3
Figure 2: Project Location.....4
Figure 3: Scaled Area Location Plan 10
Figure 4: Substation Transformer Barrier Wall Isometric View 18
Figure 5: Transformer Noise Barrier Wall Site Plan Drawing 19
Figure 6: Predicted Sound Level Contours at 1.5m Height 39
Figure 7: Predicted Sound Level Contours at 4.5m Height 40

List of Tables

Table 1: Summary of Noise Source Types 8
Table 2: Noise Source Summary 11
Table 3: Noise Attenuation Data for Acoustic Louver.....17
Table 4: Substation Transformers Barrier Wall Information.....18
Table 5: Noise Sensitive Receptors – Coordinates 21
Table 6: Point of Reception Beam Noise Impact Tables – Partial Levels (dBA).....33
Table 7: Acoustic Assessment Summary TablePoint 41
Table 8: NPC-300 – Class 3 Area Exclusionary Limits.....52

Appendices

Appendix A: Manufacturer's Equipment Specifications
Appendix B: CADNA Noise Modelling and Calculations

1. Introduction

Kingston Solar LP is developing a 100-megawatt (MWac) ground-mount solar photovoltaic (PV) project to be known as the Sol-Luce Kingston Solar PV Energy Project. The proposed project is generally bounded by Highway 38 to the east, Mud Lake Road/County Road 19 to the west, Quabbin Road to the north, and Highway 401 to the south. The proposed project falls within two municipalities; the City of Kingston to the east and Loyalist Township to the west. A Renewable Energy Approval (REA) application was submitted for this project on September 18, 2012 and received the 'deemed complete' status by the Ministry of Environment and Climate Change (MOECC) on February 12, 2013. The project was undergoing technical review by the MOECC when the clock was stopped to accommodate a Major Design Change and technical changes to the project. The REA application was resubmitted to the MOECC in January of 2014, and modifications were made to the Noise Study Report based on feedback from the Ministry in March 2014. A Renewable Energy Approval [REA No. **1016-97YHC7**] was issued by the MOECC on April 2, 2014.

This Revised Noise Study Report (NSR) is based on the final design of the Project and includes the final number and locations of the Medium Voltage (MV) inverter stations, as well as addition of two (2) DSTATCOMs with Fixed Reactor Banks (FRB) and one (1) Neutral Grounding Reactor (NGR). The previous version of the NSR was based on an overbuilt layout with 78 MV Stations. In this NSR, the final design number of MV stations (i.e., 66 MV stations) have been included in the assessment. As part of assessing impact on the grid, Hydro One Networks Inc. (HONI) reviews generation projects and grid connections points and requires installation of technologies that would maintain high MVAR output at depressed system voltages and/or filter out spikes in current. For this project, it was determined that DSTATCOM units, supported by FRBs would be required. This NSR concludes that with the implementation of the noise mitigation measures presented in this report, the Sol-Luce Kingston Solar PV Energy Project will be in compliance with MOECC Publication NPC-300 *Environmental Noise Guideline's* Class 3 Areas (Rural), for all sources assessed in this study.

2. The Proponent

Kingston Solar LP is managing and coordinating the approvals process for the Sol-Luce Kingston Solar PV Energy Project. Should there be any questions about the proposed technical changes for this Project, please contact:

Full Name of Company:	*Kingston Solar LP*
Address:	*181 University Avenue, Suite 300, Toronto, Ontario M5H 3M7*
Telephone:	*(416) 975-8800, Ext. 601 (Office)* *1-(855) 359-2342*
Prime Contact:	*David Oxtoby*
Project Website:	*www.samsungrenewableenergy.ca/kingston*
Email:	*doxtoby@carbonfree.com*

Dillon Consulting Limited (Dillon) is the consultant responsible for the preparation of the Modifications Document, including this revised Noise Study Report. The contact at Dillon is:

Full Name of Company:	*Dillon Consulting Limited*
Address:	*235 Yorkland Boulevard, Suite 800, Toronto, ON M2J 4Y8*
Telephone:	*(416) 229-4646, Ext. 2320*
Prime Contact:	*Amir A. Iravani*
Project Website:	*www.dillon.ca*
Email:	*airavani@dillon.ca*

Figure 1: General Location of Sol-Luce Kingston Solar PV Energy Project in Ontario

Sol-luce Kingston Solar PV Energy Project

Figure 2
Project Location

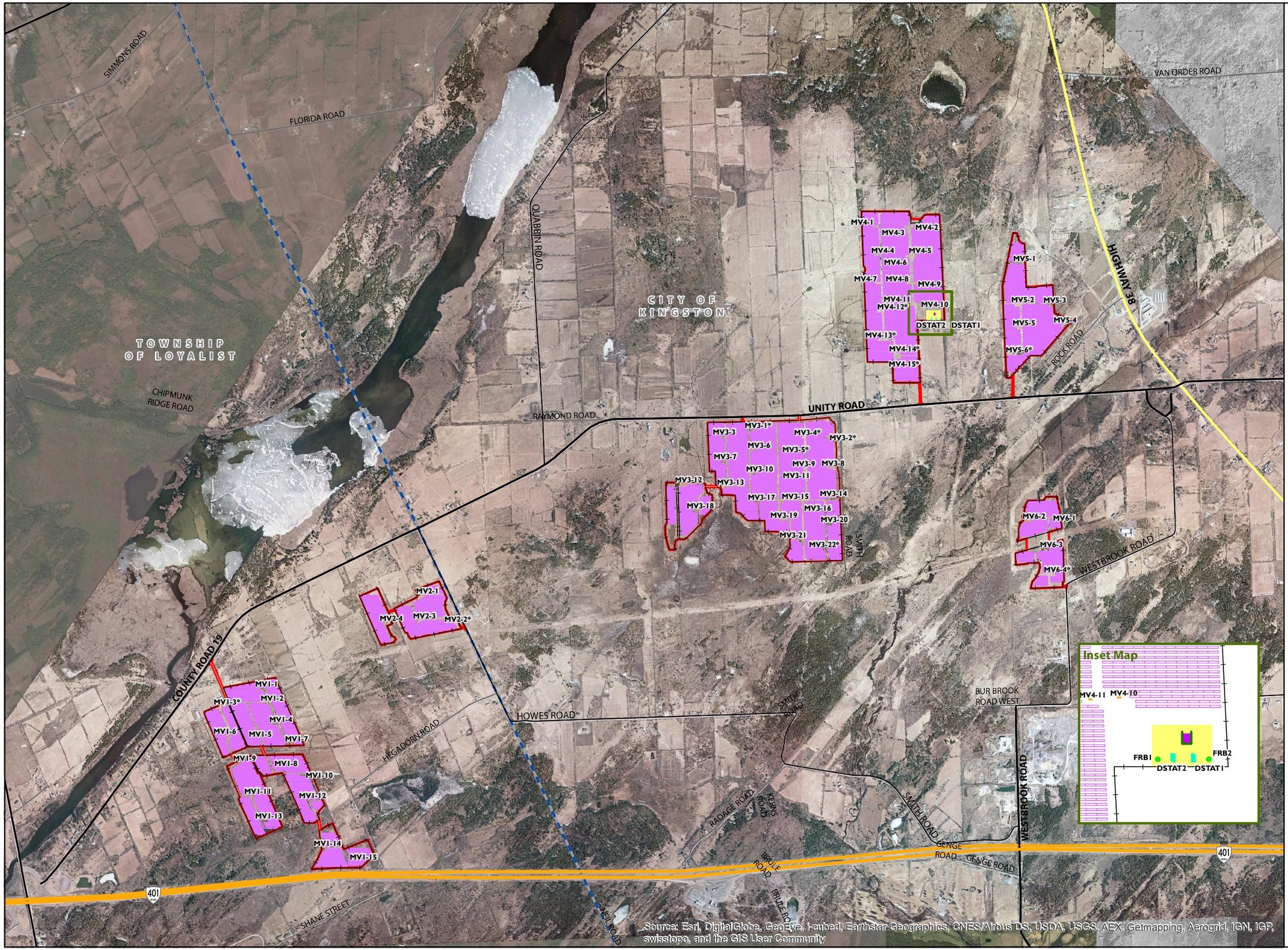

Freeway
Expressway / Highway
Arterial Road
Collector Road
Local Road
Project Location
Municipal Boundary

Project Components

Fixed Reactor Bank
Fence
Access Road
Noise Barrier
Solar Panel
DSTATCOM
Medium Voltage Power Platform (* indicates MV Station is equipped with an acoustic louver)
Substation Transformer, Noise Barrier, and Neutral Grounding Reactor
Substation Yard

N
W E
S

1:25,000

0 200 400 600 m

DILLON CONSULTING

Created By: GM
Checked By: JLP
Date Created: 9/17/2013
Date Modified: 5/25/2015
File Path:I:\GIS\138504 Kingston Solar REA Amendment\Mapping\Noise Assessment\Figure 2 Project Locaiton.mxd

Source: Esri, DigitalGlobe, GeoEye, Earthstar Geographics, CNES/Airbus DS, USDA, USGS, AEX, Getmapping, Aerogrid, IGN, IGP, swisstopo, and the GIS User Community

3. Overview of Noise Study

3.1 Summary of Acoustic Environment & Applicable Noise Limits

The background ambient noise, exclusive of that generated by the Sol-Luce Kingston Solar PV Energy Project, can be characterized as having qualities of a Class 3 (Rural) Area, as described in the Ontario Ministry of the Environment Noise Pollution Control Publication NPC-232 *Sound Level Limits for Stationary Sources in Class 3 Areas (Rural).* The primary contributor to the background sound during the daytime and nighttime periods are sounds of nature and occasional vehicle traffic on nearby roadways.

The NPC-232 Class 3 Area exclusion limits of 45 dBA for daytime (07:00 – 19:00), 40 dBA for evening (19:00 to 23:00) and 40 dBA for nighttime (23:00 to 07:00) were selected to represent the performance limits at noise sensitive receptors [note: for the purposes of this report, since the limits for evening and nighttime are the same, the nighttime is defined as 19:00 to 07:00].

Due to the proximity of two neighbouring proposed solar facilities (SunE Westbrook Solar Farm and Kingston Gardiner Hwy 2 South), the noise sources for all three proposed facilities are modelled together to address cumulative potential noise impacts.

3.2 Statement of Compliance

With the implementation of the noise mitigation measures indicated in this report (Section 5.4), the Sol-Luce Kingston Solar PV Energy Project will comply with the daytime and nighttime noise criteria as defined in the Ontario Ministry of the Environment and Climate Change Noise Pollution Control Publication NPC-300, for Class 3 Areas (Rural), for all sources assessed in this study.

4. Facility Description

The Sol-Luce Kingston Solar PV Energy Project will consist of approximately 465,000 solar PV modules. These will be contained in a series of fixed racking systems which will be supported by steel uprights on mounted driven steel piles, steel helical screw piles or cast-in-drilled-hole foundations, depending on the soil conditions within the project location. Solar PV panels (approximately 300 watts each) will be mounted on the racks and the panels and racks will be aligned in rows approximately 5 - 7 metres apart.

MV Stations will be installed to convert DC to AC current and boost the voltage for connection to the grid. The components that emit noise are as follows:

Substation Transformer

One (1) 34.5/240 kV, 110 MVA (max) substation transformer will be installed to step up the current for connection with the grid. The substation transformer will be manufactured by ABB Corporation or equivalent. The transformer specifications, including National Electrical Manufacturer's Association (NEMA) noise rating and dimensions are provided in **Appendix A**. The octave spectrum for the substation transformer was calculated using IEEE standard, accounting for 0.3m increase in dimensions. The transformer is oversized and can handle up to 110 MVA (ONAF). Noise spectrum calculation is presented in **Appendix A**. The sound power calculation includes a 5 dB tonal penalty across the octave band.

Medium Voltage (MV) Stations

For the Sol-Luce Kingston Solar PV Energy project, there are 66 MV stations, 60 of which consist of two (2) 800 kW inverters and one (1) 1.6 MVA inverter transformer and six (6) of them consist of one (1) 800 kW inverter and one (1) 0.8 MVA inverter transformer (see **Appendix A**).

Inverters

A total of 126 inverters (to convert DC to AC current) will be used at the project location. Each inverter will have its own cabinet-type enclosure and will be mounted on a concrete platform inside a larger enclosure. The inverters will be SMA's Sunny Central model SC800CP-US or equivalent, rated for up to 800 kVA of continuous power output. The manufacturer's noise data for the inverter, provided in 1/3 octave band, was used for this assessment (see **Appendix A**).

Inverter Transformers

A total of 66 inverter transformers will be installed beside the inverters to boost the AC voltage for connection to the grid. Sixty (60) of the inverter transformers will have a power rating of up to 1.6 MVA for each inverter station. Six (6) inverter transformers will have a power rating of up to 0.8 MVA. The inverter transformers will be located on concrete platforms next to the inverter enclosures.

DSTATCOM Inverter System

The Sol-Luce Solar facility will also include two (2) Distributed STATic COMpensator (DSTATCOM) inverter systems, which will maintain high MVAR output at depressed system voltages. Since the DSTATCOM can maintain constant current over its operating voltage range, the MVAR output of the system is linearly proportional to the system voltage. The DSTATCOM also has a short-term transient current rating, which allows it to provide even more MVAR to assist in the recovery of depressed voltages.

One of the DSTATCOM inverter systems includes eight (8) inverters and the other one includes seven (7) inverters, all of which are mounted in a self-standing frame and are enclosed in steel containers (DSTATCOM container). Each inverter has its own controls, circuit breaker and a small AC filter used to eliminate any high-frequency harmonic voltages in the output of the PWM waveform coming from the inverter. Each inverter is connected to a 2.5 MVA pad-mounted transformer (a total of four transformers per DSTATCOM inverter system). One of the DSTATCOM systems has a power rating of 10 mVAR and the other 8.75 mVAR. The noise data for the DSTATCOM inverter system was obtained from HGC Engineering report, dated October 21, 2013. A copy of the report is provided in **Appendix A**. Conservatively, noise data for the higher powered system (i.e., 10 mVAR) was used for both DSTATCOM systems. The two DSTATCOM units are installed within the substation yard (see **Figure 2**) and will be supported by two (2) Fixed Reactor Banks (FRBs). The function of the FRB is to filter out spikes of current that may exist between power generation and load (the grid). The FRB consists of three isolated inductors, one for each of the three line phases. The noise for the FRB was calculated using manufacturer specified data and calculation of spectrum similar to that of a transformer. Manufacturer data and calculations are presented in **Appendix A**.

Neutral Grounding Reactor (NGR)

An NGR will be an inductive element in the electrical circuit of the project. Due to natural behavior of an inductor, NGRs are used for limiting the maximum fault current to a value which will not damage the equipment in the power system, yet allow sufficient flow of fault current to operate protective relays to clear the fault. For this project, the NGR consists of a single phase (single coil) reactor that will be mounted near the substation transformer, within the substation yard (see **Figure 2**). The noise data from the manufacturer indicates a tonal noise with a peak at 125 Hz (see **Appendix A**).

Figure 2 identifies the MV stations and the substation yard. The octave spectra and the overall Sound Power Levels (PWLs) for all on-site noise sources are presented in **Table 1**.

Table 1: Summary of Noise Source Types

Source		Octave Spectrum (dB)									Overall	
Type	Count	31.5	63	125	250	500	1000	2000	4000	8000	A	lin
Inverter	126	96.2	89.1	86.7	88.2	88.3	82.7	86.4	95	84.4	97.3	100.4
0.8 MVA Inverter Transformer	6	66.2	72.2	74.2	69.2	69.2	63.2	58.2	53.2	46.2	69.6	78.2
1.6 MVA Inverter Transformer	60	65.3	71.3	73.3	68.3	68.3	62.3	57.3	52.3	45.3	68.7	77.3
Substation Transformer	1	108.5	114.5	116.5	111.5	111.5	105.5	100.5	95.5	88.5	111.9	120.5
DSTATCOM 10 MVAR	2		88.0	106.0	90.0	86.0	75.0	69.0	79.0	69	91.6	106.2
Fixed Reactor Bank (FRB)	2	86.4	92.4	94.4	89.4	89.4	83.4	78.4	73.4	66.4	89.8	98.4
Neutral Grounding Reactor (NGR)	1		63.3	73.4	40.6						57.4	73.8

Note:
A: A-weighted, Lin: Linear
The manufacturer-specified A-weighted spectra were converted to linear spectra and presented in this table.
The 5 dB tonal penalty is included in the sound power levels for all the noise sources presented above (except for DSTATCOM and NGR). For these sources the 5 dB penalty is added in the model.
The sound power spectrum for inverter includes cooling fan.

4.1 Operating Hours of Facility

The solar facility is designed to operate 365 days per year. The solar panels are only able to generate electricity when the sun is shining. Similarly, the inverters only operate when the solar panels are generating electricity. Furthermore, the inverters infrequently operate at full power as full power output requires a clear sky when the sun is at peak intensity. For this assessment the inverters and transformers were conservatively assumed to be operational at full power (i.e., maximum noise emission) during both daytime (07:00 to 19:00) and nighttime (19:00 to 07:00) hours [note: nighttime power generation occurs after 19:00 during the summer].

4.2 Site Plan Identifying All Significant Sources

Figure 3 illustrates the Sol-Luce Kingston Solar PV Energy Project location and identifies 'Potential Noise Receptors' surrounding the project location within 1000 m. In addition, as per *Ontario Regulation 359/09* and guidance documents from the MOECC, 'Assumed Future Noise Receptors' must be identified on vacant lots measuring at least 100 metres by 100 metres. 45 vacant lots have been identified within 1 kilometre of the project location and are presented in **Figure 3**. In addition to the 45 vacant lot receptors for the Sol Luce project, 21 vacant lot receptors for Westbrook solar project, and 14 vacant lot receptors for Gardiner Hwy 2 solar project were included in this assessment.

Sol-luce Kingston Solar PV Energy Project

Figure 3
Scaled Area Location Plan

- Non-Participating Noise Receptor
- Participating Noise Receptor
- Vacant Lot Receptor
- Kingston Gardiner Hwy2 Noise Source
- SunE Westbrook Noise Source
- Kingston Gardiner Hwy 2 South Solar Farm
- SunE Westbrook Solar Farm
- 1000 m Project Setback
- Fence
- Access Road
- DSTATCOM
- Medium Voltage Power Platform
- Substation Transformer, Noise Barrier, and Neutral Grounding Reactor
- Substation Yard
- Project Boundary
- Municipality
- Parcel Boundary

N
W E
S

1:35,000

0 200 400 600 m

DILLON CONSULTING

Created By: GM
Checked By: JLP
Date Created: 9/17/2013
Date Modified: 5/21/2015
File Path:I:\GIS\138504 Kingston Solar REA Amendment\Mapping\Noise Assessment\

Source: Esri, DigitalGlobe, GeoEye, i-cubed, Earthstar Geographics, CNES/Airbus DS, USDA, USGS, AEX, Getmapping, Aerogrid, IGN, IGP, swisstopo, and the GIS User Community

5. Noise Source Summary

5.1 Noise Source Summary Table

The significant noise sources identified in this noise study are listed in **Table 2**. This table contains sound power levels, source location, sound characteristics, and any noise control measures that already exist as a part of the original equipment. Noise sources from the neighbouring solar projects (located within 2 km of the Sol-Luce Kingston Solar PV Energy Project), SunE Westbrook Solar Farm and the Kingston Gardiner Hwy 2 South project have also been included in this noise study.

Table 2: Noise Source Summary

Noise Source ID	PWL (dBA)	Source Location[1] (I or O)	Sound Characteristics[2] (S,Q,I,B,T,C)	Noise Control Measures[3] (S,A,B,L,E,O,U)	UTM		Height
					X (m)	Y (m)	(m)
S_Substation	112.1	O	T	B	369426	4908792	3.5
DSAT1	96.6	O	T	U	369379	4908757	2.5
DSAT2	96.6	O	T	U	369401	4908756	2.5
NGR	62.4	O	T	B	369421	4908788	5.0
FRB1	89.8	O	T	U	369378	4908755	6.0
FRB2	89.8	O	T	U	369464	4908755	6.0
MV1-1	100.3	O	T	U	364715	4906166	2.0
MV1-2	100.3	O	T	U	364753	4906063	2.0
MV1-3	89.1	O	T	S	364440	4906039	2.0
MV1-4	100.3	O	T	U	364815	4905918	2.0
MV1-5	100.3	O	T	U	364671	4905892	2.0
MV1-6	100.3	O	T	U	364477	4905835	2.0
MV1-7	97.3	O	T	U	364925	4905782	2.0
MV1-8	100.3	O	T	U	364788	4905647	2.0
MV1-9	100.3	O	T	U	364561	4905646	2.0
MV1-10	97.3	O	T	U	365004	4905564	2.0
MV1-11	100.3	O	T	U	364655	4905414	2.0
MV1-12	100.3	O	T	U	365038	4905386	2.0
MV1-13	97.3	O	T	U	364731	4905241	2.0
MV1-14	97.3	O	T	U	365163	4905049	2.0
MV1-15	100.3	O	T	U	365315	4904994	2.0
MV2-1	97.3	O	T	U	365842	4906816	2.0
MV2-2	89.1	O	T	S	365977	4906654	2.0
MV2-3	100.3	O	T	U	365820	4906641	2.0
MV2-4	100.3	O	T	U	365586	4906624	2.0

Noise Source ID	PWL (dBA)	Source Location[1] (I or O)	Sound Characteristics[2] (S,Q,I,B,T,C)	Noise Control Measures[3] (S,A,B,L,E,O,U)	UTM		Height
					X (m)	Y (m)	(m)
MV3-1	89.1	O	T	S	368156	4907976	2.0
MV3-2	89.1	O	T	S	368671	4907928	2.0
MV3-3	100.3	O	T	U	367939	4907927	2.0
MV3-4	89.1	O	T	S	368502	4907925	2.0
MV3-5	89.1	O	T	S	368340	4907843	2.0
MV3-6	100.3	O	T	U	368162	4907834	2.0
MV3-7	100.3	O	T	U	367945	4907754	2.0
MV3-8	100.3	O	T	U	368680	4907712	2.0
MV3-9	100.3	O	T	U	368512	4907703	2.0
MV3-10	100.3	O	T	U	368167	4907669	2.0
MV3-11	100.3	O	T	U	368346	4907662	2.0
MV3-12	100.3	O	T	U	367668	4907594	2.0
MV3-13	100.3	O	T	U	367963	4907577	2.0
MV3-14	100.3	O	T	U	368684	4907498	2.0
MV3-15	100.3	O	T	U	368357	4907477	2.0
MV3-16	100.3	O	T	U	368514	4907475	2.0
MV3-17	100.3	O	T	U	368178	4907472	2.0
MV3-18	100.3	O	T	U	367752	4907412	2.0
MV3-19	100.3	O	T	U	368357	4907347	2.0
MV3-20	100.3	O	T	U	368689	4907317	2.0
MV3-21	100.3	O	T	U	368478	4907206	2.0
MV3-22	89.1	O	T	S	368656	4907142	2.0
MV4-1	100.3	O	T	U	369011	4909397	2.0
MV4-2	100.3	O	T	U	369272	4909397	2.0
MV4-3	100.3	O	T	U	369229	4909397	2.0
MV4-4	100.3	O	T	U	369027	4909199	2.0
MV4-5	100.3	O	T	U	369289	4909199	2.0
MV4-6	100.3	O	T	U	369243	4909192	2.0
MV4-7	100.3	O	T	U	369035	4909001	2.0
MV4-8	100.3	O	T	U	369256	4909001	2.0
MV4-9	100.3	O	T	U	369289	4909001	2.0
MV4-10	100.3	O	T	U	369312	4908858	2.0
MV4-11	100.3	O	T	U	369264	4908855	2.0
MV4-12	89.1	O	T	S	369043	4908803	2.0
MV4-13	89.1	O	T	S	369051	4908605	2.0
MV4-14	89.1	O	T	S	369176	4908507	2.0
MV4-15	89.1	O	T	S	369176	4908481	2.0
MV5-1	100.3	O	T	U	370020	4909142	2.0
MV5-2	100.3	O	T	U	370006	4908853	2.0
MV5-3	100.3	O	T	U	370231	4908851	2.0
MV5-4	100.3	O	T	U	370324	4908707	2.0

Noise Source ID	PWL (dBA)	Source Location[1] (I or O)	Sound Characteristics[2] (S,Q,I,B,T,C)	Noise Control Measures[3] (S,A,B,L,E,O,U)	UTM		Height
					X (m)	Y (m)	(m)
MV5-5	100.3	O	T	U	370015	4908690	2.0
MV5-6	89.1	O	T	S	369982	4908507	2.0
MV6-1	97.3	O	T	U	370235	4907364	2.0
MV6-2	100.3	O	T	U	370085	4907339	2.0
MV6-3	100.3	O	T	U	370207	4907140	2.0
MV6-4	86.1	O	T	S	370250	4906966	2.0
MV1-1 T	68.7	O	T	U	364721	4906166	2.0
MV1-2 T	68.7	O	T	U	364759	4906063	2.0
MV1-3 T	68.7	O	T	U	364435	4906039	2.0
MV1-4 T	68.7	O	T	U	364821	4905918	2.0
MV1-5 T	68.7	O	T	U	364676	4905892	2.0
MV1-6 T	68.7	O	T	U	364482	4905835	2.0
MV1-7 T	69.6	O	T	U	364919	4905782	2.0
MV1-8 T	68.7	O	T	U	364782	4905647	2.0
MV1-9 T	68.7	O	T	U	364555	4905646	2.0
MV1-10 T	69.6	O	T	U	365010	4905564	2.0
MV1-11 T	68.7	O	T	U	364649	4905414	2.0
MV1-12 T	68.7	O	T	U	365044	4905386	2.0
MV1-13 T	69.6	O	T	U	364725	4905241	2.0
MV1-14 T	69.6	O	T	U	365157	4905049	2.0
MV1-15 T	68.7	O	T	U	365309	4904994	2.0
MV2-1 T	69.6	O	T	U	365836	4906816	2.0
MV2-2 T	68.7	O	T	U	365982	4906654	2.0
MV2-3 T	68.7	O	T	U	365814	4906641	2.0
MV2-4 T	68.7	O	T	U	365590	4906628	2.0
MV3-1 T	68.7	O	T	U	368150	4907976	2.0
MV3-2 T	68.7	O	T	U	368677	4907928	2.0
MV3-3 T	68.7	O	T	U	367944	4907927	2.0
MV3-4 T	68.7	O	T	U	368507	4907925	2.0
MV3-5 T	68.7	O	T	U	368335	4907843	2.0
MV3-6 T	68.7	O	T	U	368156	4907834	2.0
MV3-7 T	68.7	O	T	U	367951	4907754	2.0
MV3-8 T	68.7	O	T	U	368685	4907712	2.0
MV3-9 T	68.7	O	T	U	368517	4907703	2.0
MV3-10 T	68.7	O	T	U	368162	4907669	2.0
MV3-11 T	68.7	O	T	U	368340	4907662	2.0
MV3-12 T	68.7	O	T	U	367674	4907594	2.0
MV3-13 T	68.7	O	T	U	367958	4907577	2.0
MV3-14 T	68.7	O	T	U	368678	4907498	2.0
MV3-15 T	68.7	O	T	U	368351	4907477	2.0
MV3-16 T	68.7	O	T	U	368509	4907475	2.0

Noise Source ID	PWL (dBA)	Source Location[1] (I or O)	Sound Characteristics[2] (S,Q,I,B,T,C)	Noise Control Measures[3] (S,A,B,L,E,O,U)	UTM		Height
					X (m)	Y (m)	(m)
MV3-17 T	68.7	O	T	U	368183	4907472	2.0
MV3-18 T	68.7	O	T	U	367757	4907412	2.0
MV3-19 T	68.7	O	T	U	368352	4907347	2.0
MV3-20 T	68.7	O	T	U	368683	4907317	2.0
MV3-21 T	68.7	O	T	U	368484	4907206	2.0
MV3-22 T	68.7	O	T	U	368661	4907142	2.0
MV4-1 T	68.7	O	T	U	369017	4909397	2.0
MV4-2 T	68.7	O	T	U	369267	4909397	2.0
MV4-3 T	68.7	O	T	U	369234	4909397	2.0
MV4-4 T	68.7	O	T	U	369033	4909199	2.0
MV4-5 T	68.7	O	T	U	369283	4909199	2.0
MV4-6 T	68.7	O	T	U	369249	4909192	2.0
MV4-7 T	68.7	O	T	U	369040	4909001	2.0
MV4-8 T	68.7	O	T	U	369262	4909001	2.0
MV4-9 T	68.7	O	T	U	369284	4909001	2.0
MV4-10 T	68.7	O	T	U	369307	4908858	2.0
MV4-11 T	68.7	O	T	U	369269	4908855	2.0
MV4-12 T	68.7	O	T	U	369049	4908803	2.0
MV4-13 T	68.7	O	T	U	369057	4908605	2.0
MV4-14 T	68.7	O	T	U	369182	4908507	2.0
MV4-15 T	68.7	O	T	U	369170	4908481	2.0
MV5-1 T	68.7	O	T	U	370015	4909142	2.0
MV5-2 T	68.7	O	T	U	370011	4908853	2.0
MV5-3 T	68.7	O	T	U	370237	4908851	2.0
MV5-4 T	68.7	O	T	U	370330	4908707	2.0
MV5-5 T	68.7	O	T	U	370021	4908690	2.0
MV5-6 T	68.7	O	T	U	369987	4908507	2.0
MV6-1 T	69.6	O	T	U	370230	4907364	2.0
MV6-2 T	68.7	O	T	U	370091	4907339	2.0
MV6-3 T	68.7	O	T	U	370202	4907140	2.0
MV6-4 T	69.6	O	T	U	370244	4906966	2.0
G_Sub	90.8	O	T	U	366586	4903350	2.5
G_Inv1	87.7	O	T	S	366526	4903226	2.0
G_Inv2	87.7	O	T	S	366677	4903239	2.0
G_Inv3	87.7	O	T	S	366584	4903091	2.0
G_Inv4	87.7	O	T	S	366733	4903105	2.0
G_Inv5	87.7	O	T	S	366639	4902958	2.0
G_Inv6	87.7	O	T	S	366789	4902972	2.0
G_Inv7	87.7	O	T	S	366695	4902825	2.0
G_Inv8	87.7	O	T	S	366845	4902839	2.0
G_Inv9	87.7	O	T	S	366751	4902692	2.0

Noise Source ID	PWL (dBA)	Source Location[1] (I or O)	Sound Characteristics[2] (S,Q,I,B,T,C)	Noise Control Measures[3] (S,A,B,L,E,O,U)	UTM		Height
					X (m)	Y (m)	(m)
G_Inv10	87.7	O	T	S	366901	4902705	2.0
W_ST	92.0	O	T	B	369711	4906112	2.5
W_INV1	86.1	O	T	S	369409	4906578	2.0
W_INV2	89.1	O	T	S	369374	4906388	2.0
W_INV3	89.1	O	T	S	369508	4906164	2.0
W_INV4	89.1	O	T	S	369673	4906164	2.0
W_INV5	89.1	O	T	S	369719	4906574	2.0
W_INV6	89.1	O	T	S	369875	4906578	2.0
W_INV7	89.1	O	T	S	369780	4906417	2.0
W_INVTR1	78.2	O	T	U	369403	4906578	2.0
W_INVTR2	77.3	O	T	U	369368	4906388	2.0
W_INVTR3	77.3	O	T	U	369514	4906164	2.0
W_INVTR4	77.3	O	T	U	369679	4906164	2.0
W_INVTR5	77.3	O	T	U	369725	4906574	2.0
W_INVTR6	77.3	O	T	U	369881	4906578	2.0
W_INVTR7	77.3	O	T	U	369786	4906417	2.0

Note:
The table includes all noise sources from neighbouring solar farms within 2 km of the subject project.
5 dB tonal penalty is included in the PWLs.
The initial letter for source IDs represent the neighbouring project as follows: W: Westbrook Solar, G: Kingston Gardiner Hwy2 Solar. Sources starting with 'MV' belong to the Sol-Luce Project.
Substations:
S_Substation: Sol-Luce Kingston PV Energy Project
G_Sub: Kingston Gardiner Hwy 2 Solar
W_ST: Westbrook Solar

Noise Source Summary Table Notes:

1. Source Locations

O – located/installed outside of a building, including on the roof
I – located/installed inside a building

2. Sound Characteristics

S – Steady
Q – Quasi Steady Impulsive
I – Impulsive
B – Buzzing
T – Tonal
C – Cyclic
Int – Intermittent

3. Noise Control Measures

S – silencer, acoustic louver, muffler
A – acoustic lining, plenum
B – barrier, berm, screening
L – lagging
E – acoustic enclosure
O – other
U – uncontrolled

5.2 Noise Source Specifications

Noise source specifications including manufacturer-specified noise data and calculation of sound power spectra are provided in **Appendix A**.

5.3 Source Power/Capacity Ratings

Manufacturer data for capacity and operating specifications for onsite noise sources can be found in **Appendix A.**

5.4 Noise Control Description & Acoustical Specifications

For the Sol-Luce Kingston Solar PV Energy Project, there are 66 MV stations, 60 of which consist of two (2) 800 kW inverters and one (1) 1.6 MVA inverter transformer and six (6) of them consist of one (1) 800 kW inverter and one (1) 0.8 MVA inverter transformer. In all cases, the inverters will each be contained in a cabinet (as per the specifications presented in **Appendix A**) and a secondary enclosure. The secondary enclosure will have louvers for ventilation. Conservatively, no additional noise mitigation measure was incorporated in the modelling for the secondary enclosure.

The secondary enclosure will have openings for ventilation through which noise can propagate to outside. Through modelling iterations it was determined that thirteen (13) of the inverter enclosures (see source IDs in **Table 3**) will require acoustic louvers for the openings. The Transmission Loss (TL) spectrum for the required acoustic louver is presented in **Table 3**.

Table 3: Noise Attenuation Data for Acoustic Louver

Noise Source ID	Noise Control		TL Spectrum (dB)					
	Type	Manufacturer	125	250	500	1000	2000	4000
MV1-3	Acoustic Louver	Greenheck or equivalent	4	4	6	10	17	12
MV2-2	Acoustic Louver	Greenheck or equivalent	4	4	6	10	17	12
MV3-1	Acoustic Louver	Greenheck or equivalent	4	4	6	10	17	12
MV3-2	Acoustic Louver	Greenheck or equivalent	4	4	6	10	17	12
MV3-4	Acoustic Louver	Greenheck or equivalent	4	4	6	10	17	12
MV3-5	Acoustic Louver	Greenheck or equivalent	4	4	6	10	17	12
MV3-22	Acoustic Louver	Greenheck or equivalent	4	4	6	10	17	12
MV4-12	Acoustic Louver	Greenheck or equivalent	4	4	6	10	17	12
MV4-13	Acoustic Louver	Greenheck or equivalent	4	4	6	10	17	12
MV4-14	Acoustic Louver	Greenheck or equivalent	4	4	6	10	17	12
MV4-15	Acoustic Louver	Greenheck or equivalent	4	4	6	10	17	12
MV5-6	Acoustic Louver	Greenheck or equivalent	4	4	6	10	17	12
MV6-4	Acoustic Louver	Greenheck or equivalent	4	4	6	10	17	12

It was determined through noise modelling iterations that the noise from the substation transformer (noise source ID: S_substation) would need to be mitigated. A “U” shaped, 6 m high noise barrier wall was incorporated in the modelling for the substation transformer. The noise wall will consist of solid material with a minimum surface area density of 20 kg/m^2. The walls will eliminate the line-of-sight between the substation transformers and the receptors to the south, southeast and southwest. The “U” shaped wall will be open on the north (see **Figure 5**). Details of the noise barrier wall, including UTM coordinates and dimensions are provided in **Table 4**. An isometric view of the noise barrier wall is presented in **Figure 4** and the site plan drawing is presented in **Figures 5**. A plan view of the wall is presented in **Appendix A**.

Table 4: Substation Transformers Barrier Wall Information

Noise Control		Construction Material	Height (m)	Total Length (m)	Distance from Source (m)	UTM Coordinates for Wall	
Type	Source					X (m)	Y (m)
Barrier Wall	Substation Transformer - Sol-Luce Kingston Solar	Continuous with Minimum Density: 20 kg/m^2	6	54.4	Varies (see Appendix A)	369417	4908803
						369417	4908783
						369432	4908783
						369432	4908803

Figure 4: Substation Transformer Barrier Wall Isometric View

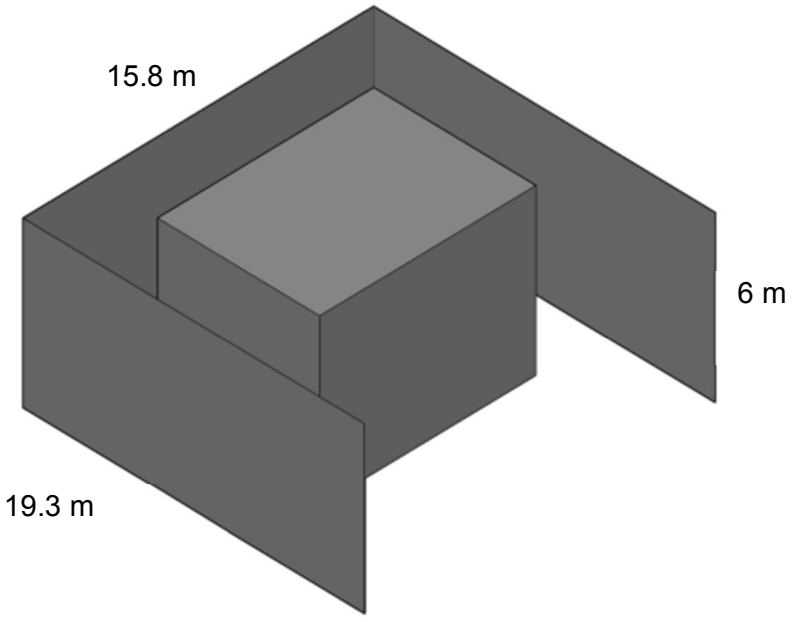

Figure 5: Transformer Noise Barrier Wall Site Plan Drawing

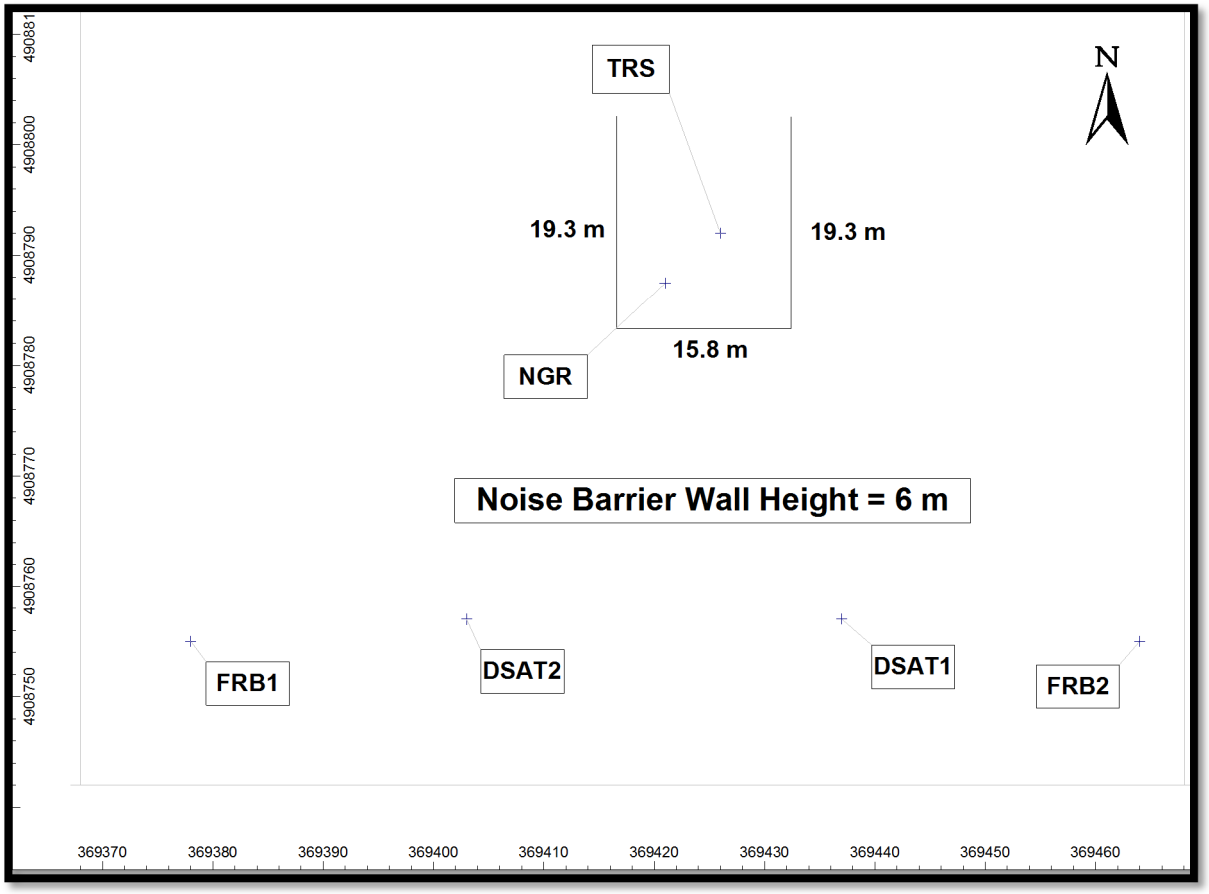

Noise mitigation measures for the neighbouring solar farms were also incorporated in the modelling. The information was obtained from the NSRs completed for the neighbouring projects.

6. Point of Reception Noise Impact Analysis

6.1 Land Use Zoning Plan

The planned solar facility will occur within lands zoned by the City of Kingston as 'Agricultural' with some areas zoned as 'Undeveloped Aggregate Resource Area' by the City of Kingston and Loyalist Township. Zoning and land use information is provided in the *Design and Operations Report* (AMEC, 2012) of the REA submission.

6.2 Scaled Area Location Plan

Figure 3 is an aerial photo showing the location of the proposed Sol-Luce Kingston Solar PV Energy Project and the surrounding area including the nearby receptors.

6.3 Points of Reception (PORs) List and Description

The Model Municipal Noise Control By-law defines a Point of Reception (POR)/receptor as "*any point on the premises of a person where sound or vibration originating from other than those premises is received.*" Noise-sensitive receptors, as defined in MOECC Publication NPC-300, include the following land uses:

- Permanent, seasonal, or rental residences;
- Hotels, motels and campgrounds;
- Schools, universities, libraries and daycare centres;
- Hospitals and clinics, nursing/retirement homes; and
- Churches and places of worship.

Conservatively, a receptor height of 4.5 metres was considered for all receptors, assuming a two-storey dwelling at each receptor location. The UTM coordinates (NAD83) of the receptors used in the noise modelling are summarized in **Table 5**. For the vacant lot receptors, the centres of the 100 metre by 100 metre lots were chosen to represent the receptor locations, as per relevant MOECC guidelines.

All receptors associated with the neighbouring solar farms (i.e., SunE Westbrook Solar Farm and Kingston Gardiner Hwy 2 South) have been included in the modelling and assessment of noise impact herein.

Table 5: Noise Sensitive Receptors – Coordinates

Point of Reception		Coordinates	
ID	Description	UTM-X (m)	UTM-Y (m)
S-R1*	Existing Noise Receptor	364518	4906471
S-R2	Existing Noise Receptor	364230	4906236
S-R3	Existing Noise Receptor	364304	4906205
S-R4	Existing Noise Receptor	364216	4906053
S-R5	Existing Noise Receptor	364123	4906064
S-R6	Existing Noise Receptor	364148	4906121
S-R7	Existing Noise Receptor	364198	4906201
S-R8	Existing Noise Receptor	364297	4906341
S-R9	Existing Noise Receptor	364369	4906412
S-R10*	Existing Noise Receptor	364424	4906375
S-R11	Existing Noise Receptor	364366	4906524
S-R12	Existing Noise Receptor	364416	4906519
S-R13	Existing Noise Receptor	364633	4906641
S-R14	Existing Noise Receptor	365178	4904753
S-R15	Existing Noise Receptor	365585	4907094
S-R16	Existing Noise Receptor	365813	4907002
S-R17	Existing Noise Receptor	365294	4906968
S-R18	Existing Noise Receptor	365422	4906972
S-R19	Existing Noise Receptor	365659	4907251
S-R20	Existing Noise Receptor	365720	4907293
S-R21	Existing Noise Receptor	366173	4906712
S-R22	Existing Noise Receptor	366104	4906755
S-R23	Existing Noise Receptor	366229	4906121
S-R24	Existing Noise Receptor	366054	4906161
S-R25*	Existing Noise Receptor	365931	4906080
S-R26	Existing Noise Receptor	366131	4905973
S-R27	Existing Noise Receptor	366299	4906069
S-R28	Existing Noise Receptor	365856	4905876
S-R29	Existing Noise Receptor	365826	4905855
S-R30	Existing Noise Receptor	365849	4905788
S-R31*	Existing Noise Receptor	367596	4907979
S-R32	Existing Noise Receptor	367358	4908024
S-R33	Existing Noise Receptor	367652	4908099
S-R34	Existing Noise Receptor	368309	4908171
S-R35	Existing Noise Receptor	368489	4908295

Point of Reception		Coordinates	
ID	Description	UTM-X (m)	UTM-Y (m)
S-R36	Existing Noise Receptor	368769	4908144
S-R37	Existing Noise Receptor	369128	4908178
S-R38	Existing Noise Receptor	369162	4908181
S-R39	Existing Noise Receptor	369216	4908191
S-R40	Existing Noise Receptor	369465	4908201
S-R41	Existing Noise Receptor	369114	4908102
S-R42	Existing Noise Receptor	369217	4908121
S-R43	Existing Noise Receptor	368969	4908169
S-R44*	Existing Noise Receptor	369008	4908170
S-R45*	Existing Noise Receptor	369359	4908303
S-R46	Existing Noise Receptor	369790	4908263
S-R47	Existing Noise Receptor	369881	4908138
S-R48*	Existing Noise Receptor	370307	4909226
S-R49*	Existing Noise Receptor	370209	4908188
S-R50	Existing Noise Receptor	369926	4908239
S-R51	Existing Noise Receptor	370593	4908571
S-R52	Existing Noise Receptor	370411	4909723
S-R53	Existing Noise Receptor	370390	4909790
S-R54	Existing Noise Receptor	370569	4909511
S-R55	Existing Noise Receptor	370520	4909722
S-R56	Existing Noise Receptor	370503	4909791
S-R57	Existing Noise Receptor	370395	4909912
S-R58	Existing Noise Receptor	370317	4910062
S-R59	Existing Noise Receptor	370341	4910151
S-R60	Existing Noise Receptor	370336	4910182
S-R61	Existing Noise Receptor	370297	4910239
S-R62	Existing Noise Receptor	370457	4909994
S-R63	Existing Noise Receptor	370445	4910024
S-R64	Existing Noise Receptor	370482	4909935
S-R65	Existing Noise Receptor	370485	4909857
S-R66	Existing Noise Receptor	364464	4906724
S-R67	Existing Noise Receptor	364563	4906932
S-R68	Existing Noise Receptor	364633	4906961
S-R69	Existing Noise Receptor	364753	4906886
S-R70	Existing Noise Receptor	364844	4906873
S-R71	Existing Noise Receptor	364782	4906767
S-R72	Existing Noise Receptor	365003	4906937
S-R73	Existing Noise Receptor	365336	4907105
S-R74	Existing Noise Receptor	365816	4907350
S-R75	Existing Noise Receptor	366052	4907446
S-R76	Existing Noise Receptor	366134	4907377
S-R77	Existing Noise Receptor	366362	4906199

Point of Reception		Coordinates	
ID	Description	UTM-X (m)	UTM-Y (m)
S-R78	Existing Noise Receptor	366440	4906141
S-R79	Existing Noise Receptor	366468	4906056
S-R80	Existing Noise Receptor	366343	4906081
S-R81	Existing Noise Receptor	370458	4909412
S-R82	Existing Noise Receptor	370407	4909521
S-R83	Existing Noise Receptor	370423	4909650
S-R84	Existing Noise Receptor	370557	4909609
S-R85	Existing Noise Receptor	364389	4904208
S-R86	Existing Noise Receptor	364051	4906031
S-R87	Existing Noise Receptor	364023	4905970
S-R88	Existing Noise Receptor	363986	4905920
S-R89	Existing Noise Receptor	363944	4905852
S-R90	Existing Noise Receptor	364140	4905859
S-R91	Existing Noise Receptor	364039	4905781
S-R92	Existing Noise Receptor	363876	4905772
S-R93	Existing Noise Receptor	363825	4905672
S-R94	Existing Noise Receptor	363753	4905589
S-R95	Existing Noise Receptor	363726	4905554
S-R96	Existing Noise Receptor	363708	4905513
S-R97	Existing Noise Receptor	363780	4905438
S-R98	Existing Noise Receptor	363552	4905373
S-R99	Existing Noise Receptor	363558	4905325
S-R100	Existing Noise Receptor	363689	4905350
S-R101	Existing Noise Receptor	363656	4905303
S-R102	Existing Noise Receptor	363606	4905237
S-R103	Existing Noise Receptor	366535	4907679
S-R104	Existing Noise Receptor	366573	4907703
S-R105	Existing Noise Receptor	366780	4908073
S-R106	Existing Noise Receptor	366885	4907947
S-R107	Existing Noise Receptor	367094	4908148
S-R108	Existing Noise Receptor	367168	4908242
S-R109	Existing Noise Receptor	368761	4908590
S-R110	Existing Noise Receptor	368816	4908424
S-R111	Existing Noise Receptor	370796	4907054
S-R112	Existing Noise Receptor	370931	4907215
S-R113	Existing Noise Receptor	370970	4907230
S-R114	Existing Noise Receptor	371009	4907243
S-R115	Existing Noise Receptor	371067	4907274
S-R116	Existing Noise Receptor	371041	4907342
S-R117	Existing Noise Receptor	371006	4908401
S-R118	Existing Noise Receptor	371127	4908400
S-R119	Existing Noise Receptor	371139	4908470

Point of Reception		Coordinates	
ID	Description	UTM-X (m)	UTM-Y (m)
S-R120	Existing Noise Receptor	371182	4908338
S-R121	Existing Noise Receptor	371238	4908351
S-R122	Existing Noise Receptor	371356	4908619
S-R123	Existing Noise Receptor	371197	4908286
S-R124	Existing Noise Receptor	371243	4908295
S-R125	Existing Noise Receptor	371002	4908242
S-R126	Existing Noise Receptor	370856	4908178
S-R127	Existing Noise Receptor	371030	4907965
S-R128	Existing Noise Receptor	371035	4907887
S-R129	Existing Noise Receptor	371044	4907815
S-R130	Existing Noise Receptor	371143	4907714
S-R131	Existing Noise Receptor	371128	4907557
S-R132	Existing Noise Receptor	364903	4904460
S-R133	Existing Noise Receptor	364840	4904440
S-R134	Existing Noise Receptor	364711	4904288
S-R135	Existing Noise Receptor	364636	4904016
S-R136	Existing Noise Receptor	365371	4905526
S-R137	Existing Noise Receptor	365349	4905362
S-R138	Existing Noise Receptor	366418	4905910
S-R139	Existing Noise Receptor	366778	4906065
S-R140	Existing Noise Receptor	366926	4906001
S-R141	Existing Noise Receptor	367018	4905998
S-R142	Existing Noise Receptor	366970	4905892
S-R143	Existing Noise Receptor	367170	4906218
S-R144	Existing Noise Receptor	369825	4906092
S-R145	Existing Noise Receptor	370306	4906505
S-R146	Existing Noise Receptor	370307	4906437
S-R147	Existing Noise Receptor	371199	4908176
S-R148	Existing Noise Receptor	371110	4908369
S-R149	Existing Noise Receptor	370276	4910278
S-R150	Existing Noise Receptor	367978	4908780
S-R151	Existing Noise Receptor	365493	4904759
S-R152	Existing Noise Receptor	365449	4905529
S-R153	Existing Noise Receptor	364710	4907137
S-R154	Existing Noise Receptor	370413	4910229
S-R155	Existing Noise Receptor	370710	4909195
S-R156	Existing Noise Receptor	370399	4908293
S-R157	Existing Noise Receptor	370851	4907277
S-VLR1	Vacant Lot Receptor	363609	4905431
S-VLR2	Vacant Lot Receptor	363929	4905712
S-VLR3	Vacant Lot Receptor	364213	4906222
S-VLR4	Vacant Lot Receptor	364272	4906314

Point of Reception		Coordinates	
ID	Description	UTM-X (m)	UTM-Y (m)
S-VLR5	Vacant Lot Receptor	364467	4906635
S-VLR6	Vacant Lot Receptor	364762	4906754
S-VLR7	Vacant Lot Receptor	365386	4907135
S-VLR8	Vacant Lot Receptor	365468	4907176
S-VLR9	Vacant Lot Receptor	366122	4907498
S-VLR10	Vacant Lot Receptor	366669	4908059
S-VLR11	Vacant Lot Receptor	366889	4908100
S-VLR12	Vacant Lot Receptor	366755	4907982
S-VLR13	Vacant Lot Receptor	366607	4907632
S-VLR14	Vacant Lot Receptor	366290	4906421
S-VLR15	Vacant Lot Receptor	367554	4908128
S-VLR16	Vacant Lot Receptor	368417	4908173
S-VLR17	Vacant Lot Receptor	368821	4908037
S-VLR18	Vacant Lot Receptor	369317	4908090
S-VLR19	Vacant Lot Receptor	369570	4908240
S-VLR20	Vacant Lot Receptor	369813	4908130
S-VLR21	Vacant Lot Receptor	369658	4908124
S-VLR22	Vacant Lot Receptor	370438	4909610
S-VLR23	Vacant Lot Receptor	370528	4909703
S-VLR24	Vacant Lot Receptor	370679	4908919
S-VLR25	Vacant Lot Receptor	371110	4908533
S-VLR26	Vacant Lot Receptor	371059	4907495
S-VLR27	Vacant Lot Receptor	371062	4907411
S-VLR28	Vacant Lot Receptor	371142	4907495
S-VLR29	Vacant Lot Receptor	370958	4907126
S-VLR30	Vacant Lot Receptor	370582	4906966
S-VLR31	Vacant Lot Receptor	370381	4906879
S-VLR32	Vacant Lot Receptor	370289	4906806
S-VLR33	Vacant Lot Receptor	369879	4906085
S-VLR34	Vacant Lot Receptor	369943	4905994
S-VLR35	Vacant Lot Receptor	368755	4906999
S-VLR36	Vacant Lot Receptor	368858	4907009
S-VLR37	Vacant Lot Receptor	366530	4905901
S-VLR38	Vacant Lot Receptor	365559	4905690
S-VLR39	Vacant Lot Receptor	365607	4905722
S-VLR40	Vacant Lot Receptor	365602	4905590
S-VLR41	Vacant Lot Receptor	365651	4905622
S-VLR42	Vacant Lot Receptor	365664	4905767
S-VLR43	Vacant Lot Receptor	365711	4905674
S-VLR44	Vacant Lot Receptor	365488	4904656
S-VLR45	Vacant Lot Receptor	371003	4908159
G-1	Existing Noise Receptor	366773	4903320

Point of Reception		Coordinates	
ID	Description	UTM-X (m)	UTM-Y (m)
G-2	Existing Noise Receptor	366859	4903323
G-3	Existing Noise Receptor	366876	4903397
G-4	Existing Noise Receptor	366782	4903432
G-5	Existing Noise Receptor	367019	4903279
G-6	Existing Noise Receptor	366950	4903384
G-7	Existing Noise Receptor	366476	4903421
G-8	Existing Noise Receptor	366973	4903383
G-9	Existing Noise Receptor	367088	4903275
G-10	Existing Noise Receptor	366439	4903427
G-11	Existing Noise Receptor	367172	4903163
G-12	Existing Noise Receptor	366391	4903443
G-13	Existing Noise Receptor	367092	4903373
G-14	Existing Noise Receptor	366449	4903496
G-15	Existing Noise Receptor	367240	4903233
G-16	Existing Noise Receptor	366166	4902770
G-17	Existing Noise Receptor	366157	4902750
G-18	Existing Noise Receptor	366180	4902639
G-19	Existing Noise Receptor	366041	4902939
G-20	Existing Noise Receptor	366034	4902964
G-21	Existing Noise Receptor	366029	4903026
G-22	Existing Noise Receptor	366017	4903032
G-23	Existing Noise Receptor	366018	4902893
G-24	Existing Noise Receptor	365998	4903069
G-25	Existing Noise Receptor	365990	4903082
G-26	Existing Noise Receptor	366304	4902384
G-27	Existing Noise Receptor	366372	4902339
G-28	Existing Noise Receptor	365968	4902982
G-29	Existing Noise Receptor	365964	4902878
G-30	Existing Noise Receptor	365942	4903033
G-31	Existing Noise Receptor	367524	4903182
G-32	Existing Noise Receptor	366039	4903555
G-33	Existing Noise Receptor	365957	4903545
G-34	Existing Noise Receptor	365864	4903408
G-35	Existing Noise Receptor	365769	4903004
G-36	Existing Noise Receptor	365767	4902982
G-37	Existing Noise Receptor	365856	4903450
G-38	Existing Noise Receptor	365899	4903590
G-39	Existing Noise Receptor	366132	4902195
G-40	Existing Noise Receptor	365786	4903405
G-41	Existing Noise Receptor	366115	4902187
G-42	Existing Noise Receptor	365916	4903656
G-43	Existing Noise Receptor	365772	4903432

Point of Reception		Coordinates	
ID	Description	UTM-X (m)	UTM-Y (m)
G-44	Existing Noise Receptor	365675	4903041
G-45	Existing Noise Receptor	366062	4902160
G-46	Existing Noise Receptor	365642	4903198
G-47	Existing Noise Receptor	365751	4902462
G-48	Existing Noise Receptor	365762	4903627
G-49	Existing Noise Receptor	365686	4903496
G-50	Existing Noise Receptor	367854	4903074
G-51	Existing Noise Receptor	365602	4903245
G-52	Existing Noise Receptor	365980	4902130
G-53	Existing Noise Receptor	365781	4903713
G-54	Existing Noise Receptor	367146	4904098
G-55	Existing Noise Receptor	367888	4903013
G-56	Existing Noise Receptor	367909	4903049
G-57	Existing Noise Receptor	365676	4902425
G-58	Existing Noise Receptor	365654	4903592
G-59	Existing Noise Receptor	365730	4903727
G-60	Existing Noise Receptor	367926	4903216
G-61	Existing Noise Receptor	367944	4903078
G-62	Existing Noise Receptor	365879	4902086
G-63	Existing Noise Receptor	365489	4903250
G-64	Existing Noise Receptor	365646	4903743
G-65	Existing Noise Receptor	367312	4904188
G-66	Existing Noise Receptor	365807	4902040
G-67	Existing Noise Receptor	365650	4903811
G-68	Existing Noise Receptor	366536	4901668
G-69	Existing Noise Receptor	366382	4901674
G-70	Existing Noise Receptor	365526	4903684
G-71	Existing Noise Receptor	366329	4901680
G-72	Existing Noise Receptor	365500	4903658
G-73	Existing Noise Receptor	365512	4903779
G-74	Existing Noise Receptor	366199	4901665
G-75	Existing Noise Receptor	366245	4901600
G-76	Existing Noise Receptor	366085	4901666
G-77	Existing Noise Receptor	366069	4901660
G-78	Existing Noise Receptor	366190	4901603
G-79	Existing Noise Receptor	365415	4903793
G-80	Existing Noise Receptor	366139	4901589
G-81	Existing Noise Receptor	366016	4901609
G-82	Existing Noise Receptor	366826	4901429
G-83	Existing Noise Receptor	365991	4901610
G-84	Existing Noise Receptor	367679	4901743
G-85	Existing Noise Receptor	367768	4901816

Point of Reception		Coordinates	
ID	Description	UTM-X (m)	UTM-Y (m)
G-86	Existing Noise Receptor	366861	4901414
G-87	Existing Noise Receptor	365339	4903808
G-88	Existing Noise Receptor	367795	4901814
G-89	Existing Noise Receptor	367715	4901725
G-90	Existing Noise Receptor	365815	4901666
G-91	Existing Noise Receptor	366875	4901385
G-92	Existing Noise Receptor	365271	4903752
G-93	Existing Noise Receptor	365766	4901673
G-94	Existing Noise Receptor	365288	4903813
G-95	Existing Noise Receptor	365265	4903816
G-96	Existing Noise Receptor	365270	4903845
G-97	Existing Noise Receptor	367907	4901809
G-98	Existing Noise Receptor	365215	4903835
G-99	Existing Noise Receptor	365213	4903857
G-100	Existing Noise Receptor	368194	4902084
G-101	Existing Noise Receptor	365178	4903844
G-102	Existing Noise Receptor	365123	4903732
G-103	Existing Noise Receptor	365110	4903782
G-104	Existing Noise Receptor	368362	4902275
G-105	Existing Noise Receptor	365135	4903856
G-106	Existing Noise Receptor	365118	4903868
G-107	Existing Noise Receptor	368397	4902267
G-108	Existing Noise Receptor	365041	4903916
G-109	Existing Noise Receptor	365011	4903913
G-110	Existing Noise Receptor	364922	4903826
G-111	Existing Noise Receptor	364942	4903879
G-112	Existing Noise Receptor	364883	4903837
G-113	Existing Noise Receptor	364872	4903824
G-114	Existing Noise Receptor	364823	4903911
G-115	Existing Noise Receptor	365499	4904756
G-116	Existing Noise Receptor	364792	4903920
G-117	Existing Noise Receptor	365182	4904745
G-118	Existing Noise Receptor	365211	4904781
G-119	Existing Noise Receptor	364893	4904450
G-120	Existing Noise Receptor	365148	4904745
G-121	Existing Noise Receptor	364855	4904442
G-122	Existing Noise Receptor	364836	4904433
G-123	Existing Noise Receptor	364677	4904232
G-124	Existing Noise Receptor	364705	4904280
G-V1	Vacant Lot Receptor	365716	4902081
G-V2	Vacant Lot Receptor	365815	4903679
G-V3	Vacant Lot Receptor	365869	4903674

Point of Reception		Coordinates	
ID	Description	UTM-X (m)	UTM-Y (m)
G-V4	Vacant Lot Receptor	365914	4901591
G-V5	Vacant Lot Receptor	365941	4902083
G-V6	Vacant Lot Receptor	366142	4902441
G-V7	Vacant Lot Receptor	366166	4903597
G-V8	Vacant Lot Receptor	366322	4901596
G-V9	Vacant Lot Receptor	366608	4903463
G-V10	Vacant Lot Receptor	366831	4902540
G-V11	Vacant Lot Receptor	366935	4903303
G-V12	Vacant Lot Receptor	366949	4902598
G-V13	Vacant Lot Receptor	367100	4903207
G-V14	Vacant Lot Receptor	367178	4902711
G-V15	Vacant Lot Receptor	367269	4904080
G-V16	Vacant Lot Receptor	367453	4903195
G-V17	Vacant Lot Receptor	367516	4903272
G-V18	Vacant Lot Receptor	367733	4901892
G-V19	Vacant Lot Receptor	367843	4901854
G-V20	Vacant Lot Receptor	367894	4901897
G-V21	Vacant Lot Receptor	367956	4901954
W-R1	Existing Noise Receptor	368453	4905661
W-R2	Existing Noise Receptor	368445	4905583
W-R3	Existing Noise Receptor	368760	4905510
W-R4	Existing Noise Receptor	369206	4905337
W-R5	Existing Noise Receptor	369339	4905291
W-R6	Existing Noise Receptor	369271	4905238
W-R7	Existing Noise Receptor	369400	4905175
W-R8	Existing Noise Receptor	369416	4905153
W-R9	Existing Noise Receptor	369352	4905131
W-R10	Existing Noise Receptor	369426	4905126
W-R11	Existing Noise Receptor	369458	4905117
W-R12	Existing Noise Receptor	369503	4905130
W-R13	Existing Noise Receptor	369575	4905129
W-R14	Existing Noise Receptor	369961	4904911
W-R15	Existing Noise Receptor	369827	4906079
W-R16	Existing Noise Receptor	370314	4906430
W-R17	Existing Noise Receptor	370314	4906490
W-R18	Existing Noise Receptor	370804	4907054
W-R19	Existing Noise Receptor	370930	4907207
W-R20	Existing Noise Receptor	370967	4907225
W-R21	Existing Noise Receptor	370825	4907285
W-R22	Existing Noise Receptor	369522	4905120
W-V1	Vacant Lot Receptor	368414	4906049
W-V2	Vacant Lot Receptor	368508	4906042

Point of Reception		Coordinates	
ID	Description	UTM-X (m)	UTM-Y (m)
W-V3	Vacant Lot Receptor	369878	4906079
W-V4	Vacant Lot Receptor	370318	4906716
W-V7	Vacant Lot Receptor	370468	4906874
W-V8	Vacant Lot Receptor	370670	4906952
W-V11	Vacant Lot Receptor	369215	4908086
W-V13	Vacant Lot Receptor	369147	4905546
W-V14	Vacant Lot Receptor	369794	4908129
W-V15	Vacant Lot Receptor	369215	4905469
W-V16	Vacant Lot Receptor	369991	4905253
W-V17	Vacant Lot Receptor	370902	4907096
W-V18	Vacant Lot Receptor	369098	4908093
W-V19	Vacant Lot Receptor	369899	4908142

Note:
The initial letter for each receptor refers to the respective solar project (W: Westbrook, G: Gardiner Hwy 2, and S: Sol-Luce).
Receptor IDs with '*' are those that have project components on their property and are financially benefiting from the project.

7. Procedure for Assessing Noise Impacts at Each POR

7.1 Method Selection Factors

The worst-case noise emission scenario at each POR was modeled using the CADNA/A software program from DataKustik GmbH. The outdoor noise propagation model is based on ISO 9613, Part 1: Calculation of the absorption of sound by the atmosphere, 1993 and Part 2: General method of calculation (ISO-9613-2: 1996). The model is capable of incorporating various site-specific features such as elevation, berms, ground absorption and barriers to accurately predict noise levels at specific receptors, pertaining to noise emissions from a particular source(s). Graphical outputs generated by the CADNA/A noise model, showing the noise level contours are presented in **Figures 6** and **7** for 1.5m and 4.5m receptor heights, respectively.

7.2 Ambient Determination

No on-site measurements were made to assess the background ambient noise level at the noise-sensitive receptors. Therefore, the MOECC's default daytime and nighttime criteria for a Class 3 Area were used for this assessment.

7.3 Parameter/Assumptions for Calculations

Manufacturer-specified noise data and calculated noise levels were used in the CADNA/A software to model the noise impact at each Point of Reception (POR). Also incorporated in the modelling was the site layout for the project. The noise impact for each receptor was modelled assuming the worst-case noise emission scenario at the site. The significant noise sources for the facility include:

- Inverters Stations;
- Substation Transformer;
- DSTATCOM Inverter Systems; and,
- Neutral Grounding Reactor (NGR).
    - **Inverter Stations** – Each MV station consisted of two noise sources as follows:
        - For single-inverter stations [Source IDs: MV1-3, MV2-2, MV3-1, MV3-2, MV3-4, MV3-5, MV3-22, MV4-12, MV4-13, MV4-14, MV4-15, MV5-6 and

MV6-4], one source representing the single-inverter enclosure and one source representing the 0.8 MVA transformer.

- For double-inverter stations [all MVs except those listed above], one source representing the combined two-inverter enclosure and one source representing the 1.6 MVA transformer.

The inverter transformers (0.8 MVA and 1.6 MVA) were modeled using calculated transformer sound power spectrum based on the NEMA (noise) rating provided by the manufacturer and IEEE calculation (see **Appendix A**). The inverters were modelled using manufacturer-specified octave spectrum. As per the MOECC requirement, a 5 dB tonal penalty was added to the inverter and inverter transformer noise spectrums for the tonal aspect of the noise generated by these sources. The inverters and inverter transformers were modeled as point sources with hemi-spherical spreading.

- **Substation Transformer** – The substation transformer were modeled using calculated transformer sound power spectrum based on the NEMA (noise) rating provided by the manufacturer and IEEE calculation (see **Appendix A**). A 5 dB tonal penalty was also added to the transformer noise spectrum. Like the inverter units, the transformers were conservatively modeled using the same data for nighttime as for daytime. The transformers were modeled as point sources with hemi-spherical spreading.
- **DSTATCOM and FRB System** – the DSTATCOMs and FRBs were modelled using manufacturer-provided noise data (A noise measurement study report) and calculated sound power spectrum, respectively (see **Appendix A**). A 5 dB tonal penalty was added to the octave spectrum for both sources.
- **NGR** – The NGR was modelled using manufacturer-specified noise data (see **Appendix A**). A 5 dB tonal penalty was added to the octave spectrum for this source.

Receptors – Conservatively, a receptor height of 4.5 metres representing a receiver in the plane of a second floor window (i.e., 2-storey dwelling) was assumed for all receptor locations.

Topography – There are topographical features that extend beyond the property boundary of the project sites, and can reduce the noise impact from the proposed projects. However, conservatively, topography was not included in the noise modelling.

Reflections – Conservatively, sources were modeled assuming a third order reflection.

Ground Absorption – For the noise modeling, a global ground absorption coefficient of 0.7 was used to represent the mostly absorptive, vegetated areas, between the onsite sources and receptors.

7.4 Point of Reception Noise Impact Tables

Tables 6 summarizes the partial noise levels (i.e., contribution from each of the onsite noise sources to the receptor noise levels) and corresponding source-receptor distance for the closest (most impacted) PORs in various directions for the Sol-Luce Kingston Solar PV Energy Project. The sound level at the POR accounts for attenuation by divergence (distance), barriers, ground effects and atmospheric absorption. This table gives the sum total of these attenuations for each source. Details of the noise modelling (CADNA output file), including partial levels for all the PORs are provided in **Appendix B – CADNA\A Model Output**. Graphical output generated by CADNA noise model, showing the noise level contours are presented in **Figures 6** and **7** for 1.5m and 4.5m receptor heights, respectively.

Table 6: Point of Reception Beam Noise Impact Tables – Partial Levels (dBA)

S-VLR16			S-R137			S-R109			S-R50		
Source ID	Dist. (m)	Partial Level (dBA)	Source ID	Dist. (m)	Partial Level (dBA)	Source ID	Dist. (m)	Partial Level (dBA)	Source ID	Dist. (m)	Partial Level (dBA)
S_Substation	1184	32	MV1-12	312	34	S_Substation	695	36	S_Substation	746	36
MV3-6	424	30	MV1-15	370	31	MV4-7	494	28	MV5-5	460	28
MV3-9	480	28	MV1-14	364	29	MV4-11	569	26	MV5-4	614	25
MV3-11	516	27	MV1-10	400	27	MV4-10	613	25	MV5-2	619	25
MV3-8	531	27	MV1-8	629	24	MV4-8	643	24	MV5-3	684	23
MV3-3	538	26	MV1-11	696	23	MV4-4	665	24	MV4-10	872	20
MV3-10	563	26	MV1-4	771	22	MV4-9	669	24	MV4-11	904	20
MV3-7	631	24	MV1-9	838	21	MV4-6	771	22	MV5-1	908	20
MV3-15	699	23	MV1-7	597	22	MV4-5	806	21	MV6-2	914	20
MV3-16	705	23	MV1-5	861	21	MV4-1	845	21	MV4-9	993	19
MV3-14	726	23	MV1-13	630	21	MV3-8	882	20	MV5-6	274	25
MV3-17	741	22	MV1-2	920	20	MV3-9	921	20	MV4-8	1015	14
MV3-13	749	22	MV1-6	992	19	MV4-3	933	20	DSAT2	737	25
MV3-19	828	21	MV1-1	1024	18	MV4-2	955	19	DSAT1	753	25

S-VLR16			S-R137			S-R109			S-R50		
Source ID	Dist. (m)	Partial Level (dBA)	Source ID	Dist. (m)	Partial Level (dBA)	Source ID	Dist. (m)	Partial Level (dBA)	Source ID	Dist. (m)	Partial Level (dBA)
MV3-20	898	20	MV2-4	1284	16	MV3-6	965	19	MV6-3	1134	17
MV3-12	947	19	MV2-3	1363	15	MV3-11	1017	26	MV4-5	1152	17
MV3-4	262	26	S_Substation	5328	14	MV3-3	1056	18	MV4-7	1172	17
MV3-21	969	19	MV2-1	1535	10	MV4-13	290	18	MV4-6	1172	17
MV3-18	1011	19	MV3-18	3159	3	DSAT1	640	26	MV6-1	928	17
MV4-7	1033	18	MV3-12	3219	3	MV3-14	1095	25	MV4-4	1315	15
MV4-11	1087	18	MV3-13	3426	2	MV3-10	1096	18	MV4-2	1330	15
MV4-10	1127	17	MV3-17	3529	2	DSAT2	661	26	MV4-3	1352	15
MV4-8	1179	17	MV3-7	3530	2	MV3-16	1142	17	MV3-8	1353	15
MV4-4	1194	16	MV3-19	3604	1	MV3-7	1168	17	MV3-14	1446	14
MV3-1	327	23	MV3-21	3632	1	MV3-15	1184	17	MV4-1	1476	14
MV4-9	1202	16	MV3-10	3642	1	MV5-5	1258	16	MV3-9	1512	13
MV3-5	339	23	MV3-3	3645	1	MV3-17	1261	16	MV3-20	1543	13
MV3-2	353	22	MV3-15	3677	1	MV5-2	1272	16	MV3-16	1605	13
MV4-6	1312	15	MV3-6	3745	1	MV3-20	1275	16	MV3-11	1682	12
MV4-5	1347	15	MV3-11	3778	1	MV3-13	1290	15	MV3-15	1744	12
MV4-1	1361	15	MV3-16	3806	0	MV4-12	353	22	MV3-21	1779	11
MV4-3	1469	14	MV3-20	3870	0	MV3-19	1307	15	MV3-19	1805	11
MV4-2	1493	14	MV3-9	3935	0	MV5-1	1375	15	MV3-6	1810	11
MV5-5	1680	12	MV3-14	3960	0	MV3-21	1413	14	MV3-10	1849	11
MV5-2	1728	12	MV3-8	4077	0	MV3-12	1479	14	MV3-17	1909	10
DSAT1	1125	20	MV1-3	1133	10	MV5-3	1493	14	MV3-3	2011	10
DSAT2	1144	20	MV6-2	5132	0	MV4-14	423	20	MV3-7	2040	9
MV6-2	1865	11	MV6-3	5173	0	MV3-18	1551	13	MV3-13	2072	9
MV5-1	1873	6	MV4-7	5180	0	MV5-4	1567	13	MV3-18	2326	8
MV5-3	1937	10	MV4-11	5247	0	MV4-15	429	20	MV3-12	2348	21
MV5-4	1980	10	MV2-2	1437	7	MV6-2	1822	11	MV4-15	788	8
MV6-3	2067	9	MV4-10	5285	0	MV6-3	2048	9	MV4-14	796	20
MV4-13	767	14	MV4-4	5315	0	MV3-2	668	22	MV4-13	948	14
MV6-1	1990	7	MV4-8	5339	0	MV3-4	714	21	MV4-12	1048	13
MV4-15	819	13	MV4-9	5363	0	MV6-1	1917	15	MV2-3	4406	12
MV2-3	3015	4	MV4-1	5449	0	MV3-5	857	15	MV2-4	4631	11
MV4-14	829	13	MV4-6	5462	0	MV3-1	862	7	MV3-2	1293	0
MV2-4	3227	3	MV4-5	5500	0	MV2-3	3528	13	MV3-4	1458	0
MV4-12	888	12	MV4-3	5598	0	MV2-4	3734	13	MV1-1	5608	8
MV3-22	1058	16	MV4-2	5628	0	MV5-6	1224	2	MV1-2	5612	7

S-VLR16			S-R137			S-R109			S-R50		
Source ID	Dist. (m)	Partial Level (dBA)	Source ID	Dist. (m)	Partial Level (dBA)	Source ID	Dist. (m)	Partial Level (dBA)	Source ID	Dist. (m)	Partial Level (dBA)
MV2-1	2911	10	MV5-5	5731	0	MV1-1	4717	1	MV1-4	5613	10
MV1-1	4211	15	MV5-2	5820	0	MV1-2	4738	9	MV1-15	5638	0
MV1-2	4228	1	MV5-4	5995	0	MV1-4	4766	0	MV1-12	5660	0
MV1-4	4250	0	MV5-3	6001	0	MV2-1	3416	0	MV1-8	5755	0
MV1-12	4380	0	MV5-1	6009	0	MV1-5	4900	0	MV1-5	5755	0
MV1-5	4386	0	G_Sub	2362	3	MV1-12	4912	0	MV1-6	5956	0
MV1-8	4422	0	MV6-1	5280	0	MV1-8	4944	0	MV1-9	5959	0
MV1-15	4442	0	DSAT1	5269	4	MV1-15	4981	0	MV3-5	1635	0
MV1-6	4581	0	DSAT2	5286	4	MV1-6	5093	0	MV1-11	5980	0
MV1-9	4610	0	G_Inv1	2439	3	MV1-9	5129	0	MV2-1	4325	0
MV1-11	4665	0	G_Inv2	2504	3	MV1-11	5191	0	MV3-22	1678	6
MV5-6	1600	0	G_Inv3	2585	2	MV3-22	1452	0	MV3-1	1789	0
MV1-7	4232	0	G_Inv4	2647	2	MV1-7	4754	0	MV6-4	1314	5
MV1-10	4296	6	MV1-12 T	306	0	MV1-10	4824	7	W_ST	2193	0
MV1-14	4511	0	G_Inv5	2728	2	MV1-14	5048	0	MV1-7	5572	5
MV1-13	4710	0	G_Inv6	2790	2	MV1-13	5240	0	MV1-10	5602	5
W_ST	2476	8	G_Inv7	2872	1	W_ST	2702	7	MV1-14	5733	4
MV3-4 T	264	0	G_Inv8	2933	1	MV4-13 T	296	0	MV1-13	5998	4
MV2-2	2874	0	MV1-14 T	367	1	MV6-4	2203	0	MV5-6 T	275	5
MV6-4	2195	3	G_Inv9	3016	4	MV2-2	3391	2	W_H5I2	1662	4
MV3-1 T	332	3	G_Inv10	3077	0	MV4-12 T	358	1	W_H5I1	1662	3
MV3-5 T	340	2	MV1-10 T	395	0	MV4-15 T	423	1	W_H7I2	1673	2
MV3-2 T	357	2	MV3-22	3756	3	MV4-14 T	429	1	W_H7I1	1673	0
G_Sub	5159	1	MV3-1	3836	0	G_Sub	5673	0	W_H8I2	1697	0
MV3-6 T	428	1	MV1-15 T	370	0	MV1-3	5018	0	W_H8I1	1698	0
MV1-3	4513	1	MV3-5	3886	0	W_H4I1	2116	0	W_H4I2	1736	0
W_H4I1	1883	0	MV3-4	4063	0	W_H4I2	2117	0	W_H4I1	1737	2
W_H4I2	1884	0	MV3-2	4198	0	MV4-7 T	497	0	MV2-2	4255	0
W_H8I1	1972	0	W_ST	4409	0	W_H8I1	2171	0	W_H6I2	1829	0
W_H8I2	1973	0	MV4-13	4922	0	W_H8I2	2172	0	W_H6I1	1829	0
W_H9I1	2030	0	MV4-15	4937	0	W_H7I1	2230	0	W_H10I2	1929	4
W_H9I2	2031	0	MV4-14	4953	0	W_H7I2	2231	0	W_H9I2	1929	3
W_H7I1	2061	0	MV4-12	5048	0	W_H9I1	2288	0	W_H10I1	1929	3
W_H7I2	2063	0	MV5-6	5600	0	W_H9I2	2289	0	W_H9I1	1930	0
MV3-9 T	481	0	MV1-7 T	601	0	W_H5I1	2300	0	MV5-5 T	461	2
W_H5I1	2161	0	MV1-13 T	636	0	W_H5I2	2301	0	G_Sub	5921	0

S-VLR16			S-R137			S-R109			S-R50		
Source ID	Dist. (m)	Partial Level (dBA)	Source ID	Dist. (m)	Partial Level (dBA)	Source ID	Dist. (m)	Partial Level (dBA)	Source ID	Dist. (m)	Partial Level (dBA)
W_H5I2	2162	3	MV1-8 T	635	0	W_H6I1	2396	0	W_H1I2	2080	0
W_H3I1	2196	0	MV6-4	5157	0	W_H6I2	2397	0	W_H1I1	2080	0
W_H3I2	2197	0	MV1-11 T	702	0	W_H10I1	2415	0	W_H2I2	2108	0
W_H10I1	2199	0	MV1-4 T	767	0	W_H10I2	2416	0	W_H2I1	2108	0
W_H10I2	2200	0	MV1-9 T	843	0	W_H3I1	2482	2	W_H3I2	2151	0
W_H6I1	2216	1	MV1-5 T	857	0	W_H3I2	2482	1	W_H3I1	2152	0
W_H6I2	2218	1	MV1-2 T	916	0	MV4-11 T	573	0	MV1-3	5911	0
MV3-11 T	517	1	W_H3I1	4056	0	W_H2I1	2529	0	W_H5T	1657	2
W_H2I1	2277	1	W_H3I2	4059	0	W_H2I2	2530	0	W_H7T	1669	0
W_H2I2	2278	0	W_H9I1	4161	0	W_H1I1	2588	0	W_H8T	1693	1
MV3-3 T	533	0	W_H9I2	4164	0	W_H1I2	2589	0	W_H4T	1732	1
MV3-8 T	533	0	W_H2I1	4234	0	MV4-10 T	608	0	MV5-4 T	618	0
W_H1I1	2369	0	W_H2I2	4237	0	G_Inv2	5742	0	MV5-2 T	620	0
W_H1I2	2370	0	W_H4I1	4246	0	MV4-8 T	648	0	W_H6T	1824	0
MV3-10 T	565	0	W_H4I2	4249	0	G_Inv1	5811	0	G_Inv2	5963	0
G_Inv2	5232	0	MV1-6 T	988	0	G_Inv4	5848	0	W_H10T	1924	0
G_Inv1	5296	0	W_H10I1	4383	0	G_Inv3	5914	0	W_H9T	1925	0
G_Inv4	5341	0	W_H10I2	4385	0	MV4-9 T	665	0	G_Inv4	6046	0
G_Inv3	5402	0	W_H8I1	4398	0	MV4-4 T	667	0	G_Inv1	6057	0
G_Inv6	5450	0	W_H8I2	4401	0	MV3-2 T	667	0	MV5-3 T	686	0
G_Inv5	5510	0	W_H1I1	4413	0	G_Inv6	5954	0	G_Inv6	6131	0
G_Inv8	5561	0	W_H1I2	4416	0	G_Inv5	6019	0	G_Inv3	6137	0
MV3-7 T	627	0	MV1-1 T	1020	0	G_Inv8	6062	0	G_Inv8	6218	0
G_Inv7	5619	0	W_H7I1	4539	0	G_Inv7	6124	0	G_Inv5	6221	0
G_Inv10	5675	0	W_H7I2	4542	0	G_Inv10	6172	0	G_Inv7	6305	0
G_Inv9	5729	0	W_H6I1	4544	0	G_Inv9	6231	0	G_Inv10	6307	0
W_H4T	1879	0	W_H6I2	4547	0	MV3-4 T	712	0	G_Inv9	6392	0
W_H8T	1968	0	W_H5I1	4686	0	W_H4T	2112	0	W_H1T	2075	0
MV3-15 T	699	0	W_H5I2	4689	0	W_H8T	2167	0	W_H2T	2104	0
MV3-16 T	704	0	MV1-3 T	1137	0	MV4-6 T	775	0	W_H3T	2147	0
W_H9T	2026	0	MV2-4 T	1289	0	W_H7T	2226	0	MV4-14 T	791	0
W_H7T	2058	0	MV2-3 T	1361	0	W_H9T	2284	0	MV4-15 T	794	0
MV3-14 T	724	0	MV2-1 T	1533	0	MV4-5 T	802	0	MV6-1 T	926	0
MV3-17 T	739	0	W_H3T	4059	0	W_H5T	2296	0	MV4-10 T	875	0
MV3-13 T	752	0	MV2-2 T	1439	0	W_H6T	2392	0	MV4-11 T	901	0
W_H5T	2158	0	W_H9T	4164	0	W_H10T	2411	0	MV5-1 T	907	0

S-VLR16			S-R137			S-R109			S-R50		
Source ID	Dist. (m)	Partial Level (dBA)	Source ID	Dist. (m)	Partial Level (dBA)	Source ID	Dist. (m)	Partial Level (dBA)	Source ID	Dist. (m)	Partial Level (dBA)
W_H3T	2192	0	W_H2T	4237	0	MV4-1 T	847	0	MV6-2 T	915	0
W_H10T	2196	0	W_H4T	4249	0	MV3-5 T	860	0	MV4-13 T	943	0
MV4-13 T	772	0	W_H10T	4385	0	MV3-1 T	866	0	MV4-9 T	996	0
W_H6T	2213	0	W_H8T	4401	0	W_H3T	2477	0	MV4-8 T	1011	0
W_H2T	2273	0	W_H1T	4415	0	MV3-8 T	881	0	MV4-12 T	1043	0
MV4-15 T	814	0	W_H7T	4542	0	W_H2T	2525	0	MV6-3 T	1133	0
MV3-19 T	829	0	W_H6T	4547	0	W_H1T	2584	0	MV4-5 T	1155	0
W_H1T	2366	0	W_H5T	4689	0	MV3-9 T	920	0	MV4-7 T	1169	0
MV4-14 T	835	0	MV3-18 T	3162	0	MV4-3 T	935	0	MV4-6 T	1169	0
MV4-12 T	892	0	MV3-12 T	3223	0	MV4-2 T	953	0	MV6-4 T	1312	0
MV3-20 T	896	0	MV3-13 T	3422	0	MV3-6 T	968	0	MV3-2 T	1287	0
MV3-12 T	942	0	MV3-17 T	3533	0	MV3-11 T	1019	0	MV4-4 T	1311	0
MV3-21 T	969	0	MV3-7 T	3534	0	MV3-3 T	1052	0	MV4-2 T	1332	0
MV3-18 T	1007	0	MV3-19 T	3600	0	MV3-14 T	1095	0	MV3-8 T	1348	0
MV4-7 T	1036	0	MV3-21 T	3637	0	MV3-10 T	1099	0	MV4-3 T	1349	0
MV3-22 T	1059	0	MV3-10 T	3638	0	MV3-16 T	1143	0	MV3-14 T	1451	0
MV4-11 T	1091	0	MV3-3 T	3649	0	MV3-7 T	1164	0	MV3-4 T	1453	0
MV4-10 T	1123	0	MV3-15 T	3672	0	MV3-15 T	1186	0	MV4-1 T	1472	0
MV4-8 T	1183	0	MV3-6 T	3740	0	MV5-6 T	1229	0	MV3-9 T	1508	0
MV4-4 T	1197	0	MV3-22 T	3760	0	MV3-17 T	1259	0	MV3-20 T	1548	0
MV4-9 T	1199	0	MV3-11 T	3773	0	MV5-5 T	1264	0	MV3-16 T	1610	0
MV4-6 T	1316	0	MV3-16 T	3801	0	MV3-20 T	1275	0	MV3-5 T	1640	0
MV4-5 T	1343	0	MV3-1 T	3831	0	MV5-2 T	1277	0	MV3-22 T	1674	0
MV4-1 T	1363	0	MV3-20 T	3865	0	MV3-13 T	1293	0	MV3-11 T	1688	0
MV4-3 T	1472	0	MV3-5 T	3882	0	MV3-19 T	1309	0	MV3-15 T	1750	0
MV4-2 T	1490	0	MV3-9 T	3939	0	MV5-1 T	1370	0	MV3-21 T	1774	0
MV5-6 T	1605	0	MV3-14 T	3955	0	MV3-21 T	1411	0	MV3-1 T	1795	0
MV5-5 T	1685	0	MV3-4 T	4067	0	MV3-22 T	1451	0	MV3-19 T	1809	0
MV5-2 T	1733	0	MV3-8 T	4081	0	MV3-12 T	1474	0	MV3-6 T	1816	0
MV6-1 T	1985	0	MV3-2 T	4202	0	MV5-3 T	1499	0	MV3-10 T	1854	0
MV5-1 T	1869	0	MV6-4 T	5151	0	MV3-18 T	1548	0	MV3-17 T	1904	0
MV6-2 T	1870	0	MV6-1 T	5276	0	MV5-4 T	1573	0	MV3-3 T	2006	0
MV5-3 T	1942	0	MV4-13 T	4926	0	MV6-1 T	1913	0	MV3-7 T	2034	0
MV6-4 T	2190	0	MV4-15 T	4932	0	MV6-2 T	1826	0	MV3-13 T	2076	0
MV5-4 T	1986	0	MV4-14 T	4958	0	MV6-4 T	2199	0	MV3-18 T	2321	0
MV6-3 T	2062	0	MV4-12 T	5053	0	MV6-3 T	2044	0	MV3-12 T	2343	0

S-VLR16			S-R137			S-R109			S-R50		
Source ID	Dist. (m)	Partial Level (dBA)	Source ID	Dist. (m)	Partial Level (dBA)	Source ID	Dist. (m)	Partial Level (dBA)	Source ID	Dist. (m)	Partial Level (dBA)
MV2-1 T	2916	0	MV6-2 T	5138	0	MV2-1 T	3421	0	MV2-1 T	4330	0
MV2-2 T	2870	0	MV6-3 T	5168	0	MV2-2 T	3387	0	MV2-2 T	4251	0
MV2-3 T	3020	0	MV4-7 T	5183	0	MV2-3 T	3533	0	MV2-3 T	4412	0
MV2-4 T	3222	0	MV4-11 T	5250	0	MV2-4 T	3729	0	MV2-4 T	4626	0
MV1-7 T	4237	0	MV4-10 T	5281	0	MV1-7 T	4759	0	MV1-7 T	5577	0
MV1-10 T	4291	0	MV4-4 T	5319	0	MV1-10 T	4819	0	MV1-10 T	5597	0

Sol-luce Kingston Solar PV Energy Project

Figure 6
Predicted Noise Level Contours at 1.5m Height

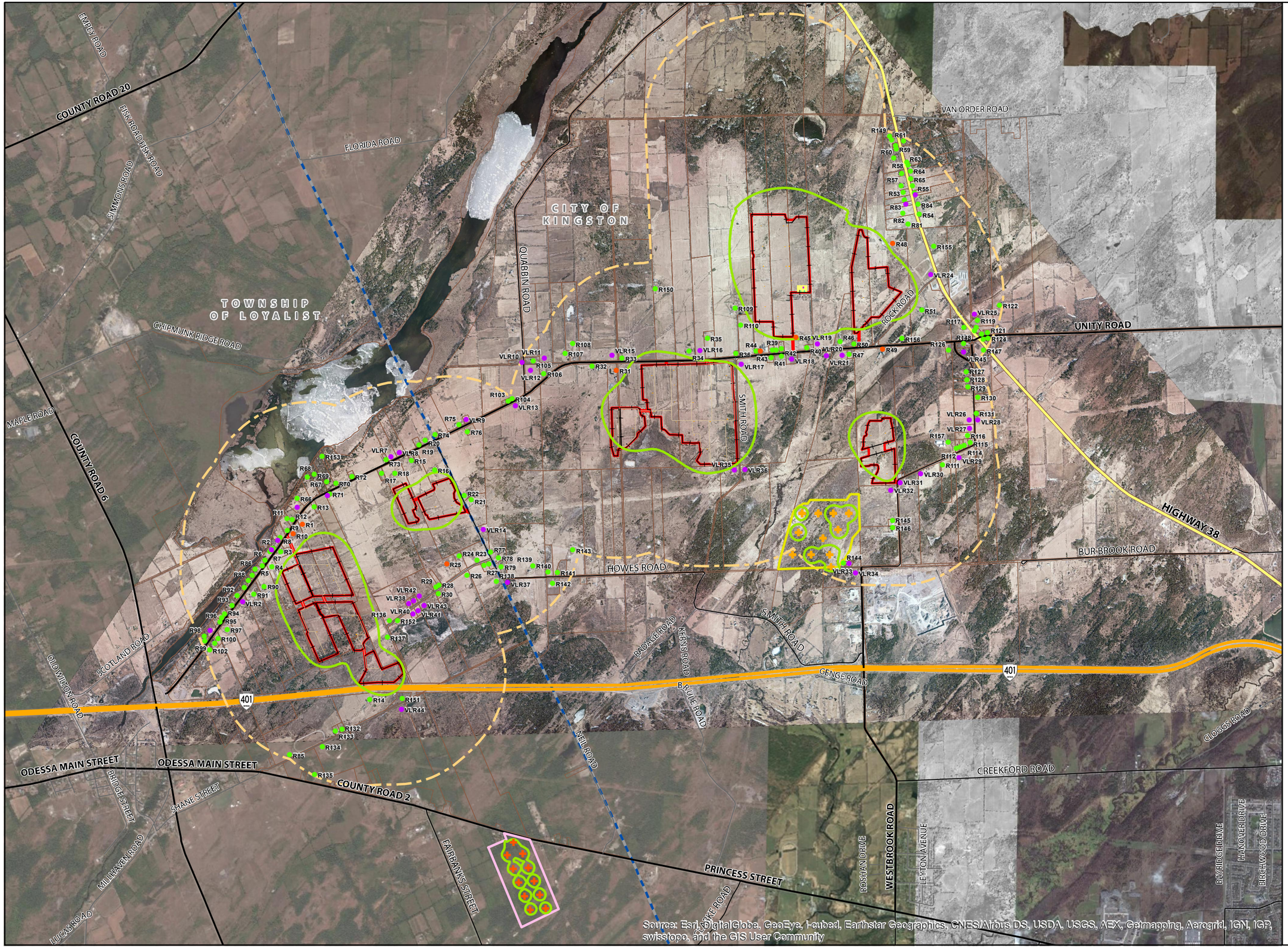

- Non-Participating Noise Receptor
- Participating Noise Receptor
- Vacant Lot Receptor
- Kingston Gardiner Hwy2 Noise Source
- SunE Westbrook Noise Source
- 40 dBA Noise Contour at 1.5 m Height
- Kingston Gardiner Hwy 2 South Solar Farm
- SunE Westbrook Solar Farm
- 1000 m Project Setback
- Fence
- Access Road
- DSTATCOM
- Medium Voltage Power Platform
- Substation Transformer, Noise Barrier, and Neutral Grounding Reactor
- Substation Yard
- Freeway
- Expressway / Highway
- Arterial Road
- Collector Road
- Local Road
- Project Boundary
- Parcel Boundary

N W E S

1:35,000

0 200 400 600 m

DILLON CONSULTING

Created By: GM
Checked By: JLP
Date Created: 9/17/2013
Date Modified: 5/25/2015
File Path:I:\GIS\138504 Kingston Solar REA Amendment\Mapping\Noise Assessment\

Sol-luce Kingston Solar PV Energy Project

Figure 7
Predicted Noise Level Contours at 4.5m Height

- Non-Participating Noise Receptor
- Participating Noise Receptor
- Vacant Lot Receptor
- Kingston Gardiner Hwy2 Noise Source
- SunE Westbrook Noise Source
- 40 dBA Noise Contour at 4.5 m Height
- Kingston Gardiner Hwy 2 South Solar Farm
- SunE Westbrook Solar Farm
- 1000 m Project Setback
- Fence
- Access Road
- DSTATCOM
- Medium Voltage Power Platform
- Substation Transformer, Noise Barrier, and Neutral Grounding Reactor
- Substation Yard
- Freeway
- Expressway / Highway
- Arterial Road
- Collector Road
- Local Road
- Project Boundary
- Parcel Boundary

N
W E
S

1:35,000

0 200 400 600 m

DILLON CONSULTING

Created By: GM
Checked By: JLP
Date Created: 9/17/2013
Date Modified: 5/25/2015
File Path:I:\GIS\138504 Kingston Solar REA Amendment\Mapping\Noise Assessment\

Source: Esri, DigitalGlobe, GeoEye, i-cubed, Earthstar Geographics, CNES/Airbus DS, USDA, USGS, AEX, Getmapping, Aerogrid, IGN, IGP, swisstopo, and the GIS User Community

8. Acoustic Assessment Summary

8.1 Acoustic Assessment Summary Table

Table 7 summarizes the compliance of the proposed Sol-Luce Kingston Solar PV Energy project with the applicable Sound Level Performance Limits at the designated Points of Reception. The performance limits in the table reflect the applicable sound level limits in the MOECC Publication NPC-300 for Class 3 Areas and the predicted POR sound levels reflect the cumulative receptor sound levels for Sol Luce solar project and the two neighbouring solar projects.

Table 7: Acoustic Assessment Summary TablePoint

Point of Reception		Sound Level at POR (dBA, Leq)*	Verified by Acoustic Audit (Yes/No)	Performance Limit		
ID	Description			Daytime (dBA)	Nighttime (dBA)	Compliance (Yes/No)
S-R1*	Existing Noise Receptor	35.7	No	45	40	N/A
S-R2	Existing Noise Receptor	35.2	No	45	40	Yes
S-R3	Existing Noise Receptor	37.1	No	45	40	Yes
S-R4	Existing Noise Receptor	37.2	No	45	40	Yes
S-R5	Existing Noise Receptor	35.0	No	45	40	Yes
S-R6	Existing Noise Receptor	35.0	No	45	40	Yes
S-R7	Existing Noise Receptor	35.0	No	45	40	Yes
S-R8	Existing Noise Receptor	34.8	No	45	40	Yes
S-R9	Existing Noise Receptor	34.8	No	45	40	Yes
S-R10*	Existing Noise Receptor	36.3	No	45	40	N/A
S-R11	Existing Noise Receptor	33.0	No	45	40	Yes
S-R12	Existing Noise Receptor	33.6	No	45	40	Yes
S-R13	Existing Noise Receptor	33.0	No	45	40	Yes
S-R14	Existing Noise Receptor	37.4	No	45	40	Yes
S-R15	Existing Noise Receptor	33.5	No	45	40	Yes
S-R16	Existing Noise Receptor	38.8	No	45	40	Yes
S-R17	Existing Noise Receptor	32.4	No	45	40	Yes
S-R18	Existing Noise Receptor	34.1	No	45	40	Yes
S-R19	Existing Noise Receptor	31.0	No	45	40	Yes
S-R20	Existing Noise Receptor	30.5	No	45	40	Yes
S-R21	Existing Noise Receptor	35.7	No	45	40	Yes
S-R22	Existing Noise Receptor	37.9	No	45	40	Yes

Point of Reception		Sound Level at POR (dBA, Leq)*	Verified by Acoustic Audit (Yes/No)	Performance Limit		
ID	Description			Daytime (dBA)	Nighttime (dBA)	Compliance (Yes/No)
S-R23	Existing Noise Receptor	29.7	No	45	40	Yes
S-R24	Existing Noise Receptor	31.4	No	45	40	Yes
S-R25*	Existing Noise Receptor	31.4	No	45	40	N/A
S-R26	Existing Noise Receptor	29.4	No	45	40	Yes
S-R27	Existing Noise Receptor	28.9	No	45	40	Yes
S-R28	Existing Noise Receptor	30.6	No	45	40	Yes
S-R29	Existing Noise Receptor	30.7	No	45	40	Yes
S-R30	Existing Noise Receptor	30.4	No	45	40	Yes
S-R31*	Existing Noise Receptor	38.3	No	45	40	N/A
S-R32	Existing Noise Receptor	34.3	No	45	40	Yes
S-R33	Existing Noise Receptor	37.7	No	45	40	Yes
S-R34	Existing Noise Receptor	39.6	No	45	40	Yes
S-R35	Existing Noise Receptor	38.2	No	45	40	Yes
S-R36	Existing Noise Receptor	39.4	No	45	40	Yes
S-R37	Existing Noise Receptor	39.5	No	45	40	Yes
S-R38	Existing Noise Receptor	39.6	No	45	40	Yes
S-R39	Existing Noise Receptor	39.7	No	45	40	Yes
S-R40	Existing Noise Receptor	39.7	No	45	40	Yes
S-R41	Existing Noise Receptor	38.9	No	45	40	Yes
S-R42	Existing Noise Receptor	39.0	No	45	40	Yes
S-R43	Existing Noise Receptor	39.3	No	45	40	Yes
S-R44*	Existing Noise Receptor	39.3	No	45	40	N/A
S-R45*	Existing Noise Receptor	41.2	No	45	40	N/A
S-R46	Existing Noise Receptor	39.8	No	45	40	Yes
S-R47	Existing Noise Receptor	38.2	No	45	40	Yes
S-R48*	Existing Noise Receptor	39.2	No	45	40	N/A
S-R49*	Existing Noise Receptor	36.8	No	45	40	N/A
S-R50	Existing Noise Receptor	38.8	No	45	40	Yes
S-R51	Existing Noise Receptor	37.6	No	45	40	Yes
S-R52	Existing Noise Receptor	33.5	No	45	40	Yes
S-R53	Existing Noise Receptor	33.2	No	45	40	Yes
S-R54	Existing Noise Receptor	33.6	No	45	40	Yes
S-R55	Existing Noise Receptor	32.9	No	45	40	Yes
S-R56	Existing Noise Receptor	32.6	No	45	40	Yes
S-R57	Existing Noise Receptor	32.5	No	45	40	Yes
S-R58	Existing Noise Receptor	32.1	No	45	40	Yes
S-R59	Existing Noise Receptor	31.5	No	45	40	Yes

Point of Reception		Sound Level at POR (dBA, Leq)*	Verified by Acoustic Audit (Yes/No)	Performance Limit		
ID	Description			Daytime (dBA)	Nighttime (dBA)	Compliance (Yes/No)
S-R60	Existing Noise Receptor	31.4	No	45	40	Yes
S-R61	Existing Noise Receptor	34.4	No	45	40	Yes
S-R62	Existing Noise Receptor	31.8	No	45	40	Yes
S-R63	Existing Noise Receptor	31.7	No	45	40	Yes
S-R64	Existing Noise Receptor	32.0	No	45	40	Yes
S-R65	Existing Noise Receptor	32.3	No	45	40	Yes
S-R66	Existing Noise Receptor	31.0	No	45	40	Yes
S-R67	Existing Noise Receptor	29.0	No	45	40	Yes
S-R68	Existing Noise Receptor	29.0	No	45	40	Yes
S-R69	Existing Noise Receptor	30.0	No	45	40	Yes
S-R70	Existing Noise Receptor	30.4	No	45	40	Yes
S-R71	Existing Noise Receptor	31.4	No	45	40	Yes
S-R72	Existing Noise Receptor	30.3	No	45	40	Yes
S-R73	Existing Noise Receptor	31.0	No	45	40	Yes
S-R74	Existing Noise Receptor	29.7	No	45	40	Yes
S-R75	Existing Noise Receptor	28.5	No	45	40	Yes
S-R76	Existing Noise Receptor	28.9	No	45	40	Yes
S-R77	Existing Noise Receptor	29.2	No	45	40	Yes
S-R78	Existing Noise Receptor	28.4	No	45	40	Yes
S-R79	Existing Noise Receptor	28.0	No	45	40	Yes
S-R80	Existing Noise Receptor	28.7	No	45	40	Yes
S-R81	Existing Noise Receptor	35.2	No	45	40	Yes
S-R82	Existing Noise Receptor	34.8	No	45	40	Yes
S-R83	Existing Noise Receptor	33.9	No	45	40	Yes
S-R84	Existing Noise Receptor	33.2	No	45	40	Yes
S-R85	Existing Noise Receptor	25.5	No	45	40	Yes
S-R86	Existing Noise Receptor	33.8	No	45	40	Yes
S-R87	Existing Noise Receptor	33.6	No	45	40	Yes
S-R88	Existing Noise Receptor	33.1	No	45	40	Yes
S-R89	Existing Noise Receptor	32.5	No	45	40	Yes
S-R90	Existing Noise Receptor	36.6	No	45	40	Yes
S-R91	Existing Noise Receptor	34.3	No	45	40	Yes
S-R92	Existing Noise Receptor	31.4	No	45	40	Yes
S-R93	Existing Noise Receptor	30.6	No	45	40	Yes
S-R94	Existing Noise Receptor	29.5	No	45	40	Yes
S-R95	Existing Noise Receptor	29.2	No	45	40	Yes
S-R96	Existing Noise Receptor	28.8	No	45	40	Yes

Point of Reception		Sound Level at POR (dBA, Leq)*	Verified by Acoustic Audit (Yes/No)	Performance Limit		
ID	Description			Daytime (dBA)	Nighttime (dBA)	Compliance (Yes/No)
S-R97	Existing Noise Receptor	29.4	No	45	40	Yes
S-R98	Existing Noise Receptor	26.9	No	45	40	Yes
S-R99	Existing Noise Receptor	26.8	No	45	40	Yes
S-R100	Existing Noise Receptor	28.2	No	45	40	Yes
S-R101	Existing Noise Receptor	27.7	No	45	40	Yes
S-R102	Existing Noise Receptor	27.0	No	45	40	Yes
S-R103	Existing Noise Receptor	28.3	No	45	40	Yes
S-R104	Existing Noise Receptor	28.5	No	45	40	Yes
S-R105	Existing Noise Receptor	29.1	No	45	40	Yes
S-R106	Existing Noise Receptor	30.1	No	45	40	Yes
S-R107	Existing Noise Receptor	31.2	No	45	40	Yes
S-R108	Existing Noise Receptor	31.4	No	45	40	Yes
S-R109	Existing Noise Receptor	39.9	No	45	40	Yes
S-R110	Existing Noise Receptor	39.8	No	45	40	Yes
S-R111	Existing Noise Receptor	31.3	No	45	40	Yes
S-R112	Existing Noise Receptor	30.4	No	45	40	Yes
S-R113	Existing Noise Receptor	30.1	No	45	40	Yes
S-R114	Existing Noise Receptor	29.9	No	45	40	Yes
S-R115	Existing Noise Receptor	29.5	No	45	40	Yes
S-R116	Existing Noise Receptor	29.8	No	45	40	Yes
S-R117	Existing Noise Receptor	31.7	No	45	40	Yes
S-R118	Existing Noise Receptor	30.8	No	45	40	Yes
S-R119	Existing Noise Receptor	30.8	No	45	40	Yes
S-R120	Existing Noise Receptor	30.4	No	45	40	Yes
S-R121	Existing Noise Receptor	30.0	No	45	40	Yes
S-R122	Existing Noise Receptor	29.5	No	45	40	Yes
S-R123	Existing Noise Receptor	30.2	No	45	40	Yes
S-R124	Existing Noise Receptor	29.9	No	45	40	Yes
S-R125	Existing Noise Receptor	31.4	No	45	40	Yes
S-R126	Existing Noise Receptor	32.2	No	45	40	Yes
S-R127	Existing Noise Receptor	30.7	No	45	40	Yes
S-R128	Existing Noise Receptor	30.5	No	45	40	Yes
S-R129	Existing Noise Receptor	30.4	No	45	40	Yes
S-R130	Existing Noise Receptor	29.7	No	45	40	Yes
S-R131	Existing Noise Receptor	29.6	No	45	40	Yes
S-R132	Existing Noise Receptor	29.6	No	45	40	Yes
S-R133	Existing Noise Receptor	29.1	No	45	40	Yes

Point of Reception		Sound Level at POR (dBA, Leq)*	Verified by Acoustic Audit (Yes/No)	Performance Limit		
ID	Description			Daytime (dBA)	Nighttime (dBA)	Compliance (Yes/No)
S-R134	Existing Noise Receptor	27.2	No	45	40	Yes
S-R135	Existing Noise Receptor	24.8	No	45	40	Yes
S-R136	Existing Noise Receptor	36.7	No	45	40	Yes
S-R137	Existing Noise Receptor	38.1	No	45	40	Yes
S-R138	Existing Noise Receptor	27.7	No	45	40	Yes
S-R139	Existing Noise Receptor	27.1	No	45	40	Yes
S-R140	Existing Noise Receptor	26.7	No	45	40	Yes
S-R141	Existing Noise Receptor	26.7	No	45	40	Yes
S-R142	Existing Noise Receptor	26.4	No	45	40	Yes
S-R143	Existing Noise Receptor	27.5	No	45	40	Yes
S-R144	Existing Noise Receptor	36.1	No	45	40	Yes
S-R145	Existing Noise Receptor	31.6	No	45	40	Yes
S-R146	Existing Noise Receptor	31.1	No	45	40	Yes
S-R147	Existing Noise Receptor	30.0	No	45	40	Yes
S-R148	Existing Noise Receptor	30.9	No	45	40	Yes
S-R149	Existing Noise Receptor	34.2	No	45	40	Yes
S-R150	Existing Noise Receptor	34.0	No	45	40	Yes
S-R151	Existing Noise Receptor	35.7	No	45	40	Yes
S-R152	Existing Noise Receptor	35.2	No	45	40	Yes
S-R153	Existing Noise Receptor	27.7	No	45	40	Yes
S-R154	Existing Noise Receptor	30.8	No	45	40	Yes
S-R155	Existing Noise Receptor	34.1	No	45	40	Yes
S-R156	Existing Noise Receptor	36.5	No	45	40	Yes
S-R157	Existing Noise Receptor	31.3	No	45	40	Yes
S-VLR1	Vacant Lot Receptor	27.6	No	45	40	Yes
S-VLR2	Vacant Lot Receptor	32.2	No	45	40	Yes
S-VLR3	Vacant Lot Receptor	35.1	No	45	40	Yes
S-VLR4	Vacant Lot Receptor	34.8	No	45	40	Yes
S-VLR5	Vacant Lot Receptor	32.2	No	45	40	Yes
S-VLR6	Vacant Lot Receptor	31.6	No	45	40	Yes
S-VLR7	Vacant Lot Receptor	31.1	No	45	40	Yes
S-VLR8	Vacant Lot Receptor	31.1	No	45	40	Yes
S-VLR9	Vacant Lot Receptor	28.1	No	45	40	Yes
S-VLR10	Vacant Lot Receptor	28.5	No	45	40	Yes
S-VLR11	Vacant Lot Receptor	29.8	No	45	40	Yes
S-VLR12	Vacant Lot Receptor	29.1	No	45	40	Yes
S-VLR13	Vacant Lot Receptor	28.7	No	45	40	Yes

Point of Reception		Sound Level at POR (dBA, Leq)*	Verified by Acoustic Audit (Yes/No)	Performance Limit		
ID	Description			Daytime (dBA)	Nighttime (dBA)	Compliance (Yes/No)
S-VLR14	Vacant Lot Receptor	31.4	No	45	40	Yes
S-VLR15	Vacant Lot Receptor	35.9	No	45	40	Yes
S-VLR16	Vacant Lot Receptor	39.3	No	45	40	Yes
S-VLR17	Vacant Lot Receptor	39.9	No	45	40	Yes
S-VLR18	Vacant Lot Receptor	38.7	No	45	40	Yes
S-VLR19	Vacant Lot Receptor	40.0	No	45	40	Yes
S-VLR20	Vacant Lot Receptor	38.3	No	45	40	Yes
S-VLR21	Vacant Lot Receptor	38.5	No	45	40	Yes
S-VLR22	Vacant Lot Receptor	34.0	No	45	40	Yes
S-VLR23	Vacant Lot Receptor	32.9	No	45	40	Yes
S-VLR24	Vacant Lot Receptor	36.0	No	45	40	Yes
S-VLR25	Vacant Lot Receptor	31.1	No	45	40	Yes
S-VLR26	Vacant Lot Receptor	29.9	No	45	40	Yes
S-VLR27	Vacant Lot Receptor	29.8	No	45	40	Yes
S-VLR28	Vacant Lot Receptor	29.4	No	45	40	Yes
S-VLR29	Vacant Lot Receptor	30.0	No	45	40	Yes
S-VLR30	Vacant Lot Receptor	33.8	No	45	40	Yes
S-VLR31	Vacant Lot Receptor	36.6	No	45	40	Yes
S-VLR32	Vacant Lot Receptor	36.0	No	45	40	Yes
S-VLR33	Vacant Lot Receptor	34.0	No	45	40	Yes
S-VLR34	Vacant Lot Receptor	32.0	No	45	40	Yes
S-VLR35	Vacant Lot Receptor	39.3	No	45	40	Yes
S-VLR36	Vacant Lot Receptor	38.0	No	45	40	Yes
S-VLR37	Vacant Lot Receptor	27.2	No	45	40	Yes
S-VLR38	Vacant Lot Receptor	33.1	No	45	40	Yes
S-VLR39	Vacant Lot Receptor	32.5	No	45	40	Yes
S-VLR40	Vacant Lot Receptor	32.8	No	45	40	Yes
S-VLR41	Vacant Lot Receptor	32.1	No	45	40	Yes
S-VLR42	Vacant Lot Receptor	31.9	No	45	40	Yes
S-VLR43	Vacant Lot Receptor	31.5	No	45	40	Yes
S-VLR44	Vacant Lot Receptor	33.1	No	45	40	Yes
S-VLR45	Vacant Lot Receptor	31.2	No	45	40	Yes
G-1	Existing Noise Receptor	36.0	No	45	40	Yes
G-2	Existing Noise Receptor	33.5	No	45	40	Yes
G-3	Existing Noise Receptor	31.9	No	45	40	Yes
G-4	Existing Noise Receptor	32.6	No	45	40	Yes
G-5	Existing Noise Receptor	31.2	No	45	40	Yes

Point of Reception		Sound Level at POR (dBA, Leq)*	Verified by Acoustic Audit (Yes/No)	Performance Limit		
ID	Description			Daytime (dBA)	Nighttime (dBA)	Compliance (Yes/No)
G-6	Existing Noise Receptor	31.0	No	45	40	Yes
G-7	Existing Noise Receptor	34.1	No	45	40	Yes
G-8	Existing Noise Receptor	30.6	No	45	40	Yes
G-9	Existing Noise Receptor	30.2	No	45	40	Yes
G-10	Existing Noise Receptor	33.2	No	45	40	Yes
G-11	Existing Noise Receptor	29.8	No	45	40	Yes
G-12	Existing Noise Receptor	31.9	No	45	40	Yes
G-13	Existing Noise Receptor	29.2	No	45	40	Yes
G-14	Existing Noise Receptor	31.5	No	45	40	Yes
G-15	Existing Noise Receptor	28.4	No	45	40	Yes
G-16	Existing Noise Receptor	28.9	No	45	40	Yes
G-17	Existing Noise Receptor	28.7	No	45	40	Yes
G-18	Existing Noise Receptor	28.2	No	45	40	Yes
G-19	Existing Noise Receptor	28.3	No	45	40	Yes
G-20	Existing Noise Receptor	28.3	No	45	40	Yes
G-21	Existing Noise Receptor	28.4	No	45	40	Yes
G-22	Existing Noise Receptor	28.3	No	45	40	Yes
G-23	Existing Noise Receptor	27.8	No	45	40	Yes
G-24	Existing Noise Receptor	28.1	No	45	40	Yes
G-25	Existing Noise Receptor	28.0	No	45	40	Yes
G-26	Existing Noise Receptor	27.2	No	45	40	Yes
G-27	Existing Noise Receptor	27.2	No	45	40	Yes
G-28	Existing Noise Receptor	27.5	No	45	40	Yes
G-29	Existing Noise Receptor	27.2	No	45	40	Yes
G-30	Existing Noise Receptor	27.4	No	45	40	Yes
G-31	Existing Noise Receptor	25.6	No	45	40	Yes
G-32	Existing Noise Receptor	26.7	No	45	40	Yes
G-33	Existing Noise Receptor	26.2	No	45	40	Yes
G-34	Existing Noise Receptor	26.6	No	45	40	Yes
G-35	Existing Noise Receptor	25.6	No	45	40	Yes
G-36	Existing Noise Receptor	25.6	No	45	40	Yes
G-37	Existing Noise Receptor	25.9	No	45	40	Yes
G-38	Existing Noise Receptor	25.7	No	45	40	Yes
G-39	Existing Noise Receptor	24.4	No	45	40	Yes
G-40	Existing Noise Receptor	26.0	No	45	40	Yes
G-41	Existing Noise Receptor	24.3	No	45	40	Yes
G-42	Existing Noise Receptor	25.6	No	45	40	Yes

Point of Reception		Sound Level at POR (dBA, Leq)*	Verified by Acoustic Audit (Yes/No)	Performance Limit		
ID	Description			Daytime (dBA)	Nighttime (dBA)	Compliance (Yes/No)
G-43	Existing Noise Receptor	25.9	No	45	40	Yes
G-44	Existing Noise Receptor	25.0	No	45	40	Yes
G-45	Existing Noise Receptor	23.8	No	45	40	Yes
G-46	Existing Noise Receptor	24.9	No	45	40	Yes
G-47	Existing Noise Receptor	23.7	No	45	40	Yes
G-48	Existing Noise Receptor	25.0	No	45	40	Yes
G-49	Existing Noise Receptor	24.8	No	45	40	Yes
G-50	Existing Noise Receptor	23.0	No	45	40	Yes
G-51	Existing Noise Receptor	24.7	No	45	40	Yes
G-52	Existing Noise Receptor	23.2	No	45	40	Yes
G-53	Existing Noise Receptor	25.0	No	45	40	Yes
G-54	Existing Noise Receptor	24.1	No	45	40	Yes
G-55	Existing Noise Receptor	22.8	No	45	40	Yes
G-56	Existing Noise Receptor	22.7	No	45	40	Yes
G-57	Existing Noise Receptor	23.0	No	45	40	Yes
G-58	Existing Noise Receptor	24.7	No	45	40	Yes
G-59	Existing Noise Receptor	24.9	No	45	40	Yes
G-60	Existing Noise Receptor	22.6	No	45	40	Yes
G-61	Existing Noise Receptor	22.5	No	45	40	Yes
G-62	Existing Noise Receptor	22.5	No	45	40	Yes
G-63	Existing Noise Receptor	24.0	No	45	40	Yes
G-64	Existing Noise Receptor	24.6	No	45	40	Yes
G-65	Existing Noise Receptor	23.5	No	45	40	Yes
G-66	Existing Noise Receptor	21.9	No	45	40	Yes
G-67	Existing Noise Receptor	24.7	No	45	40	Yes
G-68	Existing Noise Receptor	21.7	No	45	40	Yes
G-69	Existing Noise Receptor	21.5	No	45	40	Yes
G-70	Existing Noise Receptor	24.2	No	45	40	Yes
G-71	Existing Noise Receptor	21.4	No	45	40	Yes
G-72	Existing Noise Receptor	24.1	No	45	40	Yes
G-73	Existing Noise Receptor	24.5	No	45	40	Yes
G-74	Existing Noise Receptor	21.0	No	45	40	Yes
G-75	Existing Noise Receptor	20.7	No	45	40	Yes
G-76	Existing Noise Receptor	20.8	No	45	40	Yes
G-77	Existing Noise Receptor	20.7	No	45	40	Yes
G-78	Existing Noise Receptor	20.7	No	45	40	Yes
G-79	Existing Noise Receptor	24.4	No	45	40	Yes

Point of Reception		Sound Level at POR (dBA, Leq)*	Verified by Acoustic Audit (Yes/No)	Performance Limit		
ID	Description			Daytime (dBA)	Nighttime (dBA)	Compliance (Yes/No)
G-80	Existing Noise Receptor	20.5	No	45	40	Yes
G-81	Existing Noise Receptor	20.3	No	45	40	Yes
G-82	Existing Noise Receptor	20.2	No	45	40	Yes
G-83	Existing Noise Receptor	20.2	No	45	40	Yes
G-84	Existing Noise Receptor	20.2	No	45	40	Yes
G-85	Existing Noise Receptor	20.3	No	45	40	Yes
G-86	Existing Noise Receptor	20.1	No	45	40	Yes
G-87	Existing Noise Receptor	24.4	No	45	40	Yes
G-88	Existing Noise Receptor	20.2	No	45	40	Yes
G-89	Existing Noise Receptor	20.0	No	45	40	Yes
G-90	Existing Noise Receptor	20.0	No	45	40	Yes
G-91	Existing Noise Receptor	19.9	No	45	40	Yes
G-92	Existing Noise Receptor	24.1	No	45	40	Yes
G-93	Existing Noise Receptor	19.9	No	45	40	Yes
G-94	Existing Noise Receptor	24.4	No	45	40	Yes
G-95	Existing Noise Receptor	24.4	No	45	40	Yes
G-96	Existing Noise Receptor	24.6	No	45	40	Yes
G-97	Existing Noise Receptor	19.7	No	45	40	Yes
G-98	Existing Noise Receptor	24.5	No	45	40	Yes
G-99	Existing Noise Receptor	24.6	No	45	40	Yes
G-100	Existing Noise Receptor	19.6	No	45	40	Yes
G-101	Existing Noise Receptor	24.5	No	45	40	Yes
G-102	Existing Noise Receptor	23.9	No	45	40	Yes
G-103	Existing Noise Receptor	24.1	No	45	40	Yes
G-104	Existing Noise Receptor	19.6	No	45	40	Yes
G-105	Existing Noise Receptor	24.5	No	45	40	Yes
G-106	Existing Noise Receptor	24.6	No	45	40	Yes
G-107	Existing Noise Receptor	19.4	No	45	40	Yes
G-108	Existing Noise Receptor	24.8	No	45	40	Yes
G-109	Existing Noise Receptor	24.8	No	45	40	Yes
G-110	Existing Noise Receptor	24.1	No	45	40	Yes
G-111	Existing Noise Receptor	24.5	No	45	40	Yes
G-112	Existing Noise Receptor	24.1	No	45	40	Yes
G-113	Existing Noise Receptor	24.0	No	45	40	Yes
G-114	Existing Noise Receptor	24.5	No	45	40	Yes
G-115	Existing Noise Receptor	35.5	No	45	40	Yes
G-116	Existing Noise Receptor	24.5	No	45	40	Yes

Point of Reception		Sound Level at POR (dBA, Leq)*	Verified by Acoustic Audit (Yes/No)	Performance Limit		
ID	Description			Daytime (dBA)	Nighttime (dBA)	Compliance (Yes/No)
G-117	Existing Noise Receptor	37.2	No	45	40	Yes
G-118	Existing Noise Receptor	38.9	No	45	40	Yes
G-119	Existing Noise Receptor	29.4	No	45	40	Yes
G-120	Existing Noise Receptor	36.8	No	45	40	Yes
G-121	Existing Noise Receptor	29.2	No	45	40	Yes
G-122	Existing Noise Receptor	29.0	No	45	40	Yes
G-123	Existing Noise Receptor	26.6	No	45	40	Yes
G-124	Existing Noise Receptor	27.1	No	45	40	Yes
G-V1	Vacant Lot Receptor	21.7	No	45	40	Yes
G-V2	Vacant Lot Receptor	25.1	No	45	40	Yes
G-V3	Vacant Lot Receptor	25.3	No	45	40	Yes
G-V4	Vacant Lot Receptor	19.9	No	45	40	Yes
G-V5	Vacant Lot Receptor	22.7	No	45	40	Yes
G-V6	Vacant Lot Receptor	26.3	No	45	40	Yes
G-V7	Vacant Lot Receptor	27.3	No	45	40	Yes
G-V8	Vacant Lot Receptor	20.9	No	45	40	Yes
G-V9	Vacant Lot Receptor	33.5	No	45	40	Yes
G-V10	Vacant Lot Receptor	34.1	No	45	40	Yes
G-V11	Vacant Lot Receptor	32.3	No	45	40	Yes
G-V12	Vacant Lot Receptor	35.4	No	45	40	Yes
G-V13	Vacant Lot Receptor	30.6	No	45	40	Yes
G-V14	Vacant Lot Receptor	30.7	No	45	40	Yes
G-V15	Vacant Lot Receptor	23.9	No	45	40	Yes
G-V16	Vacant Lot Receptor	26.2	No	45	40	Yes
G-V17	Vacant Lot Receptor	25.4	No	45	40	Yes
G-V18	Vacant Lot Receptor	20.7	No	45	40	Yes
G-V19	Vacant Lot Receptor	20.2	No	45	40	Yes
G-V20	Vacant Lot Receptor	20.1	No	45	40	Yes
G-V21	Vacant Lot Receptor	20.1	No	45	40	Yes
W-R1	Existing Noise Receptor	26.8	No	45	40	Yes
W-R2	Existing Noise Receptor	26.5	No	45	40	Yes
W-R3	Existing Noise Receptor	26.4	No	45	40	Yes
W-R4	Existing Noise Receptor	26.7	No	45	40	Yes
W-R5	Existing Noise Receptor	26.6	No	45	40	Yes
W-R6	Existing Noise Receptor	26.2	No	45	40	Yes
W-R7	Existing Noise Receptor	25.9	No	45	40	Yes
W-R8	Existing Noise Receptor	25.8	No	45	40	Yes

Point of Reception		Sound Level at POR (dBA, Leq)*	Verified by Acoustic Audit (Yes/No)	Performance Limit		
ID	Description			Daytime (dBA)	Nighttime (dBA)	Compliance (Yes/No)
W-R9	Existing Noise Receptor	25.6	No	45	40	Yes
W-R10	Existing Noise Receptor	25.6	No	45	40	Yes
W-R11	Existing Noise Receptor	25.6	No	45	40	Yes
W-R12	Existing Noise Receptor	25.6	No	45	40	Yes
W-R13	Existing Noise Receptor	25.6	No	45	40	Yes
W-R14	Existing Noise Receptor	24.1	No	45	40	Yes
W-R15	Existing Noise Receptor	35.7	No	45	40	Yes
W-R16	Existing Noise Receptor	31.0	No	45	40	Yes
W-R17	Existing Noise Receptor	31.4	No	45	40	Yes
W-R18	Existing Noise Receptor	31.2	No	45	40	Yes
W-R19	Existing Noise Receptor	30.4	No	45	40	Yes
W-R20	Existing Noise Receptor	30.2	No	45	40	Yes
W-R21	Existing Noise Receptor	31.6	No	45	40	Yes
W-R22	Existing Noise Receptor	25.6	No	45	40	Yes
W-V1	Vacant Lot Receptor	28.9	No	45	40	Yes
W-V2	Vacant Lot Receptor	28.9	No	45	40	Yes
W-V3	Vacant Lot Receptor	34.0	No	45	40	Yes
W-V4	Vacant Lot Receptor	33.7	No	45	40	Yes
W-V7	Vacant Lot Receptor	34.7	No	45	40	Yes
W-V8	Vacant Lot Receptor	32.3	No	45	40	Yes
W-V11	Vacant Lot Receptor	38.7	No	45	40	Yes
W-V13	Vacant Lot Receptor	27.9	No	45	40	Yes
W-V14	Vacant Lot Receptor	38.3	No	45	40	Yes
W-V15	Vacant Lot Receptor	27.6	No	45	40	Yes
W-V16	Vacant Lot Receptor	26.0	No	45	40	Yes
W-V17	Vacant Lot Receptor	30.4	No	45	40	Yes
W-V18	Vacant Lot Receptor	38.9	No	45	40	Yes
W-V19	Vacant Lot Receptor	38.2	No	45	40	Yes

Note:
The initial letter for each receptor refers to the respective solar project (W: Westbrook, G: Gardiner Hwy 2, and S: Sol-Luce).
Receptor IDs with '*' are those that have project components on their property and are financially benefiting from the project.

The predicted noise levels at receptors that are financially benefiting from the project are not compared against the 40.0 dBA criterion. For these receptors 'N/A' is indicated under the 'Compliance' column.

8.2 Rationale for Selecting Applicable Noise Guideline Limits

8.2.1 Acoustic Environment

The background ambient noise, exclusive of Sol-Luce project, can be characterized as a Class 3 Area as described in NPC-300. The sources that contribute to the background sound include sounds of nature as well as occasional vehicle traffic noise from nearby roadways.

For a project located in a Class 3 Area, the project is considered compliant with NPC-300 if the predicted cumulative noise levels at the nearby receptors are at or below either the exclusion limits (see **Table 8**) or the background ambient levels as measured or calculated.

Table 8: NPC-300 – Class 3 Area Exclusionary Limits

Time of Day	One Hour Leq (dBA) Class 3 Area
07:00 – 19:00	45
19:00 – 23:00	40
23:00 – 07:00	40

The applicable nighttime limit is the most restrictive level for operation of the stationary source. The background ambient sound levels at the points of reception were not measured or modeled. Therefore, the NPC-300's Class 3 Areas' exclusionary limits have been adopted as the performance limit at each of the PORs.

8.2.2 Predictable Worst Case Operating Scenario

The inverters, inverter transformers and substation transformers were all assumed to operate on a continuous basis at their maximum load during daytime, evening and nighttime hours. These sources were modeled as such.

9. Conclusion

This *Noise Study Report* was prepared as a supporting document for a technical change amendment tot eh REA for the Sol-Luce Kingston Solar PV Energy Project. The report conforms to the guidelines for an Acoustic Assessment Report as defined in Ministry of the Environment and Climate Change (MOECC) publication NPC-233 *Information to be Submitted for the Approval of Stationary Sources of Sound*. All procedures used in this assessment were conducted in accordance with the requirements of NPC-233 and additional general direction provided by the MOECC for preparation of acoustic assessment reports for solar facilities under the REA. In this NSR, it was determined that noise mitigation measures consisting of acoustic louvers to be installed on all the ventilation openings of 13 inverter enclosures, and installation of a 6m high, U-shaped noise barrier wall for the substation transformer would be required to achieve compliance.

With the implementation of the noise mitigation measures determined in this study, the proposed Sol-Luce Kingston Solar PV Energy project will comply with the daytime and nighttime noise criteria as defined in the Ontario Ministry of the Environment and Climate Change Noise Pollution Control Publication *NPC-300 Environmental Noise Guideline's* Class 3 Areas (Rural), for all sources assessed in this study.

10. Closure

This *Noise Study Report* has been prepared based on the information provided and/or approved by Kingston Solar LP and/or their contractors. This report was prepared by Dillon for the sole benefit of Kingston Solar LP to satisfy reporting requirements for the Ontario Ministry of the Environment and Climate Change. The material in the report reflects Dillon's judgment in light of the information available to Dillon at the time of this report preparation. Any use which a third party makes of this report, or any reliance on or decisions made based on it, are the responsibilities of such third parties. Dillon accepts no responsibility for damages, if any, suffered by any third party as a result of decisions made or actions based on this report.

Respectfully Submitted,

DILLON CONSULTING LIMITED

Amir A. Iravani, Ph.D., P.Eng.
Associate

11. References

AMEC. Kingston Solar LP Sol-Luce Kingston Solar PV Energy Project Design and Operations Report. September 2012.

Industrial Noise Control Fundamentals and Applications, Bell, Lewis H., Marcel Dekker, Inc. 1982.

Ministry of Environment Publication NPC- 205 Sound Level Limits for Stationary Sources in Class 1 & 2 Areas (Urban), October 1995.

Ministry of Environment Publication NPC- 232 Sound Level Limits for Stationary Sources in Class 3 Areas (Rural), October 1995.

Ministry of Environment Publication NPC-233 Information to be Submitted for Approval of Stationary Sources of Sound, October 1995.

Ministry of Environment Publication NPC-300 Environmental Noise Guidelines – Stationary and Transportation Sources – Approval and Planning, August 2013.

Ontario Regulation 359/09. Environmental Protection Act. Renewable Energy Approvals Under Part V.0.1 of the Act.

Ontario Ministry of the Environment, Model Municipal Noise Control By-Law Publication NPC-104, August 1978.

Transformers, Regulators and Reactors, NEMA Standards Publication No. TR 1-1993(R2000), National Electrical Manufacturers Association.

Appendix A: Manufacturer’s Equipment Specifications

Acoustic Environmental Test

SC 800CP-US central inverter

(Extract of Test report SC800CP-US-91:LE1613)

1 Overview

Project title:	SC800CP-US
Type of test / thresholds and requirements:	Sound level measurement according to DIN EN ISO 3744:2011-02 and DIN EN ISO 9614-2:2010-11 of sinusoidal, irregularly shaped, transient signals. Classification of ambient conditions in compliance with the German Noise Control Guidelines (TA Lärm). (according to Section 2)
Type of device:	e.g. solar central inverter for large-scale PV power plants
Type designation:	SC800CP-US
Test specification:	Level of emissions according to the German Noise Control Guidelines and acoustic power

2 Results

The EN 3744:04/2005 and German Noise Control Guidelines form the testing specification for the thresholds and requirements	Requirement		Results [dBA]/ without fan (distance 1m)	Results [dBA]/ with fan (distance 1m)
	Standard (Germany)	SMA		
EN 3744:2011-02 typical value; LAeq averaged [1]	-	-	-	78,74
§48 of the German Federal Emission Control ACT (BImSchG): 09-2002 German Noise Control Guidelines; L_{pa} [2]	-	-	-	77,81
EN 9614-2 sound power L_{WA} [3]	-	-	-	92,30
Sound pressure level in 10m L_{xpA} [4]	-	-	-	64,31
Sound pressure level in 50m L_{xpA} [4]	-	-	-	50,32
Overall result (if applicable)			*Standard requirments: - passed	

* Dependent on the local conditions at the mounting location (distance of 10m standard)

3 Operating States

The following states and configurations have been defined as operating conditions:

- Operation of the inverter.
- Operating conditions: UDC =820 V; 800 kW
- The device fans must be running.
- The unit under test must have reached its operating temperature.
- The unit under test must have reached an operating temperature of 25 °C.

4 Calculating the Acoustic Power

L_{pA} =	average sound pressure level on the measurement surface [dB_A] *	77.81
S =	overall measurement surface [m^2]	28.09
S_0 =	1 [m^2]	

* This specified spatially/temporally averaged sound pressure level was determined using the calcu-lated acoustic power level.
$L_{PA} = L_{WA} - 10\log (S/S_0)$

Acoustic power of L_{WA}= 92,3 dBA/W results for the measurement.

Acoustic Power Levels of the Third Octave Band Frequencies According to EN ISO 9614-2

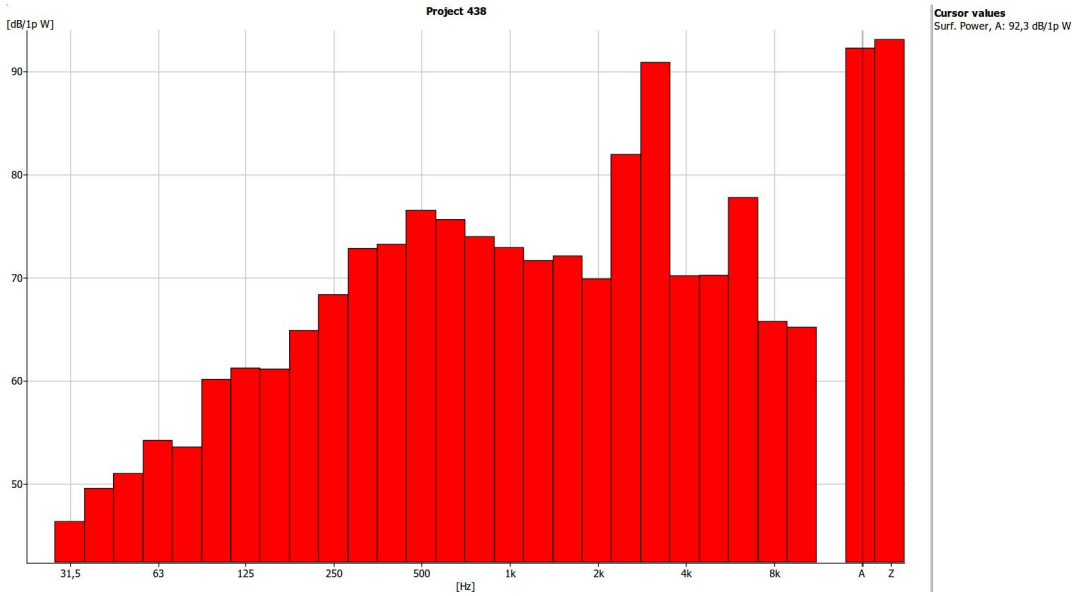

A-rated sound power = 92.3 $dB_{A/W}$

Z-rated sound power = 93.1 $dB_{A/W}$

A-rated acoustic power – based on physiologic human hearing

Z-rated acoustic power – technically linear measured value

5 Overview of the Acoustic Power

Third octave band center frequency [Hz]	Acoustic power- level LwA [dBA/pW] 880 kW	Acoustic power- level LwZ [dBA/pW] 880 kW
25 Hz	42,33	-
31.5 Hz	46,34	-
40 Hz	49,56	-
50 Hz	51	-
63 Hz	54,21	-
80 Hz	53,57	-
100 Hz	60,14	-
125 Hz	61,23	-
160 Hz	61,13	-
200 Hz	64,88	-
250 Hz	68,36	-
315 Hz	72,83	-
400 Hz	73,24	-
500 Hz	76,54	-
630 Hz	75,64	-
800 Hz	73,99	-
1 kHz	72,93	-
1.25 kHz	71,67	-
1.6 kHz	72,11	-
2 kHz	69,89	-
2.5 kHz	81,96	-
3.15 kHz	90,89	-
4 kHz	70,19	-
5 kHz	70,24	-
6.3 kHz	77,78	-
8 kHz	65,76	-
10 kHz	65,2	-
Acoustic power above the surface	A-rated	Z-rated
	92,3	93.1

6 Deriving the Emission Sound Pressure Level at a Distance

The calculated acoustic power can be used to derive an A-rated sound pressure level L_{xpA} for undirected sources at any distance x.

$$LxpA \quad LwA + Ko - 10 \cdot \log\left(4 \cdot \pi \cdot \frac{X^2}{So}\right)$$

K_0 = solid angle index on the floor 3 [dB]
X = distance from the source [m]
S_0 = 1 m

Device	Distance X [m]	Sound pressure level LxpA [dBA] without fan	Sound pressure level LxpA [dBA] with fan
SC800CP-US	10	–	64,30
	50	–	50.33

7 Appendix - Calculations

deriving sound pressure level at a distance

LxpA = LWA + K0 - 10log (4*PI*(x^2/S0))

LWA 92,3dB
K0 3dB
x 10m
S0 1m

LxpA 64,31dBA

Substation Transformer 110 MVA - Sound Power Calc. based on measured data

Height	5.2 m
Length	7.8 m
Width	7.2 m
Vertical Surface Area (includes 0.3m in all directions)	112 m^2
Horizontal Surface Area (includes 0.3m and 2m)	94 m^2
Total Surface area	205.9 m^2

Lw = Lp + 10 x log (S)

Fan on	Lp	84
	Lw	107.1

Lp: Sound pressure level
Lw: Sound Power Level

Fan on

Centre Frequency	Corr1	Corr2	PWL (Linear)	A-weighted correction	PWL (A-weighted)	PWL + 5 dB tonal penalty
31.5	-1	-2.4	103.74	-39.4	64.34	69.34
63	5	-2.4	109.74	-26.2	83.54	88.54
125	7	-2.4	111.74	-16.1	95.64	100.64
250	2	-2.4	106.74	-8.6	98.14	103.14
500	2	-2.4	106.74	-3.2	103.54	108.54
1000	-4	-2.4	100.74	0	100.74	105.74
2000	-9	-2.4	95.74	1.2	96.94	101.94
4000	-14	-2.4	90.74	1	91.74	96.74
8000	-21	-2.4	83.74	-1.1	82.64	87.64
Overall:			**115.8**		**107.1**	**112.1**

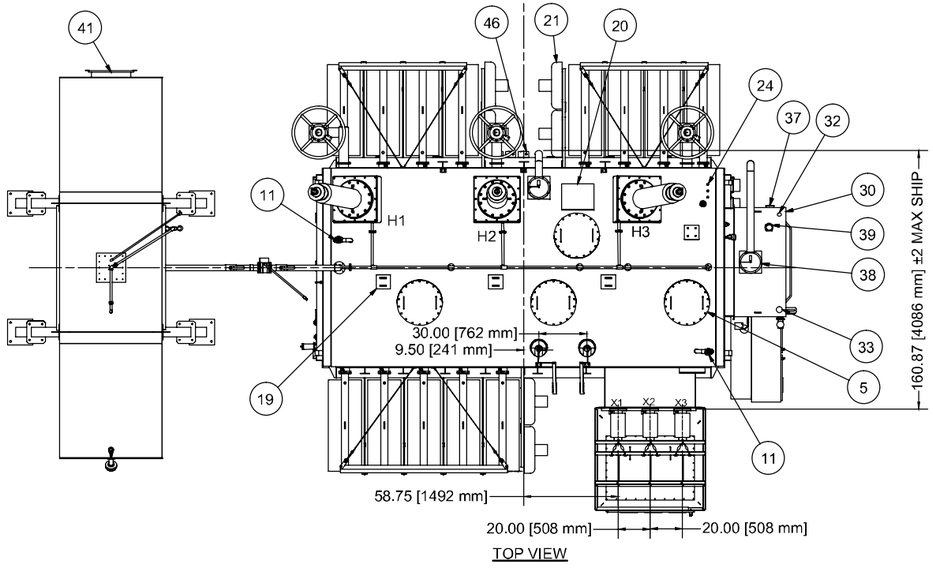

TOP VIEW

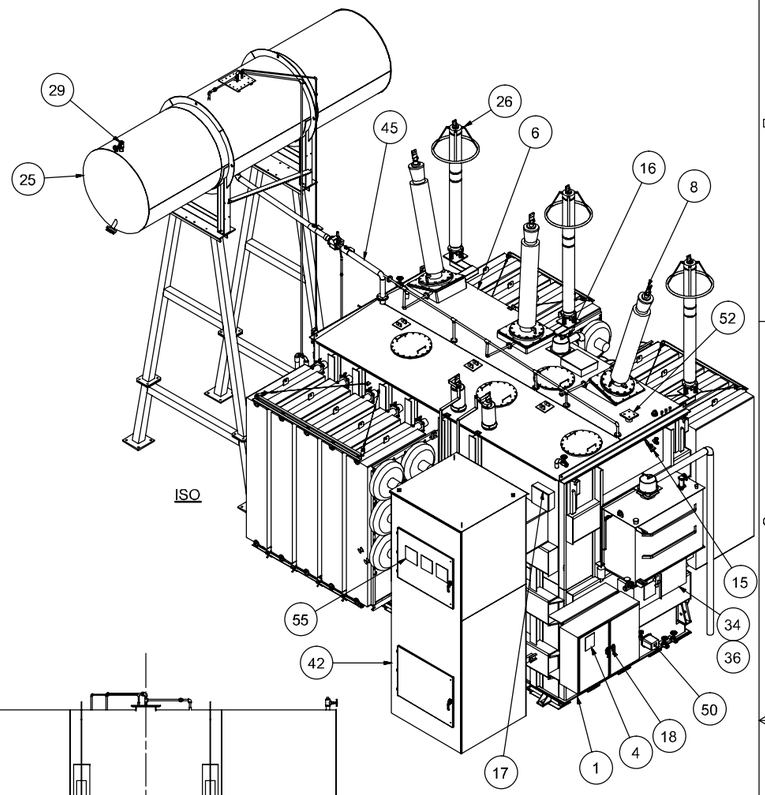

ISO

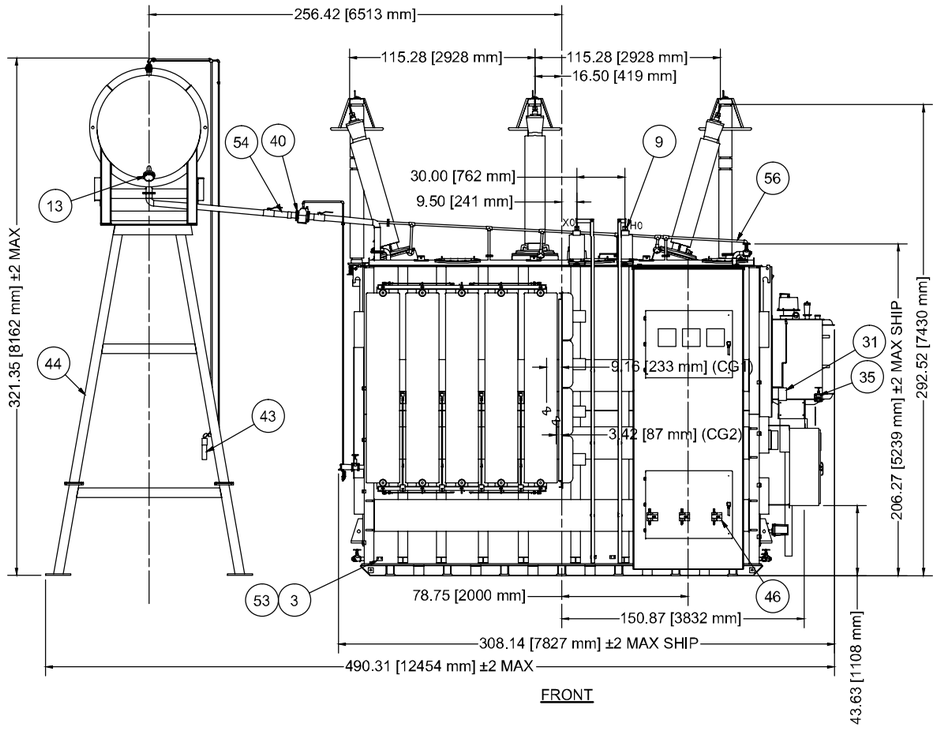

FRONT

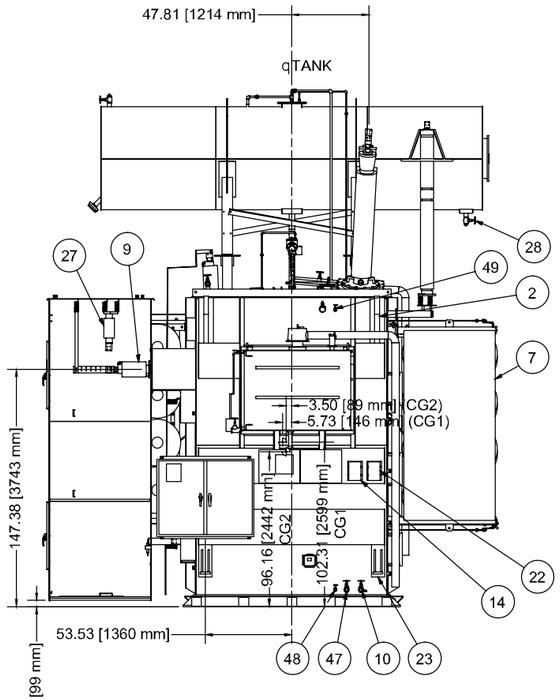

RIGHT

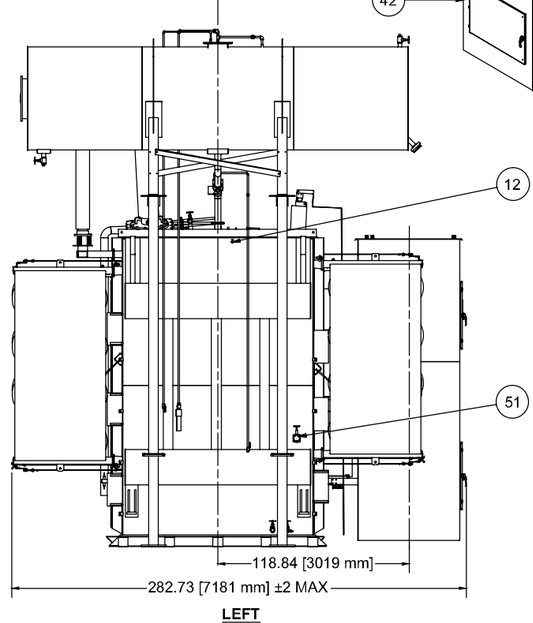

LEFT

Customer: HB WHITE CANADA
Project: KINGSTON SOLAR

NOTE:
REFER SHEET 101.1 FOR ITEM DESCRIPTION, NOTES AND BASE DETAILS

Warranty Field Work:
If, at the job site, the equipment is found to have not conformed to specifications or needs re-work covered under warranty, all parties concerned shall provide full access to Virginia Transformer Corp. or their representatives to work on the unit(s) at the job site. The method of repair/re-work will be determined solely by Virginia Transformer Corp.

TOLERANCES
IF NO TOLERANCES SHOWN ±0,5(12.7) OTHERWISE:
Δ ±0.25(6.3)
o ±1.0(25.4)

ALL DIMENSIONS IN INCHES & IN mm IF SHOWN IN PARENTHESIS

THIS DOCUMENT IS INTENDED FOR COORDINATION PURPOSES ONLY. OTHER USES ARE PROHIBITED EXCEPT BY WRITTEN PERMISSION OF VTC.

HA544A-101.idw

VIRGINIA TRANSFORMER CORP.
220 GLADE VIEW DR., N.E. ROANOKE, VA 24012
(540) 345-9892

TITLE: DIMENSIONAL OUTLINE JOB # HA544A
DWN: SB CHK: VKR DATE: 12/04/2014
D 49066MA001U SHEET 101 REVISION 0

ITEMS:
1. PROVISION ON BASE FOR SKIDDING
2. TRANSFORMER LIFTING LUGS (4) FOR LIFTING COMPLETELY OIL FILLED AND ASSEMBLED UNIT
3. NEMA GROUND PADS, STAINLESS STEEL, LOCATED ON ALL 4 CORNERS OF TANK (4)
4. STAINLESS STEEL DIAGRAMMATIC NAMEPLATE
5. 24" DIA MANHOLES WITH COVER (4)
6. WELDED TOP COVER WITH SLOPES FROM CENTRELINE
7. COOLING RADIATORS (13), HOT DIPPED GALVANIZED, UNPAINTED, DEMOUNTABLE WITH ISOLATION VALVES, LIFTING EYES AND 1/2" DRAIN AND VENT PLUGS
8. HV DRAWLEAD BUSHING, 230 kV, 1050 kV BIL, 800A (3), PCORE MAKE, WITH 4 HOLE NEMA PAD
9. LV, LVN AND HVN BOTTOM CONNECTED BUSHING, 34.5 kV, 200 kV BIL, 2000A (5), PCORE, WITH 4 HOLE NEMA PAD
10. 2" COMBINATION LOWER DRAIN AND FILTER VALVE WITH 3/8" SAMPLER AND PLUG.
11. 2" UPPER FILTER VALVE, WITH PLUG (2)
12. VTC PRESSURIZATION TEST POINT/GAS INJECTION POINT WITH 1/2" BALL VALVE
13. CONSERVATOR LIQUID LEVEL GAUGE
14. OIL TEMPERATURE GAUGE WITH CONTACTS
15. PRESSURE VACUUM GAUGE (FOR SHIPPING ONLY)
16. PRESSURE RELIEF DEVICE WITH CONTACTS, FLAG , SHROUD AND PIPING
17. BOX FOR LV CT FEED-THRU'S
18. CONTROL BOX, NEMA 4, 60 x 48 x 18
19. FALL PROTECTION PLATE (3)
20. BOX FOR HV CT FEED-THRU'S AND CORE GROUND BUSHING (MAIN & PA)
21. COOLING FANS (21), MOUNTED ON BRACKETS
22. WINDING TEMPERATURE GAUGE, SIMULATION SYSTEM, WITH CONTACTS
23. JACK PADS (4) WITH PULLING EYES
24. THERMOWELLS FOR TEMPERATURE GAUGES AND RTD (4)
25. CONSERVATOR WITH FLEXIBLE AIRCEL
26. HV STATION CLASS ARRESTER, POLYMER, 240 kV, 190 kV MCOV, ABB MAKE WITH GRADING RING
27. LV STATION CLASS ARRESTER, POLYMER, 30 kV, 24.4 kV MCOV, ABB MAKE
28. CONSERVATOR SUMP WITH 2" DRAIN VALVE
29. 2" CONSERVATOR FILL VALVE
30. LOAD TAP CHANGER SWITCH COMPARTMENT, TYPE RMV-II, 69 kV, 1500A
31. LTC DE-HYDRATING BREATHER, WITH TUBING AND SHUT OFF VALVE
32. 2" FLANGED LTC OIL FILL VALVE
33. LTC VACUUM FILLING PLUG, 2"
34. LTC POSITION INDICATOR WITH DRAG HAND
35. 2" LTC GLOBE TYPE, BRONZE, DRAIN VALVE WITH 3/8" SAMPLER, AND PLUG
36. LTC HAND CRANK OPERATING LOCATION
37. LTC LIQUID LEVEL GAUGE WITH CONTACTS
38. LTC PRESSURE RELIEF DEVICE WITH CONTACTS, FLAG, SHROUD AND TUBING
39. LTC SUDDEN PRESSURE RELAY FOR LTC
40. BUCHHOLZ RELAY WITH ISOLATION VALVES (BALL TYPE) AND GAS SAMPLING VALVE
41. BOLTED ACCESS COVER ON CONSERVATOR
42. FULL HEIGHT AIR TERMINAL CHAMBER (BOLT ON TYPE) WITH PROVISION OF HINGED DOORS, CABLE SUPPORTS, BOTTOM BOLTED PLATE, PROVISION FOR SUPPORTING 6 X 1250 kcmil CABLES
43. DE-HYDRATING BREATHER FOR CONSERVATOR AIR BLADDER
44. SUPPORT FOR CONSERVATOR
45. 3" PIPING FROM CONSERVATOR TO TANK
46. SURGE COUNTERS FOR HV AND LV ARRESTERS (6)
47. 2" LOWER FILTER PRESS/VACUUM VALVE
48. 1" BOTTOM OIL SAMPLING VALVE
49. 1" TOP OIL SAMPLING VALVE
50. GE HYDRAN M2 GAS-IN-OIL MONITOR WITH SHUT OFF VALVE
51. SUDDEN PRESSURE RELAY ON MAIN TANK WITH ISOLATION VALVE
52. 4" PIPE AND FLANGE WITH COVER PLATE FOR VACUUM PUMP CONNECTION
53. NEMA LUGS SUITABLE FOR TWIN 4/0 AWG COPPER GROUND CONDUCTORS
54. FLEXIBLE PIPE CONNECTOR
55. VIEW GLASS ON LV ATC
56. GAS COLLECTING PIPE

NOTES:
1. TYPE II MINERAL OIL (PER CAN/CSA-C50 CLASS B) FILLED TRANSFORMER, APPROXIMATELY 22700 GALLONS
2. OUTDOOR SERVICE
3. PAINT: ANSI-70, URETHANE OVER EPOXY (VTC PAINT SYSTEM III), TANK INSIDE AND CORE CLAMPS PAINTED WHITE, TOP COVER AND LTC TOP WITH ANTI-SKID COATING,
4. TOUCH UP PAINT KIT PROVIDED
5. UNIT DESIGNED FOR CONSERVATOR TYPE OIL PRESERVATION SYSTEM
6. SEE 20 SERIES SHEETS FOR SCHEMATIC
7. ACCESSORY WIRING IN RIGID GALVANIZED STEEL CONDUIT; FINAL SHORT RUNS MAY BE FLEXIBLE LIQUID TIGHT CONDUIT; FAN POWER VIA WEATHERPROOF CORDS AND PLUGS
8. CG1 IS FULLY ASSEMBLED, CG2 IS AS SHIPPED, PERMANENTLY MARKED AND LABELED
9. UNIT DESIGNED FOR FULL VACUUM OIL FILLING
10. UNIT SHIPS WITH FOLLOWING ITEMS DEMOUNTED;

ITEM:	SHIPPING WEIGHT:
HV BUSHINGS/ HV PADS	2325 LBS
LV/XO/HO BUSHING & SPADE	700 LBS
HV ARRESTERS & BRACKETS	900 LBS
RADIATORS AND FANS WITH BRACKET	31,600 LBS
CONSERVATOR SUPPORTS	5000 LBS
CONSERVATOR	7000 LBS
B'RELAY PIPE & GAS EXP. PIPE	500 LBS
OIL IN TANKER (22,170GALLONS)	166,275 LBS
MAIN UNIT	222,600 LBS
345 GALLONS OF MINERAL OIL II SHIP INSIDE LTC	
UNIT SHIPS WITHOUT OIL, DRY AIR FILLED	

11. UNIT DESIGNED FOR OPERATION AT MINIMUM AMBIENT - 40deg C AND 3300 FT ELEVATION
12. GASKET COMPRESSION CONTROL VIA MACHINED GROOVE FLANGES OR METAL TO METAL STOPS EXCEPT FOR ITEMS MOUNTED IN BOXES
13. CONTRACTED DOCUMENTS SHIP INSIDE CONTROL BOX
14. ALL EXTERNAL HARDWARE TO BE STAINLESS STEEL
15. UNIT DESIGNED FOR SEISMIC ZONE Z1 AND Z2
16. UNIT SHIPS WITH IMPACT RECORDER
17. UNTANKING HEIGHT 365.00" PLUS SLINGS
18. ALL TANK SEAMS ARE WELDED FROM INSIDE AND OUTSIDE, NO CORNER WELDS WITHIN 6" OF CORNER
19. DEW POINT TO BE MEASURED BEFORE SHIPMENT
20. 5 YEARS EXTENDED WARRANTY IS PROVIDED
21. UNIT DESIGNED PER CSA STANDARDS

BASE DETAILS

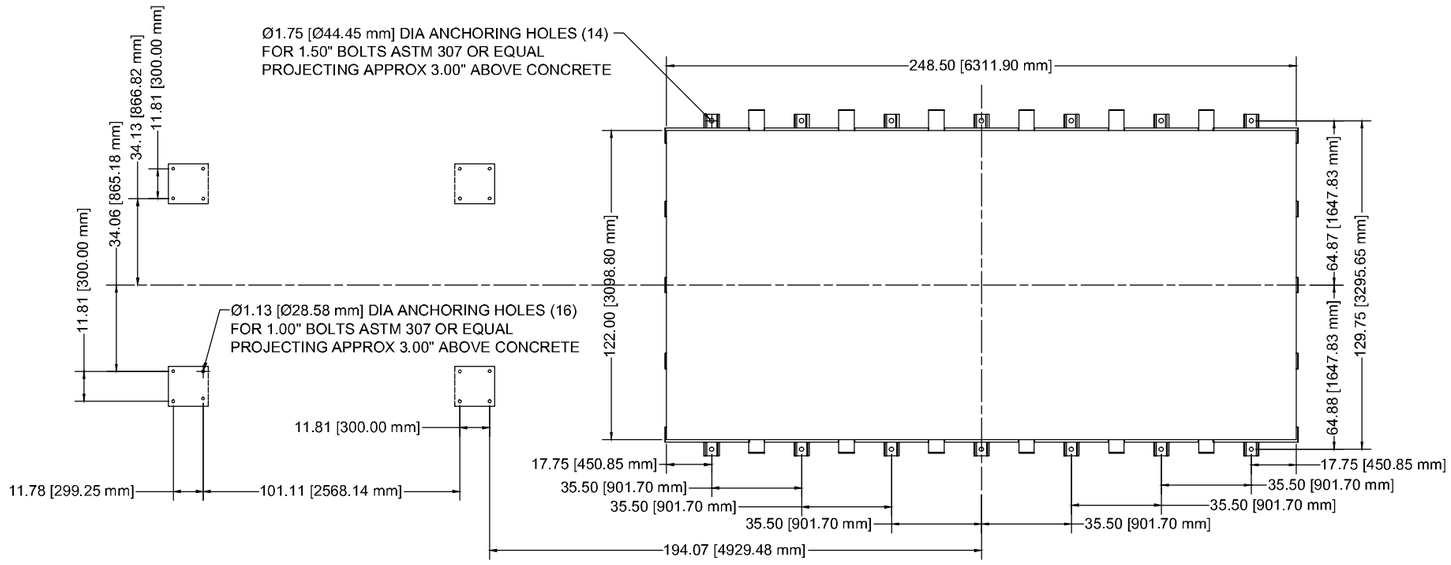

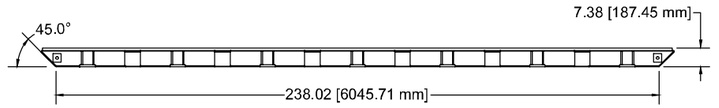

Liquid Filled Transformer Data:
MOD/SN: 49066MA001U/HA544A MVA: 66/88/110 AT 65°C RISE

3 PHASE, 60 Hz CLASS: ONAN/ONAF/ONAF
IMP: 7.00 +/- 7.50 % NOM. WT: 436,900 LBS
WINDINGS: COPPER

HV LOAD TAPS: +/- 16 X 0.625%
HV: 240,000V Grd Y/138,564V, 900 kV BIL, 265 A NOM @ 110 MVA
LV: 34500V Grd Y / 19919V, 200 kV BIL, 1841 A @ 110 MVA
TV: 13.8 kV DELTA UNLOADED

Customer: HB WHITE CANADA
Project: KINGSTON SOLAR

Warranty Field Work:
If, at the job site, the equipment is found to have not conformed to specifications or needs re-work covered under warranty, all parties concerned shall provide full access to Virginia Transformer Corp. or their representatives to work on the unit(s) at the job site. The method of repair/re-work will be determined solely by Virginia Transformer Corp.

TOLERANCES
IF NO TOLERANCES SHOWN ±0.5(12.7) OTHERWISE:
Δ ±0.25(6.3)
o ±1.0(25.4)

ALL DIMENSIONS IN INCHES & IN mm IF SHOWN IN PARENTHESIS

THIS DOCUMENT IS INTENDED FOR COORDINATION PURPOSES ONLY OTHER USES ARE PROHIBITED EXCEPT BY WRITTEN PERMISSION OF VTC.

HA544A-101.1.idw

VIRGINIA TRANSFORMER CORP.
220 GLADE VIEW DR., N.E. ROANOKE, VA 24012
(540) 345-9892

TITLE: DIMENSIONAL OUTLINE JOB # HA544A
DWN: SB CHK: VKR DATE: 12/04/2014
D 49066MA001U SHEET 101.1 REVISION 0

15.0

AUTOMATIC LOAD–TAP–CHANGING LIQUID FILLED TRANSFORMER

SL# 49066MA001U–HA544A	3 PHASE	WINDING MATERIAL: COPPER	60 Hz
MVA: 66/88/110	65°C RISE	@30°C AMBIENT	CLASS: ONAN/ONAF/ONAF
MVA: 80.85/107.8/134.75	65°C RISE	@0°C AMBIENT	BUILT TO CAN/CSA C88 M90
HV: 240000 GrdY/138564	900 kV BIL*	MONTH & YEAR OF MANUFACTURE:	
LV: 34500 GrdY/19919	200 kV BIL	IMPEDANCE: % AT 66 MVA & 240–34.5 kV	
TV RATING: 23.1/30.8/38.5 MVA, 13.8 kV			
* HV/HO BUSHING BIL: 1050/200 kV			

APPROXIMATE WEIGHTS Lbs (Kgs)

CORE & COILS	
TANK & FITTINGS	
TYPE II MINERAL OIL (C50B)	
MAIN TANK _____ GALS	
LTC TANK _____ GALS	
APPROX TOTAL WT (LBS)	
UNTANKING MASS (LBS)	

MAX. OPERATING PRESS ___ PSI POS., ___ PSI NEG.
TANK DESIGNED FOR ____ PSI VACUUM
25°C OIL LEVEL TO TOP FLG. OF MANHOLE, ____ IN.
LIQ. LEVEL CHGS. ____ IN. PER 10°C CHG. IN LIQ. TEMP.

REFER TO INSTRUCTION MANUAL LF–4 BEFORE ENERGIZATION.
UNIT CONTAINS NO DETECTABLE LEVEL(<1 PPM) OF PCB AT THE TIME OF MANUFACTURE

HV LTC ON NEUTRAL, RMVII–1500A–69kV

P4 ON	P1 ON	R ON	POS.	VOLTS	AMPS AT 110 MVA
11	11	B	16R	264000	241
11	10	B	15R	262500	242
10	10	B	14R	261000	243
10	9	B	13R	259500	245
9	9	B	12R	258000	246
9	8	B	11R	256500	248
8	8	B	10R	255000	249
8	7	B	9R	253500	251
7	7	B	8R	252000	252
7	6	B	7R	250500	254
6	6	B	6R	249000	255
6	5	B	5R	247500	257
5	5	B	4R	246000	258
5	4	B	3R	244500	260
4	4	B	2R	243000	261
4	M	B	1R	241500	263
M	M	B	N	240000	265
M	M	A	N	240000	265
M	11	A	1L	238500	266
11	11	A	2L	237000	268
11	10	A	3L	235500	270
10	10	A	4L	234000	271
10	9	A	5L	232500	273
9	9	A	6L	231000	275
9	8	A	7L	229500	277
8	8	A	8L	228000	279
8	7	A	9L	226500	280
7	7	A	10L	225000	282
7	6	A	11L	223500	284
6	6	A	12L	222000	286
6	5	A	13L	220500	288
5	5	A	14L	219000	290
5	4	A	15L	217500	292
4	4	A	16L	216000	294

LOW VOLTAGE

VOLTS	AMPS AT 110 MVA
34500	1841

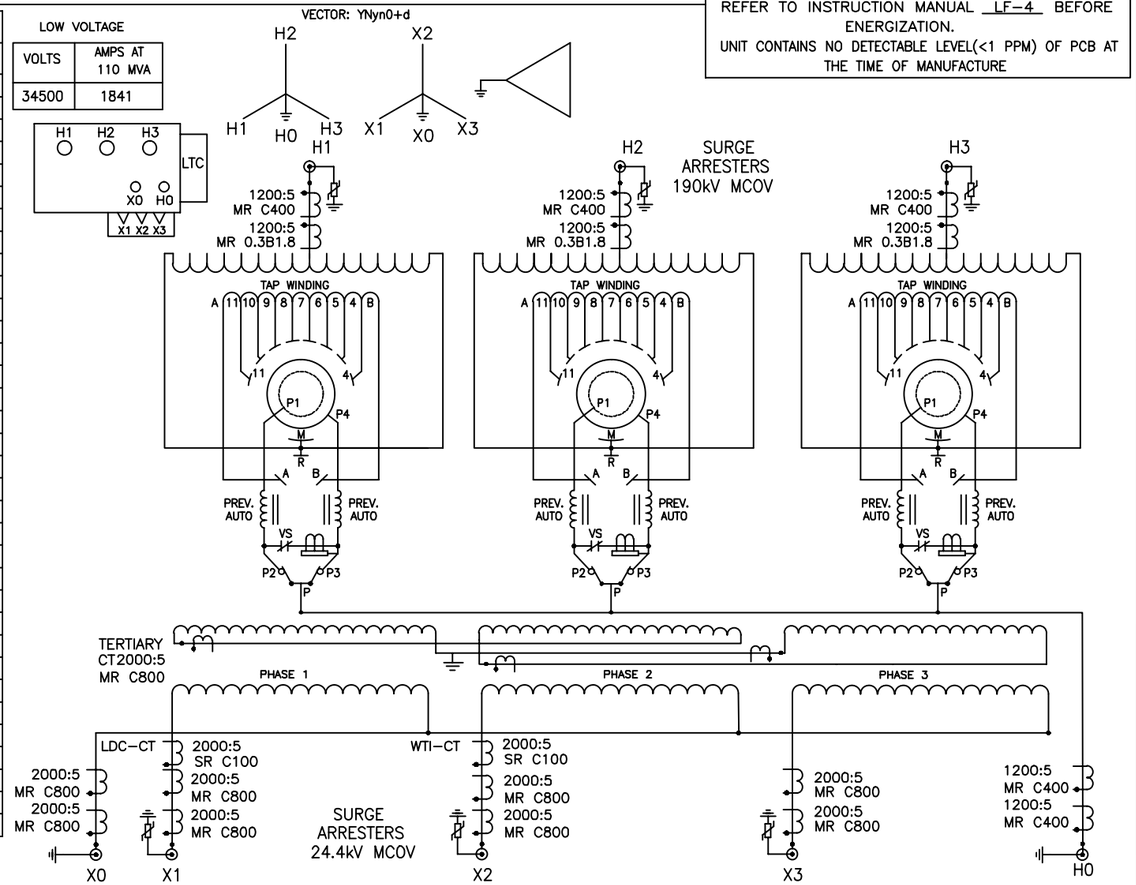

VIRGINIA TRANSFORMER CORP.
POCATELLO, ID.

13.00

0.19

0.19

MATERIAL: 0.023 STAINLESS STEEL NON–CORROSIVE OUTDOOR BLACK LETTER ENGRAVED PROTECTIVE CLEAR PLASTIC FILM
0.1875 DIA. HOLES (4)

NOTES:
IMPEDANCE & DATE/MONTH OF MFR WILL BE ENTERED ON NAMEPLATE AFTER TESTING

ALL DIMENSIONS IN INCHES & IN mm IF SHOWN IN PARENTHESIS

THIS DOCUMENT IS INTENDED FOR COORDINATION PURPOSES ONLY. OTHER USES ARE PROHIBITED EXCEPT BY WRITTEN PERMISSION OF VTC. HA544A–13JAN

VIRGINIA TRANSFORMER CORP.
220 GLADE VIEW DR., N.E., ROANOKE, VA 24012
(540) 345–9892

TITLE: NAMEPLATE | JOB # HA544A
DWN: MSC | CHK: AKS | DATE: 11/18/14 | DWG SCALE: 1:1 | PLOT SCALE: 1:1
C | 49066MA001U | SHEET 13 | REV 0

TAGS	LOCATION	DESCRIPTION	VTC #
23–1	JUNCTION BOX	THERMOSTAT, ADJUSTABLE	363010
25P	SHIP LOOSE	DIGITAL LTC TAP POSITION INDICATOR, INCON 1250B	4473031
26Q	XFMR TANK	OIL TEMPERATURE GAUGE, WITH 4 SWITCHES	3421182
26QX1,2,3	JUNCTION BOX	AUXILIARY RELAY FOR LIQUID TEMPERATURE GAUGE	306611020P
27V1	JUNCTION BOX	LOSS OF POWER RELAYS	306611020P
4–1,2	JUNCTION BOX	FAN CONTACTOR, 120 VAC COIL	30661220
43F1,2	JUNCTION BOX	FAN CONTROL MAN/OFF/AUTO SELECTOR SWITCH	30611416,30613124
43S	JUNCTION BOX	FAN GROUP SELECTOR SWITCH	30611204,30613104, 30613124
49T	XFMR TANK	WINDING TEMPERATURE GAUGE, WITH 4 SWITCHES	343030
49H1	XFMR TANK	WINDING TEMPERATURE HEATER COIL, FOR SIMULATED WINDING TEMP	343016
50	JUNCTION BOX	OVER–CURRENT PROTECTIVE RELAY FOR LTC PARALLELLING MODEL M–0127A	4470510
63G	CONSERVATOR	BUCHHOLZ RELAY, WITH ALARM & TRIP SWITCHES	3420673
63PR1	XFMR TANK	PRESSURE RELIEF DEVICE, 1 SWITCH SET @ 10PSI, YELLOW FLAG W/SHROUD	3420502,342041
63PR2	LTC TANK	PRESSURE RELIEF DEVICE, 1 SWITCH SET @ 10PSI, YELLOW FLAG W/SHROUD	3420502,342041
63PRX1,2	JUNCTION BOX	AUXILIARY RELAY FOR PRESSURE RELIEF DEVICE	306611020P
63SP	XFMR TANK	SUDDEN PRESSURE RELAY (OIL SPACE), 1 MOMENTARY SWITCH	342064S1
63X	JUNCTION BOX	SUDDEN PRESSURE SEAL–IN RELAY, 125VDC, ALARM & TRIP SWITCHES	3420605I
71Q1	CONSERVATOR	LIQUID LEVEL GAUGE, 2 SWITCHES	TBD
71Q2	LTC TANK	LIQUID LEVEL GAUGE, 2 SWITCHES	COMES W/LTC
71QX1,2	JUNCTION BOX	AUXILIARY RELAY FOR LIQUID LEVEL GAUGE	306611020P
8–M	JUNCTION BOX	CIRCUIT BREAKER, 40A, 3 POLE, UL489 RATED	3803062
8–1,2	JUNCTION BOX	CIRCUIT BREAKER, 16A, 3 POLE	380316
8–3,5,6,8	JUNCTION BOX	CIRCUIT BREAKER, 6A, 1 POLE	380106
8–4	JUNCTION BOX	CIRCUIT BREAKER, 16A, 1 POLE	380116
8–7	JUNCTION BOX	CIRCUIT BREAKER, 6A, 2 POLE	380206
88F1–21	RADIATORS	COOLING FAN, 26", 1140RPM, 1/3HP, 208/230VAC, 3PH, 60HZ, 7400CFM	360319
90	JUNCTION BOX	LTC CONTROLLER MODEL M2001C	44705431
90P	JUNCTION BOX	LTC PARALLEL BALANCING MODULE M–0115A	4470500
A1–6;B1–3;D1,2, F1,2,E1	JUNCTION BOX	TERMINAL BLOCK FOR CUSTOMER'S CONNECTION	30122123
AC,DC	JUNCTION BOX	POWER BLOCK FOR INCOMING POWER CONNECTION	30122034,30122031
ACT	JUNCTION BOX	AUXILIARY CURRENT RELAY, 8.66/5 TO 0.2A	4470521
CBA1	JUNCTION BOX	CURRENT BALANCING AUTO–XFMR, FOR WINDING TEMP. SIMULATOR	343015I
CM1,2	JUNCTION BOX	CURRENT MONITOR RELAY FOR FANS	306525031
CT1–3	XFMR TANK	OIL CURRENT XFMR, 1200:5, MR, C400, TRF: 2.0, FOR HV BUSHINGS	400212428
CT4–6	XFMR TANK	OIL CURRENT XFMR, 1200:5, MR, 0.3B1.8, TRF: 2.0, FOR HV BUSHINGS	TBD
CT7–12	XFMR TANK	OIL CURRENT XFMR, 2000:5, MR, C800, TRF: 2.0, FOR LV BUSHINGS	400220517I
CT13–15	XFMR TANK	OIL CURRENT XFMR, 2000:5, MR, C800, TRF: 2.0, FOR TV BUSHINGS	400220517I
DS1	JUNCTION BOX	DOOR SWITCH FOR LIGHT OPERATION	30620020
E2,3	JUNCTION BOX	TERMINAL BLOCK FOR LIGHT & THERMOSTAT	30122021
FTA–G	XFMR TANK	FEEDTHROUGH, 19 CONDUCTOR, FOR CT WIRING	55101197
GFI1	JUNCTION BOX	GROUND FAULT INTERRUPT RECEPTACLE, 120VAC, 15A, NEMA5–15R	30410100
GM1	XFMR TANK	HYDRAN M2	347113
GND1	JUNCTION BOX	GROUND BAR, COPPER	20880080
H1,2	JUNCTION BOX	ANTI–CONDENSATION HEATER, RATED 250W @ 250V	362021
JB	XFMR TANK	JUNCTION BOX, NEMA 4, 48HX60WX18D	303203S11M
LT1	JUNCTION BOX	LIGHT FIXTURE, 120VAC 60Hz 5.5W LED	30390103
NCT1,2	XFMR TANK	OIL CURRENT XFMR, 1200:5, MR, C400, TRF: 2.0, FOR HV NEUTRAL BUSHINGS	400212428
NCT3,4	XFMR TANK	OIL CURRENT XFMR, 2000:5, MR, C800, TRF: 2.0, FOR LV NEUTRAL BUSHINGS	400220517I
PVG	XFMR TANK	PRESSURE VACUUM GAUGE, WITH BLEEDER (SHIPPING PURPOSE)	342090
RTD1,2	XFMR TANK	RESISTANCE TERMPERATURE DETECTOR, PLATINUM 100 OHMS @0°C	347S04
SB1–20	JUNCTION BOX	CT SHORTING BLOCK, FOR CUSTOMER'S CONNECTION	30126043
WTI–CT,LDC–CT	XFMR TANK	OIL CURRENT XFMR, 2000:5, SR, C100 FOR WINDING TEMPERATURE SIMULATION	400220201I

NOTE

1. ALL WIRES ARE NUMBERED ON EACH END WITH HEAT SHRINK PLASTIC SLEEVE WRAPPED WIRE MARKERS.
2. CONTROL WIRES ARE 14AWG MTW (WHERE APPLICABLE).
3. CT AND POWER WIRES ARE 10AWG MTW (WHERE APPLICABLE).
4. GROUNDING WIRES ARE 12AWG GREEN MTW (WHERE APPLICABLE).
5. SHORTING LINK TO BE REMOVED FROM SHORTING TYPE TB WHEN CURRENT XFMR IS TO BE USED.
6. ALL TERMINAL CONNECTIONS TO BE MADE WITH PRE–INSULATED RING TONGUE CRIMPED TYPE LUGS.
7. ALL DEVICES IN JB PROVIDED WITH PHENOLIC NAME PLATES WITH BLACK LETTERING ON WHITE BACKGROUND.
8. NO BUTT SPLICES ARE ALLOWED.
9. NEUTRAL WIRES ARE 10AWG WHITE MTW (WHERE APPLICABLE).
10. EXTERNAL HARDWARE TO BE 304 SSTL.

ALL DIMENSIONS IN INCHES & IN mm IF SHOWN IN PARENTHESIS

THIS DOCUMENT IS INTENDED FOR COORDINATION PURPOSES ONLY. OTHER USES ARE PROHIBITED EXCEPT BY WRITTEN PERMISSION OF VTC.

HA544A–21.dwg

VIRGINIA TRANSFORMER CORP.
220 GLADE VIEW DR., N.E., ROANOKE, VA 24012
(540) 345–9892

TITLE: DEVICE LEGEND AND DRAWING NOTES JOB# HA544A

DWN: VKT | CHK: JWB | DATE: 11/18/14 | DWG SCALE: NTS | PLOT SCALE: 1:1

D | 49066MA001U | SHEET 21 | DRAWING 1 OF 13 | REV 0

XFMR

(FAN CONTACT SHOWN ON SHEET 22)
26Q
OIL TEMPERATURE GAUGE

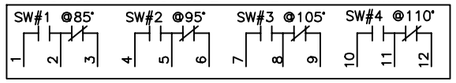

(FAN CONTACT SHOWN ON SHEET 22)
49T
WINDING TEMPERATURE

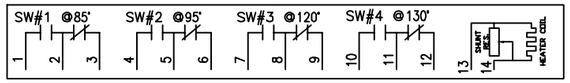

OIL TEMPERATURE GAUGE

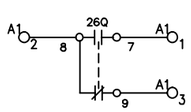

TRIP
OIL TEMPERATURE GAUGE

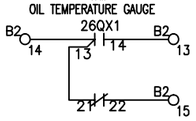

TRIP
OIL TEMPERATURE GAUGE

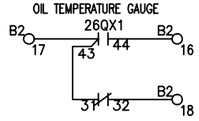

WINDING TEMPERATURE GAUGE

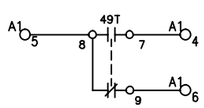

WINDING TEMPERATURE GAUGE

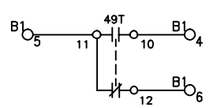

FAN STAGE 1
OIL TEMPERATURE GAUGE

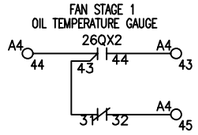

FAN STAGE 2
OIL TEMPERATURE GAUGE

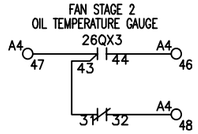

(SHIPPING PURPOSE)
PVG
PRESSURE VACUUM GAUGE

WITH BLEEDER

(CONTACTS SHOWN ON SHEET 24)
63SP
SUDDEN PRESSURE RELAY

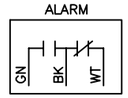

63PR1
PRESSURE RELIEF DEVICE

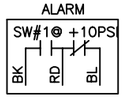

ALARM
PRESSURE RELIEF DEVICE

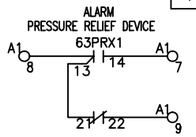

ALARM
PRESSURE RELIEF DEVICE

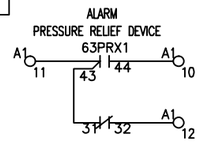

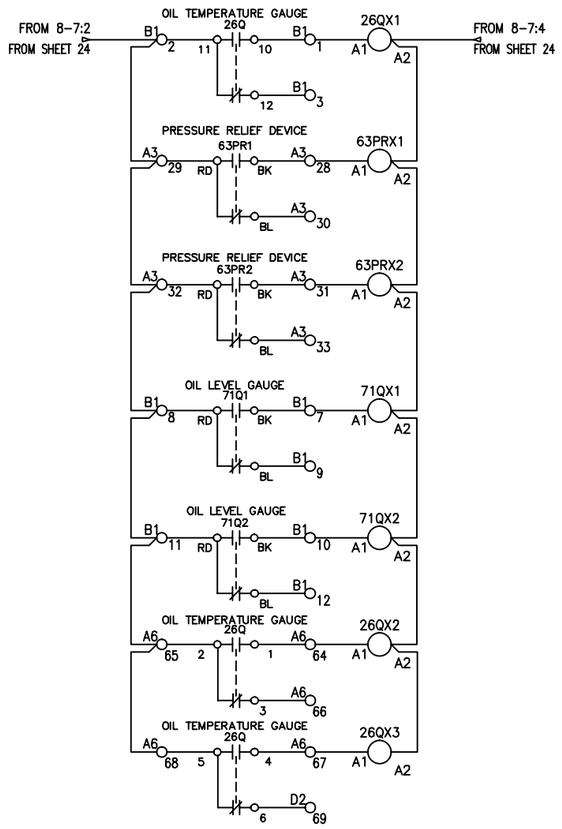

71Q1
OIL LEVEL GAUGE

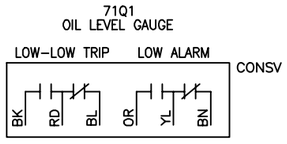

63G
BUCHHOLZ
GAS OR LOW
OIL ALARM
SURGE TRIP

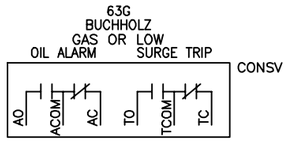

ALARM
PRESSURE RELIEF DEVICE

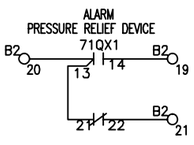

TRIP
PRESSURE RELIEF DEVICE

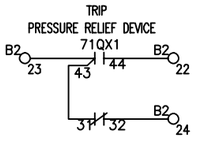

OIL LEVEL GAUGE

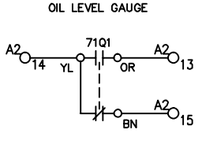

BUCHHOLZ

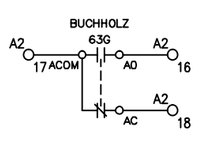

BUCHHOLZ

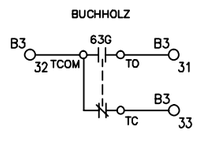

71Q2
OIL LEVEL GAUGE

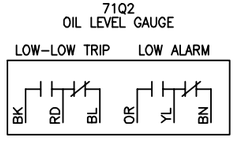

63PR2
PRESSURE RELIEF DEVICE

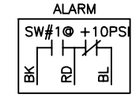

TRIP
PRESSURE RELIEF DEVICE

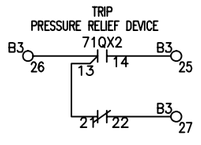

TRIP
PRESSURE RELIEF DEVICE

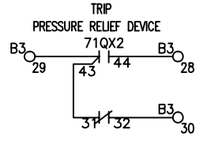

OIL LEVEL GAUGE

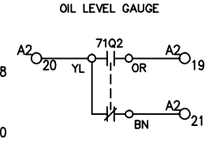

ALARM
PRESSURE RELIEF DEVICE

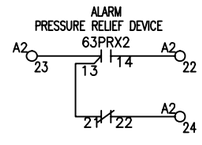

ALARM
PRESSURE RELIEF DEVICE

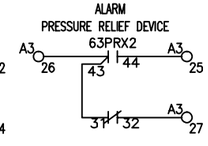

NOTE:
ALL CONTACTS ARE DRAWN IN THE NON-ALARM STATE.

NOTE
SEE DEVICE LEGEND AND WIRING NOTES ON SHEET 21

ALL DIMENSIONS IN INCHES & IN mm IF SHOWN IN PARENTHESIS

THIS DOCUMENT IS INTENDED FOR COORDINATION PURPOSES ONLY. OTHER USES ARE PROHIBITED EXCEPT BY WRITTEN PERMISSION OF VTC.
HA544A-21.1.dwg

VIRGINIA TRANSFORMER CORP.
220 GLADE VIEW DR., N.E., ROANOKE, VA 24012
(540) 345-9892

TITLE: ACCESSORY SCHEMATICS JOB# HA544A
DWN: VKT | CHK: JWB | DATE: 11/18/14 | DWG SCALE: NTS | PLOT SCALE: 1:1
D | 49066MA001U | SHEET 21.1 | DRAWING 2 OF 13 | REV 0

CUSTOMER'S SUPPLIED
208/120VAC 3PHASE

AC 1 L1 | AC 2 L2 | AC 3 L3 | AC 4 N | AC 5 G GND1

MAIN 8-M 40 AMP

TO P1:N5
TO SHEET 25

TO P1:Y1
TO SHEET 25

TO P1:Y2
TO SHEET 25

27V1 A1 A2

FAN STAGE 1

8-1 | 4-1 L1 T1 | L2 T2 | L3 T3

16A

240 CM1 COM
CURRENT MONITOR
FAN STAGE 1

D1 1 | D1 2 | D1 3

88F1 88F3 88F5 88F7 88F9 88F11 88F13 88F15 88F17 88F19 88F21

GND1

FAN STAGE 2

8-2 | 4-2 L1 T1 | L2 T2 | L3 T3

16A

240 CM2 COM
CURRENT MONITOR
FAN STAGE 2

D1 4 | D1 5 | D1 6

88F2 88F4 88F6 88F8 88F10 88F12 88F14 88F16 88F18 88F20

GND1

JUMPER TO BE REMOVED WHEN
INSTALLING CUSTOMER
REMOTE SHUT DOWN CONTACT

FAN CONTROL 8-3
1 2
6 AMP

D1 11 | D1 12

43F1
OFF
MANUAL AUTO
1a 1b
2a 2b

TO D2:14

TO D2:13

GROUP SELECTOR 43S
GROUP 1 GROUP 2
1a 1b
2a 2b

4-1 A1 A2

43F2
OFF
MANUAL AUTO
1a 1b
2a 2b

TO D2:20

TO D2:19

4a 4b
3a 3b

4-2 A1 A2

LIGHT & GFI 8-4
1 2
16 AMP

E2 1 | DS1 C NC | LT1 1 2 | E2 2

GFI1
1 2
G

HEATERS 8-5
1 2
6 AMP

E3 1 | 23-1 1 2 | E3 2

GND1 250W 250V H1 1 2

250W 250V H2 1 2

TO 8-6:1
TO SHEET 22.1

TO GM1:N
TO SHEET 22.1

NOTE
SEE DEVICE LEGEND AND WIRING NOTES ON SHEET 21

WIRE SIZE CHART	
CB SIZE	MINIMUM AWG
16 AMP	14 AWG
20 AMP	12 AWG
30-40 AMP	10 AWG
41-55 AMP	8 AWG
56-75 AMP	6 AWG
76-95 AMP	4 AWG
96-110 AMP	3 AWG

FAN STAGE 1
WINDING TEMPERATURE
49T
FROM 43F1:12b
FROM 43S:1a
D2 14 2 1 13
D2 3 15

FAN STAGE 1
OIL TEMPERATURE GAUGE
26QX2
D2 17 13 14 16
D2 21 22 18

FAN STAGE 2
WINDING TEMPERATURE
49T
43F2:2b
43S:3a
D2 20 5 4 19
D2 6 21

FAN STAGE 2
OIL TEMPERATURE GAUGE
26QX3
D2 23 13 14 22
D2 21 22 24

43F2
FANS STAGE 2
MAN/OFF/AUTO
SELECTOR SWITCH
(MAINTAINED)

CONTACTS	MAN	OFF	AUTO
1a 1b	X		
2a 2b			X
3a 3b	X		

43F1
FANS STAGE 1
MAN/OFF/AUTO
SELECTOR SWITCH
(MAINTAINED)

CONTACTS	MAN	OFF	AUTO
1a 1b	X		
2a 2b			X
3a 3b	X		

43S
GROUP SELECTOR
GROUP 1/GROUP 2
SELECTOR SWITCH
(MAINTAINED)

	GROUP 1	GROUP 2
1a 1b	X	
2a 2b		X
3a 3b	X	
4a 4b		X

LOSS OF AC SUPPLY
A4 41 | 27V1 13 14 | A4 40
21 22 | A4 42

FAN CONTACTOR
4-1
D1 7 13 14 8

FAN CONTACTOR
4-2
D1 9 13 14 10

A6 71 | 43F1 3a 3b | A6 72

E1 11 | 43F1 3a 3b | E1 12

ALL DIMENSIONS IN INCHES & IN mm IF SHOWN IN PARENTHESIS

THIS DOCUMENT IS INTENDED FOR COORDINATION PURPOSES ONLY. OTHER USES ARE PROHIBITED EXCEPT BY WRITTEN PERMISSION OF VTC.
HA544A-22.dwg

VIRGINIA TRANSFORMER CORP.
220 GLADE VIEW DR., N.E., ROANOKE, VA 24012
(540) 345-9892

TITLE: FAN, LIGHT, HEATER AND GFI SCHEMATICS JOB# HA544A

DWN: VKT | CHK: JWB | DATE: 11/18/14 | DWG SCALE: NTS | PLOT SCALE: 1:1

D | 49066MA001U | SHEET 22 | DRAWING 3 OF 13 | REV 0

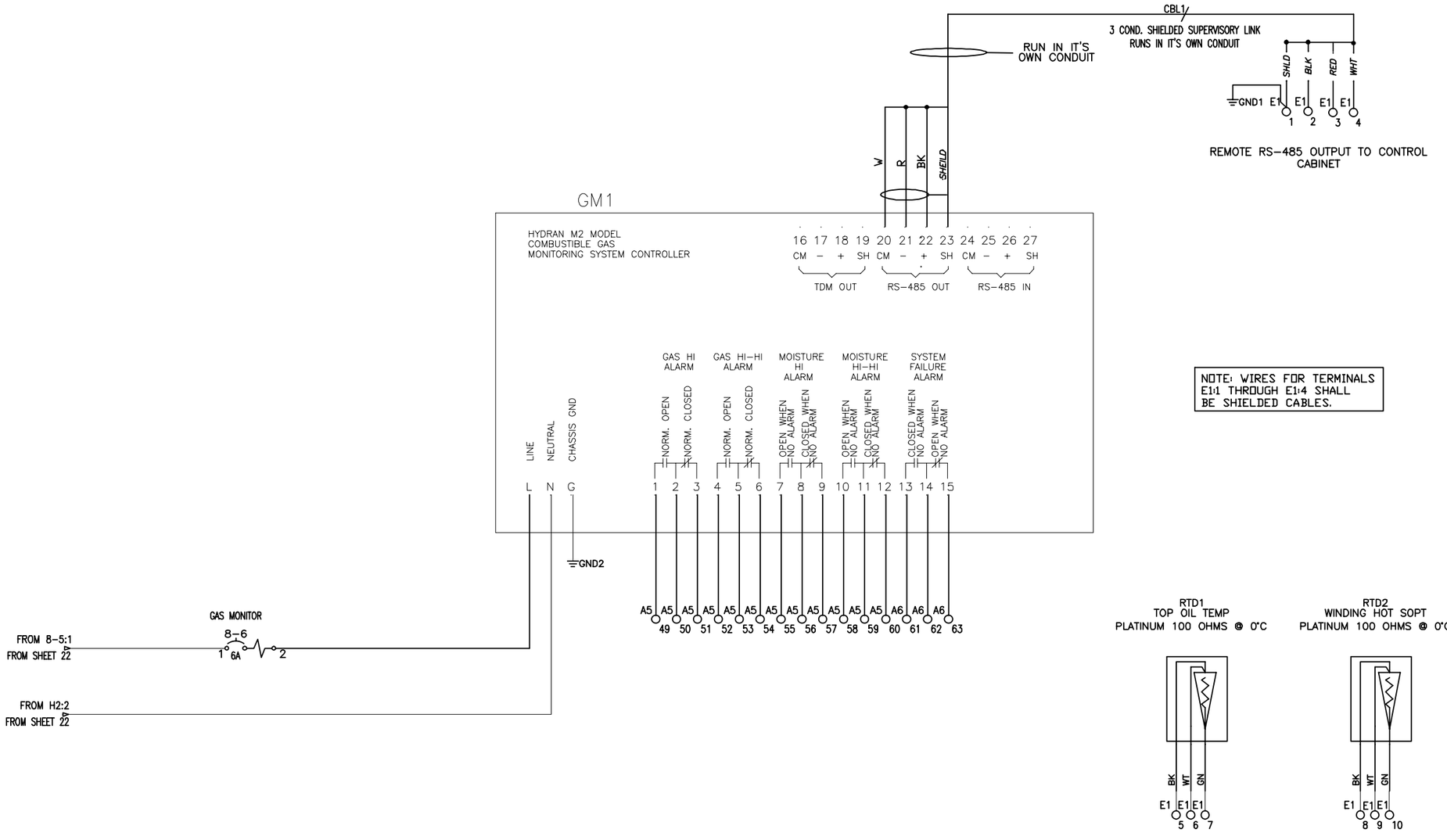

NOTE: WIRES FOR TERMINALS E1:1 THROUGH E1:4 SHALL BE SHIELDED CABLES.

NOTE:

SEE DEVICE LEGEND AND WIRING NOTES ON SHEET 21

ALL DIMENSIONS IN INCHES & IN mm IF SHOWN IN PARENTHESIS

THIS DOCUMENT IS INTENDED FOR COORDINATION PURPOSES ONLY. OTHER USES ARE PROHIBITED EXCEPT BY WRITTEN PERMISSION OF VTC.
HA544A-22.1.DWG

VIRGINIA TRANSFORMER CORP.
220 GLADE VIEW DR., N.E., ROANOKE, VA 24012
(540) 345-9892

TITLE: GM SCHEMATIC	JOB# HA544A					
DWN: VKT	CHK: JWB	DATE: 11/18/14	DWG SCALE: NTS	PLOT SCALE: 1:1		
D	49066MA001U		SHEET 22.1	DRAWING 4 OF 13	REV 0	

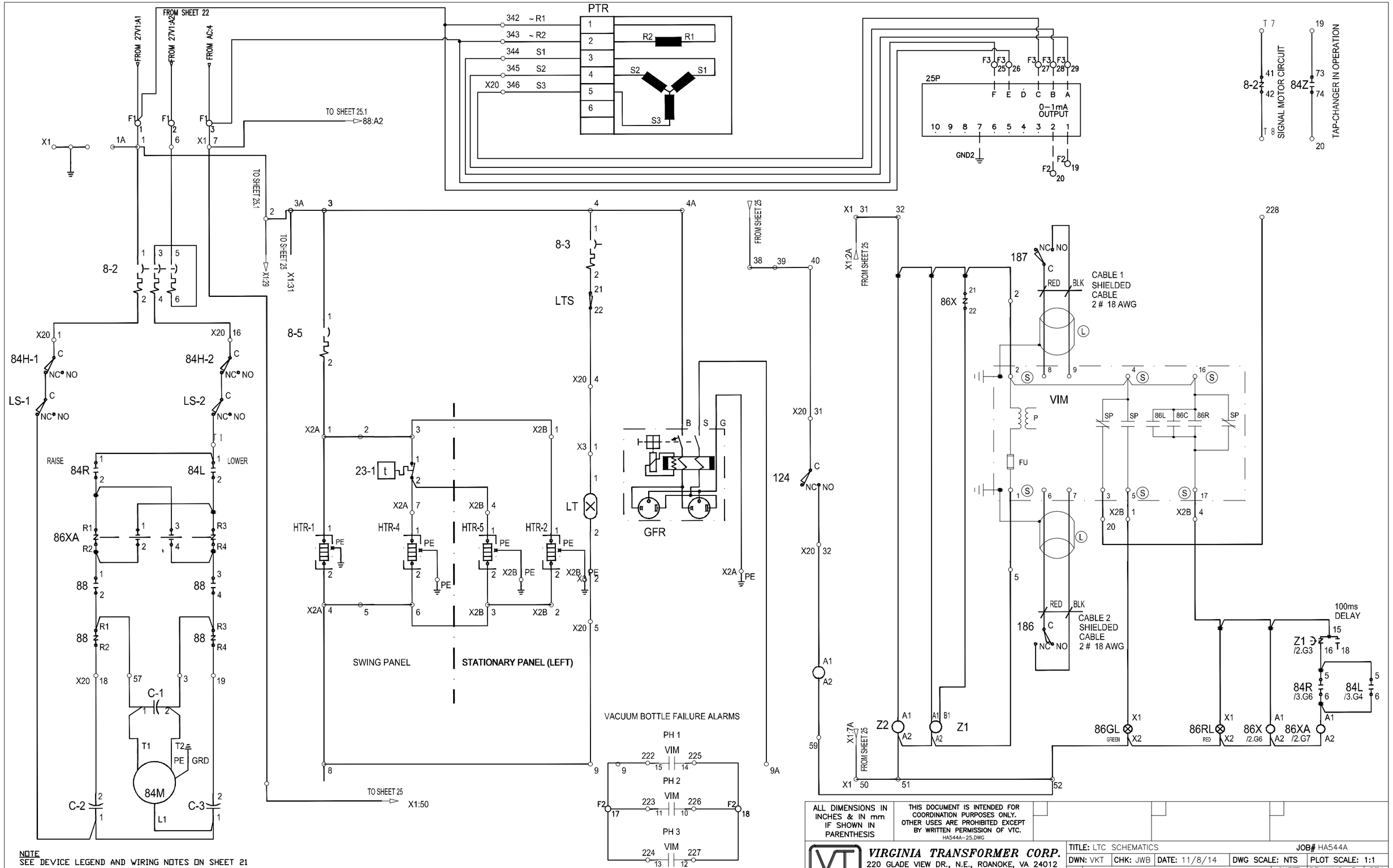

NOTE
SEE DEVICE LEGEND AND WIRING NOTES ON SHEET 21

ALL DIMENSIONS IN INCHES & IN mm IF SHOWN IN PARENTHESIS

THIS DOCUMENT IS INTENDED FOR COORDINATION PURPOSES ONLY. OTHER USES ARE PROHIBITED EXCEPT BY WRITTEN PERMISSION OF VTC.

HA544A–25.DWG

VIRGINIA TRANSFORMER CORP.
220 GLADE VIEW DR., N.E., ROANOKE, VA 24012
(540) 345–9892

TITLE: LTC SCHEMATICS JOB# HA544A
DWN: VKT CHK: JWB DATE: 11/8/14 DWG SCALE: NTS PLOT SCALE: 1:1
D 49066MA001U SHEET 25 DRAWING 8 OF 13 REV 0

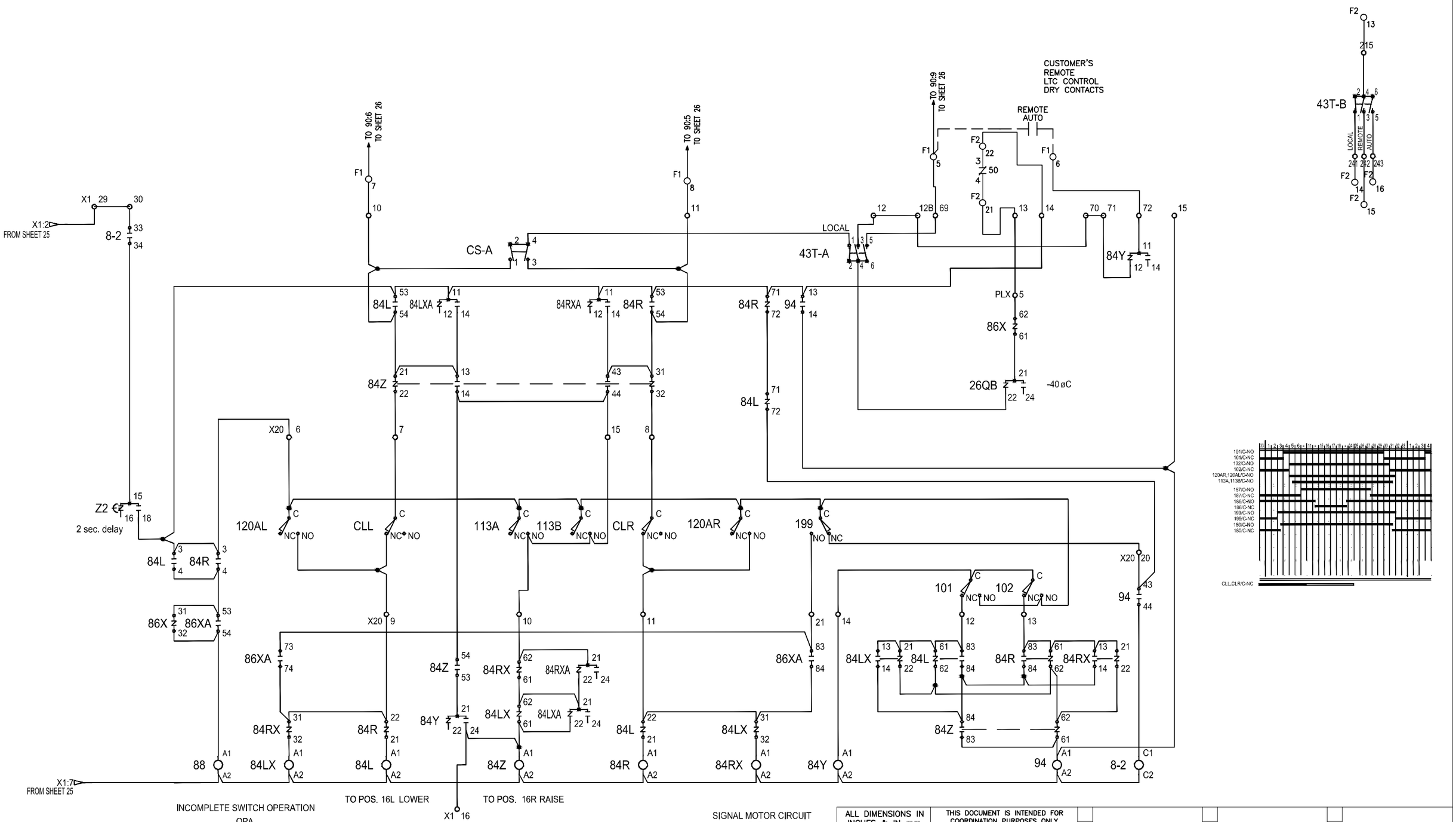

INCOMPLETE SWITCH OPERATION
OPA

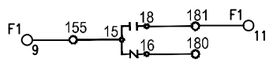

TAP-CHANGER IN OPERATION
84Z

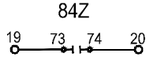

SIGNAL MOTOR CIRCUIT
8-2

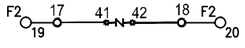

NOTE
SEE DEVICE LEGEND AND WIRING NOTES ON SHEET 21

ALL DIMENSIONS IN INCHES & IN mm IF SHOWN IN PARENTHESIS

THIS DOCUMENT IS INTENDED FOR COORDINATION PURPOSES ONLY. OTHER USES ARE PROHIBITED EXCEPT BY WRITTEN PERMISSION OF VTC.
HA544A-25.1.dwg

VIRGINIA TRANSFORMER CORP.
220 GLADE VIEW DR., N.E., ROANOKE, VA 24012
(540) 345-9892

TITLE: CT SCHEMATICS				JOB# HA544A	
DWN: VKT	CHK: JWB	DATE: 11/18/14	DWG SCALE: NTS	PLOT SCALE: 1:1	
D	49066MA001U		SHEET 25.1	DRAWING 9 OF 13	REV 0

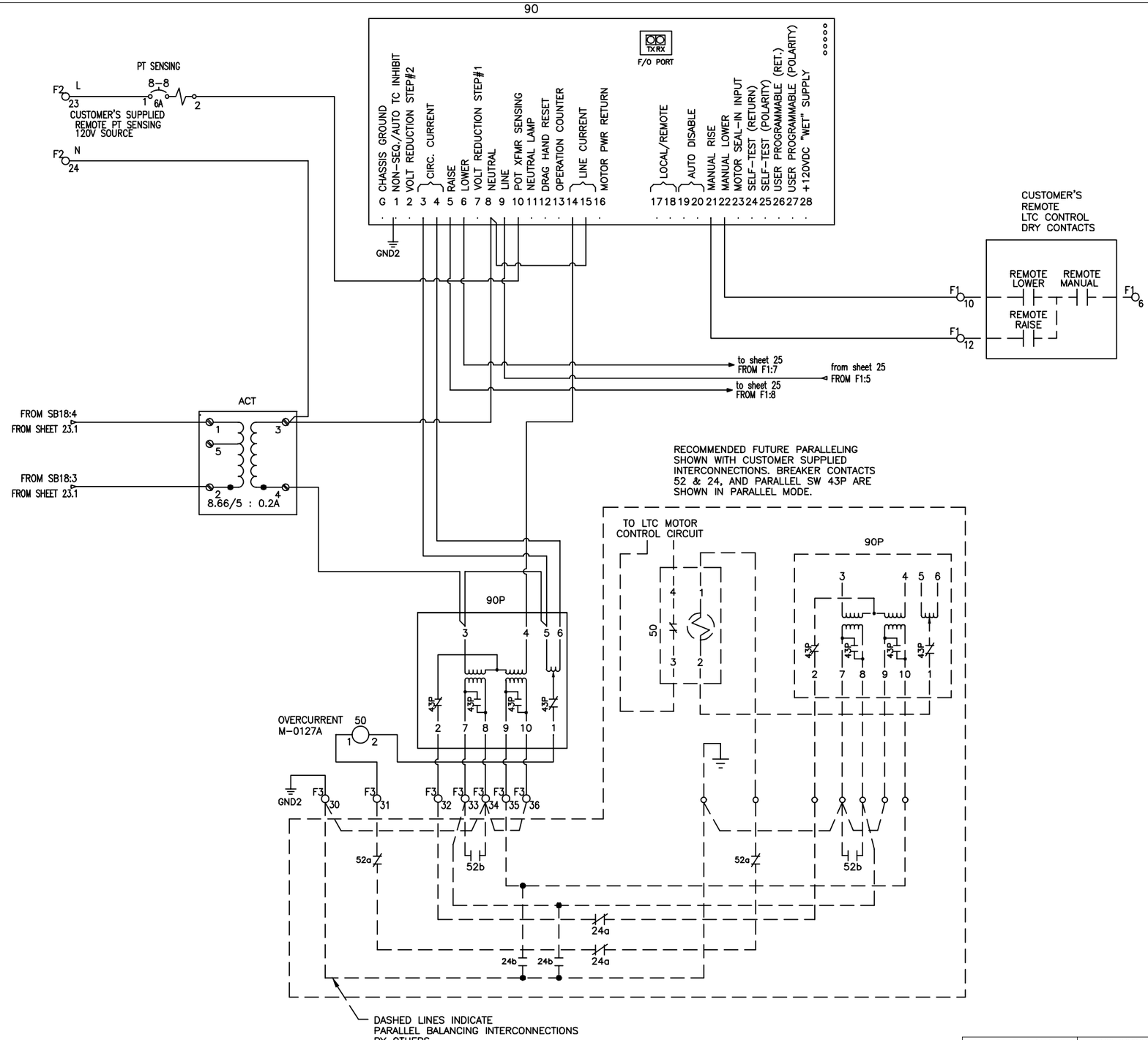

NOTE
1. SEE DEVICE LEGEND AND WIRING NOTES ON SHEET 21.
2. EXCESSIVE LOAD CURRENT BLOCKING FUNCTION IS PRESENT IN M-2001C CONTROLLER, NO NEED FOR M-0170A OVERCURRENT RELAY.

ALL DIMENSIONS IN INCHES & (IN mm IF SHOWN IN PARENTHESIS)

THIS DOCUMENT IS INTENDED FOR COORDINATION PURPOSES ONLY. OTHER USES ARE PROHIBITED EXCEPT BY WRITTEN PERMISSION OF VTC.
HA544A-26.DWG

VIRGINIA TRANSFORMER CORP.
220 GLADE VIEW DR., N.E., ROANOKE, VA 24012
(540) 345-9892

TITLE: LTC CONTROLLER SCHEMATIC				JOB# HA544A	
DWN: VKT	CHK: JWB	DATE: 11/18/14	DWG SCALE: NTS	PLOT SCALE: 1:1	
D	49066MA001U		SHEET 26	DRAWING 10 OF 13	REV 0

26Q
XFMR
OIL TEMP GAUGE

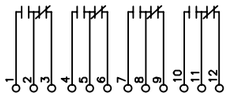

49T
XFMR
WINDING TEMP GAUGE

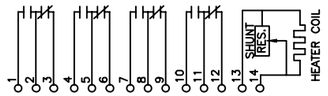

49H1
WINDING TEMP
SIMULATOR HEATER

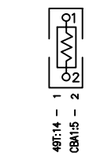

71Q1
XFMR
LIQUID LEVEL GAUGE

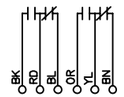

63SP
XFMR
SUDDEN PRESSURE RELIEF

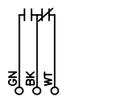

63PR1
XFMR
PRESSURE RELIEF DEVICE

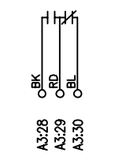

63PR2
XFMR
PRESSURE RELIEF DEVICE

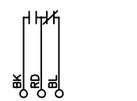

71Q2
XFMR
LIQUID LEVEL GAUGE

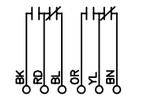

63G
CONSERV
BUCHHOLZ

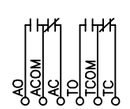

RTD1
TOP OIL. PROBE

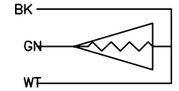

BK E1:5
WT E1:6
GN E1:7

RTD2
WIND.TEMP. PROBE

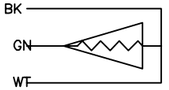

BK E1:8
WT E1:9
GN E1:10

BACK PANEL

H1

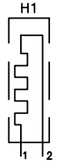

1 – E3:2;H2:1
2 – H2:2;E2:2

H2

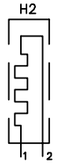

1 – H1:1
2 – GM1:N;H1:2

A1

26Q:7	1	
26Q:8	2	
26Q:9	3	
49T:7	4	
49T:8	5	
49T:9	6	
63PRX1:14	7	
63PRX1:13	8	
63PRX1:22	9	
63PRX1:44	10	
63PRX1:43	11	
63PRX1:32	12	

A5

49	GM1:1	
50	GM1:2	
51	GM1:3	
52	GM1:4	
53	GM1:5	
54	GM1:6	
55	GM1:7	
56	GM1:8	
57	GM1:9	
58	GM1:10	
59	GM1:11	
60	GM1:12	

B3

71QX2:14	25	
71QX2:13	26	
71QX2:22	27	
71QX2:44	28	
71QX2:43	29	
71QX2:32	30	
63G:TO	31	
63G:TCOM	32	
63G:TC	33	
63X:9	34	
63X:10	35	
	36	

D1

CM1:240	1	4–1:T1;88F1:1
	2	88F1:2;4–1:T2
CM1:COM	3	4–1:T3;88F1:3
CM2:240	4	4–2:T1;88F2:1
	5	4–2:T2;88F2:2
CM2:COM	6	4–2:T3;88F2:3
	7	4–1:13
	8	4–1:14
	9	4–2:14
	10	4–2:13
D1:12	11	8–3:2
D1:11	12	43F1:1a

SB15

1	FTC:1
2	FTC:2
3	FTC:3
4	FTC:4
5	FTC:5
6	SB16:6

SB1

FTA:1	1	
FTA:2	2	
FTA:3	3	
FTA:4	4	
FTA:5	5	
SB2:6	6	

SB8

1	FTD:6	
2	FTD:7	
3	FTD:8	
4	FTD:9	
5	FTD:10	
6	SB9:6	

A2

71Q1:OR	13	
71Q1:YL	14	
71Q1:BN	15	
63G:AO	16	
63G:ACOM	17	
63G:AC	18	
71Q2:OR	19	
71Q2:YL	20	
71Q2:BN	21	
63PRX2:14	22	
63PRX2:13	23	
63PRX2:22	24	

A6

61	GM1:13	
62	GM1:14	
63	GM1:15	
64	26Q:1;26QX2:A1	
65	A6:68;26Q:2;B1:11	
66	26Q:3	
67	26Q:4;26QX3:A1	
68	26Q:5;A6:65	
69		
70		
71	43F1:3a	
72	43F1:3b	

F1

27V1:A1;X:1	1	F3:26
27V1:A2;X:6	2	
AC:4;X:7	3	F3:25
	4	
90:9;X:69	5	
X:72	6	
90:6;X:10	7	
90:5;X:11	8	
X:155	9	
90:22	10	
X:181	11	
90:21	12	

D2

D2:16	13	43S:1a;49T:1
D2:17	14	49T:2;43F1:2b
	15	49T:3
	16	26Q:1;D2:13
	17	26Q:2;D2:14
	18	26Q:3
D2:22	19	43S:3a;49T:4
D2:23	20	49T:5;43F2:2b
	21	49T:6
	22	26Q:4;D2:19
	23	D2:20;26Q:5
	24	26Q:6

SB16

1	FTC:1
2	FTC:2
3	FTC:3
4	FTC:4
5	FTC:5
6	SB17:6;SB15:6

SB2

FTA:6	1	
FTA:7	2	
FTA:8	3	
FTA:9	4	
FTA:10	5	
SB1:6;SB3:6	6	

SB9

1	FTD:11	
2	FTD:12	
3	FTD:13	
4	FTD:14	
5	FTD:15	
6	SB10:6;SB8:6	

A3

63PRX2:44	25	
63PRX2:43	26	
63PRX2:32	27	
63PR1:BK;63PRX1:A1	28	
B1:2;63PR1:RD	29	A3:32
63PR1:BL	30	
63PRX2:A1;63PR2:BK	31	
63PR2:RD;B1:8	32	A3:29
63PR2:BL	33	
63X:12;63SP:GN	34	
63X:1;63SP:BK	35	
63X:2;63SP:WT	36	

B1

	1	26QX1:A1;26Q:10
A3:29	2	8–7:2;26Q:11
	3	26Q:12
	4	49T:10
	5	49T:11
	6	49T:12
	7	71QX1:A1;71Q1:BK
B1:11	8	A3:32;71Q1:RD
	9	71Q1:BL
	10	71Q2:BK;71QX2:A1
B1:8	11	A6:65;71Q2:RD
	12	71Q2:BL

F2

X:215	13	
X:241	14	
X:242	15	
X:243	16	
X:222;X:223	17	X:224
X:225;X:226	18	X:227
	19	
	20	
50:4;X:13	21	
50:3;X:14	22	
8–8:1	23	
ACT:3	24	

E1

1	GND1:5;GM1:23	
2	GM1:22	
3	GM1:21	
4	GM1:20	
5	RTD1:BK	
6	RTD1:WT	
7	RTD1:GN	
8	RTD2:BK	
9	RTD2:WT	
10	RTD2:GN	
11	43F1:3a	
12	43F1:3b	

SB17

1	FTG:1
2	FTG:2
3	FTG:3
4	FTG:4
5	FTG:5
6	SB16:6;SB18:6

SB3

FTA:11	1	
FTA:12	2	
FTA:13	3	
FTA:14	4	
FTA:15	5	
SB4:6;SB2:6	6	

SB10

1	FTE:1	
2	FTE:2	
3	FTE:3	
4	FTE:4	
5	FTE:5	
6	SB9:6;SB11:6	

A4

63X:6	37	
63X:7	38	
63X:8	39	
27V1:14	40	
27V1:13	41	
27V1:22	42	
26QX2:44	43	
26QX2:43	44	
26QX2:32	45	
26QX3:44	46	
26QX3:43	47	
26QX3:32	48	

B2

13	26QX1:14	
14	26QX1:13	
15	26QX1:22	
16	26QX1:44	
17	26QX1:43	
18	26QX1:32	
19	71QX1:14	
20	71QX1:13	
21	71QX1:22	
22	71QX1:44	
23	71QX1:43	
24	71QX1:32	

F3

X:343;F1:3	25	
X:342;F1:1	26	
X:346	27	
X:345	28	
X:344	29	
GND2:3	30	
50:1	31	
90P:2	32	
90P:7	33	
90P:8	34	
90P:9	35	
90P:10	36	

AC

1	8–M:1
2	8–M:3
3	8–M:5
4	F1:3;4–1:A2
5	GND1:1
6	

DC

1	8–7:1
2	8–7:3
3	
4	

SB18

1	FTG:6
2	FTG:7
3	FTG:8
4	FTG:9
5	FTG:10
6	SB19:6;SB17:6

SB4

FTB:1	1	
FTB:2	2	
FTB:3	3	
FTB:4	4	
FTB:5	5	
SB3:6;SB5:6	6	

SB11

1	FTE:6	
2	FTE:7	
3	FTE:8	
4	FTD:4	
5	FTE:10	
6	SB12:6;SB10:6	

SB19

1	FTG:11
2	FTG:12
3	FTG:13
4	FTG:14
5	FTG:15
6	SB18:6;SB20:6

SB5

FTB:6	1	
FTB:7	2	
FTB:8	3	
FTB:9	4	
FTB:10	5	
SB6:6;SB4:6	6	

SB12

1	FTE:11	
2	FTE:12	
3	FTE:13	
4	FTE:14	
5	FTE:15	
6	SB11:6;SB13:6	

SB20

1	CBA1:2;FTD:18
2	FTD:19;CBA1:6
3	FTD:16;ACT:2
4	ACT:1;FTD:17
5	
6	GND1:1;SB19:6

SB6

FTB:11	1	
FTB:12	2	
FTB:13	3	
FTB:14	4	
FTB:15	5	
SB5:6;SB7:6	6	

SB13

1	FTF:1	
2	FTF:2	
3	FTF:3	
4	FTF:4	
5	FTF:5	
6	SB14:6;SB12:6	

CBA1

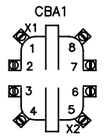

1 – 49T:13
2 – SB20:1
3 –
4 –
5 – 49H1:2
6 – SB20:2
7 –
8 –
X1 –
X2 –

SB7

FTD:1	1	
FTD:2	2	
FTD:3	3	
FTC:4	4	
FTD:5	5	
GND1:1;SB6:6	6	

SB14

1	FTF:6	
2	FTF:7	
3	FTF:8	
4	FTF:9	
5	FTF:10	
6	SB13:6;GND1:3	

LT1

1 – DS1:NC
2 – E2:2

DS1

NC – LT1:1
C – E2:1
NO –

E2

DS1:C	1	GF1:1;8–4:2
4–2:A2;GF1:2	2	H1:2;LT1:2

GND1

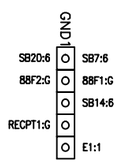

GND2

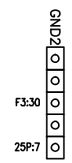

NOTE
SEE DEVICE LEGEND AND WIRING NOTES ON SHEET 21

ALL DIMENSIONS IN INCHES & IN mm IF SHOWN IN PARENTHESIS

THIS DOCUMENT IS INTENDED FOR COORDINATION PURPOSES ONLY. OTHER USES ARE PROHIBITED EXCEPT BY WRITTEN PERMISSION OF VTC.

HA544A–27.DWG

VIRGINIA TRANSFORMER CORP.
220 GLADE VIEW DR., N.E., ROANOKE, VA 24012
(540) 345–9892

TITLE: POINT TO POINT SCHEMATICS JOB# HA544A

DWN: VKT | CHK: JWB | DATE: 11/18/14 | DWG SCALE: NTS | PLOT SCALE: 1:1

D | 49066MA001U | SHEET 27 | DRAWING 11 OF 13 | REV 0

TRANSFORMER TANK

GAS MONITOR
HYDRAN M2

GM1

16 17 18 19 20 21 22 23 24 25 26 27

CM – + SH CM – + SH CM – + SH

TDM OUT | RS-485 OUT | RS-485 IN

LINE NEUTRAL CHASSIS GND

GAS HI ALARM | GAS HI-HI ALARM | MOISTURE HI ALARM | MOISTURE HI-HI ALARM | SYSTEM FAILURE ALARM

L N G 1 2 3 4 5 6 7 8 9 10 11 12 13 14 15

1 – A5:49
2 – A5:50
3 – A5:51
4 – A5:52
5 – A5:53
6 – A5:54
7 – A5:55
8 – A5:56
9 – A5:57
10 – A5:58
11 – A5:59
12 – A5:60
13 – A6:61
14 – A6:62
15 – A6:63
16 –
17 –
18 –
19 –
20 – E1:4
21 – E1:3
22 – E1:2
23 – E1:1
24 –
25 –
26 –
27 –

L – 8–6:2
N – H2:2
G – GND2:1

DETAIL A

27V1

A1 – 8–M:2;F1:1
13 – 27V1:21;A4:41
14 – A4:40
21 – 27V1:13
22 – A4:42

A2 – F1:2;8–M:6
31 –
32 –
43 –
44 –

26QX1

A1 – B1:1
13 – 26QX1:21;B2:14
14 – B2:13
21 – 26QX1:13
22 – B2:15

A2 – 63PRX1:A2;8–7:4
31 – 26QX1:43
32 – B2:18
43 – 26QX1:31;B2:17
44 – B2:16

63PRX1

A1 – A3:28
13 – 63PRX1:21;A1:8
14 – A1:7
21 – 63PRX1:13
22 – A1:9

A2 – 63PRX2:A2;26QX1:A2
31 – 63PRX1:43
32 – A1:12
43 – 63PRX1:31;A1:11
44 – A1:10

63PRX2

A1 – A3:31
13 – 63PRX2:21;A2:23
14 – A2:22
21 – 63PRX2:13
22 – A2:24

A2 – 63PRX1:A2;71QX1:A2
31 – 63PRX2:43
32 – A3:27
43 – 63PRX2:31;A3:26
44 – A3:25

71QX1

A1 – B1:7
13 – 71QX1:21;B2:20
14 – B2:19
21 – 71QX1:13
22 – B2:21

A2 – 63PRX2:A2;71QX2:A2
31 – 71QX1:43
32 – B2:24
43 – 71QX1:31;B2:23
44 – B2:22

71QX2

A1 – B1:10
13 – 71QX2:21;B3:26
14 – B3:25
21 – 71QX2:13
22 – B3:27

A2 – 71QX1:A2;26QX2:A2
31 – 71QX2:43
32 – B3:30
43 – 71QX2:31;B3:29
44 – B3:28

26QX2

A1 – A6:64
13 – 26QX2:21;D2:17
14 – D2:16
21 – 26QX2:13
22 – D2:18

A2 – 71QX2:A2;26QX3:A2
31 – 26QX2:43
32 – A4:45
43 – 26QX2:31;A4:44
44 – A4:43

26QX3

A1 – A6:67
13 – 26QX3:21;D2:23
14 – D2:22
21 – 26QX3:13
22 – D2:24

A2 – 26QX2:A2
31 – 26QX3:43
32 – A4:48
43 – 26QX3:31;A4:47
44 – A4:46

LTC CABINET

X

	PE
F1:1	1
F1:2	6
F1:3	7
F2:21	13
F2:22	14
F1:7	10
F1:8	11
F1:5	69
F1:6	72
F2:13	215
F2:17	222
F2:17	223
F2:17	224
F2:18	225
F2:18	226
F2:18	227
F2:14	241
F2:15	242
F2:16	243
	289
F1:9	155
F1:11	181
	292
	293
	294
	327
	328
F3:26	342
F3:25	343
F3:29	344
F3:28	345
F3:27	346

DETAIL B

4–1

A1 43F1:1b;43S:1b
A2 AC:4;4–2:A2
L1 8–1:2
T1 D1:1
L2 8–1:4
T2 D1:2
L3 8–1:6
T3 D1:3
13 D1:7
14 D1:8

4–2

A1 43S:3b;43F2:1b
A2 E2:2
L1 8–2:2
T1 D1:4
L2 8–2:4
T2 D1:5
L3 8–2:6
T3 D1:6
13 D1:9
14 D1:10

SHIP LOOSE

25P

A B C D E F
1 2 3 4 5 6 7 8 9 10

A B C D E F
1 2 3 4 5 6 7 8 9 10

88F1

1 – D1:1;88F3:1
2 – 88F3:2;D1:2
3 – D1:3;88F3:3
G – 88F3:G;GND1:2

88F3

1 – 88F5:1;88F1:1
2 – 88F5:2;88F1:2
3 – 88F5:3;88F1:3
G – 88F1:G;88F5:G

88F5

1 – 88F7:1;88F3:1
2 – 88F7:2;88F3:2
3 – 88F7:3;88F3:3
G – 88F3:G;88F7:G

88F7

1 – 88F9:1;88F5:1
2 – 88F9:2;88F5:2
3 – 88F9:3;88F5:3
G – 88F9:G;88F5:G

88F9

1 – 88F11:1;88F7:1
2 – 88F11:2;88F7:2
3 – 88F11:3;88F7:3
G – 88F11:G;88F7:G

88F11

1 – 88F9:1;88F13:1
2 – 88F9:2;88F13:2
3 – 88F9:3;88F13:3
G – 88F9:G;88F13:G

88F13

1 – 88F11:1;88F15:1
2 – 88F15:2;88F11:2
3 – 88F11:3;88F15:3
G – 88F11:G;88F15:G

88F15

1 – 88F13:1;88F17:1
2 – 88F17:2;88F13:2
3 – 88F13:3;88F17:3
G – 88F13:G;88F17:G

88F17

1 – 88F15:1;88F19:1
2 – 88F19:2;88F15:2
3 – 88F15:3;88F19:3
G – 88F15:G;88F19:G

88F19

1 – 88F17:1;88F21:1
2 – 88F21:2;88F17:2
3 – 88F17:3;88F21:3
G – 88F17:G;88F21:G

88F21

1 – 88F19:1
2 – 88F19:2
3 – 88F19:3
G – 88F19:G

88F2

1 – 88F4:1;D1:4
2 – 88F4:2;D1:5
3 – D1:6;88F4:3
G – GND1:2;88F4:G

88F4

1 – 88F2:1;88F6:1
2 – 88F2:2;88F6:2
3 – 88F2:3;88F6:3
G – 88F6:G;88F2:G

88F6

1 – 88F4:1;88F8:1
2 – 88F8:2;88F5:2
3 – 88F4:3;88F8:3
G – 88F8:G;88F4:G

88F8

1 – 88F6:1;88F10:1
2 – 88F6:2;88F10:2
3 – 88F6:3;88F10:3
G – 88F6:G;88F10:G

88F10

1 – 88F8:1;88F12:1
2 – 88F8:2;88F12:2
3 – 88F8:3;88F12:3
G – 88F8:G;88F12:G

88F12

1 – 88F14:1;88F10:1
2 – 88F10:2;88F14:2
3 – 88F14:3;88F10:3
G – 88F14:G;88F10:G

88F14

1 – 88F16:1;88F12:1
2 – 88F12:2;88F16:2
3 – 88F16:3;88F12:3
G – 88F16:G;88F12:G

88F16

1 – 88F18:1;88F14:1
2 – 88F14:2;88F18:2
3 – 88F18:3;88F14:3
G – 88F18:G;88F14:G

88F18

1 – 88F20:1;88F16:1
2 – 88F20:2;88F16:2
3 – 88F20:3;88F16:3
G – 88F20:G;88F16:G

88F20

1 – 88F18:1
2 – 88F18:2
3 – 88F18:3
G – 88F18:G

NOTE
SEE DEVICE LEGEND AND WIRING NOTES ON SHEET 21

ALL DIMENSIONS IN INCHES & IN mm IF SHOWN IN PARENTHESIS

THIS DOCUMENT IS INTENDED FOR COORDINATION PURPOSES ONLY. OTHER USES ARE PROHIBITED EXCEPT BY WRITTEN PERMISSION OF VTC.

HA544a–27.1.DWG

VIRGINIA TRANSFORMER CORP.
220 GLADE VIEW DR., N.E., ROANOKE, VA 24012
(540) 345–9892

TITLE: POINT TO POINT SCHEMATICS | JOB# HA544A

DWN: VKT | CHK: JWB | DATE: 11/18/14 | DWG SCALE: NTS | PLOT SCALE: 1:1

D | 49066MA001U | SHEET 27.1 | DRAWING 12 OF 13 | REV 0

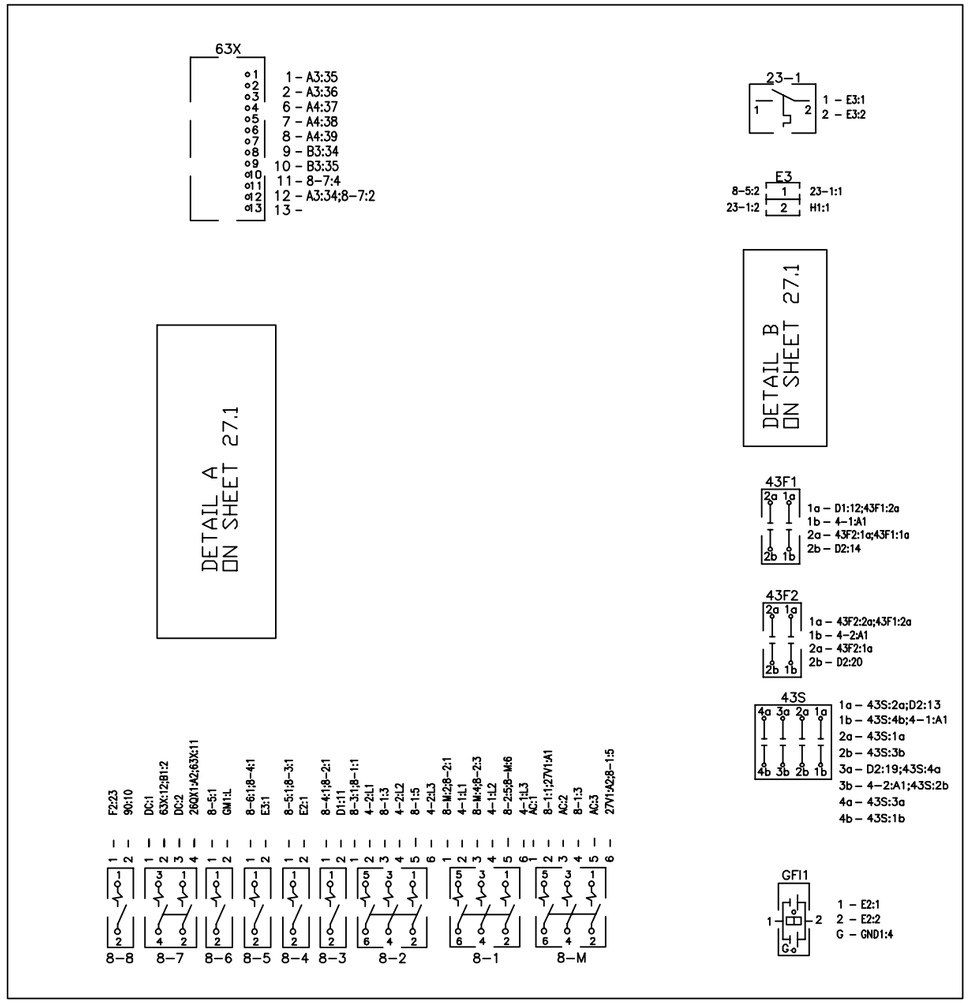

LEFT SWING PANEL (BACK VIEW)

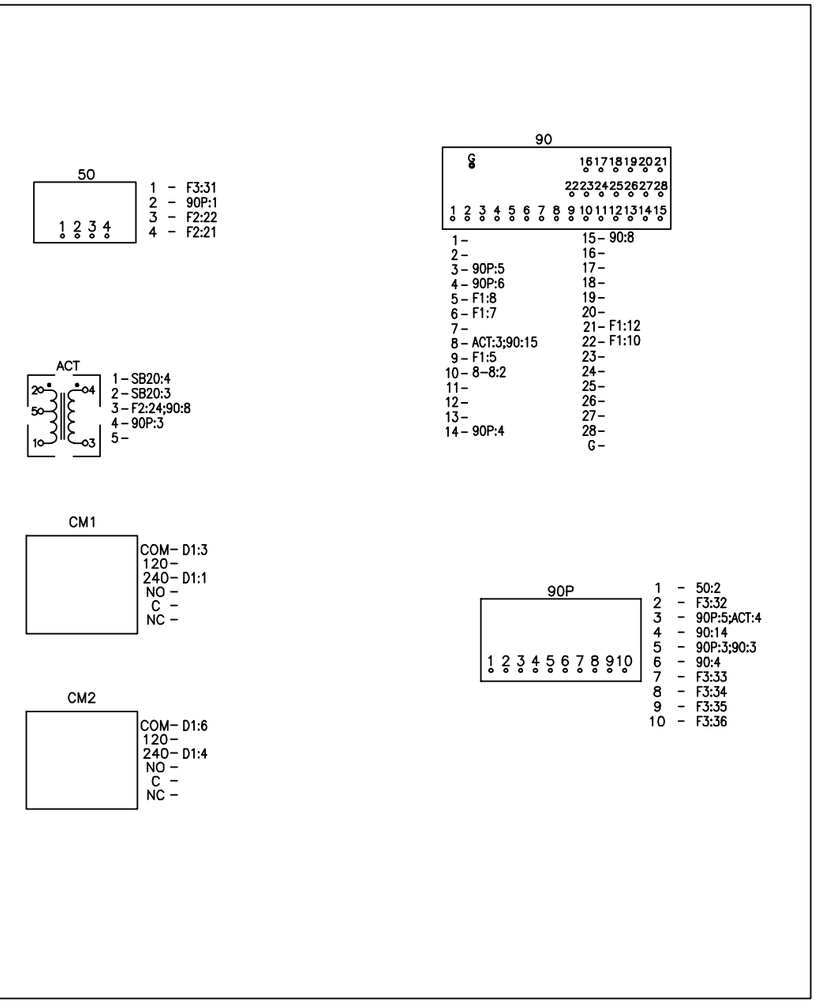

RIGHT SWING PANEL (BACK VIEW)

NOTE
SEE DEVICE LEGEND AND WIRING NOTES ON SHEET 21

ALL DIMENSIONS IN INCHES & IN mm IF SHOWN IN PARENTHESIS	THIS DOCUMENT IS INTENDED FOR COORDINATION PURPOSES ONLY. OTHER USES ARE PROHIBITED EXCEPT BY WRITTEN PERMISSION OF VTC. HA544A–28.DWG			

VIRGINIA TRANSFORMER CORP.
220 GLADE VIEW DR., N.E., ROANOKE, VA 24012
(540) 345–9892

TITLE: POINT TO POINT SCHEMATICS				JOB# HA544A	
DWN: VKT	CHK: JWB	DATE: 11/18/14	DWG SCALE: NTS	PLOT SCALE: 1:1	
D	49066MA001U		SHEET 28	DRAWING 13 OF 13	REV 0

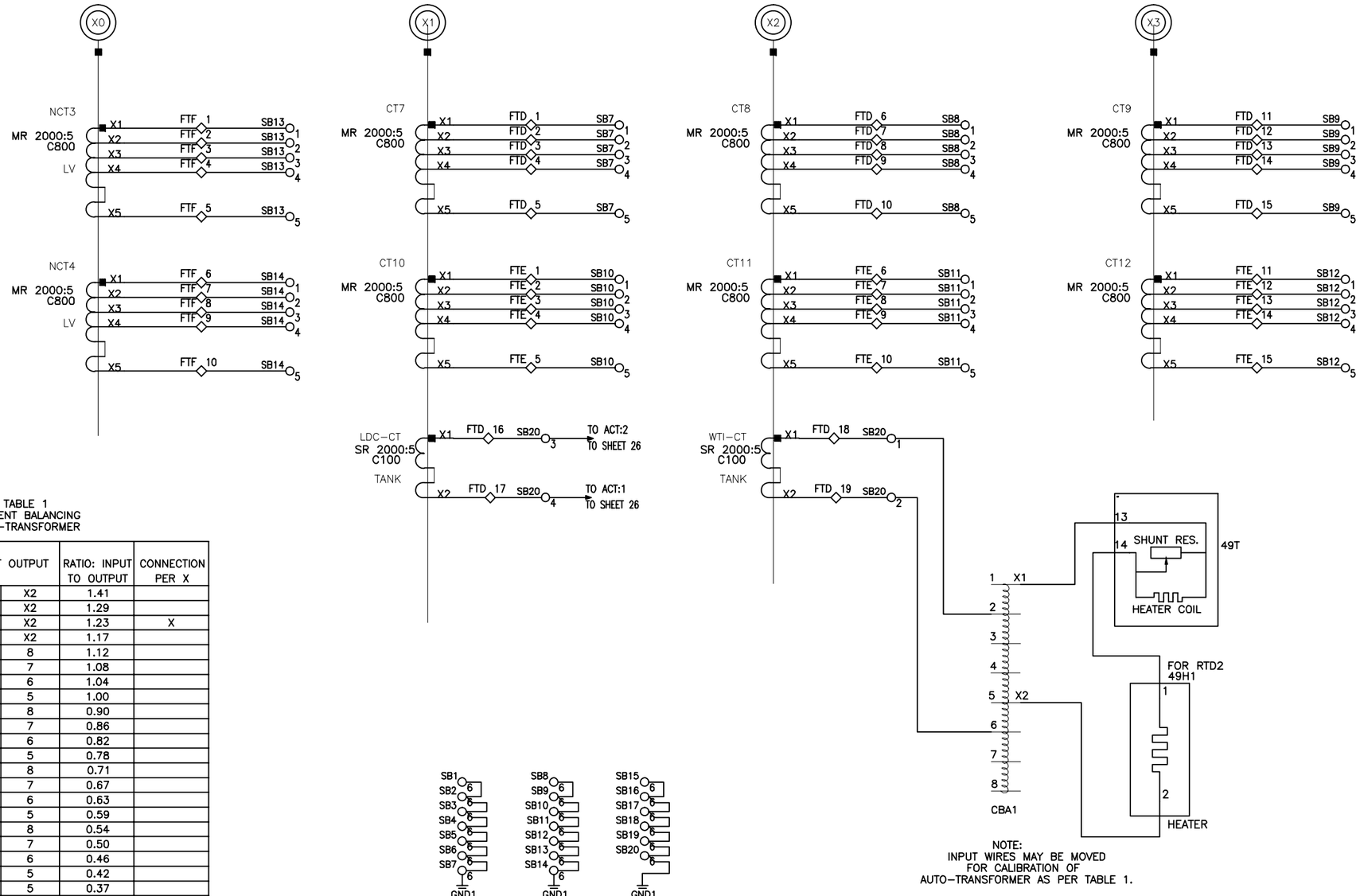

TABLE 1
CURRENT BALANCING
AUTO–TRANSFORMER

CURRENT INPUT		CURRENT OUTPUT		RATIO: INPUT TO OUTPUT	CONNECTION PER X
3	8	X1	X2	1.41	
2	5	X1	X2	1.29	
2	6	X1	X2	1.23	X
2	7	X1	X2	1.17	
X1	X2	1	8	1.12	
X1	X2	1	7	1.08	
X1	X2	1	6	1.04	
X1	X2	1	5	1.00	
X1	X2	2	8	0.90	
X1	X2	2	7	0.86	
X1	X2	2	6	0.82	
X1	X2	2	5	0.78	
X1	X2	3	8	0.71	
X1	X2	3	7	0.67	
X1	X2	3	6	0.63	
X1	X2	3	5	0.59	
X1	X2	4	8	0.54	
X1	X2	4	7	0.50	
X1	X2	4	6	0.46	
X1	X2	4	5	0.42	
X1	8	4	5	0.37	
X1	8	2	4	0.32	
3	6	3	4	0.27	
2	7	3	4	0.20	

CAUTION:
SHORT TERMINALS 1 & 2 BEFORE
DISCONNECTING SECONDARY BURDEN.
NOTE2 : INPUT WIRES MAY BE MOVED FOR CALIBRATION OF
AUTOTRANSFORMER AS PER TABLE1

NOTE
SEE DEVICE LEGEND AND WIRING NOTES ON SHEET 21

WTI–CT,LDC–CT
NOTE:
SHORT TERMINAL 1 & 2 OR 3 & 4 BEFORE
REMOVING SECONDARY BURDEN

NOTE:
INPUT WIRES MAY BE MOVED
FOR CALIBRATION OF
AUTO–TRANSFORMER AS PER TABLE 1.

CT7–12,NCT3,4:2000:5MR,C800
CAUTION:
SHORT CIRCUIT TERMINALS 1 & 5
BEFORE DISCONNECTING SECONDARY BURDEN.

TAP CONNECTIONS FOR 2000/5 MR CT	
RATIO	TAPS
300/5	X3–X4
400/5	X1–X2
500/5	X4–X5
800/5	X2–X3
1100/5	X2–X4
1200/5	X1–X3
1500/5	X1–X4
1600/5	X2–X5
2000/5	X1–X5

ALL DIMENSIONS IN INCHES & IN mm IF SHOWN IN PARENTHESIS

THIS DOCUMENT IS INTENDED FOR COORDINATION PURPOSES ONLY. OTHER USES ARE PROHIBITED EXCEPT BY WRITTEN PERMISSION OF VTC.

HA544A–23.1.dwg

VIRGINIA TRANSFORMER CORP.
220 GLADE VIEW DR., N.E., ROANOKE, VA 24012
(540) 345–9892

TITLE: CT SCHEMATICS JOB# HA544A

DWN: VKT | CHK: JWB | DATE: 11/18/14 | DWG SCALE: NTS | PLOT SCALE: 1:1

D 49066MA001U | SHEET 23.1 | DRAWING 6 OF 13 | REV 0

CT1-3,NCT1,2:1200:5,MR,C400
CT4-6:1200:5,MR,0.3B1.8
CAUTION:
SHORT CIRCUIT TERMINALS 1 & 5
BEFORE DISCONNECTING SECONDARY BURDEN.

TAP CONNECTIONS FOR 1200/5 MR CT	
RATIO	TAPS
100/5	X2-X3
200/5	X1-X2
300/5	X1-X3
400/5	X4-X5
500/5	X3-X4
600/5	X2-X4
800/5	X1-X4
900/5	X3-X5
1000/5	X2-X5
1200/5	X1-X5

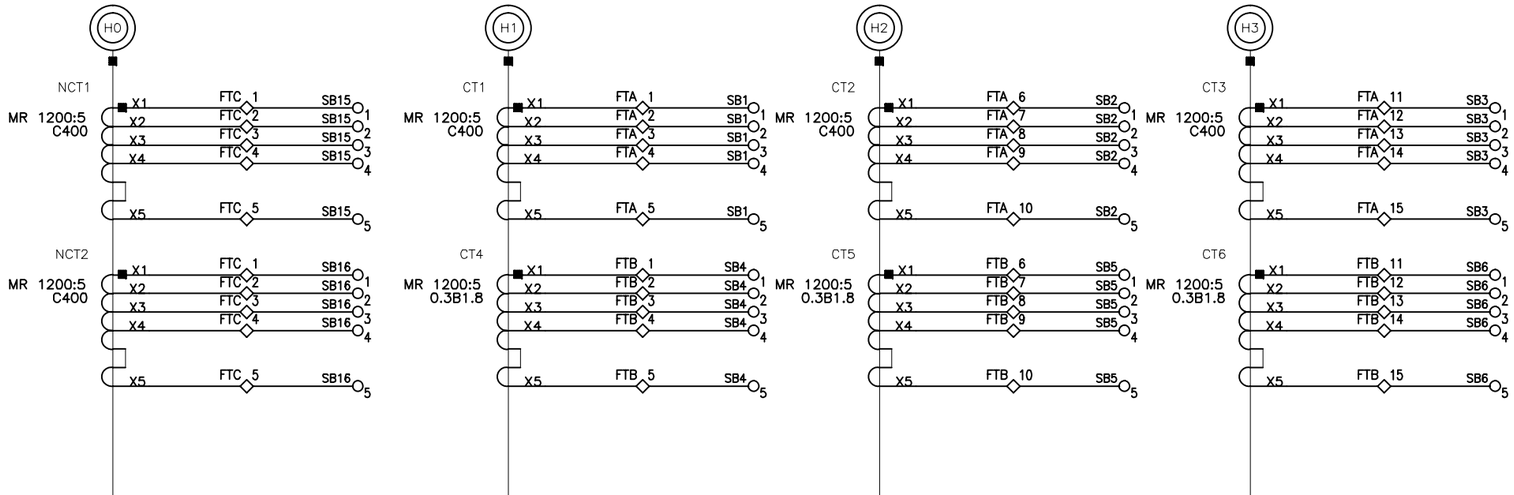

TERTIARY CT'S RACK

CT13-15:2000:5MR,C800
CAUTION:
SHORT CIRCUIT TERMINALS 1 & 5
BEFORE DISCONNECTING SECONDARY BURDEN.

TAP CONNECTIONS FOR 2000/5 MR CT	
RATIO	TAPS
300/5	X3-X4
400/5	X1-X2
500/5	X4-X5
800/5	X2-X3
1100/5	X2-X4
1200/5	X1-X3
1500/5	X1-X4
1600/5	X2-X5
2000/5	X1-X5

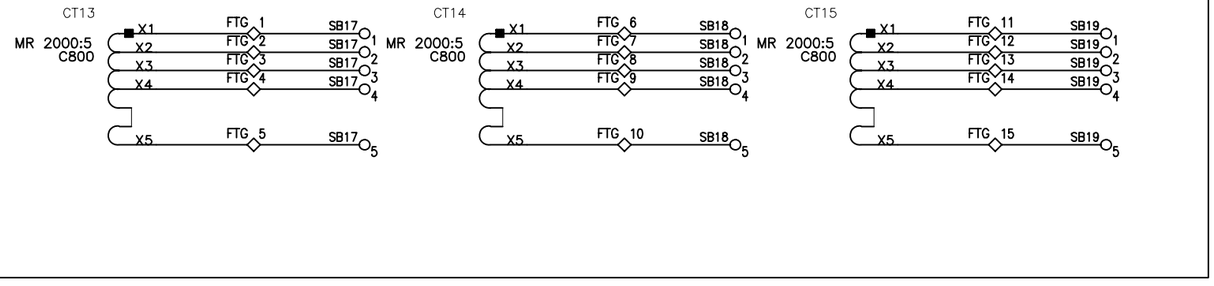

NOTE
SEE DEVICE LEGEND AND WIRING NOTES ON SHEET 21

ALL DIMENSIONS IN INCHES & IN mm IF SHOWN IN PARENTHESIS

THIS DOCUMENT IS INTENDED FOR COORDINATION PURPOSES ONLY. OTHER USES ARE PROHIBITED EXCEPT BY WRITTEN PERMISSION OF VTC.
HA544A-23.dwg

VIRGINIA TRANSFORMER CORP.
220 GLADE VIEW DR., N.E., ROANOKE, VA 24012
(540) 345-9892

TITLE: CT SCHEMATICS					JOB# HA544A
DWN: VKT	CHK: JWB	DATE: 11/18/14	DWG SCALE: NTS		PLOT SCALE: 1:1
D	49066MA001U		SHEET 23	DRAWING 5 OF 13	REV 0

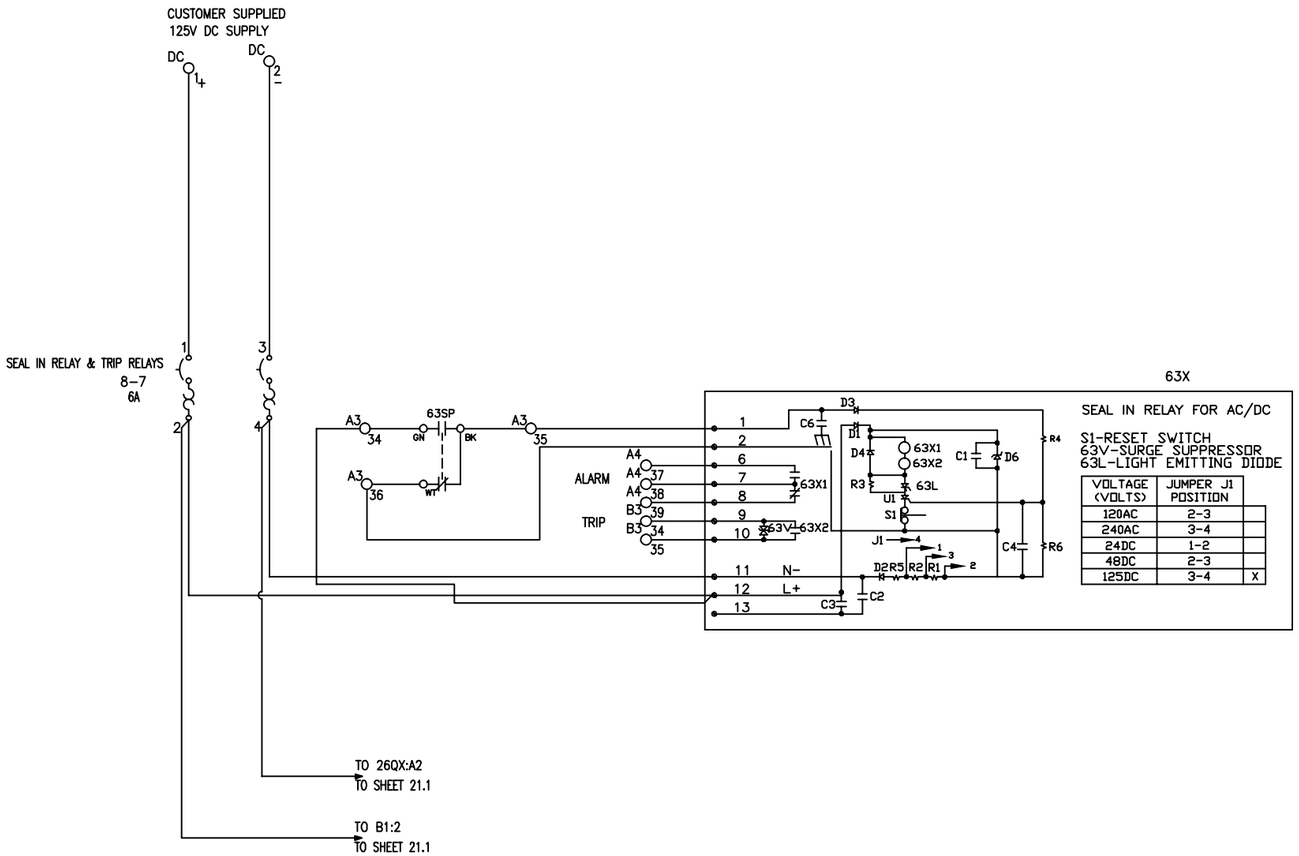

NOTE
SEE DEVICE LEGEND AND WIRING NOTES ON SHEET 21

ALL DIMENSIONS IN INCHES & IN mm IF SHOWN IN PARENTHESIS

THIS DOCUMENT IS INTENDED FOR COORDINATION PURPOSES ONLY. OTHER USES ARE PROHIBITED EXCEPT BY WRITTEN PERMISSION OF VTC.
HA544A-24.DWG

VIRGINIA TRANSFORMER CORP.
220 GLADE VIEW DR., N.E., ROANOKE, VA 24012
(540) 345-9892

TITLE: SEAL IN SCHEMATICS JOB# HA544A

DWN: VKT | CHK: JWB | DATE: 11/18/14 | DWG SCALE: NTS | PLOT SCALE: 1:1

D | 49066MA001U | SHEET 24 | DRAWING 7 OF 13 | REV 0

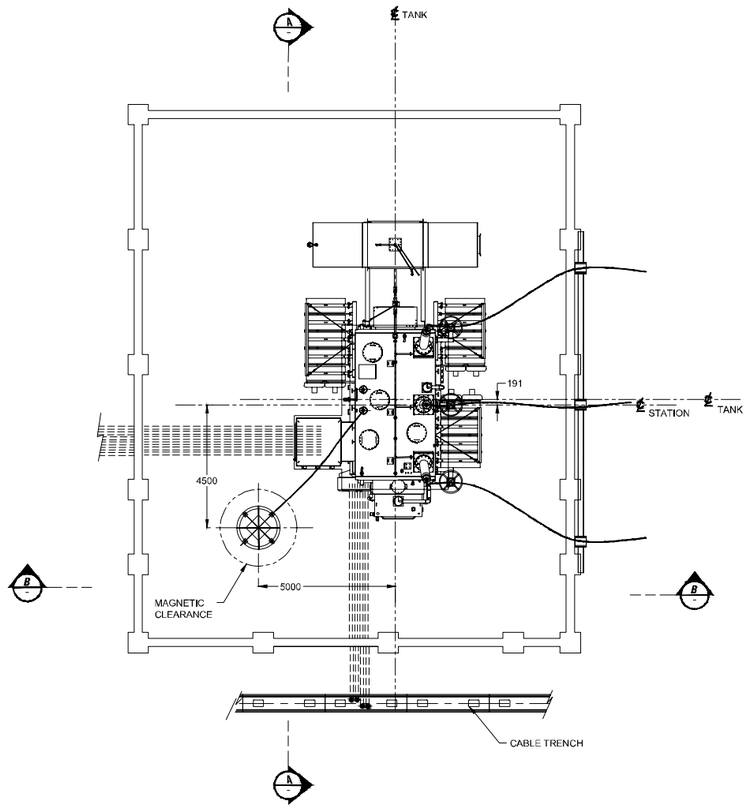

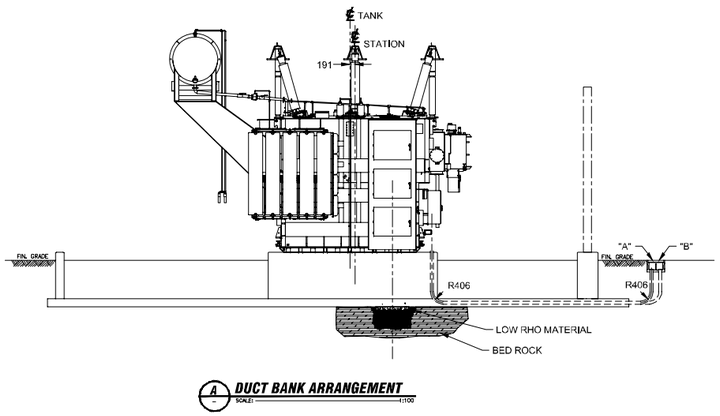

A - DUCT BANK ARRANGEMENT
SCALE: 1:100

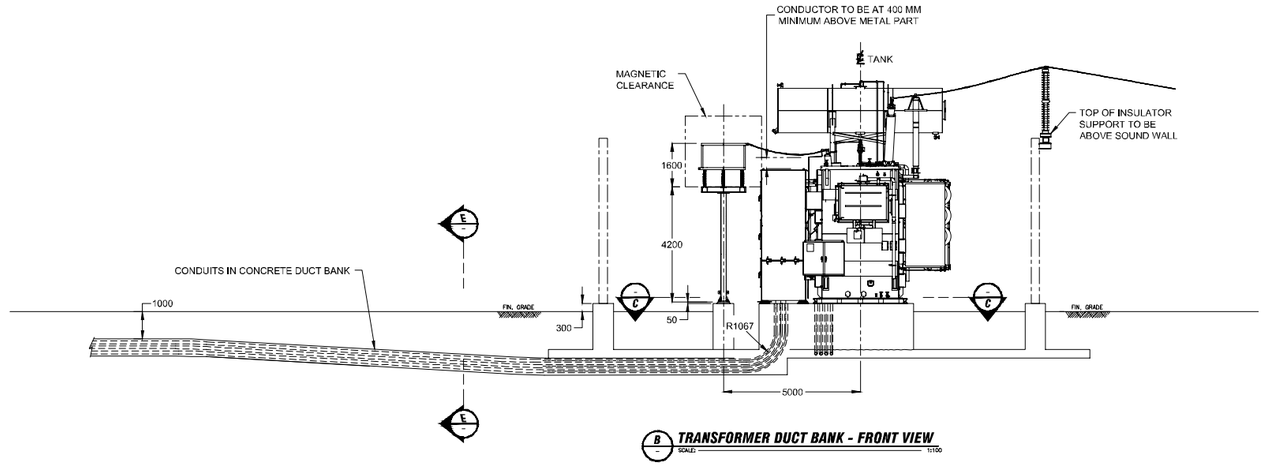

B - TRANSFORMER DUCT BANK - FRONT VIEW
SCALE: 1:100

GENERAL NOTES :

1. ALL DIMENSIONS IN mm EXCEPT WHERE NOTED.
2. UNDERGROUND CONDUIT CSA 22.2 NO 211.1 (DB-2) OR BETTER. CONDUIT ABOVE GROUND TO BE CSA 22.2 NO 211.2 SCH 40.
3. FOR CONTROL CABLES IN CONDUIT TO BE INSTALLED EXCEEDING OESC AS NOTED BELOW, OTHERWISE AS PER CODE. THIS INCLUDES, BUT IS NOT LIMITED TO:
   - RESPECT THE MINIMUM COVER OF 750mm FOR VEHICULAR AREAS. ALL AREAS IN THE SUBSTATION ARE CONSIDERED VEHICULAR AREAS.
   - MINIMUM VERTICAL BEND RADIUS:
     2" (50mm) PVC - 9,5" (240mm)
     4" (100mm) PVC - 16" (406mm)
   - MINIMUM HORIZONTAL BEND RADIUS.
     ALL CONDUIT 36"(915mm)
   - THE MINIMUM COVER COULD BE REDUCED BY 150 mm IF MECHANICAL PROTECTION IS IN PLACE.
   - IF LOCATED IN ROCK, THE CONDUIT COULD BE SECURED IN THE ROCK IN A TRENCH NOT LESS THAN 150 mm DEEP AND GROUTED WITH CONCRETE TO THE LEVEL OF THE ROCK SURFACE.
   - APPROPRIATE MARKING TAPE SHALL BE INSTALLED AT MID-DEPTH OF CONDUITS OR CABLES . TYPICALLY A RED 6" WIDE MARKING TAPE WITH "DANGER" OR "BURIED CABLE" WRITTEN IN BLACK LETTERS.
   - A LAYER OF SAND SHOULD BE INSTALLED AT LEAST 75 mm DEEP BOTH ABOVE AND BELOW THE CONDUIT .
   - PLACE BACKFILL IN LAYERS OF 150mm OR LESS AND COMPACT TO A MINIMUM OF 95% PROCTOR DENSITY , SEE SECTION AND DETAIL FOR TYPE OF BACKFILL.
     *** *PAY PARTICULAR ATTENTION WHEN BACKFILL REQUIRED IS THAT OF LOW THERMAL RESISTANCE (RHO).* ***
4. FOR 35kV CABLES IN DUCT BANK TO BE INSTALLED AS PER OESC. THIS INCLUDES, BUT IS NOT LIMITED TO:
   - RESPECT THE MINIMUM COVER OF 1000mm FOR VEHICULAR AREAS. ALL AREAS IN THE SUBSTATION ARE CONSIDERED VEHICULAR AREAS.
   - MINIMUM HORIZONTAL AND VERTICAL BEND RADIUS: 42" (1067mm)
   - IF LOCATED IN ROCK, THE DUCT BANK COULD BE SECURED IN THE ROCK IN A TRENCH NOT LESS THAN 150 mm DEEP AND GROUTED WITH CONCRETE TO THE LEVEL OF THE ROCK SURFACE.
   - APPROPRIATE MARKING TAPE SHALL BE INSTALLED AT MID-DEPTH OF CONDUIT OR CABLES. TYPICALLY A RED 9" WIDE MARKING TAPE WITH "DANGER" OR "BURIED CABLE" WRITTEN IN BLACK LETTERS.
   - PLACE BACKFILL IN LAYERS OF 150mm OR LESS AND COMPACT TO A MINIMUM OF 95% PROCTOR DENSITY , SEE SECTION AND DETAIL FOR TYPE OF BACKFILL.
     *** *PAY PARTICULAR ATTENTION WHEN BACKFILL REQUIRED IS THAT OF LOW THERMAL RESISTANCE (RHO).* ***
5. MOLDED BELL END SHALL BE INSTALLED AT EACH CONDUIT EXIT.
6. SMALLER BENDING RADIUS COULD BE USED IF IN ACCORDANCE WITH OESC RULES. CABLES MINIMUM BENDING RADII AND ACCEPTABLE CABLE PULLING FORCES, CABLE PULLING FORCES MUST BE VALIDATED BY CONTRACTOR.
7. SEAL CONDUITS AFTER INSTALLATION IS COMPLETE WITH HILTI FIRE-BLOCKING FOAM CP-620 OR EQUIVALENT TO PREVENT WATER AND RODENT ENTRY.
8. SEE CIML DRAWING FOR TRENCHES INSTALLATION DETAIL AND DRAINAGE.
9. RESPECT CIRCUIT "A" AND "B" SEPARATION WHERE NOTED.
10. CABLES RUN FROM CONDUIT TO EQUIPMENT SHALL BE SUPPORTED EVERY METER MINIMUM. THE SUPPORT METHOD COULD BE:
    - ATTACHED TO SUPPORT STRUCTURE WITH STAINLESS STEEL STRAPS
    - FASTENED WITH GALVANIZED OR STAINLESS CABLE CLIPS BOLTED TO THE STRUCTURE.
    - ATTACHED TO A BUILT-ON-SITE STRUT FRAME OR INSTALLED IN A GALVANIZED TRAY FASTENED TO THE EQUIPMENT FRAME OR SUPPORT STRUCTURE.

Rev	Date	Revisions	By
1	2014.06.23	90% DESIGN REVIEW COMMENTS	KW

WHITE
S.A. White & Sons Corporation
an IBEA company

CanadianSolar

Kingston Solar
100 MW AC, 140 MW DC, Solar Park
3670 Unity Road, Kingston, Ontario

T100038A

701-2680 Keele Street
Vaughan ON L4K 4S7
Phone: 905 695-1005
Fax: 905 695-0525
www.cimaworld.com

CIMA
ISO 9001

DRAWING BY	A. IBRAHIN
DESIGN BY	R. LANGLOIS
APPROVED BY	R. LANGLOIS
VERIFIED BY	P. LAMBERT
VERIFIED BY	F. CAXTIN
DATE	2014.06.23

REFERENCE

TITLE

No	REFERENCE

ENGINEER'S STAMP SHALL APPLY ONLY TO REVISION(S)
PROPRIETARY AND CONFIDENTIAL

PRINT SIZE:	ARCH D
ISSUED BY:	CIML
JOB #	T100038A
SCALE	
DWG #	AP-020-1

DWG TITLE:
MAIN POWER TRANS. LAYOUT

PROPOSED EQUIPMENT COORDINATES			
	X (M)	Y (M)	DESCRIPTION
P1	369316.3000	4908841.0000	SW4 - SWITCHGEAR
P2	369426.0000	4908792.0000	T1 - 110MVA STATION TRANSFORMER
P3	369466.0000	4908792.0000	250 kV LINE DEAD END GANTRY
UTM NAD83 ZONE 18N (CSRS)			

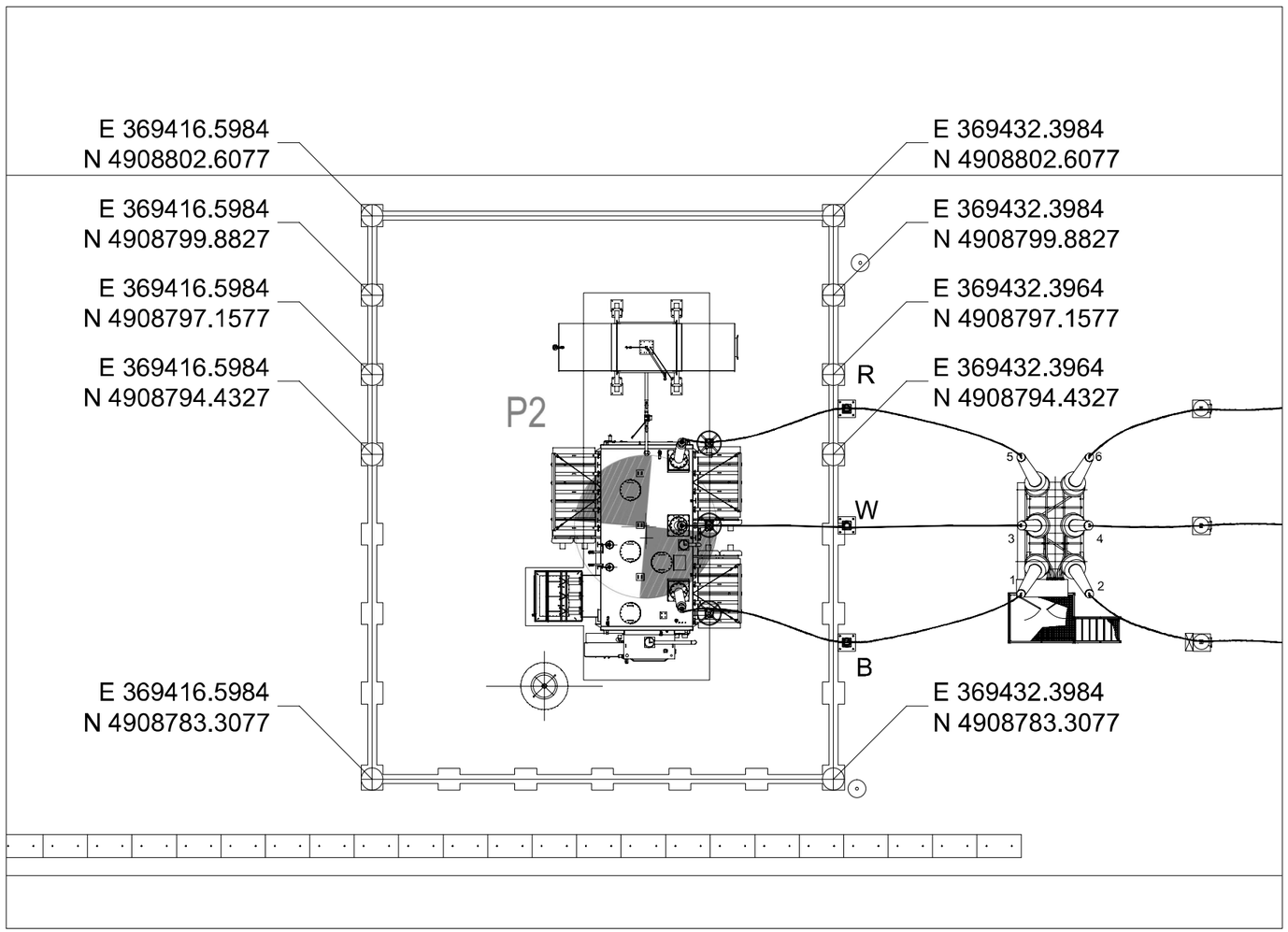

NOTES:

1. ALL UNITS ARE IN MILLIMETERS UNLESS OTHERWISE NOTED.

Kingston Solar
100 MW AC, 140 MW DC, Solar Park
3670 Unity Road, Kingston, Ontario

WHITE
Wilk White Design Corporation
an @IEA company

CanadianSolar

CIMA
ISO 9001

201-7880 Keele Street
Vaughan ON L4K 4G7
Phone: 905 695-1005
Fax: 905 696-0525
www.cima.ca

DRAWING BY A. TERANUN
VERIFIED BY P. LAMBERT
DESIGN BY R. LANGLOIS
VERIFIED BY E. CANTIN
APPROVED BY R. LANGLOIS
DATE 2014 06 23

T000286A

Rev	Date	Revisions	By

REFERENCE

TITLE

No

REFERENCE

ENGINEER'S STAMP SHALL APPLY ONLY TO REVISION(S) 0
PROPRIETARY AND CONFIDENTIAL

PRINT SIZE: ARCH D
ISSUED BY: CIMA+
JOB #: T000286A
SCALE:
DWG #:

DWG TITLE:

THE MAGNETIC FIELD OF THE REACTOR CAUSES THERMAL AND ELECTRODYNAMIC EFFECTS ON NEIGHBOURING METALLIC PARTS. THE RECOMMENDED MAGNETIC CLEARANCE CONTOUR (MC) IS SHOWN DASH–DOTTED IN THE DRAWING. FOR SMALL METALLIC PARTS DISTANCES ACCORDING TO MC1 HAVE TO BE OBSERVED. FOR METALLIC PARTS FORMING CLOSED LOOPS, SUCH AS GROUNDING WIRE, CONCRETE REBAR, ETC. DISTANCES ACCORDING TO MC2 HAVE TO BE OBSERVED. SPECIAL CARE MUST BE TAKEN FOR PLACEMENT OF SENSITIVE EQUIPMENT IN THE VICINITY OF THE REACTOR.

MINIMUM DISTANCES BETWEEN COILS. A =[4140] 163"

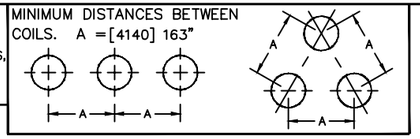

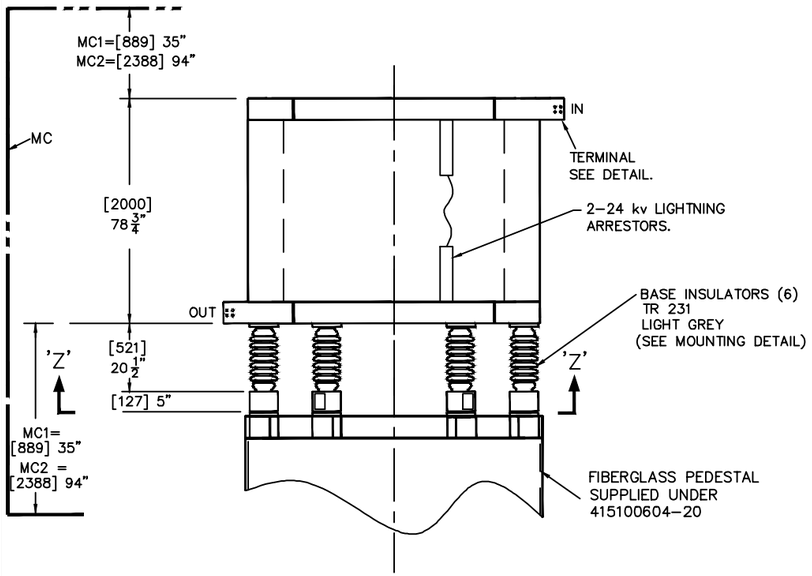

ELEVATION

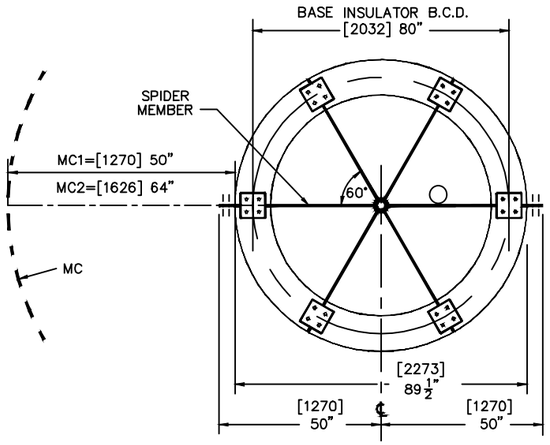

BASE VIEW 'Z'–'Z'

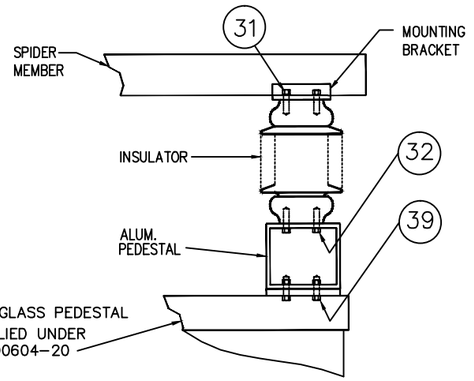

INSULATOR MTG. DETAIL

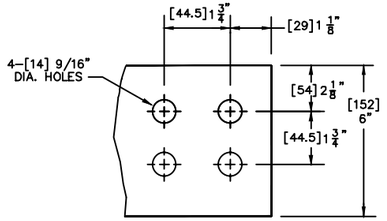

TERMINAL DETAIL

TO NEMA SPEC. SG.1
MATERIAL – [10] 3/8" THICK BARE ALUMINUM

TERMINALS ARE COATED WITH GREASE FOR PROTECTION DURING TRANSPORTATION. REMOVE GREASE BEFORE APPLYING JOINT COMPOUND

NOTES

1 – UNIT SUITABLE FOR INDOOR AND OUTDOOR INSTALLATION.
2 – ALUMINUM CONDUCTORS.
3 – LIFTING INSTRUCTIONS INCLUDED.
4 – UNIT FINISH LIGHT GREY No. ASA 70.
5 – DIMENSIONS ARE IN [MILLIMETRES] AND INCHES.
6 – UNIT BUILT TO IEEE C57.21–2008 SPECIFICATIONS.
7 – 0.35 THERMAL 3 SEC.
8 – 1 kA MECHANICAL PEAK.
9 – 200 kV BIL ACROSS COIL.
10 – 200 kV BIL ACROSS BASE INSULATOR.
11 – REACTOR MAX. WEIGHT 2266 kg, 4996 lb.
12 – FIBERGLASS PEDESTAL MAX. WEIGHT 827 kg, 1820 lb.
13 – REACTOR CAPABLE OF CONTINUOUS OPERATION @ 110% OF RATED VOLTAGE.
14 – MEETS THE INTENT OF IEEE 693–2005 SEISMIC MOD.

MOUNTING HARDWARE

(31) 5/8"–11 X 1 1/4" LG. ST.STL. BOLT WITH LOCK WASHER
(32) 5/8"–11 X 1 1/2" LG. ST.STL. BOLT WITH LOCK WASHER
(39) 5/8"–11 X 2 3/4" LG. ST.STL. BOLT WITH LOCK WASHER AND NUT

Q.21510198

TOLERANCES UNLESS OTHERWISE SPECIFIED
0–6" [152] ±1/16" [1.6]
6" [152]– 12" [305] ±1/8" [3]
12" [305]– 36" [914] ±1/4" [6]
36" [914]– 80" [2032] ±1/2" [13]
80" [2032] AND UP ±3/4" [19]
ANGULAR 2 DEGREES

REVISIONS	
No.	DESCRIPTION
1	DWG. UPDATED. 05/01/2015 JMH

TRENCH LIMITED
COPYRIGHT ALL RIGHTS RESERVED.

FINAL OUTLINE DRAWING
DRY–TYPE AIR CORE SHUNT REACTOR
REACTOR RATING: 167.35 A, 3333.333 kVA, 119.025 OHM, 315.724 mH.
SYSTEM: 34.5 kV, 60 Hz.

TRENCH

DRN.	APPD.	SCALE	DWG. No.
J.M.H.	PM	N.T.S.	415100604–10–OL

S & C ELECTRIC COMPANY
P.O. No.: 684203

DATE 04/15/2015

REV. 1

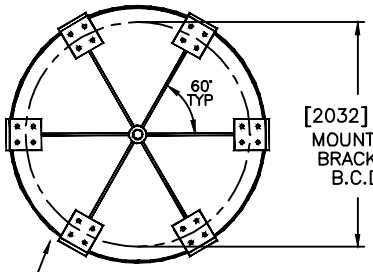

TOP VIEW 'Y'–'Y'

NOTE: LOOKING DOWN FROM TOP

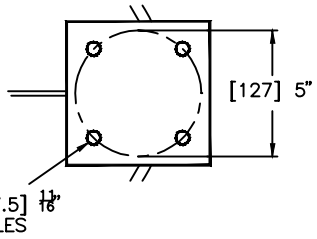

MOUNTING DETAIL A

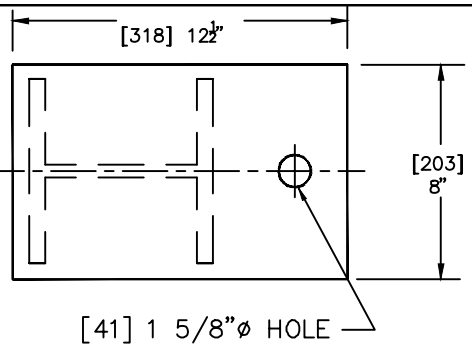

VIEW "B"–"B"

MATERIAL – [25] 1" TH. ALUMINUM

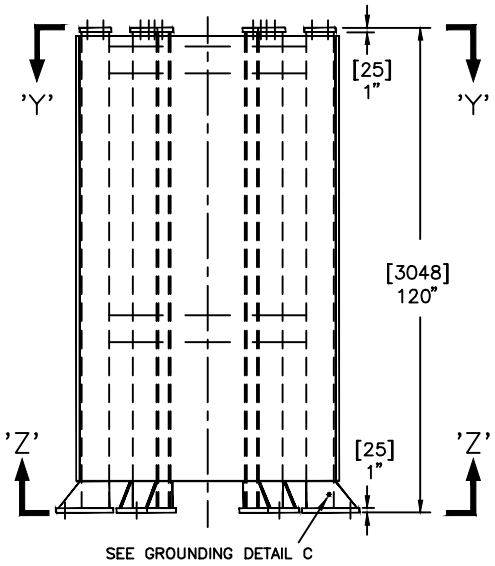

ELEVATION

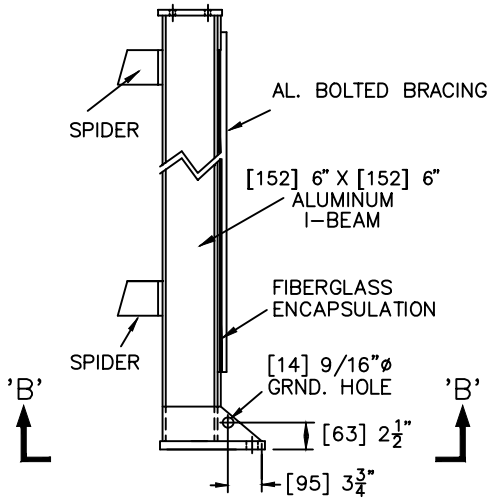

CROSS SECTION OF FIBREGLASS PEDESTAL GROUNDING DETAIL C

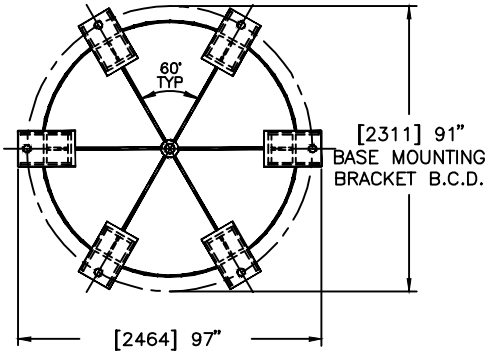

BASE VIEW 'Z'–'Z'

ATTENTION: LOOKING FROM BOTTOM UP

NOTES:

1 – PEDESTAL FINISH LIGHT GREY ASA 70.
2 – DIMENSIONS ARE IN (MILLIMETERS) AND INCHES.
3 – TOTAL WEIGHT 827 kg, 1820 lbs.
4 – UPPER AND LOWER ALUMINUM SPIDER SETS ON THE FIBERGLASS PEDESTAL ARE ELECTRICALLY CONNECTED TO FACILITATE GROUNDING OF STRUCTURE.
5 – GROUND HOLE IS PROVIDED ON ONE PEDESTAL MOUNTING BRACKET, AND IT IS TO BE NOTED THAT GROUNDING IN ONLY ONE BRACKET IS REQUIRED SINCE ALL BRACKETS ARE ELECTRICALLY INTERCONNECTED.

Q.21510198

TOLERANCES UNLESS OTHERWISE SPECIFIED	REVISIONS		TRENCH LIMITED	
0–6" [152] ±1/16" [1.6]	No.	DESCRIPTION	COPYRIGHT ALL RIGHTS RESERVED.	TRENCH®
6" [152]– 12" [305] ±1/8"[3]			FINAL OUTLINE DRAWING FIBERGLASS PEDESTAL	
12" [305]– 36" [914] ±1/4" [6]				
36" [914]– 80" [2032] ±1/2" [13]				
80" [2032] AND UP ±3/4" [19]				
ANGULAR 2 DEGREES				

DRN.	APPD.	SCALE	DWG. No.
E.C.	PM	N.T.S.	415100604–20–0L

S & C ELECTRIC COMPANY P.O. No.: 684203	DATE	REV.
	3/26/2015	0

Trench Sound Model Prediction

[1/3 Octave Band]

for

KINGSTON SOLAR/ HB WHITE
P.O. No: 4500379828

Prepared by: A. Sethi

Trench Sound Model Prediction for KINGSTON SOLAR/ HB WHITE

NGR Reactor

Item Designation: = NGR - REACTOR

Trench Quotation Ref. 21510925

DESIGNED CURRENT

FREQ	CURRENT
60.0	200.0

Acoustic Information for SZC100115

1/3 octave band analysis (Mech. freq.) (Freq/dBA)
(100/ 25.8)(125/ 40.3)(160/ 7.5)

Full octave band analysis (Mech. freq.) (Freq/dBA)
(63/ 20.1)(125/ 40.3)(250/ 15.0)

Total sound pressure: 40.32 dBA at 2 meters from reactor surface

Total sound power: 59.65 dBA / coil

Guaranteed total sound power 60 dBA / coil.

Fixed Reactor Bank

Lw (manufacturer specified) - Single Coil	80.00
Lw (manufacturer specified) - Single Coil	80.00
Lw (manufacturer specified) - Single Coil	80.00
Total for Line reactor with 3 coils	**84.8**

Lw: Sound Power Level

Centre Frequency	Corr1	Corr2	PWL	add 5 dB	A-weighted correction	PWL (A-weighted)
31.5	-1	-2.4	81.37	86.37	-39.4	47.0
63	5	-2.4	87.37	92.37	-26.2	66.2
125	7	-2.4	89.37	94.37	-16.1	78.3
250	2	-2.4	84.37	89.37	-8.6	80.8
500	2	-2.4	84.37	89.37	-3.2	86.2
1000	-4	-2.4	78.37	83.37	0	83.4
2000	-9	-2.4	73.37	78.37	1.2	79.6
4000	-14	-2.4	68.37	73.37	1	74.4
8000	-21	-2.4	61.37	66.37	-1.1	65.3
Overall:			**93.4**	**98.4**		**89.7**

To:	H.B. White Canada Corporation	From:	Trench Limited
Attn:	Tony Nguyen	Name:	Eric Chan
Email:	Tony.Nguyen@hbwhitecanada.com	Date:	May 26, 2015
Your ref:	--	Trench ref:	415100604-10
Subject:	Max Sound Power	Page:	Page 1 of 1

Dear Sir,

The maximum sound power per coil for the reactors supplied under 415100604-10 is 80 dBA when energized to 167.3A at 60hZ.

Sincerely,

Eric Chan
Designer
Trench Limited - Coil Products Division

TRENCH LIMITED

71 Maybrook Drive
Scarborough ON
M1V 4B6, Canada

Main: +1 416-298-8108 ext 381
Direct: +1 647-925-9557

Email: eric.chan@trench-group.com
Web Site: www.trenchgroup.com

GREENHECK

AFJ-601X

Florida Product Approval No: FL6876.1, 15718
UL Classified: R25119

Florida Product Approved
Acoustical Louver

Application and Design

AFJ-601X is a **Florida Product Approved** stationary acoustical aluminum louver designed to protect air intake and exhaust openings in building exterior walls. AFJ-601X is tested in accordance with AMCA 500-L Air Performance and Water Penetration. AFJ-601X is tested in accordance with AMCA sound ratings program. AFJ-601X is tested in accordance with AMCA 540 Test Method for Louvers Impacted by Wind Borne Debris (Basic Protection, Missile Level D and Enhanced Protection, Missile Level E). **AFJ-601X is licensed to bear the AMCA seal allowing design professionals to select and apply with confidence.** AFJ-601X is tested and qualified per the following Florida test protocols: TAS 201 (Large Missile Impact), TAS 202 (Uniform Static Air Pressure) and TAS 203 (Cyclic Wind Loading). AFJ-601X is approved by Florida for use in Florida's High Velocity Hurricane Zone. AFJ-601X is qualified for wind loads up to 200 PSF *(size and configuration dependent, refer to the UL published certification for size and design load restrictions).*

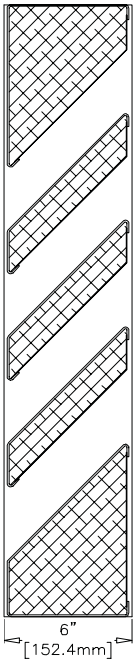

IMPACT RESISTANT
LOUVER
Enhanced Protection
LISTED
See www.AMCA.org for all certified or listed products

Standard Construction

Frame . . . . . .Heavy gauge formed aluminum, 6 in. x 0.080 in. nominal wall thickness

Blades. . . . . .J style acoustical, heavy gauge formed aluminum, 0.080 in. nominal wall thickness

Construction . . . .Mechanically fastened

Birdscreen. . . . . .3/4 in. x 0.051 in. flattened expanded aluminum in removable frame, inside mount (rear)

Acoustical Insulation . . . . . .Fiberglass insulation

Finish. . . . . .Mill

Angles . . . . . .Continuous, Ship Loose (mill finish)

Minimum Size . . .12 in. W x 15 in. H

Maximum Single Section Size . . . .60 in. W x 96 in. H

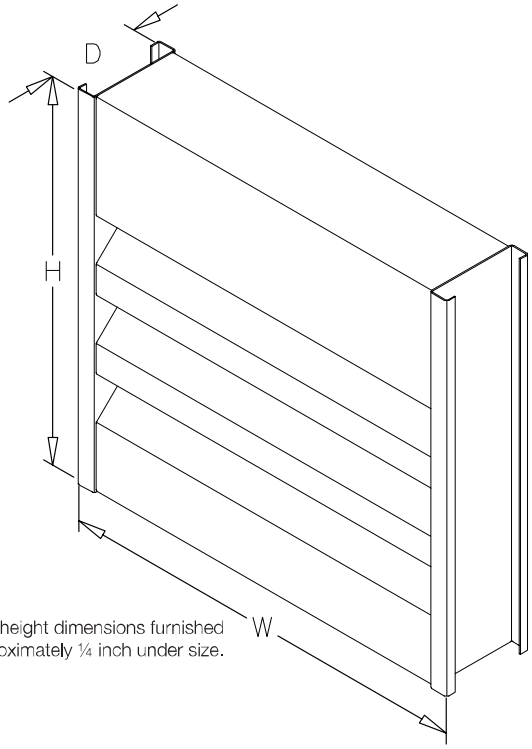

*Width and height dimensions furnished approximately ¼ inch under size.

Options *(at additional cost)*

- A variety of bird and insect screens
- Blank-off panel
- Extended sill
- Filter rack
- Flanged frame
- Security bars
- A variety of architectural finishes including:
  - Clear anodize
  - Integral color anodize
  - Baked enamel paint
  - Kynar paint

PERFORMANCE DATA

AFJ-601X

Florida Product Approval No.: FL6876.1, 15718
UL Classified: R25119

Free Area Chart (Sq. ft.)

Louver Height Inches	Louver Width Inches								
	12	18	24	30	36	42	**48**	54	60
15	0.12	0.21	0.29	0.37	0.45	0.53	0.61	0.69	0.77
18	0.25	0.41	0.57	0.74	0.90	1.06	1.22	1.38	1.55
24	0.37	0.62	0.86	1.10	1.35	1.59	1.83	2.08	2.32
30	0.50	0.82	1.15	1.47	1.80	2.12	2.44	2.77	3.09
36	0.62	1.03	1.43	1.84	2.24	2.65	3.05	3.46	3.86
42	0.75	1.24	1.72	2.21	2.69	3.18	3.67	4.15	4.64
48	1.00	1.65	2.30	2.94	3.59	4.24	**4.89**	5.54	6.18
54	1.12	1.85	2.58	3.31	4.04	4.77	5.50	6.23	6.96
60	1.25	2.06	2.87	3.68	4.49	5.30	6.11	6.92	7.73
66	1.37	2.26	3.16	4.05	4.94	5.83	6.72	7.61	8.50
72	1.50	2.47	3.44	4.41	5.39	6.36	7.33	8.30	9.27
78	1.75	2.88	4.02	5.15	6.28	7.42	8.55	9.69	10.82
84	1.87	3.09	4.30	5.52	6.73	7.95	9.16	10.38	11.59
90	2.00	3.29	4.59	5.89	7.18	8.48	9.77	11.07	12.37
96	2.12	3.50	4.88	6.25	7.63	9.01	10.38	11.76	13.14
102	2.25	3.71	5.16	6.62	8.08	9.54	11.00	12.45	13.91
108	2.50	4.12	5.74	7.36	8.98	10.60	12.22	13.84	15.46
114	2.62	4.32	6.02	7.73	9.43	11.13	12.83	14.53	16.23
120	2.75	4.53	6.31	8.09	9.88	11.66	13.44	15.22	17.00

Airflow Resistance (Standard Air - .075 lb/ft³)

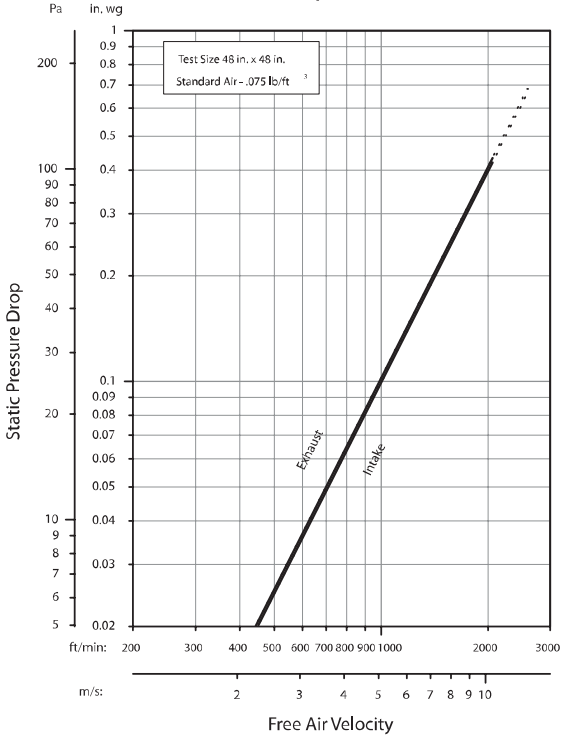

Model AFJ-601X resistance to airflow (pressure drop) varies depending on louver application (air intake or air exhaust). Free area velocities (shown) are higher than average velocity through the overall louver size. See louver selection information. (Test Figure 5.5-6.5)

Greenheck Fan Corporation certifies that the AFJ-601X louvers shown herein are licensed to bear the AMCA Seal. The ratings shown are based on tests and procedures performed in accordance with AMCA Publication 511 and comply with the requirements of the AMCA Certified Ratings Program. The AMCA Certified Ratings Seal applies to water penetration, air performance and sound ratings.

Greenheck Fan Corporation certifies that the AFJ-601X louvers shown herein are approved to bear the AMCA Listing Label. The Ratings shown are based on tests and procedures performaned in accordance with AMCA Publications and comply with the requirements of the AMCA Listing Label Program. The AMCA Listing Label applies to Wind Borne Debris Impact Resistant Resistant Louvers.

IMPACT RESISTANT LOUVER
Enhanced Protection
See www.AMCA.org for all certified or listed products

Sound Transmission Class

The Sound Transmission Class (STC) is a rating of the effectiveness of an assembly in isolating or reducing airborne sound transmission. STC is a single number that summarizes airborne sound transmission loss data. Assemblies with higher STC ratings are more efficient at reducing sound transmission. STC is determined in accordance with ASTM E413-04.

Transmission Loss

Transmission loss (TL) is a measurement of the reduction of sound power transmission (dB) through an assembly at a given frequency. The more sound power that is reduced, the greater the TL. TL is tested in accordance with ASTM E90-04.

Free Field Noise Reduction in Decibels

Free Field Noise Reduction is determined by adding 6 dB to the Transmission Loss.

Octave Band	2	3	4	5	6	7	STC
Frequency (Hz)	125	250	500	1000	2000	4000	
Transmission Loss (dB)	4	4	6	10	17	12	10
Free Field Noise Reduction (dB)	10	10	12	16	23	18	

Water Penetration (Standard Air - .075 lb/ft³)

Test size 48 in. x 48 in. Test duration of 15 min.

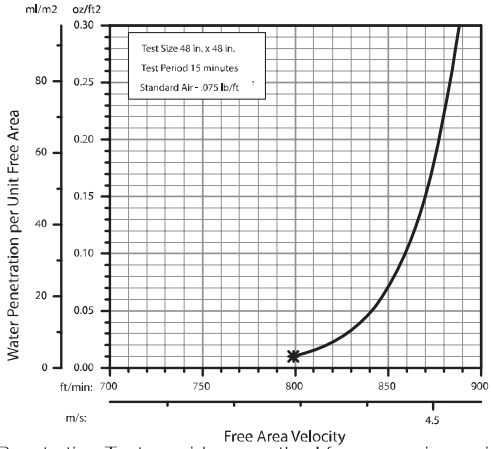

The AMCA Water Penetration Test provides a method for comparing various louver models and designs as to their efficiency in resisting the penetration of rainfall under specific laboratory test conditions. The beginning point of water penetration is defined as that velocity where the water penetration curve projects through .01 oz. of water (penetration) per sq. ft. of louver free area. ***The beginning point of water penetration for Model AFJ-601X is 799 fpm free area velocity.** These performance ratings do not guarantee a louver to be weatherproof or stormproof and should be used in combination with other factors including good engineering judgement in selecting louvers.

INSTALLATION DETAILS

AFJ-601X

Florida Product Approval No.: FL6876.1, 15718
UL Classified: R25119

Maximum Size and Installation Information

Model AFJ-601X is a Florida Product Approved louver and must be installed in accordance with the installation instructions shown herein. Model AFJ-601X is qualified for installation within concrete/masonry, steel stud, structural steel or wood framed building conditions. Model AFJ-601X is structurally calculated to withstand positive and negative wind-loads up to 200 PSF. The louver section size will determine the actual maximum wind-load that the louver sections will withstand. The maximum single section width is 60 in. The maximum single section height is 96 in. While, the maximum opening height is limited to 96 in., the opening width may be unlimited as multiple sections may be installed side by side in accordance with installation instructions.

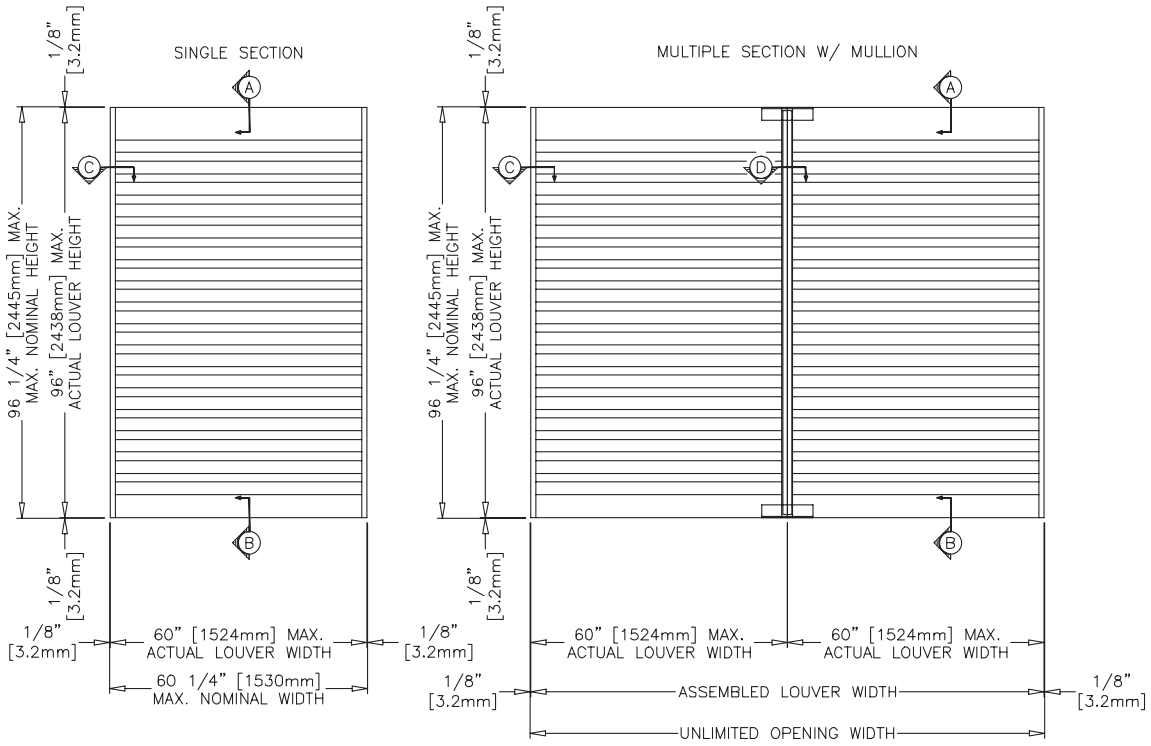

Minimum Single Section Size	Maximum Single Section Size
12 in. W x 15 in. H	60 in. W x 96 in. H

Wood Opening

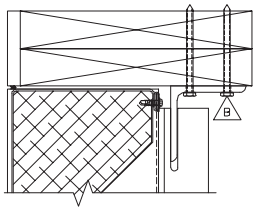

Ⓐ HEAD DETAIL AT MULLION

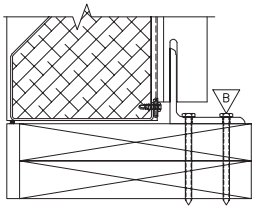

Ⓑ SILL DETAIL AT MULLION

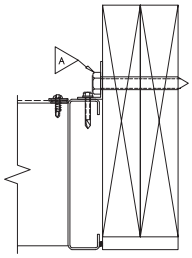

Ⓒ JAMB DETAIL

Concrete/Masonry Opening

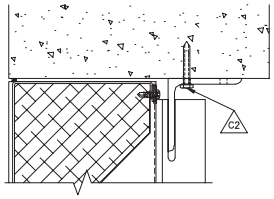

Ⓐ HEAD DETAIL AT MULLION

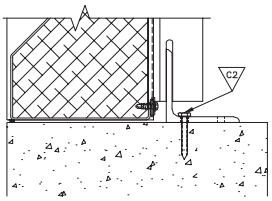

Ⓑ SILL DETAIL AT MULLION

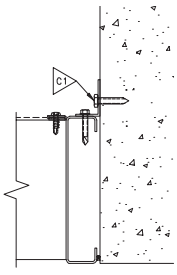

Ⓒ JAMB DETAIL

GREENHECK

INSTALLATION DETAILS

AFJ-601X

Florida Product Approval No.: FL6876.1, 15718
UL Classified: R25119

Steel Stud Opening

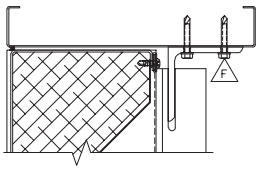

Ⓐ HEAD DETAIL AT MULLION

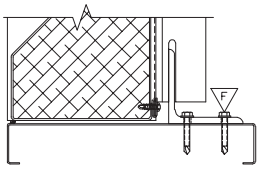

Ⓑ SILL DETAIL AT MULLION

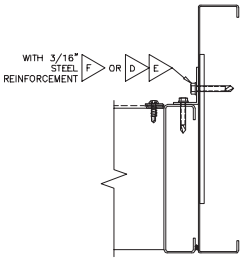

Ⓒ JAMB DETAIL

Structural Steel Opening

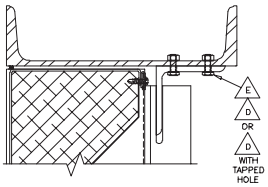

Ⓐ HEAD DETAIL AT MULLION

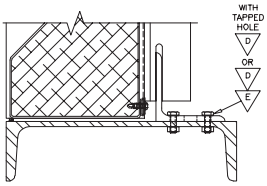

Ⓑ SILL DETAIL AT MULLION

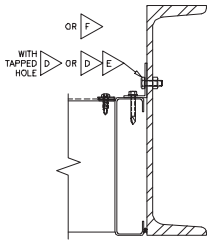

Ⓒ JAMB DETAIL

FASTENER SCHEDULE (FIELD INSTALLED - NOT BY GREENHECK)							
MOUNTING SUBSTRATE	FASTENER TYPE	DESCRIPTION	ANCHOR CLIP LOCATION	QUANTITY	MIN. EMBED.	MIN. EDGE DIST.	MIN. SPACING
WOOD	A	1/2" DIA. LAG SCREW	JAMB	VARIES	3"	2 1/2"	6.5"
WOOD	B	1/4" DIA. LAG SCREW	VERT. MULLION (HEAD/SILL)	12 PER CLIP	3"	1/2"	2"
CONCRETE	C1	1/4" DIA. TAPCON ANCH.	JAMB	VARIES	1.25"	1"	3.25"
CONCRETE	C2	1/4" DIA. TAPCON ANCH.	VERT. MULLION (HEAD/SILL)	7 PER CLIP	1.75"	2.5"	2"
MASONRY BLOCK	C1	1/4" DIA. TAPCON ANCH.	JAMB	VARIES	1.25"	1"	3.25"
MASONRY BLOCK	C2	1/4" DIA. TAPCON ANCH.	VERT. MULLION (HEAD/SILL)	7 PER CLIP	1.75"	2.5"	2"
STEEL STUD	D & E	1/4" DIA. BOLT & NUT	JAMB	VARIES	THRU BOLT	1/2"	6.5"
STEEL STUD (3/16" STEEL REINFORCED)	F	1/4" DIA. DRILL FLEX	JAMB	VARIES	FULL	1/2"	6.5"
STEEL STUD	G	1/4" DIA. DRILL FLEX	VERT. MULLION (HEAD/SILL)	12 PER CLIP	FULL	1/2"	2"
STRUCTURAL STEEL	D & E	1/4" DIA. BOLT & NUT	JAMB	VARIES	THRU BOLT	1/2"	6.5"
STRUCTURAL STEEL	D	1/4" DIA. BOLT	JAMB (FIELD DRILL & TAP HOLE)	VARIES	FULL	1/2"	6.5"
STRUCTURAL STEEL	F	1/4" DIA. DRILL FLEX	JAMB	VARIES	FULL	1/2"	6.5"
STRUCTURAL STEEL	D & E	1/4" DIA. BOLT & NUT	VERT. MULLION (HEAD/SILL)	4 PER CLIP	THRU BOLT	1/2"	6.5"
STRUCTURAL STEEL	D	1/4" DIA. BOLT	VERT. MULLION (HEAD/SILL) FIELD DRILL & TAP HOLE	4 PER CLIP	FULL	1/2"	6.5"
STRUCTURAL STEEL	F	1/4" DIA. DRILL FLEX	JAMB	VARIES	FULL	1/2"	6.5"

GENERAL NOTES:

1. IT SHALL BE THE RESPONSIBILITY OF THE PERMIT HOLDER TO VERIFY THE STRUCTURAL INTEGRITY OF THE EXISTING STRUCTURE TO SUPPORT THE LOADS SUPERIMPOSED BY THE LOUVERS.

2. INSTALLER TO PROVIDE SEPARATION OF DISSIMILAR MATERIALS AS REQUIRED.

3. WOOD SUBSTRATE TO BE MINIMUM G = 0.42 DENSITY.

4A. CONCRETE SUBSTRATE TO BE MINIMUM 3,192 PSI CONCRETE OR 3,192 PSI GROUT FILLED ASTM C-90 HOLLOW BLOCK AT HEAD/SILL MULLION ANCHORS.

4B. CONCRETE SUBSTRATE TO BE MINIMUM 3,192 PSI CONCRETE OR ASTM C-90 HOLLOW BLOCK AT JAMB ANCHORS.

5. STEEL STUD OPENINGS (16 GA. MINIMUM THICKNESS) TO BE MINIMUM Fy = 33 ksi.

6. STRUCTURAL STEEL OPENINGS (1/4" MINIMUM THICKNESS) TO BE MINIMUM Fy = 36 ksi.

PRODUCT DETAILS

AFJ-601X

Florida Product Approval No.: FL6876.1, 15718
UL Classified: R25119

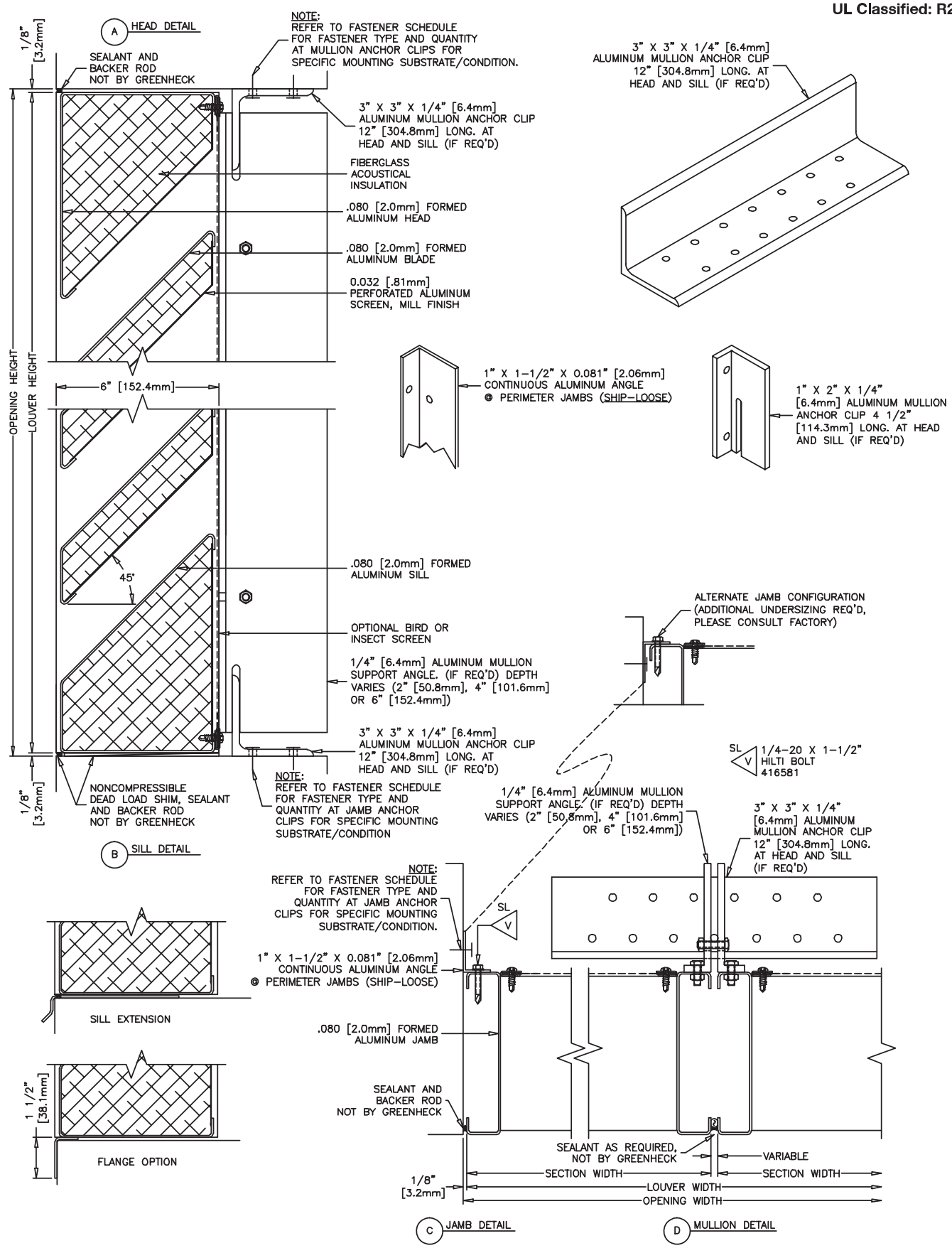

GREENHECK

OPTION DRAWINGS

AFJ-601X

Florida Product Approval No.: FL6876.1, 15718
UL Classified: R25119

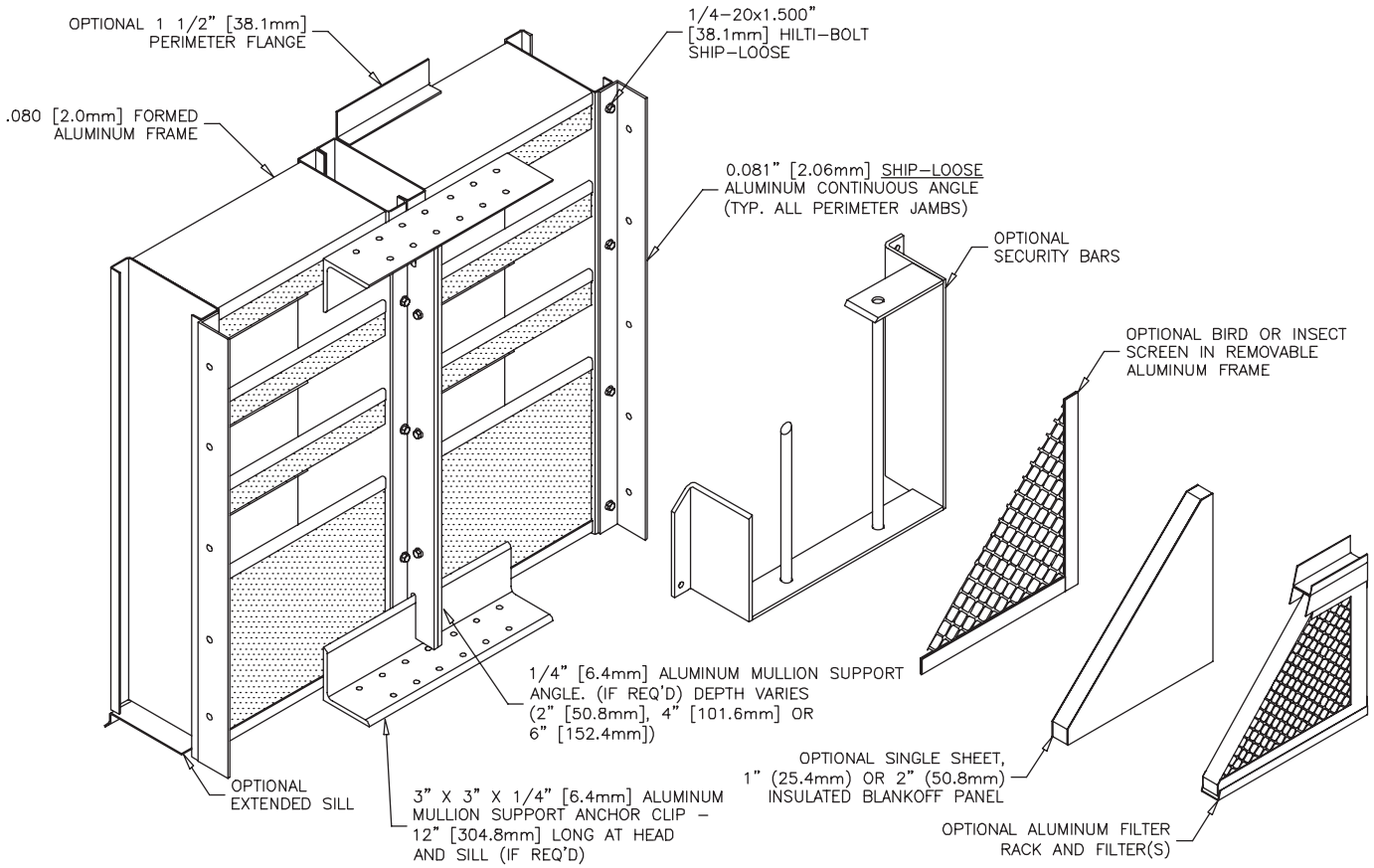

FINISHES

Finish Type	Description/Application	Color Selection	Standard Warranty (Aluminum)
2-coat 70% KYNAR 500®/HYLAR 5000® AAMA 2605 – Dry film thickness 1.2 mil. (AKA: Duranar®, Fluoropon®, Trinar®, Flouropolymer, Polyvinylidene Fluoride, PVDF2)	***"Best."*** The premier finish for extruded aluminum. Tough, long-lasting coating has superior color retention and abrasive properties. Resists chalking, fading, chemical abrasion and weathering.	**Standard Colors:** Any of the 24 standard colors shown can be furnished in 70% or 50% KYNAR 500®/HYLAR 5000® or Baked Enamel. **2-Coat Mica:** Greenheck offers 9 standard 2-coat Mica colors. Other colors are available. Consult Greenheck for possible extra cost when selecting non-standard colors or special finishes.	10 Years (Consult Greenheck for availability of extended warranty)
2-coat 50% KYNAR 500®/HYLAR 5000® AAMA 2604 – Dry film thickness 1.2 mil. (AKA: Acroflur®, Acrynar®)	***"Better."*** Tough, long-lasting coating has excellent color retention and abrasive properties. Resists chalking, fading, chemical abrasion and weathering.		5 Years
Baked Enamel AAMA 2603 – Dry film thickness 0.8 mil. (AKA: Acrabond Plus®, Duracron®)	***"Good."*** Provides good adhesion and resistance to weathering, corrosion and chemical stain.		1 Year
Integral Color Anodize AA-M10C22A42 (>0.7 mil)	"Two-step" anodizing is produced by following the normal anodizing step with a second, colorfast process.	Light, Medium or Dark Bronze; Champagne; Black	5 years
Clear Anodize 215 R-1 AA-M10C22A41 (>0.7 mil)	Clear, colorless and hard oxide aluminum coating that resists weathering and chemical attack.	Clear	5 years
Clear Anodize 204 R-1 AA-M10C22A31 (0.4-0.7 mil)	Clear, colorless and hard oxide aluminum coating that resists weathering and chemical attack.	Clear	1 Year
Industrial coatings	Greenheck offers a number of industrial coatings such as Hi-Pro Polyester, Epoxy, and Permatector®. Consult a Greenheck Product Specialist for complete color and application information.		Consult Greenheck
Mill	Materials may be supplied in natural aluminum or galvanized steel finish when normal weathering is acceptable and there is no concern for color or color change.		n/a

Finishes meet or exceed AAMA 2605, AAMA 2604, and AAMA 2603 requirements. Please consult www.greenheck.com for complete information on standard and extended paint warranties. Paint finish warranties are not applicable to steel products.

GREENHECK®

P.O. Box 410 • Schofield, WI 54476-0410 • 715.359.6171 • greenheck.com

AFJ-601X
September 2012, Rev. 1
Copyright © 2012 Greenheck Fan Corporation

Greenheck Fan Corporation reserves the right to make product changes without notice.

HGC ENGINEERING

Howe Gastmeier Chapnik Limited
2000 Argentia Road, Plaza One, Suite 203
Mississauga, Ontario, Canada L5N 1P7
t: 905.826.4044

SOUND POWER MEASUREMENTS AND DETERMINATION OF FREE-FIELD SOUND PRESSURE LEVEL OF A DSTATCOM

Prepared for:

S&C Electric Canada Ltd.
90 Belfield Road
Toronto, ON
M9W 1G4

October 21, 2013

1 INTRODUCTION

HGC Engineering was retained by S&C Electric Canada to determine the sound power levels and free-field sound pressure levels generated by typical operation of a DSTATCOM, part number PEA-1415-12 (SN 0162). This particular DSTATCOM includes eight inverters and four transformers. The sound power levels of the inverter and transformers were measured on September 25, 2013, at the Cape Scott Wind Farm, in accordance with ISO Standard 9614-2, "Acoustics – Determination of sound power levels of sources using sound intensity – Part 2: Measurement by scanning." The free-field sound pressure levels were then derived from the measured sound power according to ISO Standard 11203, "Acoustics – Noise emitted by machinery and equipment – Determination of sound pressure levels at a work station and at other specified positions from the sound power level."

2 SOUND SOURCES UNDER TEST

The PureWave DSTATCOM Distributed Static Compensator was located within the transformer station at the Cape Scott Wind Farm Project. The DSTATCOM was manufactured by S&C Electric Company in March of 2013. The unit is nominally rated at 10 mVA with an output voltage of 480 V. The particular unit under test included eight 1250 kW inverters and four 2.5 mVA transformers. Overall dimensions are approximately 9.2 metres wide, 14.1 metres in length and 2.9 metres in height. Photos of the DSTATCOM are provided in figures 1 and 2.

The unit is packaged in a steel ISO style shipping container. Interior surfaces within the unit were acoustically reflective (sheet steel). The interior lining of the air intake hoods contained 25 mm of

porous foam. The inverter enclosure and each transformer were located on concrete pads with the surrounding ground cover consisting of gravel.

Acoustically, the DSTATCOM was tonal. A tonal sound is defined as one which has a "pronounced audible tonal quality such as a whine, screech, buzz or hum". A/C transformers and inverters typically exhibit a humming character at twice the line frequency (120 Hz) and harmonics thereof, as a result of magnetostrictive forces in the windings and semiconductors. The sound level measurements indicate tones at 120 Hz and harmonics thereof, but also at 4560 Hz with harmonics at 120 Hz increments. The DSTATCOM exhibits pure-tone characteristics, which should be taken into consideration during environmental noise impact assessments, according to the guidelines appropriate to the jurisdiction of the site where the DSTATCOM package will be situated. In Ontario, for instance, an additional penalty of 5 dBA should be added to the stated sound power level, according to guidelines of the Ministry of the Environment.

The unit was operated at 100% of capacity for the duration of the measurements.

3 ACOUSTIC ENVIRONMENT

The measurements were conducted outdoors at the Cape Scott Wind Farm Project in British Columbia. The sound from the DSTATCOM was steady, such that sound intensity methods could be used to determine the sound power emission levels of the DSTATCOM assembly, according to ISO Standard 9614-2. The air intakes and exhaust hoods on the inverter enclosure had minimal air flow.

Weather conditions during the test period remained relatively constant with a mainly clear sky, air temperature of 12° Celsius, and light winds from the northwest. The measurements were paused during higher wind gusts.

4 INSTRUMENTATION

The sound power measurements were conducted using a Brüel & Kjær PULSE model 3560-B-010 Real Time Frequency Analyzer (S/N 2516092) equipped with a Brüel & Kjær model ZH 0632 Sound Intensity Probe and a Brüel & Kjær matched intensity microphone pair. The instrumentation was calibrated before and after the measurements using a Brüel & Kjær model 4231 sound level calibrator with a dual microphone coupler. Laboratory calibration certificates for the equipment are included as Appendix A. The pressure-residual intensity index, L_{PRI}, for the intensity measurement system was calibrated prior to the measurements using a G.R.A.S. cavity calibrator, model 51AB, the results of which are included in Appendix B (listed as "Ld" with the appropriate bias error factor included).

5 MEASUREMENT PROCEDURE

A sketch of the measurement setup is appended as Figure 3. Two five-sided rectangular measurement surfaces were used (four vertical sides plus top), with outer dimensions of 14.15 m x 4.6 m x 3.1 m tall for the inverter enclosure and 12.15 m x 2.9 m x 2.4 m tall for the transformers, corresponding to approximately 0.2 metres from the inverters and transformers surfaces.

A 12 mm microphone spacer was used for frequencies greater than 500 Hz and a 50 mm spacer for frequency bands in the range of 63 to 500 Hz. Each scan was repeated orthogonally, as required by the ISO 9614-2 standard.

6 MEASUREMENT RESULTS

Octave Band Results

Table I provides the combined octave band sound power levels for the transformers and inverters, part of the DSTATCOM, as determined according to ISO 9614-2.

Table I: DSTATCOM (10 mVA) Sound Power Level [dB re 10^{-12} Watt]

Octave Band Centre Frequency [Hz]	63	125	250	500	1k	2k	4k	8k	Overall [dBA]
Sound Power Level [dB]	88	106	90	86	75	69	79	69	91

Appendix B contains the detailed octave band sound power level results, including the data quality indices stipulated in the ISO 9614-2 standard (F_{pI}, $F_{+/-}$), and the resulting accuracy grade. "Engineering Grade" accuracy was achieved for the overall A-weighted sound level and for most octave bands.

The conversion from sound power to free-field sound pressure in ISO Standard 11203 is based on the area of the imaginary surface enclosing the source, at the specified reference distance from the equipment. In this case, the pressure has been calculated at 7 metres from the surfaces of the DSTATCOM (corresponding to an enveloping area of 770 m^2 for the inverters and 600 m^2 for the transformers).

The combined octave band results are presented in Table II below and are also shown graphically in Figure 4.

Table II: Free-field Sound Pressure Level at 7 metres [dB re 20 µPa] Derived from Measured Sound Power Level

Octave Band Centre Frequency [Hz]	**63**	**125**	**250**	**500**	**1k**	**2k**	**4k**	**8k**	**Overall [dBA]**
Sound Pressure Level [dB]	60	77	61	57	46	40	50	40	63

7 MEASUREMENT ACCURACY

ISO Standard 9614-2 provides certainty limits for measurement results having Engineering Grade or Survey Grade accuracy, as listed in Table III below.

Table III: Uncertainty –Standard Deviation [dB]

Frequency Range [Hz]	Engineering Grade Accuracy	Survey Grade Accuracy
50 to 160	3.0	
200 to 315	2.0	
400 to 5000	1.5	
6300	2.5	
Overall [dBA]	1.5	4

Howe Gastmeier Chapnik Limited

Ian Bonsma, PEng

Figure 1: DSTATCOM air intakes

Figure 2: DSTATCOM Transformers and air exhausts

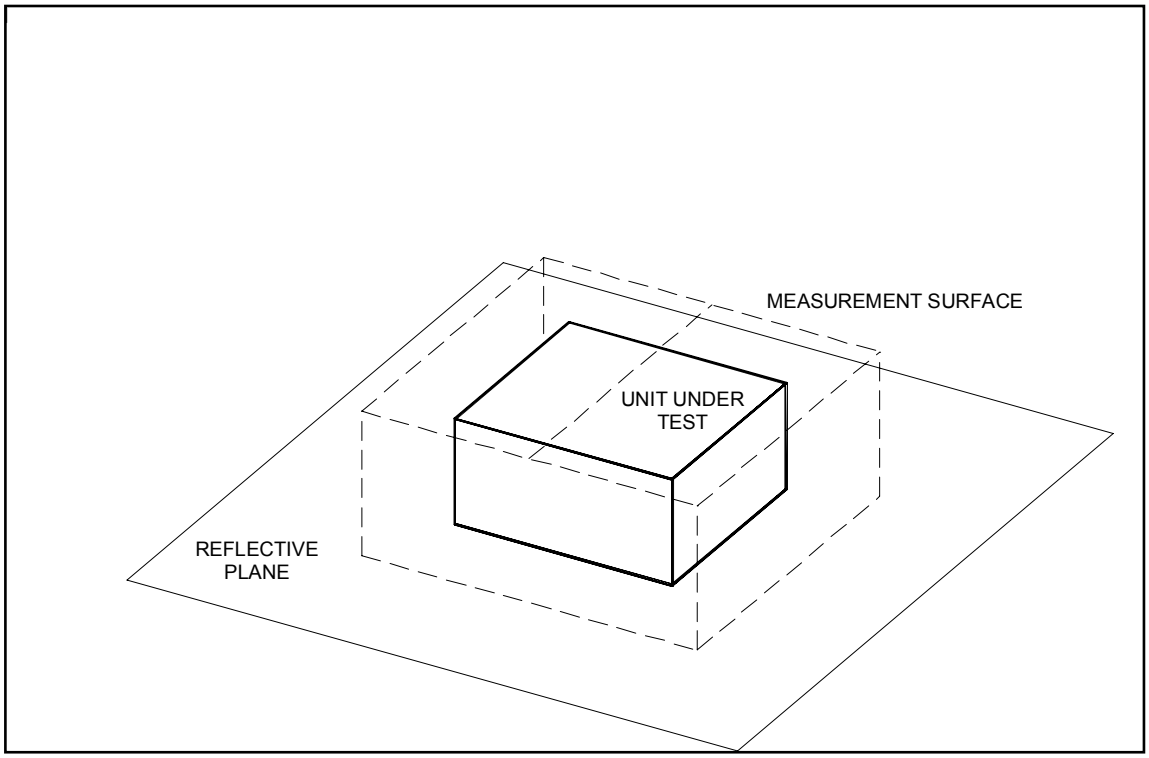

Figure 3: Sketch of Measurement Surface

Figure 4: Sound Power and Sound Pressure Levels
DSTATCOM (SN 0162), Measured September 25, 2013

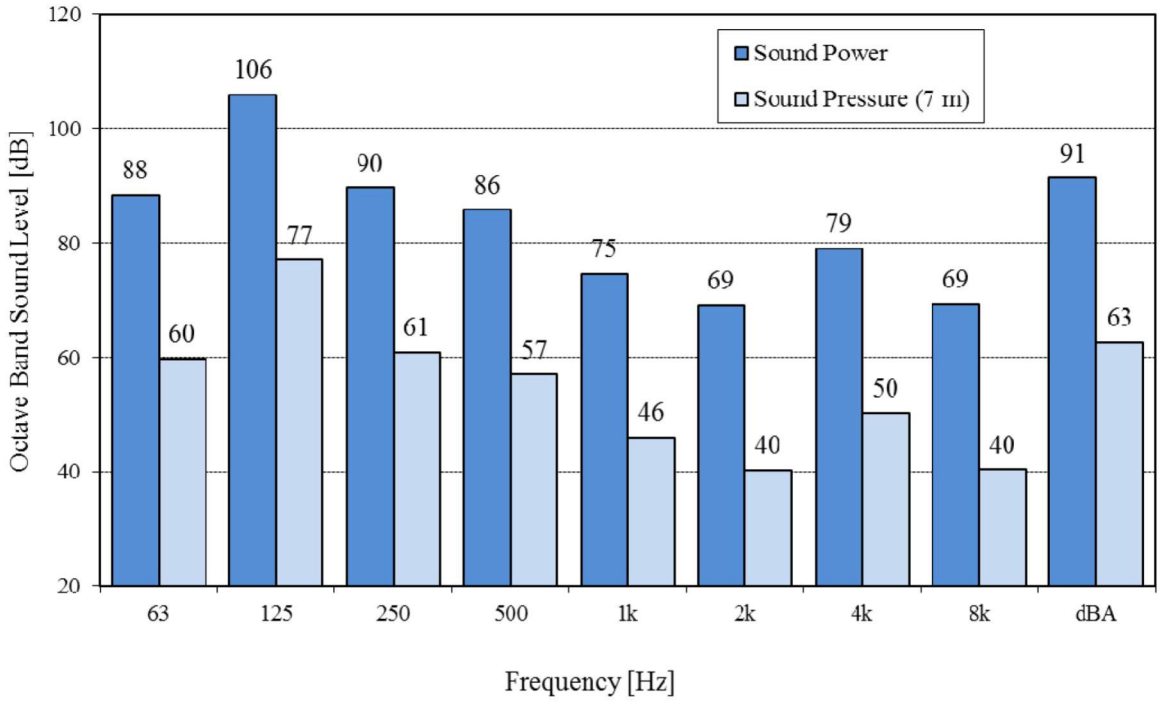

APPENDIX A
Instrument Calibration Certificates

CERTIFICATE of CALIBRATION

Make :	Bruel & Kjaer	Reference # :	127686
Model :	3560-B-010	Customer :	HGC Engineering Mississauga, ON
Descr. :	Measuring System 5 ch		
Serial # :	2476771	P. Order :	Sean Richardson
Asset # :	NAN		

Cal. status : Received in spec's, no adjustment made.

Navair Technologies certifies that the above listed instrument was calibrated on date noted and was released from this laboratory performing in accordance with the specifications set forth by the manufacturer.

Unless otherwise noted in the calibration report a 4:1 accuracy ratio was maintained for this calibration.

Our calibration system complies with the requirements of ISO-17025 standard, working standards used for calibration are certified by or traceable to the National Research Council of Canada or the National Institute of Standards and Technology.

Calibrated : Jan 28, 2013 By : J. Raposo

Cal. Due : Jan 28, 2014

Temperature : 23 °C ± 2 °C Relative Humidity : 30% to 55%

Standards used : J-129 J-303

Navair Technologies

REPAIR AND CALIBRATION TRACEABLE TO NRC AND NIST
6375 Dixie Rd. Mississauga, ON, L5T 2E7 http: // www.navair.com
Phone : 905 565 1584 Fax: 905 565 8325 e-Mail: navair @ navair.com

The copyright of this document is the property of Navair Technologies
Any reproduction other then in full requires written approval!

CERTIFICATE of CALIBRATION

Make :	Bruel & Kjaer	Reference # :	127288
Model :	4231	Customer :	HGC Engineering Mississauga, ON
Descr. :	Sound cal 94/114dB 1KHz		
Serial # :	2730278	P. Order :	Sean Richardson
Asset # :	B&K CAL 1		

Cal. status : Received in spec's, no adjustment made.

Navair Technologies certifies that the above listed instrument was calibrated on date noted and was released from this laboratory performing in accordance with the specifications set forth by the manufacturer.

Unless otherwise noted in the calibration report a 4:1 accuracy ratio was maintained for this calibration.

Our calibration system complies with the requirements of ISO-17025 standard, working standards used for calibration are certified by or traceable to the National Research Council of Canada or the National Institute of Standards and Technology.

Calibrated : Dec 12, 2012 By : J. Raposo

Cal. Due : Dec 12, 2013

Temperature : 23 °C ± 2 °C Relative Humidity : 30% to 55%

Standards used : J-163 J-265 J-508

Navair Technologies

REPAIR AND CALIBRATION TRACEABLE TO NRC AND NIST

6375 Dixie Rd. Mississauga, ON, L5T 2E7 http: // www.navair.com

Phone : 905 565 1584 Fax: 905 565 8325 e-Mail: navair @ navair.com

The copyright of this document is the property of Navair Technologies
Any reproduction other then in full requires written approval!

APPENDIX B
Detailed Measurement Results

Table B1: Inverter Test Data According to ISO 9614-2

Value	Octave Band Centre Frequency [Hz]								Overall
	63	125	250	500	1k	2k	4k	8k	[dBA]
Lw - Unweighted [dB re 10^{-12} W]	**87**	**106**	**89**	**85**	**73**	**69**	**79**	**69**	**91**
FpI	1	3	4	3	5	6	3	5	
Ld	14	23	20	20	15	17	16	10	
F+/-	-1	0	0	0	0	-1	0	0	
Grade	E	E	E	E	E	S	S	E	**E**
LwA - A-weighted [dB re 10^{-12} W]	61	90	80	82	73	70	80	68	
Level relative to overall LwA	-30	-1	-11	-9	-18	-22	-11	-23	
At least 10 dBA less than LwA?	Yes	No	Yes	No	Yes	Yes	Yes	Yes	
LwA Engineering Grade?									**Y**

Table B2: Transformer Test Data According to ISO 9614-2

Value	Octave Band Centre Frequency [Hz]								Overall
	63	125	250	500	1k	2k	4k	8k	[dBA]
Lw - Unweighted [dB re 10^{-12} W]	**81**	**-**	**80**	**73**	**68**	**59**	**63**	**54**	**75**
FpI	5	18	6	6	7	11	9	13	
Ld	14	26	20	20	15	17	16	13	
F+/-	-2	-13	-2	-2	-1	-4	-3	-7	
Grade	E	S	E	E	E	S	S	S	**E**
LwA - A-weighted [dB re 10^{-12} W]	55	--	71	70	68	60	64	53	
Level relative to overall LwA	-20	--	-4	-5	-7	-15	-11	-22	
At least 10 dBA less than LwA?	Yes		No	No	No	Yes	Yes	Yes	
LwA Engineering Grade?									**Y**

E = Engineering Grade; S=Survey Grade

HGC ENGINEERING

Howe Gastmeier Chapnik Limited
2000 Argentia Road, Plaza One, Suite 203
Mississauga, Ontario, Canada L5N 1P7
t: 905.826.4044

SOUND POWER MEASUREMENTS AND DETERMINATION OF FREE-FIELD SOUND PRESSURE LEVEL OF 800 KVA ELECTRICAL TRANSFORMER

Prepared for:

Canadian Solar Solutions Inc.
545 Speedvale Avenue West
Guelph, Ontario
N1K 1E6

April 9, 2015

1 INTRODUCTION & SUMMARY

HGC Engineering was retained by Canadian Solar Solutions Inc. to determine the sound power level of an 800 kVA transformer installed as part of an inverter assembly at the Canadian Solar site in Demorestville, Ontario. The measurements of the transformer were conducted on March 31, 2015.

Two different measurement methods were employed to determine the sound power levels of this transformer installation. The most widely used method in the industry for measuring sound from electrical transformers is the IEEE Standard, C57.12.90 [1]. Because the IEEE method utilizes sound pressure measurements, it is susceptible to interfering background sound. At the Demorestville site, extraneous sound from the adjacent power inverter unit was found to adversely influence the IEEE test results. Therefore, a second set of tests was conducted, according to ISO Standard 9614-2. Unlike the IEEE method, ISO 9614-2 utilizes sound intensity measurements, which provide the best possible immunity to interfering noise from nearby sources.

The IEEE test results are presented herein, for information purposes only, but significantly overstate the true sound power of the transformer. The overall A-weighted sound power level of the transformer, determined using the ISO 9614-2 Standard, is 55 dBA.

2 SOUND SOURCES UNDER TEST

The unit under test was an 800 kVA electrical transformer manufactured by Cooper Power Systems (model 27600 DELTA-360Y/208, serial No. CP1350007913).

The transformer was located on an elevated concrete pad, approximately 0.4 m above local grade, immediately adjacent to an electrical inverter enclosure. Pictures of the transformer and inverter assembly are included as Figures 1a and 1b.

3 ACOUSTIC ENVIRONMENT

Canadian Solar personnel on-site confirmed that both the subject transformer and the inverter unit were operating at maximum capacity during the test, as typical during sunny conditions.

During the test, high frequency sound in the 2 and 4 kHz frequency bands was emitted from a ventilation outlet of the nearby inverter enclosure and through the walls of the enclosure itself, and was clearly contributing to the sound levels measured in the vicinity of the transformer.

Weather conditions during the test period were sunny, with air temperature of 5° Celsius, and minimal winds.

4 INSTRUMENTATION

All instrumentation was within its annual laboratory calibration period (certificates in Appendix A) and correct calibration was verified before and after the measurements using a Brüel & Kjær model 4231 sound level calibrator.

For the C57.12.90 test, the sound level measurements were conducted using a Larson Davis Sound Level Meter, Model 831 (SN 0001865).

The ISO 9614-2 test was conducted using a Brüel & Kjær PULSE model 3560-B-010 Real Time Frequency Analyzer (S/N 2476771) equipped with a Brüel & Kjær model ZH 0632 Sound Intensity Probe and a Brüel & Kjær phase-matched intensity microphone pair. The pressure-residual intensity index, L_{PRI}, for the intensity measurement system was calibrated prior to the measurements using a G.R.A.S. cavity calibrator, model 51AB.

5 C57.12.90: MEASUREMENT METHOD & RESULTS

As per the IEEE C57.12.90 standard, measurements were conducted at half the height of the transformer at approximately 0.9 metre intervals around all four sides of the unit. Measurements were conducted at 8 unique locations around the transformer perimeter at 0.3 meters away from the transformer surfaces.

The conversion from sound pressure level to sound power level was based on the area of the imaginary surface enclosing the source, over which the measurements were conducted. In this case, the enclosing surface area at 0.3 metres from the transformer was 22 m^2, including the top surface.

Table I below provides the sound power level of the transformer determined from the measurements according to IEEE Standard C57.12.90.

Table I: Test Results According to C57.12.90

Octave Band Centre Frequency [Hz]	**63**	**125**	**250**	**500**	**1k**	**2k**	**4k**	**8k**	**Overall [dBA]**
Sound Power Level [dB re: 10^{-12} Watt]	64*	74*	60*	61*	49*	54*	58*	53*	64*

*Overestimate of sound power level, caused by sound from inverter

Appendix B contains the detailed measured one-third octave band sound levels used to calculate the sound power level in Table I.

Since measurement results according to C57.12.90 include contributions of extraneous sounds from the adjacent inverter enclosure, the values in Table I overestimate the true sound power levels of the transformer.

The IEEE Standard C57.12.90 does not provide accuracy grade ratings or uncertainty bounds for its measurement results.

6 ISO 9614-2: MEASUREMENT METHOD & RESULTS

In order to determine the transformer sound power level in accordance with methods of ISO Standard 9614-2, a five-sided rectangular measurement surface was defined (four vertical sides plus top) around the transformer, with side dimensions of 1.8 m x 1.7 m and height of 1.7 m. Sound intensity measurements were conducted over each measurement sub-surface, using a 12 mm microphone spacer for frequencies greater than 500 Hz and a 50 mm spacer for frequency bands in the range of 63 to 500 Hz. Each scan was repeated orthogonally, as required by the ISO 9614-2 standard.

Table II, below, provides the resulting octave band linear-weighted and overall A-weighted sound power levels of the subject 800 kVA transformer.

Table II: Test Results According to ISO 9614-2

Octave Band Centre Frequency [Hz]	**63**	**125**	**250**	**500**	**1k**	**2k**	**4k**	**8k**	**Overall [dBA]**
Sound Power Level [dB re: 10^{-12} Watt]	52	66	56	54	38	--	47	32	55
Grade of Accuracy	S	E	S	S	S	--	E	--	--

E = Engineering Grade; S = Survey Grade

ISO Standard 9614-2 provides certainty limits for measurement results having Engineering Grade or Survey Grade accuracy, as listed in Table III below.

Table III: Uncertainty –Standard Deviation [dB]

Frequency Range [Hz]	**Engineering Grade Accuracy**	**Survey Grade Accuracy**
50 to 160	3.0	
200 to 315	2.0	
400 to 5000	1.5	
6300	2.5	
Overall [dBA]	1.5	4

Engineering Grade accuracy, according to ISO 9614-2, was achieved in the 125 Hz and 4 kHz octave frequency bands; Survey Grade accuracy was achieved in the 63 Hz, 250 Hz, 500 Hz, and 1 kHz octave frequency bands.

Sound power level in the 8 kHz frequency bands did not satisfy the Survey Grade criteria due to interfering sound from the inverter. However, since the value in this band is sufficiently less than the dominant frequency bands, it does not contribute materially to the overall A-weighted sound power level, or influence its accuracy rating.

Since no quantitative level was measurable in the 2 kHz octave frequency band due to interference from the inverter enclosure, it is not possible to assign an accuracy grade to the overall A-weighted result.

The detailed results of the test, including the data quality indices stipulated in the standard, as well as the resulting accuracy grade, are summarized in Appendix C.

Howe Gastmeier Chapnik Limited

Petr Chocensky, PhD

Reviewed by:

Rob Stevens, MASc, P.Eng

LICENSED PROFESSIONAL ENGINEER
R. D. STEVENS
9-Apr-15
PROVINCE OF ONTARIO

REFERENCES

[1] IEEE Standard C57.12.90, "IEEE Standard Test Code for Liquid-Immersed Distribution, Power and Regulating Transformers." The Institute of Electrical and Electronics Engineers, Inc., New York, 2007.

[2] ISO 9614-2, "Acoustics – Determination of sound power levels of sources using sound intensity – Part 2: Measurement by scanning", International Organization for Standardization, Switzerland, 1996.

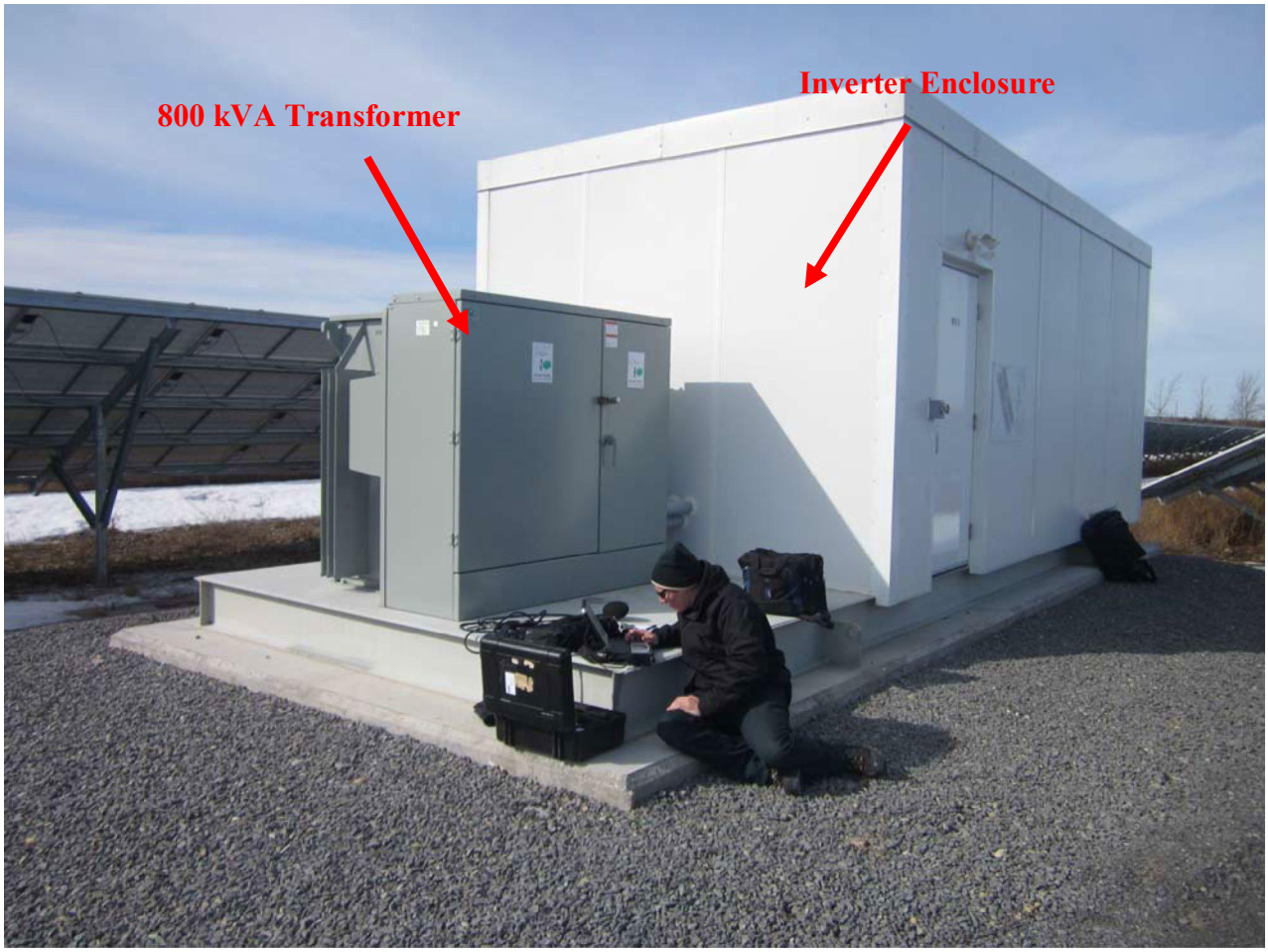

Figure 1a: 800 kVA Transformer and Inverter Enclosure

Figure 1b: 800 kVA Transformer and Inverter Enclosure

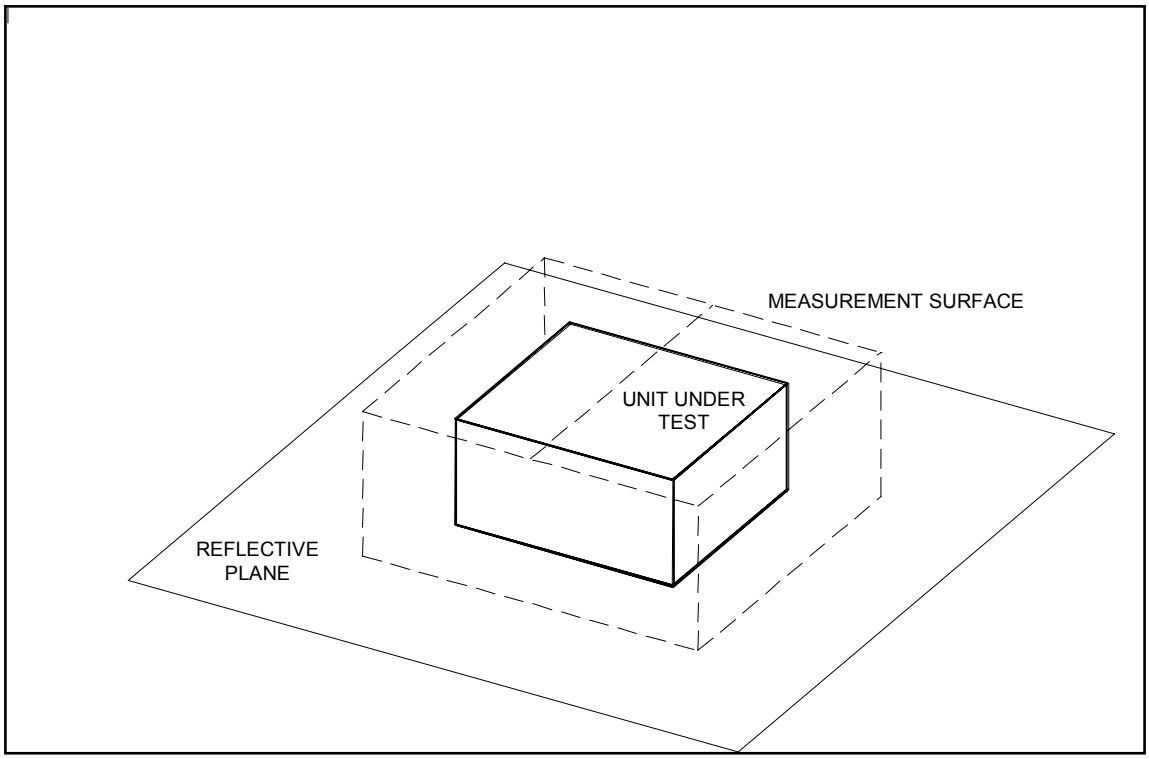

Figure 2: Sketch of Measurement Surface

APPENDIX A

CERTIFICATE of CALIBRATION

Make :	Bruel & Kjaer	Reference # :	137986
Model :	3560-B-010	Customer :	HGC Engineering Mississauga, ON
Descr. :	Measuring System 5 ch		
Serial # :	2476771	P. Order :	Sean Richardson
Asset # :	NAN		

Cal. status : Received in spec's, no adjustment made.

Navair Technologies certifies that the above listed instrument was calibrated on date noted and was released from this laboratory performing in accordance with the specifications set forth by the manufacturer.

Unless otherwise noted in the calibration report a 4:1 accuracy ratio was maintained for this calibration.

Our calibration system complies with the requirements of ISO-17025 standard, working standards used for calibration are certified by or traceable to the National Research Council of Canada or the National Institute of Standards and Technology.

Calibrated : Jan 09, 2015 By : J. Raposo

Cal. Due : Jan 09, 2016

Temperature : 23 °C ± 2 °C Relative Humidity : 30% to 70%

Standards used : J-129 J-215 J-303

Navair Technologies

REPAIR AND CALIBRATION TRACEABLE TO NRC AND NIST

6375 Dixie Rd. Mississauga, ON, L5T 2E7 http: // www.navair.com

Phone : 905 565 1584 Fax: 905 565 8325 e-Mail: navair @ navair.com

The copyright of this document is the property of Navair Technologies
Any reproduction other then in full requires written approval!

CERTIFICATE of CALIBRATION

Make : Larson Davis

Model : 831

Descr. : SLM Type 1

Serial # : 0001865

Asset # : NAN

Reference # : 138547

Customer : HGC Engineering
Mississauga, ON

P. Order :

Cal. status : Received in spec's, no adjustment made. 12 MAR 2015

Navair Technologies certifies that the above listed instrument was calibrated on date noted and was released from this laboratory performing in accordance with the specifications set forth by the manufacturer.

Unless otherwise noted in the calibration report a 4:1 accuracy ratio was maintained for this calibration.

Our calibration system complies with the requirements of ISO-17025 standard, working standards used for calibration are certified by or traceable to the National Research Council of Canada or the National Institute of Standards and Technology.

Calibrated : Mar 11, 2015

Cal. Due : Mar 11, 2016

By : T. Beilin

Temperature : 23 °C ± 2 °C Relative Humidity : 30% to 70%

Standards used : J-216 J-303 J-512

Navair Technologies

REPAIR AND CALIBRATION TRACEABLE TO NRC AND NIST

6375 Dixie Rd. Mississauga, ON, L5T 2E7
Phone : 905 565 1584 Fax: 905 565 8325
http: // www.navair.com
e-Mail: navair @ navair.com

The copyright of this document is the property of Navair Technologies
Any reproduction other then in full requires written approval!

APPENDIX B

One-Third Octave Frequency [Hz]	Measured Transformer Sound Pressure Level [dB]							
	Microphone Location							
	1	2	3	4	5	6	7	8
25	39	40	41	40	49	40	41	42
31.5	42	41	38	39	46	41	43	43
40	38	38	37	37	43	40	39	42
50	40	38	37	37	42	40	45	45
63	49	43	44	38	41	43	52	57
80	37	39	34	36	39	39	42	41
100	35	38	33	34	36	36	36	35
125	55	57	54	56	53	58	67	62
160	38	34	30	33	34	35	40	44
200	42	36	32	32	33	35	39	40
250	38	41	42	50	44	45	45	31
315	40	37	32	36	34	34	50	44
400	41	35	34	37	34	38	55	47
500	30	31	32	44	36	30	41	38
630	31	33	31	34	32	31	36	38
800	33	30	30	31	30	32	34	33
1000	31	31	31	32	32	33	37	34
1250	31	31	31	31	32	33	35	35
1600	32	32	32	32	32	32	34	34
2000	32	33	33	33	33	33	34	34
2500	39	36	37	37	38	41	43	43
3150	43	43	41	40	42	45	50	46
4000	35	37	35	35	35	35	36	35
5000	36	38	36	36	36	37	38	37
6300	38	37	36	36	36	38	41	40
8000	36	36	36	36	36	36	36	36
10000	35	35	35	35	35	35	35	35
Height [m]	0.8	0.8	0.8	0.8	0.8	0.8	0.8	0.8
Overall A-weighted	49	49	48	49	48	50	57	53
Overall C-weighted	57	58	55	58	55	59	67	64

APPENDIX C

Table C1: 800 kVA Test Data Reported In Accordance With ISO 9614-2

Value	Octave Band Centre Frequency [Hz]								Overall [dBA]
	63	125	250	500	1k	2k	4k	8k	
Lw - Unweighted [dB re 10^{-12} W]	**52**	**66**	**56**	**54**	**38**	**--**	**47**	**32**	**55**
FpI	13	6	4	5	14	17	11	15	
Ld (Engineering Grade)	14	23	20	20	15	14	13	10	
Ld (Survey Grade)	17	26	23	23	18	17	16	13	
$F_{+/-}$	-7	0	0	0	-11	-10	-2	-3	
$L_{wi}(1) - L_{wi}(2)$	3	0	2	3	>1.5	>1.5	1	>2.5	
Achieved Grade of Accuracy	S	E	S	S	S	--	E	--	--

E = Engineering Grade; S = Survey Grade

HGC ENGINEERING

Howe Gastmeier Chapnik Limited
2000 Argentia Road, Plaza One, Suite 203
Mississauga, Ontario, Canada L5N 1P7
t: 905.826.4044

SOUND POWER MEASUREMENTS OF 1600 KVA ELECTRICAL TRANSFORMER ACCORDING TO ISO 9614-2

Prepared for:

Canadian Solar Solutions Inc.
545 Speedvale Avenue West
Guelph, Ontario
N1K 1E6

April 24, 2015

1 INTRODUCTION & SUMMARY

HGC Engineering was retained by Canadian Solar Solutions Inc. to determine the sound power level of a 1600 kVA transformer installed as part of an inverter assembly at the GoldLight Solar site at 7130 Old Homestead Road, Ontario. The measurements of the transformer were conducted on April 15, 2015.

The methods in ISO Standard ISO 9614-2[1] were used to determine the transformer sound power level using sound intensity instrumentation, which provide the best possible immunity to interfering noise from nearby sources and background sound.

The results and details of the measurements are included in the body of the report.

2 SOUND SOURCES UNDER TEST

The unit under test was a 1600 kVA electrical transformer manufactured by Cooper Power Systems (catalogue No. 0001EA65X7TA, serial No. CP1459001760). The transformer was located on an elevated concrete pad, approximately 0.4 m above local grade, immediately adjacent to an electrical inverter enclosure. Pictures of the transformer and inverter assembly are included as Figures 1a and 1b.

[1] ISO 9614-2, "Acoustics – Determination of sound power levels of sources using sound intensity – Part 2: Measurement by scanning", International Organization for Standardization, Switzerland, 1996.

3 ACOUSTIC ENVIRONMENT

The transformer was energized during the measurements, as confirmed at the outset of the test by Canadian Solar personnel. In order to minimize the interference from two inverter exhausts, which are part of the adjacent inverter installation, the inverters associated with the transformer were deactivated by Canadian Solar personnel immediately before the test.

During the test, sound emissions from the transformer were observed to vary cyclically in intervals of approximately two minutes; the sound emissions exhibited tonal character, with a dominant tone to be audible in the 125 Hz octave band.

Weather conditions during the test period were sunny, with air temperature of 10° Celsius, and a northeast wind from 5 to 10 km/hr.

4 INSTRUMENTATION

All instrumentation was within its annual laboratory calibration period (certificates in Appendix A) and correct calibration was verified before and after the measurements using a Brüel & Kjær model 4231 sound level calibrator.

The test was conducted using a Brüel & Kjær PULSE model 3560-B-010 Real Time Frequency Analyzer (S/N 2476771) equipped with a Brüel & Kjær model ZH 0632 Sound Intensity Probe and a Brüel & Kjær phase-matched intensity microphone pair. The pressure-residual intensity index, L_{PRI}, for the intensity measurement system was calibrated prior to the measurements using a G.R.A.S. cavity calibrator, model 51AB.

5 MEASUREMENT PROCEDURE

In accordance with methods of ISO Standard 9614-2, a five-sided rectangular measurement surface was defined (four vertical sides plus top) around the transformer, with side dimensions of 1.8 m x 2.2 m and height of 1.95 m. Sound intensity measurements were conducted over each measurement sub-surface, using a 12 mm microphone spacer for frequencies greater than 500 Hz and a 50 mm spacer for frequency bands in the range of 50 to 500 Hz. Each scan was repeated orthogonally, as required by the ISO 9614-2 standard with a scanning speed of approximately 0.5 m/s. A sketch of the measurement setup is appended as Figure 2.

6 RESULTS

Table I, below, provides the resulting octave band linear-weighted and overall A-weighted sound power levels of the subject 1600 kVA transformer.

Table I: Test Results According to ISO 9614-2

Octave Band Centre Frequency [Hz]	**63**	**125**	**250**	**500**	**1k**	**2k**	**4k**	**8k**	**Overall [dBA]**
Sound Power Level [dB re: 10^{-12} Watt]	--	51	49	47	45	38	45	--	51

Note: The transformer produced minimal sound emissions in the 63 Hz and 8 kHz octave bands. The measured sound levels in these bands were at least 10 dB below the values in the remaining frequency bands, and were thus excluded from the determination of the transformer sound power level, as stipulated by the ISO standard.

The measurements yielded results in the range from 125 Hz to 4 kHz, and achieved "Survey Grade" accuracy according to ISO 9614-2.

ISO Standard 9614-2 provides certainty limits for measurement results having Engineering Grade or Survey Grade accuracy, as listed in Table II below.

Table II: Uncertainty –Standard Deviation [dB]

Frequency Range [Hz]	**Engineering Grade Accuracy**	**Survey Grade Accuracy**
50 to 160	3.0	
200 to 315	2.0	
400 to 5000	1.5	
6300	2.5	
Overall [dBA]	1.5	4

The detailed results of the test, including the data quality indices stipulated in the standard, are summarized in Appendix B.

Howe Gastmeier Chapnik Limited

Petr Chocensky, PhD

Reviewed by:

Rob Stevens, MASc, P.Eng

R. D. STEVENS
24-Apr-15
PROFESSIONAL ENGINEER
PROVINCE OF ONTARIO

Figure 1a: 1600 kVA Transformer and Inverter Enclosure

Figure 1b: 1600 kVA Transformer and Inverter Enclosure

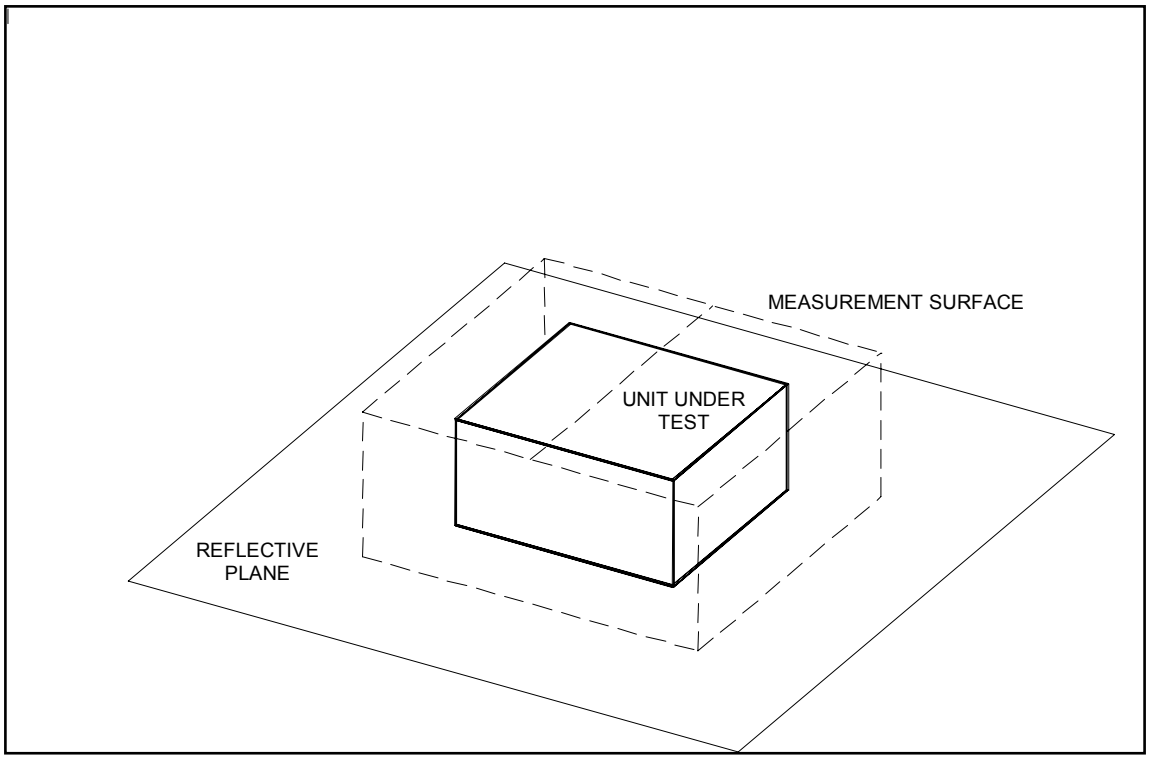

Figure 2: Sketch of Measurement Surface

APPENDIX A

CERTIFICATE of CALIBRATION

Make :	Bruel & Kjaer	Reference # :	137986
Model :	3560-B-010	Customer :	HGC Engineering Mississauga, ON
Descr. :	Measuring System 5 ch		
Serial # :	2476771	P. Order :	Sean Richardson
Asset # :	NAN		

Cal. status : Received in spec's, no adjustment made.

Navair Technologies certifies that the above listed instrument was calibrated on date noted and was released from this laboratory performing in accordance with the specifications set forth by the manufacturer.

Unless otherwise noted in the calibration report a 4:1 accuracy ratio was maintained for this calibration.

Our calibration system complies with the requirements of ISO-17025 standard, working standards used for calibration are certified by or traceable to the National Research Council of Canada or the National Institute of Standards and Technology.

Calibrated : Jan 09, 2015 By : J. Raposo

Cal. Due : Jan 09, 2016

Temperature : 23 °C ± 2 °C Relative Humidity : 30% to 70%

Standards used : J-129 J-215 J-303

Navair Technologies

REPAIR AND CALIBRATION TRACEABLE TO NRC AND NIST

6375 Dixie Rd. Mississauga, ON, L5T 2E7 http: // www.navair.com

Phone : 905 565 1584 Fax: 905 565 8325 e-Mail: navair @ navair.com

The copyright of this document is the property of Navair Technologies
Any reproduction other then in full requires written approval!

APPENDIX B

Table B1: 1600 kVA Transformer Test Data Reported In Accordance With ISO 9614-2

Value	Octave Band Centre Frequency [Hz]								Overall [dBA]
	63	125	250	500	1k	2k	4k	8k	
Lw - Unweighted [dB re 10-12 W]	**--**	**51**	**49**	**47**	**45**	**38**	**45**	--	**51**
FpI	0	13	10	7	6	11	6	22	
Ld (Engineering Grade)	14	23	20	20	15	14	13	10	
Ld (Survey Grade)	17	26	23	23	18	17	16	13	
F+/-	-2	-7	-4	-1	-2	-3	0	-11	
Lwi(1) - Lwi(2)	3	>10	4	2	6	7	1	>10	
Achieved Grade of Accuracy									Survey Grade

Note: The transformer produced minimal sound emissions in the 63 Hz and 8 kHz octave bands. The measured sound levels in these bands were at least 10 dB below the values in the remaining frequency bands, and were thus excluded from the determination of the transformer sound power level, as stipulated by the ISO standard.

To:	H.B. White Canada Corporation	From:	Trench Limited
Attn:	Tony Nguyen	Name:	Eric Chan
Email:	Tony.Nguyen@hbwhitecanada.com	Date:	May 26, 2015
Your ref:	--	Trench ref:	415100604-10
Subject:	Max Sound Power	Page:	Page 1 of 1

Dear Sir,

The maximum sound power per coil for the reactors supplied under 415100604-10 is 80 dBA when energized to 167.3A at 60hZ.

Sincerely,

Eric Chan
Designer
Trench Limited - Coil Products Division

TRENCH LIMITED

71 Maybrook Drive
Scarborough ON
M1V 4B6, Canada

Main: +1 416-298-8108 ext 381
Direct: +1 647-925-9557

Email: eric.chan@trench-group.com
Web Site: www.trenchgroup.com

Appendix B: CADNA Noise Modelling and Calculations

Receiver: Existing Noise Receptor
ID: S-R1*
X: 364518
Y: 4906471
Z: 4.5
Ground: 0

ISO	Description	ID	X	Y	Z	Ground	ReflOrd	LxT	LxN	L/A	Dist.	hm	Freq	Adiv	K0b	Agr	Abar	z	Aatm	Afol	Ahous	Cmet	CmetN	Dc	RL	LtotT	LtotN
	Inverter	MV1-1	364715	4906166	2	0	0	100.3	100.3	1	363.1	3.25	0	62.2	0	-0.64	0	0	7.21	0	0	0	0	0	0	31.54	31.54
	Inverter	MV1-2	364753	4906063	2	0	0	100.3	100.3	1	470.85	3.25	0	64.46	0	-0.57	0	0	8.29	0	0	0	0	0	0	28.14	28.14
	Inverter	MV1-5	364671	4905892	2	0	0	100.3	100.3	1	598.88	3.25	0	66.55	0	-0.48	0	0	9.2	0	0	0	0	0	0	25.05	25.05
	Inverter	MV1-4	364815	4905918	2	0	0	100.3	100.3	1	627.71	3.25	0	66.96	0	-0.46	0	0	9.36	0	0	0	0	0	0	24.45	24.45
	Inverter	MV1-6	364477	4905835	2	0	0	100.3	100.3	1	637.33	3.25	0	67.09	0	-0.45	0	0	9.42	0	0	0	0	0	0	24.26	24.26
	Inverter	MV1-9	364561	4905646	2	0	0	100.3	100.3	1	826.12	3.25	0	69.34	0	-0.34	0	0	10.29	0	0	0	0	0	0	21.02	21.02
	Inverter	MV1-8	364788	4905647	2	0	0	100.3	100.3	1	867.11	3.25	0	69.76	0	-0.31	0	0	10.44	0	0	0	0	0	0	20.42	20.42
	Inverter	MV1-11	364655	4905414	2	0	0	100.3	100.3	1	1065.84	3.25	0	71.55	0	-0.21	0	0	11.12	0	0	0	0	0	0	17.85	17.85
	Inverter	MV2-4	365586	4906624	2	0	0	100.3	100.3	1	1078.91	3.25	0	71.66	0	-0.21	0	0	11.16	0	0	0	0	0	0	17.7	17.7
	Inverter	MV1-7	364925	4905782	2	0	0	97.3	97.3	1	800.24	3.25	0	69.06	0	-0.35	0	0	10.18	0	0	0	0	0	0	18.42	18.42
	Inverter	MV1-12	365038	4905386	2	0	0	100.3	100.3	1	1203.18	3.25	0	72.61	0	-0.15	0	0	11.53	0	0	0	0	0	0	16.32	16.32
	Inverter	MV2-3	365820	4906641	2	0	0	100.3	100.3	1	1313.05	3.25	0	73.37	0	-0.11	0	0	11.84	0	0	0	0	0	0	15.21	15.21
	Sol_Luce Substation	S_Substation	369426	4908792	3.5	0	0	112.1	112.1	1	5429.13	5.25	0	85.69	0	1.01	2.77	0.3	9.12	0	0	0	0	0	0	13.48	13.48
	Inverter	MV1-10	365004	4905564	2	0	0	97.3	97.3	1	1029	3.25	0	71.25	0	-0.23	0	0	11.01	0	0	0	0	0	0	15.29	15.29
	Inverter	MV1-3	364440	4906039	2	0	0	89.1	89.1	1	438.99	3.25	0	63.85	0	0.49	0	0	4.91	0	0	0	0	0	0	19.81	19.81
	Inverter	MV1-15	365315	4904994	2	0	0	100.3	100.3	1	1678.32	3.25	0	75.5	0	0.03	0	0	12.75	0	0	0	0	0	0	12.03	12.03
	Inverter	MV1-13	364731	4905241	2	0	0	97.3	97.3	1	1248.31	3.25	0	72.93	0	-0.13	0	0	11.66	0	0	0	0	0	0	12.86	12.86
	Inverter	MV2-1	365842	4906816	2	0	0	97.3	97.3	1	1368.21	3.25	0	73.72	0	-0.08	0	0	11.99	0	0	0	0	0	0	11.69	11.69
	Inverter	MV1-14	365163	4905049	2	0	0	97.3	97.3	1	1561.45	3.25	0	74.87	0	-0.01	0	0	12.48	0	0	0	0	0	0	9.98	9.98
	Inverter	MV3-12	367668	4907594	2	0	0	100.3	100.3	1	3344.19	3.25	0	81.49	0	0.42	0	0	15.97	0	0	0	0	0	0	2.43	2.43
	Inverter	MV3-18	367752	4907412	2	0	0	100.3	100.3	1	3368.12	3.25	0	81.55	0	0.43	0	0	16.01	0	0	0	0	0	0	2.33	2.33
	Inverter	MV3-13	367963	4907577	2	0	0	100.3	100.3	1	3618.19	3.25	0	82.17	0	0.47	0	0	16.43	0	0	0	0	0	0	1.24	1.24
	Inverter	MV3-7	367945	4907754	2	0	0	100.3	100.3	1	3659.29	3.25	0	82.27	0	0.48	0	0	16.5	0	0	0	0	0	0	1.07	1.07
	Inverter	MV3-3	367939	4907927	2	0	0	100.3	100.3	1	3717.95	3.25	0	82.41	0	0.49	0	0	16.59	0	0	0	0	0	0	0.83	0.83
	Inverter	MV3-17	368178	4907472	2	0	0	100.3	100.3	1	3794.42	3.25	0	82.58	0	0.5	0	0	16.72	0	0	0	0	0	0	0.51	0.51
	Inverter	MV3-10	368167	4907669	2	0	0	100.3	100.3	1	3840.63	3.25	0	82.69	0	0.5	0	0	16.79	0	0	0	0	0	0	0.33	0.33
	Inverter	MV3-6	368162	4907834	2	0	0	100.3	100.3	1	3890.57	3.25	0	82.8	0	0.51	0	0	16.87	0	0	0	0	0	0	0.13	0.13
	Inverter	MV3-19	368357	4907347	2	0	0	100.3	100.3	1	3937.68	3.25	0	82.9	0	0.52	0	0	16.95	0	0	0	0	0	0	-0.06	-0.06
	Inverter	MV3-15	368357	4907477	2	0	0	100.3	100.3	1	3968.62	3.25	0	82.97	0	0.52	0	0	17	0	0	0	0	0	0	-0.18	-0.18
	Inverter	MV3-11	368346	4907662	2	0	0	100.3	100.3	1	4009	3.25	0	83.06	0	0.53	0	0	17.06	0	0	0	0	0	0	-0.34	-0.34
	Inverter	MV3-21	368478	4907206	2	0	0	100.3	100.3	1	4027.63	3.25	0	83.1	0	0.53	0	0	17.09	0	0	0	0	0	0	-0.41	-0.41
	Inverter	MV3-16	368514	4907475	2	0	0	100.3	100.3	1	4120.2	3.25	0	83.3	0	0.54	0	0	17.24	0	0	0	0	0	0	-0.77	-0.77
	Inverter	MV3-9	368512	4907703	2	0	0	100.3	100.3	1	4179.7	3.25	0	83.42	0	0.55	0	0	17.33	0	0	0	0	0	0	-1	-1
	Inverter	MV3-20	368689	4907317	2	0	0	100.3	100.3	1	4255.93	3.25	0	83.58	0	0.56	0	0	17.45	0	0	0	0	0	0	-1.28	-1.28
	Inverter	MV3-14	368684	4907498	2	0	0	100.3	100.3	1	4290.72	3.25	0	83.65	0	0.57	0	0	17.51	0	0	0	0	0	0	-1.41	-1.41
	Inverter	MV3-8	368680	4907712	2	0	0	100.3	100.3	1	4343.08	3.25	0	83.76	0	0.57	0	0	17.59	0	0	0	0	0	0	-1.6	-1.6
	Inverter	MV4-7	369035	4909001	2	0	0	100.3	100.3	1	5177.28	3.25	0	85.28	0	0.66	0	0	18.84	0	0	0	0	0	0	-4.47	-4.47
	Inverter	MV4-4	369027	4909199	2	0	0	100.3	100.3	1	5270.02	3.25	0	85.44	0	0.66	0	0	18.97	0	0	0	0	0	0	-4.76	-4.76
	Inverter	MV4-11	369264	4908855	2	0	0	100.3	100.3	1	5311.12	3.25	0	85.5	0	0.67	0	0	19.03	0	0	0	0	0	0	-4.89	-4.89
	Inverter	MV4-10	369312	4908858	2	0	0	100.3	100.3	1	5355.39	3.25	0	85.58	0	0.67	0	0	19.1	0	0	0	0	0	0	-5.03	-5.03
	Inverter	MV4-1	369011	4909397	2	0	0	100.3	100.3	1	5361.77	3.25	0	85.59	0	0.67	0	0	19.1	0	0	0	0	0	0	-5.05	-5.05
	Inverter	MV4-8	369256	4909001	2	0	0	100.3	100.3	1	5371.18	3.25	0	85.6	0	0.67	0	0	19.12	0	0	0	0	0	0	-5.08	-5.08
	Inverter	MV2-2	365977	4906654	2	0	0	89.1	89.1	1	1470.43	3.25	0	74.35	0	0.79	0	0	7.16	0	0	0	0	0	0	6.77	6.77
	Inverter	MV4-9	369289	4909001	2	0	0	100.3	100.3	1	5400.31	3.25	0	85.65	0	0.67	0	0	19.16	0	0	0	0	0	0	-5.17	-5.17
	Inverter	MV4-6	369243	4909192	2	0	0	100.3	100.3	1	5452.47	3.25	0	85.73	0	0.68	0	0	19.23	0	0	0	0	0	0	-5.33	-5.33
	Inverter	MV4-5	369289	4909199	2	0	0	100.3	100.3	1	5495.86	3.25	0	85.8	0	0.68	0	0	19.29	0	0	0	0	0	0	-5.46	-5.46
	Inverter	MV4-3	369229	4909397	2	0	0	100.3	100.3	1	5545.72	3.25	0	85.88	0	0.68	0	0	19.37	0	0	0	0	0	0	-5.62	-5.62
	Inverter	MV4-2	369272	4909397	2	0	0	100.3	100.3	1	5582.29	3.25	0	85.94	0	0.69	0	0	19.42	0	0	0	0	0	0	-5.73	-5.73
	Inverter	MV6-2	370085	4907339	2	0	0	100.3	100.3	1	5634.26	3.25	0	86.02	0	0.69	0	0	19.49	0	0	0	0	0	0	-5.88	-5.88
	Inverter	MV6-3	370207	4907140	2	0	0	100.3	100.3	1	5728.2	3.25	0	86.16	0	0.69	0	0	19.62	0	0	0	0	0	0	-6.16	-6.16
	Inverter	MV5-5	370015	4908690	2	0	0	100.3	100.3	1	5927.98	3.25	0	86.46	0	0.7	0	0	19.9	0	0	0	0	0	0	-6.74	-6.74
	Inverter	MV5-2	370006	4908853	2	0	0	100.3	100.3	1	5982.65	3.25	0	86.54	0	0.7	0	0	19.97	0	0	0	0	0	0	-6.9	-6.9
	Inverter	MV5-1	370020	4909142	2	0	0	100.3	100.3	1	6116.07	3.25	0	86.73	0	0.71	0	0	20.15	0	0	0	0	0	0	-7.28	-7.28
	Inverter	MV5-3	370231	4908851	2	0	0	100.3	100.3	1	6188.92	3.25	0	86.83	0	0.71	0	0	20.25	0	0	0	0	0	0	-7.48	-7.48
	Inverter	MV5-4	370324	4908707	2	0	0	100.3	100.3	1	6221.68	3.25	0	86.88	0	0.71	0	0	20.29	0	0	0	0	0	0	-7.57	-7.57
	Inverter	MV6-1	370235	4907364	2	0	0	97.3	97.3	1	5786.32	3.25	0	86.25	0	0.7	0	0	19.7	0	0	0	0	0	0	-9.33	-9.33
	DSTATCOM - 10 MVAR #2	DSAT2	369403	4908757	2.5	0	0	96.6	96.6	1	5393.42	3.5	0	85.64	0	3.72	0	0	3.55	0	0	0	0	0	0	3.72	3.72
	DSTATCOM - 10 MVAR #1	DSAT1	369437	4908757	2.5	0	0	96.6	96.6	1	5424.24	3.5	0	85.69	0	3.73	0	0	3.56	0	0	0	0	0	0	3.66	3.66
	Gardiner Substation	G_Sub	366586.3	4903349.9	2.5	0	0	90.8	90.8	1	3744.21	4.25	0	82.47	0	1.28	2.68	0.26	7.02	0	0	0	0	0	0	-2.67	-2.67
	SubstationTransformer	W_ST	369711.17	4906112.3	2.5	0	0	92	92	1	5205.55	4.25	0	85.33	0	1.69	2.28	0.29	8.86	0	0	0	0	0	0	-6.19	-6.19
	Inverter	MV3-1	368156	4907976	2	0	0	89.1	89.1	1	3937.01	3.25	0	82.9	0	1.38	0	0	10.99	0	0	0	0	0	0	-6.22	-6.22
	Inverter	MV3-5	368340	4907843	2	0	0	89.1	89.1	1	4060.8	3.25	0	83.17	0	1.41	0	0	11.17	0	0	0	0	0	0	-6.69	-6.69
	Inverter	MV3-22	368656	4907142	2	0	0	89.1	89.1	1	4192.05	3.25	0	83.45	0	1.44	0	0	11.36	0	0	0	0	0	0	-7.19	-7.19
	Inverter	MV3-4	368502	4907925	2	0	0	89.1	89.1	1	4241.04	3.25	0	83.55	0	1.45	0	0	11.42	0	0	0	0	0	0	-7.37	-7.37
	Inverter	MV3-2	368671	4907928	2	0	0	89.1	89.1	1	4401.17	3.25	0	83.87	0	1.49	0	0	11.65	0	0	0	0	0	0	-7.95	-7.95

Inverters	G_Inv1	366526.4	4903225.8	2	0	0	87.7	87.7	1	3816.41	3.25	0	82.63	0	2.78	0	0	4.67	0	0	0	0	0	0	-2.42	-2.42
Inverters	G_Inv2	366676.9	4903239.1	2	0	0	87.7	87.7	1	3886.65	3.25	0	82.79	0	2.78	0	0	4.75	0	0	0	0	0	0	-2.66	-2.66
Inverters	G_Inv3	366583.7	4903091.4	2	0	0	87.7	87.7	1	3960.91	3.25	0	82.96	0	2.79	0	0	4.83	0	0	0	0	0	0	-2.92	-2.92
Inverters	G_Inv4	366732.8	4903105	2	0	0	87.7	87.7	1	4029.31	3.25	0	83.1	0	2.79	0	0	4.91	0	0	0	0	0	0	-3.14	-3.14
Inverters	G_Inv5	366638.5	4902958.1	2	0	0	87.7	87.7	1	4103.29	3.25	0	83.26	0	2.8	0	0	4.99	0	0	0	0	0	0	-3.39	-3.39
Westbrook Inverter Enclosur	W_INV2	369374	4906388	2	0	0	89.1	89.1	1	4856.71	3.25	0	84.73	0	1.6	0	0	12.27	0	0	0	0	0	0	-9.54	-9.54
Inverters	G_Inv6	366788.5	4902972	2	0	0	87.7	87.7	1	4171.11	3.25	0	83.41	0	2.81	0	0	5.06	0	0	0	0	0	0	-3.61	-3.61
Fixed Reactor Bank 1	FRB1	369378	4908755	6	0	0	89.8	89.8	1	5369.94	5.25	0	85.6	0	-0.51	0	0	9.05	0	0	0	0	0	0	-4.36	-4.36
Inverters	G_Inv7	366694.6	4902824.7	2	0	0	87.7	87.7	1	4246.54	3.25	0	83.56	0	2.81	0	0	5.14	0	0	0	0	0	0	-3.85	-3.85
Westbrook Inverter Enclosur	W_INV3	369508	4906164	2	0	0	89.1	89.1	1	4999.44	3.25	0	84.98	0	1.64	0	0	12.46	0	0	0	0	0	0	-10.02	-10.02
Inverter	MV4-13	369051	4908605	2	0	0	89.1	89.1	1	5010.19	3.25	0	85	0	1.64	0	0	12.48	0	0	0	0	0	0	-10.06	-10.06
Fixed Reactor Bank 2	FRB2	369464	4908755	6	0	0	89.8	89.8	1	5447.9	5.25	0	85.72	0	-0.5	0	0	9.14	0	0	0	0	0	0	-4.59	-4.59
Inverters	G_Inv8	366844.5	4902838.5	2	0	0	87.7	87.7	1	4313.66	3.25	0	83.7	0	2.82	0	0	5.21	0	0	0	0	0	0	-4.07	-4.07
Inverter	MV4-15	369176	4908481	2	0	0	89.1	89.1	1	5073.17	3.25	0	85.11	0	1.66	0	0	12.56	0	0	0	0	0	0	-10.27	-10.27
Inverter	MV4-14	369176	4908507	2	0	0	89.1	89.1	1	5083.53	3.25	0	85.12	0	1.66	0	0	12.58	0	0	0	0	0	0	-10.3	-10.3
Inverter	MV4-12	369043	4908803	2	0	0	89.1	89.1	1	5090.57	3.25	0	85.14	0	1.66	0	0	12.58	0	0	0	0	0	0	-10.32	-10.32
Inverters	G_Inv9	366750.9	4902691.8	2	0	0	87.7	87.7	1	4389.56	3.25	0	83.85	0	2.82	0	0	5.29	0	0	0	0	0	0	-4.3	-4.3
Westbrook Inverter Enclosur	W_INV4	369673	4906164	2	0	0	89.1	89.1	1	5164.13	3.25	0	85.26	0	1.68	0	0	12.68	0	0	0	0	0	0	-10.56	-10.56
Westbrook Inverter Enclosur	W_INV5	369719	4906574	2	0	0	89.1	89.1	1	5202.02	3.25	0	85.32	0	1.69	0	0	12.73	0	0	0	0	0	0	-10.69	-10.69
Inverters	G_Inv10	366900.7	4902704.8	2	0	0	87.7	87.7	1	4456.63	3.25	0	83.98	0	2.83	0	0	5.36	0	0	0	0	0	0	-4.51	-4.51
Westbrook Inverter Enclosur	W_INV7	369780	4906417	2	0	0	89.1	89.1	1	5262.28	3.25	0	85.42	0	1.7	0	0	12.81	0	0	0	0	0	0	-10.88	-10.88
Westbrook Inverter Enclosur	W_INV6	369875	4906578	2	0	0	89.1	89.1	1	5358.07	3.25	0	85.58	0	1.73	0	0	12.94	0	0	0	0	0	0	-11.19	-11.19
Inverter	MV5-6	369982	4908507	2	0	0	89.1	89.1	1	5831	3.25	0	86.31	0	1.84	0	0	13.55	0	0	0	0	0	0	-12.65	-12.65
Westbrook Inverter Enclosur	W_INV1	369409	4906578	2	0	0	86.1	86.1	1	4892.17	3.25	0	84.79	0	1.61	0	0	12.32	0	0	0	0	0	0	-12.66	-12.66
Inverter Transformer	MV1-7 T	364919	4905782	2	0	0	69.4	69.4	1	797.2	3.25	0	69.03	0	1.48	0	0	3.51	0	0	0	0	0	0	-4.68	-4.68
Inverter	MV6-4	370250	4906966	2	0	0	86.1	86.1	1	5753.33	3.25	0	86.2	0	1.83	0	0	13.45	0	0	0	0	0	0	-15.41	-15.41
Inverter Transformer	MV1-10 T	365010	4905564	2	0	0	69.4	69.4	1	1031.85	3.25	0	71.27	0	1.71	0	0	3.85	0	0	0	0	0	0	-7.49	-7.49
Inverter Transformer	MV1-13 T	364725	4905241	2	0	0	69.4	69.4	1	1247.3	3.25	0	72.92	0	1.85	0	0	4.13	0	0	0	0	0	0	-9.55	-9.55
Inverter Transformer	MV2-1 T	365836	4906816	2	0	0	69.4	69.4	1	1362.41	3.25	0	73.69	0	1.91	0	0	4.27	0	0	0	0	0	0	-10.52	-10.52
Inverter Transformer	MV1-14 T	365157	4905049	2	0	0	69.4	69.4	1	1558.98	3.25	0	74.86	0	2	0	0	4.5	0	0	0	0	0	0	-12.01	-12.01
Inverter Transformer	MV1-1 T	364721	4906166	2	0	0	56.1	56.1	1	366.39	3.25	0	62.28	0	-0.11	0	0	3.07	0	0	0	0	0	0	-9.19	-9.19
Westbrook Inverter Transfor	W_INVTR1	369403	4906578	2	0	0	78.2	78.2	1	4886.17	3.25	0	84.78	0	-3.15	0	0	2.37	0	0	0	0	0	0	-5.76	-5.76
Westbrook Inverter Transfor	W_INVTR2	369368	4906388	2	0	0	77.3	77.3	1	4850.71	3.25	0	84.72	0	-3.15	0	0	2.36	0	0	0	0	0	0	-6.59	-6.59
Westbrook Inverter Transfor	W_INVTR3	369514	4906164	2	0	0	77.3	77.3	1	5005.42	3.25	0	84.99	0	-3.18	0	0	2.41	0	0	0	0	0	0	-6.88	-6.88
Inverter Transformer	MV1-3 T	364435	4906039	2	0	0	56.1	56.1	1	439.91	3.25	0	63.87	0	-0.12	0	0	3.35	0	0	0	0	0	0	-11.04	-11.04
Westbrook Inverter Transfor	W_INVTR4	369679	4906164	2	0	0	77.3	77.3	1	5170.12	3.25	0	85.27	0	-3.21	0	0	2.47	0	0	0	0	0	0	-7.19	-7.19
Westbrook Inverter Transfor	W_INVTR5	369725	4906574	2	0	0	77.3	77.3	1	5208.02	3.25	0	85.33	0	-3.22	0	0	2.48	0	0	0	0	0	0	-7.26	-7.26
Westbrook Inverter Transfor	W_INVTR7	369786	4906417	2	0	0	77.3	77.3	1	5268.28	3.25	0	85.43	0	-3.23	0	0	2.5	0	0	0	0	0	0	-7.37	-7.37
Westbrook Inverter Transfor	W_INVTR6	369881	4906578	2	0	0	77.3	77.3	1	5364.07	3.25	0	85.59	0	-3.25	0	0	2.54	0	0	0	0	0	0	-7.53	-7.53
Inverter Transformer	MV1-2 T	364759	4906063	2	0	0	56.1	56.1	1	473.87	3.25	0	64.51	0	-0.12	0	0	3.47	0	0	0	0	0	0	-11.8	-11.8
Inverter Transformer	MV1-5 T	364676	4905892	2	0	0	56.1	56.1	1	600.18	3.25	0	66.57	0	-0.1	0	0	3.86	0	0	0	0	0	0	-14.26	-14.26
Inverter Transformer	MV1-4 T	364821	4905918	2	0	0	56.1	56.1	1	630.57	3.25	0	66.99	0	-0.1	0	0	3.94	0	0	0	0	0	0	-14.78	-14.78
Inverter Transformer	MV1-6 T	364482	4905835	2	0	0	56.1	56.1	1	637.02	3.25	0	67.08	0	-0.1	0	0	3.96	0	0	0	0	0	0	-14.89	-14.89
Inverter Transformer	MV1-9 T	364555	4905646	2	0	0	56.1	56.1	1	825.83	3.25	0	69.34	0	-0.04	0	0	4.46	0	0	0	0	0	0	-17.7	-17.7
Inverter Transformer	MV1-8 T	364782	4905647	2	0	0	56.1	56.1	1	865.26	3.25	0	69.74	0	-0.03	0	0	4.56	0	0	0	0	0	0	-18.21	-18.21
Inverter Transformer	MV1-11 T	364649	4905414	2	0	0	56.1	56.1	1	1065.09	3.25	0	71.55	0	0.03	0	0	5.04	0	0	0	0	0	0	-20.57	-20.57
Inverter Transformer	MV2-4 T	365590	4906628	2	0	0	56.1	56.1	1	1083.44	3.25	0	71.7	0	0.04	0	0	5.09	0	0	0	0	0	0	-20.77	-20.77
Inverter Transformer	MV1-12 T	365044	4905386	2	0	0	56.1	56.1	1	1205.78	3.25	0	72.63	0	0.09	0	0	5.37	0	0	0	0	0	0	-22.02	-22.02
Inverter Transformer	MV6-4 T	370244	4906966	2	0	0	69.4	69.4	1	5747.36	3.25	0	86.19	0	3.15	0	0	7.86	0	0	0	0	0	0	-27.85	-27.85
Inverter Transformer	MV6-1 T	370230	4907364	2	0	0	69.4	69.4	1	5781.38	3.25	0	86.24	0	3.15	0	0	7.88	0	0	0	0	0	0	-27.93	-27.93
Inverter Transformer	MV2-3 T	365814	4906641	2	0	0	56.1	56.1	1	1307.1	3.25	0	73.33	0	0.12	0	0	5.6	0	0	0	0	0	0	-22.99	-22.99
Inverter Transformer	MV2-2 T	365982	4906654	2	0	0	56.1	56.1	1	1475.4	3.25	0	74.38	0	0.19	0	0	5.97	0	0	0	0	0	0	-24.47	-24.47
Inverter Transformer	MV1-15 T	365309	4904994	2	0	0	56.1	56.1	1	1675.47	3.25	0	75.48	0	0.27	0	0	6.39	0	0	0	0	0	0	-26.08	-26.08
Inverter Transformer	MV3-12 T	367674	4907594	2	0	0	56.1	56.1	1	3349.85	3.25	0	81.5	0	0.98	0	0	9.45	0	0	0	0	0	0	-35.87	-35.87
Inverter Transformer	MV3-18 T	367757	4907412	2	0	0	56.1	56.1	1	3372.92	3.25	0	81.56	0	0.99	0	0	9.48	0	0	0	0	0	0	-35.97	-35.97
Inverter Transformer	MV3-13 T	367958	4907577	2	0	0	56.1	56.1	1	3613.43	3.25	0	82.16	0	1.09	0	0	9.87	0	0	0	0	0	0	-37.05	-37.05
Inverter Transformer	MV3-7 T	367951	4907754	2	0	0	56.1	56.1	1	3664.91	3.25	0	82.28	0	1.11	0	0	9.95	0	0	0	0	0	0	-37.28	-37.28
Inverter Transformer	MV3-3 T	367944	4907927	2	0	0	56.1	56.1	1	3722.56	3.25	0	82.42	0	1.13	0	0	10.04	0	0	0	0	0	0	-37.53	-37.53
Inverter Transformer	MV3-17 T	368183	4907472	2	0	0	56.1	56.1	1	3799.24	3.25	0	82.59	0	1.16	0	0	10.15	0	0	0	0	0	0	-37.85	-37.85
Inverter Transformer	MV3-10 T	368162	4907669	2	0	0	56.1	56.1	1	3835.88	3.25	0	82.68	0	1.18	0	0	10.21	0	0	0	0	0	0	-38.01	-38.01
Inverter Transformer	MV3-6 T	368156	4907834	2	0	0	56.1	56.1	1	3884.95	3.25	0	82.79	0	1.2	0	0	10.28	0	0	0	0	0	0	-38.21	-38.21
Inverter Transformer	MV3-1 T	368150	4907976	2	0	0	56.1	56.1	1	3931.47	3.25	0	82.89	0	1.22	0	0	10.35	0	0	0	0	0	0	-38.4	-38.4
Inverter Transformer	MV3-19 T	368352	4907347	2	0	0	56.1	56.1	1	3932.8	3.25	0	82.89	0	1.22	0	0	10.35	0	0	0	0	0	0	-38.41	-38.41
Inverter Transformer	MV3-15 T	368351	4907477	2	0	0	56.1	56.1	1	3962.82	3.25	0	82.96	0	1.23	0	0	10.4	0	0	0	0	0	0	-38.53	-38.53
Inverter Transformer	MV3-11 T	368340	4907662	2	0	0	56.1	56.1	1	4003.27	3.25	0	83.05	0	1.25	0	0	10.46	0	0	0	0	0	0	-38.69	-38.69
Inverter Transformer	MV3-21 T	368484	4907206	2	0	0	56.1	56.1	1	4033.53	3.25	0	83.11	0	1.26	0	0	10.5	0	0	0	0	0	0	-38.82	-38.82
Inverter Transformer	MV3-5 T	368335	4907843	2	0	0	56.1	56.1	1	4056.09	3.25	0	83.16	0	1.27	0	0	10.54	0	0	0	0	0	0	-38.91	-38.91
Inverter Transformer	MV3-16 T	368509	4907475	2	0	0	56.1	56.1	1	4115.35	3.25	0	83.29	0	1.29	0	0	10.63	0	0	0	0	0	0	-39.14	-39.14
Inverter Transformer	MV3-9 T	368517	4907703	2	0	0	56.1	56.1	1	4184.48	3.25	0	83.43	0	1.32	0	0	10.73	0	0	0	0	0	0	-39.42	-39.42
Inverter Transformer	MV3-22 T	368661	4907142	2	0	0	56.1	56.1	1	4196.99	3.25	0	83.46	0	1.32	0	0	10.74	0	0	0	0	0	0	-39.47	-39.47
Inverter Transformer	MV3-4 T	368507	4907925	2	0	0	56.1	56.1	1	4245.73	3.25	0	83.56	0	1.34	0	0	10.81	0	0	0	0	0	0	-39.66	-39.66
Inverter Transformer	MV3-20 T	368683	4907317	2	0	0	56.1	56.1	1	4250.05	3.25	0	83.57	0	1.34	0	0	10.82	0	0	0	0	0	0	-39.67	-39.67
Inverter Transformer	MV3-14 T	368678	4907498	2	0	0	56.1	56.1	1	4284.9	3.25	0	83.64	0	1.36	0	0	10.87	0	0	0	0	0	0	-39.81	-39.81
Inverter Transformer	MV3-8 T	368685	4907712	2	0	0	56.1	56.1	1	4347.87	3.25	0	83.77	0	1.38	0	0	10.96	0	0	0	0	0	0	-40.05	-40.05

	Inverter Transformer	MV3-2 T	368677	4907928	2	0	0	56.1	56.1	1	4406.83	3.25	0	83.88	0	1.4	0	0	11.04	0	0	0	0	0	0	-40.27	-40.27
	Inverter Transformer	MV4-13 T	369057	4908605	2	0	0	56.1	56.1	1	5015.62	3.25	0	85.01	0	1.63	0	0	11.87	0	0	0	0	0	0	-42.45	-42.45
	Inverter Transformer	MV4-15 T	369170	4908481	2	0	0	56.1	56.1	1	5067.66	3.25	0	85.1	0	1.65	0	0	11.94	0	0	0	0	0	0	-42.63	-42.63
	Inverter Transformer	MV4-14 T	369182	4908507	2	0	0	56.1	56.1	1	5089.03	3.25	0	85.13	0	1.66	0	0	11.97	0	0	0	0	0	0	-42.7	-42.7
	Inverter Transformer	MV4-12 T	369049	4908803	2	0	0	56.1	56.1	1	5095.9	3.25	0	85.14	0	1.66	0	0	11.98	0	0	0	0	0	0	-42.73	-42.73
	Inverter Transformer	MV4-7 T	369040	4909001	2	0	0	56.1	56.1	1	5181.64	3.25	0	85.29	0	1.69	0	0	12.09	0	0	0	0	0	0	-43.01	-43.01
	Inverter Transformer	MV4-4 T	369033	4909199	2	0	0	56.1	56.1	1	5275.15	3.25	0	85.44	0	1.72	0	0	12.21	0	0	0	0	0	0	-43.32	-43.32
	Inverter Transformer	MV4-11 T	369269	4908855	2	0	0	56.1	56.1	1	5315.59	3.25	0	85.51	0	1.74	0	0	12.26	0	0	0	0	0	0	-43.45	-43.45
	Inverter Transformer	MV4-10 T	369307	4908858	2	0	0	56.1	56.1	1	5350.92	3.25	0	85.57	0	1.75	0	0	12.31	0	0	0	0	0	0	-43.57	-43.57
	Inverter Transformer	MV4-1 T	369017	4909397	2	0	0	56.1	56.1	1	5366.79	3.25	0	85.59	0	1.76	0	0	12.33	0	0	0	0	0	0	-43.62	-43.62
	Inverter Transformer	MV4-8 T	369262	4909001	2	0	0	56.1	56.1	1	5376.47	3.25	0	85.61	0	1.76	0	0	12.34	0	0	0	0	0	0	-43.65	-43.65
	Inverter Transformer	MV4-9 T	369284	4909001	2	0	0	56.1	56.1	1	5395.89	3.25	0	85.64	0	1.77	0	0	12.36	0	0	0	0	0	0	-43.71	-43.71
	Inverter Transformer	MV4-6 T	369249	4909192	2	0	0	56.1	56.1	1	5457.67	3.25	0	85.74	0	1.79	0	0	12.44	0	0	0	0	0	0	-43.91	-43.91
	Inverter Transformer	MV4-5 T	369283	4909199	2	0	0	56.1	56.1	1	5490.65	3.25	0	85.79	0	1.8	0	0	12.48	0	0	0	0	0	0	-44.02	-44.02
	Inverter Transformer	MV4-3 T	369234	4909397	2	0	0	56.1	56.1	1	5549.97	3.25	0	85.89	0	1.82	0	0	12.56	0	0	0	0	0	0	-44.2	-44.2
	Inverter Transformer	MV4-2 T	369267	4909397	2	0	0	56.1	56.1	1	5578.04	3.25	0	85.93	0	1.83	0	0	12.59	0	0	0	0	0	0	-44.29	-44.29
	Inverter Transformer	MV6-2 T	370091	4907339	2	0	0	56.1	56.1	1	5640.19	3.25	0	86.03	0	1.85	0	0	12.67	0	0	0	0	0	0	-44.48	-44.48
	Inverter Transformer	MV6-3 T	370202	4907140	2	0	0	56.1	56.1	1	5723.24	3.25	0	86.15	0	1.88	0	0	12.77	0	0	0	0	0	0	-44.74	-44.74
	Inverter Transformer	MV5-6 T	369987	4908507	2	0	0	56.1	56.1	1	5835.69	3.25	0	86.32	0	1.91	0	0	12.91	0	0	0	0	0	0	-45.08	-45.08
	Inverter Transformer	MV5-5 T	370021	4908690	2	0	0	56.1	56.1	1	5933.55	3.25	0	86.47	0	1.94	0	0	13.02	0	0	0	0	0	0	-45.38	-45.38
	Inverter Transformer	MV5-2 T	370011	4908853	2	0	0	56.1	56.1	1	5987.23	3.25	0	86.54	0	1.96	0	0	13.09	0	0	0	0	0	0	-45.53	-45.53
	Inverter Transformer	MV5-1 T	370015	4909142	2	0	0	56.1	56.1	1	6111.57	3.25	0	86.72	0	2	0	0	13.23	0	0	0	0	0	0	-45.9	-45.9
	Inverter Transformer	MV5-3 T	370237	4908851	2	0	0	56.1	56.1	1	6194.46	3.25	0	86.84	0	2.03	0	0	13.33	0	0	0	0	0	0	-46.14	-46.14
	Inverter Transformer	MV5-4 T	370330	4908707	2	0	0	56.1	56.1	1	6227.28	3.25	0	86.89	0	2.04	0	0	13.37	0	0	0	0	0	0	-46.23	-46.23
	Line Reactor	NGR	369421	4908787.5	5	0	0	45.4	45.4	1	5422.69	5.25	0	85.68	0	3.25	1.36	0.1	2.22	0	0	0	0	0	0	-47.16	-47.16
Limit. Valu	0	0																								
Level D/N:	35.6801	35.6801																								

Receiver: Existing Noise Receptor
ID: S-R2
X: 364230
Y: 4906236
Z: 4.5
Ground: 0

ISO	Description	ID	X	Y	Z	Ground	ReflOrd	LxT	LxN	L/A	Dist.	hm	Freq	Adiv	K0b	Agr	Abar	z	Aatm	Afol	Ahous	Cmet	CmetN	Dc	RL	LtotT	LtotN
	Inverter	MV1-6	364477	4905835	2	0	0	100.3	100.3	1	470.97	3.25	0	64.46	0	-0.57	0	0	8.29	0	0	0	0	0	0	28.13	28.13
	Inverter	MV1-1	364715	4906166	2	0	0	100.3	100.3	1	490.03	3.25	0	64.8	0	-0.56	0	0	8.45	0	0	0	0	0	0	27.62	27.62
	Inverter	MV1-2	364753	4906063	2	0	0	100.3	100.3	1	550.88	3.25	0	65.82	0	-0.51	0	0	8.89	0	0	0	0	0	0	26.11	26.11
	Inverter	MV1-5	364671	4905892	2	0	0	100.3	100.3	1	559.31	3.25	0	65.95	0	-0.51	0	0	8.95	0	0	0	0	0	0	25.92	25.92
	Inverter	MV1-4	364815	4905918	2	0	0	100.3	100.3	1	665.85	3.25	0	67.47	0	-0.43	0	0	9.57	0	0	0	0	0	0	23.71	23.71
	Inverter	MV1-9	364561	4905646	2	0	0	100.3	100.3	1	676.51	3.25	0	67.61	0	-0.43	0	0	9.62	0	0	0	0	0	0	23.51	23.51
	Inverter	MV1-8	364788	4905647	2	0	0	100.3	100.3	1	811.35	3.25	0	69.18	0	-0.34	0	0	10.23	0	0	0	0	0	0	21.25	21.25
	Inverter	MV1-11	364655	4905414	2	0	0	100.3	100.3	1	925.37	3.25	0	70.33	0	-0.28	0	0	10.66	0	0	0	0	0	0	19.61	19.61
	Inverter	MV1-3	364440	4906039	2	0	0	89.1	89.1	1	287.95	3.25	0	60.19	0	0.36	0	0	4.04	0	0	0	0	0	0	24.47	24.47
	Inverter	MV1-7	364925	4905782	2	0	0	97.3	97.3	1	830.15	3.25	0	69.38	0	-0.33	0	0	10.3	0	0	0	0	0	0	17.96	17.96
	Inverter	MV1-12	365038	4905386	2	0	0	100.3	100.3	1	1172.76	3.25	0	72.38	0	-0.17	0	0	11.45	0	0	0	0	0	0	16.65	16.65
	Inverter	MV2-4	365586	4906624	2	0	0	100.3	100.3	1	1410.42	3.25	0	73.99	0	-0.07	0	0	12.1	0	0	0	0	0	0	14.29	14.29
	Inverter	MV1-10	365004	4905564	2	0	0	97.3	97.3	1	1025.02	3.25	0	71.21	0	-0.23	0	0	10.99	0	0	0	0	0	0	15.34	15.34
	Sol_Luce Substation	S_Substation	369426	4908792	3.5	0	0	112.1	112.1	1	5790.64	5.25	0	86.25	0	1.11	2.69	0.29	9.52	0	0	0	0	0	0	12.51	12.51
	Inverter	MV1-13	364731	4905241	2	0	0	97.3	97.3	1	1114.02	3.25	0	71.94	0	-0.19	0	0	11.27	0	0	0	0	0	0	14.3	14.3
	Inverter	MV2-3	365820	4906641	2	0	0	100.3	100.3	1	1640.77	3.25	0	75.3	0	0.02	0	0	12.66	0	0	0	0	0	0	12.33	12.33
	Inverter	MV1-15	365315	4904994	2	0	0	100.3	100.3	1	1649.18	3.25	0	75.35	0	0.02	0	0	12.68	0	0	0	0	0	0	12.26	12.26
	Inverter	MV1-14	365163	4905049	2	0	0	97.3	97.3	1	1509.79	3.25	0	74.58	0	-0.03	0	0	12.35	0	0	0	0	0	0	10.41	10.41
	Inverter	MV2-1	365842	4906816	2	0	0	97.3	97.3	1	1713.17	3.25	0	75.68	0	0.04	0	0	12.83	0	0	0	0	0	0	8.76	8.76
	Inverter	MV3-12	367668	4907594	2	0	0	100.3	100.3	1	3696.49	3.25	0	82.36	0	0.48	0	0	16.56	0	0	0	0	0	0	0.92	0.92
	Inverter	MV3-18	367752	4907412	2	0	0	100.3	100.3	1	3713.15	3.25	0	82.39	0	0.48	0	0	16.58	0	0	0	0	0	0	0.85	0.85
	Inverter	MV3-13	367963	4907577	2	0	0	100.3	100.3	1	3966.56	3.25	0	82.97	0	0.52	0	0	17	0	0	0	0	0	0	-0.17	-0.17
	Inverter	MV3-7	367945	4907754	2	0	0	100.3	100.3	1	4013.17	3.25	0	83.07	0	0.53	0	0	17.07	0	0	0	0	0	0	-0.36	-0.36
	Inverter	MV3-3	367939	4907927	2	0	0	100.3	100.3	1	4076.29	3.25	0	83.21	0	0.54	0	0	17.17	0	0	0	0	0	0	-0.6	-0.6
	Inverter	MV3-17	368178	4907472	2	0	0	100.3	100.3	1	4136.96	3.25	0	83.33	0	0.55	0	0	17.27	0	0	0	0	0	0	-0.83	-0.83
	Inverter	MV3-10	368167	4907669	2	0	0	100.3	100.3	1	4189.69	3.25	0	83.44	0	0.55	0	0	17.35	0	0	0	0	0	0	-1.03	-1.03
	Inverter	MV3-6	368162	4907834	2	0	0	100.3	100.3	1	4244.32	3.25	0	83.56	0	0.56	0	0	17.43	0	0	0	0	0	0	-1.24	-1.24
	Inverter	MV3-19	368357	4907347	2	0	0	100.3	100.3	1	4273.93	3.25	0	83.62	0	0.56	0	0	17.48	0	0	0	0	0	0	-1.35	-1.35
	Inverter	MV3-15	368357	4907477	2	0	0	100.3	100.3	1	4309.55	3.25	0	83.69	0	0.57	0	0	17.54	0	0	0	0	0	0	-1.48	-1.48
	Inverter	MV3-11	368346	4907662	2	0	0	100.3	100.3	1	4356.02	3.25	0	83.78	0	0.57	0	0	17.61	0	0	0	0	0	0	-1.65	-1.65
	Inverter	MV3-21	368478	4907206	2	0	0	100.3	100.3	1	4357.34	3.25	0	83.78	0	0.57	0	0	17.61	0	0	0	0	0	0	-1.66	-1.66
	Inverter	MV3-16	368514	4907475	2	0	0	100.3	100.3	1	4459.57	3.25	0	83.99	0	0.59	0	0	17.77	0	0	0	0	0	0	-2.03	-2.03
	Inverter	MV3-9	368512	4907703	2	0	0	100.3	100.3	1	4526.33	3.25	0	84.11	0	0.59	0	0	17.87	0	0	0	0	0	0	-2.27	-2.27
	Inverter	MV3-20	368689	4907317	2	0	0	100.3	100.3	1	4588.16	3.25	0	84.23	0	0.6	0	0	17.96	0	0	0	0	0	0	-2.49	-2.49
	Inverter	MV3-14	368684	4907498	2	0	0	100.3	100.3	1	4629.34	3.25	0	84.31	0	0.61	0	0	18.03	0	0	0	0	0	0	-2.63	-2.63
	Inverter	MV3-8	368680	4907712	2	0	0	100.3	100.3	1	4688.4	3.25	0	84.42	0	0.61	0	0	18.12	0	0	0	0	0	0	-2.84	-2.84
	Inverter	MV4-7	369035	4909001	2	0	0	100.3	100.3	1	5543.76	3.25	0	85.88	0	0.68	0	0	19.36	0	0	0	0	0	0	-5.61	-5.61
	Inverter	MV4-4	369027	4909199	2	0	0	100.3	100.3	1	5638.31	3.25	0	86.02	0	0.69	0	0	19.49	0	0	0	0	0	0	-5.89	-5.89

Inverter	MV4-11	369264	4908855	2	0	0	100.3	100.3	1	5674.53	3.25	0	86.08	0	0.69	0	0	19.55	0	0	0	0	0	0	-6	-6
Inverter	MV4-10	369312	4908858	2	0	0	100.3	100.3	1	5718.53	3.25	0	86.15	0	0.69	0	0	19.61	0	0	0	0	0	0	-6.13	-6.13
Inverter	MV4-1	369011	4909397	2	0	0	100.3	100.3	1	5731.48	3.25	0	86.17	0	0.69	0	0	19.62	0	0	0	0	0	0	-6.17	-6.17
Inverter	MV4-8	369256	4909001	2	0	0	100.3	100.3	1	5736.37	3.25	0	86.17	0	0.69	0	0	19.63	0	0	0	0	0	0	-6.19	-6.19
Inverter	MV4-9	369289	4909001	2	0	0	100.3	100.3	1	5765.3	3.25	0	86.22	0	0.7	0	0	19.67	0	0	0	0	0	0	-6.27	-6.27
Inverter	MV4-6	369243	4909192	2	0	0	100.3	100.3	1	5819.63	3.25	0	86.3	0	0.7	0	0	19.75	0	0	0	0	0	0	-6.43	-6.43
Inverter	MV4-5	369289	4909199	2	0	0	100.3	100.3	1	5862.84	3.25	0	86.36	0	0.7	0	0	19.81	0	0	0	0	0	0	-6.56	-6.56
Inverter	MV4-3	369229	4909397	2	0	0	100.3	100.3	1	5914.55	3.25	0	86.44	0	0.7	0	0	19.88	0	0	0	0	0	0	-6.7	-6.7
Inverter	MV4-2	369272	4909397	2	0	0	100.3	100.3	1	5950.94	3.25	0	86.49	0	0.7	0	0	19.93	0	0	0	0	0	0	-6.81	-6.81
Inverter	MV6-2	370085	4907339	2	0	0	100.3	100.3	1	5957.99	3.25	0	86.5	0	0.7	0	0	19.94	0	0	0	0	0	0	-6.83	-6.83
Inverter	MV6-3	370207	4907140	2	0	0	100.3	100.3	1	6044.98	3.25	0	86.63	0	0.71	0	0	20.05	0	0	0	0	0	0	-7.08	-7.08
Inverter	MV5-5	370015	4908690	2	0	0	100.3	100.3	1	6283.98	3.25	0	86.96	0	0.71	0	0	20.37	0	0	0	0	0	0	-7.74	-7.74
Inverter	MV5-2	370006	4908853	2	0	0	100.3	100.3	1	6341.2	3.25	0	87.04	0	0.71	0	0	20.45	0	0	0	0	0	0	-7.89	-7.89
Inverter	MV5-1	370020	4909142	2	0	0	100.3	100.3	1	6478.34	3.25	0	87.23	0	0.71	0	0	20.63	0	0	0	0	0	0	-8.26	-8.26
Inverter	MV5-3	370231	4908851	2	0	0	100.3	100.3	1	6546.01	3.25	0	87.32	0	0.71	0	0	20.72	0	0	0	0	0	0	-8.44	-8.44
Inverter	MV2-2	365977	4906654	2	0	0	89.1	89.1	1	1796.31	3.25	0	76.09	0	0.86	0	0	7.71	0	0	0	0	0	0	4.4	4.4
Inverter	MV5-4	370324	4908707	2	0	0	100.3	100.3	1	6575.92	3.25	0	87.36	0	0.72	0	0	20.76	0	0	0	0	0	0	-8.52	-8.52
Inverter	MV6-1	370235	4907364	2	0	0	97.3	97.3	1	6110.03	3.25	0	86.72	0	0.71	0	0	20.14	0	0	0	0	0	0	-10.26	-10.26
DSTATCOM - 10 MVAR #2	DSAT2	369403	4908757	2.5	0	0	96.6	96.6	1	5754.6	3.5	0	86.2	0	3.75	0	0	3.72	0	0	0	0	0	0	2.95	2.95
DSTATCOM - 10 MVAR #1	DSAT1	369437	4908757	2.5	0	0	96.6	96.6	1	5785.18	3.5	0	86.25	0	3.76	0	0	3.74	0	0	0	0	0	0	2.89	2.89
Gardiner Substation	G_Sub	366586.3	4903349.9	2.5	0	0	90.8	90.8	1	3725.82	4.25	0	82.42	0	1.28	2.68	0.26	7	0	0	0	0	0	0	-2.6	-2.6
SubstationTransformer	W_ST	369711.17	4906112.3	2.5	0	0	92	92	1	5482.57	4.25	0	85.78	0	1.76	2.22	0.29	9.18	0	0	0	0	0	0	-6.96	-6.96
Inverter	MV3-1	368156	4907976	2	0	0	89.1	89.1	1	4294.31	3.25	0	83.66	0	1.47	0	0	11.5	0	0	0	0	0	0	-7.56	-7.56
Inverter	MV3-5	368340	4907843	2	0	0	89.1	89.1	1	4413	3.25	0	83.89	0	1.49	0	0	11.66	0	0	0	0	0	0	-8	-8
Inverters	G_Inv1	366526.4	4903225.8	2	0	0	87.7	87.7	1	3786.13	3.25	0	82.56	0	2.77	0	0	4.64	0	0	0	0	0	0	-2.32	-2.32
Inverter	MV3-22	368656	4907142	2	0	0	89.1	89.1	1	4517.78	3.25	0	84.1	0	1.52	0	0	11.81	0	0	0	0	0	0	-8.37	-8.37
Inverters	G_Inv2	366676.9	4903239.1	2	0	0	87.7	87.7	1	3868.95	4.2	0	82.75	0	3.17	1.52	0.01	4.73	0	0	0	0	0	0	-4.51	-4.51
Inverter	MV3-4	368502	4907925	2	0	0	89.1	89.1	1	4593.77	3.25	0	84.24	0	1.54	0	0	11.91	0	0	0	0	0	0	-8.64	-8.64
Inverters	G_Inv3	366583.7	4903091.4	2	0	0	87.7	87.7	1	3927.9	3.25	0	82.88	0	2.79	0	0	4.8	0	0	0	0	0	0	-2.8	-2.8
Inverters	G_Inv4	366732.8	4903105	2	0	0	87.7	87.7	1	4008.39	3.25	0	83.06	0	2.79	0	0	4.88	0	0	0	0	0	0	-3.07	-3.07
Inverter	MV3-2	368671	4907928	2	0	0	89.1	89.1	1	4752.4	3.25	0	84.54	0	1.58	0	0	12.13	0	0	0	0	0	0	-9.19	-9.19
Inverters	G_Inv5	366638.5	4902958.1	2	0	0	87.7	87.7	1	4067.62	3.25	0	83.19	0	2.8	0	0	4.95	0	0	0	0	0	0	-3.27	-3.27
Inverters	G_Inv6	366788.5	4902972	2	0	0	87.7	87.7	1	4147.24	3.25	0	83.36	0	2.8	0	0	5.03	0	0	0	0	0	0	-3.53	-3.53
Inverters	G_Inv7	366694.6	4902824.7	2	0	0	87.7	87.7	1	4208.47	3.25	0	83.48	0	2.81	0	0	5.1	0	0	0	0	0	0	-3.73	-3.73
Inverters	G_Inv8	366844.5	4902838.5	2	0	0	87.7	87.7	1	4287.03	3.25	0	83.64	0	2.81	0	0	5.18	0	0	0	0	0	0	-3.98	-3.98
Inverters	G_Inv9	366750.9	4902691.8	2	0	0	87.7	87.7	1	4349.29	3.25	0	83.77	0	2.82	0	0	5.25	0	0	0	0	0	0	-4.18	-4.18
Westbrook Inverter Enclosur	W_INV2	369374	4906388	2	0	0	89.1	89.1	1	5146.25	3.25	0	85.23	0	1.68	0	0	12.66	0	0	0	0	0	0	-10.51	-10.51
Inverters	G_Inv10	366900.7	4902704.8	2	0	0	87.7	87.7	1	4427.42	3.25	0	83.92	0	2.83	0	0	5.33	0	0	0	0	0	0	-4.42	-4.42
Fixed Reactor Bank 1	FRB1	369378	4908755	6	0	0	89.8	89.8	1	5731.25	5.25	0	86.16	0	-0.46	0	0	9.45	0	0	0	0	0	0	-5.38	-5.38
Westbrook Inverter Enclosur	W_INV3	369508	4906164	2	0	0	89.1	89.1	1	5278.49	3.25	0	85.45	0	1.71	0	0	12.83	0	0	0	0	0	0	-10.93	-10.93
Fixed Reactor Bank 2	FRB2	369464	4908755	6	0	0	89.8	89.8	1	5808.62	5.25	0	86.28	0	-0.45	0	0	9.54	0	0	0	0	0	0	-5.6	-5.6
Inverter	MV4-13	369051	4908605	2	0	0	89.1	89.1	1	5371.61	3.25	0	85.6	0	1.73	0	0	12.96	0	0	0	0	0	0	-11.23	-11.23
Inverter	MV4-15	369176	4908481	2	0	0	89.1	89.1	1	5431.66	3.25	0	85.7	0	1.75	0	0	13.03	0	0	0	0	0	0	-11.42	-11.42
Inverter	MV4-14	369176	4908507	2	0	0	89.1	89.1	1	5442.46	3.25	0	85.72	0	1.75	0	0	13.05	0	0	0	0	0	0	-11.45	-11.45
Westbrook Inverter Enclosur	W_INV4	369673	4906164	2	0	0	89.1	89.1	1	5443.48	3.25	0	85.72	0	1.75	0	0	13.05	0	0	0	0	0	0	-11.46	-11.46
Inverter	MV4-12	369043	4908803	2	0	0	89.1	89.1	1	5454.77	3.25	0	85.74	0	1.75	0	0	13.06	0	0	0	0	0	0	-11.49	-11.49
Westbrook Inverter Enclosur	W_INV5	369719	4906574	2	0	0	89.1	89.1	1	5499.4	3.25	0	85.81	0	1.76	0	0	13.12	0	0	0	0	0	0	-11.63	-11.63
Westbrook Inverter Enclosur	W_INV7	369780	4906417	2	0	0	89.1	89.1	1	5552.95	3.25	0	85.89	0	1.78	0	0	13.19	0	0	0	0	0	0	-11.8	-11.8
Westbrook Inverter Enclosur	W_INV6	369875	4906578	2	0	0	89.1	89.1	1	5655.35	3.25	0	86.05	0	1.8	0	0	13.32	0	0	0	0	0	0	-12.12	-12.12
Inverter	MV5-6	369982	4908507	2	0	0	89.1	89.1	1	6184.09	3.25	0	86.83	0	1.93	0	0	13.99	0	0	0	0	0	0	-13.69	-13.69
Westbrook Inverter Enclosur	W_INV1	369409	4906578	2	0	0	86.1	86.1	1	5190.28	3.25	0	85.3	0	1.69	0	0	12.72	0	0	0	0	0	0	-13.65	-13.65
Inverter Transformer	MV1-7 T	364919	4905782	2	0	0	69.4	69.4	1	825.13	3.25	0	69.33	0	1.52	0	0	3.55	0	0	0	0	0	0	-5.05	-5.05
Inverter	MV6-4	370250	4906966	2	0	0	86.1	86.1	1	6064.1	3.25	0	86.66	0	1.9	0	0	13.84	0	0	0	0	0	0	-16.34	-16.34
Inverter Transformer	MV1-10 T	365010	4905564	2	0	0	69.4	69.4	1	1029.56	3.25	0	71.25	0	1.71	0	0	3.85	0	0	0	0	0	0	-7.46	-7.46
Inverter Transformer	MV1-13 T	364725	4905241	2	0	0	69.4	69.4	1	1111.33	3.25	0	71.92	0	1.77	0	0	3.96	0	0	0	0	0	0	-8.29	-8.29
Inverter Transformer	MV1-3 T	364435	4906039	2	0	0	56.1	56.1	1	284.32	3.25	0	60.08	0	-0.06	0	0	2.71	0	0	0	0	0	0	-6.67	-6.67
Inverter Transformer	MV1-14 T	365157	4905049	2	0	0	69.4	69.4	1	1506.09	3.25	0	74.56	0	1.98	0	0	4.44	0	0	0	0	0	0	-11.62	-11.62
Inverter Transformer	MV2-1 T	365836	4906816	2	0	0	69.4	69.4	1	1707.53	3.25	0	75.65	0	2.06	0	0	4.66	0	0	0	0	0	0	-13.02	-13.02
Westbrook Inverter Transfor	W_INVTR1	369403	4906578	2	0	0	78.2	78.2	1	5184.29	3.25	0	85.29	0	-3.21	0	0	2.48	0	0	0	0	0	0	-6.31	-6.31
Westbrook Inverter Transfor	W_INVTR2	369368	4906388	2	0	0	77.3	77.3	1	5140.25	3.25	0	85.22	0	-3.21	0	0	2.46	0	0	0	0	0	0	-7.13	-7.13
Westbrook Inverter Transfor	W_INVTR3	369514	4906164	2	0	0	77.3	77.3	1	5284.49	3.25	0	85.46	0	-3.23	0	0	2.51	0	0	0	0	0	0	-7.39	-7.39
Westbrook Inverter Transfor	W_INVTR4	369679	4906164	2	0	0	77.3	77.3	1	5449.48	3.25	0	85.73	0	-3.27	0	0	2.56	0	0	0	0	0	0	-7.68	-7.68
Inverter Transformer	MV1-6 T	364482	4905835	2	0	0	56.1	56.1	1	473.62	3.25	0	64.51	0	-0.12	0	0	3.47	0	0	0	0	0	0	-11.8	-11.8
Westbrook Inverter Transfor	W_INVTR5	369725	4906574	2	0	0	77.3	77.3	1	5505.39	3.25	0	85.82	0	-3.28	0	0	2.58	0	0	0	0	0	0	-7.78	-7.78
Westbrook Inverter Transfor	W_INVTR7	369786	4906417	2	0	0	77.3	77.3	1	5558.95	3.25	0	85.9	0	-3.29	0	0	2.6	0	0	0	0	0	0	-7.87	-7.87
Westbrook Inverter Transfor	W_INVTR6	369881	4906578	2	0	0	77.3	77.3	1	5661.34	3.25	0	86.06	0	-3.31	0	0	2.63	0	0	0	0	0	0	-8.04	-8.04
Inverter Transformer	MV1-1 T	364721	4906166	2	0	0	56.1	56.1	1	495.97	3.25	0	64.91	0	-0.12	0	0	3.54	0	0	0	0	0	0	-12.27	-12.27
Inverter Transformer	MV1-2 T	364759	4906063	2	0	0	56.1	56.1	1	556.58	3.25	0	65.91	0	-0.11	0	0	3.73	0	0	0	0	0	0	-13.47	-13.47
Inverter Transformer	MV1-5 T	364676	4905892	2	0	0	56.1	56.1	1	563.26	3.25	0	66.01	0	-0.11	0	0	3.75	0	0	0	0	0	0	-13.59	-13.59
Inverter Transformer	MV1-4 T	364821	4905918	2	0	0	56.1	56.1	1	671.13	3.25	0	67.54	0	-0.09	0	0	4.05	0	0	0	0	0	0	-15.44	-15.44
Inverter Transformer	MV1-9 T	364555	4905646	2	0	0	56.1	56.1	1	673.6	3.25	0	67.57	0	-0.09	0	0	4.06	0	0	0	0	0	0	-15.48	-15.48
Inverter Transformer	MV1-8 T	364782	4905647	2	0	0	56.1	56.1	1	807.24	3.25	0	69.14	0	-0.05	0	0	4.41	0	0	0	0	0	0	-17.44	-17.44
Inverter Transformer	MV1-11 T	364649	4905414	2	0	0	56.1	56.1	1	922.63	3.25	0	70.3	0	-0.01	0	0	4.7	0	0	0	0	0	0	-18.93	-18.93
Inverter Transformer	MV1-12 T	365044	4905386	2	0	0	56.1	56.1	1	1176.9	3.25	0	72.41	0	0.08	0	0	5.3	0	0	0	0	0	0	-21.73	-21.73

Inverter Transformer	MV6-4 T	370244	4906966	2	0	0	69.4	69.4	1	6058.14	3.25	0	86.65	0	3.2	0	0	8.05	0	0	0	0	0	0	-28.55	-28.55
Inverter Transformer	MV6-1 T	370230	4907364	2	0	0	69.4	69.4	1	6105.11	3.25	0	86.71	0	3.2	0	0	8.08	0	0	0	0	0	0	-28.65	-28.65
Inverter Transformer	MV2-4 T	365590	4906628	2	0	0	56.1	56.1	1	1415.37	3.25	0	74.02	0	0.17	0	0	5.83	0	0	0	0	0	0	-23.96	-23.96
Inverter Transformer	MV2-3 T	365814	4906641	2	0	0	56.1	56.1	1	1634.96	3.25	0	75.27	0	0.25	0	0	6.3	0	0	0	0	0	0	-25.77	-25.77
Inverter Transformer	MV1-15 T	365309	4904994	2	0	0	56.1	56.1	1	1645.24	3.25	0	75.32	0	0.26	0	0	6.33	0	0	0	0	0	0	-25.85	-25.85
Inverter Transformer	MV2-2 T	365982	4906654	2	0	0	56.1	56.1	1	1801.18	3.25	0	76.11	0	0.32	0	0	6.65	0	0	0	0	0	0	-27.02	-27.02
Inverter Transformer	MV3-12 T	367674	4907594	2	0	0	56.1	56.1	1	3702.07	3.25	0	82.37	0	1.12	0	0	10	0	0	0	0	0	0	-37.44	-37.44
Inverter Transformer	MV3-18 T	367757	4907412	2	0	0	56.1	56.1	1	3717.89	3.25	0	82.41	0	1.13	0	0	10.03	0	0	0	0	0	0	-37.51	-37.51
Inverter Transformer	MV3-13 T	367958	4907577	2	0	0	56.1	56.1	1	3961.85	3.25	0	82.96	0	1.23	0	0	10.4	0	0	0	0	0	0	-38.53	-38.53
Inverter Transformer	MV3-7 T	367951	4907754	2	0	0	56.1	56.1	1	4018.73	3.25	0	83.08	0	1.25	0	0	10.48	0	0	0	0	0	0	-38.76	-38.76
Inverter Transformer	MV3-3 T	367944	4907927	2	0	0	56.1	56.1	1	4080.84	3.25	0	83.21	0	1.28	0	0	10.57	0	0	0	0	0	0	-39.01	-39.01
Inverter Transformer	MV3-17 T	368183	4907472	2	0	0	56.1	56.1	1	4141.73	3.25	0	83.34	0	1.3	0	0	10.66	0	0	0	0	0	0	-39.25	-39.25
Inverter Transformer	MV3-10 T	368162	4907669	2	0	0	56.1	56.1	1	4184.99	3.25	0	83.43	0	1.32	0	0	10.73	0	0	0	0	0	0	-39.42	-39.42
Inverter Transformer	MV3-6 T	368156	4907834	2	0	0	56.1	56.1	1	4238.76	3.25	0	83.54	0	1.34	0	0	10.8	0	0	0	0	0	0	-39.63	-39.63
Inverter Transformer	MV3-19 T	368352	4907347	2	0	0	56.1	56.1	1	4269.1	3.25	0	83.61	0	1.35	0	0	10.85	0	0	0	0	0	0	-39.75	-39.75
Inverter Transformer	MV3-1 T	368150	4907976	2	0	0	56.1	56.1	1	4288.82	3.25	0	83.65	0	1.36	0	0	10.88	0	0	0	0	0	0	-39.82	-39.82
Inverter Transformer	MV3-15 T	368351	4907477	2	0	0	56.1	56.1	1	4303.8	3.25	0	83.68	0	1.36	0	0	10.9	0	0	0	0	0	0	-39.88	-39.88
Inverter Transformer	MV3-11 T	368340	4907662	2	0	0	56.1	56.1	1	4350.35	3.25	0	83.77	0	1.38	0	0	10.96	0	0	0	0	0	0	-40.06	-40.06
Inverter Transformer	MV3-21 T	368484	4907206	2	0	0	56.1	56.1	1	4363.19	3.25	0	83.8	0	1.39	0	0	10.98	0	0	0	0	0	0	-40.11	-40.11
Inverter Transformer	MV3-5 T	368335	4907843	2	0	0	56.1	56.1	1	4408.34	3.25	0	83.89	0	1.4	0	0	11.05	0	0	0	0	0	0	-40.28	-40.28
Inverter Transformer	MV3-16 T	368509	4907475	2	0	0	56.1	56.1	1	4454.77	3.25	0	83.98	0	1.42	0	0	11.11	0	0	0	0	0	0	-40.45	-40.45
Inverter Transformer	MV3-22 T	368661	4907142	2	0	0	56.1	56.1	1	4522.68	3.25	0	84.11	0	1.45	0	0	11.21	0	0	0	0	0	0	-40.7	-40.7
Inverter Transformer	MV3-9 T	368517	4907703	2	0	0	56.1	56.1	1	4531.06	3.25	0	84.12	0	1.45	0	0	11.22	0	0	0	0	0	0	-40.74	-40.74
Inverter Transformer	MV3-20 T	368683	4907317	2	0	0	56.1	56.1	1	4582.33	3.25	0	84.22	0	1.47	0	0	11.29	0	0	0	0	0	0	-40.92	-40.92
Inverter Transformer	MV3-4 T	368507	4907925	2	0	0	56.1	56.1	1	4598.42	3.25	0	84.25	0	1.48	0	0	11.31	0	0	0	0	0	0	-40.98	-40.98
Inverter Transformer	MV3-14 T	368678	4907498	2	0	0	56.1	56.1	1	4623.57	3.25	0	84.3	0	1.49	0	0	11.35	0	0	0	0	0	0	-41.07	-41.07
Inverter Transformer	MV3-8 T	368685	4907712	2	0	0	56.1	56.1	1	4693.14	3.25	0	84.43	0	1.51	0	0	11.44	0	0	0	0	0	0	-41.33	-41.33
Inverter Transformer	MV3-2 T	368677	4907928	2	0	0	56.1	56.1	1	4758.01	3.25	0	84.55	0	1.54	0	0	11.53	0	0	0	0	0	0	-41.56	-41.56
Inverter Transformer	MV4-13 T	369057	4908605	2	0	0	56.1	56.1	1	5377	3.25	0	85.61	0	1.76	0	0	12.34	0	0	0	0	0	0	-43.65	-43.65
Inverter Transformer	MV4-15 T	369170	4908481	2	0	0	56.1	56.1	1	5426.2	3.25	0	85.69	0	1.78	0	0	12.4	0	0	0	0	0	0	-43.81	-43.81
Inverter Transformer	MV4-14 T	369182	4908507	2	0	0	56.1	56.1	1	5447.91	3.25	0	85.72	0	1.78	0	0	12.43	0	0	0	0	0	0	-43.88	-43.88
Inverter Transformer	MV4-12 T	369049	4908803	2	0	0	56.1	56.1	1	5460.06	3.25	0	85.74	0	1.79	0	0	12.45	0	0	0	0	0	0	-43.92	-43.92
Inverter Transformer	MV4-7 T	369040	4909001	2	0	0	56.1	56.1	1	5548.09	3.25	0	85.88	0	1.82	0	0	12.56	0	0	0	0	0	0	-44.2	-44.2
Inverter Transformer	MV4-4 T	369033	4909199	2	0	0	56.1	56.1	1	5643.42	3.25	0	86.03	0	1.85	0	0	12.67	0	0	0	0	0	0	-44.49	-44.49
Inverter Transformer	MV4-11 T	369269	4908855	2	0	0	56.1	56.1	1	5678.97	3.25	0	86.09	0	1.86	0	0	12.72	0	0	0	0	0	0	-44.6	-44.6
Inverter Transformer	MV4-10 T	369307	4908858	2	0	0	56.1	56.1	1	5714.09	3.25	0	86.14	0	1.87	0	0	12.76	0	0	0	0	0	0	-44.71	-44.71
Inverter Transformer	MV4-1 T	369017	4909397	2	0	0	56.1	56.1	1	5736.49	3.25	0	86.17	0	1.88	0	0	12.79	0	0	0	0	0	0	-44.78	-44.78
Inverter Transformer	MV4-8 T	369262	4909001	2	0	0	56.1	56.1	1	5741.62	3.25	0	86.18	0	1.88	0	0	12.79	0	0	0	0	0	0	-44.8	-44.8
Inverter Transformer	MV4-9 T	369284	4909001	2	0	0	56.1	56.1	1	5760.92	3.25	0	86.21	0	1.89	0	0	12.82	0	0	0	0	0	0	-44.86	-44.86
Inverter Transformer	MV4-6 T	369249	4909192	2	0	0	56.1	56.1	1	5824.8	3.25	0	86.31	0	1.91	0	0	12.89	0	0	0	0	0	0	-45.05	-45.05
Inverter Transformer	MV4-5 T	369283	4909199	2	0	0	56.1	56.1	1	5857.66	3.25	0	86.35	0	1.92	0	0	12.93	0	0	0	0	0	0	-45.15	-45.15
Inverter Transformer	MV4-3 T	369234	4909397	2	0	0	56.1	56.1	1	5918.78	3.25	0	86.44	0	1.94	0	0	13.01	0	0	0	0	0	0	-45.33	-45.33
Inverter Transformer	MV4-2 T	369267	4909397	2	0	0	56.1	56.1	1	5946.7	3.25	0	86.49	0	1.95	0	0	13.04	0	0	0	0	0	0	-45.41	-45.41
Inverter Transformer	MV6-2 T	370091	4907339	2	0	0	56.1	56.1	1	5963.89	3.25	0	86.51	0	1.95	0	0	13.06	0	0	0	0	0	0	-45.47	-45.47
Inverter Transformer	MV6-3 T	370202	4907140	2	0	0	56.1	56.1	1	6040.03	3.25	0	86.62	0	1.98	0	0	13.15	0	0	0	0	0	0	-45.69	-45.69
Inverter Transformer	MV5-6 T	369987	4908507	2	0	0	56.1	56.1	1	6188.74	3.25	0	86.83	0	2.02	0	0	13.32	0	0	0	0	0	0	-46.12	-46.12
Inverter Transformer	MV5-5 T	370021	4908690	2	0	0	56.1	56.1	1	6289.5	3.25	0	86.97	0	2.05	0	0	13.44	0	0	0	0	0	0	-46.41	-46.41
Inverter Transformer	MV5-2 T	370011	4908853	2	0	0	56.1	56.1	1	6345.76	3.25	0	87.05	0	2.07	0	0	13.5	0	0	0	0	0	0	-46.57	-46.57
Inverter Transformer	MV5-1 T	370015	4909142	2	0	0	56.1	56.1	1	6473.88	3.25	0	87.22	0	2.11	0	0	13.65	0	0	0	0	0	0	-46.93	-46.93
Inverter Transformer	MV5-3 T	370237	4908851	2	0	0	56.1	56.1	1	6551.51	3.25	0	87.33	0	2.13	0	0	13.74	0	0	0	0	0	0	-47.14	-47.14
Inverter Transformer	MV5-4 T	370330	4908707	2	0	0	56.1	56.1	1	6581.48	3.25	0	87.37	0	2.14	0	0	13.77	0	0	0	0	0	0	-47.22	-47.22
Line Reactor	NGR	369421	4908787.5	5	0	0	45.4	45.4	1	5784.17	5.25	0	86.24	0	3.24	1.36	0.1	2.36	0	0	0	0	0	0	-47.86	-47.86

Limit. Valu 0 0
Level D/N: 35.1753 35.1753

Receiver: Existing Noise Receptor
ID: S-R3
X: 364304
Y: 4906205
Z: 4.5
Ground: 0

ISO	Description	ID	X	Y	Z	Ground	ReflOrd	LxT	LxN	L/A	Dist.	hm	Freq	Adiv	K0b	Agr	Abar	z	Aatm	Afol	Ahous	Cmet	CmetN	Dc	RL	LtotT	LtotN
	Inverter	MV1-6	364477	4905835	2	0	0	100.3	100.3	1	408.45	3.25	0	63.22	0	-0.61	0	0	7.71	0	0	0	0	0	0	29.99	29.99
	Inverter	MV1-1	364715	4906166	2	0	0	100.3	100.3	1	412.85	3.25	0	63.32	0	-0.61	0	0	7.75	0	0	0	0	0	0	29.85	29.85
	Inverter	MV1-2	364753	4906063	2	0	0	100.3	100.3	1	470.93	3.25	0	64.46	0	-0.57	0	0	8.29	0	0	0	0	0	0	28.14	28.14
	Inverter	MV1-5	364671	4905892	2	0	0	100.3	100.3	1	482.35	3.25	0	64.67	0	-0.56	0	0	8.38	0	0	0	0	0	0	27.82	27.82
	Inverter	MV1-4	364815	4905918	2	0	0	100.3	100.3	1	586.09	3.25	0	66.36	0	-0.49	0	0	9.12	0	0	0	0	0	0	25.32	25.32
	Inverter	MV1-9	364561	4905646	2	0	0	100.3	100.3	1	615.25	3.25	0	66.78	0	-0.47	0	0	9.29	0	0	0	0	0	0	24.71	24.71
	Inverter	MV1-8	364788	4905647	2	0	0	100.3	100.3	1	738.67	3.25	0	68.37	0	-0.39	0	0	9.92	0	0	0	0	0	0	22.41	22.41
	Inverter	MV1-3	364440	4906039	2	0	0	89.1	89.1	1	214.61	3.25	0	57.63	0	0.34	0	0	3.38	0	0	0	0	0	0	27.71	27.71
	Inverter	MV1-11	364655	4905414	2	0	0	100.3	100.3	1	865.38	3.25	0	69.74	0	-0.32	0	0	10.44	0	0	0	0	0	0	20.45	20.45
	Inverter	MV1-7	364925	4905782	2	0	0	97.3	97.3	1	751.38	3.25	0	68.52	0	-0.38	0	0	9.97	0	0	0	0	0	0	19.2	19.2
	Inverter	MV1-12	365038	4905386	2	0	0	100.3	100.3	1	1099.78	3.25	0	71.83	0	-0.2	0	0	11.23	0	0	0	0	0	0	17.46	17.46

Inverter	MV1-10	365004	4905564	2	0	0	97.3	97.3	1	949.15	3.25	0	70.55	0	-0.27	0	0	10.74	0	0	0	0	0	0	16.3	16.3
Inverter	MV2-4	365586	4906624	2	0	0	100.3	100.3	1	1348.74	3.25	0	73.6	0	-0.09	0	0	11.94	0	0	0	0	0	0	14.87	14.87
Sol_Luce Substation	S_Substation	369426	4908792	3.5	0	0	112.1	112.1	1	5738.24	5.25	0	86.18	0	1.09	2.7	0.29	9.46	0	0	0	0	0	0	12.65	12.65
Inverter	MV1-13	364731	4905241	2	0	0	97.3	97.3	1	1054.34	3.25	0	71.46	0	-0.22	0	0	11.09	0	0	0	0	0	0	14.99	14.99
Inverter	MV2-3	365820	4906641	2	0	0	100.3	100.3	1	1577.45	3.25	0	74.96	0	-0.01	0	0	12.51	0	0	0	0	0	0	12.84	12.84
Inverter	MV1-15	365315	4904994	2	0	0	100.3	100.3	1	1577.55	3.25	0	74.96	0	-0.01	0	0	12.51	0	0	0	0	0	0	12.84	12.84
Inverter	MV1-14	365163	4905049	2	0	0	97.3	97.3	1	1440.22	3.25	0	74.17	0	-0.06	0	0	12.17	0	0	0	0	0	0	11.03	11.03
Inverter	MV2-1	365842	4906816	2	0	0	97.3	97.3	1	1654.92	3.25	0	75.38	0	0.02	0	0	12.7	0	0	0	0	0	0	9.22	9.22
Inverter	MV3-12	367668	4907594	2	0	0	100.3	100.3	1	3639.48	3.25	0	82.22	0	0.47	0	0	16.46	0	0	0	0	0	0	1.15	1.15
Inverter	MV3-18	367752	4907412	2	0	0	100.3	100.3	1	3653.16	3.25	0	82.25	0	0.48	0	0	16.49	0	0	0	0	0	0	1.1	1.1
Inverter	MV3-13	367963	4907577	2	0	0	100.3	100.3	1	3907.77	3.25	0	82.84	0	0.51	0	0	16.9	0	0	0	0	0	0	0.06	0.06
Inverter	MV3-7	367945	4907754	2	0	0	100.3	100.3	1	3956.8	3.25	0	82.95	0	0.52	0	0	16.98	0	0	0	0	0	0	-0.14	-0.14
Inverter	MV3-3	367939	4907927	2	0	0	100.3	100.3	1	4022.25	3.25	0	83.09	0	0.53	0	0	17.08	0	0	0	0	0	0	-0.39	-0.39
Inverter	MV3-17	368178	4907472	2	0	0	100.3	100.3	1	4075.93	3.25	0	83.2	0	0.54	0	0	17.17	0	0	0	0	0	0	-0.6	-0.6
Inverter	MV3-10	368167	4907669	2	0	0	100.3	100.3	1	4131.11	3.25	0	83.32	0	0.54	0	0	17.26	0	0	0	0	0	0	-0.81	-0.81
Inverter	MV3-6	368162	4907834	2	0	0	100.3	100.3	1	4187.82	3.25	0	83.44	0	0.55	0	0	17.35	0	0	0	0	0	0	-1.03	-1.03
Inverter	MV3-19	368357	4907347	2	0	0	100.3	100.3	1	4210.82	3.25	0	83.49	0	0.56	0	0	17.38	0	0	0	0	0	0	-1.11	-1.11
Inverter	MV3-15	368357	4907477	2	0	0	100.3	100.3	1	4247.92	3.25	0	83.56	0	0.56	0	0	17.44	0	0	0	0	0	0	-1.25	-1.25
Inverter	MV3-21	368478	4907206	2	0	0	100.3	100.3	1	4292.35	3.25	0	83.65	0	0.57	0	0	17.51	0	0	0	0	0	0	-1.42	-1.42
Inverter	MV3-11	368346	4907662	2	0	0	100.3	100.3	1	4296.58	3.25	0	83.66	0	0.57	0	0	17.52	0	0	0	0	0	0	-1.43	-1.43
Inverter	MV3-16	368514	4907475	2	0	0	100.3	100.3	1	4397.39	3.25	0	83.86	0	0.58	0	0	17.67	0	0	0	0	0	0	-1.8	-1.8
Inverter	MV3-9	368512	4907703	2	0	0	100.3	100.3	1	4466.68	3.25	0	84	0	0.59	0	0	17.78	0	0	0	0	0	0	-2.05	-2.05
Inverter	MV3-20	368689	4907317	2	0	0	100.3	100.3	1	4523.8	3.25	0	84.11	0	0.59	0	0	17.87	0	0	0	0	0	0	-2.26	-2.26
Inverter	MV3-14	368684	4907498	2	0	0	100.3	100.3	1	4566.86	3.25	0	84.19	0	0.6	0	0	17.93	0	0	0	0	0	0	-2.41	-2.41
Inverter	MV3-8	368680	4907712	2	0	0	100.3	100.3	1	4628.22	3.25	0	84.31	0	0.61	0	0	18.03	0	0	0	0	0	0	-2.63	-2.63
Inverter	MV4-7	369035	4909001	2	0	0	100.3	100.3	1	5495.45	3.25	0	85.8	0	0.68	0	0	19.29	0	0	0	0	0	0	-5.46	-5.46
Inverter	MV4-4	369027	4909199	2	0	0	100.3	100.3	1	5592.03	3.25	0	85.95	0	0.69	0	0	19.43	0	0	0	0	0	0	-5.76	-5.76
Inverter	MV4-11	369264	4908855	2	0	0	100.3	100.3	1	5623.53	3.25	0	86	0	0.69	0	0	19.47	0	0	0	0	0	0	-5.85	-5.85
Inverter	MV4-10	369312	4908858	2	0	0	100.3	100.3	1	5667.32	3.25	0	86.07	0	0.69	0	0	19.54	0	0	0	0	0	0	-5.98	-5.98
Inverter	MV4-8	369256	4909001	2	0	0	100.3	100.3	1	5686.82	3.25	0	86.1	0	0.69	0	0	19.56	0	0	0	0	0	0	-6.04	-6.04
Inverter	MV4-1	369011	4909397	2	0	0	100.3	100.3	1	5687.24	3.25	0	86.1	0	0.69	0	0	19.56	0	0	0	0	0	0	-6.04	-6.04
Inverter	MV4-9	369289	4909001	2	0	0	100.3	100.3	1	5715.58	3.25	0	86.14	0	0.69	0	0	19.6	0	0	0	0	0	0	-6.12	-6.12
Inverter	MV4-6	369243	4909192	2	0	0	100.3	100.3	1	5771.99	3.25	0	86.23	0	0.7	0	0	19.68	0	0	0	0	0	0	-6.29	-6.29
Inverter	MV4-5	369289	4909199	2	0	0	100.3	100.3	1	5815	3.25	0	86.29	0	0.7	0	0	19.74	0	0	0	0	0	0	-6.42	-6.42
Inverter	MV4-3	369229	4909397	2	0	0	100.3	100.3	1	5868.94	3.25	0	86.37	0	0.7	0	0	19.81	0	0	0	0	0	0	-6.57	-6.57
Inverter	MV6-2	370085	4907339	2	0	0	100.3	100.3	1	5891.17	3.25	0	86.4	0	0.7	0	0	19.84	0	0	0	0	0	0	-6.64	-6.64
Inverter	MV4-2	369272	4909397	2	0	0	100.3	100.3	1	5905.07	3.25	0	86.42	0	0.7	0	0	19.86	0	0	0	0	0	0	-6.68	-6.68
Inverter	MV6-3	370207	4907140	2	0	0	100.3	100.3	1	5976.59	3.25	0	86.53	0	0.7	0	0	19.96	0	0	0	0	0	0	-6.88	-6.88
Inverter	MV5-5	370015	4908690	2	0	0	100.3	100.3	1	6228.22	3.25	0	86.89	0	0.71	0	0	20.3	0	0	0	0	0	0	-7.59	-7.59
Inverter	MV5-2	370006	4908853	2	0	0	100.3	100.3	1	6286.87	3.25	0	86.97	0	0.71	0	0	20.38	0	0	0	0	0	0	-7.75	-7.75
Inverter	MV2-2	365977	4906654	2	0	0	89.1	89.1	1	1732.21	3.25	0	75.77	0	0.84	0	0	7.6	0	0	0	0	0	0	4.84	4.84
Inverter	MV5-1	370020	4909142	2	0	0	100.3	100.3	1	6426.4	3.25	0	87.16	0	0.71	0	0	20.56	0	0	0	0	0	0	-8.12	-8.12
Inverter	MV5-3	370231	4908851	2	0	0	100.3	100.3	1	6490.81	3.25	0	87.25	0	0.71	0	0	20.65	0	0	0	0	0	0	-8.3	-8.3
Inverter	MV5-4	370324	4908707	2	0	0	100.3	100.3	1	6519.23	3.25	0	87.28	0	0.71	0	0	20.68	0	0	0	0	0	0	-8.37	-8.37
Inverter	MV6-1	370235	4907364	2	0	0	97.3	97.3	1	6043.18	3.25	0	86.63	0	0.71	0	0	20.05	0	0	0	0	0	0	-10.07	-10.07
DSTATCOM - 10 MVAR #2	DSAT2	369403	4908757	2.5	0	0	96.6	96.6	1	5701.97	3.5	0	86.12	0	3.75	0	0	3.7	0	0	0	0	0	0	3.06	3.06
DSTATCOM - 10 MVAR #1	DSAT1	369437	4908757	2.5	0	0	96.6	96.6	1	5732.4	3.5	0	86.17	0	3.75	0	0	3.71	0	0	0	0	0	0	3	3
Gardiner Substation	G_Sub	366586.3	4903349.9	2.5	0	0	90.8	90.8	1	3655.2	4.25	0	82.26	0	1.25	2.71	0.26	6.9	0	0	0	0	0	0	-2.34	-2.34
SubstationTransformer	W_ST	369711.17	4906112.3	2.5	0	0	92	92	1	5407.97	4.25	0	85.66	0	1.74	2.23	0.29	9.09	0	0	0	0	0	0	-6.75	-6.75
Inverter	MV3-1	368156	4907976	2	0	0	89.1	89.1	1	4239.62	3.25	0	83.55	0	1.45	0	0	11.42	0	0	0	0	0	0	-7.36	-7.36
Inverter	MV3-5	368340	4907843	2	0	0	89.1	89.1	1	4355.73	3.25	0	83.78	0	1.48	0	0	11.58	0	0	0	0	0	0	-7.79	-7.79
Inverters	G_Inv1	366526.4	4903225.8	2	0	0	87.7	87.7	1	3716.81	3.25	0	82.4	0	2.77	0	0	4.57	0	0	0	0	0	0	-2.08	-2.08
Inverter	MV3-22	368656	4907142	2	0	0	89.1	89.1	1	4451.73	3.25	0	83.97	0	1.5	0	0	11.72	0	0	0	0	0	0	-8.13	-8.13
Inverters	G_Inv2	366676.9	4903239.1	2	0	0	87.7	87.7	1	3798.32	4.2	0	82.59	0	3.16	1.53	0.01	4.65	0	0	0	0	0	0	-4.28	-4.28
Inverters	G_Inv3	366583.7	4903091.4	2	0	0	87.7	87.7	1	3858.96	3.25	0	82.73	0	2.78	0	0	4.72	0	0	0	0	0	0	-2.57	-2.57
Inverter	MV3-4	368502	4907925	2	0	0	89.1	89.1	1	4536.7	3.25	0	84.13	0	1.53	0	0	11.84	0	0	0	0	0	0	-8.44	-8.44
Inverters	G_Inv4	366732.8	4903105	2	0	0	87.7	87.7	1	3938.16	3.25	0	82.91	0	2.79	0	0	4.81	0	0	0	0	0	0	-2.84	-2.84
Inverter	MV3-2	368671	4907928	2	0	0	89.1	89.1	1	4694.62	3.25	0	84.43	0	1.56	0	0	12.05	0	0	0	0	0	0	-8.99	-8.99
Inverters	G_Inv5	366638.5	4902958.1	2	0	0	87.7	87.7	1	3999.03	3.25	0	83.04	0	2.79	0	0	4.87	0	0	0	0	0	0	-3.04	-3.04
Inverters	G_Inv6	366788.5	4902972	2	0	0	87.7	87.7	1	4077.38	3.25	0	83.21	0	2.8	0	0	4.96	0	0	0	0	0	0	-3.3	-3.3
Inverters	G_Inv7	366694.6	4902824.7	2	0	0	87.7	87.7	1	4140.22	3.25	0	83.34	0	2.8	0	0	5.03	0	0	0	0	0	0	-3.51	-3.51
Inverters	G_Inv8	366844.5	4902838.5	2	0	0	87.7	87.7	1	4217.52	3.25	0	83.5	0	2.81	0	0	5.11	0	0	0	0	0	0	-3.76	-3.76
Inverters	G_Inv9	366750.9	4902691.8	2	0	0	87.7	87.7	1	4281.34	3.25	0	83.63	0	2.81	0	0	5.18	0	0	0	0	0	0	-3.96	-3.96
Westbrook Inverter Enclosur	W_INV2	369374	4906388	2	0	0	89.1	89.1	1	5073.3	3.25	0	85.11	0	1.66	0	0	12.56	0	0	0	0	0	0	-10.27	-10.27
Inverters	G_Inv10	366900.7	4902704.8	2	0	0	87.7	87.7	1	4358.24	3.25	0	83.79	0	2.82	0	0	5.26	0	0	0	0	0	0	-4.21	-4.21
Westbrook Inverter Enclosur	W_INV3	369508	4906164	2	0	0	89.1	89.1	1	5204.16	3.25	0	85.33	0	1.69	0	0	12.74	0	0	0	0	0	0	-10.69	-10.69
Fixed Reactor Bank 1	FRB1	369378	4908755	6	0	0	89.8	89.8	1	5678.73	5.25	0	86.09	0	-0.46	0	0	9.4	0	0	0	0	0	0	-5.24	-5.24
Fixed Reactor Bank 2	FRB2	369464	4908755	6	0	0	89.8	89.8	1	5755.7	5.25	0	86.2	0	-0.45	0	0	9.48	0	0	0	0	0	0	-5.45	-5.45
Inverter	MV4-13	369051	4908605	2	0	0	89.1	89.1	1	5319.21	3.25	0	85.52	0	1.72	0	0	12.89	0	0	0	0	0	0	-11.06	-11.06
Westbrook Inverter Enclosur	W_INV4	369673	4906164	2	0	0	89.1	89.1	1	5369.16	3.25	0	85.6	0	1.73	0	0	12.95	0	0	0	0	0	0	-11.22	-11.22
Inverter	MV4-15	369176	4908481	2	0	0	89.1	89.1	1	5377.41	3.25	0	85.61	0	1.73	0	0	12.96	0	0	0	0	0	0	-11.25	-11.25
Inverter	MV4-14	369176	4908507	2	0	0	89.1	89.1	1	5388.47	3.25	0	85.63	0	1.74	0	0	12.98	0	0	0	0	0	0	-11.28	-11.28
Inverter	MV4-12	369043	4908803	2	0	0	89.1	89.1	1	5404.42	3.25	0	85.65	0	1.74	0	0	13	0	0	0	0	0	0	-11.33	-11.33
Westbrook Inverter Enclosur	W_INV5	369719	4906574	2	0	0	89.1	89.1	1	5427.56	3.25	0	85.69	0	1.75	0	0	13.03	0	0	0	0	0	0	-11.41	-11.41

Westbrook Inverter Enclosur	W_INV7	369780	4906417	2	0	0	89.1	89.1	1	5480.1	3.25	0	85.78	0	1.76	0	0	13.1	0	0	0	0	0	0	-11.57	-11.57
Westbrook Inverter Enclosur	W_INV6	369875	4906578	2	0	0	89.1	89.1	1	5583.47	3.25	0	85.94	0	1.78	0	0	13.23	0	0	0	0	0	0	-11.89	-11.89
Inverter	MV5-6	369982	4908507	2	0	0	89.1	89.1	1	6126.9	3.25	0	86.74	0	1.92	0	0	13.92	0	0	0	0	0	0	-13.53	-13.53
Inverter Transformer	MV1-7 T	364919	4905782	2	0	0	69.4	69.4	1	746.43	3.25	0	68.46	0	1.42	0	0	3.43	0	0	0	0	0	0	-3.96	-3.96
Westbrook Inverter Enclosur	W_INV1	369409	4906578	2	0	0	86.1	86.1	1	5118.61	3.25	0	85.18	0	1.67	0	0	12.62	0	0	0	0	0	0	-13.42	-13.42
Inverter	MV6-4	370250	4906966	2	0	0	86.1	86.1	1	5994.5	3.25	0	86.56	0	1.88	0	0	13.76	0	0	0	0	0	0	-16.14	-16.14
Inverter Transformer	MV1-10 T	365010	4905564	2	0	0	69.4	69.4	1	953.58	3.25	0	70.59	0	1.64	0	0	3.75	0	0	0	0	0	0	-6.63	-6.63
Inverter Transformer	MV1-3 T	364435	4906039	2	0	0	56.1	56.1	1	211.48	3.25	0	57.51	0	0.06	0	0	2.3	0	0	0	0	0	0	-3.81	-3.81
Inverter Transformer	MV1-13 T	364725	4905241	2	0	0	69.4	69.4	1	1051.92	3.25	0	71.44	0	1.72	0	0	3.88	0	0	0	0	0	0	-7.7	-7.7
Inverter Transformer	MV1-14 T	365157	4905049	2	0	0	69.4	69.4	1	1436.65	3.25	0	74.15	0	1.94	0	0	4.36	0	0	0	0	0	0	-11.1	-11.1
Inverter Transformer	MV2-1 T	365836	4906816	2	0	0	69.4	69.4	1	1649.35	3.25	0	75.35	0	2.04	0	0	4.6	0	0	0	0	0	0	-12.63	-12.63
Westbrook Inverter Transfor	W_INVTR1	369403	4906578	2	0	0	78.2	78.2	1	5112.63	3.25	0	85.17	0	-3.2	0	0	2.45	0	0	0	0	0	0	-6.18	-6.18
Inverter Transformer	MV1-6 T	364482	4905835	2	0	0	56.1	56.1	1	410.6	3.25	0	63.27	0	-0.12	0	0	3.25	0	0	0	0	0	0	-10.34	-10.34
Inverter Transformer	MV1-1 T	364721	4906166	2	0	0	56.1	56.1	1	418.83	3.25	0	63.44	0	-0.12	0	0	3.28	0	0	0	0	0	0	-10.54	-10.54
Westbrook Inverter Transfor	W_INVTR2	369368	4906388	2	0	0	77.3	77.3	1	5067.31	3.25	0	85.1	0	-3.19	0	0	2.44	0	0	0	0	0	0	-7	-7
Westbrook Inverter Transfor	W_INVTR3	369514	4906164	2	0	0	77.3	77.3	1	5210.16	3.25	0	85.34	0	-3.22	0	0	2.48	0	0	0	0	0	0	-7.26	-7.26
Westbrook Inverter Transfor	W_INVTR4	369679	4906164	2	0	0	77.3	77.3	1	5375.16	3.25	0	85.61	0	-3.25	0	0	2.54	0	0	0	0	0	0	-7.55	-7.55
Westbrook Inverter Transfor	W_INVTR5	369725	4906574	2	0	0	77.3	77.3	1	5433.54	3.25	0	85.7	0	-3.26	0	0	2.56	0	0	0	0	0	0	-7.66	-7.66
Westbrook Inverter Transfor	W_INVTR7	369786	4906417	2	0	0	77.3	77.3	1	5486.1	3.25	0	85.79	0	-3.27	0	0	2.58	0	0	0	0	0	0	-7.75	-7.75
Inverter Transformer	MV1-2 T	364759	4906063	2	0	0	56.1	56.1	1	476.65	3.25	0	64.56	0	-0.12	0	0	3.48	0	0	0	0	0	0	-11.86	-11.86
Westbrook Inverter Transfor	W_INVTR6	369881	4906578	2	0	0	77.3	77.3	1	5589.46	3.25	0	85.95	0	-3.29	0	0	2.61	0	0	0	0	0	0	-7.92	-7.92
Inverter Transformer	MV1-5 T	364676	4905892	2	0	0	56.1	56.1	1	486.17	3.25	0	64.74	0	-0.12	0	0	3.51	0	0	0	0	0	0	-12.07	-12.07
Inverter Transformer	MV1-4 T	364821	4905918	2	0	0	56.1	56.1	1	591.32	3.25	0	66.44	0	-0.11	0	0	3.83	0	0	0	0	0	0	-14.1	-14.1
Inverter Transformer	MV1-9 T	364555	4905646	2	0	0	56.1	56.1	1	612.77	3.25	0	66.75	0	-0.1	0	0	3.89	0	0	0	0	0	0	-14.48	-14.48
Inverter Transformer	MV1-8 T	364782	4905647	2	0	0	56.1	56.1	1	734.75	3.25	0	68.32	0	-0.07	0	0	4.23	0	0	0	0	0	0	-16.42	-16.42
Inverter Transformer	MV1-11 T	364649	4905414	2	0	0	56.1	56.1	1	862.97	3.25	0	69.72	0	-0.03	0	0	4.55	0	0	0	0	0	0	-18.18	-18.18
Inverter Transformer	MV1-12 T	365044	4905386	2	0	0	56.1	56.1	1	1103.8	3.25	0	71.86	0	0.05	0	0	5.13	0	0	0	0	0	0	-20.98	-20.98
Inverter Transformer	MV6-4 T	370244	4906966	2	0	0	69.4	69.4	1	5988.55	3.25	0	86.55	0	3.19	0	0	8.01	0	0	0	0	0	0	-28.39	-28.39
Inverter Transformer	MV6-1 T	370230	4907364	2	0	0	69.4	69.4	1	6038.27	3.25	0	86.62	0	3.19	0	0	8.04	0	0	0	0	0	0	-28.5	-28.5
Inverter Transformer	MV2-4 T	365590	4906628	2	0	0	56.1	56.1	1	1353.78	3.25	0	73.63	0	0.14	0	0	5.7	0	0	0	0	0	0	-23.41	-23.41
Inverter Transformer	MV2-3 T	365814	4906641	2	0	0	56.1	56.1	1	1571.69	3.25	0	74.93	0	0.23	0	0	6.17	0	0	0	0	0	0	-25.27	-25.27
Inverter Transformer	MV1-15 T	365309	4904994	2	0	0	56.1	56.1	1	1573.71	3.25	0	74.94	0	0.23	0	0	6.17	0	0	0	0	0	0	-25.28	-25.28
Inverter Transformer	MV2-2 T	365982	4906654	2	0	0	56.1	56.1	1	1737.04	3.25	0	75.8	0	0.29	0	0	6.52	0	0	0	0	0	0	-26.55	-26.55
Inverter Transformer	MV3-12 T	367674	4907594	2	0	0	56.1	56.1	1	3645.03	3.25	0	82.23	0	1.1	0	0	9.92	0	0	0	0	0	0	-37.19	-37.19
Inverter Transformer	MV3-18 T	367757	4907412	2	0	0	56.1	56.1	1	3657.88	3.25	0	82.26	0	1.11	0	0	9.94	0	0	0	0	0	0	-37.25	-37.25
Inverter Transformer	MV3-13 T	367958	4907577	2	0	0	56.1	56.1	1	3903.09	3.25	0	82.83	0	1.21	0	0	10.31	0	0	0	0	0	0	-38.28	-38.28
Inverter Transformer	MV3-7 T	367951	4907754	2	0	0	56.1	56.1	1	3962.32	3.25	0	82.96	0	1.23	0	0	10.4	0	0	0	0	0	0	-38.53	-38.53
Inverter Transformer	MV3-3 T	367944	4907927	2	0	0	56.1	56.1	1	4026.77	3.25	0	83.1	0	1.25	0	0	10.49	0	0	0	0	0	0	-38.79	-38.79
Inverter Transformer	MV3-17 T	368183	4907472	2	0	0	56.1	56.1	1	4080.68	3.25	0	83.21	0	1.28	0	0	10.57	0	0	0	0	0	0	-39.01	-39.01
Inverter Transformer	MV3-10 T	368162	4907669	2	0	0	56.1	56.1	1	4126.44	3.25	0	83.31	0	1.29	0	0	10.64	0	0	0	0	0	0	-39.19	-39.19
Inverter Transformer	MV3-6 T	368156	4907834	2	0	0	56.1	56.1	1	4182.29	3.25	0	83.43	0	1.32	0	0	10.72	0	0	0	0	0	0	-39.41	-39.41
Inverter Transformer	MV3-19 T	368352	4907347	2	0	0	56.1	56.1	1	4206	3.25	0	83.48	0	1.33	0	0	10.76	0	0	0	0	0	0	-39.5	-39.5
Inverter Transformer	MV3-1 T	368150	4907976	2	0	0	56.1	56.1	1	4234.17	3.25	0	83.54	0	1.34	0	0	10.8	0	0	0	0	0	0	-39.61	-39.61
Inverter Transformer	MV3-15 T	368351	4907477	2	0	0	56.1	56.1	1	4242.19	3.25	0	83.55	0	1.34	0	0	10.81	0	0	0	0	0	0	-39.64	-39.64
Inverter Transformer	MV3-11 T	368340	4907662	2	0	0	56.1	56.1	1	4290.94	3.25	0	83.65	0	1.36	0	0	10.88	0	0	0	0	0	0	-39.83	-39.83
Inverter Transformer	MV3-21 T	368484	4907206	2	0	0	56.1	56.1	1	4298.19	3.25	0	83.67	0	1.36	0	0	10.89	0	0	0	0	0	0	-39.86	-39.86
Inverter Transformer	MV3-5 T	368335	4907843	2	0	0	56.1	56.1	1	4351.09	3.25	0	83.77	0	1.38	0	0	10.97	0	0	0	0	0	0	-40.06	-40.06
Inverter Transformer	MV3-16 T	368509	4907475	2	0	0	56.1	56.1	1	4392.6	3.25	0	83.85	0	1.4	0	0	11.02	0	0	0	0	0	0	-40.22	-40.22
Inverter Transformer	MV3-22 T	368661	4907142	2	0	0	56.1	56.1	1	4456.62	3.25	0	83.98	0	1.42	0	0	11.11	0	0	0	0	0	0	-40.46	-40.46
Inverter Transformer	MV3-9 T	368517	4907703	2	0	0	56.1	56.1	1	4471.4	3.25	0	84.01	0	1.43	0	0	11.14	0	0	0	0	0	0	-40.51	-40.51
Inverter Transformer	MV3-20 T	368683	4907317	2	0	0	56.1	56.1	1	4517.99	3.25	0	84.1	0	1.45	0	0	11.2	0	0	0	0	0	0	-40.69	-40.69
Inverter Transformer	MV3-4 T	368507	4907925	2	0	0	56.1	56.1	1	4541.32	3.25	0	84.14	0	1.46	0	0	11.23	0	0	0	0	0	0	-40.77	-40.77
Inverter Transformer	MV3-14 T	368678	4907498	2	0	0	56.1	56.1	1	4561.11	3.25	0	84.18	0	1.46	0	0	11.26	0	0	0	0	0	0	-40.85	-40.85
Inverter Transformer	MV3-8 T	368685	4907712	2	0	0	56.1	56.1	1	4632.95	3.25	0	84.32	0	1.49	0	0	11.36	0	0	0	0	0	0	-41.11	-41.11
Inverter Transformer	MV3-2 T	368677	4907928	2	0	0	56.1	56.1	1	4700.2	3.25	0	84.44	0	1.52	0	0	11.45	0	0	0	0	0	0	-41.35	-41.35
Inverter Transformer	MV4-13 T	369057	4908605	2	0	0	56.1	56.1	1	5324.57	3.25	0	85.53	0	1.74	0	0	12.27	0	0	0	0	0	0	-43.48	-43.48
Inverter Transformer	MV4-15 T	369170	4908481	2	0	0	56.1	56.1	1	5371.98	3.25	0	85.6	0	1.76	0	0	12.33	0	0	0	0	0	0	-43.64	-43.64
Inverter Transformer	MV4-14 T	369182	4908507	2	0	0	56.1	56.1	1	5393.89	3.25	0	85.64	0	1.76	0	0	12.36	0	0	0	0	0	0	-43.71	-43.71
Inverter Transformer	MV4-12 T	369049	4908803	2	0	0	56.1	56.1	1	5409.68	3.25	0	85.66	0	1.77	0	0	12.38	0	0	0	0	0	0	-43.76	-43.76
Inverter Transformer	MV4-7 T	369040	4909001	2	0	0	56.1	56.1	1	5499.76	3.25	0	85.81	0	1.8	0	0	12.5	0	0	0	0	0	0	-44.04	-44.04
Inverter Transformer	MV4-4 T	369033	4909199	2	0	0	56.1	56.1	1	5597.1	3.25	0	85.96	0	1.83	0	0	12.62	0	0	0	0	0	0	-44.35	-44.35
Inverter Transformer	MV4-11 T	369269	4908855	2	0	0	56.1	56.1	1	5627.94	3.25	0	86.01	0	1.84	0	0	12.65	0	0	0	0	0	0	-44.45	-44.45
Inverter Transformer	MV4-10 T	369307	4908858	2	0	0	56.1	56.1	1	5662.9	3.25	0	86.06	0	1.86	0	0	12.7	0	0	0	0	0	0	-44.55	-44.55
Inverter Transformer	MV4-8 T	369262	4909001	2	0	0	56.1	56.1	1	5692.05	3.25	0	86.11	0	1.86	0	0	12.73	0	0	0	0	0	0	-44.64	-44.64
Inverter Transformer	MV4-1 T	369017	4909397	2	0	0	56.1	56.1	1	5692.21	3.25	0	86.11	0	1.87	0	0	12.73	0	0	0	0	0	0	-44.64	-44.64
Inverter Transformer	MV4-9 T	369284	4909001	2	0	0	56.1	56.1	1	5711.22	3.25	0	86.13	0	1.87	0	0	12.76	0	0	0	0	0	0	-44.7	-44.7
Inverter Transformer	MV4-6 T	369249	4909192	2	0	0	56.1	56.1	1	5777.13	3.25	0	86.23	0	1.89	0	0	12.84	0	0	0	0	0	0	-44.9	-44.9
Inverter Transformer	MV4-5 T	369283	4909199	2	0	0	56.1	56.1	1	5809.86	3.25	0	86.28	0	1.9	0	0	12.88	0	0	0	0	0	0	-45	-45
Inverter Transformer	MV4-3 T	369234	4909397	2	0	0	56.1	56.1	1	5873.14	3.25	0	86.38	0	1.92	0	0	12.95	0	0	0	0	0	0	-45.19	-45.19
Inverter Transformer	MV6-2 T	370091	4907339	2	0	0	56.1	56.1	1	5897.06	3.25	0	86.41	0	1.93	0	0	12.98	0	0	0	0	0	0	-45.27	-45.27
Inverter Transformer	MV4-2 T	369267	4909397	2	0	0	56.1	56.1	1	5900.87	3.25	0	86.42	0	1.93	0	0	12.98	0	0	0	0	0	0	-45.28	-45.28
Inverter Transformer	MV6-3 T	370202	4907140	2	0	0	56.1	56.1	1	5971.65	3.25	0	86.52	0	1.96	0	0	13.07	0	0	0	0	0	0	-45.49	-45.49
Inverter Transformer	MV5-6 T	369987	4908507	2	0	0	56.1	56.1	1	6131.53	3.25	0	86.75	0	2.01	0	0	13.26	0	0	0	0	0	0	-45.96	-45.96
Inverter Transformer	MV5-5 T	370021	4908690	2	0	0	56.1	56.1	1	6233.72	3.25	0	86.89	0	2.04	0	0	13.38	0	0	0	0	0	0	-46.25	-46.25

	Inverter Transformer	MV5-2 T	370011	4908853	2	0	0	56.1	56.1	1	6291.4	3.25	0	86.97	0	2.06	0	0	13.44	0	0	0	0	0	0	-46.41	-46.41
	Inverter Transformer	MV5-1 T	370015	4909142	2	0	0	56.1	56.1	1	6421.95	3.25	0	87.15	0	2.09	0	0	13.59	0	0	0	0	0	0	-46.78	-46.78
	Inverter Transformer	MV5-3 T	370237	4908851	2	0	0	56.1	56.1	1	6496.29	3.25	0	87.25	0	2.12	0	0	13.68	0	0	0	0	0	0	-46.99	-46.99
	Inverter Transformer	MV5-4 T	370330	4908707	2	0	0	56.1	56.1	1	6524.77	3.25	0	87.29	0	2.13	0	0	13.71	0	0	0	0	0	0	-47.07	-47.07
	Line Reactor	NGR	369421	4908787.5	5	0	0	45.4	45.4	1	5731.75	5.25	0	86.17	0	3.24	1.36	0.1	2.34	0	0	0	0	0	0	-47.76	-47.76
Limit. Valu	0	0																								
Level D/N:	37.068	37.068																								

Receiver: Existing Noise Receptor
ID: S-R4
X: 364216
Y: 4906053
Z: 4.5
Ground: 0

ISO	Description	ID	X	Y	Z	Ground	ReflOrd	LxT	LxN	L/A	Dist.	hm	Freq	Adiv	K0b	Agr	Abar	z	Aatm	Afol	Ahous	Cmet	CmetN	Dc	RL	LtotT	LtotN
	Inverter	MV1-6	364477	4905835	2	0	0	100.3	100.3	1	340.08	3.25	0	61.63	0	-0.65	0	0	6.93	0	0	0	0	0	0	32.39	32.39
	Inverter	MV1-5	364671	4905892	2	0	0	100.3	100.3	1	482.65	3.25	0	64.67	0	-0.56	0	0	8.39	0	0	0	0	0	0	27.82	27.82
	Inverter	MV1-1	364715	4906166	2	0	0	100.3	100.3	1	511.64	3.25	0	65.18	0	-0.54	0	0	8.61	0	0	0	0	0	0	27.06	27.06
	Inverter	MV1-9	364561	4905646	2	0	0	100.3	100.3	1	533.55	3.25	0	65.54	0	-0.53	0	0	8.77	0	0	0	0	0	0	26.52	26.52
	Inverter	MV1-2	364753	4906063	2	0	0	100.3	100.3	1	537.1	3.25	0	65.6	0	-0.52	0	0	8.8	0	0	0	0	0	0	26.44	26.44
	Inverter	MV1-4	364815	4905918	2	0	0	100.3	100.3	1	614.03	3.25	0	66.76	0	-0.47	0	0	9.29	0	0	0	0	0	0	24.73	24.73
	Inverter	MV1-8	364788	4905647	2	0	0	100.3	100.3	1	701.45	3.25	0	67.92	0	-0.41	0	0	9.74	0	0	0	0	0	0	23.06	23.06
	Inverter	MV1-11	364655	4905414	2	0	0	100.3	100.3	1	775.27	3.25	0	68.79	0	-0.37	0	0	10.08	0	0	0	0	0	0	21.81	21.81
	Inverter	MV1-3	364440	4906039	2	0	0	89.1	89.1	1	224.45	3.25	0	58.02	0	0.33	0	0	3.48	0	0	0	0	0	0	27.22	27.22
	Inverter	MV1-12	365038	4905386	2	0	0	100.3	100.3	1	1058.57	3.25	0	71.49	0	-0.22	0	0	11.1	0	0	0	0	0	0	17.94	17.94
	Inverter	MV1-7	364925	4905782	2	0	0	97.3	97.3	1	759.03	3.25	0	68.61	0	-0.38	0	0	10.01	0	0	0	0	0	0	19.07	19.07
	Inverter	MV1-10	365004	4905564	2	0	0	97.3	97.3	1	927.4	3.25	0	70.35	0	-0.28	0	0	10.66	0	0	0	0	0	0	16.59	16.59
	Inverter	MV1-13	364731	4905241	2	0	0	97.3	97.3	1	961.55	3.25	0	70.66	0	-0.27	0	0	10.78	0	0	0	0	0	0	16.14	16.14
	Inverter	MV2-4	365586	4906624	2	0	0	100.3	100.3	1	1484.23	3.25	0	74.43	0	-0.04	0	0	12.29	0	0	0	0	0	0	13.64	13.64
	Sol_Luce Substation	S_Substation	369426	4908792	3.5	0	0	112.1	112.1	1	5886.1	5.25	0	86.4	0	1.13	2.67	0.29	9.62	0	0	0	0	0	0	12.26	12.26
	Inverter	MV1-15	365315	4904994	2	0	0	100.3	100.3	1	1526.2	3.25	0	74.67	0	-0.02	0	0	12.39	0	0	0	0	0	0	13.27	13.27
	Inverter	MV2-3	365820	4906641	2	0	0	100.3	100.3	1	1708.38	3.25	0	75.65	0	0.04	0	0	12.82	0	0	0	0	0	0	11.8	11.8
	Inverter	MV1-14	365163	4905049	2	0	0	97.3	97.3	1	1380.16	3.25	0	73.8	0	-0.08	0	0	12.02	0	0	0	0	0	0	11.57	11.57
	Inverter	MV2-1	365842	4906816	2	0	0	97.3	97.3	1	1796.12	3.25	0	76.09	0	0.07	0	0	13.02	0	0	0	0	0	0	8.14	8.14
	Inverter	MV3-12	367668	4907594	2	0	0	100.3	100.3	1	3780.34	3.25	0	82.55	0	0.5	0	0	16.69	0	0	0	0	0	0	0.57	0.57
	Inverter	MV3-18	367752	4907412	2	0	0	100.3	100.3	1	3788.16	3.25	0	82.57	0	0.5	0	0	16.71	0	0	0	0	0	0	0.54	0.54
	Inverter	MV3-13	367963	4907577	2	0	0	100.3	100.3	1	4045.07	3.25	0	83.14	0	0.53	0	0	17.12	0	0	0	0	0	0	-0.48	-0.48
	Inverter	MV3-7	367945	4907754	2	0	0	100.3	100.3	1	4098.64	3.25	0	83.25	0	0.54	0	0	17.21	0	0	0	0	0	0	-0.69	-0.69
	Inverter	MV3-3	367939	4907927	2	0	0	100.3	100.3	1	4168.05	3.25	0	83.4	0	0.55	0	0	17.31	0	0	0	0	0	0	-0.95	-0.95
	Inverter	MV3-17	368178	4907472	2	0	0	100.3	100.3	1	4208.45	3.25	0	83.48	0	0.56	0	0	17.38	0	0	0	0	0	0	-1.1	-1.1
	Inverter	MV3-10	368167	4907669	2	0	0	100.3	100.3	1	4268.71	3.25	0	83.61	0	0.56	0	0	17.47	0	0	0	0	0	0	-1.33	-1.33
	Inverter	MV3-6	368162	4907834	2	0	0	100.3	100.3	1	4329.31	3.25	0	83.73	0	0.57	0	0	17.57	0	0	0	0	0	0	-1.55	-1.55
	Inverter	MV3-19	368357	4907347	2	0	0	100.3	100.3	1	4338.47	3.25	0	83.75	0	0.57	0	0	17.58	0	0	0	0	0	0	-1.59	-1.59
	Inverter	MV3-15	368357	4907477	2	0	0	100.3	100.3	1	4379	3.25	0	83.83	0	0.58	0	0	17.64	0	0	0	0	0	0	-1.74	-1.74
	Inverter	MV3-21	368478	4907206	2	0	0	100.3	100.3	1	4415.21	3.25	0	83.9	0	0.58	0	0	17.7	0	0	0	0	0	0	-1.87	-1.87
	Inverter	MV3-11	368346	4907662	2	0	0	100.3	100.3	1	4432.36	3.25	0	83.93	0	0.58	0	0	17.73	0	0	0	0	0	0	-1.93	-1.93
	Inverter	MV3-16	368514	4907475	2	0	0	100.3	100.3	1	4527.13	3.25	0	84.12	0	0.59	0	0	17.87	0	0	0	0	0	0	-2.27	-2.27
	Inverter	MV3-9	368512	4907703	2	0	0	100.3	100.3	1	4601.97	3.25	0	84.26	0	0.6	0	0	17.99	0	0	0	0	0	0	-2.53	-2.53
	Inverter	MV3-20	368689	4907317	2	0	0	100.3	100.3	1	4648.16	3.25	0	84.35	0	0.61	0	0	18.06	0	0	0	0	0	0	-2.7	-2.7
	Inverter	MV3-14	368684	4907498	2	0	0	100.3	100.3	1	4695.86	3.25	0	84.43	0	0.61	0	0	18.13	0	0	0	0	0	0	-2.86	-2.86
	Inverter	MV3-8	368680	4907712	2	0	0	100.3	100.3	1	4762.31	3.25	0	84.56	0	0.62	0	0	18.23	0	0	0	0	0	0	-3.09	-3.09
	Inverter	MV4-7	369035	4909001	2	0	0	100.3	100.3	1	5649.2	3.25	0	86.04	0	0.69	0	0	19.51	0	0	0	0	0	0	-5.93	-5.93
	Inverter	MV4-4	369027	4909199	2	0	0	100.3	100.3	1	5748.31	3.25	0	86.19	0	0.69	0	0	19.65	0	0	0	0	0	0	-6.22	-6.22
	Inverter	MV4-11	369264	4908855	2	0	0	100.3	100.3	1	5773.52	3.25	0	86.23	0	0.7	0	0	19.68	0	0	0	0	0	0	-6.3	-6.3
	Inverter	MV4-10	369312	4908858	2	0	0	100.3	100.3	1	5816.98	3.25	0	86.29	0	0.7	0	0	19.74	0	0	0	0	0	0	-6.42	-6.42
	Inverter	MV4-8	369256	4909001	2	0	0	100.3	100.3	1	5838.86	3.25	0	86.33	0	0.7	0	0	19.77	0	0	0	0	0	0	-6.49	-6.49
	Inverter	MV4-1	369011	4909397	2	0	0	100.3	100.3	1	5845.88	3.25	0	86.34	0	0.7	0	0	19.78	0	0	0	0	0	0	-6.51	-6.51
	Inverter	MV4-9	369289	4909001	2	0	0	100.3	100.3	1	5867.37	3.25	0	86.37	0	0.7	0	0	19.81	0	0	0	0	0	0	-6.57	-6.57
	Inverter	MV4-6	369243	4909192	2	0	0	100.3	100.3	1	5926.56	3.25	0	86.46	0	0.7	0	0	19.89	0	0	0	0	0	0	-6.74	-6.74
	Inverter	MV4-5	369289	4909199	2	0	0	100.3	100.3	1	5969.31	3.25	0	86.52	0	0.7	0	0	19.95	0	0	0	0	0	0	-6.86	-6.86
	Inverter	MV6-2	370085	4907339	2	0	0	100.3	100.3	1	6008.24	3.25	0	86.57	0	0.71	0	0	20	0	0	0	0	0	0	-6.97	-6.97
	Inverter	MV4-3	369229	4909397	2	0	0	100.3	100.3	1	6025.99	3.25	0	86.6	0	0.71	0	0	20.03	0	0	0	0	0	0	-7.02	-7.02
	Inverter	MV4-2	369272	4909397	2	0	0	100.3	100.3	1	6061.8	3.25	0	86.65	0	0.71	0	0	20.08	0	0	0	0	0	0	-7.12	-7.12
	Inverter	MV6-3	370207	4907140	2	0	0	100.3	100.3	1	6088.81	3.25	0	86.69	0	0.71	0	0	20.11	0	0	0	0	0	0	-7.2	-7.2
	Inverter	MV5-5	370015	4908690	2	0	0	100.3	100.3	1	6370.41	3.25	0	87.08	0	0.71	0	0	20.49	0	0	0	0	0	0	-7.97	-7.97
	Inverter	MV5-2	370006	4908853	2	0	0	100.3	100.3	1	6431.49	3.25	0	87.17	0	0.71	0	0	20.57	0	0	0	0	0	0	-8.14	-8.14
	Inverter	MV5-1	370020	4909142	2	0	0	100.3	100.3	1	6574.83	3.25	0	87.36	0	0.72	0	0	20.76	0	0	0	0	0	0	-8.52	-8.52
	Inverter	MV5-3	370231	4908851	2	0	0	100.3	100.3	1	6633.93	3.25	0	87.44	0	0.71	0	0	20.83	0	0	0	0	0	0	-8.67	-8.67
	Inverter	MV5-4	370324	4908707	2	0	0	100.3	100.3	1	6659.68	3.25	0	87.47	0	0.71	0	0	20.87	0	0	0	0	0	0	-8.74	-8.74
	Inverter	MV2-2	365977	4906654	2	0	0	89.1	89.1	1	1860.73	3.25	0	76.39	0	0.87	0	0	7.82	0	0	0	0	0	0	3.97	3.97
	Inverter	MV6-1	370235	4907364	2	0	0	97.3	97.3	1	6160.12	3.25	0	86.79	0	0.71	0	0	20.21	0	0	0	0	0	0	-10.4	-10.4
	DSTATCOM - 10 MVAR #2	DSAT2	369403	4908757	2.5	0	0	96.6	96.6	1	5849.49	3.5	0	86.34	0	3.76	0	0	3.77	0	0	0	0	0	0	2.76	2.76
	DSTATCOM - 10 MVAR #1	DSAT1	369437	4908757	2.5	0	0	96.6	96.6	1	5879.67	3.5	0	86.39	0	3.76	0	0	3.78	0	0	0	0	0	0	2.7	2.7

Gardiner Substation	G_Sub	366586.3	4903349.9	2.5	0	0	90.8	90.8	1	3595.15	4.25	0	82.11	0	1.24	2.73	0.26	6.82	0	0	0	0	0	0	-2.12	-2.12
SubstationTransformer	W_ST	369711.17	4906112.3	2.5	0	0	92	92	1	5495.49	4.25	0	85.8	0	1.76	2.21	0.29	9.19	0	0	0	0	0	0	-6.99	-6.99
Inverters	G_Inv1	366526.4	4903225.8	2	0	0	87.7	87.7	1	3651.17	3.25	0	82.25	0	2.76	0	0	4.49	0	0	0	0	0	0	-1.84	-1.84
Inverter	MV3-1	368156	4907976	2	0	0	89.1	89.1	1	4384.24	3.25	0	83.84	0	1.49	0	0	11.62	0	0	0	0	0	0	-7.89	-7.89
Inverters	G_Inv2	366676.9	4903239.1	2	0	0	87.7	87.7	1	3738.19	3.25	0	82.45	0	2.77	0	0	4.59	0	0	0	0	0	0	-2.15	-2.15
Inverters	G_Inv3	366583.7	4903091.4	2	0	0	87.7	87.7	1	3791.71	3.25	0	82.58	0	2.77	0	0	4.65	0	0	0	0	0	0	-2.34	-2.34
Inverter	MV3-5	368340	4907843	2	0	0	89.1	89.1	1	4495.72	3.25	0	84.06	0	1.51	0	0	11.78	0	0	0	0	0	0	-8.29	-8.29
Inverters	G_Inv4	366732.8	4903105	2	0	0	87.7	87.7	1	3876.21	3.25	0	82.77	0	2.78	0	0	4.74	0	0	0	0	0	0	-2.63	-2.63
Inverter	MV3-22	368656	4907142	2	0	0	89.1	89.1	1	4571.6	3.25	0	84.2	0	1.53	0	0	11.88	0	0	0	0	0	0	-8.56	-8.56
Inverters	G_Inv5	366638.5	4902958.1	2	0	0	87.7	87.7	1	3930.26	3.25	0	82.89	0	2.79	0	0	4.8	0	0	0	0	0	0	-2.81	-2.81
Inverter	MV3-4	368502	4907925	2	0	0	89.1	89.1	1	4676.98	3.25	0	84.4	0	1.56	0	0	12.03	0	0	0	0	0	0	-8.93	-8.93
Inverters	G_Inv6	366788.5	4902972	2	0	0	87.7	87.7	1	4013.77	3.25	0	83.07	0	2.79	0	0	4.89	0	0	0	0	0	0	-3.09	-3.09
Inverters	G_Inv7	366694.6	4902824.7	2	0	0	87.7	87.7	1	4070.06	3.25	0	83.19	0	2.8	0	0	4.95	0	0	0	0	0	0	-3.28	-3.28
Inverter	MV3-2	368671	4907928	2	0	0	89.1	89.1	1	4833.49	3.25	0	84.69	0	1.6	0	0	12.24	0	0	0	0	0	0	-9.47	-9.47
Inverters	G_Inv8	366844.5	4902838.5	2	0	0	87.7	87.7	1	4152.35	3.25	0	83.37	0	2.8	0	0	5.04	0	0	0	0	0	0	-3.55	-3.55
Inverters	G_Inv9	366750.9	4902691.8	2	0	0	87.7	87.7	1	4209.92	3.25	0	83.49	0	2.81	0	0	5.1	0	0	0	0	0	0	-3.73	-3.73
Inverters	G_Inv10	366900.7	4902704.8	2	0	0	87.7	87.7	1	4291.63	3.25	0	83.65	0	2.82	0	0	5.19	0	0	0	0	0	0	-4	-4
Westbrook Inverter Enclosur	W_INV2	369374	4906388	2	0	0	89.1	89.1	1	5168.87	3.25	0	85.27	0	1.68	0	0	12.69	0	0	0	0	0	0	-10.58	-10.58
Westbrook Inverter Enclosur	W_INV3	369508	4906164	2	0	0	89.1	89.1	1	5293.16	3.25	0	85.47	0	1.71	0	0	12.85	0	0	0	0	0	0	-10.98	-10.98
Fixed Reactor Bank 1	FRB1	369378	4908755	6	0	0	89.8	89.8	1	5826.41	5.25	0	86.31	0	-0.44	0	0	9.56	0	0	0	0	0	0	-5.64	-5.64
Fixed Reactor Bank 2	FRB2	369464	4908755	6	0	0	89.8	89.8	1	5902.74	5.25	0	86.42	0	-0.43	0	0	9.64	0	0	0	0	0	0	-5.85	-5.85
Westbrook Inverter Enclosur	W_INV4	369673	4906164	2	0	0	89.1	89.1	1	5458.13	3.25	0	85.74	0	1.75	0	0	13.07	0	0	0	0	0	0	-11.5	-11.5
Inverter	MV4-13	369051	4908605	2	0	0	89.1	89.1	1	5467.17	3.25	0	85.76	0	1.76	0	0	13.08	0	0	0	0	0	0	-11.53	-11.53
Inverter	MV4-15	369176	4908481	2	0	0	89.1	89.1	1	5522.39	3.25	0	85.84	0	1.77	0	0	13.15	0	0	0	0	0	0	-11.7	-11.7
Westbrook Inverter Enclosur	W_INV5	369719	4906574	2	0	0	89.1	89.1	1	5527.61	3.25	0	85.85	0	1.77	0	0	13.16	0	0	0	0	0	0	-11.72	-11.72
Inverter	MV4-14	369176	4908507	2	0	0	89.1	89.1	1	5533.87	3.25	0	85.86	0	1.77	0	0	13.17	0	0	0	0	0	0	-11.74	-11.74
Inverter	MV4-12	369043	4908803	2	0	0	89.1	89.1	1	5555.4	3.25	0	85.89	0	1.78	0	0	13.19	0	0	0	0	0	0	-11.81	-11.81
Westbrook Inverter Enclosur	W_INV7	369780	4906417	2	0	0	89.1	89.1	1	5575.89	3.25	0	85.93	0	1.78	0	0	13.22	0	0	0	0	0	0	-11.87	-11.87
Westbrook Inverter Enclosur	W_INV6	369875	4906578	2	0	0	89.1	89.1	1	5683.3	3.25	0	86.09	0	1.81	0	0	13.36	0	0	0	0	0	0	-12.2	-12.2
Inverter	MV5-6	369982	4908507	2	0	0	89.1	89.1	1	6266.49	3.25	0	86.94	0	1.95	0	0	14.1	0	0	0	0	0	0	-13.93	-13.93
Inverter Transformer	MV1-7 T	364919	4905782	2	0	0	69.4	69.4	1	753.43	3.25	0	68.54	0	1.43	0	0	3.44	0	0	0	0	0	0	-4.06	-4.06
Westbrook Inverter Enclosur	W_INV1	369409	4906578	2	0	0	86.1	86.1	1	5219.47	3.25	0	85.35	0	1.69	0	0	12.76	0	0	0	0	0	0	-13.74	-13.74
Inverter	MV6-4	370250	4906966	2	0	0	86.1	86.1	1	6102.68	3.25	0	86.71	0	1.91	0	0	13.89	0	0	0	0	0	0	-16.45	-16.45
Inverter Transformer	MV1-10 T	365010	4905564	2	0	0	69.4	69.4	1	932.5	3.25	0	70.39	0	1.63	0	0	3.72	0	0	0	0	0	0	-6.38	-6.38
Inverter Transformer	MV1-13 T	364725	4905241	2	0	0	69.4	69.4	1	958.35	3.25	0	70.63	0	1.65	0	0	3.75	0	0	0	0	0	0	-6.68	-6.68
Inverter Transformer	MV1-3 T	364435	4906039	2	0	0	56.1	56.1	1	219.46	3.25	0	57.83	0	0.04	0	0	2.35	0	0	0	0	0	0	-4.16	-4.16
Inverter Transformer	MV1-14 T	365157	4905049	2	0	0	69.4	69.4	1	1376.05	3.25	0	73.77	0	1.92	0	0	4.29	0	0	0	0	0	0	-10.63	-10.63
Inverter Transformer	MV1-6 T	364482	4905835	2	0	0	56.1	56.1	1	343.93	3.25	0	61.73	0	-0.1	0	0	2.98	0	0	0	0	0	0	-8.56	-8.56
Inverter Transformer	MV2-1 T	365836	4906816	2	0	0	69.4	69.4	1	1790.69	3.25	0	76.06	0	2.09	0	0	4.75	0	0	0	0	0	0	-13.55	-13.55
Westbrook Inverter Transfor	W_INVTR1	369403	4906578	2	0	0	78.2	78.2	1	5213.5	3.25	0	85.34	0	-3.22	0	0	2.49	0	0	0	0	0	0	-6.37	-6.37
Westbrook Inverter Transfor	W_INVTR2	369368	4906388	2	0	0	77.3	77.3	1	5162.88	3.25	0	85.26	0	-3.21	0	0	2.47	0	0	0	0	0	0	-7.17	-7.17
Westbrook Inverter Transfor	W_INVTR3	369514	4906164	2	0	0	77.3	77.3	1	5299.16	3.25	0	85.48	0	-3.24	0	0	2.51	0	0	0	0	0	0	-7.42	-7.42
Westbrook Inverter Transfor	W_INVTR4	369679	4906164	2	0	0	77.3	77.3	1	5464.13	3.25	0	85.75	0	-3.27	0	0	2.57	0	0	0	0	0	0	-7.71	-7.71
Westbrook Inverter Transfor	W_INVTR5	369725	4906574	2	0	0	77.3	77.3	1	5533.58	3.25	0	85.86	0	-3.28	0	0	2.59	0	0	0	0	0	0	-7.83	-7.83
Westbrook Inverter Transfor	W_INVTR7	369786	4906417	2	0	0	77.3	77.3	1	5581.88	3.25	0	85.94	0	-3.29	0	0	2.61	0	0	0	0	0	0	-7.91	-7.91
Inverter Transformer	MV1-5 T	364676	4905892	2	0	0	56.1	56.1	1	487.37	3.25	0	64.76	0	-0.12	0	0	3.51	0	0	0	0	0	0	-12.09	-12.09
Westbrook Inverter Transfor	W_INVTR6	369881	4906578	2	0	0	77.3	77.3	1	5689.28	3.25	0	86.1	0	-3.31	0	0	2.64	0	0	0	0	0	0	-8.09	-8.09
Inverter Transformer	MV1-1 T	364721	4906166	2	0	0	56.1	56.1	1	517.49	3.25	0	65.28	0	-0.12	0	0	3.61	0	0	0	0	0	0	-12.71	-12.71
Inverter Transformer	MV1-9 T	364555	4905646	2	0	0	56.1	56.1	1	529.69	3.25	0	65.48	0	-0.11	0	0	3.65	0	0	0	0	0	0	-12.95	-12.95
Inverter Transformer	MV1-2 T	364759	4906063	2	0	0	56.1	56.1	1	543.1	3.25	0	65.7	0	-0.11	0	0	3.69	0	0	0	0	0	0	-13.21	-13.21
Inverter Transformer	MV1-4 T	364821	4905918	2	0	0	56.1	56.1	1	619.88	3.25	0	66.85	0	-0.1	0	0	3.91	0	0	0	0	0	0	-14.6	-14.6
Inverter Transformer	MV1-8 T	364782	4905647	2	0	0	56.1	56.1	1	696.56	3.25	0	67.86	0	-0.08	0	0	4.12	0	0	0	0	0	0	-15.84	-15.84
Inverter Transformer	MV1-11 T	364649	4905414	2	0	0	56.1	56.1	1	771.89	3.25	0	68.75	0	-0.06	0	0	4.32	0	0	0	0	0	0	-16.95	-16.95
Inverter Transformer	MV1-12 T	365044	4905386	2	0	0	56.1	56.1	1	1063.24	3.25	0	71.53	0	0.03	0	0	5.04	0	0	0	0	0	0	-20.55	-20.55
Inverter Transformer	MV6-4 T	370244	4906966	2	0	0	69.4	69.4	1	6096.75	3.25	0	86.7	0	3.2	0	0	8.08	0	0	0	0	0	0	-28.63	-28.63
Inverter Transformer	MV6-1 T	370230	4907364	2	0	0	69.4	69.4	1	6155.24	3.25	0	86.78	0	3.21	0	0	8.11	0	0	0	0	0	0	-28.76	-28.76
Inverter Transformer	MV2-4 T	365590	4906628	2	0	0	56.1	56.1	1	1489.47	3.25	0	74.46	0	0.19	0	0	6	0	0	0	0	0	0	-24.59	-24.59
Inverter Transformer	MV1-15 T	365309	4904994	2	0	0	56.1	56.1	1	1521.89	3.25	0	74.65	0	0.21	0	0	6.06	0	0	0	0	0	0	-24.86	-24.86
Inverter Transformer	MV2-3 T	365814	4906641	2	0	0	56.1	56.1	1	1702.75	3.25	0	75.62	0	0.28	0	0	6.44	0	0	0	0	0	0	-26.29	-26.29
Inverter Transformer	MV2-2 T	365982	4906654	2	0	0	56.1	56.1	1	1865.47	3.25	0	76.42	0	0.35	0	0	6.78	0	0	0	0	0	0	-27.48	-27.48
Inverter Transformer	MV3-12 T	367674	4907594	2	0	0	56.1	56.1	1	3785.82	3.25	0	82.56	0	1.16	0	0	10.13	0	0	0	0	0	0	-37.79	-37.79
Inverter Transformer	MV3-18 T	367757	4907412	2	0	0	56.1	56.1	1	3792.83	3.25	0	82.58	0	1.16	0	0	10.14	0	0	0	0	0	0	-37.82	-37.82
Inverter Transformer	MV3-13 T	367958	4907577	2	0	0	56.1	56.1	1	4040.44	3.25	0	83.13	0	1.26	0	0	10.51	0	0	0	0	0	0	-38.85	-38.85
Inverter Transformer	MV3-7 T	367951	4907754	2	0	0	56.1	56.1	1	4104.1	3.25	0	83.26	0	1.29	0	0	10.61	0	0	0	0	0	0	-39.1	-39.1
Inverter Transformer	MV3-3 T	367944	4907927	2	0	0	56.1	56.1	1	4172.51	3.25	0	83.41	0	1.31	0	0	10.71	0	0	0	0	0	0	-39.37	-39.37
Inverter Transformer	MV3-17 T	368183	4907472	2	0	0	56.1	56.1	1	4213.15	3.25	0	83.49	0	1.33	0	0	10.77	0	0	0	0	0	0	-39.53	-39.53
Inverter Transformer	MV3-10 T	368162	4907669	2	0	0	56.1	56.1	1	4264.08	3.25	0	83.6	0	1.35	0	0	10.84	0	0	0	0	0	0	-39.73	-39.73
Inverter Transformer	MV3-6 T	368156	4907834	2	0	0	56.1	56.1	1	4323.84	3.25	0	83.72	0	1.37	0	0	10.93	0	0	0	0	0	0	-39.96	-39.96
Inverter Transformer	MV3-19 T	368352	4907347	2	0	0	56.1	56.1	1	4333.7	3.25	0	83.74	0	1.38	0	0	10.94	0	0	0	0	0	0	-39.99	-39.99
Inverter Transformer	MV3-15 T	368351	4907477	2	0	0	56.1	56.1	1	4373.33	3.25	0	83.82	0	1.39	0	0	11	0	0	0	0	0	0	-40.15	-40.15
Inverter Transformer	MV3-1 T	368150	4907976	2	0	0	56.1	56.1	1	4378.85	3.25	0	83.83	0	1.39	0	0	11	0	0	0	0	0	0	-40.17	-40.17
Inverter Transformer	MV3-21 T	368484	4907206	2	0	0	56.1	56.1	1	4421	3.25	0	83.91	0	1.41	0	0	11.06	0	0	0	0	0	0	-40.33	-40.33
Inverter Transformer	MV3-11 T	368340	4907662	2	0	0	56.1	56.1	1	4426.77	3.25	0	83.92	0	1.41	0	0	11.07	0	0	0	0	0	0	-40.35	-40.35
Inverter Transformer	MV3-5 T	368335	4907843	2	0	0	56.1	56.1	1	4491.13	3.25	0	84.05	0	1.44	0	0	11.16	0	0	0	0	0	0	-40.59	-40.59

	Inverter Transformer	MV3-16 T	368509	4907475	2	0	0	56.1	56.1	1	4522.38	3.25	0	84.11	0	1.45	0	0	11.21	0	0	0	0	0	0	-40.7	-40.7
	Inverter Transformer	MV3-22 T	368661	4907142	2	0	0	56.1	56.1	1	4576.46	3.25	0	84.21	0	1.47	0	0	11.28	0	0	0	0	0	0	-40.9	-40.9
	Inverter Transformer	MV3-9 T	368517	4907703	2	0	0	56.1	56.1	1	4606.64	3.25	0	84.27	0	1.48	0	0	11.32	0	0	0	0	0	0	-41.01	-41.01
	Inverter Transformer	MV3-20 T	368683	4907317	2	0	0	56.1	56.1	1	4642.39	3.25	0	84.33	0	1.49	0	0	11.37	0	0	0	0	0	0	-41.14	-41.14
	Inverter Transformer	MV3-4 T	368507	4907925	2	0	0	56.1	56.1	1	4681.57	3.25	0	84.41	0	1.51	0	0	11.43	0	0	0	0	0	0	-41.28	-41.28
	Inverter Transformer	MV3-14 T	368678	4907498	2	0	0	56.1	56.1	1	4690.15	3.25	0	84.42	0	1.51	0	0	11.44	0	0	0	0	0	0	-41.31	-41.31
	Inverter Transformer	MV3-8 T	368685	4907712	2	0	0	56.1	56.1	1	4767	3.25	0	84.56	0	1.54	0	0	11.54	0	0	0	0	0	0	-41.59	-41.59
	Inverter Transformer	MV3-2 T	368677	4907928	2	0	0	56.1	56.1	1	4839.02	3.25	0	84.7	0	1.57	0	0	11.64	0	0	0	0	0	0	-41.84	-41.84
	Inverter Transformer	MV4-13 T	369057	4908605	2	0	0	56.1	56.1	1	5472.48	3.25	0	85.76	0	1.79	0	0	12.46	0	0	0	0	0	0	-43.96	-43.96
	Inverter Transformer	MV4-15 T	369170	4908481	2	0	0	56.1	56.1	1	5517	3.25	0	85.83	0	1.81	0	0	12.52	0	0	0	0	0	0	-44.1	-44.1
	Inverter Transformer	MV4-14 T	369182	4908507	2	0	0	56.1	56.1	1	5539.25	3.25	0	85.87	0	1.81	0	0	12.54	0	0	0	0	0	0	-44.17	-44.17
	Inverter Transformer	MV4-12 T	369049	4908803	2	0	0	56.1	56.1	1	5560.61	3.25	0	85.9	0	1.82	0	0	12.57	0	0	0	0	0	0	-44.24	-44.24
	Inverter Transformer	MV4-7 T	369040	4909001	2	0	0	56.1	56.1	1	5653.47	3.25	0	86.05	0	1.85	0	0	12.69	0	0	0	0	0	0	-44.53	-44.53
	Inverter Transformer	MV4-4 T	369033	4909199	2	0	0	56.1	56.1	1	5753.33	3.25	0	86.2	0	1.89	0	0	12.81	0	0	0	0	0	0	-44.83	-44.83
	Inverter Transformer	MV4-11 T	369269	4908855	2	0	0	56.1	56.1	1	5777.89	3.25	0	86.24	0	1.89	0	0	12.84	0	0	0	0	0	0	-44.91	-44.91
	Inverter Transformer	MV4-10 T	369307	4908858	2	0	0	56.1	56.1	1	5812.6	3.25	0	86.29	0	1.9	0	0	12.88	0	0	0	0	0	0	-45.01	-45.01
	Inverter Transformer	MV4-8 T	369262	4909001	2	0	0	56.1	56.1	1	5844.04	3.25	0	86.33	0	1.91	0	0	12.92	0	0	0	0	0	0	-45.11	-45.11
	Inverter Transformer	MV4-1 T	369017	4909397	2	0	0	56.1	56.1	1	5850.81	3.25	0	86.34	0	1.92	0	0	12.92	0	0	0	0	0	0	-45.13	-45.13
	Inverter Transformer	MV4-9 T	369284	4909001	2	0	0	56.1	56.1	1	5863.05	3.25	0	86.36	0	1.92	0	0	12.94	0	0	0	0	0	0	-45.16	-45.16
	Inverter Transformer	MV4-6 T	369249	4909192	2	0	0	56.1	56.1	1	5931.65	3.25	0	86.46	0	1.94	0	0	13.02	0	0	0	0	0	0	-45.37	-45.37
	Inverter Transformer	MV4-5 T	369283	4909199	2	0	0	56.1	56.1	1	5964.21	3.25	0	86.51	0	1.95	0	0	13.06	0	0	0	0	0	0	-45.47	-45.47
	Inverter Transformer	MV6-2 T	370091	4907339	2	0	0	56.1	56.1	1	6014.1	3.25	0	86.58	0	1.97	0	0	13.12	0	0	0	0	0	0	-45.61	-45.61
	Inverter Transformer	MV4-3 T	369234	4909397	2	0	0	56.1	56.1	1	6030.15	3.25	0	86.61	0	1.97	0	0	13.14	0	0	0	0	0	0	-45.66	-45.66
	Inverter Transformer	MV4-2 T	369267	4909397	2	0	0	56.1	56.1	1	6057.64	3.25	0	86.65	0	1.98	0	0	13.17	0	0	0	0	0	0	-45.74	-45.74
	Inverter Transformer	MV6-3 T	370202	4907140	2	0	0	56.1	56.1	1	6083.89	3.25	0	86.68	0	1.99	0	0	13.2	0	0	0	0	0	0	-45.82	-45.82
	Inverter Transformer	MV5-6 T	369987	4908507	2	0	0	56.1	56.1	1	6271.09	3.25	0	86.95	0	2.05	0	0	13.42	0	0	0	0	0	0	-46.36	-46.36
	Inverter Transformer	MV5-5 T	370021	4908690	2	0	0	56.1	56.1	1	6375.88	3.25	0	87.09	0	2.08	0	0	13.54	0	0	0	0	0	0	-46.65	-46.65
	Inverter Transformer	MV5-2 T	370011	4908853	2	0	0	56.1	56.1	1	6435.99	3.25	0	87.17	0	2.1	0	0	13.61	0	0	0	0	0	0	-46.82	-46.82
	Inverter Transformer	MV5-1 T	370015	4909142	2	0	0	56.1	56.1	1	6570.41	3.25	0	87.35	0	2.14	0	0	13.76	0	0	0	0	0	0	-47.19	-47.19
	Inverter Transformer	MV5-3 T	370237	4908851	2	0	0	56.1	56.1	1	6639.37	3.25	0	87.44	0	2.16	0	0	13.84	0	0	0	0	0	0	-47.38	-47.38
	Inverter Transformer	MV5-4 T	370330	4908707	2	0	0	56.1	56.1	1	6665.19	3.25	0	87.48	0	2.17	0	0	13.86	0	0	0	0	0	0	-47.45	-47.45
	Line Reactor	NGR	369421	4908787.5	5	0	0	45.4	45.4	1	5879.58	5.25	0	86.39	0	3.24	1.36	0.1	2.4	0	0	0	0	0	0	-48.04	-48.04
Limit. Valu	0	0																								
Level D/N:	37.2233	37.2233																								

Receiver: Existing Noise Receptor
ID: S-R5
X: 364123
Y: 4906064
Z: 4.5
Ground: 0

ISO	Description	ID	X	Y	Z	Ground	ReflOrd	LxT	LxN	L/A	Dist.	hm	Freq	Adiv	K0b	Agr	Abar	z	Aatm	Afol	Ahous	Cmet	CmetN	Dc	RL	LtotT	LtotN
	Inverter	MV1-6	364477	4905835	2	0	0	100.3	100.3	1	421.62	3.25	0	63.5	0	-0.61	0	0	7.84	0	0	0	0	0	0	29.58	29.58
	Inverter	MV1-5	364671	4905892	2	0	0	100.3	100.3	1	574.36	3.25	0	66.18	0	-0.5	0	0	9.05	0	0	0	0	0	0	25.58	25.58
	Inverter	MV1-1	364715	4906166	2	0	0	100.3	100.3	1	600.73	3.25	0	66.57	0	-0.48	0	0	9.21	0	0	0	0	0	0	25.01	25.01
	Inverter	MV1-9	364561	4905646	2	0	0	100.3	100.3	1	605.45	3.25	0	66.64	0	-0.47	0	0	9.24	0	0	0	0	0	0	24.91	24.91
	Inverter	MV1-2	364753	4906063	2	0	0	100.3	100.3	1	630.01	3.25	0	66.99	0	-0.46	0	0	9.38	0	0	0	0	0	0	24.41	24.41
	Inverter	MV1-4	364815	4905918	2	0	0	100.3	100.3	1	707.24	3.25	0	67.99	0	-0.41	0	0	9.77	0	0	0	0	0	0	22.96	22.96
	Inverter	MV1-8	364788	4905647	2	0	0	100.3	100.3	1	784.93	3.25	0	68.9	0	-0.36	0	0	10.12	0	0	0	0	0	0	21.66	21.66
	Inverter	MV1-11	364655	4905414	2	0	0	100.3	100.3	1	839.96	3.25	0	69.49	0	-0.33	0	0	10.34	0	0	0	0	0	0	20.82	20.82
	Inverter	MV1-12	365038	4905386	2	0	0	100.3	100.3	1	1138.82	3.25	0	72.13	0	-0.18	0	0	11.35	0	0	0	0	0	0	17.02	17.02
	Inverter	MV1-3	364440	4906039	2	0	0	89.1	89.1	1	317.99	3.25	0	61.05	0	0.38	0	0	4.26	0	0	0	0	0	0	23.37	23.37
	Inverter	MV1-7	364925	4905782	2	0	0	97.3	97.3	1	850.14	3.25	0	69.59	0	-0.32	0	0	10.38	0	0	0	0	0	0	17.67	17.67
	Inverter	MV1-10	365004	4905564	2	0	0	97.3	97.3	1	1013	3.25	0	71.11	0	-0.24	0	0	10.95	0	0	0	0	0	0	15.49	15.49
	Inverter	MV1-13	364731	4905241	2	0	0	97.3	97.3	1	1023.23	3.25	0	71.2	0	-0.23	0	0	10.99	0	0	0	0	0	0	15.36	15.36
	Sol_Luce Substation	S_Substation	369426	4908792	3.5	0	0	112.1	112.1	1	5963.54	5.25	0	86.51	0	1.15	2.65	0.29	9.7	0	0	0	0	0	0	12.06	12.06
	Inverter	MV2-4	365586	4906624	2	0	0	100.3	100.3	1	1566.52	3.25	0	74.9	0	-0.01	0	0	12.49	0	0	0	0	0	0	12.94	12.94
	Inverter	MV1-15	365315	4904994	2	0	0	100.3	100.3	1	1601.8	3.25	0	75.09	0	0	0	0	12.57	0	0	0	0	0	0	12.64	12.64
	Inverter	MV2-3	365820	4906641	2	0	0	100.3	100.3	1	1792.41	3.25	0	76.07	0	0.07	0	0	13.01	0	0	0	0	0	0	11.16	11.16
	Inverter	MV1-14	365163	4905049	2	0	0	97.3	97.3	1	1453.21	3.25	0	74.25	0	-0.05	0	0	12.21	0	0	0	0	0	0	10.91	10.91
	Inverter	MV2-1	365842	4906816	2	0	0	97.3	97.3	1	1876.29	3.25	0	76.47	0	0.09	0	0	13.2	0	0	0	0	0	0	7.56	7.56
	Inverter	MV3-12	367668	4907594	2	0	0	100.3	100.3	1	3861.08	3.25	0	82.73	0	0.51	0	0	16.83	0	0	0	0	0	0	0.25	0.25
	Inverter	MV3-18	367752	4907412	2	0	0	100.3	100.3	1	3871.27	3.25	0	82.76	0	0.51	0	0	16.84	0	0	0	0	0	0	0.2	0.2
	Inverter	MV3-13	367963	4907577	2	0	0	100.3	100.3	1	4127.32	3.25	0	83.31	0	0.54	0	0	17.25	0	0	0	0	0	0	-0.8	-0.8
	Inverter	MV3-7	367945	4907754	2	0	0	100.3	100.3	1	4178.97	3.25	0	83.42	0	0.55	0	0	17.33	0	0	0	0	0	0	-0.99	-0.99
	Inverter	MV3-3	367939	4907927	2	0	0	100.3	100.3	1	4246.48	3.25	0	83.56	0	0.56	0	0	17.44	0	0	0	0	0	0	-1.25	-1.25
	Inverter	MV3-17	368178	4907472	2	0	0	100.3	100.3	1	4292.49	3.25	0	83.65	0	0.57	0	0	17.51	0	0	0	0	0	0	-1.42	-1.42
	Inverter	MV3-10	368167	4907669	2	0	0	100.3	100.3	1	4350.86	3.25	0	83.77	0	0.57	0	0	17.6	0	0	0	0	0	0	-1.63	-1.63
	Inverter	MV3-6	368162	4907834	2	0	0	100.3	100.3	1	4409.81	3.25	0	83.89	0	0.58	0	0	17.69	0	0	0	0	0	0	-1.85	-1.85
	Inverter	MV3-19	368357	4907347	2	0	0	100.3	100.3	1	4424.12	3.25	0	83.92	0	0.58	0	0	17.71	0	0	0	0	0	0	-1.9	-1.9
	Inverter	MV3-15	368357	4907477	2	0	0	100.3	100.3	1	4463.56	3.25	0	83.99	0	0.59	0	0	17.77	0	0	0	0	0	0	-2.04	-2.04
	Inverter	MV3-21	368478	4907206	2	0	0	100.3	100.3	1	4502.24	3.25	0	84.07	0	0.59	0	0	17.83	0	0	0	0	0	0	-2.18	-2.18
	Inverter	MV3-11	368346	4907662	2	0	0	100.3	100.3	1	4515.23	3.25	0	84.09	0	0.59	0	0	17.85	0	0	0	0	0	0	-2.23	-2.23

Inverter	MV3-16	368514	4907475	2	0	0	100.3	100.3	1	4612.14	3.25	0	84.28	0	0.6	0	0	18	0	0	0	0	0	0	-2.57	-2.57
Inverter	MV3-9	368512	4907703	2	0	0	100.3	100.3	1	4685.05	3.25	0	84.41	0	0.61	0	0	18.11	0	0	0	0	0	0	-2.82	-2.82
Inverter	MV3-20	368689	4907317	2	0	0	100.3	100.3	1	4734.8	3.25	0	84.51	0	0.62	0	0	18.19	0	0	0	0	0	0	-3	-3
Inverter	MV3-14	368684	4907498	2	0	0	100.3	100.3	1	4781.12	3.25	0	84.59	0	0.62	0	0	18.26	0	0	0	0	0	0	-3.16	-3.16
Inverter	MV3-8	368680	4907712	2	0	0	100.3	100.3	1	4845.84	3.25	0	84.71	0	0.63	0	0	18.35	0	0	0	0	0	0	-3.38	-3.38
Inverter	MV4-7	369035	4909001	2	0	0	100.3	100.3	1	5723.09	3.25	0	86.15	0	0.69	0	0	19.61	0	0	0	0	0	0	-6.15	-6.15
Inverter	MV4-4	369027	4909199	2	0	0	100.3	100.3	1	5820.43	3.25	0	86.3	0	0.7	0	0	19.75	0	0	0	0	0	0	-6.43	-6.43
Inverter	MV4-11	369264	4908855	2	0	0	100.3	100.3	1	5849.75	3.25	0	86.34	0	0.7	0	0	19.79	0	0	0	0	0	0	-6.52	-6.52
Inverter	MV4-10	369312	4908858	2	0	0	100.3	100.3	1	5893.4	3.25	0	86.41	0	0.7	0	0	19.85	0	0	0	0	0	0	-6.64	-6.64
Inverter	MV4-8	369256	4909001	2	0	0	100.3	100.3	1	5913.85	3.25	0	86.44	0	0.7	0	0	19.88	0	0	0	0	0	0	-6.7	-6.7
Inverter	MV4-1	369011	4909397	2	0	0	100.3	100.3	1	5916.2	3.25	0	86.44	0	0.7	0	0	19.88	0	0	0	0	0	0	-6.71	-6.71
Inverter	MV4-9	369289	4909001	2	0	0	100.3	100.3	1	5942.52	3.25	0	86.48	0	0.7	0	0	19.91	0	0	0	0	0	0	-6.79	-6.79
Inverter	MV4-6	369243	4909192	2	0	0	100.3	100.3	1	5999.9	3.25	0	86.56	0	0.7	0	0	19.99	0	0	0	0	0	0	-6.95	-6.95
Inverter	MV4-5	369289	4909199	2	0	0	100.3	100.3	1	6042.83	3.25	0	86.62	0	0.71	0	0	20.05	0	0	0	0	0	0	-7.07	-7.07
Inverter	MV6-2	370085	4907339	2	0	0	100.3	100.3	1	6096.81	3.25	0	86.7	0	0.71	0	0	20.12	0	0	0	0	0	0	-7.22	-7.22
Inverter	MV4-3	369229	4909397	2	0	0	100.3	100.3	1	6097.55	3.25	0	86.7	0	0.71	0	0	20.13	0	0	0	0	0	0	-7.22	-7.22
Inverter	MV4-2	369272	4909397	2	0	0	100.3	100.3	1	6133.6	3.25	0	86.75	0	0.71	0	0	20.17	0	0	0	0	0	0	-7.32	-7.32
Inverter	MV6-3	370207	4907140	2	0	0	100.3	100.3	1	6178.42	3.25	0	86.82	0	0.71	0	0	20.23	0	0	0	0	0	0	-7.45	-7.45
Inverter	MV5-5	370015	4908690	2	0	0	100.3	100.3	1	6450.7	3.25	0	87.19	0	0.71	0	0	20.59	0	0	0	0	0	0	-8.19	-8.19
Inverter	MV5-2	370006	4908853	2	0	0	100.3	100.3	1	6510.62	3.25	0	87.27	0	0.71	0	0	20.67	0	0	0	0	0	0	-8.35	-8.35
Inverter	MV5-1	370020	4909142	2	0	0	100.3	100.3	1	6651.97	3.25	0	87.46	0	0.71	0	0	20.86	0	0	0	0	0	0	-8.72	-8.72
Inverter	MV5-3	370231	4908851	2	0	0	100.3	100.3	1	6713.79	3.25	0	87.54	0	0.71	0	0	20.94	0	0	0	0	0	0	-8.88	-8.88
Inverter	MV5-4	370324	4908707	2	0	0	100.3	100.3	1	6740.76	3.25	0	87.57	0	0.71	0	0	20.97	0	0	0	0	0	0	-8.95	-8.95
Inverter	MV2-2	365977	4906654	2	0	0	89.1	89.1	1	1945.62	3.25	0	76.78	0	0.89	0	0	7.96	0	0	0	0	0	0	3.43	3.43
Inverter	MV6-1	370235	4907364	2	0	0	97.3	97.3	1	6248.72	3.25	0	86.92	0	0.71	0	0	20.33	0	0	0	0	0	0	-10.64	-10.64
DSTATCOM - 10 MVAR #2	DSAT2	369403	4908757	2.5	0	0	96.6	96.6	1	5927.11	3.5	0	86.46	0	3.77	0	0	3.8	0	0	0	0	0	0	2.6	2.6
DSTATCOM - 10 MVAR #1	DSAT1	369437	4908757	2.5	0	0	96.6	96.6	1	5957.42	3.5	0	86.5	0	3.77	0	0	3.82	0	0	0	0	0	0	2.54	2.54
Gardiner Substation	G_Sub	366586.3	4903349.9	2.5	0	0	90.8	90.8	1	3665.27	4.25	0	82.28	0	1.26	2.71	0.27	6.91	0	0	0	0	0	0	-2.39	-2.39
SubstationTransformer	W_ST	369711.17	4906112.3	2.5	0	0	92	92	1	5588.38	4.25	0	85.95	0	1.78	2.19	0.29	9.3	0	0	0	0	0	0	-7.24	-7.24
Inverters	G_Inv1	366526.4	4903225.8	2	0	0	87.7	87.7	1	3719.1	3.25	0	82.41	0	2.77	0	0	4.57	0	0	0	0	0	0	-2.08	-2.08
Inverter	MV3-1	368156	4907976	2	0	0	89.1	89.1	1	4463.28	3.25	0	83.99	0	1.51	0	0	11.73	0	0	0	0	0	0	-8.18	-8.18
Inverters	G_Inv2	366676.9	4903239.1	2	0	0	87.7	87.7	1	3808.21	3.25	0	82.61	0	2.78	0	0	4.67	0	0	0	0	0	0	-2.4	-2.4
Inverters	G_Inv3	366583.7	4903091.4	2	0	0	87.7	87.7	1	3858.94	3.25	0	82.73	0	2.78	0	0	4.72	0	0	0	0	0	0	-2.57	-2.57
Inverter	MV3-5	368340	4907843	2	0	0	89.1	89.1	1	4576.89	3.25	0	84.21	0	1.54	0	0	11.89	0	0	0	0	0	0	-8.58	-8.58
Inverters	G_Inv4	366732.8	4903105	2	0	0	87.7	87.7	1	3945.47	3.25	0	82.92	0	2.79	0	0	4.81	0	0	0	0	0	0	-2.86	-2.86
Inverter	MV3-22	368656	4907142	2	0	0	89.1	89.1	1	4659.42	3.25	0	84.37	0	1.56	0	0	12	0	0	0	0	0	0	-8.87	-8.87
Inverters	G_Inv5	366638.5	4902958.1	2	0	0	87.7	87.7	1	3996.79	3.25	0	83.03	0	2.79	0	0	4.87	0	0	0	0	0	0	-3.04	-3.04
Inverter	MV3-4	368502	4907925	2	0	0	89.1	89.1	1	4758.04	3.25	0	84.55	0	1.58	0	0	12.14	0	0	0	0	0	0	-9.21	-9.21
Inverters	G_Inv6	366788.5	4902972	2	0	0	87.7	87.7	1	4082.32	3.25	0	83.22	0	2.8	0	0	4.96	0	0	0	0	0	0	-3.32	-3.32
Inverters	G_Inv7	366694.6	4902824.7	2	0	0	87.7	87.7	1	4135.96	3.25	0	83.33	0	2.8	0	0	5.02	0	0	0	0	0	0	-3.49	-3.49
Inverter	MV3-2	368671	4907928	2	0	0	89.1	89.1	1	4915.16	3.25	0	84.83	0	1.62	0	0	12.35	0	0	0	0	0	0	-9.74	-9.74
Inverters	G_Inv8	366844.5	4902838.5	2	0	0	87.7	87.7	1	4220.24	3.25	0	83.51	0	2.81	0	0	5.11	0	0	0	0	0	0	-3.77	-3.77
Inverters	G_Inv9	366750.9	4902691.8	2	0	0	87.7	87.7	1	4275.23	3.25	0	83.62	0	2.81	0	0	5.17	0	0	0	0	0	0	-3.94	-3.94
Inverters	G_Inv10	366900.7	4902704.8	2	0	0	87.7	87.7	1	4358.88	3.25	0	83.79	0	2.82	0	0	5.26	0	0	0	0	0	0	-4.21	-4.21
Westbrook Inverter Enclosur	W_INV2	369374	4906388	2	0	0	89.1	89.1	1	5260.99	3.25	0	85.42	0	1.7	0	0	12.81	0	0	0	0	0	0	-10.88	-10.88
Westbrook Inverter Enclosur	W_INV3	369508	4906164	2	0	0	89.1	89.1	1	5385.93	3.25	0	85.63	0	1.74	0	0	12.97	0	0	0	0	0	0	-11.28	-11.28
Fixed Reactor Bank 1	FRB1	369378	4908755	6	0	0	89.8	89.8	1	5903.94	5.25	0	86.42	0	-0.43	0	0	9.64	0	0	0	0	0	0	-5.85	-5.85
Fixed Reactor Bank 2	FRB2	369464	4908755	6	0	0	89.8	89.8	1	5980.62	5.25	0	86.53	0	-0.42	0	0	9.72	0	0	0	0	0	0	-6.06	-6.06
Inverter	MV4-13	369051	4908605	2	0	0	89.1	89.1	1	5544.54	3.25	0	85.88	0	1.77	0	0	13.18	0	0	0	0	0	0	-11.77	-11.77
Westbrook Inverter Enclosur	W_INV4	369673	4906164	2	0	0	89.1	89.1	1	5550.9	3.25	0	85.89	0	1.78	0	0	13.19	0	0	0	0	0	0	-11.79	-11.79
Inverter	MV4-15	369176	4908481	2	0	0	89.1	89.1	1	5601.31	3.25	0	85.97	0	1.79	0	0	13.25	0	0	0	0	0	0	-11.95	-11.95
Inverter	MV4-14	369176	4908507	2	0	0	89.1	89.1	1	5612.58	3.25	0	85.98	0	1.79	0	0	13.27	0	0	0	0	0	0	-11.98	-11.98
Westbrook Inverter Enclosur	W_INV5	369719	4906574	2	0	0	89.1	89.1	1	5619.19	3.25	0	85.99	0	1.79	0	0	13.28	0	0	0	0	0	0	-12	-12
Inverter	MV4-12	369043	4908803	2	0	0	89.1	89.1	1	5631.03	3.25	0	86.01	0	1.8	0	0	13.29	0	0	0	0	0	0	-12.04	-12.04
Westbrook Inverter Enclosur	W_INV7	369780	4906417	2	0	0	89.1	89.1	1	5668	3.25	0	86.07	0	1.8	0	0	13.34	0	0	0	0	0	0	-12.15	-12.15
Westbrook Inverter Enclosur	W_INV6	369875	4906578	2	0	0	89.1	89.1	1	5774.92	3.25	0	86.23	0	1.83	0	0	13.48	0	0	0	0	0	0	-12.48	-12.48
Inverter	MV5-6	369982	4908507	2	0	0	89.1	89.1	1	6347.92	3.25	0	87.05	0	1.97	0	0	14.2	0	0	0	0	0	0	-14.16	-14.16
Westbrook Inverter Enclosur	W_INV1	369409	4906578	2	0	0	86.1	86.1	1	5310.93	3.25	0	85.5	0	1.72	0	0	12.88	0	0	0	0	0	0	-14.04	-14.04
Inverter Transformer	MV1-7 T	364919	4905782	2	0	0	69.4	69.4	1	844.48	3.25	0	69.53	0	1.54	0	0	3.58	0	0	0	0	0	0	-5.3	-5.3
Inverter	MV6-4	370250	4906966	2	0	0	86.1	86.1	1	6193.04	3.25	0	86.84	0	1.93	0	0	14	0	0	0	0	0	0	-16.72	-16.72
Inverter Transformer	MV1-10 T	365010	4905564	2	0	0	69.4	69.4	1	1018.22	3.25	0	71.16	0	1.7	0	0	3.84	0	0	0	0	0	0	-7.34	-7.34
Inverter Transformer	MV1-13 T	364725	4905241	2	0	0	69.4	69.4	1	1019.68	3.25	0	71.17	0	1.7	0	0	3.84	0	0	0	0	0	0	-7.36	-7.36
Inverter Transformer	MV1-3 T	364435	4906039	2	0	0	56.1	56.1	1	313.01	3.25	0	60.91	0	-0.08	0	0	2.85	0	0	0	0	0	0	-7.62	-7.62
Inverter Transformer	MV1-14 T	365157	4905049	2	0	0	69.4	69.4	1	1448.93	3.25	0	74.22	0	1.95	0	0	4.38	0	0	0	0	0	0	-11.2	-11.2
Inverter Transformer	MV2-1 T	365836	4906816	2	0	0	69.4	69.4	1	1870.8	3.25	0	76.44	0	2.12	0	0	4.83	0	0	0	0	0	0	-14.05	-14.05
Westbrook Inverter Transfor	W_INVTR1	369403	4906578	2	0	0	78.2	78.2	1	5304.96	3.25	0	85.49	0	-3.24	0	0	2.52	0	0	0	0	0	0	-6.53	-6.53
Inverter Transformer	MV1-6 T	364482	4905835	2	0	0	56.1	56.1	1	425.83	3.25	0	63.58	0	-0.12	0	0	3.3	0	0	0	0	0	0	-10.71	-10.71
Westbrook Inverter Transfor	W_INVTR2	369368	4906388	2	0	0	77.3	77.3	1	5255	3.25	0	85.41	0	-3.23	0	0	2.5	0	0	0	0	0	0	-7.34	-7.34
Westbrook Inverter Transfor	W_INVTR3	369514	4906164	2	0	0	77.3	77.3	1	5391.93	3.25	0	85.63	0	-3.25	0	0	2.54	0	0	0	0	0	0	-7.58	-7.58
Westbrook Inverter Transfor	W_INVTR4	369679	4906164	2	0	0	77.3	77.3	1	5556.9	3.25	0	85.9	0	-3.29	0	0	2.6	0	0	0	0	0	0	-7.87	-7.87
Westbrook Inverter Transfor	W_INVTR5	369725	4906574	2	0	0	77.3	77.3	1	5625.17	3.25	0	86	0	-3.3	0	0	2.62	0	0	0	0	0	0	-7.98	-7.98
Westbrook Inverter Transfor	W_INVTR7	369786	4906417	2	0	0	77.3	77.3	1	5673.99	3.25	0	86.08	0	-3.31	0	0	2.64	0	0	0	0	0	0	-8.07	-8.07
Westbrook Inverter Transfor	W_INVTR6	369881	4906578	2	0	0	77.3	77.3	1	5780.9	3.25	0	86.24	0	-3.33	0	0	2.67	0	0	0	0	0	0	-8.24	-8.24
Inverter Transformer	MV1-5 T	364676	4905892	2	0	0	56.1	56.1	1	579.14	3.25	0	66.26	0	-0.11	0	0	3.79	0	0	0	0	0	0	-13.88	-13.88

	Inverter Transformer	MV1-9 T	364555	4905646	2	0	0	56.1	56.1	1	601.13	3.25	0	66.58	0	-0.1	0	0	3.86	0	0	0	0	0	0	-14.28	-14.28
	Inverter Transformer	MV1-1 T	364721	4906166	2	0	0	56.1	56.1	1	606.64	3.25	0	66.66	0	-0.1	0	0	3.87	0	0	0	0	0	0	-14.37	-14.37
	Inverter Transformer	MV1-2 T	364759	4906063	2	0	0	56.1	56.1	1	636.01	3.25	0	67.07	0	-0.1	0	0	3.96	0	0	0	0	0	0	-14.87	-14.87
	Inverter Transformer	MV1-4 T	364821	4905918	2	0	0	56.1	56.1	1	713.11	3.25	0	68.06	0	-0.08	0	0	4.17	0	0	0	0	0	0	-16.1	-16.1
	Inverter Transformer	MV1-8 T	364782	4905647	2	0	0	56.1	56.1	1	779.86	3.25	0	68.84	0	-0.06	0	0	4.34	0	0	0	0	0	0	-17.07	-17.07
	Inverter Transformer	MV1-11 T	364649	4905414	2	0	0	56.1	56.1	1	836.17	3.25	0	69.45	0	-0.04	0	0	4.49	0	0	0	0	0	0	-17.83	-17.83
	Inverter Transformer	MV1-12 T	365044	4905386	2	0	0	56.1	56.1	1	1143.65	3.25	0	72.17	0	0.06	0	0	5.23	0	0	0	0	0	0	-21.4	-21.4
	Inverter Transformer	MV6-4 T	370244	4906966	2	0	0	69.4	69.4	1	6187.1	3.25	0	86.83	0	3.22	0	0	8.13	0	0	0	0	0	0	-28.83	-28.83
	Inverter Transformer	MV6-1 T	370230	4907364	2	0	0	69.4	69.4	1	6243.83	3.25	0	86.91	0	3.22	0	0	8.16	0	0	0	0	0	0	-28.95	-28.95
	Inverter Transformer	MV2-4 T	365590	4906628	2	0	0	56.1	56.1	1	1571.68	3.25	0	74.93	0	0.23	0	0	6.17	0	0	0	0	0	0	-25.27	-25.27
	Inverter Transformer	MV1-15 T	365309	4904994	2	0	0	56.1	56.1	1	1597.34	3.25	0	75.07	0	0.24	0	0	6.22	0	0	0	0	0	0	-25.47	-25.47
	Inverter Transformer	MV2-3 T	365814	4906641	2	0	0	56.1	56.1	1	1786.73	3.25	0	76.04	0	0.32	0	0	6.62	0	0	0	0	0	0	-26.91	-26.91
	Inverter Transformer	MV2-2 T	365982	4906654	2	0	0	56.1	56.1	1	1950.38	3.25	0	76.8	0	0.38	0	0	6.95	0	0	0	0	0	0	-28.07	-28.07
	Inverter Transformer	MV3-12 T	367674	4907594	2	0	0	56.1	56.1	1	3866.59	3.25	0	82.75	0	1.19	0	0	10.26	0	0	0	0	0	0	-38.13	-38.13
	Inverter Transformer	MV3-18 T	367757	4907412	2	0	0	56.1	56.1	1	3875.96	3.25	0	82.77	0	1.19	0	0	10.27	0	0	0	0	0	0	-38.17	-38.17
	Inverter Transformer	MV3-13 T	367958	4907577	2	0	0	56.1	56.1	1	4122.67	3.25	0	83.3	0	1.29	0	0	10.64	0	0	0	0	0	0	-39.17	-39.17
	Inverter Transformer	MV3-7 T	367951	4907754	2	0	0	56.1	56.1	1	4184.46	3.25	0	83.43	0	1.32	0	0	10.73	0	0	0	0	0	0	-39.42	-39.42
	Inverter Transformer	MV3-3 T	367944	4907927	2	0	0	56.1	56.1	1	4250.98	3.25	0	83.57	0	1.34	0	0	10.82	0	0	0	0	0	0	-39.68	-39.68
	Inverter Transformer	MV3-17 T	368183	4907472	2	0	0	56.1	56.1	1	4297.22	3.25	0	83.66	0	1.36	0	0	10.89	0	0	0	0	0	0	-39.86	-39.86
	Inverter Transformer	MV3-10 T	368162	4907669	2	0	0	56.1	56.1	1	4346.21	3.25	0	83.76	0	1.38	0	0	10.96	0	0	0	0	0	0	-40.04	-40.04
	Inverter Transformer	MV3-6 T	368156	4907834	2	0	0	56.1	56.1	1	4404.32	3.25	0	83.88	0	1.4	0	0	11.04	0	0	0	0	0	0	-40.26	-40.26
	Inverter Transformer	MV3-19 T	368352	4907347	2	0	0	56.1	56.1	1	4419.34	3.25	0	83.91	0	1.41	0	0	11.06	0	0	0	0	0	0	-40.32	-40.32
	Inverter Transformer	MV3-1 T	368150	4907976	2	0	0	56.1	56.1	1	4457.86	3.25	0	83.98	0	1.42	0	0	11.12	0	0	0	0	0	0	-40.46	-40.46
	Inverter Transformer	MV3-15 T	368351	4907477	2	0	0	56.1	56.1	1	4457.86	3.25	0	83.98	0	1.42	0	0	11.12	0	0	0	0	0	0	-40.46	-40.46
	Inverter Transformer	MV3-21 T	368484	4907206	2	0	0	56.1	56.1	1	4508.05	3.25	0	84.08	0	1.44	0	0	11.19	0	0	0	0	0	0	-40.65	-40.65
	Inverter Transformer	MV3-11 T	368340	4907662	2	0	0	56.1	56.1	1	4509.62	3.25	0	84.08	0	1.44	0	0	11.19	0	0	0	0	0	0	-40.66	-40.66
	Inverter Transformer	MV3-5 T	368335	4907843	2	0	0	56.1	56.1	1	4572.29	3.25	0	84.2	0	1.47	0	0	11.28	0	0	0	0	0	0	-40.89	-40.89
	Inverter Transformer	MV3-16 T	368509	4907475	2	0	0	56.1	56.1	1	4607.38	3.25	0	84.27	0	1.48	0	0	11.32	0	0	0	0	0	0	-41.02	-41.02
	Inverter Transformer	MV3-22 T	368661	4907142	2	0	0	56.1	56.1	1	4664.28	3.25	0	84.38	0	1.5	0	0	11.4	0	0	0	0	0	0	-41.22	-41.22
	Inverter Transformer	MV3-9 T	368517	4907703	2	0	0	56.1	56.1	1	4689.73	3.25	0	84.42	0	1.51	0	0	11.44	0	0	0	0	0	0	-41.31	-41.31
	Inverter Transformer	MV3-20 T	368683	4907317	2	0	0	56.1	56.1	1	4729.02	3.25	0	84.5	0	1.53	0	0	11.49	0	0	0	0	0	0	-41.45	-41.45
	Inverter Transformer	MV3-4 T	368507	4907925	2	0	0	56.1	56.1	1	4762.64	3.25	0	84.56	0	1.54	0	0	11.54	0	0	0	0	0	0	-41.57	-41.57
	Inverter Transformer	MV3-14 T	368678	4907498	2	0	0	56.1	56.1	1	4775.39	3.25	0	84.58	0	1.54	0	0	11.55	0	0	0	0	0	0	-41.62	-41.62
	Inverter Transformer	MV3-8 T	368685	4907712	2	0	0	56.1	56.1	1	4850.54	3.25	0	84.72	0	1.57	0	0	11.66	0	0	0	0	0	0	-41.88	-41.88
	Inverter Transformer	MV3-2 T	368677	4907928	2	0	0	56.1	56.1	1	4920.71	3.25	0	84.84	0	1.6	0	0	11.75	0	0	0	0	0	0	-42.13	-42.13
	Inverter Transformer	MV4-13 T	369057	4908605	2	0	0	56.1	56.1	1	5549.87	3.25	0	85.89	0	1.82	0	0	12.56	0	0	0	0	0	0	-44.2	-44.2
	Inverter Transformer	MV4-15 T	369170	4908481	2	0	0	56.1	56.1	1	5595.9	3.25	0	85.96	0	1.83	0	0	12.61	0	0	0	0	0	0	-44.35	-44.35
	Inverter Transformer	MV4-14 T	369182	4908507	2	0	0	56.1	56.1	1	5617.98	3.25	0	85.99	0	1.84	0	0	12.64	0	0	0	0	0	0	-44.42	-44.42
	Inverter Transformer	MV4-12 T	369049	4908803	2	0	0	56.1	56.1	1	5636.28	3.25	0	86.02	0	1.85	0	0	12.66	0	0	0	0	0	0	-44.47	-44.47
	Inverter Transformer	MV4-7 T	369040	4909001	2	0	0	56.1	56.1	1	5727.38	3.25	0	86.16	0	1.88	0	0	12.78	0	0	0	0	0	0	-44.75	-44.75
	Inverter Transformer	MV4-4 T	369033	4909199	2	0	0	56.1	56.1	1	5825.49	3.25	0	86.31	0	1.91	0	0	12.89	0	0	0	0	0	0	-45.05	-45.05
	Inverter Transformer	MV4-11 T	369269	4908855	2	0	0	56.1	56.1	1	5854.14	3.25	0	86.35	0	1.92	0	0	12.93	0	0	0	0	0	0	-45.14	-45.14
	Inverter Transformer	MV4-10 T	369307	4908858	2	0	0	56.1	56.1	1	5889	3.25	0	86.4	0	1.93	0	0	12.97	0	0	0	0	0	0	-45.24	-45.24
	Inverter Transformer	MV4-8 T	369262	4909001	2	0	0	56.1	56.1	1	5919.06	3.25	0	86.45	0	1.94	0	0	13.01	0	0	0	0	0	0	-45.33	-45.33
	Inverter Transformer	MV4-1 T	369017	4909397	2	0	0	56.1	56.1	1	5921.16	3.25	0	86.45	0	1.94	0	0	13.01	0	0	0	0	0	0	-45.34	-45.34
	Inverter Transformer	MV4-9 T	369284	4909001	2	0	0	56.1	56.1	1	5938.17	3.25	0	86.47	0	1.95	0	0	13.03	0	0	0	0	0	0	-45.39	-45.39
	Inverter Transformer	MV4-6 T	369249	4909192	2	0	0	56.1	56.1	1	6005.02	3.25	0	86.57	0	1.97	0	0	13.11	0	0	0	0	0	0	-45.59	-45.59
	Inverter Transformer	MV4-5 T	369283	4909199	2	0	0	56.1	56.1	1	6037.7	3.25	0	86.62	0	1.98	0	0	13.15	0	0	0	0	0	0	-45.68	-45.68
	Inverter Transformer	MV4-3 T	369234	4909397	2	0	0	56.1	56.1	1	6101.74	3.25	0	86.71	0	2	0	0	13.22	0	0	0	0	0	0	-45.87	-45.87
	Inverter Transformer	MV6-2 T	370091	4907339	2	0	0	56.1	56.1	1	6102.68	3.25	0	86.71	0	2	0	0	13.22	0	0	0	0	0	0	-45.87	-45.87
	Inverter Transformer	MV4-2 T	369267	4909397	2	0	0	56.1	56.1	1	6129.41	3.25	0	86.75	0	2.01	0	0	13.25	0	0	0	0	0	0	-45.95	-45.95
	Inverter Transformer	MV6-3 T	370202	4907140	2	0	0	56.1	56.1	1	6173.49	3.25	0	86.81	0	2.02	0	0	13.31	0	0	0	0	0	0	-46.08	-46.08
	Inverter Transformer	MV5-6 T	369987	4908507	2	0	0	56.1	56.1	1	6352.54	3.25	0	87.06	0	2.07	0	0	13.51	0	0	0	0	0	0	-46.59	-46.59
	Inverter Transformer	MV5-5 T	370021	4908690	2	0	0	56.1	56.1	1	6456.18	3.25	0	87.2	0	2.1	0	0	13.63	0	0	0	0	0	0	-46.88	-46.88
	Inverter Transformer	MV5-2 T	370011	4908853	2	0	0	56.1	56.1	1	6515.14	3.25	0	87.28	0	2.12	0	0	13.7	0	0	0	0	0	0	-47.04	-47.04
	Inverter Transformer	MV5-1 T	370015	4909142	2	0	0	56.1	56.1	1	6647.54	3.25	0	87.45	0	2.16	0	0	13.84	0	0	0	0	0	0	-47.4	-47.4
	Inverter Transformer	MV5-3 T	370237	4908851	2	0	0	56.1	56.1	1	6719.25	3.25	0	87.55	0	2.18	0	0	13.92	0	0	0	0	0	0	-47.59	-47.59
	Inverter Transformer	MV5-4 T	370330	4908707	2	0	0	56.1	56.1	1	6746.28	3.25	0	87.58	0	2.19	0	0	13.95	0	0	0	0	0	0	-47.67	-47.67
	Line Reactor	NGR	369421	4908787.5	5	0	0	45.4	45.4	1	5957.03	5.25	0	86.5	0	3.24	1.36	0.1	2.44	0	0	0	0	0	0	-48.18	-48.18
Limit. Valu	0	0																								
Level D/N:	34.9796	34.9796																								

Receiver: Existing Noise Receptor
ID: S-R6
X: 364148
Y: 4906121
Z: 4.5
Ground: 0

ISO	Description	ID	X	Y	Z	Ground	ReflOrd	LxT	LxN	L/A	Dist.	hm	Freq	Adiv	K0b	Agr	Abar	z	Aatm	Afol	Ahous	Cmet	CmetN	Dc	RL	LtotT	LtotN
	Inverter	MV1-6	364477	4905835	2	0	0	100.3	100.3	1	435.94	3.25	0	63.79	0	-0.6	0	0	7.98	0	0	0	0	0	0	29.14	29.14
	Inverter	MV1-1	364715	4906166	2	0	0	100.3	100.3	1	568.79	3.25	0	66.1	0	-0.5	0	0	9.01	0	0	0	0	0	0	25.7	25.7
	Inverter	MV1-5	364671	4905892	2	0	0	100.3	100.3	1	570.94	3.25	0	66.13	0	-0.5	0	0	9.02	0	0	0	0	0	0	25.65	25.65
	Inverter	MV1-2	364753	4906063	2	0	0	100.3	100.3	1	607.78	3.25	0	66.67	0	-0.47	0	0	9.25	0	0	0	0	0	0	24.86	24.86

Inverter	MV1-9	364561	4905646	2	0	0	100.3	100.3	1	629.44	3.25	0	66.98	0	-0.46	0	0	9.37	0	0	0	0	0	0	24.42	24.42
Inverter	MV1-4	364815	4905918	2	0	0	100.3	100.3	1	697.21	3.25	0	67.87	0	-0.41	0	0	9.72	0	0	0	0	0	0	23.13	23.13
Inverter	MV1-8	364788	4905647	2	0	0	100.3	100.3	1	796.42	3.25	0	69.02	0	-0.35	0	0	10.17	0	0	0	0	0	0	21.48	21.48
Inverter	MV1-11	364655	4905414	2	0	0	100.3	100.3	1	870	3.25	0	69.79	0	-0.31	0	0	10.45	0	0	0	0	0	0	20.38	20.38
Inverter	MV1-3	364440	4906039	2	0	0	89.1	89.1	1	303.31	3.25	0	60.64	0	0.37	0	0	4.16	0	0	0	0	0	0	23.89	23.89
Inverter	MV1-12	365038	4905386	2	0	0	100.3	100.3	1	1154.27	3.25	0	72.25	0	-0.17	0	0	11.39	0	0	0	0	0	0	16.85	16.85
Inverter	MV1-7	364925	4905782	2	0	0	97.3	97.3	1	847.74	3.25	0	69.57	0	-0.32	0	0	10.37	0	0	0	0	0	0	17.7	17.7
Inverter	MV1-10	365004	4905564	2	0	0	97.3	97.3	1	1021.27	3.25	0	71.18	0	-0.24	0	0	10.98	0	0	0	0	0	0	15.38	15.38
Inverter	MV1-13	364731	4905241	2	0	0	97.3	97.3	1	1055.6	3.25	0	71.47	0	-0.22	0	0	11.09	0	0	0	0	0	0	14.97	14.97
Inverter	MV2-4	365586	4906624	2	0	0	100.3	100.3	1	1523.44	3.25	0	74.66	0	-0.02	0	0	12.38	0	0	0	0	0	0	13.3	13.3
Sol_Luce Substation	S_Substation	369426	4908792	3.5	0	0	112.1	112.1	1	5915.36	5.25	0	86.44	0	1.14	2.66	0.29	9.65	0	0	0	0	0	0	12.18	12.18
Inverter	MV1-15	365315	4904994	2	0	0	100.3	100.3	1	1622.35	3.25	0	75.2	0	0.01	0	0	12.62	0	0	0	0	0	0	12.48	12.48
Inverter	MV2-3	365820	4906641	2	0	0	100.3	100.3	1	1751	3.25	0	75.87	0	0.05	0	0	12.92	0	0	0	0	0	0	11.47	11.47
Inverter	MV1-14	365163	4905049	2	0	0	97.3	97.3	1	1476.28	3.25	0	74.38	0	-0.04	0	0	12.27	0	0	0	0	0	0	10.71	10.71
Inverter	MV2-1	365842	4906816	2	0	0	97.3	97.3	1	1831.03	3.25	0	76.25	0	0.08	0	0	13.1	0	0	0	0	0	0	7.88	7.88
Inverter	MV3-12	367668	4907594	2	0	0	100.3	100.3	1	3815.77	3.25	0	82.63	0	0.5	0	0	16.75	0	0	0	0	0	0	0.43	0.43
Inverter	MV3-18	367752	4907412	2	0	0	100.3	100.3	1	3828.25	3.25	0	82.66	0	0.5	0	0	16.77	0	0	0	0	0	0	0.38	0.38
Inverter	MV3-13	367963	4907577	2	0	0	100.3	100.3	1	4083.4	3.25	0	83.22	0	0.54	0	0	17.18	0	0	0	0	0	0	-0.63	-0.63
Inverter	MV3-7	367945	4907754	2	0	0	100.3	100.3	1	4133.27	3.25	0	83.33	0	0.55	0	0	17.26	0	0	0	0	0	0	-0.82	-0.82
Inverter	MV3-3	367939	4907927	2	0	0	100.3	100.3	1	4199.21	3.25	0	83.46	0	0.55	0	0	17.36	0	0	0	0	0	0	-1.07	-1.07
Inverter	MV3-17	368178	4907472	2	0	0	100.3	100.3	1	4250.42	3.25	0	83.57	0	0.56	0	0	17.44	0	0	0	0	0	0	-1.26	-1.26
Inverter	MV3-10	368167	4907669	2	0	0	100.3	100.3	1	4306.82	3.25	0	83.68	0	0.57	0	0	17.53	0	0	0	0	0	0	-1.47	-1.47
Inverter	MV3-6	368162	4907834	2	0	0	100.3	100.3	1	4364.24	3.25	0	83.8	0	0.57	0	0	17.62	0	0	0	0	0	0	-1.68	-1.68
Inverter	MV3-19	368357	4907347	2	0	0	100.3	100.3	1	4383.92	3.25	0	83.84	0	0.58	0	0	17.65	0	0	0	0	0	0	-1.75	-1.75
Inverter	MV3-15	368357	4907477	2	0	0	100.3	100.3	1	4422.04	3.25	0	83.91	0	0.58	0	0	17.71	0	0	0	0	0	0	-1.89	-1.89
Inverter	MV3-21	368478	4907206	2	0	0	100.3	100.3	1	4463.87	3.25	0	83.99	0	0.59	0	0	17.77	0	0	0	0	0	0	-2.04	-2.04
Inverter	MV3-11	368346	4907662	2	0	0	100.3	100.3	1	4471.9	3.25	0	84.01	0	0.59	0	0	17.79	0	0	0	0	0	0	-2.07	-2.07
Inverter	MV3-16	368514	4907475	2	0	0	100.3	100.3	1	4571.14	3.25	0	84.2	0	0.6	0	0	17.94	0	0	0	0	0	0	-2.43	-2.43
Inverter	MV3-9	368512	4907703	2	0	0	100.3	100.3	1	4641.9	3.25	0	84.33	0	0.61	0	0	18.05	0	0	0	0	0	0	-2.67	-2.67
Inverter	MV3-20	368689	4907317	2	0	0	100.3	100.3	1	4695.86	3.25	0	84.43	0	0.61	0	0	18.13	0	0	0	0	0	0	-2.86	-2.86
Inverter	MV3-14	368684	4907498	2	0	0	100.3	100.3	1	4740.4	3.25	0	84.52	0	0.62	0	0	18.19	0	0	0	0	0	0	-3.02	-3.02
Inverter	MV3-8	368680	4907712	2	0	0	100.3	100.3	1	4803.16	3.25	0	84.63	0	0.62	0	0	18.29	0	0	0	0	0	0	-3.23	-3.23
Inverter	MV4-7	369035	4909001	2	0	0	100.3	100.3	1	5672.49	3.25	0	86.08	0	0.69	0	0	19.54	0	0	0	0	0	0	-6	-6
Inverter	MV4-4	369027	4909199	2	0	0	100.3	100.3	1	5768.77	3.25	0	86.22	0	0.7	0	0	19.68	0	0	0	0	0	0	-6.28	-6.28
Inverter	MV4-11	369264	4908855	2	0	0	100.3	100.3	1	5800.71	3.25	0	86.27	0	0.7	0	0	19.72	0	0	0	0	0	0	-6.37	-6.37
Inverter	MV4-10	369312	4908858	2	0	0	100.3	100.3	1	5844.49	3.25	0	86.33	0	0.7	0	0	19.78	0	0	0	0	0	0	-6.5	-6.5
Inverter	MV4-1	369011	4909397	2	0	0	100.3	100.3	1	5863.53	3.25	0	86.36	0	0.7	0	0	19.81	0	0	0	0	0	0	-6.56	-6.56
Inverter	MV4-8	369256	4909001	2	0	0	100.3	100.3	1	5863.96	3.25	0	86.36	0	0.7	0	0	19.81	0	0	0	0	0	0	-6.56	-6.56
Inverter	MV4-9	369289	4909001	2	0	0	100.3	100.3	1	5892.73	3.25	0	86.41	0	0.7	0	0	19.85	0	0	0	0	0	0	-6.64	-6.64
Inverter	MV4-6	369243	4909192	2	0	0	100.3	100.3	1	5948.96	3.25	0	86.49	0	0.7	0	0	19.92	0	0	0	0	0	0	-6.8	-6.8
Inverter	MV4-5	369289	4909199	2	0	0	100.3	100.3	1	5991.99	3.25	0	86.55	0	0.7	0	0	19.98	0	0	0	0	0	0	-6.93	-6.93
Inverter	MV4-3	369229	4909397	2	0	0	100.3	100.3	1	6045.56	3.25	0	86.63	0	0.71	0	0	20.05	0	0	0	0	0	0	-7.08	-7.08
Inverter	MV6-2	370085	4907339	2	0	0	100.3	100.3	1	6060.65	3.25	0	86.65	0	0.71	0	0	20.08	0	0	0	0	0	0	-7.12	-7.12
Inverter	MV4-2	369272	4909397	2	0	0	100.3	100.3	1	6081.74	3.25	0	86.68	0	0.71	0	0	20.1	0	0	0	0	0	0	-7.18	-7.18
Inverter	MV6-3	370207	4907140	2	0	0	100.3	100.3	1	6144.09	3.25	0	86.77	0	0.71	0	0	20.19	0	0	0	0	0	0	-7.35	-7.35
Inverter	MV5-5	370015	4908690	2	0	0	100.3	100.3	1	6404.8	3.25	0	87.13	0	0.71	0	0	20.53	0	0	0	0	0	0	-8.07	-8.07
Inverter	MV5-2	370006	4908853	2	0	0	100.3	100.3	1	6463.74	3.25	0	87.21	0	0.71	0	0	20.61	0	0	0	0	0	0	-8.22	-8.22
Inverter	MV5-1	370020	4909142	2	0	0	100.3	100.3	1	6603.55	3.25	0	87.4	0	0.72	0	0	20.79	0	0	0	0	0	0	-8.59	-8.59
Inverter	MV5-3	370231	4908851	2	0	0	100.3	100.3	1	6667.52	3.25	0	87.48	0	0.71	0	0	20.88	0	0	0	0	0	0	-8.76	-8.76
Inverter	MV5-4	370324	4908707	2	0	0	100.3	100.3	1	6695.55	3.25	0	87.52	0	0.71	0	0	20.91	0	0	0	0	0	0	-8.83	-8.83
Inverter	MV2-2	365977	4906654	2	0	0	89.1	89.1	1	1905.08	3.25	0	76.6	0	0.88	0	0	7.89	0	0	0	0	0	0	3.69	3.69
Inverter	MV6-1	370235	4907364	2	0	0	97.3	97.3	1	6212.62	3.25	0	86.87	0	0.71	0	0	20.28	0	0	0	0	0	0	-10.54	-10.54
DSTATCOM - 10 MVAR #2	DSAT2	369403	4908757	2.5	0	0	96.6	96.6	1	5879.08	3.5	0	86.39	0	3.76	0	0	3.78	0	0	0	0	0	0	2.7	2.7
DSTATCOM - 10 MVAR #1	DSAT1	369437	4908757	2.5	0	0	96.6	96.6	1	5909.49	3.5	0	86.43	0	3.77	0	0	3.8	0	0	0	0	0	0	2.64	2.64
Gardiner Substation	G_Sub	366586.3	4903349.9	2.5	0	0	90.8	90.8	1	3691.11	4.25	0	82.34	0	1.27	2.7	0.26	6.95	0	0	0	0	0	0	-2.48	-2.48
SubstationTransformer	W_ST	369711.17	4906112.3	2.5	0	0	92	92	1	5563.18	4.25	0	85.91	0	1.78	2.2	0.29	9.27	0	0	0	0	0	0	-7.17	-7.17
Inverters	G_Inv1	366526.4	4903225.8	2	0	0	87.7	87.7	1	3746.86	3.25	0	82.47	0	2.77	0	0	4.6	0	0	0	0	0	0	-2.18	-2.18
Inverter	MV3-1	368156	4907976	2	0	0	89.1	89.1	1	4416.46	3.25	0	83.9	0	1.5	0	0	11.67	0	0	0	0	0	0	-8.01	-8.01
Inverters	G_Inv2	366676.9	4903239.1	2	0	0	87.7	87.7	1	3834.15	3.25	0	82.67	0	2.78	0	0	4.69	0	0	0	0	0	0	-2.48	-2.48
Inverter	MV3-5	368340	4907843	2	0	0	89.1	89.1	1	4531.9	3.25	0	84.13	0	1.52	0	0	11.83	0	0	0	0	0	0	-8.42	-8.42
Inverters	G_Inv3	366583.7	4903091.4	2	0	0	87.7	87.7	1	3887.3	3.25	0	82.79	0	2.78	0	0	4.75	0	0	0	0	0	0	-2.67	-2.67
Inverter	MV3-22	368656	4907142	2	0	0	89.1	89.1	1	4622.18	3.25	0	84.3	0	1.55	0	0	11.95	0	0	0	0	0	0	-8.74	-8.74
Inverters	G_Inv4	366732.8	4903105	2	0	0	87.7	87.7	1	3972.08	3.25	0	82.98	0	2.79	0	0	4.84	0	0	0	0	0	0	-2.95	-2.95
Inverter	MV3-4	368502	4907925	2	0	0	89.1	89.1	1	4712.93	3.25	0	84.47	0	1.57	0	0	12.08	0	0	0	0	0	0	-9.05	-9.05
Inverters	G_Inv5	366638.5	4902958.1	2	0	0	87.7	87.7	1	4025.73	3.25	0	83.1	0	2.79	0	0	4.9	0	0	0	0	0	0	-3.13	-3.13
Inverters	G_Inv6	366788.5	4902972	2	0	0	87.7	87.7	1	4109.56	3.25	0	83.28	0	2.8	0	0	4.99	0	0	0	0	0	0	-3.41	-3.41
Inverter	MV3-2	368671	4907928	2	0	0	89.1	89.1	1	4870.6	3.25	0	84.75	0	1.61	0	0	12.29	0	0	0	0	0	0	-9.59	-9.59
Inverters	G_Inv7	366694.6	4902824.7	2	0	0	87.7	87.7	1	4165.43	3.25	0	83.39	0	2.81	0	0	5.05	0	0	0	0	0	0	-3.59	-3.59
Inverters	G_Inv8	366844.5	4902838.5	2	0	0	87.7	87.7	1	4248.05	3.25	0	83.56	0	2.81	0	0	5.14	0	0	0	0	0	0	-3.86	-3.86
Inverters	G_Inv9	366750.9	4902691.8	2	0	0	87.7	87.7	1	4305.17	3.25	0	83.68	0	2.82	0	0	5.2	0	0	0	0	0	0	-4.04	-4.04
Inverters	G_Inv10	366900.7	4902704.8	2	0	0	87.7	87.7	1	4387.23	3.25	0	83.84	0	2.82	0	0	5.29	0	0	0	0	0	0	-4.3	-4.3
Westbrook Inverter Enclosur	W_INV2	369374	4906388	2	0	0	89.1	89.1	1	5232.82	3.25	0	85.37	0	1.7	0	0	12.77	0	0	0	0	0	0	-10.79	-10.79
Westbrook Inverter Enclosur	W_INV3	369508	4906164	2	0	0	89.1	89.1	1	5360.17	3.25	0	85.58	0	1.73	0	0	12.94	0	0	0	0	0	0	-11.19	-11.19
Fixed Reactor Bank 1	FRB1	369378	4908755	6	0	0	89.8	89.8	1	5855.84	5.25	0	86.35	0	-0.44	0	0	9.59	0	0	0	0	0	0	-5.72	-5.72

Fixed Reactor Bank 2	FRB2	369464	4908755	6	0	0	89.8	89.8	1	5932.77	5.25	0	86.47	0	-0.43	0	0	9.67	0	0	0	0	0	0	-5.93	-5.93
Inverter	MV4-13	369051	4908605	2	0	0	89.1	89.1	1	5496.33	3.25	0	85.8	0	1.76	0	0	13.12	0	0	0	0	0	0	-11.62	-11.62
Westbrook Inverter Enclosur	W_INV4	369673	4906164	2	0	0	89.1	89.1	1	5525.17	3.25	0	85.85	0	1.77	0	0	13.16	0	0	0	0	0	0	-11.71	-11.71
Inverter	MV4-15	369176	4908481	2	0	0	89.1	89.1	1	5554.31	3.25	0	85.89	0	1.78	0	0	13.19	0	0	0	0	0	0	-11.8	-11.8
Inverter	MV4-14	369176	4908507	2	0	0	89.1	89.1	1	5565.41	3.25	0	85.91	0	1.78	0	0	13.21	0	0	0	0	0	0	-11.84	-11.84
Inverter	MV4-12	369043	4908803	2	0	0	89.1	89.1	1	5581.59	3.25	0	85.94	0	1.78	0	0	13.23	0	0	0	0	0	0	-11.89	-11.89
Westbrook Inverter Enclosur	W_INV5	369719	4906574	2	0	0	89.1	89.1	1	5589.39	3.25	0	85.95	0	1.79	0	0	13.24	0	0	0	0	0	0	-11.91	-11.91
Westbrook Inverter Enclosur	W_INV7	369780	4906417	2	0	0	89.1	89.1	1	5639.77	3.25	0	86.03	0	1.8	0	0	13.3	0	0	0	0	0	0	-12.07	-12.07
Westbrook Inverter Enclosur	W_INV6	369875	4906578	2	0	0	89.1	89.1	1	5745.21	3.25	0	86.19	0	1.82	0	0	13.44	0	0	0	0	0	0	-12.39	-12.39
Inverter	MV5-6	369982	4908507	2	0	0	89.1	89.1	1	6303.06	3.25	0	86.99	0	1.96	0	0	14.14	0	0	0	0	0	0	-14.03	-14.03
Westbrook Inverter Enclosur	W_INV1	369409	4906578	2	0	0	86.1	86.1	1	5280.81	3.25	0	85.45	0	1.71	0	0	12.84	0	0	0	0	0	0	-13.94	-13.94
Inverter Transformer	MV1-7 T	364919	4905782	2	0	0	69.4	69.4	1	842.24	3.25	0	69.51	0	1.54	0	0	3.58	0	0	0	0	0	0	-5.27	-5.27
Inverter	MV6-4	370250	4906966	2	0	0	86.1	86.1	1	6160.23	3.25	0	86.79	0	1.93	0	0	13.96	0	0	0	0	0	0	-16.62	-16.62
Inverter Transformer	MV1-10 T	365010	4905564	2	0	0	69.4	69.4	1	1026.3	3.25	0	71.23	0	1.7	0	0	3.85	0	0	0	0	0	0	-7.43	-7.43
Inverter Transformer	MV1-13 T	364725	4905241	2	0	0	69.4	69.4	1	1052.3	3.25	0	71.44	0	1.72	0	0	3.88	0	0	0	0	0	0	-7.7	-7.7
Inverter Transformer	MV1-3 T	364435	4906039	2	0	0	56.1	56.1	1	298.49	3.25	0	60.5	0	-0.07	0	0	2.78	0	0	0	0	0	0	-7.15	-7.15
Inverter Transformer	MV1-14 T	365157	4905049	2	0	0	69.4	69.4	1	1472.17	3.25	0	74.36	0	1.96	0	0	4.4	0	0	0	0	0	0	-11.37	-11.37
Inverter Transformer	MV2-1 T	365836	4906816	2	0	0	69.4	69.4	1	1825.48	3.25	0	76.23	0	2.11	0	0	4.79	0	0	0	0	0	0	-13.77	-13.77
Westbrook Inverter Transfor	W_INVTR1	369403	4906578	2	0	0	78.2	78.2	1	5274.83	3.25	0	85.44	0	-3.23	0	0	2.51	0	0	0	0	0	0	-6.48	-6.48
Inverter Transformer	MV1-6 T	364482	4905835	2	0	0	56.1	56.1	1	439.73	3.25	0	63.86	0	-0.12	0	0	3.35	0	0	0	0	0	0	-11.04	-11.04
Westbrook Inverter Transfor	W_INVTR2	369368	4906388	2	0	0	77.3	77.3	1	5226.82	3.25	0	85.36	0	-3.22	0	0	2.49	0	0	0	0	0	0	-7.29	-7.29
Westbrook Inverter Transfor	W_INVTR3	369514	4906164	2	0	0	77.3	77.3	1	5366.17	3.25	0	85.59	0	-3.25	0	0	2.54	0	0	0	0	0	0	-7.54	-7.54
Westbrook Inverter Transfor	W_INVTR4	369679	4906164	2	0	0	77.3	77.3	1	5531.17	3.25	0	85.86	0	-3.28	0	0	2.59	0	0	0	0	0	0	-7.82	-7.82
Westbrook Inverter Transfor	W_INVTR5	369725	4906574	2	0	0	77.3	77.3	1	5595.37	3.25	0	85.96	0	-3.29	0	0	2.61	0	0	0	0	0	0	-7.93	-7.93
Westbrook Inverter Transfor	W_INVTR7	369786	4906417	2	0	0	77.3	77.3	1	5645.77	3.25	0	86.03	0	-3.3	0	0	2.63	0	0	0	0	0	0	-8.02	-8.02
Westbrook Inverter Transfor	W_INVTR6	369881	4906578	2	0	0	77.3	77.3	1	5751.19	3.25	0	86.2	0	-3.32	0	0	2.66	0	0	0	0	0	0	-8.19	-8.19
Inverter Transformer	MV1-1 T	364721	4906166	2	0	0	56.1	56.1	1	574.77	3.25	0	66.19	0	-0.11	0	0	3.78	0	0	0	0	0	0	-13.8	-13.8
Inverter Transformer	MV1-5 T	364676	4905892	2	0	0	56.1	56.1	1	575.53	3.25	0	66.2	0	-0.11	0	0	3.78	0	0	0	0	0	0	-13.82	-13.82
Inverter Transformer	MV1-2 T	364759	4906063	2	0	0	56.1	56.1	1	613.75	3.25	0	66.76	0	-0.1	0	0	3.89	0	0	0	0	0	0	-14.5	-14.5
Inverter Transformer	MV1-9 T	364555	4905646	2	0	0	56.1	56.1	1	625.52	3.25	0	66.92	0	-0.1	0	0	3.93	0	0	0	0	0	0	-14.7	-14.7
Inverter Transformer	MV1-4 T	364821	4905918	2	0	0	56.1	56.1	1	702.95	3.25	0	67.94	0	-0.08	0	0	4.14	0	0	0	0	0	0	-15.94	-15.94
Inverter Transformer	MV1-8 T	364782	4905647	2	0	0	56.1	56.1	1	791.6	3.25	0	68.97	0	-0.06	0	0	4.37	0	0	0	0	0	0	-17.23	-17.23
Inverter Transformer	MV1-11 T	364649	4905414	2	0	0	56.1	56.1	1	866.52	3.25	0	69.76	0	-0.03	0	0	4.56	0	0	0	0	0	0	-18.23	-18.23
Inverter Transformer	MV1-12 T	365044	4905386	2	0	0	56.1	56.1	1	1158.9	3.25	0	72.28	0	0.07	0	0	5.26	0	0	0	0	0	0	-21.55	-21.55
Inverter Transformer	MV6-4 T	370244	4906966	2	0	0	69.4	69.4	1	6154.29	3.25	0	86.78	0	3.21	0	0	8.11	0	0	0	0	0	0	-28.76	-28.76
Inverter Transformer	MV6-1 T	370230	4907364	2	0	0	69.4	69.4	1	6207.72	3.25	0	86.86	0	3.22	0	0	8.14	0	0	0	0	0	0	-28.87	-28.87
Inverter Transformer	MV2-4 T	365590	4906628	2	0	0	56.1	56.1	1	1528.54	3.25	0	74.69	0	0.21	0	0	6.08	0	0	0	0	0	0	-24.92	-24.92
Inverter Transformer	MV1-15 T	365309	4904994	2	0	0	56.1	56.1	1	1618.04	3.25	0	75.18	0	0.25	0	0	6.27	0	0	0	0	0	0	-25.64	-25.64
Inverter Transformer	MV2-3 T	365814	4906641	2	0	0	56.1	56.1	1	1745.27	3.25	0	75.84	0	0.3	0	0	6.53	0	0	0	0	0	0	-26.61	-26.61
Inverter Transformer	MV2-2 T	365982	4906654	2	0	0	56.1	56.1	1	1909.88	3.25	0	76.62	0	0.37	0	0	6.87	0	0	0	0	0	0	-27.79	-27.79
Inverter Transformer	MV3-12 T	367674	4907594	2	0	0	56.1	56.1	1	3821.31	3.25	0	82.64	0	1.17	0	0	10.19	0	0	0	0	0	0	-37.94	-37.94
Inverter Transformer	MV3-18 T	367757	4907412	2	0	0	56.1	56.1	1	3832.96	3.25	0	82.67	0	1.18	0	0	10.2	0	0	0	0	0	0	-37.99	-37.99
Inverter Transformer	MV3-13 T	367958	4907577	2	0	0	56.1	56.1	1	4078.73	3.25	0	83.21	0	1.28	0	0	10.57	0	0	0	0	0	0	-39	-39
Inverter Transformer	MV3-7 T	367951	4907754	2	0	0	56.1	56.1	1	4138.78	3.25	0	83.34	0	1.3	0	0	10.66	0	0	0	0	0	0	-39.24	-39.24
Inverter Transformer	MV3-3 T	367944	4907927	2	0	0	56.1	56.1	1	4203.72	3.25	0	83.47	0	1.32	0	0	10.75	0	0	0	0	0	0	-39.49	-39.49
Inverter Transformer	MV3-17 T	368183	4907472	2	0	0	56.1	56.1	1	4255.17	3.25	0	83.58	0	1.34	0	0	10.83	0	0	0	0	0	0	-39.69	-39.69
Inverter Transformer	MV3-10 T	368162	4907669	2	0	0	56.1	56.1	1	4302.15	3.25	0	83.67	0	1.36	0	0	10.9	0	0	0	0	0	0	-39.87	-39.87
Inverter Transformer	MV3-6 T	368156	4907834	2	0	0	56.1	56.1	1	4358.72	3.25	0	83.79	0	1.39	0	0	10.98	0	0	0	0	0	0	-40.09	-40.09
Inverter Transformer	MV3-19 T	368352	4907347	2	0	0	56.1	56.1	1	4379.12	3.25	0	83.83	0	1.39	0	0	11.01	0	0	0	0	0	0	-40.17	-40.17
Inverter Transformer	MV3-1 T	368150	4907976	2	0	0	56.1	56.1	1	4411.01	3.25	0	83.89	0	1.41	0	0	11.05	0	0	0	0	0	0	-40.29	-40.29
Inverter Transformer	MV3-15 T	368351	4907477	2	0	0	56.1	56.1	1	4416.33	3.25	0	83.9	0	1.41	0	0	11.06	0	0	0	0	0	0	-40.31	-40.31
Inverter Transformer	MV3-11 T	368340	4907662	2	0	0	56.1	56.1	1	4466.27	3.25	0	84	0	1.43	0	0	11.13	0	0	0	0	0	0	-40.5	-40.5
Inverter Transformer	MV3-21 T	368484	4907206	2	0	0	56.1	56.1	1	4469.69	3.25	0	84.01	0	1.43	0	0	11.13	0	0	0	0	0	0	-40.51	-40.51
Inverter Transformer	MV3-5 T	368335	4907843	2	0	0	56.1	56.1	1	4527.28	3.25	0	84.12	0	1.45	0	0	11.21	0	0	0	0	0	0	-40.72	-40.72
Inverter Transformer	MV3-16 T	368509	4907475	2	0	0	56.1	56.1	1	4566.36	3.25	0	84.19	0	1.46	0	0	11.27	0	0	0	0	0	0	-40.87	-40.87
Inverter Transformer	MV3-22 T	368661	4907142	2	0	0	56.1	56.1	1	4627.05	3.25	0	84.31	0	1.49	0	0	11.35	0	0	0	0	0	0	-41.09	-41.09
Inverter Transformer	MV3-9 T	368517	4907703	2	0	0	56.1	56.1	1	4646.6	3.25	0	84.34	0	1.5	0	0	11.38	0	0	0	0	0	0	-41.16	-41.16
Inverter Transformer	MV3-20 T	368683	4907317	2	0	0	56.1	56.1	1	4690.06	3.25	0	84.42	0	1.51	0	0	11.44	0	0	0	0	0	0	-41.31	-41.31
Inverter Transformer	MV3-4 T	368507	4907925	2	0	0	56.1	56.1	1	4717.55	3.25	0	84.47	0	1.52	0	0	11.48	0	0	0	0	0	0	-41.41	-41.41
Inverter Transformer	MV3-14 T	368678	4907498	2	0	0	56.1	56.1	1	4734.66	3.25	0	84.51	0	1.53	0	0	11.5	0	0	0	0	0	0	-41.47	-41.47
Inverter Transformer	MV3-8 T	368685	4907712	2	0	0	56.1	56.1	1	4807.87	3.25	0	84.64	0	1.56	0	0	11.6	0	0	0	0	0	0	-41.73	-41.73
Inverter Transformer	MV3-2 T	368677	4907928	2	0	0	56.1	56.1	1	4876.18	3.25	0	84.76	0	1.58	0	0	11.69	0	0	0	0	0	0	-41.97	-41.97
Inverter Transformer	MV4-13 T	369057	4908605	2	0	0	56.1	56.1	1	5501.69	3.25	0	85.81	0	1.8	0	0	12.5	0	0	0	0	0	0	-44.05	-44.05
Inverter Transformer	MV4-15 T	369170	4908481	2	0	0	56.1	56.1	1	5548.88	3.25	0	85.88	0	1.82	0	0	12.56	0	0	0	0	0	0	-44.2	-44.2
Inverter Transformer	MV4-14 T	369182	4908507	2	0	0	56.1	56.1	1	5570.83	3.25	0	85.92	0	1.82	0	0	12.58	0	0	0	0	0	0	-44.27	-44.27
Inverter Transformer	MV4-12 T	369049	4908803	2	0	0	56.1	56.1	1	5586.85	3.25	0	85.94	0	1.83	0	0	12.6	0	0	0	0	0	0	-44.32	-44.32
Inverter Transformer	MV4-7 T	369040	4909001	2	0	0	56.1	56.1	1	5676.8	3.25	0	86.08	0	1.86	0	0	12.71	0	0	0	0	0	0	-44.6	-44.6
Inverter Transformer	MV4-4 T	369033	4909199	2	0	0	56.1	56.1	1	5773.85	3.25	0	86.23	0	1.89	0	0	12.83	0	0	0	0	0	0	-44.89	-44.89
Inverter Transformer	MV4-11 T	369269	4908855	2	0	0	56.1	56.1	1	5805.12	3.25	0	86.28	0	1.9	0	0	12.87	0	0	0	0	0	0	-44.99	-44.99
Inverter Transformer	MV4-10 T	369307	4908858	2	0	0	56.1	56.1	1	5840.07	3.25	0	86.33	0	1.91	0	0	12.91	0	0	0	0	0	0	-45.1	-45.1
Inverter Transformer	MV4-1 T	369017	4909397	2	0	0	56.1	56.1	1	5868.5	3.25	0	86.37	0	1.92	0	0	12.95	0	0	0	0	0	0	-45.18	-45.18
Inverter Transformer	MV4-8 T	369262	4909001	2	0	0	56.1	56.1	1	5869.19	3.25	0	86.37	0	1.92	0	0	12.95	0	0	0	0	0	0	-45.18	-45.18
Inverter Transformer	MV4-9 T	369284	4909001	2	0	0	56.1	56.1	1	5888.37	3.25	0	86.4	0	1.93	0	0	12.97	0	0	0	0	0	0	-45.24	-45.24
Inverter Transformer	MV4-6 T	369249	4909192	2	0	0	56.1	56.1	1	5954.1	3.25	0	86.5	0	1.95	0	0	13.05	0	0	0	0	0	0	-45.44	-45.44

	Inverter Transformer	MV4-5 T	369283	4909199	2	0	0	56.1	56.1	1	5986.85	3.25	0	86.54	0	1.96	0	0	13.09	0	0	0	0	0	0	-45.53	-45.53
	Inverter Transformer	MV4-3 T	369234	4909397	2	0	0	56.1	56.1	1	6049.76	3.25	0	86.63	0	1.98	0	0	13.16	0	0	0	0	0	0	-45.72	-45.72
	Inverter Transformer	MV6-2 T	370091	4907339	2	0	0	56.1	56.1	1	6066.53	3.25	0	86.66	0	1.99	0	0	13.18	0	0	0	0	0	0	-45.77	-45.77
	Inverter Transformer	MV4-2 T	369267	4909397	2	0	0	56.1	56.1	1	6077.53	3.25	0	86.67	0	1.99	0	0	13.19	0	0	0	0	0	0	-45.8	-45.8
	Inverter Transformer	MV6-3 T	370202	4907140	2	0	0	56.1	56.1	1	6139.16	3.25	0	86.76	0	2.01	0	0	13.27	0	0	0	0	0	0	-45.98	-45.98
	Inverter Transformer	MV5-6 T	369987	4908507	2	0	0	56.1	56.1	1	6307.69	3.25	0	87	0	2.06	0	0	13.46	0	0	0	0	0	0	-46.46	-46.46
	Inverter Transformer	MV5-5 T	370021	4908690	2	0	0	56.1	56.1	1	6410.3	3.25	0	87.14	0	2.09	0	0	13.58	0	0	0	0	0	0	-46.75	-46.75
	Inverter Transformer	MV5-2 T	370011	4908853	2	0	0	56.1	56.1	1	6468.28	3.25	0	87.22	0	2.11	0	0	13.64	0	0	0	0	0	0	-46.91	-46.91
	Inverter Transformer	MV5-1 T	370015	4909142	2	0	0	56.1	56.1	1	6599.1	3.25	0	87.39	0	2.15	0	0	13.79	0	0	0	0	0	0	-47.27	-47.27
	Inverter Transformer	MV5-3 T	370237	4908851	2	0	0	56.1	56.1	1	6672.99	3.25	0	87.49	0	2.17	0	0	13.87	0	0	0	0	0	0	-47.47	-47.47
	Inverter Transformer	MV5-4 T	370330	4908707	2	0	0	56.1	56.1	1	6701.08	3.25	0	87.52	0	2.18	0	0	13.9	0	0	0	0	0	0	-47.54	-47.54
	Line Reactor	NGR	369421	4908787.5	5	0	0	45.4	45.4	1	5908.87	5.25	0	86.43	0	3.24	1.36	0.1	2.42	0	0	0	0	0	0	-48.09	-48.09
Limit. Valu	0	0																								
Level D/N:	34.9635	34.9635																								

Receiver: Existing Noise Receptor
ID: S-R7
X: 364198
Y: 4906201
Z: 4.5
Ground: 0

ISO	Description	ID	X	Y	Z	Ground	ReflOrd	LxT	LxN	L/A	Dist.	hm	Freq	Adiv	K0b	Agr	Abar	z	Aatm	Afol	Ahous	Cmet	CmetN	Dc	RL	LtotT	LtotN
	Inverter	MV1-6	364477	4905835	2	0	0	100.3	100.3	1	460.22	3.25	0	64.26	0	-0.58	0	0	8.2	0	0	0	0	0	0	28.43	28.43
	Inverter	MV1-1	364715	4906166	2	0	0	100.3	100.3	1	518.19	3.25	0	65.29	0	-0.54	0	0	8.66	0	0	0	0	0	0	26.9	26.9
	Inverter	MV1-5	364671	4905892	2	0	0	100.3	100.3	1	564.99	3.25	0	66.04	0	-0.5	0	0	8.99	0	0	0	0	0	0	25.79	25.79
	Inverter	MV1-2	364753	4906063	2	0	0	100.3	100.3	1	571.9	3.25	0	66.15	0	-0.5	0	0	9.03	0	0	0	0	0	0	25.63	25.63
	Inverter	MV1-9	364561	4905646	2	0	0	100.3	100.3	1	663.17	3.25	0	67.43	0	-0.44	0	0	9.55	0	0	0	0	0	0	23.76	23.76
	Inverter	MV1-4	364815	4905918	2	0	0	100.3	100.3	1	678.81	3.25	0	67.63	0	-0.43	0	0	9.63	0	0	0	0	0	0	23.47	23.47
	Inverter	MV1-8	364788	4905647	2	0	0	100.3	100.3	1	809.33	3.25	0	69.16	0	-0.35	0	0	10.22	0	0	0	0	0	0	21.28	21.28
	Inverter	MV1-11	364655	4905414	2	0	0	100.3	100.3	1	910.07	3.25	0	70.18	0	-0.29	0	0	10.6	0	0	0	0	0	0	19.82	19.82
	Inverter	MV1-3	364440	4906039	2	0	0	89.1	89.1	1	291.23	3.25	0	60.28	0	0.36	0	0	4.07	0	0	0	0	0	0	24.34	24.34
	Inverter	MV1-12	365038	4905386	2	0	0	100.3	100.3	1	1170.4	3.25	0	72.37	0	-0.17	0	0	11.44	0	0	0	0	0	0	16.67	16.67
	Inverter	MV1-7	364925	4905782	2	0	0	97.3	97.3	1	839.1	3.25	0	69.48	0	-0.33	0	0	10.34	0	0	0	0	0	0	17.83	17.83
	Inverter	MV2-4	365586	4906624	2	0	0	100.3	100.3	1	1451.03	3.25	0	74.23	0	-0.05	0	0	12.2	0	0	0	0	0	0	13.93	13.93
	Inverter	MV1-10	365004	4905564	2	0	0	97.3	97.3	1	1027.33	3.25	0	71.23	0	-0.23	0	0	11	0	0	0	0	0	0	15.31	15.31
	Sol_Luce Substation	S_Substation	369426	4908792	3.5	0	0	112.1	112.1	1	5834.83	5.25	0	86.32	0	1.12	2.68	0.29	9.57	0	0	0	0	0	0	12.39	12.39
	Inverter	MV1-13	364731	4905241	2	0	0	97.3	97.3	1	1098.04	3.25	0	71.81	0	-0.2	0	0	11.22	0	0	0	0	0	0	14.48	14.48
	Inverter	MV1-15	365315	4904994	2	0	0	100.3	100.3	1	1644.55	3.25	0	75.32	0	0.02	0	0	12.67	0	0	0	0	0	0	12.3	12.3
	Inverter	MV2-3	365820	4906641	2	0	0	100.3	100.3	1	1680.62	3.25	0	75.51	0	0.03	0	0	12.76	0	0	0	0	0	0	12.01	12.01
	Inverter	MV1-14	365163	4905049	2	0	0	97.3	97.3	1	1502.78	3.25	0	74.54	0	-0.03	0	0	12.33	0	0	0	0	0	0	10.48	10.48
	Inverter	MV2-1	365842	4906816	2	0	0	97.3	97.3	1	1755.27	3.25	0	75.89	0	0.05	0	0	12.93	0	0	0	0	0	0	8.44	8.44
	Inverter	MV3-12	367668	4907594	2	0	0	100.3	100.3	1	3739.17	3.25	0	82.46	0	0.49	0	0	16.63	0	0	0	0	0	0	0.74	0.74
	Inverter	MV3-18	367752	4907412	2	0	0	100.3	100.3	1	3754.66	3.25	0	82.49	0	0.49	0	0	16.65	0	0	0	0	0	0	0.68	0.68
	Inverter	MV3-13	367963	4907577	2	0	0	100.3	100.3	1	4008.57	3.25	0	83.06	0	0.53	0	0	17.06	0	0	0	0	0	0	-0.34	-0.34
	Inverter	MV3-7	367945	4907754	2	0	0	100.3	100.3	1	4056.08	3.25	0	83.16	0	0.53	0	0	17.14	0	0	0	0	0	0	-0.52	-0.52
	Inverter	MV3-3	367939	4907927	2	0	0	100.3	100.3	1	4119.97	3.25	0	83.3	0	0.54	0	0	17.24	0	0	0	0	0	0	-0.77	-0.77
	Inverter	MV3-17	368178	4907472	2	0	0	100.3	100.3	1	4178.02	3.25	0	83.42	0	0.55	0	0	17.33	0	0	0	0	0	0	-0.99	-0.99
	Inverter	MV3-10	368167	4907669	2	0	0	100.3	100.3	1	4231.78	3.25	0	83.53	0	0.56	0	0	17.42	0	0	0	0	0	0	-1.19	-1.19
	Inverter	MV3-6	368162	4907834	2	0	0	100.3	100.3	1	4287.19	3.25	0	83.64	0	0.57	0	0	17.5	0	0	0	0	0	0	-1.4	-1.4
	Inverter	MV3-19	368357	4907347	2	0	0	100.3	100.3	1	4314	3.25	0	83.7	0	0.57	0	0	17.54	0	0	0	0	0	0	-1.5	-1.5
	Inverter	MV3-15	368357	4907477	2	0	0	100.3	100.3	1	4350.34	3.25	0	83.77	0	0.57	0	0	17.6	0	0	0	0	0	0	-1.63	-1.63
	Inverter	MV3-21	368478	4907206	2	0	0	100.3	100.3	1	4396.41	3.25	0	83.86	0	0.58	0	0	17.67	0	0	0	0	0	0	-1.8	-1.8
	Inverter	MV3-11	368346	4907662	2	0	0	100.3	100.3	1	4397.78	3.25	0	83.86	0	0.58	0	0	17.67	0	0	0	0	0	0	-1.8	-1.8
	Inverter	MV3-16	368514	4907475	2	0	0	100.3	100.3	1	4500.1	3.25	0	84.06	0	0.59	0	0	17.83	0	0	0	0	0	0	-2.17	-2.17
	Inverter	MV3-9	368512	4907703	2	0	0	100.3	100.3	1	4568	3.25	0	84.19	0	0.6	0	0	17.93	0	0	0	0	0	0	-2.42	-2.42
	Inverter	MV3-20	368689	4907317	2	0	0	100.3	100.3	1	4627.59	3.25	0	84.31	0	0.61	0	0	18.02	0	0	0	0	0	0	-2.62	-2.62
	Inverter	MV3-14	368684	4907498	2	0	0	100.3	100.3	1	4669.73	3.25	0	84.39	0	0.61	0	0	18.09	0	0	0	0	0	0	-2.77	-2.77
	Inverter	MV3-8	368680	4907712	2	0	0	100.3	100.3	1	4729.85	3.25	0	84.5	0	0.62	0	0	18.18	0	0	0	0	0	0	-2.98	-2.98
	Inverter	MV4-7	369035	4909001	2	0	0	100.3	100.3	1	5588.97	3.25	0	85.95	0	0.69	0	0	19.43	0	0	0	0	0	0	-5.75	-5.75
	Inverter	MV4-4	369027	4909199	2	0	0	100.3	100.3	1	5683.95	3.25	0	86.09	0	0.69	0	0	19.56	0	0	0	0	0	0	-6.03	-6.03
	Inverter	MV4-11	369264	4908855	2	0	0	100.3	100.3	1	5719.1	3.25	0	86.15	0	0.69	0	0	19.61	0	0	0	0	0	0	-6.13	-6.13
	Inverter	MV4-10	369312	4908858	2	0	0	100.3	100.3	1	5763.04	3.25	0	86.21	0	0.69	0	0	19.67	0	0	0	0	0	0	-6.26	-6.26
	Inverter	MV4-1	369011	4909397	2	0	0	100.3	100.3	1	5777.49	3.25	0	86.23	0	0.7	0	0	19.69	0	0	0	0	0	0	-6.31	-6.31
	Inverter	MV4-8	369256	4909001	2	0	0	100.3	100.3	1	5781.29	3.25	0	86.24	0	0.7	0	0	19.69	0	0	0	0	0	0	-6.32	-6.32
	Inverter	MV4-9	369289	4909001	2	0	0	100.3	100.3	1	5810.19	3.25	0	86.28	0	0.7	0	0	19.73	0	0	0	0	0	0	-6.4	-6.4
	Inverter	MV4-6	369243	4909192	2	0	0	100.3	100.3	1	5864.99	3.25	0	86.37	0	0.7	0	0	19.81	0	0	0	0	0	0	-6.56	-6.56
	Inverter	MV4-5	369289	4909199	2	0	0	100.3	100.3	1	5908.15	3.25	0	86.43	0	0.7	0	0	19.87	0	0	0	0	0	0	-6.69	-6.69
	Inverter	MV4-3	369229	4909397	2	0	0	100.3	100.3	1	5960.32	3.25	0	86.51	0	0.7	0	0	19.94	0	0	0	0	0	0	-6.84	-6.84
	Inverter	MV6-2	370085	4907339	2	0	0	100.3	100.3	1	5995.98	3.25	0	86.56	0	0.7	0	0	19.99	0	0	0	0	0	0	-6.94	-6.94
	Inverter	MV4-2	369272	4909397	2	0	0	100.3	100.3	1	5996.66	3.25	0	86.56	0	0.7	0	0	19.99	0	0	0	0	0	0	-6.94	-6.94
	Inverter	MV6-3	370207	4907140	2	0	0	100.3	100.3	1	6081.92	3.25	0	86.68	0	0.71	0	0	20.1	0	0	0	0	0	0	-7.18	-7.18
	Inverter	MV5-5	370015	4908690	2	0	0	100.3	100.3	1	6327.13	3.25	0	87.02	0	0.71	0	0	20.43	0	0	0	0	0	0	-7.86	-7.86
	Inverter	MV5-2	370006	4908853	2	0	0	100.3	100.3	1	6384.82	3.25	0	87.1	0	0.71	0	0	20.51	0	0	0	0	0	0	-8.01	-8.01

Inverter	MV5-1	370020	4909142	2	0	0	100.3	100.3	1	6522.67	3.25	0	87.29	0	0.71	0	0	20.69	0	0	0	0	0	0	-8.38	-8.38
Inverter	MV5-3	370231	4908851	2	0	0	100.3	100.3	1	6589.35	3.25	0	87.38	0	0.72	0	0	20.78	0	0	0	0	0	0	-8.56	-8.56
Inverter	MV5-4	370324	4908707	2	0	0	100.3	100.3	1	6618.76	3.25	0	87.42	0	0.71	0	0	20.81	0	0	0	0	0	0	-8.63	-8.63
Inverter	MV2-2	365977	4906654	2	0	0	89.1	89.1	1	1835.77	3.25	0	76.28	0	0.87	0	0	7.77	0	0	0	0	0	0	4.14	4.14
Inverter	MV6-1	370235	4907364	2	0	0	97.3	97.3	1	6148	3.25	0	86.77	0	0.71	0	0	20.19	0	0	0	0	0	0	-10.36	-10.36
DSTATCOM - 10 MVAR #2	DSAT2	369403	4908757	2.5	0	0	96.6	96.6	1	5798.72	3.5	0	86.27	0	3.76	0	0	3.74	0	0	0	0	0	0	2.86	2.86
DSTATCOM - 10 MVAR #1	DSAT1	369437	4908757	2.5	0	0	96.6	96.6	1	5829.26	3.5	0	86.31	0	3.76	0	0	3.76	0	0	0	0	0	0	2.8	2.8
Gardiner Substation	G_Sub	366586.3	4903349.9	2.5	0	0	90.8	90.8	1	3719.24	4.25	0	82.41	0	1.27	2.69	0.26	6.99	0	0	0	0	0	0	-2.58	-2.58
SubstationTransformer	W_ST	369711.17	4906112.3	2.5	0	0	92	92	1	5513.88	4.25	0	85.83	0	1.77	2.21	0.29	9.21	0	0	0	0	0	0	-7.04	-7.04
Inverter	MV3-1	368156	4907976	2	0	0	89.1	89.1	1	4337.79	3.25	0	83.75	0	1.48	0	0	11.56	0	0	0	0	0	0	-7.72	-7.72
Inverters	G_Inv1	366526.4	4903225.8	2	0	0	87.7	87.7	1	3778	3.25	0	82.55	0	2.77	0	0	4.63	0	0	0	0	0	0	-2.29	-2.29
Inverter	MV3-5	368340	4907843	2	0	0	89.1	89.1	1	4455.6	3.25	0	83.98	0	1.5	0	0	11.72	0	0	0	0	0	0	-8.15	-8.15
Inverters	G_Inv2	366676.9	4903239.1	2	0	0	87.7	87.7	1	3862.36	4.2	0	82.74	0	3.17	1.52	0.01	4.72	0	0	0	0	0	0	-4.49	-4.49
Inverter	MV3-22	368656	4907142	2	0	0	89.1	89.1	1	4556.23	3.25	0	84.17	0	1.53	0	0	11.86	0	0	0	0	0	0	-8.51	-8.51
Inverters	G_Inv3	366583.7	4903091.4	2	0	0	87.7	87.7	1	3919.33	3.25	0	82.86	0	2.79	0	0	4.79	0	0	0	0	0	0	-2.78	-2.78
Inverter	MV3-4	368502	4907925	2	0	0	89.1	89.1	1	4636.44	3.25	0	84.32	0	1.55	0	0	11.97	0	0	0	0	0	0	-8.79	-8.79
Inverters	G_Inv4	366732.8	4903105	2	0	0	87.7	87.7	1	4001.3	3.25	0	83.04	0	2.79	0	0	4.88	0	0	0	0	0	0	-3.05	-3.05
Inverters	G_Inv5	366638.5	4902958.1	2	0	0	87.7	87.7	1	4058.63	3.25	0	83.17	0	2.8	0	0	4.94	0	0	0	0	0	0	-3.24	-3.24
Inverter	MV3-2	368671	4907928	2	0	0	89.1	89.1	1	4794.82	3.25	0	84.62	0	1.59	0	0	12.19	0	0	0	0	0	0	-9.33	-9.33
Inverters	G_Inv6	366788.5	4902972	2	0	0	87.7	87.7	1	4139.7	3.25	0	83.34	0	2.8	0	0	5.02	0	0	0	0	0	0	-3.51	-3.51
Inverters	G_Inv7	366694.6	4902824.7	2	0	0	87.7	87.7	1	4199.1	3.25	0	83.46	0	2.81	0	0	5.09	0	0	0	0	0	0	-3.7	-3.7
Inverters	G_Inv8	366844.5	4902838.5	2	0	0	87.7	87.7	1	4279.06	3.25	0	83.63	0	2.81	0	0	5.17	0	0	0	0	0	0	-3.96	-3.96
Inverters	G_Inv9	366750.9	4902691.8	2	0	0	87.7	87.7	1	4339.56	3.25	0	83.75	0	2.82	0	0	5.24	0	0	0	0	0	0	-4.15	-4.15
Westbrook Inverter Enclosur	W_INV2	369374	4906388	2	0	0	89.1	89.1	1	5179.38	3.25	0	85.29	0	1.68	0	0	12.7	0	0	0	0	0	0	-10.61	-10.61
Inverters	G_Inv10	366900.7	4902704.8	2	0	0	87.7	87.7	1	4419.05	3.25	0	83.91	0	2.83	0	0	5.32	0	0	0	0	0	0	-4.4	-4.4
Westbrook Inverter Enclosur	W_INV3	369508	4906164	2	0	0	89.1	89.1	1	5310.13	3.25	0	85.5	0	1.72	0	0	12.87	0	0	0	0	0	0	-11.04	-11.04
Fixed Reactor Bank 1	FRB1	369378	4908755	6	0	0	89.8	89.8	1	5775.41	5.25	0	86.23	0	-0.45	0	0	9.5	0	0	0	0	0	0	-5.51	-5.51
Fixed Reactor Bank 2	FRB2	369464	4908755	6	0	0	89.8	89.8	1	5852.66	5.25	0	86.35	0	-0.44	0	0	9.58	0	0	0	0	0	0	-5.72	-5.72
Inverter	MV4-13	369051	4908605	2	0	0	89.1	89.1	1	5415.79	3.25	0	85.67	0	1.74	0	0	13.01	0	0	0	0	0	0	-11.37	-11.37
Westbrook Inverter Enclosur	W_INV4	369673	4906164	2	0	0	89.1	89.1	1	5475.13	3.25	0	85.77	0	1.76	0	0	13.09	0	0	0	0	0	0	-11.56	-11.56
Inverter	MV4-15	369176	4908481	2	0	0	89.1	89.1	1	5475.3	3.25	0	85.77	0	1.76	0	0	13.09	0	0	0	0	0	0	-11.56	-11.56
Inverter	MV4-14	369176	4908507	2	0	0	89.1	89.1	1	5486.18	3.25	0	85.79	0	1.76	0	0	13.1	0	0	0	0	0	0	-11.59	-11.59
Inverter	MV4-12	369043	4908803	2	0	0	89.1	89.1	1	5499.49	3.25	0	85.81	0	1.76	0	0	13.12	0	0	0	0	0	0	-11.63	-11.63
Westbrook Inverter Enclosur	W_INV5	369719	4906574	2	0	0	89.1	89.1	1	5533.59	3.25	0	85.86	0	1.77	0	0	13.17	0	0	0	0	0	0	-11.74	-11.74
Westbrook Inverter Enclosur	W_INV7	369780	4906417	2	0	0	89.1	89.1	1	5586.18	3.25	0	85.94	0	1.78	0	0	13.23	0	0	0	0	0	0	-11.9	-11.9
Westbrook Inverter Enclosur	W_INV6	369875	4906578	2	0	0	89.1	89.1	1	5689.5	3.25	0	86.1	0	1.81	0	0	13.37	0	0	0	0	0	0	-12.22	-12.22
Inverter	MV5-6	369982	4908507	2	0	0	89.1	89.1	1	6226.74	3.25	0	86.89	0	1.94	0	0	14.05	0	0	0	0	0	0	-13.81	-13.81
Westbrook Inverter Enclosur	W_INV1	369409	4906578	2	0	0	86.1	86.1	1	5224.62	3.25	0	85.36	0	1.7	0	0	12.76	0	0	0	0	0	0	-13.76	-13.76
Inverter Transformer	MV1-7 T	364919	4905782	2	0	0	69.4	69.4	1	833.91	3.25	0	69.42	0	1.53	0	0	3.57	0	0	0	0	0	0	-5.17	-5.17
Inverter	MV6-4	370250	4906966	2	0	0	86.1	86.1	1	6100.16	3.25	0	86.71	0	1.91	0	0	13.89	0	0	0	0	0	0	-16.45	-16.45
Inverter Transformer	MV1-10 T	365010	4905564	2	0	0	69.4	69.4	1	1032.05	3.25	0	71.27	0	1.71	0	0	3.85	0	0	0	0	0	0	-7.49	-7.49
Inverter Transformer	MV1-13 T	364725	4905241	2	0	0	69.4	69.4	1	1095.14	3.25	0	71.79	0	1.76	0	0	3.94	0	0	0	0	0	0	-8.13	-8.13
Inverter Transformer	MV1-3 T	364435	4906039	2	0	0	56.1	56.1	1	287.09	3.25	0	60.16	0	-0.06	0	0	2.72	0	0	0	0	0	0	-6.77	-6.77
Inverter Transformer	MV1-14 T	365157	4905049	2	0	0	69.4	69.4	1	1498.93	3.25	0	74.52	0	1.97	0	0	4.43	0	0	0	0	0	0	-11.57	-11.57
Inverter Transformer	MV2-1 T	365836	4906816	2	0	0	69.4	69.4	1	1749.65	3.25	0	75.86	0	2.08	0	0	4.71	0	0	0	0	0	0	-13.29	-13.29
Westbrook Inverter Transfor	W_INVTR1	369403	4906578	2	0	0	78.2	78.2	1	5218.64	3.25	0	85.35	0	-3.22	0	0	2.49	0	0	0	0	0	0	-6.38	-6.38
Westbrook Inverter Transfor	W_INVTR2	369368	4906388	2	0	0	77.3	77.3	1	5173.38	3.25	0	85.28	0	-3.21	0	0	2.47	0	0	0	0	0	0	-7.19	-7.19
Westbrook Inverter Transfor	W_INVTR3	369514	4906164	2	0	0	77.3	77.3	1	5316.13	3.25	0	85.51	0	-3.24	0	0	2.52	0	0	0	0	0	0	-7.45	-7.45
Inverter Transformer	MV1-6 T	364482	4905835	2	0	0	56.1	56.1	1	463.27	3.25	0	64.32	0	-0.12	0	0	3.43	0	0	0	0	0	0	-11.57	-11.57
Westbrook Inverter Transfor	W_INVTR4	369679	4906164	2	0	0	77.3	77.3	1	5481.13	3.25	0	85.78	0	-3.27	0	0	2.57	0	0	0	0	0	0	-7.74	-7.74
Westbrook Inverter Transfor	W_INVTR5	369725	4906574	2	0	0	77.3	77.3	1	5539.57	3.25	0	85.87	0	-3.28	0	0	2.59	0	0	0	0	0	0	-7.84	-7.84
Westbrook Inverter Transfor	W_INVTR7	369786	4906417	2	0	0	77.3	77.3	1	5592.17	3.25	0	85.95	0	-3.29	0	0	2.61	0	0	0	0	0	0	-7.93	-7.93
Westbrook Inverter Transfor	W_INVTR6	369881	4906578	2	0	0	77.3	77.3	1	5695.49	3.25	0	86.11	0	-3.31	0	0	2.64	0	0	0	0	0	0	-8.1	-8.1
Inverter Transformer	MV1-1 T	364721	4906166	2	0	0	56.1	56.1	1	524.18	3.25	0	65.39	0	-0.12	0	0	3.63	0	0	0	0	0	0	-12.84	-12.84
Inverter Transformer	MV1-5 T	364676	4905892	2	0	0	56.1	56.1	1	569.18	3.25	0	66.11	0	-0.11	0	0	3.77	0	0	0	0	0	0	-13.7	-13.7
Inverter Transformer	MV1-2 T	364759	4906063	2	0	0	56.1	56.1	1	577.73	3.25	0	66.23	0	-0.11	0	0	3.79	0	0	0	0	0	0	-13.86	-13.86
Inverter Transformer	MV1-9 T	364555	4905646	2	0	0	56.1	56.1	1	659.91	3.25	0	67.39	0	-0.09	0	0	4.02	0	0	0	0	0	0	-15.26	-15.26
Inverter Transformer	MV1-4 T	364821	4905918	2	0	0	56.1	56.1	1	684.27	3.25	0	67.7	0	-0.08	0	0	4.09	0	0	0	0	0	0	-15.65	-15.65
Inverter Transformer	MV1-8 T	364782	4905647	2	0	0	56.1	56.1	1	804.97	3.25	0	69.12	0	-0.05	0	0	4.41	0	0	0	0	0	0	-17.41	-17.41
Inverter Transformer	MV1-11 T	364649	4905414	2	0	0	56.1	56.1	1	907.07	3.25	0	70.15	0	-0.02	0	0	4.66	0	0	0	0	0	0	-18.74	-18.74
Inverter Transformer	MV1-12 T	365044	4905386	2	0	0	56.1	56.1	1	1174.71	3.25	0	72.4	0	0.07	0	0	5.3	0	0	0	0	0	0	-21.71	-21.71
Inverter Transformer	MV6-4 T	370244	4906966	2	0	0	69.4	69.4	1	6094.21	3.25	0	86.7	0	3.2	0	0	8.08	0	0	0	0	0	0	-28.63	-28.63
Inverter Transformer	MV6-1 T	370230	4907364	2	0	0	69.4	69.4	1	6143.09	3.25	0	86.77	0	3.21	0	0	8.1	0	0	0	0	0	0	-28.73	-28.73
Inverter Transformer	MV2-4 T	365590	4906628	2	0	0	56.1	56.1	1	1456.02	3.25	0	74.26	0	0.18	0	0	5.92	0	0	0	0	0	0	-24.31	-24.31
Inverter Transformer	MV1-15 T	365309	4904994	2	0	0	56.1	56.1	1	1640.48	3.25	0	75.3	0	0.26	0	0	6.32	0	0	0	0	0	0	-25.81	-25.81
Inverter Transformer	MV2-3 T	365814	4906641	2	0	0	56.1	56.1	1	1674.83	3.25	0	75.48	0	0.27	0	0	6.39	0	0	0	0	0	0	-26.08	-26.08
Inverter Transformer	MV2-2 T	365982	4906654	2	0	0	56.1	56.1	1	1840.62	3.25	0	76.3	0	0.34	0	0	6.73	0	0	0	0	0	0	-27.3	-27.3
Inverter Transformer	MV3-12 T	367674	4907594	2	0	0	56.1	56.1	1	3744.73	3.25	0	82.47	0	1.14	0	0	10.07	0	0	0	0	0	0	-37.62	-37.62
Inverter Transformer	MV3-18 T	367757	4907412	2	0	0	56.1	56.1	1	3759.39	3.25	0	82.5	0	1.15	0	0	10.09	0	0	0	0	0	0	-37.68	-37.68
Inverter Transformer	MV3-13 T	367958	4907577	2	0	0	56.1	56.1	1	4003.87	3.25	0	83.05	0	1.25	0	0	10.46	0	0	0	0	0	0	-38.7	-38.7
Inverter Transformer	MV3-7 T	367951	4907754	2	0	0	56.1	56.1	1	4061.63	3.25	0	83.17	0	1.27	0	0	10.55	0	0	0	0	0	0	-38.93	-38.93
Inverter Transformer	MV3-3 T	367944	4907927	2	0	0	56.1	56.1	1	4124.51	3.25	0	83.31	0	1.29	0	0	10.64	0	0	0	0	0	0	-39.18	-39.18
Inverter Transformer	MV3-17 T	368183	4907472	2	0	0	56.1	56.1	1	4182.78	3.25	0	83.43	0	1.32	0	0	10.72	0	0	0	0	0	0	-39.41	-39.41
Inverter Transformer	MV3-10 T	368162	4907669	2	0	0	56.1	56.1	1	4227.09	3.25	0	83.52	0	1.33	0	0	10.79	0	0	0	0	0	0	-39.58	-39.58

	Inverter Transformer	MV3-6 T	368156	4907834	2	0	0	56.1	56.1	1	4281.64	3.25	0	83.63	0	1.36	0	0	10.87	0	0	0	0	0	0	-39.8	-39.8
	Inverter Transformer	MV3-19 T	368352	4907347	2	0	0	56.1	56.1	1	4309.18	3.25	0	83.69	0	1.37	0	0	10.91	0	0	0	0	0	0	-39.9	-39.9
	Inverter Transformer	MV3-1 T	368150	4907976	2	0	0	56.1	56.1	1	4332.31	3.25	0	83.73	0	1.37	0	0	10.94	0	0	0	0	0	0	-39.99	-39.99
	Inverter Transformer	MV3-15 T	368351	4907477	2	0	0	56.1	56.1	1	4344.6	3.25	0	83.76	0	1.38	0	0	10.96	0	0	0	0	0	0	-40.04	-40.04
	Inverter Transformer	MV3-11 T	368340	4907662	2	0	0	56.1	56.1	1	4392.12	3.25	0	83.85	0	1.4	0	0	11.02	0	0	0	0	0	0	-40.22	-40.22
	Inverter Transformer	MV3-21 T	368484	4907206	2	0	0	56.1	56.1	1	4402.25	3.25	0	83.87	0	1.4	0	0	11.04	0	0	0	0	0	0	-40.26	-40.26
	Inverter Transformer	MV3-5 T	368335	4907843	2	0	0	56.1	56.1	1	4450.95	3.25	0	83.97	0	1.42	0	0	11.11	0	0	0	0	0	0	-40.44	-40.44
	Inverter Transformer	MV3-16 T	368509	4907475	2	0	0	56.1	56.1	1	4495.31	3.25	0	84.06	0	1.44	0	0	11.17	0	0	0	0	0	0	-40.6	-40.6
	Inverter Transformer	MV3-22 T	368661	4907142	2	0	0	56.1	56.1	1	4561.12	3.25	0	84.18	0	1.46	0	0	11.26	0	0	0	0	0	0	-40.85	-40.85
	Inverter Transformer	MV3-9 T	368517	4907703	2	0	0	56.1	56.1	1	4572.72	3.25	0	84.2	0	1.47	0	0	11.28	0	0	0	0	0	0	-40.89	-40.89
	Inverter Transformer	MV3-20 T	368683	4907317	2	0	0	56.1	56.1	1	4621.76	3.25	0	84.3	0	1.49	0	0	11.34	0	0	0	0	0	0	-41.07	-41.07
	Inverter Transformer	MV3-4 T	368507	4907925	2	0	0	56.1	56.1	1	4641.08	3.25	0	84.33	0	1.49	0	0	11.37	0	0	0	0	0	0	-41.14	-41.14
	Inverter Transformer	MV3-14 T	368678	4907498	2	0	0	56.1	56.1	1	4663.97	3.25	0	84.38	0	1.5	0	0	11.4	0	0	0	0	0	0	-41.22	-41.22
	Inverter Transformer	MV3-8 T	368685	4907712	2	0	0	56.1	56.1	1	4734.59	3.25	0	84.51	0	1.53	0	0	11.5	0	0	0	0	0	0	-41.47	-41.47
	Inverter Transformer	MV3-2 T	368677	4907928	2	0	0	56.1	56.1	1	4800.41	3.25	0	84.63	0	1.55	0	0	11.59	0	0	0	0	0	0	-41.71	-41.71
	Inverter Transformer	MV4-13 T	369057	4908605	2	0	0	56.1	56.1	1	5421.17	3.25	0	85.68	0	1.77	0	0	12.4	0	0	0	0	0	0	-43.79	-43.79
	Inverter Transformer	MV4-15 T	369170	4908481	2	0	0	56.1	56.1	1	5469.84	3.25	0	85.76	0	1.79	0	0	12.46	0	0	0	0	0	0	-43.95	-43.95
	Inverter Transformer	MV4-14 T	369182	4908507	2	0	0	56.1	56.1	1	5491.62	3.25	0	85.79	0	1.8	0	0	12.48	0	0	0	0	0	0	-44.02	-44.02
	Inverter Transformer	MV4-12 T	369049	4908803	2	0	0	56.1	56.1	1	5504.78	3.25	0	85.81	0	1.8	0	0	12.5	0	0	0	0	0	0	-44.06	-44.06
	Inverter Transformer	MV4-7 T	369040	4909001	2	0	0	56.1	56.1	1	5593.3	3.25	0	85.95	0	1.83	0	0	12.61	0	0	0	0	0	0	-44.34	-44.34
	Inverter Transformer	MV4-4 T	369033	4909199	2	0	0	56.1	56.1	1	5689.05	3.25	0	86.1	0	1.86	0	0	12.73	0	0	0	0	0	0	-44.64	-44.64
	Inverter Transformer	MV4-11 T	369269	4908855	2	0	0	56.1	56.1	1	5723.53	3.25	0	86.15	0	1.88	0	0	12.77	0	0	0	0	0	0	-44.74	-44.74
	Inverter Transformer	MV4-10 T	369307	4908858	2	0	0	56.1	56.1	1	5758.61	3.25	0	86.21	0	1.89	0	0	12.81	0	0	0	0	0	0	-44.85	-44.85
	Inverter Transformer	MV4-1 T	369017	4909397	2	0	0	56.1	56.1	1	5782.49	3.25	0	86.24	0	1.89	0	0	12.84	0	0	0	0	0	0	-44.92	-44.92
	Inverter Transformer	MV4-8 T	369262	4909001	2	0	0	56.1	56.1	1	5786.54	3.25	0	86.25	0	1.9	0	0	12.85	0	0	0	0	0	0	-44.93	-44.93
	Inverter Transformer	MV4-9 T	369284	4909001	2	0	0	56.1	56.1	1	5805.81	3.25	0	86.28	0	1.9	0	0	12.87	0	0	0	0	0	0	-44.99	-44.99
	Inverter Transformer	MV4-6 T	369249	4909192	2	0	0	56.1	56.1	1	5870.15	3.25	0	86.37	0	1.92	0	0	12.95	0	0	0	0	0	0	-45.19	-45.19
	Inverter Transformer	MV4-5 T	369283	4909199	2	0	0	56.1	56.1	1	5902.99	3.25	0	86.42	0	1.93	0	0	12.99	0	0	0	0	0	0	-45.28	-45.28
	Inverter Transformer	MV4-3 T	369234	4909397	2	0	0	56.1	56.1	1	5964.54	3.25	0	86.51	0	1.95	0	0	13.06	0	0	0	0	0	0	-45.47	-45.47
	Inverter Transformer	MV4-2 T	369267	4909397	2	0	0	56.1	56.1	1	5992.43	3.25	0	86.55	0	1.96	0	0	13.09	0	0	0	0	0	0	-45.55	-45.55
	Inverter Transformer	MV6-2 T	370091	4907339	2	0	0	56.1	56.1	1	6001.87	3.25	0	86.57	0	1.97	0	0	13.11	0	0	0	0	0	0	-45.58	-45.58
	Inverter Transformer	MV6-3 T	370202	4907140	2	0	0	56.1	56.1	1	6076.98	3.25	0	86.67	0	1.99	0	0	13.19	0	0	0	0	0	0	-45.8	-45.8
	Inverter Transformer	MV5-6 T	369987	4908507	2	0	0	56.1	56.1	1	6231.39	3.25	0	86.89	0	2.04	0	0	13.37	0	0	0	0	0	0	-46.24	-46.24
	Inverter Transformer	MV5-5 T	370021	4908690	2	0	0	56.1	56.1	1	6332.65	3.25	0	87.03	0	2.07	0	0	13.49	0	0	0	0	0	0	-46.53	-46.53
	Inverter Transformer	MV5-2 T	370011	4908853	2	0	0	56.1	56.1	1	6389.37	3.25	0	87.11	0	2.08	0	0	13.55	0	0	0	0	0	0	-46.69	-46.69
	Inverter Transformer	MV5-1 T	370015	4909142	2	0	0	56.1	56.1	1	6518.2	3.25	0	87.28	0	2.12	0	0	13.7	0	0	0	0	0	0	-47.05	-47.05
	Inverter Transformer	MV5-3 T	370237	4908851	2	0	0	56.1	56.1	1	6594.85	3.25	0	87.38	0	2.15	0	0	13.79	0	0	0	0	0	0	-47.26	-47.26
	Inverter Transformer	MV5-4 T	370330	4908707	2	0	0	56.1	56.1	1	6624.31	3.25	0	87.42	0	2.15	0	0	13.82	0	0	0	0	0	0	-47.34	-47.34
	Line Reactor	NGR	369421	4908787.5	5	0	0	45.4	45.4	1	5828.35	5.25	0	86.31	0	3.24	1.36	0.1	2.38	0	0	0	0	0	0	-47.94	-47.94
Limit. Valu	0	0																								
Level D/N:	35.0364	35.0364																								

Receiver: Existing Noise Receptor
ID: S-R8
X: 364297
Y: 4906341
Z: 4.5
Ground: 0

ISO	Description	ID	X	Y	Z	Ground	ReflOrd	LxT	LxN	L/A	Dist.	hm	Freq	Adiv	K0b	Agr	Abar	z	Aatm	Afol	Ahous	Cmet	CmetN	Dc	RL	LtotT	LtotN
	Inverter	MV1-1	364715	4906166	2	0	0	100.3	100.3	1	453.16	3.25	0	64.13	0	-0.58	0	0	8.14	0	0	0	0	0	0	28.64	28.64
	Inverter	MV1-2	364753	4906063	2	0	0	100.3	100.3	1	534.07	3.25	0	65.55	0	-0.53	0	0	8.78	0	0	0	0	0	0	26.51	26.51
	Inverter	MV1-6	364477	4905835	2	0	0	100.3	100.3	1	537.07	3.25	0	65.6	0	-0.52	0	0	8.8	0	0	0	0	0	0	26.44	26.44
	Inverter	MV1-5	364671	4905892	2	0	0	100.3	100.3	1	584.37	3.25	0	66.33	0	-0.49	0	0	9.11	0	0	0	0	0	0	25.36	25.36
	Inverter	MV1-4	364815	4905918	2	0	0	100.3	100.3	1	668.77	3.25	0	67.51	0	-0.43	0	0	9.58	0	0	0	0	0	0	23.66	23.66
	Inverter	MV1-9	364561	4905646	2	0	0	100.3	100.3	1	743.46	3.25	0	68.43	0	-0.38	0	0	9.94	0	0	0	0	0	0	22.33	22.33
	Inverter	MV1-8	364788	4905647	2	0	0	100.3	100.3	1	850.13	3.25	0	69.59	0	-0.32	0	0	10.38	0	0	0	0	0	0	20.67	20.67
	Inverter	MV1-11	364655	4905414	2	0	0	100.3	100.3	1	993.73	3.25	0	70.95	0	-0.25	0	0	10.89	0	0	0	0	0	0	18.73	18.73
	Inverter	MV1-7	364925	4905782	2	0	0	97.3	97.3	1	840.76	3.25	0	69.49	0	-0.33	0	0	10.34	0	0	0	0	0	0	17.8	17.8
	Inverter	MV1-12	365038	4905386	2	0	0	100.3	100.3	1	1208.76	3.25	0	72.65	0	-0.15	0	0	11.55	0	0	0	0	0	0	16.26	16.26
	Inverter	MV1-3	364440	4906039	2	0	0	89.1	89.1	1	334.15	3.25	0	61.48	0	0.4	0	0	4.36	0	0	0	0	0	0	22.82	22.82
	Inverter	MV2-4	365586	4906624	2	0	0	100.3	100.3	1	1319.7	3.25	0	73.41	0	-0.1	0	0	11.86	0	0	0	0	0	0	15.15	15.15
	Sol_Luce Substation	S_Substation	369426	4908792	3.5	0	0	112.1	112.1	1	5684.54	5.25	0	86.09	0	1.08	2.71	0.3	9.4	0	0	0	0	0	0	12.79	12.79
	Inverter	MV1-10	365004	4905564	2	0	0	97.3	97.3	1	1050.52	3.25	0	71.43	0	-0.22	0	0	11.07	0	0	0	0	0	0	15.03	15.03
	Inverter	MV2-3	365820	4906641	2	0	0	100.3	100.3	1	1552.27	3.25	0	74.82	0	-0.01	0	0	12.45	0	0	0	0	0	0	13.05	13.05
	Inverter	MV1-13	364731	4905241	2	0	0	97.3	97.3	1	1182.52	3.25	0	72.46	0	-0.16	0	0	11.48	0	0	0	0	0	0	13.54	13.54
	Inverter	MV1-15	365315	4904994	2	0	0	100.3	100.3	1	1688.41	3.25	0	75.55	0	0.03	0	0	12.78	0	0	0	0	0	0	11.95	11.95
	Inverter	MV1-14	365163	4905049	2	0	0	97.3	97.3	1	1555.39	3.25	0	74.84	0	-0.01	0	0	12.46	0	0	0	0	0	0	10.03	10.03
	Inverter	MV2-1	365842	4906816	2	0	0	97.3	97.3	1	1616.37	3.25	0	75.17	0	0.01	0	0	12.61	0	0	0	0	0	0	9.53	9.53
	Inverter	MV3-12	367668	4907594	2	0	0	100.3	100.3	1	3596.34	3.25	0	82.12	0	0.47	0	0	16.39	0	0	0	0	0	0	1.34	1.34
	Inverter	MV3-18	367752	4907412	2	0	0	100.3	100.3	1	3617.19	3.25	0	82.17	0	0.47	0	0	16.43	0	0	0	0	0	0	1.25	1.25
	Inverter	MV3-13	367963	4907577	2	0	0	100.3	100.3	1	3868.75	3.25	0	82.75	0	0.51	0	0	16.84	0	0	0	0	0	0	0.21	0.21
	Inverter	MV3-7	367945	4907754	2	0	0	100.3	100.3	1	3912.09	3.25	0	82.85	0	0.51	0	0	16.91	0	0	0	0	0	0	0.04	0.04
	Inverter	MV3-3	367939	4907927	2	0	0	100.3	100.3	1	3972.35	3.25	0	82.98	0	0.52	0	0	17	0	0	0	0	0	0	-0.2	-0.2

Inverter	MV3-17	368178	4907472	2	0	0	100.3	100.3	1	4042.44	3.25	0	83.13	0	0.53	0	0	17.12	0	0	0	0	0	0	-0.47	-0.47
Inverter	MV3-10	368167	4907669	2	0	0	100.3	100.3	1	4091.51	3.25	0	83.24	0	0.54	0	0	17.19	0	0	0	0	0	0	-0.66	-0.66
Inverter	MV3-6	368162	4907834	2	0	0	100.3	100.3	1	4143.34	3.25	0	83.35	0	0.55	0	0	17.28	0	0	0	0	0	0	-0.86	-0.86
Inverter	MV3-19	368357	4907347	2	0	0	100.3	100.3	1	4182.78	3.25	0	83.43	0	0.55	0	0	17.34	0	0	0	0	0	0	-1.01	-1.01
Inverter	MV3-15	368357	4907477	2	0	0	100.3	100.3	1	4215.93	3.25	0	83.5	0	0.56	0	0	17.39	0	0	0	0	0	0	-1.13	-1.13
Inverter	MV3-11	368346	4907662	2	0	0	100.3	100.3	1	4259.04	3.25	0	83.59	0	0.56	0	0	17.46	0	0	0	0	0	0	-1.29	-1.29
Inverter	MV3-21	368478	4907206	2	0	0	100.3	100.3	1	4269.54	3.25	0	83.61	0	0.56	0	0	17.47	0	0	0	0	0	0	-1.33	-1.33
Inverter	MV3-16	368514	4907475	2	0	0	100.3	100.3	1	4366.81	3.25	0	83.8	0	0.58	0	0	17.63	0	0	0	0	0	0	-1.69	-1.69
Inverter	MV3-9	368512	4907703	2	0	0	100.3	100.3	1	4429.59	3.25	0	83.93	0	0.58	0	0	17.72	0	0	0	0	0	0	-1.92	-1.92
Inverter	MV3-20	368689	4907317	2	0	0	100.3	100.3	1	4499.14	3.25	0	84.06	0	0.59	0	0	17.83	0	0	0	0	0	0	-2.17	-2.17
Inverter	MV3-14	368684	4907498	2	0	0	100.3	100.3	1	4537.01	3.25	0	84.14	0	0.6	0	0	17.89	0	0	0	0	0	0	-2.31	-2.31
Inverter	MV3-8	368680	4907712	2	0	0	100.3	100.3	1	4592.42	3.25	0	84.24	0	0.6	0	0	17.97	0	0	0	0	0	0	-2.5	-2.5
Inverter	MV4-7	369035	4909001	2	0	0	100.3	100.3	1	5433.62	3.25	0	85.7	0	0.68	0	0	19.21	0	0	0	0	0	0	-5.27	-5.27
Inverter	MV4-4	369027	4909199	2	0	0	100.3	100.3	1	5526.4	3.25	0	85.85	0	0.68	0	0	19.34	0	0	0	0	0	0	-5.56	-5.56
Inverter	MV4-11	369264	4908855	2	0	0	100.3	100.3	1	5566.98	3.25	0	85.91	0	0.68	0	0	19.39	0	0	0	0	0	0	-5.68	-5.68
Inverter	MV4-10	369312	4908858	2	0	0	100.3	100.3	1	5611.2	3.25	0	85.98	0	0.69	0	0	19.46	0	0	0	0	0	0	-5.81	-5.81
Inverter	MV4-1	369011	4909397	2	0	0	100.3	100.3	1	5617.91	3.25	0	85.99	0	0.69	0	0	19.47	0	0	0	0	0	0	-5.83	-5.83
Inverter	MV4-8	369256	4909001	2	0	0	100.3	100.3	1	5627.37	3.25	0	86.01	0	0.69	0	0	19.48	0	0	0	0	0	0	-5.86	-5.86
Inverter	MV4-9	369289	4909001	2	0	0	100.3	100.3	1	5656.47	3.25	0	86.05	0	0.69	0	0	19.52	0	0	0	0	0	0	-5.95	-5.95
Inverter	MV4-6	369243	4909192	2	0	0	100.3	100.3	1	5708.86	3.25	0	86.13	0	0.69	0	0	19.59	0	0	0	0	0	0	-6.1	-6.1
Inverter	MV4-5	369289	4909199	2	0	0	100.3	100.3	1	5752.24	3.25	0	86.2	0	0.69	0	0	19.65	0	0	0	0	0	0	-6.23	-6.23
Inverter	MV4-3	369229	4909397	2	0	0	100.3	100.3	1	5802.05	3.25	0	86.27	0	0.7	0	0	19.72	0	0	0	0	0	0	-6.38	-6.38
Inverter	MV4-2	369272	4909397	2	0	0	100.3	100.3	1	5838.64	3.25	0	86.33	0	0.7	0	0	19.77	0	0	0	0	0	0	-6.49	-6.49
Inverter	MV6-2	370085	4907339	2	0	0	100.3	100.3	1	5873.41	3.25	0	86.38	0	0.7	0	0	19.82	0	0	0	0	0	0	-6.59	-6.59
Inverter	MV6-3	370207	4907140	2	0	0	100.3	100.3	1	5963.77	3.25	0	86.51	0	0.7	0	0	19.94	0	0	0	0	0	0	-6.85	-6.85
Inverter	MV5-5	370015	4908690	2	0	0	100.3	100.3	1	6181.69	3.25	0	86.82	0	0.71	0	0	20.24	0	0	0	0	0	0	-7.46	-7.46
Inverter	MV5-2	370006	4908853	2	0	0	100.3	100.3	1	6237.21	3.25	0	86.9	0	0.71	0	0	20.31	0	0	0	0	0	0	-7.61	-7.61
Inverter	MV2-2	365977	4906654	2	0	0	89.1	89.1	1	1708.91	3.25	0	75.65	0	0.84	0	0	7.56	0	0	0	0	0	0	5	5
Inverter	MV5-1	370020	4909142	2	0	0	100.3	100.3	1	6371.68	3.25	0	87.09	0	0.71	0	0	20.49	0	0	0	0	0	0	-7.98	-7.98
Inverter	MV5-3	370231	4908851	2	0	0	100.3	100.3	1	6443.02	3.25	0	87.18	0	0.71	0	0	20.58	0	0	0	0	0	0	-8.17	-8.17
Inverter	MV5-4	370324	4908707	2	0	0	100.3	100.3	1	6474.77	3.25	0	87.22	0	0.71	0	0	20.63	0	0	0	0	0	0	-8.25	-8.25
Inverter	MV6-1	370235	4907364	2	0	0	97.3	97.3	1	6025.48	3.25	0	86.6	0	0.71	0	0	20.03	0	0	0	0	0	0	-10.02	-10.02
DSTATCOM - 10 MVAR #2	DSAT2	369403	4908757	2.5	0	0	96.6	96.6	1	5648.74	3.5	0	86.04	0	3.75	0	0	3.67	0	0	0	0	0	0	3.18	3.18
DSTATCOM - 10 MVAR #1	DSAT1	369437	4908757	2.5	0	0	96.6	96.6	1	5679.49	3.5	0	86.09	0	3.75	0	0	3.68	0	0	0	0	0	0	3.11	3.11
Gardiner Substation	G_Sub	366586.3	4903349.9	2.5	0	0	90.8	90.8	1	3766.64	4.25	0	82.52	0	1.29	2.67	0.25	7.05	0	0	0	0	0	0	-2.75	-2.75
SubstationTransformer	W_ST	369711.17	4906112.3	2.5	0	0	92	92	1	5419	4.25	0	85.68	0	1.74	2.23	0.29	9.11	0	0	0	0	0	0	-6.78	-6.78
Inverter	MV3-1	368156	4907976	2	0	0	89.1	89.1	1	4191.08	3.25	0	83.45	0	1.44	0	0	11.35	0	0	0	0	0	0	-7.18	-7.18
Inverter	MV3-5	368340	4907843	2	0	0	89.1	89.1	1	4312.99	3.25	0	83.7	0	1.47	0	0	11.53	0	0	0	0	0	0	-7.63	-7.63
Inverter	MV3-22	368656	4907142	2	0	0	89.1	89.1	1	4431.98	3.25	0	83.93	0	1.5	0	0	11.69	0	0	0	0	0	0	-8.06	-8.06
Inverter	MV3-4	368502	4907925	2	0	0	89.1	89.1	1	4493.45	3.25	0	84.05	0	1.51	0	0	11.78	0	0	0	0	0	0	-8.28	-8.28
Inverters	G_Inv1	366526.4	4903225.8	2	0	0	87.7	87.7	1	3830.76	3.25	0	82.67	0	2.78	0	0	4.69	0	0	0	0	0	0	-2.47	-2.47
Inverters	G_Inv2	366676.9	4903239.1	2	0	0	87.7	87.7	1	3909.69	3.25	0	82.84	0	2.78	0	0	4.78	0	0	0	0	0	0	-2.74	-2.74
Inverter	MV3-2	368671	4907928	2	0	0	89.1	89.1	1	4653	3.25	0	84.35	0	1.55	0	0	11.99	0	0	0	0	0	0	-8.85	-8.85
Inverters	G_Inv3	366583.7	4903091.4	2	0	0	87.7	87.7	1	3973.53	3.25	0	82.98	0	2.79	0	0	4.85	0	0	0	0	0	0	-2.96	-2.96
Inverters	G_Inv4	366732.8	4903105	2	0	0	87.7	87.7	1	4050.29	3.25	0	83.15	0	2.8	0	0	4.93	0	0	0	0	0	0	-3.21	-3.21
Inverters	G_Inv5	366638.5	4902958.1	2	0	0	87.7	87.7	1	4114.2	3.25	0	83.29	0	2.8	0	0	5	0	0	0	0	0	0	-3.42	-3.42
Inverters	G_Inv6	366788.5	4902972	2	0	0	87.7	87.7	1	4190.2	3.25	0	83.44	0	2.81	0	0	5.08	0	0	0	0	0	0	-3.67	-3.67
Inverters	G_Inv7	366694.6	4902824.7	2	0	0	87.7	87.7	1	4255.92	3.25	0	83.58	0	2.81	0	0	5.15	0	0	0	0	0	0	-3.88	-3.88
Westbrook Inverter Enclosur	W_INV2	369374	4906388	2	0	0	89.1	89.1	1	5077.22	3.25	0	85.11	0	1.66	0	0	12.57	0	0	0	0	0	0	-10.28	-10.28
Inverters	G_Inv8	366844.5	4902838.5	2	0	0	87.7	87.7	1	4330.97	3.25	0	83.73	0	2.82	0	0	5.23	0	0	0	0	0	0	-4.12	-4.12
Inverters	G_Inv9	366750.9	4902691.8	2	0	0	87.7	87.7	1	4397.53	3.25	0	83.86	0	2.82	0	0	5.3	0	0	0	0	0	0	-4.33	-4.33
Fixed Reactor Bank 1	FRB1	369378	4908755	6	0	0	89.8	89.8	1	5625.3	5.25	0	86	0	-0.47	0	0	9.34	0	0	0	0	0	0	-5.09	-5.09
Westbrook Inverter Enclosur	W_INV3	369508	4906164	2	0	0	89.1	89.1	1	5214.01	3.25	0	85.34	0	1.69	0	0	12.75	0	0	0	0	0	0	-10.73	-10.73
Fixed Reactor Bank 2	FRB2	369464	4908755	6	0	0	89.8	89.8	1	5703.09	5.25	0	86.12	0	-0.46	0	0	9.42	0	0	0	0	0	0	-5.31	-5.31
Inverters	G_Inv10	366900.7	4902704.8	2	0	0	87.7	87.7	1	4472.27	3.25	0	84.01	0	2.83	0	0	5.38	0	0	0	0	0	0	-4.56	-4.56
Inverter	MV4-13	369051	4908605	2	0	0	89.1	89.1	1	5265.57	3.25	0	85.43	0	1.71	0	0	12.82	0	0	0	0	0	0	-10.89	-10.89
Inverter	MV4-15	369176	4908481	2	0	0	89.1	89.1	1	5327.69	3.25	0	85.53	0	1.72	0	0	12.9	0	0	0	0	0	0	-11.09	-11.09
Inverter	MV4-14	369176	4908507	2	0	0	89.1	89.1	1	5338.18	3.25	0	85.55	0	1.72	0	0	12.91	0	0	0	0	0	0	-11.12	-11.12
Inverter	MV4-12	369043	4908803	2	0	0	89.1	89.1	1	5346.58	3.25	0	85.56	0	1.73	0	0	12.92	0	0	0	0	0	0	-11.15	-11.15
Westbrook Inverter Enclosur	W_INV4	369673	4906164	2	0	0	89.1	89.1	1	5378.91	3.25	0	85.61	0	1.73	0	0	12.96	0	0	0	0	0	0	-11.25	-11.25
Westbrook Inverter Enclosur	W_INV5	369719	4906574	2	0	0	89.1	89.1	1	5427	3.25	0	85.69	0	1.75	0	0	13.03	0	0	0	0	0	0	-11.41	-11.41
Westbrook Inverter Enclosur	W_INV7	369780	4906417	2	0	0	89.1	89.1	1	5483.53	3.25	0	85.78	0	1.76	0	0	13.1	0	0	0	0	0	0	-11.58	-11.58
Westbrook Inverter Enclosur	W_INV6	369875	4906578	2	0	0	89.1	89.1	1	5583.03	3.25	0	85.94	0	1.78	0	0	13.23	0	0	0	0	0	0	-11.89	-11.89
Inverter	MV5-6	369982	4908507	2	0	0	89.1	89.1	1	6083.65	3.25	0	86.68	0	1.91	0	0	13.87	0	0	0	0	0	0	-13.4	-13.4
Westbrook Inverter Enclosur	W_INV1	369409	4906578	2	0	0	86.1	86.1	1	5117.49	3.25	0	85.18	0	1.67	0	0	12.62	0	0	0	0	0	0	-13.41	-13.41
Inverter Transformer	MV1-7 T	364919	4905782	2	0	0	69.4	69.4	1	836.28	3.25	0	69.45	0	1.53	0	0	3.57	0	0	0	0	0	0	-5.2	-5.2
Inverter	MV6-4	370250	4906966	2	0	0	86.1	86.1	1	5985.72	3.25	0	86.54	0	1.88	0	0	13.74	0	0	0	0	0	0	-16.11	-16.11
Inverter Transformer	MV1-10 T	365010	4905564	2	0	0	69.4	69.4	1	1054.56	3.25	0	71.46	0	1.73	0	0	3.89	0	0	0	0	0	0	-7.72	-7.72
Inverter Transformer	MV1-13 T	364725	4905241	2	0	0	69.4	69.4	1	1180.33	3.25	0	72.44	0	1.81	0	0	4.05	0	0	0	0	0	0	-8.95	-8.95
Inverter Transformer	MV1-3 T	364435	4906039	2	0	0	56.1	56.1	1	332.05	3.25	0	61.42	0	-0.09	0	0	2.93	0	0	0	0	0	0	-8.21	-8.21
Inverter Transformer	MV1-14 T	365157	4905049	2	0	0	69.4	69.4	1	1552.05	3.25	0	74.82	0	2	0	0	4.49	0	0	0	0	0	0	-11.96	-11.96
Inverter Transformer	MV2-1 T	365836	4906816	2	0	0	69.4	69.4	1	1610.64	3.25	0	75.14	0	2.02	0	0	4.56	0	0	0	0	0	0	-12.37	-12.37
Westbrook Inverter Transfor	W_INVTR1	369403	4906578	2	0	0	78.2	78.2	1	5111.5	3.25	0	85.17	0	-3.2	0	0	2.45	0	0	0	0	0	0	-6.18	-6.18
Westbrook Inverter Transfor	W_INVTR2	369368	4906388	2	0	0	77.3	77.3	1	5071.22	3.25	0	85.1	0	-3.19	0	0	2.44	0	0	0	0	0	0	-7.01	-7.01

Westbrook Inverter Transfor	W_INVTR3	369514	4906164	2	0	0	77.3	77.3	1	5220	3.25	0	85.35	0	-3.22	0	0	2.49	0	0	0	0	0	0	-7.28	-7.28
Inverter Transformer	MV1-1 T	364721	4906166	2	0	0	56.1	56.1	1	458.7	3.25	0	64.23	0	-0.12	0	0	3.42	0	0	0	0	0	0	-11.47	-11.47
Westbrook Inverter Transfor	W_INVTR4	369679	4906164	2	0	0	77.3	77.3	1	5384.91	3.25	0	85.62	0	-3.25	0	0	2.54	0	0	0	0	0	0	-7.57	-7.57
Westbrook Inverter Transfor	W_INVTR5	369725	4906574	2	0	0	77.3	77.3	1	5433	3.25	0	85.7	0	-3.26	0	0	2.56	0	0	0	0	0	0	-7.66	-7.66
Westbrook Inverter Transfor	W_INVTR7	369786	4906417	2	0	0	77.3	77.3	1	5489.53	3.25	0	85.79	0	-3.27	0	0	2.58	0	0	0	0	0	0	-7.75	-7.75
Westbrook Inverter Transfor	W_INVTR6	369881	4906578	2	0	0	77.3	77.3	1	5589.03	3.25	0	85.95	0	-3.29	0	0	2.61	0	0	0	0	0	0	-7.92	-7.92
Inverter Transformer	MV1-6 T	364482	4905835	2	0	0	56.1	56.1	1	538.76	3.25	0	65.63	0	-0.11	0	0	3.67	0	0	0	0	0	0	-13.13	-13.13
Inverter Transformer	MV1-2 T	364759	4906063	2	0	0	56.1	56.1	1	539.2	3.25	0	65.63	0	-0.11	0	0	3.67	0	0	0	0	0	0	-13.14	-13.14
Inverter Transformer	MV1-5 T	364676	4905892	2	0	0	56.1	56.1	1	587.58	3.25	0	66.38	0	-0.11	0	0	3.82	0	0	0	0	0	0	-14.04	-14.04
Inverter Transformer	MV1-4 T	364821	4905918	2	0	0	56.1	56.1	1	673.43	3.25	0	67.57	0	-0.09	0	0	4.06	0	0	0	0	0	0	-15.48	-15.48
Inverter Transformer	MV1-9 T	364555	4905646	2	0	0	56.1	56.1	1	741.35	3.25	0	68.4	0	-0.07	0	0	4.24	0	0	0	0	0	0	-16.52	-16.52
Inverter Transformer	MV1-8 T	364782	4905647	2	0	0	56.1	56.1	1	846.68	3.25	0	69.55	0	-0.04	0	0	4.51	0	0	0	0	0	0	-17.97	-17.97
Inverter Transformer	MV1-11 T	364649	4905414	2	0	0	56.1	56.1	1	991.58	3.25	0	70.93	0	0.01	0	0	4.87	0	0	0	0	0	0	-19.75	-19.75
Inverter Transformer	MV1-12 T	365044	4905386	2	0	0	56.1	56.1	1	1212.45	3.25	0	72.67	0	0.09	0	0	5.38	0	0	0	0	0	0	-22.09	-22.09
Inverter Transformer	MV6-4 T	370244	4906966	2	0	0	69.4	69.4	1	5979.75	3.25	0	86.53	0	3.19	0	0	8.01	0	0	0	0	0	0	-28.37	-28.37
Inverter Transformer	MV6-1 T	370230	4907364	2	0	0	69.4	69.4	1	6020.55	3.25	0	86.59	0	3.19	0	0	8.03	0	0	0	0	0	0	-28.46	-28.46
Inverter Transformer	MV2-4 T	365590	4906628	2	0	0	56.1	56.1	1	1324.47	3.25	0	73.44	0	0.13	0	0	5.64	0	0	0	0	0	0	-23.15	-23.15
Inverter Transformer	MV2-3 T	365814	4906641	2	0	0	56.1	56.1	1	1546.38	3.25	0	74.79	0	0.22	0	0	6.12	0	0	0	0	0	0	-25.06	-25.06
Inverter Transformer	MV1-15 T	365309	4904994	2	0	0	56.1	56.1	1	1684.8	3.25	0	75.53	0	0.27	0	0	6.41	0	0	0	0	0	0	-26.15	-26.15
Inverter Transformer	MV2-2 T	365982	4906654	2	0	0	56.1	56.1	1	1713.83	3.25	0	75.68	0	0.29	0	0	6.47	0	0	0	0	0	0	-26.37	-26.37
Inverter Transformer	MV3-12 T	367674	4907594	2	0	0	56.1	56.1	1	3601.96	3.25	0	82.13	0	1.08	0	0	9.85	0	0	0	0	0	0	-37	-37
Inverter Transformer	MV3-18 T	367757	4907412	2	0	0	56.1	56.1	1	3621.97	3.25	0	82.18	0	1.09	0	0	9.88	0	0	0	0	0	0	-37.09	-37.09
Inverter Transformer	MV3-13 T	367958	4907577	2	0	0	56.1	56.1	1	3864.02	3.25	0	82.74	0	1.19	0	0	10.25	0	0	0	0	0	0	-38.12	-38.12
Inverter Transformer	MV3-7 T	367951	4907754	2	0	0	56.1	56.1	1	3917.69	3.25	0	82.86	0	1.21	0	0	10.33	0	0	0	0	0	0	-38.35	-38.35
Inverter Transformer	MV3-3 T	367944	4907927	2	0	0	56.1	56.1	1	3976.93	3.25	0	82.99	0	1.23	0	0	10.42	0	0	0	0	0	0	-38.59	-38.59
Inverter Transformer	MV3-17 T	368183	4907472	2	0	0	56.1	56.1	1	4047.24	3.25	0	83.14	0	1.26	0	0	10.52	0	0	0	0	0	0	-38.87	-38.87
Inverter Transformer	MV3-10 T	368162	4907669	2	0	0	56.1	56.1	1	4086.79	3.25	0	83.23	0	1.28	0	0	10.58	0	0	0	0	0	0	-39.03	-39.03
Inverter Transformer	MV3-6 T	368156	4907834	2	0	0	56.1	56.1	1	4137.75	3.25	0	83.34	0	1.3	0	0	10.66	0	0	0	0	0	0	-39.23	-39.23
Inverter Transformer	MV3-19 T	368352	4907347	2	0	0	56.1	56.1	1	4177.93	3.25	0	83.42	0	1.31	0	0	10.72	0	0	0	0	0	0	-39.39	-39.39
Inverter Transformer	MV3-1 T	368150	4907976	2	0	0	56.1	56.1	1	4185.55	3.25	0	83.44	0	1.32	0	0	10.73	0	0	0	0	0	0	-39.42	-39.42
Inverter Transformer	MV3-15 T	368351	4907477	2	0	0	56.1	56.1	1	4210.16	3.25	0	83.49	0	1.33	0	0	10.76	0	0	0	0	0	0	-39.52	-39.52
Inverter Transformer	MV3-11 T	368340	4907662	2	0	0	56.1	56.1	1	4253.34	3.25	0	83.57	0	1.34	0	0	10.83	0	0	0	0	0	0	-39.69	-39.69
Inverter Transformer	MV3-21 T	368484	4907206	2	0	0	56.1	56.1	1	4275.42	3.25	0	83.62	0	1.35	0	0	10.86	0	0	0	0	0	0	-39.77	-39.77
Inverter Transformer	MV3-5 T	368335	4907843	2	0	0	56.1	56.1	1	4308.3	3.25	0	83.69	0	1.37	0	0	10.9	0	0	0	0	0	0	-39.9	-39.9
Inverter Transformer	MV3-16 T	368509	4907475	2	0	0	56.1	56.1	1	4361.98	3.25	0	83.79	0	1.39	0	0	10.98	0	0	0	0	0	0	-40.1	-40.1
Inverter Transformer	MV3-9 T	368517	4907703	2	0	0	56.1	56.1	1	4434.35	3.25	0	83.94	0	1.41	0	0	11.08	0	0	0	0	0	0	-40.38	-40.38
Inverter Transformer	MV3-22 T	368661	4907142	2	0	0	56.1	56.1	1	4436.9	3.25	0	83.94	0	1.42	0	0	11.09	0	0	0	0	0	0	-40.39	-40.39
Inverter Transformer	MV3-20 T	368683	4907317	2	0	0	56.1	56.1	1	4493.28	3.25	0	84.05	0	1.44	0	0	11.17	0	0	0	0	0	0	-40.6	-40.6
Inverter Transformer	MV3-4 T	368507	4907925	2	0	0	56.1	56.1	1	4498.13	3.25	0	84.06	0	1.44	0	0	11.17	0	0	0	0	0	0	-40.61	-40.61
Inverter Transformer	MV3-14 T	368678	4907498	2	0	0	56.1	56.1	1	4531.2	3.25	0	84.12	0	1.45	0	0	11.22	0	0	0	0	0	0	-40.74	-40.74
Inverter Transformer	MV3-8 T	368685	4907712	2	0	0	56.1	56.1	1	4597.19	3.25	0	84.25	0	1.48	0	0	11.31	0	0	0	0	0	0	-40.98	-40.98
Inverter Transformer	MV3-2 T	368677	4907928	2	0	0	56.1	56.1	1	4658.65	3.25	0	84.37	0	1.5	0	0	11.4	0	0	0	0	0	0	-41.2	-41.2
Inverter Transformer	MV4-13 T	369057	4908605	2	0	0	56.1	56.1	1	5270.99	3.25	0	85.44	0	1.72	0	0	12.21	0	0	0	0	0	0	-43.31	-43.31
Inverter Transformer	MV4-15 T	369170	4908481	2	0	0	56.1	56.1	1	5322.19	3.25	0	85.52	0	1.74	0	0	12.27	0	0	0	0	0	0	-43.47	-43.47
Inverter Transformer	MV4-14 T	369182	4908507	2	0	0	56.1	56.1	1	5343.67	3.25	0	85.56	0	1.75	0	0	12.3	0	0	0	0	0	0	-43.54	-43.54
Inverter Transformer	MV4-12 T	369049	4908803	2	0	0	56.1	56.1	1	5351.91	3.25	0	85.57	0	1.75	0	0	12.31	0	0	0	0	0	0	-43.57	-43.57
Inverter Transformer	MV4-7 T	369040	4909001	2	0	0	56.1	56.1	1	5437.98	3.25	0	85.71	0	1.78	0	0	12.42	0	0	0	0	0	0	-43.85	-43.85
Inverter Transformer	MV4-4 T	369033	4909199	2	0	0	56.1	56.1	1	5531.53	3.25	0	85.86	0	1.81	0	0	12.53	0	0	0	0	0	0	-44.14	-44.14
Inverter Transformer	MV4-11 T	369269	4908855	2	0	0	56.1	56.1	1	5571.44	3.25	0	85.92	0	1.82	0	0	12.58	0	0	0	0	0	0	-44.27	-44.27
Inverter Transformer	MV4-10 T	369307	4908858	2	0	0	56.1	56.1	1	5606.73	3.25	0	85.97	0	1.84	0	0	12.63	0	0	0	0	0	0	-44.38	-44.38
Inverter Transformer	MV4-1 T	369017	4909397	2	0	0	56.1	56.1	1	5622.95	3.25	0	86	0	1.84	0	0	12.65	0	0	0	0	0	0	-44.43	-44.43
Inverter Transformer	MV4-8 T	369262	4909001	2	0	0	56.1	56.1	1	5632.66	3.25	0	86.01	0	1.85	0	0	12.66	0	0	0	0	0	0	-44.46	-44.46
Inverter Transformer	MV4-9 T	369284	4909001	2	0	0	56.1	56.1	1	5652.06	3.25	0	86.04	0	1.85	0	0	12.68	0	0	0	0	0	0	-44.52	-44.52
Inverter Transformer	MV4-6 T	369249	4909192	2	0	0	56.1	56.1	1	5714.06	3.25	0	86.14	0	1.87	0	0	12.76	0	0	0	0	0	0	-44.71	-44.71
Inverter Transformer	MV4-5 T	369283	4909199	2	0	0	56.1	56.1	1	5747.03	3.25	0	86.19	0	1.88	0	0	12.8	0	0	0	0	0	0	-44.81	-44.81
Inverter Transformer	MV4-3 T	369234	4909397	2	0	0	56.1	56.1	1	5806.3	3.25	0	86.28	0	1.9	0	0	12.87	0	0	0	0	0	0	-44.99	-44.99
Inverter Transformer	MV4-2 T	369267	4909397	2	0	0	56.1	56.1	1	5834.38	3.25	0	86.32	0	1.91	0	0	12.91	0	0	0	0	0	0	-45.08	-45.08
Inverter Transformer	MV6-2 T	370091	4907339	2	0	0	56.1	56.1	1	5879.32	3.25	0	86.39	0	1.93	0	0	12.96	0	0	0	0	0	0	-45.21	-45.21
Inverter Transformer	MV6-3 T	370202	4907140	2	0	0	56.1	56.1	1	5958.81	3.25	0	86.5	0	1.95	0	0	13.05	0	0	0	0	0	0	-45.45	-45.45
Inverter Transformer	MV5-6 T	369987	4908507	2	0	0	56.1	56.1	1	6088.32	3.25	0	86.69	0	1.99	0	0	13.21	0	0	0	0	0	0	-45.83	-45.83
Inverter Transformer	MV5-5 T	370021	4908690	2	0	0	56.1	56.1	1	6187.24	3.25	0	86.83	0	2.02	0	0	13.32	0	0	0	0	0	0	-46.12	-46.12
Inverter Transformer	MV5-2 T	370011	4908853	2	0	0	56.1	56.1	1	6241.79	3.25	0	86.91	0	2.04	0	0	13.39	0	0	0	0	0	0	-46.27	-46.27
Inverter Transformer	MV5-1 T	370015	4909142	2	0	0	56.1	56.1	1	6367.19	3.25	0	87.08	0	2.08	0	0	13.53	0	0	0	0	0	0	-46.63	-46.63
Inverter Transformer	MV5-3 T	370237	4908851	2	0	0	56.1	56.1	1	6448.54	3.25	0	87.19	0	2.1	0	0	13.62	0	0	0	0	0	0	-46.86	-46.86
Inverter Transformer	MV5-4 T	370330	4908707	2	0	0	56.1	56.1	1	6480.36	3.25	0	87.23	0	2.11	0	0	13.66	0	0	0	0	0	0	-46.94	-46.94
Line Reactor	NGR	369421	4908787.5	5	0	0	45.4	45.4	1	5678.09	5.25	0	86.08	0	3.25	1.36	0.1	2.32	0	0	0	0	0	0	-47.66	-47.66
Limit. Valu 0	0																								
Level D/N: 34.8386	34.8386																								

Receiver: Existing Noise Receptor
ID: S-R9
X: 364369
Y: 4906412
Z: 4.5

Ground: 0

ISO	Description	ID	X	Y	Z	Ground	ReflOrd	LxT	LxN	L/A	Dist.	hm	Freq	Adiv	K0b	Agr	Abar	z	Aatm	Afol	Ahous	Cmet	CmetN	Dc	RL	LtotT	LtotN
	Inverter	MV1-1	364715	4906166	2	0	0	100.3	100.3	1	424.54	3.25	0	63.56	0	-0.6	0	0	7.87	0	0	0	0	0	0	29.49	29.49
	Inverter	MV1-2	364753	4906063	2	0	0	100.3	100.3	1	518.91	3.25	0	65.3	0	-0.54	0	0	8.67	0	0	0	0	0	0	26.88	26.88
	Inverter	MV1-6	364477	4905835	2	0	0	100.3	100.3	1	587.03	3.25	0	66.37	0	-0.49	0	0	9.13	0	0	0	0	0	0	25.3	25.3
	Inverter	MV1-5	364671	4905892	2	0	0	100.3	100.3	1	601.34	3.25	0	66.58	0	-0.48	0	0	9.21	0	0	0	0	0	0	25	25
	Inverter	MV1-4	364815	4905918	2	0	0	100.3	100.3	1	665.55	3.25	0	67.46	0	-0.43	0	0	9.57	0	0	0	0	0	0	23.72	23.72
	Inverter	MV1-9	364561	4905646	2	0	0	100.3	100.3	1	789.7	3.25	0	68.95	0	-0.36	0	0	10.14	0	0	0	0	0	0	21.58	21.58
	Inverter	MV1-8	364788	4905647	2	0	0	100.3	100.3	1	872.23	3.25	0	69.81	0	-0.31	0	0	10.46	0	0	0	0	0	0	20.35	20.35
	Inverter	MV1-11	364655	4905414	2	0	0	100.3	100.3	1	1038.17	3.25	0	71.33	0	-0.23	0	0	11.04	0	0	0	0	0	0	18.18	18.18
	Inverter	MV1-7	364925	4905782	2	0	0	97.3	97.3	1	840.26	3.25	0	69.49	0	-0.33	0	0	10.34	0	0	0	0	0	0	17.81	17.81
	Inverter	MV1-12	365038	4905386	2	0	0	100.3	100.3	1	1224.84	3.25	0	72.76	0	-0.14	0	0	11.6	0	0	0	0	0	0	16.1	16.1
	Inverter	MV2-4	365586	4906624	2	0	0	100.3	100.3	1	1235.33	3.25	0	72.84	0	-0.14	0	0	11.63	0	0	0	0	0	0	15.99	15.99
	Inverter	MV1-3	364440	4906039	2	0	0	89.1	89.1	1	379.71	3.25	0	62.59	0	0.44	0	0	4.63	0	0	0	0	0	0	21.4	21.4
	Sol_Luce Substation	S_Substation	369426	4908792	3.5	0	0	112.1	112.1	1	5589.07	5.25	0	85.95	0	1.06	2.73	0.3	9.3	0	0	0	0	0	0	13.04	13.04
	Inverter	MV2-3	365820	4906641	2	0	0	100.3	100.3	1	1468.96	3.25	0	74.34	0	-0.05	0	0	12.25	0	0	0	0	0	0	13.77	13.77
	Inverter	MV1-10	365004	4905564	2	0	0	97.3	97.3	1	1059.4	3.25	0	71.5	0	-0.22	0	0	11.1	0	0	0	0	0	0	14.93	14.93
	Inverter	MV1-15	365315	4904994	2	0	0	100.3	100.3	1	1704.6	3.25	0	75.63	0	0.04	0	0	12.81	0	0	0	0	0	0	11.83	11.83
	Inverter	MV1-13	364731	4905241	2	0	0	97.3	97.3	1	1225.68	3.25	0	72.77	0	-0.14	0	0	11.6	0	0	0	0	0	0	13.09	13.09
	Inverter	MV2-1	365842	4906816	2	0	0	97.3	97.3	1	1527.4	3.25	0	74.68	0	-0.02	0	0	12.39	0	0	0	0	0	0	10.26	10.26
	Inverter	MV1-14	365163	4905049	2	0	0	97.3	97.3	1	1577.41	3.25	0	74.96	0	-0.01	0	0	12.51	0	0	0	0	0	0	9.84	9.84
	Inverter	MV3-12	367668	4907594	2	0	0	100.3	100.3	1	3504.36	3.25	0	81.89	0	0.45	0	0	16.24	0	0	0	0	0	0	1.73	1.73
	Inverter	MV3-18	367752	4907412	2	0	0	100.3	100.3	1	3527.7	3.25	0	81.95	0	0.46	0	0	16.28	0	0	0	0	0	0	1.63	1.63
	Inverter	MV3-13	367963	4907577	2	0	0	100.3	100.3	1	3778.1	3.25	0	82.55	0	0.49	0	0	16.69	0	0	0	0	0	0	0.58	0.58
	Inverter	MV3-7	367945	4907754	2	0	0	100.3	100.3	1	3819.52	3.25	0	82.64	0	0.5	0	0	16.76	0	0	0	0	0	0	0.41	0.41
	Inverter	MV3-3	367939	4907927	2	0	0	100.3	100.3	1	3878.16	3.25	0	82.77	0	0.51	0	0	16.85	0	0	0	0	0	0	0.18	0.18
	Inverter	MV3-17	368178	4907472	2	0	0	100.3	100.3	1	3953.74	3.25	0	82.94	0	0.52	0	0	16.97	0	0	0	0	0	0	-0.12	-0.12
	Inverter	MV3-10	368167	4907669	2	0	0	100.3	100.3	1	4000.61	3.25	0	83.04	0	0.53	0	0	17.05	0	0	0	0	0	0	-0.31	-0.31
	Inverter	MV3-6	368162	4907834	2	0	0	100.3	100.3	1	4050.79	3.25	0	83.15	0	0.53	0	0	17.13	0	0	0	0	0	0	-0.5	-0.5
	Inverter	MV3-19	368357	4907347	2	0	0	100.3	100.3	1	4096.14	3.25	0	83.25	0	0.54	0	0	17.2	0	0	0	0	0	0	-0.68	-0.68
	Inverter	MV3-15	368357	4907477	2	0	0	100.3	100.3	1	4127.76	3.25	0	83.31	0	0.54	0	0	17.25	0	0	0	0	0	0	-0.8	-0.8
	Inverter	MV3-11	368346	4907662	2	0	0	100.3	100.3	1	4168.82	3.25	0	83.4	0	0.55	0	0	17.32	0	0	0	0	0	0	-0.95	-0.95
	Inverter	MV3-21	368478	4907206	2	0	0	100.3	100.3	1	4185.01	3.25	0	83.43	0	0.55	0	0	17.34	0	0	0	0	0	0	-1.02	-1.02
	Inverter	MV3-16	368514	4907475	2	0	0	100.3	100.3	1	4279.14	3.25	0	83.63	0	0.56	0	0	17.49	0	0	0	0	0	0	-1.37	-1.37
	Inverter	MV3-9	368512	4907703	2	0	0	100.3	100.3	1	4339.49	3.25	0	83.75	0	0.57	0	0	17.58	0	0	0	0	0	0	-1.59	-1.59
	Inverter	MV3-20	368689	4907317	2	0	0	100.3	100.3	1	4413.78	3.25	0	83.9	0	0.58	0	0	17.7	0	0	0	0	0	0	-1.86	-1.86
	Inverter	MV3-14	368684	4907498	2	0	0	100.3	100.3	1	4449.56	3.25	0	83.97	0	0.58	0	0	17.75	0	0	0	0	0	0	-1.99	-1.99
	Inverter	MV3-8	368680	4907712	2	0	0	100.3	100.3	1	4502.75	3.25	0	84.07	0	0.59	0	0	17.83	0	0	0	0	0	0	-2.18	-2.18
	Inverter	MV4-7	369035	4909001	2	0	0	100.3	100.3	1	5336.15	3.25	0	85.54	0	0.67	0	0	19.07	0	0	0	0	0	0	-4.97	-4.97
	Inverter	MV4-4	369027	4909199	2	0	0	100.3	100.3	1	5428.11	3.25	0	85.69	0	0.68	0	0	19.2	0	0	0	0	0	0	-5.26	-5.26
	Inverter	MV4-11	369264	4908855	2	0	0	100.3	100.3	1	5470.77	3.25	0	85.76	0	0.68	0	0	19.26	0	0	0	0	0	0	-5.39	-5.39
	Inverter	MV4-10	369312	4908858	2	0	0	100.3	100.3	1	5515.09	3.25	0	85.83	0	0.68	0	0	19.32	0	0	0	0	0	0	-5.52	-5.52
	Inverter	MV4-1	369011	4909397	2	0	0	100.3	100.3	1	5518.91	3.25	0	85.84	0	0.68	0	0	19.33	0	0	0	0	0	0	-5.53	-5.53
	Inverter	MV4-8	369256	4909001	2	0	0	100.3	100.3	1	5530.43	3.25	0	85.86	0	0.68	0	0	19.34	0	0	0	0	0	0	-5.57	-5.57
	Inverter	MV4-9	369289	4909001	2	0	0	100.3	100.3	1	5559.62	3.25	0	85.9	0	0.68	0	0	19.38	0	0	0	0	0	0	-5.66	-5.66
	Inverter	MV4-6	369243	4909192	2	0	0	100.3	100.3	1	5611.09	3.25	0	85.98	0	0.69	0	0	19.46	0	0	0	0	0	0	-5.81	-5.81
	Inverter	MV4-5	369289	4909199	2	0	0	100.3	100.3	1	5654.54	3.25	0	86.05	0	0.69	0	0	19.52	0	0	0	0	0	0	-5.94	-5.94
	Inverter	MV4-3	369229	4909397	2	0	0	100.3	100.3	1	5703.49	3.25	0	86.12	0	0.69	0	0	19.59	0	0	0	0	0	0	-6.09	-6.09
	Inverter	MV4-2	369272	4909397	2	0	0	100.3	100.3	1	5740.18	3.25	0	86.18	0	0.69	0	0	19.64	0	0	0	0	0	0	-6.2	-6.2
	Inverter	MV6-2	370085	4907339	2	0	0	100.3	100.3	1	5790.68	3.25	0	86.25	0	0.7	0	0	19.71	0	0	0	0	0	0	-6.35	-6.35
	Inverter	MV6-3	370207	4907140	2	0	0	100.3	100.3	1	5883.22	3.25	0	86.39	0	0.7	0	0	19.83	0	0	0	0	0	0	-6.61	-6.61
	Inverter	MV2-2	365977	4906654	2	0	0	89.1	89.1	1	1626.11	3.25	0	75.22	0	0.82	0	0	7.42	0	0	0	0	0	0	5.59	5.59
	Inverter	MV5-5	370015	4908690	2	0	0	100.3	100.3	1	6088.24	3.25	0	86.69	0	0.71	0	0	20.11	0	0	0	0	0	0	-7.2	-7.2
	Inverter	MV5-2	370006	4908853	2	0	0	100.3	100.3	1	6142.82	3.25	0	86.77	0	0.71	0	0	20.19	0	0	0	0	0	0	-7.35	-7.35
	Inverter	MV5-1	370020	4909142	2	0	0	100.3	100.3	1	6275.88	3.25	0	86.95	0	0.71	0	0	20.36	0	0	0	0	0	0	-7.72	-7.72
	Inverter	MV5-3	370231	4908851	2	0	0	100.3	100.3	1	6349.16	3.25	0	87.05	0	0.71	0	0	20.46	0	0	0	0	0	0	-7.92	-7.92
	Inverter	MV5-4	370324	4908707	2	0	0	100.3	100.3	1	6381.93	3.25	0	87.1	0	0.71	0	0	20.5	0	0	0	0	0	0	-8	-8
	Inverter	MV6-1	370235	4907364	2	0	0	97.3	97.3	1	5942.75	3.25	0	86.48	0	0.7	0	0	19.92	0	0	0	0	0	0	-9.79	-9.79
	DSTATCOM - 10 MVAR #2	DSAT2	369403	4908757	2.5	0	0	96.6	96.6	1	5553.39	3.5	0	85.89	0	3.74	0	0	3.62	0	0	0	0	0	0	3.38	3.38
	DSTATCOM - 10 MVAR #1	DSAT1	369437	4908757	2.5	0	0	96.6	96.6	1	5584.23	3.5	0	85.94	0	3.74	0	0	3.64	0	0	0	0	0	0	3.31	3.31
	Gardiner Substation	G_Sub	366586.3	4903349.9	2.5	0	0	90.8	90.8	1	3780.59	4.25	0	82.55	0	1.29	2.66	0.25	7.07	0	0	0	0	0	0	-2.8	-2.8
	SubstationTransformer	W_ST	369711.17	4906112.3	2.5	0	0	92	92	1	5350.57	4.25	0	85.57	0	1.73	2.25	0.29	9.03	0	0	0	0	0	0	-6.59	-6.59
	Inverter	MV3-1	368156	4907976	2	0	0	89.1	89.1	1	4097.25	3.25	0	83.25	0	1.42	0	0	11.22	0	0	0	0	0	0	-6.83	-6.83
	Inverter	MV3-5	368340	4907843	2	0	0	89.1	89.1	1	4220.97	3.25	0	83.51	0	1.45	0	0	11.4	0	0	0	0	0	0	-7.29	-7.29
	Inverter	MV3-22	368656	4907142	2	0	0	89.1	89.1	1	4348.71	3.25	0	83.77	0	1.48	0	0	11.58	0	0	0	0	0	0	-7.76	-7.76
	Inverter	MV3-4	368502	4907925	2	0	0	89.1	89.1	1	4401.23	3.25	0	83.87	0	1.49	0	0	11.65	0	0	0	0	0	0	-7.95	-7.95
	Inverters	G_Inv1	366526.4	4903225.8	2	0	0	87.7	87.7	1	3847.89	3.25	0	82.7	0	2.78	0	0	4.71	0	0	0	0	0	0	-2.53	-2.53
	Inverter	MV3-2	368671	4907928	2	0	0	89.1	89.1	1	4561.3	3.25	0	84.18	0	1.53	0	0	11.87	0	0	0	0	0	0	-8.52	-8.52
	Inverters	G_Inv2	366676.9	4903239.1	2	0	0	87.7	87.7	1	3923.48	3.25	0	82.87	0	2.79	0	0	4.79	0	0	0	0	0	0	-2.79	-2.79
	Inverters	G_Inv3	366583.7	4903091.4	2	0	0	87.7	87.7	1	3991.4	3.25	0	83.02	0	2.79	0	0	4.86	0	0	0	0	0	0	-3.02	-3.02
	Inverters	G_Inv4	366732.8	4903105	2	0	0	87.7	87.7	1	4064.95	3.25	0	83.18	0	2.8	0	0	4.94	0	0	0	0	0	0	-3.26	-3.26
	Inverters	G_Inv5	366638.5	4902958.1	2	0	0	87.7	87.7	1	4132.8	3.25	0	83.32	0	2.8	0	0	5.02	0	0	0	0	0	0	-3.48	-3.48
	Inverters	G_Inv6	366788.5	4902972	2	0	0	87.7	87.7	1	4205.66	3.25	0	83.48	0	2.81	0	0	5.1	0	0	0	0	0	0	-3.72	-3.72

Westbrook Inverter Enclosur	W_INV2	369374	4906388	2	0	0	89.1	89.1	1	5005.06	3.25	0	84.99	0	1.64	0	0	12.47	0	0	0	0	0	0	-10.04	-10.04
Inverters	G_Inv7	366694.6	4902824.7	2	0	0	87.7	87.7	1	4275.18	3.25	0	83.62	0	2.81	0	0	5.17	0	0	0	0	0	0	-3.94	-3.94
Fixed Reactor Bank 1	FRB1	369378	4908755	6	0	0	89.8	89.8	1	5529.89	5.25	0	85.85	0	-0.49	0	0	9.23	0	0	0	0	0	0	-4.82	-4.82
Inverters	G_Inv8	366844.5	4902838.5	2	0	0	87.7	87.7	1	4347.18	3.25	0	83.76	0	2.82	0	0	5.25	0	0	0	0	0	0	-4.17	-4.17
Westbrook Inverter Enclosur	W_INV3	369508	4906164	2	0	0	89.1	89.1	1	5144.98	3.25	0	85.23	0	1.68	0	0	12.66	0	0	0	0	0	0	-10.5	-10.5
Fixed Reactor Bank 2	FRB2	369464	4908755	6	0	0	89.8	89.8	1	5607.91	5.25	0	85.98	0	-0.48	0	0	9.32	0	0	0	0	0	0	-5.04	-5.04
Inverter	MV4-13	369051	4908605	2	0	0	89.1	89.1	1	5170.14	3.25	0	85.27	0	1.68	0	0	12.69	0	0	0	0	0	0	-10.58	-10.58
Inverters	G_Inv9	366750.9	4902691.8	2	0	0	87.7	87.7	1	4417.39	3.25	0	83.9	0	2.82	0	0	5.32	0	0	0	0	0	0	-4.39	-4.39
Inverter	MV4-15	369176	4908481	2	0	0	89.1	89.1	1	5233.36	3.25	0	85.38	0	1.7	0	0	12.77	0	0	0	0	0	0	-10.79	-10.79
Inverter	MV4-14	369176	4908507	2	0	0	89.1	89.1	1	5243.69	3.25	0	85.39	0	1.7	0	0	12.79	0	0	0	0	0	0	-10.82	-10.82
Inverter	MV4-12	369043	4908803	2	0	0	89.1	89.1	1	5250.06	3.25	0	85.4	0	1.7	0	0	12.8	0	0	0	0	0	0	-10.84	-10.84
Inverters	G_Inv10	366900.7	4902704.8	2	0	0	87.7	87.7	1	4489.19	3.25	0	84.04	0	2.83	0	0	5.4	0	0	0	0	0	0	-4.61	-4.61
Westbrook Inverter Enclosur	W_INV4	369673	4906164	2	0	0	89.1	89.1	1	5309.8	3.25	0	85.5	0	1.72	0	0	12.87	0	0	0	0	0	0	-11.03	-11.03
Westbrook Inverter Enclosur	W_INV5	369719	4906574	2	0	0	89.1	89.1	1	5352.45	3.25	0	85.57	0	1.73	0	0	12.93	0	0	0	0	0	0	-11.17	-11.17
Westbrook Inverter Enclosur	W_INV7	369780	4906417	2	0	0	89.1	89.1	1	5411	3.25	0	85.67	0	1.74	0	0	13.01	0	0	0	0	0	0	-11.36	-11.36
Westbrook Inverter Enclosur	W_INV6	369875	4906578	2	0	0	89.1	89.1	1	5508.5	3.25	0	85.82	0	1.77	0	0	13.13	0	0	0	0	0	0	-11.66	-11.66
Inverter	MV5-6	369982	4908507	2	0	0	89.1	89.1	1	5991.23	3.25	0	86.55	0	1.88	0	0	13.75	0	0	0	0	0	0	-13.13	-13.13
Westbrook Inverter Enclosur	W_INV1	369409	4906578	2	0	0	86.1	86.1	1	5042.73	3.25	0	85.05	0	1.65	0	0	12.52	0	0	0	0	0	0	-13.17	-13.17
Inverter Transformer	MV1-7 T	364919	4905782	2	0	0	69.4	69.4	1	836.31	3.25	0	69.45	0	1.53	0	0	3.57	0	0	0	0	0	0	-5.2	-5.2
Inverter	MV6-4	370250	4906966	2	0	0	86.1	86.1	1	5907.04	3.25	0	86.43	0	1.86	0	0	13.64	0	0	0	0	0	0	-15.88	-15.88
Inverter Transformer	MV1-10 T	365010	4905564	2	0	0	69.4	69.4	1	1063.01	3.25	0	71.53	0	1.73	0	0	3.9	0	0	0	0	0	0	-7.81	-7.81
Inverter Transformer	MV1-13 T	364725	4905241	2	0	0	69.4	69.4	1	1223.92	3.25	0	72.76	0	1.84	0	0	4.11	0	0	0	0	0	0	-9.35	-9.35
Inverter Transformer	MV2-1 T	365836	4906816	2	0	0	69.4	69.4	1	1521.61	3.25	0	74.65	0	1.98	0	0	4.46	0	0	0	0	0	0	-11.74	-11.74
Inverter Transformer	MV1-14 T	365157	4905049	2	0	0	69.4	69.4	1	1574.39	3.25	0	74.94	0	2.01	0	0	4.52	0	0	0	0	0	0	-12.11	-12.11
Inverter Transformer	MV1-3 T	364435	4906039	2	0	0	56.1	56.1	1	378.8	3.25	0	62.57	0	-0.11	0	0	3.12	0	0	0	0	0	0	-9.53	-9.53
Westbrook Inverter Transfor	W_INVTR1	369403	4906578	2	0	0	78.2	78.2	1	5036.74	3.25	0	85.04	0	-3.18	0	0	2.43	0	0	0	0	0	0	-6.04	-6.04
Inverter Transformer	MV1-1 T	364721	4906166	2	0	0	56.1	56.1	1	429.45	3.25	0	63.66	0	-0.12	0	0	3.31	0	0	0	0	0	0	-10.8	-10.8
Westbrook Inverter Transfor	W_INVTR2	369368	4906388	2	0	0	77.3	77.3	1	4999.06	3.25	0	84.98	0	-3.18	0	0	2.41	0	0	0	0	0	0	-6.87	-6.87
Westbrook Inverter Transfor	W_INVTR3	369514	4906164	2	0	0	77.3	77.3	1	5150.97	3.25	0	85.24	0	-3.21	0	0	2.46	0	0	0	0	0	0	-7.15	-7.15
Westbrook Inverter Transfor	W_INVTR4	369679	4906164	2	0	0	77.3	77.3	1	5315.79	3.25	0	85.51	0	-3.24	0	0	2.52	0	0	0	0	0	0	-7.45	-7.45
Westbrook Inverter Transfor	W_INVTR5	369725	4906574	2	0	0	77.3	77.3	1	5358.45	3.25	0	85.58	0	-3.25	0	0	2.53	0	0	0	0	0	0	-7.52	-7.52
Westbrook Inverter Transfor	W_INVTR7	369786	4906417	2	0	0	77.3	77.3	1	5417	3.25	0	85.68	0	-3.26	0	0	2.55	0	0	0	0	0	0	-7.63	-7.63
Westbrook Inverter Transfor	W_INVTR6	369881	4906578	2	0	0	77.3	77.3	1	5514.5	3.25	0	85.83	0	-3.28	0	0	2.59	0	0	0	0	0	0	-7.8	-7.8
Inverter Transformer	MV1-2 T	364759	4906063	2	0	0	56.1	56.1	1	523.36	3.25	0	65.38	0	-0.12	0	0	3.63	0	0	0	0	0	0	-12.83	-12.83
Inverter Transformer	MV1-6 T	364482	4905835	2	0	0	56.1	56.1	1	587.97	3.25	0	66.39	0	-0.11	0	0	3.82	0	0	0	0	0	0	-14.04	-14.04
Inverter Transformer	MV1-5 T	364676	4905892	2	0	0	56.1	56.1	1	603.87	3.25	0	66.62	0	-0.1	0	0	3.87	0	0	0	0	0	0	-14.32	-14.32
Inverter Transformer	MV1-4 T	364821	4905918	2	0	0	56.1	56.1	1	669.59	3.25	0	67.52	0	-0.09	0	0	4.05	0	0	0	0	0	0	-15.42	-15.42
Inverter Transformer	MV1-9 T	364555	4905646	2	0	0	56.1	56.1	1	788.26	3.25	0	68.93	0	-0.06	0	0	4.37	0	0	0	0	0	0	-17.18	-17.18
Inverter Transformer	MV1-8 T	364782	4905647	2	0	0	56.1	56.1	1	869.37	3.25	0	69.78	0	-0.03	0	0	4.57	0	0	0	0	0	0	-18.26	-18.26
Inverter Transformer	MV1-11 T	364649	4905414	2	0	0	56.1	56.1	1	1036.54	3.25	0	71.31	0	0.02	0	0	4.98	0	0	0	0	0	0	-20.25	-20.25
Inverter Transformer	MV1-12 T	365044	4905386	2	0	0	56.1	56.1	1	1228.13	3.25	0	72.78	0	0.09	0	0	5.42	0	0	0	0	0	0	-22.24	-22.24
Inverter Transformer	MV2-4 T	365590	4906628	2	0	0	56.1	56.1	1	1239.96	3.25	0	72.87	0	0.1	0	0	5.45	0	0	0	0	0	0	-22.35	-22.35
Inverter Transformer	MV6-4 T	370244	4906966	2	0	0	69.4	69.4	1	5901.06	3.25	0	86.42	0	3.17	0	0	7.96	0	0	0	0	0	0	-28.2	-28.2
Inverter Transformer	MV6-1 T	370230	4907364	2	0	0	69.4	69.4	1	5937.81	3.25	0	86.47	0	3.18	0	0	7.98	0	0	0	0	0	0	-28.28	-28.28
Inverter Transformer	MV2-3 T	365814	4906641	2	0	0	56.1	56.1	1	1463.04	3.25	0	74.31	0	0.18	0	0	5.94	0	0	0	0	0	0	-24.37	-24.37
Inverter Transformer	MV2-2 T	365982	4906654	2	0	0	56.1	56.1	1	1631.05	3.25	0	75.25	0	0.25	0	0	6.3	0	0	0	0	0	0	-25.74	-25.74
Inverter Transformer	MV1-15 T	365309	4904994	2	0	0	56.1	56.1	1	1701.27	3.25	0	75.62	0	0.28	0	0	6.44	0	0	0	0	0	0	-26.28	-26.28
Inverter Transformer	MV3-12 T	367674	4907594	2	0	0	56.1	56.1	1	3510.01	3.25	0	81.91	0	1.04	0	0	9.7	0	0	0	0	0	0	-36.6	-36.6
Inverter Transformer	MV3-18 T	367757	4907412	2	0	0	56.1	56.1	1	3532.5	3.25	0	81.96	0	1.05	0	0	9.74	0	0	0	0	0	0	-36.7	-36.7
Inverter Transformer	MV3-13 T	367958	4907577	2	0	0	56.1	56.1	1	3773.35	3.25	0	82.53	0	1.15	0	0	10.11	0	0	0	0	0	0	-37.74	-37.74
Inverter Transformer	MV3-7 T	367951	4907754	2	0	0	56.1	56.1	1	3825.14	3.25	0	82.65	0	1.17	0	0	10.19	0	0	0	0	0	0	-37.96	-37.96
Inverter Transformer	MV3-3 T	367944	4907927	2	0	0	56.1	56.1	1	3882.76	3.25	0	82.78	0	1.2	0	0	10.28	0	0	0	0	0	0	-38.2	-38.2
Inverter Transformer	MV3-17 T	368183	4907472	2	0	0	56.1	56.1	1	3958.56	3.25	0	82.95	0	1.23	0	0	10.39	0	0	0	0	0	0	-38.51	-38.51
Inverter Transformer	MV3-10 T	368162	4907669	2	0	0	56.1	56.1	1	3995.86	3.25	0	83.03	0	1.24	0	0	10.45	0	0	0	0	0	0	-38.66	-38.66
Inverter Transformer	MV3-6 T	368156	4907834	2	0	0	56.1	56.1	1	4045.18	3.25	0	83.14	0	1.26	0	0	10.52	0	0	0	0	0	0	-38.86	-38.86
Inverter Transformer	MV3-19 T	368352	4907347	2	0	0	56.1	56.1	1	4091.27	3.25	0	83.24	0	1.28	0	0	10.59	0	0	0	0	0	0	-39.05	-39.05
Inverter Transformer	MV3-1 T	368150	4907976	2	0	0	56.1	56.1	1	4091.71	3.25	0	83.24	0	1.28	0	0	10.59	0	0	0	0	0	0	-39.05	-39.05
Inverter Transformer	MV3-15 T	368351	4907477	2	0	0	56.1	56.1	1	4121.96	3.25	0	83.3	0	1.29	0	0	10.63	0	0	0	0	0	0	-39.17	-39.17
Inverter Transformer	MV3-11 T	368340	4907662	2	0	0	56.1	56.1	1	4163.09	3.25	0	83.39	0	1.31	0	0	10.69	0	0	0	0	0	0	-39.33	-39.33
Inverter Transformer	MV3-21 T	368484	4907206	2	0	0	56.1	56.1	1	4190.9	3.25	0	83.45	0	1.32	0	0	10.74	0	0	0	0	0	0	-39.44	-39.44
Inverter Transformer	MV3-5 T	368335	4907843	2	0	0	56.1	56.1	1	4216.27	3.25	0	83.5	0	1.33	0	0	10.77	0	0	0	0	0	0	-39.54	-39.54
Inverter Transformer	MV3-16 T	368509	4907475	2	0	0	56.1	56.1	1	4274.29	3.25	0	83.62	0	1.35	0	0	10.86	0	0	0	0	0	0	-39.77	-39.77
Inverter Transformer	MV3-9 T	368517	4907703	2	0	0	56.1	56.1	1	4344.26	3.25	0	83.76	0	1.38	0	0	10.96	0	0	0	0	0	0	-40.04	-40.04
Inverter Transformer	MV3-22 T	368661	4907142	2	0	0	56.1	56.1	1	4353.64	3.25	0	83.78	0	1.38	0	0	10.97	0	0	0	0	0	0	-40.07	-40.07
Inverter Transformer	MV3-4 T	368507	4907925	2	0	0	56.1	56.1	1	4405.93	3.25	0	83.88	0	1.4	0	0	11.04	0	0	0	0	0	0	-40.27	-40.27
Inverter Transformer	MV3-20 T	368683	4907317	2	0	0	56.1	56.1	1	4407.91	3.25	0	83.88	0	1.4	0	0	11.05	0	0	0	0	0	0	-40.28	-40.28
Inverter Transformer	MV3-14 T	368678	4907498	2	0	0	56.1	56.1	1	4443.75	3.25	0	83.95	0	1.42	0	0	11.1	0	0	0	0	0	0	-40.41	-40.41
Inverter Transformer	MV3-8 T	368685	4907712	2	0	0	56.1	56.1	1	4507.53	3.25	0	84.08	0	1.44	0	0	11.19	0	0	0	0	0	0	-40.65	-40.65
Inverter Transformer	MV3-2 T	368677	4907928	2	0	0	56.1	56.1	1	4566.96	3.25	0	84.19	0	1.47	0	0	11.27	0	0	0	0	0	0	-40.87	-40.87
Inverter Transformer	MV4-13 T	369057	4908605	2	0	0	56.1	56.1	1	5175.58	3.25	0	85.28	0	1.69	0	0	12.08	0	0	0	0	0	0	-42.99	-42.99
Inverter Transformer	MV4-15 T	369170	4908481	2	0	0	56.1	56.1	1	5227.85	3.25	0	85.37	0	1.71	0	0	12.15	0	0	0	0	0	0	-43.17	-43.17
Inverter Transformer	MV4-14 T	369182	4908507	2	0	0	56.1	56.1	1	5249.19	3.25	0	85.4	0	1.71	0	0	12.18	0	0	0	0	0	0	-43.24	-43.24
Inverter Transformer	MV4-12 T	369049	4908803	2	0	0	56.1	56.1	1	5255.41	3.25	0	85.41	0	1.72	0	0	12.19	0	0	0	0	0	0	-43.26	-43.26
Inverter Transformer	MV4-7 T	369040	4909001	2	0	0	56.1	56.1	1	5340.52	3.25	0	85.55	0	1.75	0	0	12.29	0	0	0	0	0	0	-43.53	-43.53

	Inverter Transformer	MV4-4 T	369033	4909199	2	0	0	56.1	56.1	1	5433.26	3.25	0	85.7	0	1.78	0	0	12.41	0	0	0	0	0	0	-43.83	-43.83
	Inverter Transformer	MV4-11 T	369269	4908855	2	0	0	56.1	56.1	1	5475.24	3.25	0	85.77	0	1.79	0	0	12.46	0	0	0	0	0	0	-43.97	-43.97
	Inverter Transformer	MV4-10 T	369307	4908858	2	0	0	56.1	56.1	1	5510.6	3.25	0	85.82	0	1.8	0	0	12.51	0	0	0	0	0	0	-44.08	-44.08
	Inverter Transformer	MV4-1 T	369017	4909397	2	0	0	56.1	56.1	1	5523.96	3.25	0	85.85	0	1.81	0	0	12.53	0	0	0	0	0	0	-44.12	-44.12
	Inverter Transformer	MV4-8 T	369262	4909001	2	0	0	56.1	56.1	1	5535.74	3.25	0	85.86	0	1.81	0	0	12.54	0	0	0	0	0	0	-44.16	-44.16
	Inverter Transformer	MV4-9 T	369284	4909001	2	0	0	56.1	56.1	1	5555.19	3.25	0	85.89	0	1.82	0	0	12.56	0	0	0	0	0	0	-44.22	-44.22
	Inverter Transformer	MV4-6 T	369249	4909192	2	0	0	56.1	56.1	1	5616.3	3.25	0	85.99	0	1.84	0	0	12.64	0	0	0	0	0	0	-44.41	-44.41
	Inverter Transformer	MV4-5 T	369283	4909199	2	0	0	56.1	56.1	1	5649.32	3.25	0	86.04	0	1.85	0	0	12.68	0	0	0	0	0	0	-44.51	-44.51
	Inverter Transformer	MV4-3 T	369234	4909397	2	0	0	56.1	56.1	1	5707.75	3.25	0	86.13	0	1.87	0	0	12.75	0	0	0	0	0	0	-44.69	-44.69
	Inverter Transformer	MV4-2 T	369267	4909397	2	0	0	56.1	56.1	1	5735.91	3.25	0	86.17	0	1.88	0	0	12.79	0	0	0	0	0	0	-44.78	-44.78
	Inverter Transformer	MV6-2 T	370091	4907339	2	0	0	56.1	56.1	1	5796.6	3.25	0	86.26	0	1.9	0	0	12.86	0	0	0	0	0	0	-44.96	-44.96
	Inverter Transformer	MV6-3 T	370202	4907140	2	0	0	56.1	56.1	1	5878.25	3.25	0	86.38	0	1.93	0	0	12.96	0	0	0	0	0	0	-45.21	-45.21
	Inverter Transformer	MV5-6 T	369987	4908507	2	0	0	56.1	56.1	1	5995.91	3.25	0	86.56	0	1.96	0	0	13.1	0	0	0	0	0	0	-45.56	-45.56
	Inverter Transformer	MV5-5 T	370021	4908690	2	0	0	56.1	56.1	1	6093.8	3.25	0	86.7	0	1.99	0	0	13.21	0	0	0	0	0	0	-45.85	-45.85
	Inverter Transformer	MV5-2 T	370011	4908853	2	0	0	56.1	56.1	1	6147.41	3.25	0	86.77	0	2.01	0	0	13.28	0	0	0	0	0	0	-46	-46
	Inverter Transformer	MV5-1 T	370015	4909142	2	0	0	56.1	56.1	1	6271.38	3.25	0	86.95	0	2.05	0	0	13.42	0	0	0	0	0	0	-46.36	-46.36
	Inverter Transformer	MV5-3 T	370237	4908851	2	0	0	56.1	56.1	1	6354.7	3.25	0	87.06	0	2.07	0	0	13.52	0	0	0	0	0	0	-46.59	-46.59
	Inverter Transformer	MV5-4 T	370330	4908707	2	0	0	56.1	56.1	1	6387.53	3.25	0	87.11	0	2.08	0	0	13.55	0	0	0	0	0	0	-46.69	-46.69
	Line Reactor	NGR	369421	4908787.5	5	0	0	45.4	45.4	1	5582.63	5.25	0	85.94	0	3.25	1.36	0.1	2.28	0	0	0	0	0	0	-47.47	-47.47
Limit. Valu	0	0																								
Level D/N:	34.8179	34.8179																								

Receiver: Existing Noise Receptor
ID: S-R10*
X: 364424
Y: 4906375
Z: 4.5
Ground: 0

ISO	Description	ID	X	Y	Z	Ground	ReflOrd	LxT	LxN	L/A	Dist.	hm	Freq	Adiv	K0b	Agr	Abar	z	Aatm	Afol	Ahous	Cmet	CmetN	Dc	RL	LtotT	LtotN
	Inverter	MV1-1	364715	4906166	2	0	0	100.3	100.3	1	358.29	3.25	0	62.08	0	-0.64	0	0	7.16	0	0	0	0	0	0	31.71	31.71
	Inverter	MV1-2	364753	4906063	2	0	0	100.3	100.3	1	453.42	3.25	0	64.13	0	-0.58	0	0	8.14	0	0	0	0	0	0	28.63	28.63
	Inverter	MV1-5	364671	4905892	2	0	0	100.3	100.3	1	542.5	3.25	0	65.69	0	-0.52	0	0	8.84	0	0	0	0	0	0	26.31	26.31
	Inverter	MV1-6	364477	4905835	2	0	0	100.3	100.3	1	542.6	3.25	0	65.69	0	-0.52	0	0	8.84	0	0	0	0	0	0	26.31	26.31
	Inverter	MV1-4	364815	4905918	2	0	0	100.3	100.3	1	601.45	3.25	0	66.58	0	-0.48	0	0	9.21	0	0	0	0	0	0	24.99	24.99
	Inverter	MV1-9	364561	4905646	2	0	0	100.3	100.3	1	741.77	3.25	0	68.41	0	-0.39	0	0	9.93	0	0	0	0	0	0	22.36	22.36
	Inverter	MV1-8	364788	4905647	2	0	0	100.3	100.3	1	813.93	3.25	0	69.21	0	-0.34	0	0	10.24	0	0	0	0	0	0	21.21	21.21
	Inverter	MV1-11	364655	4905414	2	0	0	100.3	100.3	1	988.38	3.25	0	70.9	0	-0.25	0	0	10.87	0	0	0	0	0	0	18.79	18.79
	Inverter	MV1-7	364925	4905782	2	0	0	97.3	97.3	1	776.31	3.25	0	68.8	0	-0.37	0	0	10.08	0	0	0	0	0	0	18.79	18.79
	Inverter	MV1-12	365038	4905386	2	0	0	100.3	100.3	1	1164.1	3.25	0	72.32	0	-0.17	0	0	11.42	0	0	0	0	0	0	16.74	16.74
	Inverter	MV2-4	365586	4906624	2	0	0	100.3	100.3	1	1188.38	3.25	0	72.5	0	-0.16	0	0	11.49	0	0	0	0	0	0	16.48	16.48
	Inverter	MV1-3	364440	4906039	2	0	0	89.1	89.1	1	336.39	3.25	0	61.54	0	0.4	0	0	4.38	0	0	0	0	0	0	22.74	22.74
	Inverter	MV1-10	365004	4905564	2	0	0	97.3	97.3	1	997.06	3.25	0	70.97	0	-0.25	0	0	10.9	0	0	0	0	0	0	15.68	15.68
	Inverter	MV2-3	365820	4906641	2	0	0	100.3	100.3	1	1421.12	3.25	0	74.05	0	-0.06	0	0	12.13	0	0	0	0	0	0	14.2	14.2
	Sol_Luce Substation	S_Substation	369426	4908792	3.5	0	0	112.1	112.1	1	5555.35	5.25	0	85.89	0	1.05	2.74	0.3	9.26	0	0	0	0	0	0	13.14	13.14
	Inverter	MV1-15	365315	4904994	2	0	0	100.3	100.3	1	1643.49	3.25	0	75.32	0	0.02	0	0	12.67	0	0	0	0	0	0	12.31	12.31
	Inverter	MV1-13	364731	4905241	2	0	0	97.3	97.3	1	1174.82	3.25	0	72.4	0	-0.17	0	0	11.45	0	0	0	0	0	0	13.63	13.63
	Inverter	MV2-1	365842	4906816	2	0	0	97.3	97.3	1	1485	3.25	0	74.43	0	-0.04	0	0	12.29	0	0	0	0	0	0	10.63	10.63
	Inverter	MV1-14	365163	4905049	2	0	0	97.3	97.3	1	1518.03	3.25	0	74.63	0	-0.03	0	0	12.37	0	0	0	0	0	0	10.34	10.34
	Inverter	MV3-12	367668	4907594	2	0	0	100.3	100.3	1	3465.47	3.25	0	81.8	0	0.45	0	0	16.17	0	0	0	0	0	0	1.9	1.9
	Inverter	MV3-18	367752	4907412	2	0	0	100.3	100.3	1	3485.82	3.25	0	81.85	0	0.45	0	0	16.21	0	0	0	0	0	0	1.81	1.81
	Inverter	MV3-13	367963	4907577	2	0	0	100.3	100.3	1	3737.56	3.25	0	82.45	0	0.49	0	0	16.62	0	0	0	0	0	0	0.75	0.75
	Inverter	MV3-7	367945	4907754	2	0	0	100.3	100.3	1	3781.41	3.25	0	82.55	0	0.5	0	0	16.7	0	0	0	0	0	0	0.57	0.57
	Inverter	MV3-3	367939	4907927	2	0	0	100.3	100.3	1	3842.39	3.25	0	82.69	0	0.5	0	0	16.79	0	0	0	0	0	0	0.32	0.32
	Inverter	MV3-17	368178	4907472	2	0	0	100.3	100.3	1	3911	3.25	0	82.85	0	0.51	0	0	16.91	0	0	0	0	0	0	0.05	0.05
	Inverter	MV3-10	368167	4907669	2	0	0	100.3	100.3	1	3960.37	3.25	0	82.95	0	0.52	0	0	16.99	0	0	0	0	0	0	-0.15	-0.15
	Inverter	MV3-6	368162	4907834	2	0	0	100.3	100.3	1	4012.65	3.25	0	83.07	0	0.53	0	0	17.07	0	0	0	0	0	0	-0.35	-0.35
	Inverter	MV3-19	368357	4907347	2	0	0	100.3	100.3	1	4051.33	3.25	0	83.15	0	0.53	0	0	17.13	0	0	0	0	0	0	-0.5	-0.5
	Inverter	MV3-15	368357	4907477	2	0	0	100.3	100.3	1	4084.47	3.25	0	83.22	0	0.54	0	0	17.18	0	0	0	0	0	0	-0.63	-0.63
	Inverter	MV3-11	368346	4907662	2	0	0	100.3	100.3	1	4127.77	3.25	0	83.31	0	0.54	0	0	17.25	0	0	0	0	0	0	-0.8	-0.8
	Inverter	MV3-21	368478	4907206	2	0	0	100.3	100.3	1	4138.29	3.25	0	83.34	0	0.55	0	0	17.27	0	0	0	0	0	0	-0.84	-0.84
	Inverter	MV3-16	368514	4907475	2	0	0	100.3	100.3	1	4235.34	3.25	0	83.54	0	0.56	0	0	17.42	0	0	0	0	0	0	-1.2	-1.2
	Inverter	MV3-9	368512	4907703	2	0	0	100.3	100.3	1	4298.29	3.25	0	83.67	0	0.57	0	0	17.52	0	0	0	0	0	0	-1.44	-1.44
	Inverter	MV3-20	368689	4907317	2	0	0	100.3	100.3	1	4367.79	3.25	0	83.81	0	0.58	0	0	17.63	0	0	0	0	0	0	-1.7	-1.7
	Inverter	MV3-14	368684	4907498	2	0	0	100.3	100.3	1	4405.53	3.25	0	83.88	0	0.58	0	0	17.69	0	0	0	0	0	0	-1.83	-1.83
	Inverter	MV3-8	368680	4907712	2	0	0	100.3	100.3	1	4461.07	3.25	0	83.99	0	0.59	0	0	17.77	0	0	0	0	0	0	-2.03	-2.03
	Inverter	MV4-7	369035	4909001	2	0	0	100.3	100.3	1	5306.34	3.25	0	85.5	0	0.67	0	0	19.02	0	0	0	0	0	0	-4.88	-4.88
	Inverter	MV4-4	369027	4909199	2	0	0	100.3	100.3	1	5400.24	3.25	0	85.65	0	0.67	0	0	19.16	0	0	0	0	0	0	-5.17	-5.17
	Inverter	MV4-11	369264	4908855	2	0	0	100.3	100.3	1	5438.38	3.25	0	85.71	0	0.68	0	0	19.21	0	0	0	0	0	0	-5.29	-5.29
	Inverter	MV4-10	369312	4908858	2	0	0	100.3	100.3	1	5482.5	3.25	0	85.78	0	0.68	0	0	19.28	0	0	0	0	0	0	-5.42	-5.42
	Inverter	MV4-1	369011	4909397	2	0	0	100.3	100.3	1	5493	3.25	0	85.8	0	0.68	0	0	19.29	0	0	0	0	0	0	-5.45	-5.45
	Inverter	MV4-8	369256	4909001	2	0	0	100.3	100.3	1	5499.46	3.25	0	85.81	0	0.68	0	0	19.3	0	0	0	0	0	0	-5.47	-5.47
	Inverter	MV4-9	369289	4909001	2	0	0	100.3	100.3	1	5528.48	3.25	0	85.85	0	0.68	0	0	19.34	0	0	0	0	0	0	-5.56	-5.56
	Inverter	MV4-6	369243	4909192	2	0	0	100.3	100.3	1	5581.96	3.25	0	85.94	0	0.69	0	0	19.42	0	0	0	0	0	0	-5.73	-5.73

Inverter	MV4-5	369289	4909199	2	0	0	100.3	100.3	1	5625.23	3.25	0	86	0	0.69	0	0	19.48	0	0	0	0	0	0	-5.86	-5.86
Inverter	MV4-3	369229	4909397	2	0	0	100.3	100.3	1	5676.31	3.25	0	86.08	0	0.69	0	0	19.55	0	0	0	0	0	0	-6.01	-6.01
Inverter	MV4-2	369272	4909397	2	0	0	100.3	100.3	1	5712.76	3.25	0	86.14	0	0.69	0	0	19.6	0	0	0	0	0	0	-6.12	-6.12
Inverter	MV6-2	370085	4907339	2	0	0	100.3	100.3	1	5742.49	3.25	0	86.18	0	0.69	0	0	19.64	0	0	0	0	0	0	-6.2	-6.2
Inverter	MV2-2	365977	4906654	2	0	0	89.1	89.1	1	1577.86	3.25	0	74.96	0	0.81	0	0	7.34	0	0	0	0	0	0	5.95	5.95
Inverter	MV6-3	370207	4907140	2	0	0	100.3	100.3	1	5833.38	3.25	0	86.32	0	0.7	0	0	19.77	0	0	0	0	0	0	-6.47	-6.47
Inverter	MV5-5	370015	4908690	2	0	0	100.3	100.3	1	6051.32	3.25	0	86.64	0	0.71	0	0	20.06	0	0	0	0	0	0	-7.09	-7.09
Inverter	MV5-2	370006	4908853	2	0	0	100.3	100.3	1	6107.31	3.25	0	86.72	0	0.71	0	0	20.14	0	0	0	0	0	0	-7.25	-7.25
Inverter	MV5-1	370020	4909142	2	0	0	100.3	100.3	1	6242.72	3.25	0	86.91	0	0.71	0	0	20.32	0	0	0	0	0	0	-7.63	-7.63
Inverter	MV5-3	370231	4908851	2	0	0	100.3	100.3	1	6312.83	3.25	0	87	0	0.71	0	0	20.41	0	0	0	0	0	0	-7.82	-7.82
Inverter	MV5-4	370324	4908707	2	0	0	100.3	100.3	1	6344.15	3.25	0	87.05	0	0.71	0	0	20.45	0	0	0	0	0	0	-7.9	-7.9
Inverter	MV6-1	370235	4907364	2	0	0	97.3	97.3	1	5894.56	3.25	0	86.41	0	0.7	0	0	19.85	0	0	0	0	0	0	-9.65	-9.65
DSTATCOM - 10 MVAR #2	DSAT2	369403	4908757	2.5	0	0	96.6	96.6	1	5519.45	3.5	0	85.84	0	3.73	0	0	3.61	0	0	0	0	0	0	3.45	3.45
DSTATCOM - 10 MVAR #1	DSAT1	369437	4908757	2.5	0	0	96.6	96.6	1	5550.14	3.5	0	85.89	0	3.74	0	0	3.62	0	0	0	0	0	0	3.39	3.39
Gardiner Substation	G_Sub	366586.3	4903349.9	2.5	0	0	90.8	90.8	1	3718.44	4.25	0	82.41	0	1.27	2.68	0.25	6.99	0	0	0	0	0	0	-2.57	-2.57
SubstationTransformer	W_ST	369711.17	4906112.3	2.5	0	0	92	92	1	5293.69	4.25	0	85.48	0	1.71	2.26	0.29	8.96	0	0	0	0	0	0	-6.44	-6.44
Inverter	MV3-1	368156	4907976	2	0	0	89.1	89.1	1	4060.92	3.25	0	83.17	0	1.41	0	0	11.17	0	0	0	0	0	0	-6.69	-6.69
Inverter	MV3-5	368340	4907843	2	0	0	89.1	89.1	1	4182.12	3.25	0	83.43	0	1.44	0	0	11.34	0	0	0	0	0	0	-7.15	-7.15
Inverter	MV3-22	368656	4907142	2	0	0	89.1	89.1	1	4300.94	3.25	0	83.67	0	1.47	0	0	11.51	0	0	0	0	0	0	-7.59	-7.59
Inverter	MV3-4	368502	4907925	2	0	0	89.1	89.1	1	4362.64	3.25	0	83.79	0	1.48	0	0	11.59	0	0	0	0	0	0	-7.81	-7.81
Inverters	G_Inv1	366526.4	4903225.8	2	0	0	87.7	87.7	1	3786.5	3.25	0	82.56	0	2.77	0	0	4.64	0	0	0	0	0	0	-2.32	-2.32
Inverter	MV3-2	368671	4907928	2	0	0	89.1	89.1	1	4522.04	3.25	0	84.11	0	1.52	0	0	11.81	0	0	0	0	0	0	-8.39	-8.39
Inverters	G_Inv2	366676.9	4903239.1	2	0	0	87.7	87.7	1	3861.27	3.25	0	82.73	0	2.78	0	0	4.72	0	0	0	0	0	0	-2.58	-2.58
Inverters	G_Inv3	366583.7	4903091.4	2	0	0	87.7	87.7	1	3930.18	3.25	0	82.89	0	2.79	0	0	4.8	0	0	0	0	0	0	-2.81	-2.81
Inverters	G_Inv4	366732.8	4903105	2	0	0	87.7	87.7	1	4002.93	3.25	0	83.05	0	2.79	0	0	4.88	0	0	0	0	0	0	-3.06	-3.06
Inverters	G_Inv5	366638.5	4902958.1	2	0	0	87.7	87.7	1	4071.76	3.25	0	83.2	0	2.8	0	0	4.95	0	0	0	0	0	0	-3.28	-3.28
Inverters	G_Inv6	366788.5	4902972	2	0	0	87.7	87.7	1	4143.82	3.25	0	83.35	0	2.8	0	0	5.03	0	0	0	0	0	0	-3.52	-3.52
Westbrook Inverter Enclosur	W_INV2	369374	4906388	2	0	0	89.1	89.1	1	4950.02	3.25	0	84.89	0	1.63	0	0	12.4	0	0	0	0	0	0	-9.86	-9.86
Inverters	G_Inv7	366694.6	4902824.7	2	0	0	87.7	87.7	1	4214.29	3.25	0	83.49	0	2.81	0	0	5.1	0	0	0	0	0	0	-3.75	-3.75
Inverters	G_Inv8	366844.5	4902838.5	2	0	0	87.7	87.7	1	4285.52	3.25	0	83.64	0	2.81	0	0	5.18	0	0	0	0	0	0	-3.98	-3.98
Fixed Reactor Bank 1	FRB1	369378	4908755	6	0	0	89.8	89.8	1	5496.05	5.25	0	85.8	0	-0.49	0	0	9.19	0	0	0	0	0	0	-4.72	-4.72
Westbrook Inverter Enclosur	W_INV3	369508	4906164	2	0	0	89.1	89.1	1	5088.38	3.25	0	85.13	0	1.66	0	0	12.58	0	0	0	0	0	0	-10.32	-10.32
Inverters	G_Inv9	366750.9	4902691.8	2	0	0	87.7	87.7	1	4356.65	3.25	0	83.78	0	2.82	0	0	5.26	0	0	0	0	0	0	-4.2	-4.2
Fixed Reactor Bank 2	FRB2	369464	4908755	6	0	0	89.8	89.8	1	5573.69	5.25	0	85.92	0	-0.48	0	0	9.28	0	0	0	0	0	0	-4.95	-4.95
Inverter	MV4-13	369051	4908605	2	0	0	89.1	89.1	1	5136.34	3.25	0	85.21	0	1.67	0	0	12.65	0	0	0	0	0	0	-10.47	-10.47
Inverter	MV4-15	369176	4908481	2	0	0	89.1	89.1	1	5197.76	3.25	0	85.32	0	1.69	0	0	12.73	0	0	0	0	0	0	-10.67	-10.67
Inverters	G_Inv10	366900.7	4902704.8	2	0	0	87.7	87.7	1	4427.69	3.25	0	83.92	0	2.83	0	0	5.33	0	0	0	0	0	0	-4.42	-4.42
Inverter	MV4-14	369176	4908507	2	0	0	89.1	89.1	1	5208.35	3.25	0	85.33	0	1.69	0	0	12.74	0	0	0	0	0	0	-10.71	-10.71
Inverter	MV4-12	369043	4908803	2	0	0	89.1	89.1	1	5218.27	3.25	0	85.35	0	1.69	0	0	12.75	0	0	0	0	0	0	-10.74	-10.74
Westbrook Inverter Enclosur	W_INV4	369673	4906164	2	0	0	89.1	89.1	1	5253.24	3.25	0	85.41	0	1.7	0	0	12.8	0	0	0	0	0	0	-10.85	-10.85
Westbrook Inverter Enclosur	W_INV5	369719	4906574	2	0	0	89.1	89.1	1	5298.74	3.25	0	85.48	0	1.71	0	0	12.86	0	0	0	0	0	0	-11	-11
Westbrook Inverter Enclosur	W_INV7	369780	4906417	2	0	0	89.1	89.1	1	5356.17	3.25	0	85.58	0	1.73	0	0	12.94	0	0	0	0	0	0	-11.18	-11.18
Westbrook Inverter Enclosur	W_INV6	369875	4906578	2	0	0	89.1	89.1	1	5454.78	3.25	0	85.74	0	1.75	0	0	13.06	0	0	0	0	0	0	-11.49	-11.49
Inverter	MV5-6	369982	4908507	2	0	0	89.1	89.1	1	5952.88	3.25	0	86.49	0	1.87	0	0	13.7	0	0	0	0	0	0	-13.01	-13.01
Westbrook Inverter Enclosur	W_INV1	369409	4906578	2	0	0	86.1	86.1	1	4989.13	3.25	0	84.96	0	1.64	0	0	12.45	0	0	0	0	0	0	-12.99	-12.99
Inverter Transformer	MV1-7 T	364919	4905782	2	0	0	69.4	69.4	1	772.45	3.25	0	68.76	0	1.45	0	0	3.47	0	0	0	0	0	0	-4.33	-4.33
Inverter	MV6-4	370250	4906966	2	0	0	86.1	86.1	1	5855.9	3.25	0	86.35	0	1.85	0	0	13.58	0	0	0	0	0	0	-15.72	-15.72
Inverter Transformer	MV1-10 T	365010	4905564	2	0	0	69.4	69.4	1	1000.56	3.25	0	71	0	1.68	0	0	3.81	0	0	0	0	0	0	-7.15	-7.15
Inverter Transformer	MV1-13 T	364725	4905241	2	0	0	69.4	69.4	1	1173.27	3.25	0	72.39	0	1.81	0	0	4.04	0	0	0	0	0	0	-8.88	-8.88
Inverter Transformer	MV2-1 T	365836	4906816	2	0	0	69.4	69.4	1	1479.27	3.25	0	74.4	0	1.96	0	0	4.41	0	0	0	0	0	0	-11.42	-11.42
Inverter Transformer	MV1-14 T	365157	4905049	2	0	0	69.4	69.4	1	1515.11	3.25	0	74.61	0	1.98	0	0	4.45	0	0	0	0	0	0	-11.69	-11.69
Inverter Transformer	MV1-3 T	364435	4906039	2	0	0	56.1	56.1	1	336.19	3.25	0	61.53	0	-0.09	0	0	2.95	0	0	0	0	0	0	-8.33	-8.33
Inverter Transformer	MV1-1 T	364721	4906166	2	0	0	56.1	56.1	1	363.18	3.25	0	62.2	0	-0.1	0	0	3.06	0	0	0	0	0	0	-9.1	-9.1
Westbrook Inverter Transfor	W_INVTR1	369403	4906578	2	0	0	78.2	78.2	1	4983.14	3.25	0	84.95	0	-3.17	0	0	2.41	0	0	0	0	0	0	-5.94	-5.94
Westbrook Inverter Transfor	W_INVTR2	369368	4906388	2	0	0	77.3	77.3	1	4944.02	3.25	0	84.88	0	-3.17	0	0	2.39	0	0	0	0	0	0	-6.77	-6.77
Westbrook Inverter Transfor	W_INVTR3	369514	4906164	2	0	0	77.3	77.3	1	5094.37	3.25	0	85.14	0	-3.2	0	0	2.45	0	0	0	0	0	0	-7.05	-7.05
Westbrook Inverter Transfor	W_INVTR4	369679	4906164	2	0	0	77.3	77.3	1	5259.23	3.25	0	85.42	0	-3.23	0	0	2.5	0	0	0	0	0	0	-7.35	-7.35
Westbrook Inverter Transfor	W_INVTR5	369725	4906574	2	0	0	77.3	77.3	1	5304.73	3.25	0	85.49	0	-3.24	0	0	2.52	0	0	0	0	0	0	-7.43	-7.43
Inverter Transformer	MV1-2 T	364759	4906063	2	0	0	56.1	56.1	1	457.79	3.25	0	64.21	0	-0.12	0	0	3.41	0	0	0	0	0	0	-11.45	-11.45
Westbrook Inverter Transfor	W_INVTR7	369786	4906417	2	0	0	77.3	77.3	1	5362.17	3.25	0	85.59	0	-3.25	0	0	2.53	0	0	0	0	0	0	-7.53	-7.53
Westbrook Inverter Transfor	W_INVTR6	369881	4906578	2	0	0	77.3	77.3	1	5460.78	3.25	0	85.75	0	-3.27	0	0	2.57	0	0	0	0	0	0	-7.7	-7.7
Inverter Transformer	MV1-6 T	364482	4905835	2	0	0	56.1	56.1	1	543.11	3.25	0	65.7	0	-0.11	0	0	3.69	0	0	0	0	0	0	-13.21	-13.21
Inverter Transformer	MV1-5 T	364676	4905892	2	0	0	56.1	56.1	1	544.79	3.25	0	65.72	0	-0.11	0	0	3.69	0	0	0	0	0	0	-13.25	-13.25
Inverter Transformer	MV1-4 T	364821	4905918	2	0	0	56.1	56.1	1	605.36	3.25	0	66.64	0	-0.1	0	0	3.87	0	0	0	0	0	0	-14.35	-14.35
Inverter Transformer	MV1-9 T	364555	4905646	2	0	0	56.1	56.1	1	740.68	3.25	0	68.39	0	-0.07	0	0	4.24	0	0	0	0	0	0	-16.51	-16.51
Inverter Transformer	MV1-8 T	364782	4905647	2	0	0	56.1	56.1	1	811.27	3.25	0	69.18	0	-0.05	0	0	4.42	0	0	0	0	0	0	-17.5	-17.5
Inverter Transformer	MV1-11 T	364649	4905414	2	0	0	56.1	56.1	1	986.99	3.25	0	70.89	0	0.01	0	0	4.86	0	0	0	0	0	0	-19.69	-19.69
Inverter Transformer	MV1-12 T	365044	4905386	2	0	0	56.1	56.1	1	1167.27	3.25	0	72.34	0	0.07	0	0	5.28	0	0	0	0	0	0	-21.64	-21.64
Inverter Transformer	MV2-4 T	365590	4906628	2	0	0	56.1	56.1	1	1193.14	3.25	0	72.53	0	0.08	0	0	5.34	0	0	0	0	0	0	-21.9	-21.9
Inverter Transformer	MV6-4 T	370244	4906966	2	0	0	69.4	69.4	1	5849.93	3.25	0	86.34	0	3.17	0	0	7.93	0	0	0	0	0	0	-28.08	-28.08
Inverter Transformer	MV6-1 T	370230	4907364	2	0	0	69.4	69.4	1	5889.63	3.25	0	86.4	0	3.17	0	0	7.95	0	0	0	0	0	0	-28.17	-28.17
Inverter Transformer	MV2-3 T	365814	4906641	2	0	0	56.1	56.1	1	1415.23	3.25	0	74.02	0	0.17	0	0	5.83	0	0	0	0	0	0	-23.96	-23.96
Inverter Transformer	MV2-2 T	365982	4906654	2	0	0	56.1	56.1	1	1582.79	3.25	0	74.99	0	0.23	0	0	6.19	0	0	0	0	0	0	-25.36	-25.36
Inverter Transformer	MV1-15 T	365309	4904994	2	0	0	56.1	56.1	1	1640.24	3.25	0	75.3	0	0.26	0	0	6.31	0	0	0	0	0	0	-25.81	-25.81

	Inverter Transformer	MV3-12 T	367674	4907594	2	0	0	56.1	56.1	1	3471.09	3.25	0	81.81	0	1.03	0	0	9.64	0	0	0	0	0	0	-36.42	-36.42
	Inverter Transformer	MV3-18 T	367757	4907412	2	0	0	56.1	56.1	1	3490.6	3.25	0	81.86	0	1.04	0	0	9.67	0	0	0	0	0	0	-36.51	-36.51
	Inverter Transformer	MV3-13 T	367958	4907577	2	0	0	56.1	56.1	1	3732.82	3.25	0	82.44	0	1.14	0	0	10.05	0	0	0	0	0	0	-37.57	-37.57
	Inverter Transformer	MV3-7 T	367951	4907754	2	0	0	56.1	56.1	1	3787	3.25	0	82.57	0	1.16	0	0	10.13	0	0	0	0	0	0	-37.8	-37.8
	Inverter Transformer	MV3-3 T	367944	4907927	2	0	0	56.1	56.1	1	3846.96	3.25	0	82.7	0	1.18	0	0	10.23	0	0	0	0	0	0	-38.05	-38.05
	Inverter Transformer	MV3-17 T	368183	4907472	2	0	0	56.1	56.1	1	3915.8	3.25	0	82.86	0	1.21	0	0	10.33	0	0	0	0	0	0	-38.34	-38.34
	Inverter Transformer	MV3-10 T	368162	4907669	2	0	0	56.1	56.1	1	3955.64	3.25	0	82.94	0	1.23	0	0	10.39	0	0	0	0	0	0	-38.5	-38.5
	Inverter Transformer	MV3-6 T	368156	4907834	2	0	0	56.1	56.1	1	4007.06	3.25	0	83.06	0	1.25	0	0	10.47	0	0	0	0	0	0	-38.71	-38.71
	Inverter Transformer	MV3-19 T	368352	4907347	2	0	0	56.1	56.1	1	4046.48	3.25	0	83.14	0	1.26	0	0	10.52	0	0	0	0	0	0	-38.87	-38.87
	Inverter Transformer	MV3-1 T	368150	4907976	2	0	0	56.1	56.1	1	4055.4	3.25	0	83.16	0	1.27	0	0	10.54	0	0	0	0	0	0	-38.91	-38.91
	Inverter Transformer	MV3-15 T	368351	4907477	2	0	0	56.1	56.1	1	4078.69	3.25	0	83.21	0	1.28	0	0	10.57	0	0	0	0	0	0	-39	-39
	Inverter Transformer	MV3-11 T	368340	4907662	2	0	0	56.1	56.1	1	4122.07	3.25	0	83.3	0	1.29	0	0	10.63	0	0	0	0	0	0	-39.17	-39.17
	Inverter Transformer	MV3-21 T	368484	4907206	2	0	0	56.1	56.1	1	4144.17	3.25	0	83.35	0	1.3	0	0	10.67	0	0	0	0	0	0	-39.26	-39.26
	Inverter Transformer	MV3-5 T	368335	4907843	2	0	0	56.1	56.1	1	4177.43	3.25	0	83.42	0	1.31	0	0	10.72	0	0	0	0	0	0	-39.39	-39.39
	Inverter Transformer	MV3-16 T	368509	4907475	2	0	0	56.1	56.1	1	4230.51	3.25	0	83.53	0	1.34	0	0	10.79	0	0	0	0	0	0	-39.6	-39.6
	Inverter Transformer	MV3-9 T	368517	4907703	2	0	0	56.1	56.1	1	4303.05	3.25	0	83.68	0	1.36	0	0	10.9	0	0	0	0	0	0	-39.88	-39.88
	Inverter Transformer	MV3-22 T	368661	4907142	2	0	0	56.1	56.1	1	4305.86	3.25	0	83.68	0	1.36	0	0	10.9	0	0	0	0	0	0	-39.89	-39.89
	Inverter Transformer	MV3-20 T	368683	4907317	2	0	0	56.1	56.1	1	4361.93	3.25	0	83.79	0	1.39	0	0	10.98	0	0	0	0	0	0	-40.1	-40.1
	Inverter Transformer	MV3-4 T	368507	4907925	2	0	0	56.1	56.1	1	4367.31	3.25	0	83.8	0	1.39	0	0	10.99	0	0	0	0	0	0	-40.12	-40.12
	Inverter Transformer	MV3-14 T	368678	4907498	2	0	0	56.1	56.1	1	4399.73	3.25	0	83.87	0	1.4	0	0	11.03	0	0	0	0	0	0	-40.25	-40.25
	Inverter Transformer	MV3-8 T	368685	4907712	2	0	0	56.1	56.1	1	4465.84	3.25	0	84	0	1.43	0	0	11.13	0	0	0	0	0	0	-40.49	-40.49
	Inverter Transformer	MV3-2 T	368677	4907928	2	0	0	56.1	56.1	1	4527.67	3.25	0	84.12	0	1.45	0	0	11.21	0	0	0	0	0	0	-40.72	-40.72
	Inverter Transformer	MV4-13 T	369057	4908605	2	0	0	56.1	56.1	1	5141.75	3.25	0	85.22	0	1.68	0	0	12.04	0	0	0	0	0	0	-42.88	-42.88
	Inverter Transformer	MV4-15 T	369170	4908481	2	0	0	56.1	56.1	1	5192.28	3.25	0	85.31	0	1.69	0	0	12.1	0	0	0	0	0	0	-43.05	-43.05
	Inverter Transformer	MV4-14 T	369182	4908507	2	0	0	56.1	56.1	1	5213.83	3.25	0	85.34	0	1.7	0	0	12.13	0	0	0	0	0	0	-43.12	-43.12
	Inverter Transformer	MV4-12 T	369049	4908803	2	0	0	56.1	56.1	1	5223.58	3.25	0	85.36	0	1.71	0	0	12.15	0	0	0	0	0	0	-43.15	-43.15
	Inverter Transformer	MV4-7 T	369040	4909001	2	0	0	56.1	56.1	1	5310.68	3.25	0	85.5	0	1.74	0	0	12.26	0	0	0	0	0	0	-43.44	-43.44
	Inverter Transformer	MV4-4 T	369033	4909199	2	0	0	56.1	56.1	1	5405.36	3.25	0	85.66	0	1.77	0	0	12.38	0	0	0	0	0	0	-43.74	-43.74
	Inverter Transformer	MV4-11 T	369269	4908855	2	0	0	56.1	56.1	1	5442.83	3.25	0	85.72	0	1.78	0	0	12.42	0	0	0	0	0	0	-43.86	-43.86
	Inverter Transformer	MV4-10 T	369307	4908858	2	0	0	56.1	56.1	1	5478.05	3.25	0	85.77	0	1.79	0	0	12.47	0	0	0	0	0	0	-43.98	-43.98
	Inverter Transformer	MV4-1 T	369017	4909397	2	0	0	56.1	56.1	1	5498.01	3.25	0	85.8	0	1.8	0	0	12.49	0	0	0	0	0	0	-44.04	-44.04
	Inverter Transformer	MV4-8 T	369262	4909001	2	0	0	56.1	56.1	1	5504.74	3.25	0	85.81	0	1.8	0	0	12.5	0	0	0	0	0	0	-44.06	-44.06
	Inverter Transformer	MV4-9 T	369284	4909001	2	0	0	56.1	56.1	1	5524.08	3.25	0	85.85	0	1.81	0	0	12.53	0	0	0	0	0	0	-44.12	-44.12
	Inverter Transformer	MV4-6 T	369249	4909192	2	0	0	56.1	56.1	1	5587.14	3.25	0	85.94	0	1.83	0	0	12.6	0	0	0	0	0	0	-44.32	-44.32
	Inverter Transformer	MV4-5 T	369283	4909199	2	0	0	56.1	56.1	1	5620.04	3.25	0	85.99	0	1.84	0	0	12.64	0	0	0	0	0	0	-44.42	-44.42
	Inverter Transformer	MV4-3 T	369234	4909397	2	0	0	56.1	56.1	1	5680.54	3.25	0	86.09	0	1.86	0	0	12.72	0	0	0	0	0	0	-44.61	-44.61
	Inverter Transformer	MV4-2 T	369267	4909397	2	0	0	56.1	56.1	1	5708.51	3.25	0	86.13	0	1.87	0	0	12.75	0	0	0	0	0	0	-44.7	-44.7
	Inverter Transformer	MV6-2 T	370091	4907339	2	0	0	56.1	56.1	1	5748.41	3.25	0	86.19	0	1.88	0	0	12.8	0	0	0	0	0	0	-44.82	-44.82
	Inverter Transformer	MV6-3 T	370202	4907140	2	0	0	56.1	56.1	1	5828.42	3.25	0	86.31	0	1.91	0	0	12.9	0	0	0	0	0	0	-45.06	-45.06
	Inverter Transformer	MV5-6 T	369987	4908507	2	0	0	56.1	56.1	1	5957.55	3.25	0	86.5	0	1.95	0	0	13.05	0	0	0	0	0	0	-45.45	-45.45
	Inverter Transformer	MV5-5 T	370021	4908690	2	0	0	56.1	56.1	1	6056.87	3.25	0	86.64	0	1.98	0	0	13.17	0	0	0	0	0	0	-45.74	-45.74
	Inverter Transformer	MV5-2 T	370011	4908853	2	0	0	56.1	56.1	1	6111.88	3.25	0	86.72	0	2	0	0	13.23	0	0	0	0	0	0	-45.9	-45.9
	Inverter Transformer	MV5-1 T	370015	4909142	2	0	0	56.1	56.1	1	6238.24	3.25	0	86.9	0	2.04	0	0	13.38	0	0	0	0	0	0	-46.26	-46.26
	Inverter Transformer	MV5-3 T	370237	4908851	2	0	0	56.1	56.1	1	6318.35	3.25	0	87.01	0	2.06	0	0	13.47	0	0	0	0	0	0	-46.49	-46.49
	Inverter Transformer	MV5-4 T	370330	4908707	2	0	0	56.1	56.1	1	6349.73	3.25	0	87.06	0	2.07	0	0	13.51	0	0	0	0	0	0	-46.58	-46.58
	Line Reactor	NGR	369421	4908787.5	5	0	0	45.4	45.4	1	5548.89	5.25	0	85.88	0	3.25	1.36	0.1	2.27	0	0	0	0	0	0	-47.41	-47.41
Limit. Valu	0	0																								
Level D/N:	36.339	36.339																								

Receiver: Existing Noise Receptor
ID: S-R11
X: 364366
Y: 4906524
Z: 4.5
Ground: 0

ISO	Description	ID	X	Y	Z	Ground	ReflOrd	LxT	LxN	L/A	Dist.	hm	Freq	Adiv	K0b	Agr	Abar	z	Aatm	Afol	Ahous	Cmet	CmetN	Dc	RL	LtotT	LtotN
	Inverter	MV1-1	364715	4906166	2	0	0	100.3	100.3	1	499.97	3.25	0	64.98	0	-0.55	0	0	8.52	0	0	0	0	0	0	27.36	27.36
	Inverter	MV1-2	364753	4906063	2	0	0	100.3	100.3	1	601.91	3.25	0	66.59	0	-0.48	0	0	9.21	0	0	0	0	0	0	24.98	24.98
	Inverter	MV1-6	364477	4905835	2	0	0	100.3	100.3	1	697.89	3.25	0	67.88	0	-0.41	0	0	9.73	0	0	0	0	0	0	23.12	23.12
	Inverter	MV1-5	364671	4905892	2	0	0	100.3	100.3	1	701.75	3.25	0	67.92	0	-0.41	0	0	9.75	0	0	0	0	0	0	23.05	23.05
	Inverter	MV1-4	364815	4905918	2	0	0	100.3	100.3	1	754.22	3.25	0	68.55	0	-0.38	0	0	9.99	0	0	0	0	0	0	22.15	22.15
	Inverter	MV1-9	364561	4905646	2	0	0	100.3	100.3	1	899.4	3.25	0	70.08	0	-0.3	0	0	10.56	0	0	0	0	0	0	19.97	19.97
	Inverter	MV1-8	364788	4905647	2	0	0	100.3	100.3	1	973.25	3.25	0	70.76	0	-0.26	0	0	10.82	0	0	0	0	0	0	18.99	18.99
	Inverter	MV1-11	364655	4905414	2	0	0	100.3	100.3	1	1147.01	3.25	0	72.19	0	-0.18	0	0	11.37	0	0	0	0	0	0	16.93	16.93
	Inverter	MV2-4	365586	4906624	2	0	0	100.3	100.3	1	1224.09	3.25	0	72.76	0	-0.14	0	0	11.59	0	0	0	0	0	0	16.11	16.11
	Inverter	MV1-7	364925	4905782	2	0	0	97.3	97.3	1	929.01	3.25	0	70.36	0	-0.28	0	0	10.67	0	0	0	0	0	0	16.56	16.56
	Inverter	MV1-12	365038	4905386	2	0	0	100.3	100.3	1	1321.6	3.25	0	73.42	0	-0.1	0	0	11.86	0	0	0	0	0	0	15.13	15.13
	Sol_Luce Substation	S_Substation	369426	4908792	3.5	0	0	112.1	112.1	1	5545.04	5.25	0	85.88	0	1.04	2.74	0.3	9.25	0	0	0	0	0	0	13.16	13.16
	Inverter	MV2-3	365820	4906641	2	0	0	100.3	100.3	1	1458.7	3.25	0	74.28	0	-0.05	0	0	12.22	0	0	0	0	0	0	13.86	13.86
	Inverter	MV1-10	365004	4905564	2	0	0	97.3	97.3	1	1152.67	3.25	0	72.23	0	-0.17	0	0	11.39	0	0	0	0	0	0	13.87	13.87
	Inverter	MV1-3	364440	4906039	2	0	0	89.1	89.1	1	490.62	3.25	0	64.81	0	0.52	0	0	5.11	0	0	0	0	0	0	18.61	18.61
	Inverter	MV1-15	365315	4904994	2	0	0	100.3	100.3	1	1800.42	3.25	0	76.11	0	0.07	0	0	13.03	0	0	0	0	0	0	11.11	11.11
	Inverter	MV1-13	364731	4905241	2	0	0	97.3	97.3	1	1333.91	3.25	0	73.5	0	-0.1	0	0	11.9	0	0	0	0	0	0	12.01	12.01

Inverter	MV2-1	365842	4906816	2	0	0	97.3	97.3	1	1504.61	3.25	0	74.55	0	-0.03	0	0	12.34	0	0	0	0	0	0	10.46	10.46
Inverter	MV1-14	365163	4905049	2	0	0	97.3	97.3	1	1676.56	3.25	0	75.49	0	0.03	0	0	12.75	0	0	0	0	0	0	9.05	9.05
Inverter	MV3-12	367668	4907594	2	0	0	100.3	100.3	1	3471.04	3.25	0	81.81	0	0.45	0	0	16.18	0	0	0	0	0	0	1.87	1.87
Inverter	MV3-18	367752	4907412	2	0	0	100.3	100.3	1	3500.51	3.25	0	81.88	0	0.45	0	0	16.23	0	0	0	0	0	0	1.75	1.75
Inverter	MV3-13	367963	4907577	2	0	0	100.3	100.3	1	3747.96	3.25	0	82.48	0	0.49	0	0	16.64	0	0	0	0	0	0	0.7	0.7
Inverter	MV3-7	367945	4907754	2	0	0	100.3	100.3	1	3784.46	3.25	0	82.56	0	0.5	0	0	16.7	0	0	0	0	0	0	0.56	0.56
Inverter	MV3-3	367939	4907927	2	0	0	100.3	100.3	1	3838.59	3.25	0	82.68	0	0.5	0	0	16.79	0	0	0	0	0	0	0.34	0.34
Inverter	MV3-17	368178	4907472	2	0	0	100.3	100.3	1	3928.11	3.25	0	82.88	0	0.52	0	0	16.93	0	0	0	0	0	0	-0.02	-0.02
Inverter	MV3-10	368167	4907669	2	0	0	100.3	100.3	1	3969.71	3.25	0	82.98	0	0.52	0	0	17	0	0	0	0	0	0	-0.19	-0.19
Inverter	MV3-6	368162	4907834	2	0	0	100.3	100.3	1	4015.68	3.25	0	83.08	0	0.53	0	0	17.07	0	0	0	0	0	0	-0.37	-0.37
Inverter	MV3-19	368357	4907347	2	0	0	100.3	100.3	1	4074.97	3.25	0	83.2	0	0.54	0	0	17.17	0	0	0	0	0	0	-0.6	-0.6
Inverter	MV3-15	368357	4907477	2	0	0	100.3	100.3	1	4103.21	3.25	0	83.26	0	0.54	0	0	17.21	0	0	0	0	0	0	-0.7	-0.7
Inverter	MV3-11	368346	4907662	2	0	0	100.3	100.3	1	4139.5	3.25	0	83.34	0	0.55	0	0	17.27	0	0	0	0	0	0	-0.84	-0.84
Inverter	MV3-21	368478	4907206	2	0	0	100.3	100.3	1	4168.17	3.25	0	83.4	0	0.55	0	0	17.32	0	0	0	0	0	0	-0.95	-0.95
Inverter	MV3-16	368514	4907475	2	0	0	100.3	100.3	1	4255.62	3.25	0	83.58	0	0.56	0	0	17.45	0	0	0	0	0	0	-1.28	-1.28
Inverter	MV3-9	368512	4907703	2	0	0	100.3	100.3	1	4310.38	3.25	0	83.69	0	0.57	0	0	17.54	0	0	0	0	0	0	-1.48	-1.48
Inverter	MV3-20	368689	4907317	2	0	0	100.3	100.3	1	4395.13	3.25	0	83.86	0	0.58	0	0	17.67	0	0	0	0	0	0	-1.79	-1.79
Inverter	MV3-14	368684	4907498	2	0	0	100.3	100.3	1	4426.49	3.25	0	83.92	0	0.58	0	0	17.72	0	0	0	0	0	0	-1.91	-1.91
Inverter	MV3-8	368680	4907712	2	0	0	100.3	100.3	1	4474.59	3.25	0	84.02	0	0.59	0	0	17.79	0	0	0	0	0	0	-2.08	-2.08
Inverter	MV4-7	369035	4909001	2	0	0	100.3	100.3	1	5285.37	3.25	0	85.46	0	0.67	0	0	18.99	0	0	0	0	0	0	-4.81	-4.81
Inverter	MV4-4	369027	4909199	2	0	0	100.3	100.3	1	5374.06	3.25	0	85.61	0	0.67	0	0	19.12	0	0	0	0	0	0	-5.09	-5.09
Inverter	MV4-11	369264	4908855	2	0	0	100.3	100.3	1	5424.39	3.25	0	85.69	0	0.68	0	0	19.19	0	0	0	0	0	0	-5.24	-5.24
Inverter	MV4-1	369011	4909397	2	0	0	100.3	100.3	1	5461.7	3.25	0	85.75	0	0.68	0	0	19.25	0	0	0	0	0	0	-5.36	-5.36
Inverter	MV4-10	369312	4908858	2	0	0	100.3	100.3	1	5469.05	3.25	0	85.76	0	0.68	0	0	19.26	0	0	0	0	0	0	-5.38	-5.38
Inverter	MV4-8	369256	4909001	2	0	0	100.3	100.3	1	5481.57	3.25	0	85.78	0	0.68	0	0	19.27	0	0	0	0	0	0	-5.42	-5.42
Inverter	MV4-9	369289	4909001	2	0	0	100.3	100.3	1	5511.03	3.25	0	85.82	0	0.68	0	0	19.32	0	0	0	0	0	0	-5.51	-5.51
Inverter	MV4-6	369243	4909192	2	0	0	100.3	100.3	1	5559.08	3.25	0	85.9	0	0.68	0	0	19.38	0	0	0	0	0	0	-5.66	-5.66
Inverter	MV4-5	369289	4909199	2	0	0	100.3	100.3	1	5602.82	3.25	0	85.97	0	0.69	0	0	19.45	0	0	0	0	0	0	-5.79	-5.79
Inverter	MV4-3	369229	4909397	2	0	0	100.3	100.3	1	5648.27	3.25	0	86.04	0	0.69	0	0	19.51	0	0	0	0	0	0	-5.92	-5.92
Inverter	MV4-2	369272	4909397	2	0	0	100.3	100.3	1	5685.33	3.25	0	86.1	0	0.69	0	0	19.56	0	0	0	0	0	0	-6.03	-6.03
Inverter	MV6-2	370085	4907339	2	0	0	100.3	100.3	1	5776.78	3.25	0	86.23	0	0.7	0	0	19.69	0	0	0	0	0	0	-6.3	-6.3
Inverter	MV6-3	370207	4907140	2	0	0	100.3	100.3	1	5873.39	3.25	0	86.38	0	0.7	0	0	19.82	0	0	0	0	0	0	-6.59	-6.59
Inverter	MV2-2	365977	4906654	2	0	0	89.1	89.1	1	1616.24	3.25	0	75.17	0	0.82	0	0	7.41	0	0	0	0	0	0	5.66	5.66
Inverter	MV5-5	370015	4908690	2	0	0	100.3	100.3	1	6050.02	3.25	0	86.64	0	0.71	0	0	20.06	0	0	0	0	0	0	-7.09	-7.09
Inverter	MV5-2	370006	4908853	2	0	0	100.3	100.3	1	6101.95	3.25	0	86.71	0	0.71	0	0	20.13	0	0	0	0	0	0	-7.24	-7.24
Inverter	MV5-1	370020	4909142	2	0	0	100.3	100.3	1	6230.7	3.25	0	86.89	0	0.71	0	0	20.3	0	0	0	0	0	0	-7.59	-7.59
Inverter	MV5-3	370231	4908851	2	0	0	100.3	100.3	1	6309.77	3.25	0	87	0	0.71	0	0	20.41	0	0	0	0	0	0	-7.81	-7.81
Inverter	MV5-4	370324	4908707	2	0	0	100.3	100.3	1	6345.33	3.25	0	87.05	0	0.71	0	0	20.46	0	0	0	0	0	0	-7.91	-7.91
Inverter	MV6-1	370235	4907364	2	0	0	97.3	97.3	1	5928.81	3.25	0	86.46	0	0.7	0	0	19.9	0	0	0	0	0	0	-9.75	-9.75
DSTATCOM - 10 MVAR #2	DSAT2	369403	4908757	2.5	0	0	96.6	96.6	1	5509.78	3.5	0	85.82	0	3.73	0	0	3.6	0	0	0	0	0	0	3.47	3.47
DSTATCOM - 10 MVAR #1	DSAT1	369437	4908757	2.5	0	0	96.6	96.6	1	5540.88	3.5	0	85.87	0	3.74	0	0	3.62	0	0	0	0	0	0	3.4	3.4
Gardiner Substation	G_Sub	366586.3	4903349.9	2.5	0	0	90.8	90.8	1	3873.58	4.25	0	82.76	0	1.32	2.64	0.25	7.2	0	0	0	0	0	0	-3.14	-3.14
SubstationTransformer	W_ST	369711.17	4906112.3	2.5	0	0	92	92	1	5361	4.25	0	85.58	0	1.73	2.25	0.29	9.04	0	0	0	0	0	0	-6.62	-6.62
Inverter	MV3-1	368156	4907976	2	0	0	89.1	89.1	1	4058.62	3.25	0	83.17	0	1.41	0	0	11.17	0	0	0	0	0	0	-6.68	-6.68
Inverter	MV3-5	368340	4907843	2	0	0	89.1	89.1	1	4187.18	3.25	0	83.44	0	1.44	0	0	11.35	0	0	0	0	0	0	-7.17	-7.17
Inverter	MV3-22	368656	4907142	2	0	0	89.1	89.1	1	4334.29	3.25	0	83.74	0	1.47	0	0	11.55	0	0	0	0	0	0	-7.71	-7.71
Inverter	MV3-4	368502	4907925	2	0	0	89.1	89.1	1	4366.84	3.25	0	83.8	0	1.48	0	0	11.6	0	0	0	0	0	0	-7.83	-7.83
Inverter	MV3-2	368671	4907928	2	0	0	89.1	89.1	1	4528.16	3.25	0	84.12	0	1.52	0	0	11.82	0	0	0	0	0	0	-8.41	-8.41
Inverters	G_Inv1	366526.4	4903225.8	2	0	0	87.7	87.7	1	3942.77	3.25	0	82.92	0	2.79	0	0	4.81	0	0	0	0	0	0	-2.85	-2.85
Inverters	G_Inv2	366676.9	4903239.1	2	0	0	87.7	87.7	1	4016.32	3.25	0	83.08	0	2.79	0	0	4.89	0	0	0	0	0	0	-3.1	-3.1
Inverters	G_Inv3	366583.7	4903091.4	2	0	0	87.7	87.7	1	4086.68	3.25	0	83.23	0	2.8	0	0	4.97	0	0	0	0	0	0	-3.33	-3.33
Inverters	G_Inv4	366732.8	4903105	2	0	0	87.7	87.7	1	4158.28	3.25	0	83.38	0	2.8	0	0	5.04	0	0	0	0	0	0	-3.57	-3.57
Inverters	G_Inv5	366638.5	4902958.1	2	0	0	87.7	87.7	1	4228.46	3.25	0	83.52	0	2.81	0	0	5.12	0	0	0	0	0	0	-3.79	-3.79
Westbrook Inverter Enclosur	W_INV2	369374	4906388	2	0	0	89.1	89.1	1	5009.85	3.25	0	85	0	1.64	0	0	12.48	0	0	0	0	0	0	-10.06	-10.06
Inverters	G_Inv6	366788.5	4902972	2	0	0	87.7	87.7	1	4299.44	3.25	0	83.67	0	2.82	0	0	5.2	0	0	0	0	0	0	-4.02	-4.02
Fixed Reactor Bank 1	FRB1	369378	4908755	6	0	0	89.8	89.8	1	5486.12	5.25	0	85.79	0	-0.49	0	0	9.18	0	0	0	0	0	0	-4.7	-4.7
Fixed Reactor Bank 2	FRB2	369464	4908755	6	0	0	89.8	89.8	1	5564.8	5.25	0	85.91	0	-0.48	0	0	9.27	0	0	0	0	0	0	-4.92	-4.92
Inverter	MV4-13	369051	4908605	2	0	0	89.1	89.1	1	5126.38	3.25	0	85.2	0	1.67	0	0	12.63	0	0	0	0	0	0	-10.44	-10.44
Inverters	G_Inv7	366694.6	4902824.7	2	0	0	87.7	87.7	1	4371.18	3.25	0	83.81	0	2.82	0	0	5.27	0	0	0	0	0	0	-4.25	-4.25
Westbrook Inverter Enclosur	W_INV3	369508	4906164	2	0	0	89.1	89.1	1	5154.59	3.25	0	85.24	0	1.68	0	0	12.67	0	0	0	0	0	0	-10.53	-10.53
Inverter	MV4-15	369176	4908481	2	0	0	89.1	89.1	1	5192.88	3.25	0	85.31	0	1.69	0	0	12.72	0	0	0	0	0	0	-10.66	-10.66
Inverter	MV4-12	369043	4908803	2	0	0	89.1	89.1	1	5202.71	3.25	0	85.32	0	1.69	0	0	12.73	0	0	0	0	0	0	-10.69	-10.69
Inverter	MV4-14	369176	4908507	2	0	0	89.1	89.1	1	5202.73	3.25	0	85.32	0	1.69	0	0	12.73	0	0	0	0	0	0	-10.69	-10.69
Inverters	G_Inv8	366844.5	4902838.5	2	0	0	87.7	87.7	1	4441.38	3.25	0	83.95	0	2.83	0	0	5.35	0	0	0	0	0	0	-4.46	-4.46
Inverters	G_Inv9	366750.9	4902691.8	2	0	0	87.7	87.7	1	4513.7	3.25	0	84.09	0	2.83	0	0	5.43	0	0	0	0	0	0	-4.69	-4.69
Westbrook Inverter Enclosur	W_INV4	369673	4906164	2	0	0	89.1	89.1	1	5319.2	3.25	0	85.52	0	1.72	0	0	12.89	0	0	0	0	0	0	-11.06	-11.06
Westbrook Inverter Enclosur	W_INV5	369719	4906574	2	0	0	89.1	89.1	1	5353.23	3.25	0	85.57	0	1.73	0	0	12.93	0	0	0	0	0	0	-11.17	-11.17
Inverters	G_Inv10	366900.7	4902704.8	2	0	0	87.7	87.7	1	4583.78	3.25	0	84.22	0	2.84	0	0	5.5	0	0	0	0	0	0	-4.9	-4.9
Westbrook Inverter Enclosur	W_INV7	369780	4906417	2	0	0	89.1	89.1	1	5415.06	3.25	0	85.67	0	1.74	0	0	13.01	0	0	0	0	0	0	-11.37	-11.37
Westbrook Inverter Enclosur	W_INV6	369875	4906578	2	0	0	89.1	89.1	1	5509.27	3.25	0	85.82	0	1.77	0	0	13.13	0	0	0	0	0	0	-11.66	-11.66
Inverter	MV5-6	369982	4908507	2	0	0	89.1	89.1	1	5955.82	3.25	0	86.5	0	1.88	0	0	13.71	0	0	0	0	0	0	-13.02	-13.02
Westbrook Inverter Enclosur	W_INV1	369409	4906578	2	0	0	86.1	86.1	1	5043.29	3.25	0	85.05	0	1.65	0	0	12.52	0	0	0	0	0	0	-13.17	-13.17
Inverter	MV6-4	370250	4906966	2	0	0	86.1	86.1	1	5900.58	3.25	0	86.42	0	1.86	0	0	13.64	0	0	0	0	0	0	-15.86	-15.86
Inverter Transformer	MV1-7 T	364919	4905782	2	0	0	69.4	69.4	1	925.41	3.25	0	70.33	0	1.62	0	0	3.7	0	0	0	0	0	0	-6.3	-6.3

Inverter Transformer	MV1-10 T	365010	4905564	2	0	0	69.4	69.4	1	1156	3.25	0	72.26	0	1.8	0	0	4.02	0	0	0	0	0	0	-8.72	-8.72
Inverter Transformer	MV1-13 T	364725	4905241	2	0	0	69.4	69.4	1	1332.28	3.25	0	73.49	0	1.89	0	0	4.24	0	0	0	0	0	0	-10.27	-10.27
Inverter Transformer	MV2-1 T	365836	4906816	2	0	0	69.4	69.4	1	1498.72	3.25	0	74.51	0	1.97	0	0	4.43	0	0	0	0	0	0	-11.57	-11.57
Inverter Transformer	MV1-14 T	365157	4905049	2	0	0	69.4	69.4	1	1673.71	3.25	0	75.47	0	2.05	0	0	4.63	0	0	0	0	0	0	-12.8	-12.8
Westbrook Inverter Transfor	W_INVTR1	369403	4906578	2	0	0	78.2	78.2	1	5037.29	3.25	0	85.04	0	-3.18	0	0	2.43	0	0	0	0	0	0	-6.04	-6.04
Westbrook Inverter Transfor	W_INVTR2	369368	4906388	2	0	0	77.3	77.3	1	5003.85	3.25	0	84.99	0	-3.18	0	0	2.41	0	0	0	0	0	0	-6.88	-6.88
Westbrook Inverter Transfor	W_INVTR3	369514	4906164	2	0	0	77.3	77.3	1	5160.57	3.25	0	85.25	0	-3.21	0	0	2.47	0	0	0	0	0	0	-7.17	-7.17
Westbrook Inverter Transfor	W_INVTR4	369679	4906164	2	0	0	77.3	77.3	1	5325.18	3.25	0	85.53	0	-3.24	0	0	2.52	0	0	0	0	0	0	-7.47	-7.47
Westbrook Inverter Transfor	W_INVTR5	369725	4906574	2	0	0	77.3	77.3	1	5359.23	3.25	0	85.58	0	-3.25	0	0	2.53	0	0	0	0	0	0	-7.53	-7.53
Westbrook Inverter Transfor	W_INVTR7	369786	4906417	2	0	0	77.3	77.3	1	5421.06	3.25	0	85.68	0	-3.26	0	0	2.55	0	0	0	0	0	0	-7.63	-7.63
Westbrook Inverter Transfor	W_INVTR6	369881	4906578	2	0	0	77.3	77.3	1	5515.26	3.25	0	85.83	0	-3.28	0	0	2.59	0	0	0	0	0	0	-7.8	-7.8
Inverter Transformer	MV1-3 T	364435	4906039	2	0	0	56.1	56.1	1	489.89	3.25	0	64.8	0	-0.12	0	0	3.52	0	0	0	0	0	0	-12.14	-12.14
Inverter Transformer	MV1-1 T	364721	4906166	2	0	0	56.1	56.1	1	504.18	3.25	0	65.05	0	-0.12	0	0	3.57	0	0	0	0	0	0	-12.44	-12.44
Inverter Transformer	MV1-2 T	364759	4906063	2	0	0	56.1	56.1	1	605.79	3.25	0	66.65	0	-0.1	0	0	3.87	0	0	0	0	0	0	-14.36	-14.36
Inverter Transformer	MV1-6 T	364482	4905835	2	0	0	56.1	56.1	1	698.7	3.25	0	67.89	0	-0.08	0	0	4.13	0	0	0	0	0	0	-15.88	-15.88
Inverter Transformer	MV1-5 T	364676	4905892	2	0	0	56.1	56.1	1	703.94	3.25	0	67.95	0	-0.08	0	0	4.14	0	0	0	0	0	0	-15.96	-15.96
Inverter Transformer	MV1-4 T	364821	4905918	2	0	0	56.1	56.1	1	757.8	3.25	0	68.59	0	-0.07	0	0	4.29	0	0	0	0	0	0	-16.75	-16.75
Inverter Transformer	MV1-9 T	364555	4905646	2	0	0	56.1	56.1	1	898.12	3.25	0	70.07	0	-0.02	0	0	4.64	0	0	0	0	0	0	-18.63	-18.63
Inverter Transformer	MV1-8 T	364782	4905647	2	0	0	56.1	56.1	1	970.67	3.25	0	70.74	0	0	0	0	4.82	0	0	0	0	0	0	-19.5	-19.5
Inverter Transformer	MV1-11 T	364649	4905414	2	0	0	56.1	56.1	1	1145.51	3.25	0	72.18	0	0.06	0	0	5.23	0	0	0	0	0	0	-21.42	-21.42
Inverter Transformer	MV2-4 T	365590	4906628	2	0	0	56.1	56.1	1	1228.41	3.25	0	72.79	0	0.09	0	0	5.42	0	0	0	0	0	0	-22.24	-22.24
Inverter Transformer	MV6-4 T	370244	4906966	2	0	0	69.4	69.4	1	5894.6	3.25	0	86.41	0	3.17	0	0	7.95	0	0	0	0	0	0	-28.18	-28.18
Inverter Transformer	MV6-1 T	370230	4907364	2	0	0	69.4	69.4	1	5923.86	3.25	0	86.45	0	3.18	0	0	7.97	0	0	0	0	0	0	-28.25	-28.25
Inverter Transformer	MV1-12 T	365044	4905386	2	0	0	56.1	56.1	1	1324.66	3.25	0	73.44	0	0.13	0	0	5.64	0	0	0	0	0	0	-23.15	-23.15
Inverter Transformer	MV2-3 T	365814	4906641	2	0	0	56.1	56.1	1	1452.72	3.25	0	74.24	0	0.18	0	0	5.92	0	0	0	0	0	0	-24.28	-24.28
Inverter Transformer	MV2-2 T	365982	4906654	2	0	0	56.1	56.1	1	1621.22	3.25	0	75.2	0	0.25	0	0	6.27	0	0	0	0	0	0	-25.66	-25.66
Inverter Transformer	MV1-15 T	365309	4904994	2	0	0	56.1	56.1	1	1797.26	3.25	0	76.09	0	0.32	0	0	6.64	0	0	0	0	0	0	-26.99	-26.99
Inverter Transformer	MV3-12 T	367674	4907594	2	0	0	56.1	56.1	1	3476.75	3.25	0	81.82	0	1.03	0	0	9.65	0	0	0	0	0	0	-36.45	-36.45
Inverter Transformer	MV3-18 T	367757	4907412	2	0	0	56.1	56.1	1	3505.34	3.25	0	81.89	0	1.04	0	0	9.7	0	0	0	0	0	0	-36.57	-36.57
Inverter Transformer	MV3-13 T	367958	4907577	2	0	0	56.1	56.1	1	3743.16	3.25	0	82.46	0	1.14	0	0	10.07	0	0	0	0	0	0	-37.61	-37.61
Inverter Transformer	MV3-7 T	367951	4907754	2	0	0	56.1	56.1	1	3790.14	3.25	0	82.57	0	1.16	0	0	10.14	0	0	0	0	0	0	-37.81	-37.81
Inverter Transformer	MV3-3 T	367944	4907927	2	0	0	56.1	56.1	1	3843.24	3.25	0	82.69	0	1.18	0	0	10.22	0	0	0	0	0	0	-38.04	-38.04
Inverter Transformer	MV3-17 T	368183	4907472	2	0	0	56.1	56.1	1	3932.96	3.25	0	82.89	0	1.22	0	0	10.35	0	0	0	0	0	0	-38.41	-38.41
Inverter Transformer	MV3-10 T	368162	4907669	2	0	0	56.1	56.1	1	3964.93	3.25	0	82.96	0	1.23	0	0	10.4	0	0	0	0	0	0	-38.54	-38.54
Inverter Transformer	MV3-6 T	368156	4907834	2	0	0	56.1	56.1	1	4010.01	3.25	0	83.06	0	1.25	0	0	10.47	0	0	0	0	0	0	-38.72	-38.72
Inverter Transformer	MV3-1 T	368150	4907976	2	0	0	56.1	56.1	1	4053.02	3.25	0	83.16	0	1.27	0	0	10.53	0	0	0	0	0	0	-38.9	-38.9
Inverter Transformer	MV3-19 T	368352	4907347	2	0	0	56.1	56.1	1	4070.08	3.25	0	83.19	0	1.27	0	0	10.56	0	0	0	0	0	0	-38.96	-38.96
Inverter Transformer	MV3-15 T	368351	4907477	2	0	0	56.1	56.1	1	4097.37	3.25	0	83.25	0	1.28	0	0	10.6	0	0	0	0	0	0	-39.07	-39.07
Inverter Transformer	MV3-11 T	368340	4907662	2	0	0	56.1	56.1	1	4133.73	3.25	0	83.33	0	1.3	0	0	10.65	0	0	0	0	0	0	-39.22	-39.22
Inverter Transformer	MV3-21 T	368484	4907206	2	0	0	56.1	56.1	1	4174.09	3.25	0	83.41	0	1.31	0	0	10.71	0	0	0	0	0	0	-39.38	-39.38
Inverter Transformer	MV3-5 T	368335	4907843	2	0	0	56.1	56.1	1	4182.43	3.25	0	83.43	0	1.32	0	0	10.72	0	0	0	0	0	0	-39.41	-39.41
Inverter Transformer	MV3-16 T	368509	4907475	2	0	0	56.1	56.1	1	4250.75	3.25	0	83.57	0	1.34	0	0	10.82	0	0	0	0	0	0	-39.68	-39.68
Inverter Transformer	MV3-9 T	368517	4907703	2	0	0	56.1	56.1	1	4315.19	3.25	0	83.7	0	1.37	0	0	10.91	0	0	0	0	0	0	-39.92	-39.92
Inverter Transformer	MV3-22 T	368661	4907142	2	0	0	56.1	56.1	1	4339.23	3.25	0	83.75	0	1.38	0	0	10.95	0	0	0	0	0	0	-40.02	-40.02
Inverter Transformer	MV3-4 T	368507	4907925	2	0	0	56.1	56.1	1	4371.58	3.25	0	83.81	0	1.39	0	0	10.99	0	0	0	0	0	0	-40.14	-40.14
Inverter Transformer	MV3-20 T	368683	4907317	2	0	0	56.1	56.1	1	4389.23	3.25	0	83.85	0	1.4	0	0	11.02	0	0	0	0	0	0	-40.21	-40.21
Inverter Transformer	MV3-14 T	368678	4907498	2	0	0	56.1	56.1	1	4420.64	3.25	0	83.91	0	1.41	0	0	11.06	0	0	0	0	0	0	-40.32	-40.32
Inverter Transformer	MV3-8 T	368685	4907712	2	0	0	56.1	56.1	1	4479.41	3.25	0	84.02	0	1.43	0	0	11.15	0	0	0	0	0	0	-40.54	-40.54
Inverter Transformer	MV3-2 T	368677	4907928	2	0	0	56.1	56.1	1	4533.87	3.25	0	84.13	0	1.45	0	0	11.22	0	0	0	0	0	0	-40.75	-40.75
Inverter Transformer	MV4-13 T	369057	4908605	2	0	0	56.1	56.1	1	5131.87	3.25	0	85.21	0	1.67	0	0	12.03	0	0	0	0	0	0	-42.85	-42.85
Inverter Transformer	MV4-15 T	369170	4908481	2	0	0	56.1	56.1	1	5187.32	3.25	0	85.3	0	1.69	0	0	12.1	0	0	0	0	0	0	-43.03	-43.03
Inverter Transformer	MV4-12 T	369049	4908803	2	0	0	56.1	56.1	1	5208.1	3.25	0	85.33	0	1.7	0	0	12.13	0	0	0	0	0	0	-43.1	-43.1
Inverter Transformer	MV4-14 T	369182	4908507	2	0	0	56.1	56.1	1	5208.28	3.25	0	85.33	0	1.7	0	0	12.13	0	0	0	0	0	0	-43.1	-43.1
Inverter Transformer	MV4-7 T	369040	4909001	2	0	0	56.1	56.1	1	5289.78	3.25	0	85.47	0	1.73	0	0	12.23	0	0	0	0	0	0	-43.37	-43.37
Inverter Transformer	MV4-4 T	369033	4909199	2	0	0	56.1	56.1	1	5379.27	3.25	0	85.61	0	1.76	0	0	12.34	0	0	0	0	0	0	-43.66	-43.66
Inverter Transformer	MV4-11 T	369269	4908855	2	0	0	56.1	56.1	1	5428.9	3.25	0	85.69	0	1.78	0	0	12.41	0	0	0	0	0	0	-43.82	-43.82
Inverter Transformer	MV4-10 T	369307	4908858	2	0	0	56.1	56.1	1	5464.53	3.25	0	85.75	0	1.79	0	0	12.45	0	0	0	0	0	0	-43.93	-43.93
Inverter Transformer	MV4-1 T	369017	4909397	2	0	0	56.1	56.1	1	5466.8	3.25	0	85.75	0	1.79	0	0	12.45	0	0	0	0	0	0	-43.94	-43.94
Inverter Transformer	MV4-8 T	369262	4909001	2	0	0	56.1	56.1	1	5486.93	3.25	0	85.79	0	1.8	0	0	12.48	0	0	0	0	0	0	-44	-44
Inverter Transformer	MV4-9 T	369284	4909001	2	0	0	56.1	56.1	1	5506.57	3.25	0	85.82	0	1.8	0	0	12.5	0	0	0	0	0	0	-44.07	-44.07
Inverter Transformer	MV4-6 T	369249	4909192	2	0	0	56.1	56.1	1	5564.34	3.25	0	85.91	0	1.82	0	0	12.58	0	0	0	0	0	0	-44.25	-44.25
Inverter Transformer	MV4-5 T	369283	4909199	2	0	0	56.1	56.1	1	5597.55	3.25	0	85.96	0	1.83	0	0	12.62	0	0	0	0	0	0	-44.35	-44.35
Inverter Transformer	MV4-3 T	369234	4909397	2	0	0	56.1	56.1	1	5652.57	3.25	0	86.04	0	1.85	0	0	12.68	0	0	0	0	0	0	-44.52	-44.52
Inverter Transformer	MV4-2 T	369267	4909397	2	0	0	56.1	56.1	1	5681.02	3.25	0	86.09	0	1.86	0	0	12.72	0	0	0	0	0	0	-44.61	-44.61
Inverter Transformer	MV6-2 T	370091	4907339	2	0	0	56.1	56.1	1	5782.72	3.25	0	86.24	0	1.89	0	0	12.84	0	0	0	0	0	0	-44.92	-44.92
Inverter Transformer	MV6-3 T	370202	4907140	2	0	0	56.1	56.1	1	5868.42	3.25	0	86.37	0	1.92	0	0	12.95	0	0	0	0	0	0	-45.18	-45.18
Inverter Transformer	MV5-6 T	369987	4908507	2	0	0	56.1	56.1	1	5960.53	3.25	0	86.51	0	1.95	0	0	13.06	0	0	0	0	0	0	-45.46	-45.46
Inverter Transformer	MV5-5 T	370021	4908690	2	0	0	56.1	56.1	1	6055.62	3.25	0	86.64	0	1.98	0	0	13.17	0	0	0	0	0	0	-45.74	-45.74
Inverter Transformer	MV5-2 T	370011	4908853	2	0	0	56.1	56.1	1	6106.58	3.25	0	86.72	0	2	0	0	13.23	0	0	0	0	0	0	-45.88	-45.88
Inverter Transformer	MV5-1 T	370015	4909142	2	0	0	56.1	56.1	1	6226.17	3.25	0	86.88	0	2.04	0	0	13.37	0	0	0	0	0	0	-46.23	-46.23
Inverter Transformer	MV5-3 T	370237	4908851	2	0	0	56.1	56.1	1	6315.34	3.25	0	87.01	0	2.06	0	0	13.47	0	0	0	0	0	0	-46.48	-46.48
Inverter Transformer	MV5-4 T	370330	4908707	2	0	0	56.1	56.1	1	6350.97	3.25	0	87.06	0	2.07	0	0	13.51	0	0	0	0	0	0	-46.58	-46.58
Line Reactor	NGR	369421	4908787.5	5	0	0	45.4	45.4	1	5538.63	5.25	0	85.87	0	3.25	1.36	0.1	2.26	0	0	0	0	0	0	-47.39	-47.39
Limit. Valu 0	0																									

Level D/N: 33.0221 33.0221

Receiver: Existing Noise Receptor
ID: S-R12
X: 364416
Y: 4906519
Z: 4.5
Ground: 0

ISO	Description	ID	X	Y	Z	Ground	ReflOrd	LxT	LxN	L/A	Dist.	hm	Freq	Adiv	K0b	Agr	Abar	z	Aatm	Afol	Ahous	Cmet	CmetN	Dc	RL	LtotT	LtotN
	Inverter	MV1-1	364715	4906166	2	0	0	100.3	100.3	1	462.62	3.25	0	64.3	0	-0.58	0	0	8.22	0	0	0	0	0	0	28.37	28.37
	Inverter	MV1-2	364753	4906063	2	0	0	100.3	100.3	1	567.02	3.25	0	66.07	0	-0.5	0	0	9	0	0	0	0	0	0	25.74	25.74
	Inverter	MV1-5	364671	4905892	2	0	0	100.3	100.3	1	676.88	3.25	0	67.61	0	-0.43	0	0	9.62	0	0	0	0	0	0	23.5	23.5
	Inverter	MV1-6	364477	4905835	2	0	0	100.3	100.3	1	686.72	3.25	0	67.74	0	-0.42	0	0	9.67	0	0	0	0	0	0	23.32	23.32
	Inverter	MV1-4	364815	4905918	2	0	0	100.3	100.3	1	721.39	3.25	0	68.16	0	-0.4	0	0	9.84	0	0	0	0	0	0	22.71	22.71
	Inverter	MV1-9	364561	4905646	2	0	0	100.3	100.3	1	884.96	3.25	0	69.94	0	-0.3	0	0	10.51	0	0	0	0	0	0	20.17	20.17
	Inverter	MV1-8	364788	4905647	2	0	0	100.3	100.3	1	948.04	3.25	0	70.54	0	-0.27	0	0	10.74	0	0	0	0	0	0	19.31	19.31
	Inverter	MV1-11	364655	4905414	2	0	0	100.3	100.3	1	1130.55	3.25	0	72.07	0	-0.18	0	0	11.32	0	0	0	0	0	0	17.11	17.11
	Inverter	MV2-4	365586	4906624	2	0	0	100.3	100.3	1	1174.7	3.25	0	72.4	0	-0.17	0	0	11.45	0	0	0	0	0	0	16.63	16.63
	Inverter	MV1-7	364925	4905782	2	0	0	97.3	97.3	1	895.69	3.25	0	70.04	0	-0.3	0	0	10.55	0	0	0	0	0	0	17.02	17.02
	Inverter	MV1-12	365038	4905386	2	0	0	100.3	100.3	1	1292.51	3.25	0	73.23	0	-0.11	0	0	11.78	0	0	0	0	0	0	15.41	15.41
	Inverter	MV2-3	365820	4906641	2	0	0	100.3	100.3	1	1409.29	3.25	0	73.98	0	-0.07	0	0	12.09	0	0	0	0	0	0	14.3	14.3
	Sol_Luce Substation	S_Substation	369426	4908792	3.5	0	0	112.1	112.1	1	5501.51	5.25	0	85.81	0	1.03	2.75	0.3	9.2	0	0	0	0	0	0	13.28	13.28
	Inverter	MV1-10	365004	4905564	2	0	0	97.3	97.3	1	1121.51	3.25	0	72	0	-0.19	0	0	11.29	0	0	0	0	0	0	14.21	14.21
	Inverter	MV1-3	364440	4906039	2	0	0	89.1	89.1	1	480.61	3.25	0	64.64	0	0.51	0	0	5.07	0	0	0	0	0	0	18.83	18.83
	Inverter	MV1-15	365315	4904994	2	0	0	100.3	100.3	1	1770.26	3.25	0	75.96	0	0.06	0	0	12.96	0	0	0	0	0	0	11.33	11.33
	Inverter	MV1-13	364731	4905241	2	0	0	97.3	97.3	1	1316.25	3.25	0	73.39	0	-0.11	0	0	11.85	0	0	0	0	0	0	12.18	12.18
	Inverter	MV2-1	365842	4906816	2	0	0	97.3	97.3	1	1456.6	3.25	0	74.27	0	-0.05	0	0	12.22	0	0	0	0	0	0	10.88	10.88
	Inverter	MV1-14	365163	4905049	2	0	0	97.3	97.3	1	1648.91	3.25	0	75.34	0	0.02	0	0	12.68	0	0	0	0	0	0	9.26	9.26
	Inverter	MV3-12	367668	4907594	2	0	0	100.3	100.3	1	3425.07	3.25	0	81.69	0	0.44	0	0	16.11	0	0	0	0	0	0	2.07	2.07
	Inverter	MV3-18	367752	4907412	2	0	0	100.3	100.3	1	3453.45	3.25	0	81.77	0	0.44	0	0	16.15	0	0	0	0	0	0	1.95	1.95
	Inverter	MV3-13	367963	4907577	2	0	0	100.3	100.3	1	3701.43	3.25	0	82.37	0	0.48	0	0	16.57	0	0	0	0	0	0	0.9	0.9
	Inverter	MV3-7	367945	4907754	2	0	0	100.3	100.3	1	3738.86	3.25	0	82.45	0	0.49	0	0	16.63	0	0	0	0	0	0	0.74	0.74
	Inverter	MV3-3	367939	4907927	2	0	0	100.3	100.3	1	3793.94	3.25	0	82.58	0	0.5	0	0	16.72	0	0	0	0	0	0	0.52	0.52
	Inverter	MV3-17	368178	4907472	2	0	0	100.3	100.3	1	3880.83	3.25	0	82.78	0	0.51	0	0	16.86	0	0	0	0	0	0	0.17	0.17
	Inverter	MV3-10	368167	4907669	2	0	0	100.3	100.3	1	3923.33	3.25	0	82.87	0	0.52	0	0	16.93	0	0	0	0	0	0	0	0
	Inverter	MV3-6	368162	4907834	2	0	0	100.3	100.3	1	3970.11	3.25	0	82.98	0	0.52	0	0	17	0	0	0	0	0	0	-0.19	-0.19
	Inverter	MV3-19	368357	4907347	2	0	0	100.3	100.3	1	4027.04	3.25	0	83.1	0	0.53	0	0	17.09	0	0	0	0	0	0	-0.41	-0.41
	Inverter	MV3-15	368357	4907477	2	0	0	100.3	100.3	1	4055.77	3.25	0	83.16	0	0.53	0	0	17.14	0	0	0	0	0	0	-0.52	-0.52
	Inverter	MV3-11	368346	4907662	2	0	0	100.3	100.3	1	4092.84	3.25	0	83.24	0	0.54	0	0	17.2	0	0	0	0	0	0	-0.66	-0.66
	Inverter	MV3-21	368478	4907206	2	0	0	100.3	100.3	1	4119.69	3.25	0	83.3	0	0.54	0	0	17.24	0	0	0	0	0	0	-0.77	-0.77
	Inverter	MV3-16	368514	4907475	2	0	0	100.3	100.3	1	4208.03	3.25	0	83.48	0	0.56	0	0	17.38	0	0	0	0	0	0	-1.1	-1.1
	Inverter	MV3-9	368512	4907703	2	0	0	100.3	100.3	1	4263.69	3.25	0	83.6	0	0.56	0	0	17.46	0	0	0	0	0	0	-1.31	-1.31
	Inverter	MV3-20	368689	4907317	2	0	0	100.3	100.3	1	4346.88	3.25	0	83.76	0	0.57	0	0	17.59	0	0	0	0	0	0	-1.62	-1.62
	Inverter	MV3-14	368684	4907498	2	0	0	100.3	100.3	1	4378.84	3.25	0	83.83	0	0.58	0	0	17.64	0	0	0	0	0	0	-1.74	-1.74
	Inverter	MV3-8	368680	4907712	2	0	0	100.3	100.3	1	4427.75	3.25	0	83.92	0	0.58	0	0	17.72	0	0	0	0	0	0	-1.91	-1.91
	Inverter	MV4-7	369035	4909001	2	0	0	100.3	100.3	1	5243.61	3.25	0	85.39	0	0.66	0	0	18.93	0	0	0	0	0	0	-4.68	-4.68
	Inverter	MV4-4	369027	4909199	2	0	0	100.3	100.3	1	5333.27	3.25	0	85.54	0	0.67	0	0	19.06	0	0	0	0	0	0	-4.96	-4.96
	Inverter	MV4-11	369264	4908855	2	0	0	100.3	100.3	1	5381.45	3.25	0	85.62	0	0.67	0	0	19.13	0	0	0	0	0	0	-5.11	-5.11
	Inverter	MV4-1	369011	4909397	2	0	0	100.3	100.3	1	5421.89	3.25	0	85.68	0	0.68	0	0	19.19	0	0	0	0	0	0	-5.24	-5.24
	Inverter	MV4-10	369312	4908858	2	0	0	100.3	100.3	1	5426.02	3.25	0	85.69	0	0.68	0	0	19.2	0	0	0	0	0	0	-5.25	-5.25
	Inverter	MV4-8	369256	4909001	2	0	0	100.3	100.3	1	5439.3	3.25	0	85.71	0	0.68	0	0	19.21	0	0	0	0	0	0	-5.29	-5.29
	Inverter	MV4-9	369289	4909001	2	0	0	100.3	100.3	1	5468.68	3.25	0	85.76	0	0.68	0	0	19.26	0	0	0	0	0	0	-5.38	-5.38
	Inverter	MV4-6	369243	4909192	2	0	0	100.3	100.3	1	5517.69	3.25	0	85.84	0	0.68	0	0	19.33	0	0	0	0	0	0	-5.53	-5.53
	Inverter	MV4-5	369289	4909199	2	0	0	100.3	100.3	1	5561.34	3.25	0	85.9	0	0.68	0	0	19.39	0	0	0	0	0	0	-5.66	-5.66
	Inverter	MV4-3	369229	4909397	2	0	0	100.3	100.3	1	5607.84	3.25	0	85.98	0	0.69	0	0	19.45	0	0	0	0	0	0	-5.8	-5.8
	Inverter	MV4-2	369272	4909397	2	0	0	100.3	100.3	1	5644.79	3.25	0	86.03	0	0.69	0	0	19.5	0	0	0	0	0	0	-5.91	-5.91
	Inverter	MV2-2	365977	4906654	2	0	0	89.1	89.1	1	1566.83	3.25	0	74.9	0	0.81	0	0	7.32	0	0	0	0	0	0	6.03	6.03
	Inverter	MV6-2	370085	4907339	2	0	0	100.3	100.3	1	5728	3.25	0	86.16	0	0.69	0	0	19.62	0	0	0	0	0	0	-6.16	-6.16
	Inverter	MV6-3	370207	4907140	2	0	0	100.3	100.3	1	5824.2	3.25	0	86.3	0	0.7	0	0	19.75	0	0	0	0	0	0	-6.44	-6.44
	Inverter	MV5-5	370015	4908690	2	0	0	100.3	100.3	1	6005.17	3.25	0	86.57	0	0.71	0	0	20	0	0	0	0	0	0	-6.96	-6.96
	Inverter	MV5-2	370006	4908853	2	0	0	100.3	100.3	1	6057.69	3.25	0	86.65	0	0.71	0	0	20.07	0	0	0	0	0	0	-7.11	-7.11
	Inverter	MV5-1	370020	4909142	2	0	0	100.3	100.3	1	6187.48	3.25	0	86.83	0	0.71	0	0	20.25	0	0	0	0	0	0	-7.47	-7.47
	Inverter	MV5-3	370231	4908851	2	0	0	100.3	100.3	1	6265.18	3.25	0	86.94	0	0.71	0	0	20.35	0	0	0	0	0	0	-7.69	-7.69
	Inverter	MV5-4	370324	4908707	2	0	0	100.3	100.3	1	6300.14	3.25	0	86.99	0	0.71	0	0	20.4	0	0	0	0	0	0	-7.78	-7.78
	Inverter	MV6-1	370235	4907364	2	0	0	97.3	97.3	1	5880.03	3.25	0	86.39	0	0.7	0	0	19.83	0	0	0	0	0	0	-9.61	-9.61
	DSTATCOM - 10 MVAR #2	DSAT2	369403	4908757	2.5	0	0	96.6	96.6	1	5466.15	3.5	0	85.75	0	3.73	0	0	3.58	0	0	0	0	0	0	3.57	3.57
	DSTATCOM - 10 MVAR #1	DSAT1	369437	4908757	2.5	0	0	96.6	96.6	1	5497.19	3.5	0	85.8	0	3.73	0	0	3.6	0	0	0	0	0	0	3.5	3.5
	Gardiner Substation	G_Sub	366586.3	4903349.9	2.5	0	0	90.8	90.8	1	3841.02	4.25	0	82.69	0	1.31	2.65	0.26	7.15	0	0	0	0	0	0	-3.02	-3.02
	SubstationTransformer	W_ST	369711.17	4906112.3	2.5	0	0	92	92	1	5310.77	4.25	0	85.5	0	1.72	2.26	0.29	8.98	0	0	0	0	0	0	-6.48	-6.48
	Inverter	MV3-1	368156	4907976	2	0	0	89.1	89.1	1	4013.78	3.25	0	83.07	0	1.4	0	0	11.1	0	0	0	0	0	0	-6.51	-6.51
	Inverter	MV3-5	368340	4907843	2	0	0	89.1	89.1	1	4141.35	3.25	0	83.34	0	1.43	0	0	11.28	0	0	0	0	0	0	-7	-7
	Inverter	MV3-22	368656	4907142	2	0	0	89.1	89.1	1	4285.53	3.25	0	83.64	0	1.46	0	0	11.49	0	0	0	0	0	0	-7.53	-7.53
	Inverter	MV3-4	368502	4907925	2	0	0	89.1	89.1	1	4321.14	3.25	0	83.71	0	1.47	0	0	11.54	0	0	0	0	0	0	-7.66	-7.66

Inverter	MV3-2	368671	4907928	2	0	0	89.1	89.1	1	4482.22	3.25	0	84.03	0	1.51	0	0	11.76	0	0	0	0	0	0	-8.24	-8.24
Inverters	G_Inv1	366526.4	4903225.8	2	0	0	87.7	87.7	1	3911.39	3.25	0	82.85	0	2.78	0	0	4.78	0	0	0	0	0	0	-2.75	-2.75
Inverters	G_Inv2	366676.9	4903239.1	2	0	0	87.7	87.7	1	3983.64	3.25	0	83.01	0	2.79	0	0	4.86	0	0	0	0	0	0	-2.99	-2.99
Inverters	G_Inv3	366583.7	4903091.4	2	0	0	87.7	87.7	1	4055.54	3.25	0	83.16	0	2.8	0	0	4.93	0	0	0	0	0	0	-3.23	-3.23
Inverters	G_Inv4	366732.8	4903105	2	0	0	87.7	87.7	1	4125.89	3.25	0	83.31	0	2.8	0	0	5.01	0	0	0	0	0	0	-3.46	-3.46
Inverters	G_Inv5	366638.5	4902958.1	2	0	0	87.7	87.7	1	4197.56	3.25	0	83.46	0	2.81	0	0	5.09	0	0	0	0	0	0	-3.69	-3.69
Westbrook Inverter Enclosur	W_INV2	369374	4906388	2	0	0	89.1	89.1	1	4959.73	3.25	0	84.91	0	1.63	0	0	12.41	0	0	0	0	0	0	-9.89	-9.89
Fixed Reactor Bank 1	FRB1	369378	4908755	6	0	0	89.8	89.8	1	5442.53	5.25	0	85.72	0	-0.5	0	0	9.13	0	0	0	0	0	0	-4.57	-4.57
Inverters	G_Inv6	366788.5	4902972	2	0	0	87.7	87.7	1	4267.31	3.25	0	83.6	0	2.81	0	0	5.16	0	0	0	0	0	0	-3.92	-3.92
Fixed Reactor Bank 2	FRB2	369464	4908755	6	0	0	89.8	89.8	1	5521.05	5.25	0	85.84	0	-0.49	0	0	9.22	0	0	0	0	0	0	-4.8	-4.8
Inverter	MV4-13	369051	4908605	2	0	0	89.1	89.1	1	5082.78	3.25	0	85.12	0	1.66	0	0	12.57	0	0	0	0	0	0	-10.3	-10.3
Inverters	G_Inv7	366694.6	4902824.7	2	0	0	87.7	87.7	1	4340.49	3.25	0	83.75	0	2.82	0	0	5.24	0	0	0	0	0	0	-4.15	-4.15
Westbrook Inverter Enclosur	W_INV3	369508	4906164	2	0	0	89.1	89.1	1	5104.36	3.25	0	85.16	0	1.67	0	0	12.6	0	0	0	0	0	0	-10.37	-10.37
Inverter	MV4-15	369176	4908481	2	0	0	89.1	89.1	1	5148.5	3.25	0	85.23	0	1.68	0	0	12.66	0	0	0	0	0	0	-10.51	-10.51
Inverter	MV4-14	369176	4908507	2	0	0	89.1	89.1	1	5158.46	3.25	0	85.25	0	1.68	0	0	12.67	0	0	0	0	0	0	-10.55	-10.55
Inverter	MV4-12	369043	4908803	2	0	0	89.1	89.1	1	5160.02	3.25	0	85.25	0	1.68	0	0	12.68	0	0	0	0	0	0	-10.55	-10.55
Inverters	G_Inv8	366844.5	4902838.5	2	0	0	87.7	87.7	1	4409.5	3.25	0	83.89	0	2.82	0	0	5.31	0	0	0	0	0	0	-4.37	-4.37
Inverters	G_Inv9	366750.9	4902691.8	2	0	0	87.7	87.7	1	4483.22	3.25	0	84.03	0	2.83	0	0	5.39	0	0	0	0	0	0	-4.59	-4.59
Westbrook Inverter Enclosur	W_INV4	369673	4906164	2	0	0	89.1	89.1	1	5268.97	3.25	0	85.43	0	1.71	0	0	12.82	0	0	0	0	0	0	-10.9	-10.9
Westbrook Inverter Enclosur	W_INV5	369719	4906574	2	0	0	89.1	89.1	1	5303.29	3.25	0	85.49	0	1.71	0	0	12.87	0	0	0	0	0	0	-11.01	-11.01
Inverters	G_Inv10	366900.7	4902704.8	2	0	0	87.7	87.7	1	4552.13	3.25	0	84.16	0	2.83	0	0	5.47	0	0	0	0	0	0	-4.8	-4.8
Westbrook Inverter Enclosur	W_INV7	369780	4906417	2	0	0	89.1	89.1	1	5364.97	3.25	0	85.59	0	1.73	0	0	12.95	0	0	0	0	0	0	-11.21	-11.21
Westbrook Inverter Enclosur	W_INV6	369875	4906578	2	0	0	89.1	89.1	1	5459.32	3.25	0	85.74	0	1.75	0	0	13.07	0	0	0	0	0	0	-11.51	-11.51
Inverter	MV5-6	369982	4908507	2	0	0	89.1	89.1	1	5910.37	3.25	0	86.43	0	1.86	0	0	13.65	0	0	0	0	0	0	-12.89	-12.89
Westbrook Inverter Enclosur	W_INV1	369409	4906578	2	0	0	86.1	86.1	1	4993.35	3.25	0	84.97	0	1.64	0	0	12.45	0	0	0	0	0	0	-13	-13
Inverter	MV6-4	370250	4906966	2	0	0	86.1	86.1	1	5851.1	3.25	0	86.34	0	1.85	0	0	13.57	0	0	0	0	0	0	-15.71	-15.71
Inverter Transformer	MV1-7 T	364919	4905782	2	0	0	69.4	69.4	1	892.29	3.25	0	70.01	0	1.59	0	0	3.66	0	0	0	0	0	0	-5.9	-5.9
Inverter Transformer	MV1-10 T	365010	4905564	2	0	0	69.4	69.4	1	1124.66	3.25	0	72.02	0	1.77	0	0	3.98	0	0	0	0	0	0	-8.42	-8.42
Inverter Transformer	MV1-13 T	364725	4905241	2	0	0	69.4	69.4	1	1314.83	3.25	0	73.38	0	1.88	0	0	4.22	0	0	0	0	0	0	-10.13	-10.13
Inverter Transformer	MV2-1 T	365836	4906816	2	0	0	69.4	69.4	1	1450.73	3.25	0	74.23	0	1.95	0	0	4.38	0	0	0	0	0	0	-11.21	-11.21
Inverter Transformer	MV1-14 T	365157	4905049	2	0	0	69.4	69.4	1	1646.2	3.25	0	75.33	0	2.04	0	0	4.6	0	0	0	0	0	0	-12.61	-12.61
Westbrook Inverter Transfor	W_INVTR1	369403	4906578	2	0	0	78.2	78.2	1	4987.35	3.25	0	84.96	0	-3.17	0	0	2.41	0	0	0	0	0	0	-5.95	-5.95
Westbrook Inverter Transfor	W_INVTR2	369368	4906388	2	0	0	77.3	77.3	1	4953.73	3.25	0	84.9	0	-3.17	0	0	2.4	0	0	0	0	0	0	-6.79	-6.79
Westbrook Inverter Transfor	W_INVTR3	369514	4906164	2	0	0	77.3	77.3	1	5110.35	3.25	0	85.17	0	-3.2	0	0	2.45	0	0	0	0	0	0	-7.08	-7.08
Westbrook Inverter Transfor	W_INVTR4	369679	4906164	2	0	0	77.3	77.3	1	5274.96	3.25	0	85.44	0	-3.23	0	0	2.51	0	0	0	0	0	0	-7.38	-7.38
Westbrook Inverter Transfor	W_INVTR5	369725	4906574	2	0	0	77.3	77.3	1	5309.29	3.25	0	85.5	0	-3.24	0	0	2.52	0	0	0	0	0	0	-7.44	-7.44
Westbrook Inverter Transfor	W_INVTR7	369786	4906417	2	0	0	77.3	77.3	1	5370.97	3.25	0	85.6	0	-3.25	0	0	2.54	0	0	0	0	0	0	-7.55	-7.55
Inverter Transformer	MV1-1 T	364721	4906166	2	0	0	56.1	56.1	1	466.52	3.25	0	64.38	0	-0.12	0	0	3.44	0	0	0	0	0	0	-11.64	-11.64
Westbrook Inverter Transfor	W_INVTR6	369881	4906578	2	0	0	77.3	77.3	1	5465.32	3.25	0	85.75	0	-3.27	0	0	2.57	0	0	0	0	0	0	-7.71	-7.71
Inverter Transformer	MV1-3 T	364435	4906039	2	0	0	56.1	56.1	1	480.38	3.25	0	64.63	0	-0.12	0	0	3.49	0	0	0	0	0	0	-11.94	-11.94
Inverter Transformer	MV1-2 T	364759	4906063	2	0	0	56.1	56.1	1	570.61	3.25	0	66.13	0	-0.11	0	0	3.77	0	0	0	0	0	0	-13.73	-13.73
Inverter Transformer	MV1-5 T	364676	4905892	2	0	0	56.1	56.1	1	678.77	3.25	0	67.63	0	-0.09	0	0	4.08	0	0	0	0	0	0	-15.57	-15.57
Inverter Transformer	MV1-6 T	364482	4905835	2	0	0	56.1	56.1	1	687.18	3.25	0	67.74	0	-0.08	0	0	4.1	0	0	0	0	0	0	-15.7	-15.7
Inverter Transformer	MV1-4 T	364821	4905918	2	0	0	56.1	56.1	1	724.73	3.25	0	68.2	0	-0.07	0	0	4.2	0	0	0	0	0	0	-16.27	-16.27
Inverter Transformer	MV1-9 T	364555	4905646	2	0	0	56.1	56.1	1	884	3.25	0	69.93	0	-0.03	0	0	4.61	0	0	0	0	0	0	-18.45	-18.45
Inverter Transformer	MV1-8 T	364782	4905647	2	0	0	56.1	56.1	1	945.7	3.25	0	70.52	0	-0.01	0	0	4.76	0	0	0	0	0	0	-19.21	-19.21
Inverter Transformer	MV1-11 T	364649	4905414	2	0	0	56.1	56.1	1	1129.3	3.25	0	72.06	0	0.06	0	0	5.19	0	0	0	0	0	0	-21.25	-21.25
Inverter Transformer	MV2-4 T	365590	4906628	2	0	0	56.1	56.1	1	1179.05	3.25	0	72.43	0	0.08	0	0	5.31	0	0	0	0	0	0	-21.76	-21.76
Inverter Transformer	MV6-4 T	370244	4906966	2	0	0	69.4	69.4	1	5845.12	3.25	0	86.34	0	3.16	0	0	7.92	0	0	0	0	0	0	-28.07	-28.07
Inverter Transformer	MV6-1 T	370230	4907364	2	0	0	69.4	69.4	1	5875.09	3.25	0	86.38	0	3.17	0	0	7.94	0	0	0	0	0	0	-28.14	-28.14
Inverter Transformer	MV1-12 T	365044	4905386	2	0	0	56.1	56.1	1	1295.41	3.25	0	73.25	0	0.12	0	0	5.57	0	0	0	0	0	0	-22.88	-22.88
Inverter Transformer	MV2-3 T	365814	4906641	2	0	0	56.1	56.1	1	1403.32	3.25	0	73.94	0	0.16	0	0	5.81	0	0	0	0	0	0	-23.85	-23.85
Inverter Transformer	MV2-2 T	365982	4906654	2	0	0	56.1	56.1	1	1571.81	3.25	0	74.93	0	0.23	0	0	6.17	0	0	0	0	0	0	-25.27	-25.27
Inverter Transformer	MV1-15 T	365309	4904994	2	0	0	56.1	56.1	1	1767.22	3.25	0	75.95	0	0.31	0	0	6.58	0	0	0	0	0	0	-26.77	-26.77
Inverter Transformer	MV3-12 T	367674	4907594	2	0	0	56.1	56.1	1	3430.77	3.25	0	81.71	0	1.01	0	0	9.58	0	0	0	0	0	0	-36.24	-36.24
Inverter Transformer	MV3-18 T	367757	4907412	2	0	0	56.1	56.1	1	3458.29	3.25	0	81.78	0	1.02	0	0	9.62	0	0	0	0	0	0	-36.36	-36.36
Inverter Transformer	MV3-13 T	367958	4907577	2	0	0	56.1	56.1	1	3696.64	3.25	0	82.36	0	1.12	0	0	10	0	0	0	0	0	0	-37.41	-37.41
Inverter Transformer	MV3-7 T	367951	4907754	2	0	0	56.1	56.1	1	3744.52	3.25	0	82.47	0	1.14	0	0	10.07	0	0	0	0	0	0	-37.62	-37.62
Inverter Transformer	MV3-3 T	367944	4907927	2	0	0	56.1	56.1	1	3798.59	3.25	0	82.59	0	1.16	0	0	10.15	0	0	0	0	0	0	-37.85	-37.85
Inverter Transformer	MV3-17 T	368183	4907472	2	0	0	56.1	56.1	1	3885.68	3.25	0	82.79	0	1.2	0	0	10.28	0	0	0	0	0	0	-38.21	-38.21
Inverter Transformer	MV3-10 T	368162	4907669	2	0	0	56.1	56.1	1	3918.55	3.25	0	82.86	0	1.21	0	0	10.33	0	0	0	0	0	0	-38.35	-38.35
Inverter Transformer	MV3-6 T	368156	4907834	2	0	0	56.1	56.1	1	3964.45	3.25	0	82.96	0	1.23	0	0	10.4	0	0	0	0	0	0	-38.54	-38.54
Inverter Transformer	MV3-1 T	368150	4907976	2	0	0	56.1	56.1	1	4008.19	3.25	0	83.06	0	1.25	0	0	10.47	0	0	0	0	0	0	-38.71	-38.71
Inverter Transformer	MV3-19 T	368352	4907347	2	0	0	56.1	56.1	1	4022.15	3.25	0	83.09	0	1.25	0	0	10.49	0	0	0	0	0	0	-38.77	-38.77
Inverter Transformer	MV3-15 T	368351	4907477	2	0	0	56.1	56.1	1	4049.94	3.25	0	83.15	0	1.26	0	0	10.53	0	0	0	0	0	0	-38.88	-38.88
Inverter Transformer	MV3-11 T	368340	4907662	2	0	0	56.1	56.1	1	4087.08	3.25	0	83.23	0	1.28	0	0	10.58	0	0	0	0	0	0	-39.03	-39.03
Inverter Transformer	MV3-21 T	368484	4907206	2	0	0	56.1	56.1	1	4125.6	3.25	0	83.31	0	1.29	0	0	10.64	0	0	0	0	0	0	-39.19	-39.19
Inverter Transformer	MV3-5 T	368335	4907843	2	0	0	56.1	56.1	1	4136.61	3.25	0	83.33	0	1.3	0	0	10.66	0	0	0	0	0	0	-39.23	-39.23
Inverter Transformer	MV3-16 T	368509	4907475	2	0	0	56.1	56.1	1	4203.16	3.25	0	83.47	0	1.32	0	0	10.75	0	0	0	0	0	0	-39.49	-39.49
Inverter Transformer	MV3-9 T	368517	4907703	2	0	0	56.1	56.1	1	4268.5	3.25	0	83.61	0	1.35	0	0	10.85	0	0	0	0	0	0	-39.74	-39.74
Inverter Transformer	MV3-22 T	368661	4907142	2	0	0	56.1	56.1	1	4290.47	3.25	0	83.65	0	1.36	0	0	10.88	0	0	0	0	0	0	-39.83	-39.83
Inverter Transformer	MV3-4 T	368507	4907925	2	0	0	56.1	56.1	1	4325.87	3.25	0	83.72	0	1.37	0	0	10.93	0	0	0	0	0	0	-39.97	-39.97
Inverter Transformer	MV3-20 T	368683	4907317	2	0	0	56.1	56.1	1	4340.98	3.25	0	83.75	0	1.38	0	0	10.95	0	0	0	0	0	0	-40.02	-40.02
Inverter Transformer	MV3-14 T	368678	4907498	2	0	0	56.1	56.1	1	4373	3.25	0	83.82	0	1.39	0	0	11	0	0	0	0	0	0	-40.14	-40.14

	Inverter Transformer	MV3-8 T	368685	4907712	2	0	0	56.1	56.1	1	4432.56	3.25	0	83.93	0	1.41	0	0	11.08	0	0	0	0	0	0	-40.37	-40.37
	Inverter Transformer	MV3-2 T	368677	4907928	2	0	0	56.1	56.1	1	4487.92	3.25	0	84.04	0	1.43	0	0	11.16	0	0	0	0	0	0	-40.58	-40.58
	Inverter Transformer	MV4-13 T	369057	4908605	2	0	0	56.1	56.1	1	5088.25	3.25	0	85.13	0	1.66	0	0	11.97	0	0	0	0	0	0	-42.7	-42.7
	Inverter Transformer	MV4-15 T	369170	4908481	2	0	0	56.1	56.1	1	5142.95	3.25	0	85.22	0	1.68	0	0	12.04	0	0	0	0	0	0	-42.88	-42.88
	Inverter Transformer	MV4-14 T	369182	4908507	2	0	0	56.1	56.1	1	5164	3.25	0	85.26	0	1.68	0	0	12.07	0	0	0	0	0	0	-42.95	-42.95
	Inverter Transformer	MV4-12 T	369049	4908803	2	0	0	56.1	56.1	1	5165.4	3.25	0	85.26	0	1.68	0	0	12.07	0	0	0	0	0	0	-42.96	-42.96
	Inverter Transformer	MV4-7 T	369040	4909001	2	0	0	56.1	56.1	1	5248.02	3.25	0	85.4	0	1.71	0	0	12.18	0	0	0	0	0	0	-43.23	-43.23
	Inverter Transformer	MV4-4 T	369033	4909199	2	0	0	56.1	56.1	1	5338.45	3.25	0	85.55	0	1.75	0	0	12.29	0	0	0	0	0	0	-43.53	-43.53
	Inverter Transformer	MV4-11 T	369269	4908855	2	0	0	56.1	56.1	1	5385.95	3.25	0	85.63	0	1.76	0	0	12.35	0	0	0	0	0	0	-43.68	-43.68
	Inverter Transformer	MV4-10 T	369307	4908858	2	0	0	56.1	56.1	1	5421.51	3.25	0	85.68	0	1.77	0	0	12.4	0	0	0	0	0	0	-43.79	-43.79
	Inverter Transformer	MV4-1 T	369017	4909397	2	0	0	56.1	56.1	1	5426.98	3.25	0	85.69	0	1.78	0	0	12.4	0	0	0	0	0	0	-43.81	-43.81
	Inverter Transformer	MV4-8 T	369262	4909001	2	0	0	56.1	56.1	1	5444.63	3.25	0	85.72	0	1.78	0	0	12.43	0	0	0	0	0	0	-43.87	-43.87
	Inverter Transformer	MV4-9 T	369284	4909001	2	0	0	56.1	56.1	1	5464.22	3.25	0	85.75	0	1.79	0	0	12.45	0	0	0	0	0	0	-43.93	-43.93
	Inverter Transformer	MV4-6 T	369249	4909192	2	0	0	56.1	56.1	1	5522.94	3.25	0	85.84	0	1.81	0	0	12.52	0	0	0	0	0	0	-44.12	-44.12
	Inverter Transformer	MV4-5 T	369283	4909199	2	0	0	56.1	56.1	1	5556.09	3.25	0	85.9	0	1.82	0	0	12.57	0	0	0	0	0	0	-44.22	-44.22
	Inverter Transformer	MV4-3 T	369234	4909397	2	0	0	56.1	56.1	1	5612.13	3.25	0	85.98	0	1.84	0	0	12.63	0	0	0	0	0	0	-44.4	-44.4
	Inverter Transformer	MV4-2 T	369267	4909397	2	0	0	56.1	56.1	1	5640.49	3.25	0	86.03	0	1.85	0	0	12.67	0	0	0	0	0	0	-44.49	-44.49
	Inverter Transformer	MV6-2 T	370091	4907339	2	0	0	56.1	56.1	1	5733.94	3.25	0	86.17	0	1.88	0	0	12.78	0	0	0	0	0	0	-44.77	-44.77
	Inverter Transformer	MV6-3 T	370202	4907140	2	0	0	56.1	56.1	1	5819.23	3.25	0	86.3	0	1.91	0	0	12.89	0	0	0	0	0	0	-45.03	-45.03
	Inverter Transformer	MV5-6 T	369987	4908507	2	0	0	56.1	56.1	1	5915.08	3.25	0	86.44	0	1.94	0	0	13	0	0	0	0	0	0	-45.32	-45.32
	Inverter Transformer	MV5-5 T	370021	4908690	2	0	0	56.1	56.1	1	6010.76	3.25	0	86.58	0	1.97	0	0	13.12	0	0	0	0	0	0	-45.6	-45.6
	Inverter Transformer	MV5-2 T	370011	4908853	2	0	0	56.1	56.1	1	6062.31	3.25	0	86.65	0	1.98	0	0	13.18	0	0	0	0	0	0	-45.76	-45.76
	Inverter Transformer	MV5-1 T	370015	4909142	2	0	0	56.1	56.1	1	6182.96	3.25	0	86.82	0	2.02	0	0	13.32	0	0	0	0	0	0	-46.1	-46.1
	Inverter Transformer	MV5-3 T	370237	4908851	2	0	0	56.1	56.1	1	6270.75	3.25	0	86.95	0	2.05	0	0	13.42	0	0	0	0	0	0	-46.36	-46.36
	Inverter Transformer	MV5-4 T	370330	4908707	2	0	0	56.1	56.1	1	6305.77	3.25	0	86.99	0	2.06	0	0	13.46	0	0	0	0	0	0	-46.46	-46.46
	Line Reactor	NGR	369421	4908787.5	5	0	0	45.4	45.4	1	5495.1	5.25	0	85.8	0	3.25	1.36	0.1	2.25	0	0	0	0	0	0	-47.3	-47.3
Limit. Valu	0	0																								
Level D/N:	33.6189	33.6189																								

Receiver: Existing Noise Receptor
ID: S-R13
X: 364633
Y: 4906641
Z: 4.5
Ground: 0

ISO	Description	ID	X	Y	Z	Ground	ReflOrd	LxT	LxN	L/A	Dist.	hm	Freq	Adiv	K0b	Agr	Abar	z	Aatm	Afol	Ahous	Cmet	CmetN	Dc	RL	LtotT	LtotN
	Inverter	MV1-1	364715	4906166	2	0	0	100.3	100.3	1	482.03	3.25	0	64.66	0	-0.56	0	0	8.38	0	0	0	0	0	0	27.83	27.83
	Inverter	MV1-2	364753	4906063	2	0	0	100.3	100.3	1	590.33	3.25	0	66.42	0	-0.49	0	0	9.15	0	0	0	0	0	0	25.23	25.23
	Inverter	MV1-4	364815	4905918	2	0	0	100.3	100.3	1	745.56	3.25	0	68.45	0	-0.38	0	0	9.95	0	0	0	0	0	0	22.3	22.3
	Inverter	MV1-5	364671	4905892	2	0	0	100.3	100.3	1	749.97	3.25	0	68.5	0	-0.38	0	0	9.97	0	0	0	0	0	0	22.22	22.22
	Inverter	MV1-6	364477	4905835	2	0	0	100.3	100.3	1	820.96	3.25	0	69.29	0	-0.34	0	0	10.27	0	0	0	0	0	0	21.1	21.1
	Inverter	MV2-4	365586	4906624	2	0	0	100.3	100.3	1	953.15	3.25	0	70.58	0	-0.27	0	0	10.75	0	0	0	0	0	0	19.25	19.25
	Inverter	MV1-9	364561	4905646	2	0	0	100.3	100.3	1	997.6	3.25	0	70.98	0	-0.25	0	0	10.9	0	0	0	0	0	0	18.68	18.68
	Inverter	MV1-8	364788	4905647	2	0	0	100.3	100.3	1	1006.02	3.25	0	71.05	0	-0.24	0	0	10.93	0	0	0	0	0	0	18.57	18.57
	Inverter	MV2-3	365820	4906641	2	0	0	100.3	100.3	1	1187	3.25	0	72.49	0	-0.16	0	0	11.49	0	0	0	0	0	0	16.49	16.49
	Inverter	MV1-11	364655	4905414	2	0	0	100.3	100.3	1	1227.2	3.25	0	72.78	0	-0.14	0	0	11.6	0	0	0	0	0	0	16.07	16.07
	Inverter	MV1-7	364925	4905782	2	0	0	97.3	97.3	1	907.28	3.25	0	70.15	0	-0.29	0	0	10.59	0	0	0	0	0	0	16.86	16.86
	Inverter	MV1-12	365038	4905386	2	0	0	100.3	100.3	1	1318.73	3.25	0	73.4	0	-0.1	0	0	11.86	0	0	0	0	0	0	15.16	15.16
	Sol_Luce Substation	S_Substation	369426	4908792	3.5	0	0	112.1	112.1	1	5253.54	5.25	0	85.41	0	0.97	2.81	0.3	8.92	0	0	0	0	0	0	13.98	13.98
	Inverter	MV1-10	365004	4905564	2	0	0	97.3	97.3	1	1139.11	3.25	0	72.13	0	-0.18	0	0	11.35	0	0	0	0	0	0	14.01	14.01
	Inverter	MV2-1	365842	4906816	2	0	0	97.3	97.3	1	1221.6	3.25	0	72.74	0	-0.14	0	0	11.59	0	0	0	0	0	0	13.13	13.13
	Inverter	MV1-15	365315	4904994	2	0	0	100.3	100.3	1	1782.62	3.25	0	76.02	0	0.06	0	0	12.99	0	0	0	0	0	0	11.24	11.24
	Inverter	MV1-13	364731	4905241	2	0	0	97.3	97.3	1	1403.43	3.25	0	73.94	0	-0.07	0	0	12.08	0	0	0	0	0	0	11.36	11.36
	Inverter	MV1-3	364440	4906039	2	0	0	89.1	89.1	1	632.19	3.25	0	67.02	0	0.59	0	0	5.54	0	0	0	0	0	0	15.92	15.92
	Inverter	MV1-14	365163	4905049	2	0	0	97.3	97.3	1	1677.91	3.25	0	75.5	0	0.03	0	0	12.75	0	0	0	0	0	0	9.04	9.04
	Inverter	MV3-12	367668	4907594	2	0	0	100.3	100.3	1	3181.11	3.25	0	81.05	0	0.4	0	0	15.69	0	0	0	0	0	0	3.18	3.18
	Inverter	MV3-18	367752	4907412	2	0	0	100.3	100.3	1	3212.88	3.25	0	81.14	0	0.4	0	0	15.74	0	0	0	0	0	0	3.03	3.03
	Inverter	MV3-13	367963	4907577	2	0	0	100.3	100.3	1	3459.05	3.25	0	81.78	0	0.44	0	0	16.16	0	0	0	0	0	0	1.93	1.93
	Inverter	MV3-7	367945	4907754	2	0	0	100.3	100.3	1	3494.01	3.25	0	81.87	0	0.45	0	0	16.22	0	0	0	0	0	0	1.77	1.77
	Inverter	MV3-3	367939	4907927	2	0	0	100.3	100.3	1	3547.31	3.25	0	82	0	0.46	0	0	16.31	0	0	0	0	0	0	1.54	1.54
	Inverter	MV3-17	368178	4907472	2	0	0	100.3	100.3	1	3641.1	3.25	0	82.22	0	0.47	0	0	16.47	0	0	0	0	0	0	1.15	1.15
	Inverter	MV3-10	368167	4907669	2	0	0	100.3	100.3	1	3680.48	3.25	0	82.32	0	0.48	0	0	16.53	0	0	0	0	0	0	0.98	0.98
	Inverter	MV3-6	368162	4907834	2	0	0	100.3	100.3	1	3725.2	3.25	0	82.42	0	0.49	0	0	16.6	0	0	0	0	0	0	0.8	0.8
	Inverter	MV3-19	368357	4907347	2	0	0	100.3	100.3	1	3790.33	3.25	0	82.57	0	0.5	0	0	16.71	0	0	0	0	0	0	0.53	0.53
	Inverter	MV3-15	368357	4907477	2	0	0	100.3	100.3	1	3816.68	3.25	0	82.63	0	0.5	0	0	16.75	0	0	0	0	0	0	0.42	0.42
	Inverter	MV3-11	368346	4907662	2	0	0	100.3	100.3	1	3850.82	3.25	0	82.71	0	0.51	0	0	16.81	0	0	0	0	0	0	0.29	0.29
	Inverter	MV3-21	368478	4907206	2	0	0	100.3	100.3	1	3886.29	3.25	0	82.79	0	0.51	0	0	16.87	0	0	0	0	0	0	0.14	0.14
	Inverter	MV3-16	368514	4907475	2	0	0	100.3	100.3	1	3969.6	3.25	0	82.97	0	0.52	0	0	17	0	0	0	0	0	0	-0.19	-0.19
	Inverter	MV3-9	368512	4907703	2	0	0	100.3	100.3	1	4021.75	3.25	0	83.09	0	0.53	0	0	17.08	0	0	0	0	0	0	-0.39	-0.39
	Inverter	MV3-20	368689	4907317	2	0	0	100.3	100.3	1	4111.95	3.25	0	83.28	0	0.54	0	0	17.23	0	0	0	0	0	0	-0.74	-0.74
	Inverter	MV3-14	368684	4907498	2	0	0	100.3	100.3	1	4140.66	3.25	0	83.34	0	0.55	0	0	17.27	0	0	0	0	0	0	-0.85	-0.85
	Inverter	MV3-8	368680	4907712	2	0	0	100.3	100.3	1	4186.32	3.25	0	83.44	0	0.55	0	0	17.34	0	0	0	0	0	0	-1.02	-1.02
	Inverter	MV2-2	365977	4906654	2	0	0	89.1	89.1	1	1344.07	3.25	0	73.57	0	0.76	0	0	6.94	0	0	0	0	0	0	7.79	7.79

Inverter	MV4-7	369035	4909001	2	0	0	100.3	100.3	1	4994.72	3.25	0	84.97	0	0.64	0	0	18.57	0	0	0	0	0	0	-3.87	-3.87
Inverter	MV4-4	369027	4909199	2	0	0	100.3	100.3	1	5084.35	3.25	0	85.12	0	0.65	0	0	18.7	0	0	0	0	0	0	-4.17	-4.17
Inverter	MV4-11	369264	4908855	2	0	0	100.3	100.3	1	5133.03	3.25	0	85.21	0	0.65	0	0	18.77	0	0	0	0	0	0	-4.32	-4.32
Inverter	MV4-1	369011	4909397	2	0	0	100.3	100.3	1	5173.24	3.25	0	85.28	0	0.66	0	0	18.83	0	0	0	0	0	0	-4.45	-4.45
Inverter	MV4-10	369312	4908858	2	0	0	100.3	100.3	1	5177.66	3.25	0	85.28	0	0.66	0	0	18.84	0	0	0	0	0	0	-4.47	-4.47
Inverter	MV4-8	369256	4909001	2	0	0	100.3	100.3	1	5190.54	3.25	0	85.3	0	0.66	0	0	18.86	0	0	0	0	0	0	-4.51	-4.51
Inverter	MV4-9	369289	4909001	2	0	0	100.3	100.3	1	5219.96	3.25	0	85.35	0	0.66	0	0	18.9	0	0	0	0	0	0	-4.6	-4.6
Inverter	MV4-6	369243	4909192	2	0	0	100.3	100.3	1	5268.75	3.25	0	85.43	0	0.66	0	0	18.97	0	0	0	0	0	0	-4.76	-4.76
Inverter	MV4-5	369289	4909199	2	0	0	100.3	100.3	1	5312.41	3.25	0	85.51	0	0.67	0	0	19.03	0	0	0	0	0	0	-4.9	-4.9
Inverter	MV4-3	369229	4909397	2	0	0	100.3	100.3	1	5358.99	3.25	0	85.58	0	0.67	0	0	19.1	0	0	0	0	0	0	-5.04	-5.04
Inverter	MV4-2	369272	4909397	2	0	0	100.3	100.3	1	5395.91	3.25	0	85.64	0	0.67	0	0	19.15	0	0	0	0	0	0	-5.16	-5.16
Inverter	MV6-2	370085	4907339	2	0	0	100.3	100.3	1	5496.5	3.25	0	85.8	0	0.68	0	0	19.3	0	0	0	0	0	0	-5.47	-5.47
Inverter	MV6-3	370207	4907140	2	0	0	100.3	100.3	1	5596.29	3.25	0	85.96	0	0.69	0	0	19.44	0	0	0	0	0	0	-5.77	-5.77
Inverter	MV5-5	370015	4908690	2	0	0	100.3	100.3	1	5758.85	3.25	0	86.21	0	0.69	0	0	19.66	0	0	0	0	0	0	-6.25	-6.25
Inverter	MV5-2	370006	4908853	2	0	0	100.3	100.3	1	5810.51	3.25	0	86.28	0	0.7	0	0	19.73	0	0	0	0	0	0	-6.4	-6.4
Inverter	MV5-1	370020	4909142	2	0	0	100.3	100.3	1	5939.26	3.25	0	86.47	0	0.7	0	0	19.91	0	0	0	0	0	0	-6.78	-6.78
Inverter	MV5-3	370231	4908851	2	0	0	100.3	100.3	1	6018.45	3.25	0	86.59	0	0.71	0	0	20.02	0	0	0	0	0	0	-7	-7
Inverter	MV5-4	370324	4908707	2	0	0	100.3	100.3	1	6054.41	3.25	0	86.64	0	0.71	0	0	20.07	0	0	0	0	0	0	-7.1	-7.1
DSTATCOM - 10 MVAR #2	DSAT2	369403	4908757	2.5	0	0	96.6	96.6	1	5218.27	3.5	0	85.35	0	3.71	0	0	3.46	0	0	0	0	0	0	4.11	4.11
Inverter	MV6-1	370235	4907364	2	0	0	97.3	97.3	1	5648.46	3.25	0	86.04	0	0.69	0	0	19.51	0	0	0	0	0	0	-8.92	-8.92
DSTATCOM - 10 MVAR #1	DSAT1	369437	4908757	2.5	0	0	96.6	96.6	1	5249.37	3.5	0	85.4	0	3.71	0	0	3.47	0	0	0	0	0	0	4.04	4.04
Gardiner Substation	G_Sub	366586.3	4903349.9	2.5	0	0	90.8	90.8	1	3827.1	4.25	0	82.66	0	1.31	2.66	0.28	7.13	0	0	0	0	0	0	-2.99	-2.99
SubstationTransformer	W_ST	369711.17	4906112.3	2.5	0	0	92	92	1	5105.62	4.25	0	85.16	0	1.67	2.31	0.29	8.74	0	0	0	0	0	0	-5.9	-5.9
Inverter	MV3-1	368156	4907976	2	0	0	89.1	89.1	1	3767.46	3.25	0	82.52	0	1.33	0	0	10.75	0	0	0	0	0	0	-5.55	-5.55
Inverter	MV3-5	368340	4907843	2	0	0	89.1	89.1	1	3897.01	3.25	0	82.81	0	1.37	0	0	10.94	0	0	0	0	0	0	-6.06	-6.06
Inverter	MV3-22	368656	4907142	2	0	0	89.1	89.1	1	4054.08	3.25	0	83.16	0	1.41	0	0	11.16	0	0	0	0	0	0	-6.67	-6.67
Inverter	MV3-4	368502	4907925	2	0	0	89.1	89.1	1	4076.5	3.25	0	83.21	0	1.41	0	0	11.19	0	0	0	0	0	0	-6.75	-6.75
Inverter	MV3-2	368671	4907928	2	0	0	89.1	89.1	1	4238.14	3.25	0	83.54	0	1.45	0	0	11.42	0	0	0	0	0	0	-7.36	-7.36
Inverters	G_Inv1	366526.4	4903225.8	2	0	0	87.7	87.7	1	3904.94	3.25	0	82.83	0	2.78	0	0	4.77	0	0	0	0	0	0	-2.73	-2.73
Inverters	G_Inv2	366676.9	4903239.1	2	0	0	87.7	87.7	1	3968.68	3.25	0	82.97	0	2.79	0	0	4.84	0	0	0	0	0	0	-2.94	-2.94
Westbrook Inverter Enclosur	W_INV2	369374	4906388	2	0	0	89.1	89.1	1	4747.75	3.25	0	84.53	0	1.58	0	0	12.12	0	0	0	0	0	0	-9.17	-9.17
Inverters	G_Inv3	366583.7	4903091.4	2	0	0	87.7	87.7	1	4050.3	3.25	0	83.15	0	2.8	0	0	4.93	0	0	0	0	0	0	-3.21	-3.21
Fixed Reactor Bank 1	FRB1	369378	4908755	6	0	0	89.8	89.8	1	5194.61	5.25	0	85.31	0	-0.54	0	0	8.85	0	0	0	0	0	0	-3.85	-3.85
Inverters	G_Inv4	366732.8	4903105	2	0	0	87.7	87.7	1	4112.48	4.16	0	83.28	0	3.18	1.51	0.01	5	0	0	0	0	0	0	-5.31	-5.31
Inverter	MV4-13	369051	4908605	2	0	0	89.1	89.1	1	4834.88	3.25	0	84.69	0	1.6	0	0	12.24	0	0	0	0	0	0	-9.47	-9.47
Fixed Reactor Bank 2	FRB2	369464	4908755	6	0	0	89.8	89.8	1	5273.29	5.25	0	85.44	0	-0.53	0	0	8.94	0	0	0	0	0	0	-4.08	-4.08
Westbrook Inverter Enclosur	W_INV3	369508	4906164	2	0	0	89.1	89.1	1	4898.28	3.25	0	84.8	0	1.61	0	0	12.33	0	0	0	0	0	0	-9.68	-9.68
Inverter	MV4-15	369176	4908481	2	0	0	89.1	89.1	1	4901.47	3.25	0	84.81	0	1.62	0	0	12.33	0	0	0	0	0	0	-9.7	-9.7
Inverter	MV4-14	369176	4908507	2	0	0	89.1	89.1	1	4911.29	3.25	0	84.82	0	1.62	0	0	12.34	0	0	0	0	0	0	-9.73	-9.73
Inverter	MV4-12	369043	4908803	2	0	0	89.1	89.1	1	4911.45	3.25	0	84.82	0	1.62	0	0	12.34	0	0	0	0	0	0	-9.73	-9.73
Inverters	G_Inv5	366638.5	4902958.1	2	0	0	87.7	87.7	1	4193.54	3.25	0	83.45	0	2.81	0	0	5.08	0	0	0	0	0	0	-3.68	-3.68
Inverters	G_Inv6	366788.5	4902972	2	0	0	87.7	87.7	1	4255.32	3.25	0	83.58	0	2.81	0	0	5.15	0	0	0	0	0	0	-3.88	-3.88
Westbrook Inverter Enclosur	W_INV4	369673	4906164	2	0	0	89.1	89.1	1	5062.52	3.25	0	85.09	0	1.66	0	0	12.55	0	0	0	0	0	0	-10.23	-10.23
Westbrook Inverter Enclosur	W_INV5	369719	4906574	2	0	0	89.1	89.1	1	5086.44	3.25	0	85.13	0	1.66	0	0	12.58	0	0	0	0	0	0	-10.31	-10.31
Inverters	G_Inv7	366694.6	4902824.7	2	0	0	87.7	87.7	1	4337.55	3.25	0	83.74	0	2.82	0	0	5.24	0	0	0	0	0	0	-4.14	-4.14
Westbrook Inverter Enclosur	W_INV7	369780	4906417	2	0	0	89.1	89.1	1	5151.87	3.25	0	85.24	0	1.68	0	0	12.67	0	0	0	0	0	0	-10.52	-10.52
Inverters	G_Inv8	366844.5	4902838.5	2	0	0	87.7	87.7	1	4398.83	3.25	0	83.87	0	2.82	0	0	5.3	0	0	0	0	0	0	-4.33	-4.33
Westbrook Inverter Enclosur	W_INV6	369875	4906578	2	0	0	89.1	89.1	1	5242.38	3.25	0	85.39	0	1.7	0	0	12.79	0	0	0	0	0	0	-10.82	-10.82
Inverters	G_Inv9	366750.9	4902691.8	2	0	0	87.7	87.7	1	4481.26	3.25	0	84.03	0	2.83	0	0	5.39	0	0	0	0	0	0	-4.59	-4.59
Inverters	G_Inv10	366900.7	4902704.8	2	0	0	87.7	87.7	1	4542.7	3.25	0	84.15	0	2.83	0	0	5.46	0	0	0	0	0	0	-4.78	-4.78
Inverter	MV5-6	369982	4908507	2	0	0	89.1	89.1	1	5665.14	3.25	0	86.06	0	1.8	0	0	13.34	0	0	0	0	0	0	-12.15	-12.15
Westbrook Inverter Enclosur	W_INV1	369409	4906578	2	0	0	86.1	86.1	1	4776.42	3.25	0	84.58	0	1.58	0	0	12.16	0	0	0	0	0	0	-12.27	-12.27
Inverter	MV6-4	370250	4906966	2	0	0	86.1	86.1	1	5626.39	3.25	0	86	0	1.79	0	0	13.29	0	0	0	0	0	0	-15.03	-15.03
Inverter Transformer	MV1-7 T	364919	4905782	2	0	0	69.4	69.4	1	905.36	3.25	0	70.14	0	1.6	0	0	3.68	0	0	0	0	0	0	-6.06	-6.06
Inverter Transformer	MV1-10 T	365010	4905564	2	0	0	69.4	69.4	1	1141.08	3.25	0	72.15	0	1.79	0	0	4	0	0	0	0	0	0	-8.58	-8.58
Inverter Transformer	MV2-1 T	365836	4906816	2	0	0	69.4	69.4	1	1215.66	3.25	0	72.7	0	1.83	0	0	4.1	0	0	0	0	0	0	-9.27	-9.27
Inverter Transformer	MV1-13 T	364725	4905241	2	0	0	69.4	69.4	1	1403.02	3.25	0	73.94	0	1.93	0	0	4.32	0	0	0	0	0	0	-10.84	-10.84
Inverter Transformer	MV1-14 T	365157	4905049	2	0	0	69.4	69.4	1	1676.02	3.25	0	75.49	0	2.05	0	0	4.63	0	0	0	0	0	0	-12.81	-12.81
Westbrook Inverter Transfor	W_INVTR1	369403	4906578	2	0	0	78.2	78.2	1	4770.42	3.25	0	84.57	0	-3.13	0	0	2.33	0	0	0	0	0	0	-5.53	-5.53
Westbrook Inverter Transfor	W_INVTR2	369368	4906388	2	0	0	77.3	77.3	1	4741.75	3.25	0	84.52	0	-3.12	0	0	2.32	0	0	0	0	0	0	-6.38	-6.38
Westbrook Inverter Transfor	W_INVTR3	369514	4906164	2	0	0	77.3	77.3	1	4904.25	3.25	0	84.81	0	-3.16	0	0	2.38	0	0	0	0	0	0	-6.69	-6.69
Westbrook Inverter Transfor	W_INVTR4	369679	4906164	2	0	0	77.3	77.3	1	5068.5	3.25	0	85.1	0	-3.19	0	0	2.44	0	0	0	0	0	0	-7	-7
Westbrook Inverter Transfor	W_INVTR5	369725	4906574	2	0	0	77.3	77.3	1	5092.44	3.25	0	85.14	0	-3.2	0	0	2.44	0	0	0	0	0	0	-7.05	-7.05
Westbrook Inverter Transfor	W_INVTR7	369786	4906417	2	0	0	77.3	77.3	1	5157.87	3.25	0	85.25	0	-3.21	0	0	2.47	0	0	0	0	0	0	-7.17	-7.17
Westbrook Inverter Transfor	W_INVTR6	369881	4906578	2	0	0	77.3	77.3	1	5248.38	3.25	0	85.4	0	-3.23	0	0	2.5	0	0	0	0	0	0	-7.33	-7.33
Inverter Transformer	MV1-1 T	364721	4906166	2	0	0	56.1	56.1	1	483.09	3.25	0	64.68	0	-0.12	0	0	3.5	0	0	0	0	0	0	-12	-12
Inverter Transformer	MV1-2 T	364759	4906063	2	0	0	56.1	56.1	1	591.58	3.25	0	66.44	0	-0.11	0	0	3.83	0	0	0	0	0	0	-14.11	-14.11
Inverter Transformer	MV1-3 T	364435	4906039	2	0	0	56.1	56.1	1	633.73	3.25	0	67.04	0	-0.1	0	0	3.95	0	0	0	0	0	0	-14.83	-14.83
Inverter Transformer	MV1-4 T	364821	4905918	2	0	0	56.1	56.1	1	747.05	3.25	0	68.47	0	-0.07	0	0	4.26	0	0	0	0	0	0	-16.6	-16.6
Inverter Transformer	MV1-5 T	364676	4905892	2	0	0	56.1	56.1	1	750.24	3.25	0	68.5	0	-0.07	0	0	4.27	0	0	0	0	0	0	-16.64	-16.64
Inverter Transformer	MV1-6 T	364482	4905835	2	0	0	56.1	56.1	1	820.03	3.25	0	69.28	0	-0.05	0	0	4.45	0	0	0	0	0	0	-17.62	-17.62
Inverter Transformer	MV2-4 T	365590	4906628	2	0	0	56.1	56.1	1	957.09	3.25	0	70.62	0	0	0	0	4.79	0	0	0	0	0	0	-19.34	-19.34
Inverter Transformer	MV1-9 T	364555	4905646	2	0	0	56.1	56.1	1	998.06	3.25	0	70.98	0	0.01	0	0	4.88	0	0	0	0	0	0	-19.82	-19.82
Inverter Transformer	MV1-8 T	364782	4905647	2	0	0	56.1	56.1	1	1005.11	3.25	0	71.04	0	0.01	0	0	4.9	0	0	0	0	0	0	-19.9	-19.9

	Inverter Transformer	MV2-3 T	365814	4906641	2	0	0	56.1	56.1	1	1181	3.25	0	72.45	0	0.08	0	0	5.31	0	0	0	0	0	0	-21.78	-21.78
	Inverter Transformer	MV6-4 T	370244	4906966	2	0	0	69.4	69.4	1	5620.4	3.25	0	86	0	3.13	0	0	7.78	0	0	0	0	0	0	-27.56	-27.56
	Inverter Transformer	MV6-1 T	370230	4907364	2	0	0	69.4	69.4	1	5643.5	3.25	0	86.03	0	3.13	0	0	7.8	0	0	0	0	0	0	-27.61	-27.61
	Inverter Transformer	MV1-11 T	364649	4905414	2	0	0	56.1	56.1	1	1227.11	3.25	0	72.78	0	0.09	0	0	5.42	0	0	0	0	0	0	-22.23	-22.23
	Inverter Transformer	MV1-12 T	365044	4905386	2	0	0	56.1	56.1	1	1320.59	3.25	0	73.42	0	0.13	0	0	5.63	0	0	0	0	0	0	-23.11	-23.11
	Inverter Transformer	MV2-2 T	365982	4906654	2	0	0	56.1	56.1	1	1349.06	3.25	0	73.6	0	0.14	0	0	5.69	0	0	0	0	0	0	-23.37	-23.37
	Inverter Transformer	MV1-15 T	365309	4904994	2	0	0	56.1	56.1	1	1780.33	3.25	0	76.01	0	0.31	0	0	6.6	0	0	0	0	0	0	-26.87	-26.87
	Inverter Transformer	MV3-12 T	367674	4907594	2	0	0	56.1	56.1	1	3186.83	3.25	0	81.07	0	0.91	0	0	9.18	0	0	0	0	0	0	-35.1	-35.1
	Inverter Transformer	MV3-18 T	367757	4907412	2	0	0	56.1	56.1	1	3217.74	3.25	0	81.15	0	0.92	0	0	9.23	0	0	0	0	0	0	-35.25	-35.25
	Inverter Transformer	MV3-13 T	367958	4907577	2	0	0	56.1	56.1	1	3454.23	3.25	0	81.77	0	1.02	0	0	9.61	0	0	0	0	0	0	-36.34	-36.34
	Inverter Transformer	MV3-7 T	367951	4907754	2	0	0	56.1	56.1	1	3499.7	3.25	0	81.88	0	1.04	0	0	9.69	0	0	0	0	0	0	-36.55	-36.55
	Inverter Transformer	MV3-3 T	367944	4907927	2	0	0	56.1	56.1	1	3551.97	3.25	0	82.01	0	1.06	0	0	9.77	0	0	0	0	0	0	-36.78	-36.78
	Inverter Transformer	MV3-17 T	368183	4907472	2	0	0	56.1	56.1	1	3645.97	3.25	0	82.24	0	1.1	0	0	9.92	0	0	0	0	0	0	-37.19	-37.19
	Inverter Transformer	MV3-10 T	368162	4907669	2	0	0	56.1	56.1	1	3675.68	3.25	0	82.31	0	1.11	0	0	9.96	0	0	0	0	0	0	-37.32	-37.32
	Inverter Transformer	MV3-6 T	368156	4907834	2	0	0	56.1	56.1	1	3719.51	3.25	0	82.41	0	1.13	0	0	10.03	0	0	0	0	0	0	-37.51	-37.51
	Inverter Transformer	MV3-1 T	368150	4907976	2	0	0	56.1	56.1	1	3761.85	3.25	0	82.51	0	1.15	0	0	10.1	0	0	0	0	0	0	-37.69	-37.69
	Inverter Transformer	MV3-19 T	368352	4907347	2	0	0	56.1	56.1	1	3785.42	3.25	0	82.56	0	1.16	0	0	10.13	0	0	0	0	0	0	-37.79	-37.79
	Inverter Transformer	MV3-15 T	368351	4907477	2	0	0	56.1	56.1	1	3810.83	3.25	0	82.62	0	1.17	0	0	10.17	0	0	0	0	0	0	-37.9	-37.9
	Inverter Transformer	MV3-11 T	368340	4907662	2	0	0	56.1	56.1	1	3845.04	3.25	0	82.7	0	1.18	0	0	10.22	0	0	0	0	0	0	-38.04	-38.04
	Inverter Transformer	MV3-21 T	368484	4907206	2	0	0	56.1	56.1	1	3892.23	3.25	0	82.8	0	1.2	0	0	10.29	0	0	0	0	0	0	-38.24	-38.24
	Inverter Transformer	MV3-5 T	368335	4907843	2	0	0	56.1	56.1	1	3892.25	3.25	0	82.8	0	1.2	0	0	10.29	0	0	0	0	0	0	-38.24	-38.24
	Inverter Transformer	MV3-16 T	368509	4907475	2	0	0	56.1	56.1	1	3964.71	3.25	0	82.96	0	1.23	0	0	10.4	0	0	0	0	0	0	-38.54	-38.54
	Inverter Transformer	MV3-9 T	368517	4907703	2	0	0	56.1	56.1	1	4026.58	3.25	0	83.1	0	1.25	0	0	10.49	0	0	0	0	0	0	-38.79	-38.79
	Inverter Transformer	MV3-22 T	368661	4907142	2	0	0	56.1	56.1	1	4059.04	3.25	0	83.17	0	1.27	0	0	10.54	0	0	0	0	0	0	-38.92	-38.92
	Inverter Transformer	MV3-4 T	368507	4907925	2	0	0	56.1	56.1	1	4081.24	3.25	0	83.22	0	1.28	0	0	10.58	0	0	0	0	0	0	-39.01	-39.01
	Inverter Transformer	MV3-20 T	368683	4907317	2	0	0	56.1	56.1	1	4106.03	3.25	0	83.27	0	1.29	0	0	10.61	0	0	0	0	0	0	-39.11	-39.11
	Inverter Transformer	MV3-14 T	368678	4907498	2	0	0	56.1	56.1	1	4134.79	3.25	0	83.33	0	1.3	0	0	10.65	0	0	0	0	0	0	-39.22	-39.22
	Inverter Transformer	MV3-8 T	368685	4907712	2	0	0	56.1	56.1	1	4191.15	3.25	0	83.45	0	1.32	0	0	10.74	0	0	0	0	0	0	-39.44	-39.44
	Inverter Transformer	MV3-2 T	368677	4907928	2	0	0	56.1	56.1	1	4243.86	3.25	0	83.56	0	1.34	0	0	10.81	0	0	0	0	0	0	-39.65	-39.65
	Inverter Transformer	MV4-13 T	369057	4908605	2	0	0	56.1	56.1	1	4840.36	3.25	0	84.7	0	1.57	0	0	11.64	0	0	0	0	0	0	-41.85	-41.85
	Inverter Transformer	MV4-15 T	369170	4908481	2	0	0	56.1	56.1	1	4895.91	3.25	0	84.8	0	1.59	0	0	11.72	0	0	0	0	0	0	-42.04	-42.04
	Inverter Transformer	MV4-12 T	369049	4908803	2	0	0	56.1	56.1	1	4916.84	3.25	0	84.83	0	1.6	0	0	11.74	0	0	0	0	0	0	-42.11	-42.11
	Inverter Transformer	MV4-14 T	369182	4908507	2	0	0	56.1	56.1	1	4916.84	3.25	0	84.83	0	1.6	0	0	11.74	0	0	0	0	0	0	-42.11	-42.11
	Inverter Transformer	MV4-7 T	369040	4909001	2	0	0	56.1	56.1	1	4999.13	3.25	0	84.98	0	1.63	0	0	11.85	0	0	0	0	0	0	-42.4	-42.4
	Inverter Transformer	MV4-4 T	369033	4909199	2	0	0	56.1	56.1	1	5089.54	3.25	0	85.13	0	1.66	0	0	11.97	0	0	0	0	0	0	-42.7	-42.7
	Inverter Transformer	MV4-11 T	369269	4908855	2	0	0	56.1	56.1	1	5137.54	3.25	0	85.22	0	1.67	0	0	12.03	0	0	0	0	0	0	-42.87	-42.87
	Inverter Transformer	MV4-10 T	369307	4908858	2	0	0	56.1	56.1	1	5173.14	3.25	0	85.28	0	1.69	0	0	12.08	0	0	0	0	0	0	-42.98	-42.98
	Inverter Transformer	MV4-1 T	369017	4909397	2	0	0	56.1	56.1	1	5178.32	3.25	0	85.28	0	1.69	0	0	12.09	0	0	0	0	0	0	-43	-43
	Inverter Transformer	MV4-8 T	369262	4909001	2	0	0	56.1	56.1	1	5195.89	3.25	0	85.31	0	1.7	0	0	12.11	0	0	0	0	0	0	-43.06	-43.06
	Inverter Transformer	MV4-9 T	369284	4909001	2	0	0	56.1	56.1	1	5215.5	3.25	0	85.35	0	1.7	0	0	12.13	0	0	0	0	0	0	-43.12	-43.12
	Inverter Transformer	MV4-6 T	369249	4909192	2	0	0	56.1	56.1	1	5274	3.25	0	85.44	0	1.72	0	0	12.21	0	0	0	0	0	0	-43.32	-43.32
	Inverter Transformer	MV4-5 T	369283	4909199	2	0	0	56.1	56.1	1	5307.15	3.25	0	85.5	0	1.73	0	0	12.25	0	0	0	0	0	0	-43.43	-43.43
	Inverter Transformer	MV4-3 T	369234	4909397	2	0	0	56.1	56.1	1	5363.28	3.25	0	85.59	0	1.75	0	0	12.32	0	0	0	0	0	0	-43.61	-43.61
	Inverter Transformer	MV4-2 T	369267	4909397	2	0	0	56.1	56.1	1	5391.61	3.25	0	85.63	0	1.76	0	0	12.36	0	0	0	0	0	0	-43.7	-43.7
	Inverter Transformer	MV6-2 T	370091	4907339	2	0	0	56.1	56.1	1	5502.45	3.25	0	85.81	0	1.8	0	0	12.5	0	0	0	0	0	0	-44.05	-44.05
	Inverter Transformer	MV6-3 T	370202	4907140	2	0	0	56.1	56.1	1	5591.31	3.25	0	85.95	0	1.83	0	0	12.61	0	0	0	0	0	0	-44.33	-44.33
	Inverter Transformer	MV5-6 T	369987	4908507	2	0	0	56.1	56.1	1	5669.86	3.25	0	86.07	0	1.86	0	0	12.71	0	0	0	0	0	0	-44.58	-44.58
	Inverter Transformer	MV5-5 T	370021	4908690	2	0	0	56.1	56.1	1	5764.46	3.25	0	86.22	0	1.89	0	0	12.82	0	0	0	0	0	0	-44.87	-44.87
	Inverter Transformer	MV5-2 T	370011	4908853	2	0	0	56.1	56.1	1	5815.14	3.25	0	86.29	0	1.91	0	0	12.88	0	0	0	0	0	0	-45.02	-45.02
	Inverter Transformer	MV5-1 T	370015	4909142	2	0	0	56.1	56.1	1	5934.72	3.25	0	86.47	0	1.94	0	0	13.03	0	0	0	0	0	0	-45.38	-45.38
	Inverter Transformer	MV5-3 T	370237	4908851	2	0	0	56.1	56.1	1	6024.03	3.25	0	86.6	0	1.97	0	0	13.13	0	0	0	0	0	0	-45.64	-45.64
	Inverter Transformer	MV5-4 T	370330	4908707	2	0	0	56.1	56.1	1	6060.05	3.25	0	86.65	0	1.98	0	0	13.17	0	0	0	0	0	0	-45.75	-45.75
	Line Reactor	NGR	369421	4908787.5	5	0	0	45.4	45.4	1	5247.13	5.25	0	85.4	0	3.26	1.35	0.1	2.15	0	0	0	0	0	0	-46.8	-46.8
Limit. Valu	0	0																								
Level D/N:	32.9994	32.9994																								

Receiver: Existing Noise Receptor
ID: S-R14
X: 365178
Y: 4904753
Z: 4.5
Ground: 0

ISO	Description	ID	X	Y	Z	Ground	ReflOrd	LxT	LxN	L/A	Dist.	hm	Freq	Adiv	K0b	Agr	Abar	z	Aatm	Afol	Ahous	Cmet	CmetN	Dc	RL	LtotT	LtotN
	Inverter	MV1-15	365315	4904994	2	0	0	100.3	100.3	1	277.23	3.25	0	59.86	0	-0.64	0	0	6.06	0	0	0	0	0	0	35.04	35.04
	Inverter	MV1-14	365163	4905049	2	0	0	97.3	97.3	1	296.39	3.25	0	60.44	0	-0.65	0	0	6.34	0	0	0	0	0	0	31.18	31.18
	Inverter	MV1-12	365038	4905386	2	0	0	100.3	100.3	1	648.3	3.25	0	67.24	0	-0.45	0	0	9.48	0	0	0	0	0	0	24.05	24.05
	Inverter	MV1-11	364655	4905414	2	0	0	100.3	100.3	1	842.89	3.25	0	69.52	0	-0.33	0	0	10.35	0	0	0	0	0	0	20.77	20.77
	Inverter	MV1-13	364731	4905241	2	0	0	97.3	97.3	1	661.78	3.25	0	67.41	0	-0.44	0	0	9.55	0	0	0	0	0	0	20.79	20.79
	Inverter	MV1-8	364788	4905647	2	0	0	100.3	100.3	1	975.37	3.25	0	70.78	0	-0.26	0	0	10.83	0	0	0	0	0	0	18.96	18.96
	Inverter	MV1-9	364561	4905646	2	0	0	100.3	100.3	1	1085.42	3.25	0	71.71	0	-0.21	0	0	11.18	0	0	0	0	0	0	17.62	17.62
	Inverter	MV1-10	365004	4905564	2	0	0	97.3	97.3	1	829.46	3.25	0	69.38	0	-0.33	0	0	10.3	0	0	0	0	0	0	17.97	17.97
	Inverter	MV1-4	364815	4905918	2	0	0	100.3	100.3	1	1220.25	3.25	0	72.73	0	-0.15	0	0	11.58	0	0	0	0	0	0	16.14	16.14
	Inverter	MV1-5	364671	4905892	2	0	0	100.3	100.3	1	1246.75	3.25	0	72.92	0	-0.13	0	0	11.66	0	0	0	0	0	0	15.87	15.87

Inverter	MV1-6	364477	4905835	2	0	0	100.3	100.3	1	1289.24	3.25	0	73.21	0	-0.12	0	0	11.78	0	0	0	0	0	0	15.45	15.45
Inverter	MV1-2	364753	4906063	2	0	0	100.3	100.3	1	1377.22	3.25	0	73.78	0	-0.08	0	0	12.01	0	0	0	0	0	0	14.6	14.6
Inverter	MV1-1	364715	4906166	2	0	0	100.3	100.3	1	1486.92	3.25	0	74.45	0	-0.04	0	0	12.29	0	0	0	0	0	0	13.61	13.61
Inverter	MV1-7	364925	4905782	2	0	0	97.3	97.3	1	1059.65	3.25	0	71.5	0	-0.22	0	0	11.1	0	0	0	0	0	0	14.92	14.92
Sol_Luce Substation	S_Substation	369426	4908792	3.5	0	0	112.1	112.1	1	5861.66	5.25	0	86.36	0	1.13	2.67	0.25	9.59	0	0	0	0	0	0	12.32	12.32
Inverter	MV2-4	365586	4906624	2	0	0	100.3	100.3	1	1914.97	3.25	0	76.64	0	0.1	0	0	13.28	0	0	0	0	0	0	10.28	10.28
Inverter	MV2-3	365820	4906641	2	0	0	100.3	100.3	1	1994.17	3.25	0	77	0	0.13	0	0	13.45	0	0	0	0	0	0	9.74	9.74
Inverter	MV2-1	365842	4906816	2	0	0	97.3	97.3	1	2167.23	3.25	0	77.72	0	0.18	0	0	13.81	0	0	0	0	0	0	5.61	5.61
Inverter	MV3-18	367752	4907412	2	0	0	100.3	100.3	1	3700.78	3.25	0	82.37	0	0.48	0	0	16.56	0	0	0	0	0	0	0.9	0.9
Inverter	MV3-12	367668	4907594	2	0	0	100.3	100.3	1	3777.75	3.25	0	82.54	0	0.49	0	0	16.69	0	0	0	0	0	0	0.58	0.58
Inverter	MV3-13	367963	4907577	2	0	0	100.3	100.3	1	3966.26	3.25	0	82.97	0	0.52	0	0	16.99	0	0	0	0	0	0	-0.17	-0.17
Inverter	MV3-17	368178	4907472	2	0	0	100.3	100.3	1	4048.82	3.25	0	83.15	0	0.53	0	0	17.13	0	0	0	0	0	0	-0.49	-0.49
Inverter	MV3-7	367945	4907754	2	0	0	100.3	100.3	1	4081.95	3.25	0	83.22	0	0.54	0	0	17.18	0	0	0	0	0	0	-0.62	-0.62
Inverter	MV3-19	368357	4907347	2	0	0	100.3	100.3	1	4103.03	3.25	0	83.26	0	0.54	0	0	17.21	0	0	0	0	0	0	-0.7	-0.7
Inverter	MV3-21	368478	4907206	2	0	0	100.3	100.3	1	4111.84	3.25	0	83.28	0	0.54	0	0	17.23	0	0	0	0	0	0	-0.74	-0.74
Inverter	MV3-10	368167	4907669	2	0	0	100.3	100.3	1	4175.79	3.25	0	83.41	0	0.55	0	0	17.33	0	0	0	0	0	0	-0.98	-0.98
Inverter	MV3-15	368357	4907477	2	0	0	100.3	100.3	1	4186.43	3.25	0	83.44	0	0.55	0	0	17.34	0	0	0	0	0	0	-1.02	-1.02
Inverter	MV3-3	367939	4907927	2	0	0	100.3	100.3	1	4206.83	3.25	0	83.48	0	0.55	0	0	17.38	0	0	0	0	0	0	-1.1	-1.1
Inverter	MV3-6	368162	4907834	2	0	0	100.3	100.3	1	4289.15	3.25	0	83.65	0	0.57	0	0	17.5	0	0	0	0	0	0	-1.41	-1.41
Inverter	MV3-11	368346	4907662	2	0	0	100.3	100.3	1	4300.99	3.25	0	83.67	0	0.57	0	0	17.52	0	0	0	0	0	0	-1.45	-1.45
Inverter	MV3-16	368514	4907475	2	0	0	100.3	100.3	1	4305.6	3.25	0	83.68	0	0.57	0	0	17.53	0	0	0	0	0	0	-1.47	-1.47
Inverter	MV3-20	368689	4907317	2	0	0	100.3	100.3	1	4347.55	3.25	0	83.76	0	0.57	0	0	17.6	0	0	0	0	0	0	-1.62	-1.62
Inverter	MV3-9	368512	4907703	2	0	0	100.3	100.3	1	4451.75	3.25	0	83.97	0	0.59	0	0	17.76	0	0	0	0	0	0	-2	-2
Inverter	MV3-14	368684	4907498	2	0	0	100.3	100.3	1	4452.76	3.25	0	83.97	0	0.59	0	0	17.76	0	0	0	0	0	0	-2	-2
Inverter	MV3-8	368680	4907712	2	0	0	100.3	100.3	1	4584.72	3.25	0	84.23	0	0.6	0	0	17.96	0	0	0	0	0	0	-2.47	-2.47
Inverter	MV1-3	364440	4906039	2	0	0	89.1	89.1	1	1482.72	3.25	0	74.42	0	0.79	0	0	7.18	0	0	0	0	0	0	6.67	6.67
Inverter	MV6-2	370085	4907339	2	0	0	100.3	100.3	1	5546.72	3.25	0	85.88	0	0.68	0	0	19.37	0	0	0	0	0	0	-5.62	-5.62
Inverter	MV6-3	370207	4907140	2	0	0	100.3	100.3	1	5566.74	3.25	0	85.91	0	0.68	0	0	19.39	0	0	0	0	0	0	-5.68	-5.68
Inverter	MV4-7	369035	4909001	2	0	0	100.3	100.3	1	5737.77	3.25	0	86.17	0	0.69	0	0	19.63	0	0	0	0	0	0	-6.19	-6.19
Inverter	MV4-11	369264	4908855	2	0	0	100.3	100.3	1	5789.8	3.25	0	86.25	0	0.7	0	0	19.71	0	0	0	0	0	0	-6.34	-6.34
Inverter	MV4-10	369312	4908858	2	0	0	100.3	100.3	1	5825.89	3.25	0	86.31	0	0.7	0	0	19.76	0	0	0	0	0	0	-6.45	-6.45
Inverter	MV4-4	369027	4909199	2	0	0	100.3	100.3	1	5880.62	3.25	0	86.39	0	0.7	0	0	19.83	0	0	0	0	0	0	-6.61	-6.61
Inverter	MV4-8	369256	4909001	2	0	0	100.3	100.3	1	5888.6	3.25	0	86.4	0	0.7	0	0	19.84	0	0	0	0	0	0	-6.63	-6.63
Inverter	MV4-9	369289	4909001	2	0	0	100.3	100.3	1	5911.5	3.25	0	86.43	0	0.7	0	0	19.87	0	0	0	0	0	0	-6.7	-6.7
Gardiner Substation	G_Sub	366586.3	4903349.9	2.5	0	0	90.8	90.8	1	1987.96	4.25	0	76.97	0	0.82	3.63	0.27	4.35	0	0	0	0	0	0	5.01	5.01
Inverter	MV4-6	369243	4909192	2	0	0	100.3	100.3	1	6019.05	3.25	0	86.59	0	0.71	0	0	20.02	0	0	0	0	0	0	-7	-7
Inverter	MV4-1	369011	4909397	2	0	0	100.3	100.3	1	6021.51	3.25	0	86.59	0	0.71	0	0	20.02	0	0	0	0	0	0	-7.01	-7.01
Inverter	MV4-5	369289	4909199	2	0	0	100.3	100.3	1	6055.35	3.25	0	86.64	0	0.71	0	0	20.07	0	0	0	0	0	0	-7.11	-7.11
Inverter	MV4-3	369229	4909397	2	0	0	100.3	100.3	1	6162.58	3.25	0	86.8	0	0.71	0	0	20.21	0	0	0	0	0	0	-7.41	-7.41
Inverter	MV4-2	369272	4909397	2	0	0	100.3	100.3	1	6190.93	3.25	0	86.84	0	0.71	0	0	20.25	0	0	0	0	0	0	-7.48	-7.48
Inverter	MV5-5	370015	4908690	2	0	0	100.3	100.3	1	6236.71	3.25	0	86.9	0	0.71	0	0	20.31	0	0	0	0	0	0	-7.61	-7.61
Inverter	MV5-2	370006	4908853	2	0	0	100.3	100.3	1	6334	3.25	0	87.03	0	0.71	0	0	20.44	0	0	0	0	0	0	-7.88	-7.88
Inverter	MV5-4	370324	4908707	2	0	0	100.3	100.3	1	6489.64	3.25	0	87.24	0	0.71	0	0	20.65	0	0	0	0	0	0	-8.29	-8.29
Inverter	MV5-3	370231	4908851	2	0	0	100.3	100.3	1	6505.88	3.25	0	87.27	0	0.71	0	0	20.67	0	0	0	0	0	0	-8.34	-8.34
Inverter	MV5-1	370020	4909142	2	0	0	100.3	100.3	1	6535.16	3.25	0	87.31	0	0.71	0	0	20.7	0	0	0	0	0	0	-8.41	-8.41
Inverter	MV2-2	365977	4906654	2	0	0	89.1	89.1	1	2062.09	3.25	0	77.29	0	0.92	0	0	8.15	0	0	0	0	0	0	2.7	2.7
Inverter	MV6-1	370235	4907364	2	0	0	97.3	97.3	1	5691.27	3.25	0	86.1	0	0.69	0	0	19.57	0	0	0	0	0	0	-9.05	-9.05
Inverters	G_Inv1	366526.4	4903225.8	2	0	0	87.7	87.7	1	2037.28	3.25	0	77.18	0	2.59	0	0	2.68	0	0	0	0	0	0	5.21	5.21
DSTATCOM - 10 MVAR #2	DSAT2	369403	4908757	2.5	0	0	96.6	96.6	1	5820.88	3.5	0	86.3	0	3.76	0	0	3.75	0	0	0	0	0	0	2.82	2.82
DSTATCOM - 10 MVAR #1	DSAT1	369437	4908757	2.5	0	0	96.6	96.6	1	5845.61	3.5	0	86.34	0	3.76	0	0	3.77	0	0	0	0	0	0	2.77	2.77
Inverters	G_Inv2	366676.9	4903239.1	2	0	0	87.7	87.7	1	2130.4	3.25	0	77.57	0	2.6	0	0	2.79	0	0	0	0	0	0	4.7	4.7
Inverters	G_Inv3	366583.7	4903091.4	2	0	0	87.7	87.7	1	2176.45	3.25	0	77.75	0	2.61	0	0	2.84	0	0	0	0	0	0	4.46	4.46
Inverters	G_Inv4	366732.8	4903105	2	0	0	87.7	87.7	1	2265.68	3.25	0	78.1	0	2.62	0	0	2.94	0	0	0	0	0	0	4	4
Inverters	G_Inv5	366638.5	4902958.1	2	0	0	87.7	87.7	1	2314.03	3.25	0	78.29	0	2.62	0	0	3	0	0	0	0	0	0	3.75	3.75
Inverters	G_Inv6	366788.5	4902972	2	0	0	87.7	87.7	1	2401.18	3.25	0	78.61	0	2.63	0	0	3.1	0	0	0	0	0	0	3.32	3.32
Inverter Transformer	MV1-14 T	365157	4905049	2	0	0	69.4	69.4	1	296.75	3.25	0	60.45	0	0.76	0	0	2.36	0	0	0	0	0	0	5.78	5.78
Inverters	G_Inv7	366694.6	4902824.7	2	0	0	87.7	87.7	1	2453.25	3.25	0	78.79	0	2.64	0	0	3.16	0	0	0	0	0	0	3.07	3.07
Inverters	G_Inv8	366844.5	4902838.5	2	0	0	87.7	87.7	1	2538.22	3.25	0	79.09	0	2.65	0	0	3.25	0	0	0	0	0	0	2.67	2.67
Inverters	G_Inv9	366750.9	4902691.8	2	0	0	87.7	87.7	1	2592.79	3.25	0	79.28	0	2.65	0	0	3.32	0	0	0	0	0	0	2.41	2.41
Inverters	G_Inv10	366900.7	4902704.8	2	0	0	87.7	87.7	1	2676.35	3.25	0	79.55	0	2.66	0	0	3.41	0	0	0	0	0	0	2.03	2.03
SubstationTransformer	W_ST	369711.17	4906112.3	2.5	0	0	92	92	1	4732.57	4.25	0	84.5	0	1.57	2.4	0.28	8.3	0	0	0	0	0	0	-4.79	-4.79
Inverter	MV3-22	368656	4907142	2	0	0	89.1	89.1	1	4219.46	3.25	0	83.51	0	1.45	0	0	11.39	0	0	0	0	0	0	-7.29	-7.29
Inverter	MV3-1	368156	4907976	2	0	0	89.1	89.1	1	4388.19	3.25	0	83.85	0	1.49	0	0	11.63	0	0	0	0	0	0	-7.91	-7.91
Inverter	MV3-5	368340	4907843	2	0	0	89.1	89.1	1	4421.13	3.25	0	83.91	0	1.5	0	0	11.68	0	0	0	0	0	0	-8.02	-8.02
Westbrook Inverter Enclosur	W_INV2	369374	4906388	2	0	0	89.1	89.1	1	4503.29	3.25	0	84.07	0	1.52	0	0	11.79	0	0	0	0	0	0	-8.32	-8.32
Westbrook Inverter Enclosur	W_INV3	369508	4906164	2	0	0	89.1	89.1	1	4554.1	3.25	0	84.17	0	1.53	0	0	11.86	0	0	0	0	0	0	-8.5	-8.5
Inverter	MV3-4	368502	4907925	2	0	0	89.1	89.1	1	4594.62	3.25	0	84.24	0	1.54	0	0	11.91	0	0	0	0	0	0	-8.64	-8.64
Westbrook Inverter Enclosur	W_INV4	369673	4906164	2	0	0	89.1	89.1	1	4711.26	3.25	0	84.46	0	1.57	0	0	12.07	0	0	0	0	0	0	-9.05	-9.05
Inverter	MV3-2	368671	4907928	2	0	0	89.1	89.1	1	4720.35	3.25	0	84.48	0	1.57	0	0	12.09	0	0	0	0	0	0	-9.08	-9.08
Westbrook Inverter Enclosur	W_INV5	369719	4906574	2	0	0	89.1	89.1	1	4892.52	3.25	0	84.79	0	1.61	0	0	12.32	0	0	0	0	0	0	-9.67	-9.67
Westbrook Inverter Enclosur	W_INV7	369780	4906417	2	0	0	89.1	89.1	1	4893.6	3.25	0	84.79	0	1.61	0	0	12.32	0	0	0	0	0	0	-9.67	-9.67
Westbrook Inverter Enclosur	W_INV6	369875	4906578	2	0	0	89.1	89.1	1	5039.09	3.25	0	85.05	0	1.65	0	0	12.52	0	0	0	0	0	0	-10.15	-10.15
Fixed Reactor Bank 1	FRB1	369378	4908755	6	0	0	89.8	89.8	1	5801.38	5.25	0	86.27	0	-0.45	0	0	9.53	0	0	0	0	0	0	-5.58	-5.58
Fixed Reactor Bank 2	FRB2	369464	4908755	6	0	0	89.8	89.8	1	5863.94	5.25	0	86.36	0	-0.44	0	0	9.6	0	0	0	0	0	0	-5.75	-5.75

Inverter	MV4-13	369051	4908605	2	0	0	89.1	89.1	1	5462.42	3.25	0	85.75	0	1.75	0	0	13.07	0	0	0	0	0	0	-11.52	-11.52
Inverter	MV4-15	369176	4908481	2	0	0	89.1	89.1	1	5466.44	3.25	0	85.75	0	1.75	0	0	13.08	0	0	0	0	0	0	-11.53	-11.53
Inverter	MV4-14	369176	4908507	2	0	0	89.1	89.1	1	5484.21	3.25	0	85.78	0	1.76	0	0	13.1	0	0	0	0	0	0	-11.59	-11.59
Inverter	MV4-12	369043	4908803	2	0	0	89.1	89.1	1	5598.28	3.25	0	85.96	0	1.79	0	0	13.25	0	0	0	0	0	0	-11.94	-11.94
Inverter	MV5-6	369982	4908507	2	0	0	89.1	89.1	1	6096.8	3.25	0	86.7	0	1.91	0	0	13.88	0	0	0	0	0	0	-13.44	-13.44
Inverter Transformer	MV1-13 T	364725	4905241	2	0	0	69.4	69.4	1	665.85	3.25	0	67.47	0	1.31	0	0	3.29	0	0	0	0	0	0	-2.72	-2.72
Westbrook Inverter Enclosur	W_INV1	369409	4906578	2	0	0	86.1	86.1	1	4607.82	3.25	0	84.27	0	1.54	0	0	11.93	0	0	0	0	0	0	-11.69	-11.69
Inverter	MV6-4	370250	4906966	2	0	0	86.1	86.1	1	5533.77	3.25	0	85.86	0	1.77	0	0	13.17	0	0	0	0	0	0	-14.74	-14.74
Inverter Transformer	MV1-10 T	365010	4905564	2	0	0	69.4	69.4	1	828.22	3.25	0	69.36	0	1.52	0	0	3.56	0	0	0	0	0	0	-5.09	-5.09
Inverter Transformer	MV1-7 T	364919	4905782	2	0	0	69.4	69.4	1	1061.1	3.25	0	71.52	0	1.73	0	0	3.89	0	0	0	0	0	0	-7.79	-7.79
Inverter Transformer	MV1-15 T	365309	4904994	2	0	0	56.1	56.1	1	274.31	3.25	0	59.76	0	-0.05	0	0	2.66	0	0	0	0	0	0	-6.32	-6.32
Westbrook Inverter Transfor	W_INVTR1	369403	4906578	2	0	0	78.2	78.2	1	4602.31	3.25	0	84.26	0	-3.1	0	0	2.27	0	0	0	0	0	0	-5.2	-5.2
Westbrook Inverter Transfor	W_INVTR2	369368	4906388	2	0	0	77.3	77.3	1	4497.7	3.25	0	84.06	0	-3.07	0	0	2.24	0	0	0	0	0	0	-5.88	-5.88
Westbrook Inverter Transfor	W_INVTR3	369514	4906164	2	0	0	77.3	77.3	1	4559.81	3.25	0	84.18	0	-3.09	0	0	2.26	0	0	0	0	0	0	-6.01	-6.01
Westbrook Inverter Transfor	W_INVTR4	369679	4906164	2	0	0	77.3	77.3	1	4716.98	3.25	0	84.47	0	-3.12	0	0	2.31	0	0	0	0	0	0	-6.33	-6.33
Westbrook Inverter Transfor	W_INVTR5	369725	4906574	2	0	0	77.3	77.3	1	4898.09	3.25	0	84.8	0	-3.16	0	0	2.38	0	0	0	0	0	0	-6.68	-6.68
Westbrook Inverter Transfor	W_INVTR7	369786	4906417	2	0	0	77.3	77.3	1	4899.24	3.25	0	84.8	0	-3.16	0	0	2.38	0	0	0	0	0	0	-6.68	-6.68
Westbrook Inverter Transfor	W_INVTR6	369881	4906578	2	0	0	77.3	77.3	1	5044.68	3.25	0	85.06	0	-3.19	0	0	2.43	0	0	0	0	0	0	-6.96	-6.96
Inverter Transformer	MV2-1 T	365836	4906816	2	0	0	69.4	69.4	1	2165.4	3.25	0	77.71	0	2.23	0	0	5.13	0	0	0	0	0	0	-15.72	-15.72
Inverter Transformer	MV1-12 T	365044	4905386	2	0	0	56.1	56.1	1	647.03	3.25	0	67.22	0	-0.09	0	0	3.99	0	0	0	0	0	0	-15.05	-15.05
Inverter Transformer	MV1-11 T	364649	4905414	2	0	0	56.1	56.1	1	846.62	3.25	0	69.55	0	-0.04	0	0	4.51	0	0	0	0	0	0	-17.97	-17.97
Inverter Transformer	MV1-8 T	364782	4905647	2	0	0	56.1	56.1	1	977.78	3.25	0	70.8	0	0	0	0	4.84	0	0	0	0	0	0	-19.59	-19.59
Inverter Transformer	MV1-9 T	364555	4905646	2	0	0	56.1	56.1	1	1088.85	3.25	0	71.74	0	0.04	0	0	5.1	0	0	0	0	0	0	-20.82	-20.82
Inverter Transformer	MV6-4 T	370244	4906966	2	0	0	69.4	69.4	1	5528.27	3.25	0	85.85	0	3.11	0	0	7.73	0	0	0	0	0	0	-27.34	-27.34
Inverter Transformer	MV1-4 T	364821	4905918	2	0	0	56.1	56.1	1	1218.47	3.25	0	72.72	0	0.09	0	0	5.4	0	0	0	0	0	0	-22.15	-22.15
Inverter Transformer	MV6-1 T	370230	4907364	2	0	0	69.4	69.4	1	5686.83	3.25	0	86.1	0	3.14	0	0	7.83	0	0	0	0	0	0	-27.71	-27.71
Inverter Transformer	MV1-5 T	364676	4905892	2	0	0	56.1	56.1	1	1244.72	3.25	0	72.9	0	0.1	0	0	5.46	0	0	0	0	0	0	-22.4	-22.4
Inverter Transformer	MV1-6 T	364482	4905835	2	0	0	56.1	56.1	1	1286.52	3.25	0	73.19	0	0.12	0	0	5.55	0	0	0	0	0	0	-22.8	-22.8
Inverter Transformer	MV1-2 T	364759	4906063	2	0	0	56.1	56.1	1	1375.38	3.25	0	73.77	0	0.15	0	0	5.75	0	0	0	0	0	0	-23.61	-23.61
Inverter Transformer	MV1-1 T	364721	4906166	2	0	0	56.1	56.1	1	1485.07	3.25	0	74.43	0	0.19	0	0	5.99	0	0	0	0	0	0	-24.56	-24.56
Inverter Transformer	MV1-3 T	364435	4906039	2	0	0	56.1	56.1	1	1485.21	3.25	0	74.44	0	0.19	0	0	5.99	0	0	0	0	0	0	-24.56	-24.56
Inverter Transformer	MV2-4 T	365590	4906628	2	0	0	56.1	56.1	1	1919.73	3.25	0	76.66	0	0.37	0	0	6.88	0	0	0	0	0	0	-27.86	-27.86
Inverter Transformer	MV2-3 T	365814	4906641	2	0	0	56.1	56.1	1	1992.25	3.25	0	76.99	0	0.4	0	0	7.03	0	0	0	0	0	0	-28.36	-28.36
Inverter Transformer	MV2-2 T	365982	4906654	2	0	0	56.1	56.1	1	2064.03	3.25	0	77.29	0	0.43	0	0	7.17	0	0	0	0	0	0	-28.84	-28.84
Inverter Transformer	MV3-18 T	367757	4907412	2	0	0	56.1	56.1	1	3704.26	3.25	0	82.37	0	1.12	0	0	10.01	0	0	0	0	0	0	-37.45	-37.45
Inverter Transformer	MV3-12 T	367674	4907594	2	0	0	56.1	56.1	1	3781.71	3.25	0	82.55	0	1.16	0	0	10.13	0	0	0	0	0	0	-37.78	-37.78
Inverter Transformer	MV3-13 T	367958	4907577	2	0	0	56.1	56.1	1	3962.75	3.25	0	82.96	0	1.23	0	0	10.4	0	0	0	0	0	0	-38.53	-38.53
Inverter Transformer	MV3-17 T	368183	4907472	2	0	0	56.1	56.1	1	4052.53	3.25	0	83.15	0	1.26	0	0	10.53	0	0	0	0	0	0	-38.89	-38.89
Inverter Transformer	MV3-7 T	367951	4907754	2	0	0	56.1	56.1	1	4086.02	3.25	0	83.23	0	1.28	0	0	10.58	0	0	0	0	0	0	-39.03	-39.03
Inverter Transformer	MV3-19 T	368352	4907347	2	0	0	56.1	56.1	1	4099.16	3.25	0	83.25	0	1.28	0	0	10.6	0	0	0	0	0	0	-39.08	-39.08
Inverter Transformer	MV3-21 T	368484	4907206	2	0	0	56.1	56.1	1	4116.66	3.25	0	83.29	0	1.29	0	0	10.63	0	0	0	0	0	0	-39.15	-39.15
Inverter Transformer	MV3-10 T	368162	4907669	2	0	0	56.1	56.1	1	4172.21	3.25	0	83.41	0	1.31	0	0	10.71	0	0	0	0	0	0	-39.37	-39.37
Inverter Transformer	MV3-15 T	368351	4907477	2	0	0	56.1	56.1	1	4181.88	3.25	0	83.43	0	1.32	0	0	10.72	0	0	0	0	0	0	-39.41	-39.41
Inverter Transformer	MV3-3 T	367944	4907927	2	0	0	56.1	56.1	1	4210.11	3.25	0	83.49	0	1.33	0	0	10.76	0	0	0	0	0	0	-39.52	-39.52
Inverter Transformer	MV3-22 T	368661	4907142	2	0	0	56.1	56.1	1	4223.58	3.25	0	83.51	0	1.33	0	0	10.78	0	0	0	0	0	0	-39.57	-39.57
Inverter Transformer	MV3-6 T	368156	4907834	2	0	0	56.1	56.1	1	4284.98	3.25	0	83.64	0	1.36	0	0	10.87	0	0	0	0	0	0	-39.81	-39.81
Inverter Transformer	MV3-11 T	368340	4907662	2	0	0	56.1	56.1	1	4296.57	3.25	0	83.66	0	1.36	0	0	10.89	0	0	0	0	0	0	-39.85	-39.85
Inverter Transformer	MV3-16 T	368509	4907475	2	0	0	56.1	56.1	1	4301.73	3.25	0	83.67	0	1.36	0	0	10.9	0	0	0	0	0	0	-39.87	-39.87
Inverter Transformer	MV3-20 T	368683	4907317	2	0	0	56.1	56.1	1	4342.71	3.25	0	83.76	0	1.38	0	0	10.95	0	0	0	0	0	0	-40.03	-40.03
Inverter Transformer	MV3-1 T	368150	4907976	2	0	0	56.1	56.1	1	4384.12	3.25	0	83.84	0	1.4	0	0	11.01	0	0	0	0	0	0	-40.19	-40.19
Inverter Transformer	MV3-5 T	368335	4907843	2	0	0	56.1	56.1	1	4417.55	3.25	0	83.9	0	1.41	0	0	11.06	0	0	0	0	0	0	-40.31	-40.31
Inverter Transformer	MV3-14 T	368678	4907498	2	0	0	56.1	56.1	1	4448.04	3.25	0	83.96	0	1.42	0	0	11.1	0	0	0	0	0	0	-40.43	-40.43
Inverter Transformer	MV3-9 T	368517	4907703	2	0	0	56.1	56.1	1	4455.49	3.25	0	83.98	0	1.42	0	0	11.11	0	0	0	0	0	0	-40.46	-40.46
Inverter Transformer	MV3-8 T	368685	4907712	2	0	0	56.1	56.1	1	4588.54	3.25	0	84.23	0	1.47	0	0	11.3	0	0	0	0	0	0	-40.95	-40.95
Inverter Transformer	MV3-4 T	368507	4907925	2	0	0	56.1	56.1	1	4598.24	3.25	0	84.25	0	1.48	0	0	11.31	0	0	0	0	0	0	-40.98	-40.98
Inverter Transformer	MV3-2 T	368677	4907928	2	0	0	56.1	56.1	1	4724.79	3.25	0	84.49	0	1.52	0	0	11.49	0	0	0	0	0	0	-41.44	-41.44
Inverter Transformer	MV4-15 T	369170	4908481	2	0	0	56.1	56.1	1	5462.06	3.25	0	85.75	0	1.79	0	0	12.45	0	0	0	0	0	0	-43.92	-43.92
Inverter Transformer	MV4-13 T	369057	4908605	2	0	0	56.1	56.1	1	5466.68	3.25	0	85.75	0	1.79	0	0	12.45	0	0	0	0	0	0	-43.94	-43.94
Inverter Transformer	MV4-14 T	369182	4908507	2	0	0	56.1	56.1	1	5488.58	3.25	0	85.79	0	1.8	0	0	12.48	0	0	0	0	0	0	-44.01	-44.01
Inverter Transformer	MV6-2 T	370091	4907339	2	0	0	56.1	56.1	1	5552.02	3.25	0	85.89	0	1.82	0	0	12.56	0	0	0	0	0	0	-44.21	-44.21
Inverter Transformer	MV6-3 T	370202	4907140	2	0	0	56.1	56.1	1	5562.23	3.25	0	85.9	0	1.82	0	0	12.57	0	0	0	0	0	0	-44.24	-44.24
Inverter Transformer	MV4-12 T	369049	4908803	2	0	0	56.1	56.1	1	5602.42	3.25	0	85.97	0	1.84	0	0	12.62	0	0	0	0	0	0	-44.37	-44.37
Inverter Transformer	MV4-7 T	369040	4909001	2	0	0	56.1	56.1	1	5741.13	3.25	0	86.18	0	1.88	0	0	12.79	0	0	0	0	0	0	-44.8	-44.8
Inverter Transformer	MV4-11 T	369269	4908855	2	0	0	56.1	56.1	1	5793.33	3.25	0	86.26	0	1.9	0	0	12.86	0	0	0	0	0	0	-44.95	-44.95
Inverter Transformer	MV4-10 T	369307	4908858	2	0	0	56.1	56.1	1	5822.34	3.25	0	86.3	0	1.91	0	0	12.89	0	0	0	0	0	0	-45.04	-45.04
Inverter Transformer	MV4-4 T	369033	4909199	2	0	0	56.1	56.1	1	5884.55	3.25	0	86.39	0	1.93	0	0	12.97	0	0	0	0	0	0	-45.23	-45.23
Inverter Transformer	MV4-8 T	369262	4909001	2	0	0	56.1	56.1	1	5892.76	3.25	0	86.41	0	1.93	0	0	12.98	0	0	0	0	0	0	-45.25	-45.25
Inverter Transformer	MV4-9 T	369284	4909001	2	0	0	56.1	56.1	1	5908.02	3.25	0	86.43	0	1.94	0	0	12.99	0	0	0	0	0	0	-45.3	-45.3
Inverter Transformer	MV4-6 T	369249	4909192	2	0	0	56.1	56.1	1	6023.1	3.25	0	86.6	0	1.97	0	0	13.13	0	0	0	0	0	0	-45.64	-45.64
Inverter Transformer	MV4-1 T	369017	4909397	2	0	0	56.1	56.1	1	6025.34	3.25	0	86.6	0	1.97	0	0	13.13	0	0	0	0	0	0	-45.65	-45.65
Inverter Transformer	MV4-5 T	369283	4909199	2	0	0	56.1	56.1	1	6051.28	3.25	0	86.64	0	1.98	0	0	13.16	0	0	0	0	0	0	-45.72	-45.72
Inverter Transformer	MV5-6 T	369987	4908507	2	0	0	56.1	56.1	1	6100.74	3.25	0	86.71	0	2	0	0	13.22	0	0	0	0	0	0	-45.87	-45.87
Inverter Transformer	MV4-3 T	369234	4909397	2	0	0	56.1	56.1	1	6165.86	3.25	0	86.8	0	2.02	0	0	13.3	0	0	0	0	0	0	-46.06	-46.06
Inverter Transformer	MV4-2 T	369267	4909397	2	0	0	56.1	56.1	1	6187.62	3.25	0	86.83	0	2.02	0	0	13.32	0	0	0	0	0	0	-46.12	-46.12

	Inverter Transformer	MV5-5 T	370021	4908690	2	0	0	56.1	56.1	1	6241.36	3.25	0	86.91	0	2.04	0	0	13.39	0	0	0	0	0	0	-46.27	-46.27
	Inverter Transformer	MV5-2 T	370011	4908853	2	0	0	56.1	56.1	1	6337.81	3.25	0	87.04	0	2.07	0	0	13.5	0	0	0	0	0	0	-46.55	-46.55
	Inverter Transformer	MV5-4 T	370330	4908707	2	0	0	56.1	56.1	1	6494.4	3.25	0	87.25	0	2.12	0	0	13.67	0	0	0	0	0	0	-46.98	-46.98
	Inverter Transformer	MV5-3 T	370237	4908851	2	0	0	56.1	56.1	1	6510.54	3.25	0	87.27	0	2.12	0	0	13.69	0	0	0	0	0	0	-47.03	-47.03
	Inverter Transformer	MV5-1 T	370015	4909142	2	0	0	56.1	56.1	1	6531.45	3.25	0	87.3	0	2.13	0	0	13.72	0	0	0	0	0	0	-47.08	-47.08
	Line Reactor	NGR	369421	4908787.5	5	0	0	45.4	45.4	1	5854.93	5.25	0	86.35	0	3.24	1.36	0.08	2.39	0	0	0	0	0	0	-47.99	-47.99
Limit. Valu	0	0																								
Level D/N:	37.4009	37.4009																								

Receiver: Existing Noise Receptor
ID: S-R15
X: 365585
Y: 4907094
Z: 4.5
Ground: 0

ISO	Description	ID	X	Y	Z	Ground	ReflOrd	LxT	LxN	L/A	Dist.	hm	Freq	Adiv	K0b	Agr	Abar	z	Aatm	Afol	Ahous	Cmet	CmetN	Dc	RL	LtotT	LtotN
	Inverter	MV2-4	365586	4906624	2	0	0	100.3	100.3	1	470.01	3.25	0	64.44	0	-0.57	0	0	8.28	0	0	0	0	0	0	28.16	28.16
	Inverter	MV2-3	365820	4906641	2	0	0	100.3	100.3	1	510.33	3.25	0	65.16	0	-0.54	0	0	8.6	0	0	0	0	0	0	27.09	27.09
	Inverter	MV2-1	365842	4906816	2	0	0	97.3	97.3	1	378.6	3.25	0	62.56	0	-0.63	0	0	7.39	0	0	0	0	0	0	27.99	27.99
	Sol_Luce Substation	S_Substation	369426	4908792	3.5	0	0	112.1	112.1	1	4199.58	5.25	0	83.46	0	0.66	3.06	0.3	7.63	0	0	0	0	0	0	17.27	17.27
	Inverter	MV1-1	364715	4906166	2	0	0	100.3	100.3	1	1272.04	3.25	0	73.09	0	-0.12	0	0	11.73	0	0	0	0	0	0	15.62	15.62
	Inverter	MV1-2	364753	4906063	2	0	0	100.3	100.3	1	1324.84	3.25	0	73.44	0	-0.1	0	0	11.87	0	0	0	0	0	0	15.1	15.1
	Inverter	MV1-4	364815	4905918	2	0	0	100.3	100.3	1	1405.66	3.25	0	73.96	0	-0.07	0	0	12.09	0	0	0	0	0	0	14.34	14.34
	Inverter	MV1-5	364671	4905892	2	0	0	100.3	100.3	1	1510.04	3.25	0	74.58	0	-0.03	0	0	12.35	0	0	0	0	0	0	13.41	13.41
	Inverter	MV1-8	364788	4905647	2	0	0	100.3	100.3	1	1651.98	3.25	0	75.36	0	0.02	0	0	12.69	0	0	0	0	0	0	12.24	12.24
	Inverter	MV1-6	364477	4905835	2	0	0	100.3	100.3	1	1677.13	3.25	0	75.49	0	0.03	0	0	12.75	0	0	0	0	0	0	12.04	12.04
	Inverter	MV1-9	364561	4905646	2	0	0	100.3	100.3	1	1773.5	3.25	0	75.98	0	0.06	0	0	12.97	0	0	0	0	0	0	11.31	11.31
	Inverter	MV1-12	365038	4905386	2	0	0	100.3	100.3	1	1793.45	3.25	0	76.07	0	0.07	0	0	13.01	0	0	0	0	0	0	11.16	11.16
	Inverter	MV1-11	364655	4905414	2	0	0	100.3	100.3	1	1920.24	3.25	0	76.67	0	0.11	0	0	13.29	0	0	0	0	0	0	10.25	10.25
	Inverter	MV1-7	364925	4905782	2	0	0	97.3	97.3	1	1468.66	3.25	0	74.34	0	-0.05	0	0	12.25	0	0	0	0	0	0	10.77	10.77
	Inverter	MV1-15	365315	4904994	2	0	0	100.3	100.3	1	2117.29	3.25	0	77.52	0	0.16	0	0	13.71	0	0	0	0	0	0	8.93	8.93
	Inverter	MV3-12	367668	4907594	2	0	0	100.3	100.3	1	2142.17	3.25	0	77.62	0	0.17	0	0	13.76	0	0	0	0	0	0	8.77	8.77
	Inverter	MV2-2	365977	4906654	2	0	0	89.1	89.1	1	589.3	3.25	0	66.41	0	0.57	0	0	5.42	0	0	0	0	0	0	16.66	16.66
	Inverter	MV3-18	367752	4907412	2	0	0	100.3	100.3	1	2190.21	3.25	0	77.81	0	0.18	0	0	13.85	0	0	0	0	0	0	8.47	8.47
	Inverter	MV1-10	365004	4905564	2	0	0	97.3	97.3	1	1636.6	3.25	0	75.28	0	0.02	0	0	12.65	0	0	0	0	0	0	9.36	9.36
	Inverter	MV3-13	367963	4907577	2	0	0	100.3	100.3	1	2426.56	3.25	0	78.7	0	0.24	0	0	14.32	0	0	0	0	0	0	7.05	7.05
	Inverter	MV3-7	367945	4907754	2	0	0	100.3	100.3	1	2450.55	3.25	0	78.79	0	0.25	0	0	14.36	0	0	0	0	0	0	6.92	6.92
	Inverter	MV3-3	367939	4907927	2	0	0	100.3	100.3	1	2497.04	3.25	0	78.95	0	0.26	0	0	14.45	0	0	0	0	0	0	6.65	6.65
	Inverter	MV3-17	368178	4907472	2	0	0	100.3	100.3	1	2620.41	3.25	0	79.37	0	0.28	0	0	14.68	0	0	0	0	0	0	5.98	5.98
	Inverter	MV3-10	368167	4907669	2	0	0	100.3	100.3	1	2645.25	3.25	0	79.45	0	0.29	0	0	14.73	0	0	0	0	0	0	5.84	5.84
	Inverter	MV3-6	368162	4907834	2	0	0	100.3	100.3	1	2681.14	3.25	0	79.57	0	0.3	0	0	14.8	0	0	0	0	0	0	5.65	5.65
	Inverter	MV3-19	368357	4907347	2	0	0	100.3	100.3	1	2783.52	3.25	0	79.89	0	0.32	0	0	14.98	0	0	0	0	0	0	5.12	5.12
	Inverter	MV3-15	368357	4907477	2	0	0	100.3	100.3	1	2798.34	3.25	0	79.94	0	0.32	0	0	15.01	0	0	0	0	0	0	5.04	5.04
	Inverter	MV3-11	368346	4907662	2	0	0	100.3	100.3	1	2818.82	3.25	0	80	0	0.33	0	0	15.05	0	0	0	0	0	0	4.94	4.94
	Inverter	MV1-13	364731	4905241	2	0	0	97.3	97.3	1	2040.33	3.25	0	77.19	0	0.14	0	0	13.55	0	0	0	0	0	0	6.43	6.43
	Inverter	MV3-21	368478	4907206	2	0	0	100.3	100.3	1	2895.17	3.25	0	80.23	0	0.34	0	0	15.19	0	0	0	0	0	0	4.55	4.55
	Inverter	MV1-14	365163	4905049	2	0	0	97.3	97.3	1	2088.09	3.25	0	77.39	0	0.15	0	0	13.65	0	0	0	0	0	0	6.12	6.12
	Inverter	MV3-16	368514	4907475	2	0	0	100.3	100.3	1	2953.68	3.25	0	80.41	0	0.35	0	0	15.29	0	0	0	0	0	0	4.26	4.26
	Inverter	MV3-9	368512	4907703	2	0	0	100.3	100.3	1	2989.68	3.25	0	80.51	0	0.36	0	0	15.35	0	0	0	0	0	0	4.09	4.09
	Inverter	MV3-20	368689	4907317	2	0	0	100.3	100.3	1	3112	3.25	0	80.86	0	0.38	0	0	15.57	0	0	0	0	0	0	3.5	3.5
	Inverter	MV3-14	368684	4907498	2	0	0	100.3	100.3	1	3125.22	3.25	0	80.9	0	0.39	0	0	15.59	0	0	0	0	0	0	3.44	3.44
	Inverter	MV3-8	368680	4907712	2	0	0	100.3	100.3	1	3156.1	3.25	0	80.98	0	0.39	0	0	15.65	0	0	0	0	0	0	3.29	3.29
	Inverter	MV4-7	369035	4909001	2	0	0	100.3	100.3	1	3941.97	3.25	0	82.91	0	0.52	0	0	16.96	0	0	0	0	0	0	-0.08	-0.08
	Inverter	MV4-4	369027	4909199	2	0	0	100.3	100.3	1	4034.65	3.25	0	83.12	0	0.53	0	0	17.1	0	0	0	0	0	0	-0.44	-0.44
	Inverter	MV4-11	369264	4908855	2	0	0	100.3	100.3	1	4078.75	3.25	0	83.21	0	0.54	0	0	17.17	0	0	0	0	0	0	-0.61	-0.61
	Inverter	MV4-10	369312	4908858	2	0	0	100.3	100.3	1	4123.38	3.25	0	83.31	0	0.54	0	0	17.24	0	0	0	0	0	0	-0.78	-0.78
	Inverter	MV4-1	369011	4909397	2	0	0	100.3	100.3	1	4128.11	3.25	0	83.32	0	0.54	0	0	17.25	0	0	0	0	0	0	-0.8	-0.8
	Inverter	MV4-8	369256	4909001	2	0	0	100.3	100.3	1	4136.77	3.25	0	83.33	0	0.55	0	0	17.27	0	0	0	0	0	0	-0.83	-0.83
	Inverter	MV4-9	369289	4909001	2	0	0	100.3	100.3	1	4166.09	3.25	0	83.39	0	0.55	0	0	17.31	0	0	0	0	0	0	-0.94	-0.94
	Inverter	MV4-6	369243	4909192	2	0	0	100.3	100.3	1	4216.94	3.25	0	83.5	0	0.56	0	0	17.39	0	0	0	0	0	0	-1.14	-1.14
	Inverter	MV4-5	369289	4909199	2	0	0	100.3	100.3	1	4260.36	3.25	0	83.59	0	0.56	0	0	17.46	0	0	0	0	0	0	-1.3	-1.3
	Inverter	MV4-3	369229	4909397	2	0	0	100.3	100.3	1	4310.75	3.25	0	83.69	0	0.57	0	0	17.54	0	0	0	0	0	0	-1.49	-1.49
	Inverter	MV4-2	369272	4909397	2	0	0	100.3	100.3	1	4347.16	3.25	0	83.76	0	0.57	0	0	17.59	0	0	0	0	0	0	-1.62	-1.62
	Inverter	MV6-2	370085	4907339	2	0	0	100.3	100.3	1	4506.67	3.25	0	84.08	0	0.59	0	0	17.84	0	0	0	0	0	0	-2.2	-2.2
	Inverter	MV6-3	370207	4907140	2	0	0	100.3	100.3	1	4622.23	3.25	0	84.3	0	0.6	0	0	18.02	0	0	0	0	0	0	-2.61	-2.61
	Inverter	MV5-5	370015	4908690	2	0	0	100.3	100.3	1	4708.73	3.25	0	84.46	0	0.61	0	0	18.15	0	0	0	0	0	0	-2.91	-2.91
	Inverter	MV5-2	370006	4908853	2	0	0	100.3	100.3	1	4758.08	3.25	0	84.55	0	0.62	0	0	18.22	0	0	0	0	0	0	-3.08	-3.08
	Inverter	MV5-1	370020	4909142	2	0	0	100.3	100.3	1	4885.03	3.25	0	84.78	0	0.63	0	0	18.41	0	0	0	0	0	0	-3.51	-3.51
	Inverter	MV5-3	370231	4908851	2	0	0	100.3	100.3	1	4967.13	3.25	0	84.92	0	0.64	0	0	18.53	0	0	0	0	0	0	-3.78	-3.78
	Inverter	MV5-4	370324	4908707	2	0	0	100.3	100.3	1	5005.99	3.25	0	84.99	0	0.64	0	0	18.59	0	0	0	0	0	0	-3.91	-3.91
	Inverter	MV1-3	364440	4906039	2	0	0	89.1	89.1	1	1556.94	3.25	0	74.85	0	0.81	0	0	7.31	0	0	0	0	0	0	6.1	6.1
	DSTATCOM - 10 MVAR #2	DSAT2	369403	4908757	2.5	0	0	96.6	96.6	1	4164.46	3.5	0	83.39	0	3.59	0	0	2.93	0	0	0	0	0	0	6.72	6.72
	DSTATCOM - 10 MVAR #1	DSAT1	369437	4908757	2.5	0	0	96.6	96.6	1	4195.65	3.5	0	83.46	0	3.59	0	0	2.94	0	0	0	0	0	0	6.64	6.64

Inverter	MV6-1	370235	4907364	2	0	0	97.3	97.3	1	4657.83	3.25	0	84.36	0	0.61	0	0	18.07	0	0	0	0	0	0	-5.73	-5.73
Inverter	MV3-1	368156	4907976	2	0	0	89.1	89.1	1	2718.08	3.25	0	79.69	0	1.08	0	0	9.19	0	0	0	0	0	0	-0.89	-0.89
Inverter	MV3-5	368340	4907843	2	0	0	89.1	89.1	1	2855	3.25	0	80.11	0	1.11	0	0	9.4	0	0	0	0	0	0	-1.56	-1.56
SubstationTransformer	W_ST	369711.17	4906112.3	2.5	0	0	92	92	1	4241.35	4.25	0	83.55	0	1.43	2.54	0.28	7.68	0	0	0	0	0	0	-3.23	-3.23
Inverter	MV3-4	368502	4907925	2	0	0	89.1	89.1	1	3033.06	3.25	0	80.64	0	1.15	0	0	9.67	0	0	0	0	0	0	-2.4	-2.4
Inverter	MV3-22	368656	4907142	2	0	0	89.1	89.1	1	3071.38	3.25	0	80.75	0	1.16	0	0	9.72	0	0	0	0	0	0	-2.58	-2.58
Gardiner Substation	G_Sub	366586.3	4903349.9	2.5	0	0	90.8	90.8	1	3875.68	4.25	0	82.77	0	1.34	2.72	0.34	7.2	0	0	0	0	0	0	-3.25	-3.25
Inverter	MV3-2	368671	4907928	2	0	0	89.1	89.1	1	3196.71	3.25	0	81.09	0	1.19	0	0	9.91	0	0	0	0	0	0	-3.14	-3.14
Inverter Transformer	MV2-1 T	365836	4906816	2	0	0	69.4	69.4	1	374.55	3.25	0	62.47	0	0.85	0	0	2.63	0	0	0	0	0	0	3.4	3.4
Inverter	MV4-13	369051	4908605	2	0	0	89.1	89.1	1	3781.04	3.25	0	82.55	0	1.34	0	0	10.77	0	0	0	0	0	0	-5.6	-5.6
Fixed Reactor Bank 1	FRB1	369378	4908755	6	0	0	89.8	89.8	1	4140.75	5.25	0	83.34	0	-0.7	0	0	7.55	0	0	0	0	0	0	-0.41	-0.41
Inverter	MV4-15	369176	4908481	2	0	0	89.1	89.1	1	3849.55	3.25	0	82.71	0	1.36	0	0	10.87	0	0	0	0	0	0	-5.88	-5.88
Westbrook Inverter Enclosur	W_INV2	369374	4906388	2	0	0	89.1	89.1	1	3854.21	3.25	0	82.72	0	1.36	0	0	10.88	0	0	0	0	0	0	-5.89	-5.89
Inverter	MV4-12	369043	4908803	2	0	0	89.1	89.1	1	3857.26	3.25	0	82.73	0	1.36	0	0	10.88	0	0	0	0	0	0	-5.91	-5.91
Inverter	MV4-14	369176	4908507	2	0	0	89.1	89.1	1	3859	3.25	0	82.73	0	1.36	0	0	10.88	0	0	0	0	0	0	-5.91	-5.91
Fixed Reactor Bank 2	FRB2	369464	4908755	6	0	0	89.8	89.8	1	4219.66	5.25	0	83.51	0	-0.69	0	0	7.65	0	0	0	0	0	0	-0.69	-0.69
Westbrook Inverter Enclosur	W_INV3	369508	4906164	2	0	0	89.1	89.1	1	4031.73	3.25	0	83.11	0	1.4	0	0	11.13	0	0	0	0	0	0	-6.58	-6.58
Westbrook Inverter Enclosur	W_INV5	369719	4906574	2	0	0	89.1	89.1	1	4166.58	3.25	0	83.4	0	1.43	0	0	11.32	0	0	0	0	0	0	-7.09	-7.09
Westbrook Inverter Enclosur	W_INV4	369673	4906164	2	0	0	89.1	89.1	1	4192.45	3.25	0	83.45	0	1.44	0	0	11.36	0	0	0	0	0	0	-7.19	-7.19
Westbrook Inverter Enclosur	W_INV7	369780	4906417	2	0	0	89.1	89.1	1	4249.28	3.25	0	83.57	0	1.45	0	0	11.44	0	0	0	0	0	0	-7.4	-7.4
Westbrook Inverter Enclosur	W_INV6	369875	4906578	2	0	0	89.1	89.1	1	4320.92	3.25	0	83.71	0	1.47	0	0	11.54	0	0	0	0	0	0	-7.66	-7.66
Inverter	MV5-6	369982	4908507	2	0	0	89.1	89.1	1	4618.46	3.25	0	84.29	0	1.55	0	0	11.95	0	0	0	0	0	0	-8.72	-8.72
Inverters	G_Inv1	366526.4	4903225.8	2	0	0	87.7	87.7	1	3981.11	3.25	0	83	0	2.79	0	0	4.85	0	0	0	0	0	0	-2.98	-2.98
Inverters	G_Inv2	366676.9	4903239.1	2	0	0	87.7	87.7	1	4006.56	3.25	0	83.06	0	2.79	0	0	4.88	0	0	0	0	0	0	-3.07	-3.07
Inverters	G_Inv3	366583.7	4903091.4	2	0	0	87.7	87.7	1	4125.31	3.25	0	83.31	0	2.8	0	0	5.01	0	0	0	0	0	0	-3.46	-3.46
Inverters	G_Inv4	366732.8	4903105	2	0	0	87.7	87.7	1	4150.85	3.25	0	83.36	0	2.8	0	0	5.04	0	0	0	0	0	0	-3.54	-3.54
Inverters	G_Inv5	366638.5	4902958.1	2	0	0	87.7	87.7	1	4267.97	3.25	0	83.6	0	2.81	0	0	5.16	0	0	0	0	0	0	-3.92	-3.92
Inverters	G_Inv6	366788.5	4902972	2	0	0	87.7	87.7	1	4294.1	3.25	0	83.66	0	2.82	0	0	5.19	0	0	0	0	0	0	-4	-4
Inverters	G_Inv7	366694.6	4902824.7	2	0	0	87.7	87.7	1	4411.14	3.25	0	83.89	0	2.82	0	0	5.32	0	0	0	0	0	0	-4.37	-4.37
Inverters	G_Inv8	366844.5	4902838.5	2	0	0	87.7	87.7	1	4437.98	3.25	0	83.94	0	2.83	0	0	5.34	0	0	0	0	0	0	-4.45	-4.45
Inverters	G_Inv9	366750.9	4902691.8	2	0	0	87.7	87.7	1	4553.98	3.25	0	84.17	0	2.83	0	0	5.47	0	0	0	0	0	0	-4.81	-4.81
Inverters	G_Inv10	366900.7	4902704.8	2	0	0	87.7	87.7	1	4582.16	3.25	0	84.22	0	2.84	0	0	5.5	0	0	0	0	0	0	-4.9	-4.9
Westbrook Inverter Enclosur	W_INV1	369409	4906578	2	0	0	86.1	86.1	1	3858.66	3.25	0	82.73	0	1.36	0	0	10.88	0	0	0	0	0	0	-8.91	-8.91
Inverter	MV6-4	370250	4906966	2	0	0	86.1	86.1	1	4666.76	3.25	0	84.38	0	1.56	0	0	12.01	0	0	0	0	0	0	-11.89	-11.89
Westbrook Inverter Transfor	W_INVTR1	369403	4906578	2	0	0	78.2	78.2	1	3852.71	3.25	0	82.72	0	-2.93	0	0	2	0	0	0	0	0	0	-3.54	-3.54
Inverter Transformer	MV1-7 T	364919	4905782	2	0	0	69.4	69.4	1	1471.36	3.25	0	74.35	0	1.96	0	0	4.4	0	0	0	0	0	0	-11.37	-11.37
Westbrook Inverter Transfor	W_INVTR2	369368	4906388	2	0	0	77.3	77.3	1	3848.32	3.25	0	82.71	0	-2.93	0	0	2	0	0	0	0	0	0	-4.43	-4.43
Westbrook Inverter Transfor	W_INVTR3	369514	4906164	2	0	0	77.3	77.3	1	4037.57	3.25	0	83.12	0	-2.97	0	0	2.07	0	0	0	0	0	0	-4.88	-4.88
Inverter Transformer	MV1-10 T	365010	4905564	2	0	0	69.4	69.4	1	1634.48	3.25	0	75.27	0	2.03	0	0	4.58	0	0	0	0	0	0	-12.53	-12.53
Westbrook Inverter Transfor	W_INVTR5	369725	4906574	2	0	0	77.3	77.3	1	4172.53	3.25	0	83.41	0	-3	0	0	2.12	0	0	0	0	0	0	-5.18	-5.18
Westbrook Inverter Transfor	W_INVTR4	369679	4906164	2	0	0	77.3	77.3	1	4198.3	3.25	0	83.46	0	-3.01	0	0	2.13	0	0	0	0	0	0	-5.24	-5.24
Westbrook Inverter Transfor	W_INVTR7	369786	4906417	2	0	0	77.3	77.3	1	4255.2	3.25	0	83.58	0	-3.02	0	0	2.15	0	0	0	0	0	0	-5.37	-5.37
Westbrook Inverter Transfor	W_INVTR6	369881	4906578	2	0	0	77.3	77.3	1	4326.88	3.25	0	83.72	0	-3.04	0	0	2.18	0	0	0	0	0	0	-5.52	-5.52
Inverter Transformer	MV1-13 T	364725	4905241	2	0	0	69.4	69.4	1	2042.84	3.25	0	77.2	0	2.19	0	0	5.01	0	0	0	0	0	0	-15.05	-15.05
Inverter Transformer	MV1-14 T	365157	4905049	2	0	0	69.4	69.4	1	2089.31	3.25	0	77.4	0	2.21	0	0	5.05	0	0	0	0	0	0	-15.31	-15.31
Inverter Transformer	MV2-4 T	365590	4906628	2	0	0	56.1	56.1	1	466.03	3.25	0	64.37	0	-0.12	0	0	3.44	0	0	0	0	0	0	-11.63	-11.63
Inverter Transformer	MV2-3 T	365814	4906641	2	0	0	56.1	56.1	1	507.6	3.25	0	65.11	0	-0.12	0	0	3.58	0	0	0	0	0	0	-12.51	-12.51
Inverter Transformer	MV2-2 T	365982	4906654	2	0	0	56.1	56.1	1	592.63	3.25	0	66.46	0	-0.11	0	0	3.83	0	0	0	0	0	0	-14.13	-14.13
Inverter Transformer	MV6-1 T	370230	4907364	2	0	0	69.4	69.4	1	4652.84	3.25	0	84.35	0	2.94	0	0	7.15	0	0	0	0	0	0	-25.09	-25.09
Inverter Transformer	MV6-4 T	370244	4906966	2	0	0	69.4	69.4	1	4660.76	3.25	0	84.37	0	2.94	0	0	7.15	0	0	0	0	0	0	-25.11	-25.11
Inverter Transformer	MV1-1 T	364721	4906166	2	0	0	56.1	56.1	1	1267.95	3.25	0	73.06	0	0.11	0	0	5.51	0	0	0	0	0	0	-22.62	-22.62
Inverter Transformer	MV1-2 T	364759	4906063	2	0	0	56.1	56.1	1	1321.08	3.25	0	73.42	0	0.13	0	0	5.63	0	0	0	0	0	0	-23.12	-23.12
Inverter Transformer	MV1-4 T	364821	4905918	2	0	0	56.1	56.1	1	1402.38	3.25	0	73.94	0	0.16	0	0	5.81	0	0	0	0	0	0	-23.85	-23.85
Inverter Transformer	MV1-5 T	364676	4905892	2	0	0	56.1	56.1	1	1507.01	3.25	0	74.56	0	0.2	0	0	6.03	0	0	0	0	0	0	-24.74	-24.74
Inverter Transformer	MV1-3 T	364435	4906039	2	0	0	56.1	56.1	1	1560.62	3.25	0	74.87	0	0.22	0	0	6.15	0	0	0	0	0	0	-25.18	-25.18
Inverter Transformer	MV1-8 T	364782	4905647	2	0	0	56.1	56.1	1	1654.88	3.25	0	75.38	0	0.26	0	0	6.35	0	0	0	0	0	0	-25.92	-25.92
Inverter Transformer	MV1-6 T	364482	4905835	2	0	0	56.1	56.1	1	1673.83	3.25	0	75.47	0	0.27	0	0	6.38	0	0	0	0	0	0	-26.07	-26.07
Inverter Transformer	MV1-9 T	364555	4905646	2	0	0	56.1	56.1	1	1776.97	3.25	0	75.99	0	0.31	0	0	6.6	0	0	0	0	0	0	-26.84	-26.84
Inverter Transformer	MV1-12 T	365044	4905386	2	0	0	56.1	56.1	1	1791.63	3.25	0	76.06	0	0.32	0	0	6.63	0	0	0	0	0	0	-26.95	-26.95
Inverter Transformer	MV1-11 T	364649	4905414	2	0	0	56.1	56.1	1	1923.15	3.25	0	76.68	0	0.37	0	0	6.89	0	0	0	0	0	0	-27.89	-27.89
Inverter Transformer	MV1-15 T	365309	4904994	2	0	0	56.1	56.1	1	2118.06	3.25	0	77.52	0	0.45	0	0	7.27	0	0	0	0	0	0	-29.19	-29.19
Inverter Transformer	MV3-12 T	367674	4907594	2	0	0	56.1	56.1	1	2148.01	3.25	0	77.64	0	0.47	0	0	7.33	0	0	0	0	0	0	-29.38	-29.38
Inverter Transformer	MV3-18 T	367757	4907412	2	0	0	56.1	56.1	1	2195.16	3.25	0	77.83	0	0.49	0	0	7.42	0	0	0	0	0	0	-29.68	-29.68
Inverter Transformer	MV3-13 T	367958	4907577	2	0	0	56.1	56.1	1	2421.66	3.25	0	78.68	0	0.58	0	0	7.85	0	0	0	0	0	0	-31.05	-31.05
Inverter Transformer	MV3-7 T	367951	4907754	2	0	0	56.1	56.1	1	2456.33	3.25	0	78.81	0	0.6	0	0	7.91	0	0	0	0	0	0	-31.25	-31.25
Inverter Transformer	MV3-3 T	367944	4907927	2	0	0	56.1	56.1	1	2501.75	3.25	0	78.96	0	0.62	0	0	7.99	0	0	0	0	0	0	-31.52	-31.52
Inverter Transformer	MV3-17 T	368183	4907472	2	0	0	56.1	56.1	1	2625.36	3.25	0	79.38	0	0.67	0	0	8.22	0	0	0	0	0	0	-32.21	-32.21
Inverter Transformer	MV3-10 T	368162	4907669	2	0	0	56.1	56.1	1	2640.37	3.25	0	79.43	0	0.68	0	0	8.24	0	0	0	0	0	0	-32.29	-32.29
Inverter Transformer	MV3-6 T	368156	4907834	2	0	0	56.1	56.1	1	2675.38	3.25	0	79.55	0	0.69	0	0	8.3	0	0	0	0	0	0	-32.49	-32.49
Inverter Transformer	MV3-1 T	368150	4907976	2	0	0	56.1	56.1	1	2712.41	3.25	0	79.67	0	0.71	0	0	8.37	0	0	0	0	0	0	-32.69	-32.69
Inverter Transformer	MV3-19 T	368352	4907347	2	0	0	56.1	56.1	1	2778.54	3.25	0	79.88	0	0.74	0	0	8.49	0	0	0	0	0	0	-33.04	-33.04
Inverter Transformer	MV3-15 T	368351	4907477	2	0	0	56.1	56.1	1	2792.39	3.25	0	79.92	0	0.74	0	0	8.51	0	0	0	0	0	0	-33.11	-33.11
Inverter Transformer	MV3-11 T	368340	4907662	2	0	0	56.1	56.1	1	2812.94	3.25	0	79.98	0	0.75	0	0	8.55	0	0	0	0	0	0	-33.22	-33.22
Inverter Transformer	MV3-5 T	368335	4907843	2	0	0	56.1	56.1	1	2850.18	3.25	0	80.1	0	0.77	0	0	8.61	0	0	0	0	0	0	-33.42	-33.42

	Inverter Transformer	MV3-21 T	368484	4907206	2	0	0	56.1	56.1	1	2901.16	3.25	0	80.25	0	0.79	0	0	8.7	0	0	0	0	0	0	-33.68	-33.68
	Inverter Transformer	MV3-16 T	368509	4907475	2	0	0	56.1	56.1	1	2948.72	3.25	0	80.39	0	0.81	0	0	8.78	0	0	0	0	0	0	-33.92	-33.92
	Inverter Transformer	MV3-9 T	368517	4907703	2	0	0	56.1	56.1	1	2994.58	3.25	0	80.53	0	0.83	0	0	8.86	0	0	0	0	0	0	-34.15	-34.15
	Inverter Transformer	MV3-4 T	368507	4907925	2	0	0	56.1	56.1	1	3037.87	3.25	0	80.65	0	0.85	0	0	8.93	0	0	0	0	0	0	-34.37	-34.37
	Inverter Transformer	MV3-22 T	368661	4907142	2	0	0	56.1	56.1	1	3076.38	3.25	0	80.76	0	0.86	0	0	9	0	0	0	0	0	0	-34.56	-34.56
	Inverter Transformer	MV3-20 T	368683	4907317	2	0	0	56.1	56.1	1	3106.02	3.25	0	80.84	0	0.87	0	0	9.05	0	0	0	0	0	0	-34.71	-34.71
	Inverter Transformer	MV3-14 T	368678	4907498	2	0	0	56.1	56.1	1	3119.27	3.25	0	80.88	0	0.88	0	0	9.07	0	0	0	0	0	0	-34.77	-34.77
	Inverter Transformer	MV3-8 T	368685	4907712	2	0	0	56.1	56.1	1	3161	3.25	0	81	0	0.9	0	0	9.14	0	0	0	0	0	0	-34.97	-34.97
	Inverter Transformer	MV3-2 T	368677	4907928	2	0	0	56.1	56.1	1	3202.5	3.25	0	81.11	0	0.92	0	0	9.21	0	0	0	0	0	0	-35.17	-35.17
	Inverter Transformer	MV4-13 T	369057	4908605	2	0	0	56.1	56.1	1	3786.54	3.25	0	82.56	0	1.16	0	0	10.13	0	0	0	0	0	0	-37.8	-37.8
	Inverter Transformer	MV4-15 T	369170	4908481	2	0	0	56.1	56.1	1	3843.96	3.25	0	82.7	0	1.18	0	0	10.22	0	0	0	0	0	0	-38.04	-38.04
	Inverter Transformer	MV4-12 T	369049	4908803	2	0	0	56.1	56.1	1	3862.64	3.25	0	82.74	0	1.19	0	0	10.25	0	0	0	0	0	0	-38.12	-38.12
	Inverter Transformer	MV4-14 T	369182	4908507	2	0	0	56.1	56.1	1	3864.58	3.25	0	82.74	0	1.19	0	0	10.25	0	0	0	0	0	0	-38.13	-38.13
	Inverter Transformer	MV4-7 T	369040	4909001	2	0	0	56.1	56.1	1	3946.35	3.25	0	82.92	0	1.22	0	0	10.37	0	0	0	0	0	0	-38.46	-38.46
	Inverter Transformer	MV4-4 T	369033	4909199	2	0	0	56.1	56.1	1	4039.77	3.25	0	83.13	0	1.26	0	0	10.51	0	0	0	0	0	0	-38.84	-38.84
	Inverter Transformer	MV4-11 T	369269	4908855	2	0	0	56.1	56.1	1	4083.26	3.25	0	83.22	0	1.28	0	0	10.58	0	0	0	0	0	0	-39.02	-39.02
	Inverter Transformer	MV4-10 T	369307	4908858	2	0	0	56.1	56.1	1	4118.86	3.25	0	83.3	0	1.29	0	0	10.63	0	0	0	0	0	0	-39.16	-39.16
	Inverter Transformer	MV4-1 T	369017	4909397	2	0	0	56.1	56.1	1	4133.09	3.25	0	83.33	0	1.3	0	0	10.65	0	0	0	0	0	0	-39.22	-39.22
	Inverter Transformer	MV4-8 T	369262	4909001	2	0	0	56.1	56.1	1	4142.1	3.25	0	83.34	0	1.3	0	0	10.66	0	0	0	0	0	0	-39.25	-39.25
	Inverter Transformer	MV4-9 T	369284	4909001	2	0	0	56.1	56.1	1	4161.64	3.25	0	83.39	0	1.31	0	0	10.69	0	0	0	0	0	0	-39.33	-39.33
	Inverter Transformer	MV4-6 T	369249	4909192	2	0	0	56.1	56.1	1	4222.14	3.25	0	83.51	0	1.33	0	0	10.78	0	0	0	0	0	0	-39.56	-39.56
	Inverter Transformer	MV4-5 T	369283	4909199	2	0	0	56.1	56.1	1	4255.14	3.25	0	83.58	0	1.34	0	0	10.83	0	0	0	0	0	0	-39.69	-39.69
	Inverter Transformer	MV4-3 T	369234	4909397	2	0	0	56.1	56.1	1	4314.98	3.25	0	83.7	0	1.37	0	0	10.91	0	0	0	0	0	0	-39.92	-39.92
	Inverter Transformer	MV4-2 T	369267	4909397	2	0	0	56.1	56.1	1	4342.92	3.25	0	83.76	0	1.38	0	0	10.95	0	0	0	0	0	0	-40.03	-40.03
	Inverter Transformer	MV6-2 T	370091	4907339	2	0	0	56.1	56.1	1	4512.66	3.25	0	84.09	0	1.44	0	0	11.19	0	0	0	0	0	0	-40.67	-40.67
	Inverter Transformer	MV6-3 T	370202	4907140	2	0	0	56.1	56.1	1	4617.23	3.25	0	84.29	0	1.48	0	0	11.34	0	0	0	0	0	0	-41.05	-41.05
	Inverter Transformer	MV5-6 T	369987	4908507	2	0	0	56.1	56.1	1	4623.22	3.25	0	84.3	0	1.49	0	0	11.35	0	0	0	0	0	0	-41.07	-41.07
	Inverter Transformer	MV5-5 T	370021	4908690	2	0	0	56.1	56.1	1	4714.37	3.25	0	84.47	0	1.52	0	0	11.47	0	0	0	0	0	0	-41.4	-41.4
	Inverter Transformer	MV5-2 T	370011	4908853	2	0	0	56.1	56.1	1	4762.73	3.25	0	84.56	0	1.54	0	0	11.54	0	0	0	0	0	0	-41.57	-41.57
	Inverter Transformer	MV5-1 T	370015	4909142	2	0	0	56.1	56.1	1	4880.49	3.25	0	84.77	0	1.58	0	0	11.7	0	0	0	0	0	0	-41.99	-41.99
	Inverter Transformer	MV5-3 T	370237	4908851	2	0	0	56.1	56.1	1	4972.74	3.25	0	84.93	0	1.62	0	0	11.82	0	0	0	0	0	0	-42.31	-42.31
	Inverter Transformer	MV5-4 T	370330	4908707	2	0	0	56.1	56.1	1	5011.67	3.25	0	85	0	1.63	0	0	11.87	0	0	0	0	0	0	-42.44	-42.44
	Line Reactor	NGR	369421	4908787.5	5	0	0	45.4	45.4	1	4193.19	5.25	0	83.45	0	3.28	1.34	0.1	1.72	0	0	0	0	0	0	-44.43	-44.43
Limit. Valu	0	0																								
Level D/N:	33.4808	33.4808																								

Receiver: Existing Noise Receptor
ID: S-R16
X: 365813
Y: 4907002
Z: 4.5
Ground: 0

ISO	Description	ID	X	Y	Z	Ground	ReflOrd	LxT	LxN	L/A	Dist.	hm	Freq	Adiv	K0b	Agr	Abar	z	Aatm	Afol	Ahous	Cmet	CmetN	Dc	RL	LtotT	LtotN
	Inverter	MV2-1	365842	4906816	2	0	0	97.3	97.3	1	188.26	3.25	0	56.5	0	-0.53	0	0	4.53	0	0	0	0	0	0	36.82	36.82
	Inverter	MV2-3	365820	4906641	2	0	0	100.3	100.3	1	361.08	3.25	0	62.15	0	-0.64	0	0	7.19	0	0	0	0	0	0	31.61	31.61
	Inverter	MV2-4	365586	4906624	2	0	0	100.3	100.3	1	440.93	3.25	0	63.89	0	-0.59	0	0	8.03	0	0	0	0	0	0	28.99	28.99
	Sol_Luce Substation	S_Substation	369426	4908792	3.5	0	0	112.1	112.1	1	4032.1	5.25	0	83.11	0	0.61	3.1	0.29	7.41	0	0	0	0	0	0	17.85	17.85
	Inverter	MV1-1	364715	4906166	2	0	0	100.3	100.3	1	1380.04	3.25	0	73.8	0	-0.08	0	0	12.02	0	0	0	0	0	0	14.57	14.57
	Inverter	MV2-2	365977	4906654	2	0	0	89.1	89.1	1	384.72	3.25	0	62.7	0	0.44	0	0	4.65	0	0	0	0	0	0	21.26	21.26
	Inverter	MV1-2	364753	4906063	2	0	0	100.3	100.3	1	1416.1	3.25	0	74.02	0	-0.07	0	0	12.11	0	0	0	0	0	0	14.24	14.24
	Inverter	MV1-4	364815	4905918	2	0	0	100.3	100.3	1	1473.45	3.25	0	74.37	0	-0.04	0	0	12.26	0	0	0	0	0	0	13.73	13.73
	Inverter	MV1-5	364671	4905892	2	0	0	100.3	100.3	1	1592.57	3.25	0	75.04	0	0	0	0	12.55	0	0	0	0	0	0	12.72	12.72
	Inverter	MV1-8	364788	4905647	2	0	0	100.3	100.3	1	1699.02	3.25	0	75.6	0	0.04	0	0	12.8	0	0	0	0	0	0	11.87	11.87
	Inverter	MV1-6	364477	4905835	2	0	0	100.3	100.3	1	1773.92	3.25	0	75.98	0	0.06	0	0	12.97	0	0	0	0	0	0	11.3	11.3
	Inverter	MV1-12	365038	4905386	2	0	0	100.3	100.3	1	1792.23	3.25	0	76.07	0	0.07	0	0	13.01	0	0	0	0	0	0	11.17	11.17
	Inverter	MV1-9	364561	4905646	2	0	0	100.3	100.3	1	1845.6	3.25	0	76.32	0	0.08	0	0	13.13	0	0	0	0	0	0	10.78	10.78
	Inverter	MV3-12	367668	4907594	2	0	0	100.3	100.3	1	1947.18	3.25	0	76.79	0	0.11	0	0	13.35	0	0	0	0	0	0	10.06	10.06
	Inverter	MV1-11	364655	4905414	2	0	0	100.3	100.3	1	1965.38	3.25	0	76.87	0	0.12	0	0	13.39	0	0	0	0	0	0	9.94	9.94
	Inverter	MV3-18	367752	4907412	2	0	0	100.3	100.3	1	1981.87	3.25	0	76.94	0	0.12	0	0	13.42	0	0	0	0	0	0	9.82	9.82
	Inverter	MV1-15	365315	4904994	2	0	0	100.3	100.3	1	2068.83	3.25	0	77.31	0	0.15	0	0	13.61	0	0	0	0	0	0	9.24	9.24
	Inverter	MV1-7	364925	4905782	2	0	0	97.3	97.3	1	1508.96	3.25	0	74.57	0	-0.03	0	0	12.35	0	0	0	0	0	0	10.42	10.42
	Inverter	MV3-13	367963	4907577	2	0	0	100.3	100.3	1	2225.56	3.25	0	77.95	0	0.19	0	0	13.92	0	0	0	0	0	0	8.25	8.25
	Inverter	MV3-7	367945	4907754	2	0	0	100.3	100.3	1	2260.74	3.25	0	78.09	0	0.2	0	0	13.99	0	0	0	0	0	0	8.03	8.03
	Inverter	MV3-3	367939	4907927	2	0	0	100.3	100.3	1	2318.51	3.25	0	78.3	0	0.21	0	0	14.11	0	0	0	0	0	0	7.69	7.69
	Inverter	MV1-10	365004	4905564	2	0	0	97.3	97.3	1	1649.95	3.25	0	75.35	0	0.02	0	0	12.69	0	0	0	0	0	0	9.26	9.26
	Inverter	MV3-17	368178	4907472	2	0	0	100.3	100.3	1	2411.25	3.25	0	78.64	0	0.24	0	0	14.29	0	0	0	0	0	0	7.14	7.14
	Inverter	MV3-10	368167	4907669	2	0	0	100.3	100.3	1	2446.67	3.25	0	78.77	0	0.24	0	0	14.36	0	0	0	0	0	0	6.94	6.94
	Inverter	MV3-6	368162	4907834	2	0	0	100.3	100.3	1	2491.99	3.25	0	78.93	0	0.26	0	0	14.44	0	0	0	0	0	0	6.68	6.68
	Inverter	MV3-19	368357	4907347	2	0	0	100.3	100.3	1	2567.29	3.25	0	79.19	0	0.27	0	0	14.59	0	0	0	0	0	0	6.27	6.27
	Inverter	MV3-15	368357	4907477	2	0	0	100.3	100.3	1	2587.97	3.25	0	79.26	0	0.28	0	0	14.62	0	0	0	0	0	0	6.15	6.15
	Inverter	MV3-11	368346	4907662	2	0	0	100.3	100.3	1	2617.57	3.25	0	79.36	0	0.28	0	0	14.68	0	0	0	0	0	0	5.99	5.99
	Inverter	MV3-21	368478	4907206	2	0	0	100.3	100.3	1	2672.8	3.25	0	79.54	0	0.3	0	0	14.78	0	0	0	0	0	0	5.7	5.7
	Inverter	MV3-16	368514	4907475	2	0	0	100.3	100.3	1	2742.1	3.25	0	79.76	0	0.31	0	0	14.91	0	0	0	0	0	0	5.33	5.33

Inverter	MV3-9	368512	4907703	2	0	0	100.3	100.3	1	2788.55	3.25	0	79.91	0	0.32	0	0	14.99	0	0	0	0	0	0	5.09	5.09
Inverter	MV3-20	368689	4907317	2	0	0	100.3	100.3	1	2893.2	3.25	0	80.23	0	0.34	0	0	15.18	0	0	0	0	0	0	4.56	4.56
Inverter	MV1-14	365163	4905049	2	0	0	97.3	97.3	1	2058.33	3.25	0	77.27	0	0.15	0	0	13.58	0	0	0	0	0	0	6.31	6.31
Inverter	MV3-14	368684	4907498	2	0	0	100.3	100.3	1	2913.53	3.25	0	80.29	0	0.35	0	0	15.22	0	0	0	0	0	0	4.46	4.46
Inverter	MV1-13	364731	4905241	2	0	0	97.3	97.3	1	2066.85	3.25	0	77.31	0	0.15	0	0	13.6	0	0	0	0	0	0	6.26	6.26
Inverter	MV3-8	368680	4907712	2	0	0	100.3	100.3	1	2953.61	3.25	0	80.41	0	0.35	0	0	15.29	0	0	0	0	0	0	4.26	4.26
Inverter	MV4-7	369035	4909001	2	0	0	100.3	100.3	1	3791.74	3.25	0	82.58	0	0.5	0	0	16.71	0	0	0	0	0	0	0.53	0.53
Inverter	MV4-4	369027	4909199	2	0	0	100.3	100.3	1	3893.15	3.25	0	82.81	0	0.51	0	0	16.88	0	0	0	0	0	0	0.12	0.12
Inverter	MV4-11	369264	4908855	2	0	0	100.3	100.3	1	3917.02	3.25	0	82.86	0	0.52	0	0	16.92	0	0	0	0	0	0	0.02	0.02
Inverter	MV4-10	369312	4908858	2	0	0	100.3	100.3	1	3960.78	3.25	0	82.96	0	0.52	0	0	16.99	0	0	0	0	0	0	-0.15	-0.15
Inverter	MV4-8	369256	4909001	2	0	0	100.3	100.3	1	3981.24	3.25	0	83	0	0.52	0	0	17.02	0	0	0	0	0	0	-0.23	-0.23
Inverter	MV4-1	369011	4909397	2	0	0	100.3	100.3	1	3995.4	3.25	0	83.03	0	0.53	0	0	17.04	0	0	0	0	0	0	-0.29	-0.29
Inverter	MV4-9	369289	4909001	2	0	0	100.3	100.3	1	4009.81	3.25	0	83.06	0	0.53	0	0	17.06	0	0	0	0	0	0	-0.34	-0.34
Inverter	MV4-6	369243	4909192	2	0	0	100.3	100.3	1	4069.52	3.25	0	83.19	0	0.54	0	0	17.16	0	0	0	0	0	0	-0.57	-0.57
Inverter	MV4-5	369289	4909199	2	0	0	100.3	100.3	1	4112.1	3.25	0	83.28	0	0.54	0	0	17.23	0	0	0	0	0	0	-0.74	-0.74
Inverter	MV4-3	369229	4909397	2	0	0	100.3	100.3	1	4171.94	3.25	0	83.41	0	0.55	0	0	17.32	0	0	0	0	0	0	-0.97	-0.97
Inverter	MV4-2	369272	4909397	2	0	0	100.3	100.3	1	4207.22	3.25	0	83.48	0	0.55	0	0	17.38	0	0	0	0	0	0	-1.1	-1.1
Inverter	MV6-2	370085	4907339	2	0	0	100.3	100.3	1	4285.27	3.25	0	83.64	0	0.56	0	0	17.5	0	0	0	0	0	0	-1.39	-1.39
Inverter	MV6-3	370207	4907140	2	0	0	100.3	100.3	1	4396.17	3.25	0	83.86	0	0.58	0	0	17.67	0	0	0	0	0	0	-1.8	-1.8
Inverter	MV5-5	370015	4908690	2	0	0	100.3	100.3	1	4528.37	3.25	0	84.12	0	0.59	0	0	17.87	0	0	0	0	0	0	-2.27	-2.27
Inverter	MV5-2	370006	4908853	2	0	0	100.3	100.3	1	4583.39	3.25	0	84.22	0	0.6	0	0	17.96	0	0	0	0	0	0	-2.47	-2.47
Inverter	MV5-1	370020	4909142	2	0	0	100.3	100.3	1	4720.01	3.25	0	84.48	0	0.61	0	0	18.16	0	0	0	0	0	0	-2.95	-2.95
Inverter	MV5-3	370231	4908851	2	0	0	100.3	100.3	1	4789.31	3.25	0	84.61	0	0.62	0	0	18.27	0	0	0	0	0	0	-3.18	-3.18
Inverter	MV5-4	370324	4908707	2	0	0	100.3	100.3	1	4822.46	3.25	0	84.67	0	0.63	0	0	18.32	0	0	0	0	0	0	-3.3	-3.3
DSTATCOM - 10 MVAR #2	DSAT2	369403	4908757	2.5	0	0	96.6	96.6	1	3996.01	3.5	0	83.03	0	3.57	0	0	2.84	0	0	0	0	0	0	7.19	7.19
Inverter	MV1-3	364440	4906039	2	0	0	89.1	89.1	1	1677.05	3.25	0	75.49	0	0.83	0	0	7.51	0	0	0	0	0	0	5.23	5.23
DSTATCOM - 10 MVAR #1	DSAT1	369437	4908757	2.5	0	0	96.6	96.6	1	4026.59	3.5	0	83.1	0	3.57	0	0	2.85	0	0	0	0	0	0	7.11	7.11
Inverter	MV6-1	370235	4907364	2	0	0	97.3	97.3	1	4436.79	3.25	0	83.94	0	0.58	0	0	17.73	0	0	0	0	0	0	-4.95	-4.95
Inverter Transformer	MV2-1 T	365836	4906816	2	0	0	69.4	69.4	1	187.43	3.25	0	56.46	0	0.72	0	0	1.85	0	0	0	0	0	0	10.32	10.32
Inverter	MV3-1	368156	4907976	2	0	0	89.1	89.1	1	2537.39	3.25	0	79.09	0	1.03	0	0	8.9	0	0	0	0	0	0	0.03	0.03
Inverter	MV3-5	368340	4907843	2	0	0	89.1	89.1	1	2663.27	3.25	0	79.51	0	1.07	0	0	9.1	0	0	0	0	0	0	-0.62	-0.62
Inverter	MV3-4	368502	4907925	2	0	0	89.1	89.1	1	2843	3.25	0	80.08	0	1.11	0	0	9.38	0	0	0	0	0	0	-1.5	-1.5
Inverter	MV3-22	368656	4907142	2	0	0	89.1	89.1	1	2846.45	3.25	0	80.09	0	1.11	0	0	9.38	0	0	0	0	0	0	-1.52	-1.52
SubstationTransformer	W_ST	369711.17	4906112.3	2.5	0	0	92	92	1	3998.42	4.25	0	83.04	0	1.36	2.61	0.28	7.36	0	0	0	0	0	0	-2.4	-2.4
Inverter	MV3-2	368671	4907928	2	0	0	89.1	89.1	1	3004.27	3.25	0	80.55	0	1.15	0	0	9.62	0	0	0	0	0	0	-2.27	-2.27
Gardiner Substation	G_Sub	366586.3	4903349.9	2.5	0	0	90.8	90.8	1	3733.07	4.25	0	82.44	0	1.31	2.79	0.35	7.01	0	0	0	0	0	0	-2.77	-2.77
Inverter	MV4-13	369051	4908605	2	0	0	89.1	89.1	1	3613.07	3.25	0	82.16	0	1.3	0	0	10.53	0	0	0	0	0	0	-4.92	-4.92
Westbrook Inverter Enclosur	W_INV2	369374	4906388	2	0	0	89.1	89.1	1	3613.55	3.25	0	82.16	0	1.3	0	0	10.53	0	0	0	0	0	0	-4.93	-4.93
Fixed Reactor Bank 1	FRB1	369378	4908755	6	0	0	89.8	89.8	1	3972.69	5.25	0	82.98	0	-0.73	0	0	7.33	0	0	0	0	0	0	0.19	0.19
Inverter	MV4-15	369176	4908481	2	0	0	89.1	89.1	1	3673.86	3.25	0	82.3	0	1.31	0	0	10.62	0	0	0	0	0	0	-5.17	-5.17
Inverter	MV4-14	369176	4908507	2	0	0	89.1	89.1	1	3684.4	3.25	0	82.33	0	1.31	0	0	10.63	0	0	0	0	0	0	-5.22	-5.22
Inverter	MV4-12	369043	4908803	2	0	0	89.1	89.1	1	3698.18	3.25	0	82.36	0	1.32	0	0	10.65	0	0	0	0	0	0	-5.27	-5.27
Fixed Reactor Bank 2	FRB2	369464	4908755	6	0	0	89.8	89.8	1	4050.04	5.25	0	83.15	0	-0.72	0	0	7.43	0	0	0	0	0	0	-0.09	-0.09
Westbrook Inverter Enclosur	W_INV3	369508	4906164	2	0	0	89.1	89.1	1	3788.84	3.25	0	82.57	0	1.34	0	0	10.78	0	0	0	0	0	0	-5.63	-5.63
Westbrook Inverter Enclosur	W_INV5	369719	4906574	2	0	0	89.1	89.1	1	3929.38	3.25	0	82.89	0	1.37	0	0	10.98	0	0	0	0	0	0	-6.19	-6.19
Westbrook Inverter Enclosur	W_INV4	369673	4906164	2	0	0	89.1	89.1	1	3949.92	3.25	0	82.93	0	1.38	0	0	11.01	0	0	0	0	0	0	-6.27	-6.27
Westbrook Inverter Enclosur	W_INV7	369780	4906417	2	0	0	89.1	89.1	1	4009.9	3.25	0	83.06	0	1.39	0	0	11.1	0	0	0	0	0	0	-6.5	-6.5
Westbrook Inverter Enclosur	W_INV6	369875	4906578	2	0	0	89.1	89.1	1	4084.07	3.25	0	83.22	0	1.41	0	0	11.2	0	0	0	0	0	0	-6.78	-6.78
Inverter	MV5-6	369982	4908507	2	0	0	89.1	89.1	1	4432.33	3.25	0	83.93	0	1.5	0	0	11.69	0	0	0	0	0	0	-8.07	-8.07
Inverters	G_Inv1	366526.4	4903225.8	2	0	0	87.7	87.7	1	3843	3.25	0	82.69	0	2.78	0	0	4.7	0	0	0	0	0	0	-2.52	-2.52
Inverters	G_Inv2	366676.9	4903239.1	2	0	0	87.7	87.7	1	3860.8	3.25	0	82.73	0	2.78	0	0	4.72	0	0	0	0	0	0	-2.58	-2.58
Inverters	G_Inv3	366583.7	4903091.4	2	0	0	87.7	87.7	1	3985.82	3.25	0	83.01	0	2.79	0	0	4.86	0	0	0	0	0	0	-3	-3
Inverters	G_Inv4	366732.8	4903105	2	0	0	87.7	87.7	1	4004.08	3.25	0	83.05	0	2.79	0	0	4.88	0	0	0	0	0	0	-3.06	-3.06
Inverters	G_Inv5	366638.5	4902958.1	2	0	0	87.7	87.7	1	4127.3	3.25	0	83.31	0	2.8	0	0	5.01	0	0	0	0	0	0	-3.47	-3.47
Inverters	G_Inv6	366788.5	4902972	2	0	0	87.7	87.7	1	4146.38	3.25	0	83.35	0	2.8	0	0	5.03	0	0	0	0	0	0	-3.53	-3.53
Inverters	G_Inv7	366694.6	4902824.7	2	0	0	87.7	87.7	1	4269.32	4.09	0	83.61	0	3.19	1.5	0	5.16	0	0	0	0	0	0	-5.8	-5.8
Inverters	G_Inv8	366844.5	4902838.5	2	0	0	87.7	87.7	1	4289.37	3.25	0	83.65	0	2.82	0	0	5.19	0	0	0	0	0	0	-3.99	-3.99
Westbrook Inverter Enclosur	W_INV1	369409	4906578	2	0	0	86.1	86.1	1	3620.91	3.25	0	82.18	0	1.3	0	0	10.54	0	0	0	0	0	0	-7.96	-7.96
Inverters	G_Inv9	366750.9	4902691.8	2	0	0	87.7	87.7	1	4411.06	3.25	0	83.89	0	2.82	0	0	5.32	0	0	0	0	0	0	-4.37	-4.37
Inverters	G_Inv10	366900.7	4902704.8	2	0	0	87.7	87.7	1	4432.72	3.25	0	83.93	0	2.83	0	0	5.34	0	0	0	0	0	0	-4.44	-4.44
Inverter	MV6-4	370250	4906966	2	0	0	86.1	86.1	1	4437.15	3.25	0	83.94	0	1.5	0	0	11.7	0	0	0	0	0	0	-11.08	-11.08
Westbrook Inverter Transfor	W_INVTR1	369403	4906578	2	0	0	78.2	78.2	1	3614.95	3.25	0	82.16	0	-2.87	0	0	1.91	0	0	0	0	0	0	-2.96	-2.96
Westbrook Inverter Transfor	W_INVTR2	369368	4906388	2	0	0	77.3	77.3	1	3607.63	3.25	0	82.14	0	-2.87	0	0	1.9	0	0	0	0	0	0	-3.84	-3.84
Westbrook Inverter Transfor	W_INVTR3	369514	4906164	2	0	0	77.3	77.3	1	3794.69	3.25	0	82.58	0	-2.92	0	0	1.98	0	0	0	0	0	0	-4.3	-4.3
Inverter Transformer	MV1-7 T	364919	4905782	2	0	0	69.4	69.4	1	1512.5	3.25	0	74.59	0	1.98	0	0	4.45	0	0	0	0	0	0	-11.67	-11.67
Westbrook Inverter Transfor	W_INVTR5	369725	4906574	2	0	0	77.3	77.3	1	3935.34	3.25	0	82.9	0	-2.95	0	0	2.03	0	0	0	0	0	0	-4.64	-4.64
Westbrook Inverter Transfor	W_INVTR4	369679	4906164	2	0	0	77.3	77.3	1	3955.78	3.25	0	82.94	0	-2.95	0	0	2.04	0	0	0	0	0	0	-4.69	-4.69
Westbrook Inverter Transfor	W_INVTR7	369786	4906417	2	0	0	77.3	77.3	1	4015.84	3.25	0	83.08	0	-2.97	0	0	2.06	0	0	0	0	0	0	-4.83	-4.83
Westbrook Inverter Transfor	W_INVTR6	369881	4906578	2	0	0	77.3	77.3	1	4090.04	3.25	0	83.23	0	-2.98	0	0	2.09	0	0	0	0	0	0	-5	-5
Inverter Transformer	MV1-10 T	365010	4905564	2	0	0	69.4	69.4	1	1647.02	3.25	0	75.33	0	2.04	0	0	4.6	0	0	0	0	0	0	-12.62	-12.62
Inverter Transformer	MV2-3 T	365814	4906641	2	0	0	56.1	56.1	1	361.01	3.25	0	62.15	0	-0.1	0	0	3.05	0	0	0	0	0	0	-9.04	-9.04
Inverter Transformer	MV2-2 T	365982	4906654	2	0	0	56.1	56.1	1	386.87	3.25	0	62.75	0	-0.11	0	0	3.16	0	0	0	0	0	0	-9.74	-9.74
Inverter Transformer	MV2-4 T	365590	4906628	2	0	0	56.1	56.1	1	435.44	3.25	0	63.78	0	-0.12	0	0	3.33	0	0	0	0	0	0	-10.94	-10.94
Inverter Transformer	MV1-14 T	365157	4905049	2	0	0	69.4	69.4	1	2060.23	3.25	0	77.28	0	2.2	0	0	5.03	0	0	0	0	0	0	-15.15	-15.15

	Inverter Transformer	MV1-13 T	364725	4905241	2	0	0	69.4	69.4	1	2069.99	3.25	0	77.32	0	2.2	0	0	5.04	0	0	0	0	0	0	-15.2	-15.2
	Inverter Transformer	MV6-4 T	370244	4906966	2	0	0	69.4	69.4	1	4431.15	3.25	0	83.93	0	2.89	0	0	6.99	0	0	0	0	0	0	-24.46	-24.46
	Inverter Transformer	MV6-1 T	370230	4907364	2	0	0	69.4	69.4	1	4431.81	3.25	0	83.93	0	2.89	0	0	6.99	0	0	0	0	0	0	-24.46	-24.46
	Inverter Transformer	MV1-1 T	364721	4906166	2	0	0	56.1	56.1	1	1375.27	3.25	0	73.77	0	0.15	0	0	5.75	0	0	0	0	0	0	-23.61	-23.61
	Inverter Transformer	MV1-2 T	364759	4906063	2	0	0	56.1	56.1	1	1411.61	3.25	0	73.99	0	0.16	0	0	5.83	0	0	0	0	0	0	-23.93	-23.93
	Inverter Transformer	MV1-4 T	364821	4905918	2	0	0	56.1	56.1	1	1469.4	3.25	0	74.34	0	0.19	0	0	5.95	0	0	0	0	0	0	-24.42	-24.42
	Inverter Transformer	MV1-5 T	364676	4905892	2	0	0	56.1	56.1	1	1588.99	3.25	0	75.02	0	0.23	0	0	6.21	0	0	0	0	0	0	-25.41	-25.41
	Inverter Transformer	MV1-3 T	364435	4906039	2	0	0	56.1	56.1	1	1681.15	3.25	0	75.51	0	0.27	0	0	6.4	0	0	0	0	0	0	-26.13	-26.13
	Inverter Transformer	MV1-8 T	364782	4905647	2	0	0	56.1	56.1	1	1702.64	3.25	0	75.62	0	0.28	0	0	6.44	0	0	0	0	0	0	-26.29	-26.29
	Inverter Transformer	MV1-6 T	364482	4905835	2	0	0	56.1	56.1	1	1770.16	3.25	0	75.96	0	0.31	0	0	6.58	0	0	0	0	0	0	-26.79	-26.79
	Inverter Transformer	MV1-12 T	365044	4905386	2	0	0	56.1	56.1	1	1789.64	3.25	0	76.06	0	0.32	0	0	6.62	0	0	0	0	0	0	-26.94	-26.94
	Inverter Transformer	MV1-9 T	364555	4905646	2	0	0	56.1	56.1	1	1849.68	3.25	0	76.34	0	0.34	0	0	6.74	0	0	0	0	0	0	-27.37	-27.37
	Inverter Transformer	MV3-12 T	367674	4907594	2	0	0	56.1	56.1	1	1952.89	3.25	0	76.81	0	0.38	0	0	6.95	0	0	0	0	0	0	-28.09	-28.09
	Inverter Transformer	MV1-11 T	364649	4905414	2	0	0	56.1	56.1	1	1968.92	3.25	0	76.88	0	0.39	0	0	6.98	0	0	0	0	0	0	-28.2	-28.2
	Inverter Transformer	MV3-18 T	367757	4907412	2	0	0	56.1	56.1	1	1986.77	3.25	0	76.96	0	0.4	0	0	7.02	0	0	0	0	0	0	-28.32	-28.32
	Inverter Transformer	MV1-15 T	365309	4904994	2	0	0	56.1	56.1	1	2070.29	3.25	0	77.32	0	0.43	0	0	7.18	0	0	0	0	0	0	-28.88	-28.88
	Inverter Transformer	MV3-13 T	367958	4907577	2	0	0	56.1	56.1	1	2220.73	3.25	0	77.93	0	0.5	0	0	7.47	0	0	0	0	0	0	-29.84	-29.84
	Inverter Transformer	MV3-7 T	367951	4907754	2	0	0	56.1	56.1	1	2266.4	3.25	0	78.11	0	0.52	0	0	7.56	0	0	0	0	0	0	-30.12	-30.12
	Inverter Transformer	MV3-3 T	367944	4907927	2	0	0	56.1	56.1	1	2323.1	3.25	0	78.32	0	0.54	0	0	7.66	0	0	0	0	0	0	-30.47	-30.47
	Inverter Transformer	MV3-17 T	368183	4907472	2	0	0	56.1	56.1	1	2416.16	3.25	0	78.66	0	0.58	0	0	7.84	0	0	0	0	0	0	-31.02	-31.02
	Inverter Transformer	MV3-10 T	368162	4907669	2	0	0	56.1	56.1	1	2441.86	3.25	0	78.75	0	0.59	0	0	7.88	0	0	0	0	0	0	-31.17	-31.17
	Inverter Transformer	MV3-6 T	368156	4907834	2	0	0	56.1	56.1	1	2486.34	3.25	0	78.91	0	0.61	0	0	7.96	0	0	0	0	0	0	-31.43	-31.43
	Inverter Transformer	MV3-1 T	368150	4907976	2	0	0	56.1	56.1	1	2531.85	3.25	0	79.07	0	0.63	0	0	8.05	0	0	0	0	0	0	-31.69	-31.69
	Inverter Transformer	MV3-19 T	368352	4907347	2	0	0	56.1	56.1	1	2562.33	3.25	0	79.17	0	0.64	0	0	8.1	0	0	0	0	0	0	-31.86	-31.86
	Inverter Transformer	MV3-15 T	368351	4907477	2	0	0	56.1	56.1	1	2582.07	3.25	0	79.24	0	0.65	0	0	8.14	0	0	0	0	0	0	-31.97	-31.97
	Inverter Transformer	MV3-11 T	368340	4907662	2	0	0	56.1	56.1	1	2611.77	3.25	0	79.34	0	0.66	0	0	8.19	0	0	0	0	0	0	-32.14	-32.14
	Inverter Transformer	MV3-5 T	368335	4907843	2	0	0	56.1	56.1	1	2658.53	3.25	0	79.49	0	0.68	0	0	8.27	0	0	0	0	0	0	-32.39	-32.39
	Inverter Transformer	MV3-21 T	368484	4907206	2	0	0	56.1	56.1	1	2678.78	3.25	0	79.56	0	0.69	0	0	8.31	0	0	0	0	0	0	-32.5	-32.5
	Inverter Transformer	MV3-16 T	368509	4907475	2	0	0	56.1	56.1	1	2737.18	3.25	0	79.75	0	0.72	0	0	8.41	0	0	0	0	0	0	-32.82	-32.82
	Inverter Transformer	MV3-9 T	368517	4907703	2	0	0	56.1	56.1	1	2793.39	3.25	0	79.92	0	0.74	0	0	8.51	0	0	0	0	0	0	-33.12	-33.12
	Inverter Transformer	MV3-4 T	368507	4907925	2	0	0	56.1	56.1	1	2847.73	3.25	0	80.09	0	0.77	0	0	8.61	0	0	0	0	0	0	-33.4	-33.4
	Inverter Transformer	MV3-22 T	368661	4907142	2	0	0	56.1	56.1	1	2851.44	3.25	0	80.1	0	0.77	0	0	8.61	0	0	0	0	0	0	-33.42	-33.42
	Inverter Transformer	MV3-20 T	368683	4907317	2	0	0	56.1	56.1	1	2887.24	3.25	0	80.21	0	0.78	0	0	8.68	0	0	0	0	0	0	-33.61	-33.61
	Inverter Transformer	MV3-14 T	368678	4907498	2	0	0	56.1	56.1	1	2907.62	3.25	0	80.27	0	0.79	0	0	8.71	0	0	0	0	0	0	-33.71	-33.71
	Inverter Transformer	MV3-8 T	368685	4907712	2	0	0	56.1	56.1	1	2958.46	3.25	0	80.42	0	0.81	0	0	8.8	0	0	0	0	0	0	-33.97	-33.97
	Inverter Transformer	MV3-2 T	368677	4907928	2	0	0	56.1	56.1	1	3009.98	3.25	0	80.57	0	0.83	0	0	8.88	0	0	0	0	0	0	-34.23	-34.23
	Inverter Transformer	MV4-13 T	369057	4908605	2	0	0	56.1	56.1	1	3618.45	3.25	0	82.17	0	1.09	0	0	9.87	0	0	0	0	0	0	-37.07	-37.07
	Inverter Transformer	MV4-15 T	369170	4908481	2	0	0	56.1	56.1	1	3668.36	3.25	0	82.29	0	1.11	0	0	9.95	0	0	0	0	0	0	-37.29	-37.29
	Inverter Transformer	MV4-14 T	369182	4908507	2	0	0	56.1	56.1	1	3689.88	3.25	0	82.34	0	1.12	0	0	9.98	0	0	0	0	0	0	-37.39	-37.39
	Inverter Transformer	MV4-12 T	369049	4908803	2	0	0	56.1	56.1	1	3703.42	3.25	0	82.37	0	1.12	0	0	10.01	0	0	0	0	0	0	-37.44	-37.44
	Inverter Transformer	MV4-7 T	369040	4909001	2	0	0	56.1	56.1	1	3795.99	3.25	0	82.59	0	1.16	0	0	10.15	0	0	0	0	0	0	-37.84	-37.84
	Inverter Transformer	MV4-4 T	369033	4909199	2	0	0	56.1	56.1	1	3898.1	3.25	0	82.82	0	1.2	0	0	10.3	0	0	0	0	0	0	-38.26	-38.26
	Inverter Transformer	MV4-11 T	369269	4908855	2	0	0	56.1	56.1	1	3921.42	3.25	0	82.87	0	1.21	0	0	10.34	0	0	0	0	0	0	-38.36	-38.36
	Inverter Transformer	MV4-10 T	369307	4908858	2	0	0	56.1	56.1	1	3956.36	3.25	0	82.95	0	1.23	0	0	10.39	0	0	0	0	0	0	-38.5	-38.5
	Inverter Transformer	MV4-8 T	369262	4909001	2	0	0	56.1	56.1	1	3986.43	3.25	0	83.01	0	1.24	0	0	10.43	0	0	0	0	0	0	-38.63	-38.63
	Inverter Transformer	MV4-1 T	369017	4909397	2	0	0	56.1	56.1	1	4000.21	3.25	0	83.04	0	1.24	0	0	10.46	0	0	0	0	0	0	-38.68	-38.68
	Inverter Transformer	MV4-9 T	369284	4909001	2	0	0	56.1	56.1	1	4005.48	3.25	0	83.05	0	1.25	0	0	10.46	0	0	0	0	0	0	-38.7	-38.7
	Inverter Transformer	MV4-6 T	369249	4909192	2	0	0	56.1	56.1	1	4074.58	3.25	0	83.2	0	1.27	0	0	10.57	0	0	0	0	0	0	-38.98	-38.98
	Inverter Transformer	MV4-5 T	369283	4909199	2	0	0	56.1	56.1	1	4107.03	3.25	0	83.27	0	1.29	0	0	10.61	0	0	0	0	0	0	-39.11	-39.11
	Inverter Transformer	MV4-3 T	369234	4909397	2	0	0	56.1	56.1	1	4176.04	3.25	0	83.42	0	1.31	0	0	10.71	0	0	0	0	0	0	-39.38	-39.38
	Inverter Transformer	MV4-2 T	369267	4909397	2	0	0	56.1	56.1	1	4203.11	3.25	0	83.47	0	1.32	0	0	10.75	0	0	0	0	0	0	-39.49	-39.49
	Inverter Transformer	MV6-2 T	370091	4907339	2	0	0	56.1	56.1	1	4291.25	3.25	0	83.65	0	1.36	0	0	10.88	0	0	0	0	0	0	-39.83	-39.83
	Inverter Transformer	MV6-3 T	370202	4907140	2	0	0	56.1	56.1	1	4391.17	3.25	0	83.85	0	1.4	0	0	11.02	0	0	0	0	0	0	-40.21	-40.21
	Inverter Transformer	MV5-6 T	369987	4908507	2	0	0	56.1	56.1	1	4437.04	3.25	0	83.94	0	1.42	0	0	11.09	0	0	0	0	0	0	-40.39	-40.39
	Inverter Transformer	MV5-5 T	370021	4908690	2	0	0	56.1	56.1	1	4533.94	3.25	0	84.13	0	1.45	0	0	11.22	0	0	0	0	0	0	-40.75	-40.75
	Inverter Transformer	MV5-2 T	370011	4908853	2	0	0	56.1	56.1	1	4587.96	3.25	0	84.23	0	1.47	0	0	11.3	0	0	0	0	0	0	-40.94	-40.94
	Inverter Transformer	MV5-1 T	370015	4909142	2	0	0	56.1	56.1	1	4715.55	3.25	0	84.47	0	1.52	0	0	11.47	0	0	0	0	0	0	-41.41	-41.41
	Inverter Transformer	MV5-3 T	370237	4908851	2	0	0	56.1	56.1	1	4794.85	3.25	0	84.62	0	1.55	0	0	11.58	0	0	0	0	0	0	-41.69	-41.69
	Inverter Transformer	MV5-4 T	370330	4908707	2	0	0	56.1	56.1	1	4828.08	3.25	0	84.68	0	1.56	0	0	11.63	0	0	0	0	0	0	-41.8	-41.8
	Line Reactor	NGR	369421	4908787.5	5	0	0	45.4	45.4	1	4025.63	5.25	0	83.1	0	3.29	1.34	0.1	1.65	0	0	0	0	0	0	-44.01	-44.01
Limit. Valu	0	0																								
Level D/N:	38.7982	38.7982																								

Receiver: Existing Noise Receptor
ID: S-R17
X: 365294
Y: 4906968
Z: 4.5
Ground: 0

ISO	Description	ID	X	Y	Z	Ground	ReflOrd	LxT	LxN	L/A	Dist.	hm	Freq	Adiv	K0b	Agr	Abar	z	Aatm	Afol	Ahous	Cmet	CmetN	Dc	RL	LtotT	LtotN
	Inverter	MV2-4	365586	4906624	2	0	0	100.3	100.3	1	451.23	3.25	0	64.09	0	-0.59	0	0	8.12	0	0	0	0	0	0	28.69	28.69
	Inverter	MV2-3	365820	4906641	2	0	0	100.3	100.3	1	619.36	3.25	0	66.84	0	-0.46	0	0	9.32	0	0	0	0	0	0	24.62	24.62
	Inverter	MV2-1	365842	4906816	2	0	0	97.3	97.3	1	568.7	3.25	0	66.1	0	-0.5	0	0	9.01	0	0	0	0	0	0	22.71	22.71

Inverter	MV1-1	364715	4906166	2	0	0	100.3	100.3	1	989.17	3.25	0	70.91	0	-0.25	0	0	10.88	0	0	0	0	0	0	18.78	18.78
Inverter	MV1-2	364753	4906063	2	0	0	100.3	100.3	1	1054.38	3.25	0	71.46	0	-0.22	0	0	11.09	0	0	0	0	0	0	17.99	17.99
Inverter	MV1-4	364815	4905918	2	0	0	100.3	100.3	1	1154.1	3.25	0	72.24	0	-0.17	0	0	11.39	0	0	0	0	0	0	16.85	16.85
Sol_Luce Substation	S_Substation	369426	4908792	3.5	0	0	112.1	112.1	1	4516.68	5.25	0	84.1	0	0.76	2.98	0.3	8.03	0	0	0	0	0	0	16.21	16.21
Inverter	MV1-5	364671	4905892	2	0	0	100.3	100.3	1	1243.35	3.25	0	72.89	0	-0.14	0	0	11.65	0	0	0	0	0	0	15.91	15.91
Inverter	MV1-6	364477	4905835	2	0	0	100.3	100.3	1	1396.85	3.25	0	73.9	0	-0.07	0	0	12.06	0	0	0	0	0	0	14.42	14.42
Inverter	MV1-8	364788	4905647	2	0	0	100.3	100.3	1	1414.6	3.25	0	74.01	0	-0.07	0	0	12.11	0	0	0	0	0	0	14.26	14.26
Inverter	MV1-9	364561	4905646	2	0	0	100.3	100.3	1	1511.61	3.25	0	74.59	0	-0.03	0	0	12.35	0	0	0	0	0	0	13.4	13.4
Inverter	MV1-12	365038	4905386	2	0	0	100.3	100.3	1	1602.58	3.25	0	75.1	0	0	0	0	12.57	0	0	0	0	0	0	12.64	12.64
Inverter	MV1-11	364655	4905414	2	0	0	100.3	100.3	1	1680.25	3.25	0	75.51	0	0.03	0	0	12.76	0	0	0	0	0	0	12.02	12.02
Inverter	MV1-7	364925	4905782	2	0	0	97.3	97.3	1	1242.08	3.25	0	72.88	0	-0.14	0	0	11.65	0	0	0	0	0	0	12.92	12.92
Inverter	MV1-15	365315	4904994	2	0	0	100.3	100.3	1	1974.11	3.25	0	76.91	0	0.12	0	0	13.41	0	0	0	0	0	0	9.88	9.88
Inverter	MV1-10	365004	4905564	2	0	0	97.3	97.3	1	1433.64	3.25	0	74.13	0	-0.06	0	0	12.16	0	0	0	0	0	0	11.08	11.08
Inverter	MV3-12	367668	4907594	2	0	0	100.3	100.3	1	2455.15	3.25	0	78.8	0	0.25	0	0	14.37	0	0	0	0	0	0	6.89	6.89
Inverter	MV3-18	367752	4907412	2	0	0	100.3	100.3	1	2497.78	3.25	0	78.95	0	0.26	0	0	14.45	0	0	0	0	0	0	6.65	6.65
Inverter	MV1-13	364731	4905241	2	0	0	97.3	97.3	1	1816.45	3.25	0	76.18	0	0.07	0	0	13.07	0	0	0	0	0	0	7.99	7.99
Inverter	MV1-14	365163	4905049	2	0	0	97.3	97.3	1	1923.47	3.25	0	76.68	0	0.11	0	0	13.3	0	0	0	0	0	0	7.22	7.22
Inverter	MV3-13	367963	4907577	2	0	0	100.3	100.3	1	2737.6	3.25	0	79.75	0	0.31	0	0	14.9	0	0	0	0	0	0	5.35	5.35
Inverter	MV2-2	365977	4906654	2	0	0	89.1	89.1	1	751.73	3.25	0	68.52	0	0.63	0	0	5.82	0	0	0	0	0	0	14.09	14.09
Inverter	MV3-7	367945	4907754	2	0	0	100.3	100.3	1	2765.07	3.25	0	79.83	0	0.31	0	0	14.95	0	0	0	0	0	0	5.21	5.21
Inverter	MV3-3	367939	4907927	2	0	0	100.3	100.3	1	2813.49	3.25	0	79.98	0	0.32	0	0	15.04	0	0	0	0	0	0	4.96	4.96
Inverter	MV3-17	368178	4907472	2	0	0	100.3	100.3	1	2927.71	3.25	0	80.33	0	0.35	0	0	15.24	0	0	0	0	0	0	4.39	4.39
Inverter	MV3-10	368167	4907669	2	0	0	100.3	100.3	1	2957.29	3.25	0	80.42	0	0.35	0	0	15.3	0	0	0	0	0	0	4.24	4.24
Inverter	MV3-6	368162	4907834	2	0	0	100.3	100.3	1	2995.89	3.25	0	80.53	0	0.36	0	0	15.36	0	0	0	0	0	0	4.06	4.06
Inverter	MV3-19	368357	4907347	2	0	0	100.3	100.3	1	3086.36	3.25	0	80.79	0	0.38	0	0	15.52	0	0	0	0	0	0	3.62	3.62
Inverter	MV3-15	368357	4907477	2	0	0	100.3	100.3	1	3105.01	3.25	0	80.84	0	0.38	0	0	15.56	0	0	0	0	0	0	3.53	3.53
Inverter	MV3-11	368346	4907662	2	0	0	100.3	100.3	1	3129.91	3.25	0	80.91	0	0.39	0	0	15.6	0	0	0	0	0	0	3.41	3.41
Inverter	MV3-21	368478	4907206	2	0	0	100.3	100.3	1	3192.88	3.25	0	81.08	0	0.4	0	0	15.71	0	0	0	0	0	0	3.12	3.12
Inverter	MV3-16	368514	4907475	2	0	0	100.3	100.3	1	3259.67	3.25	0	81.26	0	0.41	0	0	15.82	0	0	0	0	0	0	2.81	2.81
Inverter	MV3-9	368512	4907703	2	0	0	100.3	100.3	1	3300.87	3.25	0	81.37	0	0.42	0	0	15.89	0	0	0	0	0	0	2.63	2.63
Inverter	MV3-20	368689	4907317	2	0	0	100.3	100.3	1	3412.89	3.25	0	81.66	0	0.44	0	0	16.08	0	0	0	0	0	0	2.13	2.13
Inverter	MV3-14	368684	4907498	2	0	0	100.3	100.3	1	3431.18	3.25	0	81.71	0	0.44	0	0	16.12	0	0	0	0	0	0	2.05	2.05
Inverter	MV3-8	368680	4907712	2	0	0	100.3	100.3	1	3466.78	3.25	0	81.8	0	0.45	0	0	16.18	0	0	0	0	0	0	1.89	1.89
Inverter	MV4-7	369035	4909001	2	0	0	100.3	100.3	1	4257.72	3.25	0	83.58	0	0.56	0	0	17.46	0	0	0	0	0	0	-1.29	-1.29
Inverter	MV4-4	369027	4909199	2	0	0	100.3	100.3	1	4348.87	3.25	0	83.77	0	0.57	0	0	17.6	0	0	0	0	0	0	-1.63	-1.63
Inverter	MV4-11	369264	4908855	2	0	0	100.3	100.3	1	4395.64	3.25	0	83.86	0	0.58	0	0	17.67	0	0	0	0	0	0	-1.8	-1.8
Inverter	MV4-1	369011	4909397	2	0	0	100.3	100.3	1	4440.29	3.25	0	83.95	0	0.58	0	0	17.74	0	0	0	0	0	0	-1.96	-1.96
Inverter	MV4-10	369312	4908858	2	0	0	100.3	100.3	1	4440.32	3.25	0	83.95	0	0.58	0	0	17.74	0	0	0	0	0	0	-1.96	-1.96
Inverter	MV4-8	369256	4909001	2	0	0	100.3	100.3	1	4453.15	3.25	0	83.97	0	0.59	0	0	17.76	0	0	0	0	0	0	-2.01	-2.01
Inverter	MV4-9	369289	4909001	2	0	0	100.3	100.3	1	4482.54	3.25	0	84.03	0	0.59	0	0	17.8	0	0	0	0	0	0	-2.11	-2.11
Inverter	MV4-6	369243	4909192	2	0	0	100.3	100.3	1	4532.19	3.25	0	84.13	0	0.59	0	0	17.88	0	0	0	0	0	0	-2.29	-2.29
Inverter	MV4-5	369289	4909199	2	0	0	100.3	100.3	1	4575.74	3.25	0	84.21	0	0.6	0	0	17.95	0	0	0	0	0	0	-2.44	-2.44
Inverter	MV1-3	364440	4906039	2	0	0	89.1	89.1	1	1261.89	3.25	0	73.02	0	0.74	0	0	6.79	0	0	0	0	0	0	8.5	8.5
Inverter	MV4-3	369229	4909397	2	0	0	100.3	100.3	1	4624.31	3.25	0	84.3	0	0.6	0	0	18.02	0	0	0	0	0	0	-2.61	-2.61
Inverter	MV4-2	369272	4909397	2	0	0	100.3	100.3	1	4660.96	3.25	0	84.37	0	0.61	0	0	18.08	0	0	0	0	0	0	-2.74	-2.74
Inverter	MV6-2	370085	4907339	2	0	0	100.3	100.3	1	4805.34	3.25	0	84.63	0	0.62	0	0	18.29	0	0	0	0	0	0	-3.24	-3.24
Inverter	MV6-3	370207	4907140	2	0	0	100.3	100.3	1	4916.01	3.25	0	84.83	0	0.63	0	0	18.46	0	0	0	0	0	0	-3.61	-3.61
Inverter	MV5-5	370015	4908690	2	0	0	100.3	100.3	1	5025.25	3.25	0	85.02	0	0.64	0	0	18.62	0	0	0	0	0	0	-3.97	-3.97
Inverter	MV5-2	370006	4908853	2	0	0	100.3	100.3	1	5075.05	3.25	0	85.11	0	0.65	0	0	18.69	0	0	0	0	0	0	-4.14	-4.14
Inverter	MV5-1	370020	4909142	2	0	0	100.3	100.3	1	5202.05	3.25	0	85.32	0	0.66	0	0	18.87	0	0	0	0	0	0	-4.55	-4.55
Inverter	MV5-3	370231	4908851	2	0	0	100.3	100.3	1	5283.91	3.25	0	85.46	0	0.67	0	0	18.99	0	0	0	0	0	0	-4.81	-4.81
Inverter	MV5-4	370324	4908707	2	0	0	100.3	100.3	1	5322.13	3.25	0	85.52	0	0.67	0	0	19.05	0	0	0	0	0	0	-4.93	-4.93
DSTATCOM - 10 MVAR #2	DSAT2	369403	4908757	2.5	0	0	96.6	96.6	1	4481.56	3.5	0	84.03	0	3.63	0	0	3.09	0	0	0	0	0	0	5.88	5.88
DSTATCOM - 10 MVAR #1	DSAT1	369437	4908757	2.5	0	0	96.6	96.6	1	4512.76	3.5	0	84.09	0	3.63	0	0	3.11	0	0	0	0	0	0	5.8	5.8
Inverter	MV6-1	370235	4907364	2	0	0	97.3	97.3	1	4956.84	3.25	0	84.9	0	0.64	0	0	18.52	0	0	0	0	0	0	-6.75	-6.75
Inverter	MV3-1	368156	4907976	2	0	0	89.1	89.1	1	3034.32	3.25	0	80.64	0	1.16	0	0	9.67	0	0	0	0	0	0	-2.41	-2.41
Gardiner Substation	G_Sub	366586.3	4903349.9	2.5	0	0	90.8	90.8	1	3841.96	4.25	0	82.69	0	1.33	2.71	0.32	7.15	0	0	0	0	0	0	-3.1	-3.1
Inverter	MV3-5	368340	4907843	2	0	0	89.1	89.1	1	3169.19	3.25	0	81.02	0	1.19	0	0	9.87	0	0	0	0	0	0	-3.02	-3.02
SubstationTransformer	W_ST	369711.17	4906112.3	2.5	0	0	92	92	1	4499.3	4.25	0	84.06	0	1.5	2.47	0.28	8.01	0	0	0	0	0	0	-4.07	-4.07
Inverter	MV3-4	368502	4907925	2	0	0	89.1	89.1	1	3347.7	3.25	0	81.49	0	1.23	0	0	10.14	0	0	0	0	0	0	-3.81	-3.81
Inverter	MV3-22	368656	4907142	2	0	0	89.1	89.1	1	3366.5	3.25	0	81.54	0	1.24	0	0	10.17	0	0	0	0	0	0	-3.89	-3.89
Inverter	MV3-2	368671	4907928	2	0	0	89.1	89.1	1	3510.8	3.25	0	81.91	0	1.27	0	0	10.38	0	0	0	0	0	0	-4.5	-4.5
Inverter	MV4-13	369051	4908605	2	0	0	89.1	89.1	1	4098.15	3.25	0	83.25	0	1.42	0	0	11.22	0	0	0	0	0	0	-6.83	-6.83
Fixed Reactor Bank 1	FRB1	369378	4908755	6	0	0	89.8	89.8	1	4457.85	5.25	0	83.98	0	-0.65	0	0	7.96	0	0	0	0	0	0	-1.51	-1.51
Westbrook Inverter Enclosur	W_INV2	369374	4906388	2	0	0	89.1	89.1	1	4121.02	3.25	0	83.3	0	1.42	0	0	11.26	0	0	0	0	0	0	-6.92	-6.92
Inverter	MV4-15	369176	4908481	2	0	0	89.1	89.1	1	4166.43	3.25	0	83.4	0	1.43	0	0	11.32	0	0	0	0	0	0	-7.09	-7.09
Inverter	MV4-12	369043	4908803	2	0	0	89.1	89.1	1	4173.99	3.25	0	83.41	0	1.44	0	0	11.33	0	0	0	0	0	0	-7.12	-7.12
Inverter	MV4-14	369176	4908507	2	0	0	89.1	89.1	1	4175.94	3.25	0	83.42	0	1.44	0	0	11.33	0	0	0	0	0	0	-7.13	-7.13
Fixed Reactor Bank 2	FRB2	369464	4908755	6	0	0	89.8	89.8	1	4536.77	5.25	0	84.13	0	-0.64	0	0	8.06	0	0	0	0	0	0	-1.78	-1.78
Westbrook Inverter Enclosur	W_INV3	369508	4906164	2	0	0	89.1	89.1	1	4290.01	3.25	0	83.65	0	1.46	0	0	11.49	0	0	0	0	0	0	-7.55	-7.55
Westbrook Inverter Enclosur	W_INV5	369719	4906574	2	0	0	89.1	89.1	1	4442.51	3.25	0	83.95	0	1.5	0	0	11.71	0	0	0	0	0	0	-8.1	-8.1
Westbrook Inverter Enclosur	W_INV4	369673	4906164	2	0	0	89.1	89.1	1	4452.2	3.25	0	83.97	0	1.5	0	0	11.72	0	0	0	0	0	0	-8.14	-8.14
Westbrook Inverter Enclosur	W_INV7	369780	4906417	2	0	0	89.1	89.1	1	4519.71	3.25	0	84.1	0	1.52	0	0	11.81	0	0	0	0	0	0	-8.38	-8.38
Westbrook Inverter Enclosur	W_INV6	369875	4906578	2	0	0	89.1	89.1	1	4597.57	3.25	0	84.25	0	1.54	0	0	11.92	0	0	0	0	0	0	-8.65	-8.65

Inverters	G_Inv1	366526.4	4903225.8	2	0	0	87.7	87.7	1	3939.91	3.25	0	82.91	0	2.79	0	0	4.81	0	0	0	0	0	0	-2.84	-2.84
Inverters	G_Inv2	366676.9	4903239.1	2	0	0	87.7	87.7	1	3977.07	3.25	0	82.99	0	2.79	0	0	4.85	0	0	0	0	0	0	-2.97	-2.97
Inverters	G_Inv3	366583.7	4903091.4	2	0	0	87.7	87.7	1	4085.51	3.25	0	83.22	0	2.8	0	0	4.97	0	0	0	0	0	0	-3.33	-3.33
Inverters	G_Inv4	366732.8	4903105	2	0	0	87.7	87.7	1	4122.25	3.25	0	83.3	0	2.8	0	0	5.01	0	0	0	0	0	0	-3.45	-3.45
Inverter	MV5-6	369982	4908507	2	0	0	89.1	89.1	1	4934.15	3.25	0	84.86	0	1.62	0	0	12.38	0	0	0	0	0	0	-9.81	-9.81
Inverters	G_Inv5	366638.5	4902958.1	2	0	0	87.7	87.7	1	4229.3	3.25	0	83.53	0	2.81	0	0	5.12	0	0	0	0	0	0	-3.8	-3.8
Inverters	G_Inv6	366788.5	4902972	2	0	0	87.7	87.7	1	4266.33	3.25	0	83.6	0	2.81	0	0	5.16	0	0	0	0	0	0	-3.91	-3.91
Inverters	G_Inv7	366694.6	4902824.7	2	0	0	87.7	87.7	1	4373.63	3.25	0	83.82	0	2.82	0	0	5.28	0	0	0	0	0	0	-4.25	-4.25
Inverters	G_Inv8	366844.5	4902838.5	2	0	0	87.7	87.7	1	4410.99	3.25	0	83.89	0	2.82	0	0	5.32	0	0	0	0	0	0	-4.37	-4.37
Inverters	G_Inv9	366750.9	4902691.8	2	0	0	87.7	87.7	1	4517.57	3.25	0	84.1	0	2.83	0	0	5.43	0	0	0	0	0	0	-4.7	-4.7
Inverters	G_Inv10	366900.7	4902704.8	2	0	0	87.7	87.7	1	4555.92	3.25	0	84.17	0	2.84	0	0	5.47	0	0	0	0	0	0	-4.82	-4.82
Inverter Transformer	MV2-1 T	365836	4906816	2	0	0	69.4	69.4	1	562.92	3.25	0	66.01	0	1.15	0	0	3.09	0	0	0	0	0	0	-0.9	-0.9
Westbrook Inverter Enclosur	W_INV1	369409	4906578	2	0	0	86.1	86.1	1	4133.44	3.25	0	83.33	0	1.43	0	0	11.27	0	0	0	0	0	0	-9.97	-9.97
Inverter	MV6-4	370250	4906966	2	0	0	86.1	86.1	1	4956	3.25	0	84.9	0	1.63	0	0	12.4	0	0	0	0	0	0	-12.88	-12.88
Inverter Transformer	MV1-7 T	364919	4905782	2	0	0	69.4	69.4	1	1243.88	3.25	0	72.9	0	1.85	0	0	4.13	0	0	0	0	0	0	-9.52	-9.52
Inverter Transformer	MV1-10 T	365010	4905564	2	0	0	69.4	69.4	1	1432.44	3.25	0	74.12	0	1.94	0	0	4.36	0	0	0	0	0	0	-11.07	-11.07
Westbrook Inverter Transfor	W_INVTR1	369403	4906578	2	0	0	78.2	78.2	1	4127.47	3.25	0	83.31	0	-2.99	0	0	2.1	0	0	0	0	0	0	-4.18	-4.18
Westbrook Inverter Transfor	W_INVTR2	369368	4906388	2	0	0	77.3	77.3	1	4115.08	3.25	0	83.29	0	-2.99	0	0	2.1	0	0	0	0	0	0	-5.05	-5.05
Westbrook Inverter Transfor	W_INVTR3	369514	4906164	2	0	0	77.3	77.3	1	4295.91	3.25	0	83.66	0	-3.03	0	0	2.16	0	0	0	0	0	0	-5.45	-5.45
Westbrook Inverter Transfor	W_INVTR5	369725	4906574	2	0	0	77.3	77.3	1	4448.48	3.25	0	83.96	0	-3.06	0	0	2.22	0	0	0	0	0	0	-5.78	-5.78
Westbrook Inverter Transfor	W_INVTR4	369679	4906164	2	0	0	77.3	77.3	1	4458.1	3.25	0	83.98	0	-3.06	0	0	2.22	0	0	0	0	0	0	-5.8	-5.8
Westbrook Inverter Transfor	W_INVTR7	369786	4906417	2	0	0	77.3	77.3	1	4525.67	3.25	0	84.11	0	-3.08	0	0	2.25	0	0	0	0	0	0	-5.94	-5.94
Inverter Transformer	MV1-13 T	364725	4905241	2	0	0	69.4	69.4	1	1818.32	3.25	0	76.19	0	2.1	0	0	4.78	0	0	0	0	0	0	-13.73	-13.73
Westbrook Inverter Transfor	W_INVTR6	369881	4906578	2	0	0	77.3	77.3	1	4603.55	3.25	0	84.26	0	-3.1	0	0	2.27	0	0	0	0	0	0	-6.1	-6.1
Inverter Transformer	MV1-14 T	365157	4905049	2	0	0	69.4	69.4	1	1923.89	3.25	0	76.68	0	2.14	0	0	4.89	0	0	0	0	0	0	-14.37	-14.37
Inverter Transformer	MV2-4 T	365590	4906628	2	0	0	56.1	56.1	1	450.8	3.25	0	64.08	0	-0.12	0	0	3.39	0	0	0	0	0	0	-11.29	-11.29
Inverter Transformer	MV2-3 T	365814	4906641	2	0	0	56.1	56.1	1	614.28	3.25	0	66.77	0	-0.1	0	0	3.9	0	0	0	0	0	0	-14.5	-14.5
Inverter Transformer	MV2-2 T	365982	4906654	2	0	0	56.1	56.1	1	756.27	3.25	0	68.57	0	-0.07	0	0	4.28	0	0	0	0	0	0	-16.73	-16.73
Inverter Transformer	MV1-1 T	364721	4906166	2	0	0	56.1	56.1	1	985.67	3.25	0	70.87	0	0.01	0	0	4.85	0	0	0	0	0	0	-19.68	-19.68
Inverter Transformer	MV1-2 T	364759	4906063	2	0	0	56.1	56.1	1	1051.31	3.25	0	71.43	0	0.03	0	0	5.01	0	0	0	0	0	0	-20.42	-20.42
Inverter Transformer	MV6-4 T	370244	4906966	2	0	0	69.4	69.4	1	4950	3.25	0	84.89	0	3	0	0	7.35	0	0	0	0	0	0	-25.89	-25.89
Inverter Transformer	MV6-1 T	370230	4907364	2	0	0	69.4	69.4	1	4951.86	3.25	0	84.9	0	3	0	0	7.35	0	0	0	0	0	0	-25.9	-25.9
Inverter Transformer	MV1-4 T	364821	4905918	2	0	0	56.1	56.1	1	1151.62	3.25	0	72.23	0	0.07	0	0	5.24	0	0	0	0	0	0	-21.48	-21.48
Inverter Transformer	MV1-5 T	364676	4905892	2	0	0	56.1	56.1	1	1240.85	3.25	0	72.87	0	0.1	0	0	5.45	0	0	0	0	0	0	-22.36	-22.36
Inverter Transformer	MV1-3 T	364435	4906039	2	0	0	56.1	56.1	1	1265.28	3.25	0	73.04	0	0.11	0	0	5.5	0	0	0	0	0	0	-22.6	-22.6
Inverter Transformer	MV1-6 T	364482	4905835	2	0	0	56.1	56.1	1	1393.93	3.25	0	73.88	0	0.16	0	0	5.79	0	0	0	0	0	0	-23.77	-23.77
Inverter Transformer	MV1-8 T	364782	4905647	2	0	0	56.1	56.1	1	1416.75	3.25	0	74.03	0	0.17	0	0	5.84	0	0	0	0	0	0	-23.97	-23.97
Inverter Transformer	MV1-9 T	364555	4905646	2	0	0	56.1	56.1	1	1514.53	3.25	0	74.61	0	0.2	0	0	6.05	0	0	0	0	0	0	-24.8	-24.8
Inverter Transformer	MV1-12 T	365044	4905386	2	0	0	56.1	56.1	1	1601.63	3.25	0	75.09	0	0.24	0	0	6.23	0	0	0	0	0	0	-25.51	-25.51
Inverter Transformer	MV1-11 T	364649	4905414	2	0	0	56.1	56.1	1	1682.54	3.25	0	75.52	0	0.27	0	0	6.4	0	0	0	0	0	0	-26.14	-26.14
Inverter Transformer	MV1-15 T	365309	4904994	2	0	0	56.1	56.1	1	1974.06	3.25	0	76.91	0	0.39	0	0	6.99	0	0	0	0	0	0	-28.23	-28.23
Inverter Transformer	MV3-12 T	367674	4907594	2	0	0	56.1	56.1	1	2460.95	3.25	0	78.82	0	0.6	0	0	7.92	0	0	0	0	0	0	-31.28	-31.28
Inverter Transformer	MV3-18 T	367757	4907412	2	0	0	56.1	56.1	1	2502.7	3.25	0	78.97	0	0.62	0	0	7.99	0	0	0	0	0	0	-31.52	-31.52
Inverter Transformer	MV3-13 T	367958	4907577	2	0	0	56.1	56.1	1	2732.72	3.25	0	79.73	0	0.72	0	0	8.41	0	0	0	0	0	0	-32.8	-32.8
Inverter Transformer	MV3-7 T	367951	4907754	2	0	0	56.1	56.1	1	2770.82	3.25	0	79.85	0	0.73	0	0	8.47	0	0	0	0	0	0	-33	-33
Inverter Transformer	MV3-3 T	367944	4907927	2	0	0	56.1	56.1	1	2818.19	3.25	0	80	0	0.75	0	0	8.56	0	0	0	0	0	0	-33.25	-33.25
Inverter Transformer	MV3-17 T	368183	4907472	2	0	0	56.1	56.1	1	2932.63	3.25	0	80.35	0	0.8	0	0	8.75	0	0	0	0	0	0	-33.84	-33.84
Inverter Transformer	MV3-10 T	368162	4907669	2	0	0	56.1	56.1	1	2952.43	3.25	0	80.4	0	0.81	0	0	8.79	0	0	0	0	0	0	-33.94	-33.94
Inverter Transformer	MV3-6 T	368156	4907834	2	0	0	56.1	56.1	1	2990.15	3.25	0	80.51	0	0.83	0	0	8.85	0	0	0	0	0	0	-34.13	-34.13
Inverter Transformer	MV3-1 T	368150	4907976	2	0	0	56.1	56.1	1	3028.66	3.25	0	80.63	0	0.84	0	0	8.92	0	0	0	0	0	0	-34.33	-34.33
Inverter Transformer	MV3-19 T	368352	4907347	2	0	0	56.1	56.1	1	3081.4	3.25	0	80.77	0	0.86	0	0	9.01	0	0	0	0	0	0	-34.59	-34.59
Inverter Transformer	MV3-15 T	368351	4907477	2	0	0	56.1	56.1	1	3099.09	3.25	0	80.82	0	0.87	0	0	9.03	0	0	0	0	0	0	-34.67	-34.67
Inverter Transformer	MV3-11 T	368340	4907662	2	0	0	56.1	56.1	1	3124.06	3.25	0	80.89	0	0.88	0	0	9.08	0	0	0	0	0	0	-34.8	-34.8
Inverter Transformer	MV3-5 T	368335	4907843	2	0	0	56.1	56.1	1	3164.38	3.25	0	81.01	0	0.9	0	0	9.14	0	0	0	0	0	0	-34.99	-34.99
Inverter Transformer	MV3-21 T	368484	4907206	2	0	0	56.1	56.1	1	3198.87	3.25	0	81.1	0	0.91	0	0	9.2	0	0	0	0	0	0	-35.16	-35.16
Inverter Transformer	MV3-16 T	368509	4907475	2	0	0	56.1	56.1	1	3254.73	3.25	0	81.25	0	0.94	0	0	9.29	0	0	0	0	0	0	-35.42	-35.42
Inverter Transformer	MV3-9 T	368517	4907703	2	0	0	56.1	56.1	1	3305.75	3.25	0	81.39	0	0.96	0	0	9.38	0	0	0	0	0	0	-35.66	-35.66
Inverter Transformer	MV3-4 T	368507	4907925	2	0	0	56.1	56.1	1	3352.5	3.25	0	81.51	0	0.98	0	0	9.45	0	0	0	0	0	0	-35.88	-35.88
Inverter Transformer	MV3-22 T	368661	4907142	2	0	0	56.1	56.1	1	3371.49	3.25	0	81.56	0	0.99	0	0	9.48	0	0	0	0	0	0	-35.97	-35.97
Inverter Transformer	MV3-20 T	368683	4907317	2	0	0	56.1	56.1	1	3406.92	3.25	0	81.65	0	1	0	0	9.54	0	0	0	0	0	0	-36.13	-36.13
Inverter Transformer	MV3-14 T	368678	4907498	2	0	0	56.1	56.1	1	3425.25	3.25	0	81.69	0	1.01	0	0	9.57	0	0	0	0	0	0	-36.21	-36.21
Inverter Transformer	MV3-8 T	368685	4907712	2	0	0	56.1	56.1	1	3471.66	3.25	0	81.81	0	1.03	0	0	9.64	0	0	0	0	0	0	-36.42	-36.42
Inverter Transformer	MV3-2 T	368677	4907928	2	0	0	56.1	56.1	1	3516.57	3.25	0	81.92	0	1.05	0	0	9.71	0	0	0	0	0	0	-36.62	-36.62
Inverter Transformer	MV4-13 T	369057	4908605	2	0	0	56.1	56.1	1	4103.65	3.25	0	83.26	0	1.29	0	0	10.61	0	0	0	0	0	0	-39.1	-39.1
Inverter Transformer	MV4-15 T	369170	4908481	2	0	0	56.1	56.1	1	4160.84	3.25	0	83.38	0	1.31	0	0	10.69	0	0	0	0	0	0	-39.32	-39.32
Inverter Transformer	MV4-12 T	369049	4908803	2	0	0	56.1	56.1	1	4179.38	3.25	0	83.42	0	1.32	0	0	10.72	0	0	0	0	0	0	-39.4	-39.4
Inverter Transformer	MV4-14 T	369182	4908507	2	0	0	56.1	56.1	1	4181.52	3.25	0	83.43	0	1.32	0	0	10.72	0	0	0	0	0	0	-39.41	-39.41
Inverter Transformer	MV4-7 T	369040	4909001	2	0	0	56.1	56.1	1	4262.11	3.25	0	83.59	0	1.35	0	0	10.84	0	0	0	0	0	0	-39.72	-39.72
Inverter Transformer	MV4-4 T	369033	4909199	2	0	0	56.1	56.1	1	4354.02	3.25	0	83.78	0	1.38	0	0	10.97	0	0	0	0	0	0	-40.07	-40.07
Inverter Transformer	MV4-11 T	369269	4908855	2	0	0	56.1	56.1	1	4400.16	3.25	0	83.87	0	1.4	0	0	11.04	0	0	0	0	0	0	-40.25	-40.25
Inverter Transformer	MV4-10 T	369307	4908858	2	0	0	56.1	56.1	1	4435.79	3.25	0	83.94	0	1.41	0	0	11.09	0	0	0	0	0	0	-40.38	-40.38
Inverter Transformer	MV4-1 T	369017	4909397	2	0	0	56.1	56.1	1	4445.31	3.25	0	83.96	0	1.42	0	0	11.1	0	0	0	0	0	0	-40.42	-40.42
Inverter Transformer	MV4-8 T	369262	4909001	2	0	0	56.1	56.1	1	4458.49	3.25	0	83.98	0	1.42	0	0	11.12	0	0	0	0	0	0	-40.47	-40.47
Inverter Transformer	MV4-9 T	369284	4909001	2	0	0	56.1	56.1	1	4478.08	3.25	0	84.02	0	1.43	0	0	11.14	0	0	0	0	0	0	-40.54	-40.54

	Inverter Transformer	MV4-6 T	369249	4909192	2	0	0	56.1	56.1	1	4537.42	3.25	0	84.14	0	1.45	0	0	11.23	0	0	0	0	0	0	-40.76	-40.76
	Inverter Transformer	MV4-5 T	369283	4909199	2	0	0	56.1	56.1	1	4570.5	3.25	0	84.2	0	1.47	0	0	11.27	0	0	0	0	0	0	-40.88	-40.88
	Inverter Transformer	MV4-3 T	369234	4909397	2	0	0	56.1	56.1	1	4628.57	3.25	0	84.31	0	1.49	0	0	11.35	0	0	0	0	0	0	-41.09	-41.09
	Inverter Transformer	MV4-2 T	369267	4909397	2	0	0	56.1	56.1	1	4656.69	3.25	0	84.36	0	1.5	0	0	11.39	0	0	0	0	0	0	-41.19	-41.19
	Inverter Transformer	MV6-2 T	370091	4907339	2	0	0	56.1	56.1	1	4811.33	3.25	0	84.65	0	1.56	0	0	11.6	0	0	0	0	0	0	-41.75	-41.75
	Inverter Transformer	MV6-3 T	370202	4907140	2	0	0	56.1	56.1	1	4911.01	3.25	0	84.82	0	1.59	0	0	11.74	0	0	0	0	0	0	-42.09	-42.09
	Inverter Transformer	MV5-6 T	369987	4908507	2	0	0	56.1	56.1	1	4938.9	3.25	0	84.87	0	1.6	0	0	11.77	0	0	0	0	0	0	-42.19	-42.19
	Inverter Transformer	MV5-5 T	370021	4908690	2	0	0	56.1	56.1	1	5030.89	3.25	0	85.03	0	1.64	0	0	11.89	0	0	0	0	0	0	-42.51	-42.51
	Inverter Transformer	MV5-2 T	370011	4908853	2	0	0	56.1	56.1	1	5079.7	3.25	0	85.12	0	1.65	0	0	11.96	0	0	0	0	0	0	-42.67	-42.67
	Inverter Transformer	MV5-1 T	370015	4909142	2	0	0	56.1	56.1	1	5197.51	3.25	0	85.32	0	1.7	0	0	12.11	0	0	0	0	0	0	-43.07	-43.07
	Inverter Transformer	MV5-3 T	370237	4908851	2	0	0	56.1	56.1	1	5289.51	3.25	0	85.47	0	1.73	0	0	12.23	0	0	0	0	0	0	-43.37	-43.37
	Inverter Transformer	MV5-4 T	370330	4908707	2	0	0	56.1	56.1	1	5327.8	3.25	0	85.53	0	1.74	0	0	12.28	0	0	0	0	0	0	-43.49	-43.49
	Line Reactor	NGR	369421	4908787.5	5	0	0	45.4	45.4	1	4510.29	5.25	0	84.08	0	3.27	1.35	0.1	1.85	0	0	0	0	0	0	-45.19	-45.19
Limit. Valu	0	0																								
Level D/N:	32.4472	32.4472																								

Receiver: Existing Noise Receptor
ID: S-R18
X: 365422
Y: 4906972
Z: 4.5
Ground: 0

ISO	Description	ID	X	Y	Z	Ground	ReflOrd	LxT	LxN	L/A	Dist.	hm	Freq	Adiv	K0b	Agr	Abar	z	Aatm	Afol	Ahous	Cmet	CmetN	Dc	RL	LtotT	LtotN
	Inverter	MV2-4	365586	4906624	2	0	0	100.3	100.3	1	384.72	3.25	0	62.7	0	-0.63	0	0	7.46	0	0	0	0	0	0	30.78	30.78
	Inverter	MV2-3	365820	4906641	2	0	0	100.3	100.3	1	517.66	3.25	0	65.28	0	-0.54	0	0	8.66	0	0	0	0	0	0	26.91	26.91
	Inverter	MV2-1	365842	4906816	2	0	0	97.3	97.3	1	448.04	3.25	0	64.03	0	-0.59	0	0	8.09	0	0	0	0	0	0	25.78	25.78
	Inverter	MV1-1	364715	4906166	2	0	0	100.3	100.3	1	1072.14	3.25	0	71.61	0	-0.21	0	0	11.14	0	0	0	0	0	0	17.78	17.78
	Inverter	MV1-2	364753	4906063	2	0	0	100.3	100.3	1	1128.65	3.25	0	72.05	0	-0.19	0	0	11.32	0	0	0	0	0	0	17.13	17.13
	Sol_Luce Substation	S_Substation	369426	4908792	3.5	0	0	112.1	112.1	1	4398.23	5.25	0	83.87	0	0.72	3.01	0.3	7.88	0	0	0	0	0	0	16.6	16.6
	Inverter	MV1-4	364815	4905918	2	0	0	100.3	100.3	1	1216.29	3.25	0	72.7	0	-0.15	0	0	11.57	0	0	0	0	0	0	16.19	16.19
	Inverter	MV1-5	364671	4905892	2	0	0	100.3	100.3	1	1315.45	3.25	0	73.38	0	-0.11	0	0	11.85	0	0	0	0	0	0	15.19	15.19
	Inverter	MV1-8	364788	4905647	2	0	0	100.3	100.3	1	1468.87	3.25	0	74.34	0	-0.05	0	0	12.25	0	0	0	0	0	0	13.77	13.77
	Inverter	MV1-6	364477	4905835	2	0	0	100.3	100.3	1	1478.45	3.25	0	74.4	0	-0.04	0	0	12.27	0	0	0	0	0	0	13.69	13.69
	Inverter	MV1-9	364561	4905646	2	0	0	100.3	100.3	1	1581.01	3.25	0	74.98	0	0	0	0	12.52	0	0	0	0	0	0	12.81	12.81
	Inverter	MV1-12	365038	4905386	2	0	0	100.3	100.3	1	1631.83	3.25	0	75.25	0	0.01	0	0	12.64	0	0	0	0	0	0	12.4	12.4
	Inverter	MV1-11	364655	4905414	2	0	0	100.3	100.3	1	1736.57	3.25	0	75.79	0	0.05	0	0	12.89	0	0	0	0	0	0	11.58	11.58
	Inverter	MV1-7	364925	4905782	2	0	0	97.3	97.3	1	1289.62	3.25	0	73.21	0	-0.12	0	0	11.78	0	0	0	0	0	0	12.44	12.44
	Inverter	MV1-15	365315	4904994	2	0	0	100.3	100.3	1	1980.89	3.25	0	76.94	0	0.12	0	0	13.42	0	0	0	0	0	0	9.83	9.83
	Inverter	MV1-10	365004	4905564	2	0	0	97.3	97.3	1	1468.74	3.25	0	74.34	0	-0.05	0	0	12.25	0	0	0	0	0	0	10.77	10.77
	Inverter	MV3-12	367668	4907594	2	0	0	100.3	100.3	1	2330.54	3.25	0	78.35	0	0.22	0	0	14.13	0	0	0	0	0	0	7.61	7.61
	Inverter	MV2-2	365977	4906654	2	0	0	89.1	89.1	1	639.65	3.25	0	67.12	0	0.59	0	0	5.56	0	0	0	0	0	0	15.79	15.79
	Inverter	MV3-18	367752	4907412	2	0	0	100.3	100.3	1	2371.18	3.25	0	78.5	0	0.23	0	0	14.21	0	0	0	0	0	0	7.38	7.38
	Inverter	MV3-13	367963	4907577	2	0	0	100.3	100.3	1	2612.03	3.25	0	79.34	0	0.28	0	0	14.67	0	0	0	0	0	0	6.02	6.02
	Inverter	MV1-13	364731	4905241	2	0	0	97.3	97.3	1	1863.83	3.25	0	76.41	0	0.09	0	0	13.17	0	0	0	0	0	0	7.65	7.65
	Inverter	MV3-7	367945	4907754	2	0	0	100.3	100.3	1	2641.41	3.25	0	79.44	0	0.29	0	0	14.72	0	0	0	0	0	0	5.86	5.86
	Inverter	MV3-3	367939	4907927	2	0	0	100.3	100.3	1	2692.08	3.25	0	79.6	0	0.3	0	0	14.82	0	0	0	0	0	0	5.59	5.59
	Inverter	MV1-14	365163	4905049	2	0	0	97.3	97.3	1	1940.36	3.25	0	76.76	0	0.11	0	0	13.34	0	0	0	0	0	0	7.11	7.11
	Inverter	MV3-17	368178	4907472	2	0	0	100.3	100.3	1	2800.99	3.25	0	79.95	0	0.32	0	0	15.02	0	0	0	0	0	0	5.03	5.03
	Inverter	MV3-10	368167	4907669	2	0	0	100.3	100.3	1	2832.11	3.25	0	80.04	0	0.33	0	0	15.07	0	0	0	0	0	0	4.87	4.87
	Inverter	MV3-6	368162	4907834	2	0	0	100.3	100.3	1	2872.39	3.25	0	80.16	0	0.34	0	0	15.14	0	0	0	0	0	0	4.67	4.67
	Inverter	MV3-19	368357	4907347	2	0	0	100.3	100.3	1	2958.86	3.25	0	80.42	0	0.35	0	0	15.3	0	0	0	0	0	0	4.24	4.24
	Inverter	MV3-15	368357	4907477	2	0	0	100.3	100.3	1	2978.13	3.25	0	80.48	0	0.36	0	0	15.33	0	0	0	0	0	0	4.14	4.14
	Inverter	MV3-11	368346	4907662	2	0	0	100.3	100.3	1	3004.31	3.25	0	80.55	0	0.36	0	0	15.38	0	0	0	0	0	0	4.01	4.01
	Inverter	MV3-21	368478	4907206	2	0	0	100.3	100.3	1	3064.95	3.25	0	80.73	0	0.37	0	0	15.49	0	0	0	0	0	0	3.72	3.72
	Inverter	MV3-16	368514	4907475	2	0	0	100.3	100.3	1	3132.65	3.25	0	80.92	0	0.39	0	0	15.6	0	0	0	0	0	0	3.4	3.4
	Inverter	MV3-9	368512	4907703	2	0	0	100.3	100.3	1	3175.29	3.25	0	81.04	0	0.39	0	0	15.68	0	0	0	0	0	0	3.2	3.2
	Inverter	MV3-20	368689	4907317	2	0	0	100.3	100.3	1	3285.17	3.25	0	81.33	0	0.41	0	0	15.87	0	0	0	0	0	0	2.7	2.7
	Inverter	MV3-14	368684	4907498	2	0	0	100.3	100.3	1	3304.14	3.25	0	81.38	0	0.42	0	0	15.9	0	0	0	0	0	0	2.61	2.61
	Inverter	MV3-8	368680	4907712	2	0	0	100.3	100.3	1	3340.98	3.25	0	81.48	0	0.42	0	0	15.96	0	0	0	0	0	0	2.45	2.45
	Inverter	MV4-7	369035	4909001	2	0	0	100.3	100.3	1	4143.74	3.25	0	83.35	0	0.55	0	0	17.28	0	0	0	0	0	0	-0.86	-0.86
	Inverter	MV4-4	369027	4909199	2	0	0	100.3	100.3	1	4237.4	3.25	0	83.54	0	0.56	0	0	17.42	0	0	0	0	0	0	-1.21	-1.21
	Inverter	MV4-11	369264	4908855	2	0	0	100.3	100.3	1	4278.63	3.25	0	83.63	0	0.56	0	0	17.49	0	0	0	0	0	0	-1.37	-1.37
	Inverter	MV4-10	369312	4908858	2	0	0	100.3	100.3	1	4323.09	3.25	0	83.72	0	0.57	0	0	17.56	0	0	0	0	0	0	-1.53	-1.53
	Inverter	MV4-1	369011	4909397	2	0	0	100.3	100.3	1	4331.46	3.25	0	83.73	0	0.57	0	0	17.57	0	0	0	0	0	0	-1.56	-1.56
	Inverter	MV4-8	369256	4909001	2	0	0	100.3	100.3	1	4337.79	3.25	0	83.75	0	0.57	0	0	17.58	0	0	0	0	0	0	-1.59	-1.59
	Inverter	MV4-9	369289	4909001	2	0	0	100.3	100.3	1	4366.98	3.25	0	83.8	0	0.58	0	0	17.63	0	0	0	0	0	0	-1.69	-1.69
	Inverter	MV4-6	369243	4909192	2	0	0	100.3	100.3	1	4419.1	3.25	0	83.91	0	0.58	0	0	17.71	0	0	0	0	0	0	-1.88	-1.88
	Inverter	MV4-5	369289	4909199	2	0	0	100.3	100.3	1	4462.42	3.25	0	83.99	0	0.59	0	0	17.77	0	0	0	0	0	0	-2.04	-2.04
	Inverter	MV4-3	369229	4909397	2	0	0	100.3	100.3	1	4513.74	3.25	0	84.09	0	0.59	0	0	17.85	0	0	0	0	0	0	-2.22	-2.22
	Inverter	MV4-2	369272	4909397	2	0	0	100.3	100.3	1	4550.07	3.25	0	84.16	0	0.6	0	0	17.91	0	0	0	0	0	0	-2.35	-2.35
	Inverter	MV6-2	370085	4907339	2	0	0	100.3	100.3	1	4677.42	3.25	0	84.4	0	0.61	0	0	18.1	0	0	0	0	0	0	-2.8	-2.8
	Inverter	MV6-3	370207	4907140	2	0	0	100.3	100.3	1	4787.95	3.25	0	84.6	0	0.62	0	0	18.27	0	0	0	0	0	0	-3.18	-3.18
	Inverter	MV5-5	370015	4908690	2	0	0	100.3	100.3	1	4903.79	3.25	0	84.81	0	0.63	0	0	18.44	0	0	0	0	0	0	-3.57	-3.57

Inverter	MV1-3	364440	4906039	2	0	0	89.1	89.1	1	1354.56	3.25	0	73.64	0	0.76	0	0	6.96	0	0	0	0	0	0	7.71	7.71
Inverter	MV5-2	370006	4908853	2	0	0	100.3	100.3	1	4954.92	3.25	0	84.9	0	0.64	0	0	18.51	0	0	0	0	0	0	-3.74	-3.74
Inverter	MV5-1	370020	4909142	2	0	0	100.3	100.3	1	5084.34	3.25	0	85.12	0	0.65	0	0	18.7	0	0	0	0	0	0	-4.17	-4.17
Inverter	MV5-3	370231	4908851	2	0	0	100.3	100.3	1	5163.05	3.25	0	85.26	0	0.66	0	0	18.82	0	0	0	0	0	0	-4.42	-4.42
Inverter	MV5-4	370324	4908707	2	0	0	100.3	100.3	1	5199.98	3.25	0	85.32	0	0.66	0	0	18.87	0	0	0	0	0	0	-4.54	-4.54
DSTATCOM - 10 MVAR #2	DSAT2	369403	4908757	2.5	0	0	96.6	96.6	1	4362.86	3.5	0	83.8	0	3.61	0	0	3.03	0	0	0	0	0	0	6.19	6.19
DSTATCOM - 10 MVAR #1	DSAT1	369437	4908757	2.5	0	0	96.6	96.6	1	4393.91	3.5	0	83.86	0	3.62	0	0	3.04	0	0	0	0	0	0	6.11	6.11
Inverter	MV6-1	370235	4907364	2	0	0	97.3	97.3	1	4828.94	3.25	0	84.68	0	0.63	0	0	18.33	0	0	0	0	0	0	-6.32	-6.32
Inverter	MV3-1	368156	4907976	2	0	0	89.1	89.1	1	2912.52	3.25	0	80.29	0	1.13	0	0	9.48	0	0	0	0	0	0	-1.84	-1.84
Inverter	MV3-5	368340	4907843	2	0	0	89.1	89.1	1	3045.22	3.25	0	80.67	0	1.16	0	0	9.69	0	0	0	0	0	0	-2.46	-2.46
Gardiner Substation	G_Sub	366586.3	4903349.9	2.5	0	0	90.8	90.8	1	3804.63	4.25	0	82.61	0	1.32	2.73	0.33	7.1	0	0	0	0	0	0	-2.98	-2.98
SubstationTransformer	W_ST	369711.17	4906112.3	2.5	0	0	92	92	1	4374.48	4.25	0	83.82	0	1.47	2.5	0.28	7.85	0	0	0	0	0	0	-3.67	-3.67
Inverter	MV3-4	368502	4907925	2	0	0	89.1	89.1	1	3224.07	3.25	0	81.17	0	1.2	0	0	9.95	0	0	0	0	0	0	-3.27	-3.27
Inverter	MV3-22	368656	4907142	2	0	0	89.1	89.1	1	3238.47	3.25	0	81.21	0	1.21	0	0	9.98	0	0	0	0	0	0	-3.33	-3.33
Inverter	MV3-2	368671	4907928	2	0	0	89.1	89.1	1	3386.73	3.25	0	81.6	0	1.24	0	0	10.2	0	0	0	0	0	0	-3.97	-3.97
Inverter	MV4-13	369051	4908605	2	0	0	89.1	89.1	1	3979.49	3.25	0	83	0	1.39	0	0	11.06	0	0	0	0	0	0	-6.38	-6.38
Fixed Reactor Bank 1	FRB1	369378	4908755	6	0	0	89.8	89.8	1	4339.24	5.25	0	83.75	0	-0.67	0	0	7.81	0	0	0	0	0	0	-1.11	-1.11
Westbrook Inverter Enclosur	W_INV2	369374	4906388	2	0	0	89.1	89.1	1	3994.92	3.25	0	83.03	0	1.39	0	0	11.08	0	0	0	0	0	0	-6.44	-6.44
Inverter	MV4-15	369176	4908481	2	0	0	89.1	89.1	1	4045.94	3.25	0	83.14	0	1.4	0	0	11.15	0	0	0	0	0	0	-6.64	-6.64
Inverter	MV4-14	369176	4908507	2	0	0	89.1	89.1	1	4055.71	3.25	0	83.16	0	1.41	0	0	11.16	0	0	0	0	0	0	-6.67	-6.67
Inverter	MV4-12	369043	4908803	2	0	0	89.1	89.1	1	4057.61	3.25	0	83.17	0	1.41	0	0	11.17	0	0	0	0	0	0	-6.68	-6.68
Fixed Reactor Bank 2	FRB2	369464	4908755	6	0	0	89.8	89.8	1	4417.79	5.25	0	83.9	0	-0.66	0	0	7.91	0	0	0	0	0	0	-1.38	-1.38
Westbrook Inverter Enclosur	W_INV3	369508	4906164	2	0	0	89.1	89.1	1	4165.12	3.25	0	83.39	0	1.43	0	0	11.32	0	0	0	0	0	0	-7.09	-7.09
Inverter Transformer	MV2-1 T	365836	4906816	2	0	0	69.4	69.4	1	442.42	3.25	0	63.92	0	0.96	0	0	2.82	0	0	0	0	0	0	1.66	1.66
Westbrook Inverter Enclosur	W_INV5	369719	4906574	2	0	0	89.1	89.1	1	4315.39	3.25	0	83.7	0	1.47	0	0	11.53	0	0	0	0	0	0	-7.64	-7.64
Westbrook Inverter Enclosur	W_INV4	369673	4906164	2	0	0	89.1	89.1	1	4327.11	3.25	0	83.72	0	1.47	0	0	11.54	0	0	0	0	0	0	-7.68	-7.68
Westbrook Inverter Enclosur	W_INV7	369780	4906417	2	0	0	89.1	89.1	1	4393.2	3.25	0	83.86	0	1.49	0	0	11.64	0	0	0	0	0	0	-7.92	-7.92
Westbrook Inverter Enclosur	W_INV6	369875	4906578	2	0	0	89.1	89.1	1	4470.4	3.25	0	84.01	0	1.51	0	0	11.74	0	0	0	0	0	0	-8.2	-8.2
Inverters	G_Inv1	366526.4	4903225.8	2	0	0	87.7	87.7	1	3905.6	3.25	0	82.83	0	2.78	0	0	4.77	0	0	0	0	0	0	-2.73	-2.73
Inverters	G_Inv2	366676.9	4903239.1	2	0	0	87.7	87.7	1	3938.19	3.25	0	82.91	0	2.79	0	0	4.81	0	0	0	0	0	0	-2.84	-2.84
Inverters	G_Inv3	366583.7	4903091.4	2	0	0	87.7	87.7	1	4050.75	3.25	0	83.15	0	2.8	0	0	4.93	0	0	0	0	0	0	-3.22	-3.22
Inverters	G_Inv4	366732.8	4903105	2	0	0	87.7	87.7	1	4083.12	3.25	0	83.22	0	2.8	0	0	4.96	0	0	0	0	0	0	-3.32	-3.32
Inverter	MV5-6	369982	4908507	2	0	0	89.1	89.1	1	4811.43	3.25	0	84.65	0	1.59	0	0	12.21	0	0	0	0	0	0	-9.39	-9.39
Inverters	G_Inv5	366638.5	4902958.1	2	0	0	87.7	87.7	1	4194.2	3.25	0	83.45	0	2.81	0	0	5.08	0	0	0	0	0	0	-3.68	-3.68
Inverters	G_Inv6	366788.5	4902972	2	0	0	87.7	87.7	1	4226.98	3.25	0	83.52	0	2.81	0	0	5.12	0	0	0	0	0	0	-3.79	-3.79
Inverters	G_Inv7	366694.6	4902824.7	2	0	0	87.7	87.7	1	4338.16	3.25	0	83.75	0	2.82	0	0	5.24	0	0	0	0	0	0	-4.14	-4.14
Inverters	G_Inv8	366844.5	4902838.5	2	0	0	87.7	87.7	1	4371.42	3.25	0	83.81	0	2.82	0	0	5.27	0	0	0	0	0	0	-4.25	-4.25
Inverters	G_Inv9	366750.9	4902691.8	2	0	0	87.7	87.7	1	4481.75	3.25	0	84.03	0	2.83	0	0	5.39	0	0	0	0	0	0	-4.59	-4.59
Inverters	G_Inv10	366900.7	4902704.8	2	0	0	87.7	87.7	1	4516.14	3.25	0	84.1	0	2.83	0	0	5.43	0	0	0	0	0	0	-4.7	-4.7
Westbrook Inverter Enclosur	W_INV1	369409	4906578	2	0	0	86.1	86.1	1	4006.42	3.25	0	83.06	0	1.39	0	0	11.09	0	0	0	0	0	0	-9.48	-9.48
Inverter	MV6-4	370250	4906966	2	0	0	86.1	86.1	1	4828	3.25	0	84.68	0	1.6	0	0	12.23	0	0	0	0	0	0	-12.45	-12.45
Inverter Transformer	MV1-7 T	364919	4905782	2	0	0	69.4	69.4	1	1291.94	3.25	0	73.22	0	1.87	0	0	4.19	0	0	0	0	0	0	-9.94	-9.94
Westbrook Inverter Transfor	W_INVTR1	369403	4906578	2	0	0	78.2	78.2	1	4000.45	3.25	0	83.04	0	-2.96	0	0	2.05	0	0	0	0	0	0	-3.89	-3.89
Inverter Transformer	MV1-10 T	365010	4905564	2	0	0	69.4	69.4	1	1467.04	3.25	0	74.33	0	1.96	0	0	4.4	0	0	0	0	0	0	-11.33	-11.33
Westbrook Inverter Transfor	W_INVTR2	369368	4906388	2	0	0	77.3	77.3	1	3988.98	3.25	0	83.02	0	-2.96	0	0	2.05	0	0	0	0	0	0	-4.77	-4.77
Westbrook Inverter Transfor	W_INVTR3	369514	4906164	2	0	0	77.3	77.3	1	4171.01	3.25	0	83.4	0	-3	0	0	2.12	0	0	0	0	0	0	-5.18	-5.18
Westbrook Inverter Transfor	W_INVTR5	369725	4906574	2	0	0	77.3	77.3	1	4321.37	3.25	0	83.71	0	-3.04	0	0	2.17	0	0	0	0	0	0	-5.51	-5.51
Westbrook Inverter Transfor	W_INVTR4	369679	4906164	2	0	0	77.3	77.3	1	4333	3.25	0	83.74	0	-3.04	0	0	2.18	0	0	0	0	0	0	-5.53	-5.53
Westbrook Inverter Transfor	W_INVTR7	369786	4906417	2	0	0	77.3	77.3	1	4399.15	3.25	0	83.87	0	-3.05	0	0	2.2	0	0	0	0	0	0	-5.68	-5.68
Inverter Transformer	MV2-4 T	365590	4906628	2	0	0	56.1	56.1	1	382.84	3.25	0	62.66	0	-0.11	0	0	3.14	0	0	0	0	0	0	-9.63	-9.63
Westbrook Inverter Transfor	W_INVTR6	369881	4906578	2	0	0	77.3	77.3	1	4476.37	3.25	0	84.02	0	-3.07	0	0	2.23	0	0	0	0	0	0	-5.84	-5.84
Inverter Transformer	MV1-13 T	364725	4905241	2	0	0	69.4	69.4	1	1866.06	3.25	0	76.42	0	2.12	0	0	4.83	0	0	0	0	0	0	-14.02	-14.02
Inverter Transformer	MV1-14 T	365157	4905049	2	0	0	69.4	69.4	1	1941.17	3.25	0	76.76	0	2.15	0	0	4.91	0	0	0	0	0	0	-14.47	-14.47
Inverter Transformer	MV2-3 T	365814	4906641	2	0	0	56.1	56.1	1	513.06	3.25	0	65.2	0	-0.12	0	0	3.59	0	0	0	0	0	0	-12.62	-12.62
Inverter Transformer	MV2-2 T	365982	4906654	2	0	0	56.1	56.1	1	644	3.25	0	67.18	0	-0.09	0	0	3.98	0	0	0	0	0	0	-15	-15
Inverter Transformer	MV6-4 T	370244	4906966	2	0	0	69.4	69.4	1	4822	3.25	0	84.66	0	2.98	0	0	7.26	0	0	0	0	0	0	-25.55	-25.55
Inverter Transformer	MV6-1 T	370230	4907364	2	0	0	69.4	69.4	1	4823.95	3.25	0	84.67	0	2.98	0	0	7.26	0	0	0	0	0	0	-25.56	-25.56
Inverter Transformer	MV1-1 T	364721	4906166	2	0	0	56.1	56.1	1	1068.2	3.25	0	71.57	0	0.04	0	0	5.05	0	0	0	0	0	0	-20.6	-20.6
Inverter Transformer	MV1-2 T	364759	4906063	2	0	0	56.1	56.1	1	1125.1	3.25	0	72.02	0	0.06	0	0	5.18	0	0	0	0	0	0	-21.21	-21.21
Inverter Transformer	MV1-4 T	364821	4905918	2	0	0	56.1	56.1	1	1213.31	3.25	0	72.68	0	0.09	0	0	5.39	0	0	0	0	0	0	-22.1	-22.1
Inverter Transformer	MV1-5 T	364676	4905892	2	0	0	56.1	56.1	1	1312.6	3.25	0	73.36	0	0.13	0	0	5.61	0	0	0	0	0	0	-23.04	-23.04
Inverter Transformer	MV1-3 T	364435	4906039	2	0	0	56.1	56.1	1	1358.18	3.25	0	73.66	0	0.14	0	0	5.71	0	0	0	0	0	0	-23.45	-23.45
Inverter Transformer	MV1-8 T	364782	4905647	2	0	0	56.1	56.1	1	1471.47	3.25	0	74.36	0	0.19	0	0	5.96	0	0	0	0	0	0	-24.44	-24.44
Inverter Transformer	MV1-6 T	364482	4905835	2	0	0	56.1	56.1	1	1475.25	3.25	0	74.38	0	0.19	0	0	5.96	0	0	0	0	0	0	-24.47	-24.47
Inverter Transformer	MV1-9 T	364555	4905646	2	0	0	56.1	56.1	1	1584.29	3.25	0	75	0	0.23	0	0	6.2	0	0	0	0	0	0	-25.37	-25.37
Inverter Transformer	MV1-12 T	365044	4905386	2	0	0	56.1	56.1	1	1630.43	3.25	0	75.25	0	0.25	0	0	6.29	0	0	0	0	0	0	-25.73	-25.73
Inverter Transformer	MV1-11 T	364649	4905414	2	0	0	56.1	56.1	1	1739.22	3.25	0	75.81	0	0.3	0	0	6.52	0	0	0	0	0	0	-26.56	-26.56
Inverter Transformer	MV1-15 T	365309	4904994	2	0	0	56.1	56.1	1	1981.23	3.25	0	76.94	0	0.4	0	0	7.01	0	0	0	0	0	0	-28.28	-28.28
Inverter Transformer	MV3-12 T	367674	4907594	2	0	0	56.1	56.1	1	2336.32	3.25	0	78.37	0	0.55	0	0	7.69	0	0	0	0	0	0	-30.55	-30.55
Inverter Transformer	MV3-18 T	367757	4907412	2	0	0	56.1	56.1	1	2376.1	3.25	0	78.52	0	0.56	0	0	7.76	0	0	0	0	0	0	-30.78	-30.78
Inverter Transformer	MV3-13 T	367958	4907577	2	0	0	56.1	56.1	1	2607.17	3.25	0	79.32	0	0.66	0	0	8.18	0	0	0	0	0	0	-32.11	-32.11
Inverter Transformer	MV3-7 T	367951	4907754	2	0	0	56.1	56.1	1	2647.14	3.25	0	79.46	0	0.68	0	0	8.25	0	0	0	0	0	0	-32.33	-32.33
Inverter Transformer	MV3-3 T	367944	4907927	2	0	0	56.1	56.1	1	2696.76	3.25	0	79.62	0	0.7	0	0	8.34	0	0	0	0	0	0	-32.6	-32.6
Inverter Transformer	MV3-17 T	368183	4907472	2	0	0	56.1	56.1	1	2805.91	3.25	0	79.96	0	0.75	0	0	8.53	0	0	0	0	0	0	-33.18	-33.18

	Inverter Transformer	MV3-10 T	368162	4907669	2	0	0	56.1	56.1	1	2827.26	3.25	0	80.03	0	0.76	0	0	8.57	0	0	0	0	0	0	-33.3	-33.3
	Inverter Transformer	MV3-6 T	368156	4907834	2	0	0	56.1	56.1	1	2866.67	3.25	0	80.15	0	0.77	0	0	8.64	0	0	0	0	0	0	-33.5	-33.5
	Inverter Transformer	MV3-1 T	368150	4907976	2	0	0	56.1	56.1	1	2906.89	3.25	0	80.27	0	0.79	0	0	8.71	0	0	0	0	0	0	-33.71	-33.71
	Inverter Transformer	MV3-19 T	368352	4907347	2	0	0	56.1	56.1	1	2953.9	3.25	0	80.41	0	0.81	0	0	8.79	0	0	0	0	0	0	-33.95	-33.95
	Inverter Transformer	MV3-15 T	368351	4907477	2	0	0	56.1	56.1	1	2972.22	3.25	0	80.46	0	0.82	0	0	8.82	0	0	0	0	0	0	-34.04	-34.04
	Inverter Transformer	MV3-11 T	368340	4907662	2	0	0	56.1	56.1	1	2998.47	3.25	0	80.54	0	0.83	0	0	8.87	0	0	0	0	0	0	-34.17	-34.17
	Inverter Transformer	MV3-5 T	368335	4907843	2	0	0	56.1	56.1	1	3040.43	3.25	0	80.66	0	0.85	0	0	8.94	0	0	0	0	0	0	-34.38	-34.38
	Inverter Transformer	MV3-21 T	368484	4907206	2	0	0	56.1	56.1	1	3070.93	3.25	0	80.75	0	0.86	0	0	8.99	0	0	0	0	0	0	-34.53	-34.53
	Inverter Transformer	MV3-16 T	368509	4907475	2	0	0	56.1	56.1	1	3127.71	3.25	0	80.9	0	0.88	0	0	9.08	0	0	0	0	0	0	-34.81	-34.81
	Inverter Transformer	MV3-9 T	368517	4907703	2	0	0	56.1	56.1	1	3180.16	3.25	0	81.05	0	0.91	0	0	9.17	0	0	0	0	0	0	-35.07	-35.07
	Inverter Transformer	MV3-4 T	368507	4907925	2	0	0	56.1	56.1	1	3228.85	3.25	0	81.18	0	0.93	0	0	9.25	0	0	0	0	0	0	-35.3	-35.3
	Inverter Transformer	MV3-22 T	368661	4907142	2	0	0	56.1	56.1	1	3243.46	3.25	0	81.22	0	0.93	0	0	9.27	0	0	0	0	0	0	-35.37	-35.37
	Inverter Transformer	MV3-20 T	368683	4907317	2	0	0	56.1	56.1	1	3279.2	3.25	0	81.32	0	0.95	0	0	9.33	0	0	0	0	0	0	-35.54	-35.54
	Inverter Transformer	MV3-14 T	368678	4907498	2	0	0	56.1	56.1	1	3298.21	3.25	0	81.37	0	0.96	0	0	9.36	0	0	0	0	0	0	-35.63	-35.63
	Inverter Transformer	MV3-8 T	368685	4907712	2	0	0	56.1	56.1	1	3345.86	3.25	0	81.49	0	0.98	0	0	9.44	0	0	0	0	0	0	-35.85	-35.85
	Inverter Transformer	MV3-2 T	368677	4907928	2	0	0	56.1	56.1	1	3392.49	3.25	0	81.61	0	1	0	0	9.52	0	0	0	0	0	0	-36.06	-36.06
	Inverter Transformer	MV4-13 T	369057	4908605	2	0	0	56.1	56.1	1	3984.96	3.25	0	83.01	0	1.24	0	0	10.43	0	0	0	0	0	0	-38.62	-38.62
	Inverter Transformer	MV4-15 T	369170	4908481	2	0	0	56.1	56.1	1	4040.37	3.25	0	83.13	0	1.26	0	0	10.51	0	0	0	0	0	0	-38.84	-38.84
	Inverter Transformer	MV4-14 T	369182	4908507	2	0	0	56.1	56.1	1	4061.26	3.25	0	83.17	0	1.27	0	0	10.55	0	0	0	0	0	0	-38.93	-38.93
	Inverter Transformer	MV4-12 T	369049	4908803	2	0	0	56.1	56.1	1	4062.97	3.25	0	83.18	0	1.27	0	0	10.55	0	0	0	0	0	0	-38.94	-38.94
	Inverter Transformer	MV4-7 T	369040	4909001	2	0	0	56.1	56.1	1	4148.1	3.25	0	83.36	0	1.3	0	0	10.67	0	0	0	0	0	0	-39.27	-39.27
	Inverter Transformer	MV4-4 T	369033	4909199	2	0	0	56.1	56.1	1	4242.51	3.25	0	83.55	0	1.34	0	0	10.81	0	0	0	0	0	0	-39.64	-39.64
	Inverter Transformer	MV4-11 T	369269	4908855	2	0	0	56.1	56.1	1	4283.12	3.25	0	83.64	0	1.36	0	0	10.87	0	0	0	0	0	0	-39.8	-39.8
	Inverter Transformer	MV4-10 T	369307	4908858	2	0	0	56.1	56.1	1	4318.59	3.25	0	83.71	0	1.37	0	0	10.92	0	0	0	0	0	0	-39.94	-39.94
	Inverter Transformer	MV4-1 T	369017	4909397	2	0	0	56.1	56.1	1	4336.43	3.25	0	83.74	0	1.38	0	0	10.94	0	0	0	0	0	0	-40.01	-40.01
	Inverter Transformer	MV4-8 T	369262	4909001	2	0	0	56.1	56.1	1	4343.09	3.25	0	83.76	0	1.38	0	0	10.95	0	0	0	0	0	0	-40.03	-40.03
	Inverter Transformer	MV4-9 T	369284	4909001	2	0	0	56.1	56.1	1	4362.56	3.25	0	83.79	0	1.39	0	0	10.98	0	0	0	0	0	0	-40.1	-40.1
	Inverter Transformer	MV4-6 T	369249	4909192	2	0	0	56.1	56.1	1	4424.29	3.25	0	83.92	0	1.41	0	0	11.07	0	0	0	0	0	0	-40.34	-40.34
	Inverter Transformer	MV4-5 T	369283	4909199	2	0	0	56.1	56.1	1	4457.23	3.25	0	83.98	0	1.42	0	0	11.12	0	0	0	0	0	0	-40.46	-40.46
	Inverter Transformer	MV4-3 T	369234	4909397	2	0	0	56.1	56.1	1	4517.96	3.25	0	84.1	0	1.45	0	0	11.2	0	0	0	0	0	0	-40.69	-40.69
	Inverter Transformer	MV4-2 T	369267	4909397	2	0	0	56.1	56.1	1	4545.84	3.25	0	84.15	0	1.46	0	0	11.24	0	0	0	0	0	0	-40.79	-40.79
	Inverter Transformer	MV6-2 T	370091	4907339	2	0	0	56.1	56.1	1	4683.4	3.25	0	84.41	0	1.51	0	0	11.43	0	0	0	0	0	0	-41.29	-41.29
	Inverter Transformer	MV6-3 T	370202	4907140	2	0	0	56.1	56.1	1	4782.95	3.25	0	84.59	0	1.55	0	0	11.56	0	0	0	0	0	0	-41.65	-41.65
	Inverter Transformer	MV5-6 T	369987	4908507	2	0	0	56.1	56.1	1	4816.17	3.25	0	84.65	0	1.56	0	0	11.61	0	0	0	0	0	0	-41.76	-41.76
	Inverter Transformer	MV5-5 T	370021	4908690	2	0	0	56.1	56.1	1	4909.41	3.25	0	84.82	0	1.59	0	0	11.73	0	0	0	0	0	0	-42.09	-42.09
	Inverter Transformer	MV5-2 T	370011	4908853	2	0	0	56.1	56.1	1	4959.55	3.25	0	84.91	0	1.61	0	0	11.8	0	0	0	0	0	0	-42.26	-42.26
	Inverter Transformer	MV5-1 T	370015	4909142	2	0	0	56.1	56.1	1	5079.82	3.25	0	85.12	0	1.65	0	0	11.96	0	0	0	0	0	0	-42.67	-42.67
	Inverter Transformer	MV5-3 T	370237	4908851	2	0	0	56.1	56.1	1	5168.64	3.25	0	85.27	0	1.69	0	0	12.07	0	0	0	0	0	0	-42.97	-42.97
	Inverter Transformer	MV5-4 T	370330	4908707	2	0	0	56.1	56.1	1	5205.64	3.25	0	85.33	0	1.7	0	0	12.12	0	0	0	0	0	0	-43.09	-43.09
	Line Reactor	NGR	369421	4908787.5	5	0	0	45.4	45.4	1	4391.82	5.25	0	83.85	0	3.28	1.34	0.1	1.8	0	0	0	0	0	0	-44.92	-44.92
Limit. Valu	0	0																								
Level D/N:	34.1102	34.1102																								

Receiver: Existing Noise Receptor
ID: S-R19
X: 365659
Y: 4907251
Z: 4.5
Ground: 0

ISO	Description	ID	X	Y	Z	Ground	ReflOrd	LxT	LxN	L/A	Dist.	hm	Freq	Adiv	K0b	Agr	Abar	z	Aatm	Afol	Ahous	Cmet	CmetN	Dc	RL	LtotT	LtotN
	Inverter	MV2-3	365820	4906641	2	0	0	100.3	100.3	1	630.89	3.25	0	67	0	-0.46	0	0	9.38	0	0	0	0	0	0	24.39	24.39
	Inverter	MV2-4	365586	4906624	2	0	0	100.3	100.3	1	631.24	3.25	0	67	0	-0.46	0	0	9.38	0	0	0	0	0	0	24.38	24.38
	Inverter	MV2-1	365842	4906816	2	0	0	97.3	97.3	1	471.93	3.25	0	64.48	0	-0.57	0	0	8.3	0	0	0	0	0	0	25.11	25.11
	Sol_Luce Substation	S_Substation	369426	4908792	3.5	0	0	112.1	112.1	1	4070.01	5.25	0	83.19	0	0.62	3.09	0.3	7.46	0	0	0	0	0	0	17.71	17.71
	Inverter	MV1-1	364715	4906166	2	0	0	100.3	100.3	1	1438.18	3.25	0	74.16	0	-0.06	0	0	12.17	0	0	0	0	0	0	14.04	14.04
	Inverter	MV1-2	364753	4906063	2	0	0	100.3	100.3	1	1494.05	3.25	0	74.49	0	-0.04	0	0	12.31	0	0	0	0	0	0	13.55	13.55
	Inverter	MV1-4	364815	4905918	2	0	0	100.3	100.3	1	1577.73	3.25	0	74.96	0	-0.01	0	0	12.51	0	0	0	0	0	0	12.84	12.84
	Inverter	MV1-5	364671	4905892	2	0	0	100.3	100.3	1	1680.19	3.25	0	75.51	0	0.03	0	0	12.76	0	0	0	0	0	0	12.02	12.02
	Inverter	MV1-8	364788	4905647	2	0	0	100.3	100.3	1	1825.23	3.25	0	76.23	0	0.08	0	0	13.08	0	0	0	0	0	0	10.92	10.92
	Inverter	MV1-6	364477	4905835	2	0	0	100.3	100.3	1	1844.5	3.25	0	76.32	0	0.08	0	0	13.13	0	0	0	0	0	0	10.78	10.78
	Inverter	MV1-9	364561	4905646	2	0	0	100.3	100.3	1	1944.64	3.25	0	76.78	0	0.11	0	0	13.34	0	0	0	0	0	0	10.08	10.08
	Inverter	MV1-12	365038	4905386	2	0	0	100.3	100.3	1	1965.67	3.25	0	76.87	0	0.12	0	0	13.39	0	0	0	0	0	0	9.93	9.93
	Inverter	MV3-12	367668	4907594	2	0	0	100.3	100.3	1	2038.07	3.25	0	77.18	0	0.14	0	0	13.54	0	0	0	0	0	0	9.45	9.45
	Inverter	MV1-11	364655	4905414	2	0	0	100.3	100.3	1	2093.46	3.25	0	77.42	0	0.16	0	0	13.66	0	0	0	0	0	0	9.08	9.08
	Inverter	MV3-18	367752	4907412	2	0	0	100.3	100.3	1	2099.18	3.25	0	77.44	0	0.16	0	0	13.67	0	0	0	0	0	0	9.05	9.05
	Inverter	MV1-15	365315	4904994	2	0	0	100.3	100.3	1	2283.07	3.25	0	78.17	0	0.21	0	0	14.04	0	0	0	0	0	0	7.9	7.9
	Inverter	MV1-7	364925	4905782	2	0	0	97.3	97.3	1	1642.17	3.25	0	75.31	0	0.02	0	0	12.67	0	0	0	0	0	0	9.32	9.32
	Inverter	MV3-13	367963	4907577	2	0	0	100.3	100.3	1	2326.95	3.25	0	78.34	0	0.22	0	0	14.12	0	0	0	0	0	0	7.64	7.64
	Inverter	MV3-7	367945	4907754	2	0	0	100.3	100.3	1	2340.69	3.25	0	78.39	0	0.22	0	0	14.15	0	0	0	0	0	0	7.55	7.55
	Inverter	MV3-3	367939	4907927	2	0	0	100.3	100.3	1	2378.1	3.25	0	78.52	0	0.23	0	0	14.22	0	0	0	0	0	0	7.33	7.33
	Inverter	MV2-2	365977	4906654	2	0	0	89.1	89.1	1	676.42	3.25	0	67.6	0	0.6	0	0	5.65	0	0	0	0	0	0	15.2	15.2
	Inverter	MV3-17	368178	4907472	2	0	0	100.3	100.3	1	2528.68	3.25	0	79.06	0	0.26	0	0	14.51	0	0	0	0	0	0	6.48	6.48
	Inverter	MV3-10	368167	4907669	2	0	0	100.3	100.3	1	2542.6	3.25	0	79.11	0	0.27	0	0	14.54	0	0	0	0	0	0	6.4	6.4

Inverter	MV1-10	365004	4905564	2	0	0	97.3	97.3	1	1809.7	3.25	0	76.15	0	0.07	0	0	13.05	0	0	0	0	0	0	8.04	8.04
Inverter	MV3-6	368162	4907834	2	0	0	100.3	100.3	1	2570	3.25	0	79.2	0	0.27	0	0	14.59	0	0	0	0	0	0	6.25	6.25
Inverter	MV3-19	368357	4907347	2	0	0	100.3	100.3	1	2699.71	3.25	0	79.63	0	0.3	0	0	14.83	0	0	0	0	0	0	5.55	5.55
Inverter	MV3-15	368357	4907477	2	0	0	100.3	100.3	1	2707.45	3.25	0	79.65	0	0.3	0	0	14.85	0	0	0	0	0	0	5.51	5.51
Inverter	MV3-11	368346	4907662	2	0	0	100.3	100.3	1	2718.25	3.25	0	79.69	0	0.31	0	0	14.87	0	0	0	0	0	0	5.46	5.46
Inverter	MV3-21	368478	4907206	2	0	0	100.3	100.3	1	2819.36	3.25	0	80	0	0.33	0	0	15.05	0	0	0	0	0	0	4.93	4.93
Inverter	MV3-16	368514	4907475	2	0	0	100.3	100.3	1	2863.77	3.25	0	80.14	0	0.34	0	0	15.13	0	0	0	0	0	0	4.71	4.71
Inverter	MV3-9	368512	4907703	2	0	0	100.3	100.3	1	2888.58	3.25	0	80.21	0	0.34	0	0	15.17	0	0	0	0	0	0	4.58	4.58
Inverter	MV3-20	368689	4907317	2	0	0	100.3	100.3	1	3030.72	3.25	0	80.63	0	0.37	0	0	15.43	0	0	0	0	0	0	3.89	3.89
Inverter	MV3-14	368684	4907498	2	0	0	100.3	100.3	1	3035.07	3.25	0	80.64	0	0.37	0	0	15.43	0	0	0	0	0	0	3.87	3.87
Inverter	MV3-8	368680	4907712	2	0	0	100.3	100.3	1	3055.97	3.25	0	80.7	0	0.37	0	0	15.47	0	0	0	0	0	0	3.77	3.77
Inverter	MV1-13	364731	4905241	2	0	0	97.3	97.3	1	2213.89	3.25	0	77.9	0	0.19	0	0	13.9	0	0	0	0	0	0	5.32	5.32
Inverter	MV1-14	365163	4905049	2	0	0	97.3	97.3	1	2257.17	3.25	0	78.07	0	0.2	0	0	13.99	0	0	0	0	0	0	5.06	5.06
Inverter	MV4-7	369035	4909001	2	0	0	100.3	100.3	1	3802.62	3.25	0	82.6	0	0.5	0	0	16.73	0	0	0	0	0	0	0.48	0.48
Inverter	MV4-4	369027	4909199	2	0	0	100.3	100.3	1	3890.78	3.25	0	82.8	0	0.51	0	0	16.87	0	0	0	0	0	0	0.13	0.13
Inverter	MV4-11	369264	4908855	2	0	0	100.3	100.3	1	3945.74	3.25	0	82.92	0	0.52	0	0	16.96	0	0	0	0	0	0	-0.09	-0.09
Inverter	MV4-1	369011	4909397	2	0	0	100.3	100.3	1	3980.1	3.25	0	83	0	0.52	0	0	17.02	0	0	0	0	0	0	-0.23	-0.23
Inverter	MV4-10	369312	4908858	2	0	0	100.3	100.3	1	3990.85	3.25	0	83.02	0	0.53	0	0	17.03	0	0	0	0	0	0	-0.27	-0.27
Inverter	MV4-8	369256	4909001	2	0	0	100.3	100.3	1	4000.11	3.25	0	83.04	0	0.53	0	0	17.05	0	0	0	0	0	0	-0.31	-0.31
Inverter	MV4-9	369289	4909001	2	0	0	100.3	100.3	1	4029.81	3.25	0	83.11	0	0.53	0	0	17.1	0	0	0	0	0	0	-0.42	-0.42
Inverter	MV4-6	369243	4909192	2	0	0	100.3	100.3	1	4075.85	3.25	0	83.2	0	0.54	0	0	17.17	0	0	0	0	0	0	-0.6	-0.6
Inverter	MV4-5	369289	4909199	2	0	0	100.3	100.3	1	4119.66	3.25	0	83.3	0	0.54	0	0	17.24	0	0	0	0	0	0	-0.77	-0.77
Inverter	MV4-3	369229	4909397	2	0	0	100.3	100.3	1	4165.36	3.25	0	83.39	0	0.55	0	0	17.31	0	0	0	0	0	0	-0.94	-0.94
Inverter	MV4-2	369272	4909397	2	0	0	100.3	100.3	1	4202.27	3.25	0	83.47	0	0.55	0	0	17.37	0	0	0	0	0	0	-1.08	-1.08
Inverter	MV6-2	370085	4907339	2	0	0	100.3	100.3	1	4426.88	3.25	0	83.92	0	0.58	0	0	17.72	0	0	0	0	0	0	-1.91	-1.91
Inverter	MV6-3	370207	4907140	2	0	0	100.3	100.3	1	4549.36	3.25	0	84.16	0	0.6	0	0	17.91	0	0	0	0	0	0	-2.35	-2.35
Inverter	MV5-5	370015	4908690	2	0	0	100.3	100.3	1	4587.53	3.25	0	84.23	0	0.6	0	0	17.96	0	0	0	0	0	0	-2.48	-2.48
Inverter	MV5-2	370006	4908853	2	0	0	100.3	100.3	1	4632.8	3.25	0	84.32	0	0.61	0	0	18.03	0	0	0	0	0	0	-2.64	-2.64
Inverter	MV5-1	370020	4909142	2	0	0	100.3	100.3	1	4753.34	3.25	0	84.54	0	0.62	0	0	18.21	0	0	0	0	0	0	-3.06	-3.06
Inverter	MV5-3	370231	4908851	2	0	0	100.3	100.3	1	4843.88	3.25	0	84.7	0	0.63	0	0	18.35	0	0	0	0	0	0	-3.37	-3.37
Inverter	MV5-4	370324	4908707	2	0	0	100.3	100.3	1	4886.94	3.25	0	84.78	0	0.63	0	0	18.41	0	0	0	0	0	0	-3.51	-3.51
DSTATCOM - 10 MVAR #2	DSAT2	369403	4908757	2.5	0	0	96.6	96.6	1	4035.54	3.5	0	83.12	0	3.57	0	0	2.86	0	0	0	0	0	0	7.08	7.08
DSTATCOM - 10 MVAR #1	DSAT1	369437	4908757	2.5	0	0	96.6	96.6	1	4067.1	3.5	0	83.19	0	3.58	0	0	2.88	0	0	0	0	0	0	6.99	6.99
Inverter	MV1-3	364440	4906039	2	0	0	89.1	89.1	1	1718.99	3.25	0	75.71	0	0.84	0	0	7.58	0	0	0	0	0	0	4.93	4.93
Inverter	MV6-1	370235	4907364	2	0	0	97.3	97.3	1	4577.4	3.25	0	84.21	0	0.6	0	0	17.95	0	0	0	0	0	0	-5.45	-5.45
Inverter	MV3-1	368156	4907976	2	0	0	89.1	89.1	1	2600.12	3.25	0	79.3	0	1.05	0	0	9	0	0	0	0	0	0	-0.29	-0.29
Inverter	MV3-5	368340	4907843	2	0	0	89.1	89.1	1	2745.58	3.25	0	79.77	0	1.09	0	0	9.23	0	0	0	0	0	0	-1.03	-1.03
Inverter	MV3-4	368502	4907925	2	0	0	89.1	89.1	1	2921.8	3.25	0	80.31	0	1.13	0	0	9.5	0	0	0	0	0	0	-1.88	-1.88
Inverter	MV3-22	368656	4907142	2	0	0	89.1	89.1	1	2998.98	3.25	0	80.54	0	1.15	0	0	9.62	0	0	0	0	0	0	-2.24	-2.24
SubstationTransformer	W_ST	369711.17	4906112.3	2.5	0	0	92	92	1	4209.13	4.25	0	83.48	0	1.42	2.55	0.28	7.64	0	0	0	0	0	0	-3.12	-3.12
Inverter	MV3-2	368671	4907928	2	0	0	89.1	89.1	1	3087.15	3.25	0	80.79	0	1.17	0	0	9.75	0	0	0	0	0	0	-2.65	-2.65
Gardiner Substation	G_Sub	366586.3	4903349.9	2.5	0	0	90.8	90.8	1	4009.8	4.25	0	83.06	0	1.38	2.67	0.34	7.38	0	0	0	0	0	0	-3.72	-3.72
Inverter	MV4-13	369051	4908605	2	0	0	89.1	89.1	1	3652.26	3.25	0	82.25	0	1.31	0	0	10.58	0	0	0	0	0	0	-5.08	-5.08
Fixed Reactor Bank 1	FRB1	369378	4908755	6	0	0	89.8	89.8	1	4011.61	5.25	0	83.07	0	-0.72	0	0	7.38	0	0	0	0	0	0	0.05	0.05
Inverter	MV4-12	369043	4908803	2	0	0	89.1	89.1	1	3722.92	3.25	0	82.42	0	1.32	0	0	10.69	0	0	0	0	0	0	-5.37	-5.37
Inverter	MV4-15	369176	4908481	2	0	0	89.1	89.1	1	3725.88	3.25	0	82.42	0	1.32	0	0	10.69	0	0	0	0	0	0	-5.38	-5.38
Inverter	MV4-14	369176	4908507	2	0	0	89.1	89.1	1	3734.55	3.25	0	82.44	0	1.33	0	0	10.7	0	0	0	0	0	0	-5.42	-5.42
Fixed Reactor Bank 2	FRB2	369464	4908755	6	0	0	89.8	89.8	1	4091.46	5.25	0	83.24	0	-0.71	0	0	7.49	0	0	0	0	0	0	-0.24	-0.24
Westbrook Inverter Enclosur	W_INV2	369374	4906388	2	0	0	89.1	89.1	1	3813.92	3.25	0	82.63	0	1.35	0	0	10.82	0	0	0	0	0	0	-5.73	-5.73
Westbrook Inverter Enclosur	W_INV3	369508	4906164	2	0	0	89.1	89.1	1	3999.55	3.25	0	83.04	0	1.39	0	0	11.08	0	0	0	0	0	0	-6.46	-6.46
Westbrook Inverter Enclosur	W_INV5	369719	4906574	2	0	0	89.1	89.1	1	4116.06	3.25	0	83.29	0	1.42	0	0	11.25	0	0	0	0	0	0	-6.9	-6.9
Westbrook Inverter Enclosur	W_INV4	369673	4906164	2	0	0	89.1	89.1	1	4158.58	3.25	0	83.38	0	1.43	0	0	11.31	0	0	0	0	0	0	-7.06	-7.06
Westbrook Inverter Enclosur	W_INV7	369780	4906417	2	0	0	89.1	89.1	1	4204.55	3.25	0	83.47	0	1.44	0	0	11.37	0	0	0	0	0	0	-7.23	-7.23
Westbrook Inverter Enclosur	W_INV6	369875	4906578	2	0	0	89.1	89.1	1	4269.38	3.25	0	83.61	0	1.46	0	0	11.46	0	0	0	0	0	0	-7.47	-7.47
Inverter	MV5-6	369982	4908507	2	0	0	89.1	89.1	1	4501.76	3.25	0	84.07	0	1.52	0	0	11.79	0	0	0	0	0	0	-8.31	-8.31
Inverter Transformer	MV2-1 T	365836	4906816	2	0	0	69.4	69.4	1	469.64	3.25	0	64.44	0	1	0	0	2.89	0	0	0	0	0	0	1.03	1.03
Inverters	G_Inv1	366526.4	4903225.8	2	0	0	87.7	87.7	1	4117.6	3.25	0	83.29	0	2.8	0	0	5	0	0	0	0	0	0	-3.43	-3.43
Inverters	G_Inv2	366676.9	4903239.1	2	0	0	87.7	87.7	1	4139.02	3.25	0	83.34	0	2.8	0	0	5.02	0	0	0	0	0	0	-3.5	-3.5
Inverters	G_Inv3	366583.7	4903091.4	2	0	0	87.7	87.7	1	4261.14	3.25	0	83.59	0	2.81	0	0	5.16	0	0	0	0	0	0	-3.9	-3.9
Inverters	G_Inv4	366732.8	4903105	2	0	0	87.7	87.7	1	4282.8	3.25	0	83.63	0	2.81	0	0	5.18	0	0	0	0	0	0	-3.97	-3.97
Inverters	G_Inv5	366638.5	4902958.1	2	0	0	87.7	87.7	1	4403.23	3.25	0	83.88	0	2.82	0	0	5.31	0	0	0	0	0	0	-4.35	-4.35
Inverters	G_Inv6	366788.5	4902972	2	0	0	87.7	87.7	1	4425.56	3.25	0	83.92	0	2.83	0	0	5.33	0	0	0	0	0	0	-4.42	-4.42
Inverters	G_Inv7	366694.6	4902824.7	2	0	0	87.7	87.7	1	4545.83	3.25	0	84.15	0	2.83	0	0	5.46	0	0	0	0	0	0	-4.79	-4.79
Inverters	G_Inv8	366844.5	4902838.5	2	0	0	87.7	87.7	1	4568.98	3.25	0	84.2	0	2.84	0	0	5.48	0	0	0	0	0	0	-4.86	-4.86
Westbrook Inverter Enclosur	W_INV1	369409	4906578	2	0	0	86.1	86.1	1	3809.91	3.25	0	82.62	0	1.35	0	0	10.81	0	0	0	0	0	0	-8.72	-8.72
Inverters	G_Inv9	366750.9	4902691.8	2	0	0	87.7	87.7	1	4688.13	3.25	0	84.42	0	2.84	0	0	5.61	0	0	0	0	0	0	-5.21	-5.21
Inverters	G_Inv10	366900.7	4902704.8	2	0	0	87.7	87.7	1	4712.72	3.25	0	84.47	0	2.85	0	0	5.64	0	0	0	0	0	0	-5.29	-5.29
Inverter	MV6-4	370250	4906966	2	0	0	86.1	86.1	1	4599.84	3.25	0	84.25	0	1.54	0	0	11.92	0	0	0	0	0	0	-11.66	-11.66
Westbrook Inverter Transfor	W_INVTR1	369403	4906578	2	0	0	78.2	78.2	1	3804.01	3.25	0	82.6	0	-2.92	0	0	1.98	0	0	0	0	0	0	-3.43	-3.43
Westbrook Inverter Transfor	W_INVTR2	369368	4906388	2	0	0	77.3	77.3	1	3808.08	3.25	0	82.61	0	-2.92	0	0	1.98	0	0	0	0	0	0	-4.34	-4.34
Westbrook Inverter Transfor	W_INVTR3	369514	4906164	2	0	0	77.3	77.3	1	4005.32	3.25	0	83.05	0	-2.96	0	0	2.06	0	0	0	0	0	0	-4.8	-4.8
Westbrook Inverter Transfor	W_INVTR5	369725	4906574	2	0	0	77.3	77.3	1	4121.98	3.25	0	83.3	0	-2.99	0	0	2.1	0	0	0	0	0	0	-5.07	-5.07
Inverter Transformer	MV1-7 T	364919	4905782	2	0	0	69.4	69.4	1	1644.86	3.25	0	75.32	0	2.03	0	0	4.6	0	0	0	0	0	0	-12.6	-12.6
Westbrook Inverter Transfor	W_INVTR4	369679	4906164	2	0	0	77.3	77.3	1	4164.37	3.25	0	83.39	0	-3	0	0	2.12	0	0	0	0	0	0	-5.17	-5.17

Westbrook Inverter Transfor	W_INVTR7	369786	4906417	2	0	0	77.3	77.3	1	4210.43	3.25	0	83.49	0	-3.01	0	0	2.13	0	0	0	0	0	0	-5.27	-5.27
Westbrook Inverter Transfor	W_INVTR6	369881	4906578	2	0	0	77.3	77.3	1	4275.3	3.25	0	83.62	0	-3.02	0	0	2.16	0	0	0	0	0	0	-5.41	-5.41
Inverter Transformer	MV1-10 T	365010	4905564	2	0	0	69.4	69.4	1	1807.53	3.25	0	76.14	0	2.1	0	0	4.77	0	0	0	0	0	0	-13.66	-13.66
Inverter Transformer	MV1-13 T	364725	4905241	2	0	0	69.4	69.4	1	2216.41	3.25	0	77.91	0	2.25	0	0	5.18	0	0	0	0	0	0	-15.99	-15.99
Inverter Transformer	MV1-14 T	365157	4905049	2	0	0	69.4	69.4	1	2258.5	3.25	0	78.08	0	2.27	0	0	5.22	0	0	0	0	0	0	-16.21	-16.21
Inverter Transformer	MV2-4 T	365590	4906628	2	0	0	56.1	56.1	1	626.81	3.25	0	66.94	0	-0.1	0	0	3.93	0	0	0	0	0	0	-14.72	-14.72
Inverter Transformer	MV2-3 T	365814	4906641	2	0	0	56.1	56.1	1	629.39	3.25	0	66.98	0	-0.1	0	0	3.94	0	0	0	0	0	0	-14.76	-14.76
Inverter Transformer	MV2-2 T	365982	4906654	2	0	0	56.1	56.1	1	678.78	3.25	0	67.63	0	-0.09	0	0	4.08	0	0	0	0	0	0	-15.57	-15.57
Inverter Transformer	MV6-1 T	370230	4907364	2	0	0	69.4	69.4	1	4572.4	3.25	0	84.2	0	2.92	0	0	7.09	0	0	0	0	0	0	-24.86	-24.86
Inverter Transformer	MV6-4 T	370244	4906966	2	0	0	69.4	69.4	1	4593.85	3.25	0	84.24	0	2.93	0	0	7.1	0	0	0	0	0	0	-24.92	-24.92
Inverter Transformer	MV1-1 T	364721	4906166	2	0	0	56.1	56.1	1	1434.25	3.25	0	74.13	0	0.17	0	0	5.88	0	0	0	0	0	0	-24.12	-24.12
Inverter Transformer	MV1-2 T	364759	4906063	2	0	0	56.1	56.1	1	1490.42	3.25	0	74.47	0	0.19	0	0	6	0	0	0	0	0	0	-24.6	-24.6
Inverter Transformer	MV1-4 T	364821	4905918	2	0	0	56.1	56.1	1	1574.53	3.25	0	74.94	0	0.23	0	0	6.18	0	0	0	0	0	0	-25.29	-25.29
Inverter Transformer	MV1-5 T	364676	4905892	2	0	0	56.1	56.1	1	1677.25	3.25	0	75.49	0	0.27	0	0	6.39	0	0	0	0	0	0	-26.1	-26.1
Inverter Transformer	MV1-3 T	364435	4906039	2	0	0	56.1	56.1	1	1722.53	3.25	0	75.72	0	0.29	0	0	6.49	0	0	0	0	0	0	-26.44	-26.44
Inverter Transformer	MV1-8 T	364782	4905647	2	0	0	56.1	56.1	1	1828.1	3.25	0	76.24	0	0.33	0	0	6.7	0	0	0	0	0	0	-27.21	-27.21
Inverter Transformer	MV1-6 T	364482	4905835	2	0	0	56.1	56.1	1	1841.3	3.25	0	76.3	0	0.34	0	0	6.73	0	0	0	0	0	0	-27.31	-27.31
Inverter Transformer	MV1-9 T	364555	4905646	2	0	0	56.1	56.1	1	1948.04	3.25	0	76.79	0	0.38	0	0	6.94	0	0	0	0	0	0	-28.06	-28.06
Inverter Transformer	MV1-12 T	365044	4905386	2	0	0	56.1	56.1	1	1963.79	3.25	0	76.86	0	0.39	0	0	6.97	0	0	0	0	0	0	-28.16	-28.16
Inverter Transformer	MV3-12 T	367674	4907594	2	0	0	56.1	56.1	1	2043.99	3.25	0	77.21	0	0.42	0	0	7.13	0	0	0	0	0	0	-28.7	-28.7
Inverter Transformer	MV1-11 T	364649	4905414	2	0	0	56.1	56.1	1	2096.35	3.25	0	77.43	0	0.44	0	0	7.23	0	0	0	0	0	0	-29.05	-29.05
Inverter Transformer	MV3-18 T	367757	4907412	2	0	0	56.1	56.1	1	2104.17	3.25	0	77.46	0	0.45	0	0	7.25	0	0	0	0	0	0	-29.1	-29.1
Inverter Transformer	MV1-15 T	365309	4904994	2	0	0	56.1	56.1	1	2283.98	3.25	0	78.17	0	0.52	0	0	7.59	0	0	0	0	0	0	-30.23	-30.23
Inverter Transformer	MV3-13 T	367958	4907577	2	0	0	56.1	56.1	1	2322	3.25	0	78.32	0	0.54	0	0	7.66	0	0	0	0	0	0	-30.46	-30.46
Inverter Transformer	MV3-7 T	367951	4907754	2	0	0	56.1	56.1	1	2346.55	3.25	0	78.41	0	0.55	0	0	7.71	0	0	0	0	0	0	-30.61	-30.61
Inverter Transformer	MV3-3 T	367944	4907927	2	0	0	56.1	56.1	1	2382.9	3.25	0	78.54	0	0.57	0	0	7.77	0	0	0	0	0	0	-30.82	-30.82
Inverter Transformer	MV3-17 T	368183	4907472	2	0	0	56.1	56.1	1	2533.66	3.25	0	79.07	0	0.63	0	0	8.05	0	0	0	0	0	0	-31.7	-31.7
Inverter Transformer	MV3-10 T	368162	4907669	2	0	0	56.1	56.1	1	2537.66	3.25	0	79.09	0	0.63	0	0	8.06	0	0	0	0	0	0	-31.72	-31.72
Inverter Transformer	MV3-6 T	368156	4907834	2	0	0	56.1	56.1	1	2564.16	3.25	0	79.18	0	0.64	0	0	8.11	0	0	0	0	0	0	-31.87	-31.87
Inverter Transformer	MV3-1 T	368150	4907976	2	0	0	56.1	56.1	1	2594.36	3.25	0	79.28	0	0.66	0	0	8.16	0	0	0	0	0	0	-32.04	-32.04
Inverter Transformer	MV3-19 T	368352	4907347	2	0	0	56.1	56.1	1	2694.71	3.25	0	79.61	0	0.7	0	0	8.34	0	0	0	0	0	0	-32.59	-32.59
Inverter Transformer	MV3-15 T	368351	4907477	2	0	0	56.1	56.1	1	2701.47	3.25	0	79.63	0	0.7	0	0	8.35	0	0	0	0	0	0	-32.63	-32.63
Inverter Transformer	MV3-11 T	368340	4907662	2	0	0	56.1	56.1	1	2712.32	3.25	0	79.67	0	0.71	0	0	8.37	0	0	0	0	0	0	-32.69	-32.69
Inverter Transformer	MV3-5 T	368335	4907843	2	0	0	56.1	56.1	1	2740.7	3.25	0	79.76	0	0.72	0	0	8.42	0	0	0	0	0	0	-32.84	-32.84
Inverter Transformer	MV3-21 T	368484	4907206	2	0	0	56.1	56.1	1	2825.36	3.25	0	80.02	0	0.76	0	0	8.57	0	0	0	0	0	0	-33.29	-33.29
Inverter Transformer	MV3-16 T	368509	4907475	2	0	0	56.1	56.1	1	2858.79	3.25	0	80.12	0	0.77	0	0	8.63	0	0	0	0	0	0	-33.46	-33.46
Inverter Transformer	MV3-9 T	368517	4907703	2	0	0	56.1	56.1	1	2893.52	3.25	0	80.23	0	0.78	0	0	8.69	0	0	0	0	0	0	-33.64	-33.64
Inverter Transformer	MV3-4 T	368507	4907925	2	0	0	56.1	56.1	1	2926.67	3.25	0	80.33	0	0.8	0	0	8.74	0	0	0	0	0	0	-33.81	-33.81
Inverter Transformer	MV3-22 T	368661	4907142	2	0	0	56.1	56.1	1	3003.98	3.25	0	80.55	0	0.83	0	0	8.87	0	0	0	0	0	0	-34.2	-34.2
Inverter Transformer	MV3-20 T	368683	4907317	2	0	0	56.1	56.1	1	3024.72	3.25	0	80.61	0	0.84	0	0	8.91	0	0	0	0	0	0	-34.31	-34.31
Inverter Transformer	MV3-14 T	368678	4907498	2	0	0	56.1	56.1	1	3029.09	3.25	0	80.63	0	0.84	0	0	8.92	0	0	0	0	0	0	-34.33	-34.33
Inverter Transformer	MV3-8 T	368685	4907712	2	0	0	56.1	56.1	1	3060.92	3.25	0	80.72	0	0.86	0	0	8.97	0	0	0	0	0	0	-34.49	-34.49
Inverter Transformer	MV3-2 T	368677	4907928	2	0	0	56.1	56.1	1	3093	3.25	0	80.81	0	0.87	0	0	9.02	0	0	0	0	0	0	-34.64	-34.64
Inverter Transformer	MV4-13 T	369057	4908605	2	0	0	56.1	56.1	1	3657.83	3.25	0	82.26	0	1.11	0	0	9.94	0	0	0	0	0	0	-37.25	-37.25
Inverter Transformer	MV4-15 T	369170	4908481	2	0	0	56.1	56.1	1	3720.22	3.25	0	82.41	0	1.13	0	0	10.03	0	0	0	0	0	0	-37.52	-37.52
Inverter Transformer	MV4-12 T	369049	4908803	2	0	0	56.1	56.1	1	3728.38	3.25	0	82.43	0	1.13	0	0	10.04	0	0	0	0	0	0	-37.55	-37.55
Inverter Transformer	MV4-14 T	369182	4908507	2	0	0	56.1	56.1	1	3740.2	3.25	0	82.46	0	1.14	0	0	10.06	0	0	0	0	0	0	-37.6	-37.6
Inverter Transformer	MV4-7 T	369040	4909001	2	0	0	56.1	56.1	1	3807.05	3.25	0	82.61	0	1.17	0	0	10.16	0	0	0	0	0	0	-37.88	-37.88
Inverter Transformer	MV4-4 T	369033	4909199	2	0	0	56.1	56.1	1	3895.97	3.25	0	82.81	0	1.2	0	0	10.3	0	0	0	0	0	0	-38.26	-38.26
Inverter Transformer	MV4-11 T	369269	4908855	2	0	0	56.1	56.1	1	3950.31	3.25	0	82.93	0	1.22	0	0	10.38	0	0	0	0	0	0	-38.48	-38.48
Inverter Transformer	MV4-1 T	369017	4909397	2	0	0	56.1	56.1	1	3985.16	3.25	0	83.01	0	1.24	0	0	10.43	0	0	0	0	0	0	-38.62	-38.62
Inverter Transformer	MV4-10 T	369307	4908858	2	0	0	56.1	56.1	1	3986.27	3.25	0	83.01	0	1.24	0	0	10.43	0	0	0	0	0	0	-38.63	-38.63
Inverter Transformer	MV4-8 T	369262	4909001	2	0	0	56.1	56.1	1	4005.51	3.25	0	83.05	0	1.25	0	0	10.46	0	0	0	0	0	0	-38.7	-38.7
Inverter Transformer	MV4-9 T	369284	4909001	2	0	0	56.1	56.1	1	4025.31	3.25	0	83.1	0	1.25	0	0	10.49	0	0	0	0	0	0	-38.78	-38.78
Inverter Transformer	MV4-6 T	369249	4909192	2	0	0	56.1	56.1	1	4081.13	3.25	0	83.22	0	1.28	0	0	10.57	0	0	0	0	0	0	-39.01	-39.01
Inverter Transformer	MV4-5 T	369283	4909199	2	0	0	56.1	56.1	1	4114.38	3.25	0	83.29	0	1.29	0	0	10.62	0	0	0	0	0	0	-39.14	-39.14
Inverter Transformer	MV4-3 T	369234	4909397	2	0	0	56.1	56.1	1	4169.65	3.25	0	83.4	0	1.31	0	0	10.7	0	0	0	0	0	0	-39.36	-39.36
Inverter Transformer	MV4-2 T	369267	4909397	2	0	0	56.1	56.1	1	4197.97	3.25	0	83.46	0	1.32	0	0	10.75	0	0	0	0	0	0	-39.47	-39.47
Inverter Transformer	MV6-2 T	370091	4907339	2	0	0	56.1	56.1	1	4432.87	3.25	0	83.93	0	1.41	0	0	11.08	0	0	0	0	0	0	-40.37	-40.37
Inverter Transformer	MV5-6 T	369987	4908507	2	0	0	56.1	56.1	1	4506.56	3.25	0	84.08	0	1.44	0	0	11.18	0	0	0	0	0	0	-40.65	-40.65
Inverter Transformer	MV6-3 T	370202	4907140	2	0	0	56.1	56.1	1	4544.36	3.25	0	84.15	0	1.46	0	0	11.24	0	0	0	0	0	0	-40.78	-40.78
Inverter Transformer	MV5-5 T	370021	4908690	2	0	0	56.1	56.1	1	4593.23	3.25	0	84.24	0	1.47	0	0	11.31	0	0	0	0	0	0	-40.96	-40.96
Inverter Transformer	MV5-2 T	370011	4908853	2	0	0	56.1	56.1	1	4637.49	3.25	0	84.33	0	1.49	0	0	11.37	0	0	0	0	0	0	-41.12	-41.12
Inverter Transformer	MV5-1 T	370015	4909142	2	0	0	56.1	56.1	1	4748.75	3.25	0	84.53	0	1.53	0	0	11.52	0	0	0	0	0	0	-41.52	-41.52
Inverter Transformer	MV5-3 T	370237	4908851	2	0	0	56.1	56.1	1	4849.55	3.25	0	84.71	0	1.57	0	0	11.65	0	0	0	0	0	0	-41.88	-41.88
Inverter Transformer	MV5-4 T	370330	4908707	2	0	0	56.1	56.1	1	4892.67	3.25	0	84.79	0	1.59	0	0	11.71	0	0	0	0	0	0	-42.03	-42.03
Line Reactor	NGR	369421	4908787.5	5	0	0	45.4	45.4	1	4063.68	5.25	0	83.18	0	3.29	1.34	0.1	1.66	0	0	0	0	0	0	-44.11	-44.11
Limit. Valu 0	0																								
Level D/N: 30.9569	30.9569																								

Receiver: Existing Noise Receptor
ID: S-R20
X: 365720
Y: 4907293

Z: 4.5
Ground: 0

ISO	Description	ID	X	Y	Z	Ground	ReflOrd	LxT	LxN	L/A	Dist.	hm	Freq	Adiv	K0b	Agr	Abar	z	Aatm	Afol	Ahous	Cmet	CmetN	Dc	RL	LtotT	LtotN
	Inverter	MV2-3	365820	4906641	2	0	0	100.3	100.3	1	659.63	3.25	0	67.39	0	-0.44	0	0	9.54	0	0	0	0	0	0	23.83	23.83
	Inverter	MV2-4	365586	4906624	2	0	0	100.3	100.3	1	682.29	3.25	0	67.68	0	-0.42	0	0	9.65	0	0	0	0	0	0	23.4	23.4
	Inverter	MV2-1	365842	4906816	2	0	0	97.3	97.3	1	492.36	3.25	0	64.85	0	-0.56	0	0	8.47	0	0	0	0	0	0	24.56	24.56
	Sol_Luce Substation	S_Substation	369426	4908792	3.5	0	0	112.1	112.1	1	3997.68	5.25	0	83.04	0	0.6	3.11	0.3	7.36	0	0	0	0	0	0	17.97	17.97
	Inverter	MV1-1	364715	4906166	2	0	0	100.3	100.3	1	1510.02	3.25	0	74.58	0	-0.03	0	0	12.35	0	0	0	0	0	0	13.41	13.41
	Inverter	MV1-2	364753	4906063	2	0	0	100.3	100.3	1	1564.61	3.25	0	74.89	0	-0.01	0	0	12.48	0	0	0	0	0	0	12.95	12.95
	Inverter	MV1-4	364815	4905918	2	0	0	100.3	100.3	1	1646.1	3.25	0	75.33	0	0.02	0	0	12.68	0	0	0	0	0	0	12.29	12.29
	Inverter	MV1-5	364671	4905892	2	0	0	100.3	100.3	1	1750.2	3.25	0	75.86	0	0.05	0	0	12.92	0	0	0	0	0	0	11.48	11.48
	Inverter	MV1-8	364788	4905647	2	0	0	100.3	100.3	1	1891.55	3.25	0	76.54	0	0.1	0	0	13.23	0	0	0	0	0	0	10.45	10.45
	Inverter	MV1-6	364477	4905835	2	0	0	100.3	100.3	1	1915.94	3.25	0	76.65	0	0.1	0	0	13.28	0	0	0	0	0	0	10.28	10.28
	Inverter	MV3-12	367668	4907594	2	0	0	100.3	100.3	1	1971.12	3.25	0	76.89	0	0.12	0	0	13.4	0	0	0	0	0	0	9.9	9.9
	Inverter	MV1-9	364561	4905646	2	0	0	100.3	100.3	1	2013.93	3.25	0	77.08	0	0.13	0	0	13.49	0	0	0	0	0	0	9.61	9.61
	Inverter	MV1-12	365038	4905386	2	0	0	100.3	100.3	1	2025.28	3.25	0	77.13	0	0.14	0	0	13.51	0	0	0	0	0	0	9.53	9.53
	Inverter	MV3-18	367752	4907412	2	0	0	100.3	100.3	1	2035.48	3.25	0	77.17	0	0.14	0	0	13.54	0	0	0	0	0	0	9.46	9.46
	Inverter	MV1-11	364655	4905414	2	0	0	100.3	100.3	1	2159.83	3.25	0	77.69	0	0.17	0	0	13.79	0	0	0	0	0	0	8.66	8.66
	Inverter	MV3-13	367963	4907577	2	0	0	100.3	100.3	1	2260.91	3.25	0	78.09	0	0.2	0	0	13.99	0	0	0	0	0	0	8.03	8.03
	Inverter	MV3-7	367945	4907754	2	0	0	100.3	100.3	1	2272.26	3.25	0	78.13	0	0.2	0	0	14.02	0	0	0	0	0	0	7.96	7.96
	Inverter	MV3-3	367939	4907927	2	0	0	100.3	100.3	1	2307.8	3.25	0	78.26	0	0.21	0	0	14.09	0	0	0	0	0	0	7.75	7.75
	Inverter	MV1-15	365315	4904994	2	0	0	100.3	100.3	1	2334.4	3.25	0	78.36	0	0.22	0	0	14.14	0	0	0	0	0	0	7.59	7.59
	Inverter	MV1-7	364925	4905782	2	0	0	97.3	97.3	1	1707.38	3.25	0	75.65	0	0.04	0	0	12.82	0	0	0	0	0	0	8.81	8.81
	Inverter	MV3-17	368178	4907472	2	0	0	100.3	100.3	1	2464.51	3.25	0	78.83	0	0.25	0	0	14.39	0	0	0	0	0	0	6.84	6.84
	Inverter	MV3-10	368167	4907669	2	0	0	100.3	100.3	1	2475.72	3.25	0	78.87	0	0.25	0	0	14.41	0	0	0	0	0	0	6.77	6.77
	Inverter	MV3-6	368162	4907834	2	0	0	100.3	100.3	1	2501.21	3.25	0	78.96	0	0.26	0	0	14.46	0	0	0	0	0	0	6.63	6.63
	Inverter	MV2-2	365977	4906654	2	0	0	89.1	89.1	1	688.75	3.25	0	67.76	0	0.61	0	0	5.67	0	0	0	0	0	0	15.01	15.01
	Inverter	MV3-19	368357	4907347	2	0	0	100.3	100.3	1	2637.55	3.25	0	79.42	0	0.29	0	0	14.72	0	0	0	0	0	0	5.88	5.88
	Inverter	MV1-10	365004	4905564	2	0	0	97.3	97.3	1	1871.39	3.25	0	76.44	0	0.09	0	0	13.19	0	0	0	0	0	0	7.59	7.59
	Inverter	MV3-15	368357	4907477	2	0	0	100.3	100.3	1	2643.41	3.25	0	79.44	0	0.29	0	0	14.73	0	0	0	0	0	0	5.85	5.85
	Inverter	MV3-11	368346	4907662	2	0	0	100.3	100.3	1	2651.8	3.25	0	79.47	0	0.29	0	0	14.74	0	0	0	0	0	0	5.81	5.81
	Inverter	MV3-21	368478	4907206	2	0	0	100.3	100.3	1	2759.37	3.25	0	79.82	0	0.31	0	0	14.94	0	0	0	0	0	0	5.24	5.24
	Inverter	MV3-16	368514	4907475	2	0	0	100.3	100.3	1	2799.92	3.25	0	79.94	0	0.32	0	0	15.01	0	0	0	0	0	0	5.03	5.03
	Inverter	MV3-9	368512	4907703	2	0	0	100.3	100.3	1	2821.94	3.25	0	80.01	0	0.33	0	0	15.05	0	0	0	0	0	0	4.92	4.92
	Inverter	MV3-20	368689	4907317	2	0	0	100.3	100.3	1	2969.1	3.25	0	80.45	0	0.36	0	0	15.32	0	0	0	0	0	0	4.19	4.19
	Inverter	MV3-14	368684	4907498	2	0	0	100.3	100.3	1	2971.08	3.25	0	80.46	0	0.36	0	0	15.32	0	0	0	0	0	0	4.18	4.18
	Inverter	MV3-8	368680	4907712	2	0	0	100.3	100.3	1	2989.51	3.25	0	80.51	0	0.36	0	0	15.35	0	0	0	0	0	0	4.09	4.09
	Inverter	MV1-13	364731	4905241	2	0	0	97.3	97.3	1	2277.9	3.25	0	78.15	0	0.2	0	0	14.03	0	0	0	0	0	0	4.93	4.93
	Inverter	MV1-14	365163	4905049	2	0	0	97.3	97.3	1	2312.1	3.25	0	78.28	0	0.21	0	0	14.1	0	0	0	0	0	0	4.72	4.72
	Inverter	MV4-7	369035	4909001	2	0	0	100.3	100.3	1	3729.14	3.25	0	82.43	0	0.49	0	0	16.61	0	0	0	0	0	0	0.78	0.78
	Inverter	MV4-4	369027	4909199	2	0	0	100.3	100.3	1	3816.95	3.25	0	82.63	0	0.5	0	0	16.75	0	0	0	0	0	0	0.42	0.42
	Inverter	MV4-11	369264	4908855	2	0	0	100.3	100.3	1	3872.96	3.25	0	82.76	0	0.51	0	0	16.84	0	0	0	0	0	0	0.2	0.2
	Inverter	MV4-1	369011	4909397	2	0	0	100.3	100.3	1	3906.09	3.25	0	82.83	0	0.51	0	0	16.9	0	0	0	0	0	0	0.07	0.07
	Inverter	MV4-10	369312	4908858	2	0	0	100.3	100.3	1	3918.12	3.25	0	82.86	0	0.52	0	0	16.92	0	0	0	0	0	0	0.02	0.02
	Inverter	MV4-8	369256	4909001	2	0	0	100.3	100.3	1	3926.9	3.25	0	82.88	0	0.52	0	0	16.93	0	0	0	0	0	0	-0.02	-0.02
	Inverter	MV4-9	369289	4909001	2	0	0	100.3	100.3	1	3956.64	3.25	0	82.95	0	0.52	0	0	16.98	0	0	0	0	0	0	-0.13	-0.13
	Inverter	MV4-6	369243	4909192	2	0	0	100.3	100.3	1	4002.22	3.25	0	83.05	0	0.53	0	0	17.05	0	0	0	0	0	0	-0.31	-0.31
	Inverter	MV4-5	369289	4909199	2	0	0	100.3	100.3	1	4046.06	3.25	0	83.14	0	0.53	0	0	17.12	0	0	0	0	0	0	-0.48	-0.48
	Inverter	MV4-3	369229	4909397	2	0	0	100.3	100.3	1	4091.44	3.25	0	83.24	0	0.54	0	0	17.19	0	0	0	0	0	0	-0.66	-0.66
	Inverter	MV4-2	369272	4909397	2	0	0	100.3	100.3	1	4128.38	3.25	0	83.32	0	0.54	0	0	17.25	0	0	0	0	0	0	-0.8	-0.8
	Inverter	MV6-2	370085	4907339	2	0	0	100.3	100.3	1	4365.24	3.25	0	83.8	0	0.57	0	0	17.62	0	0	0	0	0	0	-1.69	-1.69
	Inverter	MV6-3	370207	4907140	2	0	0	100.3	100.3	1	4489.61	3.25	0	84.04	0	0.59	0	0	17.81	0	0	0	0	0	0	-2.14	-2.14
	Inverter	MV5-5	370015	4908690	2	0	0	100.3	100.3	1	4516.49	3.25	0	84.1	0	0.59	0	0	17.86	0	0	0	0	0	0	-2.23	-2.23
	Inverter	MV5-2	370006	4908853	2	0	0	100.3	100.3	1	4561.07	3.25	0	84.18	0	0.6	0	0	17.92	0	0	0	0	0	0	-2.39	-2.39
	Inverter	MV5-1	370020	4909142	2	0	0	100.3	100.3	1	4680.68	3.25	0	84.41	0	0.61	0	0	18.1	0	0	0	0	0	0	-2.81	-2.81
	Inverter	MV5-3	370231	4908851	2	0	0	100.3	100.3	1	4772.47	3.25	0	84.57	0	0.62	0	0	18.24	0	0	0	0	0	0	-3.13	-3.13
	Inverter	MV5-4	370324	4908707	2	0	0	100.3	100.3	1	4816.25	3.25	0	84.65	0	0.62	0	0	18.31	0	0	0	0	0	0	-3.27	-3.27
	DSTATCOM - 10 MVAR #2	DSAT2	369403	4908757	2.5	0	0	96.6	96.6	1	3963.31	3.5	0	82.96	0	3.56	0	0	2.82	0	0	0	0	0	0	7.28	7.28
	DSTATCOM - 10 MVAR #1	DSAT1	369437	4908757	2.5	0	0	96.6	96.6	1	3994.92	3.5	0	83.03	0	3.57	0	0	2.84	0	0	0	0	0	0	7.19	7.19
	Inverter	MV6-1	370235	4907364	2	0	0	97.3	97.3	1	4515.56	3.25	0	84.09	0	0.59	0	0	17.85	0	0	0	0	0	0	-5.23	-5.23
	Inverter	MV1-3	364440	4906039	2	0	0	89.1	89.1	1	1791.9	3.25	0	76.07	0	0.86	0	0	7.7	0	0	0	0	0	0	4.43	4.43
	Inverter	MV3-1	368156	4907976	2	0	0	89.1	89.1	1	2529.94	3.25	0	79.06	0	1.03	0	0	8.89	0	0	0	0	0	0	0.07	0.07
	Inverter	MV3-5	368340	4907843	2	0	0	89.1	89.1	1	2677.11	3.25	0	79.55	0	1.07	0	0	9.12	0	0	0	0	0	0	-0.69	-0.69
	Inverter	MV3-4	368502	4907925	2	0	0	89.1	89.1	1	2852.89	3.25	0	80.11	0	1.11	0	0	9.39	0	0	0	0	0	0	-1.55	-1.55
	Inverter	MV3-22	368656	4907142	2	0	0	89.1	89.1	1	2939.88	3.25	0	80.37	0	1.13	0	0	9.53	0	0	0	0	0	0	-1.97	-1.97
	SubstationTransformer	W_ST	369711.17	4906112.3	2.5	0	0	92	92	1	4162.16	4.25	0	83.39	0	1.41	2.56	0.28	7.58	0	0	0	0	0	0	-2.96	-2.96
	Inverter	MV3-2	368671	4907928	2	0	0	89.1	89.1	1	3018.55	3.25	0	80.6	0	1.15	0	0	9.65	0	0	0	0	0	0	-2.33	-2.33
	Gardiner Substation	G_Sub	366586.3	4903349.9	2.5	0	0	90.8	90.8	1	4037.14	4.25	0	83.12	0	1.39	2.66	0.35	7.41	0	0	0	0	0	0	-3.82	-3.82
	Inverter	MV4-13	369051	4908605	2	0	0	89.1	89.1	1	3580.07	3.25	0	82.08	0	1.29	0	0	10.48	0	0	0	0	0	0	-4.79	-4.79
	Fixed Reactor Bank 1	FRB1	369378	4908755	6	0	0	89.8	89.8	1	3939.34	5.25	0	82.91	0	-0.73	0	0	7.28	0	0	0	0	0	0	0.32	0.32
	Inverter	MV4-12	369043	4908803	2	0	0	89.1	89.1	1	3649.99	3.25	0	82.25	0	1.31	0	0	10.58	0	0	0	0	0	0	-5.08	-5.08
	Inverter	MV4-15	369176	4908481	2	0	0	89.1	89.1	1	3654.49	3.25	0	82.26	0	1.31	0	0	10.59	0	0	0	0	0	0	-5.09	-5.09
	Inverter	MV4-14	369176	4908507	2	0	0	89.1	89.1	1	3663.02	3.25	0	82.28	0	1.31	0	0	10.6	0	0	0	0	0	0	-5.13	-5.13

Fixed Reactor Bank 2	FRB2	369464	4908755	6	0	0	89.8	89.8	1	4019.33	5.25	0	83.08	0	-0.72	0	0	7.39	0	0	0	0	0	0	0.02	0.02
Westbrook Inverter Enclosur	W_INV2	369374	4906388	2	0	0	89.1	89.1	1	3764.41	3.25	0	82.51	0	1.33	0	0	10.75	0	0	0	0	0	0	-5.54	-5.54
Westbrook Inverter Enclosur	W_INV3	369508	4906164	2	0	0	89.1	89.1	1	3952.67	3.25	0	82.94	0	1.38	0	0	11.02	0	0	0	0	0	0	-6.28	-6.28
Westbrook Inverter Enclosur	W_INV5	369719	4906574	2	0	0	89.1	89.1	1	4063.12	3.25	0	83.18	0	1.41	0	0	11.17	0	0	0	0	0	0	-6.7	-6.7
Westbrook Inverter Enclosur	W_INV4	369673	4906164	2	0	0	89.1	89.1	1	4111.07	3.25	0	83.28	0	1.42	0	0	11.24	0	0	0	0	0	0	-6.88	-6.88
Westbrook Inverter Enclosur	W_INV7	369780	4906417	2	0	0	89.1	89.1	1	4153.43	3.25	0	83.37	0	1.43	0	0	11.3	0	0	0	0	0	0	-7.04	-7.04
Westbrook Inverter Enclosur	W_INV6	369875	4906578	2	0	0	89.1	89.1	1	4216.07	3.25	0	83.5	0	1.45	0	0	11.39	0	0	0	0	0	0	-7.28	-7.28
Inverter	MV5-6	369982	4908507	2	0	0	89.1	89.1	1	4431.53	3.25	0	83.93	0	1.5	0	0	11.69	0	0	0	0	0	0	-8.06	-8.06
Inverter Transformer	MV2-1 T	365836	4906816	2	0	0	69.4	69.4	1	490.91	3.25	0	64.82	0	1.04	0	0	2.94	0	0	0	0	0	0	0.56	0.56
Inverters	G_Inv1	366526.4	4903225.8	2	0	0	87.7	87.7	1	4146.37	3.25	0	83.35	0	2.8	0	0	5.03	0	0	0	0	0	0	-3.53	-3.53
Inverters	G_Inv2	366676.9	4903239.1	2	0	0	87.7	87.7	1	4165.31	3.25	0	83.39	0	2.81	0	0	5.05	0	0	0	0	0	0	-3.59	-3.59
Inverters	G_Inv3	366583.7	4903091.4	2	0	0	87.7	87.7	1	4289.46	3.25	0	83.65	0	2.82	0	0	5.19	0	0	0	0	0	0	-3.99	-3.99
Inverters	G_Inv4	366732.8	4903105	2	0	0	87.7	87.7	1	4308.73	3.25	0	83.69	0	2.82	0	0	5.21	0	0	0	0	0	0	-4.05	-4.05
Inverters	G_Inv5	366638.5	4902958.1	2	0	0	87.7	87.7	1	4431.14	3.25	0	83.93	0	2.83	0	0	5.34	0	0	0	0	0	0	-4.43	-4.43
Inverters	G_Inv6	366788.5	4902972	2	0	0	87.7	87.7	1	4451.15	3.25	0	83.97	0	2.83	0	0	5.36	0	0	0	0	0	0	-4.5	-4.5
Westbrook Inverter Enclosur	W_INV1	369409	4906578	2	0	0	86.1	86.1	1	3757.65	3.25	0	82.5	0	1.33	0	0	10.74	0	0	0	0	0	0	-8.51	-8.51
Inverters	G_Inv7	366694.6	4902824.7	2	0	0	87.7	87.7	1	4573.35	3.25	0	84.2	0	2.84	0	0	5.49	0	0	0	0	0	0	-4.87	-4.87
Inverters	G_Inv8	366844.5	4902838.5	2	0	0	87.7	87.7	1	4594.24	3.25	0	84.24	0	2.84	0	0	5.51	0	0	0	0	0	0	-4.93	-4.93
Inverters	G_Inv9	366750.9	4902691.8	2	0	0	87.7	87.7	1	4715.27	3.25	0	84.47	0	2.85	0	0	5.64	0	0	0	0	0	0	-5.3	-5.3
Inverters	G_Inv10	366900.7	4902704.8	2	0	0	87.7	87.7	1	4737.68	3.25	0	84.51	0	2.85	0	0	5.66	0	0	0	0	0	0	-5.36	-5.36
Inverter	MV6-4	370250	4906966	2	0	0	86.1	86.1	1	4541.79	3.25	0	84.14	0	1.53	0	0	11.84	0	0	0	0	0	0	-11.46	-11.46
Westbrook Inverter Transfor	W_INVTR1	369403	4906578	2	0	0	78.2	78.2	1	3751.76	3.25	0	82.48	0	-2.91	0	0	1.96	0	0	0	0	0	0	-3.3	-3.3
Westbrook Inverter Transfor	W_INVTR2	369368	4906388	2	0	0	77.3	77.3	1	3758.58	3.25	0	82.5	0	-2.91	0	0	1.96	0	0	0	0	0	0	-4.21	-4.21
Westbrook Inverter Transfor	W_INVTR3	369514	4906164	2	0	0	77.3	77.3	1	3958.42	3.25	0	82.95	0	-2.95	0	0	2.04	0	0	0	0	0	0	-4.69	-4.69
Westbrook Inverter Transfor	W_INVTR5	369725	4906574	2	0	0	77.3	77.3	1	4069.03	3.25	0	83.19	0	-2.98	0	0	2.08	0	0	0	0	0	0	-4.95	-4.95
Westbrook Inverter Transfor	W_INVTR4	369679	4906164	2	0	0	77.3	77.3	1	4116.83	3.25	0	83.29	0	-2.99	0	0	2.1	0	0	0	0	0	0	-5.06	-5.06
Westbrook Inverter Transfor	W_INVTR7	369786	4906417	2	0	0	77.3	77.3	1	4159.3	3.25	0	83.38	0	-3	0	0	2.11	0	0	0	0	0	0	-5.15	-5.15
Westbrook Inverter Transfor	W_INVTR6	369881	4906578	2	0	0	77.3	77.3	1	4221.98	3.25	0	83.51	0	-3.01	0	0	2.14	0	0	0	0	0	0	-5.29	-5.29
Inverter Transformer	MV1-7 T	364919	4905782	2	0	0	69.4	69.4	1	1710.18	3.25	0	75.66	0	2.06	0	0	4.67	0	0	0	0	0	0	-13.04	-13.04
Inverter Transformer	MV1-10 T	365010	4905564	2	0	0	69.4	69.4	1	1869.1	3.25	0	76.43	0	2.12	0	0	4.83	0	0	0	0	0	0	-14.04	-14.04
Inverter Transformer	MV1-13 T	364725	4905241	2	0	0	69.4	69.4	1	2280.51	3.25	0	78.16	0	2.27	0	0	5.24	0	0	0	0	0	0	-16.32	-16.32
Inverter Transformer	MV1-14 T	365157	4905049	2	0	0	69.4	69.4	1	2313.55	3.25	0	78.29	0	2.29	0	0	5.27	0	0	0	0	0	0	-16.49	-16.49
Inverter Transformer	MV2-3 T	365814	4906641	2	0	0	56.1	56.1	1	658.75	3.25	0	67.37	0	-0.09	0	0	4.02	0	0	0	0	0	0	-15.25	-15.25
Inverter Transformer	MV2-4 T	365590	4906628	2	0	0	56.1	56.1	1	677.59	3.25	0	67.62	0	-0.09	0	0	4.07	0	0	0	0	0	0	-15.55	-15.55
Inverter Transformer	MV2-2 T	365982	4906654	2	0	0	56.1	56.1	1	690.63	3.25	0	67.78	0	-0.08	0	0	4.11	0	0	0	0	0	0	-15.75	-15.75
Inverter Transformer	MV6-1 T	370230	4907364	2	0	0	69.4	69.4	1	4510.56	3.25	0	84.08	0	2.91	0	0	7.05	0	0	0	0	0	0	-24.69	-24.69
Inverter Transformer	MV6-4 T	370244	4906966	2	0	0	69.4	69.4	1	4535.8	3.25	0	84.13	0	2.91	0	0	7.06	0	0	0	0	0	0	-24.76	-24.76
Inverter Transformer	MV1-1 T	364721	4906166	2	0	0	56.1	56.1	1	1506.03	3.25	0	74.56	0	0.2	0	0	6.03	0	0	0	0	0	0	-24.73	-24.73
Inverter Transformer	MV1-2 T	364759	4906063	2	0	0	56.1	56.1	1	1560.91	3.25	0	74.87	0	0.22	0	0	6.15	0	0	0	0	0	0	-25.18	-25.18
Inverter Transformer	MV1-4 T	364821	4905918	2	0	0	56.1	56.1	1	1642.81	3.25	0	75.31	0	0.26	0	0	6.32	0	0	0	0	0	0	-25.83	-25.83
Inverter Transformer	MV1-5 T	364676	4905892	2	0	0	56.1	56.1	1	1747.21	3.25	0	75.85	0	0.3	0	0	6.54	0	0	0	0	0	0	-26.62	-26.62
Inverter Transformer	MV1-3 T	364435	4906039	2	0	0	56.1	56.1	1	1795.48	3.25	0	76.08	0	0.32	0	0	6.63	0	0	0	0	0	0	-26.98	-26.98
Inverter Transformer	MV1-8 T	364782	4905647	2	0	0	56.1	56.1	1	1894.51	3.25	0	76.55	0	0.36	0	0	6.83	0	0	0	0	0	0	-27.69	-27.69
Inverter Transformer	MV1-6 T	364482	4905835	2	0	0	56.1	56.1	1	1912.7	3.25	0	76.63	0	0.37	0	0	6.87	0	0	0	0	0	0	-27.81	-27.81
Inverter Transformer	MV3-12 T	367674	4907594	2	0	0	56.1	56.1	1	1977.05	3.25	0	76.92	0	0.39	0	0	7	0	0	0	0	0	0	-28.25	-28.25
Inverter Transformer	MV1-9 T	364555	4905646	2	0	0	56.1	56.1	1	2017.38	3.25	0	77.1	0	0.41	0	0	7.08	0	0	0	0	0	0	-28.53	-28.53
Inverter Transformer	MV1-12 T	365044	4905386	2	0	0	56.1	56.1	1	2023.27	3.25	0	77.12	0	0.41	0	0	7.09	0	0	0	0	0	0	-28.57	-28.57
Inverter Transformer	MV3-18 T	367757	4907412	2	0	0	56.1	56.1	1	2040.47	3.25	0	77.19	0	0.42	0	0	7.12	0	0	0	0	0	0	-28.68	-28.68
Inverter Transformer	MV1-11 T	364649	4905414	2	0	0	56.1	56.1	1	2162.8	3.25	0	77.7	0	0.47	0	0	7.36	0	0	0	0	0	0	-29.47	-29.47
Inverter Transformer	MV3-13 T	367958	4907577	2	0	0	56.1	56.1	1	2255.95	3.25	0	78.07	0	0.51	0	0	7.54	0	0	0	0	0	0	-30.06	-30.06
Inverter Transformer	MV3-7 T	367951	4907754	2	0	0	56.1	56.1	1	2278.13	3.25	0	78.15	0	0.52	0	0	7.58	0	0	0	0	0	0	-30.19	-30.19
Inverter Transformer	MV3-3 T	367944	4907927	2	0	0	56.1	56.1	1	2312.6	3.25	0	78.28	0	0.54	0	0	7.64	0	0	0	0	0	0	-30.4	-30.4
Inverter Transformer	MV1-15 T	365309	4904994	2	0	0	56.1	56.1	1	2335.45	3.25	0	78.37	0	0.55	0	0	7.69	0	0	0	0	0	0	-30.54	-30.54
Inverter Transformer	MV3-17 T	368183	4907472	2	0	0	56.1	56.1	1	2469.5	3.25	0	78.85	0	0.6	0	0	7.93	0	0	0	0	0	0	-31.33	-31.33
Inverter Transformer	MV3-10 T	368162	4907669	2	0	0	56.1	56.1	1	2470.78	3.25	0	78.86	0	0.6	0	0	7.94	0	0	0	0	0	0	-31.34	-31.34
Inverter Transformer	MV3-6 T	368156	4907834	2	0	0	56.1	56.1	1	2495.35	3.25	0	78.94	0	0.61	0	0	7.98	0	0	0	0	0	0	-31.48	-31.48
Inverter Transformer	MV3-1 T	368150	4907976	2	0	0	56.1	56.1	1	2524.16	3.25	0	79.04	0	0.63	0	0	8.03	0	0	0	0	0	0	-31.64	-31.64
Inverter Transformer	MV3-19 T	368352	4907347	2	0	0	56.1	56.1	1	2632.56	3.25	0	79.41	0	0.67	0	0	8.23	0	0	0	0	0	0	-32.25	-32.25
Inverter Transformer	MV3-15 T	368351	4907477	2	0	0	56.1	56.1	1	2637.43	3.25	0	79.42	0	0.68	0	0	8.24	0	0	0	0	0	0	-32.28	-32.28
Inverter Transformer	MV3-11 T	368340	4907662	2	0	0	56.1	56.1	1	2645.86	3.25	0	79.45	0	0.68	0	0	8.25	0	0	0	0	0	0	-32.32	-32.32
Inverter Transformer	MV3-5 T	368335	4907843	2	0	0	56.1	56.1	1	2672.21	3.25	0	79.54	0	0.69	0	0	8.3	0	0	0	0	0	0	-32.47	-32.47
Inverter Transformer	MV3-21 T	368484	4907206	2	0	0	56.1	56.1	1	2765.37	3.25	0	79.84	0	0.73	0	0	8.46	0	0	0	0	0	0	-32.97	-32.97
Inverter Transformer	MV3-16 T	368509	4907475	2	0	0	56.1	56.1	1	2794.93	3.25	0	79.93	0	0.74	0	0	8.52	0	0	0	0	0	0	-33.13	-33.13
Inverter Transformer	MV3-9 T	368517	4907703	2	0	0	56.1	56.1	1	2826.89	3.25	0	80.03	0	0.76	0	0	8.57	0	0	0	0	0	0	-33.29	-33.29
Inverter Transformer	MV3-4 T	368507	4907925	2	0	0	56.1	56.1	1	2857.76	3.25	0	80.12	0	0.77	0	0	8.62	0	0	0	0	0	0	-33.46	-33.46
Inverter Transformer	MV3-22 T	368661	4907142	2	0	0	56.1	56.1	1	2944.87	3.25	0	80.38	0	0.81	0	0	8.77	0	0	0	0	0	0	-33.9	-33.9
Inverter Transformer	MV3-20 T	368683	4907317	2	0	0	56.1	56.1	1	2963.1	3.25	0	80.43	0	0.81	0	0	8.81	0	0	0	0	0	0	-34	-34
Inverter Transformer	MV3-14 T	368678	4907498	2	0	0	56.1	56.1	1	2965.1	3.25	0	80.44	0	0.82	0	0	8.81	0	0	0	0	0	0	-34.01	-34.01
Inverter Transformer	MV3-8 T	368685	4907712	2	0	0	56.1	56.1	1	2994.46	3.25	0	80.53	0	0.83	0	0	8.86	0	0	0	0	0	0	-34.15	-34.15
Inverter Transformer	MV3-2 T	368677	4907928	2	0	0	56.1	56.1	1	3024.41	3.25	0	80.61	0	0.84	0	0	8.91	0	0	0	0	0	0	-34.3	-34.3
Inverter Transformer	MV4-13 T	369057	4908605	2	0	0	56.1	56.1	1	3585.65	3.25	0	82.09	0	1.08	0	0	9.82	0	0	0	0	0	0	-36.93	-36.93
Inverter Transformer	MV4-15 T	369170	4908481	2	0	0	56.1	56.1	1	3648.81	3.25	0	82.24	0	1.1	0	0	9.92	0	0	0	0	0	0	-37.21	-37.21
Inverter Transformer	MV4-12 T	369049	4908803	2	0	0	56.1	56.1	1	3655.45	3.25	0	82.26	0	1.1	0	0	9.93	0	0	0	0	0	0	-37.24	-37.24
Inverter Transformer	MV4-14 T	369182	4908507	2	0	0	56.1	56.1	1	3668.68	3.25	0	82.29	0	1.11	0	0	9.95	0	0	0	0	0	0	-37.29	-37.29

	Inverter Transformer	MV4-7 T	369040	4909001	2	0	0	56.1	56.1	1	3733.59	3.25	0	82.44	0	1.14	0	0	10.05	0	0	0	0	0	0	-37.57	-37.57
	Inverter Transformer	MV4-4 T	369033	4909199	2	0	0	56.1	56.1	1	3822.15	3.25	0	82.65	0	1.17	0	0	10.19	0	0	0	0	0	0	-37.95	-37.95
	Inverter Transformer	MV4-11 T	369269	4908855	2	0	0	56.1	56.1	1	3877.53	3.25	0	82.77	0	1.19	0	0	10.27	0	0	0	0	0	0	-38.18	-38.18
	Inverter Transformer	MV4-1 T	369017	4909397	2	0	0	56.1	56.1	1	3911.14	3.25	0	82.85	0	1.21	0	0	10.32	0	0	0	0	0	0	-38.32	-38.32
	Inverter Transformer	MV4-10 T	369307	4908858	2	0	0	56.1	56.1	1	3913.54	3.25	0	82.85	0	1.21	0	0	10.33	0	0	0	0	0	0	-38.33	-38.33
	Inverter Transformer	MV4-8 T	369262	4909001	2	0	0	56.1	56.1	1	3932.31	3.25	0	82.89	0	1.22	0	0	10.35	0	0	0	0	0	0	-38.41	-38.41
	Inverter Transformer	MV4-9 T	369284	4909001	2	0	0	56.1	56.1	1	3952.13	3.25	0	82.94	0	1.22	0	0	10.38	0	0	0	0	0	0	-38.49	-38.49
	Inverter Transformer	MV4-6 T	369249	4909192	2	0	0	56.1	56.1	1	4007.5	3.25	0	83.06	0	1.25	0	0	10.47	0	0	0	0	0	0	-38.71	-38.71
	Inverter Transformer	MV4-5 T	369283	4909199	2	0	0	56.1	56.1	1	4040.77	3.25	0	83.13	0	1.26	0	0	10.52	0	0	0	0	0	0	-38.85	-38.85
	Inverter Transformer	MV4-3 T	369234	4909397	2	0	0	56.1	56.1	1	4095.73	3.25	0	83.25	0	1.28	0	0	10.6	0	0	0	0	0	0	-39.07	-39.07
	Inverter Transformer	MV4-2 T	369267	4909397	2	0	0	56.1	56.1	1	4124.08	3.25	0	83.31	0	1.29	0	0	10.64	0	0	0	0	0	0	-39.18	-39.18
	Inverter Transformer	MV6-2 T	370091	4907339	2	0	0	56.1	56.1	1	4371.24	3.25	0	83.81	0	1.39	0	0	10.99	0	0	0	0	0	0	-40.14	-40.14
	Inverter Transformer	MV5-6 T	369987	4908507	2	0	0	56.1	56.1	1	4436.34	3.25	0	83.94	0	1.42	0	0	11.09	0	0	0	0	0	0	-40.38	-40.38
	Inverter Transformer	MV6-3 T	370202	4907140	2	0	0	56.1	56.1	1	4484.61	3.25	0	84.03	0	1.43	0	0	11.15	0	0	0	0	0	0	-40.56	-40.56
	Inverter Transformer	MV5-5 T	370021	4908690	2	0	0	56.1	56.1	1	4522.19	3.25	0	84.11	0	1.45	0	0	11.21	0	0	0	0	0	0	-40.7	-40.7
	Inverter Transformer	MV5-2 T	370011	4908853	2	0	0	56.1	56.1	1	4565.77	3.25	0	84.19	0	1.46	0	0	11.27	0	0	0	0	0	0	-40.86	-40.86
	Inverter Transformer	MV5-1 T	370015	4909142	2	0	0	56.1	56.1	1	4676.09	3.25	0	84.4	0	1.51	0	0	11.42	0	0	0	0	0	0	-41.26	-41.26
	Inverter Transformer	MV5-3 T	370237	4908851	2	0	0	56.1	56.1	1	4778.14	3.25	0	84.59	0	1.54	0	0	11.56	0	0	0	0	0	0	-41.63	-41.63
	Inverter Transformer	MV5-4 T	370330	4908707	2	0	0	56.1	56.1	1	4821.98	3.25	0	84.66	0	1.56	0	0	11.62	0	0	0	0	0	0	-41.78	-41.78
	Line Reactor	NGR	369421	4908787.5	5	0	0	45.4	45.4	1	3991.36	5.25	0	83.02	0	3.29	1.34	0.1	1.63	0	0	0	0	0	0	-43.93	-43.93
Limit. Valu	0	0																								
Level D/N:	30.4589	30.4589																								

Receiver: Existing Noise Receptor
ID: S-R21
X: 366173
Y: 4906712
Z: 4.5
Ground: 0

ISO	Description	ID	X	Y	Z	Ground	ReflOrd	LxT	LxN	L/A	Dist.	hm	Freq	Adiv	K0b	Agr	Abar	z	Aatm	Afol	Ahous	Cmet	CmetN	Dc	RL	LtotT	LtotN
	Inverter	MV2-3	365820	4906641	2	0	0	100.3	100.3	1	360.08	3.25	0	62.13	0	-0.64	0	0	7.18	0	0	0	0	0	0	31.65	31.65
	Inverter	MV2-1	365842	4906816	2	0	0	97.3	97.3	1	346.96	3.25	0	61.81	0	-0.64	0	0	7.02	0	0	0	0	0	0	29.13	29.13
	Inverter	MV2-4	365586	4906624	2	0	0	100.3	100.3	1	593.56	3.25	0	66.47	0	-0.48	0	0	9.16	0	0	0	0	0	0	25.16	25.16
	Inverter	MV2-2	365977	4906654	2	0	0	89.1	89.1	1	204.42	3.25	0	57.21	0	0.34	0	0	3.27	0	0	0	0	0	0	28.24	28.24
	Sol_Luce Substation	S_Substation	369426	4908792	3.5	0	0	112.1	112.1	1	3861.14	5.25	0	82.73	0	0.56	3.14	0.28	7.18	0	0	0	0	0	0	18.46	18.46
	Inverter	MV1-1	364715	4906166	2	0	0	100.3	100.3	1	1556.88	3.25	0	74.85	0	-0.01	0	0	12.46	0	0	0	0	0	0	13.02	13.02
	Inverter	MV1-2	364753	4906063	2	0	0	100.3	100.3	1	1561.28	3.25	0	74.87	0	-0.01	0	0	12.47	0	0	0	0	0	0	12.98	12.98
	Inverter	MV1-4	364815	4905918	2	0	0	100.3	100.3	1	1573.09	3.25	0	74.94	0	-0.01	0	0	12.5	0	0	0	0	0	0	12.88	12.88
	Inverter	MV1-5	364671	4905892	2	0	0	100.3	100.3	1	1711.26	3.25	0	75.67	0	0.04	0	0	12.83	0	0	0	0	0	0	11.78	11.78
	Inverter	MV3-18	367752	4907412	2	0	0	100.3	100.3	1	1727.21	3.25	0	75.75	0	0.05	0	0	12.86	0	0	0	0	0	0	11.65	11.65
	Inverter	MV3-12	367668	4907594	2	0	0	100.3	100.3	1	1735.79	3.25	0	75.79	0	0.05	0	0	12.88	0	0	0	0	0	0	11.59	11.59
	Inverter	MV1-12	365038	4905386	2	0	0	100.3	100.3	1	1745.42	3.25	0	75.84	0	0.05	0	0	12.91	0	0	0	0	0	0	11.52	11.52
	Inverter	MV1-8	364788	4905647	2	0	0	100.3	100.3	1	1747.13	3.25	0	75.85	0	0.05	0	0	12.91	0	0	0	0	0	0	11.5	11.5
	Inverter	MV1-6	364477	4905835	2	0	0	100.3	100.3	1	1909.33	3.25	0	76.62	0	0.1	0	0	13.27	0	0	0	0	0	0	10.32	10.32
	Inverter	MV1-15	365315	4904994	2	0	0	100.3	100.3	1	1920.34	3.25	0	76.67	0	0.11	0	0	13.29	0	0	0	0	0	0	10.25	10.25
	Inverter	MV1-9	364561	4905646	2	0	0	100.3	100.3	1	1932.59	3.25	0	76.72	0	0.11	0	0	13.32	0	0	0	0	0	0	10.16	10.16
	Inverter	MV3-13	367963	4907577	2	0	0	100.3	100.3	1	1988.05	3.25	0	76.97	0	0.13	0	0	13.44	0	0	0	0	0	0	9.78	9.78
	Inverter	MV1-11	364655	4905414	2	0	0	100.3	100.3	1	1997.28	3.25	0	77.01	0	0.13	0	0	13.46	0	0	0	0	0	0	9.72	9.72
	Inverter	MV3-7	367945	4907754	2	0	0	100.3	100.3	1	2055.66	3.25	0	77.26	0	0.14	0	0	13.58	0	0	0	0	0	0	9.33	9.33
	Inverter	MV3-3	367939	4907927	2	0	0	100.3	100.3	1	2143.59	3.25	0	77.62	0	0.17	0	0	13.76	0	0	0	0	0	0	8.76	8.76
	Inverter	MV3-17	368178	4907472	2	0	0	100.3	100.3	1	2144.21	3.25	0	77.63	0	0.17	0	0	13.76	0	0	0	0	0	0	8.76	8.76
	Inverter	MV1-7	364925	4905782	2	0	0	97.3	97.3	1	1556.41	3.25	0	74.84	0	-0.01	0	0	12.46	0	0	0	0	0	0	10.02	10.02
	Inverter	MV3-10	368167	4907669	2	0	0	100.3	100.3	1	2211.76	3.25	0	77.89	0	0.19	0	0	13.9	0	0	0	0	0	0	8.33	8.33
	Inverter	MV3-19	368357	4907347	2	0	0	100.3	100.3	1	2274.44	3.25	0	78.14	0	0.2	0	0	14.02	0	0	0	0	0	0	7.95	7.95
	Inverter	MV3-6	368162	4907834	2	0	0	100.3	100.3	1	2283.64	3.25	0	78.17	0	0.21	0	0	14.04	0	0	0	0	0	0	7.89	7.89
	Inverter	MV3-15	368357	4907477	2	0	0	100.3	100.3	1	2314.11	3.25	0	78.29	0	0.21	0	0	14.1	0	0	0	0	0	0	7.71	7.71
	Inverter	MV1-10	365004	4905564	2	0	0	97.3	97.3	1	1638.44	3.25	0	75.29	0	0.02	0	0	12.66	0	0	0	0	0	0	9.35	9.35
	Inverter	MV3-21	368478	4907206	2	0	0	100.3	100.3	1	2357.34	3.25	0	78.45	0	0.22	0	0	14.18	0	0	0	0	0	0	7.46	7.46
	Inverter	MV3-11	368346	4907662	2	0	0	100.3	100.3	1	2371.59	3.25	0	78.5	0	0.23	0	0	14.21	0	0	0	0	0	0	7.37	7.37
	Inverter	MV3-16	368514	4907475	2	0	0	100.3	100.3	1	2462.21	3.25	0	78.83	0	0.25	0	0	14.39	0	0	0	0	0	0	6.85	6.85
	Inverter	MV3-9	368512	4907703	2	0	0	100.3	100.3	1	2540.28	3.25	0	79.1	0	0.27	0	0	14.53	0	0	0	0	0	0	6.41	6.41
	Inverter	MV3-20	368689	4907317	2	0	0	100.3	100.3	1	2587.72	3.25	0	79.26	0	0.28	0	0	14.62	0	0	0	0	0	0	6.15	6.15
	Inverter	MV3-14	368684	4907498	2	0	0	100.3	100.3	1	2631.14	3.25	0	79.4	0	0.29	0	0	14.7	0	0	0	0	0	0	5.92	5.92
	Inverter	MV3-8	368680	4907712	2	0	0	100.3	100.3	1	2699.08	3.25	0	79.62	0	0.3	0	0	14.83	0	0	0	0	0	0	5.56	5.56
	Inverter	MV1-14	365163	4905049	2	0	0	97.3	97.3	1	1945.68	3.25	0	76.78	0	0.11	0	0	13.35	0	0	0	0	0	0	7.07	7.07
	Inverter	MV1-13	364731	4905241	2	0	0	97.3	97.3	1	2059.91	3.25	0	77.28	0	0.15	0	0	13.59	0	0	0	0	0	0	6.3	6.3
	Inverter	MV4-7	369035	4909001	2	0	0	100.3	100.3	1	3664.77	3.25	0	82.28	0	0.48	0	0	16.5	0	0	0	0	0	0	1.05	1.05
	Inverter	MV4-11	369264	4908855	2	0	0	100.3	100.3	1	3761.21	3.25	0	82.51	0	0.49	0	0	16.66	0	0	0	0	0	0	0.65	0.65
	Inverter	MV4-4	369027	4909199	2	0	0	100.3	100.3	1	3785.56	3.25	0	82.56	0	0.5	0	0	16.7	0	0	0	0	0	0	0.55	0.55
	Inverter	MV4-10	369312	4908858	2	0	0	100.3	100.3	1	3802.45	3.25	0	82.6	0	0.5	0	0	16.73	0	0	0	0	0	0	0.48	0.48
	Inverter	MV4-8	369256	4909001	2	0	0	100.3	100.3	1	3839.85	3.25	0	82.69	0	0.5	0	0	16.79	0	0	0	0	0	0	0.33	0.33
	Inverter	MV4-9	369289	4909001	2	0	0	100.3	100.3	1	3866.39	3.25	0	82.75	0	0.51	0	0	16.83	0	0	0	0	0	0	0.22	0.22
	Inverter	MV4-1	369011	4909397	2	0	0	100.3	100.3	1	3906.85	3.25	0	82.84	0	0.51	0	0	16.9	0	0	0	0	0	0	0.06	0.06

Inverter	MV4-6	369243	4909192	2	0	0	100.3	100.3	1	3946.56	3.25	0	82.92	0	0.52	0	0	16.96	0	0	0	0	0	0	-0.09	-0.09
Inverter	MV6-2	370085	4907339	2	0	0	100.3	100.3	1	3961.93	3.25	0	82.96	0	0.52	0	0	16.99	0	0	0	0	0	0	-0.16	-0.16
Inverter	MV4-5	369289	4909199	2	0	0	100.3	100.3	1	3986.81	3.25	0	83.01	0	0.53	0	0	17.03	0	0	0	0	0	0	-0.25	-0.25
Inverter	MV6-3	370207	4907140	2	0	0	100.3	100.3	1	4056.64	3.25	0	83.16	0	0.53	0	0	17.14	0	0	0	0	0	0	-0.52	-0.52
Inverter	MV4-3	369229	4909397	2	0	0	100.3	100.3	1	4067.97	3.25	0	83.19	0	0.54	0	0	17.16	0	0	0	0	0	0	-0.57	-0.57
Inverter	MV4-2	369272	4909397	2	0	0	100.3	100.3	1	4100.37	3.25	0	83.26	0	0.54	0	0	17.21	0	0	0	0	0	0	-0.69	-0.69
Inverter	MV5-5	370015	4908690	2	0	0	100.3	100.3	1	4321.28	3.25	0	83.71	0	0.57	0	0	17.55	0	0	0	0	0	0	-1.52	-1.52
Inverter	MV5-2	370006	4908853	2	0	0	100.3	100.3	1	4390.42	3.25	0	83.85	0	0.58	0	0	17.66	0	0	0	0	0	0	-1.78	-1.78
Inverter	MV5-1	370020	4909142	2	0	0	100.3	100.3	1	4550.2	3.25	0	84.16	0	0.6	0	0	17.91	0	0	0	0	0	0	-2.35	-2.35
Inverter	MV5-3	370231	4908851	2	0	0	100.3	100.3	1	4587.23	3.25	0	84.23	0	0.6	0	0	17.96	0	0	0	0	0	0	-2.48	-2.48
Inverter	MV5-4	370324	4908707	2	0	0	100.3	100.3	1	4605.52	3.25	0	84.27	0	0.6	0	0	17.99	0	0	0	0	0	0	-2.55	-2.55
Inverter	MV6-1	370235	4907364	2	0	0	97.3	97.3	1	4113.99	3.25	0	83.29	0	0.54	0	0	17.23	0	0	0	0	0	0	-3.75	-3.75
DSTATCOM - 10 MVAR #2	DSAT2	369403	4908757	2.5	0	0	96.6	96.6	1	3822.95	3.5	0	82.65	0	3.54	0	0	2.75	0	0	0	0	0	0	7.69	7.69
DSTATCOM - 10 MVAR #1	DSAT1	369437	4908757	2.5	0	0	96.6	96.6	1	3851.72	3.5	0	82.71	0	3.55	0	0	2.76	0	0	0	0	0	0	7.61	7.61
Inverter	MV1-3	364440	4906039	2	0	0	89.1	89.1	1	1859.09	3.25	0	76.39	0	0.87	0	0	7.81	0	0	0	0	0	0	3.98	3.98
Inverter	MV3-1	368156	4907976	2	0	0	89.1	89.1	1	2351.59	3.25	0	78.43	0	0.99	0	0	8.61	0	0	0	0	0	0	1.03	1.03
Inverter	MV3-5	368340	4907843	2	0	0	89.1	89.1	1	2444.39	3.25	0	78.76	0	1.01	0	0	8.76	0	0	0	0	0	0	0.52	0.52
Inverter	MV3-22	368656	4907142	2	0	0	89.1	89.1	1	2519.96	3.25	0	79.03	0	1.03	0	0	8.88	0	0	0	0	0	0	0.12	0.12
SubstationTransformer	W_ST	369711.17	4906112.3	2.5	0	0	92	92	1	3588.64	4.25	0	82.1	0	1.24	2.75	0.28	6.81	0	0	0	0	0	0	-0.92	-0.92
Inverter	MV3-4	368502	4907925	2	0	0	89.1	89.1	1	2625.95	3.25	0	79.39	0	1.06	0	0	9.04	0	0	0	0	0	0	-0.43	-0.43
Inverter	MV3-2	368671	4907928	2	0	0	89.1	89.1	1	2778.25	3.25	0	79.88	0	1.09	0	0	9.28	0	0	0	0	0	0	-1.19	-1.19
Gardiner Substation	G_Sub	366586.3	4903349.9	2.5	0	0	90.8	90.8	1	3387.41	4.25	0	81.6	0	1.23	2.99	0.36	6.52	0	0	0	0	0	0	-1.56	-1.56
Westbrook Inverter Enclosur	W_INV2	369374	4906388	2	0	0	89.1	89.1	1	3217.36	3.25	0	81.15	0	1.2	0	0	9.94	0	0	0	0	0	0	-3.24	-3.24
Westbrook Inverter Enclosur	W_INV3	369508	4906164	2	0	0	89.1	89.1	1	3379.72	3.25	0	81.58	0	1.24	0	0	10.19	0	0	0	0	0	0	-3.94	-3.94
Inverter Transformer	MV2-1 T	365836	4906816	2	0	0	69.4	69.4	1	352.69	3.25	0	61.95	0	0.82	0	0	2.56	0	0	0	0	0	0	4.02	4.02
Inverter	MV4-13	369051	4908605	2	0	0	89.1	89.1	1	3444.76	3.25	0	81.74	0	1.26	0	0	10.28	0	0	0	0	0	0	-4.22	-4.22
Inverter	MV4-15	369176	4908481	2	0	0	89.1	89.1	1	3485.31	3.25	0	81.84	0	1.27	0	0	10.34	0	0	0	0	0	0	-4.39	-4.39
Inverter	MV4-14	369176	4908507	2	0	0	89.1	89.1	1	3498.58	3.25	0	81.88	0	1.27	0	0	10.36	0	0	0	0	0	0	-4.45	-4.45
Fixed Reactor Bank 1	FRB1	369378	4908755	6	0	0	89.8	89.8	1	3800.77	5.25	0	82.6	0	-0.75	0	0	7.1	0	0	0	0	0	0	0.83	0.83
Westbrook Inverter Enclosur	W_INV4	369673	4906164	2	0	0	89.1	89.1	1	3542.64	3.25	0	81.99	0	1.28	0	0	10.43	0	0	0	0	0	0	-4.63	-4.63
Westbrook Inverter Enclosur	W_INV5	369719	4906574	2	0	0	89.1	89.1	1	3548.69	3.25	0	82	0	1.28	0	0	10.43	0	0	0	0	0	0	-4.66	-4.66
Inverter	MV4-12	369043	4908803	2	0	0	89.1	89.1	1	3550.94	3.25	0	82.01	0	1.28	0	0	10.44	0	0	0	0	0	0	-4.67	-4.67
Fixed Reactor Bank 2	FRB2	369464	4908755	6	0	0	89.8	89.8	1	3873.57	5.25	0	82.76	0	-0.74	0	0	7.2	0	0	0	0	0	0	0.56	0.56
Westbrook Inverter Enclosur	W_INV7	369780	4906417	2	0	0	89.1	89.1	1	3619.04	3.25	0	82.17	0	1.3	0	0	10.54	0	0	0	0	0	0	-4.95	-4.95
Westbrook Inverter Enclosur	W_INV6	369875	4906578	2	0	0	89.1	89.1	1	3704.43	3.25	0	82.37	0	1.32	0	0	10.66	0	0	0	0	0	0	-5.3	-5.3
Inverters	G_Inv1	366526.4	4903225.8	2	0	0	87.7	87.7	1	3504.07	3.25	0	81.89	0	2.75	0	0	4.33	0	0	0	0	0	0	-1.31	-1.31
Inverters	G_Inv2	366676.9	4903239.1	2	0	0	87.7	87.7	1	3509.27	3.25	0	81.9	0	2.75	0	0	4.34	0	0	0	0	0	0	-1.33	-1.33
Inverter	MV5-6	369982	4908507	2	0	0	89.1	89.1	1	4210.76	3.25	0	83.49	0	1.44	0	0	11.38	0	0	0	0	0	0	-7.26	-7.26
Inverters	G_Inv3	366583.7	4903091.4	2	0	0	87.7	87.7	1	3643.82	3.25	0	82.23	0	2.76	0	0	4.49	0	0	0	0	0	0	-1.82	-1.82
Inverters	G_Inv4	366732.8	4903105	2	0	0	87.7	87.7	1	3650.18	3.25	0	82.25	0	2.76	0	0	4.49	0	0	0	0	0	0	-1.84	-1.84
Inverters	G_Inv5	366638.5	4902958.1	2	0	0	87.7	87.7	1	3782.65	4.12	0	82.56	0	3.16	1.53	0	4.64	0	0	0	0	0	0	-4.22	-4.22
Inverters	G_Inv6	366788.5	4902972	2	0	0	87.7	87.7	1	3790.31	3.25	0	82.57	0	2.77	0	0	4.65	0	0	0	0	0	0	-2.33	-2.33
Westbrook Inverter Enclosur	W_INV1	369409	4906578	2	0	0	86.1	86.1	1	3238.77	3.25	0	81.21	0	1.21	0	0	9.98	0	0	0	0	0	0	-6.33	-6.33
Inverters	G_Inv7	366694.6	4902824.7	2	0	0	87.7	87.7	1	3922.14	3.25	0	82.87	0	2.79	0	0	4.79	0	0	0	0	0	0	-2.78	-2.78
Inverters	G_Inv8	366844.5	4902838.5	2	0	0	87.7	87.7	1	3931.27	3.25	0	82.89	0	2.79	0	0	4.8	0	0	0	0	0	0	-2.82	-2.82
Inverters	G_Inv9	366750.9	4902691.8	2	0	0	87.7	87.7	1	4061.52	3.25	0	83.17	0	2.8	0	0	4.94	0	0	0	0	0	0	-3.25	-3.25
Inverters	G_Inv10	366900.7	4902704.8	2	0	0	87.7	87.7	1	4072.74	3.25	0	83.2	0	2.8	0	0	4.95	0	0	0	0	0	0	-3.29	-3.29
Inverter	MV6-4	370250	4906966	2	0	0	86.1	86.1	1	4084.91	3.25	0	83.22	0	1.41	0	0	11.21	0	0	0	0	0	0	-9.78	-9.78
Inverter Transformer	MV2-2 T	365982	4906654	2	0	0	56.1	56.1	1	199.63	3.25	0	57	0	0.09	0	0	2.23	0	0	0	0	0	0	-3.26	-3.26
Westbrook Inverter Transfor	W_INVTR1	369403	4906578	2	0	0	78.2	78.2	1	3232.78	3.25	0	81.19	0	-2.78	0	0	1.75	0	0	0	0	0	0	-1.93	-1.93
Westbrook Inverter Transfor	W_INVTR2	369368	4906388	2	0	0	77.3	77.3	1	3211.39	3.25	0	81.13	0	-2.77	0	0	1.74	0	0	0	0	0	0	-2.77	-2.77
Westbrook Inverter Transfor	W_INVTR3	369514	4906164	2	0	0	77.3	77.3	1	3385.64	3.25	0	81.59	0	-2.82	0	0	1.82	0	0	0	0	0	0	-3.25	-3.25
Westbrook Inverter Transfor	W_INVTR4	369679	4906164	2	0	0	77.3	77.3	1	3548.57	3.25	0	82	0	-2.86	0	0	1.88	0	0	0	0	0	0	-3.68	-3.68
Westbrook Inverter Transfor	W_INVTR5	369725	4906574	2	0	0	77.3	77.3	1	3554.68	3.25	0	82.02	0	-2.86	0	0	1.88	0	0	0	0	0	0	-3.7	-3.7
Westbrook Inverter Transfor	W_INVTR7	369786	4906417	2	0	0	77.3	77.3	1	3625.02	3.25	0	82.19	0	-2.87	0	0	1.91	0	0	0	0	0	0	-3.88	-3.88
Westbrook Inverter Transfor	W_INVTR6	369881	4906578	2	0	0	77.3	77.3	1	3710.42	3.25	0	82.39	0	-2.9	0	0	1.94	0	0	0	0	0	0	-4.1	-4.1
Inverter Transformer	MV1-7 T	364919	4905782	2	0	0	69.4	69.4	1	1561.22	3.25	0	74.87	0	2	0	0	4.5	0	0	0	0	0	0	-12.02	-12.02
Inverter Transformer	MV1-10 T	365010	4905564	2	0	0	69.4	69.4	1	1634.16	3.25	0	75.27	0	2.03	0	0	4.58	0	0	0	0	0	0	-12.53	-12.53
Inverter Transformer	MV2-3 T	365814	4906641	2	0	0	56.1	56.1	1	365.96	3.25	0	62.27	0	-0.11	0	0	3.07	0	0	0	0	0	0	-9.18	-9.18
Inverter Transformer	MV1-14 T	365157	4905049	2	0	0	69.4	69.4	1	1948.8	3.25	0	76.8	0	2.15	0	0	4.91	0	0	0	0	0	0	-14.51	-14.51
Inverter Transformer	MV1-13 T	364725	4905241	2	0	0	69.4	69.4	1	2064.11	3.25	0	77.29	0	2.2	0	0	5.03	0	0	0	0	0	0	-15.17	-15.17
Inverter Transformer	MV2-4 T	365590	4906628	2	0	0	56.1	56.1	1	589.03	3.25	0	66.4	0	-0.11	0	0	3.82	0	0	0	0	0	0	-14.06	-14.06
Inverter Transformer	MV6-4 T	370244	4906966	2	0	0	69.4	69.4	1	4078.92	3.25	0	83.21	0	2.81	0	0	6.74	0	0	0	0	0	0	-23.4	-23.4
Inverter Transformer	MV6-1 T	370230	4907364	2	0	0	69.4	69.4	1	4109.06	3.25	0	83.27	0	2.81	0	0	6.76	0	0	0	0	0	0	-23.49	-23.49
Inverter Transformer	MV1-1 T	364721	4906166	2	0	0	56.1	56.1	1	1551.27	3.25	0	74.81	0	0.22	0	0	6.13	0	0	0	0	0	0	-25.1	-25.1
Inverter Transformer	MV1-2 T	364759	4906063	2	0	0	56.1	56.1	1	1555.83	3.25	0	74.84	0	0.22	0	0	6.14	0	0	0	0	0	0	-25.14	-25.14
Inverter Transformer	MV1-4 T	364821	4905918	2	0	0	56.1	56.1	1	1567.91	3.25	0	74.91	0	0.23	0	0	6.16	0	0	0	0	0	0	-25.24	-25.24
Inverter Transformer	MV1-5 T	364676	4905892	2	0	0	56.1	56.1	1	1706.87	3.25	0	75.64	0	0.28	0	0	6.45	0	0	0	0	0	0	-26.32	-26.32
Inverter Transformer	MV3-18 T	367757	4907412	2	0	0	56.1	56.1	1	1731.78	3.25	0	75.77	0	0.29	0	0	6.5	0	0	0	0	0	0	-26.51	-26.51
Inverter Transformer	MV3-12 T	367674	4907594	2	0	0	56.1	56.1	1	1740.96	3.25	0	75.82	0	0.3	0	0	6.52	0	0	0	0	0	0	-26.58	-26.58
Inverter Transformer	MV1-12 T	365044	4905386	2	0	0	56.1	56.1	1	1741.53	3.25	0	75.82	0	0.3	0	0	6.52	0	0	0	0	0	0	-26.58	-26.58
Inverter Transformer	MV1-8 T	364782	4905647	2	0	0	56.1	56.1	1	1751.89	3.25	0	75.87	0	0.3	0	0	6.55	0	0	0	0	0	0	-26.66	-26.66
Inverter Transformer	MV1-3 T	364435	4906039	2	0	0	56.1	56.1	1	1863.75	3.25	0	76.41	0	0.35	0	0	6.77	0	0	0	0	0	0	-27.47	-27.47
Inverter Transformer	MV1-6 T	364482	4905835	2	0	0	56.1	56.1	1	1904.89	3.25	0	76.6	0	0.36	0	0	6.86	0	0	0	0	0	0	-27.76	-27.76

	Inverter Transformer	MV1-15 T	365309	4904994	2	0	0	56.1	56.1	1	1923.03	3.25	0	76.68	0	0.37	0	0	6.89	0	0	0	0	0	0	-27.88	-27.88
	Inverter Transformer	MV1-9 T	364555	4905646	2	0	0	56.1	56.1	1	1937.6	3.25	0	76.75	0	0.38	0	0	6.92	0	0	0	0	0	0	-27.98	-27.98
	Inverter Transformer	MV3-13 T	367958	4907577	2	0	0	56.1	56.1	1	1983.55	3.25	0	76.95	0	0.4	0	0	7.01	0	0	0	0	0	0	-28.3	-28.3
	Inverter Transformer	MV1-11 T	364649	4905414	2	0	0	56.1	56.1	1	2001.85	3.25	0	77.03	0	0.4	0	0	7.05	0	0	0	0	0	0	-28.42	-28.42
	Inverter Transformer	MV3-7 T	367951	4907754	2	0	0	56.1	56.1	1	2060.84	3.25	0	77.28	0	0.43	0	0	7.16	0	0	0	0	0	0	-28.81	-28.81
	Inverter Transformer	MV3-3 T	367944	4907927	2	0	0	56.1	56.1	1	2147.71	3.25	0	77.64	0	0.47	0	0	7.33	0	0	0	0	0	0	-29.38	-29.38
	Inverter Transformer	MV3-17 T	368183	4907472	2	0	0	56.1	56.1	1	2148.88	3.25	0	77.64	0	0.47	0	0	7.33	0	0	0	0	0	0	-29.39	-29.39
	Inverter Transformer	MV3-10 T	368162	4907669	2	0	0	56.1	56.1	1	2207.26	3.25	0	77.88	0	0.49	0	0	7.44	0	0	0	0	0	0	-29.75	-29.75
	Inverter Transformer	MV3-19 T	368352	4907347	2	0	0	56.1	56.1	1	2269.64	3.25	0	78.12	0	0.52	0	0	7.56	0	0	0	0	0	0	-30.14	-30.14
	Inverter Transformer	MV3-6 T	368156	4907834	2	0	0	56.1	56.1	1	2278.42	3.25	0	78.15	0	0.52	0	0	7.58	0	0	0	0	0	0	-30.2	-30.2
	Inverter Transformer	MV3-15 T	368351	4907477	2	0	0	56.1	56.1	1	2308.44	3.25	0	78.27	0	0.53	0	0	7.64	0	0	0	0	0	0	-30.38	-30.38
	Inverter Transformer	MV3-1 T	368150	4907976	2	0	0	56.1	56.1	1	2346.54	3.25	0	78.41	0	0.55	0	0	7.71	0	0	0	0	0	0	-30.61	-30.61
	Inverter Transformer	MV3-21 T	368484	4907206	2	0	0	56.1	56.1	1	2363.21	3.25	0	78.47	0	0.56	0	0	7.74	0	0	0	0	0	0	-30.71	-30.71
	Inverter Transformer	MV3-11 T	368340	4907662	2	0	0	56.1	56.1	1	2366.09	3.25	0	78.48	0	0.56	0	0	7.74	0	0	0	0	0	0	-30.72	-30.72
	Inverter Transformer	MV3-5 T	368335	4907843	2	0	0	56.1	56.1	1	2439.96	3.25	0	78.75	0	0.59	0	0	7.88	0	0	0	0	0	0	-31.16	-31.16
	Inverter Transformer	MV3-16 T	368509	4907475	2	0	0	56.1	56.1	1	2457.45	3.25	0	78.81	0	0.6	0	0	7.91	0	0	0	0	0	0	-31.26	-31.26
	Inverter Transformer	MV3-22 T	368661	4907142	2	0	0	56.1	56.1	1	2524.89	3.25	0	79.04	0	0.63	0	0	8.03	0	0	0	0	0	0	-31.65	-31.65
	Inverter Transformer	MV3-9 T	368517	4907703	2	0	0	56.1	56.1	1	2544.88	3.25	0	79.11	0	0.64	0	0	8.07	0	0	0	0	0	0	-31.76	-31.76
	Inverter Transformer	MV3-20 T	368683	4907317	2	0	0	56.1	56.1	1	2581.89	3.25	0	79.24	0	0.65	0	0	8.14	0	0	0	0	0	0	-31.97	-31.97
	Inverter Transformer	MV3-14 T	368678	4907498	2	0	0	56.1	56.1	1	2625.42	3.25	0	79.38	0	0.67	0	0	8.22	0	0	0	0	0	0	-32.21	-32.21
	Inverter Transformer	MV3-4 T	368507	4907925	2	0	0	56.1	56.1	1	2630.39	3.25	0	79.4	0	0.67	0	0	8.22	0	0	0	0	0	0	-32.24	-32.24
	Inverter Transformer	MV3-8 T	368685	4907712	2	0	0	56.1	56.1	1	2703.73	3.25	0	79.64	0	0.7	0	0	8.36	0	0	0	0	0	0	-32.64	-32.64
	Inverter Transformer	MV3-2 T	368677	4907928	2	0	0	56.1	56.1	1	2783.64	3.25	0	79.89	0	0.74	0	0	8.5	0	0	0	0	0	0	-33.07	-33.07
	Inverter Transformer	MV4-13 T	369057	4908605	2	0	0	56.1	56.1	1	3449.77	3.25	0	81.76	0	1.02	0	0	9.61	0	0	0	0	0	0	-36.32	-36.32
	Inverter Transformer	MV4-15 T	369170	4908481	2	0	0	56.1	56.1	1	3480.14	3.25	0	81.83	0	1.03	0	0	9.66	0	0	0	0	0	0	-36.46	-36.46
	Inverter Transformer	MV4-14 T	369182	4908507	2	0	0	56.1	56.1	1	3503.73	3.25	0	81.89	0	1.04	0	0	9.69	0	0	0	0	0	0	-36.57	-36.57
	Inverter Transformer	MV4-12 T	369049	4908803	2	0	0	56.1	56.1	1	3555.79	3.25	0	82.02	0	1.06	0	0	9.78	0	0	0	0	0	0	-36.8	-36.8
	Inverter Transformer	MV4-7 T	369040	4909001	2	0	0	56.1	56.1	1	3668.68	3.25	0	82.29	0	1.11	0	0	9.95	0	0	0	0	0	0	-37.29	-37.29
	Inverter Transformer	MV4-11 T	369269	4908855	2	0	0	56.1	56.1	1	3765.32	3.25	0	82.52	0	1.15	0	0	10.1	0	0	0	0	0	0	-37.71	-37.71
	Inverter Transformer	MV4-4 T	369033	4909199	2	0	0	56.1	56.1	1	3790.09	3.25	0	82.57	0	1.16	0	0	10.14	0	0	0	0	0	0	-37.81	-37.81
	Inverter Transformer	MV4-10 T	369307	4908858	2	0	0	56.1	56.1	1	3798.33	3.25	0	82.59	0	1.16	0	0	10.15	0	0	0	0	0	0	-37.85	-37.85
	Inverter Transformer	MV4-8 T	369262	4909001	2	0	0	56.1	56.1	1	3844.66	3.25	0	82.7	0	1.18	0	0	10.22	0	0	0	0	0	0	-38.04	-38.04
	Inverter Transformer	MV4-9 T	369284	4909001	2	0	0	56.1	56.1	1	3862.36	3.25	0	82.74	0	1.19	0	0	10.25	0	0	0	0	0	0	-38.12	-38.12
	Inverter Transformer	MV4-1 T	369017	4909397	2	0	0	56.1	56.1	1	3911.21	3.25	0	82.85	0	1.21	0	0	10.32	0	0	0	0	0	0	-38.32	-38.32
	Inverter Transformer	MV4-6 T	369249	4909192	2	0	0	56.1	56.1	1	3951.23	3.25	0	82.93	0	1.22	0	0	10.38	0	0	0	0	0	0	-38.48	-38.48
	Inverter Transformer	MV6-2 T	370091	4907339	2	0	0	56.1	56.1	1	3967.85	3.25	0	82.97	0	1.23	0	0	10.41	0	0	0	0	0	0	-38.55	-38.55
	Inverter Transformer	MV4-5 T	369283	4909199	2	0	0	56.1	56.1	1	3982.12	3.25	0	83	0	1.24	0	0	10.43	0	0	0	0	0	0	-38.61	-38.61
	Inverter Transformer	MV6-3 T	370202	4907140	2	0	0	56.1	56.1	1	4051.67	3.25	0	83.15	0	1.26	0	0	10.53	0	0	0	0	0	0	-38.89	-38.89
	Inverter Transformer	MV4-3 T	369234	4909397	2	0	0	56.1	56.1	1	4071.73	3.25	0	83.2	0	1.27	0	0	10.56	0	0	0	0	0	0	-38.97	-38.97
	Inverter Transformer	MV4-2 T	369267	4909397	2	0	0	56.1	56.1	1	4096.59	3.25	0	83.25	0	1.28	0	0	10.6	0	0	0	0	0	0	-39.07	-39.07
	Inverter Transformer	MV5-6 T	369987	4908507	2	0	0	56.1	56.1	1	4215.28	3.25	0	83.5	0	1.33	0	0	10.77	0	0	0	0	0	0	-39.54	-39.54
	Inverter Transformer	MV5-5 T	370021	4908690	2	0	0	56.1	56.1	1	4326.61	3.25	0	83.72	0	1.37	0	0	10.93	0	0	0	0	0	0	-39.97	-39.97
	Inverter Transformer	MV5-2 T	370011	4908853	2	0	0	56.1	56.1	1	4394.78	3.25	0	83.86	0	1.4	0	0	11.03	0	0	0	0	0	0	-40.23	-40.23
	Inverter Transformer	MV5-1 T	370015	4909142	2	0	0	56.1	56.1	1	4545.97	3.25	0	84.15	0	1.46	0	0	11.24	0	0	0	0	0	0	-40.79	-40.79
	Inverter Transformer	MV5-3 T	370237	4908851	2	0	0	56.1	56.1	1	4592.54	3.25	0	84.24	0	1.47	0	0	11.3	0	0	0	0	0	0	-40.96	-40.96
	Inverter Transformer	MV5-4 T	370330	4908707	2	0	0	56.1	56.1	1	4610.93	3.25	0	84.28	0	1.48	0	0	11.33	0	0	0	0	0	0	-41.03	-41.03
	Line Reactor	NGR	369421	4908787.5	5	0	0	45.4	45.4	1	3854.5	5.25	0	82.72	0	3.29	1.33	0.1	1.58	0	0	0	0	0	0	-43.57	-43.57
Limit. Valu	0	0																								
Level D/N:	35.6727	35.6727																								

Receiver: Existing Noise Receptor
ID: S-R22
X: 366104
Y: 4906755
Z: 4.5
Ground: 0

ISO	Description	ID	X	Y	Z	Ground	ReflOrd	LxT	LxN	L/A	Dist.	hm	Freq	Adiv	K0b	Agr	Abar	z	Aatm	Afol	Ahous	Cmet	CmetN	Dc	RL	LtotT	LtotN
	Inverter	MV2-3	365820	4906641	2	0	0	100.3	100.3	1	306.04	3.25	0	60.72	0	-0.65	0	0	6.48	0	0	0	0	0	0	33.77	33.77
	Inverter	MV2-1	365842	4906816	2	0	0	97.3	97.3	1	269.02	3.25	0	59.6	0	-0.64	0	0	5.93	0	0	0	0	0	0	32.42	32.42
	Inverter	MV2-4	365586	4906624	2	0	0	100.3	100.3	1	534.31	3.25	0	65.56	0	-0.53	0	0	8.78	0	0	0	0	0	0	26.5	26.5
	Inverter	MV2-2	365977	4906654	2	0	0	89.1	89.1	1	162.28	3.25	0	55.21	0	0.22	0	0	2.77	0	0	0	0	0	0	30.86	30.86
	Sol_Luce Substation	S_Substation	369426	4908792	3.5	0	0	112.1	112.1	1	3896.8	5.25	0	82.81	0	0.57	3.13	0.28	7.23	0	0	0	0	0	0	18.33	18.33
	Inverter	MV1-1	364715	4906166	2	0	0	100.3	100.3	1	1508.72	3.25	0	74.57	0	-0.03	0	0	12.35	0	0	0	0	0	0	13.42	13.42
	Inverter	MV1-2	364753	4906063	2	0	0	100.3	100.3	1	1517.92	3.25	0	74.62	0	-0.03	0	0	12.37	0	0	0	0	0	0	13.35	13.35
	Inverter	MV1-4	364815	4905918	2	0	0	100.3	100.3	1	1536.91	3.25	0	74.73	0	-0.02	0	0	12.42	0	0	0	0	0	0	13.18	13.18
	Inverter	MV1-5	364671	4905892	2	0	0	100.3	100.3	1	1672.8	3.25	0	75.47	0	0.03	0	0	12.74	0	0	0	0	0	0	12.08	12.08
	Inverter	MV1-8	364788	4905647	2	0	0	100.3	100.3	1	1720.33	3.25	0	75.71	0	0.04	0	0	12.85	0	0	0	0	0	0	11.71	11.71
	Inverter	MV1-12	365038	4905386	2	0	0	100.3	100.3	1	1735.09	3.25	0	75.79	0	0.05	0	0	12.88	0	0	0	0	0	0	11.59	11.59
	Inverter	MV3-18	367752	4907412	2	0	0	100.3	100.3	1	1774.14	3.25	0	75.98	0	0.06	0	0	12.97	0	0	0	0	0	0	11.3	11.3
	Inverter	MV3-12	367668	4907594	2	0	0	100.3	100.3	1	1774.83	3.25	0	75.98	0	0.06	0	0	12.97	0	0	0	0	0	0	11.3	11.3
	Inverter	MV1-6	364477	4905835	2	0	0	100.3	100.3	1	1869.1	3.25	0	76.43	0	0.09	0	0	13.18	0	0	0	0	0	0	10.61	10.61
	Inverter	MV1-9	364561	4905646	2	0	0	100.3	100.3	1	1900.19	3.25	0	76.58	0	0.1	0	0	13.25	0	0	0	0	0	0	10.39	10.39
	Inverter	MV1-15	365315	4904994	2	0	0	100.3	100.3	1	1929.68	3.25	0	76.71	0	0.11	0	0	13.31	0	0	0	0	0	0	10.18	10.18

Inverter	MV1-11	364655	4905414	2	0	0	100.3	100.3	1	1974.31	3.25	0	76.91	0	0.12	0	0	13.41	0	0	0	0	0	0	9.87	9.87
Inverter	MV3-13	367963	4907577	2	0	0	100.3	100.3	1	2032.63	3.25	0	77.16	0	0.14	0	0	13.53	0	0	0	0	0	0	9.48	9.48
Inverter	MV3-7	367945	4907754	2	0	0	100.3	100.3	1	2094.59	3.25	0	77.42	0	0.16	0	0	13.66	0	0	0	0	0	0	9.08	9.08
Inverter	MV1-7	364925	4905782	2	0	0	97.3	97.3	1	1528.65	3.25	0	74.69	0	-0.02	0	0	12.4	0	0	0	0	0	0	10.25	10.25
Inverter	MV3-3	367939	4907927	2	0	0	100.3	100.3	1	2177.34	3.25	0	77.76	0	0.18	0	0	13.83	0	0	0	0	0	0	8.55	8.55
Inverter	MV3-17	368178	4907472	2	0	0	100.3	100.3	1	2194.44	3.25	0	77.83	0	0.18	0	0	13.86	0	0	0	0	0	0	8.44	8.44
Inverter	MV3-10	368167	4907669	2	0	0	100.3	100.3	1	2256.41	3.25	0	78.07	0	0.2	0	0	13.99	0	0	0	0	0	0	8.06	8.06
Inverter	MV1-10	365004	4905564	2	0	0	97.3	97.3	1	1621.26	3.25	0	75.2	0	0.01	0	0	12.62	0	0	0	0	0	0	9.49	9.49
Inverter	MV3-6	368162	4907834	2	0	0	100.3	100.3	1	2323.71	3.25	0	78.32	0	0.22	0	0	14.12	0	0	0	0	0	0	7.65	7.65
Inverter	MV3-19	368357	4907347	2	0	0	100.3	100.3	1	2329.48	3.25	0	78.35	0	0.22	0	0	14.13	0	0	0	0	0	0	7.62	7.62
Inverter	MV3-15	368357	4907477	2	0	0	100.3	100.3	1	2365.86	3.25	0	78.48	0	0.23	0	0	14.2	0	0	0	0	0	0	7.41	7.41
Inverter	MV3-21	368478	4907206	2	0	0	100.3	100.3	1	2416.46	3.25	0	78.66	0	0.24	0	0	14.3	0	0	0	0	0	0	7.11	7.11
Inverter	MV3-11	368346	4907662	2	0	0	100.3	100.3	1	2418.52	3.25	0	78.67	0	0.24	0	0	14.3	0	0	0	0	0	0	7.1	7.1
Inverter	MV3-16	368514	4907475	2	0	0	100.3	100.3	1	2515.25	3.25	0	79.01	0	0.26	0	0	14.49	0	0	0	0	0	0	6.55	6.55
Inverter	MV3-9	368512	4907703	2	0	0	100.3	100.3	1	2587.89	3.25	0	79.26	0	0.28	0	0	14.62	0	0	0	0	0	0	6.15	6.15
Inverter	MV3-20	368689	4907317	2	0	0	100.3	100.3	1	2645.39	3.25	0	79.45	0	0.29	0	0	14.73	0	0	0	0	0	0	5.84	5.84
Inverter	MV3-14	368684	4907498	2	0	0	100.3	100.3	1	2684.86	3.25	0	79.58	0	0.3	0	0	14.8	0	0	0	0	0	0	5.63	5.63
Inverter	MV3-8	368680	4907712	2	0	0	100.3	100.3	1	2748.02	3.25	0	79.78	0	0.31	0	0	14.92	0	0	0	0	0	0	5.3	5.3
Inverter	MV1-14	365163	4905049	2	0	0	97.3	97.3	1	1948.31	3.25	0	76.79	0	0.11	0	0	13.35	0	0	0	0	0	0	7.05	7.05
Inverter	MV1-13	364731	4905241	2	0	0	97.3	97.3	1	2043.85	3.25	0	77.21	0	0.14	0	0	13.55	0	0	0	0	0	0	6.41	6.41
Inverter	MV4-7	369035	4909001	2	0	0	100.3	100.3	1	3692.6	3.25	0	82.35	0	0.48	0	0	16.55	0	0	0	0	0	0	0.93	0.93
Inverter	MV4-11	369264	4908855	2	0	0	100.3	100.3	1	3794.15	3.25	0	82.58	0	0.5	0	0	16.72	0	0	0	0	0	0	0.52	0.52
Inverter	MV4-4	369027	4909199	2	0	0	100.3	100.3	1	3810.13	3.25	0	82.62	0	0.5	0	0	16.74	0	0	0	0	0	0	0.45	0.45
Inverter	MV4-10	369312	4908858	2	0	0	100.3	100.3	1	3835.87	3.25	0	82.68	0	0.5	0	0	16.78	0	0	0	0	0	0	0.35	0.35
Inverter	MV4-8	369256	4909001	2	0	0	100.3	100.3	1	3870.35	3.25	0	82.76	0	0.51	0	0	16.84	0	0	0	0	0	0	0.21	0.21
Inverter	MV4-9	369289	4909001	2	0	0	100.3	100.3	1	3897.27	3.25	0	82.82	0	0.51	0	0	16.88	0	0	0	0	0	0	0.1	0.1
Inverter	MV4-1	369011	4909397	2	0	0	100.3	100.3	1	3928.21	3.25	0	82.88	0	0.52	0	0	16.93	0	0	0	0	0	0	-0.02	-0.02
Inverter	MV4-6	369243	4909192	2	0	0	100.3	100.3	1	3973.95	3.25	0	82.98	0	0.52	0	0	17.01	0	0	0	0	0	0	-0.2	-0.2
Inverter	MV4-5	369289	4909199	2	0	0	100.3	100.3	1	4014.64	3.25	0	83.07	0	0.53	0	0	17.07	0	0	0	0	0	0	-0.36	-0.36
Inverter	MV6-2	370085	4907339	2	0	0	100.3	100.3	1	4023.61	3.25	0	83.09	0	0.53	0	0	17.09	0	0	0	0	0	0	-0.4	-0.4
Inverter	MV4-3	369229	4909397	2	0	0	100.3	100.3	1	4092.16	3.25	0	83.24	0	0.54	0	0	17.2	0	0	0	0	0	0	-0.66	-0.66
Inverter	MV6-3	370207	4907140	2	0	0	100.3	100.3	1	4121.02	3.25	0	83.3	0	0.54	0	0	17.24	0	0	0	0	0	0	-0.77	-0.77
Inverter	MV4-2	369272	4909397	2	0	0	100.3	100.3	1	4125.09	3.25	0	83.31	0	0.54	0	0	17.25	0	0	0	0	0	0	-0.79	-0.79
Inverter	MV5-5	370015	4908690	2	0	0	100.3	100.3	1	4363.5	3.25	0	83.8	0	0.57	0	0	17.62	0	0	0	0	0	0	-1.68	-1.68
Inverter	MV5-2	370006	4908853	2	0	0	100.3	100.3	1	4430.26	3.25	0	83.93	0	0.58	0	0	17.72	0	0	0	0	0	0	-1.92	-1.92
Inverter	MV5-1	370020	4909142	2	0	0	100.3	100.3	1	4586.16	5.06	0	84.23	0	1.48	2.81	0.01	17.96	0	0	0	0	0	0	-6.17	-6.17
Inverter	MV5-3	370231	4908851	2	0	0	100.3	100.3	1	4628.75	3.25	0	84.31	0	0.61	0	0	18.03	0	0	0	0	0	0	-2.63	-2.63
Inverter	MV5-4	370324	4908707	2	0	0	100.3	100.3	1	4649.59	3.25	0	84.35	0	0.61	0	0	18.06	0	0	0	0	0	0	-2.7	-2.7
DSTATCOM - 10 MVAR #2	DSAT2	369403	4908757	2.5	0	0	96.6	96.6	1	3858.94	3.5	0	82.73	0	3.55	0	0	2.77	0	0	0	0	0	0	7.59	7.59
Inverter	MV6-1	370235	4907364	2	0	0	97.3	97.3	1	4175.65	3.25	0	83.41	0	0.55	0	0	17.33	0	0	0	0	0	0	-3.98	-3.98
DSTATCOM - 10 MVAR #1	DSAT1	369437	4908757	2.5	0	0	96.6	96.6	1	3888.05	3.5	0	82.79	0	3.55	0	0	2.78	0	0	0	0	0	0	7.5	7.5
Inverter	MV1-3	364440	4906039	2	0	0	89.1	89.1	1	1811.51	3.25	0	76.16	0	0.86	0	0	7.73	0	0	0	0	0	0	4.3	4.3
Inverter	MV3-1	368156	4907976	2	0	0	89.1	89.1	1	2387.79	3.25	0	78.56	0	1	0	0	8.67	0	0	0	0	0	0	0.83	0.83
Inverter	MV3-5	368340	4907843	2	0	0	89.1	89.1	1	2486.65	3.25	0	78.91	0	1.02	0	0	8.82	0	0	0	0	0	0	0.3	0.3
Inverter	MV3-22	368656	4907142	2	0	0	89.1	89.1	1	2581.18	3.25	0	79.24	0	1.05	0	0	8.97	0	0	0	0	0	0	-0.2	-0.2
SubstationTransformer	W_ST	369711.17	4906112.3	2.5	0	0	92	92	1	3663.98	4.25	0	82.28	0	1.26	2.73	0.28	6.91	0	0	0	0	0	0	-1.2	-1.2
Inverter Transformer	MV2-1 T	365836	4906816	2	0	0	69.4	69.4	1	274.87	3.25	0	59.78	0	0.74	0	0	2.28	0	0	0	0	0	0	6.55	6.55
Inverter	MV3-4	368502	4907925	2	0	0	89.1	89.1	1	2668.2	3.25	0	79.52	0	1.07	0	0	9.11	0	0	0	0	0	0	-0.64	-0.64
Gardiner Substation	G_Sub	366586.3	4903349.9	2.5	0	0	90.8	90.8	1	3439.09	4.25	0	81.73	0	1.24	2.95	0.36	6.6	0	0	0	0	0	0	-1.74	-1.74
Inverter	MV3-2	368671	4907928	2	0	0	89.1	89.1	1	2822.31	3.25	0	80.01	0	1.1	0	0	9.35	0	0	0	0	0	0	-1.4	-1.4
Westbrook Inverter Enclosur	W_INV2	369374	4906388	2	0	0	89.1	89.1	1	3290.53	3.25	0	81.35	0	1.22	0	0	10.05	0	0	0	0	0	0	-3.56	-3.56
Westbrook Inverter Enclosur	W_INV3	369508	4906164	2	0	0	89.1	89.1	1	3454.92	3.25	0	81.77	0	1.26	0	0	10.3	0	0	0	0	0	0	-4.27	-4.27
Inverter	MV4-13	369051	4908605	2	0	0	89.1	89.1	1	3479.56	3.25	0	81.83	0	1.26	0	0	10.33	0	0	0	0	0	0	-4.37	-4.37
Inverter	MV4-15	369176	4908481	2	0	0	89.1	89.1	1	3523.67	3.25	0	81.94	0	1.27	0	0	10.4	0	0	0	0	0	0	-4.55	-4.55
Fixed Reactor Bank 1	FRB1	369378	4908755	6	0	0	89.8	89.8	1	3836.55	5.25	0	82.68	0	-0.75	0	0	7.15	0	0	0	0	0	0	0.7	0.7
Inverter	MV4-14	369176	4908507	2	0	0	89.1	89.1	1	3536.48	3.25	0	81.97	0	1.28	0	0	10.42	0	0	0	0	0	0	-4.61	-4.61
Inverter	MV4-12	369043	4908803	2	0	0	89.1	89.1	1	3582.18	3.25	0	82.08	0	1.29	0	0	10.48	0	0	0	0	0	0	-4.8	-4.8
Fixed Reactor Bank 2	FRB2	369464	4908755	6	0	0	89.8	89.8	1	3910.19	5.25	0	82.84	0	-0.74	0	0	7.25	0	0	0	0	0	0	0.42	0.42
Westbrook Inverter Enclosur	W_INV4	369673	4906164	2	0	0	89.1	89.1	1	3617.6	3.25	0	82.17	0	1.3	0	0	10.53	0	0	0	0	0	0	-4.94	-4.94
Westbrook Inverter Enclosur	W_INV5	369719	4906574	2	0	0	89.1	89.1	1	3619.53	3.25	0	82.17	0	1.3	0	0	10.54	0	0	0	0	0	0	-4.95	-4.95
Westbrook Inverter Enclosur	W_INV7	369780	4906417	2	0	0	89.1	89.1	1	3691.51	3.25	0	82.34	0	1.32	0	0	10.64	0	0	0	0	0	0	-5.24	-5.24
Westbrook Inverter Enclosur	W_INV6	369875	4906578	2	0	0	89.1	89.1	1	3775.15	3.25	0	82.54	0	1.34	0	0	10.76	0	0	0	0	0	0	-5.58	-5.58
Inverters	G_Inv1	366526.4	4903225.8	2	0	0	87.7	87.7	1	3554.39	3.25	0	82.02	0	2.75	0	0	4.39	0	0	0	0	0	0	-1.5	-1.5
Inverters	G_Inv2	366676.9	4903239.1	2	0	0	87.7	87.7	1	3562.27	3.25	0	82.03	0	2.75	0	0	4.4	0	0	0	0	0	0	-1.52	-1.52
Inverter	MV5-6	369982	4908507	2	0	0	89.1	89.1	1	4255.4	3.25	0	83.58	0	1.46	0	0	11.44	0	0	0	0	0	0	-7.42	-7.42
Inverters	G_Inv3	366583.7	4903091.4	2	0	0	87.7	87.7	1	3694.87	3.25	0	82.35	0	2.77	0	0	4.54	0	0	0	0	0	0	-2	-2
Inverters	G_Inv4	366732.8	4903105	2	0	0	87.7	87.7	1	3703.77	3.25	0	82.37	0	2.77	0	0	4.55	0	0	0	0	0	0	-2.03	-2.03
Inverters	G_Inv5	366638.5	4902958.1	2	0	0	87.7	87.7	1	3834.34	4.12	0	82.67	0	3.16	1.53	0	4.69	0	0	0	0	0	0	-4.4	-4.4
Inverters	G_Inv6	366788.5	4902972	2	0	0	87.7	87.7	1	3844.43	3.25	0	82.7	0	2.78	0	0	4.71	0	0	0	0	0	0	-2.52	-2.52
Inverters	G_Inv7	366694.6	4902824.7	2	0	0	87.7	87.7	1	3974.43	3.25	0	82.99	0	2.79	0	0	4.85	0	0	0	0	0	0	-2.96	-2.96
Westbrook Inverter Enclosur	W_INV1	369409	4906578	2	0	0	86.1	86.1	1	3309.74	3.25	0	81.4	0	1.22	0	0	10.08	0	0	0	0	0	0	-6.64	-6.64
Inverters	G_Inv8	366844.5	4902838.5	2	0	0	87.7	87.7	1	3985.89	3.25	0	83.01	0	2.79	0	0	4.86	0	0	0	0	0	0	-3	-3
Inverters	G_Inv9	366750.9	4902691.8	2	0	0	87.7	87.7	1	4114.37	3.25	0	83.29	0	2.8	0	0	5	0	0	0	0	0	0	-3.42	-3.42
Inverters	G_Inv10	366900.7	4902704.8	2	0	0	87.7	87.7	1	4127.82	3.25	0	83.31	0	2.8	0	0	5.01	0	0	0	0	0	0	-3.47	-3.47

Inverter	MV6-4	370250	4906966	2	0	0	86.1	86.1	1	4151.37	3.25	0	83.36	0	1.43	0	0	11.3	0	0	0	0	0	0	-10.03	-10.03
Inverter Transformer	MV2-2 T	365982	4906654	2	0	0	56.1	56.1	1	158.4	3.25	0	55	0	0.03	0	0	1.94	0	0	0	0	0	0	-0.9	-0.9
Westbrook Inverter Transfor	W_INVTR1	369403	4906578	2	0	0	78.2	78.2	1	3303.75	3.25	0	81.38	0	-2.79	0	0	1.78	0	0	0	0	0	0	-2.13	-2.13
Westbrook Inverter Transfor	W_INVTR2	369368	4906388	2	0	0	77.3	77.3	1	3284.57	3.25	0	81.33	0	-2.79	0	0	1.77	0	0	0	0	0	0	-2.97	-2.97
Westbrook Inverter Transfor	W_INVTR3	369514	4906164	2	0	0	77.3	77.3	1	3460.84	3.25	0	81.78	0	-2.83	0	0	1.85	0	0	0	0	0	0	-3.45	-3.45
Inverter Transformer	MV2-3 T	365814	4906641	2	0	0	56.1	56.1	1	311.61	3.25	0	60.87	0	-0.08	0	0	2.84	0	0	0	0	0	0	-7.57	-7.57
Westbrook Inverter Transfor	W_INVTR4	369679	4906164	2	0	0	77.3	77.3	1	3623.52	3.25	0	82.18	0	-2.87	0	0	1.91	0	0	0	0	0	0	-3.88	-3.88
Westbrook Inverter Transfor	W_INVTR5	369725	4906574	2	0	0	77.3	77.3	1	3625.52	3.25	0	82.19	0	-2.87	0	0	1.91	0	0	0	0	0	0	-3.88	-3.88
Westbrook Inverter Transfor	W_INVTR7	369786	4906417	2	0	0	77.3	77.3	1	3697.48	3.25	0	82.36	0	-2.89	0	0	1.94	0	0	0	0	0	0	-4.06	-4.06
Westbrook Inverter Transfor	W_INVTR6	369881	4906578	2	0	0	77.3	77.3	1	3781.15	3.25	0	82.55	0	-2.91	0	0	1.97	0	0	0	0	0	0	-4.27	-4.27
Inverter Transformer	MV1-7 T	364919	4905782	2	0	0	69.4	69.4	1	1533.28	3.25	0	74.71	0	1.99	0	0	4.47	0	0	0	0	0	0	-11.82	-11.82
Inverter Transformer	MV1-10 T	365010	4905564	2	0	0	69.4	69.4	1	1617.2	3.25	0	75.18	0	2.02	0	0	4.57	0	0	0	0	0	0	-12.41	-12.41
Inverter Transformer	MV1-14 T	365157	4905049	2	0	0	69.4	69.4	1	1951.22	3.25	0	76.81	0	2.16	0	0	4.92	0	0	0	0	0	0	-14.53	-14.53
Inverter Transformer	MV1-13 T	364725	4905241	2	0	0	69.4	69.4	1	2047.89	3.25	0	77.23	0	2.19	0	0	5.01	0	0	0	0	0	0	-15.08	-15.08
Inverter Transformer	MV2-4 T	365590	4906628	2	0	0	56.1	56.1	1	529.46	3.25	0	65.48	0	-0.11	0	0	3.64	0	0	0	0	0	0	-12.95	-12.95
Inverter Transformer	MV6-4 T	370244	4906966	2	0	0	69.4	69.4	1	4145.37	3.25	0	83.35	0	2.82	0	0	6.78	0	0	0	0	0	0	-23.61	-23.61
Inverter Transformer	MV6-1 T	370230	4907364	2	0	0	69.4	69.4	1	4170.7	3.25	0	83.4	0	2.83	0	0	6.8	0	0	0	0	0	0	-23.68	-23.68
Inverter Transformer	MV1-1 T	364721	4906166	2	0	0	56.1	56.1	1	1503.2	3.25	0	74.54	0	0.2	0	0	6.02	0	0	0	0	0	0	-24.71	-24.71
Inverter Transformer	MV1-2 T	364759	4906063	2	0	0	56.1	56.1	1	1512.58	3.25	0	74.59	0	0.2	0	0	6.04	0	0	0	0	0	0	-24.78	-24.78
Inverter Transformer	MV1-4 T	364821	4905918	2	0	0	56.1	56.1	1	1531.88	3.25	0	74.7	0	0.21	0	0	6.09	0	0	0	0	0	0	-24.94	-24.94
Inverter Transformer	MV1-5 T	364676	4905892	2	0	0	56.1	56.1	1	1668.52	3.25	0	75.45	0	0.27	0	0	6.37	0	0	0	0	0	0	-26.03	-26.03
Inverter Transformer	MV1-8 T	364782	4905647	2	0	0	56.1	56.1	1	1724.92	3.25	0	75.74	0	0.29	0	0	6.49	0	0	0	0	0	0	-26.46	-26.46
Inverter Transformer	MV1-12 T	365044	4905386	2	0	0	56.1	56.1	1	1731.41	3.25	0	75.77	0	0.29	0	0	6.5	0	0	0	0	0	0	-26.51	-26.51
Inverter Transformer	MV3-18 T	367757	4907412	2	0	0	56.1	56.1	1	1778.78	3.25	0	76	0	0.31	0	0	6.6	0	0	0	0	0	0	-26.86	-26.86
Inverter Transformer	MV3-12 T	367674	4907594	2	0	0	56.1	56.1	1	1780.12	3.25	0	76.01	0	0.31	0	0	6.6	0	0	0	0	0	0	-26.87	-26.87
Inverter Transformer	MV1-3 T	364435	4906039	2	0	0	56.1	56.1	1	1816.1	3.25	0	76.18	0	0.33	0	0	6.68	0	0	0	0	0	0	-27.13	-27.13
Inverter Transformer	MV1-6 T	364482	4905835	2	0	0	56.1	56.1	1	1864.75	3.25	0	76.41	0	0.35	0	0	6.77	0	0	0	0	0	0	-27.48	-27.48
Inverter Transformer	MV1-9 T	364555	4905646	2	0	0	56.1	56.1	1	1905.07	3.25	0	76.6	0	0.36	0	0	6.86	0	0	0	0	0	0	-27.76	-27.76
Inverter Transformer	MV1-15 T	365309	4904994	2	0	0	56.1	56.1	1	1932.14	3.25	0	76.72	0	0.38	0	0	6.91	0	0	0	0	0	0	-27.95	-27.95
Inverter Transformer	MV1-11 T	364649	4905414	2	0	0	56.1	56.1	1	1978.71	3.25	0	76.93	0	0.39	0	0	7	0	0	0	0	0	0	-28.27	-28.27
Inverter Transformer	MV3-13 T	367958	4907577	2	0	0	56.1	56.1	1	2028.05	3.25	0	77.14	0	0.42	0	0	7.1	0	0	0	0	0	0	-28.6	-28.6
Inverter Transformer	MV3-7 T	367951	4907754	2	0	0	56.1	56.1	1	2099.86	3.25	0	77.44	0	0.45	0	0	7.24	0	0	0	0	0	0	-29.07	-29.07
Inverter Transformer	MV3-3 T	367944	4907927	2	0	0	56.1	56.1	1	2181.56	3.25	0	77.78	0	0.48	0	0	7.4	0	0	0	0	0	0	-29.59	-29.59
Inverter Transformer	MV3-17 T	368183	4907472	2	0	0	56.1	56.1	1	2199.17	3.25	0	77.85	0	0.49	0	0	7.43	0	0	0	0	0	0	-29.7	-29.7
Inverter Transformer	MV3-10 T	368162	4907669	2	0	0	56.1	56.1	1	2251.84	3.25	0	78.05	0	0.51	0	0	7.53	0	0	0	0	0	0	-30.03	-30.03
Inverter Transformer	MV3-6 T	368156	4907834	2	0	0	56.1	56.1	1	2318.39	3.25	0	78.3	0	0.54	0	0	7.65	0	0	0	0	0	0	-30.44	-30.44
Inverter Transformer	MV3-19 T	368352	4907347	2	0	0	56.1	56.1	1	2324.64	3.25	0	78.33	0	0.54	0	0	7.67	0	0	0	0	0	0	-30.48	-30.48
Inverter Transformer	MV3-15 T	368351	4907477	2	0	0	56.1	56.1	1	2360.15	3.25	0	78.46	0	0.56	0	0	7.73	0	0	0	0	0	0	-30.69	-30.69
Inverter Transformer	MV3-1 T	368150	4907976	2	0	0	56.1	56.1	1	2382.64	3.25	0	78.54	0	0.57	0	0	7.77	0	0	0	0	0	0	-30.82	-30.82
Inverter Transformer	MV3-11 T	368340	4907662	2	0	0	56.1	56.1	1	2412.95	3.25	0	78.65	0	0.58	0	0	7.83	0	0	0	0	0	0	-31	-31
Inverter Transformer	MV3-21 T	368484	4907206	2	0	0	56.1	56.1	1	2422.36	3.25	0	78.68	0	0.58	0	0	7.85	0	0	0	0	0	0	-31.06	-31.06
Inverter Transformer	MV3-5 T	368335	4907843	2	0	0	56.1	56.1	1	2482.16	3.25	0	78.9	0	0.61	0	0	7.96	0	0	0	0	0	0	-31.4	-31.4
Inverter Transformer	MV3-16 T	368509	4907475	2	0	0	56.1	56.1	1	2510.46	3.25	0	79	0	0.62	0	0	8.01	0	0	0	0	0	0	-31.57	-31.57
Inverter Transformer	MV3-22 T	368661	4907142	2	0	0	56.1	56.1	1	2586.12	3.25	0	79.25	0	0.65	0	0	8.15	0	0	0	0	0	0	-31.99	-31.99
Inverter Transformer	MV3-9 T	368517	4907703	2	0	0	56.1	56.1	1	2592.54	3.25	0	79.27	0	0.66	0	0	8.16	0	0	0	0	0	0	-32.03	-32.03
Inverter Transformer	MV3-20 T	368683	4907317	2	0	0	56.1	56.1	1	2639.52	3.25	0	79.43	0	0.68	0	0	8.24	0	0	0	0	0	0	-32.29	-32.29
Inverter Transformer	MV3-4 T	368507	4907925	2	0	0	56.1	56.1	1	2672.7	3.25	0	79.54	0	0.69	0	0	8.3	0	0	0	0	0	0	-32.47	-32.47
Inverter Transformer	MV3-14 T	368678	4907498	2	0	0	56.1	56.1	1	2679.09	3.25	0	79.56	0	0.69	0	0	8.31	0	0	0	0	0	0	-32.51	-32.51
Inverter Transformer	MV3-8 T	368685	4907712	2	0	0	56.1	56.1	1	2752.71	3.25	0	79.8	0	0.72	0	0	8.44	0	0	0	0	0	0	-32.9	-32.9
Inverter Transformer	MV3-2 T	368677	4907928	2	0	0	56.1	56.1	1	2827.77	3.25	0	80.03	0	0.76	0	0	8.57	0	0	0	0	0	0	-33.3	-33.3
Inverter Transformer	MV4-13 T	369057	4908605	2	0	0	56.1	56.1	1	3484.64	3.25	0	81.84	0	1.03	0	0	9.66	0	0	0	0	0	0	-36.48	-36.48
Inverter Transformer	MV4-15 T	369170	4908481	2	0	0	56.1	56.1	1	3518.44	3.25	0	81.93	0	1.05	0	0	9.72	0	0	0	0	0	0	-36.63	-36.63
Inverter Transformer	MV4-14 T	369182	4908507	2	0	0	56.1	56.1	1	3541.69	3.25	0	81.98	0	1.06	0	0	9.75	0	0	0	0	0	0	-36.74	-36.74
Inverter Transformer	MV4-12 T	369049	4908803	2	0	0	56.1	56.1	1	3587.11	3.25	0	82.09	0	1.08	0	0	9.82	0	0	0	0	0	0	-36.94	-36.94
Inverter Transformer	MV4-7 T	369040	4909001	2	0	0	56.1	56.1	1	3696.57	3.25	0	82.36	0	1.12	0	0	10	0	0	0	0	0	0	-37.41	-37.41
Inverter Transformer	MV4-11 T	369269	4908855	2	0	0	56.1	56.1	1	3798.32	3.25	0	82.59	0	1.16	0	0	10.15	0	0	0	0	0	0	-37.85	-37.85
Inverter Transformer	MV4-4 T	369033	4909199	2	0	0	56.1	56.1	1	3814.73	3.25	0	82.63	0	1.17	0	0	10.18	0	0	0	0	0	0	-37.92	-37.92
Inverter Transformer	MV4-10 T	369307	4908858	2	0	0	56.1	56.1	1	3831.69	3.25	0	82.67	0	1.18	0	0	10.2	0	0	0	0	0	0	-37.99	-37.99
Inverter Transformer	MV4-8 T	369262	4909001	2	0	0	56.1	56.1	1	3875.24	3.25	0	82.77	0	1.19	0	0	10.27	0	0	0	0	0	0	-38.17	-38.17
Inverter Transformer	MV4-9 T	369284	4909001	2	0	0	56.1	56.1	1	3893.19	3.25	0	82.81	0	1.2	0	0	10.3	0	0	0	0	0	0	-38.24	-38.24
Inverter Transformer	MV4-1 T	369017	4909397	2	0	0	56.1	56.1	1	3932.65	3.25	0	82.89	0	1.22	0	0	10.35	0	0	0	0	0	0	-38.41	-38.41
Inverter Transformer	MV4-6 T	369249	4909192	2	0	0	56.1	56.1	1	3978.69	3.25	0	82.99	0	1.24	0	0	10.42	0	0	0	0	0	0	-38.6	-38.6
Inverter Transformer	MV4-5 T	369283	4909199	2	0	0	56.1	56.1	1	4009.89	3.25	0	83.06	0	1.25	0	0	10.47	0	0	0	0	0	0	-38.72	-38.72
Inverter Transformer	MV6-2 T	370091	4907339	2	0	0	56.1	56.1	1	4029.54	3.25	0	83.11	0	1.26	0	0	10.5	0	0	0	0	0	0	-38.8	-38.8
Inverter Transformer	MV4-3 T	369234	4909397	2	0	0	56.1	56.1	1	4095.98	3.25	0	83.25	0	1.28	0	0	10.6	0	0	0	0	0	0	-39.07	-39.07
Inverter Transformer	MV6-3 T	370202	4907140	2	0	0	56.1	56.1	1	4116.05	3.25	0	83.29	0	1.29	0	0	10.63	0	0	0	0	0	0	-39.15	-39.15
Inverter Transformer	MV4-2 T	369267	4909397	2	0	0	56.1	56.1	1	4121.25	3.25	0	83.3	0	1.29	0	0	10.63	0	0	0	0	0	0	-39.17	-39.17
Inverter Transformer	MV5-6 T	369987	4908507	2	0	0	56.1	56.1	1	4259.95	3.25	0	83.59	0	1.35	0	0	10.84	0	0	0	0	0	0	-39.71	-39.71
Inverter Transformer	MV5-5 T	370021	4908690	2	0	0	56.1	56.1	1	4368.88	3.25	0	83.81	0	1.39	0	0	10.99	0	0	0	0	0	0	-40.13	-40.13
Inverter Transformer	MV5-2 T	370011	4908853	2	0	0	56.1	56.1	1	4434.67	3.25	0	83.94	0	1.41	0	0	11.08	0	0	0	0	0	0	-40.38	-40.38
Inverter Transformer	MV5-1 T	370015	4909142	2	0	0	56.1	56.1	1	4581.89	5.06	0	84.22	0	2.39	2.14	0.01	11.29	0	0	0	0	0	0	-43.98	-43.98
Inverter Transformer	MV5-3 T	370237	4908851	2	0	0	56.1	56.1	1	4634.1	3.25	0	84.32	0	1.49	0	0	11.36	0	0	0	0	0	0	-41.11	-41.11
Inverter Transformer	MV5-4 T	370330	4908707	2	0	0	56.1	56.1	1	4655.04	3.25	0	84.36	0	1.5	0	0	11.39	0	0	0	0	0	0	-41.19	-41.19
Line Reactor	NGR	369421	4908787.5	5	0	0	45.4	45.4	1	3890.19	5.25	0	82.8	0	3.29	1.34	0.1	1.59	0	0	0	0	0	0	-43.66	-43.66

Limit. Valu 0 0
Level D/N: 37.9312 37.9312

Receiver: Existing Noise Receptor
ID: S-R23
X: 366229
Y: 4906121
Z: 4.5
Ground: 0

ISO	Description	ID	X	Y	Z	Ground	ReflOrd	LxT	LxN	L/A	Dist.	hm	Freq	Adiv	K0b	Agr	Abar	z	Aatm	Afol	Ahous	Cmet	CmetN	Dc	RL	LtotT	LtotN
	Inverter	MV2-3	365820	4906641	2	0	0	100.3	100.3	1	661.58	3.25	0	67.41	0	-0.44	0	0	9.55	0	0	0	0	0	0	23.79	23.79
	Inverter	MV2-4	365586	4906624	2	0	0	100.3	100.3	1	816.37	3.25	0	69.24	0	-0.34	0	0	10.25	0	0	0	0	0	0	21.17	21.17
	Sol_Luce Substation	S_Substation	369426	4908792	3.5	0	0	112.1	112.1	1	4165.94	5.25	0	83.39	0	0.65	3.07	0.25	7.58	0	0	0	0	0	0	17.38	17.38
	Inverter	MV2-1	365842	4906816	2	0	0	97.3	97.3	1	795.49	3.25	0	69.01	0	-0.35	0	0	10.16	0	0	0	0	0	0	18.49	18.49
	Inverter	MV1-12	365038	4905386	2	0	0	100.3	100.3	1	1399.54	3.25	0	73.92	0	-0.07	0	0	12.07	0	0	0	0	0	0	14.39	14.39
	Inverter	MV1-4	364815	4905918	2	0	0	100.3	100.3	1	1428.5	3.25	0	74.1	0	-0.06	0	0	12.14	0	0	0	0	0	0	14.13	14.13
	Inverter	MV1-15	365315	4904994	2	0	0	100.3	100.3	1	1451.04	3.25	0	74.23	0	-0.05	0	0	12.2	0	0	0	0	0	0	13.93	13.93
	Inverter	MV1-2	364753	4906063	2	0	0	100.3	100.3	1	1477.14	3.25	0	74.39	0	-0.04	0	0	12.27	0	0	0	0	0	0	13.7	13.7
	Inverter	MV1-1	364715	4906166	2	0	0	100.3	100.3	1	1514.67	3.25	0	74.61	0	-0.03	0	0	12.36	0	0	0	0	0	0	13.37	13.37
	Inverter	MV1-8	364788	4905647	2	0	0	100.3	100.3	1	1516.96	3.25	0	74.62	0	-0.03	0	0	12.37	0	0	0	0	0	0	13.35	13.35
	Inverter	MV1-5	364671	4905892	2	0	0	100.3	100.3	1	1574.74	3.25	0	74.94	0	-0.01	0	0	12.51	0	0	0	0	0	0	12.87	12.87
	Inverter	MV1-11	364655	4905414	2	0	0	100.3	100.3	1	1725.49	3.25	0	75.74	0	0.05	0	0	12.86	0	0	0	0	0	0	11.67	11.67
	Inverter	MV1-9	364561	4905646	2	0	0	100.3	100.3	1	1734.32	3.25	0	75.78	0	0.05	0	0	12.88	0	0	0	0	0	0	11.6	11.6
	Inverter	MV1-6	364477	4905835	2	0	0	100.3	100.3	1	1775.19	3.25	0	75.98	0	0.06	0	0	12.97	0	0	0	0	0	0	11.29	11.29
	Inverter	MV1-10	365004	4905564	2	0	0	97.3	97.3	1	1345.69	3.25	0	73.58	0	-0.09	0	0	11.93	0	0	0	0	0	0	11.9	11.9
	Inverter	MV1-7	364925	4905782	2	0	0	97.3	97.3	1	1347.35	3.25	0	73.59	0	-0.09	0	0	11.93	0	0	0	0	0	0	11.88	11.88
	Inverter	MV3-18	367752	4907412	2	0	0	100.3	100.3	1	1996.55	3.25	0	77.01	0	0.13	0	0	13.45	0	0	0	0	0	0	9.72	9.72
	Inverter	MV3-12	367668	4907594	2	0	0	100.3	100.3	1	2059.24	3.25	0	77.27	0	0.15	0	0	13.59	0	0	0	0	0	0	9.31	9.31
	Inverter	MV1-14	365163	4905049	2	0	0	97.3	97.3	1	1511.8	3.25	0	74.59	0	-0.03	0	0	12.35	0	0	0	0	0	0	10.4	10.4
	Inverter	MV2-2	365977	4906654	2	0	0	89.1	89.1	1	589.58	3.25	0	66.41	0	0.57	0	0	5.42	0	0	0	0	0	0	16.65	16.65
	Inverter	MV3-13	367963	4907577	2	0	0	100.3	100.3	1	2264.22	3.25	0	78.1	0	0.2	0	0	14	0	0	0	0	0	0	8.01	8.01
	Inverter	MV3-7	367945	4907754	2	0	0	100.3	100.3	1	2368.83	3.25	0	78.49	0	0.23	0	0	14.21	0	0	0	0	0	0	7.39	7.39
	Inverter	MV3-17	368178	4907472	2	0	0	100.3	100.3	1	2371.46	3.25	0	78.5	0	0.23	0	0	14.21	0	0	0	0	0	0	7.37	7.37
	Inverter	MV1-13	364731	4905241	2	0	0	97.3	97.3	1	1737.36	3.25	0	75.8	0	0.05	0	0	12.89	0	0	0	0	0	0	8.58	8.58
	Inverter	MV3-19	368357	4907347	2	0	0	100.3	100.3	1	2455.9	3.25	0	78.8	0	0.25	0	0	14.37	0	0	0	0	0	0	6.89	6.89
	Inverter	MV3-10	368167	4907669	2	0	0	100.3	100.3	1	2480.35	3.25	0	78.89	0	0.25	0	0	14.42	0	0	0	0	0	0	6.75	6.75
	Inverter	MV3-3	367939	4907927	2	0	0	100.3	100.3	1	2487.12	3.25	0	78.91	0	0.25	0	0	14.43	0	0	0	0	0	0	6.71	6.71
	Inverter	MV3-21	368478	4907206	2	0	0	100.3	100.3	1	2497.04	3.25	0	78.95	0	0.26	0	0	14.45	0	0	0	0	0	0	6.65	6.65
	Inverter	MV3-15	368357	4907477	2	0	0	100.3	100.3	1	2523.32	3.25	0	79.04	0	0.26	0	0	14.5	0	0	0	0	0	0	6.51	6.51
	Inverter	MV3-6	368162	4907834	2	0	0	100.3	100.3	1	2582.8	3.25	0	79.24	0	0.28	0	0	14.61	0	0	0	0	0	0	6.18	6.18
	Inverter	MV3-11	368346	4907662	2	0	0	100.3	100.3	1	2618.47	3.25	0	79.36	0	0.28	0	0	14.68	0	0	0	0	0	0	5.99	5.99
	Inverter	MV3-16	368514	4907475	2	0	0	100.3	100.3	1	2656.04	3.25	0	79.48	0	0.29	0	0	14.75	0	0	0	0	0	0	5.78	5.78
	Inverter	MV3-20	368689	4907317	2	0	0	100.3	100.3	1	2735.33	3.25	0	79.74	0	0.31	0	0	14.9	0	0	0	0	0	0	5.37	5.37
	Inverter	MV3-9	368512	4907703	2	0	0	100.3	100.3	1	2777.56	3.25	0	79.87	0	0.32	0	0	14.97	0	0	0	0	0	0	5.15	5.15
	Inverter	MV3-14	368684	4907498	2	0	0	100.3	100.3	1	2814.81	3.25	0	79.99	0	0.33	0	0	15.04	0	0	0	0	0	0	4.96	4.96
	Inverter	MV3-8	368680	4907712	2	0	0	100.3	100.3	1	2922.1	3.25	0	80.31	0	0.35	0	0	15.23	0	0	0	0	0	0	4.42	4.42
	Inverter	MV4-7	369035	4909001	2	0	0	100.3	100.3	1	4020.95	3.25	0	83.09	0	0.53	0	0	17.08	0	0	0	0	0	0	-0.39	-0.39
	Inverter	MV6-2	370085	4907339	2	0	0	100.3	100.3	1	4043.79	3.25	0	83.14	0	0.53	0	0	17.12	0	0	0	0	0	0	-0.48	-0.48
	Inverter	MV4-11	369264	4908855	2	0	0	100.3	100.3	1	4084.85	3.25	0	83.22	0	0.54	0	0	17.18	0	0	0	0	0	0	-0.63	-0.63
	Inverter	MV6-3	370207	4907140	2	0	0	100.3	100.3	1	4106.44	3.25	0	83.27	0	0.54	0	0	17.22	0	0	0	0	0	0	-0.72	-0.72
	Inverter	MV4-10	369312	4908858	2	0	0	100.3	100.3	1	4122.63	3.25	0	83.3	0	0.54	0	0	17.24	0	0	0	0	0	0	-0.78	-0.78
	Inverter	MV4-4	369027	4909199	2	0	0	100.3	100.3	1	4159.67	3.25	0	83.38	0	0.55	0	0	17.3	0	0	0	0	0	0	-0.92	-0.92
	Inverter	MV4-8	369256	4909001	2	0	0	100.3	100.3	1	4178.17	3.25	0	83.42	0	0.55	0	0	17.33	0	0	0	0	0	0	-0.99	-0.99
	Inverter	MV4-9	369289	4909001	2	0	0	100.3	100.3	1	4202.14	3.25	0	83.47	0	0.55	0	0	17.37	0	0	0	0	0	0	-1.08	-1.08
	Inverter	MV4-1	369011	4909397	2	0	0	100.3	100.3	1	4297.87	3.25	0	83.67	0	0.57	0	0	17.52	0	0	0	0	0	0	-1.44	-1.44
	Inverter	MV4-6	369243	4909192	2	0	0	100.3	100.3	1	4302.93	3.25	0	83.68	0	0.57	0	0	17.53	0	0	0	0	0	0	-1.46	-1.46
	Inverter	MV4-5	369289	4909199	2	0	0	100.3	100.3	1	4340.24	3.25	0	83.75	0	0.57	0	0	17.58	0	0	0	0	0	0	-1.59	-1.59
	Inverter	MV4-3	369229	4909397	2	0	0	100.3	100.3	1	4442.09	3.25	0	83.95	0	0.58	0	0	17.74	0	0	0	0	0	0	-1.97	-1.97
	Inverter	MV4-2	369272	4909397	2	0	0	100.3	100.3	1	4471.24	3.25	0	84.01	0	0.59	0	0	17.79	0	0	0	0	0	0	-2.07	-2.07
	Inverter	MV5-5	370015	4908690	2	0	0	100.3	100.3	1	4575.32	3.25	0	84.21	0	0.6	0	0	17.95	0	0	0	0	0	0	-2.44	-2.44
	Inverter	MV5-2	370006	4908853	2	0	0	100.3	100.3	1	4661.5	3.25	0	84.37	0	0.61	0	0	18.08	0	0	0	0	0	0	-2.74	-2.74
	Inverter	MV5-4	370324	4908707	2	0	0	100.3	100.3	1	4843.18	3.25	0	84.7	0	0.63	0	0	18.35	0	0	0	0	0	0	-3.37	-3.37
	Inverter	MV5-3	370231	4908851	2	0	0	100.3	100.3	1	4844.47	3.25	0	84.7	0	0.63	0	0	18.35	0	0	0	0	0	0	-3.37	-3.37
	Inverter	MV5-1	370020	4909142	2	0	0	100.3	100.3	1	4847.49	3.25	0	84.71	0	0.63	0	0	18.35	0	0	0	0	0	0	-3.38	-3.38
	Inverter	MV6-1	370235	4907364	2	0	0	97.3	97.3	1	4194.41	3.25	0	83.45	0	0.55	0	0	17.36	0	0	0	0	0	0	-4.05	-4.05
	DSTATCOM - 10 MVAR #2	DSAT2	369403	4908757	2.5	0	0	96.6	96.6	1	4125.87	3.5	0	83.31	0	3.59	0	0	2.91	0	0	0	0	0	0	6.83	6.83
	DSTATCOM - 10 MVAR #1	DSAT1	369437	4908757	2.5	0	0	96.6	96.6	1	4152.08	3.5	0	83.37	0	3.59	0	0	2.92	0	0	0	0	0	0	6.76	6.76
	Inverter	MV1-3	364440	4906039	2	0	0	89.1	89.1	1	1790.88	3.25	0	76.06	0	0.86	0	0	7.7	0	0	0	0	0	0	4.44	4.44
	Gardiner Substation	G_Sub	366586.3	4903349.9	2.5	0	0	90.8	90.8	1	2794.04	4.25	0	79.92	0	1.09	3.37	0.36	5.65	0	0	0	0	0	0	0.74	0.74
	SubstationTransformer	W_ST	369711.17	4906112.3	2.5	0	0	92	92	1	3482.18	4.25	0	81.84	0	1.21	2.8	0.29	6.66	0	0	0	0	0	0	-0.53	-0.53
	Inverter	MV3-22	368656	4907142	2	0	0	89.1	89.1	1	2633.02	3.25	0	79.41	0	1.06	0	0	9.05	0	0	0	0	0	0	-0.46	-0.46
	Inverter	MV3-1	368156	4907976	2	0	0	89.1	89.1	1	2674.76	3.25	0	79.55	0	1.07	0	0	9.12	0	0	0	0	0	0	-0.67	-0.67
	Inverter	MV3-5	368340	4907843	2	0	0	89.1	89.1	1	2724.26	3.25	0	79.7	0	1.08	0	0	9.2	0	0	0	0	0	0	-0.92	-0.92

Inverter	MV3-4	368502	4907925	2	0	0	89.1	89.1	1	2901.89	3.25	0	80.25	0	1.12	0	0	9.47	0	0	0	0	0	0	-1.79	-1.79
Inverter	MV3-2	368671	4907928	2	0	0	89.1	89.1	1	3037.86	3.25	0	80.65	0	1.16	0	0	9.67	0	0	0	0	0	0	-2.42	-2.42
Westbrook Inverter Enclosur	W_INV2	369374	4906388	2	0	0	89.1	89.1	1	3156.31	3.25	0	80.98	0	1.18	0	0	9.85	0	0	0	0	0	0	-2.96	-2.96
Westbrook Inverter Enclosur	W_INV3	369508	4906164	2	0	0	89.1	89.1	1	3279.28	3.25	0	81.32	0	1.22	0	0	10.04	0	0	0	0	0	0	-3.51	-3.51
Inverters	G_Inv1	366526.4	4903225.8	2	0	0	87.7	87.7	1	2910.44	3.25	0	80.28	0	2.69	0	0	3.67	0	0	0	0	0	0	1.02	1.02
Inverters	G_Inv2	366676.9	4903239.1	2	0	0	87.7	87.7	1	2916.5	3.25	0	80.3	0	2.69	0	0	3.68	0	0	0	0	0	0	0.99	0.99
Westbrook Inverter Enclosur	W_INV4	369673	4906164	2	0	0	89.1	89.1	1	3444.27	3.25	0	81.74	0	1.26	0	0	10.28	0	0	0	0	0	0	-4.22	-4.22
Westbrook Inverter Enclosur	W_INV5	369719	4906574	2	0	0	89.1	89.1	1	3519.28	3.25	0	81.93	0	1.27	0	0	10.39	0	0	0	0	0	0	-4.54	-4.54
Westbrook Inverter Enclosur	W_INV7	369780	4906417	2	0	0	89.1	89.1	1	3563.32	3.25	0	82.04	0	1.28	0	0	10.46	0	0	0	0	0	0	-4.72	-4.72
Inverters	G_Inv3	366583.7	4903091.4	2	0	0	87.7	87.7	1	3050.29	3.25	0	80.69	0	2.7	0	0	3.83	0	0	0	0	0	0	0.44	0.44
Inverters	G_Inv4	366732.8	4903105	2	0	0	87.7	87.7	1	3057.79	3.25	0	80.71	0	2.7	0	0	3.84	0	0	0	0	0	0	0.41	0.41
Westbrook Inverter Enclosur	W_INV6	369875	4906578	2	0	0	89.1	89.1	1	3674.53	3.25	0	82.3	0	1.31	0	0	10.62	0	0	0	0	0	0	-5.18	-5.18
Inverters	G_Inv5	366638.5	4902958.1	2	0	0	87.7	87.7	1	3189.3	4.09	0	81.07	0	3.13	1.56	0	3.99	0	0	0	0	0	0	-2.09	-2.09
Inverters	G_Inv6	366788.5	4902972	2	0	0	87.7	87.7	1	3198.32	3.25	0	81.1	0	2.72	0	0	4	0	0	0	0	0	0	-0.15	-0.15
Inverter	MV4-13	369051	4908605	2	0	0	89.1	89.1	1	3759.51	3.25	0	82.5	0	1.33	0	0	10.74	0	0	0	0	0	0	-5.52	-5.52
Inverter	MV4-15	369176	4908481	2	0	0	89.1	89.1	1	3775.5	3.25	0	82.54	0	1.34	0	0	10.76	0	0	0	0	0	0	-5.58	-5.58
Fixed Reactor Bank 1	FRB1	369378	4908755	6	0	0	89.8	89.8	1	4105.38	5.25	0	83.27	0	-0.71	0	0	7.5	0	0	0	0	0	0	-0.29	-0.29
Inverter	MV4-14	369176	4908507	2	0	0	89.1	89.1	1	3791.81	3.25	0	82.58	0	1.34	0	0	10.79	0	0	0	0	0	0	-5.65	-5.65
Fixed Reactor Bank 2	FRB2	369464	4908755	6	0	0	89.8	89.8	1	4171.71	5.25	0	83.41	0	-0.7	0	0	7.59	0	0	0	0	0	0	-0.52	-0.52
Inverter	MV4-12	369043	4908803	2	0	0	89.1	89.1	1	3887.38	3.25	0	82.79	0	1.36	0	0	10.92	0	0	0	0	0	0	-6.02	-6.02
Inverters	G_Inv7	366694.6	4902824.7	2	0	0	87.7	87.7	1	3329.02	3.25	0	81.45	0	2.73	0	0	4.14	0	0	0	0	0	0	-0.66	-0.66
Inverters	G_Inv8	366844.5	4902838.5	2	0	0	87.7	87.7	1	3339.71	3.25	0	81.47	0	2.73	0	0	4.15	0	0	0	0	0	0	-0.7	-0.7
Inverters	G_Inv9	366750.9	4902691.8	2	0	0	87.7	87.7	1	3468.69	3.25	0	81.8	0	2.74	0	0	4.29	0	0	0	0	0	0	-1.18	-1.18
Inverters	G_Inv10	366900.7	4902704.8	2	0	0	87.7	87.7	1	3481.61	3.25	0	81.84	0	2.75	0	0	4.31	0	0	0	0	0	0	-1.23	-1.23
Inverter	MV5-6	369982	4908507	2	0	0	89.1	89.1	1	4447.25	3.25	0	83.96	0	1.5	0	0	11.71	0	0	0	0	0	0	-8.12	-8.12
Westbrook Inverter Enclosur	W_INV1	369409	4906578	2	0	0	86.1	86.1	1	3212.67	3.25	0	81.14	0	1.2	0	0	9.94	0	0	0	0	0	0	-6.22	-6.22
Inverter	MV6-4	370250	4906966	2	0	0	86.1	86.1	1	4108.83	3.25	0	83.27	0	1.42	0	0	11.24	0	0	0	0	0	0	-9.87	-9.87
Inverter Transformer	MV2-1 T	365836	4906816	2	0	0	69.4	69.4	1	798.42	3.25	0	69.04	0	1.49	0	0	3.51	0	0	0	0	0	0	-4.69	-4.69
Westbrook Inverter Transfor	W_INVTR1	369403	4906578	2	0	0	78.2	78.2	1	3206.73	3.25	0	81.12	0	-2.77	0	0	1.74	0	0	0	0	0	0	-1.85	-1.85
Westbrook Inverter Transfor	W_INVTR2	369368	4906388	2	0	0	77.3	77.3	1	3150.34	3.25	0	80.97	0	-2.75	0	0	1.72	0	0	0	0	0	0	-2.59	-2.59
Westbrook Inverter Transfor	W_INVTR3	369514	4906164	2	0	0	77.3	77.3	1	3285.28	3.25	0	81.33	0	-2.79	0	0	1.78	0	0	0	0	0	0	-2.98	-2.98
Inverter Transformer	MV1-10 T	365010	4905564	2	0	0	69.4	69.4	1	1340.23	3.25	0	73.54	0	1.9	0	0	4.25	0	0	0	0	0	0	-10.34	-10.34
Inverter Transformer	MV1-7 T	364919	4905782	2	0	0	69.4	69.4	1	1353.15	3.25	0	73.63	0	1.9	0	0	4.26	0	0	0	0	0	0	-10.44	-10.44
Westbrook Inverter Transfor	W_INVTR4	369679	4906164	2	0	0	77.3	77.3	1	3450.27	3.25	0	81.76	0	-2.83	0	0	1.84	0	0	0	0	0	0	-3.43	-3.43
Westbrook Inverter Transfor	W_INVTR5	369725	4906574	2	0	0	77.3	77.3	1	3525.23	3.25	0	81.94	0	-2.85	0	0	1.87	0	0	0	0	0	0	-3.62	-3.62
Westbrook Inverter Transfor	W_INVTR7	369786	4906417	2	0	0	77.3	77.3	1	3569.3	3.25	0	82.05	0	-2.86	0	0	1.89	0	0	0	0	0	0	-3.74	-3.74
Westbrook Inverter Transfor	W_INVTR6	369881	4906578	2	0	0	77.3	77.3	1	3680.48	3.25	0	82.32	0	-2.89	0	0	1.93	0	0	0	0	0	0	-4.02	-4.02
Inverter Transformer	MV1-14 T	365157	4905049	2	0	0	69.4	69.4	1	1516.04	3.25	0	74.61	0	1.98	0	0	4.45	0	0	0	0	0	0	-11.7	-11.7
Inverter Transformer	MV1-13 T	364725	4905241	2	0	0	69.4	69.4	1	1742.53	3.25	0	75.82	0	2.07	0	0	4.7	0	0	0	0	0	0	-13.25	-13.25
Inverter Transformer	MV2-2 T	365982	4906654	2	0	0	56.1	56.1	1	587.46	3.25	0	66.38	0	-0.11	0	0	3.82	0	0	0	0	0	0	-14.03	-14.03
Inverter Transformer	MV2-3 T	365814	4906641	2	0	0	56.1	56.1	1	665.31	3.25	0	67.46	0	-0.09	0	0	4.04	0	0	0	0	0	0	-15.35	-15.35
Inverter Transformer	MV2-4 T	365590	4906628	2	0	0	56.1	56.1	1	815.71	3.25	0	69.23	0	-0.05	0	0	4.44	0	0	0	0	0	0	-17.56	-17.56
Inverter Transformer	MV6-4 T	370244	4906966	2	0	0	69.4	69.4	1	4102.96	3.25	0	83.26	0	2.81	0	0	6.75	0	0	0	0	0	0	-23.48	-23.48
Inverter Transformer	MV6-1 T	370230	4907364	2	0	0	69.4	69.4	1	4189.64	3.25	0	83.44	0	2.83	0	0	6.82	0	0	0	0	0	0	-23.74	-23.74
Inverter Transformer	MV1-12 T	365044	4905386	2	0	0	56.1	56.1	1	1394.44	3.25	0	73.89	0	0.16	0	0	5.79	0	0	0	0	0	0	-23.78	-23.78
Inverter Transformer	MV1-4 T	364821	4905918	2	0	0	56.1	56.1	1	1422.56	3.25	0	74.06	0	0.17	0	0	5.85	0	0	0	0	0	0	-24.02	-24.02
Inverter Transformer	MV1-15 T	365309	4904994	2	0	0	56.1	56.1	1	1454.83	3.25	0	74.26	0	0.18	0	0	5.92	0	0	0	0	0	0	-24.3	-24.3
Inverter Transformer	MV1-2 T	364759	4906063	2	0	0	56.1	56.1	1	1471.15	3.25	0	74.35	0	0.19	0	0	5.96	0	0	0	0	0	0	-24.44	-24.44
Inverter Transformer	MV1-1 T	364721	4906166	2	0	0	56.1	56.1	1	1508.67	3.25	0	74.57	0	0.2	0	0	6.04	0	0	0	0	0	0	-24.75	-24.75
Inverter Transformer	MV1-8 T	364782	4905647	2	0	0	56.1	56.1	1	1522.66	3.25	0	74.65	0	0.21	0	0	6.07	0	0	0	0	0	0	-24.87	-24.87
Inverter Transformer	MV1-5 T	364676	4905892	2	0	0	56.1	56.1	1	1569.79	3.25	0	74.92	0	0.23	0	0	6.17	0	0	0	0	0	0	-25.25	-25.25
Inverter Transformer	MV1-11 T	364649	4905414	2	0	0	56.1	56.1	1	1730.97	3.25	0	75.77	0	0.29	0	0	6.5	0	0	0	0	0	0	-26.5	-26.5
Inverter Transformer	MV1-9 T	364555	4905646	2	0	0	56.1	56.1	1	1740.09	3.25	0	75.81	0	0.3	0	0	6.52	0	0	0	0	0	0	-26.57	-26.57
Inverter Transformer	MV1-6 T	364482	4905835	2	0	0	56.1	56.1	1	1770.26	3.25	0	75.96	0	0.31	0	0	6.58	0	0	0	0	0	0	-26.79	-26.79
Inverter Transformer	MV1-3 T	364435	4906039	2	0	0	56.1	56.1	1	1795.87	3.25	0	76.09	0	0.32	0	0	6.64	0	0	0	0	0	0	-26.98	-26.98
Inverter Transformer	MV3-18 T	367757	4907412	2	0	0	56.1	56.1	1	2000.37	3.25	0	77.02	0	0.4	0	0	7.04	0	0	0	0	0	0	-28.41	-28.41
Inverter Transformer	MV3-12 T	367674	4907594	2	0	0	56.1	56.1	1	2063.43	3.25	0	77.29	0	0.43	0	0	7.17	0	0	0	0	0	0	-28.83	-28.83
Inverter Transformer	MV3-13 T	367958	4907577	2	0	0	56.1	56.1	1	2260.39	3.25	0	78.08	0	0.51	0	0	7.55	0	0	0	0	0	0	-30.08	-30.08
Inverter Transformer	MV3-7 T	367951	4907754	2	0	0	56.1	56.1	1	2373.18	3.25	0	78.51	0	0.56	0	0	7.76	0	0	0	0	0	0	-30.77	-30.77
Inverter Transformer	MV3-17 T	368183	4907472	2	0	0	56.1	56.1	1	2375.57	3.25	0	78.52	0	0.56	0	0	7.76	0	0	0	0	0	0	-30.78	-30.78
Inverter Transformer	MV3-19 T	368352	4907347	2	0	0	56.1	56.1	1	2451.57	3.25	0	78.79	0	0.6	0	0	7.9	0	0	0	0	0	0	-31.23	-31.23
Inverter Transformer	MV3-10 T	368162	4907669	2	0	0	56.1	56.1	1	2476.45	3.25	0	78.88	0	0.61	0	0	7.95	0	0	0	0	0	0	-31.37	-31.37
Inverter Transformer	MV3-3 T	367944	4907927	2	0	0	56.1	56.1	1	2490.56	3.25	0	78.93	0	0.61	0	0	7.97	0	0	0	0	0	0	-31.45	-31.45
Inverter Transformer	MV3-21 T	368484	4907206	2	0	0	56.1	56.1	1	2502.45	3.25	0	78.97	0	0.62	0	0	7.99	0	0	0	0	0	0	-31.52	-31.52
Inverter Transformer	MV3-15 T	368351	4907477	2	0	0	56.1	56.1	1	2518.26	3.25	0	79.02	0	0.62	0	0	8.02	0	0	0	0	0	0	-31.61	-31.61
Inverter Transformer	MV3-6 T	368156	4907834	2	0	0	56.1	56.1	1	2578.31	3.25	0	79.23	0	0.65	0	0	8.13	0	0	0	0	0	0	-31.95	-31.95
Inverter Transformer	MV3-11 T	368340	4907662	2	0	0	56.1	56.1	1	2613.62	3.25	0	79.34	0	0.67	0	0	8.19	0	0	0	0	0	0	-32.15	-32.15
Inverter Transformer	MV3-22 T	368661	4907142	2	0	0	56.1	56.1	1	2637.63	3.25	0	79.42	0	0.68	0	0	8.24	0	0	0	0	0	0	-32.28	-32.28
Inverter Transformer	MV3-16 T	368509	4907475	2	0	0	56.1	56.1	1	2651.74	3.25	0	79.47	0	0.68	0	0	8.26	0	0	0	0	0	0	-32.36	-32.36
Inverter Transformer	MV3-1 T	368150	4907976	2	0	0	56.1	56.1	1	2670.44	3.25	0	79.53	0	0.69	0	0	8.3	0	0	0	0	0	0	-32.46	-32.46
Inverter Transformer	MV3-5 T	368335	4907843	2	0	0	56.1	56.1	1	2720.39	3.25	0	79.69	0	0.71	0	0	8.38	0	0	0	0	0	0	-32.73	-32.73
Inverter Transformer	MV3-20 T	368683	4907317	2	0	0	56.1	56.1	1	2729.93	3.25	0	79.72	0	0.71	0	0	8.4	0	0	0	0	0	0	-32.78	-32.78
Inverter Transformer	MV3-9 T	368517	4907703	2	0	0	56.1	56.1	1	2781.67	3.25	0	79.89	0	0.74	0	0	8.49	0	0	0	0	0	0	-33.06	-33.06
Inverter Transformer	MV3-14 T	368678	4907498	2	0	0	56.1	56.1	1	2809.58	3.25	0	79.97	0	0.75	0	0	8.54	0	0	0	0	0	0	-33.2	-33.2

	Inverter Transformer	MV3-4 T	368507	4907925	2	0	0	56.1	56.1	1	2905.81	3.25	0	80.27	0	0.79	0	0	8.71	0	0	0	0	0	0	-33.7	-33.7
	Inverter Transformer	MV3-8 T	368685	4907712	2	0	0	56.1	56.1	1	2926.3	3.25	0	80.33	0	0.8	0	0	8.74	0	0	0	0	0	0	-33.81	-33.81
	Inverter Transformer	MV3-2 T	368677	4907928	2	0	0	56.1	56.1	1	3042.69	3.25	0	80.67	0	0.85	0	0	8.94	0	0	0	0	0	0	-34.39	-34.39
	Inverter Transformer	MV4-13 T	369057	4908605	2	0	0	56.1	56.1	1	3764.02	3.25	0	82.51	0	1.15	0	0	10.1	0	0	0	0	0	0	-37.7	-37.7
	Inverter Transformer	MV4-15 T	369170	4908481	2	0	0	56.1	56.1	1	3770.82	3.25	0	82.53	0	1.15	0	0	10.11	0	0	0	0	0	0	-37.73	-37.73
	Inverter Transformer	MV4-14 T	369182	4908507	2	0	0	56.1	56.1	1	3796.47	3.25	0	82.59	0	1.16	0	0	10.15	0	0	0	0	0	0	-37.84	-37.84
	Inverter Transformer	MV4-12 T	369049	4908803	2	0	0	56.1	56.1	1	3891.73	3.25	0	82.8	0	1.2	0	0	10.29	0	0	0	0	0	0	-38.24	-38.24
	Inverter Transformer	MV4-7 T	369040	4909001	2	0	0	56.1	56.1	1	4024.44	3.25	0	83.09	0	1.25	0	0	10.49	0	0	0	0	0	0	-38.78	-38.78
	Inverter Transformer	MV6-2 T	370091	4907339	2	0	0	56.1	56.1	1	4049.52	3.25	0	83.15	0	1.26	0	0	10.53	0	0	0	0	0	0	-38.88	-38.88
	Inverter Transformer	MV4-11 T	369269	4908855	2	0	0	56.1	56.1	1	4088.56	3.25	0	83.23	0	1.28	0	0	10.59	0	0	0	0	0	0	-39.04	-39.04
	Inverter Transformer	MV6-3 T	370202	4907140	2	0	0	56.1	56.1	1	4101.6	3.25	0	83.26	0	1.28	0	0	10.6	0	0	0	0	0	0	-39.09	-39.09
	Inverter Transformer	MV4-10 T	369307	4908858	2	0	0	56.1	56.1	1	4118.89	3.25	0	83.3	0	1.29	0	0	10.63	0	0	0	0	0	0	-39.16	-39.16
	Inverter Transformer	MV4-4 T	369033	4909199	2	0	0	56.1	56.1	1	4163.71	3.25	0	83.39	0	1.31	0	0	10.7	0	0	0	0	0	0	-39.34	-39.34
	Inverter Transformer	MV4-8 T	369262	4909001	2	0	0	56.1	56.1	1	4182.52	3.25	0	83.43	0	1.32	0	0	10.72	0	0	0	0	0	0	-39.41	-39.41
	Inverter Transformer	MV4-9 T	369284	4909001	2	0	0	56.1	56.1	1	4198.5	3.25	0	83.46	0	1.32	0	0	10.75	0	0	0	0	0	0	-39.47	-39.47
	Inverter Transformer	MV4-1 T	369017	4909397	2	0	0	56.1	56.1	1	4301.76	3.25	0	83.67	0	1.36	0	0	10.9	0	0	0	0	0	0	-39.87	-39.87
	Inverter Transformer	MV4-6 T	369249	4909192	2	0	0	56.1	56.1	1	4307.14	3.25	0	83.68	0	1.37	0	0	10.9	0	0	0	0	0	0	-39.89	-39.89
	Inverter Transformer	MV4-5 T	369283	4909199	2	0	0	56.1	56.1	1	4336.01	3.25	0	83.74	0	1.38	0	0	10.94	0	0	0	0	0	0	-40	-40
	Inverter Transformer	MV4-3 T	369234	4909397	2	0	0	56.1	56.1	1	4445.47	3.25	0	83.96	0	1.42	0	0	11.1	0	0	0	0	0	0	-40.42	-40.42
	Inverter Transformer	MV5-6 T	369987	4908507	2	0	0	56.1	56.1	1	4451.47	3.25	0	83.97	0	1.42	0	0	11.11	0	0	0	0	0	0	-40.44	-40.44
	Inverter Transformer	MV4-2 T	369267	4909397	2	0	0	56.1	56.1	1	4467.84	3.25	0	84	0	1.43	0	0	11.13	0	0	0	0	0	0	-40.5	-40.5
	Inverter Transformer	MV5-5 T	370021	4908690	2	0	0	56.1	56.1	1	4580.29	3.25	0	84.22	0	1.47	0	0	11.29	0	0	0	0	0	0	-40.92	-40.92
	Inverter Transformer	MV5-2 T	370011	4908853	2	0	0	56.1	56.1	1	4665.55	3.25	0	84.38	0	1.5	0	0	11.4	0	0	0	0	0	0	-41.23	-41.23
	Inverter Transformer	MV5-1 T	370015	4909142	2	0	0	56.1	56.1	1	4843.58	3.25	0	84.7	0	1.57	0	0	11.65	0	0	0	0	0	0	-41.86	-41.86
	Inverter Transformer	MV5-4 T	370330	4908707	2	0	0	56.1	56.1	1	4848.26	3.25	0	84.71	0	1.57	0	0	11.65	0	0	0	0	0	0	-41.88	-41.88
	Inverter Transformer	MV5-3 T	370237	4908851	2	0	0	56.1	56.1	1	4849.43	3.25	0	84.71	0	1.57	0	0	11.65	0	0	0	0	0	0	-41.88	-41.88
	Line Reactor	NGR	369421	4908787.5	5	0	0	45.4	45.4	1	4159.22	5.25	0	83.38	0	3.28	1.34	0.09	1.7	0	0	0	0	0	0	-44.35	-44.35
Limit. Valu	0	0																								
Level D/N:	29.6926	29.6926																								

Receiver: Existing Noise Receptor
ID: S-R24
X: 366054
Y: 4906161
Z: 4.5
Ground: 0

ISO	Description	ID	X	Y	Z	Ground	ReflOrd	LxT	LxN	L/A	Dist.	hm	Freq	Adiv	K0b	Agr	Abar	z	Aatm	Afol	Ahous	Cmet	CmetN	Dc	RL	LtotT	LtotN
	Inverter	MV2-3	365820	4906641	2	0	0	100.3	100.3	1	534.01	3.25	0	65.55	0	-0.53	0	0	8.78	0	0	0	0	0	0	26.51	26.51
	Inverter	MV2-4	365586	4906624	2	0	0	100.3	100.3	1	658.33	3.25	0	67.37	0	-0.44	0	0	9.53	0	0	0	0	0	0	23.85	23.85
	Inverter	MV2-1	365842	4906816	2	0	0	97.3	97.3	1	688.46	3.25	0	67.76	0	-0.42	0	0	9.68	0	0	0	0	0	0	20.29	20.29
	Sol_Luce Substation	S_Substation	369426	4908792	3.5	0	0	112.1	112.1	1	4276.98	5.25	0	83.62	0	0.68	3.04	0.26	7.73	0	0	0	0	0	0	17	17
	Inverter	MV1-4	364815	4905918	2	0	0	100.3	100.3	1	1262.61	3.25	0	73.03	0	-0.13	0	0	11.7	0	0	0	0	0	0	15.71	15.71
	Inverter	MV1-12	365038	4905386	2	0	0	100.3	100.3	1	1277.84	3.25	0	73.13	0	-0.12	0	0	11.74	0	0	0	0	0	0	15.56	15.56
	Inverter	MV1-2	364753	4906063	2	0	0	100.3	100.3	1	1304.69	3.25	0	73.31	0	-0.11	0	0	11.82	0	0	0	0	0	0	15.29	15.29
	Inverter	MV1-1	364715	4906166	2	0	0	100.3	100.3	1	1339.01	3.25	0	73.54	0	-0.1	0	0	11.91	0	0	0	0	0	0	14.96	14.96
	Inverter	MV1-8	364788	4905647	2	0	0	100.3	100.3	1	1366.37	3.25	0	73.71	0	-0.08	0	0	11.98	0	0	0	0	0	0	14.7	14.7
	Inverter	MV1-15	365315	4904994	2	0	0	100.3	100.3	1	1381.31	3.25	0	73.81	0	-0.08	0	0	12.02	0	0	0	0	0	0	14.56	14.56
	Inverter	MV1-5	364671	4905892	2	0	0	100.3	100.3	1	1408.92	3.25	0	73.98	0	-0.07	0	0	12.09	0	0	0	0	0	0	14.31	14.31
	Inverter	MV1-9	364561	4905646	2	0	0	100.3	100.3	1	1579.33	3.25	0	74.97	0	0	0	0	12.52	0	0	0	0	0	0	12.83	12.83
	Inverter	MV1-11	364655	4905414	2	0	0	100.3	100.3	1	1585.94	3.25	0	75.01	0	0	0	0	12.53	0	0	0	0	0	0	12.77	12.77
	Inverter	MV1-6	364477	4905835	2	0	0	100.3	100.3	1	1610.35	3.25	0	75.14	0	0.01	0	0	12.59	0	0	0	0	0	0	12.57	12.57
	Inverter	MV1-7	364925	4905782	2	0	0	97.3	97.3	1	1190.92	3.25	0	72.52	0	-0.16	0	0	11.5	0	0	0	0	0	0	13.45	13.45
	Inverter	MV1-10	365004	4905564	2	0	0	97.3	97.3	1	1207.86	3.25	0	72.64	0	-0.15	0	0	11.55	0	0	0	0	0	0	13.27	13.27
	Inverter	MV2-2	365977	4906654	2	0	0	89.1	89.1	1	498.98	3.25	0	64.96	0	0.53	0	0	5.14	0	0	0	0	0	0	18.43	18.43
	Inverter	MV1-14	365163	4905049	2	0	0	97.3	97.3	1	1424.93	3.25	0	74.08	0	-0.06	0	0	12.14	0	0	0	0	0	0	11.16	11.16
	Inverter	MV3-18	367752	4907412	2	0	0	100.3	100.3	1	2109.08	3.25	0	77.48	0	0.16	0	0	13.69	0	0	0	0	0	0	8.98	8.98
	Inverter	MV3-12	367668	4907594	2	0	0	100.3	100.3	1	2158.35	3.25	0	77.68	0	0.17	0	0	13.79	0	0	0	0	0	0	8.67	8.67
	Inverter	MV1-13	364731	4905241	2	0	0	97.3	97.3	1	1611.44	3.25	0	75.14	0	0.01	0	0	12.6	0	0	0	0	0	0	9.57	9.57
	Inverter	MV3-13	367963	4907577	2	0	0	100.3	100.3	1	2376.83	3.25	0	78.52	0	0.23	0	0	14.22	0	0	0	0	0	0	7.34	7.34
	Inverter	MV3-7	367945	4907754	2	0	0	100.3	100.3	1	2472.56	3.25	0	78.86	0	0.25	0	0	14.41	0	0	0	0	0	0	6.79	6.79
	Inverter	MV3-17	368178	4907472	2	0	0	100.3	100.3	1	2496.02	3.25	0	78.94	0	0.26	0	0	14.45	0	0	0	0	0	0	6.66	6.66
	Inverter	MV3-3	367939	4907927	2	0	0	100.3	100.3	1	2583.02	3.25	0	79.24	0	0.28	0	0	14.61	0	0	0	0	0	0	6.18	6.18
	Inverter	MV3-19	368357	4907347	2	0	0	100.3	100.3	1	2590.45	3.25	0	79.27	0	0.28	0	0	14.63	0	0	0	0	0	0	6.14	6.14
	Inverter	MV3-10	368167	4907669	2	0	0	100.3	100.3	1	2595.93	3.25	0	79.29	0	0.28	0	0	14.64	0	0	0	0	0	0	6.11	6.11
	Inverter	MV3-21	368478	4907206	2	0	0	100.3	100.3	1	2639.66	3.25	0	79.43	0	0.29	0	0	14.72	0	0	0	0	0	0	5.87	5.87
	Inverter	MV3-15	368357	4907477	2	0	0	100.3	100.3	1	2652.48	3.25	0	79.47	0	0.29	0	0	14.74	0	0	0	0	0	0	5.8	5.8
	Inverter	MV3-6	368162	4907834	2	0	0	100.3	100.3	1	2691.21	3.25	0	79.6	0	0.3	0	0	14.82	0	0	0	0	0	0	5.6	5.6
	Inverter	MV3-11	368346	4907662	2	0	0	100.3	100.3	1	2739.76	3.25	0	79.75	0	0.31	0	0	14.9	0	0	0	0	0	0	5.34	5.34
	Inverter	MV3-16	368514	4907475	2	0	0	100.3	100.3	1	2788.94	3.25	0	79.91	0	0.32	0	0	14.99	0	0	0	0	0	0	5.09	5.09
	Inverter	MV3-20	368689	4907317	2	0	0	100.3	100.3	1	2877.42	3.25	0	80.18	0	0.34	0	0	15.15	0	0	0	0	0	0	4.64	4.64
	Inverter	MV3-9	368512	4907703	2	0	0	100.3	100.3	1	2901.64	3.25	0	80.25	0	0.34	0	0	15.2	0	0	0	0	0	0	4.52	4.52
	Inverter	MV3-14	368684	4907498	2	0	0	100.3	100.3	1	2950.33	3.25	0	80.4	0	0.35	0	0	15.28	0	0	0	0	0	0	4.28	4.28
	Inverter	MV3-8	368680	4907712	2	0	0	100.3	100.3	1	3049.83	3.25	0	80.69	0	0.37	0	0	15.46	0	0	0	0	0	0	3.8	3.8

Inverter	MV4-7	369035	4909001	2	0	0	100.3	100.3	1	4117.28	3.25	0	83.29	0	0.54	0	0	17.23	0	0	0	0	0	0	-0.76	-0.76
Inverter	MV4-11	369264	4908855	2	0	0	100.3	100.3	1	4190.67	3.25	0	83.45	0	0.55	0	0	17.35	0	0	0	0	0	0	-1.04	-1.04
Inverter	MV6-2	370085	4907339	2	0	0	100.3	100.3	1	4199.6	3.25	0	83.46	0	0.55	0	0	17.36	0	0	0	0	0	0	-1.07	-1.07
Inverter	MV4-10	369312	4908858	2	0	0	100.3	100.3	1	4229.47	3.25	0	83.53	0	0.56	0	0	17.41	0	0	0	0	0	0	-1.18	-1.18
Inverter	MV4-4	369027	4909199	2	0	0	100.3	100.3	1	4250.67	3.25	0	83.57	0	0.56	0	0	17.44	0	0	0	0	0	0	-1.26	-1.26
Inverter	MV6-3	370207	4907140	2	0	0	100.3	100.3	1	4266.83	3.25	0	83.6	0	0.56	0	0	17.47	0	0	0	0	0	0	-1.32	-1.32
Inverter	MV4-8	369256	4909001	2	0	0	100.3	100.3	1	4280	3.25	0	83.63	0	0.56	0	0	17.49	0	0	0	0	0	0	-1.37	-1.37
Inverter	MV4-9	369289	4909001	2	0	0	100.3	100.3	1	4304.75	3.25	0	83.68	0	0.57	0	0	17.53	0	0	0	0	0	0	-1.46	-1.46
Inverter	MV4-1	369011	4909397	2	0	0	100.3	100.3	1	4383.55	3.25	0	83.84	0	0.58	0	0	17.65	0	0	0	0	0	0	-1.75	-1.75
Inverter	MV4-6	369243	4909192	2	0	0	100.3	100.3	1	4399.62	3.25	0	83.87	0	0.58	0	0	17.68	0	0	0	0	0	0	-1.81	-1.81
Inverter	MV4-5	369289	4909199	2	0	0	100.3	100.3	1	4437.87	3.25	0	83.94	0	0.58	0	0	17.73	0	0	0	0	0	0	-1.95	-1.95
Inverter	MV4-3	369229	4909397	2	0	0	100.3	100.3	1	4533.47	3.25	0	84.13	0	0.59	0	0	17.88	0	0	0	0	0	0	-2.29	-2.29
Inverter	MV4-2	369272	4909397	2	0	0	100.3	100.3	1	4563.69	3.25	0	84.19	0	0.6	0	0	17.93	0	0	0	0	0	0	-2.4	-2.4
Inverter	MV5-5	370015	4908690	2	0	0	100.3	100.3	1	4699.51	3.25	0	84.44	0	0.61	0	0	18.13	0	0	0	0	0	0	-2.87	-2.87
Inverter	MV5-2	370006	4908853	2	0	0	100.3	100.3	1	4781.75	3.25	0	84.59	0	0.62	0	0	18.26	0	0	0	0	0	0	-3.16	-3.16
Inverter	MV5-1	370020	4909142	2	0	0	100.3	100.3	1	4961.4	3.25	0	84.91	0	0.64	0	0	18.52	0	0	0	0	0	0	-3.76	-3.76
Inverter	MV5-3	370231	4908851	2	0	0	100.3	100.3	1	4968.24	3.25	0	84.92	0	0.64	0	0	18.53	0	0	0	0	0	0	-3.78	-3.78
Inverter	MV5-4	370324	4908707	2	0	0	100.3	100.3	1	4971.42	3.25	0	84.93	0	0.64	0	0	18.54	0	0	0	0	0	0	-3.8	-3.8
Inverter	MV1-3	364440	4906039	2	0	0	89.1	89.1	1	1618.61	3.25	0	75.18	0	0.82	0	0	7.41	0	0	0	0	0	0	5.65	5.65
Inverter	MV6-1	370235	4907364	2	0	0	97.3	97.3	1	4350.63	3.25	0	83.77	0	0.57	0	0	17.6	0	0	0	0	0	0	-4.63	-4.63
DSTATCOM - 10 MVAR #2	DSAT2	369403	4908757	2.5	0	0	96.6	96.6	1	4237.34	3.5	0	83.54	0	3.6	0	0	2.96	0	0	0	0	0	0	6.53	6.53
DSTATCOM - 10 MVAR #1	DSAT1	369437	4908757	2.5	0	0	96.6	96.6	1	4264.26	3.5	0	83.6	0	3.6	0	0	2.98	0	0	0	0	0	0	6.45	6.45
Gardiner Substation	G_Sub	366586.3	4903349.9	2.5	0	0	90.8	90.8	1	2861.05	4.25	0	80.13	0	1.1	3.29	0.35	5.75	0	0	0	0	0	0	0.52	0.52
SubstationTransformer	W_ST	369711.17	4906112.3	2.5	0	0	92	92	1	3657.5	4.25	0	82.26	0	1.26	2.73	0.29	6.9	0	0	0	0	0	0	-1.18	-1.18
Inverter	MV3-1	368156	4907976	2	0	0	89.1	89.1	1	2777.16	3.25	0	79.87	0	1.09	0	0	9.28	0	0	0	0	0	0	-1.18	-1.18
Inverter	MV3-22	368656	4907142	2	0	0	89.1	89.1	1	2780.79	3.25	0	79.88	0	1.09	0	0	9.28	0	0	0	0	0	0	-1.2	-1.2
Inverter	MV3-5	368340	4907843	2	0	0	89.1	89.1	1	2838.12	3.25	0	80.06	0	1.11	0	0	9.37	0	0	0	0	0	0	-1.48	-1.48
Inverter	MV3-4	368502	4907925	2	0	0	89.1	89.1	1	3017.35	3.25	0	80.59	0	1.15	0	0	9.64	0	0	0	0	0	0	-2.33	-2.33
Inverter	MV3-2	368671	4907928	2	0	0	89.1	89.1	1	3157.69	3.25	0	80.99	0	1.19	0	0	9.85	0	0	0	0	0	0	-2.97	-2.97
Westbrook Inverter Enclosur	W_INV2	369374	4906388	2	0	0	89.1	89.1	1	3327.75	3.25	0	81.44	0	1.23	0	0	10.11	0	0	0	0	0	0	-3.72	-3.72
Westbrook Inverter Enclosur	W_INV3	369508	4906164	2	0	0	89.1	89.1	1	3454	3.25	0	81.77	0	1.26	0	0	10.3	0	0	0	0	0	0	-4.26	-4.26
Inverters	G_Inv1	366526.4	4903225.8	2	0	0	87.7	87.7	1	2972.97	3.25	0	80.46	0	2.7	0	0	3.74	0	0	0	0	0	0	0.76	0.76
Inverters	G_Inv2	366676.9	4903239.1	2	0	0	87.7	87.7	1	2987.56	3.25	0	80.51	0	2.7	0	0	3.76	0	0	0	0	0	0	0.7	0.7
Westbrook Inverter Enclosur	W_INV4	369673	4906164	2	0	0	89.1	89.1	1	3619	3.25	0	82.17	0	1.3	0	0	10.54	0	0	0	0	0	0	-4.95	-4.95
Inverters	G_Inv3	366583.7	4903091.4	2	0	0	87.7	87.7	1	3114.97	3.25	0	80.87	0	2.71	0	0	3.9	0	0	0	0	0	0	0.18	0.18
Inverters	G_Inv4	366732.8	4903105	2	0	0	87.7	87.7	1	3130.48	3.25	0	80.91	0	2.71	0	0	3.92	0	0	0	0	0	0	0.12	0.12
Westbrook Inverter Enclosur	W_INV5	369719	4906574	2	0	0	89.1	89.1	1	3688.2	3.25	0	82.34	0	1.32	0	0	10.64	0	0	0	0	0	0	-5.23	-5.23
Westbrook Inverter Enclosur	W_INV7	369780	4906417	2	0	0	89.1	89.1	1	3734.78	3.25	0	82.45	0	1.33	0	0	10.7	0	0	0	0	0	0	-5.42	-5.42
Inverters	G_Inv5	366638.5	4902958.1	2	0	0	87.7	87.7	1	3255.8	3.25	0	81.25	0	2.72	0	0	4.06	0	0	0	0	0	0	-0.38	-0.38
Westbrook Inverter Enclosur	W_INV6	369875	4906578	2	0	0	89.1	89.1	1	3843.69	3.25	0	82.69	0	1.35	0	0	10.86	0	0	0	0	0	0	-5.85	-5.85
Inverters	G_Inv6	366788.5	4902972	2	0	0	87.7	87.7	1	3272.49	3.25	0	81.3	0	2.73	0	0	4.08	0	0	0	0	0	0	-0.44	-0.44
Inverter	MV4-13	369051	4908605	2	0	0	89.1	89.1	1	3867.19	3.25	0	82.75	0	1.36	0	0	10.9	0	0	0	0	0	0	-5.94	-5.94
Fixed Reactor Bank 1	FRB1	369378	4908755	6	0	0	89.8	89.8	1	4216.37	5.25	0	83.5	0	-0.69	0	0	7.65	0	0	0	0	0	0	-0.68	-0.68
Inverter	MV4-15	369176	4908481	2	0	0	89.1	89.1	1	3889.64	3.25	0	82.8	0	1.37	0	0	10.93	0	0	0	0	0	0	-6.03	-6.03
Inverter	MV4-14	369176	4908507	2	0	0	89.1	89.1	1	3905.2	3.25	0	82.83	0	1.37	0	0	10.95	0	0	0	0	0	0	-6.09	-6.09
Fixed Reactor Bank 2	FRB2	369464	4908755	6	0	0	89.8	89.8	1	4284.5	5.25	0	83.64	0	-0.68	0	0	7.74	0	0	0	0	0	0	-0.92	-0.92
Inverter	MV4-12	369043	4908803	2	0	0	89.1	89.1	1	3989.27	3.25	0	83.02	0	1.39	0	0	11.07	0	0	0	0	0	0	-6.42	-6.42
Inverters	G_Inv7	366694.6	4902824.7	2	0	0	87.7	87.7	1	3397.24	3.25	0	81.62	0	2.74	0	0	4.22	0	0	0	0	0	0	-0.92	-0.92
Inverters	G_Inv8	366844.5	4902838.5	2	0	0	87.7	87.7	1	3415.25	3.25	0	81.67	0	2.74	0	0	4.24	0	0	0	0	0	0	-0.98	-0.98
Inverters	G_Inv9	366750.9	4902691.8	2	0	0	87.7	87.7	1	3538.51	3.25	0	81.98	0	2.75	0	0	4.37	0	0	0	0	0	0	-1.44	-1.44
Inverters	G_Inv10	366900.7	4902704.8	2	0	0	87.7	87.7	1	3558.4	3.25	0	82.03	0	2.75	0	0	4.39	0	0	0	0	0	0	-1.51	-1.51
Inverter	MV5-6	369982	4908507	2	0	0	89.1	89.1	1	4575.25	3.25	0	84.21	0	1.53	0	0	11.89	0	0	0	0	0	0	-8.57	-8.57
Westbrook Inverter Enclosur	W_INV1	369409	4906578	2	0	0	86.1	86.1	1	3380.82	3.25	0	81.58	0	1.24	0	0	10.19	0	0	0	0	0	0	-6.95	-6.95
Inverter	MV6-4	370250	4906966	2	0	0	86.1	86.1	1	4272.52	3.25	0	83.61	0	1.46	0	0	11.47	0	0	0	0	0	0	-10.48	-10.48
Inverter Transformer	MV2-1 T	365836	4906816	2	0	0	69.4	69.4	1	690.33	3.25	0	67.78	0	1.35	0	0	3.33	0	0	0	0	0	0	-3.11	-3.11
Inverter Transformer	MV1-7 T	364919	4905782	2	0	0	69.4	69.4	1	1196.61	3.25	0	72.56	0	1.82	0	0	4.07	0	0	0	0	0	0	-9.1	-9.1
Inverter Transformer	MV1-10 T	365010	4905564	2	0	0	69.4	69.4	1	1202.64	3.25	0	72.6	0	1.82	0	0	4.08	0	0	0	0	0	0	-9.15	-9.15
Westbrook Inverter Transfor	W_INVTR1	369403	4906578	2	0	0	78.2	78.2	1	3374.86	3.25	0	81.57	0	-2.81	0	0	1.81	0	0	0	0	0	0	-2.32	-2.32
Westbrook Inverter Transfor	W_INVTR2	369368	4906388	2	0	0	77.3	77.3	1	3321.77	3.25	0	81.43	0	-2.8	0	0	1.79	0	0	0	0	0	0	-3.08	-3.08
Westbrook Inverter Transfor	W_INVTR3	369514	4906164	2	0	0	77.3	77.3	1	3460	3.25	0	81.78	0	-2.83	0	0	1.85	0	0	0	0	0	0	-3.45	-3.45
Inverter Transformer	MV1-14 T	365157	4905049	2	0	0	69.4	69.4	1	1428.69	3.25	0	74.1	0	1.94	0	0	4.35	0	0	0	0	0	0	-11.04	-11.04
Westbrook Inverter Transfor	W_INVTR4	369679	4906164	2	0	0	77.3	77.3	1	3625	3.25	0	82.19	0	-2.87	0	0	1.91	0	0	0	0	0	0	-3.88	-3.88
Westbrook Inverter Transfor	W_INVTR5	369725	4906574	2	0	0	77.3	77.3	1	3694.16	3.25	0	82.35	0	-2.89	0	0	1.94	0	0	0	0	0	0	-4.06	-4.06
Westbrook Inverter Transfor	W_INVTR7	369786	4906417	2	0	0	77.3	77.3	1	3740.77	3.25	0	82.46	0	-2.9	0	0	1.96	0	0	0	0	0	0	-4.17	-4.17
Westbrook Inverter Transfor	W_INVTR6	369881	4906578	2	0	0	77.3	77.3	1	3849.65	3.25	0	82.71	0	-2.93	0	0	2	0	0	0	0	0	0	-4.44	-4.44
Inverter Transformer	MV1-13 T	364725	4905241	2	0	0	69.4	69.4	1	1616.37	3.25	0	75.17	0	2.02	0	0	4.56	0	0	0	0	0	0	-12.41	-12.41
Inverter Transformer	MV2-2 T	365982	4906654	2	0	0	56.1	56.1	1	498.24	3.25	0	64.95	0	-0.12	0	0	3.55	0	0	0	0	0	0	-12.32	-12.32
Inverter Transformer	MV2-3 T	365814	4906641	2	0	0	56.1	56.1	1	536.66	3.25	0	65.59	0	-0.11	0	0	3.67	0	0	0	0	0	0	-13.09	-13.09
Inverter Transformer	MV2-4 T	365590	4906628	2	0	0	56.1	56.1	1	658.32	3.25	0	67.37	0	-0.09	0	0	4.02	0	0	0	0	0	0	-15.24	-15.24
Inverter Transformer	MV6-4 T	370244	4906966	2	0	0	69.4	69.4	1	4266.63	3.25	0	83.6	0	2.85	0	0	6.87	0	0	0	0	0	0	-23.97	-23.97
Inverter Transformer	MV6-1 T	370230	4907364	2	0	0	69.4	69.4	1	4345.82	3.25	0	83.76	0	2.87	0	0	6.93	0	0	0	0	0	0	-24.21	-24.21
Inverter Transformer	MV1-4 T	364821	4905918	2	0	0	56.1	56.1	1	1256.72	3.25	0	72.98	0	0.1	0	0	5.48	0	0	0	0	0	0	-22.51	-22.51
Inverter Transformer	MV1-12 T	365044	4905386	2	0	0	56.1	56.1	1	1273.08	3.25	0	73.1	0	0.11	0	0	5.52	0	0	0	0	0	0	-22.67	-22.67
Inverter Transformer	MV1-2 T	364759	4906063	2	0	0	56.1	56.1	1	1298.71	3.25	0	73.27	0	0.12	0	0	5.58	0	0	0	0	0	0	-22.91	-22.91

	Inverter Transformer	MV1-1 T	364721	4906166	2	0	0	56.1	56.1	1	1333.01	3.25	0	73.5	0	0.13	0	0	5.65	0	0	0	0	0	0	-23.23	-23.23
	Inverter Transformer	MV1-8 T	364782	4905647	2	0	0	56.1	56.1	1	1371.93	3.25	0	73.75	0	0.15	0	0	5.74	0	0	0	0	0	0	-23.58	-23.58
	Inverter Transformer	MV1-15 T	365309	4904994	2	0	0	56.1	56.1	1	1384.53	3.25	0	73.83	0	0.15	0	0	5.77	0	0	0	0	0	0	-23.69	-23.69
	Inverter Transformer	MV1-5 T	364676	4905892	2	0	0	56.1	56.1	1	1404.01	3.25	0	73.95	0	0.16	0	0	5.81	0	0	0	0	0	0	-23.86	-23.86
	Inverter Transformer	MV1-9 T	364555	4905646	2	0	0	56.1	56.1	1	1585	3.25	0	75	0	0.23	0	0	6.2	0	0	0	0	0	0	-25.37	-25.37
	Inverter Transformer	MV1-11 T	364649	4905414	2	0	0	56.1	56.1	1	1591.24	3.25	0	75.03	0	0.24	0	0	6.21	0	0	0	0	0	0	-25.42	-25.42
	Inverter Transformer	MV1-6 T	364482	4905835	2	0	0	56.1	56.1	1	1605.45	3.25	0	75.11	0	0.24	0	0	6.24	0	0	0	0	0	0	-25.54	-25.54
	Inverter Transformer	MV1-3 T	364435	4906039	2	0	0	56.1	56.1	1	1623.59	3.25	0	75.21	0	0.25	0	0	6.28	0	0	0	0	0	0	-25.68	-25.68
	Inverter Transformer	MV3-18 T	367757	4907412	2	0	0	56.1	56.1	1	2113.11	3.25	0	77.5	0	0.45	0	0	7.26	0	0	0	0	0	0	-29.16	-29.16
	Inverter Transformer	MV3-12 T	367674	4907594	2	0	0	56.1	56.1	1	2162.84	3.25	0	77.7	0	0.47	0	0	7.36	0	0	0	0	0	0	-29.47	-29.47
	Inverter Transformer	MV3-13 T	367958	4907577	2	0	0	56.1	56.1	1	2372.82	3.25	0	78.51	0	0.56	0	0	7.76	0	0	0	0	0	0	-30.76	-30.76
	Inverter Transformer	MV3-7 T	367951	4907754	2	0	0	56.1	56.1	1	2477.15	3.25	0	78.88	0	0.61	0	0	7.95	0	0	0	0	0	0	-31.38	-31.38
	Inverter Transformer	MV3-17 T	368183	4907472	2	0	0	56.1	56.1	1	2500.27	3.25	0	78.96	0	0.62	0	0	7.99	0	0	0	0	0	0	-31.51	-31.51
	Inverter Transformer	MV3-19 T	368352	4907347	2	0	0	56.1	56.1	1	2586	3.25	0	79.25	0	0.65	0	0	8.15	0	0	0	0	0	0	-31.99	-31.99
	Inverter Transformer	MV3-3 T	367944	4907927	2	0	0	56.1	56.1	1	2586.67	3.25	0	79.25	0	0.65	0	0	8.15	0	0	0	0	0	0	-32	-32
	Inverter Transformer	MV3-10 T	368162	4907669	2	0	0	56.1	56.1	1	2591.86	3.25	0	79.27	0	0.66	0	0	8.16	0	0	0	0	0	0	-32.03	-32.03
	Inverter Transformer	MV3-21 T	368484	4907206	2	0	0	56.1	56.1	1	2645.17	3.25	0	79.45	0	0.68	0	0	8.25	0	0	0	0	0	0	-32.32	-32.32
	Inverter Transformer	MV3-15 T	368351	4907477	2	0	0	56.1	56.1	1	2647.28	3.25	0	79.46	0	0.68	0	0	8.25	0	0	0	0	0	0	-32.33	-32.33
	Inverter Transformer	MV3-6 T	368156	4907834	2	0	0	56.1	56.1	1	2686.51	3.25	0	79.58	0	0.7	0	0	8.32	0	0	0	0	0	0	-32.55	-32.55
	Inverter Transformer	MV3-11 T	368340	4907662	2	0	0	56.1	56.1	1	2734.74	3.25	0	79.74	0	0.72	0	0	8.41	0	0	0	0	0	0	-32.81	-32.81
	Inverter Transformer	MV3-1 T	368150	4907976	2	0	0	56.1	56.1	1	2772.62	3.25	0	79.86	0	0.73	0	0	8.48	0	0	0	0	0	0	-33.01	-33.01
	Inverter Transformer	MV3-16 T	368509	4907475	2	0	0	56.1	56.1	1	2784.53	3.25	0	79.9	0	0.74	0	0	8.5	0	0	0	0	0	0	-33.07	-33.07
	Inverter Transformer	MV3-22 T	368661	4907142	2	0	0	56.1	56.1	1	2785.47	3.25	0	79.9	0	0.74	0	0	8.5	0	0	0	0	0	0	-33.08	-33.08
	Inverter Transformer	MV3-5 T	368335	4907843	2	0	0	56.1	56.1	1	2834.09	3.25	0	80.05	0	0.76	0	0	8.58	0	0	0	0	0	0	-33.33	-33.33
	Inverter Transformer	MV3-20 T	368683	4907317	2	0	0	56.1	56.1	1	2871.93	3.25	0	80.16	0	0.78	0	0	8.65	0	0	0	0	0	0	-33.53	-33.53
	Inverter Transformer	MV3-9 T	368517	4907703	2	0	0	56.1	56.1	1	2905.88	3.25	0	80.27	0	0.79	0	0	8.71	0	0	0	0	0	0	-33.7	-33.7
	Inverter Transformer	MV3-14 T	368678	4907498	2	0	0	56.1	56.1	1	2944.99	3.25	0	80.38	0	0.81	0	0	8.77	0	0	0	0	0	0	-33.9	-33.9
	Inverter Transformer	MV3-4 T	368507	4907925	2	0	0	56.1	56.1	1	3021.41	3.25	0	80.6	0	0.84	0	0	8.9	0	0	0	0	0	0	-34.29	-34.29
	Inverter Transformer	MV3-8 T	368685	4907712	2	0	0	56.1	56.1	1	3054.14	3.25	0	80.7	0	0.85	0	0	8.96	0	0	0	0	0	0	-34.45	-34.45
	Inverter Transformer	MV3-2 T	368677	4907928	2	0	0	56.1	56.1	1	3162.66	3.25	0	81	0	0.9	0	0	9.14	0	0	0	0	0	0	-34.98	-34.98
	Inverter Transformer	MV4-13 T	369057	4908605	2	0	0	56.1	56.1	1	3871.84	3.25	0	82.76	0	1.19	0	0	10.26	0	0	0	0	0	0	-38.16	-38.16
	Inverter Transformer	MV4-15 T	369170	4908481	2	0	0	56.1	56.1	1	3884.82	3.25	0	82.79	0	1.2	0	0	10.28	0	0	0	0	0	0	-38.21	-38.21
	Inverter Transformer	MV4-14 T	369182	4908507	2	0	0	56.1	56.1	1	3910	3.25	0	82.84	0	1.21	0	0	10.32	0	0	0	0	0	0	-38.31	-38.31
	Inverter Transformer	MV4-12 T	369049	4908803	2	0	0	56.1	56.1	1	3993.77	3.25	0	83.03	0	1.24	0	0	10.45	0	0	0	0	0	0	-38.66	-38.66
	Inverter Transformer	MV4-7 T	369040	4909001	2	0	0	56.1	56.1	1	4120.9	3.25	0	83.3	0	1.29	0	0	10.63	0	0	0	0	0	0	-39.17	-39.17
	Inverter Transformer	MV4-11 T	369269	4908855	2	0	0	56.1	56.1	1	4194.5	3.25	0	83.45	0	1.32	0	0	10.74	0	0	0	0	0	0	-39.46	-39.46
	Inverter Transformer	MV6-2 T	370091	4907339	2	0	0	56.1	56.1	1	4205.36	3.25	0	83.48	0	1.33	0	0	10.76	0	0	0	0	0	0	-39.5	-39.5
	Inverter Transformer	MV4-10 T	369307	4908858	2	0	0	56.1	56.1	1	4225.62	3.25	0	83.52	0	1.33	0	0	10.79	0	0	0	0	0	0	-39.58	-39.58
	Inverter Transformer	MV4-4 T	369033	4909199	2	0	0	56.1	56.1	1	4254.87	3.25	0	83.58	0	1.34	0	0	10.83	0	0	0	0	0	0	-39.69	-39.69
	Inverter Transformer	MV6-3 T	370202	4907140	2	0	0	56.1	56.1	1	4261.97	3.25	0	83.59	0	1.35	0	0	10.84	0	0	0	0	0	0	-39.72	-39.72
	Inverter Transformer	MV4-8 T	369262	4909001	2	0	0	56.1	56.1	1	4284.49	3.25	0	83.64	0	1.36	0	0	10.87	0	0	0	0	0	0	-39.81	-39.81
	Inverter Transformer	MV4-9 T	369284	4909001	2	0	0	56.1	56.1	1	4300.99	3.25	0	83.67	0	1.36	0	0	10.89	0	0	0	0	0	0	-39.87	-39.87
	Inverter Transformer	MV4-1 T	369017	4909397	2	0	0	56.1	56.1	1	4387.6	3.25	0	83.84	0	1.4	0	0	11.02	0	0	0	0	0	0	-40.2	-40.2
	Inverter Transformer	MV4-6 T	369249	4909192	2	0	0	56.1	56.1	1	4403.97	3.25	0	83.88	0	1.4	0	0	11.04	0	0	0	0	0	0	-40.26	-40.26
	Inverter Transformer	MV4-5 T	369283	4909199	2	0	0	56.1	56.1	1	4433.5	3.25	0	83.93	0	1.41	0	0	11.08	0	0	0	0	0	0	-40.37	-40.37
	Inverter Transformer	MV4-3 T	369234	4909397	2	0	0	56.1	56.1	1	4536.97	3.25	0	84.14	0	1.45	0	0	11.23	0	0	0	0	0	0	-40.76	-40.76
	Inverter Transformer	MV4-2 T	369267	4909397	2	0	0	56.1	56.1	1	4560.16	3.25	0	84.18	0	1.46	0	0	11.26	0	0	0	0	0	0	-40.84	-40.84
	Inverter Transformer	MV5-6 T	369987	4908507	2	0	0	56.1	56.1	1	4579.54	3.25	0	84.22	0	1.47	0	0	11.29	0	0	0	0	0	0	-40.91	-40.91
	Inverter Transformer	MV5-5 T	370021	4908690	2	0	0	56.1	56.1	1	4704.57	3.25	0	84.45	0	1.52	0	0	11.46	0	0	0	0	0	0	-41.37	-41.37
	Inverter Transformer	MV5-2 T	370011	4908853	2	0	0	56.1	56.1	1	4785.89	3.25	0	84.6	0	1.55	0	0	11.57	0	0	0	0	0	0	-41.66	-41.66
	Inverter Transformer	MV5-1 T	370015	4909142	2	0	0	56.1	56.1	1	4957.41	3.25	0	84.91	0	1.61	0	0	11.8	0	0	0	0	0	0	-42.25	-42.25
	Inverter Transformer	MV5-3 T	370237	4908851	2	0	0	56.1	56.1	1	4973.29	3.25	0	84.93	0	1.62	0	0	11.82	0	0	0	0	0	0	-42.31	-42.31
	Inverter Transformer	MV5-4 T	370330	4908707	2	0	0	56.1	56.1	1	4976.57	3.25	0	84.94	0	1.62	0	0	11.82	0	0	0	0	0	0	-42.32	-42.32
	Line Reactor	NGR	369421	4908787.5	5	0	0	45.4	45.4	1	4270.27	5.25	0	83.61	0	3.28	1.34	0.09	1.75	0	0	0	0	0	0	-44.62	-44.62
Limit. Valu	0	0																								
Level D/N:	31.4048	31.4048																								

Receiver: Existing Noise Receptor
ID: S-R25*
X: 365931
Y: 4906080
Z: 4.5
Ground: 0

ISO	Description	ID	X	Y	Z	Ground	ReflOrd	LxT	LxN	L/A	Dist.	hm	Freq	Adiv	K0b	Agr	Abar	z	Aatm	Afol	Ahous	Cmet	CmetN	Dc	RL	LtotT	LtotN
	Inverter	MV2-3	365820	4906641	2	0	0	100.3	100.3	1	571.88	3.25	0	66.15	0	-0.5	0	0	9.03	0	0	0	0	0	0	25.63	25.63
	Inverter	MV2-4	365586	4906624	2	0	0	100.3	100.3	1	644.18	3.25	0	67.18	0	-0.45	0	0	9.45	0	0	0	0	0	0	24.13	24.13
	Inverter	MV2-1	365842	4906816	2	0	0	97.3	97.3	1	741.37	3.25	0	68.4	0	-0.39	0	0	9.93	0	0	0	0	0	0	19.37	19.37
	Inverter	MV1-4	364815	4905918	2	0	0	100.3	100.3	1	1127.7	3.25	0	72.04	0	-0.19	0	0	11.31	0	0	0	0	0	0	17.14	17.14
	Inverter	MV1-12	365038	4905386	2	0	0	100.3	100.3	1	1130.97	3.25	0	72.07	0	-0.18	0	0	11.32	0	0	0	0	0	0	17.1	17.1
	Sol_Luce Substation	S_Substation	369426	4908792	3.5	0	0	112.1	112.1	1	4423.8	5.25	0	83.92	0	0.73	3	0.26	7.91	0	0	0	0	0	0	16.51	16.51
	Inverter	MV1-2	364753	4906063	2	0	0	100.3	100.3	1	1178.13	3.25	0	72.42	0	-0.16	0	0	11.46	0	0	0	0	0	0	16.59	16.59
	Inverter	MV1-1	364715	4906166	2	0	0	100.3	100.3	1	1219.04	3.25	0	72.72	0	-0.15	0	0	11.58	0	0	0	0	0	0	16.16	16.16
	Inverter	MV1-8	364788	4905647	2	0	0	100.3	100.3	1	1222.27	3.25	0	72.74	0	-0.14	0	0	11.59	0	0	0	0	0	0	16.12	16.12

Inverter	MV1-15	365315	4904994	2	0	0	100.3	100.3	1	1248.54	3.25	0	72.93	0	-0.13	0	0	11.66	0	0	0	0	0	0	15.85	15.85
Inverter	MV1-5	364671	4905892	2	0	0	100.3	100.3	1	1273.95	3.25	0	73.1	0	-0.12	0	0	11.73	0	0	0	0	0	0	15.6	15.6
Inverter	MV1-9	364561	4905646	2	0	0	100.3	100.3	1	1437.1	3.25	0	74.15	0	-0.06	0	0	12.17	0	0	0	0	0	0	14.05	14.05
Inverter	MV1-11	364655	4905414	2	0	0	100.3	100.3	1	1439.35	3.25	0	74.16	0	-0.06	0	0	12.17	0	0	0	0	0	0	14.03	14.03
Inverter	MV1-6	364477	4905835	2	0	0	100.3	100.3	1	1474.5	3.25	0	74.37	0	-0.04	0	0	12.26	0	0	0	0	0	0	13.72	13.72
Inverter	MV1-7	364925	4905782	2	0	0	97.3	97.3	1	1049.21	3.25	0	71.42	0	-0.22	0	0	11.07	0	0	0	0	0	0	15.05	15.05
Inverter	MV1-10	365004	4905564	2	0	0	97.3	97.3	1	1060.94	3.25	0	71.51	0	-0.22	0	0	11.11	0	0	0	0	0	0	14.91	14.91
Inverter	MV1-14	365163	4905049	2	0	0	97.3	97.3	1	1285.61	3.25	0	73.18	0	-0.12	0	0	11.77	0	0	0	0	0	0	12.48	12.48
Inverter	MV1-13	364731	4905241	2	0	0	97.3	97.3	1	1464.22	3.25	0	74.31	0	-0.05	0	0	12.24	0	0	0	0	0	0	10.81	10.81
Inverter	MV2-2	365977	4906654	2	0	0	89.1	89.1	1	575.85	3.25	0	66.21	0	0.57	0	0	5.38	0	0	0	0	0	0	16.9	16.9
Inverter	MV3-18	367752	4907412	2	0	0	100.3	100.3	1	2256.16	3.25	0	78.07	0	0.2	0	0	13.99	0	0	0	0	0	0	8.06	8.06
Inverter	MV3-12	367668	4907594	2	0	0	100.3	100.3	1	2304.21	3.25	0	78.25	0	0.21	0	0	14.08	0	0	0	0	0	0	7.77	7.77
Inverter	MV3-13	367963	4907577	2	0	0	100.3	100.3	1	2523.89	3.25	0	79.04	0	0.26	0	0	14.5	0	0	0	0	0	0	6.5	6.5
Inverter	MV3-7	367945	4907754	2	0	0	100.3	100.3	1	2618.87	3.25	0	79.36	0	0.28	0	0	14.68	0	0	0	0	0	0	5.98	5.98
Inverter	MV3-17	368178	4907472	2	0	0	100.3	100.3	1	2643.23	3.25	0	79.44	0	0.29	0	0	14.73	0	0	0	0	0	0	5.85	5.85
Inverter	MV3-3	367939	4907927	2	0	0	100.3	100.3	1	2728.27	3.25	0	79.72	0	0.31	0	0	14.88	0	0	0	0	0	0	5.4	5.4
Inverter	MV3-19	368357	4907347	2	0	0	100.3	100.3	1	2736.93	3.25	0	79.75	0	0.31	0	0	14.9	0	0	0	0	0	0	5.36	5.36
Inverter	MV3-10	368167	4907669	2	0	0	100.3	100.3	1	2743.1	3.25	0	79.76	0	0.31	0	0	14.91	0	0	0	0	0	0	5.33	5.33
Inverter	MV3-21	368478	4907206	2	0	0	100.3	100.3	1	2784.8	3.25	0	79.9	0	0.32	0	0	14.99	0	0	0	0	0	0	5.11	5.11
Inverter	MV3-15	368357	4907477	2	0	0	100.3	100.3	1	2799.48	3.25	0	79.94	0	0.32	0	0	15.01	0	0	0	0	0	0	5.04	5.04
Inverter	MV3-6	368162	4907834	2	0	0	100.3	100.3	1	2837.94	3.25	0	80.06	0	0.33	0	0	15.08	0	0	0	0	0	0	4.84	4.84
Inverter	MV3-11	368346	4907662	2	0	0	100.3	100.3	1	2887.03	3.25	0	80.21	0	0.34	0	0	15.17	0	0	0	0	0	0	4.59	4.59
Inverter	MV3-16	368514	4907475	2	0	0	100.3	100.3	1	2935.63	3.25	0	80.35	0	0.35	0	0	15.26	0	0	0	0	0	0	4.35	4.35
Inverter	MV3-20	368689	4907317	2	0	0	100.3	100.3	1	3022.7	3.25	0	80.61	0	0.37	0	0	15.41	0	0	0	0	0	0	3.93	3.93
Inverter	MV3-9	368512	4907703	2	0	0	100.3	100.3	1	3048.88	3.25	0	80.68	0	0.37	0	0	15.46	0	0	0	0	0	0	3.8	3.8
Inverter	MV3-14	368684	4907498	2	0	0	100.3	100.3	1	3096.73	3.25	0	80.82	0	0.38	0	0	15.54	0	0	0	0	0	0	3.57	3.57
Inverter	MV3-8	368680	4907712	2	0	0	100.3	100.3	1	3196.94	3.25	0	81.09	0	0.4	0	0	15.72	0	0	0	0	0	0	3.1	3.1
Inverter	MV4-7	369035	4909001	2	0	0	100.3	100.3	1	4262.28	3.25	0	83.59	0	0.56	0	0	17.46	0	0	0	0	0	0	-1.31	-1.31
Inverter	MV4-11	369264	4908855	2	0	0	100.3	100.3	1	4336.99	3.25	0	83.74	0	0.57	0	0	17.58	0	0	0	0	0	0	-1.58	-1.58
Inverter	MV6-2	370085	4907339	2	0	0	100.3	100.3	1	4340.6	3.25	0	83.75	0	0.57	0	0	17.58	0	0	0	0	0	0	-1.6	-1.6
Inverter	MV4-10	369312	4908858	2	0	0	100.3	100.3	1	4375.89	3.25	0	83.82	0	0.58	0	0	17.64	0	0	0	0	0	0	-1.72	-1.72
Inverter	MV4-4	369027	4909199	2	0	0	100.3	100.3	1	4394.7	3.25	0	83.86	0	0.58	0	0	17.67	0	0	0	0	0	0	-1.79	-1.79
Inverter	MV6-3	370207	4907140	2	0	0	100.3	100.3	1	4405.43	3.25	0	83.88	0	0.58	0	0	17.68	0	0	0	0	0	0	-1.83	-1.83
Inverter	MV4-8	369256	4909001	2	0	0	100.3	100.3	1	4425.82	3.25	0	83.92	0	0.58	0	0	17.72	0	0	0	0	0	0	-1.91	-1.91
Inverter	MV4-9	369289	4909001	2	0	0	100.3	100.3	1	4450.66	3.25	0	83.97	0	0.59	0	0	17.75	0	0	0	0	0	0	-2	-2
Inverter	MV4-1	369011	4909397	2	0	0	100.3	100.3	1	4526.47	3.25	0	84.12	0	0.59	0	0	17.87	0	0	0	0	0	0	-2.27	-2.27
Inverter	MV4-6	369243	4909192	2	0	0	100.3	100.3	1	4544.66	3.25	0	84.15	0	0.6	0	0	17.9	0	0	0	0	0	0	-2.33	-2.33
Inverter	MV4-5	369289	4909199	2	0	0	100.3	100.3	1	4583.05	3.25	0	84.22	0	0.6	0	0	17.96	0	0	0	0	0	0	-2.47	-2.47
Inverter	MV4-3	369229	4909397	2	0	0	100.3	100.3	1	4677.53	3.25	0	84.4	0	0.61	0	0	18.1	0	0	0	0	0	0	-2.8	-2.8
Inverter	MV4-2	369272	4909397	2	0	0	100.3	100.3	1	4707.95	3.25	0	84.46	0	0.61	0	0	18.15	0	0	0	0	0	0	-2.9	-2.9
Inverter	MV5-5	370015	4908690	2	0	0	100.3	100.3	1	4846.77	3.25	0	84.71	0	0.63	0	0	18.35	0	0	0	0	0	0	-3.38	-3.38
Inverter	MV5-2	370006	4908853	2	0	0	100.3	100.3	1	4929.01	3.25	0	84.86	0	0.64	0	0	18.48	0	0	0	0	0	0	-3.65	-3.65
Inverter	MV5-1	370020	4909142	2	0	0	100.3	100.3	1	5108.4	3.25	0	85.17	0	0.65	0	0	18.74	0	0	0	0	0	0	-4.24	-4.24
Inverter	MV5-3	370231	4908851	2	0	0	100.3	100.3	1	5115.51	3.25	0	85.18	0	0.65	0	0	18.75	0	0	0	0	0	0	-4.27	-4.27
Inverter	MV5-4	370324	4908707	2	0	0	100.3	100.3	1	5118.55	3.25	0	85.18	0	0.65	0	0	18.75	0	0	0	0	0	0	-4.28	-4.28
Inverter	MV1-3	364440	4906039	2	0	0	89.1	89.1	1	1491.57	3.25	0	74.47	0	0.79	0	0	7.19	0	0	0	0	0	0	6.6	6.6
Inverter	MV6-1	370235	4907364	2	0	0	97.3	97.3	1	4491.45	3.25	0	84.05	0	0.59	0	0	17.82	0	0	0	0	0	0	-5.14	-5.14
DSTATCOM - 10 MVAR #2	DSAT2	369403	4908757	2.5	0	0	96.6	96.6	1	4384.19	3.5	0	83.84	0	3.62	0	0	3.04	0	0	0	0	0	0	6.14	6.14
DSTATCOM - 10 MVAR #1	DSAT1	369437	4908757	2.5	0	0	96.6	96.6	1	4411.16	3.5	0	83.89	0	3.62	0	0	3.05	0	0	0	0	0	0	6.07	6.07
Gardiner Substation	G_Sub	366586.3	4903349.9	2.5	0	0	90.8	90.8	1	2807.64	4.25	0	79.97	0	1.08	3.29	0.34	5.67	0	0	0	0	0	0	0.78	0.78
SubstationTransformer	W_ST	369711.17	4906112.3	2.5	0	0	92	92	1	3780.31	4.25	0	82.55	0	1.3	2.69	0.29	7.07	0	0	0	0	0	0	-1.63	-1.63
Inverter	MV3-1	368156	4907976	2	0	0	89.1	89.1	1	2923.26	3.25	0	80.32	0	1.13	0	0	9.5	0	0	0	0	0	0	-1.89	-1.89
Inverter	MV3-22	368656	4907142	2	0	0	89.1	89.1	1	2924.63	3.25	0	80.32	0	1.13	0	0	9.5	0	0	0	0	0	0	-1.89	-1.89
Inverter	MV3-5	368340	4907843	2	0	0	89.1	89.1	1	2985.21	3.25	0	80.5	0	1.14	0	0	9.59	0	0	0	0	0	0	-2.18	-2.18
Inverter	MV3-4	368502	4907925	2	0	0	89.1	89.1	1	3164.5	3.25	0	81.01	0	1.19	0	0	9.87	0	0	0	0	0	0	-3	-3
Inverter	MV3-2	368671	4907928	2	0	0	89.1	89.1	1	3304.95	3.25	0	81.38	0	1.22	0	0	10.07	0	0	0	0	0	0	-3.62	-3.62
Inverters	G_Inv1	366526.4	4903225.8	2	0	0	87.7	87.7	1	2915.64	3.25	0	80.29	0	2.69	0	0	3.68	0	0	0	0	0	0	1	1
Inverters	G_Inv2	366676.9	4903239.1	2	0	0	87.7	87.7	1	2937.19	3.25	0	80.36	0	2.69	0	0	3.7	0	0	0	0	0	0	0.91	0.91
Westbrook Inverter Enclosur	W_INV2	369374	4906388	2	0	0	89.1	89.1	1	3456.75	3.25	0	81.77	0	1.26	0	0	10.3	0	0	0	0	0	0	-4.27	-4.27
Westbrook Inverter Enclosur	W_INV3	369508	4906164	2	0	0	89.1	89.1	1	3577.99	3.25	0	82.07	0	1.29	0	0	10.48	0	0	0	0	0	0	-4.78	-4.78
Inverters	G_Inv3	366583.7	4903091.4	2	0	0	87.7	87.7	1	3059.04	3.25	0	80.71	0	2.7	0	0	3.84	0	0	0	0	0	0	0.4	0.4
Inverters	G_Inv4	366732.8	4903105	2	0	0	87.7	87.7	1	3081.15	3.25	0	80.77	0	2.71	0	0	3.87	0	0	0	0	0	0	0.31	0.31
Westbrook Inverter Enclosur	W_INV4	369673	4906164	2	0	0	89.1	89.1	1	3742.94	3.25	0	82.46	0	1.33	0	0	10.72	0	0	0	0	0	0	-5.45	-5.45
Inverters	G_Inv5	366638.5	4902958.1	2	0	0	87.7	87.7	1	3201.07	3.25	0	81.11	0	2.72	0	0	4	0	0	0	0	0	0	-0.16	-0.16
Inverters	G_Inv6	366788.5	4902972	2	0	0	87.7	87.7	1	3224.12	3.25	0	81.17	0	2.72	0	0	4.02	0	0	0	0	0	0	-0.25	-0.25
Westbrook Inverter Enclosur	W_INV5	369719	4906574	2	0	0	89.1	89.1	1	3820.08	3.25	0	82.64	0	1.35	0	0	10.83	0	0	0	0	0	0	-5.76	-5.76
Westbrook Inverter Enclosur	W_INV7	369780	4906417	2	0	0	89.1	89.1	1	3863.73	3.25	0	82.74	0	1.36	0	0	10.89	0	0	0	0	0	0	-5.93	-5.93
Inverters	G_Inv7	366694.6	4902824.7	2	0	0	87.7	87.7	1	3343.66	3.25	0	81.48	0	2.73	0	0	4.16	0	0	0	0	0	0	-0.71	-0.71
Inverters	G_Inv8	366844.5	4902838.5	2	0	0	87.7	87.7	1	3367.76	3.25	0	81.55	0	2.74	0	0	4.18	0	0	0	0	0	0	-0.8	-0.8
Westbrook Inverter Enclosur	W_INV6	369875	4906578	2	0	0	89.1	89.1	1	3975.32	3.25	0	82.99	0	1.39	0	0	11.05	0	0	0	0	0	0	-6.37	-6.37
Inverter	MV4-13	369051	4908605	2	0	0	89.1	89.1	1	4013.73	3.25	0	83.07	0	1.4	0	0	11.1	0	0	0	0	0	0	-6.51	-6.51
Fixed Reactor Bank 1	FRB1	369378	4908755	6	0	0	89.8	89.8	1	4363.19	5.25	0	83.8	0	-0.67	0	0	7.84	0	0	0	0	0	0	-1.19	-1.19
Inverter	MV4-15	369176	4908481	2	0	0	89.1	89.1	1	4036.69	3.25	0	83.12	0	1.4	0	0	11.14	0	0	0	0	0	0	-6.6	-6.6
Inverter	MV4-14	369176	4908507	2	0	0	89.1	89.1	1	4052.2	3.25	0	83.15	0	1.41	0	0	11.16	0	0	0	0	0	0	-6.66	-6.66

Fixed Reactor Bank 2	FRB2	369464	4908755	6	0	0	89.8	89.8	1	4431.45	5.25	0	83.93	0	-0.66	0	0	7.92	0	0	0	0	0	0	-1.42	-1.42
Inverters	G_Inv9	366750.9	4902691.8	2	0	0	87.7	87.7	1	3485.99	3.25	0	81.85	0	2.75	0	0	4.31	0	0	0	0	0	0	-1.25	-1.25
Inverters	G_Inv10	366900.7	4902704.8	2	0	0	87.7	87.7	1	3511.74	3.25	0	81.91	0	2.75	0	0	4.34	0	0	0	0	0	0	-1.34	-1.34
Inverter	MV4-12	369043	4908803	2	0	0	89.1	89.1	1	4135.13	3.25	0	83.33	0	1.43	0	0	11.28	0	0	0	0	0	0	-6.97	-6.97
Inverter	MV5-6	369982	4908507	2	0	0	89.1	89.1	1	4722.39	3.25	0	84.48	0	1.57	0	0	12.09	0	0	0	0	0	0	-9.09	-9.09
Westbrook Inverter Enclosur	W_INV1	369409	4906578	2	0	0	86.1	86.1	1	3513.47	3.25	0	81.91	0	1.27	0	0	10.38	0	0	0	0	0	0	-7.51	-7.51
Inverter	MV6-4	370250	4906966	2	0	0	86.1	86.1	1	4408.94	3.25	0	83.89	0	1.49	0	0	11.66	0	0	0	0	0	0	-10.98	-10.98
Inverter Transformer	MV2-1 T	365836	4906816	2	0	0	69.4	69.4	1	742.11	3.25	0	68.41	0	1.42	0	0	3.42	0	0	0	0	0	0	-3.9	-3.9
Inverter Transformer	MV1-7 T	364919	4905782	2	0	0	69.4	69.4	1	1054.97	3.25	0	71.46	0	1.73	0	0	3.89	0	0	0	0	0	0	-7.73	-7.73
Inverter Transformer	MV1-10 T	365010	4905564	2	0	0	69.4	69.4	1	1055.7	3.25	0	71.47	0	1.73	0	0	3.89	0	0	0	0	0	0	-7.73	-7.73
Westbrook Inverter Transfor	W_INVTR1	369403	4906578	2	0	0	78.2	78.2	1	3507.53	3.25	0	81.9	0	-2.85	0	0	1.86	0	0	0	0	0	0	-2.68	-2.68
Inverter Transformer	MV1-14 T	365157	4905049	2	0	0	69.4	69.4	1	1289.2	3.25	0	73.21	0	1.87	0	0	4.19	0	0	0	0	0	0	-9.91	-9.91
Westbrook Inverter Transfor	W_INVTR2	369368	4906388	2	0	0	77.3	77.3	1	3450.77	3.25	0	81.76	0	-2.83	0	0	1.84	0	0	0	0	0	0	-3.43	-3.43
Westbrook Inverter Transfor	W_INVTR3	369514	4906164	2	0	0	77.3	77.3	1	3583.99	3.25	0	82.09	0	-2.86	0	0	1.89	0	0	0	0	0	0	-3.78	-3.78
Inverter Transformer	MV1-13 T	364725	4905241	2	0	0	69.4	69.4	1	1469.14	3.25	0	74.34	0	1.96	0	0	4.4	0	0	0	0	0	0	-11.35	-11.35
Westbrook Inverter Transfor	W_INVTR4	369679	4906164	2	0	0	77.3	77.3	1	3748.94	3.25	0	82.48	0	-2.9	0	0	1.96	0	0	0	0	0	0	-4.19	-4.19
Westbrook Inverter Transfor	W_INVTR5	369725	4906574	2	0	0	77.3	77.3	1	3826.03	3.25	0	82.65	0	-2.92	0	0	1.99	0	0	0	0	0	0	-4.38	-4.38
Westbrook Inverter Transfor	W_INVTR7	369786	4906417	2	0	0	77.3	77.3	1	3869.7	3.25	0	82.75	0	-2.93	0	0	2.01	0	0	0	0	0	0	-4.48	-4.48
Westbrook Inverter Transfor	W_INVTR6	369881	4906578	2	0	0	77.3	77.3	1	3981.27	3.25	0	83	0	-2.96	0	0	2.05	0	0	0	0	0	0	-4.75	-4.75
Inverter Transformer	MV2-3 T	365814	4906641	2	0	0	56.1	56.1	1	573.08	3.25	0	66.16	0	-0.11	0	0	3.78	0	0	0	0	0	0	-13.77	-13.77
Inverter Transformer	MV2-2 T	365982	4906654	2	0	0	56.1	56.1	1	576.27	3.25	0	66.21	0	-0.11	0	0	3.79	0	0	0	0	0	0	-13.83	-13.83
Inverter Transformer	MV2-4 T	365590	4906628	2	0	0	56.1	56.1	1	645.44	3.25	0	67.2	0	-0.09	0	0	3.98	0	0	0	0	0	0	-15.03	-15.03
Inverter Transformer	MV6-4 T	370244	4906966	2	0	0	69.4	69.4	1	4403.06	3.25	0	83.88	0	2.88	0	0	6.97	0	0	0	0	0	0	-24.38	-24.38
Inverter Transformer	MV6-1 T	370230	4907364	2	0	0	69.4	69.4	1	4486.65	3.25	0	84.04	0	2.9	0	0	7.03	0	0	0	0	0	0	-24.62	-24.62
Inverter Transformer	MV1-4 T	364821	4905918	2	0	0	56.1	56.1	1	1121.76	3.25	0	72	0	0.05	0	0	5.18	0	0	0	0	0	0	-21.17	-21.17
Inverter Transformer	MV1-12 T	365044	4905386	2	0	0	56.1	56.1	1	1126.24	3.25	0	72.03	0	0.06	0	0	5.19	0	0	0	0	0	0	-21.22	-21.22
Inverter Transformer	MV1-2 T	364759	4906063	2	0	0	56.1	56.1	1	1172.13	3.25	0	72.38	0	0.07	0	0	5.29	0	0	0	0	0	0	-21.69	-21.69
Inverter Transformer	MV1-1 T	364721	4906166	2	0	0	56.1	56.1	1	1213.05	3.25	0	72.68	0	0.09	0	0	5.39	0	0	0	0	0	0	-22.09	-22.09
Inverter Transformer	MV1-8 T	364782	4905647	2	0	0	56.1	56.1	1	1227.88	3.25	0	72.78	0	0.09	0	0	5.42	0	0	0	0	0	0	-22.24	-22.24
Inverter Transformer	MV1-15 T	365309	4904994	2	0	0	56.1	56.1	1	1251.51	3.25	0	72.95	0	0.1	0	0	5.47	0	0	0	0	0	0	-22.47	-22.47
Inverter Transformer	MV1-5 T	364676	4905892	2	0	0	56.1	56.1	1	1269.01	3.25	0	73.07	0	0.11	0	0	5.51	0	0	0	0	0	0	-22.63	-22.63
Inverter Transformer	MV1-9 T	364555	4905646	2	0	0	56.1	56.1	1	1442.82	3.25	0	74.18	0	0.18	0	0	5.89	0	0	0	0	0	0	-24.2	-24.2
Inverter Transformer	MV1-11 T	364649	4905414	2	0	0	56.1	56.1	1	1444.68	3.25	0	74.2	0	0.18	0	0	5.9	0	0	0	0	0	0	-24.21	-24.21
Inverter Transformer	MV1-6 T	364482	4905835	2	0	0	56.1	56.1	1	1469.57	3.25	0	74.34	0	0.19	0	0	5.95	0	0	0	0	0	0	-24.42	-24.42
Inverter Transformer	MV1-3 T	364435	4906039	2	0	0	56.1	56.1	1	1496.56	3.25	0	74.5	0	0.2	0	0	6.01	0	0	0	0	0	0	-24.65	-24.65
Inverter Transformer	MV3-18 T	367757	4907412	2	0	0	56.1	56.1	1	2260.2	3.25	0	78.08	0	0.51	0	0	7.54	0	0	0	0	0	0	-30.08	-30.08
Inverter Transformer	MV3-12 T	367674	4907594	2	0	0	56.1	56.1	1	2308.73	3.25	0	78.27	0	0.53	0	0	7.64	0	0	0	0	0	0	-30.38	-30.38
Inverter Transformer	MV3-13 T	367958	4907577	2	0	0	56.1	56.1	1	2519.87	3.25	0	79.03	0	0.62	0	0	8.03	0	0	0	0	0	0	-31.62	-31.62
Inverter Transformer	MV3-7 T	367951	4907754	2	0	0	56.1	56.1	1	2623.49	3.25	0	79.38	0	0.67	0	0	8.21	0	0	0	0	0	0	-32.2	-32.2
Inverter Transformer	MV3-17 T	368183	4907472	2	0	0	56.1	56.1	1	2647.48	3.25	0	79.46	0	0.68	0	0	8.26	0	0	0	0	0	0	-32.33	-32.33
Inverter Transformer	MV3-3 T	367944	4907927	2	0	0	56.1	56.1	1	2731.96	3.25	0	79.73	0	0.72	0	0	8.4	0	0	0	0	0	0	-32.79	-32.79
Inverter Transformer	MV3-19 T	368352	4907347	2	0	0	56.1	56.1	1	2732.5	3.25	0	79.73	0	0.72	0	0	8.41	0	0	0	0	0	0	-32.79	-32.79
Inverter Transformer	MV3-10 T	368162	4907669	2	0	0	56.1	56.1	1	2739.03	3.25	0	79.75	0	0.72	0	0	8.42	0	0	0	0	0	0	-32.83	-32.83
Inverter Transformer	MV3-21 T	368484	4907206	2	0	0	56.1	56.1	1	2790.29	3.25	0	79.91	0	0.74	0	0	8.51	0	0	0	0	0	0	-33.1	-33.1
Inverter Transformer	MV3-15 T	368351	4907477	2	0	0	56.1	56.1	1	2794.28	3.25	0	79.93	0	0.74	0	0	8.51	0	0	0	0	0	0	-33.12	-33.12
Inverter Transformer	MV3-6 T	368156	4907834	2	0	0	56.1	56.1	1	2833.22	3.25	0	80.05	0	0.76	0	0	8.58	0	0	0	0	0	0	-33.33	-33.33
Inverter Transformer	MV3-11 T	368340	4907662	2	0	0	56.1	56.1	1	2882.02	3.25	0	80.19	0	0.78	0	0	8.67	0	0	0	0	0	0	-33.58	-33.58
Inverter Transformer	MV3-1 T	368150	4907976	2	0	0	56.1	56.1	1	2918.7	3.25	0	80.3	0	0.8	0	0	8.73	0	0	0	0	0	0	-33.77	-33.77
Inverter Transformer	MV3-22 T	368661	4907142	2	0	0	56.1	56.1	1	2929.29	3.25	0	80.34	0	0.8	0	0	8.75	0	0	0	0	0	0	-33.82	-33.82
Inverter Transformer	MV3-16 T	368509	4907475	2	0	0	56.1	56.1	1	2931.23	3.25	0	80.34	0	0.8	0	0	8.75	0	0	0	0	0	0	-33.83	-33.83
Inverter Transformer	MV3-5 T	368335	4907843	2	0	0	56.1	56.1	1	2981.17	3.25	0	80.49	0	0.82	0	0	8.84	0	0	0	0	0	0	-34.09	-34.09
Inverter Transformer	MV3-20 T	368683	4907317	2	0	0	56.1	56.1	1	3017.23	3.25	0	80.59	0	0.84	0	0	8.9	0	0	0	0	0	0	-34.27	-34.27
Inverter Transformer	MV3-9 T	368517	4907703	2	0	0	56.1	56.1	1	3053.12	3.25	0	80.69	0	0.85	0	0	8.96	0	0	0	0	0	0	-34.45	-34.45
Inverter Transformer	MV3-14 T	368678	4907498	2	0	0	56.1	56.1	1	3091.4	3.25	0	80.8	0	0.87	0	0	9.02	0	0	0	0	0	0	-34.64	-34.64
Inverter Transformer	MV3-4 T	368507	4907925	2	0	0	56.1	56.1	1	3168.57	3.25	0	81.02	0	0.9	0	0	9.15	0	0	0	0	0	0	-35.01	-35.01
Inverter Transformer	MV3-8 T	368685	4907712	2	0	0	56.1	56.1	1	3201.24	3.25	0	81.11	0	0.92	0	0	9.2	0	0	0	0	0	0	-35.17	-35.17
Inverter Transformer	MV3-2 T	368677	4907928	2	0	0	56.1	56.1	1	3309.93	3.25	0	81.4	0	0.96	0	0	9.38	0	0	0	0	0	0	-35.68	-35.68
Inverter Transformer	MV4-13 T	369057	4908605	2	0	0	56.1	56.1	1	4018.4	3.25	0	83.08	0	1.25	0	0	10.48	0	0	0	0	0	0	-38.76	-38.76
Inverter Transformer	MV4-15 T	369170	4908481	2	0	0	56.1	56.1	1	4031.86	3.25	0	83.11	0	1.26	0	0	10.5	0	0	0	0	0	0	-38.81	-38.81
Inverter Transformer	MV4-14 T	369182	4908507	2	0	0	56.1	56.1	1	4057.01	3.25	0	83.16	0	1.27	0	0	10.54	0	0	0	0	0	0	-38.91	-38.91
Inverter Transformer	MV4-12 T	369049	4908803	2	0	0	56.1	56.1	1	4139.64	3.25	0	83.34	0	1.3	0	0	10.66	0	0	0	0	0	0	-39.24	-39.24
Inverter Transformer	MV4-7 T	369040	4909001	2	0	0	56.1	56.1	1	4265.93	3.25	0	83.6	0	1.35	0	0	10.84	0	0	0	0	0	0	-39.73	-39.73
Inverter Transformer	MV4-11 T	369269	4908855	2	0	0	56.1	56.1	1	4340.84	3.25	0	83.75	0	1.38	0	0	10.95	0	0	0	0	0	0	-40.02	-40.02
Inverter Transformer	MV6-2 T	370091	4907339	2	0	0	56.1	56.1	1	4346.34	3.25	0	83.76	0	1.38	0	0	10.96	0	0	0	0	0	0	-40.04	-40.04
Inverter Transformer	MV4-10 T	369307	4908858	2	0	0	56.1	56.1	1	4372.03	3.25	0	83.81	0	1.39	0	0	11	0	0	0	0	0	0	-40.14	-40.14
Inverter Transformer	MV4-4 T	369033	4909199	2	0	0	56.1	56.1	1	4398.93	3.25	0	83.87	0	1.4	0	0	11.03	0	0	0	0	0	0	-40.24	-40.24
Inverter Transformer	MV6-3 T	370202	4907140	2	0	0	56.1	56.1	1	4400.57	3.25	0	83.87	0	1.4	0	0	11.04	0	0	0	0	0	0	-40.25	-40.25
Inverter Transformer	MV4-8 T	369262	4909001	2	0	0	56.1	56.1	1	4430.33	3.25	0	83.93	0	1.41	0	0	11.08	0	0	0	0	0	0	-40.36	-40.36
Inverter Transformer	MV4-9 T	369284	4909001	2	0	0	56.1	56.1	1	4446.89	3.25	0	83.96	0	1.42	0	0	11.1	0	0	0	0	0	0	-40.42	-40.42
Inverter Transformer	MV4-1 T	369017	4909397	2	0	0	56.1	56.1	1	4530.55	3.25	0	84.12	0	1.45	0	0	11.22	0	0	0	0	0	0	-40.73	-40.73
Inverter Transformer	MV4-6 T	369249	4909192	2	0	0	56.1	56.1	1	4549.03	3.25	0	84.16	0	1.46	0	0	11.24	0	0	0	0	0	0	-40.8	-40.8
Inverter Transformer	MV4-5 T	369283	4909199	2	0	0	56.1	56.1	1	4578.65	3.25	0	84.21	0	1.47	0	0	11.28	0	0	0	0	0	0	-40.91	-40.91
Inverter Transformer	MV4-3 T	369234	4909397	2	0	0	56.1	56.1	1	4681.06	3.25	0	84.41	0	1.51	0	0	11.43	0	0	0	0	0	0	-41.28	-41.28
Inverter Transformer	MV4-2 T	369267	4909397	2	0	0	56.1	56.1	1	4704.4	3.25	0	84.45	0	1.52	0	0	11.46	0	0	0	0	0	0	-41.37	-41.37

	Inverter Transformer	MV5-6 T	369987	4908507	2	0	0	56.1	56.1	1	4726.68	3.25	0	84.49	0	1.53	0	0	11.49	0	0	0	0	0	0	-41.45	-41.45
	Inverter Transformer	MV5-5 T	370021	4908690	2	0	0	56.1	56.1	1	4851.83	3.25	0	84.72	0	1.57	0	0	11.66	0	0	0	0	0	0	-41.89	-41.89
	Inverter Transformer	MV5-2 T	370011	4908853	2	0	0	56.1	56.1	1	4933.15	3.25	0	84.86	0	1.6	0	0	11.77	0	0	0	0	0	0	-42.17	-42.17
	Inverter Transformer	MV5-1 T	370015	4909142	2	0	0	56.1	56.1	1	5104.4	3.25	0	85.16	0	1.66	0	0	11.99	0	0	0	0	0	0	-42.75	-42.75
	Inverter Transformer	MV5-3 T	370237	4908851	2	0	0	56.1	56.1	1	5120.55	3.25	0	85.19	0	1.67	0	0	12.01	0	0	0	0	0	0	-42.81	-42.81
	Inverter Transformer	MV5-4 T	370330	4908707	2	0	0	56.1	56.1	1	5123.7	3.25	0	85.19	0	1.67	0	0	12.02	0	0	0	0	0	0	-42.82	-42.82
	Line Reactor	NGR	369421	4908787.5	5	0	0	45.4	45.4	1	4417.09	5.25	0	83.9	0	3.28	1.34	0.09	1.81	0	0	0	0	0	0	-44.98	-44.98
Limit. Valu	0	0																								
Level D/N:	31.4079	31.4079																								

Receiver: Existing Noise Receptor
ID: S-R26
X: 366131
Y: 4905973
Z: 4.5
Ground: 0

ISO	Description	ID	X	Y	Z	Ground	ReflOrd	LxT	LxN	L/A	Dist.	hm	Freq	Adiv	K0b	Agr	Abar	z	Aatm	Afol	Ahous	Cmet	CmetN	Dc	RL	LtotT	LtotN
	Inverter	MV2-3	365820	4906641	2	0	0	100.3	100.3	1	736.85	3.25	0	68.35	0	-0.39	0	0	9.91	0	0	0	0	0	0	22.44	22.44
	Inverter	MV2-4	365586	4906624	2	0	0	100.3	100.3	1	849.02	3.25	0	69.58	0	-0.32	0	0	10.37	0	0	0	0	0	0	20.68	20.68
	Sol_Luce Substation	S_Substation	369426	4908792	3.5	0	0	112.1	112.1	1	4336.33	5.25	0	83.74	0	0.7	3.02	0.25	7.8	0	0	0	0	0	0	16.8	16.8
	Inverter	MV1-12	365038	4905386	2	0	0	100.3	100.3	1	1240.65	3.25	0	72.87	0	-0.14	0	0	11.64	0	0	0	0	0	0	15.93	15.93
	Inverter	MV2-1	365842	4906816	2	0	0	97.3	97.3	1	891.17	3.25	0	70	0	-0.3	0	0	10.53	0	0	0	0	0	0	17.08	17.08
	Inverter	MV1-15	365315	4904994	2	0	0	100.3	100.3	1	1274.48	3.25	0	73.11	0	-0.12	0	0	11.74	0	0	0	0	0	0	15.59	15.59
	Inverter	MV1-4	364815	4905918	2	0	0	100.3	100.3	1	1317.15	3.25	0	73.39	0	-0.1	0	0	11.85	0	0	0	0	0	0	15.17	15.17
	Inverter	MV1-2	364753	4906063	2	0	0	100.3	100.3	1	1380.94	3.25	0	73.8	0	-0.08	0	0	12.02	0	0	0	0	0	0	14.57	14.57
	Inverter	MV1-8	364788	4905647	2	0	0	100.3	100.3	1	1382	3.25	0	73.81	0	-0.08	0	0	12.02	0	0	0	0	0	0	14.56	14.56
	Inverter	MV1-1	364715	4906166	2	0	0	100.3	100.3	1	1429.09	3.25	0	74.1	0	-0.06	0	0	12.15	0	0	0	0	0	0	14.13	14.13
	Inverter	MV1-5	364671	4905892	2	0	0	100.3	100.3	1	1462.25	3.25	0	74.3	0	-0.05	0	0	12.23	0	0	0	0	0	0	13.83	13.83
	Inverter	MV1-11	364655	4905414	2	0	0	100.3	100.3	1	1578.31	3.25	0	74.96	0	-0.01	0	0	12.52	0	0	0	0	0	0	12.84	12.84
	Inverter	MV1-9	364561	4905646	2	0	0	100.3	100.3	1	1603.69	3.25	0	75.1	0	0	0	0	12.58	0	0	0	0	0	0	12.63	12.63
	Inverter	MV1-6	364477	4905835	2	0	0	100.3	100.3	1	1659.75	3.25	0	75.4	0	0.02	0	0	12.71	0	0	0	0	0	0	12.18	12.18
	Inverter	MV1-10	365004	4905564	2	0	0	97.3	97.3	1	1198.92	3.25	0	72.58	0	-0.15	0	0	11.52	0	0	0	0	0	0	13.37	13.37
	Inverter	MV1-7	364925	4905782	2	0	0	97.3	97.3	1	1221.03	3.25	0	72.73	0	-0.15	0	0	11.59	0	0	0	0	0	0	13.14	13.14
	Inverter	MV1-14	365163	4905049	2	0	0	97.3	97.3	1	1338.21	3.25	0	73.53	0	-0.1	0	0	11.91	0	0	0	0	0	0	11.97	11.97
	Inverter	MV3-18	367752	4907412	2	0	0	100.3	100.3	1	2167.57	3.25	0	77.72	0	0.18	0	0	13.81	0	0	0	0	0	0	8.61	8.61
	Inverter	MV1-13	364731	4905241	2	0	0	97.3	97.3	1	1579.82	3.25	0	74.97	0	0	0	0	12.52	0	0	0	0	0	0	9.82	9.82
	Inverter	MV3-12	367668	4907594	2	0	0	100.3	100.3	1	2233.83	3.25	0	77.98	0	0.19	0	0	13.94	0	0	0	0	0	0	8.2	8.2
	Inverter	MV3-13	367963	4907577	2	0	0	100.3	100.3	1	2434.96	3.25	0	78.73	0	0.24	0	0	14.33	0	0	0	0	0	0	7.01	7.01
	Inverter	MV3-17	368178	4907472	2	0	0	100.3	100.3	1	2537.17	3.25	0	79.09	0	0.27	0	0	14.53	0	0	0	0	0	0	6.43	6.43
	Inverter	MV3-7	367945	4907754	2	0	0	100.3	100.3	1	2542.16	3.25	0	79.1	0	0.27	0	0	14.54	0	0	0	0	0	0	6.4	6.4
	Inverter	MV2-2	365977	4906654	2	0	0	89.1	89.1	1	698.2	3.25	0	67.88	0	0.61	0	0	5.7	0	0	0	0	0	0	14.87	14.87
	Inverter	MV3-19	368357	4907347	2	0	0	100.3	100.3	1	2615.9	3.25	0	79.35	0	0.28	0	0	14.68	0	0	0	0	0	0	6	6
	Inverter	MV3-10	368167	4907669	2	0	0	100.3	100.3	1	2649.85	3.25	0	79.46	0	0.29	0	0	14.74	0	0	0	0	0	0	5.82	5.82
	Inverter	MV3-21	368478	4907206	2	0	0	100.3	100.3	1	2651.17	3.25	0	79.47	0	0.29	0	0	14.74	0	0	0	0	0	0	5.81	5.81
	Inverter	MV3-3	367939	4907927	2	0	0	100.3	100.3	1	2662.14	3.25	0	79.5	0	0.29	0	0	14.76	0	0	0	0	0	0	5.75	5.75
	Inverter	MV3-15	368357	4907477	2	0	0	100.3	100.3	1	2686.47	3.25	0	79.58	0	0.3	0	0	14.81	0	0	0	0	0	0	5.62	5.62
	Inverter	MV3-6	368162	4907834	2	0	0	100.3	100.3	1	2754.68	3.25	0	79.8	0	0.31	0	0	14.93	0	0	0	0	0	0	5.27	5.27
	Inverter	MV3-11	368346	4907662	2	0	0	100.3	100.3	1	2785.49	3.25	0	79.9	0	0.32	0	0	14.99	0	0	0	0	0	0	5.11	5.11
	Inverter	MV3-16	368514	4907475	2	0	0	100.3	100.3	1	2816.86	3.25	0	80	0	0.33	0	0	15.04	0	0	0	0	0	0	4.95	4.95
	Inverter	MV3-20	368689	4907317	2	0	0	100.3	100.3	1	2889.59	3.25	0	80.22	0	0.34	0	0	15.18	0	0	0	0	0	0	4.58	4.58
	Inverter	MV3-9	368512	4907703	2	0	0	100.3	100.3	1	2943.14	3.25	0	80.38	0	0.35	0	0	15.27	0	0	0	0	0	0	4.31	4.31
	Inverter	MV3-14	368684	4907498	2	0	0	100.3	100.3	1	2973.79	3.25	0	80.47	0	0.36	0	0	15.33	0	0	0	0	0	0	4.16	4.16
	Inverter	MV3-8	368680	4907712	2	0	0	100.3	100.3	1	3085.7	3.25	0	80.79	0	0.38	0	0	15.52	0	0	0	0	0	0	3.62	3.62
	Inverter	MV6-2	370085	4907339	2	0	0	100.3	100.3	1	4183.31	3.25	0	83.43	0	0.55	0	0	17.34	0	0	0	0	0	0	-1.01	-1.01
	Inverter	MV4-7	369035	4909001	2	0	0	100.3	100.3	1	4195.47	3.25	0	83.46	0	0.55	0	0	17.36	0	0	0	0	0	0	-1.06	-1.06
	Inverter	MV6-3	370207	4907140	2	0	0	100.3	100.3	1	4239.77	3.25	0	83.55	0	0.56	0	0	17.43	0	0	0	0	0	0	-1.22	-1.22
	Inverter	MV4-11	369264	4908855	2	0	0	100.3	100.3	1	4256.95	3.25	0	83.58	0	0.56	0	0	17.45	0	0	0	0	0	0	-1.29	-1.29
	Inverter	MV4-10	369312	4908858	2	0	0	100.3	100.3	1	4294.41	3.25	0	83.66	0	0.57	0	0	17.51	0	0	0	0	0	0	-1.42	-1.42
	Inverter	MV4-4	369027	4909199	2	0	0	100.3	100.3	1	4335.19	3.25	0	83.74	0	0.57	0	0	17.58	0	0	0	0	0	0	-1.58	-1.58
	Inverter	MV4-8	369256	4909001	2	0	0	100.3	100.3	1	4351.37	3.25	0	83.77	0	0.57	0	0	17.6	0	0	0	0	0	0	-1.63	-1.63
	Inverter	MV4-9	369289	4909001	2	0	0	100.3	100.3	1	4375.13	3.25	0	83.82	0	0.58	0	0	17.64	0	0	0	0	0	0	-1.72	-1.72
	Inverter	MV4-1	369011	4909397	2	0	0	100.3	100.3	1	4474.17	3.25	0	84.01	0	0.59	0	0	17.79	0	0	0	0	0	0	-2.08	-2.08
	Inverter	MV4-6	369243	4909192	2	0	0	100.3	100.3	1	4477.33	3.25	0	84.02	0	0.59	0	0	17.8	0	0	0	0	0	0	-2.09	-2.09
	Inverter	MV4-5	369289	4909199	2	0	0	100.3	100.3	1	4514.43	3.25	0	84.09	0	0.59	0	0	17.85	0	0	0	0	0	0	-2.22	-2.22
	Inverter	MV4-3	369229	4909397	2	0	0	100.3	100.3	1	4617.51	3.25	0	84.29	0	0.6	0	0	18.01	0	0	0	0	0	0	-2.59	-2.59
	Inverter	MV4-2	369272	4909397	2	0	0	100.3	100.3	1	4646.47	3.25	0	84.34	0	0.61	0	0	18.05	0	0	0	0	0	0	-2.69	-2.69
	Inverter	MV5-5	370015	4908690	2	0	0	100.3	100.3	1	4739.99	3.25	0	84.52	0	0.62	0	0	18.19	0	0	0	0	0	0	-3.01	-3.01
	Inverter	MV5-2	370006	4908853	2	0	0	100.3	100.3	1	4828.05	3.25	0	84.68	0	0.63	0	0	18.33	0	0	0	0	0	0	-3.31	-3.31
	Inverter	MV5-4	370324	4908707	2	0	0	100.3	100.3	1	5005.6	3.25	0	84.99	0	0.64	0	0	18.59	0	0	0	0	0	0	-3.91	-3.91
	Inverter	MV5-3	370231	4908851	2	0	0	100.3	100.3	1	5009.28	3.25	0	85	0	0.64	0	0	18.59	0	0	0	0	0	0	-3.92	-3.92
	Inverter	MV5-1	370020	4909142	2	0	0	100.3	100.3	1	5016.66	3.25	0	85.01	0	0.64	0	0	18.6	0	0	0	0	0	0	-3.94	-3.94
	Inverter	MV6-1	370235	4907364	2	0	0	97.3	97.3	1	4333.32	3.25	0	83.74	0	0.57	0	0	17.57	0	0	0	0	0	0	-4.57	-4.57
	Inverter	MV1-3	364440	4906039	2	0	0	89.1	89.1	1	1692.29	3.25	0	75.57	0	0.84	0	0	7.54	0	0	0	0	0	0	5.12	5.12

DSTATCOM - 10 MVAR #2	DSAT2	369403	4908757	2.5	0	0	96.6	96.6	1	4296.12	3.5	0	83.66	0	3.61	0	0	2.99	0	0	0	0	0	0	6.37	6.37
DSTATCOM - 10 MVAR #1	DSAT1	369437	4908757	2.5	0	0	96.6	96.6	1	4322.07	3.5	0	83.71	0	3.61	0	0	3.01	0	0	0	0	0	0	6.3	6.3
Gardiner Substation	G_Sub	366586.3	4903349.9	2.5	0	0	90.8	90.8	1	2662.32	4.25	0	79.51	0	1.06	3.45	0.35	5.44	0	0	0	0	0	0	1.32	1.32
SubstationTransformer	W_ST	369711.17	4906112.3	2.5	0	0	92	92	1	3582.88	4.25	0	82.08	0	1.24	2.76	0.29	6.8	0	0	0	0	0	0	-0.91	-0.91
Inverter	MV3-22	368656	4907142	2	0	0	89.1	89.1	1	2782.48	3.25	0	79.89	0	1.09	0	0	9.28	0	0	0	0	0	0	-1.21	-1.21
Inverter	MV3-1	368156	4907976	2	0	0	89.1	89.1	1	2848.27	3.25	0	80.09	0	1.11	0	0	9.39	0	0	0	0	0	0	-1.53	-1.53
Inverter	MV3-5	368340	4907843	2	0	0	89.1	89.1	1	2894.23	3.25	0	80.23	0	1.12	0	0	9.46	0	0	0	0	0	0	-1.75	-1.75
Inverter	MV3-4	368502	4907925	2	0	0	89.1	89.1	1	3071.15	3.25	0	80.75	0	1.16	0	0	9.72	0	0	0	0	0	0	-2.58	-2.58
Inverter	MV3-2	368671	4907928	2	0	0	89.1	89.1	1	3205.25	3.25	0	81.12	0	1.2	0	0	9.93	0	0	0	0	0	0	-3.18	-3.18
Inverters	G_Inv1	366526.4	4903225.8	2	0	0	87.7	87.7	1	2775.51	3.25	0	79.87	0	2.67	0	0	3.52	0	0	0	0	0	0	1.6	1.6
Westbrook Inverter Enclosur	W_INV2	369374	4906388	2	0	0	89.1	89.1	1	3269.45	3.25	0	81.29	0	1.21	0	0	10.02	0	0	0	0	0	0	-3.47	-3.47
Inverters	G_Inv2	366676.9	4903239.1	2	0	0	87.7	87.7	1	2787.87	3.25	0	79.91	0	2.68	0	0	3.54	0	0	0	0	0	0	1.54	1.54
Westbrook Inverter Enclosur	W_INV3	369508	4906164	2	0	0	89.1	89.1	1	3382.4	3.25	0	81.58	0	1.24	0	0	10.19	0	0	0	0	0	0	-3.96	-3.96
Inverters	G_Inv3	366583.7	4903091.4	2	0	0	87.7	87.7	1	2916.94	3.25	0	80.3	0	2.69	0	0	3.68	0	0	0	0	0	0	0.99	0.99
Inverters	G_Inv4	366732.8	4903105	2	0	0	87.7	87.7	1	2930.46	3.25	0	80.34	0	2.69	0	0	3.7	0	0	0	0	0	0	0.93	0.93
Westbrook Inverter Enclosur	W_INV4	369673	4906164	2	0	0	89.1	89.1	1	3547.15	3.25	0	82	0	1.28	0	0	10.43	0	0	0	0	0	0	-4.65	-4.65
Inverters	G_Inv5	366638.5	4902958.1	2	0	0	87.7	87.7	1	3057.32	3.25	0	80.71	0	2.7	0	0	3.84	0	0	0	0	0	0	0.41	0.41
Inverters	G_Inv6	366788.5	4902972	2	0	0	87.7	87.7	1	3072.18	3.25	0	80.75	0	2.71	0	0	3.86	0	0	0	0	0	0	0.35	0.35
Westbrook Inverter Enclosur	W_INV5	369719	4906574	2	0	0	89.1	89.1	1	3637.99	3.25	0	82.22	0	1.3	0	0	10.56	0	0	0	0	0	0	-5.03	-5.03
Westbrook Inverter Enclosur	W_INV7	369780	4906417	2	0	0	89.1	89.1	1	3675.91	3.25	0	82.31	0	1.31	0	0	10.62	0	0	0	0	0	0	-5.18	-5.18
Inverters	G_Inv7	366694.6	4902824.7	2	0	0	87.7	87.7	1	3198.35	3.25	0	81.1	0	2.72	0	0	4	0	0	0	0	0	0	-0.15	-0.15
Inverters	G_Inv8	366844.5	4902838.5	2	0	0	87.7	87.7	1	3214.68	3.25	0	81.14	0	2.72	0	0	4.01	0	0	0	0	0	0	-0.22	-0.22
Westbrook Inverter Enclosur	W_INV6	369875	4906578	2	0	0	89.1	89.1	1	3792.57	3.25	0	82.58	0	1.34	0	0	10.79	0	0	0	0	0	0	-5.65	-5.65
Inverters	G_Inv9	366750.9	4902691.8	2	0	0	87.7	87.7	1	3339.24	3.25	0	81.47	0	2.73	0	0	4.15	0	0	0	0	0	0	-0.7	-0.7
Inverter	MV4-13	369051	4908605	2	0	0	89.1	89.1	1	3931.14	3.25	0	82.89	0	1.38	0	0	10.99	0	0	0	0	0	0	-6.19	-6.19
Fixed Reactor Bank 1	FRB1	369378	4908755	6	0	0	89.8	89.8	1	4275.81	5.25	0	83.62	0	-0.68	0	0	7.73	0	0	0	0	0	0	-0.89	-0.89
Inverters	G_Inv10	366900.7	4902704.8	2	0	0	87.7	87.7	1	3357.61	3.25	0	81.52	0	2.73	0	0	4.17	0	0	0	0	0	0	-0.77	-0.77
Inverter	MV4-15	369176	4908481	2	0	0	89.1	89.1	1	3944.88	3.25	0	82.92	0	1.38	0	0	11.01	0	0	0	0	0	0	-6.25	-6.25
Inverter	MV4-14	369176	4908507	2	0	0	89.1	89.1	1	3961.46	3.25	0	82.96	0	1.38	0	0	11.03	0	0	0	0	0	0	-6.31	-6.31
Fixed Reactor Bank 2	FRB2	369464	4908755	6	0	0	89.8	89.8	1	4341.48	5.25	0	83.75	0	-0.67	0	0	7.81	0	0	0	0	0	0	-1.12	-1.12
Inverter	MV4-12	369043	4908803	2	0	0	89.1	89.1	1	4060.62	3.25	0	83.17	0	1.41	0	0	11.17	0	0	0	0	0	0	-6.69	-6.69
Inverter	MV5-6	369982	4908507	2	0	0	89.1	89.1	1	4609.92	3.25	0	84.27	0	1.54	0	0	11.94	0	0	0	0	0	0	-8.69	-8.69
Westbrook Inverter Enclosur	W_INV1	369409	4906578	2	0	0	86.1	86.1	1	3333.36	3.25	0	81.46	0	1.23	0	0	10.12	0	0	0	0	0	0	-6.74	-6.74
Inverter	MV6-4	370250	4906966	2	0	0	86.1	86.1	1	4237.01	3.25	0	83.54	0	1.45	0	0	11.42	0	0	0	0	0	0	-10.35	-10.35
Inverter Transformer	MV2-1 T	365836	4906816	2	0	0	69.4	69.4	1	893.13	3.25	0	70.02	0	1.59	0	0	3.66	0	0	0	0	0	0	-5.91	-5.91
Inverter Transformer	MV1-10 T	365010	4905564	2	0	0	69.4	69.4	1	1193.28	3.25	0	72.53	0	1.82	0	0	4.07	0	0	0	0	0	0	-9.07	-9.07
Westbrook Inverter Transfor	W_INVTR1	369403	4906578	2	0	0	78.2	78.2	1	3327.46	3.25	0	81.44	0	-2.8	0	0	1.79	0	0	0	0	0	0	-2.19	-2.19
Inverter Transformer	MV1-7 T	364919	4905782	2	0	0	69.4	69.4	1	1226.96	3.25	0	72.78	0	1.84	0	0	4.11	0	0	0	0	0	0	-9.37	-9.37
Westbrook Inverter Transfor	W_INVTR2	369368	4906388	2	0	0	77.3	77.3	1	3263.5	3.25	0	81.27	0	-2.78	0	0	1.77	0	0	0	0	0	0	-2.91	-2.91
Inverter Transformer	MV1-14 T	365157	4905049	2	0	0	69.4	69.4	1	1342.56	3.25	0	73.56	0	1.9	0	0	4.25	0	0	0	0	0	0	-10.36	-10.36
Westbrook Inverter Transfor	W_INVTR3	369514	4906164	2	0	0	77.3	77.3	1	3388.39	3.25	0	81.6	0	-2.82	0	0	1.82	0	0	0	0	0	0	-3.26	-3.26
Westbrook Inverter Transfor	W_INVTR4	369679	4906164	2	0	0	77.3	77.3	1	3553.14	3.25	0	82.01	0	-2.86	0	0	1.88	0	0	0	0	0	0	-3.7	-3.7
Westbrook Inverter Transfor	W_INVTR5	369725	4906574	2	0	0	77.3	77.3	1	3643.9	3.25	0	82.23	0	-2.88	0	0	1.92	0	0	0	0	0	0	-3.93	-3.93
Westbrook Inverter Transfor	W_INVTR7	369786	4906417	2	0	0	77.3	77.3	1	3681.87	3.25	0	82.32	0	-2.89	0	0	1.93	0	0	0	0	0	0	-4.02	-4.02
Westbrook Inverter Transfor	W_INVTR6	369881	4906578	2	0	0	77.3	77.3	1	3798.49	3.25	0	82.59	0	-2.92	0	0	1.98	0	0	0	0	0	0	-4.31	-4.31
Inverter Transformer	MV1-13 T	364725	4905241	2	0	0	69.4	69.4	1	1585.14	3.25	0	75	0	2.01	0	0	4.53	0	0	0	0	0	0	-12.19	-12.19
Inverter Transformer	MV2-2 T	365982	4906654	2	0	0	56.1	56.1	1	697.11	3.25	0	67.87	0	-0.08	0	0	4.13	0	0	0	0	0	0	-15.85	-15.85
Inverter Transformer	MV2-3 T	365814	4906641	2	0	0	56.1	56.1	1	739.4	3.25	0	68.38	0	-0.07	0	0	4.24	0	0	0	0	0	0	-16.49	-16.49
Inverter Transformer	MV2-4 T	365590	4906628	2	0	0	56.1	56.1	1	849.54	3.25	0	69.58	0	-0.04	0	0	4.52	0	0	0	0	0	0	-18.01	-18.01
Inverter Transformer	MV6-4 T	370244	4906966	2	0	0	69.4	69.4	1	4231.17	3.25	0	83.53	0	2.84	0	0	6.85	0	0	0	0	0	0	-23.87	-23.87
Inverter Transformer	MV6-1 T	370230	4907364	2	0	0	69.4	69.4	1	4328.59	3.25	0	83.73	0	2.87	0	0	6.92	0	0	0	0	0	0	-24.16	-24.16
Inverter Transformer	MV1-12 T	365044	4905386	2	0	0	56.1	56.1	1	1235.37	3.25	0	72.84	0	0.1	0	0	5.44	0	0	0	0	0	0	-22.31	-22.31
Inverter Transformer	MV1-15 T	365309	4904994	2	0	0	56.1	56.1	1	1278.33	3.25	0	73.13	0	0.11	0	0	5.53	0	0	0	0	0	0	-22.72	-22.72
Inverter Transformer	MV1-4 T	364821	4905918	2	0	0	56.1	56.1	1	1311.16	3.25	0	73.35	0	0.13	0	0	5.61	0	0	0	0	0	0	-23.03	-23.03
Inverter Transformer	MV1-2 T	364759	4906063	2	0	0	56.1	56.1	1	1374.95	3.25	0	73.77	0	0.15	0	0	5.75	0	0	0	0	0	0	-23.6	-23.6
Inverter Transformer	MV1-8 T	364782	4905647	2	0	0	56.1	56.1	1	1387.83	3.25	0	73.85	0	0.15	0	0	5.77	0	0	0	0	0	0	-23.72	-23.72
Inverter Transformer	MV1-1 T	364721	4906166	2	0	0	56.1	56.1	1	1423.15	3.25	0	74.07	0	0.17	0	0	5.85	0	0	0	0	0	0	-24.03	-24.03
Inverter Transformer	MV1-5 T	364676	4905892	2	0	0	56.1	56.1	1	1457.26	3.25	0	74.27	0	0.18	0	0	5.93	0	0	0	0	0	0	-24.32	-24.32
Inverter Transformer	MV1-11 T	364649	4905414	2	0	0	56.1	56.1	1	1583.92	3.25	0	74.99	0	0.23	0	0	6.2	0	0	0	0	0	0	-25.36	-25.36
Inverter Transformer	MV1-9 T	364555	4905646	2	0	0	56.1	56.1	1	1609.57	3.25	0	75.13	0	0.24	0	0	6.25	0	0	0	0	0	0	-25.57	-25.57
Inverter Transformer	MV1-6 T	364482	4905835	2	0	0	56.1	56.1	1	1654.77	3.25	0	75.37	0	0.26	0	0	6.34	0	0	0	0	0	0	-25.92	-25.92
Inverter Transformer	MV1-3 T	364435	4906039	2	0	0	56.1	56.1	1	1697.29	3.25	0	75.6	0	0.28	0	0	6.43	0	0	0	0	0	0	-26.25	-26.25
Inverter Transformer	MV3-18 T	367757	4907412	2	0	0	56.1	56.1	1	2171.31	3.25	0	77.73	0	0.48	0	0	7.38	0	0	0	0	0	0	-29.53	-29.53
Inverter Transformer	MV3-12 T	367674	4907594	2	0	0	56.1	56.1	1	2237.97	3.25	0	78	0	0.5	0	0	7.5	0	0	0	0	0	0	-29.95	-29.95
Inverter Transformer	MV3-13 T	367958	4907577	2	0	0	56.1	56.1	1	2431.2	3.25	0	78.72	0	0.59	0	0	7.86	0	0	0	0	0	0	-31.11	-31.11
Inverter Transformer	MV3-17 T	368183	4907472	2	0	0	56.1	56.1	1	2541.2	3.25	0	79.1	0	0.63	0	0	8.06	0	0	0	0	0	0	-31.74	-31.74
Inverter Transformer	MV3-7 T	367951	4907754	2	0	0	56.1	56.1	1	2546.44	3.25	0	79.12	0	0.64	0	0	8.07	0	0	0	0	0	0	-31.77	-31.77
Inverter Transformer	MV3-19 T	368352	4907347	2	0	0	56.1	56.1	1	2611.65	3.25	0	79.34	0	0.66	0	0	8.19	0	0	0	0	0	0	-32.14	-32.14
Inverter Transformer	MV3-10 T	368162	4907669	2	0	0	56.1	56.1	1	2646.01	3.25	0	79.45	0	0.68	0	0	8.25	0	0	0	0	0	0	-32.32	-32.32
Inverter Transformer	MV3-21 T	368484	4907206	2	0	0	56.1	56.1	1	2656.48	3.25	0	79.49	0	0.68	0	0	8.27	0	0	0	0	0	0	-32.38	-32.38
Inverter Transformer	MV3-3 T	367944	4907927	2	0	0	56.1	56.1	1	2665.54	3.25	0	79.52	0	0.69	0	0	8.29	0	0	0	0	0	0	-32.43	-32.43
Inverter Transformer	MV3-15 T	368351	4907477	2	0	0	56.1	56.1	1	2681.5	3.25	0	79.57	0	0.69	0	0	8.32	0	0	0	0	0	0	-32.52	-32.52
Inverter Transformer	MV3-6 T	368156	4907834	2	0	0	56.1	56.1	1	2750.26	3.25	0	79.79	0	0.72	0	0	8.44	0	0	0	0	0	0	-32.89	-32.89
Inverter Transformer	MV3-11 T	368340	4907662	2	0	0	56.1	56.1	1	2780.72	3.25	0	79.88	0	0.74	0	0	8.49	0	0	0	0	0	0	-33.05	-33.05

	Inverter Transformer	MV3-22 T	368661	4907142	2	0	0	56.1	56.1	1	2787.02	3.25	0	79.9	0	0.74	0	0	8.5	0	0	0	0	0	0	-33.08	-33.08
	Inverter Transformer	MV3-16 T	368509	4907475	2	0	0	56.1	56.1	1	2812.63	3.25	0	79.98	0	0.75	0	0	8.55	0	0	0	0	0	0	-33.22	-33.22
	Inverter Transformer	MV3-1 T	368150	4907976	2	0	0	56.1	56.1	1	2844.01	3.25	0	80.08	0	0.76	0	0	8.6	0	0	0	0	0	0	-33.38	-33.38
	Inverter Transformer	MV3-20 T	368683	4907317	2	0	0	56.1	56.1	1	2884.28	3.25	0	80.2	0	0.78	0	0	8.67	0	0	0	0	0	0	-33.59	-33.59
	Inverter Transformer	MV3-5 T	368335	4907843	2	0	0	56.1	56.1	1	2890.42	3.25	0	80.22	0	0.78	0	0	8.68	0	0	0	0	0	0	-33.62	-33.62
	Inverter Transformer	MV3-9 T	368517	4907703	2	0	0	56.1	56.1	1	2947.19	3.25	0	80.39	0	0.81	0	0	8.78	0	0	0	0	0	0	-33.92	-33.92
	Inverter Transformer	MV3-14 T	368678	4907498	2	0	0	56.1	56.1	1	2968.64	3.25	0	80.45	0	0.82	0	0	8.81	0	0	0	0	0	0	-34.02	-34.02
	Inverter Transformer	MV3-4 T	368507	4907925	2	0	0	56.1	56.1	1	3075.01	3.25	0	80.76	0	0.86	0	0	8.99	0	0	0	0	0	0	-34.55	-34.55
	Inverter Transformer	MV3-8 T	368685	4907712	2	0	0	56.1	56.1	1	3089.83	3.25	0	80.8	0	0.87	0	0	9.02	0	0	0	0	0	0	-34.63	-34.63
	Inverter Transformer	MV3-2 T	368677	4907928	2	0	0	56.1	56.1	1	3210.01	3.25	0	81.13	0	0.92	0	0	9.22	0	0	0	0	0	0	-35.21	-35.21
	Inverter Transformer	MV4-13 T	369057	4908605	2	0	0	56.1	56.1	1	3935.59	3.25	0	82.9	0	1.22	0	0	10.36	0	0	0	0	0	0	-38.42	-38.42
	Inverter Transformer	MV4-15 T	369170	4908481	2	0	0	56.1	56.1	1	3940.25	3.25	0	82.91	0	1.22	0	0	10.37	0	0	0	0	0	0	-38.44	-38.44
	Inverter Transformer	MV4-14 T	369182	4908507	2	0	0	56.1	56.1	1	3966.08	3.25	0	82.97	0	1.23	0	0	10.4	0	0	0	0	0	0	-38.54	-38.54
	Inverter Transformer	MV4-12 T	369049	4908803	2	0	0	56.1	56.1	1	4064.93	3.25	0	83.18	0	1.27	0	0	10.55	0	0	0	0	0	0	-38.94	-38.94
	Inverter Transformer	MV6-2 T	370091	4907339	2	0	0	56.1	56.1	1	4188.98	3.25	0	83.44	0	1.32	0	0	10.73	0	0	0	0	0	0	-39.44	-39.44
	Inverter Transformer	MV4-7 T	369040	4909001	2	0	0	56.1	56.1	1	4198.94	3.25	0	83.46	0	1.32	0	0	10.75	0	0	0	0	0	0	-39.47	-39.47
	Inverter Transformer	MV6-3 T	370202	4907140	2	0	0	56.1	56.1	1	4234.97	3.25	0	83.54	0	1.34	0	0	10.8	0	0	0	0	0	0	-39.61	-39.61
	Inverter Transformer	MV4-11 T	369269	4908855	2	0	0	56.1	56.1	1	4260.63	3.25	0	83.59	0	1.35	0	0	10.84	0	0	0	0	0	0	-39.71	-39.71
	Inverter Transformer	MV4-10 T	369307	4908858	2	0	0	56.1	56.1	1	4290.71	3.25	0	83.65	0	1.36	0	0	10.88	0	0	0	0	0	0	-39.83	-39.83
	Inverter Transformer	MV4-4 T	369033	4909199	2	0	0	56.1	56.1	1	4339.2	3.25	0	83.75	0	1.38	0	0	10.95	0	0	0	0	0	0	-40.02	-40.02
	Inverter Transformer	MV4-8 T	369262	4909001	2	0	0	56.1	56.1	1	4355.68	3.25	0	83.78	0	1.38	0	0	10.97	0	0	0	0	0	0	-40.08	-40.08
	Inverter Transformer	MV4-9 T	369284	4909001	2	0	0	56.1	56.1	1	4371.52	3.25	0	83.81	0	1.39	0	0	10.99	0	0	0	0	0	0	-40.14	-40.14
	Inverter Transformer	MV4-1 T	369017	4909397	2	0	0	56.1	56.1	1	4478.03	3.25	0	84.02	0	1.43	0	0	11.14	0	0	0	0	0	0	-40.54	-40.54
	Inverter Transformer	MV4-6 T	369249	4909192	2	0	0	56.1	56.1	1	4481.51	3.25	0	84.03	0	1.43	0	0	11.15	0	0	0	0	0	0	-40.55	-40.55
	Inverter Transformer	MV4-5 T	369283	4909199	2	0	0	56.1	56.1	1	4510.23	3.25	0	84.08	0	1.44	0	0	11.19	0	0	0	0	0	0	-40.66	-40.66
	Inverter Transformer	MV5-6 T	369987	4908507	2	0	0	56.1	56.1	1	4614.1	3.25	0	84.28	0	1.48	0	0	11.33	0	0	0	0	0	0	-41.04	-41.04
	Inverter Transformer	MV4-3 T	369234	4909397	2	0	0	56.1	56.1	1	4620.86	3.25	0	84.29	0	1.49	0	0	11.34	0	0	0	0	0	0	-41.06	-41.06
	Inverter Transformer	MV4-2 T	369267	4909397	2	0	0	56.1	56.1	1	4643.09	3.25	0	84.34	0	1.49	0	0	11.37	0	0	0	0	0	0	-41.15	-41.15
	Inverter Transformer	MV5-5 T	370021	4908690	2	0	0	56.1	56.1	1	4744.91	3.25	0	84.52	0	1.53	0	0	11.51	0	0	0	0	0	0	-41.51	-41.51
	Inverter Transformer	MV5-2 T	370011	4908853	2	0	0	56.1	56.1	1	4832.06	3.25	0	84.68	0	1.56	0	0	11.63	0	0	0	0	0	0	-41.82	-41.82
	Inverter Transformer	MV5-4 T	370330	4908707	2	0	0	56.1	56.1	1	5010.63	3.25	0	85	0	1.63	0	0	11.87	0	0	0	0	0	0	-42.44	-42.44
	Inverter Transformer	MV5-1 T	370015	4909142	2	0	0	56.1	56.1	1	5012.79	3.25	0	85	0	1.63	0	0	11.87	0	0	0	0	0	0	-42.44	-42.44
	Inverter Transformer	MV5-3 T	370237	4908851	2	0	0	56.1	56.1	1	5014.19	3.25	0	85	0	1.63	0	0	11.87	0	0	0	0	0	0	-42.45	-42.45
	Line Reactor	NGR	369421	4908787.5	5	0	0	45.4	45.4	1	4329.61	5.25	0	83.73	0	3.28	1.34	0.09	1.77	0	0	0	0	0	0	-44.77	-44.77
Limit. Valu	0	0																								
Level D/N:	29.4201	29.4201																								

Receiver: Existing Noise Receptor
ID: S-R27
X: 366299
Y: 4906069
Z: 4.5
Ground: 0

ISO	Description	ID	X	Y	Z	Ground	ReflOrd	LxT	LxN	L/A	Dist.	hm	Freq	Adiv	K0b	Agr	Abar	z	Aatm	Afol	Ahous	Cmet	CmetN	Dc	RL	LtotT	LtotN
	Inverter	MV2-3	365820	4906641	2	0	0	100.3	100.3	1	746.08	3.25	0	68.46	0	-0.38	0	0	9.95	0	0	0	0	0	0	22.29	22.29
	Inverter	MV2-4	365586	4906624	2	0	0	100.3	100.3	1	903.55	3.25	0	70.12	0	-0.29	0	0	10.58	0	0	0	0	0	0	19.91	19.91
	Sol_Luce Substation	S_Substation	369426	4908792	3.5	0	0	112.1	112.1	1	4146.43	5.25	0	83.35	0	0.65	3.07	0.25	7.56	0	0	0	0	0	0	17.45	17.45
	Inverter	MV2-1	365842	4906816	2	0	0	97.3	97.3	1	875.71	3.25	0	69.85	0	-0.31	0	0	10.48	0	0	0	0	0	0	17.3	17.3
	Inverter	MV1-12	365038	4905386	2	0	0	100.3	100.3	1	1434.09	3.25	0	74.13	0	-0.06	0	0	12.16	0	0	0	0	0	0	14.08	14.08
	Inverter	MV1-15	365315	4904994	2	0	0	100.3	100.3	1	1457.36	3.25	0	74.27	0	-0.05	0	0	12.22	0	0	0	0	0	0	13.87	13.87
	Inverter	MV1-4	364815	4905918	2	0	0	100.3	100.3	1	1491.66	3.25	0	74.47	0	-0.04	0	0	12.3	0	0	0	0	0	0	13.57	13.57
	Inverter	MV1-2	364753	4906063	2	0	0	100.3	100.3	1	1546.01	3.25	0	74.78	0	-0.02	0	0	12.44	0	0	0	0	0	0	13.11	13.11
	Inverter	MV1-8	364788	4905647	2	0	0	100.3	100.3	1	1568.82	3.25	0	74.91	0	-0.01	0	0	12.49	0	0	0	0	0	0	12.92	12.92
	Inverter	MV1-1	364715	4906166	2	0	0	100.3	100.3	1	1586.97	3.25	0	75.01	0	0	0	0	12.54	0	0	0	0	0	0	12.77	12.77
	Inverter	MV1-5	364671	4905892	2	0	0	100.3	100.3	1	1637.6	3.25	0	75.28	0	0.02	0	0	12.66	0	0	0	0	0	0	12.36	12.36
	Inverter	MV1-11	364655	4905414	2	0	0	100.3	100.3	1	1769.68	3.25	0	75.96	0	0.06	0	0	12.96	0	0	0	0	0	0	11.33	11.33
	Inverter	MV1-9	364561	4905646	2	0	0	100.3	100.3	1	1788.74	3.25	0	76.05	0	0.07	0	0	13	0	0	0	0	0	0	11.19	11.19
	Inverter	MV1-6	364477	4905835	2	0	0	100.3	100.3	1	1836.97	3.25	0	76.28	0	0.08	0	0	13.11	0	0	0	0	0	0	10.84	10.84
	Inverter	MV1-10	365004	4905564	2	0	0	97.3	97.3	1	1389.98	3.25	0	73.86	0	-0.08	0	0	12.04	0	0	0	0	0	0	11.48	11.48
	Inverter	MV3-18	367752	4907412	2	0	0	100.3	100.3	1	1978.6	3.25	0	76.93	0	0.12	0	0	13.42	0	0	0	0	0	0	9.85	9.85
	Inverter	MV1-7	364925	4905782	2	0	0	97.3	97.3	1	1403.66	3.25	0	73.95	0	-0.07	0	0	12.08	0	0	0	0	0	0	11.36	11.36
	Inverter	MV3-12	367668	4907594	2	0	0	100.3	100.3	1	2049.34	3.25	0	77.23	0	0.14	0	0	13.57	0	0	0	0	0	0	9.37	9.37
	Inverter	MV1-14	365163	4905049	2	0	0	97.3	97.3	1	1526.73	3.25	0	74.68	0	-0.02	0	0	12.39	0	0	0	0	0	0	10.27	10.27
	Inverter	MV3-13	367963	4907577	2	0	0	100.3	100.3	1	2245.65	3.25	0	78.03	0	0.2	0	0	13.96	0	0	0	0	0	0	8.13	8.13
	Inverter	MV3-17	368178	4907472	2	0	0	100.3	100.3	1	2345.01	3.25	0	78.4	0	0.22	0	0	14.16	0	0	0	0	0	0	7.53	7.53
	Inverter	MV3-7	367945	4907754	2	0	0	100.3	100.3	1	2355.54	3.25	0	78.44	0	0.22	0	0	14.18	0	0	0	0	0	0	7.47	7.47
	Inverter	MV3-19	368357	4907347	2	0	0	100.3	100.3	1	2422.53	3.25	0	78.69	0	0.24	0	0	14.31	0	0	0	0	0	0	7.08	7.08
	Inverter	MV2-2	365977	4906654	2	0	0	89.1	89.1	1	667.77	3.25	0	67.49	0	0.6	0	0	5.62	0	0	0	0	0	0	15.34	15.34
	Inverter	MV3-21	368478	4907206	2	0	0	100.3	100.3	1	2457.81	3.25	0	78.81	0	0.25	0	0	14.38	0	0	0	0	0	0	6.88	6.88
	Inverter	MV3-10	368167	4907669	2	0	0	100.3	100.3	1	2459.56	3.25	0	78.82	0	0.25	0	0	14.38	0	0	0	0	0	0	6.87	6.87
	Inverter	MV3-3	367939	4907927	2	0	0	100.3	100.3	1	2478.26	3.25	0	78.88	0	0.25	0	0	14.42	0	0	0	0	0	0	6.76	6.76
	Inverter	MV3-15	368357	4907477	2	0	0	100.3	100.3	1	2493.56	3.25	0	78.94	0	0.26	0	0	14.45	0	0	0	0	0	0	6.67	6.67
	Inverter	MV1-13	364731	4905241	2	0	0	97.3	97.3	1	1773.19	3.25	0	75.98	0	0.06	0	0	12.97	0	0	0	0	0	0	8.31	8.31

Inverter	MV3-6	368162	4907834	2	0	0	100.3	100.3	1	2566.32	3.25	0	79.19	0	0.27	0	0	14.58	0	0	0	0	0	0	6.27	6.27
Inverter	MV3-11	368346	4907662	2	0	0	100.3	100.3	1	2593.81	3.25	0	79.28	0	0.28	0	0	14.63	0	0	0	0	0	0	6.12	6.12
Inverter	MV3-16	368514	4907475	2	0	0	100.3	100.3	1	2623.56	3.25	0	79.38	0	0.28	0	0	14.69	0	0	0	0	0	0	5.96	5.96
Inverter	MV3-20	368689	4907317	2	0	0	100.3	100.3	1	2696.22	3.25	0	79.62	0	0.3	0	0	14.82	0	0	0	0	0	0	5.57	5.57
Inverter	MV3-9	368512	4907703	2	0	0	100.3	100.3	1	2750.88	3.25	0	79.79	0	0.31	0	0	14.92	0	0	0	0	0	0	5.29	5.29
Inverter	MV3-14	368684	4907498	2	0	0	100.3	100.3	1	2780.34	3.25	0	79.88	0	0.32	0	0	14.98	0	0	0	0	0	0	5.13	5.13
Inverter	MV3-8	368680	4907712	2	0	0	100.3	100.3	1	2892.86	3.25	0	80.23	0	0.34	0	0	15.18	0	0	0	0	0	0	4.56	4.56
Inverter	MV6-2	370085	4907339	2	0	0	100.3	100.3	1	3993.33	3.25	0	83.03	0	0.53	0	0	17.04	0	0	0	0	0	0	-0.28	-0.28
Inverter	MV4-7	369035	4909001	2	0	0	100.3	100.3	1	4010.28	3.25	0	83.06	0	0.53	0	0	17.06	0	0	0	0	0	0	-0.34	-0.34
Inverter	MV6-3	370207	4907140	2	0	0	100.3	100.3	1	4052.1	3.25	0	83.15	0	0.53	0	0	17.13	0	0	0	0	0	0	-0.51	-0.51
Inverter	MV4-11	369264	4908855	2	0	0	100.3	100.3	1	4068.54	3.25	0	83.19	0	0.54	0	0	17.16	0	0	0	0	0	0	-0.57	-0.57
Inverter	MV4-10	369312	4908858	2	0	0	100.3	100.3	1	4105.69	3.25	0	83.27	0	0.54	0	0	17.22	0	0	0	0	0	0	-0.71	-0.71
Inverter	MV4-4	369027	4909199	2	0	0	100.3	100.3	1	4151.97	3.25	0	83.37	0	0.55	0	0	17.29	0	0	0	0	0	0	-0.89	-0.89
Inverter	MV4-8	369256	4909001	2	0	0	100.3	100.3	1	4164.19	3.25	0	83.39	0	0.55	0	0	17.31	0	0	0	0	0	0	-0.94	-0.94
Inverter	MV4-9	369289	4909001	2	0	0	100.3	100.3	1	4187.69	3.25	0	83.44	0	0.55	0	0	17.35	0	0	0	0	0	0	-1.03	-1.03
Inverter	MV4-6	369243	4909192	2	0	0	100.3	100.3	1	4291.88	3.25	0	83.65	0	0.57	0	0	17.51	0	0	0	0	0	0	-1.42	-1.42
Inverter	MV4-1	369011	4909397	2	0	0	100.3	100.3	1	4293.08	3.25	0	83.66	0	0.57	0	0	17.51	0	0	0	0	0	0	-1.42	-1.42
Inverter	MV4-5	369289	4909199	2	0	0	100.3	100.3	1	4328.63	3.25	0	83.73	0	0.57	0	0	17.57	0	0	0	0	0	0	-1.55	-1.55
Inverter	MV4-3	369229	4909397	2	0	0	100.3	100.3	1	4434.02	3.25	0	83.94	0	0.58	0	0	17.73	0	0	0	0	0	0	-1.94	-1.94
Inverter	MV4-2	369272	4909397	2	0	0	100.3	100.3	1	4462.55	3.25	0	83.99	0	0.59	0	0	17.77	0	0	0	0	0	0	-2.04	-2.04
Inverter	MV5-5	370015	4908690	2	0	0	100.3	100.3	1	4547.34	3.25	0	84.16	0	0.6	0	0	17.9	0	0	0	0	0	0	-2.34	-2.34
Inverter	MV5-2	370006	4908853	2	0	0	100.3	100.3	1	4636	3.25	0	84.32	0	0.61	0	0	18.04	0	0	0	0	0	0	-2.65	-2.65
Inverter	MV5-4	370324	4908707	2	0	0	100.3	100.3	1	4812.45	3.25	0	84.65	0	0.62	0	0	18.3	0	0	0	0	0	0	-3.26	-3.26
Inverter	MV5-3	370231	4908851	2	0	0	100.3	100.3	1	4816.65	3.25	0	84.65	0	0.62	0	0	18.31	0	0	0	0	0	0	-3.28	-3.28
Inverter	MV5-1	370020	4909142	2	0	0	100.3	100.3	1	4825.89	3.25	0	84.67	0	0.63	0	0	18.32	0	0	0	0	0	0	-3.31	-3.31
Inverter	MV6-1	370235	4907364	2	0	0	97.3	97.3	1	4143.56	3.25	0	83.35	0	0.55	0	0	17.28	0	0	0	0	0	0	-3.86	-3.86
DSTATCOM - 10 MVAR #2	DSAT2	369403	4908757	2.5	0	0	96.6	96.6	1	4106.11	3.5	0	83.27	0	3.58	0	0	2.9	0	0	0	0	0	0	6.88	6.88
DSTATCOM - 10 MVAR #1	DSAT1	369437	4908757	2.5	0	0	96.6	96.6	1	4131.88	3.5	0	83.32	0	3.59	0	0	2.91	0	0	0	0	0	0	6.81	6.81
Inverter	MV1-3	364440	4906039	2	0	0	89.1	89.1	1	1859.24	3.25	0	76.39	0	0.87	0	0	7.81	0	0	0	0	0	0	3.98	3.98
Gardiner Substation	G_Sub	366586.3	4903349.9	2.5	0	0	90.8	90.8	1	2734.24	4.25	0	79.74	0	1.08	3.44	0.36	5.55	0	0	0	0	0	0	0.97	0.97
SubstationTransformer	W_ST	369711.17	4906112.3	2.5	0	0	92	92	1	3412.44	4.25	0	81.66	0	1.19	2.82	0.29	6.56	0	0	0	0	0	0	-0.26	-0.26
Inverter	MV3-22	368656	4907142	2	0	0	89.1	89.1	1	2589.75	3.25	0	79.27	0	1.05	0	0	8.99	0	0	0	0	0	0	-0.24	-0.24
Inverter	MV3-1	368156	4907976	2	0	0	89.1	89.1	1	2661.79	3.25	0	79.5	0	1.06	0	0	9.1	0	0	0	0	0	0	-0.61	-0.61
Inverter	MV3-5	368340	4907843	2	0	0	89.1	89.1	1	2704.21	3.25	0	79.64	0	1.07	0	0	9.16	0	0	0	0	0	0	-0.82	-0.82
Inverter	MV3-4	368502	4907925	2	0	0	89.1	89.1	1	2880.62	3.25	0	80.19	0	1.12	0	0	9.44	0	0	0	0	0	0	-1.68	-1.68
Inverter	MV3-2	368671	4907928	2	0	0	89.1	89.1	1	3013.68	3.25	0	80.58	0	1.15	0	0	9.64	0	0	0	0	0	0	-2.31	-2.31
Westbrook Inverter Enclosur	W_INV2	369374	4906388	2	0	0	89.1	89.1	1	3091.5	3.25	0	80.8	0	1.17	0	0	9.76	0	0	0	0	0	0	-2.67	-2.67
Westbrook Inverter Enclosur	W_INV3	369508	4906164	2	0	0	89.1	89.1	1	3210.41	3.25	0	81.13	0	1.2	0	0	9.93	0	0	0	0	0	0	-3.21	-3.21
Inverters	G_Inv1	366526.4	4903225.8	2	0	0	87.7	87.7	1	2852.28	3.25	0	80.1	0	2.68	0	0	3.61	0	0	0	0	0	0	1.26	1.26
Inverters	G_Inv2	366676.9	4903239.1	2	0	0	87.7	87.7	1	2855.02	3.25	0	80.11	0	2.68	0	0	3.61	0	0	0	0	0	0	1.25	1.25
Westbrook Inverter Enclosur	W_INV4	369673	4906164	2	0	0	89.1	89.1	1	3375.34	3.25	0	81.57	0	1.24	0	0	10.18	0	0	0	0	0	0	-3.93	-3.93
Westbrook Inverter Enclosur	W_INV5	369719	4906574	2	0	0	89.1	89.1	1	3457.08	3.25	0	81.77	0	1.26	0	0	10.3	0	0	0	0	0	0	-4.27	-4.27
Westbrook Inverter Enclosur	W_INV7	369780	4906417	2	0	0	89.1	89.1	1	3498.35	3.25	0	81.88	0	1.27	0	0	10.36	0	0	0	0	0	0	-4.45	-4.45
Inverters	G_Inv3	366583.7	4903091.4	2	0	0	87.7	87.7	1	2991.18	3.25	0	80.52	0	2.7	0	0	3.77	0	0	0	0	0	0	0.68	0.68
Inverters	G_Inv4	366732.8	4903105	2	0	0	87.7	87.7	1	2995.58	3.25	0	80.53	0	2.7	0	0	3.77	0	0	0	0	0	0	0.66	0.66
Westbrook Inverter Enclosur	W_INV6	369875	4906578	2	0	0	89.1	89.1	1	3612.04	3.25	0	82.16	0	1.3	0	0	10.53	0	0	0	0	0	0	-4.92	-4.92
Inverters	G_Inv5	366638.5	4902958.1	2	0	0	87.7	87.7	1	3129.37	3.25	0	80.91	0	2.71	0	0	3.92	0	0	0	0	0	0	0.12	0.12
Inverters	G_Inv6	366788.5	4902972	2	0	0	87.7	87.7	1	3135.45	3.25	0	80.93	0	2.71	0	0	3.93	0	0	0	0	0	0	0.1	0.1
Inverter	MV4-13	369051	4908605	2	0	0	89.1	89.1	1	3742.3	3.25	0	82.46	0	1.33	0	0	10.72	0	0	0	0	0	0	-5.45	-5.45
Inverter	MV4-15	369176	4908481	2	0	0	89.1	89.1	1	3754.31	3.25	0	82.49	0	1.33	0	0	10.73	0	0	0	0	0	0	-5.5	-5.5
Fixed Reactor Bank 1	FRB1	369378	4908755	6	0	0	89.8	89.8	1	4085.93	5.25	0	83.23	0	-0.71	0	0	7.48	0	0	0	0	0	0	-0.22	-0.22
Inverter	MV4-14	369176	4908507	2	0	0	89.1	89.1	1	3771.07	3.25	0	82.53	0	1.34	0	0	10.76	0	0	0	0	0	0	-5.56	-5.56
Fixed Reactor Bank 2	FRB2	369464	4908755	6	0	0	89.8	89.8	1	4151.12	5.25	0	83.36	0	-0.7	0	0	7.56	0	0	0	0	0	0	-0.45	-0.45
Inverters	G_Inv7	366694.6	4902824.7	2	0	0	87.7	87.7	1	3268.33	3.25	0	81.29	0	2.73	0	0	4.07	0	0	0	0	0	0	-0.42	-0.42
Inverters	G_Inv8	366844.5	4902838.5	2	0	0	87.7	87.7	1	3276.23	3.25	0	81.31	0	2.73	0	0	4.08	0	0	0	0	0	0	-0.46	-0.46
Inverter	MV4-12	369043	4908803	2	0	0	89.1	89.1	1	3873.54	3.25	0	82.76	0	1.36	0	0	10.9	0	0	0	0	0	0	-5.97	-5.97
Inverters	G_Inv9	366750.9	4902691.8	2	0	0	87.7	87.7	1	3407.3	3.25	0	81.65	0	2.74	0	0	4.23	0	0	0	0	0	0	-0.95	-0.95
Inverters	G_Inv10	366900.7	4902704.8	2	0	0	87.7	87.7	1	3417.59	3.25	0	81.67	0	2.74	0	0	4.24	0	0	0	0	0	0	-0.99	-0.99
Inverter	MV5-6	369982	4908507	2	0	0	89.1	89.1	1	4416.82	3.25	0	83.9	0	1.5	0	0	11.67	0	0	0	0	0	0	-8.01	-8.01
Westbrook Inverter Enclosur	W_INV1	369409	4906578	2	0	0	86.1	86.1	1	3151.38	3.25	0	80.97	0	1.18	0	0	9.85	0	0	0	0	0	0	-5.94	-5.94
Inverter	MV6-4	370250	4906966	2	0	0	86.1	86.1	1	4051.54	3.25	0	83.15	0	1.41	0	0	11.16	0	0	0	0	0	0	-9.66	-9.66
Inverter Transformer	MV2-1 T	365836	4906816	2	0	0	69.4	69.4	1	878.85	3.25	0	69.88	0	1.57	0	0	3.64	0	0	0	0	0	0	-5.74	-5.74
Westbrook Inverter Transfor	W_INVTR1	369403	4906578	2	0	0	78.2	78.2	1	3145.46	3.25	0	80.95	0	-2.75	0	0	1.72	0	0	0	0	0	0	-1.68	-1.68
Westbrook Inverter Transfor	W_INVTR2	369368	4906388	2	0	0	77.3	77.3	1	3085.54	3.25	0	80.79	0	-2.74	0	0	1.69	0	0	0	0	0	0	-2.4	-2.4
Westbrook Inverter Transfor	W_INVTR3	369514	4906164	2	0	0	77.3	77.3	1	3216.4	3.25	0	81.15	0	-2.77	0	0	1.75	0	0	0	0	0	0	-2.78	-2.78
Westbrook Inverter Transfor	W_INVTR4	369679	4906164	2	0	0	77.3	77.3	1	3381.34	3.25	0	81.58	0	-2.81	0	0	1.81	0	0	0	0	0	0	-3.24	-3.24
Westbrook Inverter Transfor	W_INVTR5	369725	4906574	2	0	0	77.3	77.3	1	3463.02	3.25	0	81.79	0	-2.83	0	0	1.85	0	0	0	0	0	0	-3.46	-3.46
Inverter Transformer	MV1-10 T	365010	4905564	2	0	0	69.4	69.4	1	1384.4	3.25	0	73.83	0	1.92	0	0	4.3	0	0	0	0	0	0	-10.69	-10.69
Westbrook Inverter Transfor	W_INVTR7	369786	4906417	2	0	0	77.3	77.3	1	3504.32	3.25	0	81.89	0	-2.85	0	0	1.86	0	0	0	0	0	0	-3.57	-3.57
Inverter Transformer	MV1-7 T	364919	4905782	2	0	0	69.4	69.4	1	1409.53	3.25	0	73.98	0	1.93	0	0	4.33	0	0	0	0	0	0	-10.89	-10.89
Westbrook Inverter Transfor	W_INVTR6	369881	4906578	2	0	0	77.3	77.3	1	3617.98	3.25	0	82.17	0	-2.87	0	0	1.91	0	0	0	0	0	0	-3.86	-3.86
Inverter Transformer	MV1-14 T	365157	4905049	2	0	0	69.4	69.4	1	1531.2	3.25	0	74.7	0	1.99	0	0	4.47	0	0	0	0	0	0	-11.81	-11.81
Inverter Transformer	MV1-13 T	364725	4905241	2	0	0	69.4	69.4	1	1778.5	3.25	0	76	0	2.09	0	0	4.74	0	0	0	0	0	0	-13.48	-13.48
Inverter Transformer	MV2-2 T	365982	4906654	2	0	0	56.1	56.1	1	665.37	3.25	0	67.46	0	-0.09	0	0	4.04	0	0	0	0	0	0	-15.35	-15.35

	Inverter Transformer	MV2-3 T	365814	4906641	2	0	0	56.1	56.1	1	749.94	3.25	0	68.5	0	-0.07	0	0	4.27	0	0	0	0	0	0	-16.64	-16.64
	Inverter Transformer	MV6-4 T	370244	4906966	2	0	0	69.4	69.4	1	4045.69	3.25	0	83.14	0	2.8	0	0	6.71	0	0	0	0	0	0	-23.3	-23.3
	Inverter Transformer	MV6-1 T	370230	4907364	2	0	0	69.4	69.4	1	4138.82	3.25	0	83.34	0	2.82	0	0	6.78	0	0	0	0	0	0	-23.59	-23.59
	Inverter Transformer	MV2-4 T	365590	4906628	2	0	0	56.1	56.1	1	902.87	3.25	0	70.11	0	-0.02	0	0	4.65	0	0	0	0	0	0	-18.69	-18.69
	Inverter Transformer	MV1-12 T	365044	4905386	2	0	0	56.1	56.1	1	1428.82	3.25	0	74.1	0	0.17	0	0	5.86	0	0	0	0	0	0	-24.08	-24.08
	Inverter Transformer	MV1-15 T	365309	4904994	2	0	0	56.1	56.1	1	1461.41	3.25	0	74.3	0	0.18	0	0	5.93	0	0	0	0	0	0	-24.36	-24.36
	Inverter Transformer	MV1-4 T	364821	4905918	2	0	0	56.1	56.1	1	1485.7	3.25	0	74.44	0	0.19	0	0	5.99	0	0	0	0	0	0	-24.56	-24.56
	Inverter Transformer	MV1-2 T	364759	4906063	2	0	0	56.1	56.1	1	1540.01	3.25	0	74.75	0	0.21	0	0	6.1	0	0	0	0	0	0	-25.01	-25.01
	Inverter Transformer	MV1-8 T	364782	4905647	2	0	0	56.1	56.1	1	1574.6	3.25	0	74.94	0	0.23	0	0	6.18	0	0	0	0	0	0	-25.29	-25.29
	Inverter Transformer	MV1-1 T	364721	4906166	2	0	0	56.1	56.1	1	1580.98	3.25	0	74.98	0	0.23	0	0	6.19	0	0	0	0	0	0	-25.34	-25.34
	Inverter Transformer	MV1-5 T	364676	4905892	2	0	0	56.1	56.1	1	1632.62	3.25	0	75.26	0	0.25	0	0	6.3	0	0	0	0	0	0	-25.75	-25.75
	Inverter Transformer	MV1-11 T	364649	4905414	2	0	0	56.1	56.1	1	1775.26	3.25	0	75.99	0	0.31	0	0	6.59	0	0	0	0	0	0	-26.83	-26.83
	Inverter Transformer	MV1-9 T	364555	4905646	2	0	0	56.1	56.1	1	1794.57	3.25	0	76.08	0	0.32	0	0	6.63	0	0	0	0	0	0	-26.97	-26.97
	Inverter Transformer	MV1-6 T	364482	4905835	2	0	0	56.1	56.1	1	1832.01	3.25	0	76.26	0	0.33	0	0	6.71	0	0	0	0	0	0	-27.24	-27.24
	Inverter Transformer	MV1-3 T	364435	4906039	2	0	0	56.1	56.1	1	1864.24	3.25	0	76.41	0	0.35	0	0	6.77	0	0	0	0	0	0	-27.47	-27.47
	Inverter Transformer	MV3-18 T	367757	4907412	2	0	0	56.1	56.1	1	1982.28	3.25	0	76.94	0	0.4	0	0	7.01	0	0	0	0	0	0	-28.29	-28.29
	Inverter Transformer	MV3-12 T	367674	4907594	2	0	0	56.1	56.1	1	2053.35	3.25	0	77.25	0	0.43	0	0	7.15	0	0	0	0	0	0	-28.77	-28.77
	Inverter Transformer	MV3-13 T	367958	4907577	2	0	0	56.1	56.1	1	2241.95	3.25	0	78.01	0	0.51	0	0	7.51	0	0	0	0	0	0	-29.97	-29.97
	Inverter Transformer	MV3-17 T	368183	4907472	2	0	0	56.1	56.1	1	2349.01	3.25	0	78.42	0	0.55	0	0	7.71	0	0	0	0	0	0	-30.62	-30.62
	Inverter Transformer	MV3-7 T	367951	4907754	2	0	0	56.1	56.1	1	2359.73	3.25	0	78.46	0	0.56	0	0	7.73	0	0	0	0	0	0	-30.69	-30.69
	Inverter Transformer	MV3-19 T	368352	4907347	2	0	0	56.1	56.1	1	2418.28	3.25	0	78.67	0	0.58	0	0	7.84	0	0	0	0	0	0	-31.03	-31.03
	Inverter Transformer	MV3-10 T	368162	4907669	2	0	0	56.1	56.1	1	2455.76	3.25	0	78.8	0	0.6	0	0	7.91	0	0	0	0	0	0	-31.25	-31.25
	Inverter Transformer	MV3-21 T	368484	4907206	2	0	0	56.1	56.1	1	2463.13	3.25	0	78.83	0	0.6	0	0	7.92	0	0	0	0	0	0	-31.29	-31.29
	Inverter Transformer	MV3-3 T	367944	4907927	2	0	0	56.1	56.1	1	2481.57	3.25	0	78.89	0	0.61	0	0	7.96	0	0	0	0	0	0	-31.4	-31.4
	Inverter Transformer	MV3-15 T	368351	4907477	2	0	0	56.1	56.1	1	2488.61	3.25	0	78.92	0	0.61	0	0	7.97	0	0	0	0	0	0	-31.44	-31.44
	Inverter Transformer	MV3-6 T	368156	4907834	2	0	0	56.1	56.1	1	2561.97	3.25	0	79.17	0	0.64	0	0	8.1	0	0	0	0	0	0	-31.86	-31.86
	Inverter Transformer	MV3-11 T	368340	4907662	2	0	0	56.1	56.1	1	2589.08	3.25	0	79.26	0	0.65	0	0	8.15	0	0	0	0	0	0	-32.01	-32.01
	Inverter Transformer	MV3-22 T	368661	4907142	2	0	0	56.1	56.1	1	2594.3	3.25	0	79.28	0	0.66	0	0	8.16	0	0	0	0	0	0	-32.04	-32.04
	Inverter Transformer	MV3-16 T	368509	4907475	2	0	0	56.1	56.1	1	2619.34	3.25	0	79.36	0	0.67	0	0	8.2	0	0	0	0	0	0	-32.18	-32.18
	Inverter Transformer	MV3-1 T	368150	4907976	2	0	0	56.1	56.1	1	2657.6	3.25	0	79.49	0	0.68	0	0	8.27	0	0	0	0	0	0	-32.39	-32.39
	Inverter Transformer	MV3-20 T	368683	4907317	2	0	0	56.1	56.1	1	2690.9	3.25	0	79.6	0	0.7	0	0	8.33	0	0	0	0	0	0	-32.57	-32.57
	Inverter Transformer	MV3-5 T	368335	4907843	2	0	0	56.1	56.1	1	2700.44	3.25	0	79.63	0	0.7	0	0	8.35	0	0	0	0	0	0	-32.62	-32.62
	Inverter Transformer	MV3-9 T	368517	4907703	2	0	0	56.1	56.1	1	2754.9	3.25	0	79.8	0	0.73	0	0	8.45	0	0	0	0	0	0	-32.91	-32.91
	Inverter Transformer	MV3-14 T	368678	4907498	2	0	0	56.1	56.1	1	2775.19	3.25	0	79.87	0	0.73	0	0	8.48	0	0	0	0	0	0	-33.02	-33.02
	Inverter Transformer	MV3-4 T	368507	4907925	2	0	0	56.1	56.1	1	2884.44	3.25	0	80.2	0	0.78	0	0	8.67	0	0	0	0	0	0	-33.59	-33.59
	Inverter Transformer	MV3-8 T	368685	4907712	2	0	0	56.1	56.1	1	2896.97	3.25	0	80.24	0	0.79	0	0	8.69	0	0	0	0	0	0	-33.66	-33.66
	Inverter Transformer	MV3-2 T	368677	4907928	2	0	0	56.1	56.1	1	3018.41	3.25	0	80.6	0	0.84	0	0	8.9	0	0	0	0	0	0	-34.27	-34.27
	Inverter Transformer	MV4-13 T	369057	4908605	2	0	0	56.1	56.1	1	3746.71	3.25	0	82.47	0	1.14	0	0	10.07	0	0	0	0	0	0	-37.63	-37.63
	Inverter Transformer	MV4-15 T	369170	4908481	2	0	0	56.1	56.1	1	3749.72	3.25	0	82.48	0	1.14	0	0	10.08	0	0	0	0	0	0	-37.64	-37.64
	Inverter Transformer	MV4-14 T	369182	4908507	2	0	0	56.1	56.1	1	3775.65	3.25	0	82.54	0	1.15	0	0	10.12	0	0	0	0	0	0	-37.75	-37.75
	Inverter Transformer	MV4-12 T	369049	4908803	2	0	0	56.1	56.1	1	3877.79	3.25	0	82.77	0	1.19	0	0	10.27	0	0	0	0	0	0	-38.18	-38.18
	Inverter Transformer	MV6-2 T	370091	4907339	2	0	0	56.1	56.1	1	3999.02	3.25	0	83.04	0	1.24	0	0	10.45	0	0	0	0	0	0	-38.68	-38.68
	Inverter Transformer	MV4-7 T	369040	4909001	2	0	0	56.1	56.1	1	4013.69	3.25	0	83.07	0	1.25	0	0	10.48	0	0	0	0	0	0	-38.74	-38.74
	Inverter Transformer	MV6-3 T	370202	4907140	2	0	0	56.1	56.1	1	4047.28	3.25	0	83.14	0	1.26	0	0	10.53	0	0	0	0	0	0	-38.87	-38.87
	Inverter Transformer	MV4-11 T	369269	4908855	2	0	0	56.1	56.1	1	4072.19	3.25	0	83.2	0	1.27	0	0	10.56	0	0	0	0	0	0	-38.97	-38.97
	Inverter Transformer	MV4-10 T	369307	4908858	2	0	0	56.1	56.1	1	4102.02	3.25	0	83.26	0	1.28	0	0	10.61	0	0	0	0	0	0	-39.09	-39.09
	Inverter Transformer	MV4-4 T	369033	4909199	2	0	0	56.1	56.1	1	4155.92	3.25	0	83.37	0	1.31	0	0	10.68	0	0	0	0	0	0	-39.31	-39.31
	Inverter Transformer	MV4-8 T	369262	4909001	2	0	0	56.1	56.1	1	4168.45	3.25	0	83.4	0	1.31	0	0	10.7	0	0	0	0	0	0	-39.35	-39.35
	Inverter Transformer	MV4-9 T	369284	4909001	2	0	0	56.1	56.1	1	4184.12	3.25	0	83.43	0	1.32	0	0	10.73	0	0	0	0	0	0	-39.42	-39.42
	Inverter Transformer	MV4-6 T	369249	4909192	2	0	0	56.1	56.1	1	4296	3.25	0	83.66	0	1.36	0	0	10.89	0	0	0	0	0	0	-39.85	-39.85
	Inverter Transformer	MV4-1 T	369017	4909397	2	0	0	56.1	56.1	1	4296.87	3.25	0	83.66	0	1.36	0	0	10.89	0	0	0	0	0	0	-39.85	-39.85
	Inverter Transformer	MV4-5 T	369283	4909199	2	0	0	56.1	56.1	1	4324.48	3.25	0	83.72	0	1.37	0	0	10.93	0	0	0	0	0	0	-39.96	-39.96
	Inverter Transformer	MV5-6 T	369987	4908507	2	0	0	56.1	56.1	1	4420.99	3.25	0	83.91	0	1.41	0	0	11.06	0	0	0	0	0	0	-40.33	-40.33
	Inverter Transformer	MV4-3 T	369234	4909397	2	0	0	56.1	56.1	1	4437.32	3.25	0	83.94	0	1.42	0	0	11.09	0	0	0	0	0	0	-40.39	-40.39
	Inverter Transformer	MV4-2 T	369267	4909397	2	0	0	56.1	56.1	1	4459.22	3.25	0	83.99	0	1.42	0	0	11.12	0	0	0	0	0	0	-40.47	-40.47
	Inverter Transformer	MV5-5 T	370021	4908690	2	0	0	56.1	56.1	1	4552.24	3.25	0	84.16	0	1.46	0	0	11.25	0	0	0	0	0	0	-40.81	-40.81
	Inverter Transformer	MV5-2 T	370011	4908853	2	0	0	56.1	56.1	1	4640	3.25	0	84.33	0	1.49	0	0	11.37	0	0	0	0	0	0	-41.13	-41.13
	Inverter Transformer	MV5-4 T	370330	4908707	2	0	0	56.1	56.1	1	4817.47	3.25	0	84.66	0	1.56	0	0	11.61	0	0	0	0	0	0	-41.77	-41.77
	Inverter Transformer	MV5-3 T	370237	4908851	2	0	0	56.1	56.1	1	4821.55	3.25	0	84.66	0	1.56	0	0	11.62	0	0	0	0	0	0	-41.78	-41.78
	Inverter Transformer	MV5-1 T	370015	4909142	2	0	0	56.1	56.1	1	4822.03	3.25	0	84.66	0	1.56	0	0	11.62	0	0	0	0	0	0	-41.78	-41.78
	Line Reactor	NGR	369421	4908787.5	5	0	0	45.4	45.4	1	4139.7	5.25	0	83.34	0	3.28	1.34	0.09	1.69	0	0	0	0	0	0	-44.3	-44.3
Limit. Valu	0	0																								
Level D/N:	28.9293	28.9293																								

Receiver: Existing Noise Receptor
ID: S-R28
X: 365856
Y: 4905876
Z: 4.5
Ground: 0

ISO	Description	ID	X	Y	Z	Ground	ReflOrd	LxT	LxN	L/A	Dist.	hm	Freq	Adiv	K0b	Agr	Abar	z	Aatm	Afol	Ahous	Cmet	CmetN	Dc	RL	LtotT	LtotN
	Inverter	MV2-3	365820	4906641	2	0	0	100.3	100.3	1	765.85	3.25	0	68.68	0	-0.37	0	0	10.04	0	0	0	0	0	0	21.96	21.96
	Inverter	MV2-4	365586	4906624	2	0	0	100.3	100.3	1	795.24	3.25	0	69.01	0	-0.35	0	0	10.16	0	0	0	0	0	0	21.5	21.5

Inverter	MV1-12	365038	4905386	2	0	0	100.3	100.3	1	953.54	3.25	0	70.59	0	-0.27	0	0	10.75	0	0	0	0	0	0	19.24	19.24
Inverter	MV1-15	365315	4904994	2	0	0	100.3	100.3	1	1034.7	3.25	0	71.3	0	-0.23	0	0	11.02	0	0	0	0	0	0	18.22	18.22
Inverter	MV1-4	364815	4905918	2	0	0	100.3	100.3	1	1041.85	3.25	0	71.36	0	-0.23	0	0	11.05	0	0	0	0	0	0	18.14	18.14
Inverter	MV1-8	364788	4905647	2	0	0	100.3	100.3	1	1092.28	3.25	0	71.77	0	-0.2	0	0	11.21	0	0	0	0	0	0	17.54	17.54
Inverter	MV1-2	364753	4906063	2	0	0	100.3	100.3	1	1118.74	3.25	0	71.97	0	-0.19	0	0	11.29	0	0	0	0	0	0	17.24	17.24
Inverter	MV1-1	364715	4906166	2	0	0	100.3	100.3	1	1177.28	3.25	0	72.42	0	-0.16	0	0	11.46	0	0	0	0	0	0	16.6	16.6
Inverter	MV1-5	364671	4905892	2	0	0	100.3	100.3	1	1185.11	3.25	0	72.48	0	-0.16	0	0	11.48	0	0	0	0	0	0	16.51	16.51
Sol_Luce Substation	S_Substation	369426	4908792	3.5	0	0	112.1	112.1	1	4609.55	5.25	0	84.27	0	0.78	2.96	0.25	8.15	0	0	0	0	0	0	15.91	15.91
Inverter	MV1-10	365004	4905564	2	0	0	97.3	97.3	1	907.33	3.25	0	70.16	0	-0.29	0	0	10.59	0	0	0	0	0	0	16.86	16.86
Inverter	MV1-11	364655	4905414	2	0	0	100.3	100.3	1	1286.8	3.25	0	73.19	0	-0.12	0	0	11.77	0	0	0	0	0	0	15.47	15.47
Inverter	MV1-9	364561	4905646	2	0	0	100.3	100.3	1	1315.27	3.25	0	73.38	0	-0.11	0	0	11.85	0	0	0	0	0	0	15.19	15.19
Inverter	MV1-7	364925	4905782	2	0	0	97.3	97.3	1	935.74	3.25	0	70.42	0	-0.28	0	0	10.69	0	0	0	0	0	0	16.47	16.47
Inverter	MV2-1	365842	4906816	2	0	0	97.3	97.3	1	940.11	3.25	0	70.46	0	-0.28	0	0	10.71	0	0	0	0	0	0	16.42	16.42
Inverter	MV1-6	364477	4905835	2	0	0	100.3	100.3	1	1379.61	3.25	0	73.8	0	-0.08	0	0	12.02	0	0	0	0	0	0	14.58	14.58
Inverter	MV1-14	365163	4905049	2	0	0	97.3	97.3	1	1078.97	3.25	0	71.66	0	-0.21	0	0	11.16	0	0	0	0	0	0	14.7	14.7
Inverter	MV1-13	364731	4905241	2	0	0	97.3	97.3	1	1291.84	3.25	0	73.22	0	-0.12	0	0	11.78	0	0	0	0	0	0	12.42	12.42
Inverter	MV3-18	367752	4907412	2	0	0	100.3	100.3	1	2440.11	3.25	0	78.75	0	0.24	0	0	14.34	0	0	0	0	0	0	6.98	6.98
Inverter	MV3-12	367668	4907594	2	0	0	100.3	100.3	1	2496.97	3.25	0	78.95	0	0.26	0	0	14.45	0	0	0	0	0	0	6.65	6.65
Inverter	MV3-13	367963	4907577	2	0	0	100.3	100.3	1	2707.92	3.25	0	79.65	0	0.3	0	0	14.85	0	0	0	0	0	0	5.51	5.51
Inverter	MV3-7	367945	4907754	2	0	0	100.3	100.3	1	2809.06	3.25	0	79.97	0	0.32	0	0	15.03	0	0	0	0	0	0	4.99	4.99
Inverter	MV3-17	368178	4907472	2	0	0	100.3	100.3	1	2817.61	3.25	0	80	0	0.33	0	0	15.05	0	0	0	0	0	0	4.94	4.94
Inverter	MV2-2	365977	4906654	2	0	0	89.1	89.1	1	787.36	3.25	0	68.92	0	0.64	0	0	5.89	0	0	0	0	0	0	13.6	13.6
Inverter	MV3-19	368357	4907347	2	0	0	100.3	100.3	1	2901.53	3.25	0	80.25	0	0.34	0	0	15.2	0	0	0	0	0	0	4.52	4.52
Inverter	MV3-3	367939	4907927	2	0	0	100.3	100.3	1	2923.27	3.25	0	80.32	0	0.35	0	0	15.24	0	0	0	0	0	0	4.41	4.41
Inverter	MV3-10	368167	4907669	2	0	0	100.3	100.3	1	2924.99	3.25	0	80.32	0	0.35	0	0	15.24	0	0	0	0	0	0	4.4	4.4
Inverter	MV3-21	368478	4907206	2	0	0	100.3	100.3	1	2940.03	3.25	0	80.37	0	0.35	0	0	15.27	0	0	0	0	0	0	4.33	4.33
Inverter	MV3-15	368357	4907477	2	0	0	100.3	100.3	1	2969.55	3.25	0	80.45	0	0.36	0	0	15.32	0	0	0	0	0	0	4.18	4.18
Inverter	MV3-6	368162	4907834	2	0	0	100.3	100.3	1	3025.13	3.25	0	80.61	0	0.37	0	0	15.42	0	0	0	0	0	0	3.91	3.91
Inverter	MV3-11	368346	4907662	2	0	0	100.3	100.3	1	3064.29	3.25	0	80.73	0	0.37	0	0	15.49	0	0	0	0	0	0	3.73	3.73
Inverter	MV3-16	368514	4907475	2	0	0	100.3	100.3	1	3101.9	3.25	0	80.83	0	0.38	0	0	15.55	0	0	0	0	0	0	3.55	3.55
Inverter	MV3-20	368689	4907317	2	0	0	100.3	100.3	1	3178.42	3.25	0	81.04	0	0.4	0	0	15.68	0	0	0	0	0	0	3.19	3.19
Inverter	MV3-9	368512	4907703	2	0	0	100.3	100.3	1	3223.7	3.25	0	81.17	0	0.4	0	0	15.76	0	0	0	0	0	0	2.98	2.98
Inverter	MV3-14	368684	4907498	2	0	0	100.3	100.3	1	3260.13	3.25	0	81.26	0	0.41	0	0	15.82	0	0	0	0	0	0	2.81	2.81
Inverter	MV3-8	368680	4907712	2	0	0	100.3	100.3	1	3368.36	3.25	0	81.55	0	0.43	0	0	16.01	0	0	0	0	0	0	2.33	2.33
Inverter	MV4-7	369035	4909001	2	0	0	100.3	100.3	1	4457.77	3.25	0	83.98	0	0.59	0	0	17.77	0	0	0	0	0	0	-2.02	-2.02
Inverter	MV6-2	370085	4907339	2	0	0	100.3	100.3	1	4474.91	3.25	0	84.02	0	0.59	0	0	17.79	0	0	0	0	0	0	-2.08	-2.08
Inverter	MV4-11	369264	4908855	2	0	0	100.3	100.3	1	4526.47	3.25	0	84.12	0	0.59	0	0	17.87	0	0	0	0	0	0	-2.27	-2.27
Inverter	MV6-3	370207	4907140	2	0	0	100.3	100.3	1	4530.88	3.25	0	84.12	0	0.59	0	0	17.88	0	0	0	0	0	0	-2.28	-2.28
Inverter	MV4-10	369312	4908858	2	0	0	100.3	100.3	1	4564.68	3.25	0	84.19	0	0.6	0	0	17.93	0	0	0	0	0	0	-2.4	-2.4
Inverter	MV4-4	369027	4909199	2	0	0	100.3	100.3	1	4593.21	3.25	0	84.24	0	0.6	0	0	17.97	0	0	0	0	0	0	-2.5	-2.5
Inverter	MV4-8	369256	4909001	2	0	0	100.3	100.3	1	4617.97	3.25	0	84.29	0	0.6	0	0	18.01	0	0	0	0	0	0	-2.59	-2.59
Inverter	MV4-9	369289	4909001	2	0	0	100.3	100.3	1	4642.32	3.25	0	84.33	0	0.61	0	0	18.05	0	0	0	0	0	0	-2.68	-2.68
Inverter	MV4-1	369011	4909397	2	0	0	100.3	100.3	1	4727.73	3.25	0	84.49	0	0.62	0	0	18.18	0	0	0	0	0	0	-2.97	-2.97
Inverter	MV4-6	369243	4909192	2	0	0	100.3	100.3	1	4740	3.25	0	84.52	0	0.62	0	0	18.19	0	0	0	0	0	0	-3.01	-3.01
Inverter	MV4-5	369289	4909199	2	0	0	100.3	100.3	1	4777.85	3.25	0	84.58	0	0.62	0	0	18.25	0	0	0	0	0	0	-3.14	-3.14
Inverter	MV4-3	369229	4909397	2	0	0	100.3	100.3	1	4875.92	3.25	0	84.76	0	0.63	0	0	18.4	0	0	0	0	0	0	-3.48	-3.48
Inverter	MV4-2	369272	4909397	2	0	0	100.3	100.3	1	4905.76	3.25	0	84.81	0	0.63	0	0	18.44	0	0	0	0	0	0	-3.58	-3.58
Inverter	MV5-5	370015	4908690	2	0	0	100.3	100.3	1	5021.54	3.25	0	85.02	0	0.64	0	0	18.61	0	0	0	0	0	0	-3.96	-3.96
Inverter	MV5-2	370006	4908853	2	0	0	100.3	100.3	1	5107.35	3.25	0	85.16	0	0.65	0	0	18.74	0	0	0	0	0	0	-4.24	-4.24
Inverter	MV1-3	364440	4906039	2	0	0	89.1	89.1	1	1425.35	3.25	0	74.08	0	0.78	0	0	7.08	0	0	0	0	0	0	7.12	7.12
Inverter	MV5-4	370324	4908707	2	0	0	100.3	100.3	1	5289.38	3.25	0	85.47	0	0.67	0	0	19	0	0	0	0	0	0	-4.82	-4.82
Inverter	MV5-3	370231	4908851	2	0	0	100.3	100.3	1	5290.68	3.25	0	85.47	0	0.67	0	0	19	0	0	0	0	0	0	-4.83	-4.83
Inverter	MV5-1	370020	4909142	2	0	0	100.3	100.3	1	5292.04	3.25	0	85.47	0	0.67	0	0	19	0	0	0	0	0	0	-4.83	-4.83
Inverter	MV6-1	370235	4907364	2	0	0	97.3	97.3	1	4624.91	3.25	0	84.3	0	0.6	0	0	18.02	0	0	0	0	0	0	-5.62	-5.62
DSTATCOM - 10 MVAR #2	DSAT2	369403	4908757	2.5	0	0	96.6	96.6	1	4569.61	3.5	0	84.2	0	3.64	0	0	3.13	0	0	0	0	0	0	5.66	5.66
DSTATCOM - 10 MVAR #1	DSAT1	369437	4908757	2.5	0	0	96.6	96.6	1	4596.06	3.5	0	84.25	0	3.64	0	0	3.15	0	0	0	0	0	0	5.59	5.59
Gardiner Substation	G_Sub	366586.3	4903349.9	2.5	0	0	90.8	90.8	1	2629.55	4.25	0	79.4	0	1.03	3.39	0.33	5.39	0	0	0	0	0	0	1.57	1.57
SubstationTransformer	W_ST	369711.17	4906112.3	2.5	0	0	92	92	1	3862.4	4.25	0	82.74	0	1.32	2.66	0.29	7.18	0	0	0	0	0	0	-1.93	-1.93
Inverter	MV3-22	368656	4907142	2	0	0	89.1	89.1	1	3072.91	3.25	0	80.75	0	1.16	0	0	9.73	0	0	0	0	0	0	-2.58	-2.58
Inverter	MV3-1	368156	4907976	2	0	0	89.1	89.1	1	3114.48	3.25	0	80.87	0	1.17	0	0	9.79	0	0	0	0	0	0	-2.77	-2.77
Inverter	MV3-5	368340	4907843	2	0	0	89.1	89.1	1	3168.49	3.25	0	81.02	0	1.19	0	0	9.87	0	0	0	0	0	0	-3.02	-3.02
Inverters	G_Inv1	366526.4	4903225.8	2	0	0	87.7	87.7	1	2733.68	3.25	0	79.73	0	2.67	0	0	3.48	0	0	0	0	0	0	1.78	1.78
Inverters	G_Inv2	366676.9	4903239.1	2	0	0	87.7	87.7	1	2761.72	3.25	0	79.82	0	2.67	0	0	3.51	0	0	0	0	0	0	1.66	1.66
Inverter	MV3-4	368502	4907925	2	0	0	89.1	89.1	1	3346.6	3.25	0	81.49	0	1.23	0	0	10.14	0	0	0	0	0	0	-3.8	-3.8
Inverters	G_Inv3	366583.7	4903091.4	2	0	0	87.7	87.7	1	2878.12	3.25	0	80.18	0	2.69	0	0	3.64	0	0	0	0	0	0	1.15	1.15
Inverters	G_Inv4	366732.8	4903105	2	0	0	87.7	87.7	1	2906.41	3.25	0	80.27	0	2.69	0	0	3.67	0	0	0	0	0	0	1.03	1.03
Inverter	MV3-2	368671	4907928	2	0	0	89.1	89.1	1	3483.52	3.25	0	81.84	0	1.27	0	0	10.34	0	0	0	0	0	0	-4.39	-4.39
Inverters	G_Inv5	366638.5	4902958.1	2	0	0	87.7	87.7	1	3021	3.25	0	80.6	0	2.7	0	0	3.8	0	0	0	0	0	0	0.56	0.56
Westbrook Inverter Enclosur	W_INV2	369374	4906388	2	0	0	89.1	89.1	1	3555.06	3.25	0	82.02	0	1.28	0	0	10.44	0	0	0	0	0	0	-4.68	-4.68
Inverters	G_Inv6	366788.5	4902972	2	0	0	87.7	87.7	1	3050.05	3.25	0	80.69	0	2.7	0	0	3.83	0	0	0	0	0	0	0.44	0.44
Westbrook Inverter Enclosur	W_INV3	369508	4906164	2	0	0	89.1	89.1	1	3663.34	3.25	0	82.28	0	1.31	0	0	10.6	0	0	0	0	0	0	-5.13	-5.13
Inverters	G_Inv7	366694.6	4902824.7	2	0	0	87.7	87.7	1	3164.44	3.25	0	81.01	0	2.71	0	0	3.96	0	0	0	0	0	0	-0.02	-0.02
Inverters	G_Inv8	366844.5	4902838.5	2	0	0	87.7	87.7	1	3194.3	3.25	0	81.09	0	2.72	0	0	3.99	0	0	0	0	0	0	-0.14	-0.14
Westbrook Inverter Enclosur	W_INV4	369673	4906164	2	0	0	89.1	89.1	1	3827.85	3.25	0	82.66	0	1.35	0	0	10.84	0	0	0	0	0	0	-5.79	-5.79

Inverters	G_Inv9	366750.9	4902691.8	2	0	0	87.7	87.7	1	3307.56	3.25	0	81.39	0	2.73	0	0	4.12	0	0	0	0	0	0	-0.58	-0.58
Inverters	G_Inv10	366900.7	4902704.8	2	0	0	87.7	87.7	1	3338.85	3.25	0	81.47	0	2.73	0	0	4.15	0	0	0	0	0	0	-0.7	-0.7
Westbrook Inverter Enclosur	W_INV5	369719	4906574	2	0	0	89.1	89.1	1	3925.55	3.25	0	82.88	0	1.37	0	0	10.98	0	0	0	0	0	0	-6.17	-6.17
Westbrook Inverter Enclosur	W_INV7	369780	4906417	2	0	0	89.1	89.1	1	3961.12	3.25	0	82.96	0	1.38	0	0	11.03	0	0	0	0	0	0	-6.31	-6.31
Westbrook Inverter Enclosur	W_INV6	369875	4906578	2	0	0	89.1	89.1	1	4079.85	3.25	0	83.21	0	1.41	0	0	11.2	0	0	0	0	0	0	-6.76	-6.76
Fixed Reactor Bank 1	FRB1	369378	4908755	6	0	0	89.8	89.8	1	4548.97	5.25	0	84.16	0	-0.64	0	0	8.07	0	0	0	0	0	0	-1.82	-1.82
Inverter	MV4-13	369051	4908605	2	0	0	89.1	89.1	1	4201.84	3.25	0	83.47	0	1.44	0	0	11.37	0	0	0	0	0	0	-7.22	-7.22
Inverter	MV4-15	369176	4908481	2	0	0	89.1	89.1	1	4220	3.25	0	83.51	0	1.45	0	0	11.4	0	0	0	0	0	0	-7.29	-7.29
Inverter	MV4-14	369176	4908507	2	0	0	89.1	89.1	1	4236.1	3.25	0	83.54	0	1.45	0	0	11.42	0	0	0	0	0	0	-7.35	-7.35
Fixed Reactor Bank 2	FRB2	369464	4908755	6	0	0	89.8	89.8	1	4615.88	5.25	0	84.29	0	-0.63	0	0	8.15	0	0	0	0	0	0	-2.04	-2.04
Inverter	MV4-12	369043	4908803	2	0	0	89.1	89.1	1	4327.16	3.25	0	83.72	0	1.47	0	0	11.55	0	0	0	0	0	0	-7.68	-7.68
Inverter	MV5-6	369982	4908507	2	0	0	89.1	89.1	1	4893.47	3.25	0	84.79	0	1.61	0	0	12.32	0	0	0	0	0	0	-9.67	-9.67
Westbrook Inverter Enclosur	W_INV1	369409	4906578	2	0	0	86.1	86.1	1	3621.69	3.25	0	82.18	0	1.3	0	0	10.54	0	0	0	0	0	0	-7.96	-7.96
Inverter	MV6-4	370250	4906966	2	0	0	86.1	86.1	1	4527.18	3.25	0	84.12	0	1.52	0	0	11.82	0	0	0	0	0	0	-11.4	-11.4
Inverter Transformer	MV1-10 T	365010	4905564	2	0	0	69.4	69.4	1	901.7	3.25	0	70.1	0	1.6	0	0	3.67	0	0	0	0	0	0	-6.02	-6.02
Inverter Transformer	MV2-1 T	365836	4906816	2	0	0	69.4	69.4	1	940.22	3.25	0	70.46	0	1.63	0	0	3.73	0	0	0	0	0	0	-6.47	-6.47
Inverter Transformer	MV1-7 T	364919	4905782	2	0	0	69.4	69.4	1	941.71	3.25	0	70.48	0	1.63	0	0	3.73	0	0	0	0	0	0	-6.49	-6.49
Inverter Transformer	MV1-14 T	365157	4905049	2	0	0	69.4	69.4	1	1082.84	3.25	0	71.69	0	1.75	0	0	3.92	0	0	0	0	0	0	-8.01	-8.01
Inverter Transformer	MV1-13 T	364725	4905241	2	0	0	69.4	69.4	1	1297.07	3.25	0	73.26	0	1.88	0	0	4.2	0	0	0	0	0	0	-9.98	-9.98
Westbrook Inverter Transfor	W_INVTR1	369403	4906578	2	0	0	78.2	78.2	1	3615.8	3.25	0	82.16	0	-2.87	0	0	1.91	0	0	0	0	0	0	-2.96	-2.96
Westbrook Inverter Transfor	W_INVTR2	369368	4906388	2	0	0	77.3	77.3	1	3549.13	3.25	0	82	0	-2.86	0	0	1.88	0	0	0	0	0	0	-3.69	-3.69
Westbrook Inverter Transfor	W_INVTR3	369514	4906164	2	0	0	77.3	77.3	1	3669.32	3.25	0	82.29	0	-2.89	0	0	1.93	0	0	0	0	0	0	-3.99	-3.99
Westbrook Inverter Transfor	W_INVTR4	369679	4906164	2	0	0	77.3	77.3	1	3833.83	3.25	0	82.67	0	-2.92	0	0	1.99	0	0	0	0	0	0	-4.4	-4.4
Westbrook Inverter Transfor	W_INVTR5	369725	4906574	2	0	0	77.3	77.3	1	3931.46	3.25	0	82.89	0	-2.95	0	0	2.03	0	0	0	0	0	0	-4.63	-4.63
Westbrook Inverter Transfor	W_INVTR7	369786	4906417	2	0	0	77.3	77.3	1	3967.06	3.25	0	82.97	0	-2.96	0	0	2.04	0	0	0	0	0	0	-4.71	-4.71
Westbrook Inverter Transfor	W_INVTR6	369881	4906578	2	0	0	77.3	77.3	1	4085.76	3.25	0	83.23	0	-2.98	0	0	2.09	0	0	0	0	0	0	-4.99	-4.99
Inverter Transformer	MV2-3 T	365814	4906641	2	0	0	56.1	56.1	1	766.16	3.25	0	68.69	0	-0.06	0	0	4.31	0	0	0	0	0	0	-16.87	-16.87
Inverter Transformer	MV2-2 T	365982	4906654	2	0	0	56.1	56.1	1	788.14	3.25	0	68.93	0	-0.06	0	0	4.36	0	0	0	0	0	0	-17.18	-17.18
Inverter Transformer	MV2-4 T	365590	4906628	2	0	0	56.1	56.1	1	797.66	3.25	0	69.04	0	-0.05	0	0	4.39	0	0	0	0	0	0	-17.31	-17.31
Inverter Transformer	MV1-12 T	365044	4905386	2	0	0	56.1	56.1	1	948.39	3.25	0	70.54	0	-0.01	0	0	4.76	0	0	0	0	0	0	-19.24	-19.24
Inverter Transformer	MV6-4 T	370244	4906966	2	0	0	69.4	69.4	1	4521.35	3.25	0	84.11	0	2.91	0	0	7.05	0	0	0	0	0	0	-24.72	-24.72
Inverter Transformer	MV6-1 T	370230	4907364	2	0	0	69.4	69.4	1	4620.18	3.25	0	84.29	0	2.93	0	0	7.12	0	0	0	0	0	0	-25	-25
Inverter Transformer	MV1-4 T	364821	4905918	2	0	0	56.1	56.1	1	1035.85	3.25	0	71.31	0	0.02	0	0	4.97	0	0	0	0	0	0	-20.25	-20.25
Inverter Transformer	MV1-15 T	365309	4904994	2	0	0	56.1	56.1	1	1037.85	3.25	0	71.32	0	0.03	0	0	4.98	0	0	0	0	0	0	-20.27	-20.27
Inverter Transformer	MV1-8 T	364782	4905647	2	0	0	56.1	56.1	1	1098.15	3.25	0	71.81	0	0.05	0	0	5.12	0	0	0	0	0	0	-20.92	-20.92
Inverter Transformer	MV1-2 T	364759	4906063	2	0	0	56.1	56.1	1	1112.83	3.25	0	71.93	0	0.05	0	0	5.15	0	0	0	0	0	0	-21.08	-21.08
Inverter Transformer	MV1-1 T	364721	4906166	2	0	0	56.1	56.1	1	1171.47	3.25	0	72.37	0	0.07	0	0	5.29	0	0	0	0	0	0	-21.68	-21.68
Inverter Transformer	MV1-5 T	364676	4905892	2	0	0	56.1	56.1	1	1180.11	3.25	0	72.44	0	0.08	0	0	5.31	0	0	0	0	0	0	-21.77	-21.77
Inverter Transformer	MV1-11 T	364649	4905414	2	0	0	56.1	56.1	1	1292.4	3.25	0	73.23	0	0.12	0	0	5.56	0	0	0	0	0	0	-22.85	-22.85
Inverter Transformer	MV1-9 T	364555	4905646	2	0	0	56.1	56.1	1	1321.18	3.25	0	73.42	0	0.13	0	0	5.63	0	0	0	0	0	0	-23.12	-23.12
Inverter Transformer	MV1-6 T	364482	4905835	2	0	0	56.1	56.1	1	1374.61	3.25	0	73.76	0	0.15	0	0	5.75	0	0	0	0	0	0	-23.6	-23.6
Inverter Transformer	MV1-3 T	364435	4906039	2	0	0	56.1	56.1	1	1430.32	3.25	0	74.11	0	0.17	0	0	5.87	0	0	0	0	0	0	-24.09	-24.09
Inverter Transformer	MV3-18 T	367757	4907412	2	0	0	56.1	56.1	1	2443.99	3.25	0	78.76	0	0.59	0	0	7.89	0	0	0	0	0	0	-31.18	-31.18
Inverter Transformer	MV3-12 T	367674	4907594	2	0	0	56.1	56.1	1	2501.33	3.25	0	78.96	0	0.62	0	0	7.99	0	0	0	0	0	0	-31.51	-31.51
Inverter Transformer	MV3-13 T	367958	4907577	2	0	0	56.1	56.1	1	2704.04	3.25	0	79.64	0	0.7	0	0	8.36	0	0	0	0	0	0	-32.64	-32.64
Inverter Transformer	MV3-7 T	367951	4907754	2	0	0	56.1	56.1	1	2813.52	3.25	0	79.99	0	0.75	0	0	8.55	0	0	0	0	0	0	-33.22	-33.22
Inverter Transformer	MV3-17 T	368183	4907472	2	0	0	56.1	56.1	1	2821.73	3.25	0	80.01	0	0.75	0	0	8.56	0	0	0	0	0	0	-33.27	-33.27
Inverter Transformer	MV3-19 T	368352	4907347	2	0	0	56.1	56.1	1	2897.22	3.25	0	80.24	0	0.79	0	0	8.69	0	0	0	0	0	0	-33.66	-33.66
Inverter Transformer	MV3-10 T	368162	4907669	2	0	0	56.1	56.1	1	2921.04	3.25	0	80.31	0	0.8	0	0	8.73	0	0	0	0	0	0	-33.78	-33.78
Inverter Transformer	MV3-3 T	367944	4907927	2	0	0	56.1	56.1	1	2926.83	3.25	0	80.33	0	0.8	0	0	8.74	0	0	0	0	0	0	-33.81	-33.81
Inverter Transformer	MV3-21 T	368484	4907206	2	0	0	56.1	56.1	1	2945.38	3.25	0	80.38	0	0.81	0	0	8.78	0	0	0	0	0	0	-33.91	-33.91
Inverter Transformer	MV3-15 T	368351	4907477	2	0	0	56.1	56.1	1	2964.5	3.25	0	80.44	0	0.81	0	0	8.81	0	0	0	0	0	0	-34	-34
Inverter Transformer	MV3-6 T	368156	4907834	2	0	0	56.1	56.1	1	3020.56	3.25	0	80.6	0	0.84	0	0	8.9	0	0	0	0	0	0	-34.28	-34.28
Inverter Transformer	MV3-11 T	368340	4907662	2	0	0	56.1	56.1	1	3059.42	3.25	0	80.71	0	0.86	0	0	8.97	0	0	0	0	0	0	-34.48	-34.48
Inverter Transformer	MV3-22 T	368661	4907142	2	0	0	56.1	56.1	1	3077.46	3.25	0	80.76	0	0.86	0	0	9	0	0	0	0	0	0	-34.57	-34.57
Inverter Transformer	MV3-16 T	368509	4907475	2	0	0	56.1	56.1	1	3097.61	3.25	0	80.82	0	0.87	0	0	9.03	0	0	0	0	0	0	-34.67	-34.67
Inverter Transformer	MV3-1 T	368150	4907976	2	0	0	56.1	56.1	1	3110.06	3.25	0	80.86	0	0.88	0	0	9.05	0	0	0	0	0	0	-34.73	-34.73
Inverter Transformer	MV3-5 T	368335	4907843	2	0	0	56.1	56.1	1	3164.58	3.25	0	81.01	0	0.9	0	0	9.14	0	0	0	0	0	0	-34.99	-34.99
Inverter Transformer	MV3-20 T	368683	4907317	2	0	0	56.1	56.1	1	3173.08	3.25	0	81.03	0	0.9	0	0	9.16	0	0	0	0	0	0	-35.03	-35.03
Inverter Transformer	MV3-9 T	368517	4907703	2	0	0	56.1	56.1	1	3227.83	3.25	0	81.18	0	0.93	0	0	9.25	0	0	0	0	0	0	-35.29	-35.29
Inverter Transformer	MV3-14 T	368678	4907498	2	0	0	56.1	56.1	1	3254.93	3.25	0	81.25	0	0.94	0	0	9.29	0	0	0	0	0	0	-35.42	-35.42
Inverter Transformer	MV3-4 T	368507	4907925	2	0	0	56.1	56.1	1	3350.55	3.25	0	81.5	0	0.98	0	0	9.45	0	0	0	0	0	0	-35.87	-35.87
Inverter Transformer	MV3-8 T	368685	4907712	2	0	0	56.1	56.1	1	3372.56	3.25	0	81.56	0	0.99	0	0	9.48	0	0	0	0	0	0	-35.97	-35.97
Inverter Transformer	MV3-2 T	368677	4907928	2	0	0	56.1	56.1	1	3488.37	3.25	0	81.85	0	1.04	0	0	9.67	0	0	0	0	0	0	-36.5	-36.5
Inverter Transformer	MV4-13 T	369057	4908605	2	0	0	56.1	56.1	1	4206.41	3.25	0	83.48	0	1.33	0	0	10.76	0	0	0	0	0	0	-39.5	-39.5
Inverter Transformer	MV4-15 T	369170	4908481	2	0	0	56.1	56.1	1	4215.28	3.25	0	83.5	0	1.33	0	0	10.77	0	0	0	0	0	0	-39.54	-39.54
Inverter Transformer	MV4-14 T	369182	4908507	2	0	0	56.1	56.1	1	4240.81	3.25	0	83.55	0	1.34	0	0	10.81	0	0	0	0	0	0	-39.64	-39.64
Inverter Transformer	MV4-12 T	369049	4908803	2	0	0	56.1	56.1	1	4331.58	3.25	0	83.73	0	1.37	0	0	10.94	0	0	0	0	0	0	-39.99	-39.99
Inverter Transformer	MV4-7 T	369040	4909001	2	0	0	56.1	56.1	1	4461.33	3.25	0	83.99	0	1.42	0	0	11.12	0	0	0	0	0	0	-40.48	-40.48
Inverter Transformer	MV6-2 T	370091	4907339	2	0	0	56.1	56.1	1	4480.58	3.25	0	84.03	0	1.43	0	0	11.15	0	0	0	0	0	0	-40.55	-40.55
Inverter Transformer	MV6-3 T	370202	4907140	2	0	0	56.1	56.1	1	4526.08	3.25	0	84.11	0	1.45	0	0	11.21	0	0	0	0	0	0	-40.72	-40.72
Inverter Transformer	MV4-11 T	369269	4908855	2	0	0	56.1	56.1	1	4530.23	3.25	0	84.12	0	1.45	0	0	11.22	0	0	0	0	0	0	-40.73	-40.73
Inverter Transformer	MV4-10 T	369307	4908858	2	0	0	56.1	56.1	1	4560.89	3.25	0	84.18	0	1.46	0	0	11.26	0	0	0	0	0	0	-40.85	-40.85
Inverter Transformer	MV4-4 T	369033	4909199	2	0	0	56.1	56.1	1	4597.35	3.25	0	84.25	0	1.48	0	0	11.31	0	0	0	0	0	0	-40.98	-40.98

	Inverter Transformer	MV4-8 T	369262	4909001	2	0	0	56.1	56.1	1	4622.39	3.25	0	84.3	0	1.49	0	0	11.35	0	0	0	0	0	0	-41.07	-41.07
	Inverter Transformer	MV4-9 T	369284	4909001	2	0	0	56.1	56.1	1	4638.62	3.25	0	84.33	0	1.49	0	0	11.37	0	0	0	0	0	0	-41.13	-41.13
	Inverter Transformer	MV4-1 T	369017	4909397	2	0	0	56.1	56.1	1	4731.74	3.25	0	84.5	0	1.53	0	0	11.49	0	0	0	0	0	0	-41.46	-41.46
	Inverter Transformer	MV4-6 T	369249	4909192	2	0	0	56.1	56.1	1	4744.29	3.25	0	84.52	0	1.53	0	0	11.51	0	0	0	0	0	0	-41.51	-41.51
	Inverter Transformer	MV4-5 T	369283	4909199	2	0	0	56.1	56.1	1	4773.54	3.25	0	84.58	0	1.54	0	0	11.55	0	0	0	0	0	0	-41.61	-41.61
	Inverter Transformer	MV4-3 T	369234	4909397	2	0	0	56.1	56.1	1	4879.38	3.25	0	84.77	0	1.58	0	0	11.69	0	0	0	0	0	0	-41.98	-41.98
	Inverter Transformer	MV5-6 T	369987	4908507	2	0	0	56.1	56.1	1	4897.69	3.25	0	84.8	0	1.59	0	0	11.72	0	0	0	0	0	0	-42.05	-42.05
	Inverter Transformer	MV4-2 T	369267	4909397	2	0	0	56.1	56.1	1	4902.28	3.25	0	84.81	0	1.59	0	0	11.72	0	0	0	0	0	0	-42.06	-42.06
	Inverter Transformer	MV5-5 T	370021	4908690	2	0	0	56.1	56.1	1	5026.51	3.25	0	85.03	0	1.63	0	0	11.89	0	0	0	0	0	0	-42.49	-42.49
	Inverter Transformer	MV5-2 T	370011	4908853	2	0	0	56.1	56.1	1	5111.41	3.25	0	85.17	0	1.67	0	0	12	0	0	0	0	0	0	-42.78	-42.78
	Inverter Transformer	MV5-1 T	370015	4909142	2	0	0	56.1	56.1	1	5288.1	3.25	0	85.47	0	1.73	0	0	12.23	0	0	0	0	0	0	-43.36	-43.36
	Inverter Transformer	MV5-4 T	370330	4908707	2	0	0	56.1	56.1	1	5294.45	3.25	0	85.48	0	1.73	0	0	12.24	0	0	0	0	0	0	-43.38	-43.38
	Inverter Transformer	MV5-3 T	370237	4908851	2	0	0	56.1	56.1	1	5295.64	3.25	0	85.48	0	1.73	0	0	12.24	0	0	0	0	0	0	-43.39	-43.39
	Line Reactor	NGR	369421	4908787.5	5	0	0	45.4	45.4	1	4602.83	5.25	0	84.26	0	3.27	1.35	0.09	1.88	0	0	0	0	0	0	-45.41	-45.41
Limit. Valu	0	0																								
Level D/N:	30.6059	30.6059																								

Receiver: Existing Noise Receptor
ID: S-R29
X: 365826
Y: 4905855
Z: 4.5
Ground: 0

ISO	Description	ID	X	Y	Z	Ground	ReflOrd	LxT	LxN	L/A	Dist.	hm	Freq	Adiv	K0b	Agr	Abar	z	Aatm	Afol	Ahous	Cmet	CmetN	Dc	RL	LtotT	LtotN
	Inverter	MV2-3	365820	4906641	2	0	0	100.3	100.3	1	786.03	3.25	0	68.91	0	-0.36	0	0	10.12	0	0	0	0	0	0	21.64	21.64
	Inverter	MV2-4	365586	4906624	2	0	0	100.3	100.3	1	805.59	3.25	0	69.12	0	-0.35	0	0	10.2	0	0	0	0	0	0	21.33	21.33
	Inverter	MV1-12	365038	4905386	2	0	0	100.3	100.3	1	917.01	3.25	0	70.25	0	-0.29	0	0	10.63	0	0	0	0	0	0	19.73	19.73
	Inverter	MV1-15	365315	4904994	2	0	0	100.3	100.3	1	1001.22	3.25	0	71.01	0	-0.25	0	0	10.92	0	0	0	0	0	0	18.63	18.63
	Inverter	MV1-4	364815	4905918	2	0	0	100.3	100.3	1	1012.96	3.25	0	71.11	0	-0.24	0	0	10.95	0	0	0	0	0	0	18.49	18.49
	Inverter	MV1-8	364788	4905647	2	0	0	100.3	100.3	1	1058.64	3.25	0	71.49	0	-0.22	0	0	11.1	0	0	0	0	0	0	17.93	17.93
	Inverter	MV1-2	364753	4906063	2	0	0	100.3	100.3	1	1092.98	3.25	0	71.77	0	-0.2	0	0	11.21	0	0	0	0	0	0	17.53	17.53
	Inverter	MV1-1	364715	4906166	2	0	0	100.3	100.3	1	1153.71	3.25	0	72.24	0	-0.17	0	0	11.39	0	0	0	0	0	0	16.85	16.85
	Inverter	MV1-5	364671	4905892	2	0	0	100.3	100.3	1	1155.6	3.25	0	72.26	0	-0.17	0	0	11.4	0	0	0	0	0	0	16.83	16.83
	Sol_Luce Substation	S_Substation	369426	4908792	3.5	0	0	112.1	112.1	1	4646.07	5.25	0	84.34	0	0.79	2.95	0.26	8.19	0	0	0	0	0	0	15.8	15.8
	Inverter	MV1-10	365004	4905564	2	0	0	97.3	97.3	1	871.99	3.25	0	69.81	0	-0.31	0	0	10.46	0	0	0	0	0	0	17.35	17.35
	Inverter	MV1-11	364655	4905414	2	0	0	100.3	100.3	1	1251.29	3.25	0	72.95	0	-0.13	0	0	11.67	0	0	0	0	0	0	15.83	15.83
	Inverter	MV1-7	364925	4905782	2	0	0	97.3	97.3	1	903.96	3.25	0	70.12	0	-0.29	0	0	10.58	0	0	0	0	0	0	16.9	16.9
	Inverter	MV1-9	364561	4905646	2	0	0	100.3	100.3	1	1282.15	3.25	0	73.16	0	-0.12	0	0	11.76	0	0	0	0	0	0	15.52	15.52
	Inverter	MV1-6	364477	4905835	2	0	0	100.3	100.3	1	1349.15	3.25	0	73.6	0	-0.09	0	0	11.94	0	0	0	0	0	0	14.87	14.87
	Inverter	MV2-1	365842	4906816	2	0	0	97.3	97.3	1	961.14	3.25	0	70.66	0	-0.27	0	0	10.78	0	0	0	0	0	0	16.14	16.14
	Inverter	MV1-14	365163	4905049	2	0	0	97.3	97.3	1	1043.65	3.25	0	71.37	0	-0.23	0	0	11.05	0	0	0	0	0	0	15.11	15.11
	Inverter	MV1-13	364731	4905241	2	0	0	97.3	97.3	1	1255.4	3.25	0	72.98	0	-0.13	0	0	11.68	0	0	0	0	0	0	12.78	12.78
	Inverter	MV3-18	367752	4907412	2	0	0	100.3	100.3	1	2476.64	3.25	0	78.88	0	0.25	0	0	14.41	0	0	0	0	0	0	6.77	6.77
	Inverter	MV3-12	367668	4907594	2	0	0	100.3	100.3	1	2533.2	3.25	0	79.07	0	0.26	0	0	14.52	0	0	0	0	0	0	6.45	6.45
	Inverter	MV3-13	367963	4907577	2	0	0	100.3	100.3	1	2744.46	3.25	0	79.77	0	0.31	0	0	14.91	0	0	0	0	0	0	5.32	5.32
	Inverter	MV3-7	367945	4907754	2	0	0	100.3	100.3	1	2845.41	3.25	0	80.08	0	0.33	0	0	15.1	0	0	0	0	0	0	4.8	4.8
	Inverter	MV3-17	368178	4907472	2	0	0	100.3	100.3	1	2854.22	3.25	0	80.11	0	0.33	0	0	15.11	0	0	0	0	0	0	4.76	4.76
	Inverter	MV3-19	368357	4907347	2	0	0	100.3	100.3	1	2938.03	3.25	0	80.36	0	0.35	0	0	15.26	0	0	0	0	0	0	4.34	4.34
	Inverter	MV3-3	367939	4907927	2	0	0	100.3	100.3	1	2959.38	3.25	0	80.42	0	0.35	0	0	15.3	0	0	0	0	0	0	4.23	4.23
	Inverter	MV3-10	368167	4907669	2	0	0	100.3	100.3	1	2961.57	3.25	0	80.43	0	0.35	0	0	15.3	0	0	0	0	0	0	4.22	4.22
	Inverter	MV2-2	365977	4906654	2	0	0	89.1	89.1	1	813.15	3.25	0	69.2	0	0.64	0	0	5.95	0	0	0	0	0	0	13.26	13.26
	Inverter	MV3-21	368478	4907206	2	0	0	100.3	100.3	1	2976.29	3.25	0	80.47	0	0.36	0	0	15.33	0	0	0	0	0	0	4.15	4.15
	Inverter	MV3-15	368357	4907477	2	0	0	100.3	100.3	1	3006.14	3.25	0	80.56	0	0.36	0	0	15.38	0	0	0	0	0	0	4.01	4.01
	Inverter	MV3-6	368162	4907834	2	0	0	100.3	100.3	1	3061.59	3.25	0	80.72	0	0.37	0	0	15.48	0	0	0	0	0	0	3.74	3.74
	Inverter	MV3-11	368346	4907662	2	0	0	100.3	100.3	1	3100.91	3.25	0	80.83	0	0.38	0	0	15.55	0	0	0	0	0	0	3.55	3.55
	Inverter	MV3-16	368514	4907475	2	0	0	100.3	100.3	1	3138.43	3.25	0	80.93	0	0.39	0	0	15.61	0	0	0	0	0	0	3.37	3.37
	Inverter	MV3-20	368689	4907317	2	0	0	100.3	100.3	1	3214.69	3.25	0	81.14	0	0.4	0	0	15.75	0	0	0	0	0	0	3.02	3.02
	Inverter	MV3-9	368512	4907703	2	0	0	100.3	100.3	1	3260.32	3.25	0	81.27	0	0.41	0	0	15.83	0	0	0	0	0	0	2.81	2.81
	Inverter	MV3-14	368684	4907498	2	0	0	100.3	100.3	1	3296.61	3.25	0	81.36	0	0.42	0	0	15.89	0	0	0	0	0	0	2.65	2.65
	Inverter	MV3-8	368680	4907712	2	0	0	100.3	100.3	1	3404.96	3.25	0	81.64	0	0.44	0	0	16.07	0	0	0	0	0	0	2.16	2.16
	Inverter	MV4-7	369035	4909001	2	0	0	100.3	100.3	1	4493.89	3.25	0	84.05	0	0.59	0	0	17.82	0	0	0	0	0	0	-2.15	-2.15
	Inverter	MV6-2	370085	4907339	2	0	0	100.3	100.3	1	4510.14	3.25	0	84.08	0	0.59	0	0	17.85	0	0	0	0	0	0	-2.21	-2.21
	Inverter	MV4-11	369264	4908855	2	0	0	100.3	100.3	1	4562.88	3.25	0	84.18	0	0.6	0	0	17.93	0	0	0	0	0	0	-2.4	-2.4
	Inverter	MV6-3	370207	4907140	2	0	0	100.3	100.3	1	4565.57	3.25	0	84.19	0	0.6	0	0	17.93	0	0	0	0	0	0	-2.41	-2.41
	Inverter	MV4-10	369312	4908858	2	0	0	100.3	100.3	1	4601.11	3.25	0	84.26	0	0.6	0	0	17.98	0	0	0	0	0	0	-2.53	-2.53
	Inverter	MV4-4	369027	4909199	2	0	0	100.3	100.3	1	4629.12	3.25	0	84.31	0	0.61	0	0	18.03	0	0	0	0	0	0	-2.63	-2.63
	Inverter	MV4-8	369256	4909001	2	0	0	100.3	100.3	1	4654.27	3.25	0	84.36	0	0.61	0	0	18.06	0	0	0	0	0	0	-2.72	-2.72
	Inverter	MV4-9	369289	4909001	2	0	0	100.3	100.3	1	4678.64	3.25	0	84.4	0	0.61	0	0	18.1	0	0	0	0	0	0	-2.8	-2.8
	Inverter	MV4-1	369011	4909397	2	0	0	100.3	100.3	1	4763.4	3.25	0	84.56	0	0.62	0	0	18.23	0	0	0	0	0	0	-3.09	-3.09
	Inverter	MV4-6	369243	4909192	2	0	0	100.3	100.3	1	4776.13	3.25	0	84.58	0	0.62	0	0	18.25	0	0	0	0	0	0	-3.14	-3.14
	Inverter	MV4-5	369289	4909199	2	0	0	100.3	100.3	1	4814.01	3.25	0	84.65	0	0.62	0	0	18.3	0	0	0	0	0	0	-3.27	-3.27
	Inverter	MV4-3	369229	4909397	2	0	0	100.3	100.3	1	4911.84	3.25	0	84.82	0	0.63	0	0	18.45	0	0	0	0	0	0	-3.6	-3.6
	Inverter	MV4-2	369272	4909397	2	0	0	100.3	100.3	1	4941.73	3.25	0	84.88	0	0.64	0	0	18.49	0	0	0	0	0	0	-3.7	-3.7

Inverter	MV5-5	370015	4908690	2	0	0	100.3	100.3	1	5058.16	3.25	0	85.08	0	0.65	0	0	18.67	0	0	0	0	0	0	-4.08	-4.08
Inverter	MV1-3	364440	4906039	2	0	0	89.1	89.1	1	1398.16	3.25	0	73.91	0	0.77	0	0	7.03	0	0	0	0	0	0	7.34	7.34
Inverter	MV5-2	370006	4908853	2	0	0	100.3	100.3	1	5143.97	3.25	0	85.23	0	0.65	0	0	18.79	0	0	0	0	0	0	-4.36	-4.36
Inverter	MV5-4	370324	4908707	2	0	0	100.3	100.3	1	5325.97	3.25	0	85.53	0	0.67	0	0	19.05	0	0	0	0	0	0	-4.94	-4.94
Inverter	MV5-3	370231	4908851	2	0	0	100.3	100.3	1	5327.29	3.25	0	85.53	0	0.67	0	0	19.05	0	0	0	0	0	0	-4.94	-4.94
Inverter	MV5-1	370020	4909142	2	0	0	100.3	100.3	1	5328.6	3.25	0	85.53	0	0.67	0	0	19.06	0	0	0	0	0	0	-4.95	-4.95
Inverter	MV6-1	370235	4907364	2	0	0	97.3	97.3	1	4660.08	3.25	0	84.37	0	0.61	0	0	18.07	0	0	0	0	0	0	-5.74	-5.74
DSTATCOM - 10 MVAR #2	DSAT2	369403	4908757	2.5	0	0	96.6	96.6	1	4606.14	3.5	0	84.27	0	3.64	0	0	3.15	0	0	0	0	0	0	5.57	5.57
DSTATCOM - 10 MVAR #1	DSAT1	369437	4908757	2.5	0	0	96.6	96.6	1	4632.59	3.5	0	84.32	0	3.65	0	0	3.17	0	0	0	0	0	0	5.5	5.5
Gardiner Substation	G_Sub	366586.3	4903349.9	2.5	0	0	90.8	90.8	1	2617.94	4.25	0	79.36	0	1.02	3.39	0.33	5.37	0	0	0	0	0	0	1.63	1.63
SubstationTransformer	W_ST	369711.17	4906112.3	2.5	0	0	92	92	1	3893.68	4.25	0	82.81	0	1.33	2.65	0.29	7.22	0	0	0	0	0	0	-2.04	-2.04
Inverter	MV3-22	368656	4907142	2	0	0	89.1	89.1	1	3108.9	3.25	0	80.85	0	1.17	0	0	9.78	0	0	0	0	0	0	-2.75	-2.75
Inverter	MV3-1	368156	4907976	2	0	0	89.1	89.1	1	3150.8	3.25	0	80.97	0	1.18	0	0	9.84	0	0	0	0	0	0	-2.94	-2.94
Inverters	G_Inv1	366526.4	4903225.8	2	0	0	87.7	87.7	1	2720.89	3.25	0	79.69	0	2.67	0	0	3.46	0	0	0	0	0	0	1.84	1.84
Inverter	MV3-5	368340	4907843	2	0	0	89.1	89.1	1	3205.05	3.25	0	81.12	0	1.2	0	0	9.93	0	0	0	0	0	0	-3.18	-3.18
Inverters	G_Inv2	366676.9	4903239.1	2	0	0	87.7	87.7	1	2750.81	3.25	0	79.79	0	2.67	0	0	3.5	0	0	0	0	0	0	1.7	1.7
Inverters	G_Inv3	366583.7	4903091.4	2	0	0	87.7	87.7	1	2865.59	3.25	0	80.14	0	2.68	0	0	3.62	0	0	0	0	0	0	1.21	1.21
Inverter	MV3-4	368502	4907925	2	0	0	89.1	89.1	1	3383.18	3.25	0	81.59	0	1.24	0	0	10.19	0	0	0	0	0	0	-3.96	-3.96
Inverters	G_Inv4	366732.8	4903105	2	0	0	87.7	87.7	1	2895.65	3.25	0	80.23	0	2.69	0	0	3.66	0	0	0	0	0	0	1.08	1.08
Inverter	MV3-2	368671	4907928	2	0	0	89.1	89.1	1	3520.14	3.25	0	81.93	0	1.27	0	0	10.39	0	0	0	0	0	0	-4.54	-4.54
Inverters	G_Inv5	366638.5	4902958.1	2	0	0	87.7	87.7	1	3008.69	3.25	0	80.57	0	2.7	0	0	3.78	0	0	0	0	0	0	0.61	0.61
Inverters	G_Inv6	366788.5	4902972	2	0	0	87.7	87.7	1	3039.42	3.25	0	80.66	0	2.7	0	0	3.82	0	0	0	0	0	0	0.48	0.48
Westbrook Inverter Enclosur	W_INV2	369374	4906388	2	0	0	89.1	89.1	1	3587.81	3.25	0	82.1	0	1.29	0	0	10.49	0	0	0	0	0	0	-4.82	-4.82
Westbrook Inverter Enclosur	W_INV3	369508	4906164	2	0	0	89.1	89.1	1	3694.94	3.25	0	82.35	0	1.32	0	0	10.65	0	0	0	0	0	0	-5.26	-5.26
Inverters	G_Inv7	366694.6	4902824.7	2	0	0	87.7	87.7	1	3152.33	3.25	0	80.97	0	2.71	0	0	3.94	0	0	0	0	0	0	0.03	0.03
Inverters	G_Inv8	366844.5	4902838.5	2	0	0	87.7	87.7	1	3183.81	3.25	0	81.06	0	2.72	0	0	3.98	0	0	0	0	0	0	-0.1	-0.1
Westbrook Inverter Enclosur	W_INV4	369673	4906164	2	0	0	89.1	89.1	1	3859.39	3.25	0	82.73	0	1.36	0	0	10.88	0	0	0	0	0	0	-5.91	-5.91
Inverters	G_Inv9	366750.9	4902691.8	2	0	0	87.7	87.7	1	3295.65	3.25	0	81.36	0	2.73	0	0	4.1	0	0	0	0	0	0	-0.53	-0.53
Inverters	G_Inv10	366900.7	4902704.8	2	0	0	87.7	87.7	1	3328.48	3.25	0	81.44	0	2.73	0	0	4.14	0	0	0	0	0	0	-0.66	-0.66
Westbrook Inverter Enclosur	W_INV5	369719	4906574	2	0	0	89.1	89.1	1	3958.84	3.25	0	82.95	0	1.38	0	0	11.03	0	0	0	0	0	0	-6.3	-6.3
Westbrook Inverter Enclosur	W_INV7	369780	4906417	2	0	0	89.1	89.1	1	3993.74	3.25	0	83.03	0	1.39	0	0	11.08	0	0	0	0	0	0	-6.44	-6.44
Westbrook Inverter Enclosur	W_INV6	369875	4906578	2	0	0	89.1	89.1	1	4113.04	3.25	0	83.28	0	1.42	0	0	11.24	0	0	0	0	0	0	-6.89	-6.89
Fixed Reactor Bank 1	FRB1	369378	4908755	6	0	0	89.8	89.8	1	4585.49	5.25	0	84.23	0	-0.63	0	0	8.12	0	0	0	0	0	0	-1.94	-1.94
Inverter	MV4-13	369051	4908605	2	0	0	89.1	89.1	1	4238.29	3.25	0	83.54	0	1.45	0	0	11.42	0	0	0	0	0	0	-7.36	-7.36
Inverter	MV4-15	369176	4908481	2	0	0	89.1	89.1	1	4256.57	3.25	0	83.58	0	1.46	0	0	11.45	0	0	0	0	0	0	-7.43	-7.43
Inverter	MV4-14	369176	4908507	2	0	0	89.1	89.1	1	4272.66	3.25	0	83.61	0	1.46	0	0	11.47	0	0	0	0	0	0	-7.48	-7.48
Fixed Reactor Bank 2	FRB2	369464	4908755	6	0	0	89.8	89.8	1	4652.42	5.25	0	84.35	0	-0.62	0	0	8.2	0	0	0	0	0	0	-2.16	-2.16
Inverter	MV4-12	369043	4908803	2	0	0	89.1	89.1	1	4363.46	3.25	0	83.8	0	1.48	0	0	11.6	0	0	0	0	0	0	-7.82	-7.82
Inverter	MV5-6	369982	4908507	2	0	0	89.1	89.1	1	4930.06	3.25	0	84.86	0	1.62	0	0	12.37	0	0	0	0	0	0	-9.79	-9.79
Westbrook Inverter Enclosur	W_INV1	369409	4906578	2	0	0	86.1	86.1	1	3655.22	3.25	0	82.26	0	1.31	0	0	10.59	0	0	0	0	0	0	-8.1	-8.1
Inverter	MV6-4	370250	4906966	2	0	0	86.1	86.1	1	4561.37	3.25	0	84.18	0	1.53	0	0	11.87	0	0	0	0	0	0	-11.52	-11.52
Inverter Transformer	MV1-10 T	365010	4905564	2	0	0	69.4	69.4	1	866.34	3.25	0	69.75	0	1.56	0	0	3.62	0	0	0	0	0	0	-5.58	-5.58
Inverter Transformer	MV1-7 T	364919	4905782	2	0	0	69.4	69.4	1	909.94	3.25	0	70.18	0	1.6	0	0	3.68	0	0	0	0	0	0	-6.12	-6.12
Inverter Transformer	MV2-1 T	365836	4906816	2	0	0	69.4	69.4	1	961.06	3.25	0	70.65	0	1.65	0	0	3.76	0	0	0	0	0	0	-6.71	-6.71
Inverter Transformer	MV1-14 T	365157	4905049	2	0	0	69.4	69.4	1	1047.47	3.25	0	71.4	0	1.72	0	0	3.88	0	0	0	0	0	0	-7.65	-7.65
Inverter Transformer	MV1-13 T	364725	4905241	2	0	0	69.4	69.4	1	1260.64	3.25	0	73.01	0	1.86	0	0	4.15	0	0	0	0	0	0	-9.67	-9.67
Westbrook Inverter Transfor	W_INVTR1	369403	4906578	2	0	0	78.2	78.2	1	3649.34	3.25	0	82.24	0	-2.88	0	0	1.92	0	0	0	0	0	0	-3.04	-3.04
Westbrook Inverter Transfor	W_INVTR2	369368	4906388	2	0	0	77.3	77.3	1	3581.88	3.25	0	82.08	0	-2.86	0	0	1.89	0	0	0	0	0	0	-3.77	-3.77
Westbrook Inverter Transfor	W_INVTR3	369514	4906164	2	0	0	77.3	77.3	1	3700.92	3.25	0	82.37	0	-2.89	0	0	1.94	0	0	0	0	0	0	-4.07	-4.07
Westbrook Inverter Transfor	W_INVTR4	369679	4906164	2	0	0	77.3	77.3	1	3865.37	3.25	0	82.74	0	-2.93	0	0	2	0	0	0	0	0	0	-4.47	-4.47
Westbrook Inverter Transfor	W_INVTR5	369725	4906574	2	0	0	77.3	77.3	1	3964.74	3.25	0	82.96	0	-2.95	0	0	2.04	0	0	0	0	0	0	-4.71	-4.71
Westbrook Inverter Transfor	W_INVTR7	369786	4906417	2	0	0	77.3	77.3	1	3999.68	3.25	0	83.04	0	-2.96	0	0	2.05	0	0	0	0	0	0	-4.79	-4.79
Westbrook Inverter Transfor	W_INVTR6	369881	4906578	2	0	0	77.3	77.3	1	4118.95	3.25	0	83.3	0	-2.99	0	0	2.1	0	0	0	0	0	0	-5.06	-5.06
Inverter Transformer	MV2-3 T	365814	4906641	2	0	0	56.1	56.1	1	786.1	3.25	0	68.91	0	-0.06	0	0	4.36	0	0	0	0	0	0	-17.15	-17.15
Inverter Transformer	MV2-4 T	365590	4906628	2	0	0	56.1	56.1	1	808.23	3.25	0	69.15	0	-0.05	0	0	4.42	0	0	0	0	0	0	-17.46	-17.46
Inverter Transformer	MV2-2 T	365982	4906654	2	0	0	56.1	56.1	1	814.09	3.25	0	69.21	0	-0.05	0	0	4.43	0	0	0	0	0	0	-17.54	-17.54
Inverter Transformer	MV1-12 T	365044	4905386	2	0	0	56.1	56.1	1	911.86	3.25	0	70.2	0	-0.02	0	0	4.68	0	0	0	0	0	0	-18.8	-18.8
Inverter Transformer	MV6-4 T	370244	4906966	2	0	0	69.4	69.4	1	4555.55	3.25	0	84.17	0	2.92	0	0	7.08	0	0	0	0	0	0	-24.82	-24.82
Inverter Transformer	MV1-15 T	365309	4904994	2	0	0	56.1	56.1	1	1004.3	3.25	0	71.04	0	0.01	0	0	4.9	0	0	0	0	0	0	-19.89	-19.89
Inverter Transformer	MV1-4 T	364821	4905918	2	0	0	56.1	56.1	1	1006.98	3.25	0	71.06	0	0.01	0	0	4.91	0	0	0	0	0	0	-19.92	-19.92
Inverter Transformer	MV6-1 T	370230	4907364	2	0	0	69.4	69.4	1	4655.35	3.25	0	84.36	0	2.94	0	0	7.15	0	0	0	0	0	0	-25.1	-25.1
Inverter Transformer	MV1-8 T	364782	4905647	2	0	0	56.1	56.1	1	1064.52	3.25	0	71.54	0	0.03	0	0	5.04	0	0	0	0	0	0	-20.56	-20.56
Inverter Transformer	MV1-2 T	364759	4906063	2	0	0	56.1	56.1	1	1087.09	3.25	0	71.73	0	0.04	0	0	5.09	0	0	0	0	0	0	-20.8	-20.8
Inverter Transformer	MV1-1 T	364721	4906166	2	0	0	56.1	56.1	1	1147.93	3.25	0	72.2	0	0.06	0	0	5.24	0	0	0	0	0	0	-21.44	-21.44
Inverter Transformer	MV1-5 T	364676	4905892	2	0	0	56.1	56.1	1	1150.6	3.25	0	72.22	0	0.07	0	0	5.24	0	0	0	0	0	0	-21.47	-21.47
Inverter Transformer	MV1-11 T	364649	4905414	2	0	0	56.1	56.1	1	1256.91	3.25	0	72.99	0	0.1	0	0	5.48	0	0	0	0	0	0	-22.52	-22.52
Inverter Transformer	MV1-9 T	364555	4905646	2	0	0	56.1	56.1	1	1288.07	3.25	0	73.2	0	0.12	0	0	5.55	0	0	0	0	0	0	-22.81	-22.81
Inverter Transformer	MV1-6 T	364482	4905835	2	0	0	56.1	56.1	1	1344.15	3.25	0	73.57	0	0.14	0	0	5.68	0	0	0	0	0	0	-23.33	-23.33
Inverter Transformer	MV1-3 T	364435	4906039	2	0	0	56.1	56.1	1	1403.12	3.25	0	73.94	0	0.16	0	0	5.81	0	0	0	0	0	0	-23.85	-23.85
Inverter Transformer	MV3-18 T	367757	4907412	2	0	0	56.1	56.1	1	2480.53	3.25	0	78.89	0	0.61	0	0	7.95	0	0	0	0	0	0	-31.39	-31.39
Inverter Transformer	MV3-12 T	367674	4907594	2	0	0	56.1	56.1	1	2537.56	3.25	0	79.09	0	0.63	0	0	8.06	0	0	0	0	0	0	-31.72	-31.72
Inverter Transformer	MV3-13 T	367958	4907577	2	0	0	56.1	56.1	1	2740.57	3.25	0	79.76	0	0.72	0	0	8.42	0	0	0	0	0	0	-32.84	-32.84
Inverter Transformer	MV3-7 T	367951	4907754	2	0	0	56.1	56.1	1	2849.88	3.25	0	80.1	0	0.77	0	0	8.61	0	0	0	0	0	0	-33.41	-33.41
Inverter Transformer	MV3-17 T	368183	4907472	2	0	0	56.1	56.1	1	2858.35	3.25	0	80.12	0	0.77	0	0	8.63	0	0	0	0	0	0	-33.46	-33.46

	Inverter Transformer	MV3-19 T	368352	4907347	2	0	0	56.1	56.1	1	2933.73	3.25	0	80.35	0	0.8	0	0	8.76	0	0	0	0	0	0	-33.85	-33.85
	Inverter Transformer	MV3-10 T	368162	4907669	2	0	0	56.1	56.1	1	2957.62	3.25	0	80.42	0	0.81	0	0	8.8	0	0	0	0	0	0	-33.97	-33.97
	Inverter Transformer	MV3-3 T	367944	4907927	2	0	0	56.1	56.1	1	2962.96	3.25	0	80.43	0	0.81	0	0	8.81	0	0	0	0	0	0	-34	-34
	Inverter Transformer	MV3-21 T	368484	4907206	2	0	0	56.1	56.1	1	2981.64	3.25	0	80.49	0	0.82	0	0	8.84	0	0	0	0	0	0	-34.09	-34.09
	Inverter Transformer	MV3-15 T	368351	4907477	2	0	0	56.1	56.1	1	3001.09	3.25	0	80.55	0	0.83	0	0	8.87	0	0	0	0	0	0	-34.19	-34.19
	Inverter Transformer	MV3-6 T	368156	4907834	2	0	0	56.1	56.1	1	3057.02	3.25	0	80.71	0	0.85	0	0	8.96	0	0	0	0	0	0	-34.47	-34.47
	Inverter Transformer	MV3-11 T	368340	4907662	2	0	0	56.1	56.1	1	3096.04	3.25	0	80.82	0	0.87	0	0	9.03	0	0	0	0	0	0	-34.66	-34.66
	Inverter Transformer	MV3-22 T	368661	4907142	2	0	0	56.1	56.1	1	3113.45	3.25	0	80.86	0	0.88	0	0	9.06	0	0	0	0	0	0	-34.74	-34.74
	Inverter Transformer	MV3-16 T	368509	4907475	2	0	0	56.1	56.1	1	3134.15	3.25	0	80.92	0	0.89	0	0	9.09	0	0	0	0	0	0	-34.84	-34.84
	Inverter Transformer	MV3-1 T	368150	4907976	2	0	0	56.1	56.1	1	3146.37	3.25	0	80.96	0	0.89	0	0	9.11	0	0	0	0	0	0	-34.9	-34.9
	Inverter Transformer	MV3-5 T	368335	4907843	2	0	0	56.1	56.1	1	3201.13	3.25	0	81.11	0	0.91	0	0	9.2	0	0	0	0	0	0	-35.17	-35.17
	Inverter Transformer	MV3-20 T	368683	4907317	2	0	0	56.1	56.1	1	3209.35	3.25	0	81.13	0	0.92	0	0	9.22	0	0	0	0	0	0	-35.21	-35.21
	Inverter Transformer	MV3-9 T	368517	4907703	2	0	0	56.1	56.1	1	3264.44	3.25	0	81.28	0	0.94	0	0	9.31	0	0	0	0	0	0	-35.47	-35.47
	Inverter Transformer	MV3-14 T	368678	4907498	2	0	0	56.1	56.1	1	3291.41	3.25	0	81.35	0	0.95	0	0	9.35	0	0	0	0	0	0	-35.59	-35.59
	Inverter Transformer	MV3-4 T	368507	4907925	2	0	0	56.1	56.1	1	3387.13	3.25	0	81.6	0	0.99	0	0	9.51	0	0	0	0	0	0	-36.04	-36.04
	Inverter Transformer	MV3-8 T	368685	4907712	2	0	0	56.1	56.1	1	3409.15	3.25	0	81.65	0	1	0	0	9.54	0	0	0	0	0	0	-36.14	-36.14
	Inverter Transformer	MV3-2 T	368677	4907928	2	0	0	56.1	56.1	1	3524.99	3.25	0	81.94	0	1.05	0	0	9.73	0	0	0	0	0	0	-36.66	-36.66
	Inverter Transformer	MV4-13 T	369057	4908605	2	0	0	56.1	56.1	1	4242.86	3.25	0	83.55	0	1.34	0	0	10.81	0	0	0	0	0	0	-39.65	-39.65
	Inverter Transformer	MV4-15 T	369170	4908481	2	0	0	56.1	56.1	1	4251.85	3.25	0	83.57	0	1.34	0	0	10.82	0	0	0	0	0	0	-39.68	-39.68
	Inverter Transformer	MV4-14 T	369182	4908507	2	0	0	56.1	56.1	1	4277.36	3.25	0	83.62	0	1.35	0	0	10.86	0	0	0	0	0	0	-39.78	-39.78
	Inverter Transformer	MV4-12 T	369049	4908803	2	0	0	56.1	56.1	1	4367.89	3.25	0	83.81	0	1.39	0	0	10.99	0	0	0	0	0	0	-40.13	-40.13
	Inverter Transformer	MV4-7 T	369040	4909001	2	0	0	56.1	56.1	1	4497.46	3.25	0	84.06	0	1.44	0	0	11.17	0	0	0	0	0	0	-40.61	-40.61
	Inverter Transformer	MV6-2 T	370091	4907339	2	0	0	56.1	56.1	1	4515.8	3.25	0	84.09	0	1.45	0	0	11.2	0	0	0	0	0	0	-40.68	-40.68
	Inverter Transformer	MV6-3 T	370202	4907140	2	0	0	56.1	56.1	1	4560.77	3.25	0	84.18	0	1.46	0	0	11.26	0	0	0	0	0	0	-40.85	-40.85
	Inverter Transformer	MV4-11 T	369269	4908855	2	0	0	56.1	56.1	1	4566.65	3.25	0	84.19	0	1.46	0	0	11.27	0	0	0	0	0	0	-40.87	-40.87
	Inverter Transformer	MV4-10 T	369307	4908858	2	0	0	56.1	56.1	1	4597.32	3.25	0	84.25	0	1.48	0	0	11.31	0	0	0	0	0	0	-40.98	-40.98
	Inverter Transformer	MV4-4 T	369033	4909199	2	0	0	56.1	56.1	1	4633.27	3.25	0	84.32	0	1.49	0	0	11.36	0	0	0	0	0	0	-41.11	-41.11
	Inverter Transformer	MV4-8 T	369262	4909001	2	0	0	56.1	56.1	1	4658.69	3.25	0	84.37	0	1.5	0	0	11.4	0	0	0	0	0	0	-41.2	-41.2
	Inverter Transformer	MV4-9 T	369284	4909001	2	0	0	56.1	56.1	1	4674.94	3.25	0	84.4	0	1.51	0	0	11.42	0	0	0	0	0	0	-41.26	-41.26
	Inverter Transformer	MV4-1 T	369017	4909397	2	0	0	56.1	56.1	1	4767.42	3.25	0	84.57	0	1.54	0	0	11.54	0	0	0	0	0	0	-41.59	-41.59
	Inverter Transformer	MV4-6 T	369249	4909192	2	0	0	56.1	56.1	1	4780.43	3.25	0	84.59	0	1.55	0	0	11.56	0	0	0	0	0	0	-41.64	-41.64
	Inverter Transformer	MV4-5 T	369283	4909199	2	0	0	56.1	56.1	1	4809.7	3.25	0	84.64	0	1.56	0	0	11.6	0	0	0	0	0	0	-41.74	-41.74
	Inverter Transformer	MV4-3 T	369234	4909397	2	0	0	56.1	56.1	1	4915.31	3.25	0	84.83	0	1.59	0	0	11.74	0	0	0	0	0	0	-42.11	-42.11
	Inverter Transformer	MV5-6 T	369987	4908507	2	0	0	56.1	56.1	1	4934.27	3.25	0	84.86	0	1.6	0	0	11.77	0	0	0	0	0	0	-42.17	-42.17
	Inverter Transformer	MV4-2 T	369267	4909397	2	0	0	56.1	56.1	1	4938.24	3.25	0	84.87	0	1.6	0	0	11.77	0	0	0	0	0	0	-42.19	-42.19
	Inverter Transformer	MV5-5 T	370021	4908690	2	0	0	56.1	56.1	1	5063.13	3.25	0	85.09	0	1.65	0	0	11.94	0	0	0	0	0	0	-42.62	-42.62
	Inverter Transformer	MV5-2 T	370011	4908853	2	0	0	56.1	56.1	1	5148.03	3.25	0	85.23	0	1.68	0	0	12.05	0	0	0	0	0	0	-42.9	-42.9
	Inverter Transformer	MV5-1 T	370015	4909142	2	0	0	56.1	56.1	1	5324.67	3.25	0	85.53	0	1.74	0	0	12.27	0	0	0	0	0	0	-43.48	-43.48
	Inverter Transformer	MV5-4 T	370330	4908707	2	0	0	56.1	56.1	1	5331.03	3.25	0	85.54	0	1.74	0	0	12.28	0	0	0	0	0	0	-43.5	-43.5
	Inverter Transformer	MV5-3 T	370237	4908851	2	0	0	56.1	56.1	1	5332.25	3.25	0	85.54	0	1.74	0	0	12.28	0	0	0	0	0	0	-43.51	-43.51
	Line Reactor	NGR	369421	4908787.5	5	0	0	45.4	45.4	1	4639.35	5.25	0	84.33	0	3.27	1.35	0.09	1.9	0	0	0	0	0	0	-45.49	-45.49
Limit. Valu	0	0																								
Level D/N:	30.7388	30.7388																								

Receiver: Existing Noise Receptor
ID: S-R30
X: 365849
Y: 4905788
Z: 4.5
Ground: 0

ISO	Description	ID	X	Y	Z	Ground	ReflOrd	LxT	LxN	L/A	Dist.	hm	Freq	Adiv	K0b	Agr	Abar	z	Aatm	Afol	Ahous	Cmet	CmetN	Dc	RL	LtotT	LtotN
	Inverter	MV2-3	365820	4906641	2	0	0	100.3	100.3	1	853.5	3.25	0	69.62	0	-0.32	0	0	10.39	0	0	0	0	0	0	20.62	20.62
	Inverter	MV2-4	365586	4906624	2	0	0	100.3	100.3	1	876.4	3.25	0	69.85	0	-0.31	0	0	10.48	0	0	0	0	0	0	20.29	20.29
	Inverter	MV1-12	365038	4905386	2	0	0	100.3	100.3	1	905.17	3.25	0	70.13	0	-0.29	0	0	10.58	0	0	0	0	0	0	19.89	19.89
	Inverter	MV1-15	365315	4904994	2	0	0	100.3	100.3	1	956.87	3.25	0	70.62	0	-0.27	0	0	10.77	0	0	0	0	0	0	19.2	19.2
	Inverter	MV1-4	364815	4905918	2	0	0	100.3	100.3	1	1042.14	3.25	0	71.36	0	-0.23	0	0	11.05	0	0	0	0	0	0	18.13	18.13
	Inverter	MV1-8	364788	4905647	2	0	0	100.3	100.3	1	1070.33	3.25	0	71.59	0	-0.21	0	0	11.14	0	0	0	0	0	0	17.8	17.8
	Inverter	MV1-2	364753	4906063	2	0	0	100.3	100.3	1	1129.98	3.25	0	72.06	0	-0.19	0	0	11.32	0	0	0	0	0	0	17.12	17.12
	Inverter	MV1-5	364671	4905892	2	0	0	100.3	100.3	1	1182.58	3.25	0	72.46	0	-0.16	0	0	11.48	0	0	0	0	0	0	16.54	16.54
	Inverter	MV1-1	364715	4906166	2	0	0	100.3	100.3	1	1195.34	3.25	0	72.55	0	-0.16	0	0	11.51	0	0	0	0	0	0	16.41	16.41
	Sol_Luce Substation	S_Substation	369426	4908792	3.5	0	0	112.1	112.1	1	4671.08	5.25	0	84.39	0	0.8	2.94	0.25	8.22	0	0	0	0	0	0	15.72	15.72
	Inverter	MV1-10	365004	4905564	2	0	0	97.3	97.3	1	874.19	3.25	0	69.83	0	-0.31	0	0	10.47	0	0	0	0	0	0	17.32	17.32
	Inverter	MV1-11	364655	4905414	2	0	0	100.3	100.3	1	1251.21	3.25	0	72.95	0	-0.13	0	0	11.67	0	0	0	0	0	0	15.83	15.83
	Inverter	MV1-9	364561	4905646	2	0	0	100.3	100.3	1	1295.81	3.25	0	73.25	0	-0.11	0	0	11.79	0	0	0	0	0	0	15.38	15.38
	Inverter	MV1-7	364925	4905782	2	0	0	97.3	97.3	1	924.02	3.25	0	70.31	0	-0.28	0	0	10.65	0	0	0	0	0	0	16.63	16.63
	Inverter	MV1-6	364477	4905835	2	0	0	100.3	100.3	1	1372.81	3.25	0	73.75	0	-0.08	0	0	12	0	0	0	0	0	0	14.64	14.64
	Inverter	MV1-14	365163	4905049	2	0	0	97.3	97.3	1	1008.33	3.25	0	71.07	0	-0.24	0	0	10.94	0	0	0	0	0	0	15.54	15.54
	Inverter	MV2-1	365842	4906816	2	0	0	97.3	97.3	1	1028.03	3.25	0	71.24	0	-0.23	0	0	11	0	0	0	0	0	0	15.3	15.3
	Inverter	MV1-13	364731	4905241	2	0	0	97.3	97.3	1	1244.64	3.25	0	72.9	0	-0.13	0	0	11.65	0	0	0	0	0	0	12.89	12.89
	Inverter	MV3-18	367752	4907412	2	0	0	100.3	100.3	1	2501.76	3.25	0	78.96	0	0.26	0	0	14.46	0	0	0	0	0	0	6.63	6.63
	Inverter	MV3-12	367668	4907594	2	0	0	100.3	100.3	1	2563.28	3.25	0	79.18	0	0.27	0	0	14.58	0	0	0	0	0	0	6.29	6.29
	Inverter	MV3-13	367963	4907577	2	0	0	100.3	100.3	1	2769.39	3.25	0	79.85	0	0.32	0	0	14.96	0	0	0	0	0	0	5.19	5.19
	Inverter	MV3-7	367945	4907754	2	0	0	100.3	100.3	1	2873.74	3.25	0	80.17	0	0.34	0	0	15.15	0	0	0	0	0	0	4.66	4.66

Inverter	MV3-17	368178	4907472	2	0	0	100.3	100.3	1	2874.04	3.25	0	80.17	0	0.34	0	0	15.15	0	0	0	0	0	0	4.66	4.66
Inverter	MV3-19	368357	4907347	2	0	0	100.3	100.3	1	2953.06	3.25	0	80.41	0	0.35	0	0	15.29	0	0	0	0	0	0	4.26	4.26
Inverter	MV3-10	368167	4907669	2	0	0	100.3	100.3	1	2985.18	3.25	0	80.5	0	0.36	0	0	15.35	0	0	0	0	0	0	4.11	4.11
Inverter	MV3-21	368478	4907206	2	0	0	100.3	100.3	1	2987.03	3.25	0	80.5	0	0.36	0	0	15.35	0	0	0	0	0	0	4.1	4.1
Inverter	MV3-3	367939	4907927	2	0	0	100.3	100.3	1	2990.56	3.25	0	80.52	0	0.36	0	0	15.36	0	0	0	0	0	0	4.08	4.08
Inverter	MV3-15	368357	4907477	2	0	0	100.3	100.3	1	3023.7	3.25	0	80.61	0	0.37	0	0	15.41	0	0	0	0	0	0	3.92	3.92
Inverter	MV3-6	368162	4907834	2	0	0	100.3	100.3	1	3088.06	3.25	0	80.79	0	0.38	0	0	15.53	0	0	0	0	0	0	3.61	3.61
Inverter	MV3-11	368346	4907662	2	0	0	100.3	100.3	1	3122	3.25	0	80.89	0	0.39	0	0	15.59	0	0	0	0	0	0	3.45	3.45
Inverter	MV3-16	368514	4907475	2	0	0	100.3	100.3	1	3154.08	3.25	0	80.98	0	0.39	0	0	15.64	0	0	0	0	0	0	3.3	3.3
Inverter	MV2-2	365977	4906654	2	0	0	89.1	89.1	1	875.41	3.25	0	69.84	0	0.66	0	0	6.07	0	0	0	0	0	0	12.48	12.48
Inverter	MV3-20	368689	4907317	2	0	0	100.3	100.3	1	3225.44	3.25	0	81.17	0	0.4	0	0	15.77	0	0	0	0	0	0	2.97	2.97
Inverter	MV3-9	368512	4907703	2	0	0	100.3	100.3	1	3280.06	3.25	0	81.32	0	0.41	0	0	15.86	0	0	0	0	0	0	2.72	2.72
Inverter	MV3-14	368684	4907498	2	0	0	100.3	100.3	1	3310.79	3.25	0	81.4	0	0.42	0	0	15.91	0	0	0	0	0	0	2.58	2.58
Inverter	MV3-8	368680	4907712	2	0	0	100.3	100.3	1	3422.91	3.25	0	81.69	0	0.44	0	0	16.1	0	0	0	0	0	0	2.08	2.08
Inverter	MV6-2	370085	4907339	2	0	0	100.3	100.3	1	4511.02	3.25	0	84.09	0	0.59	0	0	17.85	0	0	0	0	0	0	-2.21	-2.21
Inverter	MV4-7	369035	4909001	2	0	0	100.3	100.3	1	4524.82	3.25	0	84.11	0	0.59	0	0	17.87	0	0	0	0	0	0	-2.26	-2.26
Inverter	MV6-3	370207	4907140	2	0	0	100.3	100.3	1	4562.9	3.25	0	84.18	0	0.6	0	0	17.93	0	0	0	0	0	0	-2.4	-2.4
Inverter	MV4-11	369264	4908855	2	0	0	100.3	100.3	1	4590.07	3.25	0	84.24	0	0.6	0	0	17.97	0	0	0	0	0	0	-2.49	-2.49
Inverter	MV4-10	369312	4908858	2	0	0	100.3	100.3	1	4627.88	3.25	0	84.31	0	0.61	0	0	18.02	0	0	0	0	0	0	-2.63	-2.63
Inverter	MV4-4	369027	4909199	2	0	0	100.3	100.3	1	4662.04	3.25	0	84.37	0	0.61	0	0	18.08	0	0	0	0	0	0	-2.74	-2.74
Inverter	MV4-8	369256	4909001	2	0	0	100.3	100.3	1	4683.06	3.25	0	84.41	0	0.61	0	0	18.11	0	0	0	0	0	0	-2.82	-2.82
Inverter	MV4-9	369289	4909001	2	0	0	100.3	100.3	1	4707.12	3.25	0	84.46	0	0.61	0	0	18.14	0	0	0	0	0	0	-2.9	-2.9
Inverter	MV4-1	369011	4909397	2	0	0	100.3	100.3	1	4798.24	3.25	0	84.62	0	0.62	0	0	18.28	0	0	0	0	0	0	-3.21	-3.21
Inverter	MV4-6	369243	4909192	2	0	0	100.3	100.3	1	4806.92	3.25	0	84.64	0	0.62	0	0	18.29	0	0	0	0	0	0	-3.24	-3.24
Inverter	MV4-5	369289	4909199	2	0	0	100.3	100.3	1	4844.43	3.25	0	84.7	0	0.63	0	0	18.35	0	0	0	0	0	0	-3.37	-3.37
Inverter	MV4-3	369229	4909397	2	0	0	100.3	100.3	1	4944.62	3.25	0	84.88	0	0.64	0	0	18.5	0	0	0	0	0	0	-3.71	-3.71
Inverter	MV4-2	369272	4909397	2	0	0	100.3	100.3	1	4974.11	3.25	0	84.93	0	0.64	0	0	18.54	0	0	0	0	0	0	-3.8	-3.8
Inverter	MV5-5	370015	4908690	2	0	0	100.3	100.3	1	5077.12	3.25	0	85.11	0	0.65	0	0	18.69	0	0	0	0	0	0	-4.14	-4.14
Inverter	MV5-2	370006	4908853	2	0	0	100.3	100.3	1	5164.77	3.25	0	85.26	0	0.66	0	0	18.82	0	0	0	0	0	0	-4.43	-4.43
Inverter	MV1-3	364440	4906039	2	0	0	89.1	89.1	1	1431.18	3.25	0	74.11	0	0.78	0	0	7.09	0	0	0	0	0	0	7.08	7.08
Inverter	MV5-4	370324	4908707	2	0	0	100.3	100.3	1	5342.86	3.25	0	85.56	0	0.67	0	0	19.08	0	0	0	0	0	0	-4.99	-4.99
Inverter	MV5-3	370231	4908851	2	0	0	100.3	100.3	1	5346.39	3.25	0	85.56	0	0.67	0	0	19.08	0	0	0	0	0	0	-5	-5
Inverter	MV5-1	370020	4909142	2	0	0	100.3	100.3	1	5352.25	3.25	0	85.57	0	0.67	0	0	19.09	0	0	0	0	0	0	-5.02	-5.02
Inverter	MV6-1	370235	4907364	2	0	0	97.3	97.3	1	4660.56	3.25	0	84.37	0	0.61	0	0	18.07	0	0	0	0	0	0	-5.74	-5.74
DSTATCOM - 10 MVAR #2	DSAT2	369403	4908757	2.5	0	0	96.6	96.6	1	4630.97	3.5	0	84.31	0	3.65	0	0	3.17	0	0	0	0	0	0	5.51	5.51
DSTATCOM - 10 MVAR #1	DSAT1	369437	4908757	2.5	0	0	96.6	96.6	1	4657.11	3.5	0	84.36	0	3.65	0	0	3.18	0	0	0	0	0	0	5.44	5.44
Gardiner Substation	G_Sub	366586.3	4903349.9	2.5	0	0	90.8	90.8	1	2547.14	4.25	0	79.12	0	1.01	3.45	0.33	5.26	0	0	0	0	0	0	1.94	1.94
SubstationTransformer	W_ST	369711.17	4906112.3	2.5	0	0	92	92	1	3875.76	4.25	0	82.77	0	1.33	2.66	0.29	7.2	0	0	0	0	0	0	-1.97	-1.97
Inverters	G_Inv1	366526.4	4903225.8	2	0	0	87.7	87.7	1	2650.24	3.25	0	79.47	0	2.66	0	0	3.38	0	0	0	0	0	0	2.15	2.15
Inverter	MV3-22	368656	4907142	2	0	0	89.1	89.1	1	3116.5	3.25	0	80.87	0	1.18	0	0	9.79	0	0	0	0	0	0	-2.78	-2.78
Inverters	G_Inv2	366676.9	4903239.1	2	0	0	87.7	87.7	1	2679.98	3.25	0	79.56	0	2.66	0	0	3.42	0	0	0	0	0	0	2.02	2.02
Inverter	MV3-1	368156	4907976	2	0	0	89.1	89.1	1	3179.56	3.25	0	81.05	0	1.19	0	0	9.89	0	0	0	0	0	0	-3.07	-3.07
Inverter	MV3-5	368340	4907843	2	0	0	89.1	89.1	1	3229.26	3.25	0	81.18	0	1.2	0	0	9.96	0	0	0	0	0	0	-3.29	-3.29
Inverters	G_Inv3	366583.7	4903091.4	2	0	0	87.7	87.7	1	2794.9	3.25	0	79.93	0	2.68	0	0	3.55	0	0	0	0	0	0	1.51	1.51
Inverters	G_Inv4	366732.8	4903105	2	0	0	87.7	87.7	1	2824.82	3.25	0	80.02	0	2.68	0	0	3.58	0	0	0	0	0	0	1.38	1.38
Inverter	MV3-4	368502	4907925	2	0	0	89.1	89.1	1	3406.64	3.25	0	81.65	0	1.25	0	0	10.23	0	0	0	0	0	0	-4.06	-4.06
Inverters	G_Inv5	366638.5	4902958.1	2	0	0	87.7	87.7	1	2937.97	3.25	0	80.36	0	2.69	0	0	3.71	0	0	0	0	0	0	0.9	0.9
Inverters	G_Inv6	366788.5	4902972	2	0	0	87.7	87.7	1	2968.59	3.25	0	80.45	0	2.69	0	0	3.74	0	0	0	0	0	0	0.77	0.77
Inverter	MV3-2	368671	4907928	2	0	0	89.1	89.1	1	3541.65	3.25	0	81.98	0	1.28	0	0	10.42	0	0	0	0	0	0	-4.63	-4.63
Westbrook Inverter Enclosur	W_INV2	369374	4906388	2	0	0	89.1	89.1	1	3575.7	3.25	0	82.07	0	1.29	0	0	10.47	0	0	0	0	0	0	-4.77	-4.77
Inverters	G_Inv7	366694.6	4902824.7	2	0	0	87.7	87.7	1	3081.59	3.25	0	80.78	0	2.71	0	0	3.87	0	0	0	0	0	0	0.31	0.31
Inverters	G_Inv8	366844.5	4902838.5	2	0	0	87.7	87.7	1	3112.97	3.25	0	80.86	0	2.71	0	0	3.9	0	0	0	0	0	0	0.19	0.19
Westbrook Inverter Enclosur	W_INV3	369508	4906164	2	0	0	89.1	89.1	1	3678.27	3.25	0	82.31	0	1.31	0	0	10.62	0	0	0	0	0	0	-5.19	-5.19
Inverters	G_Inv9	366750.9	4902691.8	2	0	0	87.7	87.7	1	3224.89	3.25	0	81.17	0	2.72	0	0	4.03	0	0	0	0	0	0	-0.26	-0.26
Inverters	G_Inv10	366900.7	4902704.8	2	0	0	87.7	87.7	1	3257.64	3.25	0	81.26	0	2.72	0	0	4.06	0	0	0	0	0	0	-0.38	-0.38
Westbrook Inverter Enclosur	W_INV4	369673	4906164	2	0	0	89.1	89.1	1	3842.44	3.25	0	82.69	0	1.35	0	0	10.86	0	0	0	0	0	0	-5.85	-5.85
Westbrook Inverter Enclosur	W_INV5	369719	4906574	2	0	0	89.1	89.1	1	3949.01	3.25	0	82.93	0	1.38	0	0	11.01	0	0	0	0	0	0	-6.26	-6.26
Westbrook Inverter Enclosur	W_INV7	369780	4906417	2	0	0	89.1	89.1	1	3981.01	3.25	0	83	0	1.39	0	0	11.06	0	0	0	0	0	0	-6.39	-6.39
Westbrook Inverter Enclosur	W_INV6	369875	4906578	2	0	0	89.1	89.1	1	4102.78	3.25	0	83.26	0	1.42	0	0	11.23	0	0	0	0	0	0	-6.85	-6.85
Fixed Reactor Bank 1	FRB1	369378	4908755	6	0	0	89.8	89.8	1	4610.52	5.25	0	84.28	0	-0.63	0	0	8.15	0	0	0	0	0	0	-2.02	-2.02
Inverter	MV4-13	369051	4908605	2	0	0	89.1	89.1	1	4264.77	3.25	0	83.6	0	1.46	0	0	11.46	0	0	0	0	0	0	-7.46	-7.46
Inverter	MV4-15	369176	4908481	2	0	0	89.1	89.1	1	4280.33	3.25	0	83.63	0	1.46	0	0	11.48	0	0	0	0	0	0	-7.51	-7.51
Inverter	MV4-14	369176	4908507	2	0	0	89.1	89.1	1	4296.73	3.25	0	83.66	0	1.47	0	0	11.5	0	0	0	0	0	0	-7.57	-7.57
Fixed Reactor Bank 2	FRB2	369464	4908755	6	0	0	89.8	89.8	1	4676.68	5.25	0	84.4	0	-0.62	0	0	8.23	0	0	0	0	0	0	-2.23	-2.23
Inverter	MV4-12	369043	4908803	2	0	0	89.1	89.1	1	4392.25	3.25	0	83.85	0	1.49	0	0	11.64	0	0	0	0	0	0	-7.92	-7.92
Inverter	MV5-6	369982	4908507	2	0	0	89.1	89.1	1	4947.19	3.25	0	84.89	0	1.63	0	0	12.39	0	0	0	0	0	0	-9.85	-9.85
Westbrook Inverter Enclosur	W_INV1	369409	4906578	2	0	0	86.1	86.1	1	3646.6	3.25	0	82.24	0	1.31	0	0	10.58	0	0	0	0	0	0	-8.06	-8.06
Inverter	MV6-4	370250	4906966	2	0	0	86.1	86.1	1	4555.93	3.25	0	84.17	0	1.53	0	0	11.86	0	0	0	0	0	0	-11.51	-11.51
Inverter Transformer	MV1-10 T	365010	4905564	2	0	0	69.4	69.4	1	868.39	3.25	0	69.77	0	1.56	0	0	3.62	0	0	0	0	0	0	-5.61	-5.61
Inverter Transformer	MV1-7 T	364919	4905782	2	0	0	69.4	69.4	1	930.02	3.25	0	70.37	0	1.62	0	0	3.71	0	0	0	0	0	0	-6.35	-6.35
Inverter Transformer	MV1-14 T	365157	4905049	2	0	0	69.4	69.4	1	1012.42	3.25	0	71.11	0	1.69	0	0	3.83	0	0	0	0	0	0	-7.28	-7.28
Inverter Transformer	MV2-1 T	365836	4906816	2	0	0	69.4	69.4	1	1028.09	3.25	0	71.24	0	1.71	0	0	3.85	0	0	0	0	0	0	-7.45	-7.45
Inverter Transformer	MV1-13 T	364725	4905241	2	0	0	69.4	69.4	1	1250.04	3.25	0	72.94	0	1.85	0	0	4.14	0	0	0	0	0	0	-9.58	-9.58
Westbrook Inverter Transfor	W_INVTR1	369403	4906578	2	0	0	78.2	78.2	1	3640.74	3.25	0	82.22	0	-2.88	0	0	1.92	0	0	0	0	0	0	-3.02	-3.02

Westbrook Inverter Transfor	W_INVTR2	369368	4906388	2	0	0	77.3	77.3	1	3569.79	3.25	0	82.05	0	-2.86	0	0	1.89	0	0	0	0	0	0	-3.74	-3.74
Westbrook Inverter Transfor	W_INVTR3	369514	4906164	2	0	0	77.3	77.3	1	3684.24	3.25	0	82.33	0	-2.89	0	0	1.93	0	0	0	0	0	0	-4.03	-4.03
Westbrook Inverter Transfor	W_INVTR4	369679	4906164	2	0	0	77.3	77.3	1	3848.41	3.25	0	82.71	0	-2.93	0	0	2	0	0	0	0	0	0	-4.43	-4.43
Westbrook Inverter Transfor	W_INVTR5	369725	4906574	2	0	0	77.3	77.3	1	3954.89	3.25	0	82.94	0	-2.95	0	0	2.04	0	0	0	0	0	0	-4.69	-4.69
Westbrook Inverter Transfor	W_INVTR7	369786	4906417	2	0	0	77.3	77.3	1	3986.93	3.25	0	83.01	0	-2.96	0	0	2.05	0	0	0	0	0	0	-4.76	-4.76
Westbrook Inverter Transfor	W_INVTR6	369881	4906578	2	0	0	77.3	77.3	1	4108.67	3.25	0	83.27	0	-2.99	0	0	2.1	0	0	0	0	0	0	-5.04	-5.04
Inverter Transformer	MV2-3 T	365814	4906641	2	0	0	56.1	56.1	1	853.72	3.25	0	69.63	0	-0.04	0	0	4.53	0	0	0	0	0	0	-18.06	-18.06
Inverter Transformer	MV2-2 T	365982	4906654	2	0	0	56.1	56.1	1	876.16	3.25	0	69.85	0	-0.03	0	0	4.59	0	0	0	0	0	0	-18.35	-18.35
Inverter Transformer	MV2-4 T	365590	4906628	2	0	0	56.1	56.1	1	879.03	3.25	0	69.88	0	-0.03	0	0	4.59	0	0	0	0	0	0	-18.39	-18.39
Inverter Transformer	MV1-12 T	365044	4905386	2	0	0	56.1	56.1	1	899.8	3.25	0	70.08	0	-0.02	0	0	4.65	0	0	0	0	0	0	-18.65	-18.65
Inverter Transformer	MV1-15 T	365309	4904994	2	0	0	56.1	56.1	1	960.23	3.25	0	70.65	0	0	0	0	4.79	0	0	0	0	0	0	-19.38	-19.38
Inverter Transformer	MV6-4 T	370244	4906966	2	0	0	69.4	69.4	1	4550.13	3.25	0	84.16	0	2.92	0	0	7.07	0	0	0	0	0	0	-24.8	-24.8
Inverter Transformer	MV6-1 T	370230	4907364	2	0	0	69.4	69.4	1	4655.85	3.25	0	84.36	0	2.94	0	0	7.15	0	0	0	0	0	0	-25.1	-25.1
Inverter Transformer	MV1-4 T	364821	4905918	2	0	0	56.1	56.1	1	1036.19	3.25	0	71.31	0	0.02	0	0	4.98	0	0	0	0	0	0	-20.25	-20.25
Inverter Transformer	MV1-8 T	364782	4905647	2	0	0	56.1	56.1	1	1076.28	3.25	0	71.64	0	0.04	0	0	5.07	0	0	0	0	0	0	-20.69	-20.69
Inverter Transformer	MV1-2 T	364759	4906063	2	0	0	56.1	56.1	1	1124.16	3.25	0	72.02	0	0.06	0	0	5.18	0	0	0	0	0	0	-21.2	-21.2
Inverter Transformer	MV1-5 T	364676	4905892	2	0	0	56.1	56.1	1	1177.6	3.25	0	72.42	0	0.08	0	0	5.3	0	0	0	0	0	0	-21.74	-21.74
Inverter Transformer	MV1-1 T	364721	4906166	2	0	0	56.1	56.1	1	1189.65	3.25	0	72.51	0	0.08	0	0	5.33	0	0	0	0	0	0	-21.86	-21.86
Inverter Transformer	MV1-11 T	364649	4905414	2	0	0	56.1	56.1	1	1256.93	3.25	0	72.99	0	0.1	0	0	5.48	0	0	0	0	0	0	-22.52	-22.52
Inverter Transformer	MV1-9 T	364555	4905646	2	0	0	56.1	56.1	1	1301.77	3.25	0	73.29	0	0.12	0	0	5.58	0	0	0	0	0	0	-22.94	-22.94
Inverter Transformer	MV1-6 T	364482	4905835	2	0	0	56.1	56.1	1	1367.81	3.25	0	73.72	0	0.15	0	0	5.73	0	0	0	0	0	0	-23.54	-23.54
Inverter Transformer	MV1-3 T	364435	4906039	2	0	0	56.1	56.1	1	1436.11	3.25	0	74.14	0	0.17	0	0	5.88	0	0	0	0	0	0	-24.14	-24.14
Inverter Transformer	MV3-18 T	367757	4907412	2	0	0	56.1	56.1	1	2505.56	3.25	0	78.98	0	0.62	0	0	8	0	0	0	0	0	0	-31.54	-31.54
Inverter Transformer	MV3-12 T	367674	4907594	2	0	0	56.1	56.1	1	2567.54	3.25	0	79.19	0	0.65	0	0	8.11	0	0	0	0	0	0	-31.89	-31.89
Inverter Transformer	MV3-13 T	367958	4907577	2	0	0	56.1	56.1	1	2765.58	3.25	0	79.84	0	0.73	0	0	8.46	0	0	0	0	0	0	-32.97	-32.97
Inverter Transformer	MV3-17 T	368183	4907472	2	0	0	56.1	56.1	1	2878.09	3.25	0	80.18	0	0.78	0	0	8.66	0	0	0	0	0	0	-33.56	-33.56
Inverter Transformer	MV3-7 T	367951	4907754	2	0	0	56.1	56.1	1	2878.12	3.25	0	80.18	0	0.78	0	0	8.66	0	0	0	0	0	0	-33.56	-33.56
Inverter Transformer	MV3-19 T	368352	4907347	2	0	0	56.1	56.1	1	2948.81	3.25	0	80.39	0	0.81	0	0	8.78	0	0	0	0	0	0	-33.92	-33.92
Inverter Transformer	MV3-10 T	368162	4907669	2	0	0	56.1	56.1	1	2981.3	3.25	0	80.49	0	0.82	0	0	8.84	0	0	0	0	0	0	-34.09	-34.09
Inverter Transformer	MV3-21 T	368484	4907206	2	0	0	56.1	56.1	1	2992.32	3.25	0	80.52	0	0.83	0	0	8.86	0	0	0	0	0	0	-34.14	-34.14
Inverter Transformer	MV3-3 T	367944	4907927	2	0	0	56.1	56.1	1	2994.05	3.25	0	80.53	0	0.83	0	0	8.86	0	0	0	0	0	0	-34.15	-34.15
Inverter Transformer	MV3-15 T	368351	4907477	2	0	0	56.1	56.1	1	3018.73	3.25	0	80.6	0	0.84	0	0	8.9	0	0	0	0	0	0	-34.28	-34.28
Inverter Transformer	MV3-6 T	368156	4907834	2	0	0	56.1	56.1	1	3083.56	3.25	0	80.78	0	0.87	0	0	9.01	0	0	0	0	0	0	-34.6	-34.6
Inverter Transformer	MV3-11 T	368340	4907662	2	0	0	56.1	56.1	1	3117.2	3.25	0	80.88	0	0.88	0	0	9.07	0	0	0	0	0	0	-34.76	-34.76
Inverter Transformer	MV3-22 T	368661	4907142	2	0	0	56.1	56.1	1	3121	3.25	0	80.89	0	0.88	0	0	9.07	0	0	0	0	0	0	-34.78	-34.78
Inverter Transformer	MV3-16 T	368509	4907475	2	0	0	56.1	56.1	1	3149.85	3.25	0	80.97	0	0.89	0	0	9.12	0	0	0	0	0	0	-34.92	-34.92
Inverter Transformer	MV3-1 T	368150	4907976	2	0	0	56.1	56.1	1	3175.21	3.25	0	81.04	0	0.9	0	0	9.16	0	0	0	0	0	0	-35.04	-35.04
Inverter Transformer	MV3-20 T	368683	4907317	2	0	0	56.1	56.1	1	3220.16	3.25	0	81.16	0	0.92	0	0	9.24	0	0	0	0	0	0	-35.26	-35.26
Inverter Transformer	MV3-5 T	368335	4907843	2	0	0	56.1	56.1	1	3225.4	3.25	0	81.17	0	0.93	0	0	9.24	0	0	0	0	0	0	-35.28	-35.28
Inverter Transformer	MV3-9 T	368517	4907703	2	0	0	56.1	56.1	1	3284.12	3.25	0	81.33	0	0.95	0	0	9.34	0	0	0	0	0	0	-35.56	-35.56
Inverter Transformer	MV3-14 T	368678	4907498	2	0	0	56.1	56.1	1	3305.65	3.25	0	81.39	0	0.96	0	0	9.38	0	0	0	0	0	0	-35.66	-35.66
Inverter Transformer	MV3-4 T	368507	4907925	2	0	0	56.1	56.1	1	3410.53	3.25	0	81.66	0	1	0	0	9.55	0	0	0	0	0	0	-36.15	-36.15
Inverter Transformer	MV3-8 T	368685	4907712	2	0	0	56.1	56.1	1	3427.05	3.25	0	81.7	0	1.01	0	0	9.57	0	0	0	0	0	0	-36.22	-36.22
Inverter Transformer	MV3-2 T	368677	4907928	2	0	0	56.1	56.1	1	3546.43	3.25	0	82	0	1.06	0	0	9.76	0	0	0	0	0	0	-36.76	-36.76
Inverter Transformer	MV4-13 T	369057	4908605	2	0	0	56.1	56.1	1	4269.28	3.25	0	83.61	0	1.35	0	0	10.85	0	0	0	0	0	0	-39.75	-39.75
Inverter Transformer	MV4-15 T	369170	4908481	2	0	0	56.1	56.1	1	4275.66	3.25	0	83.62	0	1.35	0	0	10.86	0	0	0	0	0	0	-39.77	-39.77
Inverter Transformer	MV4-14 T	369182	4908507	2	0	0	56.1	56.1	1	4301.38	3.25	0	83.67	0	1.36	0	0	10.89	0	0	0	0	0	0	-39.87	-39.87
Inverter Transformer	MV4-12 T	369049	4908803	2	0	0	56.1	56.1	1	4396.62	3.25	0	83.86	0	1.4	0	0	11.03	0	0	0	0	0	0	-40.23	-40.23
Inverter Transformer	MV6-2 T	370091	4907339	2	0	0	56.1	56.1	1	4516.65	3.25	0	84.1	0	1.45	0	0	11.2	0	0	0	0	0	0	-40.68	-40.68
Inverter Transformer	MV4-7 T	369040	4909001	2	0	0	56.1	56.1	1	4528.34	3.25	0	84.12	0	1.45	0	0	11.22	0	0	0	0	0	0	-40.73	-40.73
Inverter Transformer	MV6-3 T	370202	4907140	2	0	0	56.1	56.1	1	4558.13	3.25	0	84.18	0	1.46	0	0	11.26	0	0	0	0	0	0	-40.84	-40.84
Inverter Transformer	MV4-11 T	369269	4908855	2	0	0	56.1	56.1	1	4593.79	3.25	0	84.24	0	1.48	0	0	11.31	0	0	0	0	0	0	-40.97	-40.97
Inverter Transformer	MV4-10 T	369307	4908858	2	0	0	56.1	56.1	1	4624.14	3.25	0	84.3	0	1.49	0	0	11.35	0	0	0	0	0	0	-41.08	-41.08
Inverter Transformer	MV4-4 T	369033	4909199	2	0	0	56.1	56.1	1	4666.13	3.25	0	84.38	0	1.5	0	0	11.41	0	0	0	0	0	0	-41.23	-41.23
Inverter Transformer	MV4-8 T	369262	4909001	2	0	0	56.1	56.1	1	4687.42	3.25	0	84.42	0	1.51	0	0	11.43	0	0	0	0	0	0	-41.31	-41.31
Inverter Transformer	MV4-9 T	369284	4909001	2	0	0	56.1	56.1	1	4703.47	3.25	0	84.45	0	1.52	0	0	11.46	0	0	0	0	0	0	-41.36	-41.36
Inverter Transformer	MV4-1 T	369017	4909397	2	0	0	56.1	56.1	1	4802.2	3.25	0	84.63	0	1.55	0	0	11.59	0	0	0	0	0	0	-41.71	-41.71
Inverter Transformer	MV4-6 T	369249	4909192	2	0	0	56.1	56.1	1	4811.16	3.25	0	84.64	0	1.56	0	0	11.6	0	0	0	0	0	0	-41.75	-41.75
Inverter Transformer	MV4-5 T	369283	4909199	2	0	0	56.1	56.1	1	4840.17	3.25	0	84.7	0	1.57	0	0	11.64	0	0	0	0	0	0	-41.85	-41.85
Inverter Transformer	MV4-3 T	369234	4909397	2	0	0	56.1	56.1	1	4948.04	3.25	0	84.89	0	1.61	0	0	11.79	0	0	0	0	0	0	-42.22	-42.22
Inverter Transformer	MV5-6 T	369987	4908507	2	0	0	56.1	56.1	1	4951.36	3.25	0	84.89	0	1.61	0	0	11.79	0	0	0	0	0	0	-42.23	-42.23
Inverter Transformer	MV4-2 T	369267	4909397	2	0	0	56.1	56.1	1	4970.68	3.25	0	84.93	0	1.61	0	0	11.82	0	0	0	0	0	0	-42.3	-42.3
Inverter Transformer	MV5-5 T	370021	4908690	2	0	0	56.1	56.1	1	5082.05	3.25	0	85.12	0	1.65	0	0	11.96	0	0	0	0	0	0	-42.68	-42.68
Inverter Transformer	MV5-2 T	370011	4908853	2	0	0	56.1	56.1	1	5168.8	3.25	0	85.27	0	1.69	0	0	12.07	0	0	0	0	0	0	-42.97	-42.97
Inverter Transformer	MV5-4 T	370330	4908707	2	0	0	56.1	56.1	1	5347.89	3.25	0	85.56	0	1.75	0	0	12.3	0	0	0	0	0	0	-43.56	-43.56
Inverter Transformer	MV5-1 T	370015	4909142	2	0	0	56.1	56.1	1	5348.35	3.25	0	85.56	0	1.75	0	0	12.3	0	0	0	0	0	0	-43.56	-43.56
Inverter Transformer	MV5-3 T	370237	4908851	2	0	0	56.1	56.1	1	5351.31	3.25	0	85.57	0	1.75	0	0	12.31	0	0	0	0	0	0	-43.57	-43.57
Line Reactor	NGR	369421	4908787.5	5	0	0	45.4	45.4	1	4664.35	5.25	0	84.38	0	3.27	1.35	0.09	1.91	0	0	0	0	0	0	-45.55	-45.55
Limit. Valu 0	0																								
Level D/N: 30.4315	30.4315																								

Receiver: Existing Noise Receptor
ID: S-R31*
X: 367596

Y: 4907979
Z: 4.5
Ground: 0

ISO	Description	ID	X	Y	Z	Ground	ReflOrd	LxT	LxN	L/A	Dist.	hm	Freq	Adiv	K0b	Agr	Abar	z	Aatm	Afol	Ahous	Cmet	CmetN	Dc	RL	LtotT	LtotN
	Inverter	MV3-3	367939	4907927	2	0	0	100.3	100.3	1	346.93	3.25	0	61.8	0	-0.64	0	0	7.02	0	0	0	0	0	0	32.13	32.13
	Inverter	MV3-12	367668	4907594	2	0	0	100.3	100.3	1	391.68	3.25	0	62.86	0	-0.62	0	0	7.53	0	0	0	0	0	0	30.54	30.54
	Inverter	MV3-7	367945	4907754	2	0	0	100.3	100.3	1	415.25	3.25	0	63.37	0	-0.61	0	0	7.78	0	0	0	0	0	0	29.78	29.78
	Sol_Luce Substation	S_Substation	369426	4908792	3.5	0	0	112.1	112.1	1	2002.47	5.25	0	77.03	0	0.01	3.74	0.3	4.37	0	0	0	0	0	0	26.92	26.92
	Inverter	MV3-13	367963	4907577	2	0	0	100.3	100.3	1	544.33	3.25	0	65.72	0	-0.52	0	0	8.85	0	0	0	0	0	0	26.26	26.26
	Inverter	MV3-6	368162	4907834	2	0	0	100.3	100.3	1	584.28	3.25	0	66.33	0	-0.49	0	0	9.11	0	0	0	0	0	0	25.36	25.36
	Inverter	MV3-18	367752	4907412	2	0	0	100.3	100.3	1	588.07	3.25	0	66.39	0	-0.49	0	0	9.13	0	0	0	0	0	0	25.28	25.28
	Inverter	MV3-10	368167	4907669	2	0	0	100.3	100.3	1	649.73	3.25	0	67.25	0	-0.44	0	0	9.48	0	0	0	0	0	0	24.02	24.02
	Inverter	MV3-17	368178	4907472	2	0	0	100.3	100.3	1	771.87	3.25	0	68.75	0	-0.37	0	0	10.06	0	0	0	0	0	0	21.87	21.87
	Inverter	MV3-11	368346	4907662	2	0	0	100.3	100.3	1	814.25	3.25	0	69.22	0	-0.34	0	0	10.24	0	0	0	0	0	0	21.2	21.2
	Inverter	MV3-15	368357	4907477	2	0	0	100.3	100.3	1	911.66	3.25	0	70.2	0	-0.29	0	0	10.61	0	0	0	0	0	0	19.8	19.8
	Inverter	MV3-9	368512	4907703	2	0	0	100.3	100.3	1	956.68	3.25	0	70.62	0	-0.27	0	0	10.77	0	0	0	0	0	0	19.2	19.2
	Inverter	MV3-19	368357	4907347	2	0	0	100.3	100.3	1	989.22	3.25	0	70.91	0	-0.25	0	0	10.88	0	0	0	0	0	0	18.78	18.78
	Inverter	MV3-16	368514	4907475	2	0	0	100.3	100.3	1	1047.26	3.25	0	71.4	0	-0.22	0	0	11.06	0	0	0	0	0	0	18.07	18.07
	Inverter	MV3-8	368680	4907712	2	0	0	100.3	100.3	1	1116.4	3.25	0	71.96	0	-0.19	0	0	11.28	0	0	0	0	0	0	17.27	17.27
	Inverter	MV3-21	368478	4907206	2	0	0	100.3	100.3	1	1172.8	3.25	0	72.38	0	-0.17	0	0	11.45	0	0	0	0	0	0	16.65	16.65
	Inverter	MV3-14	368684	4907498	2	0	0	100.3	100.3	1	1189.58	3.25	0	72.51	0	-0.16	0	0	11.5	0	0	0	0	0	0	16.47	16.47
	Inverter	MV3-20	368689	4907317	2	0	0	100.3	100.3	1	1277.85	3.25	0	73.13	0	-0.12	0	0	11.74	0	0	0	0	0	0	15.56	15.56
	Inverter	MV4-7	369035	4909001	2	0	0	100.3	100.3	1	1765	3.25	0	75.93	0	0.06	0	0	12.95	0	0	0	0	0	0	11.37	11.37
	Inverter	MV4-4	369027	4909199	2	0	0	100.3	100.3	1	1880.47	3.25	0	76.49	0	0.09	0	0	13.21	0	0	0	0	0	0	10.53	10.53
	Inverter	MV4-11	369264	4908855	2	0	0	100.3	100.3	1	1884.04	3.25	0	76.5	0	0.1	0	0	13.21	0	0	0	0	0	0	10.5	10.5
	Inverter	MV4-10	369312	4908858	2	0	0	100.3	100.3	1	1928.03	3.25	0	76.7	0	0.11	0	0	13.31	0	0	0	0	0	0	10.19	10.19
	Inverter	MV4-8	369256	4909001	2	0	0	100.3	100.3	1	1949.38	3.25	0	76.8	0	0.11	0	0	13.35	0	0	0	0	0	0	10.04	10.04
	Inverter	MV4-9	369289	4909001	2	0	0	100.3	100.3	1	1977.56	3.25	0	76.92	0	0.12	0	0	13.41	0	0	0	0	0	0	9.85	9.85
	Inverter	MV4-1	369011	4909397	2	0	0	100.3	100.3	1	2003.24	3.25	0	77.03	0	0.13	0	0	13.47	0	0	0	0	0	0	9.68	9.68
	Inverter	MV4-6	369243	4909192	2	0	0	100.3	100.3	1	2045.48	3.25	0	77.22	0	0.14	0	0	13.56	0	0	0	0	0	0	9.4	9.4
	Inverter	MV3-1	368156	4907976	2	0	0	89.1	89.1	1	560.01	3.25	0	65.96	0	0.56	0	0	5.34	0	0	0	0	0	0	17.2	17.2
	Inverter	MV4-5	369289	4909199	2	0	0	100.3	100.3	1	2086.78	3.25	0	77.39	0	0.15	0	0	13.64	0	0	0	0	0	0	9.13	9.13
	Inverter	MV4-3	369229	4909397	2	0	0	100.3	100.3	1	2162.73	3.25	0	77.7	0	0.17	0	0	13.8	0	0	0	0	0	0	8.64	8.64
	Inverter	MV4-2	369272	4909397	2	0	0	100.3	100.3	1	2195.38	3.25	0	77.83	0	0.18	0	0	13.86	0	0	0	0	0	0	8.44	8.44
	Inverter	MV2-3	365820	4906641	2	0	0	100.3	100.3	1	2223.61	3.25	0	77.94	0	0.19	0	0	13.92	0	0	0	0	0	0	8.26	8.26
	Inverter	MV2-4	365586	4906624	2	0	0	100.3	100.3	1	2424.07	3.25	0	78.69	0	0.24	0	0	14.31	0	0	0	0	0	0	7.07	7.07
	Inverter	MV5-5	370015	4908690	2	0	0	100.3	100.3	1	2521.33	3.25	0	79.03	0	0.26	0	0	14.5	0	0	0	0	0	0	6.52	6.52
	Inverter	MV5-2	370006	4908853	2	0	0	100.3	100.3	1	2563.59	3.25	0	79.18	0	0.27	0	0	14.58	0	0	0	0	0	0	6.29	6.29
	Inverter	MV6-2	370085	4907339	2	0	0	100.3	100.3	1	2569.97	3.25	0	79.2	0	0.27	0	0	14.59	0	0	0	0	0	0	6.25	6.25
	Inverter	MV5-1	370020	4909142	2	0	0	100.3	100.3	1	2688.56	3.25	0	79.59	0	0.3	0	0	14.81	0	0	0	0	0	0	5.61	5.61
	Inverter	MV6-3	370207	4907140	2	0	0	100.3	100.3	1	2742.49	3.25	0	79.76	0	0.31	0	0	14.91	0	0	0	0	0	0	5.33	5.33
	Inverter	MV3-5	368340	4907843	2	0	0	89.1	89.1	1	756.33	3.25	0	68.57	0	0.63	0	0	5.83	0	0	0	0	0	0	14.03	14.03
	Inverter	MV5-3	370231	4908851	2	0	0	100.3	100.3	1	2775.54	3.25	0	79.87	0	0.32	0	0	14.97	0	0	0	0	0	0	5.16	5.16
	Inverter	MV5-4	370324	4908707	2	0	0	100.3	100.3	1	2823.47	3.25	0	80.02	0	0.33	0	0	15.06	0	0	0	0	0	0	4.91	4.91
	Inverter	MV2-1	365842	4906816	2	0	0	97.3	97.3	1	2104.54	3.25	0	77.46	0	0.16	0	0	13.68	0	0	0	0	0	0	6.01	6.01
	DSTATCOM - 10 MVAR #2	DSAT2	369403	4908757	2.5	0	0	96.6	96.6	1	1967.37	3.5	0	76.88	0	3.21	0	0	1.7	0	0	0	0	0	0	14.84	14.84
	DSTATCOM - 10 MVAR #1	DSAT1	369437	4908757	2.5	0	0	96.6	96.6	1	1998.64	3.5	0	77.01	0	3.22	0	0	1.72	0	0	0	0	0	0	14.68	14.68
	Inverter	MV3-4	368502	4907925	2	0	0	89.1	89.1	1	907.61	3.25	0	70.16	0	0.66	0	0	6.14	0	0	0	0	0	0	12.1	12.1
	Inverter	MV1-1	364715	4906166	2	0	0	100.3	100.3	1	3403.99	3.25	0	81.64	0	0.43	0	0	16.07	0	0	0	0	0	0	2.17	2.17
	Inverter	MV1-2	364753	4906063	2	0	0	100.3	100.3	1	3428.37	3.25	0	81.7	0	0.44	0	0	16.11	0	0	0	0	0	0	2.06	2.06
	Inverter	MV1-4	364815	4905918	2	0	0	100.3	100.3	1	3461.46	3.25	0	81.79	0	0.44	0	0	16.17	0	0	0	0	0	0	1.92	1.92
	Inverter	MV1-5	364671	4905892	2	0	0	100.3	100.3	1	3593.22	3.25	0	82.11	0	0.47	0	0	16.39	0	0	0	0	0	0	1.35	1.35
	Inverter	MV1-12	365038	4905386	2	0	0	100.3	100.3	1	3642.39	3.25	0	82.23	0	0.47	0	0	16.47	0	0	0	0	0	0	1.14	1.14
	Inverter	MV1-8	364788	4905647	2	0	0	100.3	100.3	1	3650.08	3.25	0	82.25	0	0.48	0	0	16.48	0	0	0	0	0	0	1.11	1.11
	Inverter	MV1-15	365315	4904994	2	0	0	100.3	100.3	1	3756.75	3.25	0	82.5	0	0.49	0	0	16.66	0	0	0	0	0	0	0.67	0.67
	Inverter	MV1-6	364477	4905835	2	0	0	100.3	100.3	1	3784.83	3.25	0	82.56	0	0.5	0	0	16.7	0	0	0	0	0	0	0.55	0.55
	Inverter	MV6-1	370235	4907364	2	0	0	97.3	97.3	1	2709.71	3.25	0	79.66	0	0.3	0	0	14.85	0	0	0	0	0	0	2.5	2.5
	Inverter	MV1-9	364561	4905646	2	0	0	100.3	100.3	1	3828.07	3.25	0	82.66	0	0.5	0	0	16.77	0	0	0	0	0	0	0.38	0.38
	Inverter	MV1-11	364655	4905414	2	0	0	100.3	100.3	1	3902.4	3.25	0	82.83	0	0.51	0	0	16.89	0	0	0	0	0	0	0.08	0.08
	Inverter	MV3-2	368671	4907928	2	0	0	89.1	89.1	1	1076.21	3.25	0	71.64	0	0.7	0	0	6.46	0	0	0	0	0	0	10.26	10.26
	Inverter	MV1-7	364925	4905782	2	0	0	97.3	97.3	1	3458.48	3.25	0	81.78	0	0.44	0	0	16.16	0	0	0	0	0	0	-1.07	-1.07
	Inverter	MV3-22	368656	4907142	2	0	0	89.1	89.1	1	1350.62	3.25	0	73.61	0	0.76	0	0	6.95	0	0	0	0	0	0	7.74	7.74
	Inverter	MV1-10	365004	4905564	2	0	0	97.3	97.3	1	3542.7	3.25	0	81.99	0	0.46	0	0	16.3	0	0	0	0	0	0	-1.44	-1.44
	Inverter	MV1-14	365163	4905049	2	0	0	97.3	97.3	1	3808.46	3.25	0	82.61	0	0.5	0	0	16.74	0	0	0	0	0	0	-2.54	-2.54
	Inverter	MV1-13	364731	4905241	2	0	0	97.3	97.3	1	3962.94	3.25	0	82.96	0	0.52	0	0	16.99	0	0	0	0	0	0	-3.16	-3.16
	Inverter	MV4-13	369051	4908605	2	0	0	89.1	89.1	1	1583.95	3.25	0	74.99	0	0.81	0	0	7.35	0	0	0	0	0	0	5.9	5.9
	Inverter	MV4-15	369176	4908481	2	0	0	89.1	89.1	1	1657.83	3.25	0	75.39	0	0.83	0	0	7.48	0	0	0	0	0	0	5.36	5.36
	Inverter	MV4-12	369043	4908803	2	0	0	89.1	89.1	1	1665.17	3.25	0	75.43	0	0.83	0	0	7.49	0	0	0	0	0	0	5.31	5.31
	Inverter	MV4-14	369176	4908507	2	0	0	89.1	89.1	1	1665.89	3.25	0	75.43	0	0.83	0	0	7.49	0	0	0	0	0	0	5.3	5.3
	Fixed Reactor Bank 1	FRB1	369378	4908755	6	0	0	89.8	89.8	1	1943.63	5.25	0	76.77	0	-1	0	0	4.27	0	0	0	0	0	0	9.73	9.73
	Fixed Reactor Bank 2	FRB2	369464	4908755	6	0	0	89.8	89.8	1	2022.77	5.25	0	77.12	0	-0.99	0	0	4.41	0	0	0	0	0	0	9.24	9.24
	SubstationTransformer	W_ST	369711.17	4906112.3	2.5	0	0	92	92	1	2821.1	4.25	0	80.01	0	0.98	2.96	0.22	5.69	0	0	0	0	0	0	2.34	2.34
	Inverter	MV2-2	365977	4906654	2	0	0	89.1	89.1	1	2092.08	3.25	0	77.41	0	0.93	0	0	8.2	0	0	0	0	0	0	2.52	2.52

Westbrook Inverter Enclosur	W_INV2	369374	4906388	2	0	0	89.1	89.1	1	2385.91	3.25	0	78.55	0	1	0	0	8.67	0	0	0	0	0	0	0.84	0.84
Inverter	MV5-6	369982	4908507	2	0	0	89.1	89.1	1	2443.72	3.25	0	78.76	0	1.01	0	0	8.76	0	0	0	0	0	0	0.53	0.53
Westbrook Inverter Enclosur	W_INV5	369719	4906574	2	0	0	89.1	89.1	1	2545.81	3.25	0	79.12	0	1.04	0	0	8.92	0	0	0	0	0	0	-0.01	-0.01
Westbrook Inverter Enclosur	W_INV3	369508	4906164	2	0	0	89.1	89.1	1	2636.28	3.25	0	79.42	0	1.06	0	0	9.06	0	0	0	0	0	0	-0.48	-0.48
Westbrook Inverter Enclosur	W_INV6	369875	4906578	2	0	0	89.1	89.1	1	2675.19	3.25	0	79.55	0	1.07	0	0	9.12	0	0	0	0	0	0	-0.68	-0.68
Westbrook Inverter Enclosur	W_INV7	369780	4906417	2	0	0	89.1	89.1	1	2685.09	3.25	0	79.58	0	1.07	0	0	9.13	0	0	0	0	0	0	-0.73	-0.73
Westbrook Inverter Enclosur	W_INV4	369673	4906164	2	0	0	89.1	89.1	1	2758.29	3.25	0	79.81	0	1.09	0	0	9.25	0	0	0	0	0	0	-1.09	-1.09
Westbrook Inverter Enclosur	W_INV1	369409	4906578	2	0	0	86.1	86.1	1	2291.24	3.25	0	78.2	0	0.98	0	0	8.52	0	0	0	0	0	0	-1.63	-1.63
Inverter	MV1-3	364440	4906039	2	0	0	89.1	89.1	1	3704.58	3.25	0	82.37	0	1.32	0	0	10.66	0	0	0	0	0	0	-5.3	-5.3
Gardiner Substation	G_Sub	366586.3	4903349.9	2.5	0	0	90.8	90.8	1	4737.94	4.25	0	84.51	0	1.59	2.47	0.39	8.3	0	0	0	0	0	0	-6.09	-6.09
Inverter	MV6-4	370250	4906966	2	0	0	86.1	86.1	1	2840.76	3.25	0	80.07	0	1.11	0	0	9.37	0	0	0	0	0	0	-4.49	-4.49
Inverters	G_Inv2	366676.9	4903239.1	2	0	0	87.7	87.7	1	4828.19	3.25	0	84.68	0	2.85	0	0	5.76	0	0	0	0	0	0	-5.63	-5.63
Inverters	G_Inv1	366526.4	4903225.8	2	0	0	87.7	87.7	1	4872.06	3.25	0	84.75	0	2.86	0	0	5.81	0	0	0	0	0	0	-5.76	-5.76
Inverters	G_Inv4	366732.8	4903105	2	0	0	87.7	87.7	1	4949.85	3.25	0	84.89	0	2.86	0	0	5.89	0	0	0	0	0	0	-5.98	-5.98
Inverters	G_Inv3	366583.7	4903091.4	2	0	0	87.7	87.7	1	4991.33	3.25	0	84.96	0	2.86	0	0	5.93	0	0	0	0	0	0	-6.1	-6.1
Inverters	G_Inv6	366788.5	4902972	2	0	0	87.7	87.7	1	5071.7	3.25	0	85.1	0	2.87	0	0	6.02	0	0	0	0	0	0	-6.33	-6.33
Inverters	G_Inv5	366638.5	4902958.1	2	0	0	87.7	87.7	1	5111.38	3.25	0	85.17	0	2.87	0	0	6.06	0	0	0	0	0	0	-6.44	-6.44
Inverters	G_Inv8	366844.5	4902838.5	2	0	0	87.7	87.7	1	5195.14	3.25	0	85.31	0	2.88	0	0	6.14	0	0	0	0	0	0	-6.67	-6.67
Inverters	G_Inv7	366694.6	4902824.7	2	0	0	87.7	87.7	1	5232.53	3.25	0	85.37	0	2.88	0	0	6.18	0	0	0	0	0	0	-6.78	-6.78
Inverters	G_Inv10	366900.7	4902704.8	2	0	0	87.7	87.7	1	5319.83	3.25	0	85.52	0	2.88	0	0	6.27	0	0	0	0	0	0	-7.02	-7.02
Inverters	G_Inv9	366750.9	4902691.8	2	0	0	87.7	87.7	1	5354.31	3.25	0	85.57	0	2.89	0	0	6.31	0	0	0	0	0	0	-7.11	-7.11
Westbrook Inverter Transfor	W_INVTR1	369403	4906578	2	0	0	78.2	78.2	1	2286.49	3.25	0	78.18	0	-2.5	0	0	1.34	0	0	0	0	0	0	1.22	1.22
Westbrook Inverter Transfor	W_INVTR2	369368	4906388	2	0	0	77.3	77.3	1	2381.44	3.25	0	78.54	0	-2.53	0	0	1.39	0	0	0	0	0	0	-0.05	-0.05
Westbrook Inverter Transfor	W_INVTR5	369725	4906574	2	0	0	77.3	77.3	1	2550.82	3.25	0	79.13	0	-2.59	0	0	1.46	0	0	0	0	0	0	-0.67	-0.67
Westbrook Inverter Transfor	W_INVTR3	369514	4906164	2	0	0	77.3	77.3	1	2640.64	3.25	0	79.43	0	-2.61	0	0	1.5	0	0	0	0	0	0	-0.98	-0.98
Westbrook Inverter Transfor	W_INVTR6	369881	4906578	2	0	0	77.3	77.3	1	2680.3	3.25	0	79.56	0	-2.62	0	0	1.52	0	0	0	0	0	0	-1.12	-1.12
Westbrook Inverter Transfor	W_INVTR7	369786	4906417	2	0	0	77.3	77.3	1	2689.97	3.25	0	79.59	0	-2.63	0	0	1.52	0	0	0	0	0	0	-1.15	-1.15
Westbrook Inverter Transfor	W_INVTR4	369679	4906164	2	0	0	77.3	77.3	1	2762.81	3.25	0	79.83	0	-2.65	0	0	1.56	0	0	0	0	0	0	-1.39	-1.39
Inverter Transformer	MV3-3 T	367944	4907927	2	0	0	56.1	56.1	1	351.87	3.25	0	61.93	0	-0.1	0	0	3.02	0	0	0	0	0	0	-8.78	-8.78
Inverter Transformer	MV3-12 T	367674	4907594	2	0	0	56.1	56.1	1	392.83	3.25	0	62.88	0	-0.11	0	0	3.18	0	0	0	0	0	0	-9.89	-9.89
Inverter Transformer	MV3-7 T	367951	4907754	2	0	0	56.1	56.1	1	420.3	3.25	0	63.47	0	-0.12	0	0	3.28	0	0	0	0	0	0	-10.58	-10.58
Inverter Transformer	MV2-1 T	365836	4906816	2	0	0	69.4	69.4	1	2109.54	3.25	0	77.48	0	2.21	0	0	5.07	0	0	0	0	0	0	-15.42	-15.42
Inverter Transformer	MV3-13 T	367958	4907577	2	0	0	56.1	56.1	1	540.98	3.25	0	65.66	0	-0.11	0	0	3.68	0	0	0	0	0	0	-13.17	-13.17
Inverter Transformer	MV3-1 T	368150	4907976	2	0	0	56.1	56.1	1	554.01	3.25	0	65.87	0	-0.11	0	0	3.72	0	0	0	0	0	0	-13.42	-13.42
Inverter Transformer	MV3-6 T	368156	4907834	2	0	0	56.1	56.1	1	578.47	3.25	0	66.25	0	-0.11	0	0	3.79	0	0	0	0	0	0	-13.87	-13.87
Inverter Transformer	MV6-1 T	370230	4907364	2	0	0	69.4	69.4	1	2704.85	3.25	0	79.64	0	2.42	0	0	5.63	0	0	0	0	0	0	-18.33	-18.33
Inverter Transformer	MV3-18 T	367757	4907412	2	0	0	56.1	56.1	1	589.42	3.25	0	66.41	0	-0.11	0	0	3.82	0	0	0	0	0	0	-14.07	-14.07
Inverter Transformer	MV6-4 T	370244	4906966	2	0	0	69.4	69.4	1	2835.15	3.25	0	80.05	0	2.46	0	0	5.74	0	0	0	0	0	0	-18.9	-18.9
Inverter Transformer	MV3-10 T	368162	4907669	2	0	0	56.1	56.1	1	645.34	3.25	0	67.2	0	-0.09	0	0	3.98	0	0	0	0	0	0	-15.03	-15.03
Inverter Transformer	MV1-7 T	364919	4905782	2	0	0	69.4	69.4	1	3463.11	3.25	0	81.79	0	2.64	0	0	6.26	0	0	0	0	0	0	-21.34	-21.34
Inverter Transformer	MV3-5 T	368335	4907843	2	0	0	56.1	56.1	1	751.41	3.25	0	68.52	0	-0.07	0	0	4.27	0	0	0	0	0	0	-16.66	-16.66
Inverter Transformer	MV1-10 T	365010	4905564	2	0	0	69.4	69.4	1	3538.31	3.25	0	81.98	0	2.66	0	0	6.32	0	0	0	0	0	0	-21.61	-21.61
Inverter Transformer	MV3-17 T	368183	4907472	2	0	0	56.1	56.1	1	775.64	3.25	0	68.79	0	-0.06	0	0	4.33	0	0	0	0	0	0	-17.01	-17.01
Inverter Transformer	MV3-11 T	368340	4907662	2	0	0	56.1	56.1	1	808.72	3.25	0	69.16	0	-0.05	0	0	4.42	0	0	0	0	0	0	-17.46	-17.46
Inverter Transformer	MV1-14 T	365157	4905049	2	0	0	69.4	69.4	1	3812.3	3.25	0	82.62	0	2.74	0	0	6.53	0	0	0	0	0	0	-22.55	-22.55
Inverter Transformer	MV1-13 T	364725	4905241	2	0	0	69.4	69.4	1	3967.28	3.25	0	82.97	0	2.78	0	0	6.65	0	0	0	0	0	0	-23.05	-23.05
Inverter Transformer	MV3-15 T	368351	4907477	2	0	0	56.1	56.1	1	906.66	3.25	0	70.15	0	-0.02	0	0	4.66	0	0	0	0	0	0	-18.73	-18.73
Inverter Transformer	MV3-4 T	368507	4907925	2	0	0	56.1	56.1	1	912.6	3.25	0	70.21	0	-0.02	0	0	4.68	0	0	0	0	0	0	-18.81	-18.81
Inverter Transformer	MV3-9 T	368517	4907703	2	0	0	56.1	56.1	1	961.47	3.25	0	70.66	0	0	0	0	4.8	0	0	0	0	0	0	-19.4	-19.4
Inverter Transformer	MV3-19 T	368352	4907347	2	0	0	56.1	56.1	1	985.38	3.25	0	70.87	0	0.01	0	0	4.85	0	0	0	0	0	0	-19.67	-19.67
Inverter Transformer	MV3-16 T	368509	4907475	2	0	0	56.1	56.1	1	1042.88	3.25	0	71.36	0	0.03	0	0	4.99	0	0	0	0	0	0	-20.32	-20.32
Inverter Transformer	MV3-2 T	368677	4907928	2	0	0	56.1	56.1	1	1082.21	3.25	0	71.69	0	0.04	0	0	5.08	0	0	0	0	0	0	-20.75	-20.75
Inverter Transformer	MV3-8 T	368685	4907712	2	0	0	56.1	56.1	1	1121.26	3.25	0	71.99	0	0.05	0	0	5.17	0	0	0	0	0	0	-21.16	-21.16
Inverter Transformer	MV3-21 T	368484	4907206	2	0	0	56.1	56.1	1	1177.32	3.25	0	72.42	0	0.08	0	0	5.3	0	0	0	0	0	0	-21.74	-21.74
Inverter Transformer	MV3-14 T	368678	4907498	2	0	0	56.1	56.1	1	1184.1	3.25	0	72.47	0	0.08	0	0	5.32	0	0	0	0	0	0	-21.81	-21.81
Inverter Transformer	MV3-20 T	368683	4907317	2	0	0	56.1	56.1	1	1272.72	3.25	0	73.09	0	0.11	0	0	5.52	0	0	0	0	0	0	-22.67	-22.67
Inverter Transformer	MV3-22 T	368661	4907142	2	0	0	56.1	56.1	1	1354.55	3.25	0	73.64	0	0.14	0	0	5.7	0	0	0	0	0	0	-23.42	-23.42
Inverter Transformer	MV4-13 T	369057	4908605	2	0	0	56.1	56.1	1	1589.47	3.25	0	75.03	0	0.23	0	0	6.21	0	0	0	0	0	0	-25.41	-25.41
Inverter Transformer	MV4-15 T	369170	4908481	2	0	0	56.1	56.1	1	1652.12	3.25	0	75.36	0	0.26	0	0	6.34	0	0	0	0	0	0	-25.9	-25.9
Inverter Transformer	MV4-12 T	369049	4908803	2	0	0	56.1	56.1	1	1670.39	3.25	0	75.46	0	0.27	0	0	6.38	0	0	0	0	0	0	-26.04	-26.04
Inverter Transformer	MV4-14 T	369182	4908507	2	0	0	56.1	56.1	1	1671.58	3.25	0	75.46	0	0.27	0	0	6.38	0	0	0	0	0	0	-26.05	-26.05
Inverter Transformer	MV4-7 T	369040	4909001	2	0	0	56.1	56.1	1	1769.07	3.25	0	75.95	0	0.31	0	0	6.58	0	0	0	0	0	0	-26.79	-26.79
Inverter Transformer	MV4-4 T	369033	4909199	2	0	0	56.1	56.1	1	1885.04	3.25	0	76.51	0	0.36	0	0	6.82	0	0	0	0	0	0	-27.62	-27.62
Inverter Transformer	MV4-11 T	369269	4908855	2	0	0	56.1	56.1	1	1888.47	3.25	0	76.52	0	0.36	0	0	6.82	0	0	0	0	0	0	-27.64	-27.64
Inverter Transformer	MV4-10 T	369307	4908858	2	0	0	56.1	56.1	1	1923.58	3.25	0	76.68	0	0.37	0	0	6.89	0	0	0	0	0	0	-27.89	-27.89
Inverter Transformer	MV4-8 T	369262	4909001	2	0	0	56.1	56.1	1	1954.49	3.25	0	76.82	0	0.38	0	0	6.95	0	0	0	0	0	0	-28.1	-28.1
Inverter Transformer	MV4-9 T	369284	4909001	2	0	0	56.1	56.1	1	1973.28	3.25	0	76.9	0	0.39	0	0	6.99	0	0	0	0	0	0	-28.23	-28.23
Inverter Transformer	MV4-1 T	369017	4909397	2	0	0	56.1	56.1	1	2007.48	3.25	0	77.05	0	0.41	0	0	7.06	0	0	0	0	0	0	-28.46	-28.46
Inverter Transformer	MV4-6 T	369249	4909192	2	0	0	56.1	56.1	1	2050.31	3.25	0	77.24	0	0.43	0	0	7.14	0	0	0	0	0	0	-28.75	-28.75
Inverter Transformer	MV4-5 T	369283	4909199	2	0	0	56.1	56.1	1	2081.92	3.25	0	77.37	0	0.44	0	0	7.2	0	0	0	0	0	0	-28.95	-28.95
Inverter Transformer	MV2-2 T	365982	4906654	2	0	0	56.1	56.1	1	2088.21	3.25	0	77.4	0	0.44	0	0	7.22	0	0	0	0	0	0	-28.99	-28.99
Inverter Transformer	MV4-3 T	369234	4909397	2	0	0	56.1	56.1	1	2166.51	3.25	0	77.72	0	0.47	0	0	7.37	0	0	0	0	0	0	-29.5	-29.5
Inverter Transformer	MV4-2 T	369267	4909397	2	0	0	56.1	56.1	1	2191.57	3.25	0	77.82	0	0.48	0	0	7.41	0	0	0	0	0	0	-29.66	-29.66
Inverter Transformer	MV2-3 T	365814	4906641	2	0	0	56.1	56.1	1	2228.4	3.25	0	77.96	0	0.5	0	0	7.48	0	0	0	0	0	0	-29.89	-29.89

	Inverter Transformer	MV2-4 T	365590	4906628	2	0	0	56.1	56.1	1	2418.52	3.25	0	78.67	0	0.58	0	0	7.84	0	0	0	0	0	0	-31.03	-31.03
	Inverter Transformer	MV5-6 T	369987	4908507	2	0	0	56.1	56.1	1	2448.61	3.25	0	78.78	0	0.59	0	0	7.9	0	0	0	0	0	0	-31.21	-31.21
	Inverter Transformer	MV5-5 T	370021	4908690	2	0	0	56.1	56.1	1	2527.08	3.25	0	79.05	0	0.63	0	0	8.04	0	0	0	0	0	0	-31.66	-31.66
	Inverter Transformer	MV5-2 T	370011	4908853	2	0	0	56.1	56.1	1	2568.29	3.25	0	79.19	0	0.65	0	0	8.11	0	0	0	0	0	0	-31.89	-31.89
	Inverter Transformer	MV6-2 T	370091	4907339	2	0	0	56.1	56.1	1	2575.78	3.25	0	79.22	0	0.65	0	0	8.13	0	0	0	0	0	0	-31.94	-31.94
	Inverter Transformer	MV5-1 T	370015	4909142	2	0	0	56.1	56.1	1	2684.05	3.25	0	79.58	0	0.7	0	0	8.32	0	0	0	0	0	0	-32.53	-32.53
	Inverter Transformer	MV6-3 T	370202	4907140	2	0	0	56.1	56.1	1	2737.73	3.25	0	79.75	0	0.72	0	0	8.42	0	0	0	0	0	0	-32.82	-32.82
	Inverter Transformer	MV5-3 T	370237	4908851	2	0	0	56.1	56.1	1	2781.24	3.25	0	79.88	0	0.74	0	0	8.49	0	0	0	0	0	0	-33.05	-33.05
	Inverter Transformer	MV5-4 T	370330	4908707	2	0	0	56.1	56.1	1	2829.27	3.25	0	80.03	0	0.76	0	0	8.58	0	0	0	0	0	0	-33.31	-33.31
	Inverter Transformer	MV1-1 T	364721	4906166	2	0	0	56.1	56.1	1	3398.91	3.25	0	81.63	0	1	0	0	9.53	0	0	0	0	0	0	-36.09	-36.09
	Inverter Transformer	MV1-2 T	364759	4906063	2	0	0	56.1	56.1	1	3423.39	3.25	0	81.69	0	1.01	0	0	9.57	0	0	0	0	0	0	-36.2	-36.2
	Inverter Transformer	MV1-4 T	364821	4905918	2	0	0	56.1	56.1	1	3456.64	3.25	0	81.77	0	1.02	0	0	9.62	0	0	0	0	0	0	-36.36	-36.36
	Inverter Transformer	MV1-5 T	364676	4905892	2	0	0	56.1	56.1	1	3589.15	3.25	0	82.1	0	1.08	0	0	9.83	0	0	0	0	0	0	-36.95	-36.95
	Inverter Transformer	MV1-12 T	365044	4905386	2	0	0	56.1	56.1	1	3638.18	3.25	0	82.22	0	1.1	0	0	9.9	0	0	0	0	0	0	-37.16	-37.16
	Inverter Transformer	MV1-8 T	364782	4905647	2	0	0	56.1	56.1	1	3654.7	3.25	0	82.26	0	1.1	0	0	9.93	0	0	0	0	0	0	-37.23	-37.23
	Inverter Transformer	MV1-3 T	364435	4906039	2	0	0	56.1	56.1	1	3708.84	3.25	0	82.38	0	1.13	0	0	10.01	0	0	0	0	0	0	-37.47	-37.47
	Inverter Transformer	MV1-15 T	365309	4904994	2	0	0	56.1	56.1	1	3760.4	3.25	0	82.5	0	1.15	0	0	10.09	0	0	0	0	0	0	-37.69	-37.69
	Inverter Transformer	MV1-6 T	364482	4905835	2	0	0	56.1	56.1	1	3780.71	3.25	0	82.55	0	1.16	0	0	10.12	0	0	0	0	0	0	-37.77	-37.77
	Inverter Transformer	MV1-9 T	364555	4905646	2	0	0	56.1	56.1	1	3832.83	3.25	0	82.67	0	1.18	0	0	10.2	0	0	0	0	0	0	-37.99	-37.99
	Inverter Transformer	MV1-11 T	364649	4905414	2	0	0	56.1	56.1	1	3906.92	3.25	0	82.84	0	1.21	0	0	10.32	0	0	0	0	0	0	-38.3	-38.3
	Line Reactor	NGR	369421	4908787.5	5	0	0	45.4	45.4	1	1996.07	5.25	0	77	0	3.38	1.28	0.1	0.82	0	0	0	0	0	0	-37.13	-37.13
Limit. Valu	0	0																								
Level D/N:	38.2868	38.2868																								

Receiver: Existing Noise Receptor
ID: S-R32
X: 367358
Y: 4908024
Z: 4.5
Ground: 0

ISO	Description	ID	X	Y	Z	Ground	ReflOrd	LxT	LxN	L/A	Dist.	hm	Freq	Adiv	K0b	Agr	Abar	z	Aatm	Afol	Ahous	Cmet	CmetN	Dc	RL	LtotT	LtotN
	Inverter	MV3-12	367668	4907594	2	0	0	100.3	100.3	1	530.1	3.25	0	65.49	0	-0.53	0	0	8.75	0	0	0	0	0	0	26.6	26.6
	Sol_Luce Substation	S_Substation	369426	4908792	3.5	0	0	112.1	112.1	1	2206	5.25	0	77.87	0	0.06	3.65	0.31	4.71	0	0	0	0	0	0	25.78	25.78
	Inverter	MV3-3	367939	4907927	2	0	0	100.3	100.3	1	589.05	3.25	0	66.4	0	-0.49	0	0	9.14	0	0	0	0	0	0	25.26	25.26
	Inverter	MV3-7	367945	4907754	2	0	0	100.3	100.3	1	646.12	3.25	0	67.21	0	-0.45	0	0	9.46	0	0	0	0	0	0	24.09	24.09
	Inverter	MV3-18	367752	4907412	2	0	0	100.3	100.3	1	727.86	3.25	0	68.24	0	-0.39	0	0	9.87	0	0	0	0	0	0	22.6	22.6
	Inverter	MV3-13	367963	4907577	2	0	0	100.3	100.3	1	752.22	3.25	0	68.53	0	-0.38	0	0	9.98	0	0	0	0	0	0	22.19	22.19
	Inverter	MV3-6	368162	4907834	2	0	0	100.3	100.3	1	826.15	3.25	0	69.34	0	-0.34	0	0	10.29	0	0	0	0	0	0	21.02	21.02
	Inverter	MV3-10	368167	4907669	2	0	0	100.3	100.3	1	883.47	3.25	0	69.92	0	-0.31	0	0	10.5	0	0	0	0	0	0	20.19	20.19
	Inverter	MV3-17	368178	4907472	2	0	0	100.3	100.3	1	988.49	3.25	0	70.9	0	-0.25	0	0	10.87	0	0	0	0	0	0	18.79	18.79
	Inverter	MV3-11	368346	4907662	2	0	0	100.3	100.3	1	1052.23	3.25	0	71.44	0	-0.22	0	0	11.08	0	0	0	0	0	0	18.01	18.01
	Inverter	MV3-15	368357	4907477	2	0	0	100.3	100.3	1	1138.95	3.25	0	72.13	0	-0.18	0	0	11.35	0	0	0	0	0	0	17.02	17.02
	Inverter	MV3-9	368512	4907703	2	0	0	100.3	100.3	1	1197.82	3.25	0	72.57	0	-0.16	0	0	11.52	0	0	0	0	0	0	16.38	16.38
	Inverter	MV3-19	368357	4907347	2	0	0	100.3	100.3	1	1206.79	3.25	0	72.63	0	-0.15	0	0	11.55	0	0	0	0	0	0	16.29	16.29
	Inverter	MV3-16	368514	4907475	2	0	0	100.3	100.3	1	1279.74	3.25	0	73.14	0	-0.12	0	0	11.75	0	0	0	0	0	0	15.54	15.54
	Inverter	MV3-8	368680	4907712	2	0	0	100.3	100.3	1	1358.32	3.25	0	73.66	0	-0.09	0	0	11.96	0	0	0	0	0	0	14.78	14.78
	Inverter	MV3-21	368478	4907206	2	0	0	100.3	100.3	1	1386.91	3.25	0	73.84	0	-0.08	0	0	12.04	0	0	0	0	0	0	14.51	14.51
	Inverter	MV3-14	368684	4907498	2	0	0	100.3	100.3	1	1426.52	3.25	0	74.09	0	-0.06	0	0	12.14	0	0	0	0	0	0	14.15	14.15
	Inverter	MV3-20	368689	4907317	2	0	0	100.3	100.3	1	1507.12	3.25	0	74.56	0	-0.03	0	0	12.34	0	0	0	0	0	0	13.44	13.44
	Inverter	MV4-7	369035	4909001	2	0	0	100.3	100.3	1	1940.84	3.25	0	76.76	0	0.11	0	0	13.34	0	0	0	0	0	0	10.1	10.1
	Inverter	MV4-4	369027	4909199	2	0	0	100.3	100.3	1	2041.13	3.25	0	77.2	0	0.14	0	0	13.55	0	0	0	0	0	0	9.43	9.43
	Inverter	MV2-3	365820	4906641	2	0	0	100.3	100.3	1	2068.37	3.25	0	77.31	0	0.15	0	0	13.6	0	0	0	0	0	0	9.25	9.25
	Inverter	MV4-11	369264	4908855	2	0	0	100.3	100.3	1	2079.28	3.25	0	77.36	0	0.15	0	0	13.63	0	0	0	0	0	0	9.18	9.18
	Inverter	MV4-10	369312	4908858	2	0	0	100.3	100.3	1	2124.54	3.25	0	77.55	0	0.16	0	0	13.72	0	0	0	0	0	0	8.88	8.88
	Inverter	MV4-8	369256	4909001	2	0	0	100.3	100.3	1	2134.7	3.25	0	77.59	0	0.17	0	0	13.74	0	0	0	0	0	0	8.82	8.82
	Inverter	MV4-1	369011	4909397	2	0	0	100.3	100.3	1	2148.85	3.25	0	77.64	0	0.17	0	0	13.77	0	0	0	0	0	0	8.73	8.73
	Inverter	MV4-9	369289	4909001	2	0	0	100.3	100.3	1	2164.09	3.25	0	77.71	0	0.17	0	0	13.8	0	0	0	0	0	0	8.63	8.63
	Inverter	MV4-6	369243	4909192	2	0	0	100.3	100.3	1	2217.53	3.25	0	77.92	0	0.19	0	0	13.91	0	0	0	0	0	0	8.3	8.3
	Inverter	MV2-4	365586	4906624	2	0	0	100.3	100.3	1	2258.32	3.25	0	78.08	0	0.2	0	0	13.99	0	0	0	0	0	0	8.05	8.05
	Inverter	MV4-5	369289	4909199	2	0	0	100.3	100.3	1	2260.4	3.25	0	78.08	0	0.2	0	0	13.99	0	0	0	0	0	0	8.04	8.04
	Inverter	MV4-3	369229	4909397	2	0	0	100.3	100.3	1	2320.73	3.25	0	78.31	0	0.21	0	0	14.11	0	0	0	0	0	0	7.67	7.67
	Inverter	MV4-2	369272	4909397	2	0	0	100.3	100.3	1	2355.53	3.25	0	78.44	0	0.22	0	0	14.18	0	0	0	0	0	0	7.47	7.47
	Inverter	MV2-1	365842	4906816	2	0	0	97.3	97.3	1	1938.43	3.25	0	76.75	0	0.11	0	0	13.33	0	0	0	0	0	0	7.12	7.12
	Inverter	MV5-5	370015	4908690	2	0	0	100.3	100.3	1	2739.2	3.25	0	79.75	0	0.31	0	0	14.9	0	0	0	0	0	0	5.35	5.35
	Inverter	MV5-2	370006	4908853	2	0	0	100.3	100.3	1	2774.73	3.25	0	79.86	0	0.32	0	0	14.97	0	0	0	0	0	0	5.16	5.16
	Inverter	MV6-2	370085	4907339	2	0	0	100.3	100.3	1	2811.72	3.25	0	79.98	0	0.32	0	0	15.04	0	0	0	0	0	0	4.97	4.97
	Inverter	MV5-1	370020	4909142	2	0	0	100.3	100.3	1	2887.24	3.25	0	80.21	0	0.34	0	0	15.17	0	0	0	0	0	0	4.59	4.59
	Inverter	MV3-1	368156	4907976	2	0	0	89.1	89.1	1	799.45	3.25	0	69.06	0	0.64	0	0	5.92	0	0	0	0	0	0	13.44	13.44
	Inverter	MV6-3	370207	4907140	2	0	0	100.3	100.3	1	2983	3.25	0	80.49	0	0.36	0	0	15.34	0	0	0	0	0	0	4.12	4.12
	Inverter	MV5-3	370231	4908851	2	0	0	100.3	100.3	1	2989.66	3.25	0	80.51	0	0.36	0	0	15.35	0	0	0	0	0	0	4.09	4.09
	Inverter	MV5-4	370324	4908707	2	0	0	100.3	100.3	1	3043.62	3.25	0	80.67	0	0.37	0	0	15.45	0	0	0	0	0	0	3.82	3.82
	Inverter	MV1-1	364715	4906166	2	0	0	100.3	100.3	1	3230.73	3.25	0	81.19	0	0.4	0	0	15.77	0	0	0	0	0	0	2.95	2.95
	Inverter	MV1-2	364753	4906063	2	0	0	100.3	100.3	1	3260.61	3.25	0	81.27	0	0.41	0	0	15.83	0	0	0	0	0	0	2.81	2.81

Inverter	MV1-4	364815	4905918	2	0	0	100.3	100.3	1	3301.83	3.25	0	81.38	0	0.42	0	0	15.9	0	0	0	0	0	0	2.62	2.62
DSTATCOM - 10 MVAR #2	DSAT2	369403	4908757	2.5	0	0	96.6	96.6	1	2172.4	3.5	0	77.74	0	3.26	0	0	1.82	0	0	0	0	0	0	13.81	13.81
DSTATCOM - 10 MVAR #1	DSAT1	369437	4908757	2.5	0	0	96.6	96.6	1	2204.44	3.5	0	77.87	0	3.26	0	0	1.84	0	0	0	0	0	0	13.66	13.66
Inverter	MV1-5	364671	4905892	2	0	0	100.3	100.3	1	3430.07	3.25	0	81.71	0	0.44	0	0	16.11	0	0	0	0	0	0	2.05	2.05
Inverter	MV1-8	364788	4905647	2	0	0	100.3	100.3	1	3500.72	3.25	0	81.88	0	0.45	0	0	16.23	0	0	0	0	0	0	1.75	1.75
Inverter	MV1-12	365038	4905386	2	0	0	100.3	100.3	1	3513.04	3.25	0	81.91	0	0.45	0	0	16.25	0	0	0	0	0	0	1.69	1.69
Inverter	MV1-6	364477	4905835	2	0	0	100.3	100.3	1	3618.27	3.25	0	82.17	0	0.47	0	0	16.43	0	0	0	0	0	0	1.24	1.24
Inverter	MV3-5	368340	4907843	2	0	0	89.1	89.1	1	998.54	3.25	0	70.99	0	0.68	0	0	6.31	0	0	0	0	0	0	11.07	11.07
Inverter	MV1-15	365315	4904994	2	0	0	100.3	100.3	1	3654.42	3.25	0	82.26	0	0.48	0	0	16.49	0	0	0	0	0	0	1.09	1.09
Inverter	MV1-9	364561	4905646	2	0	0	100.3	100.3	1	3671.25	3.25	0	82.3	0	0.48	0	0	16.52	0	0	0	0	0	0	1.02	1.02
Inverter	MV1-11	364655	4905414	2	0	0	100.3	100.3	1	3757.43	3.25	0	82.5	0	0.49	0	0	16.66	0	0	0	0	0	0	0.67	0.67
Inverter	MV6-1	370235	4907364	2	0	0	97.3	97.3	1	2951.73	3.25	0	80.4	0	0.35	0	0	15.29	0	0	0	0	0	0	1.27	1.27
Inverter	MV3-4	368502	4907925	2	0	0	89.1	89.1	1	1148.28	3.25	0	72.2	0	0.72	0	0	6.59	0	0	0	0	0	0	9.55	9.55
Inverter	MV1-7	364925	4905782	2	0	0	97.3	97.3	1	3308.48	3.25	0	81.39	0	0.42	0	0	15.91	0	0	0	0	0	0	-0.41	-0.41
Inverter	MV1-10	365004	4905564	2	0	0	97.3	97.3	1	3404.84	3.25	0	81.64	0	0.44	0	0	16.07	0	0	0	0	0	0	-0.84	-0.84
Inverter	MV3-2	368671	4907928	2	0	0	89.1	89.1	1	1316.51	3.25	0	73.39	0	0.75	0	0	6.89	0	0	0	0	0	0	8.03	8.03
Inverter	MV1-14	365163	4905049	2	0	0	97.3	97.3	1	3697.11	3.25	0	82.36	0	0.48	0	0	16.56	0	0	0	0	0	0	-2.09	-2.09
Inverter	MV1-13	364731	4905241	2	0	0	97.3	97.3	1	3827.04	3.25	0	82.66	0	0.5	0	0	16.77	0	0	0	0	0	0	-2.62	-2.62
Inverter	MV3-22	368656	4907142	2	0	0	89.1	89.1	1	1569.31	3.25	0	74.91	0	0.81	0	0	7.33	0	0	0	0	0	0	6.01	6.01
Inverter	MV4-13	369051	4908605	2	0	0	89.1	89.1	1	1789.92	3.25	0	76.06	0	0.86	0	0	7.7	0	0	0	0	0	0	4.44	4.44
Inverter	MV4-12	369043	4908803	2	0	0	89.1	89.1	1	1856.36	3.25	0	76.37	0	0.87	0	0	7.81	0	0	0	0	0	0	4	4
Inverter	MV4-15	369176	4908481	2	0	0	89.1	89.1	1	1874.56	3.25	0	76.46	0	0.88	0	0	7.84	0	0	0	0	0	0	3.88	3.88
Inverter	MV4-14	369176	4908507	2	0	0	89.1	89.1	1	1881.07	3.25	0	76.49	0	0.88	0	0	7.85	0	0	0	0	0	0	3.84	3.84
Inverter	MV2-2	365977	4906654	2	0	0	89.1	89.1	1	1945.27	3.25	0	76.78	0	0.89	0	0	7.96	0	0	0	0	0	0	3.43	3.43
Fixed Reactor Bank 1	FRB1	369378	4908755	6	0	0	89.8	89.8	1	2148.2	5.25	0	77.64	0	-0.98	0	0	4.62	0	0	0	0	0	0	8.5	8.5
Fixed Reactor Bank 2	FRB2	369464	4908755	6	0	0	89.8	89.8	1	2229.26	5.25	0	77.96	0	-0.97	0	0	4.75	0	0	0	0	0	0	8.03	8.03
SubstationTransformer	W_ST	369711.17	4906112.3	2.5	0	0	92	92	1	3031.85	4.25	0	80.63	0	1.05	2.89	0.23	6.01	0	0	0	0	0	0	1.39	1.39
Westbrook Inverter Enclosur	W_INV2	369374	4906388	2	0	0	89.1	89.1	1	2596.3	3.25	0	79.29	0	1.05	0	0	9	0	0	0	0	0	0	-0.27	-0.27
Inverter	MV5-6	369982	4908507	2	0	0	89.1	89.1	1	2668.08	3.25	0	79.52	0	1.07	0	0	9.11	0	0	0	0	0	0	-0.64	-0.64
Westbrook Inverter Enclosur	W_INV5	369719	4906574	2	0	0	89.1	89.1	1	2770.71	3.25	0	79.85	0	1.09	0	0	9.27	0	0	0	0	0	0	-1.15	-1.15
Westbrook Inverter Enclosur	W_INV3	369508	4906164	2	0	0	89.1	89.1	1	2842.9	3.25	0	80.08	0	1.11	0	0	9.38	0	0	0	0	0	0	-1.5	-1.5
Westbrook Inverter Enclosur	W_INV6	369875	4906578	2	0	0	89.1	89.1	1	2902.79	3.25	0	80.26	0	1.12	0	0	9.47	0	0	0	0	0	0	-1.79	-1.79
Westbrook Inverter Enclosur	W_INV7	369780	4906417	2	0	0	89.1	89.1	1	2906.64	3.25	0	80.27	0	1.12	0	0	9.48	0	0	0	0	0	0	-1.81	-1.81
Westbrook Inverter Enclosur	W_INV4	369673	4906164	2	0	0	89.1	89.1	1	2969.65	3.25	0	80.45	0	1.14	0	0	9.57	0	0	0	0	0	0	-2.11	-2.11
Inverter	MV1-3	364440	4906039	2	0	0	89.1	89.1	1	3529.16	3.25	0	81.95	0	1.28	0	0	10.41	0	0	0	0	0	0	-4.58	-4.58
Westbrook Inverter Enclosur	W_INV1	369409	4906578	2	0	0	86.1	86.1	1	2509.49	3.25	0	78.99	0	1.03	0	0	8.86	0	0	0	0	0	0	-2.82	-2.82
Gardiner Substation	G_Sub	366586.3	4903349.9	2.5	0	0	90.8	90.8	1	4737.38	4.25	0	84.51	0	1.59	2.46	0.39	8.3	0	0	0	0	0	0	-6.09	-6.09
Inverter	MV6-4	370250	4906966	2	0	0	86.1	86.1	1	3079.45	3.25	0	80.77	0	1.17	0	0	9.74	0	0	0	0	0	0	-5.61	-5.61
Inverters	G_Inv2	366676.9	4903239.1	2	0	0	87.7	87.7	1	4833.13	3.25	0	84.68	0	2.85	0	0	5.76	0	0	0	0	0	0	-5.64	-5.64
Inverters	G_Inv1	366526.4	4903225.8	2	0	0	87.7	87.7	1	4869.73	3.25	0	84.75	0	2.86	0	0	5.8	0	0	0	0	0	0	-5.75	-5.75
Inverters	G_Inv4	366732.8	4903105	2	0	0	87.7	87.7	1	4958.57	3.25	0	84.91	0	2.86	0	0	5.9	0	0	0	0	0	0	-6.01	-6.01
Inverters	G_Inv3	366583.7	4903091.4	2	0	0	87.7	87.7	1	4993	3.25	0	84.97	0	2.86	0	0	5.93	0	0	0	0	0	0	-6.1	-6.1
Inverters	G_Inv6	366788.5	4902972	2	0	0	87.7	87.7	1	5084	3.25	0	85.12	0	2.87	0	0	6.03	0	0	0	0	0	0	-6.36	-6.36
Inverters	G_Inv5	366638.5	4902958.1	2	0	0	87.7	87.7	1	5116.74	3.25	0	85.18	0	2.87	0	0	6.06	0	0	0	0	0	0	-6.45	-6.45
Inverters	G_Inv8	366844.5	4902838.5	2	0	0	87.7	87.7	1	5210.86	3.25	0	85.34	0	2.88	0	0	6.16	0	0	0	0	0	0	-6.72	-6.72
Inverters	G_Inv7	366694.6	4902824.7	2	0	0	87.7	87.7	1	5241.45	3.25	0	85.39	0	2.88	0	0	6.19	0	0	0	0	0	0	-6.8	-6.8
Inverters	G_Inv10	366900.7	4902704.8	2	0	0	87.7	87.7	1	5338.82	3.25	0	85.55	0	2.88	0	0	6.29	0	0	0	0	0	0	-7.07	-7.07
Inverters	G_Inv9	366750.9	4902691.8	2	0	0	87.7	87.7	1	5366.65	3.25	0	85.59	0	2.89	0	0	6.32	0	0	0	0	0	0	-7.14	-7.14
Westbrook Inverter Transfor	W_INVTR1	369403	4906578	2	0	0	78.2	78.2	1	2504.59	3.25	0	78.97	0	-2.57	0	0	1.44	0	0	0	0	0	0	0.4	0.4
Westbrook Inverter Transfor	W_INVTR2	369368	4906388	2	0	0	77.3	77.3	1	2591.64	3.25	0	79.27	0	-2.6	0	0	1.48	0	0	0	0	0	0	-0.81	-0.81
Westbrook Inverter Transfor	W_INVTR5	369725	4906574	2	0	0	77.3	77.3	1	2775.82	3.25	0	79.87	0	-2.65	0	0	1.56	0	0	0	0	0	0	-1.44	-1.44
Westbrook Inverter Transfor	W_INVTR3	369514	4906164	2	0	0	77.3	77.3	1	2847.44	3.25	0	80.09	0	-2.67	0	0	1.59	0	0	0	0	0	0	-1.67	-1.67
Westbrook Inverter Transfor	W_INVTR6	369881	4906578	2	0	0	77.3	77.3	1	2908	3.25	0	80.27	0	-2.69	0	0	1.62	0	0	0	0	0	0	-1.86	-1.86
Westbrook Inverter Transfor	W_INVTR7	369786	4906417	2	0	0	77.3	77.3	1	2911.64	3.25	0	80.28	0	-2.69	0	0	1.62	0	0	0	0	0	0	-1.87	-1.87
Westbrook Inverter Transfor	W_INVTR4	369679	4906164	2	0	0	77.3	77.3	1	2974.33	3.25	0	80.47	0	-2.71	0	0	1.65	0	0	0	0	0	0	-2.06	-2.06
Inverter Transformer	MV2-1 T	365836	4906816	2	0	0	69.4	69.4	1	1943.13	3.25	0	76.77	0	2.15	0	0	4.91	0	0	0	0	0	0	-14.48	-14.48
Inverter Transformer	MV3-12 T	367674	4907594	2	0	0	56.1	56.1	1	533.63	3.25	0	65.54	0	-0.11	0	0	3.66	0	0	0	0	0	0	-13.03	-13.03
Inverter Transformer	MV3-3 T	367944	4907927	2	0	0	56.1	56.1	1	593.98	3.25	0	66.48	0	-0.1	0	0	3.84	0	0	0	0	0	0	-14.15	-14.15
Inverter Transformer	MV6-1 T	370230	4907364	2	0	0	69.4	69.4	1	2946.86	3.25	0	80.39	0	2.49	0	0	5.84	0	0	0	0	0	0	-19.37	-19.37
Inverter Transformer	MV3-7 T	367951	4907754	2	0	0	56.1	56.1	1	651.58	3.25	0	67.28	0	-0.09	0	0	4	0	0	0	0	0	0	-15.13	-15.13
Inverter Transformer	MV6-4 T	370244	4906966	2	0	0	69.4	69.4	1	3073.82	3.25	0	80.75	0	2.53	0	0	5.94	0	0	0	0	0	0	-19.88	-19.88
Inverter Transformer	MV1-7 T	364919	4905782	2	0	0	69.4	69.4	1	3312.9	3.25	0	81.4	0	2.6	0	0	6.14	0	0	0	0	0	0	-20.8	-20.8
Inverter Transformer	MV3-18 T	367757	4907412	2	0	0	56.1	56.1	1	730.58	3.25	0	68.27	0	-0.07	0	0	4.21	0	0	0	0	0	0	-16.36	-16.36
Inverter Transformer	MV1-10 T	365010	4905564	2	0	0	69.4	69.4	1	3400.69	3.25	0	81.63	0	2.63	0	0	6.21	0	0	0	0	0	0	-21.12	-21.12
Inverter Transformer	MV3-13 T	367958	4907577	2	0	0	56.1	56.1	1	748.21	3.25	0	68.48	0	-0.07	0	0	4.26	0	0	0	0	0	0	-16.62	-16.62
Inverter Transformer	MV3-1 T	368150	4907976	2	0	0	56.1	56.1	1	793.46	3.25	0	68.99	0	-0.05	0	0	4.38	0	0	0	0	0	0	-17.26	-17.26
Inverter Transformer	MV1-14 T	365157	4905049	2	0	0	69.4	69.4	1	3700.68	3.25	0	82.37	0	2.71	0	0	6.45	0	0	0	0	0	0	-22.17	-22.17
Inverter Transformer	MV3-6 T	368156	4907834	2	0	0	56.1	56.1	1	820.31	3.25	0	69.28	0	-0.05	0	0	4.45	0	0	0	0	0	0	-17.62	-17.62
Inverter Transformer	MV1-13 T	364725	4905241	2	0	0	69.4	69.4	1	3831.16	3.25	0	82.67	0	2.74	0	0	6.55	0	0	0	0	0	0	-22.61	-22.61
Inverter Transformer	MV3-10 T	368162	4907669	2	0	0	56.1	56.1	1	878.89	3.25	0	69.88	0	-0.03	0	0	4.59	0	0	0	0	0	0	-18.39	-18.39
Inverter Transformer	MV3-17 T	368183	4907472	2	0	0	56.1	56.1	1	992.64	3.25	0	70.94	0	0.01	0	0	4.87	0	0	0	0	0	0	-19.76	-19.76
Inverter Transformer	MV3-5 T	368335	4907843	2	0	0	56.1	56.1	1	993.63	3.25	0	70.94	0	0.01	0	0	4.87	0	0	0	0	0	0	-19.77	-19.77
Inverter Transformer	MV3-11 T	368340	4907662	2	0	0	56.1	56.1	1	1046.6	3.25	0	71.4	0	0.03	0	0	5	0	0	0	0	0	0	-20.37	-20.37
Inverter Transformer	MV3-15 T	368351	4907477	2	0	0	56.1	56.1	1	1133.69	3.25	0	72.09	0	0.06	0	0	5.2	0	0	0	0	0	0	-21.29	-21.29

	Inverter Transformer	MV3-4 T	368507	4907925	2	0	0	56.1	56.1	1	1153.26	3.25	0	72.24	0	0.07	0	0	5.25	0	0	0	0	0	0	-21.49	-21.49
	Inverter Transformer	MV3-9 T	368517	4907703	2	0	0	56.1	56.1	1	1202.63	3.25	0	72.6	0	0.08	0	0	5.36	0	0	0	0	0	0	-21.99	-21.99
	Inverter Transformer	MV3-19 T	368352	4907347	2	0	0	56.1	56.1	1	1202.65	3.25	0	72.6	0	0.08	0	0	5.36	0	0	0	0	0	0	-21.99	-21.99
	Inverter Transformer	MV3-16 T	368509	4907475	2	0	0	56.1	56.1	1	1275.23	3.25	0	73.11	0	0.11	0	0	5.53	0	0	0	0	0	0	-22.69	-22.69
	Inverter Transformer	MV3-2 T	368677	4907928	2	0	0	56.1	56.1	1	1322.49	3.25	0	73.43	0	0.13	0	0	5.63	0	0	0	0	0	0	-23.13	-23.13
	Inverter Transformer	MV3-8 T	368685	4907712	2	0	0	56.1	56.1	1	1363.19	3.25	0	73.69	0	0.15	0	0	5.72	0	0	0	0	0	0	-23.5	-23.5
	Inverter Transformer	MV3-21 T	368484	4907206	2	0	0	56.1	56.1	1	1391.76	3.25	0	73.87	0	0.16	0	0	5.78	0	0	0	0	0	0	-23.75	-23.75
	Inverter Transformer	MV3-14 T	368678	4907498	2	0	0	56.1	56.1	1	1420.94	3.25	0	74.05	0	0.17	0	0	5.85	0	0	0	0	0	0	-24.01	-24.01
	Inverter Transformer	MV3-20 T	368683	4907317	2	0	0	56.1	56.1	1	1501.83	3.25	0	74.53	0	0.2	0	0	6.02	0	0	0	0	0	0	-24.7	-24.7
	Inverter Transformer	MV3-22 T	368661	4907142	2	0	0	56.1	56.1	1	1573.45	3.25	0	74.94	0	0.23	0	0	6.17	0	0	0	0	0	0	-25.28	-25.28
	Inverter Transformer	MV4-13 T	369057	4908605	2	0	0	56.1	56.1	1	1795.6	3.25	0	76.08	0	0.32	0	0	6.63	0	0	0	0	0	0	-26.98	-26.98
	Inverter Transformer	MV4-12 T	369049	4908803	2	0	0	56.1	56.1	1	1861.81	3.25	0	76.4	0	0.35	0	0	6.77	0	0	0	0	0	0	-27.46	-27.46
	Inverter Transformer	MV4-15 T	369170	4908481	2	0	0	56.1	56.1	1	1868.74	3.25	0	76.43	0	0.35	0	0	6.78	0	0	0	0	0	0	-27.5	-27.5
	Inverter Transformer	MV4-14 T	369182	4908507	2	0	0	56.1	56.1	1	1886.87	3.25	0	76.51	0	0.36	0	0	6.82	0	0	0	0	0	0	-27.63	-27.63
	Inverter Transformer	MV2-2 T	365982	4906654	2	0	0	56.1	56.1	1	1941.72	3.25	0	76.76	0	0.38	0	0	6.93	0	0	0	0	0	0	-28.01	-28.01
	Inverter Transformer	MV4-7 T	369040	4909001	2	0	0	56.1	56.1	1	1945.16	3.25	0	76.78	0	0.38	0	0	6.94	0	0	0	0	0	0	-28.04	-28.04
	Inverter Transformer	MV4-4 T	369033	4909199	2	0	0	56.1	56.1	1	2046.03	3.25	0	77.22	0	0.42	0	0	7.13	0	0	0	0	0	0	-28.72	-28.72
	Inverter Transformer	MV2-3 T	365814	4906641	2	0	0	56.1	56.1	1	2072.83	3.25	0	77.33	0	0.43	0	0	7.19	0	0	0	0	0	0	-28.89	-28.89
	Inverter Transformer	MV4-11 T	369269	4908855	2	0	0	56.1	56.1	1	2083.86	3.25	0	77.38	0	0.44	0	0	7.21	0	0	0	0	0	0	-28.97	-28.97
	Inverter Transformer	MV4-10 T	369307	4908858	2	0	0	56.1	56.1	1	2119.94	3.25	0	77.53	0	0.45	0	0	7.28	0	0	0	0	0	0	-29.2	-29.2
	Inverter Transformer	MV4-8 T	369262	4909001	2	0	0	56.1	56.1	1	2140.04	3.25	0	77.61	0	0.46	0	0	7.32	0	0	0	0	0	0	-29.33	-29.33
	Inverter Transformer	MV4-1 T	369017	4909397	2	0	0	56.1	56.1	1	2153.47	3.25	0	77.66	0	0.47	0	0	7.34	0	0	0	0	0	0	-29.41	-29.41
	Inverter Transformer	MV4-9 T	369284	4909001	2	0	0	56.1	56.1	1	2159.63	3.25	0	77.69	0	0.47	0	0	7.35	0	0	0	0	0	0	-29.45	-29.45
	Inverter Transformer	MV4-6 T	369249	4909192	2	0	0	56.1	56.1	1	2222.64	3.25	0	77.94	0	0.5	0	0	7.47	0	0	0	0	0	0	-29.85	-29.85
	Inverter Transformer	MV2-4 T	365590	4906628	2	0	0	56.1	56.1	1	2252.7	3.25	0	78.05	0	0.51	0	0	7.53	0	0	0	0	0	0	-30.04	-30.04
	Inverter Transformer	MV4-5 T	369283	4909199	2	0	0	56.1	56.1	1	2255.27	3.25	0	78.06	0	0.51	0	0	7.54	0	0	0	0	0	0	-30.05	-30.05
	Inverter Transformer	MV4-3 T	369234	4909397	2	0	0	56.1	56.1	1	2324.76	3.25	0	78.33	0	0.54	0	0	7.67	0	0	0	0	0	0	-30.48	-30.48
	Inverter Transformer	MV4-2 T	369267	4909397	2	0	0	56.1	56.1	1	2351.47	3.25	0	78.43	0	0.55	0	0	7.72	0	0	0	0	0	0	-30.64	-30.64
	Inverter Transformer	MV5-6 T	369987	4908507	2	0	0	56.1	56.1	1	2673	3.25	0	79.54	0	0.69	0	0	8.3	0	0	0	0	0	0	-32.47	-32.47
	Inverter Transformer	MV5-5 T	370021	4908690	2	0	0	56.1	56.1	1	2745.02	3.25	0	79.77	0	0.72	0	0	8.43	0	0	0	0	0	0	-32.86	-32.86
	Inverter Transformer	MV5-2 T	370011	4908853	2	0	0	56.1	56.1	1	2779.51	3.25	0	79.88	0	0.74	0	0	8.49	0	0	0	0	0	0	-33.05	-33.05
	Inverter Transformer	MV6-2 T	370091	4907339	2	0	0	56.1	56.1	1	2817.54	3.25	0	80	0	0.75	0	0	8.55	0	0	0	0	0	0	-33.25	-33.25
	Inverter Transformer	MV5-1 T	370015	4909142	2	0	0	56.1	56.1	1	2882.63	3.25	0	80.2	0	0.78	0	0	8.67	0	0	0	0	0	0	-33.58	-33.58
	Inverter Transformer	MV6-3 T	370202	4907140	2	0	0	56.1	56.1	1	2978.22	3.25	0	80.48	0	0.82	0	0	8.83	0	0	0	0	0	0	-34.07	-34.07
	Inverter Transformer	MV5-3 T	370237	4908851	2	0	0	56.1	56.1	1	2995.43	3.25	0	80.53	0	0.83	0	0	8.86	0	0	0	0	0	0	-34.16	-34.16
	Inverter Transformer	MV5-4 T	370330	4908707	2	0	0	56.1	56.1	1	3049.47	3.25	0	80.68	0	0.85	0	0	8.95	0	0	0	0	0	0	-34.43	-34.43
	Inverter Transformer	MV1-1 T	364721	4906166	2	0	0	56.1	56.1	1	3225.82	3.25	0	81.17	0	0.93	0	0	9.25	0	0	0	0	0	0	-35.28	-35.28
	Inverter Transformer	MV1-2 T	364759	4906063	2	0	0	56.1	56.1	1	3255.81	3.25	0	81.25	0	0.94	0	0	9.29	0	0	0	0	0	0	-35.43	-35.43
	Inverter Transformer	MV1-4 T	364821	4905918	2	0	0	56.1	56.1	1	3297.21	3.25	0	81.36	0	0.96	0	0	9.36	0	0	0	0	0	0	-35.62	-35.62
	Inverter Transformer	MV1-5 T	364676	4905892	2	0	0	56.1	56.1	1	3426.16	3.25	0	81.7	0	1.01	0	0	9.57	0	0	0	0	0	0	-36.22	-36.22
	Inverter Transformer	MV1-8 T	364782	4905647	2	0	0	56.1	56.1	1	3505.13	3.25	0	81.89	0	1.04	0	0	9.7	0	0	0	0	0	0	-36.57	-36.57
	Inverter Transformer	MV1-12 T	365044	4905386	2	0	0	56.1	56.1	1	3509.08	3.25	0	81.9	0	1.04	0	0	9.7	0	0	0	0	0	0	-36.59	-36.59
	Inverter Transformer	MV1-3 T	364435	4906039	2	0	0	56.1	56.1	1	3533.29	3.25	0	81.96	0	1.05	0	0	9.74	0	0	0	0	0	0	-36.7	-36.7
	Inverter Transformer	MV1-6 T	364482	4905835	2	0	0	56.1	56.1	1	3614.29	3.25	0	82.16	0	1.09	0	0	9.87	0	0	0	0	0	0	-37.06	-37.06
	Inverter Transformer	MV1-15 T	365309	4904994	2	0	0	56.1	56.1	1	3657.77	3.25	0	82.26	0	1.11	0	0	9.94	0	0	0	0	0	0	-37.25	-37.25
	Inverter Transformer	MV1-9 T	364555	4905646	2	0	0	56.1	56.1	1	3675.83	3.25	0	82.31	0	1.11	0	0	9.96	0	0	0	0	0	0	-37.32	-37.32
	Inverter Transformer	MV1-11 T	364649	4905414	2	0	0	56.1	56.1	1	3761.75	3.25	0	82.51	0	1.15	0	0	10.1	0	0	0	0	0	0	-37.69	-37.69
	Line Reactor	NGR	369421	4908787.5	5	0	0	45.4	45.4	1	2199.75	5.25	0	77.85	0	3.36	1.29	0.11	0.9	0	0	0	0	0	0	-38.05	-38.05
Limit. Valu	0	0																								
Level D/N:	34.3272	34.3272																								

Receiver: Existing Noise Receptor
ID: S-R33
X: 367652
Y: 4908099
Z: 4.5
Ground: 0

ISO	Description	ID	X	Y	Z	Ground	ReflOrd	LxT	LxN	L/A	Dist.	hm	Freq	Adiv	K0b	Agr	Abar	z	Aatm	Afol	Ahous	Cmet	CmetN	Dc	RL	LtotT	LtotN
	Inverter	MV3-3	367939	4907927	2	0	0	100.3	100.3	1	334.6	3.25	0	61.49	0	-0.65	0	0	6.86	0	0	0	0	0	0	32.61	32.61
	Inverter	MV3-7	367945	4907754	2	0	0	100.3	100.3	1	452.64	3.25	0	64.12	0	-0.59	0	0	8.13	0	0	0	0	0	0	28.65	28.65
	Sol_Luce Substation	S_Substation	369426	4908792	3.5	0	0	112.1	112.1	1	1904.55	5.25	0	76.6	0	-0.01	3.81	0.31	4.2	0	0	0	0	0	0	27.47	27.47
	Inverter	MV3-12	367668	4907594	2	0	0	100.3	100.3	1	505.26	3.25	0	65.07	0	-0.55	0	0	8.57	0	0	0	0	0	0	27.22	27.22
	Inverter	MV3-6	368162	4907834	2	0	0	100.3	100.3	1	574.74	3.25	0	66.19	0	-0.5	0	0	9.05	0	0	0	0	0	0	25.57	25.57
	Inverter	MV3-13	367963	4907577	2	0	0	100.3	100.3	1	607.63	3.25	0	66.67	0	-0.47	0	0	9.25	0	0	0	0	0	0	24.86	24.86
	Inverter	MV3-10	368167	4907669	2	0	0	100.3	100.3	1	670.92	3.25	0	67.53	0	-0.43	0	0	9.59	0	0	0	0	0	0	23.62	23.62
	Inverter	MV3-18	367752	4907412	2	0	0	100.3	100.3	1	694.24	3.25	0	67.83	0	-0.42	0	0	9.71	0	0	0	0	0	0	23.19	23.19
	Inverter	MV3-17	368178	4907472	2	0	0	100.3	100.3	1	818.42	3.25	0	69.26	0	-0.34	0	0	10.25	0	0	0	0	0	0	21.14	21.14
	Inverter	MV3-11	368346	4907662	2	0	0	100.3	100.3	1	820.13	3.25	0	69.28	0	-0.34	0	0	10.26	0	0	0	0	0	0	21.11	21.11
	Inverter	MV3-15	368357	4907477	2	0	0	100.3	100.3	1	940.17	3.25	0	70.46	0	-0.28	0	0	10.71	0	0	0	0	0	0	19.42	19.42
	Inverter	MV3-9	368512	4907703	2	0	0	100.3	100.3	1	946.8	3.25	0	70.53	0	-0.27	0	0	10.73	0	0	0	0	0	0	19.33	19.33
	Inverter	MV3-19	368357	4907347	2	0	0	100.3	100.3	1	1030.79	3.25	0	71.26	0	-0.23	0	0	11.01	0	0	0	0	0	0	18.27	18.27
	Inverter	MV3-16	368514	4907475	2	0	0	100.3	100.3	1	1064.16	3.25	0	71.54	0	-0.22	0	0	11.12	0	0	0	0	0	0	17.87	17.87
	Inverter	MV3-8	368680	4907712	2	0	0	100.3	100.3	1	1098.43	3.25	0	71.82	0	-0.2	0	0	11.22	0	0	0	0	0	0	17.47	17.47

Inverter	MV3-14	368684	4907498	2	0	0	100.3	100.3	1	1194.25	3.25	0	72.54	0	-0.16	0	0	11.51	0	0	0	0	0	0	16.42	16.42
Inverter	MV3-21	368478	4907206	2	0	0	100.3	100.3	1	1216.44	3.25	0	72.7	0	-0.15	0	0	11.57	0	0	0	0	0	0	16.18	16.18
Inverter	MV3-20	368689	4907317	2	0	0	100.3	100.3	1	1298.81	3.25	0	73.27	0	-0.11	0	0	11.8	0	0	0	0	0	0	15.35	15.35
Inverter	MV4-7	369035	4909001	2	0	0	100.3	100.3	1	1651.15	3.25	0	75.36	0	0.02	0	0	12.69	0	0	0	0	0	0	12.25	12.25
Inverter	MV4-4	369027	4909199	2	0	0	100.3	100.3	1	1760.86	3.25	0	75.91	0	0.06	0	0	12.94	0	0	0	0	0	0	11.4	11.4
Inverter	MV4-11	369264	4908855	2	0	0	100.3	100.3	1	1780.47	3.25	0	76.01	0	0.06	0	0	12.99	0	0	0	0	0	0	11.25	11.25
Inverter	MV4-10	369312	4908858	2	0	0	100.3	100.3	1	1825.29	3.25	0	76.23	0	0.08	0	0	13.09	0	0	0	0	0	0	10.92	10.92
Inverter	MV4-8	369256	4909001	2	0	0	100.3	100.3	1	1840.22	3.25	0	76.3	0	0.08	0	0	13.12	0	0	0	0	0	0	10.81	10.81
Inverter	MV4-9	369289	4909001	2	0	0	100.3	100.3	1	1869.06	3.25	0	76.43	0	0.09	0	0	13.18	0	0	0	0	0	0	10.61	10.61
Inverter	MV4-1	369011	4909397	2	0	0	100.3	100.3	1	1879.28	3.25	0	76.48	0	0.09	0	0	13.2	0	0	0	0	0	0	10.53	10.53
Inverter	MV3-1	368156	4907976	2	0	0	89.1	89.1	1	518.8	3.25	0	65.3	0	0.54	0	0	5.21	0	0	0	0	0	0	18.01	18.01
Inverter	MV4-6	369243	4909192	2	0	0	100.3	100.3	1	1930.27	3.25	0	76.71	0	0.11	0	0	13.31	0	0	0	0	0	0	10.18	10.18
Inverter	MV4-5	369289	4909199	2	0	0	100.3	100.3	1	1972.25	3.25	0	76.9	0	0.12	0	0	13.4	0	0	0	0	0	0	9.89	9.89
Inverter	MV4-3	369229	4909397	2	0	0	100.3	100.3	1	2042.48	3.25	0	77.2	0	0.14	0	0	13.55	0	0	0	0	0	0	9.42	9.42
Inverter	MV4-2	369272	4909397	2	0	0	100.3	100.3	1	2075.86	3.25	0	77.34	0	0.15	0	0	13.62	0	0	0	0	0	0	9.2	9.2
Inverter	MV2-3	365820	4906641	2	0	0	100.3	100.3	1	2341.37	3.25	0	78.39	0	0.22	0	0	14.15	0	0	0	0	0	0	7.55	7.55
Inverter	MV5-5	370015	4908690	2	0	0	100.3	100.3	1	2435.79	3.25	0	78.73	0	0.24	0	0	14.34	0	0	0	0	0	0	7	7
Inverter	MV5-2	370006	4908853	2	0	0	100.3	100.3	1	2471.81	3.25	0	78.86	0	0.25	0	0	14.4	0	0	0	0	0	0	6.8	6.8
Inverter	MV2-4	365586	4906624	2	0	0	100.3	100.3	1	2538.5	3.25	0	79.09	0	0.27	0	0	14.53	0	0	0	0	0	0	6.42	6.42
Inverter	MV6-2	370085	4907339	2	0	0	100.3	100.3	1	2548.94	3.25	0	79.13	0	0.27	0	0	14.55	0	0	0	0	0	0	6.37	6.37
Inverter	MV5-1	370020	4909142	2	0	0	100.3	100.3	1	2587.52	3.25	0	79.26	0	0.28	0	0	14.62	0	0	0	0	0	0	6.15	6.15
Inverter	MV3-5	368340	4907843	2	0	0	89.1	89.1	1	734.09	3.25	0	68.31	0	0.62	0	0	5.78	0	0	0	0	0	0	14.34	14.34
Inverter	MV5-3	370231	4908851	2	0	0	100.3	100.3	1	2686.4	3.25	0	79.58	0	0.3	0	0	14.81	0	0	0	0	0	0	5.62	5.62
Inverter	MV6-3	370207	4907140	2	0	0	100.3	100.3	1	2729.05	3.25	0	79.72	0	0.31	0	0	14.88	0	0	0	0	0	0	5.4	5.4
Inverter	MV5-4	370324	4908707	2	0	0	100.3	100.3	1	2740.3	3.25	0	79.76	0	0.31	0	0	14.91	0	0	0	0	0	0	5.34	5.34
DSTATCOM - 10 MVAR #2	DSAT2	369403	4908757	2.5	0	0	96.6	96.6	1	1870.55	3.5	0	76.44	0	3.19	0	0	1.64	0	0	0	0	0	0	15.36	15.36
DSTATCOM - 10 MVAR #1	DSAT1	369437	4908757	2.5	0	0	96.6	96.6	1	1902.42	3.5	0	76.59	0	3.2	0	0	1.66	0	0	0	0	0	0	15.18	15.18
Inverter	MV2-1	365842	4906816	2	0	0	97.3	97.3	1	2218.6	3.25	0	77.92	0	0.19	0	0	13.91	0	0	0	0	0	0	5.29	5.29
Inverter	MV3-4	368502	4907925	2	0	0	89.1	89.1	1	867.63	3.25	0	69.77	0	0.66	0	0	6.06	0	0	0	0	0	0	12.58	12.58
Inverter	MV1-1	364715	4906166	2	0	0	100.3	100.3	1	3516.03	3.25	0	81.92	0	0.45	0	0	16.26	0	0	0	0	0	0	1.68	1.68
Inverter	MV1-2	364753	4906063	2	0	0	100.3	100.3	1	3542.53	3.25	0	81.99	0	0.46	0	0	16.3	0	0	0	0	0	0	1.57	1.57
Inverter	MV1-4	364815	4905918	2	0	0	100.3	100.3	1	3578.45	3.25	0	82.07	0	0.46	0	0	16.36	0	0	0	0	0	0	1.41	1.41
Inverter	MV1-5	364671	4905892	2	0	0	100.3	100.3	1	3709.07	3.25	0	82.39	0	0.48	0	0	16.58	0	0	0	0	0	0	0.86	0.86
Inverter	MV1-12	365038	4905386	2	0	0	100.3	100.3	1	3767.41	3.25	0	82.52	0	0.49	0	0	16.67	0	0	0	0	0	0	0.62	0.62
Inverter	MV1-8	364788	4905647	2	0	0	100.3	100.3	1	3770.25	3.25	0	82.53	0	0.49	0	0	16.68	0	0	0	0	0	0	0.61	0.61
Inverter	MV3-2	368671	4907928	2	0	0	89.1	89.1	1	1033.25	3.25	0	71.28	0	0.69	0	0	6.38	0	0	0	0	0	0	10.7	10.7
Inverter	MV6-1	370235	4907364	2	0	0	97.3	97.3	1	2685.54	3.25	0	79.58	0	0.3	0	0	14.81	0	0	0	0	0	0	2.63	2.63
Inverter	MV1-15	365315	4904994	2	0	0	100.3	100.3	1	3886.21	3.25	0	82.79	0	0.51	0	0	16.87	0	0	0	0	0	0	0.14	0.14
Inverter	MV1-6	364477	4905835	2	0	0	100.3	100.3	1	3899.53	3.25	0	82.82	0	0.51	0	0	16.89	0	0	0	0	0	0	0.09	0.09
Inverter	MV1-9	364561	4905646	2	0	0	100.3	100.3	1	3946.07	3.25	0	82.92	0	0.52	0	0	16.96	0	0	0	0	0	0	-0.09	-0.09
Inverter	MV1-11	364655	4905414	2	0	0	100.3	100.3	1	4023.83	3.25	0	83.09	0	0.53	0	0	17.09	0	0	0	0	0	0	-0.4	-0.4
Inverter	MV1-7	364925	4905782	2	0	0	97.3	97.3	1	3578.41	3.25	0	82.07	0	0.46	0	0	16.36	0	0	0	0	0	0	-1.59	-1.59
Inverter	MV3-22	368656	4907142	2	0	0	89.1	89.1	1	1387.04	3.25	0	73.84	0	0.77	0	0	7.01	0	0	0	0	0	0	7.44	7.44
Inverter	MV1-10	365004	4905564	2	0	0	97.3	97.3	1	3665.81	3.25	0	82.28	0	0.48	0	0	16.51	0	0	0	0	0	0	-1.96	-1.96
Inverter	MV4-13	369051	4908605	2	0	0	89.1	89.1	1	1487.7	3.25	0	74.45	0	0.79	0	0	7.19	0	0	0	0	0	0	6.63	6.63
Inverter	MV1-14	365163	4905049	2	0	0	97.3	97.3	1	3936.7	3.25	0	82.9	0	0.52	0	0	16.95	0	0	0	0	0	0	-3.06	-3.06
Inverter	MV4-12	369043	4908803	2	0	0	89.1	89.1	1	1559.01	3.25	0	74.86	0	0.81	0	0	7.31	0	0	0	0	0	0	6.09	6.09
Inverter	MV4-15	369176	4908481	2	0	0	89.1	89.1	1	1571.15	3.25	0	74.92	0	0.81	0	0	7.33	0	0	0	0	0	0	6	6
Inverter	MV4-14	369176	4908507	2	0	0	89.1	89.1	1	1577.67	3.25	0	74.96	0	0.81	0	0	7.34	0	0	0	0	0	0	5.95	5.95
Inverter	MV1-13	364731	4905241	2	0	0	97.3	97.3	1	4086.61	3.25	0	83.23	0	0.54	0	0	17.19	0	0	0	0	0	0	-3.64	-3.64
Fixed Reactor Bank 1	FRB1	369378	4908755	6	0	0	89.8	89.8	1	1846.46	5.25	0	76.33	0	-1.01	0	0	4.1	0	0	0	0	0	0	10.35	10.35
Fixed Reactor Bank 2	FRB2	369464	4908755	6	0	0	89.8	89.8	1	1927.09	5.25	0	76.7	0	-1	0	0	4.24	0	0	0	0	0	0	9.84	9.84
SubstationTransformer	W_ST	369711.17	4906112.3	2.5	0	0	92	92	1	2861.34	4.25	0	80.13	0	0.99	2.94	0.21	5.75	0	0	0	0	0	0	2.17	2.17
Inverter	MV2-2	365977	4906654	2	0	0	89.1	89.1	1	2212.16	3.25	0	77.9	0	0.96	0	0	8.39	0	0	0	0	0	0	1.82	1.82
Inverter	MV5-6	369982	4908507	2	0	0	89.1	89.1	1	2365.45	3.25	0	78.48	0	0.99	0	0	8.63	0	0	0	0	0	0	0.95	0.95
Westbrook Inverter Enclosur	W_INV2	369374	4906388	2	0	0	89.1	89.1	1	2427.51	3.25	0	78.7	0	1.01	0	0	8.73	0	0	0	0	0	0	0.61	0.61
Westbrook Inverter Enclosur	W_INV5	369719	4906574	2	0	0	89.1	89.1	1	2568.68	3.25	0	79.19	0	1.04	0	0	8.95	0	0	0	0	0	0	-0.13	-0.13
Westbrook Inverter Enclosur	W_INV3	369508	4906164	2	0	0	89.1	89.1	1	2681.22	3.25	0	79.57	0	1.07	0	0	9.13	0	0	0	0	0	0	-0.71	-0.71
Westbrook Inverter Enclosur	W_INV6	369875	4906578	2	0	0	89.1	89.1	1	2693.54	3.25	0	79.61	0	1.07	0	0	9.15	0	0	0	0	0	0	-0.77	-0.77
Westbrook Inverter Enclosur	W_INV7	369780	4906417	2	0	0	89.1	89.1	1	2712.47	3.25	0	79.67	0	1.08	0	0	9.18	0	0	0	0	0	0	-0.86	-0.86
Westbrook Inverter Enclosur	W_INV4	369673	4906164	2	0	0	89.1	89.1	1	2797.98	3.25	0	79.94	0	1.1	0	0	9.31	0	0	0	0	0	0	-1.29	-1.29
Westbrook Inverter Enclosur	W_INV1	369409	4906578	2	0	0	86.1	86.1	1	2323.9	3.25	0	78.32	0	0.98	0	0	8.57	0	0	0	0	0	0	-1.82	-1.82
Inverter	MV1-3	364440	4906039	2	0	0	89.1	89.1	1	3815.83	3.25	0	82.63	0	1.35	0	0	10.82	0	0	0	0	0	0	-5.74	-5.74
Gardiner Substation	G_Sub	366586.3	4903349.9	2.5	0	0	90.8	90.8	1	4867.2	4.25	0	84.75	0	1.62	2.42	0.39	8.46	0	0	0	0	0	0	-6.47	-6.47
Inverter	MV6-4	370250	4906966	2	0	0	86.1	86.1	1	2834.31	3.25	0	80.05	0	1.11	0	0	9.36	0	0	0	0	0	0	-4.46	-4.46
Inverters	G_Inv2	366676.9	4903239.1	2	0	0	87.7	87.7	1	4956.76	3.25	0	84.9	0	2.86	0	0	5.89	0	0	0	0	0	0	-6	-6
Inverters	G_Inv1	366526.4	4903225.8	2	0	0	87.7	87.7	1	5001.51	3.25	0	84.98	0	2.86	0	0	5.94	0	0	0	0	0	0	-6.13	-6.13
Inverters	G_Inv4	366732.8	4903105	2	0	0	87.7	87.7	1	5077.89	3.25	0	85.11	0	2.87	0	0	6.02	0	0	0	0	0	0	-6.34	-6.34
Inverters	G_Inv3	366583.7	4903091.4	2	0	0	87.7	87.7	1	5120.29	3.25	0	85.19	0	2.87	0	0	6.07	0	0	0	0	0	0	-6.46	-6.46
Inverters	G_Inv6	366788.5	4902972	2	0	0	87.7	87.7	1	5199.21	3.25	0	85.32	0	2.88	0	0	6.15	0	0	0	0	0	0	-6.68	-6.68
Inverters	G_Inv5	366638.5	4902958.1	2	0	0	87.7	87.7	1	5239.85	3.25	0	85.39	0	2.88	0	0	6.19	0	0	0	0	0	0	-6.8	-6.8
Inverters	G_Inv8	366844.5	4902838.5	2	0	0	87.7	87.7	1	5322.12	3.25	0	85.52	0	2.88	0	0	6.28	0	0	0	0	0	0	-7.02	-7.02
Inverters	G_Inv7	366694.6	4902824.7	2	0	0	87.7	87.7	1	5360.49	3.25	0	85.58	0	2.89	0	0	6.32	0	0	0	0	0	0	-7.13	-7.13
Inverters	G_Inv10	366900.7	4902704.8	2	0	0	87.7	87.7	1	5446.27	3.25	0	85.72	0	2.89	0	0	6.41	0	0	0	0	0	0	-7.36	-7.36

Inverters	G_Inv9	366750.9	4902691.8	2	0	0	87.7	87.7	1	5481.77	3.25	0	85.78	0	2.89	0	0	6.44	0	0	0	0	0	0	-7.45	-7.45
Westbrook Inverter Transfor	W_INVTR1	369403	4906578	2	0	0	78.2	78.2	1	2319.36	3.25	0	78.31	0	-2.51	0	0	1.36	0	0	0	0	0	0	1.09	1.09
Westbrook Inverter Transfor	W_INVTR2	369368	4906388	2	0	0	77.3	77.3	1	2423.26	3.25	0	78.69	0	-2.55	0	0	1.4	0	0	0	0	0	0	-0.2	-0.2
Westbrook Inverter Transfor	W_INVTR5	369725	4906574	2	0	0	77.3	77.3	1	2573.51	3.25	0	79.21	0	-2.59	0	0	1.47	0	0	0	0	0	0	-0.75	-0.75
Westbrook Inverter Transfor	W_INVTR3	369514	4906164	2	0	0	77.3	77.3	1	2685.38	3.25	0	79.58	0	-2.63	0	0	1.52	0	0	0	0	0	0	-1.13	-1.13
Westbrook Inverter Transfor	W_INVTR6	369881	4906578	2	0	0	77.3	77.3	1	2698.5	3.25	0	79.62	0	-2.63	0	0	1.53	0	0	0	0	0	0	-1.18	-1.18
Westbrook Inverter Transfor	W_INVTR7	369786	4906417	2	0	0	77.3	77.3	1	2717.18	3.25	0	79.68	0	-2.64	0	0	1.54	0	0	0	0	0	0	-1.24	-1.24
Westbrook Inverter Transfor	W_INVTR4	369679	4906164	2	0	0	77.3	77.3	1	2802.31	3.25	0	79.95	0	-2.66	0	0	1.57	0	0	0	0	0	0	-1.52	-1.52
Inverter Transformer	MV3-3 T	367944	4907927	2	0	0	56.1	56.1	1	338.9	3.25	0	61.6	0	-0.09	0	0	2.96	0	0	0	0	0	0	-8.41	-8.41
Inverter Transformer	MV3-7 T	367951	4907754	2	0	0	56.1	56.1	1	456.54	3.25	0	64.19	0	-0.12	0	0	3.41	0	0	0	0	0	0	-11.42	-11.42
Inverter Transformer	MV2-1 T	365836	4906816	2	0	0	69.4	69.4	1	2223.5	3.25	0	77.94	0	2.25	0	0	5.18	0	0	0	0	0	0	-16.03	-16.03
Inverter Transformer	MV3-12 T	367674	4907594	2	0	0	56.1	56.1	1	505.49	3.25	0	65.07	0	-0.12	0	0	3.57	0	0	0	0	0	0	-12.47	-12.47
Inverter Transformer	MV3-1 T	368150	4907976	2	0	0	56.1	56.1	1	512.97	3.25	0	65.2	0	-0.12	0	0	3.59	0	0	0	0	0	0	-12.62	-12.62
Inverter Transformer	MV3-6 T	368156	4907834	2	0	0	56.1	56.1	1	569.43	3.25	0	66.11	0	-0.11	0	0	3.77	0	0	0	0	0	0	-13.71	-13.71
Inverter Transformer	MV6-1 T	370230	4907364	2	0	0	69.4	69.4	1	2680.73	3.25	0	79.57	0	2.41	0	0	5.61	0	0	0	0	0	0	-18.23	-18.23
Inverter Transformer	MV3-13 T	367958	4907577	2	0	0	56.1	56.1	1	605.08	3.25	0	66.64	0	-0.1	0	0	3.87	0	0	0	0	0	0	-14.35	-14.35
Inverter Transformer	MV6-4 T	370244	4906966	2	0	0	69.4	69.4	1	2828.81	3.25	0	80.03	0	2.45	0	0	5.74	0	0	0	0	0	0	-18.87	-18.87
Inverter Transformer	MV3-10 T	368162	4907669	2	0	0	56.1	56.1	1	667.09	3.25	0	67.48	0	-0.09	0	0	4.04	0	0	0	0	0	0	-15.38	-15.38
Inverter Transformer	MV3-18 T	367757	4907412	2	0	0	56.1	56.1	1	694.98	3.25	0	67.84	0	-0.08	0	0	4.12	0	0	0	0	0	0	-15.82	-15.82
Inverter Transformer	MV3-5 T	368335	4907843	2	0	0	56.1	56.1	1	729.4	3.25	0	68.26	0	-0.07	0	0	4.21	0	0	0	0	0	0	-16.34	-16.34
Inverter Transformer	MV1-7 T	364919	4905782	2	0	0	69.4	69.4	1	3582.99	3.25	0	82.08	0	2.68	0	0	6.36	0	0	0	0	0	0	-21.77	-21.77
Inverter Transformer	MV1-10 T	365010	4905564	2	0	0	69.4	69.4	1	3661.47	3.25	0	82.27	0	2.7	0	0	6.42	0	0	0	0	0	0	-22.04	-22.04
Inverter Transformer	MV3-11 T	368340	4907662	2	0	0	56.1	56.1	1	815.06	3.25	0	69.22	0	-0.05	0	0	4.43	0	0	0	0	0	0	-17.55	-17.55
Inverter Transformer	MV3-17 T	368183	4907472	2	0	0	56.1	56.1	1	821.64	3.25	0	69.29	0	-0.05	0	0	4.45	0	0	0	0	0	0	-17.64	-17.64
Inverter Transformer	MV1-14 T	365157	4905049	2	0	0	69.4	69.4	1	3940.5	3.25	0	82.91	0	2.77	0	0	6.63	0	0	0	0	0	0	-22.96	-22.96
Inverter Transformer	MV3-4 T	368507	4907925	2	0	0	56.1	56.1	1	872.53	3.25	0	69.82	0	-0.03	0	0	4.58	0	0	0	0	0	0	-18.31	-18.31
Inverter Transformer	MV1-13 T	364725	4905241	2	0	0	69.4	69.4	1	4090.9	3.25	0	83.24	0	2.81	0	0	6.74	0	0	0	0	0	0	-23.44	-23.44
Inverter Transformer	MV3-15 T	368351	4907477	2	0	0	56.1	56.1	1	935.68	3.25	0	70.42	0	-0.01	0	0	4.73	0	0	0	0	0	0	-19.09	-19.09
Inverter Transformer	MV3-9 T	368517	4907703	2	0	0	56.1	56.1	1	951.34	3.25	0	70.57	0	0	0	0	4.77	0	0	0	0	0	0	-19.28	-19.28
Inverter Transformer	MV3-19 T	368352	4907347	2	0	0	56.1	56.1	1	1027.38	3.25	0	71.23	0	0.02	0	0	4.95	0	0	0	0	0	0	-20.15	-20.15
Inverter Transformer	MV3-2 T	368677	4907928	2	0	0	56.1	56.1	1	1039.17	3.25	0	71.33	0	0.03	0	0	4.98	0	0	0	0	0	0	-20.28	-20.28
Inverter Transformer	MV3-16 T	368509	4907475	2	0	0	56.1	56.1	1	1060.11	3.25	0	71.51	0	0.03	0	0	5.03	0	0	0	0	0	0	-20.51	-20.51
Inverter Transformer	MV3-8 T	368685	4907712	2	0	0	56.1	56.1	1	1103.12	3.25	0	71.85	0	0.05	0	0	5.13	0	0	0	0	0	0	-20.97	-20.97
Inverter Transformer	MV3-14 T	368678	4907498	2	0	0	56.1	56.1	1	1189.07	3.25	0	72.5	0	0.08	0	0	5.33	0	0	0	0	0	0	-21.86	-21.86
Inverter Transformer	MV3-21 T	368484	4907206	2	0	0	56.1	56.1	1	1220.52	3.25	0	72.73	0	0.09	0	0	5.4	0	0	0	0	0	0	-22.17	-22.17
Inverter Transformer	MV3-20 T	368683	4907317	2	0	0	56.1	56.1	1	1294.02	3.25	0	73.24	0	0.12	0	0	5.57	0	0	0	0	0	0	-22.87	-22.87
Inverter Transformer	MV3-22 T	368661	4907142	2	0	0	56.1	56.1	1	1390.66	3.25	0	73.86	0	0.16	0	0	5.78	0	0	0	0	0	0	-23.74	-23.74
Inverter Transformer	MV4-13 T	369057	4908605	2	0	0	56.1	56.1	1	1493.34	3.25	0	74.48	0	0.2	0	0	6	0	0	0	0	0	0	-24.62	-24.62
Inverter Transformer	MV4-12 T	369049	4908803	2	0	0	56.1	56.1	1	1564.36	3.25	0	74.89	0	0.22	0	0	6.15	0	0	0	0	0	0	-25.21	-25.21
Inverter Transformer	MV4-15 T	369170	4908481	2	0	0	56.1	56.1	1	1565.33	3.25	0	74.89	0	0.22	0	0	6.16	0	0	0	0	0	0	-25.22	-25.22
Inverter Transformer	MV4-14 T	369182	4908507	2	0	0	56.1	56.1	1	1583.47	3.25	0	74.99	0	0.23	0	0	6.2	0	0	0	0	0	0	-25.36	-25.36
Inverter Transformer	MV4-7 T	369040	4909001	2	0	0	56.1	56.1	1	1655.34	3.25	0	75.38	0	0.26	0	0	6.35	0	0	0	0	0	0	-25.93	-25.93
Inverter Transformer	MV4-4 T	369033	4909199	2	0	0	56.1	56.1	1	1765.55	3.25	0	75.94	0	0.31	0	0	6.57	0	0	0	0	0	0	-26.76	-26.76
Inverter Transformer	MV4-11 T	369269	4908855	2	0	0	56.1	56.1	1	1785	3.25	0	76.03	0	0.31	0	0	6.61	0	0	0	0	0	0	-26.9	-26.9
Inverter Transformer	MV4-10 T	369307	4908858	2	0	0	56.1	56.1	1	1820.74	3.25	0	76.2	0	0.33	0	0	6.69	0	0	0	0	0	0	-27.16	-27.16
Inverter Transformer	MV4-8 T	369262	4909001	2	0	0	56.1	56.1	1	1845.46	3.25	0	76.32	0	0.34	0	0	6.74	0	0	0	0	0	0	-27.34	-27.34
Inverter Transformer	MV4-9 T	369284	4909001	2	0	0	56.1	56.1	1	1864.68	3.25	0	76.41	0	0.35	0	0	6.77	0	0	0	0	0	0	-27.48	-27.48
Inverter Transformer	MV4-1 T	369017	4909397	2	0	0	56.1	56.1	1	1883.62	3.25	0	76.5	0	0.36	0	0	6.81	0	0	0	0	0	0	-27.61	-27.61
Inverter Transformer	MV4-6 T	369249	4909192	2	0	0	56.1	56.1	1	1935.22	3.25	0	76.73	0	0.38	0	0	6.92	0	0	0	0	0	0	-27.97	-27.97
Inverter Transformer	MV4-5 T	369283	4909199	2	0	0	56.1	56.1	1	1967.27	3.25	0	76.88	0	0.39	0	0	6.98	0	0	0	0	0	0	-28.19	-28.19
Inverter Transformer	MV4-3 T	369234	4909397	2	0	0	56.1	56.1	1	2046.35	3.25	0	77.22	0	0.42	0	0	7.13	0	0	0	0	0	0	-28.72	-28.72
Inverter Transformer	MV4-2 T	369267	4909397	2	0	0	56.1	56.1	1	2071.96	3.25	0	77.33	0	0.43	0	0	7.18	0	0	0	0	0	0	-28.89	-28.89
Inverter Transformer	MV2-2 T	365982	4906654	2	0	0	56.1	56.1	1	2208.38	3.25	0	77.88	0	0.49	0	0	7.45	0	0	0	0	0	0	-29.76	-29.76
Inverter Transformer	MV2-3 T	365814	4906641	2	0	0	56.1	56.1	1	2346.06	3.25	0	78.41	0	0.55	0	0	7.71	0	0	0	0	0	0	-30.61	-30.61
Inverter Transformer	MV5-6 T	369987	4908507	2	0	0	56.1	56.1	1	2370.38	3.25	0	78.5	0	0.56	0	0	7.75	0	0	0	0	0	0	-30.75	-30.75
Inverter Transformer	MV5-5 T	370021	4908690	2	0	0	56.1	56.1	1	2441.61	3.25	0	78.75	0	0.59	0	0	7.88	0	0	0	0	0	0	-31.17	-31.17
Inverter Transformer	MV5-2 T	370011	4908853	2	0	0	56.1	56.1	1	2476.57	3.25	0	78.88	0	0.61	0	0	7.95	0	0	0	0	0	0	-31.37	-31.37
Inverter Transformer	MV2-4 T	365590	4906628	2	0	0	56.1	56.1	1	2532.92	3.25	0	79.07	0	0.63	0	0	8.05	0	0	0	0	0	0	-31.69	-31.69
Inverter Transformer	MV6-2 T	370091	4907339	2	0	0	56.1	56.1	1	2554.67	3.25	0	79.15	0	0.64	0	0	8.09	0	0	0	0	0	0	-31.82	-31.82
Inverter Transformer	MV5-1 T	370015	4909142	2	0	0	56.1	56.1	1	2582.95	3.25	0	79.24	0	0.65	0	0	8.14	0	0	0	0	0	0	-31.98	-31.98
Inverter Transformer	MV5-3 T	370237	4908851	2	0	0	56.1	56.1	1	2692.16	3.25	0	79.6	0	0.7	0	0	8.33	0	0	0	0	0	0	-32.58	-32.58
Inverter Transformer	MV6-3 T	370202	4907140	2	0	0	56.1	56.1	1	2724.37	3.25	0	79.71	0	0.71	0	0	8.39	0	0	0	0	0	0	-32.75	-32.75
Inverter Transformer	MV5-4 T	370330	4908707	2	0	0	56.1	56.1	1	2746.15	3.25	0	79.77	0	0.72	0	0	8.43	0	0	0	0	0	0	-32.87	-32.87
Inverter Transformer	MV1-1 T	364721	4906166	2	0	0	56.1	56.1	1	3511.02	3.25	0	81.91	0	1.04	0	0	9.71	0	0	0	0	0	0	-36.6	-36.6
Inverter Transformer	MV1-2 T	364759	4906063	2	0	0	56.1	56.1	1	3537.62	3.25	0	81.97	0	1.06	0	0	9.75	0	0	0	0	0	0	-36.72	-36.72
Inverter Transformer	MV1-4 T	364821	4905918	2	0	0	56.1	56.1	1	3573.7	3.25	0	82.06	0	1.07	0	0	9.8	0	0	0	0	0	0	-36.88	-36.88
Inverter Transformer	MV1-5 T	364676	4905892	2	0	0	56.1	56.1	1	3705.05	3.25	0	82.38	0	1.12	0	0	10.01	0	0	0	0	0	0	-37.45	-37.45
Inverter Transformer	MV1-12 T	365044	4905386	2	0	0	56.1	56.1	1	3763.25	3.25	0	82.51	0	1.15	0	0	10.1	0	0	0	0	0	0	-37.7	-37.7
Inverter Transformer	MV1-8 T	364782	4905647	2	0	0	56.1	56.1	1	3774.81	3.25	0	82.54	0	1.15	0	0	10.12	0	0	0	0	0	0	-37.75	-37.75
Inverter Transformer	MV1-3 T	364435	4906039	2	0	0	56.1	56.1	1	3820.04	3.25	0	82.64	0	1.17	0	0	10.18	0	0	0	0	0	0	-37.94	-37.94
Inverter Transformer	MV1-15 T	365309	4904994	2	0	0	56.1	56.1	1	3889.82	3.25	0	82.8	0	1.2	0	0	10.29	0	0	0	0	0	0	-38.23	-38.23
Inverter Transformer	MV1-6 T	364482	4905835	2	0	0	56.1	56.1	1	3895.46	3.25	0	82.81	0	1.2	0	0	10.3	0	0	0	0	0	0	-38.25	-38.25
Inverter Transformer	MV1-9 T	364555	4905646	2	0	0	56.1	56.1	1	3950.78	3.25	0	82.93	0	1.22	0	0	10.38	0	0	0	0	0	0	-38.48	-38.48
Inverter Transformer	MV1-11 T	364649	4905414	2	0	0	56.1	56.1	1	4028.3	3.25	0	83.1	0	1.26	0	0	10.5	0	0	0	0	0	0	-38.8	-38.8

	Line Reactor	NGR	369421	4908787.5	5	0	0	45.4	45.4	1	1898.26	5.25	0	76.57	0	3.39	1.28	0.11	0.78	0	0	0	0	0	0	-36.65	-36.65
Limit. Valu	0	0																									
Level D/N:	37.7232	37.7232																									

Receiver: Existing Noise Receptor
ID: S-R34
X: 368309
Y: 4908171
Z: 4.5
Ground: 0

ISO	Description	ID	X	Y	Z	Ground	ReflOrd	LxT	LxN	L/A	Dist.	hm	Freq	Adiv	K0b	Agr	Abar	z	Aatm	Afol	Ahous	Cmet	CmetN	Dc	RL	LtotT	LtotN
	Sol_Luce Substation	S_Substation	369426	4908792	3.5	0	0	112.1	112.1	1	1278.02	5.25	0	73.13	0	-0.09	4.34	0.29	3.07	0	0	0	0	0	0	31.63	31.63
	Inverter	MV3-6	368162	4907834	2	0	0	100.3	100.3	1	367.67	3.25	0	62.31	0	-0.64	0	0	7.27	0	0	0	0	0	0	31.37	31.37
	Inverter	MV3-3	367939	4907927	2	0	0	100.3	100.3	1	443.22	3.25	0	63.93	0	-0.59	0	0	8.05	0	0	0	0	0	0	28.93	28.93
	Inverter	MV3-9	368512	4907703	2	0	0	100.3	100.3	1	510.14	3.25	0	65.15	0	-0.54	0	0	8.6	0	0	0	0	0	0	27.1	27.1
	Inverter	MV3-11	368346	4907662	2	0	0	100.3	100.3	1	510.35	3.25	0	65.16	0	-0.54	0	0	8.6	0	0	0	0	0	0	27.09	27.09
	Inverter	MV3-10	368167	4907669	2	0	0	100.3	100.3	1	521.7	3.25	0	65.35	0	-0.53	0	0	8.69	0	0	0	0	0	0	26.81	26.81
	Inverter	MV3-7	367945	4907754	2	0	0	100.3	100.3	1	553.53	3.25	0	65.86	0	-0.51	0	0	8.91	0	0	0	0	0	0	26.05	26.05
	Inverter	MV3-8	368680	4907712	2	0	0	100.3	100.3	1	590.19	3.25	0	66.42	0	-0.49	0	0	9.14	0	0	0	0	0	0	25.23	25.23
	Inverter	MV3-13	367963	4907577	2	0	0	100.3	100.3	1	687.43	3.25	0	67.74	0	-0.42	0	0	9.68	0	0	0	0	0	0	23.31	23.31
	Inverter	MV3-15	368357	4907477	2	0	0	100.3	100.3	1	695.66	3.25	0	67.85	0	-0.41	0	0	9.72	0	0	0	0	0	0	23.16	23.16
	Inverter	MV3-17	368178	4907472	2	0	0	100.3	100.3	1	711.17	3.25	0	68.04	0	-0.4	0	0	9.79	0	0	0	0	0	0	22.89	22.89
	Inverter	MV3-16	368514	4907475	2	0	0	100.3	100.3	1	725.57	3.25	0	68.21	0	-0.4	0	0	9.86	0	0	0	0	0	0	22.64	22.64
	Inverter	MV3-14	368684	4907498	2	0	0	100.3	100.3	1	770.43	3.25	0	68.73	0	-0.37	0	0	10.06	0	0	0	0	0	0	21.89	21.89
	Inverter	MV3-19	368357	4907347	2	0	0	100.3	100.3	1	825.4	3.25	0	69.33	0	-0.34	0	0	10.28	0	0	0	0	0	0	21.03	21.03
	Inverter	MV3-12	367668	4907594	2	0	0	100.3	100.3	1	862.45	3.25	0	69.71	0	-0.32	0	0	10.43	0	0	0	0	0	0	20.49	20.49
	Inverter	MV3-1	368156	4907976	2	0	0	89.1	89.1	1	247.87	3.25	0	58.88	0	0.34	0	0	3.7	0	0	0	0	0	0	26.13	26.13
	Inverter	MV3-20	368689	4907317	2	0	0	100.3	100.3	1	934.73	3.25	0	70.41	0	-0.28	0	0	10.69	0	0	0	0	0	0	19.49	19.49
	Inverter	MV3-18	367752	4907412	2	0	0	100.3	100.3	1	941.45	3.25	0	70.48	0	-0.28	0	0	10.71	0	0	0	0	0	0	19.4	19.4
	Inverter	MV3-21	368478	4907206	2	0	0	100.3	100.3	1	979.69	3.25	0	70.82	0	-0.26	0	0	10.84	0	0	0	0	0	0	18.9	18.9
	Inverter	MV4-7	369035	4909001	2	0	0	100.3	100.3	1	1102.72	3.25	0	71.85	0	-0.2	0	0	11.24	0	0	0	0	0	0	17.42	17.42
	Inverter	MV3-4	368502	4907925	2	0	0	89.1	89.1	1	312.68	3.25	0	60.9	0	0.38	0	0	4.22	0	0	0	0	0	0	23.55	23.55
	Inverter	MV4-11	369264	4908855	2	0	0	100.3	100.3	1	1174.69	3.25	0	72.4	0	-0.17	0	0	11.45	0	0	0	0	0	0	16.63	16.63
	Inverter	MV3-5	368340	4907843	2	0	0	89.1	89.1	1	329.47	3.25	0	61.36	0	0.39	0	0	4.33	0	0	0	0	0	0	22.97	22.97
	Inverter	MV4-10	369312	4908858	2	0	0	100.3	100.3	1	1215.72	3.25	0	72.7	0	-0.15	0	0	11.57	0	0	0	0	0	0	16.19	16.19
	Inverter	MV4-4	369027	4909199	2	0	0	100.3	100.3	1	1253.92	3.25	0	72.97	0	-0.13	0	0	11.68	0	0	0	0	0	0	15.8	15.8
	Inverter	MV4-8	369256	4909001	2	0	0	100.3	100.3	1	1259.25	3.25	0	73	0	-0.13	0	0	11.69	0	0	0	0	0	0	15.75	15.75
	Inverter	MV4-9	369289	4909001	2	0	0	100.3	100.3	1	1284.25	3.25	0	73.17	0	-0.12	0	0	11.76	0	0	0	0	0	0	15.5	15.5
	Inverter	MV4-6	369243	4909192	2	0	0	100.3	100.3	1	1383.76	3.25	0	73.82	0	-0.08	0	0	12.03	0	0	0	0	0	0	14.54	14.54
	Inverter	MV4-1	369011	4909397	2	0	0	100.3	100.3	1	1412.76	3.25	0	74	0	-0.07	0	0	12.1	0	0	0	0	0	0	14.27	14.27
	Inverter	MV4-5	369289	4909199	2	0	0	100.3	100.3	1	1420.28	3.25	0	74.05	0	-0.06	0	0	12.12	0	0	0	0	0	0	14.2	14.2
	Inverter	MV4-3	369229	4909397	2	0	0	100.3	100.3	1	1532.8	3.25	0	74.71	0	-0.02	0	0	12.41	0	0	0	0	0	0	13.22	13.22
	Inverter	MV4-2	369272	4909397	2	0	0	100.3	100.3	1	1558.99	3.25	0	74.86	0	-0.01	0	0	12.47	0	0	0	0	0	0	13	13
	Inverter	MV3-2	368671	4907928	2	0	0	89.1	89.1	1	436	3.25	0	63.79	0	0.48	0	0	4.9	0	0	0	0	0	0	19.89	19.89
	Inverter	MV5-5	370015	4908690	2	0	0	100.3	100.3	1	1783.2	3.25	0	76.02	0	0.06	0	0	12.99	0	0	0	0	0	0	11.23	11.23
	Inverter	MV5-2	370006	4908853	2	0	0	100.3	100.3	1	1828.92	3.25	0	76.24	0	0.08	0	0	13.09	0	0	0	0	0	0	10.9	10.9
	DSTATCOM - 10 MVAR #2	DSAT2	369403	4908757	2.5	0	0	96.6	96.6	1	1241.06	3.5	0	72.88	0	3.04	0	0	1.24	0	0	0	0	0	0	19.48	19.48
	DSTATCOM - 10 MVAR #1	DSAT1	369437	4908757	2.5	0	0	96.6	96.6	1	1271.13	3.5	0	73.08	0	3.05	0	0	1.26	0	0	0	0	0	0	19.24	19.24
	Inverter	MV6-2	370085	4907339	2	0	0	100.3	100.3	1	1961.23	3.25	0	76.85	0	0.12	0	0	13.38	0	0	0	0	0	0	9.96	9.96
	Inverter	MV5-1	370020	4909142	2	0	0	100.3	100.3	1	1967.33	4.81	0	76.88	0	0.8	3.47	0.01	13.39	0	0	0	0	0	0	5.78	5.78
	Inverter	MV5-3	370231	4908851	2	0	0	100.3	100.3	1	2038.75	3.25	0	77.19	0	0.14	0	0	13.54	0	0	0	0	0	0	9.44	9.44
	Inverter	MV5-4	370324	4908707	2	0	0	100.3	100.3	1	2085.07	3.25	0	77.38	0	0.15	0	0	13.64	0	0	0	0	0	0	9.14	9.14
	Inverter	MV6-3	370207	4907140	2	0	0	100.3	100.3	1	2159.95	3.25	0	77.69	0	0.17	0	0	13.79	0	0	0	0	0	0	8.66	8.66
	Inverter	MV2-3	365820	4906641	2	0	0	100.3	100.3	1	2921.65	3.25	0	80.31	0	0.35	0	0	15.23	0	0	0	0	0	0	4.42	4.42
	Inverter	MV6-1	370235	4907364	2	0	0	97.3	97.3	1	2088.24	3.25	0	77.4	0	0.15	0	0	13.65	0	0	0	0	0	0	6.12	6.12
	Inverter	MV2-4	365586	4906624	2	0	0	100.3	100.3	1	3131.76	3.25	0	80.92	0	0.39	0	0	15.6	0	0	0	0	0	0	3.41	3.41
	Inverter	MV4-13	369051	4908605	2	0	0	89.1	89.1	1	859.61	3.25	0	69.69	0	0.65	0	0	6.04	0	0	0	0	0	0	12.68	12.68
	Inverter	MV4-15	369176	4908481	2	0	0	89.1	89.1	1	920.76	3.25	0	70.28	0	0.67	0	0	6.16	0	0	0	0	0	0	11.94	11.94
	Inverter	MV4-14	369176	4908507	2	0	0	89.1	89.1	1	929.83	3.25	0	70.37	0	0.67	0	0	6.18	0	0	0	0	0	0	11.84	11.84
	Inverter	MV4-12	369043	4908803	2	0	0	89.1	89.1	1	968.6	3.25	0	70.72	0	0.68	0	0	6.26	0	0	0	0	0	0	11.4	11.4
	Inverter	MV3-22	368656	4907142	2	0	0	89.1	89.1	1	1085.94	3.25	0	71.72	0	0.7	0	0	6.48	0	0	0	0	0	0	10.16	10.16
	Inverter	MV2-1	365842	4906816	2	0	0	97.3	97.3	1	2814.63	3.25	0	79.99	0	0.33	0	0	15.04	0	0	0	0	0	0	1.96	1.96
	Fixed Reactor Bank 1	FRB1	369378	4908755	6	0	0	89.8	89.8	1	1218.12	5.25	0	72.71	0	-1.03	0	0	2.95	0	0	0	0	0	0	15.14	15.14
	Inverter	MV1-1	364715	4906166	2	0	0	100.3	100.3	1	4115.44	3.25	0	83.29	0	0.54	0	0	17.23	0	0	0	0	0	0	-0.75	-0.75
	Inverter	MV1-2	364753	4906063	2	0	0	100.3	100.3	1	4133.86	3.25	0	83.33	0	0.55	0	0	17.26	0	0	0	0	0	0	-0.82	-0.82
	Inverter	MV1-4	364815	4905918	2	0	0	100.3	100.3	1	4157.41	3.25	0	83.38	0	0.55	0	0	17.3	0	0	0	0	0	0	-0.91	-0.91
	Inverter	MV1-5	364671	4905892	2	0	0	100.3	100.3	1	4292.89	3.25	0	83.65	0	0.57	0	0	17.51	0	0	0	0	0	0	-1.42	-1.42
	Inverter	MV1-12	365038	4905386	2	0	0	100.3	100.3	1	4296.01	3.25	0	83.66	0	0.57	0	0	17.52	0	0	0	0	0	0	-1.43	-1.43
	Inverter	MV1-8	364788	4905647	2	0	0	100.3	100.3	1	4332.21	3.25	0	83.73	0	0.57	0	0	17.57	0	0	0	0	0	0	-1.56	-1.56
	Fixed Reactor Bank 2	FRB2	369464	4908755	6	0	0	89.8	89.8	1	1294.25	5.25	0	73.24	0	-1.03	0	0	3.1	0	0	0	0	0	0	14.47	14.47
	Inverter	MV1-15	365315	4904994	2	0	0	100.3	100.3	1	4365.47	3.25	0	83.8	0	0.57	0	0	17.62	0	0	0	0	0	0	-1.69	-1.69
	Inverter	MV1-6	364477	4905835	2	0	0	100.3	100.3	1	4487.89	3.25	0	84.04	0	0.59	0	0	17.81	0	0	0	0	0	0	-2.13	-2.13
	Inverter	MV1-9	364561	4905646	2	0	0	100.3	100.3	1	4519.2	3.25	0	84.1	0	0.59	0	0	17.86	0	0	0	0	0	0	-2.24	-2.24

Inverter	MV1-11	364655	4905414	2	0	0	100.3	100.3	1	4577.42	3.25	0	84.21	0	0.6	0	0	17.95	0	0	0	0	0	0	-2.45	-2.45
Inverter	MV1-7	364925	4905782	2	0	0	97.3	97.3	1	4142.32	3.25	0	83.34	0	0.55	0	0	17.27	0	0	0	0	0	0	-3.85	-3.85
Inverter	MV1-10	365004	4905564	2	0	0	97.3	97.3	1	4209.45	3.25	0	83.48	0	0.56	0	0	17.38	0	0	0	0	0	0	-4.11	-4.11
Inverter	MV5-6	369982	4908507	2	0	0	89.1	89.1	1	1706.41	3.25	0	75.64	0	0.84	0	0	7.56	0	0	0	0	0	0	5.02	5.02
Inverter	MV1-14	365163	4905049	2	0	0	97.3	97.3	1	4432.18	3.25	0	83.93	0	0.58	0	0	17.73	0	0	0	0	0	0	-4.93	-4.93
SubstationTransformer	W_ST	369711.17	4906112.3	2.5	0	0	92	92	1	2490.87	3.5	0	78.93	0	-0.05	0	0	5.17	0	0	0	0	0	0	7.92	7.92
Inverter	MV1-13	364731	4905241	2	0	0	97.3	97.3	1	4624.61	3.25	0	84.3	0	0.6	0	0	18.02	0	0	0	0	0	0	-5.61	-5.61
Westbrook Inverter Enclosur	W_INV2	369374	4906388	2	0	0	89.1	89.1	1	2076.85	3.25	0	77.35	0	0.93	0	0	8.17	0	0	0	0	0	0	2.61	2.61
Westbrook Inverter Enclosur	W_INV5	369719	4906574	2	0	0	89.1	89.1	1	2130.38	3.25	0	77.57	0	0.94	0	0	8.26	0	0	0	0	0	0	2.29	2.29
Westbrook Inverter Enclosur	W_INV6	369875	4906578	2	0	0	89.1	89.1	1	2233.83	3.25	0	77.98	0	0.96	0	0	8.42	0	0	0	0	0	0	1.69	1.69
Westbrook Inverter Enclosur	W_INV7	369780	4906417	2	0	0	89.1	89.1	1	2289.18	3.25	0	78.19	0	0.98	0	0	8.51	0	0	0	0	0	0	1.38	1.38
Westbrook Inverter Enclosur	W_INV3	369508	4906164	2	0	0	89.1	89.1	1	2337.87	3.25	0	78.38	0	0.99	0	0	8.59	0	0	0	0	0	0	1.1	1.1
Westbrook Inverter Enclosur	W_INV4	369673	4906164	2	0	0	89.1	89.1	1	2426.63	3.25	0	78.7	0	1.01	0	0	8.73	0	0	0	0	0	0	0.62	0.62
Westbrook Inverter Enclosur	W_INV1	369409	4906578	2	0	0	86.1	86.1	1	1935.89	3.25	0	76.74	0	0.89	0	0	7.94	0	0	0	0	0	0	0.49	0.49
Inverter	MV2-2	365977	4906654	2	0	0	89.1	89.1	1	2782	3.25	0	79.89	0	1.09	0	0	9.28	0	0	0	0	0	0	-1.21	-1.21
Inverter	MV6-4	370250	4906966	2	0	0	86.1	86.1	1	2284.63	3.25	0	78.18	0	0.97	0	0	8.5	0	0	0	0	0	0	-1.6	-1.6
Gardiner Substation	G_Sub	366586.3	4903349.9	2.5	0	0	90.8	90.8	1	5119.64	4.25	0	85.18	0	1.68	2.35	0.39	8.76	0	0	0	0	0	0	-7.2	-7.2
Inverter	MV1-3	364440	4906039	2	0	0	89.1	89.1	1	4417.53	3.25	0	83.9	0	1.5	0	0	11.67	0	0	0	0	0	0	-8.01	-8.01
Inverters	G_Inv2	366676.9	4903239.1	2	0	0	87.7	87.7	1	5194.94	3.25	0	85.31	0	2.88	0	0	6.14	0	0	0	0	0	0	-6.67	-6.67
Inverters	G_Inv1	366526.4	4903225.8	2	0	0	87.7	87.7	1	5256.68	3.25	0	85.41	0	2.88	0	0	6.21	0	0	0	0	0	0	-6.84	-6.84
Inverters	G_Inv4	366732.8	4903105	2	0	0	87.7	87.7	1	5305.54	3.25	0	85.49	0	2.88	0	0	6.26	0	0	0	0	0	0	-6.98	-6.98
Inverters	G_Inv3	366583.7	4903091.4	2	0	0	87.7	87.7	1	5364.61	3.25	0	85.59	0	2.89	0	0	6.32	0	0	0	0	0	0	-7.14	-7.14
Inverters	G_Inv6	366788.5	4902972	2	0	0	87.7	87.7	1	5416.78	3.25	0	85.67	0	2.89	0	0	6.38	0	0	0	0	0	0	-7.28	-7.28
Inverters	G_Inv5	366638.5	4902958.1	2	0	0	87.7	87.7	1	5474.02	3.25	0	85.77	0	2.89	0	0	6.44	0	0	0	0	0	0	-7.43	-7.43
Inverters	G_Inv8	366844.5	4902838.5	2	0	0	87.7	87.7	1	5529.95	3.25	0	85.85	0	2.9	0	0	6.49	0	0	0	0	0	0	-7.58	-7.58
Inverters	G_Inv7	366694.6	4902824.7	2	0	0	87.7	87.7	1	5584.73	3.25	0	85.94	0	2.9	0	0	6.55	0	0	0	0	0	0	-7.73	-7.73
Inverters	G_Inv10	366900.7	4902704.8	2	0	0	87.7	87.7	1	5644.7	3.25	0	86.03	0	2.9	0	0	6.61	0	0	0	0	0	0	-7.89	-7.89
Inverters	G_Inv9	366750.9	4902691.8	2	0	0	87.7	87.7	1	5696.43	3.25	0	86.11	0	2.9	0	0	6.67	0	0	0	0	0	0	-8.02	-8.02
Westbrook Inverter Transfor	W_INVTR1	369403	4906578	2	0	0	78.2	78.2	1	1932.48	3.25	0	76.72	0	-2.38	0	0	1.17	0	0	0	0	0	0	2.73	2.73
Westbrook Inverter Transfor	W_INVTR2	369368	4906388	2	0	0	77.3	77.3	1	2073.78	3.25	0	77.34	0	-2.43	0	0	1.24	0	0	0	0	0	0	1.2	1.2
Westbrook Inverter Transfor	W_INVTR5	369725	4906574	2	0	0	77.3	77.3	1	2134.35	3.25	0	77.59	0	-2.45	0	0	1.27	0	0	0	0	0	0	0.94	0.94
Westbrook Inverter Transfor	W_INVTR6	369881	4906578	2	0	0	77.3	77.3	1	2238.04	3.25	0	78	0	-2.49	0	0	1.32	0	0	0	0	0	0	0.51	0.51
Westbrook Inverter Transfor	W_INVTR7	369786	4906417	2	0	0	77.3	77.3	1	2293.04	3.25	0	78.21	0	-2.51	0	0	1.34	0	0	0	0	0	0	0.29	0.29
Westbrook Inverter Transfor	W_INVTR3	369514	4906164	2	0	0	77.3	77.3	1	2340.96	3.25	0	78.39	0	-2.52	0	0	1.37	0	0	0	0	0	0	0.11	0.11
Westbrook Inverter Transfor	W_INVTR4	369679	4906164	2	0	0	77.3	77.3	1	2430.01	3.25	0	78.71	0	-2.55	0	0	1.41	0	0	0	0	0	0	-0.23	-0.23
Inverter Transformer	MV3-1 T	368150	4907976	2	0	0	56.1	56.1	1	251.62	3.25	0	59.01	0	-0.02	0	0	2.54	0	0	0	0	0	0	-5.48	-5.48
Inverter Transformer	MV3-4 T	368507	4907925	2	0	0	56.1	56.1	1	315.79	3.25	0	60.99	0	-0.08	0	0	2.86	0	0	0	0	0	0	-7.71	-7.71
Inverter Transformer	MV3-5 T	368335	4907843	2	0	0	56.1	56.1	1	329.04	3.25	0	61.34	0	-0.09	0	0	2.92	0	0	0	0	0	0	-8.11	-8.11
Inverter Transformer	MV3-6 T	368156	4907834	2	0	0	56.1	56.1	1	370.11	3.25	0	62.37	0	-0.11	0	0	3.09	0	0	0	0	0	0	-9.29	-9.29
Inverter Transformer	MV3-3 T	367944	4907927	2	0	0	56.1	56.1	1	439.05	3.25	0	63.85	0	-0.12	0	0	3.35	0	0	0	0	0	0	-11.02	-11.02
Inverter Transformer	MV3-2 T	368677	4907928	2	0	0	56.1	56.1	1	441	3.25	0	63.89	0	-0.12	0	0	3.35	0	0	0	0	0	0	-11.07	-11.07
Inverter Transformer	MV6-1 T	370230	4907364	2	0	0	69.4	69.4	1	2083.63	3.25	0	77.38	0	2.2	0	0	5.05	0	0	0	0	0	0	-15.28	-15.28
Inverter Transformer	MV6-4 T	370244	4906966	2	0	0	69.4	69.4	1	2279.53	3.25	0	78.16	0	2.27	0	0	5.24	0	0	0	0	0	0	-16.32	-16.32
Inverter Transformer	MV3-11 T	368340	4907662	2	0	0	56.1	56.1	1	509.95	3.25	0	65.15	0	-0.12	0	0	3.58	0	0	0	0	0	0	-12.56	-12.56
Inverter Transformer	MV3-9 T	368517	4907703	2	0	0	56.1	56.1	1	512.15	3.25	0	65.19	0	-0.12	0	0	3.59	0	0	0	0	0	0	-12.6	-12.6
Inverter Transformer	MV3-10 T	368162	4907669	2	0	0	56.1	56.1	1	523.09	3.25	0	65.37	0	-0.12	0	0	3.62	0	0	0	0	0	0	-12.82	-12.82
Inverter Transformer	MV3-7 T	367951	4907754	2	0	0	56.1	56.1	1	549.6	3.25	0	65.8	0	-0.11	0	0	3.71	0	0	0	0	0	0	-13.34	-13.34
Inverter Transformer	MV3-8 T	368685	4907712	2	0	0	56.1	56.1	1	593.35	3.25	0	66.47	0	-0.1	0	0	3.84	0	0	0	0	0	0	-14.14	-14.14
Inverter Transformer	MV2-1 T	365836	4906816	2	0	0	69.4	69.4	1	2819.89	3.25	0	80	0	2.45	0	0	5.73	0	0	0	0	0	0	-18.83	-18.83
Inverter Transformer	MV3-13 T	367958	4907577	2	0	0	56.1	56.1	1	689.96	3.25	0	67.78	0	-0.08	0	0	4.11	0	0	0	0	0	0	-15.74	-15.74
Inverter Transformer	MV3-15 T	368351	4907477	2	0	0	56.1	56.1	1	695.27	3.25	0	67.84	0	-0.08	0	0	4.12	0	0	0	0	0	0	-15.82	-15.82
Inverter Transformer	MV3-17 T	368183	4907472	2	0	0	56.1	56.1	1	710.27	3.25	0	68.03	0	-0.08	0	0	4.16	0	0	0	0	0	0	-16.05	-16.05
Inverter Transformer	MV3-16 T	368509	4907475	2	0	0	56.1	56.1	1	724.17	3.25	0	68.2	0	-0.07	0	0	4.2	0	0	0	0	0	0	-16.26	-16.26
Inverter Transformer	MV3-14 T	368678	4907498	2	0	0	56.1	56.1	1	767.53	3.25	0	68.7	0	-0.06	0	0	4.31	0	0	0	0	0	0	-16.89	-16.89
Inverter Transformer	MV3-19 T	368352	4907347	2	0	0	56.1	56.1	1	825.12	3.25	0	69.33	0	-0.05	0	0	4.46	0	0	0	0	0	0	-17.69	-17.69
Inverter Transformer	MV3-12 T	367674	4907594	2	0	0	56.1	56.1	1	858	3.25	0	69.67	0	-0.03	0	0	4.54	0	0	0	0	0	0	-18.12	-18.12
Inverter Transformer	MV4-13 T	369057	4908605	2	0	0	56.1	56.1	1	864.79	3.25	0	69.74	0	-0.03	0	0	4.56	0	0	0	0	0	0	-18.21	-18.21
Inverter Transformer	MV1-7 T	364919	4905782	2	0	0	69.4	69.4	1	4147.22	3.25	0	83.36	0	2.82	0	0	6.79	0	0	0	0	0	0	-23.61	-23.61
Inverter Transformer	MV1-10 T	365010	4905564	2	0	0	69.4	69.4	1	4204.74	3.25	0	83.47	0	2.84	0	0	6.83	0	0	0	0	0	0	-23.79	-23.79
Inverter Transformer	MV4-15 T	369170	4908481	2	0	0	56.1	56.1	1	915.11	3.25	0	70.23	0	-0.02	0	0	4.68	0	0	0	0	0	0	-18.84	-18.84
Inverter Transformer	MV3-20 T	368683	4907317	2	0	0	56.1	56.1	1	932.31	3.25	0	70.39	0	-0.01	0	0	4.73	0	0	0	0	0	0	-19.05	-19.05
Inverter Transformer	MV4-14 T	369182	4908507	2	0	0	56.1	56.1	1	935.43	3.25	0	70.42	0	-0.01	0	0	4.73	0	0	0	0	0	0	-19.09	-19.09
Inverter Transformer	MV3-18 T	367757	4907412	2	0	0	56.1	56.1	1	938.5	3.25	0	70.45	0	-0.01	0	0	4.74	0	0	0	0	0	0	-19.12	-19.12
Inverter Transformer	MV1-14 T	365157	4905049	2	0	0	69.4	69.4	1	4436.44	3.25	0	83.94	0	2.89	0	0	6.99	0	0	0	0	0	0	-24.48	-24.48
Inverter Transformer	MV4-12 T	369049	4908803	2	0	0	56.1	56.1	1	973.15	3.25	0	70.76	0	0	0	0	4.82	0	0	0	0	0	0	-19.53	-19.53
Inverter Transformer	MV3-21 T	368484	4907206	2	0	0	56.1	56.1	1	980.74	3.25	0	70.83	0	0.01	0	0	4.84	0	0	0	0	0	0	-19.62	-19.62
Inverter Transformer	MV1-13 T	364725	4905241	2	0	0	69.4	69.4	1	4629.25	3.25	0	84.31	0	2.93	0	0	7.13	0	0	0	0	0	0	-25.02	-25.02
Inverter Transformer	MV3-22 T	368661	4907142	2	0	0	56.1	56.1	1	1087.54	3.25	0	71.73	0	0.04	0	0	5.1	0	0	0	0	0	0	-20.81	-20.81
Inverter Transformer	MV4-7 T	369040	4909001	2	0	0	56.1	56.1	1	1106.01	3.25	0	71.88	0	0.05	0	0	5.14	0	0	0	0	0	0	-21.01	-21.01
Inverter Transformer	MV4-11 T	369269	4908855	2	0	0	56.1	56.1	1	1178.75	3.25	0	72.43	0	0.08	0	0	5.31	0	0	0	0	0	0	-21.75	-21.75
Inverter Transformer	MV4-10 T	369307	4908858	2	0	0	56.1	56.1	1	1211.6	3.25	0	72.67	0	0.09	0	0	5.38	0	0	0	0	0	0	-22.08	-22.08
Inverter Transformer	MV4-4 T	369033	4909199	2	0	0	56.1	56.1	1	1257.36	3.25	0	72.99	0	0.1	0	0	5.49	0	0	0	0	0	0	-22.52	-22.52
Inverter Transformer	MV4-8 T	369262	4909001	2	0	0	56.1	56.1	1	1263.77	3.25	0	73.03	0	0.11	0	0	5.5	0	0	0	0	0	0	-22.58	-22.58
Inverter Transformer	MV4-9 T	369284	4909001	2	0	0	56.1	56.1	1	1280.44	3.25	0	73.15	0	0.11	0	0	5.54	0	0	0	0	0	0	-22.74	-22.74

	Inverter Transformer	MV4-6 T	369249	4909192	2	0	0	56.1	56.1	1	1387.82	3.25	0	73.85	0	0.15	0	0	5.77	0	0	0	0	0	0	-23.72	-23.72
	Inverter Transformer	MV4-1 T	369017	4909397	2	0	0	56.1	56.1	1	1415.75	3.25	0	74.02	0	0.17	0	0	5.84	0	0	0	0	0	0	-23.96	-23.96
	Inverter Transformer	MV4-5 T	369283	4909199	2	0	0	56.1	56.1	1	1416.14	3.25	0	74.02	0	0.17	0	0	5.84	0	0	0	0	0	0	-23.97	-23.97
	Inverter Transformer	MV4-3 T	369234	4909397	2	0	0	56.1	56.1	1	1535.81	3.25	0	74.73	0	0.21	0	0	6.09	0	0	0	0	0	0	-24.98	-24.98
	Inverter Transformer	MV4-2 T	369267	4909397	2	0	0	56.1	56.1	1	1555.91	3.25	0	74.84	0	0.22	0	0	6.14	0	0	0	0	0	0	-25.14	-25.14
	Inverter Transformer	MV5-6 T	369987	4908507	2	0	0	56.1	56.1	1	1711.31	3.25	0	75.67	0	0.28	0	0	6.46	0	0	0	0	0	0	-26.35	-26.35
	Inverter Transformer	MV5-5 T	370021	4908690	2	0	0	56.1	56.1	1	1788.94	3.25	0	76.05	0	0.32	0	0	6.62	0	0	0	0	0	0	-26.93	-26.93
	Inverter Transformer	MV5-2 T	370011	4908853	2	0	0	56.1	56.1	1	1833.56	3.25	0	76.27	0	0.33	0	0	6.71	0	0	0	0	0	0	-27.25	-27.25
	Inverter Transformer	MV5-1 T	370015	4909142	2	0	0	56.1	56.1	1	1962.98	4.81	0	76.86	0	1.26	2.99	0.01	6.97	0	0	0	0	0	0	-32.03	-32.03
	Inverter Transformer	MV6-2 T	370091	4907339	2	0	0	56.1	56.1	1	1966.66	3.25	0	76.87	0	0.39	0	0	6.98	0	0	0	0	0	0	-28.18	-28.18
	Inverter Transformer	MV5-3 T	370237	4908851	2	0	0	56.1	56.1	1	2044.4	3.25	0	77.21	0	0.42	0	0	7.13	0	0	0	0	0	0	-28.71	-28.71
	Inverter Transformer	MV5-4 T	370330	4908707	2	0	0	56.1	56.1	1	2090.87	3.25	0	77.41	0	0.44	0	0	7.22	0	0	0	0	0	0	-29.01	-29.01
	Inverter Transformer	MV6-3 T	370202	4907140	2	0	0	56.1	56.1	1	2155.55	3.25	0	77.67	0	0.47	0	0	7.35	0	0	0	0	0	0	-29.43	-29.43
	Inverter Transformer	MV2-2 T	365982	4906654	2	0	0	56.1	56.1	1	2777.81	3.25	0	79.87	0	0.74	0	0	8.49	0	0	0	0	0	0	-33.04	-33.04
	Inverter Transformer	MV2-3 T	365814	4906641	2	0	0	56.1	56.1	1	2926.76	3.25	0	80.33	0	0.8	0	0	8.74	0	0	0	0	0	0	-33.81	-33.81
	Inverter Transformer	MV2-4 T	365590	4906628	2	0	0	56.1	56.1	1	3126.31	3.25	0	80.9	0	0.88	0	0	9.08	0	0	0	0	0	0	-34.81	-34.81
	Inverter Transformer	MV1-1 T	364721	4906166	2	0	0	56.1	56.1	1	4110.2	3.25	0	83.28	0	1.29	0	0	10.62	0	0	0	0	0	0	-39.12	-39.12
	Inverter Transformer	MV1-2 T	364759	4906063	2	0	0	56.1	56.1	1	4128.7	3.25	0	83.32	0	1.3	0	0	10.64	0	0	0	0	0	0	-39.2	-39.2
	Inverter Transformer	MV1-4 T	364821	4905918	2	0	0	56.1	56.1	1	4152.37	3.25	0	83.37	0	1.3	0	0	10.68	0	0	0	0	0	0	-39.29	-39.29
	Inverter Transformer	MV1-5 T	364676	4905892	2	0	0	56.1	56.1	1	4288.65	3.25	0	83.65	0	1.36	0	0	10.88	0	0	0	0	0	0	-39.82	-39.82
	Inverter Transformer	MV1-12 T	365044	4905386	2	0	0	56.1	56.1	1	4291.44	3.25	0	83.65	0	1.36	0	0	10.88	0	0	0	0	0	0	-39.83	-39.83
	Inverter Transformer	MV1-8 T	364782	4905647	2	0	0	56.1	56.1	1	4337.09	3.25	0	83.74	0	1.38	0	0	10.95	0	0	0	0	0	0	-40.01	-40.01
	Line Reactor	NGR	369421	4908787.5	5	0	0	45.4	45.4	1	1271.46	5.25	0	73.09	0	3.46	1.25	0.1	0.52	0	0	0	0	0	0	-32.96	-32.96
	Inverter Transformer	MV1-15 T	365309	4904994	2	0	0	56.1	56.1	1	4369.59	3.25	0	83.81	0	1.39	0	0	10.99	0	0	0	0	0	0	-40.13	-40.13
	Inverter Transformer	MV1-3 T	364435	4906039	2	0	0	56.1	56.1	1	4421.91	3.25	0	83.91	0	1.41	0	0	11.07	0	0	0	0	0	0	-40.33	-40.33
	Inverter Transformer	MV1-6 T	364482	4905835	2	0	0	56.1	56.1	1	4483.62	3.25	0	84.03	0	1.43	0	0	11.15	0	0	0	0	0	0	-40.56	-40.56
	Inverter Transformer	MV1-9 T	364555	4905646	2	0	0	56.1	56.1	1	4524.17	3.25	0	84.11	0	1.45	0	0	11.21	0	0	0	0	0	0	-40.71	-40.71
	Inverter Transformer	MV1-11 T	364649	4905414	2	0	0	56.1	56.1	1	4582.21	3.25	0	84.22	0	1.47	0	0	11.29	0	0	0	0	0	0	-40.92	-40.92
Limit. Valu	0	0																								
Level D/N:	39.5559	39.5559																								

Receiver: Existing Noise Receptor
ID: S-R35
X: 368489
Y: 4908295
Z: 4.5
Ground: 0

ISO	Description	ID	X	Y	Z	Ground	ReflOrd	LxT	LxN	L/A	Dist.	hm	Freq	Adiv	K0b	Agr	Abar	z	Aatm	Afol	Ahous	Cmet	CmetN	Dc	RL	LtotT	LtotN
	Sol_Luce Substation	S_Substation	369426	4908792	3.5	0	0	112.1	112.1	1	1060.65	5.24	0	71.51	0	-0.08	4.75	0.29	2.64	0	0	0	0	0	0	33.25	33.25
	Inverter	MV3-6	368162	4907834	2	0	0	100.3	100.3	1	565.2	3.25	0	66.04	0	-0.5	0	0	8.99	0	0	0	0	0	0	25.78	25.78
	Inverter	MV3-9	368512	4907703	2	0	0	100.3	100.3	1	592.45	3.25	0	66.45	0	-0.48	0	0	9.16	0	0	0	0	0	0	25.18	25.18
	Inverter	MV3-8	368680	4907712	2	0	0	100.3	100.3	1	613.5	3.25	0	66.76	0	-0.47	0	0	9.28	0	0	0	0	0	0	24.74	24.74
	Inverter	MV3-11	368346	4907662	2	0	0	100.3	100.3	1	648.96	3.25	0	67.24	0	-0.44	0	0	9.48	0	0	0	0	0	0	24.03	24.03
	Inverter	MV3-3	367939	4907927	2	0	0	100.3	100.3	1	661.76	3.25	0	67.41	0	-0.44	0	0	9.55	0	0	0	0	0	0	23.79	23.79
	Inverter	MV3-10	368167	4907669	2	0	0	100.3	100.3	1	703.96	3.25	0	67.95	0	-0.41	0	0	9.76	0	0	0	0	0	0	23.01	23.01
	Inverter	MV3-7	367945	4907754	2	0	0	100.3	100.3	1	767.22	3.25	0	68.7	0	-0.37	0	0	10.04	0	0	0	0	0	0	21.94	21.94
	Inverter	MV3-16	368514	4907475	2	0	0	100.3	100.3	1	820.38	3.25	0	69.28	0	-0.34	0	0	10.26	0	0	0	0	0	0	21.11	21.11
	Inverter	MV3-14	368684	4907498	2	0	0	100.3	100.3	1	820.51	3.25	0	69.28	0	-0.34	0	0	10.26	0	0	0	0	0	0	21.11	21.11
	Inverter	MV3-15	368357	4907477	2	0	0	100.3	100.3	1	828.59	3.25	0	69.37	0	-0.34	0	0	10.3	0	0	0	0	0	0	20.99	20.99
	Inverter	MV3-17	368178	4907472	2	0	0	100.3	100.3	1	879.8	3.25	0	69.89	0	-0.31	0	0	10.49	0	0	0	0	0	0	20.24	20.24
	Inverter	MV3-13	367963	4907577	2	0	0	100.3	100.3	1	890.06	3.25	0	69.99	0	-0.3	0	0	10.53	0	0	0	0	0	0	20.1	20.1
	Inverter	MV4-7	369035	4909001	2	0	0	100.3	100.3	1	892.5	3.25	0	70.01	0	-0.3	0	0	10.54	0	0	0	0	0	0	20.06	20.06
	Inverter	MV4-11	369264	4908855	2	0	0	100.3	100.3	1	956.15	3.25	0	70.61	0	-0.27	0	0	10.76	0	0	0	0	0	0	19.21	19.21
	Inverter	MV3-19	368357	4907347	2	0	0	100.3	100.3	1	957.15	3.25	0	70.62	0	-0.27	0	0	10.77	0	0	0	0	0	0	19.19	19.19
	Inverter	MV4-10	369312	4908858	2	0	0	100.3	100.3	1	997.15	3.25	0	70.98	0	-0.25	0	0	10.9	0	0	0	0	0	0	18.68	18.68
	Inverter	MV3-20	368689	4907317	2	0	0	100.3	100.3	1	998.24	3.25	0	70.98	0	-0.25	0	0	10.91	0	0	0	0	0	0	18.67	18.67
	Inverter	MV4-8	369256	4909001	2	0	0	100.3	100.3	1	1042.46	3.25	0	71.36	0	-0.23	0	0	11.05	0	0	0	0	0	0	18.13	18.13
	Inverter	MV4-4	369027	4909199	2	0	0	100.3	100.3	1	1051.98	3.25	0	71.44	0	-0.22	0	0	11.08	0	0	0	0	0	0	18.01	18.01
	Inverter	MV4-9	369289	4909001	2	0	0	100.3	100.3	1	1066.98	3.25	0	71.56	0	-0.21	0	0	11.13	0	0	0	0	0	0	17.84	17.84
	Inverter	MV3-12	367668	4907594	2	0	0	100.3	100.3	1	1079.56	3.25	0	71.66	0	-0.21	0	0	11.17	0	0	0	0	0	0	17.69	17.69
	Inverter	MV3-21	368478	4907206	2	0	0	100.3	100.3	1	1089.06	3.25	0	71.74	0	-0.2	0	0	11.2	0	0	0	0	0	0	17.58	17.58
	Inverter	MV3-18	367752	4907412	2	0	0	100.3	100.3	1	1150.16	3.25	0	72.22	0	-0.18	0	0	11.38	0	0	0	0	0	0	16.89	16.89
	Inverter	MV4-6	369243	4909192	2	0	0	100.3	100.3	1	1171.81	3.25	0	72.38	0	-0.17	0	0	11.44	0	0	0	0	0	0	16.66	16.66
	Inverter	MV4-5	369289	4909199	2	0	0	100.3	100.3	1	1207.15	3.25	0	72.64	0	-0.15	0	0	11.55	0	0	0	0	0	0	16.28	16.28
	Inverter	MV4-1	369011	4909397	2	0	0	100.3	100.3	1	1219.38	3.25	0	72.72	0	-0.15	0	0	11.58	0	0	0	0	0	0	16.15	16.15
	Inverter	MV4-3	369229	4909397	2	0	0	100.3	100.3	1	1327.41	3.25	0	73.46	0	-0.1	0	0	11.88	0	0	0	0	0	0	15.07	15.07
	Inverter	MV4-2	369272	4909397	2	0	0	100.3	100.3	1	1351.85	3.25	0	73.62	0	-0.09	0	0	11.94	0	0	0	0	0	0	14.84	14.84
	Inverter	MV3-4	368502	4907925	2	0	0	89.1	89.1	1	370.24	3.25	0	62.37	0	0.43	0	0	4.58	0	0	0	0	0	0	21.68	21.68
	Inverter	MV3-2	368671	4907928	2	0	0	89.1	89.1	1	409.66	3.25	0	63.25	0	0.46	0	0	4.78	0	0	0	0	0	0	20.57	20.57
	DSTATCOM - 10 MVAR #2	DSAT2	369403	4908757	2.5	0	0	96.6	96.6	1	1024.13	3.5	0	71.21	0	2.93	0	0	1.09	0	0	0	0	0	0	21.4	21.4
	Inverter	MV5-5	370015	4908690	2	0	0	100.3	100.3	1	1576.3	3.25	0	74.95	0	-0.01	0	0	12.51	0	0	0	0	0	0	12.85	12.85
	DSTATCOM - 10 MVAR #1	DSAT1	369437	4908757	2.5	0	0	96.6	96.6	1	1054.59	3.5	0	71.46	0	2.95	0	0	1.11	0	0	0	0	0	0	21.1	21.1
	Inverter	MV5-2	370006	4908853	2	0	0	100.3	100.3	1	1616.37	3.25	0	75.17	0	0.01	0	0	12.61	0	0	0	0	0	0	12.53	12.53

Inverter	MV3-1	368156	4907976	2	0	0	89.1	89.1	1	461.15	3.25	0	64.28	0	0.5	0	0	5	0	0	0	0	0	0	19.28	19.28
Inverter	MV3-5	368340	4907843	2	0	0	89.1	89.1	1	475.93	3.25	0	64.55	0	0.51	0	0	5.06	0	0	0	0	0	0	18.94	18.94
Inverter	MV5-1	370020	4909142	2	0	0	100.3	100.3	1	1749.68	3.25	0	75.86	0	0.05	0	0	12.92	0	0	0	0	0	0	11.48	11.48
Inverter	MV5-3	370231	4908851	2	0	0	100.3	100.3	1	1828.58	3.25	0	76.24	0	0.08	0	0	13.09	0	0	0	0	0	0	10.9	10.9
Inverter	MV6-2	370085	4907339	2	0	0	100.3	100.3	1	1860.42	3.25	0	76.39	0	0.09	0	0	13.16	0	0	0	0	0	0	10.67	10.67
Inverter	MV5-4	370324	4908707	2	0	0	100.3	100.3	1	1880.68	3.25	0	76.49	0	0.09	0	0	13.21	0	0	0	0	0	0	10.52	10.52
Inverter	MV6-3	370207	4907140	2	0	0	100.3	100.3	1	2070.16	3.25	0	77.32	0	0.15	0	0	13.61	0	0	0	0	0	0	9.23	9.23
Inverter	MV4-13	369051	4908605	2	0	0	89.1	89.1	1	641.83	3.25	0	67.15	0	0.59	0	0	5.56	0	0	0	0	0	0	15.76	15.76
Inverter	MV4-15	369176	4908481	2	0	0	89.1	89.1	1	711.74	3.25	0	68.05	0	0.62	0	0	5.73	0	0	0	0	0	0	14.67	14.67
Inverter	MV4-14	369176	4908507	2	0	0	89.1	89.1	1	718.97	3.25	0	68.13	0	0.62	0	0	5.74	0	0	0	0	0	0	14.56	14.56
Inverter	MV4-12	369043	4908803	2	0	0	89.1	89.1	1	751.66	3.25	0	68.52	0	0.63	0	0	5.82	0	0	0	0	0	0	14.09	14.09
Inverter	MV6-1	370235	4907364	2	0	0	97.3	97.3	1	1978.71	3.25	0	76.93	0	0.12	0	0	13.42	0	0	0	0	0	0	6.84	6.84
Inverter	MV2-3	365820	4906641	2	0	0	100.3	100.3	1	3139.95	3.25	0	80.94	0	0.39	0	0	15.62	0	0	0	0	0	0	3.37	3.37
Inverter	MV2-4	365586	4906624	2	0	0	100.3	100.3	1	3349.58	3.25	0	81.5	0	0.43	0	0	15.98	0	0	0	0	0	0	2.41	2.41
Fixed Reactor Bank 1	FRB1	369378	4908755	6	0	0	89.8	89.8	1	1000.96	5.25	0	71.01	0	-1.01	0	0	2.52	0	0	0	0	0	0	17.26	17.26
Fixed Reactor Bank 2	FRB2	369464	4908755	6	0	0	89.8	89.8	1	1078.07	5.25	0	71.65	0	-1.02	0	0	2.68	0	0	0	0	0	0	16.47	16.47
Inverter	MV3-22	368656	4907142	2	0	0	89.1	89.1	1	1165.03	3.25	0	72.33	0	0.72	0	0	6.62	0	0	0	0	0	0	9.39	9.39
Inverter	MV2-1	365842	4906816	2	0	0	97.3	97.3	1	3032.17	3.25	0	80.64	0	0.37	0	0	15.43	0	0	0	0	0	0	0.88	0.88
Inverter	MV1-1	364715	4906166	2	0	0	100.3	100.3	1	4333.1	3.25	0	83.74	0	0.57	0	0	17.57	0	0	0	0	0	0	-1.57	-1.57
Inverter	MV1-2	364753	4906063	2	0	0	100.3	100.3	1	4351.96	3.25	0	83.77	0	0.57	0	0	17.6	0	0	0	0	0	0	-1.64	-1.64
Inverter	MV1-4	364815	4905918	2	0	0	100.3	100.3	1	4375.89	3.25	0	83.82	0	0.58	0	0	17.64	0	0	0	0	0	0	-1.72	-1.72
Inverter	MV1-5	364671	4905892	2	0	0	100.3	100.3	1	4511.27	3.25	0	84.09	0	0.59	0	0	17.85	0	0	0	0	0	0	-2.21	-2.21
Inverter	MV1-12	365038	4905386	2	0	0	100.3	100.3	1	4513.5	3.25	0	84.09	0	0.59	0	0	17.85	0	0	0	0	0	0	-2.22	-2.22
Inverter	MV1-8	364788	4905647	2	0	0	100.3	100.3	1	4550.75	3.25	0	84.16	0	0.6	0	0	17.91	0	0	0	0	0	0	-2.35	-2.35
Inverter	MV1-15	365315	4904994	2	0	0	100.3	100.3	1	4579.4	3.25	0	84.22	0	0.6	0	0	17.95	0	0	0	0	0	0	-2.46	-2.46
Inverter	MV1-6	364477	4905835	2	0	0	100.3	100.3	1	4706.14	3.25	0	84.45	0	0.61	0	0	18.14	0	0	0	0	0	0	-2.9	-2.9
Inverter	MV1-9	364561	4905646	2	0	0	100.3	100.3	1	4737.76	3.25	0	84.51	0	0.62	0	0	18.19	0	0	0	0	0	0	-3.01	-3.01
Inverter	MV1-11	364655	4905414	2	0	0	100.3	100.3	1	4795.8	3.25	0	84.62	0	0.62	0	0	18.28	0	0	0	0	0	0	-3.21	-3.21
Inverter	MV5-6	369982	4908507	2	0	0	89.1	89.1	1	1507.98	3.25	0	74.57	0	0.79	0	0	7.22	0	0	0	0	0	0	6.47	6.47
Inverter	MV1-7	364925	4905782	2	0	0	97.3	97.3	1	4360.88	3.25	0	83.79	0	0.57	0	0	17.62	0	0	0	0	0	0	-4.67	-4.67
Inverter	MV1-10	365004	4905564	2	0	0	97.3	97.3	1	4427.59	3.25	0	83.92	0	0.58	0	0	17.72	0	0	0	0	0	0	-4.91	-4.91
SubstationTransformer	W_ST	369711.17	4906112.3	2.5	0	0	92	92	1	2501.6	3.5	0	78.96	0	-0.04	0	0	5.19	0	0	0	0	0	0	7.86	7.86
Inverter	MV1-14	365163	4905049	2	0	0	97.3	97.3	1	4647.45	3.25	0	84.34	0	0.61	0	0	18.05	0	0	0	0	0	0	-5.69	-5.69
Inverter	MV1-13	364731	4905241	2	0	0	97.3	97.3	1	4842.47	3.25	0	84.7	0	0.63	0	0	18.35	0	0	0	0	0	0	-6.36	-6.36
Westbrook Inverter Enclosur	W_INV2	369374	4906388	2	0	0	89.1	89.1	1	2102.35	3.25	0	77.45	0	0.93	0	0	8.21	0	0	0	0	0	0	2.46	2.46
Westbrook Inverter Enclosur	W_INV5	369719	4906574	2	0	0	89.1	89.1	1	2115.36	3.25	0	77.51	0	0.93	0	0	8.23	0	0	0	0	0	0	2.38	2.38
Westbrook Inverter Enclosur	W_INV6	369875	4906578	2	0	0	89.1	89.1	1	2206.6	3.25	0	77.87	0	0.96	0	0	8.38	0	0	0	0	0	0	1.85	1.85
Westbrook Inverter Enclosur	W_INV7	369780	4906417	2	0	0	89.1	89.1	1	2278.94	3.25	0	78.15	0	0.97	0	0	8.5	0	0	0	0	0	0	1.43	1.43
Westbrook Inverter Enclosur	W_INV3	369508	4906164	2	0	0	89.1	89.1	1	2362.1	3.25	0	78.47	0	0.99	0	0	8.63	0	0	0	0	0	0	0.97	0.97
Westbrook Inverter Enclosur	W_INV4	369673	4906164	2	0	0	89.1	89.1	1	2437.83	3.25	0	78.74	0	1.01	0	0	8.75	0	0	0	0	0	0	0.56	0.56
Westbrook Inverter Enclosur	W_INV1	369409	4906578	2	0	0	86.1	86.1	1	1947.95	3.25	0	76.79	0	0.89	0	0	7.96	0	0	0	0	0	0	0.41	0.41
Inverter	MV2-2	365977	4906654	2	0	0	89.1	89.1	1	3000.51	3.25	0	80.54	0	1.15	0	0	9.62	0	0	0	0	0	0	-2.25	-2.25
Inverter	MV6-4	370250	4906966	2	0	0	86.1	86.1	1	2206.21	3.25	0	77.87	0	0.96	0	0	8.38	0	0	0	0	0	0	-1.15	-1.15
Gardiner Substation	G_Sub	366586.3	4903349.9	2.5	0	0	90.8	90.8	1	5298.52	4.25	0	85.48	0	1.72	2.3	0.39	8.97	0	0	0	0	0	0	-7.69	-7.69
Inverter	MV1-3	364440	4906039	2	0	0	89.1	89.1	1	4635.08	3.25	0	84.32	0	1.55	0	0	11.97	0	0	0	0	0	0	-8.78	-8.78
Inverters	G_Inv2	366676.9	4903239.1	2	0	0	87.7	87.7	1	5370.83	3.25	0	85.6	0	2.89	0	0	6.33	0	0	0	0	0	0	-7.16	-7.16
Inverters	G_Inv1	366526.4	4903225.8	2	0	0	87.7	87.7	1	5435.86	3.25	0	85.71	0	2.89	0	0	6.4	0	0	0	0	0	0	-7.33	-7.33
Inverters	G_Inv4	366732.8	4903105	2	0	0	87.7	87.7	1	5479.08	3.25	0	85.77	0	2.89	0	0	6.44	0	0	0	0	0	0	-7.45	-7.45
Inverters	G_Inv3	366583.7	4903091.4	2	0	0	87.7	87.7	1	5541.45	3.25	0	85.87	0	2.9	0	0	6.51	0	0	0	0	0	0	-7.61	-7.61
Inverters	G_Inv6	366788.5	4902972	2	0	0	87.7	87.7	1	5588.03	3.25	0	85.95	0	2.9	0	0	6.55	0	0	0	0	0	0	-7.74	-7.74
Inverters	G_Inv5	366638.5	4902958.1	2	0	0	87.7	87.7	1	5648.62	3.25	0	86.04	0	2.9	0	0	6.62	0	0	0	0	0	0	-7.9	-7.9
Inverters	G_Inv8	366844.5	4902838.5	2	0	0	87.7	87.7	1	5698.93	3.25	0	86.12	0	2.9	0	0	6.67	0	0	0	0	0	0	-8.03	-8.03
Westbrook Inverter Transfor	W_INVTR1	369403	4906578	2	0	0	78.2	78.2	1	1945.12	3.25	0	76.78	0	-2.38	0	0	1.18	0	0	0	0	0	0	2.67	2.67
Inverters	G_Inv7	366694.6	4902824.7	2	0	0	87.7	87.7	1	5757.09	3.25	0	86.2	0	2.91	0	0	6.73	0	0	0	0	0	0	-8.18	-8.18
Inverters	G_Inv10	366900.7	4902704.8	2	0	0	87.7	87.7	1	5811.46	3.25	0	86.29	0	2.91	0	0	6.78	0	0	0	0	0	0	-8.32	-8.32
Inverters	G_Inv9	366750.9	4902691.8	2	0	0	87.7	87.7	1	5866.59	3.25	0	86.37	0	2.91	0	0	6.84	0	0	0	0	0	0	-8.46	-8.46
Westbrook Inverter Transfor	W_INVTR2	369368	4906388	2	0	0	77.3	77.3	1	2099.83	3.25	0	77.44	0	-2.44	0	0	1.25	0	0	0	0	0	0	1.08	1.08
Westbrook Inverter Transfor	W_INVTR5	369725	4906574	2	0	0	77.3	77.3	1	2118.85	3.25	0	77.52	0	-2.45	0	0	1.26	0	0	0	0	0	0	1	1
Westbrook Inverter Transfor	W_INVTR6	369881	4906578	2	0	0	77.3	77.3	1	2210.38	3.25	0	77.89	0	-2.48	0	0	1.31	0	0	0	0	0	0	0.62	0.62
Westbrook Inverter Transfor	W_INVTR7	369786	4906417	2	0	0	77.3	77.3	1	2282.35	3.25	0	78.17	0	-2.5	0	0	1.34	0	0	0	0	0	0	0.34	0.34
Westbrook Inverter Transfor	W_INVTR3	369514	4906164	2	0	0	77.3	77.3	1	2364.7	3.25	0	78.48	0	-2.53	0	0	1.38	0	0	0	0	0	0	0.02	0.02
Westbrook Inverter Transfor	W_INVTR4	369679	4906164	2	0	0	77.3	77.3	1	2440.75	3.25	0	78.75	0	-2.55	0	0	1.41	0	0	0	0	0	0	-0.27	-0.27
Inverter Transformer	MV3-4 T	368507	4907925	2	0	0	56.1	56.1	1	370.45	3.25	0	62.37	0	-0.11	0	0	3.09	0	0	0	0	0	0	-9.3	-9.3
Inverter Transformer	MV3-2 T	368677	4907928	2	0	0	56.1	56.1	1	412.36	3.25	0	63.31	0	-0.12	0	0	3.25	0	0	0	0	0	0	-10.38	-10.38
Inverter Transformer	MV6-1 T	370230	4907364	2	0	0	69.4	69.4	1	1974.3	3.25	0	76.91	0	2.16	0	0	4.94	0	0	0	0	0	0	-14.66	-14.66
Inverter Transformer	MV3-1 T	368150	4907976	2	0	0	56.1	56.1	1	465.5	3.25	0	64.36	0	-0.12	0	0	3.44	0	0	0	0	0	0	-11.62	-11.62
Inverter Transformer	MV6-4 T	370244	4906966	2	0	0	69.4	69.4	1	2201.43	3.25	0	77.85	0	2.25	0	0	5.16	0	0	0	0	0	0	-15.91	-15.91
Inverter Transformer	MV3-5 T	368335	4907843	2	0	0	56.1	56.1	1	477.52	3.25	0	64.58	0	-0.12	0	0	3.48	0	0	0	0	0	0	-11.88	-11.88
Inverter Transformer	MV3-6 T	368156	4907834	2	0	0	56.1	56.1	1	568.7	3.25	0	66.1	0	-0.11	0	0	3.76	0	0	0	0	0	0	-13.69	-13.69
Inverter Transformer	MV3-9 T	368517	4907703	2	0	0	56.1	56.1	1	592.67	3.25	0	66.46	0	-0.11	0	0	3.83	0	0	0	0	0	0	-14.13	-14.13
Inverter Transformer	MV3-8 T	368685	4907712	2	0	0	56.1	56.1	1	615.07	3.25	0	66.78	0	-0.1	0	0	3.9	0	0	0	0	0	0	-14.52	-14.52
Inverter Transformer	MV4-13 T	369057	4908605	2	0	0	56.1	56.1	1	647.09	3.25	0	67.22	0	-0.09	0	0	3.99	0	0	0	0	0	0	-15.06	-15.06
Inverter Transformer	MV3-11 T	368340	4907662	2	0	0	56.1	56.1	1	650.3	3.25	0	67.26	0	-0.09	0	0	4	0	0	0	0	0	0	-15.11	-15.11
Inverter Transformer	MV2-1 T	365836	4906816	2	0	0	69.4	69.4	1	3037.41	3.25	0	80.65	0	2.52	0	0	5.91	0	0	0	0	0	0	-19.73	-19.73

	Inverter Transformer	MV3-3 T	367944	4907927	2	0	0	56.1	56.1	1	657.61	3.25	0	67.36	0	-0.09	0	0	4.02	0	0	0	0	0	0	-15.23	-15.23
	Inverter Transformer	MV4-15 T	369170	4908481	2	0	0	56.1	56.1	1	705.95	3.25	0	67.98	0	-0.08	0	0	4.15	0	0	0	0	0	0	-15.99	-15.99
	Inverter Transformer	MV3-10 T	368162	4907669	2	0	0	56.1	56.1	1	706.27	3.25	0	67.98	0	-0.08	0	0	4.15	0	0	0	0	0	0	-15.99	-15.99
	Inverter Transformer	MV4-14 T	369182	4908507	2	0	0	56.1	56.1	1	724.71	3.25	0	68.2	0	-0.07	0	0	4.2	0	0	0	0	0	0	-16.27	-16.27
	Inverter Transformer	MV4-12 T	369049	4908803	2	0	0	56.1	56.1	1	756.09	3.25	0	68.57	0	-0.07	0	0	4.28	0	0	0	0	0	0	-16.73	-16.73
	Inverter Transformer	MV3-7 T	367951	4907754	2	0	0	56.1	56.1	1	762.98	3.25	0	68.65	0	-0.06	0	0	4.3	0	0	0	0	0	0	-16.83	-16.83
	Inverter Transformer	MV3-14 T	368678	4907498	2	0	0	56.1	56.1	1	819.11	3.25	0	69.27	0	-0.05	0	0	4.44	0	0	0	0	0	0	-17.61	-17.61
	Inverter Transformer	MV3-16 T	368509	4907475	2	0	0	56.1	56.1	1	820.25	3.25	0	69.28	0	-0.05	0	0	4.45	0	0	0	0	0	0	-17.62	-17.62
	Inverter Transformer	MV3-15 T	368351	4907477	2	0	0	56.1	56.1	1	829.56	3.25	0	69.38	0	-0.04	0	0	4.47	0	0	0	0	0	0	-17.75	-17.75
	Inverter Transformer	MV3-17 T	368183	4907472	2	0	0	56.1	56.1	1	878.05	3.25	0	69.87	0	-0.03	0	0	4.59	0	0	0	0	0	0	-18.38	-18.38
	Inverter Transformer	MV3-13 T	367958	4907577	2	0	0	56.1	56.1	1	893.02	3.25	0	70.02	0	-0.02	0	0	4.63	0	0	0	0	0	0	-18.56	-18.56
	Inverter Transformer	MV4-7 T	369040	4909001	2	0	0	56.1	56.1	1	895.57	3.25	0	70.04	0	-0.02	0	0	4.64	0	0	0	0	0	0	-18.6	-18.6
	Inverter Transformer	MV1-7 T	364919	4905782	2	0	0	69.4	69.4	1	4365.78	3.25	0	83.8	0	2.87	0	0	6.94	0	0	0	0	0	0	-24.27	-24.27
	Inverter Transformer	MV1-10 T	365010	4905564	2	0	0	69.4	69.4	1	4422.87	3.25	0	83.91	0	2.89	0	0	6.98	0	0	0	0	0	0	-24.44	-24.44
	Inverter Transformer	MV3-19 T	368352	4907347	2	0	0	56.1	56.1	1	957.85	3.25	0	70.63	0	0	0	0	4.79	0	0	0	0	0	0	-19.35	-19.35
	Inverter Transformer	MV4-11 T	369269	4908855	2	0	0	56.1	56.1	1	960.21	3.25	0	70.65	0	0	0	0	4.79	0	0	0	0	0	0	-19.38	-19.38
	Inverter Transformer	MV4-10 T	369307	4908858	2	0	0	56.1	56.1	1	993.03	3.25	0	70.94	0	0.01	0	0	4.87	0	0	0	0	0	0	-19.76	-19.76
	Inverter Transformer	MV3-20 T	368683	4907317	2	0	0	56.1	56.1	1	997.06	3.25	0	70.97	0	0.01	0	0	4.88	0	0	0	0	0	0	-19.81	-19.81
	Inverter Transformer	MV1-14 T	365157	4905049	2	0	0	69.4	69.4	1	4651.75	3.25	0	84.35	0	2.94	0	0	7.14	0	0	0	0	0	0	-25.09	-25.09
	Inverter Transformer	MV4-8 T	369262	4909001	2	0	0	56.1	56.1	1	1046.89	3.25	0	71.4	0	0.03	0	0	5	0	0	0	0	0	0	-20.37	-20.37
	Inverter Transformer	MV1-13 T	364725	4905241	2	0	0	69.4	69.4	1	4847.12	3.25	0	84.71	0	2.98	0	0	7.28	0	0	0	0	0	0	-25.62	-25.62
	Inverter Transformer	MV4-4 T	369033	4909199	2	0	0	56.1	56.1	1	1055.06	3.25	0	71.47	0	0.03	0	0	5.02	0	0	0	0	0	0	-20.46	-20.46
	Inverter Transformer	MV4-9 T	369284	4909001	2	0	0	56.1	56.1	1	1063.23	3.25	0	71.53	0	0.03	0	0	5.04	0	0	0	0	0	0	-20.55	-20.55
	Inverter Transformer	MV3-12 T	367674	4907594	2	0	0	56.1	56.1	1	1075	3.25	0	71.63	0	0.04	0	0	5.07	0	0	0	0	0	0	-20.67	-20.67
	Inverter Transformer	MV3-21 T	368484	4907206	2	0	0	56.1	56.1	1	1089.01	3.25	0	71.74	0	0.04	0	0	5.1	0	0	0	0	0	0	-20.82	-20.82
	Inverter Transformer	MV3-18 T	367757	4907412	2	0	0	56.1	56.1	1	1146.96	3.25	0	72.19	0	0.06	0	0	5.23	0	0	0	0	0	0	-21.43	-21.43
	Inverter Transformer	MV3-22 T	368661	4907142	2	0	0	56.1	56.1	1	1165.76	3.25	0	72.33	0	0.07	0	0	5.28	0	0	0	0	0	0	-21.62	-21.62
	Inverter Transformer	MV4-6 T	369249	4909192	2	0	0	56.1	56.1	1	1175.68	3.25	0	72.41	0	0.07	0	0	5.3	0	0	0	0	0	0	-21.72	-21.72
	Inverter Transformer	MV4-5 T	369283	4909199	2	0	0	56.1	56.1	1	1203.19	3.25	0	72.61	0	0.08	0	0	5.36	0	0	0	0	0	0	-22	-22
	Inverter Transformer	MV4-1 T	369017	4909397	2	0	0	56.1	56.1	1	1221.96	3.25	0	72.74	0	0.09	0	0	5.41	0	0	0	0	0	0	-22.18	-22.18
	Inverter Transformer	MV4-3 T	369234	4909397	2	0	0	56.1	56.1	1	1330.2	3.25	0	73.48	0	0.13	0	0	5.65	0	0	0	0	0	0	-23.2	-23.2
	Inverter Transformer	MV4-2 T	369267	4909397	2	0	0	56.1	56.1	1	1348.96	3.25	0	73.6	0	0.14	0	0	5.69	0	0	0	0	0	0	-23.37	-23.37
	Inverter Transformer	MV5-6 T	369987	4908507	2	0	0	56.1	56.1	1	1512.93	3.25	0	74.6	0	0.2	0	0	6.05	0	0	0	0	0	0	-24.79	-24.79
	Inverter Transformer	MV5-5 T	370021	4908690	2	0	0	56.1	56.1	1	1582.1	3.25	0	74.98	0	0.23	0	0	6.19	0	0	0	0	0	0	-25.35	-25.35
	Inverter Transformer	MV5-2 T	370011	4908853	2	0	0	56.1	56.1	1	1621.07	3.25	0	75.2	0	0.25	0	0	6.27	0	0	0	0	0	0	-25.66	-25.66
	Inverter Transformer	MV5-1 T	370015	4909142	2	0	0	56.1	56.1	1	1745.31	3.25	0	75.84	0	0.3	0	0	6.53	0	0	0	0	0	0	-26.61	-26.61
	Inverter Transformer	MV5-3 T	370237	4908851	2	0	0	56.1	56.1	1	1834.3	3.25	0	76.27	0	0.33	0	0	6.71	0	0	0	0	0	0	-27.26	-27.26
	Inverter Transformer	MV6-2 T	370091	4907339	2	0	0	56.1	56.1	1	1865.57	3.25	0	76.42	0	0.35	0	0	6.78	0	0	0	0	0	0	-27.48	-27.48
	Inverter Transformer	MV5-4 T	370330	4908707	2	0	0	56.1	56.1	1	1886.54	3.25	0	76.51	0	0.36	0	0	6.82	0	0	0	0	0	0	-27.63	-27.63
	Inverter Transformer	MV6-3 T	370202	4907140	2	0	0	56.1	56.1	1	2066.01	3.25	0	77.3	0	0.43	0	0	7.17	0	0	0	0	0	0	-28.85	-28.85
	Inverter Transformer	MV2-2 T	365982	4906654	2	0	0	56.1	56.1	1	2996.32	3.25	0	80.53	0	0.83	0	0	8.86	0	0	0	0	0	0	-34.16	-34.16
	Inverter Transformer	MV2-3 T	365814	4906641	2	0	0	56.1	56.1	1	3145.05	3.25	0	80.95	0	0.89	0	0	9.11	0	0	0	0	0	0	-34.9	-34.9
	Inverter Transformer	MV2-4 T	365590	4906628	2	0	0	56.1	56.1	1	3344.11	3.25	0	81.49	0	0.98	0	0	9.44	0	0	0	0	0	0	-35.84	-35.84
	Line Reactor	NGR	369421	4908787.5	5	0	0	45.4	45.4	1	1054.13	5.25	0	71.46	0	3.47	1.28	0.1	0.43	0	0	0	0	0	0	-31.28	-31.28
	Inverter Transformer	MV1-1 T	364721	4906166	2	0	0	56.1	56.1	1	4327.87	3.25	0	83.73	0	1.37	0	0	10.93	0	0	0	0	0	0	-39.97	-39.97
	Inverter Transformer	MV1-2 T	364759	4906063	2	0	0	56.1	56.1	1	4346.81	3.25	0	83.76	0	1.38	0	0	10.96	0	0	0	0	0	0	-40.04	-40.04
	Inverter Transformer	MV1-4 T	364821	4905918	2	0	0	56.1	56.1	1	4370.85	3.25	0	83.81	0	1.39	0	0	10.99	0	0	0	0	0	0	-40.14	-40.14
	Inverter Transformer	MV1-5 T	364676	4905892	2	0	0	56.1	56.1	1	4507.04	3.25	0	84.08	0	1.44	0	0	11.19	0	0	0	0	0	0	-40.65	-40.65
	Inverter Transformer	MV1-12 T	365044	4905386	2	0	0	56.1	56.1	1	4508.91	3.25	0	84.08	0	1.44	0	0	11.19	0	0	0	0	0	0	-40.65	-40.65
	Inverter Transformer	MV1-8 T	364782	4905647	2	0	0	56.1	56.1	1	4555.63	3.25	0	84.17	0	1.46	0	0	11.25	0	0	0	0	0	0	-40.83	-40.83
	Inverter Transformer	MV1-15 T	365309	4904994	2	0	0	56.1	56.1	1	4583.56	3.25	0	84.22	0	1.47	0	0	11.29	0	0	0	0	0	0	-40.93	-40.93
	Inverter Transformer	MV1-3 T	364435	4906039	2	0	0	56.1	56.1	1	4639.45	3.25	0	84.33	0	1.49	0	0	11.37	0	0	0	0	0	0	-41.13	-41.13
	Inverter Transformer	MV1-6 T	364482	4905835	2	0	0	56.1	56.1	1	4701.88	3.25	0	84.45	0	1.52	0	0	11.45	0	0	0	0	0	0	-41.36	-41.36
	Inverter Transformer	MV1-9 T	364555	4905646	2	0	0	56.1	56.1	1	4742.74	3.25	0	84.52	0	1.53	0	0	11.51	0	0	0	0	0	0	-41.5	-41.5
	Inverter Transformer	MV1-11 T	364649	4905414	2	0	0	56.1	56.1	1	4800.6	3.25	0	84.63	0	1.55	0	0	11.59	0	0	0	0	0	0	-41.71	-41.71
Limit. Valu	0	0																								
Level D/N:	38.1878	38.1878																								

Receiver: Existing Noise Receptor
ID: S-R36
X: 368769
Y: 4908144
Z: 4.5
Ground: 0

ISO	Description	ID	X	Y	Z	Ground	ReflOrd	LxT	LxN	L/A	Dist.	hm	Freq	Adiv	K0b	Agr	Abar	z	Aatm	Afol	Ahous	Cmet	CmetN	Dc	RL	LtotT	LtotN
	Sol_Luce Substation	S_Substation	369426	4908792	3.5	0	0	112.1	112.1	1	922.8	5.24	0	70.3	0	-0.14	4.64	0.25	2.36	0	0	0	0	0	0	34.91	34.91
	Inverter	MV3-8	368680	4907712	2	0	0	100.3	100.3	1	441.08	3.25	0	63.89	0	-0.59	0	0	8.03	0	0	0	0	0	0	28.99	28.99
	Inverter	MV3-9	368512	4907703	2	0	0	100.3	100.3	1	510.43	3.25	0	65.16	0	-0.54	0	0	8.6	0	0	0	0	0	0	27.09	27.09
	Inverter	MV3-11	368346	4907662	2	0	0	100.3	100.3	1	641.29	3.25	0	67.14	0	-0.45	0	0	9.44	0	0	0	0	0	0	24.18	24.18
	Inverter	MV3-14	368684	4907498	2	0	0	100.3	100.3	1	651.57	3.25	0	67.28	0	-0.44	0	0	9.49	0	0	0	0	0	0	23.98	23.98
	Inverter	MV3-6	368162	4907834	2	0	0	100.3	100.3	1	681.58	3.25	0	67.67	0	-0.42	0	0	9.65	0	0	0	0	0	0	23.42	23.42
	Inverter	MV3-16	368514	4907475	2	0	0	100.3	100.3	1	715.96	3.25	0	68.1	0	-0.4	0	0	9.81	0	0	0	0	0	0	22.8	22.8
	Inverter	MV3-10	368167	4907669	2	0	0	100.3	100.3	1	766.83	3.25	0	68.69	0	-0.37	0	0	10.04	0	0	0	0	0	0	21.95	21.95

Inverter	MV3-15	368357	4907477	2	0	0	100.3	100.3	1	783.99	3.25	0	68.89	0	-0.36	0	0	10.11	0	0	0	0	0	0	21.67	21.67
Inverter	MV3-20	368689	4907317	2	0	0	100.3	100.3	1	830.86	3.25	0	69.39	0	-0.33	0	0	10.3	0	0	0	0	0	0	20.95	20.95
Inverter	MV3-3	367939	4907927	2	0	0	100.3	100.3	1	857.9	3.25	0	69.67	0	-0.32	0	0	10.41	0	0	0	0	0	0	20.55	20.55
Inverter	MV4-11	369264	4908855	2	0	0	100.3	100.3	1	866.34	3.25	0	69.75	0	-0.31	0	0	10.44	0	0	0	0	0	0	20.43	20.43
Inverter	MV3-2	368671	4907928	2	0	0	89.1	89.1	1	237.21	3.25	0	58.5	0	0.33	0	0	3.61	0	0	0	0	0	0	26.62	26.62
Inverter	MV3-17	368178	4907472	2	0	0	100.3	100.3	1	894.91	3.25	0	70.04	0	-0.3	0	0	10.55	0	0	0	0	0	0	20.03	20.03
Inverter	MV4-10	369312	4908858	2	0	0	100.3	100.3	1	897.02	3.25	0	70.06	0	-0.3	0	0	10.55	0	0	0	0	0	0	20	20
Inverter	MV3-19	368357	4907347	2	0	0	100.3	100.3	1	897.2	3.25	0	70.06	0	-0.3	0	0	10.56	0	0	0	0	0	0	20	20
Inverter	MV4-7	369035	4909001	2	0	0	100.3	100.3	1	897.34	3.25	0	70.06	0	-0.3	0	0	10.56	0	0	0	0	0	0	20	20
Inverter	MV3-7	367945	4907754	2	0	0	100.3	100.3	1	911.64	3.25	0	70.2	0	-0.29	0	0	10.61	0	0	0	0	0	0	19.8	19.8
Inverter	MV3-21	368478	4907206	2	0	0	100.3	100.3	1	982.11	3.25	0	70.84	0	-0.26	0	0	10.85	0	0	0	0	0	0	18.87	18.87
Inverter	MV3-13	367963	4907577	2	0	0	100.3	100.3	1	985.46	3.25	0	70.87	0	-0.25	0	0	10.86	0	0	0	0	0	0	18.83	18.83
Inverter	MV4-8	369256	4909001	2	0	0	100.3	100.3	1	985.71	3.25	0	70.87	0	-0.25	0	0	10.86	0	0	0	0	0	0	18.83	18.83
Inverter	MV4-9	369289	4909001	2	0	0	100.3	100.3	1	1002.42	3.25	0	71.02	0	-0.25	0	0	10.92	0	0	0	0	0	0	18.62	18.62
Inverter	MV4-4	369027	4909199	2	0	0	100.3	100.3	1	1086.09	3.25	0	71.72	0	-0.21	0	0	11.19	0	0	0	0	0	0	17.61	17.61
Inverter	MV4-6	369243	4909192	2	0	0	100.3	100.3	1	1150.21	3.25	0	72.22	0	-0.18	0	0	11.38	0	0	0	0	0	0	16.89	16.89
Inverter	MV4-5	369289	4909199	2	0	0	100.3	100.3	1	1176.19	3.25	0	72.41	0	-0.16	0	0	11.46	0	0	0	0	0	0	16.61	16.61
Inverter	MV3-12	367668	4907594	2	0	0	100.3	100.3	1	1230.73	3.25	0	72.8	0	-0.14	0	0	11.61	0	0	0	0	0	0	16.04	16.04
Inverter	MV3-18	367752	4907412	2	0	0	100.3	100.3	1	1253.04	3.25	0	72.96	0	-0.13	0	0	11.68	0	0	0	0	0	0	15.81	15.81
Inverter	MV3-4	368502	4907925	2	0	0	89.1	89.1	1	345.33	3.25	0	61.76	0	0.41	0	0	4.43	0	0	0	0	0	0	22.45	22.45
Inverter	MV4-1	369011	4909397	2	0	0	100.3	100.3	1	1276.16	3.25	0	73.12	0	-0.12	0	0	11.74	0	0	0	0	0	0	15.58	15.58
Inverter	MV4-3	369229	4909397	2	0	0	100.3	100.3	1	1334.77	3.25	0	73.51	0	-0.1	0	0	11.9	0	0	0	0	0	0	15	15
DSTATCOM - 10 MVAR #2	DSAT2	369403	4908757	2.5	0	0	96.6	96.6	1	881.89	3.5	0	69.91	0	2.81	0	0	0.99	0	0	0	0	0	0	22.92	22.92
Inverter	MV4-2	369272	4909397	2	0	0	100.3	100.3	1	1350.19	3.25	0	73.61	0	-0.09	0	0	11.94	0	0	0	0	0	0	14.86	14.86
Inverter	MV5-5	370015	4908690	2	0	0	100.3	100.3	1	1360.38	3.25	0	73.67	0	-0.09	0	0	11.97	0	0	0	0	0	0	14.76	14.76
DSTATCOM - 10 MVAR #1	DSAT1	369437	4908757	2.5	0	0	96.6	96.6	1	906.64	3.5	0	70.15	0	2.84	0	0	1.01	0	0	0	0	0	0	22.63	22.63
Inverter	MV5-2	370006	4908853	2	0	0	100.3	100.3	1	1425.78	3.25	0	74.08	0	-0.06	0	0	12.14	0	0	0	0	0	0	14.16	14.16
Inverter	MV6-2	370085	4907339	2	0	0	100.3	100.3	1	1542.69	3.25	0	74.77	0	-0.02	0	0	12.43	0	0	0	0	0	0	13.13	13.13
Inverter	MV5-1	370020	4909142	2	0	0	100.3	100.3	1	1600.32	3.25	0	75.08	0	0	0	0	12.57	0	0	0	0	0	0	12.66	12.66
Inverter	MV5-3	370231	4908851	2	0	0	100.3	100.3	1	1623.98	3.25	0	75.21	0	0.01	0	0	12.62	0	0	0	0	0	0	12.46	12.46
Inverter	MV5-4	370324	4908707	2	0	0	100.3	100.3	1	1653.78	3.25	0	75.37	0	0.02	0	0	12.7	0	0	0	0	0	0	12.23	12.23
Inverter	MV6-3	370207	4907140	2	0	0	100.3	100.3	1	1753.81	3.25	0	75.88	0	0.05	0	0	12.93	0	0	0	0	0	0	11.45	11.45
Inverter	MV3-5	368340	4907843	2	0	0	89.1	89.1	1	524.07	3.25	0	65.39	0	0.54	0	0	5.22	0	0	0	0	0	0	17.91	17.91
Inverter	MV4-15	369176	4908481	2	0	0	89.1	89.1	1	528.42	3.25	0	65.46	0	0.54	0	0	5.24	0	0	0	0	0	0	17.82	17.82
Inverter	MV4-13	369051	4908605	2	0	0	89.1	89.1	1	540.42	3.25	0	65.65	0	0.55	0	0	5.28	0	0	0	0	0	0	17.58	17.58
Inverter	MV4-14	369176	4908507	2	0	0	89.1	89.1	1	545.37	3.25	0	65.73	0	0.55	0	0	5.29	0	0	0	0	0	0	17.48	17.48
Inverter	MV3-1	368156	4907976	2	0	0	89.1	89.1	1	635.61	3.25	0	67.06	0	0.59	0	0	5.54	0	0	0	0	0	0	15.86	15.86
Inverter	MV6-1	370235	4907364	2	0	0	97.3	97.3	1	1660.59	3.25	0	75.41	0	0.02	0	0	12.71	0	0	0	0	0	0	9.17	9.17
Inverter	MV4-12	369043	4908803	2	0	0	89.1	89.1	1	713.7	3.25	0	68.07	0	0.62	0	0	5.73	0	0	0	0	0	0	14.64	14.64
Fixed Reactor Bank 1	FRB1	369378	4908755	6	0	0	89.8	89.8	1	862.67	5.25	0	69.72	0	-0.99	0	0	2.24	0	0	0	0	0	0	18.81	18.81
Fixed Reactor Bank 2	FRB2	369464	4908755	6	0	0	89.8	89.8	1	925.39	5.25	0	70.33	0	-1	0	0	2.37	0	0	0	0	0	0	18.08	18.08
Inverter	MV2-3	365820	4906641	2	0	0	100.3	100.3	1	3309.93	3.25	0	81.4	0	0.42	0	0	15.91	0	0	0	0	0	0	2.59	2.59
Inverter	MV2-4	365586	4906624	2	0	0	100.3	100.3	1	3527.31	3.25	0	81.95	0	0.46	0	0	16.28	0	0	0	0	0	0	1.63	1.63
Inverter	MV3-22	368656	4907142	2	0	0	89.1	89.1	1	1008.35	3.25	0	71.07	0	0.69	0	0	6.33	0	0	0	0	0	0	10.97	10.97
Inverter	MV1-1	364715	4906166	2	0	0	100.3	100.3	1	4510.81	3.25	0	84.09	0	0.59	0	0	17.85	0	0	0	0	0	0	-2.21	-2.21
Inverter	MV1-2	364753	4906063	2	0	0	100.3	100.3	1	4523.14	3.25	0	84.11	0	0.59	0	0	17.87	0	0	0	0	0	0	-2.26	-2.26
Inverter	MV1-4	364815	4905918	2	0	0	100.3	100.3	1	4537.53	3.25	0	84.14	0	0.6	0	0	17.89	0	0	0	0	0	0	-2.31	-2.31
Inverter	MV2-1	365842	4906816	2	0	0	97.3	97.3	1	3214.17	3.25	0	81.14	0	0.4	0	0	15.75	0	0	0	0	0	0	0.02	0.02
Inverter	MV5-6	369982	4908507	2	0	0	89.1	89.1	1	1266.15	3.25	0	73.05	0	0.74	0	0	6.8	0	0	0	0	0	0	8.47	8.47
Inverter	MV1-12	365038	4905386	2	0	0	100.3	100.3	1	4639.71	3.25	0	84.33	0	0.61	0	0	18.04	0	0	0	0	0	0	-2.67	-2.67
Inverter	MV1-15	365315	4904994	2	0	0	100.3	100.3	1	4674.68	3.25	0	84.4	0	0.61	0	0	18.1	0	0	0	0	0	0	-2.79	-2.79
Inverter	MV1-5	364671	4905892	2	0	0	100.3	100.3	1	4676.01	3.25	0	84.4	0	0.61	0	0	18.1	0	0	0	0	0	0	-2.79	-2.79
Inverter	MV1-8	364788	4905647	2	0	0	100.3	100.3	1	4699.3	3.25	0	84.44	0	0.61	0	0	18.13	0	0	0	0	0	0	-2.87	-2.87
Inverter	MV1-6	364477	4905835	2	0	0	100.3	100.3	1	4873.68	3.25	0	84.76	0	0.63	0	0	18.39	0	0	0	0	0	0	-3.47	-3.47
Inverter	MV1-9	364561	4905646	2	0	0	100.3	100.3	1	4893.6	3.25	0	84.79	0	0.63	0	0	18.42	0	0	0	0	0	0	-3.54	-3.54
Inverter	MV1-11	364655	4905414	2	0	0	100.3	100.3	1	4937.4	3.25	0	84.87	0	0.64	0	0	18.49	0	0	0	0	0	0	-3.68	-3.68
SubstationTransformer	W_ST	369711.17	4906112.3	2.5	0	0	92	92	1	2239.56	3.5	0	78	0	-0.11	0	0	4.77	0	0	0	0	0	0	9.31	9.31
Inverter	MV1-7	364925	4905782	2	0	0	97.3	97.3	1	4511.69	3.25	0	84.09	0	0.59	0	0	17.85	0	0	0	0	0	0	-5.22	-5.22
Inverter	MV1-10	365004	4905564	2	0	0	97.3	97.3	1	4564.17	3.25	0	84.19	0	0.6	0	0	17.93	0	0	0	0	0	0	-5.4	-5.4
Westbrook Inverter Enclosur	W_INV5	369719	4906574	2	0	0	89.1	89.1	1	1835.05	3.25	0	76.27	0	0.87	0	0	7.77	0	0	0	0	0	0	4.14	4.14
Inverter	MV1-14	365163	4905049	2	0	0	97.3	97.3	1	4752.08	3.25	0	84.54	0	0.62	0	0	18.21	0	0	0	0	0	0	-6.06	-6.06
Westbrook Inverter Enclosur	W_INV2	369374	4906388	2	0	0	89.1	89.1	1	1857.3	3.25	0	76.38	0	0.87	0	0	7.81	0	0	0	0	0	0	4	4
Westbrook Inverter Enclosur	W_INV6	369875	4906578	2	0	0	89.1	89.1	1	1917.18	3.25	0	76.65	0	0.89	0	0	7.91	0	0	0	0	0	0	3.61	3.61
Inverter	MV1-13	364731	4905241	2	0	0	97.3	97.3	1	4973.21	3.25	0	84.93	0	0.64	0	0	18.54	0	0	0	0	0	0	-6.8	-6.8
Westbrook Inverter Enclosur	W_INV7	369780	4906417	2	0	0	89.1	89.1	1	2001.16	3.25	0	77.03	0	0.91	0	0	8.05	0	0	0	0	0	0	3.08	3.08
Westbrook Inverter Enclosur	W_INV3	369508	4906164	2	0	0	89.1	89.1	1	2113.42	3.25	0	77.5	0	0.93	0	0	8.23	0	0	0	0	0	0	2.39	2.39
Westbrook Inverter Enclosur	W_INV4	369673	4906164	2	0	0	89.1	89.1	1	2176.61	3.25	0	77.76	0	0.95	0	0	8.33	0	0	0	0	0	0	2.02	2.02
Westbrook Inverter Enclosur	W_INV1	369409	4906578	2	0	0	86.1	86.1	1	1691.73	3.25	0	75.57	0	0.84	0	0	7.53	0	0	0	0	0	0	2.12	2.12
Inverter	MV6-4	370250	4906966	2	0	0	86.1	86.1	1	1892.37	3.25	0	76.54	0	0.88	0	0	7.87	0	0	0	0	0	0	0.77	0.77
Inverter	MV2-2	365977	4906654	2	0	0	89.1	89.1	1	3164.71	3.25	0	81.01	0	1.19	0	0	9.87	0	0	0	0	0	0	-3	-3
Gardiner Substation	G_Sub	366586.3	4903349.9	2.5	0	0	90.8	90.8	1	5267.6	4.25	0	85.43	0	1.72	2.3	0.39	8.93	0	0	0	0	0	0	-7.61	-7.61
Inverter	MV1-3	364440	4906039	2	0	0	89.1	89.1	1	4813.65	3.25	0	84.65	0	1.59	0	0	12.21	0	0	0	0	0	0	-9.4	-9.4
Westbrook Inverter Transfor	W_INVTR1	369403	4906578	2	0	0	78.2	78.2	1	1689.47	3.25	0	75.56	0	-2.29	0	0	1.05	0	0	0	0	0	0	3.92	3.92
Inverters	G_Inv2	366676.9	4903239.1	2	0	0	87.7	87.7	1	5332.44	3.25	0	85.54	0	2.88	0	0	6.29	0	0	0	0	0	0	-7.05	-7.05

Inverters	G_Inv1	366526.4	4903225.8	2	0	0	87.7	87.7	1	5405.36	4.22	0	85.66	0	3.23	1.44	0.01	6.36	0	0	0	0	0	0	-9.04	-9.04
Inverters	G_Inv4	366732.8	4903105	2	0	0	87.7	87.7	1	5434.85	3.25	0	85.7	0	2.89	0	0	6.39	0	0	0	0	0	0	-7.33	-7.33
Inverters	G_Inv3	366583.7	4903091.4	2	0	0	87.7	87.7	1	5504.93	3.25	0	85.82	0	2.89	0	0	6.47	0	0	0	0	0	0	-7.52	-7.52
Inverters	G_Inv6	366788.5	4902972	2	0	0	87.7	87.7	1	5538.23	3.25	0	85.87	0	2.9	0	0	6.5	0	0	0	0	0	0	-7.6	-7.6
Inverters	G_Inv5	366638.5	4902958.1	2	0	0	87.7	87.7	1	5606.48	3.25	0	85.97	0	2.9	0	0	6.57	0	0	0	0	0	0	-7.79	-7.79
Inverters	G_Inv8	366844.5	4902838.5	2	0	0	87.7	87.7	1	5643.76	3.25	0	86.03	0	2.9	0	0	6.61	0	0	0	0	0	0	-7.88	-7.88
Inverters	G_Inv7	366694.6	4902824.7	2	0	0	87.7	87.7	1	5709.47	3.25	0	86.13	0	2.9	0	0	6.68	0	0	0	0	0	0	-8.06	-8.06
Inverters	G_Inv10	366900.7	4902704.8	2	0	0	87.7	87.7	1	5751.13	3.25	0	86.2	0	2.91	0	0	6.72	0	0	0	0	0	0	-8.16	-8.16
Inverters	G_Inv9	366750.9	4902691.8	2	0	0	87.7	87.7	1	5813.71	3.25	0	86.29	0	2.91	0	0	6.79	0	0	0	0	0	0	-8.32	-8.32
Westbrook Inverter Transfor	W_INVTR5	369725	4906574	2	0	0	77.3	77.3	1	1838.16	3.25	0	76.29	0	-2.34	0	0	1.13	0	0	0	0	0	0	2.27	2.27
Westbrook Inverter Transfor	W_INVTR2	369368	4906388	2	0	0	77.3	77.3	1	1855.36	3.25	0	76.37	0	-2.35	0	0	1.14	0	0	0	0	0	0	2.19	2.19
Westbrook Inverter Transfor	W_INVTR6	369881	4906578	2	0	0	77.3	77.3	1	1920.65	3.25	0	76.67	0	-2.38	0	0	1.17	0	0	0	0	0	0	1.88	1.88
Westbrook Inverter Transfor	W_INVTR7	369786	4906417	2	0	0	77.3	77.3	1	2004.2	3.25	0	77.04	0	-2.41	0	0	1.21	0	0	0	0	0	0	1.5	1.5
Westbrook Inverter Transfor	W_INVTR3	369514	4906164	2	0	0	77.3	77.3	1	2115.52	3.25	0	77.51	0	-2.45	0	0	1.26	0	0	0	0	0	0	1.02	1.02
Westbrook Inverter Transfor	W_INVTR4	369679	4906164	2	0	0	77.3	77.3	1	2179.11	3.25	0	77.77	0	-2.47	0	0	1.29	0	0	0	0	0	0	0.75	0.75
Inverter Transformer	MV3-2 T	368677	4907928	2	0	0	56.1	56.1	1	234.79	3.25	0	58.41	0	0.01	0	0	2.44	0	0	0	0	0	0	-4.81	-4.81
Inverter Transformer	MV3-4 T	368507	4907925	2	0	0	56.1	56.1	1	341.48	3.25	0	61.67	0	-0.1	0	0	2.97	0	0	0	0	0	0	-8.48	-8.48
Inverter Transformer	MV6-1 T	370230	4907364	2	0	0	69.4	69.4	1	1656.18	3.25	0	75.38	0	2.04	0	0	4.61	0	0	0	0	0	0	-12.68	-12.68
Inverter Transformer	MV6-4 T	370244	4906966	2	0	0	69.4	69.4	1	1887.67	3.25	0	76.52	0	2.13	0	0	4.85	0	0	0	0	0	0	-14.15	-14.15
Inverter Transformer	MV3-8 T	368685	4907712	2	0	0	56.1	56.1	1	440.1	3.25	0	63.87	0	-0.12	0	0	3.35	0	0	0	0	0	0	-11.05	-11.05
Inverter Transformer	MV3-9 T	368517	4907703	2	0	0	56.1	56.1	1	507.93	3.25	0	65.12	0	-0.12	0	0	3.58	0	0	0	0	0	0	-12.52	-12.52
Inverter Transformer	MV4-15 T	369170	4908481	2	0	0	56.1	56.1	1	523.81	3.25	0	65.38	0	-0.12	0	0	3.63	0	0	0	0	0	0	-12.84	-12.84
Inverter Transformer	MV3-5 T	368335	4907843	2	0	0	56.1	56.1	1	528.17	3.25	0	65.46	0	-0.11	0	0	3.64	0	0	0	0	0	0	-12.92	-12.92
Inverter Transformer	MV4-13 T	369057	4908605	2	0	0	56.1	56.1	1	543.57	3.25	0	65.71	0	-0.11	0	0	3.69	0	0	0	0	0	0	-13.22	-13.22
Inverter Transformer	MV4-14 T	369182	4908507	2	0	0	56.1	56.1	1	549.86	3.25	0	65.81	0	-0.11	0	0	3.71	0	0	0	0	0	0	-13.34	-13.34
Inverter Transformer	MV3-1 T	368150	4907976	2	0	0	56.1	56.1	1	641.4	3.25	0	67.14	0	-0.1	0	0	3.97	0	0	0	0	0	0	-14.96	-14.96
Inverter Transformer	MV3-11 T	368340	4907662	2	0	0	56.1	56.1	1	645.27	3.25	0	67.19	0	-0.09	0	0	3.98	0	0	0	0	0	0	-15.03	-15.03
Inverter Transformer	MV3-14 T	368678	4907498	2	0	0	56.1	56.1	1	652.38	3.25	0	67.29	0	-0.09	0	0	4	0	0	0	0	0	0	-15.14	-15.14
Inverter Transformer	MV3-6 T	368156	4907834	2	0	0	56.1	56.1	1	686.93	3.25	0	67.74	0	-0.08	0	0	4.1	0	0	0	0	0	0	-15.69	-15.69
Inverter Transformer	MV2-1 T	365836	4906816	2	0	0	69.4	69.4	1	3219.64	3.25	0	81.16	0	2.57	0	0	6.07	0	0	0	0	0	0	-20.44	-20.44
Inverter Transformer	MV4-12 T	369049	4908803	2	0	0	56.1	56.1	1	716.02	3.25	0	68.1	0	-0.08	0	0	4.18	0	0	0	0	0	0	-16.14	-16.14
Inverter Transformer	MV3-16 T	368509	4907475	2	0	0	56.1	56.1	1	717.75	3.25	0	68.12	0	-0.08	0	0	4.18	0	0	0	0	0	0	-16.17	-16.17
Inverter Transformer	MV3-10 T	368162	4907669	2	0	0	56.1	56.1	1	770.77	3.25	0	68.74	0	-0.06	0	0	4.32	0	0	0	0	0	0	-16.94	-16.94
Inverter Transformer	MV3-15 T	368351	4907477	2	0	0	56.1	56.1	1	787.16	3.25	0	68.92	0	-0.06	0	0	4.36	0	0	0	0	0	0	-17.17	-17.17
Inverter Transformer	MV3-20 T	368683	4907317	2	0	0	56.1	56.1	1	831.46	3.25	0	69.4	0	-0.04	0	0	4.48	0	0	0	0	0	0	-17.77	-17.77
Inverter Transformer	MV3-3 T	367944	4907927	2	0	0	56.1	56.1	1	853.07	3.25	0	69.62	0	-0.04	0	0	4.53	0	0	0	0	0	0	-18.05	-18.05
Inverter Transformer	MV4-11 T	369269	4908855	2	0	0	56.1	56.1	1	869.21	3.25	0	69.78	0	-0.03	0	0	4.57	0	0	0	0	0	0	-18.26	-18.26
Inverter Transformer	MV3-17 T	368183	4907472	2	0	0	56.1	56.1	1	891.62	3.25	0	70	0	-0.02	0	0	4.63	0	0	0	0	0	0	-18.55	-18.55
Inverter Transformer	MV4-10 T	369307	4908858	2	0	0	56.1	56.1	1	894.01	3.25	0	70.03	0	-0.02	0	0	4.63	0	0	0	0	0	0	-18.58	-18.58
Inverter Transformer	MV4-7 T	369040	4909001	2	0	0	56.1	56.1	1	898.83	3.25	0	70.07	0	-0.02	0	0	4.64	0	0	0	0	0	0	-18.64	-18.64
Inverter Transformer	MV3-19 T	368352	4907347	2	0	0	56.1	56.1	1	899.5	3.25	0	70.08	0	-0.02	0	0	4.65	0	0	0	0	0	0	-18.65	-18.65
Inverter Transformer	MV3-7 T	367951	4907754	2	0	0	56.1	56.1	1	906.22	3.25	0	70.14	0	-0.02	0	0	4.66	0	0	0	0	0	0	-18.73	-18.73
Inverter Transformer	MV1-7 T	364919	4905782	2	0	0	69.4	69.4	1	4516.81	3.25	0	84.1	0	2.91	0	0	7.05	0	0	0	0	0	0	-24.71	-24.71
Inverter Transformer	MV3-21 T	368484	4907206	2	0	0	56.1	56.1	1	980.34	3.25	0	70.83	0	0.01	0	0	4.84	0	0	0	0	0	0	-19.62	-19.62
Inverter Transformer	MV1-10 T	365010	4905564	2	0	0	69.4	69.4	1	4559.22	3.25	0	84.18	0	2.92	0	0	7.08	0	0	0	0	0	0	-24.83	-24.83
Inverter Transformer	MV4-8 T	369262	4909001	2	0	0	56.1	56.1	1	988.69	3.25	0	70.9	0	0.01	0	0	4.86	0	0	0	0	0	0	-19.71	-19.71
Inverter Transformer	MV3-13 T	367958	4907577	2	0	0	56.1	56.1	1	989.55	3.25	0	70.91	0	0.01	0	0	4.86	0	0	0	0	0	0	-19.72	-19.72
Inverter Transformer	MV4-9 T	369284	4909001	2	0	0	56.1	56.1	1	999.84	3.25	0	71	0	0.01	0	0	4.89	0	0	0	0	0	0	-19.84	-19.84
Inverter Transformer	MV3-22 T	368661	4907142	2	0	0	56.1	56.1	1	1007.81	3.25	0	71.07	0	0.01	0	0	4.91	0	0	0	0	0	0	-19.93	-19.93
Inverter Transformer	MV1-14 T	365157	4905049	2	0	0	69.4	69.4	1	4756.63	3.25	0	84.55	0	2.96	0	0	7.22	0	0	0	0	0	0	-25.37	-25.37
Inverter Transformer	MV1-13 T	364725	4905241	2	0	0	69.4	69.4	1	4978.09	3.25	0	84.94	0	3.01	0	0	7.37	0	0	0	0	0	0	-25.97	-25.97
Inverter Transformer	MV4-4 T	369033	4909199	2	0	0	56.1	56.1	1	1087.53	3.25	0	71.73	0	0.04	0	0	5.1	0	0	0	0	0	0	-20.81	-20.81
Inverter Transformer	MV4-6 T	369249	4909192	2	0	0	56.1	56.1	1	1152.7	3.25	0	72.23	0	0.07	0	0	5.25	0	0	0	0	0	0	-21.49	-21.49
Inverter Transformer	MV4-5 T	369283	4909199	2	0	0	56.1	56.1	1	1173.55	3.25	0	72.39	0	0.07	0	0	5.3	0	0	0	0	0	0	-21.7	-21.7
Inverter Transformer	MV3-12 T	367674	4907594	2	0	0	56.1	56.1	1	1225.37	3.25	0	72.77	0	0.09	0	0	5.41	0	0	0	0	0	0	-22.21	-22.21
Inverter Transformer	MV3-18 T	367757	4907412	2	0	0	56.1	56.1	1	1248.99	3.25	0	72.93	0	0.1	0	0	5.47	0	0	0	0	0	0	-22.44	-22.44
Inverter Transformer	MV5-6 T	369987	4908507	2	0	0	56.1	56.1	1	1270.94	3.25	0	73.08	0	0.11	0	0	5.52	0	0	0	0	0	0	-22.65	-22.65
Inverter Transformer	MV4-1 T	369017	4909397	2	0	0	56.1	56.1	1	1277.31	3.25	0	73.13	0	0.11	0	0	5.53	0	0	0	0	0	0	-22.71	-22.71
Inverter Transformer	MV4-3 T	369234	4909397	2	0	0	56.1	56.1	1	1336.5	3.25	0	73.52	0	0.13	0	0	5.66	0	0	0	0	0	0	-23.26	-23.26
Inverter Transformer	MV4-2 T	369267	4909397	2	0	0	56.1	56.1	1	1348.34	3.25	0	73.6	0	0.14	0	0	5.69	0	0	0	0	0	0	-23.37	-23.37
Inverter Transformer	MV5-5 T	370021	4908690	2	0	0	56.1	56.1	1	1365.88	3.25	0	73.71	0	0.15	0	0	5.73	0	0	0	0	0	0	-23.52	-23.52
Inverter Transformer	MV5-2 T	370011	4908853	2	0	0	56.1	56.1	1	1430.12	3.25	0	74.11	0	0.17	0	0	5.87	0	0	0	0	0	0	-24.09	-24.09
Inverter Transformer	MV6-2 T	370091	4907339	2	0	0	56.1	56.1	1	1547.81	3.25	0	74.79	0	0.22	0	0	6.12	0	0	0	0	0	0	-25.07	-25.07
Inverter Transformer	MV5-1 T	370015	4909142	2	0	0	56.1	56.1	1	1596.41	3.25	0	75.06	0	0.24	0	0	6.22	0	0	0	0	0	0	-25.46	-25.46
Inverter Transformer	MV5-3 T	370237	4908851	2	0	0	56.1	56.1	1	1629.38	3.25	0	75.24	0	0.25	0	0	6.29	0	0	0	0	0	0	-25.72	-25.72
Inverter Transformer	MV5-4 T	370330	4908707	2	0	0	56.1	56.1	1	1659.43	3.25	0	75.4	0	0.26	0	0	6.35	0	0	0	0	0	0	-25.96	-25.96
Inverter Transformer	MV6-3 T	370202	4907140	2	0	0	56.1	56.1	1	1749.72	3.25	0	75.86	0	0.3	0	0	6.54	0	0	0	0	0	0	-26.64	-26.64
Line Reactor	NGR	369421	4908787.5	5	0	0	45.4	45.4	1	916.08	5.25	0	70.24	0	3.46	1.28	0.08	0.38	0	0	0	0	0	0	-29.99	-29.99
Inverter Transformer	MV2-2 T	365982	4906654	2	0	0	56.1	56.1	1	3160.3	3.25	0	80.99	0	0.9	0	0	9.14	0	0	0	0	0	0	-34.97	-34.97
Inverter Transformer	MV2-3 T	365814	4906641	2	0	0	56.1	56.1	1	3315.27	3.25	0	81.41	0	0.96	0	0	9.39	0	0	0	0	0	0	-35.71	-35.71
Inverter Transformer	MV2-4 T	365590	4906628	2	0	0	56.1	56.1	1	3521.97	3.25	0	81.94	0	1.05	0	0	9.72	0	0	0	0	0	0	-36.65	-36.65
Inverter Transformer	MV1-1 T	364721	4906166	2	0	0	56.1	56.1	1	4505.42	3.25	0	84.07	0	1.44	0	0	11.18	0	0	0	0	0	0	-40.64	-40.64
Inverter Transformer	MV1-2 T	364759	4906063	2	0	0	56.1	56.1	1	4517.82	3.25	0	84.1	0	1.45	0	0	11.2	0	0	0	0	0	0	-40.69	-40.69
Inverter Transformer	MV1-4 T	364821	4905918	2	0	0	56.1	56.1	1	4532.3	3.25	0	84.13	0	1.45	0	0	11.22	0	0	0	0	0	0	-40.74	-40.74

	Inverter Transformer	MV1-12 T	365044	4905386	2	0	0	56.1	56.1	1	4634.89	3.25	0	84.32	0	1.49	0	0	11.36	0	0	0	0	0	0	-41.12	-41.12
	Inverter Transformer	MV1-5 T	364676	4905892	2	0	0	56.1	56.1	1	4671.63	3.25	0	84.39	0	1.5	0	0	11.41	0	0	0	0	0	0	-41.25	-41.25
	Inverter Transformer	MV1-15 T	365309	4904994	2	0	0	56.1	56.1	1	4679.11	3.25	0	84.4	0	1.51	0	0	11.42	0	0	0	0	0	0	-41.28	-41.28
	Inverter Transformer	MV1-8 T	364782	4905647	2	0	0	56.1	56.1	1	4704.38	3.25	0	84.45	0	1.52	0	0	11.46	0	0	0	0	0	0	-41.37	-41.37
	Inverter Transformer	MV1-3 T	364435	4906039	2	0	0	56.1	56.1	1	4818.15	3.25	0	84.66	0	1.56	0	0	11.61	0	0	0	0	0	0	-41.77	-41.77
	Inverter Transformer	MV1-6 T	364482	4905835	2	0	0	56.1	56.1	1	4869.28	3.25	0	84.75	0	1.58	0	0	11.68	0	0	0	0	0	0	-41.95	-41.95
	Inverter Transformer	MV1-9 T	364555	4905646	2	0	0	56.1	56.1	1	4898.76	3.25	0	84.8	0	1.59	0	0	11.72	0	0	0	0	0	0	-42.05	-42.05
	Inverter Transformer	MV1-11 T	364649	4905414	2	0	0	56.1	56.1	1	4942.4	3.25	0	84.88	0	1.6	0	0	11.78	0	0	0	0	0	0	-42.2	-42.2
Limit. Valu	0	0																								
Level D/N:	39.4365	39.4365																								

Receiver: Existing Noise Receptor
ID: S-R37
X: 369128
Y: 4908178
Z: 4.5
Ground: 0

ISO	Description	ID	X	Y	Z	Ground	ReflOrd	LxT	LxN	L/A	Dist.	hm	Freq	Adiv	K0b	Agr	Abar	z	Aatm	Afol	Ahous	Cmet	CmetN	Dc	RL	LtotT	LtotN
	Sol_Luce Substation	S_Substation	369426	4908792	3.5	0	0	112.1	112.1	1	682.5	5.24	0	67.68	0	0.01	6.12	0.32	1.85	0	0	0	0	0	0	36.41	36.41
	Inverter	MV3-8	368680	4907712	2	0	0	100.3	100.3	1	646.43	3.25	0	67.21	0	-0.45	0	0	9.47	0	0	0	0	0	0	24.08	24.08
	Inverter	MV4-11	369264	4908855	2	0	0	100.3	100.3	1	690.53	3.25	0	67.78	0	-0.42	0	0	9.69	0	0	0	0	0	0	23.25	23.25
	Inverter	MV4-10	369312	4908858	2	0	0	100.3	100.3	1	704.46	3.25	0	67.96	0	-0.41	0	0	9.76	0	0	0	0	0	0	23	23
	Inverter	MV3-9	368512	4907703	2	0	0	100.3	100.3	1	777.87	3.25	0	68.82	0	-0.36	0	0	10.09	0	0	0	0	0	0	21.77	21.77
	Inverter	MV3-14	368684	4907498	2	0	0	100.3	100.3	1	812.12	3.25	0	69.19	0	-0.34	0	0	10.23	0	0	0	0	0	0	21.23	21.23
	Inverter	MV4-7	369035	4909001	2	0	0	100.3	100.3	1	828.24	3.25	0	69.36	0	-0.34	0	0	10.29	0	0	0	0	0	0	20.99	20.99
	Inverter	MV4-8	369256	4909001	2	0	0	100.3	100.3	1	832.9	3.25	0	69.41	0	-0.33	0	0	10.31	0	0	0	0	0	0	20.92	20.92
	Inverter	MV4-9	369289	4909001	2	0	0	100.3	100.3	1	838.6	3.25	0	69.47	0	-0.33	0	0	10.33	0	0	0	0	0	0	20.84	20.84
	Inverter	MV3-16	368514	4907475	2	0	0	100.3	100.3	1	933.39	3.25	0	70.4	0	-0.28	0	0	10.68	0	0	0	0	0	0	19.51	19.51
	Inverter	MV3-11	368346	4907662	2	0	0	100.3	100.3	1	936.9	3.25	0	70.43	0	-0.28	0	0	10.7	0	0	0	0	0	0	19.46	19.46
	Inverter	MV3-20	368689	4907317	2	0	0	100.3	100.3	1	966.46	3.25	0	70.7	0	-0.26	0	0	10.8	0	0	0	0	0	0	19.07	19.07
	DSTATCOM - 10 MVAR #2	DSAT2	369403	4908757	2.5	0	0	96.6	96.6	1	640.99	3.5	0	67.14	0	2.46	0	0	0.82	0	0	0	0	0	0	26.21	26.21
	DSTATCOM - 10 MVAR #1	DSAT1	369437	4908757	2.5	0	0	96.6	96.6	1	656.3	3.5	0	67.34	0	2.49	0	0	0.83	0	0	0	0	0	0	25.97	25.97
	Inverter	MV4-6	369243	4909192	2	0	0	100.3	100.3	1	1020.5	3.25	0	71.18	0	-0.24	0	0	10.98	0	0	0	0	0	0	18.39	18.39
	Inverter	MV5-5	370015	4908690	2	0	0	100.3	100.3	1	1024.17	3.25	0	71.21	0	-0.23	0	0	10.99	0	0	0	0	0	0	18.35	18.35
	Inverter	MV3-6	368162	4907834	2	0	0	100.3	100.3	1	1025.43	3.25	0	71.22	0	-0.23	0	0	10.99	0	0	0	0	0	0	18.33	18.33
	Inverter	MV4-4	369027	4909199	2	0	0	100.3	100.3	1	1025.99	3.25	0	71.22	0	-0.23	0	0	11	0	0	0	0	0	0	18.33	18.33
	Inverter	MV4-5	369289	4909199	2	0	0	100.3	100.3	1	1033.62	3.25	0	71.29	0	-0.23	0	0	11.02	0	0	0	0	0	0	18.23	18.23
	Inverter	MV3-15	368357	4907477	2	0	0	100.3	100.3	1	1042.04	3.25	0	71.36	0	-0.23	0	0	11.05	0	0	0	0	0	0	18.13	18.13
	Inverter	MV3-10	368167	4907669	2	0	0	100.3	100.3	1	1087.48	3.25	0	71.73	0	-0.2	0	0	11.19	0	0	0	0	0	0	17.6	17.6
	Inverter	MV5-2	370006	4908853	2	0	0	100.3	100.3	1	1107.48	3.25	0	71.89	0	-0.2	0	0	11.25	0	0	0	0	0	0	17.37	17.37
	Inverter	MV4-15	369176	4908481	2	0	0	89.1	89.1	1	306.79	3.25	0	60.74	0	0.38	0	0	4.18	0	0	0	0	0	0	23.77	23.77
	Inverter	MV3-19	368357	4907347	2	0	0	100.3	100.3	1	1133.58	3.25	0	72.09	0	-0.18	0	0	11.33	0	0	0	0	0	0	17.08	17.08
	Inverter	MV3-21	368478	4907206	2	0	0	100.3	100.3	1	1169.31	3.25	0	72.36	0	-0.17	0	0	11.44	0	0	0	0	0	0	16.68	16.68
	Inverter	MV3-17	368178	4907472	2	0	0	100.3	100.3	1	1183.61	3.25	0	72.46	0	-0.16	0	0	11.48	0	0	0	0	0	0	16.53	16.53
	Inverter	MV4-14	369176	4908507	2	0	0	89.1	89.1	1	332.49	3.25	0	61.44	0	0.4	0	0	4.35	0	0	0	0	0	0	22.87	22.87
	Inverter	MV3-3	367939	4907927	2	0	0	100.3	100.3	1	1215.21	3.25	0	72.69	0	-0.15	0	0	11.57	0	0	0	0	0	0	16.2	16.2
	Inverter	MV4-3	369229	4909397	2	0	0	100.3	100.3	1	1223.18	3.25	0	72.75	0	-0.14	0	0	11.59	0	0	0	0	0	0	16.11	16.11
	Inverter	MV4-1	369011	4909397	2	0	0	100.3	100.3	1	1224.6	3.25	0	72.76	0	-0.14	0	0	11.6	0	0	0	0	0	0	16.1	16.1
	Inverter	MV4-2	369272	4909397	2	0	0	100.3	100.3	1	1227.48	3.25	0	72.78	0	-0.14	0	0	11.6	0	0	0	0	0	0	16.07	16.07
	Inverter	MV3-7	367945	4907754	2	0	0	100.3	100.3	1	1256.69	3.25	0	72.98	0	-0.13	0	0	11.69	0	0	0	0	0	0	15.77	15.77
	Inverter	MV6-2	370085	4907339	2	0	0	100.3	100.3	1	1272.7	3.25	0	73.09	0	-0.12	0	0	11.73	0	0	0	0	0	0	15.61	15.61
	Inverter	MV5-3	370231	4908851	2	0	0	100.3	100.3	1	1292.11	3.25	0	73.23	0	-0.12	0	0	11.78	0	0	0	0	0	0	15.42	15.42
	Inverter	MV5-4	370324	4908707	2	0	0	100.3	100.3	1	1307.77	3.25	0	73.33	0	-0.11	0	0	11.83	0	0	0	0	0	0	15.26	15.26
	Inverter	MV3-13	367963	4907577	2	0	0	100.3	100.3	1	1310.89	3.25	0	73.35	0	-0.11	0	0	11.83	0	0	0	0	0	0	15.23	15.23
	Inverter	MV5-1	370020	4909142	2	0	0	100.3	100.3	1	1313.38	3.25	0	73.37	0	-0.11	0	0	11.84	0	0	0	0	0	0	15.21	15.21
	Inverter	MV6-3	370207	4907140	2	0	0	100.3	100.3	1	1497.23	3.25	0	74.51	0	-0.03	0	0	12.32	0	0	0	0	0	0	13.52	13.52
	Inverter	MV3-12	367668	4907594	2	0	0	100.3	100.3	1	1572.47	3.25	0	74.93	0	-0.01	0	0	12.5	0	0	0	0	0	0	12.89	12.89
	Inverter	MV3-18	367752	4907412	2	0	0	100.3	100.3	1	1574.85	3.25	0	74.94	0	-0.01	0	0	12.51	0	0	0	0	0	0	12.87	12.87
	Inverter	MV4-13	369051	4908605	2	0	0	89.1	89.1	1	433.89	3.25	0	63.75	0	0.48	0	0	4.89	0	0	0	0	0	0	19.94	19.94
	Inverter	MV3-2	368671	4907928	2	0	0	89.1	89.1	1	520.92	3.25	0	65.34	0	0.54	0	0	5.21	0	0	0	0	0	0	17.97	17.97
	Inverter	MV6-1	370235	4907364	2	0	0	97.3	97.3	1	1374.06	3.25	0	73.76	0	-0.08	0	0	12	0	0	0	0	0	0	11.63	11.63
	Fixed Reactor Bank 1	FRB1	369378	4908755	6	0	0	89.8	89.8	1	628.83	5.25	0	66.97	0	-0.91	0	0	1.73	0	0	0	0	0	0	21.99	21.99
	Fixed Reactor Bank 2	FRB2	369464	4908755	6	0	0	89.8	89.8	1	667.7	5.25	0	67.49	0	-0.93	0	0	1.81	0	0	0	0	0	0	21.4	21.4
	Inverter	MV4-12	369043	4908803	2	0	0	89.1	89.1	1	630.76	3.25	0	67	0	0.59	0	0	5.53	0	0	0	0	0	0	15.94	15.94
	Inverter	MV3-4	368502	4907925	2	0	0	89.1	89.1	1	675.2	3.25	0	67.59	0	0.6	0	0	5.64	0	0	0	0	0	0	15.22	15.22
	Inverter	MV3-5	368340	4907843	2	0	0	89.1	89.1	1	856.26	3.25	0	69.65	0	0.65	0	0	6.04	0	0	0	0	0	0	12.72	12.72
	Inverter	MV5-6	369982	4908507	2	0	0	89.1	89.1	1	915.18	3.25	0	70.23	0	0.67	0	0	6.15	0	0	0	0	0	0	12.01	12.01
	Inverter	MV3-1	368156	4907976	2	0	0	89.1	89.1	1	992.77	3.25	0	70.94	0	0.68	0	0	6.3	0	0	0	0	0	0	11.14	11.14
	Inverter	MV2-3	365820	4906641	2	0	0	100.3	100.3	1	3647.63	3.25	0	82.24	0	0.47	0	0	16.48	0	0	0	0	0	0	1.12	1.12
	Inverter	MV2-4	365586	4906624	2	0	0	100.3	100.3	1	3867.9	3.25	0	82.75	0	0.51	0	0	16.84	0	0	0	0	0	0	0.22	0.22
	Inverter	MV3-22	368656	4907142	2	0	0	89.1	89.1	1	1138.46	3.25	0	72.13	0	0.71	0	0	6.57	0	0	0	0	0	0	9.65	9.65
	Inverter	MV1-1	364715	4906166	2	0	0	100.3	100.3	1	4850.02	3.25	0	84.71	0	0.63	0	0	18.36	0	0	0	0	0	0	-3.39	-3.39
	Inverter	MV1-2	364753	4906063	2	0	0	100.3	100.3	1	4859.41	3.25	0	84.73	0	0.63	0	0	18.37	0	0	0	0	0	0	-3.42	-3.42

Inverter	MV1-4	364815	4905918	2	0	0	100.3	100.3	1	4869.25	3.25	0	84.75	0	0.63	0	0	18.39	0	0	0	0	0	0	-3.45	-3.45
Inverter	MV1-12	365038	4905386	2	0	0	100.3	100.3	1	4952.11	3.25	0	84.9	0	0.64	0	0	18.51	0	0	0	0	0	0	-3.73	-3.73
Inverter	MV1-15	365315	4904994	2	0	0	100.3	100.3	1	4967.58	3.25	0	84.92	0	0.64	0	0	18.53	0	0	0	0	0	0	-3.78	-3.78
Inverter	MV1-5	364671	4905892	2	0	0	100.3	100.3	1	5009.06	3.25	0	85	0	0.64	0	0	18.59	0	0	0	0	0	0	-3.92	-3.92
Inverter	MV1-8	364788	4905647	2	0	0	100.3	100.3	1	5024.1	3.25	0	85.02	0	0.64	0	0	18.62	0	0	0	0	0	0	-3.97	-3.97
Inverter	MV2-1	365842	4906816	2	0	0	97.3	97.3	1	3557.08	3.25	0	82.02	0	0.46	0	0	16.33	0	0	0	0	0	0	-1.5	-1.5
Inverter	MV1-6	364477	4905835	2	0	0	100.3	100.3	1	5207.83	3.25	0	85.33	0	0.66	0	0	18.88	0	0	0	0	0	0	-4.56	-4.56
Inverter	MV1-9	364561	4905646	2	0	0	100.3	100.3	1	5221.93	3.25	0	85.36	0	0.66	0	0	18.9	0	0	0	0	0	0	-4.61	-4.61
Inverter	MV1-11	364655	4905414	2	0	0	100.3	100.3	1	5258.08	3.25	0	85.42	0	0.66	0	0	18.96	0	0	0	0	0	0	-4.72	-4.72
SubstationTransformer	W_ST	369711.17	4906112.3	2.5	0	0	92	92	1	2146.47	3.5	0	77.63	0	-0.13	0	0	4.61	0	0	0	0	0	0	9.86	9.86
Westbrook Inverter Enclosur	W_INV5	369719	4906574	2	0	0	89.1	89.1	1	1709.42	3.25	0	75.66	0	0.84	0	0	7.56	0	0	0	0	0	0	5	5
Westbrook Inverter Enclosur	W_INV6	369875	4906578	2	0	0	89.1	89.1	1	1765.79	3.25	0	75.94	0	0.85	0	0	7.66	0	0	0	0	0	0	4.61	4.61
Westbrook Inverter Enclosur	W_INV2	369374	4906388	2	0	0	89.1	89.1	1	1806.83	3.25	0	76.14	0	0.86	0	0	7.73	0	0	0	0	0	0	4.33	4.33
Inverter	MV1-7	364925	4905782	2	0	0	97.3	97.3	1	4837.98	3.25	0	84.69	0	0.63	0	0	18.34	0	0	0	0	0	0	-6.35	-6.35
Westbrook Inverter Enclosur	W_INV7	369780	4906417	2	0	0	89.1	89.1	1	1877.83	3.25	0	76.47	0	0.88	0	0	7.84	0	0	0	0	0	0	3.86	3.86
Inverter	MV1-10	365004	4905564	2	0	0	97.3	97.3	1	4882.66	3.25	0	84.77	0	0.63	0	0	18.41	0	0	0	0	0	0	-6.5	-6.5
Inverter	MV1-14	365163	4905049	2	0	0	97.3	97.3	1	5050.93	3.25	0	85.07	0	0.65	0	0	18.65	0	0	0	0	0	0	-7.06	-7.06
Inverter	MV1-13	364731	4905241	2	0	0	97.3	97.3	1	5287.68	3.25	0	85.47	0	0.67	0	0	19	0	0	0	0	0	0	-7.82	-7.82
Westbrook Inverter Enclosur	W_INV3	369508	4906164	2	0	0	89.1	89.1	1	2049.54	3.25	0	77.23	0	0.92	0	0	8.13	0	0	0	0	0	0	2.78	2.78
Westbrook Inverter Enclosur	W_INV4	369673	4906164	2	0	0	89.1	89.1	1	2086.44	3.25	0	77.39	0	0.93	0	0	8.19	0	0	0	0	0	0	2.56	2.56
Westbrook Inverter Enclosur	W_INV1	369409	4906578	2	0	0	86.1	86.1	1	1624.49	3.25	0	75.21	0	0.82	0	0	7.42	0	0	0	0	0	0	2.6	2.6
Inverter	MV6-4	370250	4906966	2	0	0	86.1	86.1	1	1651.62	3.25	0	75.36	0	0.83	0	0	7.47	0	0	0	0	0	0	2.41	2.41
Inverter	MV2-2	365977	4906654	2	0	0	89.1	89.1	1	3500.2	3.25	0	81.88	0	1.27	0	0	10.36	0	0	0	0	0	0	-4.46	-4.46
Gardiner Substation	G_Sub	366586.3	4903349.9	2.5	0	0	90.8	90.8	1	5456.26	4.25	0	85.74	0	1.76	2.25	0.38	9.15	0	0	0	0	0	0	-8.12	-8.12
Inverter	MV1-3	364440	4906039	2	0	0	89.1	89.1	1	5152.93	3.25	0	85.24	0	1.68	0	0	12.67	0	0	0	0	0	0	-10.53	-10.53
Westbrook Inverter Transfor	W_INVTR1	369403	4906578	2	0	0	78.2	78.2	1	1623.46	3.25	0	75.21	0	-2.26	0	0	1.02	0	0	0	0	0	0	4.27	4.27
Inverters	G_Inv2	366676.9	4903239.1	2	0	0	87.7	87.7	1	5513.68	3.25	0	85.83	0	2.89	0	0	6.48	0	0	0	0	0	0	-7.54	-7.54
Inverters	G_Inv1	366526.4	4903225.8	2	0	0	87.7	87.7	1	5593.98	3.25	0	85.95	0	2.9	0	0	6.56	0	0	0	0	0	0	-7.75	-7.75
Inverters	G_Inv4	366732.8	4903105	2	0	0	87.7	87.7	1	5610.02	3.25	0	85.98	0	2.9	0	0	6.58	0	0	0	0	0	0	-7.79	-7.79
Westbrook Inverter Transfor	W_INVTR5	369725	4906574	2	0	0	77.3	77.3	1	1711.5	3.25	0	75.67	0	-2.29	0	0	1.06	0	0	0	0	0	0	2.9	2.9
Inverters	G_Inv3	366583.7	4903091.4	2	0	0	87.7	87.7	1	5687.44	3.25	0	86.1	0	2.9	0	0	6.66	0	0	0	0	0	0	-8	-8
Inverters	G_Inv6	366788.5	4902972	2	0	0	87.7	87.7	1	5707.51	3.25	0	86.13	0	2.9	0	0	6.68	0	0	0	0	0	0	-8.05	-8.05
Inverters	G_Inv5	366638.5	4902958.1	2	0	0	87.7	87.7	1	5783.16	3.25	0	86.24	0	2.91	0	0	6.76	0	0	0	0	0	0	-8.25	-8.25
Westbrook Inverter Transfor	W_INVTR6	369881	4906578	2	0	0	77.3	77.3	1	1768.34	3.25	0	75.95	0	-2.32	0	0	1.09	0	0	0	0	0	0	2.62	2.62
Inverters	G_Inv8	366844.5	4902838.5	2	0	0	87.7	87.7	1	5807.29	3.25	0	86.28	0	2.91	0	0	6.78	0	0	0	0	0	0	-8.31	-8.31
Inverters	G_Inv7	366694.6	4902824.7	2	0	0	87.7	87.7	1	5880.41	3.25	0	86.39	0	2.91	0	0	6.86	0	0	0	0	0	0	-8.5	-8.5
Inverters	G_Inv10	366900.7	4902704.8	2	0	0	87.7	87.7	1	5909.04	3.25	0	86.43	0	2.91	0	0	6.88	0	0	0	0	0	0	-8.57	-8.57
Westbrook Inverter Transfor	W_INVTR2	369368	4906388	2	0	0	77.3	77.3	1	1806.02	3.25	0	76.13	0	-2.33	0	0	1.11	0	0	0	0	0	0	2.43	2.43
Inverters	G_Inv9	366750.9	4902691.8	2	0	0	87.7	87.7	1	5979.05	3.25	0	86.53	0	2.92	0	0	6.96	0	0	0	0	0	0	-8.75	-8.75
Westbrook Inverter Transfor	W_INVTR7	369786	4906417	2	0	0	77.3	77.3	1	1879.92	3.25	0	76.48	0	-2.36	0	0	1.15	0	0	0	0	0	0	2.07	2.07
Westbrook Inverter Transfor	W_INVTR3	369514	4906164	2	0	0	77.3	77.3	1	2050.66	3.25	0	77.24	0	-2.42	0	0	1.23	0	0	0	0	0	0	1.3	1.3
Westbrook Inverter Transfor	W_INVTR4	369679	4906164	2	0	0	77.3	77.3	1	2088.01	3.25	0	77.39	0	-2.44	0	0	1.25	0	0	0	0	0	0	1.13	1.13
Inverter Transformer	MV6-1 T	370230	4907364	2	0	0	69.4	69.4	1	1370.04	3.25	0	73.73	0	1.91	0	0	4.28	0	0	0	0	0	0	-10.58	-10.58
Inverter Transformer	MV4-15 T	369170	4908481	2	0	0	56.1	56.1	1	305.91	3.25	0	60.71	0	-0.07	0	0	2.81	0	0	0	0	0	0	-7.39	-7.39
Inverter Transformer	MV4-14 T	369182	4908507	2	0	0	56.1	56.1	1	333.41	3.25	0	61.46	0	-0.09	0	0	2.94	0	0	0	0	0	0	-8.25	-8.25
Inverter Transformer	MV6-4 T	370244	4906966	2	0	0	69.4	69.4	1	1647.55	3.25	0	75.34	0	2.04	0	0	4.6	0	0	0	0	0	0	-12.62	-12.62
Inverter Transformer	MV4-13 T	369057	4908605	2	0	0	56.1	56.1	1	432.87	3.25	0	63.73	0	-0.12	0	0	3.33	0	0	0	0	0	0	-10.88	-10.88
Inverter Transformer	MV3-2 T	368677	4907928	2	0	0	56.1	56.1	1	515.66	3.25	0	65.25	0	-0.12	0	0	3.6	0	0	0	0	0	0	-12.67	-12.67
Inverter Transformer	MV4-12 T	369049	4908803	2	0	0	56.1	56.1	1	629.98	3.25	0	66.99	0	-0.1	0	0	3.94	0	0	0	0	0	0	-14.77	-14.77
Inverter Transformer	MV3-8 T	368685	4907712	2	0	0	56.1	56.1	1	642.97	3.25	0	67.16	0	-0.09	0	0	3.98	0	0	0	0	0	0	-14.99	-14.99
Inverter Transformer	MV3-4 T	368507	4907925	2	0	0	56.1	56.1	1	670.56	3.25	0	67.53	0	-0.09	0	0	4.05	0	0	0	0	0	0	-15.44	-15.44
Inverter Transformer	MV4-11 T	369269	4908855	2	0	0	56.1	56.1	1	691.53	3.25	0	67.8	0	-0.08	0	0	4.11	0	0	0	0	0	0	-15.77	-15.77
Inverter Transformer	MV4-10 T	369307	4908858	2	0	0	56.1	56.1	1	703.17	3.25	0	67.94	0	-0.08	0	0	4.14	0	0	0	0	0	0	-15.94	-15.94
Inverter Transformer	MV2-1 T	365836	4906816	2	0	0	69.4	69.4	1	3562.63	3.25	0	82.04	0	2.67	0	0	6.34	0	0	0	0	0	0	-21.7	-21.7
Inverter Transformer	MV3-9 T	368517	4907703	2	0	0	56.1	56.1	1	773.92	3.25	0	68.77	0	-0.06	0	0	4.33	0	0	0	0	0	0	-16.98	-16.98
Inverter Transformer	MV3-14 T	368678	4907498	2	0	0	56.1	56.1	1	815.42	3.25	0	69.23	0	-0.05	0	0	4.43	0	0	0	0	0	0	-17.56	-17.56
Inverter Transformer	MV4-7 T	369040	4909001	2	0	0	56.1	56.1	1	827.7	3.25	0	69.36	0	-0.04	0	0	4.47	0	0	0	0	0	0	-17.72	-17.72
Inverter Transformer	MV4-8 T	369262	4909001	2	0	0	56.1	56.1	1	833.84	3.25	0	69.42	0	-0.04	0	0	4.48	0	0	0	0	0	0	-17.8	-17.8
Inverter Transformer	MV4-9 T	369284	4909001	2	0	0	56.1	56.1	1	837.66	3.25	0	69.46	0	-0.04	0	0	4.49	0	0	0	0	0	0	-17.85	-17.85
Inverter Transformer	MV3-5 T	368335	4907843	2	0	0	56.1	56.1	1	860.86	3.25	0	69.7	0	-0.03	0	0	4.55	0	0	0	0	0	0	-18.16	-18.16
Inverter Transformer	MV5-6 T	369987	4908507	2	0	0	56.1	56.1	1	919.85	3.25	0	70.27	0	-0.01	0	0	4.7	0	0	0	0	0	0	-18.9	-18.9
Inverter Transformer	MV3-16 T	368509	4907475	2	0	0	56.1	56.1	1	936.68	3.25	0	70.43	0	-0.01	0	0	4.74	0	0	0	0	0	0	-19.1	-19.1
Inverter Transformer	MV3-11 T	368340	4907662	2	0	0	56.1	56.1	1	941.92	3.25	0	70.48	0	-0.01	0	0	4.75	0	0	0	0	0	0	-19.16	-19.16
Inverter Transformer	MV3-20 T	368683	4907317	2	0	0	56.1	56.1	1	969.2	3.25	0	70.73	0	0	0	0	4.82	0	0	0	0	0	0	-19.49	-19.49
Inverter Transformer	MV3-1 T	368150	4907976	2	0	0	56.1	56.1	1	998.65	3.25	0	70.99	0	0.01	0	0	4.89	0	0	0	0	0	0	-19.83	-19.83
Inverter Transformer	MV4-6 T	369249	4909192	2	0	0	56.1	56.1	1	1021.2	3.25	0	71.18	0	0.02	0	0	4.94	0	0	0	0	0	0	-20.08	-20.08
Inverter Transformer	MV4-4 T	369033	4909199	2	0	0	56.1	56.1	1	1025.41	3.25	0	71.22	0	0.02	0	0	4.95	0	0	0	0	0	0	-20.13	-20.13
Inverter Transformer	MV5-5 T	370021	4908690	2	0	0	56.1	56.1	1	1029.37	3.25	0	71.25	0	0.02	0	0	4.96	0	0	0	0	0	0	-20.17	-20.17
Inverter Transformer	MV3-6 T	368156	4907834	2	0	0	56.1	56.1	1	1031.08	3.25	0	71.27	0	0.02	0	0	4.96	0	0	0	0	0	0	-20.19	-20.19
Inverter Transformer	MV4-5 T	369283	4909199	2	0	0	56.1	56.1	1	1032.7	3.25	0	71.28	0	0.02	0	0	4.97	0	0	0	0	0	0	-20.21	-20.21
Inverter Transformer	MV3-15 T	368351	4907477	2	0	0	56.1	56.1	1	1046.49	3.25	0	71.39	0	0.03	0	0	5	0	0	0	0	0	0	-20.36	-20.36
Inverter Transformer	MV1-7 T	364919	4905782	2	0	0	69.4	69.4	1	4843.19	3.25	0	84.7	0	2.98	0	0	7.28	0	0	0	0	0	0	-25.61	-25.61
Inverter Transformer	MV1-10 T	365010	4905564	2	0	0	69.4	69.4	1	4877.59	3.25	0	84.76	0	2.99	0	0	7.3	0	0	0	0	0	0	-25.7	-25.7
Inverter Transformer	MV3-10 T	368162	4907669	2	0	0	56.1	56.1	1	1091.9	3.25	0	71.76	0	0.04	0	0	5.11	0	0	0	0	0	0	-20.86	-20.86

	Inverter Transformer	MV1-14 T	365157	4905049	2	0	0	69.4	69.4	1	5055.64	3.25	0	85.08	0	3.02	0	0	7.42	0	0	0	0	0	0	-26.17	-26.17
	Inverter Transformer	MV5-2 T	370011	4908853	2	0	0	56.1	56.1	1	1111.45	3.25	0	71.92	0	0.05	0	0	5.15	0	0	0	0	0	0	-21.06	-21.06
	Inverter Transformer	MV3-22 T	368661	4907142	2	0	0	56.1	56.1	1	1136.39	3.25	0	72.11	0	0.06	0	0	5.21	0	0	0	0	0	0	-21.32	-21.32
	Inverter Transformer	MV3-19 T	368352	4907347	2	0	0	56.1	56.1	1	1136.99	3.25	0	72.12	0	0.06	0	0	5.21	0	0	0	0	0	0	-21.33	-21.33
	Inverter Transformer	MV1-13 T	364725	4905241	2	0	0	69.4	69.4	1	5292.67	3.25	0	85.47	0	3.07	0	0	7.57	0	0	0	0	0	0	-26.77	-26.77
	Inverter Transformer	MV3-21 T	368484	4907206	2	0	0	56.1	56.1	1	1165.99	3.25	0	72.33	0	0.07	0	0	5.28	0	0	0	0	0	0	-21.62	-21.62
	Inverter Transformer	MV3-17 T	368183	4907472	2	0	0	56.1	56.1	1	1179.6	3.25	0	72.43	0	0.08	0	0	5.31	0	0	0	0	0	0	-21.76	-21.76
	Inverter Transformer	MV3-3 T	367944	4907927	2	0	0	56.1	56.1	1	1210.32	3.25	0	72.66	0	0.09	0	0	5.38	0	0	0	0	0	0	-22.07	-22.07
	Inverter Transformer	MV4-3 T	369234	4909397	2	0	0	56.1	56.1	1	1223.6	3.25	0	72.75	0	0.09	0	0	5.41	0	0	0	0	0	0	-22.2	-22.2
	Inverter Transformer	MV4-1 T	369017	4909397	2	0	0	56.1	56.1	1	1224.05	3.25	0	72.76	0	0.09	0	0	5.41	0	0	0	0	0	0	-22.2	-22.2
	Inverter Transformer	MV4-2 T	369267	4909397	2	0	0	56.1	56.1	1	1226.9	3.25	0	72.78	0	0.09	0	0	5.42	0	0	0	0	0	0	-22.23	-22.23
	Inverter Transformer	MV3-7 T	367951	4907754	2	0	0	56.1	56.1	1	1251.04	3.25	0	72.95	0	0.1	0	0	5.47	0	0	0	0	0	0	-22.46	-22.46
	Inverter Transformer	MV6-2 T	370091	4907339	2	0	0	56.1	56.1	1	1277.22	3.25	0	73.13	0	0.11	0	0	5.53	0	0	0	0	0	0	-22.71	-22.71
	Inverter Transformer	MV5-3 T	370237	4908851	2	0	0	56.1	56.1	1	1297.23	3.25	0	73.26	0	0.12	0	0	5.57	0	0	0	0	0	0	-22.9	-22.9
	Inverter Transformer	MV5-1 T	370015	4909142	2	0	0	56.1	56.1	1	1309.99	3.25	0	73.35	0	0.12	0	0	5.6	0	0	0	0	0	0	-23.01	-23.01
	Inverter Transformer	MV5-4 T	370330	4908707	2	0	0	56.1	56.1	1	1313.26	3.25	0	73.37	0	0.13	0	0	5.61	0	0	0	0	0	0	-23.04	-23.04
	Inverter Transformer	MV3-13 T	367958	4907577	2	0	0	56.1	56.1	1	1315.34	3.25	0	73.38	0	0.13	0	0	5.61	0	0	0	0	0	0	-23.06	-23.06
	Inverter Transformer	MV6-3 T	370202	4907140	2	0	0	56.1	56.1	1	1493.63	3.25	0	74.48	0	0.2	0	0	6	0	0	0	0	0	0	-24.63	-24.63
	Inverter Transformer	MV3-12 T	367674	4907594	2	0	0	56.1	56.1	1	1566.9	3.25	0	74.9	0	0.23	0	0	6.16	0	0	0	0	0	0	-25.23	-25.23
	Inverter Transformer	MV3-18 T	367757	4907412	2	0	0	56.1	56.1	1	1570.48	3.25	0	74.92	0	0.23	0	0	6.17	0	0	0	0	0	0	-25.26	-25.26
	Line Reactor	NGR	369421	4908787.5	5	0	0	45.4	45.4	1	676.27	5.25	0	67.6	0	3.37	1.54	0.11	0.28	0	0	0	0	0	0	-27.44	-27.44
	Inverter Transformer	MV2-2 T	365982	4906654	2	0	0	56.1	56.1	1	3495.7	3.25	0	81.87	0	1.04	0	0	9.68	0	0	0	0	0	0	-36.53	-36.53
	Inverter Transformer	MV2-3 T	365814	4906641	2	0	0	56.1	56.1	1	3653.08	3.25	0	82.25	0	1.1	0	0	9.93	0	0	0	0	0	0	-37.23	-37.23
	Inverter Transformer	MV2-4 T	365590	4906628	2	0	0	56.1	56.1	1	3862.64	3.25	0	82.74	0	1.19	0	0	10.25	0	0	0	0	0	0	-38.12	-38.12
	Inverter Transformer	MV1-1 T	364721	4906166	2	0	0	56.1	56.1	1	4844.56	3.25	0	84.71	0	1.57	0	0	11.65	0	0	0	0	0	0	-41.86	-41.86
	Inverter Transformer	MV1-2 T	364759	4906063	2	0	0	56.1	56.1	1	4854.01	3.25	0	84.72	0	1.57	0	0	11.66	0	0	0	0	0	0	-41.9	-41.9
	Inverter Transformer	MV1-4 T	364821	4905918	2	0	0	56.1	56.1	1	4863.93	3.25	0	84.74	0	1.58	0	0	11.67	0	0	0	0	0	0	-41.93	-41.93
	Inverter Transformer	MV1-12 T	365044	4905386	2	0	0	56.1	56.1	1	4947.15	3.25	0	84.89	0	1.61	0	0	11.78	0	0	0	0	0	0	-42.22	-42.22
	Inverter Transformer	MV1-15 T	365309	4904994	2	0	0	56.1	56.1	1	4972.18	3.25	0	84.93	0	1.62	0	0	11.82	0	0	0	0	0	0	-42.31	-42.31
	Inverter Transformer	MV1-5 T	364676	4905892	2	0	0	56.1	56.1	1	5004.61	3.25	0	84.99	0	1.63	0	0	11.86	0	0	0	0	0	0	-42.42	-42.42
	Inverter Transformer	MV1-8 T	364782	4905647	2	0	0	56.1	56.1	1	5029.28	3.25	0	85.03	0	1.64	0	0	11.89	0	0	0	0	0	0	-42.5	-42.5
	Inverter Transformer	MV1-3 T	364435	4906039	2	0	0	56.1	56.1	1	5157.48	3.25	0	85.25	0	1.68	0	0	12.06	0	0	0	0	0	0	-42.93	-42.93
	Inverter Transformer	MV1-6 T	364482	4905835	2	0	0	56.1	56.1	1	5203.36	3.25	0	85.33	0	1.7	0	0	12.12	0	0	0	0	0	0	-43.08	-43.08
	Inverter Transformer	MV1-9 T	364555	4905646	2	0	0	56.1	56.1	1	5227.18	3.25	0	85.37	0	1.71	0	0	12.15	0	0	0	0	0	0	-43.16	-43.16
	Inverter Transformer	MV1-11 T	364649	4905414	2	0	0	56.1	56.1	1	5263.19	3.25	0	85.42	0	1.72	0	0	12.2	0	0	0	0	0	0	-43.28	-43.28
Limit. Valu	0	0																								
Level D/N:	39.517	39.517																								

Receiver: Existing Noise Receptor
ID: S-R38
X: 369162
Y: 4908181
Z: 4.5
Ground: 0

ISO	Description	ID	X	Y	Z	Ground	ReflOrd	LxT	LxN	L/A	Dist.	hm	Freq	Adiv	K0b	Agr	Abar	z	Aatm	Afol	Ahous	Cmet	CmetN	Dc	RL	LtotT	LtotN
	Sol_Luce Substation	S_Substation	369426	4908792	3.5	0	0	112.1	112.1	1	665.6	5.24	0	67.46	0	0.03	6.26	0.33	1.81	0	0	0	0	0	0	36.52	36.52
	Inverter	MV3-8	368680	4907712	2	0	0	100.3	100.3	1	672.53	3.25	0	67.55	0	-0.43	0	0	9.6	0	0	0	0	0	0	23.59	23.59
	Inverter	MV4-11	369264	4908855	2	0	0	100.3	100.3	1	681.68	3.25	0	67.67	0	-0.42	0	0	9.65	0	0	0	0	0	0	23.42	23.42
	Inverter	MV4-10	369312	4908858	2	0	0	100.3	100.3	1	693.42	3.25	0	67.82	0	-0.42	0	0	9.71	0	0	0	0	0	0	23.2	23.2
	Inverter	MV3-9	368512	4907703	2	0	0	100.3	100.3	1	806.84	3.25	0	69.14	0	-0.35	0	0	10.21	0	0	0	0	0	0	21.32	21.32
	Inverter	MV4-8	369256	4909001	2	0	0	100.3	100.3	1	825.37	3.25	0	69.33	0	-0.34	0	0	10.28	0	0	0	0	0	0	21.03	21.03
	Inverter	MV4-9	369289	4909001	2	0	0	100.3	100.3	1	829.78	3.25	0	69.38	0	-0.33	0	0	10.3	0	0	0	0	0	0	20.97	20.97
	Inverter	MV4-7	369035	4909001	2	0	0	100.3	100.3	1	829.78	3.25	0	69.38	0	-0.33	0	0	10.3	0	0	0	0	0	0	20.97	20.97
	Inverter	MV3-14	368684	4907498	2	0	0	100.3	100.3	1	833.65	3.25	0	69.42	0	-0.33	0	0	10.32	0	0	0	0	0	0	20.91	20.91
	DSTATCOM - 10 MVAR #2	DSAT2	369403	4908757	2.5	0	0	96.6	96.6	1	624.39	3.5	0	66.91	0	2.43	0	0	0.81	0	0	0	0	0	0	26.48	26.48
	Inverter	MV3-16	368514	4907475	2	0	0	100.3	100.3	1	958.3	3.25	0	70.63	0	-0.27	0	0	10.77	0	0	0	0	0	0	19.18	19.18
	Inverter	MV3-11	368346	4907662	2	0	0	100.3	100.3	1	967.07	3.25	0	70.71	0	-0.26	0	0	10.8	0	0	0	0	0	0	19.06	19.06
	DSTATCOM - 10 MVAR #1	DSAT1	369437	4908757	2.5	0	0	96.6	96.6	1	638.28	3.5	0	67.1	0	2.46	0	0	0.82	0	0	0	0	0	0	26.25	26.25
	Inverter	MV3-20	368689	4907317	2	0	0	100.3	100.3	1	985	3.25	0	70.87	0	-0.25	0	0	10.86	0	0	0	0	0	0	18.84	18.84
	Inverter	MV5-5	370015	4908690	2	0	0	100.3	100.3	1	993.33	3.25	0	70.94	0	-0.25	0	0	10.89	0	0	0	0	0	0	18.73	18.73
	Inverter	MV4-6	369243	4909192	2	0	0	100.3	100.3	1	1014.24	3.25	0	71.12	0	-0.24	0	0	10.96	0	0	0	0	0	0	18.47	18.47
	Inverter	MV4-5	369289	4909199	2	0	0	100.3	100.3	1	1025.89	3.25	0	71.22	0	-0.23	0	0	11	0	0	0	0	0	0	18.33	18.33
	Inverter	MV4-4	369027	4909199	2	0	0	100.3	100.3	1	1026.92	3.25	0	71.23	0	-0.23	0	0	11	0	0	0	0	0	0	18.32	18.32
	Inverter	MV3-6	368162	4907834	2	0	0	100.3	100.3	1	1058.5	3.25	0	71.49	0	-0.22	0	0	11.1	0	0	0	0	0	0	17.94	17.94
	Inverter	MV3-15	368357	4907477	2	0	0	100.3	100.3	1	1069.41	3.25	0	71.58	0	-0.21	0	0	11.13	0	0	0	0	0	0	17.81	17.81
	Inverter	MV5-2	370006	4908853	2	0	0	100.3	100.3	1	1078.85	3.25	0	71.66	0	-0.21	0	0	11.16	0	0	0	0	0	0	17.7	17.7
	Inverter	MV4-15	369176	4908481	2	0	0	89.1	89.1	1	300.34	3.25	0	60.55	0	0.37	0	0	4.13	0	0	0	0	0	0	24	24
	Inverter	MV3-10	368167	4907669	2	0	0	100.3	100.3	1	1119.01	3.25	0	71.98	0	-0.19	0	0	11.29	0	0	0	0	0	0	17.24	17.24
	Inverter	MV3-19	368357	4907347	2	0	0	100.3	100.3	1	1159.13	3.25	0	72.28	0	-0.17	0	0	11.41	0	0	0	0	0	0	16.79	16.79
	Inverter	MV3-21	368478	4907206	2	0	0	100.3	100.3	1	1191	3.25	0	72.52	0	-0.16	0	0	11.5	0	0	0	0	0	0	16.45	16.45
	Inverter	MV4-14	369176	4908507	2	0	0	89.1	89.1	1	326.31	3.25	0	61.27	0	0.39	0	0	4.31	0	0	0	0	0	0	23.08	23.08
	Inverter	MV3-17	368178	4907472	2	0	0	100.3	100.3	1	1212.82	3.25	0	72.68	0	-0.15	0	0	11.56	0	0	0	0	0	0	16.22	16.22
	Inverter	MV4-3	369229	4909397	2	0	0	100.3	100.3	1	1217.85	3.25	0	72.71	0	-0.15	0	0	11.58	0	0	0	0	0	0	16.17	16.17

Inverter	MV4-2	369272	4909397	2	0	0	100.3	100.3	1	1220.97	3.25	0	72.73	0	-0.15	0	0	11.59	0	0	0	0	0	0	16.14	16.14
Inverter	MV4-1	369011	4909397	2	0	0	100.3	100.3	1	1225.34	3.25	0	72.77	0	-0.14	0	0	11.6	0	0	0	0	0	0	16.09	16.09
Inverter	MV3-3	367939	4907927	2	0	0	100.3	100.3	1	1249.1	3.25	0	72.93	0	-0.13	0	0	11.66	0	0	0	0	0	0	15.85	15.85
Inverter	MV6-2	370085	4907339	2	0	0	100.3	100.3	1	1249.36	3.25	0	72.93	0	-0.13	0	0	11.67	0	0	0	0	0	0	15.85	15.85
Inverter	MV5-3	370231	4908851	2	0	0	100.3	100.3	1	1261.61	3.25	0	73.02	0	-0.13	0	0	11.7	0	0	0	0	0	0	15.72	15.72
Inverter	MV5-4	370324	4908707	2	0	0	100.3	100.3	1	1275.51	3.25	0	73.11	0	-0.12	0	0	11.74	0	0	0	0	0	0	15.58	15.58
Inverter	MV5-1	370020	4909142	2	0	0	100.3	100.3	1	1288.29	3.25	0	73.2	0	-0.12	0	0	11.77	0	0	0	0	0	0	15.46	15.46
Inverter	MV3-7	367945	4907754	2	0	0	100.3	100.3	1	1289.74	3.25	0	73.21	0	-0.12	0	0	11.78	0	0	0	0	0	0	15.44	15.44
Inverter	MV3-13	367963	4907577	2	0	0	100.3	100.3	1	1342.54	3.25	0	73.56	0	-0.09	0	0	11.92	0	0	0	0	0	0	14.93	14.93
Inverter	MV6-3	370207	4907140	2	0	0	100.3	100.3	1	1475.03	3.25	0	74.38	0	-0.04	0	0	12.26	0	0	0	0	0	0	13.72	13.72
Inverter	MV4-13	369051	4908605	2	0	0	89.1	89.1	1	438.3	3.25	0	63.84	0	0.48	0	0	4.91	0	0	0	0	0	0	19.83	19.83
Inverter	MV3-12	367668	4907594	2	0	0	100.3	100.3	1	1605.18	3.25	0	75.11	0	0	0	0	12.58	0	0	0	0	0	0	12.62	12.62
Inverter	MV3-18	367752	4907412	2	0	0	100.3	100.3	1	1606.07	3.25	0	75.12	0	0	0	0	12.58	0	0	0	0	0	0	12.61	12.61
Inverter	MV6-1	370235	4907364	2	0	0	97.3	97.3	1	1348.64	3.25	0	73.6	0	-0.09	0	0	11.94	0	0	0	0	0	0	11.87	11.87
Inverter	MV3-2	368671	4907928	2	0	0	89.1	89.1	1	552.36	3.25	0	65.84	0	0.55	0	0	5.31	0	0	0	0	0	0	17.35	17.35
Fixed Reactor Bank 1	FRB1	369378	4908755	6	0	0	89.8	89.8	1	613.3	5.25	0	66.75	0	-0.9	0	0	1.69	0	0	0	0	0	0	22.23	22.23
Fixed Reactor Bank 2	FRB2	369464	4908755	6	0	0	89.8	89.8	1	648.6	5.25	0	67.24	0	-0.92	0	0	1.77	0	0	0	0	0	0	21.68	21.68
Inverter	MV4-12	369043	4908803	2	0	0	89.1	89.1	1	633.29	3.25	0	67.03	0	0.59	0	0	5.54	0	0	0	0	0	0	15.9	15.9
Inverter	MV3-4	368502	4907925	2	0	0	89.1	89.1	1	707.91	3.25	0	68	0	0.61	0	0	5.72	0	0	0	0	0	0	14.72	14.72
Inverter	MV5-6	369982	4908507	2	0	0	89.1	89.1	1	882.43	3.25	0	69.91	0	0.66	0	0	6.09	0	0	0	0	0	0	12.4	12.4
Inverter	MV3-5	368340	4907843	2	0	0	89.1	89.1	1	888.78	3.25	0	69.98	0	0.66	0	0	6.1	0	0	0	0	0	0	12.32	12.32
Inverter	MV2-3	365820	4906641	2	0	0	100.3	100.3	1	3679.75	3.25	0	82.32	0	0.48	0	0	16.53	0	0	0	0	0	0	0.99	0.99
Inverter	MV3-1	368156	4907976	2	0	0	89.1	89.1	1	1026.68	3.25	0	71.23	0	0.69	0	0	6.37	0	0	0	0	0	0	10.77	10.77
Inverter	MV2-4	365586	4906624	2	0	0	100.3	100.3	1	3900.26	3.25	0	82.82	0	0.51	0	0	16.89	0	0	0	0	0	0	0.09	0.09
Inverter	MV3-22	368656	4907142	2	0	0	89.1	89.1	1	1155.67	3.25	0	72.26	0	0.72	0	0	6.6	0	0	0	0	0	0	9.48	9.48
Inverter	MV1-1	364715	4906166	2	0	0	100.3	100.3	1	4882.22	3.25	0	84.77	0	0.63	0	0	18.41	0	0	0	0	0	0	-3.5	-3.5
Inverter	MV1-2	364753	4906063	2	0	0	100.3	100.3	1	4891.34	3.25	0	84.79	0	0.63	0	0	18.42	0	0	0	0	0	0	-3.53	-3.53
Inverter	MV1-4	364815	4905918	2	0	0	100.3	100.3	1	4900.77	3.25	0	84.81	0	0.63	0	0	18.43	0	0	0	0	0	0	-3.56	-3.56
Inverter	MV1-12	365038	4905386	2	0	0	100.3	100.3	1	4981.91	3.25	0	84.95	0	0.64	0	0	18.55	0	0	0	0	0	0	-3.83	-3.83
Inverter	MV1-15	365315	4904994	2	0	0	100.3	100.3	1	4995.64	3.25	0	84.97	0	0.64	0	0	18.57	0	0	0	0	0	0	-3.88	-3.88
Inverter	MV1-5	364671	4905892	2	0	0	100.3	100.3	1	5040.7	3.25	0	85.05	0	0.65	0	0	18.64	0	0	0	0	0	0	-4.02	-4.02
Inverter	MV1-8	364788	4905647	2	0	0	100.3	100.3	1	5055	3.25	0	85.07	0	0.65	0	0	18.66	0	0	0	0	0	0	-4.07	-4.07
Inverter	MV2-1	365842	4906816	2	0	0	97.3	97.3	1	3589.66	3.25	0	82.1	0	0.47	0	0	16.38	0	0	0	0	0	0	-1.64	-1.64
Inverter	MV1-6	364477	4905835	2	0	0	100.3	100.3	1	5239.56	3.25	0	85.39	0	0.66	0	0	18.93	0	0	0	0	0	0	-4.66	-4.66
Inverter	MV1-9	364561	4905646	2	0	0	100.3	100.3	1	5253.14	3.25	0	85.41	0	0.66	0	0	18.95	0	0	0	0	0	0	-4.71	-4.71
Inverter	MV1-11	364655	4905414	2	0	0	100.3	100.3	1	5288.61	3.25	0	85.47	0	0.67	0	0	19	0	0	0	0	0	0	-4.82	-4.82
SubstationTransformer	W_ST	369711.17	4906112.3	2.5	0	0	92	92	1	2140.38	3.5	0	77.61	0	-0.13	0	0	4.6	0	0	0	0	0	0	9.9	9.9
Westbrook Inverter Enclosur	W_INV5	369719	4906574	2	0	0	89.1	89.1	1	1700.8	3.25	0	75.61	0	0.84	0	0	7.55	0	0	0	0	0	0	5.06	5.06
Westbrook Inverter Enclosur	W_INV6	369875	4906578	2	0	0	89.1	89.1	1	1754.42	3.25	0	75.88	0	0.85	0	0	7.64	0	0	0	0	0	0	4.69	4.69
Westbrook Inverter Enclosur	W_INV2	369374	4906388	2	0	0	89.1	89.1	1	1805.49	3.25	0	76.13	0	0.86	0	0	7.72	0	0	0	0	0	0	4.34	4.34
Westbrook Inverter Enclosur	W_INV7	369780	4906417	2	0	0	89.1	89.1	1	1869.12	3.25	0	76.43	0	0.88	0	0	7.83	0	0	0	0	0	0	3.92	3.92
Inverter	MV1-7	364925	4905782	2	0	0	97.3	97.3	1	4869.02	3.25	0	84.75	0	0.63	0	0	18.39	0	0	0	0	0	0	-6.45	-6.45
Inverter	MV1-10	365004	4905564	2	0	0	97.3	97.3	1	4913.01	3.25	0	84.83	0	0.63	0	0	18.45	0	0	0	0	0	0	-6.6	-6.6
Inverter	MV1-14	365163	4905049	2	0	0	97.3	97.3	1	5079.51	3.25	0	85.12	0	0.65	0	0	18.7	0	0	0	0	0	0	-7.15	-7.15
Westbrook Inverter Enclosur	W_INV3	369508	4906164	2	0	0	89.1	89.1	1	2046.46	3.25	0	77.22	0	0.92	0	0	8.12	0	0	0	0	0	0	2.8	2.8
Inverter	MV1-13	364731	4905241	2	0	0	97.3	97.3	1	5317.65	3.25	0	85.51	0	0.67	0	0	19.04	0	0	0	0	0	0	-7.91	-7.91
Westbrook Inverter Enclosur	W_INV4	369673	4906164	2	0	0	89.1	89.1	1	2080.72	3.25	0	77.36	0	0.93	0	0	8.18	0	0	0	0	0	0	2.59	2.59
Westbrook Inverter Enclosur	W_INV1	369409	4906578	2	0	0	86.1	86.1	1	1621.92	3.25	0	75.2	0	0.82	0	0	7.42	0	0	0	0	0	0	2.62	2.62
Inverter	MV6-4	370250	4906966	2	0	0	86.1	86.1	1	1630.94	3.25	0	75.25	0	0.82	0	0	7.43	0	0	0	0	0	0	2.56	2.56
Inverter	MV2-2	365977	4906654	2	0	0	89.1	89.1	1	3532.13	3.25	0	81.96	0	1.28	0	0	10.41	0	0	0	0	0	0	-4.59	-4.59
Gardiner Substation	G_Sub	366586.3	4903349.9	2.5	0	0	90.8	90.8	1	5474.83	4.25	0	85.77	0	1.76	2.24	0.38	9.17	0	0	0	0	0	0	-8.17	-8.17
Inverter	MV1-3	364440	4906039	2	0	0	89.1	89.1	1	5185.12	3.25	0	85.3	0	1.69	0	0	12.71	0	0	0	0	0	0	-10.63	-10.63
Westbrook Inverter Transfor	W_INVTR1	369403	4906578	2	0	0	78.2	78.2	1	1621.02	3.25	0	75.2	0	-2.26	0	0	1.02	0	0	0	0	0	0	4.28	4.28
Inverters	G_Inv2	366676.9	4903239.1	2	0	0	87.7	87.7	1	5531.56	3.25	0	85.86	0	2.9	0	0	6.5	0	0	0	0	0	0	-7.59	-7.59
Westbrook Inverter Transfor	W_INVTR5	369725	4906574	2	0	0	77.3	77.3	1	1702.77	3.25	0	75.62	0	-2.29	0	0	1.06	0	0	0	0	0	0	2.95	2.95
Inverters	G_Inv1	366526.4	4903225.8	2	0	0	87.7	87.7	1	5612.52	3.25	0	85.98	0	2.9	0	0	6.58	0	0	0	0	0	0	-7.8	-7.8
Inverters	G_Inv4	366732.8	4903105	2	0	0	87.7	87.7	1	5627.33	3.25	0	86.01	0	2.9	0	0	6.59	0	0	0	0	0	0	-7.84	-7.84
Inverters	G_Inv3	366583.7	4903091.4	2	0	0	87.7	87.7	1	5705.41	3.25	0	86.13	0	2.9	0	0	6.68	0	0	0	0	0	0	-8.04	-8.04
Inverters	G_Inv6	366788.5	4902972	2	0	0	87.7	87.7	1	5724.26	3.25	0	86.15	0	2.9	0	0	6.69	0	0	0	0	0	0	-8.09	-8.09
Westbrook Inverter Transfor	W_INVTR6	369881	4906578	2	0	0	77.3	77.3	1	1756.87	3.25	0	75.89	0	-2.31	0	0	1.09	0	0	0	0	0	0	2.67	2.67
Inverters	G_Inv5	366638.5	4902958.1	2	0	0	87.7	87.7	1	5800.58	3.25	0	86.27	0	2.91	0	0	6.77	0	0	0	0	0	0	-8.29	-8.29
Inverters	G_Inv8	366844.5	4902838.5	2	0	0	87.7	87.7	1	5823.5	3.25	0	86.3	0	2.91	0	0	6.8	0	0	0	0	0	0	-8.35	-8.35
Inverters	G_Inv7	366694.6	4902824.7	2	0	0	87.7	87.7	1	5897.29	3.25	0	86.41	0	2.91	0	0	6.87	0	0	0	0	0	0	-8.54	-8.54
Westbrook Inverter Transfor	W_INVTR2	369368	4906388	2	0	0	77.3	77.3	1	1804.8	3.25	0	76.13	0	-2.33	0	0	1.11	0	0	0	0	0	0	2.43	2.43
Inverters	G_Inv10	366900.7	4902704.8	2	0	0	87.7	87.7	1	5924.72	3.25	0	86.45	0	2.91	0	0	6.9	0	0	0	0	0	0	-8.61	-8.61
Inverters	G_Inv9	366750.9	4902691.8	2	0	0	87.7	87.7	1	5995.39	3.25	0	86.56	0	2.92	0	0	6.97	0	0	0	0	0	0	-8.79	-8.79
Westbrook Inverter Transfor	W_INVTR7	369786	4906417	2	0	0	77.3	77.3	1	1871.12	3.25	0	76.44	0	-2.36	0	0	1.14	0	0	0	0	0	0	2.11	2.11
Westbrook Inverter Transfor	W_INVTR3	369514	4906164	2	0	0	77.3	77.3	1	2047.49	3.25	0	77.22	0	-2.42	0	0	1.23	0	0	0	0	0	0	1.31	1.31
Westbrook Inverter Transfor	W_INVTR4	369679	4906164	2	0	0	77.3	77.3	1	2082.21	3.25	0	77.37	0	-2.43	0	0	1.25	0	0	0	0	0	0	1.16	1.16
Inverter Transformer	MV6-1 T	370230	4907364	2	0	0	69.4	69.4	1	1344.66	3.25	0	73.57	0	1.9	0	0	4.25	0	0	0	0	0	0	-10.38	-10.38
Inverter Transformer	MV4-15 T	369170	4908481	2	0	0	56.1	56.1	1	300.12	3.25	0	60.55	0	-0.07	0	0	2.78	0	0	0	0	0	0	-7.2	-7.2
Inverter Transformer	MV4-14 T	369182	4908507	2	0	0	56.1	56.1	1	326.62	3.25	0	61.28	0	-0.09	0	0	2.91	0	0	0	0	0	0	-8.04	-8.04
Inverter Transformer	MV6-4 T	370244	4906966	2	0	0	69.4	69.4	1	1626.95	3.25	0	75.23	0	2.03	0	0	4.58	0	0	0	0	0	0	-12.48	-12.48
Inverter Transformer	MV4-13 T	369057	4908605	2	0	0	56.1	56.1	1	436.81	3.25	0	63.81	0	-0.12	0	0	3.34	0	0	0	0	0	0	-10.97	-10.97

Inverter Transformer	MV3-2 T	368677	4907928	2	0	0	56.1	56.1	1	547.03	3.25	0	65.76	0	-0.11	0	0	3.7	0	0	0	0	0	0	-13.29	-13.29
Inverter Transformer	MV4-12 T	369049	4908803	2	0	0	56.1	56.1	1	632.19	3.25	0	67.02	0	-0.1	0	0	3.95	0	0	0	0	0	0	-14.81	-14.81
Inverter Transformer	MV3-8 T	368685	4907712	2	0	0	56.1	56.1	1	668.95	3.25	0	67.51	0	-0.09	0	0	4.05	0	0	0	0	0	0	-15.41	-15.41
Inverter Transformer	MV4-11 T	369269	4908855	2	0	0	56.1	56.1	1	682.45	3.25	0	67.68	0	-0.09	0	0	4.09	0	0	0	0	0	0	-15.62	-15.62
Inverter Transformer	MV4-10 T	369307	4908858	2	0	0	56.1	56.1	1	692.36	3.25	0	67.81	0	-0.08	0	0	4.11	0	0	0	0	0	0	-15.78	-15.78
Inverter Transformer	MV3-4 T	368507	4907925	2	0	0	56.1	56.1	1	703.25	3.25	0	67.94	0	-0.08	0	0	4.14	0	0	0	0	0	0	-15.95	-15.95
Inverter Transformer	MV2-1 T	365836	4906816	2	0	0	69.4	69.4	1	3595.21	3.25	0	82.11	0	2.68	0	0	6.37	0	0	0	0	0	0	-21.81	-21.81
Inverter Transformer	MV3-9 T	368517	4907703	2	0	0	56.1	56.1	1	802.82	3.25	0	69.09	0	-0.05	0	0	4.4	0	0	0	0	0	0	-17.38	-17.38
Inverter Transformer	MV4-8 T	369262	4909001	2	0	0	56.1	56.1	1	826.08	3.25	0	69.34	0	-0.04	0	0	4.46	0	0	0	0	0	0	-17.7	-17.7
Inverter Transformer	MV4-7 T	369040	4909001	2	0	0	56.1	56.1	1	829.03	3.25	0	69.37	0	-0.04	0	0	4.47	0	0	0	0	0	0	-17.74	-17.74
Inverter Transformer	MV4-9 T	369284	4909001	2	0	0	56.1	56.1	1	829.03	3.25	0	69.37	0	-0.04	0	0	4.47	0	0	0	0	0	0	-17.74	-17.74
Inverter Transformer	MV3-14 T	368678	4907498	2	0	0	56.1	56.1	1	837.11	3.25	0	69.46	0	-0.04	0	0	4.49	0	0	0	0	0	0	-17.85	-17.85
Inverter Transformer	MV5-6 T	369987	4908507	2	0	0	56.1	56.1	1	887.08	3.25	0	69.96	0	-0.03	0	0	4.61	0	0	0	0	0	0	-18.49	-18.49
Inverter Transformer	MV3-5 T	368335	4907843	2	0	0	56.1	56.1	1	893.41	3.25	0	70.02	0	-0.02	0	0	4.63	0	0	0	0	0	0	-18.57	-18.57
Inverter Transformer	MV3-16 T	368509	4907475	2	0	0	56.1	56.1	1	961.69	3.25	0	70.66	0	0	0	0	4.8	0	0	0	0	0	0	-19.4	-19.4
Inverter Transformer	MV3-11 T	368340	4907662	2	0	0	56.1	56.1	1	972.14	3.25	0	70.75	0	0	0	0	4.82	0	0	0	0	0	0	-19.52	-19.52
Inverter Transformer	MV3-20 T	368683	4907317	2	0	0	56.1	56.1	1	987.9	3.25	0	70.89	0	0.01	0	0	4.86	0	0	0	0	0	0	-19.7	-19.7
Inverter Transformer	MV5-5 T	370021	4908690	2	0	0	56.1	56.1	1	998.48	3.25	0	70.99	0	0.01	0	0	4.89	0	0	0	0	0	0	-19.83	-19.83
Inverter Transformer	MV4-6 T	369249	4909192	2	0	0	56.1	56.1	1	1014.74	3.25	0	71.13	0	0.02	0	0	4.92	0	0	0	0	0	0	-20.01	-20.01
Inverter Transformer	MV4-5 T	369283	4909199	2	0	0	56.1	56.1	1	1025.17	3.25	0	71.22	0	0.02	0	0	4.95	0	0	0	0	0	0	-20.13	-20.13
Inverter Transformer	MV4-4 T	369033	4909199	2	0	0	56.1	56.1	1	1026.14	3.25	0	71.22	0	0.02	0	0	4.95	0	0	0	0	0	0	-20.14	-20.14
Inverter Transformer	MV3-1 T	368150	4907976	2	0	0	56.1	56.1	1	1032.56	3.25	0	71.28	0	0.02	0	0	4.97	0	0	0	0	0	0	-20.21	-20.21
Inverter Transformer	MV1-7 T	364919	4905782	2	0	0	69.4	69.4	1	4874.24	3.25	0	84.76	0	2.99	0	0	7.3	0	0	0	0	0	0	-25.69	-25.69
Inverter Transformer	MV1-10 T	365010	4905564	2	0	0	69.4	69.4	1	4907.93	3.25	0	84.82	0	2.99	0	0	7.32	0	0	0	0	0	0	-25.78	-25.78
Inverter Transformer	MV3-6 T	368156	4907834	2	0	0	56.1	56.1	1	1064.17	3.25	0	71.54	0	0.03	0	0	5.04	0	0	0	0	0	0	-20.56	-20.56
Inverter Transformer	MV3-15 T	368351	4907477	2	0	0	56.1	56.1	1	1073.94	3.25	0	71.62	0	0.04	0	0	5.06	0	0	0	0	0	0	-20.66	-20.66
Inverter Transformer	MV5-2 T	370011	4908853	2	0	0	56.1	56.1	1	1082.77	3.25	0	71.69	0	0.04	0	0	5.08	0	0	0	0	0	0	-20.76	-20.76
Inverter Transformer	MV1-14 T	365157	4905049	2	0	0	69.4	69.4	1	5084.24	3.25	0	85.12	0	3.03	0	0	7.44	0	0	0	0	0	0	-26.24	-26.24
Inverter Transformer	MV3-10 T	368162	4907669	2	0	0	56.1	56.1	1	1123.45	3.25	0	72.01	0	0.06	0	0	5.18	0	0	0	0	0	0	-21.19	-21.19
Inverter Transformer	MV1-13 T	364725	4905241	2	0	0	69.4	69.4	1	5322.65	3.25	0	85.52	0	3.07	0	0	7.59	0	0	0	0	0	0	-26.84	-26.84
Inverter Transformer	MV3-22 T	368661	4907142	2	0	0	56.1	56.1	1	1153.49	3.25	0	72.24	0	0.07	0	0	5.25	0	0	0	0	0	0	-21.5	-21.5
Inverter Transformer	MV3-19 T	368352	4907347	2	0	0	56.1	56.1	1	1162.61	3.25	0	72.31	0	0.07	0	0	5.27	0	0	0	0	0	0	-21.59	-21.59
Inverter Transformer	MV3-21 T	368484	4907206	2	0	0	56.1	56.1	1	1187.57	3.25	0	72.49	0	0.08	0	0	5.33	0	0	0	0	0	0	-21.84	-21.84
Inverter Transformer	MV3-17 T	368183	4907472	2	0	0	56.1	56.1	1	1208.77	3.25	0	72.65	0	0.09	0	0	5.38	0	0	0	0	0	0	-22.05	-22.05
Inverter Transformer	MV4-3 T	369234	4909397	2	0	0	56.1	56.1	1	1218.13	3.25	0	72.71	0	0.09	0	0	5.4	0	0	0	0	0	0	-22.14	-22.14
Inverter Transformer	MV4-2 T	369267	4909397	2	0	0	56.1	56.1	1	1220.53	3.25	0	72.73	0	0.09	0	0	5.4	0	0	0	0	0	0	-22.17	-22.17
Inverter Transformer	MV4-1 T	369017	4909397	2	0	0	56.1	56.1	1	1224.62	3.25	0	72.76	0	0.09	0	0	5.41	0	0	0	0	0	0	-22.21	-22.21
Inverter Transformer	MV3-3 T	367944	4907927	2	0	0	56.1	56.1	1	1244.21	3.25	0	72.9	0	0.1	0	0	5.46	0	0	0	0	0	0	-22.4	-22.4
Inverter Transformer	MV6-2 T	370091	4907339	2	0	0	56.1	56.1	1	1253.8	3.25	0	72.96	0	0.1	0	0	5.48	0	0	0	0	0	0	-22.49	-22.49
Inverter Transformer	MV5-3 T	370237	4908851	2	0	0	56.1	56.1	1	1266.7	3.25	0	73.05	0	0.11	0	0	5.51	0	0	0	0	0	0	-22.61	-22.61
Inverter Transformer	MV5-4 T	370330	4908707	2	0	0	56.1	56.1	1	1280.98	3.25	0	73.15	0	0.11	0	0	5.54	0	0	0	0	0	0	-22.74	-22.74
Inverter Transformer	MV3-7 T	367951	4907754	2	0	0	56.1	56.1	1	1284.08	3.25	0	73.17	0	0.11	0	0	5.55	0	0	0	0	0	0	-22.77	-22.77
Inverter Transformer	MV5-1 T	370015	4909142	2	0	0	56.1	56.1	1	1284.97	3.25	0	73.18	0	0.12	0	0	5.55	0	0	0	0	0	0	-22.78	-22.78
Inverter Transformer	MV3-13 T	367958	4907577	2	0	0	56.1	56.1	1	1347.01	3.25	0	73.59	0	0.14	0	0	5.69	0	0	0	0	0	0	-23.35	-23.35
Inverter Transformer	MV6-3 T	370202	4907140	2	0	0	56.1	56.1	1	1471.49	3.25	0	74.36	0	0.19	0	0	5.96	0	0	0	0	0	0	-24.44	-24.44
Inverter Transformer	MV3-12 T	367674	4907594	2	0	0	56.1	56.1	1	1599.6	3.25	0	75.08	0	0.24	0	0	6.23	0	0	0	0	0	0	-25.49	-25.49
Inverter Transformer	MV3-18 T	367757	4907412	2	0	0	56.1	56.1	1	1601.68	3.25	0	75.09	0	0.24	0	0	6.23	0	0	0	0	0	0	-25.51	-25.51
Line Reactor	NGR	369421	4908787.5	5	0	0	45.4	45.4	1	659.49	5.25	0	67.38	0	3.36	1.57	0.11	0.27	0	0	0	0	0	0	-27.24	-27.24
Inverter Transformer	MV2-2 T	365982	4906654	2	0	0	56.1	56.1	1	3527.62	3.25	0	81.95	0	1.05	0	0	9.73	0	0	0	0	0	0	-36.67	-36.67
Inverter Transformer	MV2-3 T	365814	4906641	2	0	0	56.1	56.1	1	3685.2	3.25	0	82.33	0	1.12	0	0	9.98	0	0	0	0	0	0	-37.36	-37.36
Inverter Transformer	MV2-4 T	365590	4906628	2	0	0	56.1	56.1	1	3895	3.25	0	82.81	0	1.2	0	0	10.3	0	0	0	0	0	0	-38.25	-38.25
Inverter Transformer	MV1-1 T	364721	4906166	2	0	0	56.1	56.1	1	4876.75	3.25	0	84.76	0	1.58	0	0	11.69	0	0	0	0	0	0	-41.98	-41.98
Inverter Transformer	MV1-2 T	364759	4906063	2	0	0	56.1	56.1	1	4885.93	3.25	0	84.78	0	1.58	0	0	11.7	0	0	0	0	0	0	-42.01	-42.01
Inverter Transformer	MV1-4 T	364821	4905918	2	0	0	56.1	56.1	1	4895.45	3.25	0	84.8	0	1.59	0	0	11.72	0	0	0	0	0	0	-42.04	-42.04
Inverter Transformer	MV1-12 T	365044	4905386	2	0	0	56.1	56.1	1	4976.94	3.25	0	84.94	0	1.62	0	0	11.82	0	0	0	0	0	0	-42.32	-42.32
Inverter Transformer	MV1-15 T	365309	4904994	2	0	0	56.1	56.1	1	5000.26	3.25	0	84.98	0	1.63	0	0	11.85	0	0	0	0	0	0	-42.4	-42.4
Inverter Transformer	MV1-5 T	364676	4905892	2	0	0	56.1	56.1	1	5036.24	3.25	0	85.04	0	1.64	0	0	11.9	0	0	0	0	0	0	-42.52	-42.52
Inverter Transformer	MV1-8 T	364782	4905647	2	0	0	56.1	56.1	1	5060.19	3.25	0	85.08	0	1.65	0	0	11.93	0	0	0	0	0	0	-42.61	-42.61
Inverter Transformer	MV1-3 T	364435	4906039	2	0	0	56.1	56.1	1	5189.67	3.25	0	85.3	0	1.69	0	0	12.1	0	0	0	0	0	0	-43.04	-43.04
Inverter Transformer	MV1-6 T	364482	4905835	2	0	0	56.1	56.1	1	5235.09	3.25	0	85.38	0	1.71	0	0	12.16	0	0	0	0	0	0	-43.19	-43.19
Inverter Transformer	MV1-9 T	364555	4905646	2	0	0	56.1	56.1	1	5258.39	3.25	0	85.42	0	1.72	0	0	12.19	0	0	0	0	0	0	-43.27	-43.27
Inverter Transformer	MV1-11 T	364649	4905414	2	0	0	56.1	56.1	1	5293.72	3.25	0	85.48	0	1.73	0	0	12.24	0	0	0	0	0	0	-43.38	-43.38
Limit. Valu 0	0																								
Level D/N: 39.5793	39.5793																								

Receiver: Existing Noise Receptor
ID: S-R39
X: 369216
Y: 4908191
Z: 4.5
Ground: 0

ISO	Description	ID	X	Y	Z	Ground	ReflOrd	LxT	LxN	L/A	Dist.	hm	Freq	Adiv	K0b	Agr	Abar	z	Aatm	Afol	Ahous	Cmet	CmetN	Dc	RL	LtotT	LtotN
	Sol_Luce Substation	S_Substation	369426	4908792	3.5	0	0	112.1	112.1	1	636.63	5.24	0	67.08	0	0.04	6.48	0.33	1.75	0	0	0	0	0	0	36.73	36.73

Inverter	MV4-11	369264	4908855	2	0	0	100.3	100.3	1	665.74	3.25	0	67.47	0	-0.43	0	0	9.57	0	0	0	0	0	0	23.71	23.71
Inverter	MV4-10	369312	4908858	2	0	0	100.3	100.3	1	673.88	3.25	0	67.57	0	-0.43	0	0	9.61	0	0	0	0	0	0	23.56	23.56
Inverter	MV3-8	368680	4907712	2	0	0	100.3	100.3	1	718.85	3.25	0	68.13	0	-0.4	0	0	9.83	0	0	0	0	0	0	22.75	22.75
Inverter	MV4-8	369256	4909001	2	0	0	100.3	100.3	1	810.99	3.25	0	69.18	0	-0.35	0	0	10.23	0	0	0	0	0	0	21.25	21.25
Inverter	MV4-9	369289	4909001	2	0	0	100.3	100.3	1	813.29	3.25	0	69.2	0	-0.34	0	0	10.23	0	0	0	0	0	0	21.22	21.22
Inverter	MV4-7	369035	4909001	2	0	0	100.3	100.3	1	829.98	3.25	0	69.38	0	-0.33	0	0	10.3	0	0	0	0	0	0	20.96	20.96
Inverter	MV3-9	368512	4907703	2	0	0	100.3	100.3	1	856.6	3.25	0	69.66	0	-0.32	0	0	10.4	0	0	0	0	0	0	20.57	20.57
Inverter	MV3-14	368684	4907498	2	0	0	100.3	100.3	1	873.66	3.25	0	69.83	0	-0.31	0	0	10.47	0	0	0	0	0	0	20.33	20.33
DSTATCOM - 10 MVAR #2	DSAT2	369403	4908757	2.5	0	0	96.6	96.6	1	596.09	3.5	0	66.51	0	2.37	0	0	0.79	0	0	0	0	0	0	26.96	26.96
DSTATCOM - 10 MVAR #1	DSAT1	369437	4908757	2.5	0	0	96.6	96.6	1	607.62	3.5	0	66.67	0	2.4	0	0	0.8	0	0	0	0	0	0	26.76	26.76
Inverter	MV5-5	370015	4908690	2	0	0	100.3	100.3	1	942.02	3.25	0	70.48	0	-0.28	0	0	10.71	0	0	0	0	0	0	19.39	19.39
Inverter	MV4-6	369243	4909192	2	0	0	100.3	100.3	1	1001.37	3.25	0	71.01	0	-0.25	0	0	10.92	0	0	0	0	0	0	18.63	18.63
Inverter	MV3-16	368514	4907475	2	0	0	100.3	100.3	1	1002.73	3.25	0	71.02	0	-0.24	0	0	10.92	0	0	0	0	0	0	18.61	18.61
Inverter	MV4-5	369289	4909199	2	0	0	100.3	100.3	1	1010.64	3.25	0	71.09	0	-0.24	0	0	10.95	0	0	0	0	0	0	18.52	18.52
Inverter	MV3-11	368346	4907662	2	0	0	100.3	100.3	1	1018.21	3.25	0	71.16	0	-0.24	0	0	10.97	0	0	0	0	0	0	18.42	18.42
Inverter	MV3-20	368689	4907317	2	0	0	100.3	100.3	1	1020.59	3.25	0	71.18	0	-0.24	0	0	10.98	0	0	0	0	0	0	18.39	18.39
Inverter	MV4-4	369027	4909199	2	0	0	100.3	100.3	1	1025.57	3.25	0	71.22	0	-0.23	0	0	10.99	0	0	0	0	0	0	18.33	18.33
Inverter	MV5-2	370006	4908853	2	0	0	100.3	100.3	1	1030.7	3.25	0	71.26	0	-0.23	0	0	11.01	0	0	0	0	0	0	18.27	18.27
Inverter	MV4-15	369176	4908481	2	0	0	89.1	89.1	1	292.76	3.25	0	60.33	0	0.36	0	0	4.08	0	0	0	0	0	0	24.29	24.29
Inverter	MV3-6	368162	4907834	2	0	0	100.3	100.3	1	1112.82	3.25	0	71.93	0	-0.19	0	0	11.27	0	0	0	0	0	0	17.31	17.31
Inverter	MV3-15	368357	4907477	2	0	0	100.3	100.3	1	1117	3.25	0	71.96	0	-0.19	0	0	11.28	0	0	0	0	0	0	17.26	17.26
Inverter	MV4-14	369176	4908507	2	0	0	89.1	89.1	1	318.53	3.25	0	61.06	0	0.39	0	0	4.26	0	0	0	0	0	0	23.35	23.35
Inverter	MV3-10	368167	4907669	2	0	0	100.3	100.3	1	1171.7	3.25	0	72.38	0	-0.17	0	0	11.44	0	0	0	0	0	0	16.66	16.66
Inverter	MV3-19	368357	4907347	2	0	0	100.3	100.3	1	1204.25	3.25	0	72.61	0	-0.15	0	0	11.54	0	0	0	0	0	0	16.31	16.31
Inverter	MV4-3	369229	4909397	2	0	0	100.3	100.3	1	1206.07	3.25	0	72.63	0	-0.15	0	0	11.54	0	0	0	0	0	0	16.29	16.29
Inverter	MV4-2	369272	4909397	2	0	0	100.3	100.3	1	1207.3	3.25	0	72.64	0	-0.15	0	0	11.55	0	0	0	0	0	0	16.28	16.28
Inverter	MV5-3	370231	4908851	2	0	0	100.3	100.3	1	1210.72	3.25	0	72.66	0	-0.15	0	0	11.56	0	0	0	0	0	0	16.24	16.24
Inverter	MV6-2	370085	4907339	2	0	0	100.3	100.3	1	1216.99	3.25	0	72.71	0	-0.15	0	0	11.57	0	0	0	0	0	0	16.18	16.18
Inverter	MV5-4	370324	4908707	2	0	0	100.3	100.3	1	1222.26	3.25	0	72.74	0	-0.14	0	0	11.59	0	0	0	0	0	0	16.12	16.12
Inverter	MV4-1	369011	4909397	2	0	0	100.3	100.3	1	1223.3	3.25	0	72.75	0	-0.14	0	0	11.59	0	0	0	0	0	0	16.11	16.11
Inverter	MV3-21	368478	4907206	2	0	0	100.3	100.3	1	1230.8	3.25	0	72.8	0	-0.14	0	0	11.61	0	0	0	0	0	0	16.04	16.04
Inverter	MV5-1	370020	4909142	2	0	0	100.3	100.3	1	1245.32	3.25	0	72.91	0	-0.13	0	0	11.65	0	0	0	0	0	0	15.89	15.89
Inverter	MV3-17	368178	4907472	2	0	0	100.3	100.3	1	1262.7	3.25	0	73.03	0	-0.13	0	0	11.7	0	0	0	0	0	0	15.71	15.71
Inverter	MV3-3	367939	4907927	2	0	0	100.3	100.3	1	1304.01	3.25	0	73.31	0	-0.11	0	0	11.82	0	0	0	0	0	0	15.3	15.3
Inverter	MV3-7	367945	4907754	2	0	0	100.3	100.3	1	1344.03	3.25	0	73.57	0	-0.09	0	0	11.92	0	0	0	0	0	0	14.91	14.91
Inverter	MV3-13	367963	4907577	2	0	0	100.3	100.3	1	1395.35	3.25	0	73.89	0	-0.07	0	0	12.06	0	0	0	0	0	0	14.43	14.43
Inverter	MV6-3	370207	4907140	2	0	0	100.3	100.3	1	1444.54	3.25	0	74.19	0	-0.05	0	0	12.19	0	0	0	0	0	0	13.99	13.99
Inverter	MV4-13	369051	4908605	2	0	0	89.1	89.1	1	445.68	3.25	0	63.98	0	0.49	0	0	4.94	0	0	0	0	0	0	19.65	19.65
Inverter	MV3-18	367752	4907412	2	0	0	100.3	100.3	1	1658.36	3.25	0	75.39	0	0.02	0	0	12.71	0	0	0	0	0	0	12.19	12.19
Inverter	MV3-12	367668	4907594	2	0	0	100.3	100.3	1	1659.13	3.25	0	75.4	0	0.02	0	0	12.71	0	0	0	0	0	0	12.18	12.18
Inverter	MV6-1	370235	4907364	2	0	0	97.3	97.3	1	1312.36	3.25	0	73.36	0	-0.11	0	0	11.84	0	0	0	0	0	0	12.22	12.22
Fixed Reactor Bank 1	FRB1	369378	4908755	6	0	0	89.8	89.8	1	586.81	5.25	0	66.37	0	-0.88	0	0	1.63	0	0	0	0	0	0	22.66	22.66
Fixed Reactor Bank 2	FRB2	369464	4908755	6	0	0	89.8	89.8	1	616.12	5.25	0	66.79	0	-0.9	0	0	1.7	0	0	0	0	0	0	22.19	22.19
Inverter	MV3-2	368671	4907928	2	0	0	89.1	89.1	1	605.14	3.25	0	66.64	0	0.58	0	0	5.46	0	0	0	0	0	0	16.38	16.38
Inverter	MV4-12	369043	4908803	2	0	0	89.1	89.1	1	635.99	3.25	0	67.07	0	0.59	0	0	5.55	0	0	0	0	0	0	15.85	15.85
Inverter	MV3-4	368502	4907925	2	0	0	89.1	89.1	1	761.94	3.25	0	68.64	0	0.63	0	0	5.84	0	0	0	0	0	0	13.95	13.95
Inverter	MV5-6	369982	4908507	2	0	0	89.1	89.1	1	828.62	3.25	0	69.37	0	0.65	0	0	5.98	0	0	0	0	0	0	13.06	13.06
Inverter	MV3-5	368340	4907843	2	0	0	89.1	89.1	1	942.6	3.25	0	70.49	0	0.67	0	0	6.21	0	0	0	0	0	0	11.69	11.69
Inverter	MV2-3	365820	4906641	2	0	0	100.3	100.3	1	3733	3.25	0	82.44	0	0.49	0	0	16.62	0	0	0	0	0	0	0.77	0.77
Inverter	MV3-1	368156	4907976	2	0	0	89.1	89.1	1	1081.59	3.25	0	71.68	0	0.7	0	0	6.47	0	0	0	0	0	0	10.21	10.21
Inverter	MV2-4	365586	4906624	2	0	0	100.3	100.3	1	3953.78	3.25	0	82.94	0	0.52	0	0	16.97	0	0	0	0	0	0	-0.12	-0.12
Inverter	MV3-22	368656	4907142	2	0	0	89.1	89.1	1	1189.12	3.25	0	72.5	0	0.72	0	0	6.66	0	0	0	0	0	0	9.17	9.17
Inverter	MV1-1	364715	4906166	2	0	0	100.3	100.3	1	4935.55	3.25	0	84.87	0	0.64	0	0	18.49	0	0	0	0	0	0	-3.68	-3.68
Inverter	MV1-2	364753	4906063	2	0	0	100.3	100.3	1	4944.37	3.25	0	84.88	0	0.64	0	0	18.5	0	0	0	0	0	0	-3.71	-3.71
Inverter	MV1-4	364815	4905918	2	0	0	100.3	100.3	1	4953.32	3.25	0	84.9	0	0.64	0	0	18.51	0	0	0	0	0	0	-3.74	-3.74
Inverter	MV1-12	365038	4905386	2	0	0	100.3	100.3	1	5032.27	3.25	0	85.04	0	0.64	0	0	18.63	0	0	0	0	0	0	-4	-4
Inverter	MV1-15	365315	4904994	2	0	0	100.3	100.3	1	5043.67	3.25	0	85.05	0	0.65	0	0	18.64	0	0	0	0	0	0	-4.03	-4.03
Inverter	MV1-5	364671	4905892	2	0	0	100.3	100.3	1	5093.37	3.25	0	85.14	0	0.65	0	0	18.72	0	0	0	0	0	0	-4.2	-4.2
Inverter	MV1-8	364788	4905647	2	0	0	100.3	100.3	1	5106.77	3.25	0	85.16	0	0.65	0	0	18.74	0	0	0	0	0	0	-4.24	-4.24
Inverter	MV2-1	365842	4906816	2	0	0	97.3	97.3	1	3643.42	3.25	0	82.23	0	0.47	0	0	16.47	0	0	0	0	0	0	-1.86	-1.86
Inverter	MV1-6	364477	4905835	2	0	0	100.3	100.3	1	5292.34	3.25	0	85.47	0	0.67	0	0	19	0	0	0	0	0	0	-4.83	-4.83
Inverter	MV1-9	364561	4905646	2	0	0	100.3	100.3	1	5305.29	3.25	0	85.49	0	0.67	0	0	19.02	0	0	0	0	0	0	-4.87	-4.87
Inverter	MV1-11	364655	4905414	2	0	0	100.3	100.3	1	5339.89	3.25	0	85.55	0	0.67	0	0	19.07	0	0	0	0	0	0	-4.98	-4.98
SubstationTransformer	W_ST	369711.17	4906112.3	2.5	0	0	92	92	1	2136.89	3.5	0	77.6	0	-0.13	0	0	4.6	0	0	0	0	0	0	9.92	9.92
Westbrook Inverter Enclosur	W_INV5	369719	4906574	2	0	0	89.1	89.1	1	1693.43	3.25	0	75.58	0	0.84	0	0	7.54	0	0	0	0	0	0	5.11	5.11
Westbrook Inverter Enclosur	W_INV6	369875	4906578	2	0	0	89.1	89.1	1	1742.43	3.25	0	75.82	0	0.85	0	0	7.62	0	0	0	0	0	0	4.77	4.77
Westbrook Inverter Enclosur	W_INV2	369374	4906388	2	0	0	89.1	89.1	1	1809.91	3.25	0	76.15	0	0.86	0	0	7.73	0	0	0	0	0	0	4.31	4.31
Westbrook Inverter Enclosur	W_INV7	369780	4906417	2	0	0	89.1	89.1	1	1861.5	3.25	0	76.4	0	0.87	0	0	7.82	0	0	0	0	0	0	3.97	3.97
Inverter	MV1-7	364925	4905782	2	0	0	97.3	97.3	1	4920.97	3.25	0	84.84	0	0.63	0	0	18.46	0	0	0	0	0	0	-6.63	-6.63
Inverter	MV1-10	365004	4905564	2	0	0	97.3	97.3	1	4964.08	3.25	0	84.92	0	0.64	0	0	18.53	0	0	0	0	0	0	-6.77	-6.77
Inverter	MV1-14	365163	4905049	2	0	0	97.3	97.3	1	5128.25	3.25	0	85.2	0	0.65	0	0	18.77	0	0	0	0	0	0	-7.31	-7.31
Westbrook Inverter Enclosur	W_INV3	369508	4906164	2	0	0	89.1	89.1	1	2047.93	3.25	0	77.23	0	0.92	0	0	8.12	0	0	0	0	0	0	2.79	2.79
Inverter	MV1-13	364731	4905241	2	0	0	97.3	97.3	1	5368.21	3.25	0	85.6	0	0.67	0	0	19.11	0	0	0	0	0	0	-8.07	-8.07
Westbrook Inverter Enclosur	W_INV4	369673	4906164	2	0	0	89.1	89.1	1	2077.88	3.25	0	77.35	0	0.93	0	0	8.17	0	0	0	0	0	0	2.61	2.61

Inverter	MV6-4	370250	4906966	2	0	0	86.1	86.1	1	1603.06	3.25	0	75.1	0	0.82	0	0	7.38	0	0	0	0	0	0	2.76	2.76
Westbrook Inverter Enclosur	W_INV1	369409	4906578	2	0	0	86.1	86.1	1	1624.51	3.25	0	75.21	0	0.82	0	0	7.42	0	0	0	0	0	0	2.6	2.6
Inverter	MV2-2	365977	4906654	2	0	0	89.1	89.1	1	3585.18	3.25	0	82.09	0	1.29	0	0	10.49	0	0	0	0	0	0	-4.81	-4.81
Gardiner Substation	G_Sub	366586.3	4903349.9	2.5	0	0	90.8	90.8	1	5509.23	4.25	0	85.82	0	1.77	2.24	0.38	9.21	0	0	0	0	0	0	-8.26	-8.26
Inverter	MV1-3	364440	4906039	2	0	0	89.1	89.1	1	5238.44	3.25	0	85.38	0	1.7	0	0	12.78	0	0	0	0	0	0	-10.81	-10.81
Westbrook Inverter Transfor	W_INVTR1	369403	4906578	2	0	0	78.2	78.2	1	1623.81	3.25	0	75.21	0	-2.26	0	0	1.02	0	0	0	0	0	0	4.27	4.27
Westbrook Inverter Transfor	W_INVTR5	369725	4906574	2	0	0	77.3	77.3	1	1695.22	3.25	0	75.58	0	-2.29	0	0	1.05	0	0	0	0	0	0	2.99	2.99
Inverters	G_Inv2	366676.9	4903239.1	2	0	0	87.7	87.7	1	5564.92	3.25	0	85.91	0	2.9	0	0	6.53	0	0	0	0	0	0	-7.68	-7.68
Inverters	G_Inv1	366526.4	4903225.8	2	0	0	87.7	87.7	1	5646.87	3.25	0	86.04	0	2.9	0	0	6.61	0	0	0	0	0	0	-7.89	-7.89
Inverters	G_Inv4	366732.8	4903105	2	0	0	87.7	87.7	1	5659.83	3.25	0	86.06	0	2.9	0	0	6.63	0	0	0	0	0	0	-7.93	-7.93
Westbrook Inverter Transfor	W_INVTR6	369881	4906578	2	0	0	77.3	77.3	1	1744.71	3.25	0	75.83	0	-2.31	0	0	1.08	0	0	0	0	0	0	2.73	2.73
Inverters	G_Inv3	366583.7	4903091.4	2	0	0	87.7	87.7	1	5738.9	3.25	0	86.18	0	2.91	0	0	6.71	0	0	0	0	0	0	-8.13	-8.13
Inverters	G_Inv6	366788.5	4902972	2	0	0	87.7	87.7	1	5755.93	3.25	0	86.2	0	2.91	0	0	6.73	0	0	0	0	0	0	-8.18	-8.18
Inverters	G_Inv5	366638.5	4902958.1	2	0	0	87.7	87.7	1	5833.25	3.25	0	86.32	0	2.91	0	0	6.81	0	0	0	0	0	0	-8.37	-8.37
Inverters	G_Inv8	366844.5	4902838.5	2	0	0	87.7	87.7	1	5854.34	3.25	0	86.35	0	2.91	0	0	6.83	0	0	0	0	0	0	-8.43	-8.43
Inverters	G_Inv7	366694.6	4902824.7	2	0	0	87.7	87.7	1	5929.13	3.25	0	86.46	0	2.91	0	0	6.91	0	0	0	0	0	0	-8.62	-8.62
Westbrook Inverter Transfor	W_INVTR2	369368	4906388	2	0	0	77.3	77.3	1	1809.4	3.25	0	76.15	0	-2.33	0	0	1.11	0	0	0	0	0	0	2.41	2.41
Inverters	G_Inv10	366900.7	4902704.8	2	0	0	87.7	87.7	1	5954.75	3.25	0	86.5	0	2.92	0	0	6.93	0	0	0	0	0	0	-8.68	-8.68
Inverters	G_Inv9	366750.9	4902691.8	2	0	0	87.7	87.7	1	6026.44	3.25	0	86.6	0	2.92	0	0	7.01	0	0	0	0	0	0	-8.86	-8.86
Westbrook Inverter Transfor	W_INVTR7	369786	4906417	2	0	0	77.3	77.3	1	1863.33	3.25	0	76.41	0	-2.35	0	0	1.14	0	0	0	0	0	0	2.15	2.15
Westbrook Inverter Transfor	W_INVTR3	369514	4906164	2	0	0	77.3	77.3	1	2048.79	3.25	0	77.23	0	-2.42	0	0	1.23	0	0	0	0	0	0	1.3	1.3
Westbrook Inverter Transfor	W_INVTR4	369679	4906164	2	0	0	77.3	77.3	1	2079.21	3.25	0	77.36	0	-2.43	0	0	1.24	0	0	0	0	0	0	1.17	1.17
Inverter Transformer	MV6-1 T	370230	4907364	2	0	0	69.4	69.4	1	1308.48	3.25	0	73.34	0	1.88	0	0	4.21	0	0	0	0	0	0	-10.08	-10.08
Inverter Transformer	MV4-15 T	369170	4908481	2	0	0	56.1	56.1	1	293.64	3.25	0	60.36	0	-0.06	0	0	2.75	0	0	0	0	0	0	-6.99	-6.99
Inverter Transformer	MV4-14 T	369182	4908507	2	0	0	56.1	56.1	1	317.83	3.25	0	61.04	0	-0.08	0	0	2.87	0	0	0	0	0	0	-7.77	-7.77
Inverter Transformer	MV6-4 T	370244	4906966	2	0	0	69.4	69.4	1	1599.19	3.25	0	75.08	0	2.02	0	0	4.55	0	0	0	0	0	0	-12.29	-12.29
Inverter Transformer	MV4-13 T	369057	4908605	2	0	0	56.1	56.1	1	443.49	3.25	0	63.94	0	-0.12	0	0	3.36	0	0	0	0	0	0	-11.12	-11.12
Inverter Transformer	MV3-2 T	368677	4907928	2	0	0	56.1	56.1	1	599.75	3.25	0	66.56	0	-0.1	0	0	3.85	0	0	0	0	0	0	-14.25	-14.25
Inverter Transformer	MV4-12 T	369049	4908803	2	0	0	56.1	56.1	1	634.38	3.25	0	67.05	0	-0.1	0	0	3.95	0	0	0	0	0	0	-14.85	-14.85
Inverter Transformer	MV4-11 T	369269	4908855	2	0	0	56.1	56.1	1	666.12	3.25	0	67.47	0	-0.09	0	0	4.04	0	0	0	0	0	0	-15.36	-15.36
Inverter Transformer	MV4-10 T	369307	4908858	2	0	0	56.1	56.1	1	673.18	3.25	0	67.56	0	-0.09	0	0	4.06	0	0	0	0	0	0	-15.48	-15.48
Inverter Transformer	MV3-8 T	368685	4907712	2	0	0	56.1	56.1	1	715.13	3.25	0	68.09	0	-0.08	0	0	4.17	0	0	0	0	0	0	-16.13	-16.13
Inverter Transformer	MV3-4 T	368507	4907925	2	0	0	56.1	56.1	1	757.26	3.25	0	68.58	0	-0.07	0	0	4.28	0	0	0	0	0	0	-16.75	-16.75
Inverter Transformer	MV2-1 T	365836	4906816	2	0	0	69.4	69.4	1	3648.98	3.25	0	82.24	0	2.69	0	0	6.41	0	0	0	0	0	0	-22	-22
Inverter Transformer	MV4-8 T	369262	4909001	2	0	0	56.1	56.1	1	811.31	3.25	0	69.18	0	-0.05	0	0	4.42	0	0	0	0	0	0	-17.5	-17.5
Inverter Transformer	MV4-9 T	369284	4909001	2	0	0	56.1	56.1	1	812.85	3.25	0	69.2	0	-0.05	0	0	4.43	0	0	0	0	0	0	-17.52	-17.52
Inverter Transformer	MV4-7 T	369040	4909001	2	0	0	56.1	56.1	1	828.9	3.25	0	69.37	0	-0.04	0	0	4.47	0	0	0	0	0	0	-17.74	-17.74
Inverter Transformer	MV5-6 T	369987	4908507	2	0	0	56.1	56.1	1	833.25	3.25	0	69.42	0	-0.04	0	0	4.48	0	0	0	0	0	0	-17.79	-17.79
Inverter Transformer	MV3-9 T	368517	4907703	2	0	0	56.1	56.1	1	852.5	3.25	0	69.61	0	-0.04	0	0	4.53	0	0	0	0	0	0	-18.05	-18.05
Inverter Transformer	MV3-14 T	368678	4907498	2	0	0	56.1	56.1	1	877.33	3.25	0	69.86	0	-0.03	0	0	4.59	0	0	0	0	0	0	-18.37	-18.37
Inverter Transformer	MV5-5 T	370021	4908690	2	0	0	56.1	56.1	1	947.12	3.25	0	70.53	0	-0.01	0	0	4.76	0	0	0	0	0	0	-19.23	-19.23
Inverter Transformer	MV3-5 T	368335	4907843	2	0	0	56.1	56.1	1	947.24	3.25	0	70.53	0	-0.01	0	0	4.76	0	0	0	0	0	0	-19.23	-19.23
Inverter Transformer	MV4-6 T	369249	4909192	2	0	0	56.1	56.1	1	1001.55	3.25	0	71.01	0	0.01	0	0	4.89	0	0	0	0	0	0	-19.86	-19.86
Inverter Transformer	MV3-16 T	368509	4907475	2	0	0	56.1	56.1	1	1006.24	3.25	0	71.05	0	0.01	0	0	4.9	0	0	0	0	0	0	-19.91	-19.91
Inverter Transformer	MV4-5 T	369283	4909199	2	0	0	56.1	56.1	1	1010.23	3.25	0	71.09	0	0.02	0	0	4.91	0	0	0	0	0	0	-19.96	-19.96
Inverter Transformer	MV3-11 T	368340	4907662	2	0	0	56.1	56.1	1	1023.34	3.25	0	71.2	0	0.02	0	0	4.94	0	0	0	0	0	0	-20.11	-20.11
Inverter Transformer	MV3-20 T	368683	4907317	2	0	0	56.1	56.1	1	1023.7	3.25	0	71.2	0	0.02	0	0	4.95	0	0	0	0	0	0	-20.11	-20.11
Inverter Transformer	MV4-4 T	369033	4909199	2	0	0	56.1	56.1	1	1024.48	3.25	0	71.21	0	0.02	0	0	4.95	0	0	0	0	0	0	-20.12	-20.12
Inverter Transformer	MV5-2 T	370011	4908853	2	0	0	56.1	56.1	1	1034.54	3.25	0	71.29	0	0.02	0	0	4.97	0	0	0	0	0	0	-20.23	-20.23
Inverter Transformer	MV1-7 T	364919	4905782	2	0	0	69.4	69.4	1	4926.21	3.25	0	84.85	0	3	0	0	7.33	0	0	0	0	0	0	-25.83	-25.83
Inverter Transformer	MV1-10 T	365010	4905564	2	0	0	69.4	69.4	1	4958.99	3.25	0	84.91	0	3	0	0	7.35	0	0	0	0	0	0	-25.92	-25.92
Inverter Transformer	MV3-1 T	368150	4907976	2	0	0	56.1	56.1	1	1087.47	3.25	0	71.73	0	0.04	0	0	5.1	0	0	0	0	0	0	-20.81	-20.81
Inverter Transformer	MV1-14 T	365157	4905049	2	0	0	69.4	69.4	1	5133	3.25	0	85.21	0	3.04	0	0	7.47	0	0	0	0	0	0	-26.37	-26.37
Inverter Transformer	MV3-6 T	368156	4907834	2	0	0	56.1	56.1	1	1118.51	3.25	0	71.97	0	0.05	0	0	5.17	0	0	0	0	0	0	-21.14	-21.14
Inverter Transformer	MV3-15 T	368351	4907477	2	0	0	56.1	56.1	1	1121.62	3.25	0	72	0	0.05	0	0	5.18	0	0	0	0	0	0	-21.17	-21.17
Inverter Transformer	MV1-13 T	364725	4905241	2	0	0	69.4	69.4	1	5373.23	3.25	0	85.6	0	3.08	0	0	7.63	0	0	0	0	0	0	-26.96	-26.96
Inverter Transformer	MV3-10 T	368162	4907669	2	0	0	56.1	56.1	1	1176.18	3.25	0	72.41	0	0.07	0	0	5.3	0	0	0	0	0	0	-21.73	-21.73
Inverter Transformer	MV3-22 T	368661	4907142	2	0	0	56.1	56.1	1	1186.77	3.25	0	72.49	0	0.08	0	0	5.33	0	0	0	0	0	0	-21.83	-21.83
Inverter Transformer	MV4-3 T	369234	4909397	2	0	0	56.1	56.1	1	1206.14	3.25	0	72.63	0	0.09	0	0	5.37	0	0	0	0	0	0	-22.02	-22.02
Inverter Transformer	MV4-2 T	369267	4909397	2	0	0	56.1	56.1	1	1207.08	3.25	0	72.63	0	0.09	0	0	5.37	0	0	0	0	0	0	-22.03	-22.03
Inverter Transformer	MV3-19 T	368352	4907347	2	0	0	56.1	56.1	1	1207.82	3.25	0	72.64	0	0.09	0	0	5.37	0	0	0	0	0	0	-22.04	-22.04
Inverter Transformer	MV5-3 T	370237	4908851	2	0	0	56.1	56.1	1	1215.75	3.25	0	72.7	0	0.09	0	0	5.39	0	0	0	0	0	0	-22.12	-22.12
Inverter Transformer	MV6-2 T	370091	4907339	2	0	0	56.1	56.1	1	1221.28	3.25	0	72.74	0	0.09	0	0	5.4	0	0	0	0	0	0	-22.17	-22.17
Inverter Transformer	MV4-1 T	369017	4909397	2	0	0	56.1	56.1	1	1222.31	3.25	0	72.74	0	0.09	0	0	5.41	0	0	0	0	0	0	-22.18	-22.18
Inverter Transformer	MV3-21 T	368484	4907206	2	0	0	56.1	56.1	1	1227.21	3.25	0	72.78	0	0.09	0	0	5.42	0	0	0	0	0	0	-22.23	-22.23
Inverter Transformer	MV5-4 T	370330	4908707	2	0	0	56.1	56.1	1	1227.7	3.25	0	72.78	0	0.09	0	0	5.42	0	0	0	0	0	0	-22.24	-22.24
Inverter Transformer	MV5-1 T	370015	4909142	2	0	0	56.1	56.1	1	1242.1	3.25	0	72.88	0	0.1	0	0	5.45	0	0	0	0	0	0	-22.37	-22.37
Inverter Transformer	MV3-17 T	368183	4907472	2	0	0	56.1	56.1	1	1258.59	3.25	0	73	0	0.11	0	0	5.49	0	0	0	0	0	0	-22.53	-22.53
Inverter Transformer	MV3-3 T	367944	4907927	2	0	0	56.1	56.1	1	1299.11	3.25	0	73.27	0	0.12	0	0	5.58	0	0	0	0	0	0	-22.91	-22.91
Inverter Transformer	MV3-7 T	367951	4907754	2	0	0	56.1	56.1	1	1338.36	3.25	0	73.53	0	0.14	0	0	5.67	0	0	0	0	0	0	-23.27	-23.27
Inverter Transformer	MV3-13 T	367958	4907577	2	0	0	56.1	56.1	1	1399.85	3.25	0	73.92	0	0.16	0	0	5.8	0	0	0	0	0	0	-23.82	-23.82
Inverter Transformer	MV6-3 T	370202	4907140	2	0	0	56.1	56.1	1	1441.11	3.25	0	74.17	0	0.18	0	0	5.89	0	0	0	0	0	0	-24.18	-24.18
Inverter Transformer	MV3-12 T	367674	4907594	2	0	0	56.1	56.1	1	1653.54	3.25	0	75.37	0	0.26	0	0	6.34	0	0	0	0	0	0	-25.91	-25.91
Inverter Transformer	MV3-18 T	367757	4907412	2	0	0	56.1	56.1	1	1653.94	3.25	0	75.37	0	0.26	0	0	6.34	0	0	0	0	0	0	-25.92	-25.92

	Line Reactor	NGR	369421	4908787.5	5	0	0	45.4	45.4	1	630.74	5.25	0	67	0	3.35	1.62	0.11	0.26	0	0	0	0	0	0	-26.87	-26.87
	Inverter Transformer	MV2-2 T	365982	4906654	2	0	0	56.1	56.1	1	3580.66	3.25	0	82.08	0	1.07	0	0	9.81	0	0	0	0	0	0	-36.91	-36.91
	Inverter Transformer	MV2-3 T	365814	4906641	2	0	0	56.1	56.1	1	3738.46	3.25	0	82.45	0	1.14	0	0	10.06	0	0	0	0	0	0	-37.59	-37.59
	Inverter Transformer	MV2-4 T	365590	4906628	2	0	0	56.1	56.1	1	3948.53	3.25	0	82.93	0	1.22	0	0	10.38	0	0	0	0	0	0	-38.47	-38.47
	Inverter Transformer	MV1-1 T	364721	4906166	2	0	0	56.1	56.1	1	4930.08	3.25	0	84.86	0	1.6	0	0	11.76	0	0	0	0	0	0	-42.16	-42.16
	Inverter Transformer	MV1-2 T	364759	4906063	2	0	0	56.1	56.1	1	4938.95	3.25	0	84.87	0	1.6	0	0	11.77	0	0	0	0	0	0	-42.19	-42.19
	Inverter Transformer	MV1-4 T	364821	4905918	2	0	0	56.1	56.1	1	4947.99	3.25	0	84.89	0	1.61	0	0	11.79	0	0	0	0	0	0	-42.22	-42.22
	Inverter Transformer	MV1-12 T	365044	4905386	2	0	0	56.1	56.1	1	5027.29	3.25	0	85.03	0	1.64	0	0	11.89	0	0	0	0	0	0	-42.49	-42.49
	Inverter Transformer	MV1-15 T	365309	4904994	2	0	0	56.1	56.1	1	5048.31	3.25	0	85.06	0	1.64	0	0	11.92	0	0	0	0	0	0	-42.56	-42.56
	Inverter Transformer	MV1-5 T	364676	4905892	2	0	0	56.1	56.1	1	5088.91	3.25	0	85.13	0	1.66	0	0	11.97	0	0	0	0	0	0	-42.7	-42.7
	Inverter Transformer	MV1-8 T	364782	4905647	2	0	0	56.1	56.1	1	5111.98	3.25	0	85.17	0	1.67	0	0	12	0	0	0	0	0	0	-42.78	-42.78
	Inverter Transformer	MV1-3 T	364435	4906039	2	0	0	56.1	56.1	1	5243	3.25	0	85.39	0	1.71	0	0	12.17	0	0	0	0	0	0	-43.22	-43.22
	Inverter Transformer	MV1-6 T	364482	4905835	2	0	0	56.1	56.1	1	5287.86	3.25	0	85.47	0	1.73	0	0	12.23	0	0	0	0	0	0	-43.36	-43.36
	Inverter Transformer	MV1-9 T	364555	4905646	2	0	0	56.1	56.1	1	5310.55	3.25	0	85.5	0	1.74	0	0	12.26	0	0	0	0	0	0	-43.44	-43.44
	Inverter Transformer	MV1-11 T	364649	4905414	2	0	0	56.1	56.1	1	5345.02	3.25	0	85.56	0	1.75	0	0	12.3	0	0	0	0	0	0	-43.55	-43.55
Limit. Valu	0	0																								
Level D/N:	39.7265	39.7265																								

Receiver: Existing Noise Receptor
ID: S-R40
X: 369465
Y: 4908201
Z: 4.5
Ground: 0

ISO	Description	ID	X	Y	Z	Ground	ReflOrd	LxT	LxN	L/A	Dist.	hm	Freq	Adiv	K0b	Agr	Abar	z	Aatm	Afol	Ahous	Cmet	CmetN	Dc	RL	LtotT	LtotN
	Sol_Luce Substation	S_Substation	369426	4908792	3.5	0	0	112.1	112.1	1	592.29	5.24	0	66.45	0	0.08	6.87	0.35	1.64	0	0	0	0	0	0	37.03	37.03
	Inverter	MV4-10	369312	4908858	2	0	0	100.3	100.3	1	674.58	3.25	0	67.58	0	-0.43	0	0	9.61	0	0	0	0	0	0	23.55	23.55
	Inverter	MV4-11	369264	4908855	2	0	0	100.3	100.3	1	684.2	3.25	0	67.7	0	-0.42	0	0	9.66	0	0	0	0	0	0	23.37	23.37
	Inverter	MV5-5	370015	4908690	2	0	0	100.3	100.3	1	735.95	3.25	0	68.34	0	-0.39	0	0	9.91	0	0	0	0	0	0	22.46	22.46
	Inverter	MV4-9	369289	4909001	2	0	0	100.3	100.3	1	819.14	3.25	0	69.27	0	-0.34	0	0	10.26	0	0	0	0	0	0	21.13	21.13
	Inverter	MV4-8	369256	4909001	2	0	0	100.3	100.3	1	826.85	3.25	0	69.35	0	-0.34	0	0	10.29	0	0	0	0	0	0	21.01	21.01
	Inverter	MV5-2	370006	4908853	2	0	0	100.3	100.3	1	847.23	3.25	0	69.56	0	-0.33	0	0	10.37	0	0	0	0	0	0	20.71	20.71
	DSTATCOM - 10 MVAR #1	DSAT1	369437	4908757	2.5	0	0	96.6	96.6	1	556.71	3.5	0	65.91	0	2.3	0	0	0.76	0	0	0	0	0	0	27.66	27.66
	DSTATCOM - 10 MVAR #2	DSAT2	369403	4908757	2.5	0	0	96.6	96.6	1	559.45	3.5	0	65.96	0	2.3	0	0	0.76	0	0	0	0	0	0	27.61	27.61
	Inverter	MV4-7	369035	4909001	2	0	0	100.3	100.3	1	908.24	3.25	0	70.16	0	-0.29	0	0	10.59	0	0	0	0	0	0	19.85	19.85
	Inverter	MV3-8	368680	4907712	2	0	0	100.3	100.3	1	924.85	3.25	0	70.32	0	-0.28	0	0	10.65	0	0	0	0	0	0	19.62	19.62
	Inverter	MV5-4	370324	4908707	2	0	0	100.3	100.3	1	996.96	3.25	0	70.97	0	-0.25	0	0	10.9	0	0	0	0	0	0	18.69	18.69
	Inverter	MV5-3	370231	4908851	2	0	0	100.3	100.3	1	1004.62	3.25	0	71.04	0	-0.24	0	0	10.93	0	0	0	0	0	0	18.59	18.59
	Inverter	MV4-5	369289	4909199	2	0	0	100.3	100.3	1	1013.4	3.25	0	71.12	0	-0.24	0	0	10.96	0	0	0	0	0	0	18.48	18.48
	Inverter	MV4-6	369243	4909192	2	0	0	100.3	100.3	1	1015.56	3.25	0	71.13	0	-0.24	0	0	10.96	0	0	0	0	0	0	18.45	18.45
	Inverter	MV3-14	368684	4907498	2	0	0	100.3	100.3	1	1050.8	3.25	0	71.43	0	-0.22	0	0	11.08	0	0	0	0	0	0	18.03	18.03
	Inverter	MV6-2	370085	4907339	2	0	0	100.3	100.3	1	1061.81	3.25	0	71.52	0	-0.22	0	0	11.11	0	0	0	0	0	0	17.9	17.9
	Inverter	MV3-9	368512	4907703	2	0	0	100.3	100.3	1	1075.28	3.25	0	71.63	0	-0.21	0	0	11.15	0	0	0	0	0	0	17.74	17.74
	Inverter	MV4-4	369027	4909199	2	0	0	100.3	100.3	1	1089.89	3.25	0	71.75	0	-0.2	0	0	11.2	0	0	0	0	0	0	17.57	17.57
	Inverter	MV5-1	370020	4909142	2	0	0	100.3	100.3	1	1092.48	3.25	0	71.77	0	-0.2	0	0	11.21	0	0	0	0	0	0	17.54	17.54
	Inverter	MV3-20	368689	4907317	2	0	0	100.3	100.3	1	1176.28	3.25	0	72.41	0	-0.16	0	0	11.46	0	0	0	0	0	0	16.61	16.61
	Inverter	MV3-16	368514	4907475	2	0	0	100.3	100.3	1	1196.45	3.25	0	72.56	0	-0.16	0	0	11.52	0	0	0	0	0	0	16.39	16.39
	Inverter	MV4-2	369272	4909397	2	0	0	100.3	100.3	1	1211.47	3.25	0	72.67	0	-0.15	0	0	11.56	0	0	0	0	0	0	16.24	16.24
	Inverter	MV4-3	369229	4909397	2	0	0	100.3	100.3	1	1219.06	3.25	0	72.72	0	-0.15	0	0	11.58	0	0	0	0	0	0	16.16	16.16
	Inverter	MV3-11	368346	4907662	2	0	0	100.3	100.3	1	1242.05	3.25	0	72.88	0	-0.14	0	0	11.65	0	0	0	0	0	0	15.92	15.92
	Inverter	MV4-1	369011	4909397	2	0	0	100.3	100.3	1	1279.27	3.25	0	73.14	0	-0.12	0	0	11.75	0	0	0	0	0	0	15.54	15.54
	Inverter	MV6-3	370207	4907140	2	0	0	100.3	100.3	1	1294.72	3.25	0	73.24	0	-0.11	0	0	11.79	0	0	0	0	0	0	15.39	15.39
	Inverter	MV3-15	368357	4907477	2	0	0	100.3	100.3	1	1323.57	3.25	0	73.43	0	-0.1	0	0	11.87	0	0	0	0	0	0	15.11	15.11
	Inverter	MV3-6	368162	4907834	2	0	0	100.3	100.3	1	1353.7	3.25	0	73.63	0	-0.09	0	0	11.95	0	0	0	0	0	0	14.82	14.82
	Inverter	MV3-19	368357	4907347	2	0	0	100.3	100.3	1	1398.92	3.25	0	73.92	0	-0.07	0	0	12.07	0	0	0	0	0	0	14.4	14.4
	Inverter	MV3-21	368478	4907206	2	0	0	100.3	100.3	1	1401.5	3.25	0	73.93	0	-0.07	0	0	12.07	0	0	0	0	0	0	14.38	14.38
	Inverter	MV3-10	368167	4907669	2	0	0	100.3	100.3	1	1402.8	3.25	0	73.94	0	-0.07	0	0	12.08	0	0	0	0	0	0	14.36	14.36
	Inverter	MV4-15	369176	4908481	2	0	0	89.1	89.1	1	402.4	3.25	0	63.09	0	0.46	0	0	4.74	0	0	0	0	0	0	20.76	20.76
	Inverter	MV3-17	368178	4907472	2	0	0	100.3	100.3	1	1479.13	3.25	0	74.4	0	-0.04	0	0	12.27	0	0	0	0	0	0	13.68	13.68
	Inverter	MV4-14	369176	4908507	2	0	0	89.1	89.1	1	420.91	3.25	0	63.48	0	0.47	0	0	4.83	0	0	0	0	0	0	20.27	20.27
	Inverter	MV3-3	367939	4907927	2	0	0	100.3	100.3	1	1550.41	3.25	0	74.81	0	-0.02	0	0	12.45	0	0	0	0	0	0	13.07	13.07
	Inverter	MV3-7	367945	4907754	2	0	0	100.3	100.3	1	1584.37	3.25	0	75	0	0	0	0	12.53	0	0	0	0	0	0	12.79	12.79
	Inverter	MV6-1	370235	4907364	2	0	0	97.3	97.3	1	1137.31	3.25	0	72.12	0	-0.18	0	0	11.34	0	0	0	0	0	0	14.03	14.03
	Inverter	MV3-13	367963	4907577	2	0	0	100.3	100.3	1	1626.46	3.25	0	75.22	0	0.01	0	0	12.63	0	0	0	0	0	0	12.44	12.44
	Fixed Reactor Bank 2	FRB2	369464	4908755	6	0	0	89.8	89.8	1	554	5.25	0	65.87	0	-0.86	0	0	1.56	0	0	0	0	0	0	23.21	23.21
	Inverter	MV3-18	367752	4907412	2	0	0	100.3	100.3	1	1885.97	3.25	0	76.51	0	0.1	0	0	13.22	0	0	0	0	0	0	10.49	10.49
	Fixed Reactor Bank 1	FRB1	369378	4908755	6	0	0	89.8	89.8	1	560.79	5.25	0	65.98	0	-0.87	0	0	1.57	0	0	0	0	0	0	23.09	23.09
	Inverter	MV3-12	367668	4907594	2	0	0	100.3	100.3	1	1896.75	3.25	0	76.56	0	0.1	0	0	13.24	0	0	0	0	0	0	10.41	10.41
	Inverter	MV4-13	369051	4908605	2	0	0	89.1	89.1	1	578.46	3.25	0	66.25	0	0.57	0	0	5.39	0	0	0	0	0	0	16.85	16.85
	Inverter	MV5-6	369982	4908507	2	0	0	89.1	89.1	1	600.78	3.25	0	66.57	0	0.58	0	0	5.45	0	0	0	0	0	0	16.45	16.45
	Inverter	MV4-12	369043	4908803	2	0	0	89.1	89.1	1	735.18	3.25	0	68.33	0	0.62	0	0	5.78	0	0	0	0	0	0	14.33	14.33
	Inverter	MV3-2	368671	4907928	2	0	0	89.1	89.1	1	839.63	3.25	0	69.48	0	0.65	0	0	6	0	0	0	0	0	0	12.92	12.92
	Inverter	MV3-4	368502	4907925	2	0	0	89.1	89.1	1	1001.77	3.25	0	71.02	0	0.69	0	0	6.32	0	0	0	0	0	0	11.04	11.04

Inverter	MV2-3	365820	4906641	2	0	0	100.3	100.3	1	3964.8	3.25	0	82.96	0	0.52	0	0	16.99	0	0	0	0	0	0	-0.17	-0.17
Inverter	MV2-4	365586	4906624	2	0	0	100.3	100.3	1	4187.31	3.25	0	83.44	0	0.55	0	0	17.35	0	0	0	0	0	0	-1.02	-1.02
Inverter	MV3-5	368340	4907843	2	0	0	89.1	89.1	1	1180.59	3.25	0	72.44	0	0.72	0	0	6.65	0	0	0	0	0	0	9.25	9.25
Inverter	MV3-1	368156	4907976	2	0	0	89.1	89.1	1	1328.2	3.25	0	73.47	0	0.75	0	0	6.91	0	0	0	0	0	0	7.93	7.93
Inverter	MV3-22	368656	4907142	2	0	0	89.1	89.1	1	1332.65	3.25	0	73.49	0	0.76	0	0	6.92	0	0	0	0	0	0	7.89	7.89
Inverter	MV1-1	364715	4906166	2	0	0	100.3	100.3	1	5167.57	3.25	0	85.27	0	0.66	0	0	18.82	0	0	0	0	0	0	-4.43	-4.43
Inverter	MV1-2	364753	4906063	2	0	0	100.3	100.3	1	5174.36	3.25	0	85.28	0	0.66	0	0	18.83	0	0	0	0	0	0	-4.46	-4.46
Inverter	MV1-4	364815	4905918	2	0	0	100.3	100.3	1	5180.21	3.25	0	85.29	0	0.66	0	0	18.84	0	0	0	0	0	0	-4.48	-4.48
Inverter	MV1-15	365315	4904994	2	0	0	100.3	100.3	1	5244.75	3.25	0	85.39	0	0.66	0	0	18.94	0	0	0	0	0	0	-4.68	-4.68
Inverter	MV1-12	365038	4905386	2	0	0	100.3	100.3	1	5246.19	3.25	0	85.4	0	0.66	0	0	18.94	0	0	0	0	0	0	-4.69	-4.69
Inverter	MV1-5	364671	4905892	2	0	0	100.3	100.3	1	5321.08	3.25	0	85.52	0	0.67	0	0	19.05	0	0	0	0	0	0	-4.92	-4.92
Inverter	MV1-8	364788	4905647	2	0	0	100.3	100.3	1	5328.91	3.25	0	85.53	0	0.67	0	0	19.06	0	0	0	0	0	0	-4.95	-4.95
Inverter	MV2-1	365842	4906816	2	0	0	97.3	97.3	1	3878.71	3.25	0	82.77	0	0.51	0	0	16.85	0	0	0	0	0	0	-2.83	-2.83
SubstationTransformer	W_ST	369711.17	4906112.3	2.5	0	0	92	92	1	2103.19	3.5	0	77.46	0	-0.14	0	0	4.54	0	0	0	0	0	0	10.12	10.12
Inverter	MV1-6	364477	4905835	2	0	0	100.3	100.3	1	5520.7	3.25	0	85.84	0	0.68	0	0	19.33	0	0	0	0	0	0	-5.54	-5.54
Inverter	MV1-9	364561	4905646	2	0	0	100.3	100.3	1	5529.67	3.25	0	85.85	0	0.68	0	0	19.34	0	0	0	0	0	0	-5.57	-5.57
Inverter	MV1-11	364655	4905414	2	0	0	100.3	100.3	1	5559.09	3.25	0	85.9	0	0.68	0	0	19.38	0	0	0	0	0	0	-5.66	-5.66
Westbrook Inverter Enclosur	W_INV5	369719	4906574	2	0	0	89.1	89.1	1	1646.71	3.25	0	75.33	0	0.83	0	0	7.46	0	0	0	0	0	0	5.44	5.44
Westbrook Inverter Enclosur	W_INV6	369875	4906578	2	0	0	89.1	89.1	1	1673.99	3.25	0	75.48	0	0.83	0	0	7.5	0	0	0	0	0	0	5.25	5.25
Westbrook Inverter Enclosur	W_INV7	369780	4906417	2	0	0	89.1	89.1	1	1811.6	3.25	0	76.16	0	0.86	0	0	7.73	0	0	0	0	0	0	4.3	4.3
Westbrook Inverter Enclosur	W_INV2	369374	4906388	2	0	0	89.1	89.1	1	1815.28	3.25	0	76.18	0	0.86	0	0	7.74	0	0	0	0	0	0	4.27	4.27
Inverter	MV1-7	364925	4905782	2	0	0	97.3	97.3	1	5144.24	3.25	0	85.23	0	0.65	0	0	18.79	0	0	0	0	0	0	-7.36	-7.36
Inverter	MV1-10	365004	4905564	2	0	0	97.3	97.3	1	5182.11	3.25	0	85.29	0	0.66	0	0	18.85	0	0	0	0	0	0	-7.48	-7.48
Westbrook Inverter Enclosur	W_INV3	369508	4906164	2	0	0	89.1	89.1	1	2037.46	3.25	0	77.18	0	0.92	0	0	8.11	0	0	0	0	0	0	2.85	2.85
Westbrook Inverter Enclosur	W_INV4	369673	4906164	2	0	0	89.1	89.1	1	2047.59	3.25	0	77.22	0	0.92	0	0	8.12	0	0	0	0	0	0	2.79	2.79
Inverter	MV1-14	365163	4905049	2	0	0	97.3	97.3	1	5333.13	3.25	0	85.54	0	0.67	0	0	19.06	0	0	0	0	0	0	-7.96	-7.96
Inverter	MV6-4	370250	4906966	2	0	0	86.1	86.1	1	1463.37	3.25	0	74.31	0	0.78	0	0	7.15	0	0	0	0	0	0	3.82	3.82
Inverter	MV1-13	364731	4905241	2	0	0	97.3	97.3	1	5583.22	3.25	0	85.94	0	0.69	0	0	19.42	0	0	0	0	0	0	-8.73	-8.73
Westbrook Inverter Enclosur	W_INV1	369409	4906578	2	0	0	86.1	86.1	1	1623.97	3.25	0	75.21	0	0.82	0	0	7.42	0	0	0	0	0	0	2.61	2.61
Inverter	MV2-2	365977	4906654	2	0	0	89.1	89.1	1	3815.67	3.25	0	82.63	0	1.35	0	0	10.82	0	0	0	0	0	0	-5.74	-5.74
Gardiner Substation	G_Sub	366586.3	4903349.9	2.5	0	0	90.8	90.8	1	5640.93	4.25	0	86.03	0	1.8	2.2	0.38	9.35	0	0	0	0	0	0	-8.6	-8.6
Inverter	MV1-3	364440	4906039	2	0	0	89.1	89.1	1	5470.36	3.25	0	85.76	0	1.76	0	0	13.08	0	0	0	0	0	0	-11.54	-11.54
Westbrook Inverter Transfor	W_INVTR1	369403	4906578	2	0	0	78.2	78.2	1	1624.19	3.25	0	75.21	0	-2.26	0	0	1.02	0	0	0	0	0	0	4.27	4.27
Westbrook Inverter Transfor	W_INVTR5	369725	4906574	2	0	0	77.3	77.3	1	1647.65	3.25	0	75.34	0	-2.27	0	0	1.03	0	0	0	0	0	0	3.24	3.24
Westbrook Inverter Transfor	W_INVTR6	369881	4906578	2	0	0	77.3	77.3	1	1675.47	3.25	0	75.48	0	-2.28	0	0	1.04	0	0	0	0	0	0	3.09	3.09
Inverters	G_Inv2	366676.9	4903239.1	2	0	0	87.7	87.7	1	5691.57	3.25	0	86.1	0	2.9	0	0	6.66	0	0	0	0	0	0	-8.01	-8.01
Inverters	G_Inv1	366526.4	4903225.8	2	0	0	87.7	87.7	1	5778.23	3.25	0	86.24	0	2.91	0	0	6.75	0	0	0	0	0	0	-8.23	-8.23
Inverters	G_Inv4	366732.8	4903105	2	0	0	87.7	87.7	1	5782.23	3.25	0	86.24	0	2.91	0	0	6.75	0	0	0	0	0	0	-8.24	-8.24
Inverters	G_Inv3	366583.7	4903091.4	2	0	0	87.7	87.7	1	5866	3.25	0	86.37	0	2.91	0	0	6.84	0	0	0	0	0	0	-8.46	-8.46
Inverters	G_Inv6	366788.5	4902972	2	0	0	87.7	87.7	1	5874.19	3.25	0	86.38	0	2.91	0	0	6.85	0	0	0	0	0	0	-8.48	-8.48
Westbrook Inverter Transfor	W_INVTR7	369786	4906417	2	0	0	77.3	77.3	1	1812.65	3.25	0	76.17	0	-2.33	0	0	1.11	0	0	0	0	0	0	2.4	2.4
Westbrook Inverter Transfor	W_INVTR2	369368	4906388	2	0	0	77.3	77.3	1	1815.59	3.25	0	76.18	0	-2.34	0	0	1.12	0	0	0	0	0	0	2.38	2.38
Inverters	G_Inv5	366638.5	4902958.1	2	0	0	87.7	87.7	1	5956.27	3.25	0	86.5	0	2.92	0	0	6.93	0	0	0	0	0	0	-8.69	-8.69
Inverters	G_Inv8	366844.5	4902838.5	2	0	0	87.7	87.7	1	5968.54	3.25	0	86.52	0	2.92	0	0	6.95	0	0	0	0	0	0	-8.72	-8.72
Inverters	G_Inv7	366694.6	4902824.7	2	0	0	87.7	87.7	1	6048.12	3.25	0	86.63	0	2.92	0	0	7.03	0	0	0	0	0	0	-8.92	-8.92
Inverters	G_Inv10	366900.7	4902704.8	2	0	0	87.7	87.7	1	6064.97	3.25	0	86.66	0	2.92	0	0	7.04	0	0	0	0	0	0	-8.96	-8.96
Inverters	G_Inv9	366750.9	4902691.8	2	0	0	87.7	87.7	1	6141.47	3.25	0	86.77	0	2.92	0	0	7.12	0	0	0	0	0	0	-9.15	-9.15
Westbrook Inverter Transfor	W_INVTR3	369514	4906164	2	0	0	77.3	77.3	1	2037.59	3.25	0	77.18	0	-2.42	0	0	1.22	0	0	0	0	0	0	1.35	1.35
Westbrook Inverter Transfor	W_INVTR4	369679	4906164	2	0	0	77.3	77.3	1	2048.21	3.25	0	77.23	0	-2.42	0	0	1.23	0	0	0	0	0	0	1.31	1.31
Inverter Transformer	MV6-1 T	370230	4907364	2	0	0	69.4	69.4	1	1133.93	3.25	0	72.09	0	1.78	0	0	3.99	0	0	0	0	0	0	-8.51	-8.51
Inverter Transformer	MV6-4 T	370244	4906966	2	0	0	69.4	69.4	1	1460.16	3.25	0	74.29	0	1.95	0	0	4.39	0	0	0	0	0	0	-11.28	-11.28
Inverter Transformer	MV4-15 T	369170	4908481	2	0	0	56.1	56.1	1	406.73	3.25	0	63.19	0	-0.11	0	0	3.23	0	0	0	0	0	0	-10.24	-10.24
Inverter Transformer	MV4-14 T	369182	4908507	2	0	0	56.1	56.1	1	416.81	3.25	0	63.4	0	-0.12	0	0	3.27	0	0	0	0	0	0	-10.49	-10.49
Inverter Transformer	MV4-13 T	369057	4908605	2	0	0	56.1	56.1	1	574.18	3.25	0	66.18	0	-0.11	0	0	3.78	0	0	0	0	0	0	-13.79	-13.79
Inverter Transformer	MV5-6 T	369987	4908507	2	0	0	56.1	56.1	1	605.08	3.25	0	66.64	0	-0.1	0	0	3.87	0	0	0	0	0	0	-14.35	-14.35
Inverter Transformer	MV4-10 T	369307	4908858	2	0	0	56.1	56.1	1	675.74	3.25	0	67.6	0	-0.09	0	0	4.07	0	0	0	0	0	0	-15.52	-15.52
Inverter Transformer	MV4-11 T	369269	4908855	2	0	0	56.1	56.1	1	682.74	3.25	0	67.69	0	-0.09	0	0	4.09	0	0	0	0	0	0	-15.63	-15.63
Inverter Transformer	MV4-12 T	369049	4908803	2	0	0	56.1	56.1	1	731.76	3.25	0	68.29	0	-0.07	0	0	4.22	0	0	0	0	0	0	-16.37	-16.37
Inverter Transformer	MV5-5 T	370021	4908690	2	0	0	56.1	56.1	1	740.45	3.25	0	68.39	0	-0.07	0	0	4.24	0	0	0	0	0	0	-16.5	-16.5
Inverter Transformer	MV4-9 T	369284	4909001	2	0	0	56.1	56.1	1	820.22	3.25	0	69.28	0	-0.05	0	0	4.45	0	0	0	0	0	0	-17.62	-17.62
Inverter Transformer	MV4-8 T	369262	4909001	2	0	0	56.1	56.1	1	825.36	3.25	0	69.33	0	-0.05	0	0	4.46	0	0	0	0	0	0	-17.69	-17.69
Inverter Transformer	MV3-2 T	368677	4907928	2	0	0	56.1	56.1	1	833.95	3.25	0	69.42	0	-0.04	0	0	4.48	0	0	0	0	0	0	-17.8	-17.8
Inverter Transformer	MV2-1 T	365836	4906816	2	0	0	69.4	69.4	1	3884.31	3.25	0	82.79	0	2.76	0	0	6.59	0	0	0	0	0	0	-22.78	-22.78
Inverter Transformer	MV5-2 T	370011	4908853	2	0	0	56.1	56.1	1	850.43	3.25	0	69.59	0	-0.04	0	0	4.52	0	0	0	0	0	0	-18.02	-18.02
Inverter Transformer	MV4-7 T	369040	4909001	2	0	0	56.1	56.1	1	905.89	3.25	0	70.14	0	-0.02	0	0	4.66	0	0	0	0	0	0	-18.72	-18.72
Inverter Transformer	MV3-8 T	368685	4907712	2	0	0	56.1	56.1	1	920.61	3.25	0	70.28	0	-0.01	0	0	4.7	0	0	0	0	0	0	-18.91	-18.91
Inverter Transformer	MV3-4 T	368507	4907925	2	0	0	56.1	56.1	1	996.97	3.25	0	70.97	0	0.01	0	0	4.88	0	0	0	0	0	0	-19.81	-19.81
Inverter Transformer	MV5-4 T	370330	4908707	2	0	0	56.1	56.1	1	1002.13	3.25	0	71.02	0	0.01	0	0	4.89	0	0	0	0	0	0	-19.87	-19.87
Inverter Transformer	MV5-3 T	370237	4908851	2	0	0	56.1	56.1	1	1009.2	3.25	0	71.08	0	0.02	0	0	4.91	0	0	0	0	0	0	-19.95	-19.95
Inverter Transformer	MV4-6 T	369249	4909192	2	0	0	56.1	56.1	1	1014.27	3.25	0	71.12	0	0.02	0	0	4.92	0	0	0	0	0	0	-20	-20
Inverter Transformer	MV4-5 T	369283	4909199	2	0	0	56.1	56.1	1	1014.46	3.25	0	71.12	0	0.02	0	0	4.92	0	0	0	0	0	0	-20.01	-20.01
Inverter Transformer	MV3-14 T	368678	4907498	2	0	0	56.1	56.1	1	1055.27	3.25	0	71.47	0	0.03	0	0	5.02	0	0	0	0	0	0	-20.46	-20.46
Inverter Transformer	MV6-2 T	370091	4907339	2	0	0	56.1	56.1	1	1065.33	3.25	0	71.55	0	0.03	0	0	5.04	0	0	0	0	0	0	-20.57	-20.57
Inverter Transformer	MV3-9 T	368517	4907703	2	0	0	56.1	56.1	1	1070.85	3.25	0	71.59	0	0.04	0	0	5.06	0	0	0	0	0	0	-20.63	-20.63

	Inverter Transformer	MV4-4 T	369033	4909199	2	0	0	56.1	56.1	1	1087.49	3.25	0	71.73	0	0.04	0	0	5.1	0	0	0	0	0	0	-20.81	-20.81
	Inverter Transformer	MV5-1 T	370015	4909142	2	0	0	56.1	56.1	1	1089.95	3.25	0	71.75	0	0.04	0	0	5.1	0	0	0	0	0	0	-20.83	-20.83
	Inverter Transformer	MV1-7 T	364919	4905782	2	0	0	69.4	69.4	1	5149.53	3.25	0	85.24	0	3.04	0	0	7.48	0	0	0	0	0	0	-26.41	-26.41
	Inverter Transformer	MV1-10 T	365010	4905564	2	0	0	69.4	69.4	1	5176.95	3.25	0	85.28	0	3.05	0	0	7.5	0	0	0	0	0	0	-26.48	-26.48
	Inverter Transformer	MV1-14 T	365157	4905049	2	0	0	69.4	69.4	1	5337.97	3.25	0	85.55	0	3.08	0	0	7.6	0	0	0	0	0	0	-26.88	-26.88
	Inverter Transformer	MV3-20 T	368683	4907317	2	0	0	56.1	56.1	1	1180.25	3.25	0	72.44	0	0.08	0	0	5.31	0	0	0	0	0	0	-21.77	-21.77
	Inverter Transformer	MV3-5 T	368335	4907843	2	0	0	56.1	56.1	1	1185.36	3.25	0	72.48	0	0.08	0	0	5.32	0	0	0	0	0	0	-21.82	-21.82
	Inverter Transformer	MV3-16 T	368509	4907475	2	0	0	56.1	56.1	1	1200.42	3.25	0	72.59	0	0.08	0	0	5.36	0	0	0	0	0	0	-21.97	-21.97
	Inverter Transformer	MV1-13 T	364725	4905241	2	0	0	69.4	69.4	1	5588.31	3.25	0	85.95	0	3.12	0	0	7.76	0	0	0	0	0	0	-27.48	-27.48
	Inverter Transformer	MV4-2 T	369267	4909397	2	0	0	56.1	56.1	1	1212.28	3.25	0	72.67	0	0.09	0	0	5.38	0	0	0	0	0	0	-22.09	-22.09
	Inverter Transformer	MV4-3 T	369234	4909397	2	0	0	56.1	56.1	1	1218.11	3.25	0	72.71	0	0.09	0	0	5.4	0	0	0	0	0	0	-22.14	-22.14
	Inverter Transformer	MV3-11 T	368340	4907662	2	0	0	56.1	56.1	1	1247.46	3.25	0	72.92	0	0.1	0	0	5.46	0	0	0	0	0	0	-22.43	-22.43
	Inverter Transformer	MV4-1 T	369017	4909397	2	0	0	56.1	56.1	1	1277.16	3.25	0	73.12	0	0.11	0	0	5.53	0	0	0	0	0	0	-22.71	-22.71
	Inverter Transformer	MV6-3 T	370202	4907140	2	0	0	56.1	56.1	1	1291.86	3.25	0	73.22	0	0.12	0	0	5.56	0	0	0	0	0	0	-22.85	-22.85
	Inverter Transformer	MV3-15 T	368351	4907477	2	0	0	56.1	56.1	1	1328.6	3.25	0	73.47	0	0.13	0	0	5.64	0	0	0	0	0	0	-23.19	-23.19
	Inverter Transformer	MV3-22 T	368661	4907142	2	0	0	56.1	56.1	1	1329.63	3.25	0	73.47	0	0.13	0	0	5.65	0	0	0	0	0	0	-23.2	-23.2
	Inverter Transformer	MV3-1 T	368150	4907976	2	0	0	56.1	56.1	1	1334.11	3.25	0	73.5	0	0.13	0	0	5.66	0	0	0	0	0	0	-23.24	-23.24
	Inverter Transformer	MV3-6 T	368156	4907834	2	0	0	56.1	56.1	1	1359.48	3.25	0	73.67	0	0.14	0	0	5.71	0	0	0	0	0	0	-23.47	-23.47
	Inverter Transformer	MV3-21 T	368484	4907206	2	0	0	56.1	56.1	1	1397.28	3.25	0	73.91	0	0.16	0	0	5.8	0	0	0	0	0	0	-23.8	-23.8
	Inverter Transformer	MV3-19 T	368352	4907347	2	0	0	56.1	56.1	1	1402.89	3.25	0	73.94	0	0.16	0	0	5.81	0	0	0	0	0	0	-23.85	-23.85
	Inverter Transformer	MV3-10 T	368162	4907669	2	0	0	56.1	56.1	1	1407.42	3.25	0	73.97	0	0.16	0	0	5.82	0	0	0	0	0	0	-23.89	-23.89
	Inverter Transformer	MV3-17 T	368183	4907472	2	0	0	56.1	56.1	1	1474.78	3.25	0	74.37	0	0.19	0	0	5.96	0	0	0	0	0	0	-24.47	-24.47
	Inverter Transformer	MV3-3 T	367944	4907927	2	0	0	56.1	56.1	1	1545.48	3.25	0	74.78	0	0.22	0	0	6.11	0	0	0	0	0	0	-25.05	-25.05
	Inverter Transformer	MV3-7 T	367951	4907754	2	0	0	56.1	56.1	1	1578.61	3.25	0	74.97	0	0.23	0	0	6.19	0	0	0	0	0	0	-25.32	-25.32
	Inverter Transformer	MV3-13 T	367958	4907577	2	0	0	56.1	56.1	1	1631.08	3.25	0	75.25	0	0.25	0	0	6.3	0	0	0	0	0	0	-25.74	-25.74
	Inverter Transformer	MV3-18 T	367757	4907412	2	0	0	56.1	56.1	1	1881.43	3.25	0	76.49	0	0.35	0	0	6.81	0	0	0	0	0	0	-27.59	-27.59
	Inverter Transformer	MV3-12 T	367674	4907594	2	0	0	56.1	56.1	1	1891.07	3.25	0	76.53	0	0.36	0	0	6.83	0	0	0	0	0	0	-27.66	-27.66
	Line Reactor	NGR	369421	4908787.5	5	0	0	45.4	45.4	1	588.15	5.25	0	66.39	0	3.32	1.69	0.12	0.24	0	0	0	0	0	0	-26.28	-26.28
	Inverter Transformer	MV2-2 T	365982	4906654	2	0	0	56.1	56.1	1	3811.1	3.25	0	82.62	0	1.17	0	0	10.17	0	0	0	0	0	0	-37.9	-37.9
	Inverter Transformer	MV2-3 T	365814	4906641	2	0	0	56.1	56.1	1	3970.32	3.25	0	82.98	0	1.23	0	0	10.41	0	0	0	0	0	0	-38.56	-38.56
	Inverter Transformer	MV2-4 T	365590	4906628	2	0	0	56.1	56.1	1	4182.1	3.25	0	83.43	0	1.32	0	0	10.72	0	0	0	0	0	0	-39.41	-39.41
	Inverter Transformer	MV1-1 T	364721	4906166	2	0	0	56.1	56.1	1	5162.05	3.25	0	85.26	0	1.68	0	0	12.07	0	0	0	0	0	0	-42.95	-42.95
	Inverter Transformer	MV1-2 T	364759	4906063	2	0	0	56.1	56.1	1	5168.9	3.25	0	85.27	0	1.69	0	0	12.07	0	0	0	0	0	0	-42.97	-42.97
	Inverter Transformer	MV1-4 T	364821	4905918	2	0	0	56.1	56.1	1	5174.83	3.25	0	85.28	0	1.69	0	0	12.08	0	0	0	0	0	0	-42.99	-42.99
	Inverter Transformer	MV1-12 T	365044	4905386	2	0	0	56.1	56.1	1	5241.13	3.25	0	85.39	0	1.71	0	0	12.17	0	0	0	0	0	0	-43.21	-43.21
	Inverter Transformer	MV1-15 T	365309	4904994	2	0	0	56.1	56.1	1	5249.49	3.25	0	85.4	0	1.71	0	0	12.18	0	0	0	0	0	0	-43.24	-43.24
	Inverter Transformer	MV1-5 T	364676	4905892	2	0	0	56.1	56.1	1	5316.58	3.25	0	85.51	0	1.74	0	0	12.26	0	0	0	0	0	0	-43.46	-43.46
	Inverter Transformer	MV1-8 T	364782	4905647	2	0	0	56.1	56.1	1	5334.17	3.25	0	85.54	0	1.74	0	0	12.29	0	0	0	0	0	0	-43.51	-43.51
	Inverter Transformer	MV1-3 T	364435	4906039	2	0	0	56.1	56.1	1	5474.96	3.25	0	85.77	0	1.79	0	0	12.46	0	0	0	0	0	0	-43.97	-43.97
	Inverter Transformer	MV1-6 T	364482	4905835	2	0	0	56.1	56.1	1	5516.18	3.25	0	85.83	0	1.81	0	0	12.52	0	0	0	0	0	0	-44.1	-44.1
	Inverter Transformer	MV1-9 T	364555	4905646	2	0	0	56.1	56.1	1	5534.99	3.25	0	85.86	0	1.81	0	0	12.54	0	0	0	0	0	0	-44.16	-44.16
	Inverter Transformer	MV1-11 T	364649	4905414	2	0	0	56.1	56.1	1	5564.28	3.25	0	85.91	0	1.82	0	0	12.58	0	0	0	0	0	0	-44.25	-44.25
Limit. Valu	0	0																								
Level D/N:	39.7279	39.7279																								

Receiver: Existing Noise Receptor
ID: S-R41
X: 369114
Y: 4908102
Z: 4.5
Ground: 0

ISO	Description	ID	X	Y	Z	Ground	ReflOrd	LxT	LxN	L/A	Dist.	hm	Freq	Adiv	K0b	Agr	Abar	z	Aatm	Afol	Ahous	Cmet	CmetN	Dc	RL	LtotT	LtotN
	Sol_Luce Substation	S_Substation	369426	4908792	3.5	0	0	112.1	112.1	1	757.26	5.24	0	68.58	0	0.01	5.88	0.32	2.01	0	0	0	0	0	0	35.59	35.59
	Inverter	MV3-8	368680	4907712	2	0	0	100.3	100.3	1	583.49	3.25	0	66.32	0	-0.49	0	0	9.1	0	0	0	0	0	0	25.38	25.38
	Inverter	MV3-9	368512	4907703	2	0	0	100.3	100.3	1	722.23	3.25	0	68.17	0	-0.4	0	0	9.84	0	0	0	0	0	0	22.69	22.69
	Inverter	MV3-14	368684	4907498	2	0	0	100.3	100.3	1	741.43	3.25	0	68.4	0	-0.39	0	0	9.93	0	0	0	0	0	0	22.37	22.37
	Inverter	MV4-11	369264	4908855	2	0	0	100.3	100.3	1	767.8	3.25	0	68.7	0	-0.37	0	0	10.05	0	0	0	0	0	0	21.93	21.93
	Inverter	MV4-10	369312	4908858	2	0	0	100.3	100.3	1	781.5	3.25	0	68.86	0	-0.36	0	0	10.1	0	0	0	0	0	0	21.71	21.71
	Inverter	MV3-16	368514	4907475	2	0	0	100.3	100.3	1	867.83	3.25	0	69.77	0	-0.31	0	0	10.45	0	0	0	0	0	0	20.41	20.41
	Inverter	MV3-11	368346	4907662	2	0	0	100.3	100.3	1	885.12	3.25	0	69.94	0	-0.3	0	0	10.51	0	0	0	0	0	0	20.17	20.17
	Inverter	MV3-20	368689	4907317	2	0	0	100.3	100.3	1	892.67	3.25	0	70.01	0	-0.3	0	0	10.54	0	0	0	0	0	0	20.06	20.06
	Inverter	MV4-7	369035	4909001	2	0	0	100.3	100.3	1	902.47	3.25	0	70.11	0	-0.3	0	0	10.57	0	0	0	0	0	0	19.92	19.92
	Inverter	MV4-8	369256	4909001	2	0	0	100.3	100.3	1	910.15	3.25	0	70.18	0	-0.29	0	0	10.6	0	0	0	0	0	0	19.82	19.82
	Inverter	MV4-9	369289	4909001	2	0	0	100.3	100.3	1	915.88	3.25	0	70.24	0	-0.29	0	0	10.62	0	0	0	0	0	0	19.74	19.74
	Inverter	MV3-15	368357	4907477	2	0	0	100.3	100.3	1	981.67	3.25	0	70.84	0	-0.26	0	0	10.85	0	0	0	0	0	0	18.88	18.88
	Inverter	MV3-6	368162	4907834	2	0	0	100.3	100.3	1	989.01	3.25	0	70.9	0	-0.25	0	0	10.87	0	0	0	0	0	0	18.79	18.79
	Inverter	MV3-10	368167	4907669	2	0	0	100.3	100.3	1	1041.3	3.25	0	71.35	0	-0.23	0	0	11.05	0	0	0	0	0	0	18.14	18.14
	Inverter	MV3-19	368357	4907347	2	0	0	100.3	100.3	1	1069.15	3.25	0	71.58	0	-0.21	0	0	11.13	0	0	0	0	0	0	17.81	17.81
	Inverter	MV5-5	370015	4908690	2	0	0	100.3	100.3	1	1075.9	3.25	0	71.64	0	-0.21	0	0	11.15	0	0	0	0	0	0	17.73	17.73
	DSTATCOM - 10 MVAR #2	DSAT2	369403	4908757	2.5	0	0	96.6	96.6	1	715.93	3.5	0	68.1	0	2.59	0	0	0.88	0	0	0	0	0	0	25.07	25.07
	Inverter	MV4-6	369243	4909192	2	0	0	100.3	100.3	1	1097.61	3.25	0	71.81	0	-0.2	0	0	11.22	0	0	0	0	0	0	17.48	17.48
	Inverter	MV3-21	368478	4907206	2	0	0	100.3	100.3	1	1098.78	3.25	0	71.82	0	-0.2	0	0	11.23	0	0	0	0	0	0	17.47	17.47
	Inverter	MV4-4	369027	4909199	2	0	0	100.3	100.3	1	1100.45	3.25	0	71.83	0	-0.2	0	0	11.23	0	0	0	0	0	0	17.45	17.45

Inverter	MV4-5	369289	4909199	2	0	0	100.3	100.3	1	1110.87	3.25	0	71.91	0	-0.19	0	0	11.26	0	0	0	0	0	0	17.33	17.33
DSTATCOM - 10 MVAR #1	DSAT1	369437	4908757	2.5	0	0	96.6	96.6	1	730.31	3.5	0	68.27	0	2.61	0	0	0.89	0	0	0	0	0	0	24.86	24.86
Inverter	MV3-17	368178	4907472	2	0	0	100.3	100.3	1	1128.27	3.25	0	72.05	0	-0.19	0	0	11.31	0	0	0	0	0	0	17.13	17.13
Inverter	MV5-2	370006	4908853	2	0	0	100.3	100.3	1	1166.05	3.25	0	72.33	0	-0.17	0	0	11.43	0	0	0	0	0	0	16.72	16.72
Inverter	MV3-3	367939	4907927	2	0	0	100.3	100.3	1	1187.96	3.25	0	72.5	0	-0.16	0	0	11.49	0	0	0	0	0	0	16.48	16.48
Inverter	MV3-7	367945	4907754	2	0	0	100.3	100.3	1	1219.7	3.25	0	72.73	0	-0.15	0	0	11.58	0	0	0	0	0	0	16.15	16.15
Inverter	MV6-2	370085	4907339	2	0	0	100.3	100.3	1	1234.92	3.25	0	72.83	0	-0.14	0	0	11.62	0	0	0	0	0	0	15.99	15.99
Inverter	MV3-13	367963	4907577	2	0	0	100.3	100.3	1	1265.08	3.25	0	73.04	0	-0.13	0	0	11.71	0	0	0	0	0	0	15.69	15.69
Inverter	MV4-1	369011	4909397	2	0	0	100.3	100.3	1	1299.09	3.25	0	73.27	0	-0.11	0	0	11.8	0	0	0	0	0	0	15.35	15.35
Inverter	MV4-3	369229	4909397	2	0	0	100.3	100.3	1	1300.1	3.25	0	73.28	0	-0.11	0	0	11.81	0	0	0	0	0	0	15.34	15.34
Inverter	MV4-2	369272	4909397	2	0	0	100.3	100.3	1	1304.61	3.25	0	73.31	0	-0.11	0	0	11.82	0	0	0	0	0	0	15.29	15.29
Inverter	MV5-3	370231	4908851	2	0	0	100.3	100.3	1	1344.88	3.25	0	73.57	0	-0.09	0	0	11.93	0	0	0	0	0	0	14.91	14.91
Inverter	MV5-4	370324	4908707	2	0	0	100.3	100.3	1	1352.82	3.25	0	73.62	0	-0.09	0	0	11.95	0	0	0	0	0	0	14.83	14.83
Inverter	MV5-1	370020	4909142	2	0	0	100.3	100.3	1	1379.29	3.25	0	73.79	0	-0.08	0	0	12.02	0	0	0	0	0	0	14.58	14.58
Inverter	MV4-15	369176	4908481	2	0	0	89.1	89.1	1	384.05	3.25	0	62.69	0	0.44	0	0	4.65	0	0	0	0	0	0	21.28	21.28
Inverter	MV6-3	370207	4907140	2	0	0	100.3	100.3	1	1456.06	3.25	0	74.26	0	-0.05	0	0	12.21	0	0	0	0	0	0	13.88	13.88
Inverter	MV4-14	369176	4908507	2	0	0	89.1	89.1	1	409.73	3.25	0	63.25	0	0.46	0	0	4.78	0	0	0	0	0	0	20.57	20.57
Inverter	MV3-18	367752	4907412	2	0	0	100.3	100.3	1	1526.81	3.25	0	74.68	0	-0.02	0	0	12.39	0	0	0	0	0	0	13.27	13.27
Inverter	MV3-12	367668	4907594	2	0	0	100.3	100.3	1	1532.64	3.25	0	74.71	0	-0.02	0	0	12.41	0	0	0	0	0	0	13.22	13.22
Inverter	MV3-2	368671	4907928	2	0	0	89.1	89.1	1	475.95	3.25	0	64.55	0	0.51	0	0	5.06	0	0	0	0	0	0	18.94	18.94
Inverter	MV4-13	369051	4908605	2	0	0	89.1	89.1	1	506.94	3.25	0	65.1	0	0.53	0	0	5.17	0	0	0	0	0	0	18.26	18.26
Inverter	MV6-1	370235	4907364	2	0	0	97.3	97.3	1	1342.12	3.25	0	73.56	0	-0.09	0	0	11.92	0	0	0	0	0	0	11.93	11.93
Inverter	MV3-4	368502	4907925	2	0	0	89.1	89.1	1	637.09	3.25	0	67.08	0	0.59	0	0	5.55	0	0	0	0	0	0	15.83	15.83
Fixed Reactor Bank 1	FRB1	369378	4908755	6	0	0	89.8	89.8	1	704.35	5.25	0	67.96	0	-0.94	0	0	1.9	0	0	0	0	0	0	20.87	20.87
Fixed Reactor Bank 2	FRB2	369464	4908755	6	0	0	89.8	89.8	1	740.89	5.25	0	68.4	0	-0.96	0	0	1.98	0	0	0	0	0	0	20.36	20.36
Inverter	MV4-12	369043	4908803	2	0	0	89.1	89.1	1	704.59	3.25	0	67.96	0	0.61	0	0	5.71	0	0	0	0	0	0	14.77	14.77
Inverter	MV3-5	368340	4907843	2	0	0	89.1	89.1	1	816.19	3.25	0	69.24	0	0.64	0	0	5.95	0	0	0	0	0	0	13.22	13.22
Inverter	MV5-6	369982	4908507	2	0	0	89.1	89.1	1	957.84	3.25	0	70.63	0	0.68	0	0	6.23	0	0	0	0	0	0	11.52	11.52
Inverter	MV3-1	368156	4907976	2	0	0	89.1	89.1	1	966.25	3.25	0	70.7	0	0.68	0	0	6.25	0	0	0	0	0	0	11.43	11.43
Inverter	MV2-3	365820	4906641	2	0	0	100.3	100.3	1	3603.47	3.25	0	82.13	0	0.47	0	0	16.4	0	0	0	0	0	0	1.31	1.31
Inverter	MV2-4	365586	4906624	2	0	0	100.3	100.3	1	3825.08	3.25	0	82.65	0	0.5	0	0	16.77	0	0	0	0	0	0	0.39	0.39
Inverter	MV3-22	368656	4907142	2	0	0	89.1	89.1	1	1063.66	3.25	0	71.54	0	0.7	0	0	6.43	0	0	0	0	0	0	10.39	10.39
Inverter	MV1-1	364715	4906166	2	0	0	100.3	100.3	1	4806.17	3.25	0	84.64	0	0.62	0	0	18.29	0	0	0	0	0	0	-3.24	-3.24
Inverter	MV1-2	364753	4906063	2	0	0	100.3	100.3	1	4814.13	3.25	0	84.65	0	0.62	0	0	18.3	0	0	0	0	0	0	-3.27	-3.27
Inverter	MV1-4	364815	4905918	2	0	0	100.3	100.3	1	4821.96	3.25	0	84.66	0	0.63	0	0	18.32	0	0	0	0	0	0	-3.29	-3.29
Inverter	MV1-12	365038	4905386	2	0	0	100.3	100.3	1	4898	3.25	0	84.8	0	0.63	0	0	18.43	0	0	0	0	0	0	-3.55	-3.55
Inverter	MV1-15	365315	4904994	2	0	0	100.3	100.3	1	4908.37	3.25	0	84.82	0	0.63	0	0	18.45	0	0	0	0	0	0	-3.59	-3.59
Inverter	MV1-5	364671	4905892	2	0	0	100.3	100.3	1	4962.29	3.25	0	84.91	0	0.64	0	0	18.52	0	0	0	0	0	0	-3.76	-3.76
Inverter	MV2-1	365842	4906816	2	0	0	97.3	97.3	1	3515.65	3.25	0	81.92	0	0.45	0	0	16.26	0	0	0	0	0	0	-1.32	-1.32
Inverter	MV1-8	364788	4905647	2	0	0	100.3	100.3	1	4974.06	3.25	0	84.93	0	0.64	0	0	18.54	0	0	0	0	0	0	-3.8	-3.8
Inverter	MV1-6	364477	4905835	2	0	0	100.3	100.3	1	5161.5	3.25	0	85.26	0	0.66	0	0	18.82	0	0	0	0	0	0	-4.42	-4.42
Inverter	MV1-9	364561	4905646	2	0	0	100.3	100.3	1	5173.18	3.25	0	85.28	0	0.66	0	0	18.83	0	0	0	0	0	0	-4.45	-4.45
Inverter	MV1-11	364655	4905414	2	0	0	100.3	100.3	1	5206.54	3.25	0	85.33	0	0.66	0	0	18.88	0	0	0	0	0	0	-4.56	-4.56
SubstationTransformer	W_ST	369711.17	4906112.3	2.5	0	0	92	92	1	2077.41	3.5	0	77.35	0	-0.15	0	0	4.5	0	0	0	0	0	0	10.28	10.28
Westbrook Inverter Enclosur	W_INV5	369719	4906574	2	0	0	89.1	89.1	1	1643.42	3.25	0	75.31	0	0.82	0	0	7.45	0	0	0	0	0	0	5.47	5.47
Westbrook Inverter Enclosur	W_INV6	369875	4906578	2	0	0	89.1	89.1	1	1703.44	3.25	0	75.63	0	0.84	0	0	7.55	0	0	0	0	0	0	5.04	5.04
Westbrook Inverter Enclosur	W_INV2	369374	4906388	2	0	0	89.1	89.1	1	1733.61	3.25	0	75.78	0	0.85	0	0	7.6	0	0	0	0	0	0	4.83	4.83
Westbrook Inverter Enclosur	W_INV7	369780	4906417	2	0	0	89.1	89.1	1	1811.85	3.25	0	76.16	0	0.86	0	0	7.74	0	0	0	0	0	0	4.3	4.3
Inverter	MV1-7	364925	4905782	2	0	0	97.3	97.3	1	4788.54	3.25	0	84.6	0	0.62	0	0	18.27	0	0	0	0	0	0	-6.18	-6.18
Inverter	MV1-10	365004	4905564	2	0	0	97.3	97.3	1	4830.48	3.25	0	84.68	0	0.63	0	0	18.33	0	0	0	0	0	0	-6.32	-6.32
Inverter	MV1-14	365163	4905049	2	0	0	97.3	97.3	1	4993.12	3.25	0	84.97	0	0.64	0	0	18.57	0	0	0	0	0	0	-6.87	-6.87
Westbrook Inverter Enclosur	W_INV3	369508	4906164	2	0	0	89.1	89.1	1	1977.65	3.25	0	76.92	0	0.9	0	0	8.01	0	0	0	0	0	0	3.22	3.22
Westbrook Inverter Enclosur	W_INV4	369673	4906164	2	0	0	89.1	89.1	1	2017.01	3.25	0	77.09	0	0.91	0	0	8.07	0	0	0	0	0	0	2.98	2.98
Inverter	MV1-13	364731	4905241	2	0	0	97.3	97.3	1	5234.12	3.25	0	85.38	0	0.66	0	0	18.92	0	0	0	0	0	0	-7.65	-7.65
Westbrook Inverter Enclosur	W_INV1	369409	4906578	2	0	0	86.1	86.1	1	1552.29	3.25	0	74.82	0	0.8	0	0	7.3	0	0	0	0	0	0	3.14	3.14
Inverter	MV6-4	370250	4906966	2	0	0	86.1	86.1	1	1606.55	3.25	0	75.12	0	0.82	0	0	7.39	0	0	0	0	0	0	2.73	2.73
Inverter	MV2-2	365977	4906654	2	0	0	89.1	89.1	1	3455.07	3.25	0	81.77	0	1.26	0	0	10.3	0	0	0	0	0	0	-4.27	-4.27
Gardiner Substation	G_Sub	366586.3	4903349.9	2.5	0	0	90.8	90.8	1	5382.54	4.25	0	85.62	0	1.74	2.27	0.38	9.06	0	0	0	0	0	0	-7.92	-7.92
Inverter	MV1-3	364440	4906039	2	0	0	89.1	89.1	1	5109.04	3.25	0	85.17	0	1.67	0	0	12.61	0	0	0	0	0	0	-10.38	-10.38
Westbrook Inverter Transfor	W_INVTR1	369403	4906578	2	0	0	78.2	78.2	1	1551.16	3.25	0	74.81	0	-2.23	0	0	0.98	0	0	0	0	0	0	4.67	4.67
Westbrook Inverter Transfor	W_INVTR5	369725	4906574	2	0	0	77.3	77.3	1	1645.63	3.25	0	75.33	0	-2.27	0	0	1.03	0	0	0	0	0	0	3.25	3.25
Inverters	G_Inv2	366676.9	4903239.1	2	0	0	87.7	87.7	1	5439.42	3.25	0	85.71	0	2.89	0	0	6.4	0	0	0	0	0	0	-7.34	-7.34
Inverters	G_Inv1	366526.4	4903225.8	2	0	0	87.7	87.7	1	5520.24	3.25	0	85.84	0	2.89	0	0	6.48	0	0	0	0	0	0	-7.56	-7.56
Inverters	G_Inv4	366732.8	4903105	2	0	0	87.7	87.7	1	5535.35	3.25	0	85.86	0	2.9	0	0	6.5	0	0	0	0	0	0	-7.6	-7.6
Westbrook Inverter Transfor	W_INVTR6	369881	4906578	2	0	0	77.3	77.3	1	1706.13	3.25	0	75.64	0	-2.29	0	0	1.06	0	0	0	0	0	0	2.93	2.93
Inverters	G_Inv3	366583.7	4903091.4	2	0	0	87.7	87.7	1	5613.25	3.25	0	85.98	0	2.9	0	0	6.58	0	0	0	0	0	0	-7.8	-7.8
Inverters	G_Inv6	366788.5	4902972	2	0	0	87.7	87.7	1	5632.48	3.25	0	86.01	0	2.9	0	0	6.6	0	0	0	0	0	0	-7.85	-7.85
Westbrook Inverter Transfor	W_INVTR2	369368	4906388	2	0	0	77.3	77.3	1	1732.72	3.25	0	75.77	0	-2.3	0	0	1.07	0	0	0	0	0	0	2.8	2.8
Inverters	G_Inv5	366638.5	4902958.1	2	0	0	87.7	87.7	1	5708.57	3.25	0	86.13	0	2.9	0	0	6.68	0	0	0	0	0	0	-8.05	-8.05
Inverters	G_Inv8	366844.5	4902838.5	2	0	0	87.7	87.7	1	5731.93	3.25	0	86.17	0	2.91	0	0	6.7	0	0	0	0	0	0	-8.11	-8.11
Inverters	G_Inv7	366694.6	4902824.7	2	0	0	87.7	87.7	1	5805.46	3.25	0	86.28	0	2.91	0	0	6.78	0	0	0	0	0	0	-8.3	-8.3
Inverters	G_Inv10	366900.7	4902704.8	2	0	0	87.7	87.7	1	5833.39	3.25	0	86.32	0	2.91	0	0	6.81	0	0	0	0	0	0	-8.38	-8.38
Inverters	G_Inv9	366750.9	4902691.8	2	0	0	87.7	87.7	1	5903.77	3.25	0	86.42	0	2.91	0	0	6.88	0	0	0	0	0	0	-8.55	-8.55
Westbrook Inverter Transfor	W_INVTR7	369786	4906417	2	0	0	77.3	77.3	1	1814.06	3.25	0	76.17	0	-2.34	0	0	1.11	0	0	0	0	0	0	2.39	2.39

Westbrook Inverter Transfor	W_INVTR3	369514	4906164	2	0	0	77.3	77.3	1	1978.85	3.25	0	76.93	0	-2.4	0	0	1.2	0	0	0	0	0	0	1.61	1.61
Westbrook Inverter Transfor	W_INVTR4	369679	4906164	2	0	0	77.3	77.3	1	2018.68	3.25	0	77.1	0	-2.41	0	0	1.22	0	0	0	0	0	0	1.44	1.44
Inverter Transformer	MV6-1 T	370230	4907364	2	0	0	69.4	69.4	1	1337.95	3.25	0	73.53	0	1.9	0	0	4.25	0	0	0	0	0	0	-10.32	-10.32
Inverter Transformer	MV6-4 T	370244	4906966	2	0	0	69.4	69.4	1	1602.31	3.25	0	75.09	0	2.02	0	0	4.55	0	0	0	0	0	0	-12.31	-12.31
Inverter Transformer	MV4-15 T	369170	4908481	2	0	0	56.1	56.1	1	383.12	3.25	0	62.67	0	-0.11	0	0	3.14	0	0	0	0	0	0	-9.64	-9.64
Inverter Transformer	MV4-14 T	369182	4908507	2	0	0	56.1	56.1	1	410.68	3.25	0	63.27	0	-0.12	0	0	3.25	0	0	0	0	0	0	-10.34	-10.34
Inverter Transformer	MV3-2 T	368677	4907928	2	0	0	56.1	56.1	1	470.37	3.25	0	64.45	0	-0.12	0	0	3.45	0	0	0	0	0	0	-11.73	-11.73
Inverter Transformer	MV4-13 T	369057	4908605	2	0	0	56.1	56.1	1	506.23	3.25	0	65.09	0	-0.12	0	0	3.57	0	0	0	0	0	0	-12.48	-12.48
Inverter Transformer	MV3-8 T	368685	4907712	2	0	0	56.1	56.1	1	579.78	3.25	0	66.27	0	-0.11	0	0	3.8	0	0	0	0	0	0	-13.9	-13.9
Inverter Transformer	MV3-4 T	368507	4907925	2	0	0	56.1	56.1	1	632.28	3.25	0	67.02	0	-0.1	0	0	3.95	0	0	0	0	0	0	-14.81	-14.81
Inverter Transformer	MV4-12 T	369049	4908803	2	0	0	56.1	56.1	1	704.01	3.25	0	67.95	0	-0.08	0	0	4.14	0	0	0	0	0	0	-15.96	-15.96
Inverter Transformer	MV3-9 T	368517	4907703	2	0	0	56.1	56.1	1	718.06	3.25	0	68.12	0	-0.08	0	0	4.18	0	0	0	0	0	0	-16.17	-16.17
Inverter Transformer	MV3-14 T	368678	4907498	2	0	0	56.1	56.1	1	744.93	3.25	0	68.44	0	-0.07	0	0	4.25	0	0	0	0	0	0	-16.57	-16.57
Inverter Transformer	MV2-1 T	365836	4906816	2	0	0	69.4	69.4	1	3521.23	3.25	0	81.93	0	2.66	0	0	6.31	0	0	0	0	0	0	-21.55	-21.55
Inverter Transformer	MV4-11 T	369269	4908855	2	0	0	56.1	56.1	1	768.79	3.25	0	68.72	0	-0.06	0	0	4.31	0	0	0	0	0	0	-16.91	-16.91
Inverter Transformer	MV4-10 T	369307	4908858	2	0	0	56.1	56.1	1	780.25	3.25	0	68.84	0	-0.06	0	0	4.34	0	0	0	0	0	0	-17.07	-17.07
Inverter Transformer	MV3-5 T	368335	4907843	2	0	0	56.1	56.1	1	820.93	3.25	0	69.29	0	-0.05	0	0	4.45	0	0	0	0	0	0	-17.63	-17.63
Inverter Transformer	MV3-16 T	368509	4907475	2	0	0	56.1	56.1	1	871.3	3.25	0	69.8	0	-0.03	0	0	4.58	0	0	0	0	0	0	-18.29	-18.29
Inverter Transformer	MV3-11 T	368340	4907662	2	0	0	56.1	56.1	1	890.33	3.25	0	69.99	0	-0.02	0	0	4.62	0	0	0	0	0	0	-18.53	-18.53
Inverter Transformer	MV3-20 T	368683	4907317	2	0	0	56.1	56.1	1	895.54	3.25	0	70.04	0	-0.02	0	0	4.64	0	0	0	0	0	0	-18.6	-18.6
Inverter Transformer	MV4-7 T	369040	4909001	2	0	0	56.1	56.1	1	902.04	3.25	0	70.1	0	-0.02	0	0	4.65	0	0	0	0	0	0	-18.68	-18.68
Inverter Transformer	MV4-8 T	369262	4909001	2	0	0	56.1	56.1	1	911.1	3.25	0	70.19	0	-0.02	0	0	4.67	0	0	0	0	0	0	-18.79	-18.79
Inverter Transformer	MV4-9 T	369284	4909001	2	0	0	56.1	56.1	1	914.94	3.25	0	70.23	0	-0.02	0	0	4.68	0	0	0	0	0	0	-18.84	-18.84
Inverter Transformer	MV5-6 T	369987	4908507	2	0	0	56.1	56.1	1	962.37	3.25	0	70.67	0	0	0	0	4.8	0	0	0	0	0	0	-19.41	-19.41
Inverter Transformer	MV3-1 T	368150	4907976	2	0	0	56.1	56.1	1	972.2	3.25	0	70.76	0	0	0	0	4.82	0	0	0	0	0	0	-19.52	-19.52
Inverter Transformer	MV3-15 T	368351	4907477	2	0	0	56.1	56.1	1	986.31	3.25	0	70.88	0	0.01	0	0	4.86	0	0	0	0	0	0	-19.69	-19.69
Inverter Transformer	MV3-6 T	368156	4907834	2	0	0	56.1	56.1	1	994.78	3.25	0	70.95	0	0.01	0	0	4.88	0	0	0	0	0	0	-19.78	-19.78
Inverter Transformer	MV1-7 T	364919	4905782	2	0	0	69.4	69.4	1	4793.79	3.25	0	84.61	0	2.97	0	0	7.24	0	0	0	0	0	0	-25.48	-25.48
Inverter Transformer	MV1-10 T	365010	4905564	2	0	0	69.4	69.4	1	4825.38	3.25	0	84.67	0	2.98	0	0	7.26	0	0	0	0	0	0	-25.56	-25.56
Inverter Transformer	MV3-10 T	368162	4907669	2	0	0	56.1	56.1	1	1045.85	3.25	0	71.39	0	0.03	0	0	5	0	0	0	0	0	0	-20.36	-20.36
Inverter Transformer	MV3-22 T	368661	4907142	2	0	0	56.1	56.1	1	1061.52	3.25	0	71.52	0	0.03	0	0	5.03	0	0	0	0	0	0	-20.53	-20.53
Inverter Transformer	MV3-19 T	368352	4907347	2	0	0	56.1	56.1	1	1072.7	3.25	0	71.61	0	0.04	0	0	5.06	0	0	0	0	0	0	-20.65	-20.65
Inverter Transformer	MV5-5 T	370021	4908690	2	0	0	56.1	56.1	1	1080.93	3.25	0	71.68	0	0.04	0	0	5.08	0	0	0	0	0	0	-20.74	-20.74
Inverter Transformer	MV1-14 T	365157	4905049	2	0	0	69.4	69.4	1	4997.87	3.25	0	84.98	0	3.01	0	0	7.38	0	0	0	0	0	0	-26.02	-26.02
Inverter Transformer	MV3-21 T	368484	4907206	2	0	0	56.1	56.1	1	1095.32	3.25	0	71.79	0	0.05	0	0	5.11	0	0	0	0	0	0	-20.89	-20.89
Inverter Transformer	MV4-6 T	369249	4909192	2	0	0	56.1	56.1	1	1098.33	3.25	0	71.81	0	0.05	0	0	5.12	0	0	0	0	0	0	-20.92	-20.92
Inverter Transformer	MV4-4 T	369033	4909199	2	0	0	56.1	56.1	1	1099.99	3.25	0	71.83	0	0.05	0	0	5.13	0	0	0	0	0	0	-20.94	-20.94
Inverter Transformer	MV4-5 T	369283	4909199	2	0	0	56.1	56.1	1	1109.94	3.25	0	71.91	0	0.05	0	0	5.15	0	0	0	0	0	0	-21.05	-21.05
Inverter Transformer	MV3-17 T	368183	4907472	2	0	0	56.1	56.1	1	1124.13	3.25	0	72.02	0	0.06	0	0	5.18	0	0	0	0	0	0	-21.19	-21.19
Inverter Transformer	MV1-13 T	364725	4905241	2	0	0	69.4	69.4	1	5239.15	3.25	0	85.39	0	3.06	0	0	7.54	0	0	0	0	0	0	-26.63	-26.63
Inverter Transformer	MV5-2 T	370011	4908853	2	0	0	56.1	56.1	1	1169.88	3.25	0	72.36	0	0.07	0	0	5.29	0	0	0	0	0	0	-21.66	-21.66
Inverter Transformer	MV3-3 T	367944	4907927	2	0	0	56.1	56.1	1	1183.02	3.25	0	72.46	0	0.08	0	0	5.32	0	0	0	0	0	0	-21.8	-21.8
Inverter Transformer	MV3-7 T	367951	4907754	2	0	0	56.1	56.1	1	1213.95	3.25	0	72.68	0	0.09	0	0	5.39	0	0	0	0	0	0	-22.1	-22.1
Inverter Transformer	MV6-2 T	370091	4907339	2	0	0	56.1	56.1	1	1239.64	3.25	0	72.87	0	0.1	0	0	5.45	0	0	0	0	0	0	-22.35	-22.35
Inverter Transformer	MV3-13 T	367958	4907577	2	0	0	56.1	56.1	1	1269.63	3.25	0	73.07	0	0.11	0	0	5.51	0	0	0	0	0	0	-22.64	-22.64
Inverter Transformer	MV4-1 T	369017	4909397	2	0	0	56.1	56.1	1	1298.63	3.25	0	73.27	0	0.12	0	0	5.58	0	0	0	0	0	0	-22.91	-22.91
Inverter Transformer	MV4-3 T	369234	4909397	2	0	0	56.1	56.1	1	1300.55	3.25	0	73.28	0	0.12	0	0	5.58	0	0	0	0	0	0	-22.93	-22.93
Inverter Transformer	MV4-2 T	369267	4909397	2	0	0	56.1	56.1	1	1304.01	3.25	0	73.31	0	0.12	0	0	5.59	0	0	0	0	0	0	-22.96	-22.96
Inverter Transformer	MV5-3 T	370237	4908851	2	0	0	56.1	56.1	1	1349.87	3.25	0	73.61	0	0.14	0	0	5.69	0	0	0	0	0	0	-23.38	-23.38
Inverter Transformer	MV5-4 T	370330	4908707	2	0	0	56.1	56.1	1	1358.19	3.25	0	73.66	0	0.14	0	0	5.71	0	0	0	0	0	0	-23.45	-23.45
Inverter Transformer	MV5-1 T	370015	4909142	2	0	0	56.1	56.1	1	1376.01	3.25	0	73.77	0	0.15	0	0	5.75	0	0	0	0	0	0	-23.61	-23.61
Inverter Transformer	MV6-3 T	370202	4907140	2	0	0	56.1	56.1	1	1452.31	3.25	0	74.24	0	0.18	0	0	5.92	0	0	0	0	0	0	-24.28	-24.28
Inverter Transformer	MV3-18 T	367757	4907412	2	0	0	56.1	56.1	1	1522.35	3.25	0	74.65	0	0.21	0	0	6.07	0	0	0	0	0	0	-24.87	-24.87
Inverter Transformer	MV3-12 T	367674	4907594	2	0	0	56.1	56.1	1	1526.98	3.25	0	74.68	0	0.21	0	0	6.08	0	0	0	0	0	0	-24.9	-24.9
Line Reactor	NGR	369421	4908787.5	5	0	0	45.4	45.4	1	751.11	5.25	0	68.51	0	3.4	1.47	0.11	0.31	0	0	0	0	0	0	-28.35	-28.35
Inverter Transformer	MV2-2 T	365982	4906654	2	0	0	56.1	56.1	1	3450.53	3.25	0	81.76	0	1.02	0	0	9.61	0	0	0	0	0	0	-36.33	-36.33
Inverter Transformer	MV2-3 T	365814	4906641	2	0	0	56.1	56.1	1	3608.95	3.25	0	82.15	0	1.09	0	0	9.86	0	0	0	0	0	0	-37.03	-37.03
Inverter Transformer	MV2-4 T	365590	4906628	2	0	0	56.1	56.1	1	3819.85	3.25	0	82.64	0	1.17	0	0	10.18	0	0	0	0	0	0	-37.94	-37.94
Inverter Transformer	MV1-1 T	364721	4906166	2	0	0	56.1	56.1	1	4800.68	3.25	0	84.63	0	1.55	0	0	11.59	0	0	0	0	0	0	-41.71	-41.71
Inverter Transformer	MV1-2 T	364759	4906063	2	0	0	56.1	56.1	1	4808.7	3.25	0	84.64	0	1.56	0	0	11.6	0	0	0	0	0	0	-41.74	-41.74
Inverter Transformer	MV1-4 T	364821	4905918	2	0	0	56.1	56.1	1	4816.61	3.25	0	84.65	0	1.56	0	0	11.61	0	0	0	0	0	0	-41.76	-41.76
Inverter Transformer	MV1-12 T	365044	4905386	2	0	0	56.1	56.1	1	4893.01	3.25	0	84.79	0	1.59	0	0	11.71	0	0	0	0	0	0	-42.03	-42.03
Inverter Transformer	MV1-15 T	365309	4904994	2	0	0	56.1	56.1	1	4913.01	3.25	0	84.83	0	1.59	0	0	11.74	0	0	0	0	0	0	-42.1	-42.1
Inverter Transformer	MV1-5 T	364676	4905892	2	0	0	56.1	56.1	1	4957.82	3.25	0	84.91	0	1.61	0	0	11.8	0	0	0	0	0	0	-42.26	-42.26
Inverter Transformer	MV1-8 T	364782	4905647	2	0	0	56.1	56.1	1	4979.28	3.25	0	84.94	0	1.62	0	0	11.83	0	0	0	0	0	0	-42.33	-42.33
Inverter Transformer	MV1-3 T	364435	4906039	2	0	0	56.1	56.1	1	5113.61	3.25	0	85.17	0	1.67	0	0	12	0	0	0	0	0	0	-42.79	-42.79
Inverter Transformer	MV1-6 T	364482	4905835	2	0	0	56.1	56.1	1	5157.01	3.25	0	85.25	0	1.68	0	0	12.06	0	0	0	0	0	0	-42.93	-42.93
Inverter Transformer	MV1-9 T	364555	4905646	2	0	0	56.1	56.1	1	5178.46	3.25	0	85.28	0	1.69	0	0	12.09	0	0	0	0	0	0	-43	-43
Inverter Transformer	MV1-11 T	364649	4905414	2	0	0	56.1	56.1	1	5211.68	3.25	0	85.34	0	1.7	0	0	12.13	0	0	0	0	0	0	-43.11	-43.11
Limit. Valu 0	0																								
Level D/N: 38.9014	38.9014																								

Receiver: Existing Noise Receptor
ID: S-R42

X: 369217
Y: 4908121
Z: 4.5
Ground: 0

ISO	Description	ID	X	Y	Z	Ground	ReflOrd	LxT	LxN	L/A	Dist.	hm	Freq	Adiv	K0b	Agr	Abar	z	Aatm	Afol	Ahous	Cmet	CmetN	Dc	RL	LtotT	LtotN
	Sol_Luce Substation	S_Substation	369426	4908792	3.5	0	0	112.1	112.1	1	702.8	5.24	0	67.94	0	0.04	6.25	0.34	1.89	0	0	0	0	0	0	35.96	35.96
	Inverter	MV3-8	368680	4907712	2	0	0	100.3	100.3	1	675.02	3.25	0	67.59	0	-0.43	0	0	9.61	0	0	0	0	0	0	23.54	23.54
	Inverter	MV4-11	369264	4908855	2	0	0	100.3	100.3	1	735.51	3.25	0	68.33	0	-0.39	0	0	9.9	0	0	0	0	0	0	22.47	22.47
	Inverter	MV4-10	369312	4908858	2	0	0	100.3	100.3	1	743.1	3.25	0	68.42	0	-0.38	0	0	9.94	0	0	0	0	0	0	22.34	22.34
	Inverter	MV3-9	368512	4907703	2	0	0	100.3	100.3	1	819.61	3.25	0	69.27	0	-0.34	0	0	10.26	0	0	0	0	0	0	21.12	21.12
	Inverter	MV3-14	368684	4907498	2	0	0	100.3	100.3	1	819.89	3.25	0	69.28	0	-0.34	0	0	10.26	0	0	0	0	0	0	21.12	21.12
	Inverter	MV4-8	369256	4909001	2	0	0	100.3	100.3	1	880.87	3.25	0	69.9	0	-0.31	0	0	10.5	0	0	0	0	0	0	20.23	20.23
	Inverter	MV4-9	369289	4909001	2	0	0	100.3	100.3	1	882.94	3.25	0	69.92	0	-0.31	0	0	10.5	0	0	0	0	0	0	20.2	20.2
	Inverter	MV4-7	369035	4909001	2	0	0	100.3	100.3	1	898.63	3.25	0	70.07	0	-0.3	0	0	10.56	0	0	0	0	0	0	19.98	19.98
	Inverter	MV3-16	368514	4907475	2	0	0	100.3	100.3	1	954.74	3.25	0	70.6	0	-0.27	0	0	10.76	0	0	0	0	0	0	19.22	19.22
	Inverter	MV3-20	368689	4907317	2	0	0	100.3	100.3	1	961.88	3.25	0	70.66	0	-0.27	0	0	10.78	0	0	0	0	0	0	19.13	19.13
	Inverter	MV5-5	370015	4908690	2	0	0	100.3	100.3	1	980.09	3.25	0	70.83	0	-0.26	0	0	10.84	0	0	0	0	0	0	18.9	18.9
	Inverter	MV3-11	368346	4907662	2	0	0	100.3	100.3	1	984.54	3.25	0	70.86	0	-0.25	0	0	10.86	0	0	0	0	0	0	18.84	18.84
	DSTATCOM - 10 MVAR #2	DSAT2	369403	4908757	2.5	0	0	96.6	96.6	1	662.64	3.5	0	67.43	0	2.5	0	0	0.84	0	0	0	0	0	0	25.87	25.87
	DSTATCOM - 10 MVAR #1	DSAT1	369437	4908757	2.5	0	0	96.6	96.6	1	672.98	3.5	0	67.56	0	2.52	0	0	0.85	0	0	0	0	0	0	25.71	25.71
	Inverter	MV4-6	369243	4909192	2	0	0	100.3	100.3	1	1071.32	3.25	0	71.6	0	-0.21	0	0	11.14	0	0	0	0	0	0	17.79	17.79
	Inverter	MV3-15	368357	4907477	2	0	0	100.3	100.3	1	1074.4	3.25	0	71.62	0	-0.21	0	0	11.15	0	0	0	0	0	0	17.75	17.75
	Inverter	MV5-2	370006	4908853	2	0	0	100.3	100.3	1	1076.27	3.25	0	71.64	0	-0.21	0	0	11.16	0	0	0	0	0	0	17.73	17.73
	Inverter	MV4-5	369289	4909199	2	0	0	100.3	100.3	1	1080.4	3.25	0	71.67	0	-0.21	0	0	11.17	0	0	0	0	0	0	17.68	17.68
	Inverter	MV3-6	368162	4907834	2	0	0	100.3	100.3	1	1093.34	3.25	0	71.78	0	-0.2	0	0	11.21	0	0	0	0	0	0	17.53	17.53
	Inverter	MV4-4	369027	4909199	2	0	0	100.3	100.3	1	1094.62	3.25	0	71.79	0	-0.2	0	0	11.21	0	0	0	0	0	0	17.52	17.52
	Inverter	MV3-10	368167	4907669	2	0	0	100.3	100.3	1	1143.16	3.25	0	72.16	0	-0.18	0	0	11.36	0	0	0	0	0	0	16.97	16.97
	Inverter	MV3-19	368357	4907347	2	0	0	100.3	100.3	1	1157.01	3.25	0	72.27	0	-0.17	0	0	11.4	0	0	0	0	0	0	16.82	16.82
	Inverter	MV6-2	370085	4907339	2	0	0	100.3	100.3	1	1168.31	3.25	0	72.35	0	-0.17	0	0	11.43	0	0	0	0	0	0	16.7	16.7
	Inverter	MV3-21	368478	4907206	2	0	0	100.3	100.3	1	1176.16	3.25	0	72.41	0	-0.16	0	0	11.46	0	0	0	0	0	0	16.61	16.61
	Inverter	MV3-17	368178	4907472	2	0	0	100.3	100.3	1	1225.04	3.25	0	72.76	0	-0.14	0	0	11.6	0	0	0	0	0	0	16.1	16.1
	Inverter	MV5-3	370231	4908851	2	0	0	100.3	100.3	1	1249.44	3.25	0	72.93	0	-0.13	0	0	11.67	0	0	0	0	0	0	15.84	15.84
	Inverter	MV5-4	370324	4908707	2	0	0	100.3	100.3	1	1252.54	3.25	0	72.96	0	-0.13	0	0	11.67	0	0	0	0	0	0	15.81	15.81
	Inverter	MV4-3	369229	4909397	2	0	0	100.3	100.3	1	1276.06	3.25	0	73.12	0	-0.12	0	0	11.74	0	0	0	0	0	0	15.58	15.58
	Inverter	MV4-2	369272	4909397	2	0	0	100.3	100.3	1	1277.19	3.25	0	73.13	0	-0.12	0	0	11.74	0	0	0	0	0	0	15.57	15.57
	Inverter	MV4-1	369011	4909397	2	0	0	100.3	100.3	1	1292.52	3.25	0	73.23	0	-0.11	0	0	11.78	0	0	0	0	0	0	15.41	15.41
	Inverter	MV3-3	367939	4907927	2	0	0	100.3	100.3	1	1292.64	3.25	0	73.23	0	-0.11	0	0	11.79	0	0	0	0	0	0	15.41	15.41
	Inverter	MV5-1	370020	4909142	2	0	0	100.3	100.3	1	1298.94	3.25	0	73.27	0	-0.11	0	0	11.8	0	0	0	0	0	0	15.35	15.35
	Inverter	MV4-15	369176	4908481	2	0	0	89.1	89.1	1	362.34	3.25	0	62.18	0	0.42	0	0	4.53	0	0	0	0	0	0	21.92	21.92
	Inverter	MV3-7	367945	4907754	2	0	0	100.3	100.3	1	1323.89	3.25	0	73.44	0	-0.1	0	0	11.87	0	0	0	0	0	0	15.11	15.11
	Inverter	MV3-13	367963	4907577	2	0	0	100.3	100.3	1	1366.92	3.25	0	73.71	0	-0.08	0	0	11.98	0	0	0	0	0	0	14.7	14.7
	Inverter	MV6-3	370207	4907140	2	0	0	100.3	100.3	1	1393.72	3.25	0	73.88	0	-0.07	0	0	12.05	0	0	0	0	0	0	14.45	14.45
	Inverter	MV4-14	369176	4908507	2	0	0	89.1	89.1	1	388.18	3.25	0	62.78	0	0.45	0	0	4.67	0	0	0	0	0	0	21.16	21.16
	Inverter	MV3-18	367752	4907412	2	0	0	100.3	100.3	1	1627.55	3.25	0	75.23	0	0.01	0	0	12.63	0	0	0	0	0	0	12.44	12.44
	Inverter	MV3-12	367668	4907594	2	0	0	100.3	100.3	1	1636.2	3.25	0	75.28	0	0.02	0	0	12.65	0	0	0	0	0	0	12.37	12.37
	Inverter	MV6-1	370235	4907364	2	0	0	97.3	97.3	1	1268.61	3.25	0	73.07	0	-0.12	0	0	11.72	0	0	0	0	0	0	12.65	12.65
	Inverter	MV4-13	369051	4908605	2	0	0	89.1	89.1	1	511.68	3.25	0	65.18	0	0.53	0	0	5.18	0	0	0	0	0	0	18.16	18.16
	Inverter	MV3-2	368671	4907928	2	0	0	89.1	89.1	1	579.11	3.25	0	66.26	0	0.57	0	0	5.39	0	0	0	0	0	0	16.84	16.84
	Fixed Reactor Bank 1	FRB1	369378	4908755	6	0	0	89.8	89.8	1	654.12	5.25	0	67.31	0	-0.92	0	0	1.78	0	0	0	0	0	0	21.6	21.6
	Fixed Reactor Bank 2	FRB2	369464	4908755	6	0	0	89.8	89.8	1	680.42	5.25	0	67.66	0	-0.93	0	0	1.84	0	0	0	0	0	0	21.21	21.21
	Inverter	MV4-12	369043	4908803	2	0	0	89.1	89.1	1	703.85	3.25	0	67.95	0	0.61	0	0	5.71	0	0	0	0	0	0	14.79	14.79
	Inverter	MV3-4	368502	4907925	2	0	0	89.1	89.1	1	741.38	3.25	0	68.4	0	0.62	0	0	5.79	0	0	0	0	0	0	14.24	14.24
	Inverter	MV5-6	369982	4908507	2	0	0	89.1	89.1	1	856.87	3.25	0	69.66	0	0.65	0	0	6.04	0	0	0	0	0	0	12.71	12.71
	Inverter	MV3-5	368340	4907843	2	0	0	89.1	89.1	1	920.01	3.25	0	70.28	0	0.67	0	0	6.16	0	0	0	0	0	0	11.95	11.95
	Inverter	MV2-3	365820	4906641	2	0	0	100.3	100.3	1	3705.4	3.25	0	82.38	0	0.48	0	0	16.57	0	0	0	0	0	0	0.88	0.88
	Inverter	MV3-1	368156	4907976	2	0	0	89.1	89.1	1	1070.87	3.25	0	71.59	0	0.7	0	0	6.45	0	0	0	0	0	0	10.32	10.32
	Inverter	MV2-4	365586	4906624	2	0	0	100.3	100.3	1	3927.49	3.25	0	82.88	0	0.52	0	0	16.93	0	0	0	0	0	0	-0.02	-0.02
	Inverter	MV3-22	368656	4907142	2	0	0	89.1	89.1	1	1128.35	3.25	0	72.05	0	0.71	0	0	6.55	0	0	0	0	0	0	9.74	9.74
	Inverter	MV1-1	364715	4906166	2	0	0	100.3	100.3	1	4908.16	3.25	0	84.82	0	0.63	0	0	18.44	0	0	0	0	0	0	-3.58	-3.58
	Inverter	MV1-2	364753	4906063	2	0	0	100.3	100.3	1	4915.55	3.25	0	84.83	0	0.63	0	0	18.46	0	0	0	0	0	0	-3.61	-3.61
	Inverter	MV1-4	364815	4905918	2	0	0	100.3	100.3	1	4922.48	3.25	0	84.84	0	0.63	0	0	18.47	0	0	0	0	0	0	-3.63	-3.63
	Inverter	MV1-12	365038	4905386	2	0	0	100.3	100.3	1	4994.42	3.25	0	84.97	0	0.64	0	0	18.57	0	0	0	0	0	0	-3.87	-3.87
	Inverter	MV1-15	365315	4904994	2	0	0	100.3	100.3	1	5000.37	3.25	0	84.98	0	0.64	0	0	18.58	0	0	0	0	0	0	-3.89	-3.89
	Inverter	MV1-5	364671	4905892	2	0	0	100.3	100.3	1	5063.06	3.25	0	85.09	0	0.65	0	0	18.67	0	0	0	0	0	0	-4.1	-4.1
	Inverter	MV1-8	364788	4905647	2	0	0	100.3	100.3	1	5073.14	3.25	0	85.11	0	0.65	0	0	18.69	0	0	0	0	0	0	-4.13	-4.13
	Inverter	MV2-1	365842	4906816	2	0	0	97.3	97.3	1	3618.52	3.25	0	82.17	0	0.47	0	0	16.43	0	0	0	0	0	0	-1.76	-1.76
	Inverter	MV1-6	364477	4905835	2	0	0	100.3	100.3	1	5262.45	3.25	0	85.42	0	0.66	0	0	18.96	0	0	0	0	0	0	-4.74	-4.74
	Inverter	MV1-9	364561	4905646	2	0	0	100.3	100.3	1	5272.95	3.25	0	85.44	0	0.66	0	0	18.98	0	0	0	0	0	0	-4.77	-4.77
	Inverter	MV1-11	364655	4905414	2	0	0	100.3	100.3	1	5304.69	3.25	0	85.49	0	0.67	0	0	19.02	0	0	0	0	0	0	-4.87	-4.87
	SubstationTransformer	W_ST	369711.17	4906112.3	2.5	0	0	92	92	1	2068.62	3.5	0	77.31	0	-0.15	0	0	4.48	0	0	0	0	0	0	10.33	10.33
	Westbrook Inverter Enclosur	W_INV5	369719	4906574	2	0	0	89.1	89.1	1	1626.41	3.25	0	75.22	0	0.82	0	0	7.42	0	0	0	0	0	0	5.59	5.59
	Westbrook Inverter Enclosur	W_INV6	369875	4906578	2	0	0	89.1	89.1	1	1677.44	3.25	0	75.49	0	0.83	0	0	7.51	0	0	0	0	0	0	5.22	5.22
	Westbrook Inverter Enclosur	W_INV2	369374	4906388	2	0	0	89.1	89.1	1	1740.1	3.25	0	75.81	0	0.85	0	0	7.62	0	0	0	0	0	0	4.78	4.78

Westbrook Inverter Enclosur	W_INV7	369780	4906417	2	0	0	89.1	89.1	1	1794.6	3.25	0	76.08	0	0.86	0	0	7.71	0	0	0	0	0	0	4.41	4.41
Inverter	MV1-7	364925	4905782	2	0	0	97.3	97.3	1	4887.96	3.25	0	84.78	0	0.63	0	0	18.41	0	0	0	0	0	0	-6.52	-6.52
Inverter	MV1-10	365004	4905564	2	0	0	97.3	97.3	1	4928.25	3.25	0	84.85	0	0.64	0	0	18.47	0	0	0	0	0	0	-6.65	-6.65
Inverter	MV1-14	365163	4905049	2	0	0	97.3	97.3	1	5086.46	3.25	0	85.13	0	0.65	0	0	18.71	0	0	0	0	0	0	-7.17	-7.17
Westbrook Inverter Enclosur	W_INV3	369508	4906164	2	0	0	89.1	89.1	1	1978.52	3.25	0	76.93	0	0.9	0	0	8.01	0	0	0	0	0	0	3.22	3.22
Westbrook Inverter Enclosur	W_INV4	369673	4906164	2	0	0	89.1	89.1	1	2009.43	3.25	0	77.06	0	0.91	0	0	8.06	0	0	0	0	0	0	3.03	3.03
Inverter	MV1-13	364731	4905241	2	0	0	97.3	97.3	1	5330.91	3.25	0	85.54	0	0.67	0	0	19.06	0	0	0	0	0	0	-7.95	-7.95
Inverter	MV6-4	370250	4906966	2	0	0	86.1	86.1	1	1549.55	3.25	0	74.8	0	0.8	0	0	7.29	0	0	0	0	0	0	3.16	3.16
Westbrook Inverter Enclosur	W_INV1	369409	4906578	2	0	0	86.1	86.1	1	1554.9	3.25	0	74.83	0	0.8	0	0	7.3	0	0	0	0	0	0	3.12	3.12
Inverter	MV2-2	365977	4906654	2	0	0	89.1	89.1	1	3556.64	3.25	0	82.02	0	1.28	0	0	10.45	0	0	0	0	0	0	-4.69	-4.69
Gardiner Substation	G_Sub	366586.3	4903349.9	2.5	0	0	90.8	90.8	1	5448.3	4.25	0	85.73	0	1.76	2.25	0.38	9.14	0	0	0	0	0	0	-8.1	-8.1
Inverter	MV1-3	364440	4906039	2	0	0	89.1	89.1	1	5210.99	3.25	0	85.34	0	1.69	0	0	12.74	0	0	0	0	0	0	-10.72	-10.72
Westbrook Inverter Transfor	W_INVTR1	369403	4906578	2	0	0	78.2	78.2	1	1554.17	3.25	0	74.83	0	-2.23	0	0	0.98	0	0	0	0	0	0	4.66	4.66
Westbrook Inverter Transfor	W_INVTR5	369725	4906574	2	0	0	77.3	77.3	1	1628.27	3.25	0	75.23	0	-2.26	0	0	1.02	0	0	0	0	0	0	3.35	3.35
Inverters	G_Inv2	366676.9	4903239.1	2	0	0	87.7	87.7	1	5503.19	3.25	0	85.81	0	2.89	0	0	6.47	0	0	0	0	0	0	-7.51	-7.51
Westbrook Inverter Transfor	W_INVTR6	369881	4906578	2	0	0	77.3	77.3	1	1679.81	3.25	0	75.51	0	-2.28	0	0	1.05	0	0	0	0	0	0	3.07	3.07
Inverters	G_Inv1	366526.4	4903225.8	2	0	0	87.7	87.7	1	5585.9	3.25	0	85.94	0	2.9	0	0	6.55	0	0	0	0	0	0	-7.73	-7.73
Inverters	G_Inv4	366732.8	4903105	2	0	0	87.7	87.7	1	5597.46	3.25	0	85.96	0	2.9	0	0	6.56	0	0	0	0	0	0	-7.76	-7.76
Inverters	G_Inv3	366583.7	4903091.4	2	0	0	87.7	87.7	1	5677.25	3.25	0	86.08	0	2.9	0	0	6.65	0	0	0	0	0	0	-7.97	-7.97
Inverters	G_Inv6	366788.5	4902972	2	0	0	87.7	87.7	1	5692.96	3.25	0	86.11	0	2.9	0	0	6.66	0	0	0	0	0	0	-8.01	-8.01
Westbrook Inverter Transfor	W_INVTR2	369368	4906388	2	0	0	77.3	77.3	1	1739.57	3.25	0	75.81	0	-2.31	0	0	1.08	0	0	0	0	0	0	2.76	2.76
Inverters	G_Inv5	366638.5	4902958.1	2	0	0	87.7	87.7	1	5770.98	3.25	0	86.22	0	2.91	0	0	6.74	0	0	0	0	0	0	-8.21	-8.21
Inverters	G_Inv8	366844.5	4902838.5	2	0	0	87.7	87.7	1	5790.82	3.25	0	86.25	0	2.91	0	0	6.76	0	0	0	0	0	0	-8.27	-8.27
Inverters	G_Inv7	366694.6	4902824.7	2	0	0	87.7	87.7	1	5866.29	3.25	0	86.37	0	2.91	0	0	6.84	0	0	0	0	0	0	-8.46	-8.46
Inverters	G_Inv10	366900.7	4902704.8	2	0	0	87.7	87.7	1	5890.71	3.25	0	86.4	0	2.91	0	0	6.87	0	0	0	0	0	0	-8.52	-8.52
Westbrook Inverter Transfor	W_INVTR7	369786	4906417	2	0	0	77.3	77.3	1	1796.49	3.25	0	76.09	0	-2.33	0	0	1.11	0	0	0	0	0	0	2.48	2.48
Inverters	G_Inv9	366750.9	4902691.8	2	0	0	87.7	87.7	1	5963.04	3.25	0	86.51	0	2.92	0	0	6.94	0	0	0	0	0	0	-8.7	-8.7
Westbrook Inverter Transfor	W_INVTR3	369514	4906164	2	0	0	77.3	77.3	1	1979.41	3.25	0	76.93	0	-2.4	0	0	1.2	0	0	0	0	0	0	1.61	1.61
Westbrook Inverter Transfor	W_INVTR4	369679	4906164	2	0	0	77.3	77.3	1	2010.8	3.25	0	77.07	0	-2.41	0	0	1.21	0	0	0	0	0	0	1.47	1.47
Inverter Transformer	MV6-1 T	370230	4907364	2	0	0	69.4	69.4	1	1264.6	3.25	0	73.04	0	1.86	0	0	4.16	0	0	0	0	0	0	-9.7	-9.7
Inverter Transformer	MV6-4 T	370244	4906966	2	0	0	69.4	69.4	1	1545.56	3.25	0	74.78	0	1.99	0	0	4.49	0	0	0	0	0	0	-11.91	-11.91
Inverter Transformer	MV4-15 T	369170	4908481	2	0	0	56.1	56.1	1	363.06	3.25	0	62.2	0	-0.1	0	0	3.06	0	0	0	0	0	0	-9.1	-9.1
Inverter Transformer	MV4-14 T	369182	4908507	2	0	0	56.1	56.1	1	387.59	3.25	0	62.77	0	-0.11	0	0	3.16	0	0	0	0	0	0	-9.76	-9.76
Inverter Transformer	MV4-13 T	369057	4908605	2	0	0	56.1	56.1	1	509.77	3.25	0	65.15	0	-0.12	0	0	3.58	0	0	0	0	0	0	-12.56	-12.56
Inverter Transformer	MV3-2 T	368677	4907928	2	0	0	56.1	56.1	1	573.46	3.25	0	66.17	0	-0.11	0	0	3.78	0	0	0	0	0	0	-13.78	-13.78
Inverter Transformer	MV3-8 T	368685	4907712	2	0	0	56.1	56.1	1	671.05	3.25	0	67.54	0	-0.09	0	0	4.05	0	0	0	0	0	0	-15.44	-15.44
Inverter Transformer	MV4-12 T	369049	4908803	2	0	0	56.1	56.1	1	702.39	3.25	0	67.93	0	-0.08	0	0	4.14	0	0	0	0	0	0	-15.93	-15.93
Inverter Transformer	MV4-11 T	369269	4908855	2	0	0	56.1	56.1	1	735.84	3.25	0	68.34	0	-0.07	0	0	4.23	0	0	0	0	0	0	-16.43	-16.43
Inverter Transformer	MV3-4 T	368507	4907925	2	0	0	56.1	56.1	1	736.56	3.25	0	68.34	0	-0.07	0	0	4.23	0	0	0	0	0	0	-16.45	-16.45
Inverter Transformer	MV4-10 T	369307	4908858	2	0	0	56.1	56.1	1	742.48	3.25	0	68.41	0	-0.07	0	0	4.25	0	0	0	0	0	0	-16.53	-16.53
Inverter Transformer	MV2-1 T	365836	4906816	2	0	0	69.4	69.4	1	3624.11	3.25	0	82.18	0	2.69	0	0	6.39	0	0	0	0	0	0	-21.91	-21.91
Inverter Transformer	MV3-9 T	368517	4907703	2	0	0	56.1	56.1	1	815.31	3.25	0	69.23	0	-0.05	0	0	4.43	0	0	0	0	0	0	-17.55	-17.55
Inverter Transformer	MV3-14 T	368678	4907498	2	0	0	56.1	56.1	1	823.81	3.25	0	69.32	0	-0.05	0	0	4.46	0	0	0	0	0	0	-17.67	-17.67
Inverter Transformer	MV5-6 T	369987	4908507	2	0	0	56.1	56.1	1	861.34	3.25	0	69.7	0	-0.03	0	0	4.55	0	0	0	0	0	0	-18.16	-18.16
Inverter Transformer	MV4-8 T	369262	4909001	2	0	0	56.1	56.1	1	881.15	3.25	0	69.9	0	-0.03	0	0	4.6	0	0	0	0	0	0	-18.41	-18.41
Inverter Transformer	MV4-9 T	369284	4909001	2	0	0	56.1	56.1	1	882.55	3.25	0	69.91	0	-0.03	0	0	4.6	0	0	0	0	0	0	-18.43	-18.43
Inverter Transformer	MV4-7 T	369040	4909001	2	0	0	56.1	56.1	1	897.63	3.25	0	70.06	0	-0.02	0	0	4.64	0	0	0	0	0	0	-18.62	-18.62
Inverter Transformer	MV3-5 T	368335	4907843	2	0	0	56.1	56.1	1	924.78	3.25	0	70.32	0	-0.01	0	0	4.71	0	0	0	0	0	0	-18.96	-18.96
Inverter Transformer	MV3-16 T	368509	4907475	2	0	0	56.1	56.1	1	958.43	3.25	0	70.63	0	0	0	0	4.79	0	0	0	0	0	0	-19.36	-19.36
Inverter Transformer	MV3-20 T	368683	4907317	2	0	0	56.1	56.1	1	965.18	3.25	0	70.69	0	0	0	0	4.81	0	0	0	0	0	0	-19.44	-19.44
Inverter Transformer	MV5-5 T	370021	4908690	2	0	0	56.1	56.1	1	984.98	3.25	0	70.87	0	0.01	0	0	4.85	0	0	0	0	0	0	-19.67	-19.67
Inverter Transformer	MV3-11 T	368340	4907662	2	0	0	56.1	56.1	1	989.86	3.25	0	70.91	0	0.01	0	0	4.86	0	0	0	0	0	0	-19.73	-19.73
Inverter Transformer	MV1-7 T	364919	4905782	2	0	0	69.4	69.4	1	4893.23	3.25	0	84.79	0	2.99	0	0	7.31	0	0	0	0	0	0	-25.74	-25.74
Inverter Transformer	MV1-10 T	365010	4905564	2	0	0	69.4	69.4	1	4923.12	3.25	0	84.84	0	3	0	0	7.33	0	0	0	0	0	0	-25.82	-25.82
Inverter Transformer	MV4-6 T	369249	4909192	2	0	0	56.1	56.1	1	1071.48	3.25	0	71.6	0	0.04	0	0	5.06	0	0	0	0	0	0	-20.64	-20.64
Inverter Transformer	MV3-1 T	368150	4907976	2	0	0	56.1	56.1	1	1076.81	3.25	0	71.64	0	0.04	0	0	5.07	0	0	0	0	0	0	-20.69	-20.69
Inverter Transformer	MV3-15 T	368351	4907477	2	0	0	56.1	56.1	1	1079.21	3.25	0	71.66	0	0.04	0	0	5.08	0	0	0	0	0	0	-20.72	-20.72
Inverter Transformer	MV5-2 T	370011	4908853	2	0	0	56.1	56.1	1	1079.94	3.25	0	71.67	0	0.04	0	0	5.08	0	0	0	0	0	0	-20.73	-20.73
Inverter Transformer	MV4-5 T	369283	4909199	2	0	0	56.1	56.1	1	1080.02	3.25	0	71.67	0	0.04	0	0	5.08	0	0	0	0	0	0	-20.73	-20.73
Inverter Transformer	MV4-4 T	369033	4909199	2	0	0	56.1	56.1	1	1093.59	3.25	0	71.78	0	0.04	0	0	5.11	0	0	0	0	0	0	-20.87	-20.87
Inverter Transformer	MV3-6 T	368156	4907834	2	0	0	56.1	56.1	1	1099.13	3.25	0	71.82	0	0.05	0	0	5.12	0	0	0	0	0	0	-20.93	-20.93
Inverter Transformer	MV1-14 T	365157	4905049	2	0	0	69.4	69.4	1	5091.25	3.25	0	85.14	0	3.03	0	0	7.44	0	0	0	0	0	0	-26.26	-26.26
Inverter Transformer	MV3-22 T	368661	4907142	2	0	0	56.1	56.1	1	1125.87	3.25	0	72.03	0	0.06	0	0	5.19	0	0	0	0	0	0	-21.21	-21.21
Inverter Transformer	MV3-10 T	368162	4907669	2	0	0	56.1	56.1	1	1147.75	3.25	0	72.2	0	0.06	0	0	5.24	0	0	0	0	0	0	-21.44	-21.44
Inverter Transformer	MV1-13 T	364725	4905241	2	0	0	69.4	69.4	1	5335.96	3.25	0	85.54	0	3.08	0	0	7.6	0	0	0	0	0	0	-26.87	-26.87
Inverter Transformer	MV3-19 T	368352	4907347	2	0	0	56.1	56.1	1	1160.74	3.25	0	72.29	0	0.07	0	0	5.27	0	0	0	0	0	0	-21.57	-21.57
Inverter Transformer	MV3-21 T	368484	4907206	2	0	0	56.1	56.1	1	1172.4	3.25	0	72.38	0	0.07	0	0	5.29	0	0	0	0	0	0	-21.69	-21.69
Inverter Transformer	MV6-2 T	370091	4907339	2	0	0	56.1	56.1	1	1172.78	3.25	0	72.38	0	0.07	0	0	5.29	0	0	0	0	0	0	-21.69	-21.69
Inverter Transformer	MV3-17 T	368183	4907472	2	0	0	56.1	56.1	1	1220.8	3.25	0	72.73	0	0.09	0	0	5.4	0	0	0	0	0	0	-22.17	-22.17
Inverter Transformer	MV5-3 T	370237	4908851	2	0	0	56.1	56.1	1	1254.32	3.25	0	72.97	0	0.1	0	0	5.48	0	0	0	0	0	0	-22.49	-22.49
Inverter Transformer	MV5-4 T	370330	4908707	2	0	0	56.1	56.1	1	1257.84	3.25	0	72.99	0	0.11	0	0	5.49	0	0	0	0	0	0	-22.53	-22.53
Inverter Transformer	MV4-3 T	369234	4909397	2	0	0	56.1	56.1	1	1276.12	3.25	0	73.12	0	0.11	0	0	5.53	0	0	0	0	0	0	-22.7	-22.7
Inverter Transformer	MV4-2 T	369267	4909397	2	0	0	56.1	56.1	1	1276.98	3.25	0	73.12	0	0.11	0	0	5.53	0	0	0	0	0	0	-22.71	-22.71
Inverter Transformer	MV3-3 T	367944	4907927	2	0	0	56.1	56.1	1	1287.7	3.25	0	73.2	0	0.12	0	0	5.55	0	0	0	0	0	0	-22.81	-22.81

	Inverter Transformer	MV4-1 T	369017	4909397	2	0	0	56.1	56.1	1	1291.58	3.25	0	73.22	0	0.12	0	0	5.56	0	0	0	0	0	0	-22.84	-22.84
	Inverter Transformer	MV5-1 T	370015	4909142	2	0	0	56.1	56.1	1	1295.86	3.25	0	73.25	0	0.12	0	0	5.57	0	0	0	0	0	0	-22.88	-22.88
	Inverter Transformer	MV3-7 T	367951	4907754	2	0	0	56.1	56.1	1	1318.12	3.25	0	73.4	0	0.13	0	0	5.62	0	0	0	0	0	0	-23.09	-23.09
	Inverter Transformer	MV3-13 T	367958	4907577	2	0	0	56.1	56.1	1	1371.5	3.25	0	73.74	0	0.15	0	0	5.74	0	0	0	0	0	0	-23.57	-23.57
	Inverter Transformer	MV6-3 T	370202	4907140	2	0	0	56.1	56.1	1	1390.18	3.25	0	73.86	0	0.16	0	0	5.78	0	0	0	0	0	0	-23.74	-23.74
	Inverter Transformer	MV3-18 T	367757	4907412	2	0	0	56.1	56.1	1	1623.05	3.25	0	75.21	0	0.25	0	0	6.28	0	0	0	0	0	0	-25.67	-25.67
	Inverter Transformer	MV3-12 T	367674	4907594	2	0	0	56.1	56.1	1	1630.52	3.25	0	75.25	0	0.25	0	0	6.29	0	0	0	0	0	0	-25.73	-25.73
	Line Reactor	NGR	369421	4908787.5	5	0	0	45.4	45.4	1	697.02	5.25	0	67.86	0	3.38	1.55	0.11	0.29	0	0	0	0	0	0	-27.73	-27.73
	Inverter Transformer	MV2-2 T	365982	4906654	2	0	0	56.1	56.1	1	3552.09	3.25	0	82.01	0	1.06	0	0	9.77	0	0	0	0	0	0	-36.78	-36.78
	Inverter Transformer	MV2-3 T	365814	4906641	2	0	0	56.1	56.1	1	3710.9	3.25	0	82.39	0	1.13	0	0	10.02	0	0	0	0	0	0	-37.48	-37.48
	Inverter Transformer	MV2-4 T	365590	4906628	2	0	0	56.1	56.1	1	3922.27	3.25	0	82.87	0	1.21	0	0	10.34	0	0	0	0	0	0	-38.36	-38.36
	Inverter Transformer	MV1-1 T	364721	4906166	2	0	0	56.1	56.1	1	4902.66	3.25	0	84.81	0	1.59	0	0	11.73	0	0	0	0	0	0	-42.07	-42.07
	Inverter Transformer	MV1-2 T	364759	4906063	2	0	0	56.1	56.1	1	4910.11	3.25	0	84.82	0	1.59	0	0	11.74	0	0	0	0	0	0	-42.09	-42.09
	Inverter Transformer	MV1-4 T	364821	4905918	2	0	0	56.1	56.1	1	4917.12	3.25	0	84.83	0	1.6	0	0	11.74	0	0	0	0	0	0	-42.12	-42.12
	Inverter Transformer	MV1-12 T	365044	4905386	2	0	0	56.1	56.1	1	4989.4	3.25	0	84.96	0	1.62	0	0	11.84	0	0	0	0	0	0	-42.36	-42.36
	Inverter Transformer	MV1-15 T	365309	4904994	2	0	0	56.1	56.1	1	5005.06	3.25	0	84.99	0	1.63	0	0	11.86	0	0	0	0	0	0	-42.42	-42.42
	Inverter Transformer	MV1-5 T	364676	4905892	2	0	0	56.1	56.1	1	5058.57	3.25	0	85.08	0	1.65	0	0	11.93	0	0	0	0	0	0	-42.6	-42.6
	Inverter Transformer	MV1-8 T	364782	4905647	2	0	0	56.1	56.1	1	5078.38	3.25	0	85.11	0	1.65	0	0	11.96	0	0	0	0	0	0	-42.67	-42.67
	Inverter Transformer	MV1-3 T	364435	4906039	2	0	0	56.1	56.1	1	5215.58	3.25	0	85.35	0	1.7	0	0	12.13	0	0	0	0	0	0	-43.12	-43.12
	Inverter Transformer	MV1-6 T	364482	4905835	2	0	0	56.1	56.1	1	5257.95	3.25	0	85.42	0	1.72	0	0	12.19	0	0	0	0	0	0	-43.26	-43.26
	Inverter Transformer	MV1-9 T	364555	4905646	2	0	0	56.1	56.1	1	5278.25	3.25	0	85.45	0	1.72	0	0	12.22	0	0	0	0	0	0	-43.33	-43.33
	Inverter Transformer	MV1-11 T	364649	4905414	2	0	0	56.1	56.1	1	5309.85	3.25	0	85.5	0	1.74	0	0	12.26	0	0	0	0	0	0	-43.43	-43.43
Limit. Valu	0	0																								
Level D/N:	39.0218	39.0218																								

Receiver: Existing Noise Receptor
ID: S-R43
X: 368969
Y: 4908169
Z: 4.5
Ground: 0

ISO	Description	ID	X	Y	Z	Ground	ReflOrd	LxT	LxN	L/A	Dist.	hm	Freq	Adiv	K0b	Agr	Abar	z	Aatm	Afol	Ahous	Cmet	CmetN	Dc	RL	LtotT	LtotN
	Sol_Luce Substation	S_Substation	369426	4908792	3.5	0	0	112.1	112.1	1	772.64	5.24	0	68.76	0	-0.06	5.43	0.29	2.04	0	0	0	0	0	0	35.9	35.9
	Inverter	MV3-8	368680	4907712	2	0	0	100.3	100.3	1	540.72	3.25	0	65.66	0	-0.52	0	0	8.82	0	0	0	0	0	0	26.35	26.35
	Inverter	MV3-9	368512	4907703	2	0	0	100.3	100.3	1	652.7	3.25	0	67.29	0	-0.44	0	0	9.5	0	0	0	0	0	0	23.96	23.96
	Inverter	MV3-14	368684	4907498	2	0	0	100.3	100.3	1	729.02	3.25	0	68.25	0	-0.39	0	0	9.87	0	0	0	0	0	0	22.58	22.58
	Inverter	MV4-11	369264	4908855	2	0	0	100.3	100.3	1	746.74	3.25	0	68.46	0	-0.38	0	0	9.95	0	0	0	0	0	0	22.28	22.28
	Inverter	MV4-10	369312	4908858	2	0	0	100.3	100.3	1	769.66	3.25	0	68.73	0	-0.37	0	0	10.05	0	0	0	0	0	0	21.9	21.9
	Inverter	MV3-11	368346	4907662	2	0	0	100.3	100.3	1	803.23	3.25	0	69.1	0	-0.35	0	0	10.19	0	0	0	0	0	0	21.37	21.37
	Inverter	MV3-16	368514	4907475	2	0	0	100.3	100.3	1	829.86	3.25	0	69.38	0	-0.33	0	0	10.3	0	0	0	0	0	0	20.97	20.97
	Inverter	MV4-7	369035	4909001	2	0	0	100.3	100.3	1	834.62	3.25	0	69.43	0	-0.33	0	0	10.32	0	0	0	0	0	0	20.9	20.9
	Inverter	MV3-6	368162	4907834	2	0	0	100.3	100.3	1	873.77	3.25	0	69.83	0	-0.31	0	0	10.47	0	0	0	0	0	0	20.33	20.33
	Inverter	MV4-8	369256	4909001	2	0	0	100.3	100.3	1	880.11	3.25	0	69.89	0	-0.31	0	0	10.49	0	0	0	0	0	0	20.24	20.24
	Inverter	MV4-9	369289	4909001	2	0	0	100.3	100.3	1	891.42	3.25	0	70	0	-0.3	0	0	10.53	0	0	0	0	0	0	20.08	20.08
	Inverter	MV3-20	368689	4907317	2	0	0	100.3	100.3	1	896.83	3.25	0	70.05	0	-0.3	0	0	10.55	0	0	0	0	0	0	20	20
	Inverter	MV3-15	368357	4907477	2	0	0	100.3	100.3	1	923.8	3.25	0	70.31	0	-0.28	0	0	10.65	0	0	0	0	0	0	19.63	19.63
	Inverter	MV3-10	368167	4907669	2	0	0	100.3	100.3	1	945.1	3.25	0	70.51	0	-0.27	0	0	10.73	0	0	0	0	0	0	19.35	19.35
	Inverter	MV3-19	368357	4907347	2	0	0	100.3	100.3	1	1024.81	3.25	0	71.21	0	-0.23	0	0	10.99	0	0	0	0	0	0	18.34	18.34
	Inverter	MV4-4	369027	4909199	2	0	0	100.3	100.3	1	1031.63	3.25	0	71.27	0	-0.23	0	0	11.01	0	0	0	0	0	0	18.26	18.26
	Inverter	MV3-17	368178	4907472	2	0	0	100.3	100.3	1	1054.28	3.25	0	71.46	0	-0.22	0	0	11.09	0	0	0	0	0	0	17.99	17.99
	Inverter	MV3-3	367939	4907927	2	0	0	100.3	100.3	1	1058.05	3.25	0	71.49	0	-0.22	0	0	11.1	0	0	0	0	0	0	17.94	17.94
	Inverter	MV4-6	369243	4909192	2	0	0	100.3	100.3	1	1059.06	3.25	0	71.5	0	-0.22	0	0	11.1	0	0	0	0	0	0	17.93	17.93
	Inverter	MV4-5	369289	4909199	2	0	0	100.3	100.3	1	1078.57	3.25	0	71.66	0	-0.21	0	0	11.16	0	0	0	0	0	0	17.7	17.7
	Inverter	MV3-21	368478	4907206	2	0	0	100.3	100.3	1	1080.95	3.25	0	71.68	0	-0.21	0	0	11.17	0	0	0	0	0	0	17.67	17.67
	Inverter	MV3-7	367945	4907754	2	0	0	100.3	100.3	1	1104.9	3.25	0	71.87	0	-0.2	0	0	11.24	0	0	0	0	0	0	17.4	17.4
	DSTATCOM - 10 MVAR #2	DSAT2	369403	4908757	2.5	0	0	96.6	96.6	1	730.82	3.5	0	68.28	0	2.61	0	0	0.89	0	0	0	0	0	0	24.85	24.85
	DSTATCOM - 10 MVAR #1	DSAT1	369437	4908757	2.5	0	0	96.6	96.6	1	751.51	3.5	0	68.52	0	2.65	0	0	0.9	0	0	0	0	0	0	24.56	24.56
	Inverter	MV3-13	367963	4907577	2	0	0	100.3	100.3	1	1167.26	3.25	0	72.34	0	-0.17	0	0	11.43	0	0	0	0	0	0	16.71	16.71
	Inverter	MV5-5	370015	4908690	2	0	0	100.3	100.3	1	1168.57	3.25	0	72.35	0	-0.17	0	0	11.43	0	0	0	0	0	0	16.69	16.69
	Inverter	MV4-1	369011	4909397	2	0	0	100.3	100.3	1	1228.72	3.25	0	72.79	0	-0.14	0	0	11.61	0	0	0	0	0	0	16.06	16.06
	Inverter	MV5-2	370006	4908853	2	0	0	100.3	100.3	1	1242.27	3.25	0	72.88	0	-0.14	0	0	11.65	0	0	0	0	0	0	15.92	15.92
	Inverter	MV4-3	369229	4909397	2	0	0	100.3	100.3	1	1255.23	3.25	0	72.97	0	-0.13	0	0	11.68	0	0	0	0	0	0	15.79	15.79
	Inverter	MV4-2	369272	4909397	2	0	0	100.3	100.3	1	1264.83	3.25	0	73.04	0	-0.13	0	0	11.71	0	0	0	0	0	0	15.69	15.69
	Inverter	MV4-15	369176	4908481	2	0	0	89.1	89.1	1	374.43	3.25	0	62.47	0	0.43	0	0	4.6	0	0	0	0	0	0	21.56	21.56
	Inverter	MV6-2	370085	4907339	2	0	0	100.3	100.3	1	1390.81	3.25	0	73.87	0	-0.08	0	0	12.05	0	0	0	0	0	0	14.47	14.47
	Inverter	MV3-2	368671	4907928	2	0	0	89.1	89.1	1	383.26	3.25	0	62.67	0	0.44	0	0	4.65	0	0	0	0	0	0	21.3	21.3
	Inverter	MV3-12	367668	4907594	2	0	0	100.3	100.3	1	1422.4	3.25	0	74.06	0	-0.06	0	0	12.13	0	0	0	0	0	0	14.19	14.19
	Inverter	MV5-1	370020	4909142	2	0	0	100.3	100.3	1	1432.25	3.25	0	74.12	0	-0.06	0	0	12.15	0	0	0	0	0	0	14.1	14.1
	Inverter	MV3-18	367752	4907412	2	0	0	100.3	100.3	1	1433.23	3.25	0	74.13	0	-0.06	0	0	12.16	0	0	0	0	0	0	14.09	14.09
	Inverter	MV5-3	370231	4908851	2	0	0	100.3	100.3	1	1434.49	3.25	0	74.13	0	-0.06	0	0	12.16	0	0	0	0	0	0	14.08	14.08
	Inverter	MV4-14	369176	4908507	2	0	0	89.1	89.1	1	396.36	3.25	0	62.96	0	0.45	0	0	4.71	0	0	0	0	0	0	20.93	20.93
	Inverter	MV5-4	370324	4908707	2	0	0	100.3	100.3	1	1457.9	3.25	0	74.27	0	-0.05	0	0	12.22	0	0	0	0	0	0	13.87	13.87
	Inverter	MV6-3	370207	4907140	2	0	0	100.3	100.3	1	1609.81	3.25	0	75.14	0	0.01	0	0	12.59	0	0	0	0	0	0	12.58	12.58

Inverter	MV4-13	369051	4908605	2	0	0	89.1	89.1	1	443.65	3.25	0	63.94	0	0.49	0	0	4.93	0	0	0	0	0	0	19.7	19.7
Inverter	MV3-4	368502	4907925	2	0	0	89.1	89.1	1	526.91	3.25	0	65.43	0	0.54	0	0	5.23	0	0	0	0	0	0	17.85	17.85
Inverter	MV6-1	370235	4907364	2	0	0	97.3	97.3	1	1500.26	3.25	0	74.52	0	-0.03	0	0	12.33	0	0	0	0	0	0	10.5	10.5
Inverter	MV4-12	369043	4908803	2	0	0	89.1	89.1	1	638.31	3.25	0	67.1	0	0.59	0	0	5.55	0	0	0	0	0	0	15.81	15.81
Fixed Reactor Bank 1	FRB1	369378	4908755	6	0	0	89.8	89.8	1	714.62	5.25	0	68.08	0	-0.95	0	0	1.92	0	0	0	0	0	0	20.72	20.72
Fixed Reactor Bank 2	FRB2	369464	4908755	6	0	0	89.8	89.8	1	767.09	5.25	0	68.7	0	-0.97	0	0	2.03	0	0	0	0	0	0	20.01	20.01
Inverter	MV3-5	368340	4907843	2	0	0	89.1	89.1	1	708.47	3.25	0	68.01	0	0.61	0	0	5.72	0	0	0	0	0	0	14.72	14.72
Inverter	MV3-1	368156	4907976	2	0	0	89.1	89.1	1	835.6	3.25	0	69.44	0	0.65	0	0	5.99	0	0	0	0	0	0	12.98	12.98
Inverter	MV2-3	365820	4906641	2	0	0	100.3	100.3	1	3500.14	3.25	0	81.88	0	0.45	0	0	16.23	0	0	0	0	0	0	1.75	1.75
Inverter	MV2-4	365586	4906624	2	0	0	100.3	100.3	1	3719.1	3.25	0	82.41	0	0.49	0	0	16.59	0	0	0	0	0	0	0.82	0.82
Inverter	MV5-6	369982	4908507	2	0	0	89.1	89.1	1	1067.9	3.25	0	71.57	0	0.7	0	0	6.44	0	0	0	0	0	0	10.35	10.35
Inverter	MV3-22	368656	4907142	2	0	0	89.1	89.1	1	1073.64	3.25	0	71.62	0	0.7	0	0	6.45	0	0	0	0	0	0	10.29	10.29
Inverter	MV1-1	364715	4906166	2	0	0	100.3	100.3	1	4701.97	3.25	0	84.45	0	0.61	0	0	18.14	0	0	0	0	0	0	-2.88	-2.88
Inverter	MV1-2	364753	4906063	2	0	0	100.3	100.3	1	4712.74	3.25	0	84.47	0	0.61	0	0	18.15	0	0	0	0	0	0	-2.92	-2.92
Inverter	MV1-4	364815	4905918	2	0	0	100.3	100.3	1	4724.69	3.25	0	84.49	0	0.62	0	0	18.17	0	0	0	0	0	0	-2.96	-2.96
Inverter	MV2-1	365842	4906816	2	0	0	97.3	97.3	1	3407.16	3.25	0	81.65	0	0.44	0	0	16.08	0	0	0	0	0	0	-0.85	-0.85
Inverter	MV1-12	365038	4905386	2	0	0	100.3	100.3	1	4816.42	3.25	0	84.65	0	0.62	0	0	18.31	0	0	0	0	0	0	-3.28	-3.28
Inverter	MV1-15	365315	4904994	2	0	0	100.3	100.3	1	4840.7	3.25	0	84.7	0	0.63	0	0	18.34	0	0	0	0	0	0	-3.36	-3.36
Inverter	MV1-5	364671	4905892	2	0	0	100.3	100.3	1	4863.9	3.25	0	84.74	0	0.63	0	0	18.38	0	0	0	0	0	0	-3.44	-3.44
Inverter	MV1-8	364788	4905647	2	0	0	100.3	100.3	1	4882.75	3.25	0	84.77	0	0.63	0	0	18.41	0	0	0	0	0	0	-3.5	-3.5
Inverter	MV1-6	364477	4905835	2	0	0	100.3	100.3	1	5062.18	3.25	0	85.09	0	0.65	0	0	18.67	0	0	0	0	0	0	-4.09	-4.09
Inverter	MV1-9	364561	4905646	2	0	0	100.3	100.3	1	5078.98	3.25	0	85.12	0	0.65	0	0	18.7	0	0	0	0	0	0	-4.15	-4.15
Inverter	MV1-11	364655	4905414	2	0	0	100.3	100.3	1	5118.65	3.25	0	85.18	0	0.65	0	0	18.75	0	0	0	0	0	0	-4.28	-4.28
SubstationTransformer	W_ST	369711.17	4906112.3	2.5	0	0	92	92	1	2186.54	3.5	0	77.8	0	-0.12	0	0	4.68	0	0	0	0	0	0	9.62	9.62
Westbrook Inverter Enclosur	W_INV5	369719	4906574	2	0	0	89.1	89.1	1	1762.54	3.25	0	75.92	0	0.85	0	0	7.65	0	0	0	0	0	0	4.63	4.63
Inverter	MV1-7	364925	4905782	2	0	0	97.3	97.3	1	4695.92	3.25	0	84.43	0	0.61	0	0	18.13	0	0	0	0	0	0	-5.86	-5.86
Westbrook Inverter Enclosur	W_INV2	369374	4906388	2	0	0	89.1	89.1	1	1826.47	3.25	0	76.23	0	0.87	0	0	7.76	0	0	0	0	0	0	4.2	4.2
Westbrook Inverter Enclosur	W_INV6	369875	4906578	2	0	0	89.1	89.1	1	1830.88	3.25	0	76.25	0	0.87	0	0	7.77	0	0	0	0	0	0	4.17	4.17
Inverter	MV1-10	365004	4905564	2	0	0	97.3	97.3	1	4744.18	3.25	0	84.52	0	0.62	0	0	18.2	0	0	0	0	0	0	-6.03	-6.03
Inverter	MV1-14	365163	4905049	2	0	0	97.3	97.3	1	4921.39	3.25	0	84.84	0	0.63	0	0	18.46	0	0	0	0	0	0	-6.63	-6.63
Westbrook Inverter Enclosur	W_INV7	369780	4906417	2	0	0	89.1	89.1	1	1930.6	3.25	0	76.71	0	0.89	0	0	7.93	0	0	0	0	0	0	3.52	3.52
Inverter	MV1-13	364731	4905241	2	0	0	97.3	97.3	1	5151.1	3.25	0	85.24	0	0.66	0	0	18.8	0	0	0	0	0	0	-7.38	-7.38
Westbrook Inverter Enclosur	W_INV3	369508	4906164	2	0	0	89.1	89.1	1	2076.19	3.25	0	77.35	0	0.92	0	0	8.17	0	0	0	0	0	0	2.62	2.62
Westbrook Inverter Enclosur	W_INV4	369673	4906164	2	0	0	89.1	89.1	1	2125.01	3.25	0	77.55	0	0.94	0	0	8.25	0	0	0	0	0	0	2.33	2.33
Westbrook Inverter Enclosur	W_INV1	369409	4906578	2	0	0	86.1	86.1	1	1650.72	3.25	0	75.35	0	0.83	0	0	7.47	0	0	0	0	0	0	2.41	2.41
Inverter	MV6-4	370250	4906966	2	0	0	86.1	86.1	1	1757.32	3.25	0	75.9	0	0.85	0	0	7.64	0	0	0	0	0	0	1.67	1.67
Inverter	MV2-2	365977	4906654	2	0	0	89.1	89.1	1	3353.7	3.25	0	81.51	0	1.23	0	0	10.15	0	0	0	0	0	0	-3.83	-3.83
Gardiner Substation	G_Sub	366586.3	4903349.9	2.5	0	0	90.8	90.8	1	5375.96	4.25	0	85.61	0	1.74	2.27	0.38	9.06	0	0	0	0	0	0	-7.9	-7.9
Inverter	MV1-3	364440	4906039	2	0	0	89.1	89.1	1	5004.87	3.25	0	84.99	0	1.64	0	0	12.47	0	0	0	0	0	0	-10.04	-10.04
Westbrook Inverter Transfor	W_INVTR1	369403	4906578	2	0	0	78.2	78.2	1	1649.13	3.25	0	75.35	0	-2.27	0	0	1.03	0	0	0	0	0	0	4.13	4.13
Inverters	G_Inv2	366676.9	4903239.1	2	0	0	87.7	87.7	1	5436.69	3.25	0	85.71	0	2.89	0	0	6.4	0	0	0	0	0	0	-7.33	-7.33
Inverters	G_Inv1	366526.4	4903225.8	2	0	0	87.7	87.7	1	5513.76	4.22	0	85.83	0	3.24	1.44	0.01	6.48	0	0	0	0	0	0	-9.32	-9.32
Inverters	G_Inv4	366732.8	4903105	2	0	0	87.7	87.7	1	5535.76	3.25	0	85.86	0	2.9	0	0	6.5	0	0	0	0	0	0	-7.6	-7.6
Inverters	G_Inv3	366583.7	4903091.4	2	0	0	87.7	87.7	1	5609.96	3.25	0	85.98	0	2.9	0	0	6.58	0	0	0	0	0	0	-7.79	-7.79
Inverters	G_Inv6	366788.5	4902972	2	0	0	87.7	87.7	1	5635.9	3.25	0	86.02	0	2.9	0	0	6.6	0	0	0	0	0	0	-7.86	-7.86
Inverters	G_Inv5	366638.5	4902958.1	2	0	0	87.7	87.7	1	5708.3	3.25	0	86.13	0	2.9	0	0	6.68	0	0	0	0	0	0	-8.05	-8.05
Inverters	G_Inv8	366844.5	4902838.5	2	0	0	87.7	87.7	1	5738.27	3.25	0	86.18	0	2.91	0	0	6.71	0	0	0	0	0	0	-8.13	-8.13
Westbrook Inverter Transfor	W_INVTR5	369725	4906574	2	0	0	77.3	77.3	1	1765.1	3.25	0	75.94	0	-2.32	0	0	1.09	0	0	0	0	0	0	2.63	2.63
Inverters	G_Inv7	366694.6	4902824.7	2	0	0	87.7	87.7	1	5808.14	3.25	0	86.28	0	2.91	0	0	6.78	0	0	0	0	0	0	-8.31	-8.31
Inverters	G_Inv10	366900.7	4902704.8	2	0	0	87.7	87.7	1	5842.55	3.25	0	86.33	0	2.91	0	0	6.82	0	0	0	0	0	0	-8.4	-8.4
Inverters	G_Inv9	366750.9	4902691.8	2	0	0	87.7	87.7	1	5909.29	3.25	0	86.43	0	2.91	0	0	6.88	0	0	0	0	0	0	-8.57	-8.57
Westbrook Inverter Transfor	W_INVTR2	369368	4906388	2	0	0	77.3	77.3	1	1825.15	3.25	0	76.23	0	-2.34	0	0	1.12	0	0	0	0	0	0	2.33	2.33
Westbrook Inverter Transfor	W_INVTR6	369881	4906578	2	0	0	77.3	77.3	1	1833.86	3.25	0	76.27	0	-2.34	0	0	1.12	0	0	0	0	0	0	2.29	2.29
Westbrook Inverter Transfor	W_INVTR7	369786	4906417	2	0	0	77.3	77.3	1	1933.13	3.25	0	76.73	0	-2.38	0	0	1.17	0	0	0	0	0	0	1.82	1.82
Westbrook Inverter Transfor	W_INVTR3	369514	4906164	2	0	0	77.3	77.3	1	2077.75	3.25	0	77.35	0	-2.43	0	0	1.24	0	0	0	0	0	0	1.18	1.18
Westbrook Inverter Transfor	W_INVTR4	369679	4906164	2	0	0	77.3	77.3	1	2127	3.25	0	77.56	0	-2.45	0	0	1.27	0	0	0	0	0	0	0.97	0.97
Inverter Transformer	MV6-1 T	370230	4907364	2	0	0	69.4	69.4	1	1496.05	3.25	0	74.5	0	1.97	0	0	4.43	0	0	0	0	0	0	-11.55	-11.55
Inverter Transformer	MV4-15 T	369170	4908481	2	0	0	56.1	56.1	1	371.15	3.25	0	62.39	0	-0.11	0	0	3.09	0	0	0	0	0	0	-9.32	-9.32
Inverter Transformer	MV3-2 T	368677	4907928	2	0	0	56.1	56.1	1	378.62	3.25	0	62.56	0	-0.11	0	0	3.12	0	0	0	0	0	0	-9.52	-9.52
Inverter Transformer	MV6-4 T	370244	4906966	2	0	0	69.4	69.4	1	1752.95	3.25	0	75.88	0	2.08	0	0	4.71	0	0	0	0	0	0	-13.31	-13.31
Inverter Transformer	MV4-14 T	369182	4908507	2	0	0	56.1	56.1	1	399.52	3.25	0	63.03	0	-0.11	0	0	3.2	0	0	0	0	0	0	-10.06	-10.06
Inverter Transformer	MV4-13 T	369057	4908605	2	0	0	56.1	56.1	1	444.8	3.25	0	63.96	0	-0.12	0	0	3.37	0	0	0	0	0	0	-11.15	-11.15
Inverter Transformer	MV3-4 T	368507	4907925	2	0	0	56.1	56.1	1	522.48	3.25	0	65.36	0	-0.12	0	0	3.62	0	0	0	0	0	0	-12.81	-12.81
Inverter Transformer	MV3-8 T	368685	4907712	2	0	0	56.1	56.1	1	538.06	3.25	0	65.62	0	-0.11	0	0	3.67	0	0	0	0	0	0	-13.12	-13.12
Inverter Transformer	MV4-12 T	369049	4908803	2	0	0	56.1	56.1	1	639.03	3.25	0	67.11	0	-0.1	0	0	3.97	0	0	0	0	0	0	-14.92	-14.92
Inverter Transformer	MV3-9 T	368517	4907703	2	0	0	56.1	56.1	1	649.2	3.25	0	67.25	0	-0.09	0	0	3.99	0	0	0	0	0	0	-15.09	-15.09
Inverter Transformer	MV3-5 T	368335	4907843	2	0	0	56.1	56.1	1	712.91	3.25	0	68.06	0	-0.08	0	0	4.17	0	0	0	0	0	0	-16.09	-16.09
Inverter Transformer	MV3-14 T	368678	4907498	2	0	0	56.1	56.1	1	731.39	3.25	0	68.28	0	-0.07	0	0	4.22	0	0	0	0	0	0	-16.37	-16.37
Inverter Transformer	MV2-1 T	365836	4906816	2	0	0	69.4	69.4	1	3412.67	3.25	0	81.66	0	2.63	0	0	6.22	0	0	0	0	0	0	-21.16	-21.16
Inverter Transformer	MV4-11 T	369269	4908855	2	0	0	56.1	56.1	1	748.73	3.25	0	68.49	0	-0.07	0	0	4.26	0	0	0	0	0	0	-16.62	-16.62
Inverter Transformer	MV4-10 T	369307	4908858	2	0	0	56.1	56.1	1	767.44	3.25	0	68.7	0	-0.06	0	0	4.31	0	0	0	0	0	0	-16.89	-16.89
Inverter Transformer	MV3-11 T	368340	4907662	2	0	0	56.1	56.1	1	807.9	3.25	0	69.15	0	-0.05	0	0	4.42	0	0	0	0	0	0	-17.45	-17.45
Inverter Transformer	MV3-16 T	368509	4907475	2	0	0	56.1	56.1	1	832.61	3.25	0	69.41	0	-0.04	0	0	4.48	0	0	0	0	0	0	-17.79	-17.79
Inverter Transformer	MV4-7 T	369040	4909001	2	0	0	56.1	56.1	1	835.03	3.25	0	69.43	0	-0.04	0	0	4.48	0	0	0	0	0	0	-17.82	-17.82

	Inverter Transformer	MV3-1 T	368150	4907976	2	0	0	56.1	56.1	1	841.44	3.25	0	69.5	0	-0.04	0	0	4.5	0	0	0	0	0	0	-17.9	-17.9
	Inverter Transformer	MV3-6 T	368156	4907834	2	0	0	56.1	56.1	1	879.32	3.25	0	69.88	0	-0.03	0	0	4.6	0	0	0	0	0	0	-18.39	-18.39
	Inverter Transformer	MV4-8 T	369262	4909001	2	0	0	56.1	56.1	1	882.09	3.25	0	69.91	0	-0.03	0	0	4.6	0	0	0	0	0	0	-18.43	-18.43
	Inverter Transformer	MV4-9 T	369284	4909001	2	0	0	56.1	56.1	1	889.64	3.25	0	69.98	0	-0.02	0	0	4.62	0	0	0	0	0	0	-18.52	-18.52
	Inverter Transformer	MV3-20 T	368683	4907317	2	0	0	56.1	56.1	1	898.72	3.25	0	70.07	0	-0.02	0	0	4.64	0	0	0	0	0	0	-18.64	-18.64
	Inverter Transformer	MV3-15 T	368351	4907477	2	0	0	56.1	56.1	1	927.79	3.25	0	70.35	0	-0.01	0	0	4.71	0	0	0	0	0	0	-18.99	-18.99
	Inverter Transformer	MV3-10 T	368162	4907669	2	0	0	56.1	56.1	1	949.34	3.25	0	70.55	0	-0.01	0	0	4.77	0	0	0	0	0	0	-19.25	-19.25
	Inverter Transformer	MV1-7 T	364919	4905782	2	0	0	69.4	69.4	1	4701.09	3.25	0	84.44	0	2.95	0	0	7.18	0	0	0	0	0	0	-25.22	-25.22
	Inverter Transformer	MV1-10 T	365010	4905564	2	0	0	69.4	69.4	1	4739.17	3.25	0	84.51	0	2.96	0	0	7.21	0	0	0	0	0	0	-25.33	-25.33
	Inverter Transformer	MV3-19 T	368352	4907347	2	0	0	56.1	56.1	1	1027.8	3.25	0	71.24	0	0.02	0	0	4.96	0	0	0	0	0	0	-20.16	-20.16
	Inverter Transformer	MV4-4 T	369033	4909199	2	0	0	56.1	56.1	1	1031.99	3.25	0	71.27	0	0.02	0	0	4.97	0	0	0	0	0	0	-20.2	-20.2
	Inverter Transformer	MV3-17 T	368183	4907472	2	0	0	56.1	56.1	1	1050.53	3.25	0	71.43	0	0.03	0	0	5.01	0	0	0	0	0	0	-20.41	-20.41
	Inverter Transformer	MV3-3 T	367944	4907927	2	0	0	56.1	56.1	1	1053.18	3.25	0	71.45	0	0.03	0	0	5.02	0	0	0	0	0	0	-20.44	-20.44
	Inverter Transformer	MV4-6 T	369249	4909192	2	0	0	56.1	56.1	1	1060.63	3.25	0	71.51	0	0.03	0	0	5.03	0	0	0	0	0	0	-20.52	-20.52
	Inverter Transformer	MV1-14 T	365157	4905049	2	0	0	69.4	69.4	1	4926.03	3.25	0	84.85	0	3	0	0	7.33	0	0	0	0	0	0	-25.83	-25.83
	Inverter Transformer	MV3-22 T	368661	4907142	2	0	0	56.1	56.1	1	1072.19	3.25	0	71.61	0	0.04	0	0	5.06	0	0	0	0	0	0	-20.64	-20.64
	Inverter Transformer	MV5-6 T	369987	4908507	2	0	0	56.1	56.1	1	1072.65	3.25	0	71.61	0	0.04	0	0	5.06	0	0	0	0	0	0	-20.65	-20.65
	Inverter Transformer	MV4-5 T	369283	4909199	2	0	0	56.1	56.1	1	1076.8	3.25	0	71.64	0	0.04	0	0	5.07	0	0	0	0	0	0	-20.69	-20.69
	Inverter Transformer	MV3-21 T	368484	4907206	2	0	0	56.1	56.1	1	1078.24	3.25	0	71.65	0	0.04	0	0	5.07	0	0	0	0	0	0	-20.71	-20.71
	Inverter Transformer	MV3-7 T	367951	4907754	2	0	0	56.1	56.1	1	1099.34	3.25	0	71.82	0	0.05	0	0	5.12	0	0	0	0	0	0	-20.93	-20.93
	Inverter Transformer	MV1-13 T	364725	4905241	2	0	0	69.4	69.4	1	5156.04	3.25	0	85.25	0	3.04	0	0	7.49	0	0	0	0	0	0	-26.42	-26.42
	Inverter Transformer	MV3-13 T	367958	4907577	2	0	0	56.1	56.1	1	1171.58	3.25	0	72.38	0	0.07	0	0	5.29	0	0	0	0	0	0	-21.68	-21.68
	Inverter Transformer	MV5-5 T	370021	4908690	2	0	0	56.1	56.1	1	1173.95	3.25	0	72.39	0	0.07	0	0	5.3	0	0	0	0	0	0	-21.7	-21.7
	Inverter Transformer	MV4-1 T	369017	4909397	2	0	0	56.1	56.1	1	1228.94	3.25	0	72.79	0	0.09	0	0	5.42	0	0	0	0	0	0	-22.25	-22.25
	Inverter Transformer	MV5-2 T	370011	4908853	2	0	0	56.1	56.1	1	1246.45	3.25	0	72.91	0	0.1	0	0	5.46	0	0	0	0	0	0	-22.42	-22.42
	Inverter Transformer	MV4-3 T	369234	4909397	2	0	0	56.1	56.1	1	1256.27	3.25	0	72.98	0	0.1	0	0	5.48	0	0	0	0	0	0	-22.51	-22.51
	Inverter Transformer	MV4-2 T	369267	4909397	2	0	0	56.1	56.1	1	1263.64	3.25	0	73.03	0	0.11	0	0	5.5	0	0	0	0	0	0	-22.58	-22.58
	Inverter Transformer	MV6-2 T	370091	4907339	2	0	0	56.1	56.1	1	1395.63	3.25	0	73.9	0	0.16	0	0	5.79	0	0	0	0	0	0	-23.79	-23.79
	Inverter Transformer	MV3-12 T	367674	4907594	2	0	0	56.1	56.1	1	1416.92	3.25	0	74.03	0	0.17	0	0	5.84	0	0	0	0	0	0	-23.97	-23.97
	Inverter Transformer	MV5-1 T	370015	4909142	2	0	0	56.1	56.1	1	1428.58	3.25	0	74.1	0	0.17	0	0	5.86	0	0	0	0	0	0	-24.07	-24.07
	Inverter Transformer	MV3-18 T	367757	4907412	2	0	0	56.1	56.1	1	1428.99	3.25	0	74.1	0	0.17	0	0	5.86	0	0	0	0	0	0	-24.08	-24.08
	Inverter Transformer	MV5-3 T	370237	4908851	2	0	0	56.1	56.1	1	1439.78	3.25	0	74.17	0	0.18	0	0	5.89	0	0	0	0	0	0	-24.17	-24.17
	Inverter Transformer	MV5-4 T	370330	4908707	2	0	0	56.1	56.1	1	1463.48	3.25	0	74.31	0	0.18	0	0	5.94	0	0	0	0	0	0	-24.37	-24.37
	Inverter Transformer	MV6-3 T	370202	4907140	2	0	0	56.1	56.1	1	1605.97	3.25	0	75.11	0	0.24	0	0	6.24	0	0	0	0	0	0	-25.54	-25.54
	Line Reactor	NGR	369421	4908787.5	5	0	0	45.4	45.4	1	766.06	5.25	0	68.69	0	3.41	1.41	0.1	0.31	0	0	0	0	0	0	-28.46	-28.46
	Inverter Transformer	MV2-2 T	365982	4906654	2	0	0	56.1	56.1	1	3349.24	3.25	0	81.5	0	0.98	0	0	9.45	0	0	0	0	0	0	-35.86	-35.86
	Inverter Transformer	MV2-3 T	365814	4906641	2	0	0	56.1	56.1	1	3505.54	3.25	0	81.9	0	1.04	0	0	9.7	0	0	0	0	0	0	-36.58	-36.58
	Inverter Transformer	MV2-4 T	365590	4906628	2	0	0	56.1	56.1	1	3713.8	3.25	0	82.4	0	1.13	0	0	10.02	0	0	0	0	0	0	-37.49	-37.49
	Inverter Transformer	MV1-1 T	364721	4906166	2	0	0	56.1	56.1	1	4696.54	3.25	0	84.44	0	1.51	0	0	11.45	0	0	0	0	0	0	-41.34	-41.34
	Inverter Transformer	MV1-2 T	364759	4906063	2	0	0	56.1	56.1	1	4707.37	3.25	0	84.46	0	1.52	0	0	11.46	0	0	0	0	0	0	-41.38	-41.38
	Inverter Transformer	MV1-4 T	364821	4905918	2	0	0	56.1	56.1	1	4719.42	3.25	0	84.48	0	1.52	0	0	11.48	0	0	0	0	0	0	-41.42	-41.42
	Inverter Transformer	MV1-12 T	365044	4905386	2	0	0	56.1	56.1	1	4811.52	3.25	0	84.65	0	1.56	0	0	11.6	0	0	0	0	0	0	-41.75	-41.75
	Inverter Transformer	MV1-15 T	365309	4904994	2	0	0	56.1	56.1	1	4845.23	3.25	0	84.71	0	1.57	0	0	11.65	0	0	0	0	0	0	-41.87	-41.87
	Inverter Transformer	MV1-5 T	364676	4905892	2	0	0	56.1	56.1	1	4859.48	3.25	0	84.73	0	1.57	0	0	11.67	0	0	0	0	0	0	-41.91	-41.91
	Inverter Transformer	MV1-8 T	364782	4905647	2	0	0	56.1	56.1	1	4887.89	3.25	0	84.78	0	1.58	0	0	11.71	0	0	0	0	0	0	-42.01	-42.01
	Inverter Transformer	MV1-3 T	364435	4906039	2	0	0	56.1	56.1	1	5009.4	3.25	0	85	0	1.63	0	0	11.87	0	0	0	0	0	0	-42.43	-42.43
	Inverter Transformer	MV1-6 T	364482	4905835	2	0	0	56.1	56.1	1	5057.74	3.25	0	85.08	0	1.65	0	0	11.93	0	0	0	0	0	0	-42.6	-42.6
	Inverter Transformer	MV1-9 T	364555	4905646	2	0	0	56.1	56.1	1	5084.18	3.25	0	85.12	0	1.66	0	0	11.96	0	0	0	0	0	0	-42.69	-42.69
	Inverter Transformer	MV1-11 T	364649	4905414	2	0	0	56.1	56.1	1	5123.71	3.25	0	85.19	0	1.67	0	0	12.02	0	0	0	0	0	0	-42.82	-42.82
Limit. Valu	0	0																								
Level D/N:	39.2962	39.2962																								

Receiver: Existing Noise Receptor
ID: S-R44*
X: 369008
Y: 4908170
Z: 4.5
Ground: 0

ISO	Description	ID	X	Y	Z	Ground	ReflOrd	LxT	LxN	L/A	Dist.	hm	Freq	Adiv	K0b	Agr	Abar	z	Aatm	Afol	Ahous	Cmet	CmetN	Dc	RL	LtotT	LtotN
	Sol_Luce Substation	S_Substation	369426	4908792	3.5	0	0	112.1	112.1	1	749.41	5.24	0	68.49	0	-0.04	5.61	0.29	1.99	0	0	0	0	0	0	36.02	36.02
	Inverter	MV3-8	368680	4907712	2	0	0	100.3	100.3	1	563.34	3.25	0	66.02	0	-0.5	0	0	8.98	0	0	0	0	0	0	25.83	25.83
	Inverter	MV3-9	368512	4907703	2	0	0	100.3	100.3	1	681.26	3.25	0	67.67	0	-0.42	0	0	9.65	0	0	0	0	0	0	23.42	23.42
	Inverter	MV4-11	369264	4908855	2	0	0	100.3	100.3	1	731.28	3.25	0	68.28	0	-0.39	0	0	9.88	0	0	0	0	0	0	22.54	22.54
	Inverter	MV3-14	368684	4907498	2	0	0	100.3	100.3	1	746.03	3.25	0	68.46	0	-0.38	0	0	9.95	0	0	0	0	0	0	22.29	22.29
	Inverter	MV4-10	369312	4908858	2	0	0	100.3	100.3	1	752.17	3.25	0	68.53	0	-0.38	0	0	9.98	0	0	0	0	0	0	22.19	22.19
	Inverter	MV4-7	369035	4909001	2	0	0	100.3	100.3	1	831.44	3.25	0	69.4	0	-0.33	0	0	10.31	0	0	0	0	0	0	20.94	20.94
	Inverter	MV3-11	368346	4907662	2	0	0	100.3	100.3	1	834.45	3.25	0	69.43	0	-0.33	0	0	10.32	0	0	0	0	0	0	20.9	20.9
	Inverter	MV3-16	368514	4907475	2	0	0	100.3	100.3	1	852.68	3.25	0	69.62	0	-0.32	0	0	10.39	0	0	0	0	0	0	20.63	20.63
	Inverter	MV4-8	369256	4909001	2	0	0	100.3	100.3	1	867.22	3.25	0	69.76	0	-0.31	0	0	10.44	0	0	0	0	0	0	20.42	20.42
	Inverter	MV4-9	369289	4909001	2	0	0	100.3	100.3	1	877.23	3.25	0	69.86	0	-0.31	0	0	10.48	0	0	0	0	0	0	20.28	20.28
	Inverter	MV3-6	368162	4907834	2	0	0	100.3	100.3	1	910.28	3.25	0	70.18	0	-0.29	0	0	10.6	0	0	0	0	0	0	19.82	19.82
	Inverter	MV3-20	368689	4907317	2	0	0	100.3	100.3	1	910.7	3.25	0	70.19	0	-0.29	0	0	10.6	0	0	0	0	0	0	19.81	19.81
	Inverter	MV3-15	368357	4907477	2	0	0	100.3	100.3	1	950.82	3.25	0	70.56	0	-0.27	0	0	10.74	0	0	0	0	0	0	19.28	19.28

Inverter	MV3-10	368167	4907669	2	0	0	100.3	100.3	1	978.92	3.25	0	70.81	0	-0.26	0	0	10.84	0	0	0	0	0	0	18.91	18.91
Inverter	MV4-4	369027	4909199	2	0	0	100.3	100.3	1	1029.18	3.25	0	71.25	0	-0.23	0	0	11.01	0	0	0	0	0	0	18.29	18.29
Inverter	MV4-6	369243	4909192	2	0	0	100.3	100.3	1	1048.67	3.25	0	71.41	0	-0.22	0	0	11.07	0	0	0	0	0	0	18.05	18.05
Inverter	MV3-19	368357	4907347	2	0	0	100.3	100.3	1	1049.35	3.25	0	71.42	0	-0.22	0	0	11.07	0	0	0	0	0	0	18.05	18.05
Inverter	MV4-5	369289	4909199	2	0	0	100.3	100.3	1	1066.68	3.25	0	71.56	0	-0.21	0	0	11.13	0	0	0	0	0	0	17.84	17.84
DSTATCOM - 10 MVAR #2	DSAT2	369403	4908757	2.5	0	0	96.6	96.6	1	707.53	3.5	0	67.99	0	2.58	0	0	0.87	0	0	0	0	0	0	25.19	25.19
Inverter	MV3-17	368178	4907472	2	0	0	100.3	100.3	1	1084.49	3.25	0	71.7	0	-0.21	0	0	11.18	0	0	0	0	0	0	17.63	17.63
Inverter	MV3-3	367939	4907927	2	0	0	100.3	100.3	1	1096.27	3.25	0	71.8	0	-0.2	0	0	11.22	0	0	0	0	0	0	17.5	17.5
Inverter	MV3-21	368478	4907206	2	0	0	100.3	100.3	1	1100.09	3.25	0	71.83	0	-0.2	0	0	11.23	0	0	0	0	0	0	17.45	17.45
DSTATCOM - 10 MVAR #1	DSAT1	369437	4908757	2.5	0	0	96.6	96.6	1	727.06	3.5	0	68.23	0	2.61	0	0	0.88	0	0	0	0	0	0	24.91	24.91
Inverter	MV5-5	370015	4908690	2	0	0	100.3	100.3	1	1133.34	3.25	0	72.09	0	-0.18	0	0	11.33	0	0	0	0	0	0	17.08	17.08
Inverter	MV3-7	367945	4907754	2	0	0	100.3	100.3	1	1141.5	3.25	0	72.15	0	-0.18	0	0	11.35	0	0	0	0	0	0	16.99	16.99
Inverter	MV3-13	367963	4907577	2	0	0	100.3	100.3	1	1201.53	3.25	0	72.59	0	-0.15	0	0	11.53	0	0	0	0	0	0	16.34	16.34
Inverter	MV5-2	370006	4908853	2	0	0	100.3	100.3	1	1209.34	3.25	0	72.65	0	-0.15	0	0	11.55	0	0	0	0	0	0	16.26	16.26
Inverter	MV4-1	369011	4909397	2	0	0	100.3	100.3	1	1227.01	3.25	0	72.78	0	-0.14	0	0	11.6	0	0	0	0	0	0	16.07	16.07
Inverter	MV4-3	369229	4909397	2	0	0	100.3	100.3	1	1246.75	3.25	0	72.92	0	-0.13	0	0	11.66	0	0	0	0	0	0	15.87	15.87
Inverter	MV4-2	369272	4909397	2	0	0	100.3	100.3	1	1255.08	3.25	0	72.97	0	-0.13	0	0	11.68	0	0	0	0	0	0	15.79	15.79
Inverter	MV4-15	369176	4908481	2	0	0	89.1	89.1	1	353.48	3.25	0	61.97	0	0.42	0	0	4.48	0	0	0	0	0	0	22.19	22.19
Inverter	MV6-2	370085	4907339	2	0	0	100.3	100.3	1	1360.33	3.25	0	73.67	0	-0.09	0	0	11.97	0	0	0	0	0	0	14.76	14.76
Inverter	MV4-14	369176	4908507	2	0	0	89.1	89.1	1	376.56	3.25	0	62.52	0	0.44	0	0	4.61	0	0	0	0	0	0	21.49	21.49
Inverter	MV5-3	370231	4908851	2	0	0	100.3	100.3	1	1399.82	3.25	0	73.92	0	-0.07	0	0	12.07	0	0	0	0	0	0	14.39	14.39
Inverter	MV5-1	370020	4909142	2	0	0	100.3	100.3	1	1403.19	3.25	0	73.94	0	-0.07	0	0	12.08	0	0	0	0	0	0	14.36	14.36
Inverter	MV5-4	370324	4908707	2	0	0	100.3	100.3	1	1421.35	3.25	0	74.05	0	-0.06	0	0	12.13	0	0	0	0	0	0	14.2	14.2
Inverter	MV3-12	367668	4907594	2	0	0	100.3	100.3	1	1458.55	3.25	0	74.28	0	-0.05	0	0	12.22	0	0	0	0	0	0	13.86	13.86
Inverter	MV3-18	367752	4907412	2	0	0	100.3	100.3	1	1467.01	3.25	0	74.33	0	-0.05	0	0	12.24	0	0	0	0	0	0	13.79	13.79
Inverter	MV3-2	368671	4907928	2	0	0	89.1	89.1	1	414.9	3.25	0	63.36	0	0.47	0	0	4.8	0	0	0	0	0	0	20.43	20.43
Inverter	MV6-3	370207	4907140	2	0	0	100.3	100.3	1	1580.67	3.25	0	74.98	0	0	0	0	12.52	0	0	0	0	0	0	12.82	12.82
Inverter	MV4-13	369051	4908605	2	0	0	89.1	89.1	1	437.13	3.25	0	63.81	0	0.48	0	0	4.9	0	0	0	0	0	0	19.86	19.86
Inverter	MV3-4	368502	4907925	2	0	0	89.1	89.1	1	562.2	3.25	0	66	0	0.56	0	0	5.34	0	0	0	0	0	0	17.16	17.16
Inverter	MV6-1	370235	4907364	2	0	0	97.3	97.3	1	1468.05	3.25	0	74.33	0	-0.05	0	0	12.24	0	0	0	0	0	0	10.78	10.78
Inverter	MV4-12	369043	4908803	2	0	0	89.1	89.1	1	633.97	3.25	0	67.04	0	0.59	0	0	5.54	0	0	0	0	0	0	15.89	15.89
Fixed Reactor Bank 1	FRB1	369378	4908755	6	0	0	89.8	89.8	1	692.19	5.25	0	67.8	0	-0.94	0	0	1.87	0	0	0	0	0	0	21.04	21.04
Fixed Reactor Bank 2	FRB2	369464	4908755	6	0	0	89.8	89.8	1	741.73	5.25	0	68.4	0	-0.96	0	0	1.98	0	0	0	0	0	0	20.35	20.35
Inverter	MV3-5	368340	4907843	2	0	0	89.1	89.1	1	743.75	3.25	0	68.43	0	0.62	0	0	5.8	0	0	0	0	0	0	14.2	14.2
Inverter	MV3-1	368156	4907976	2	0	0	89.1	89.1	1	873.81	3.25	0	69.83	0	0.66	0	0	6.07	0	0	0	0	0	0	12.5	12.5
Inverter	MV2-3	365820	4906641	2	0	0	100.3	100.3	1	3535.7	3.25	0	81.97	0	0.46	0	0	16.29	0	0	0	0	0	0	1.59	1.59
Inverter	MV2-4	365586	4906624	2	0	0	100.3	100.3	1	3755.02	3.25	0	82.49	0	0.49	0	0	16.65	0	0	0	0	0	0	0.68	0.68
Inverter	MV5-6	369982	4908507	2	0	0	89.1	89.1	1	1030.66	3.25	0	71.26	0	0.69	0	0	6.37	0	0	0	0	0	0	10.73	10.73
Inverter	MV3-22	368656	4907142	2	0	0	89.1	89.1	1	1086.6	3.25	0	71.72	0	0.7	0	0	6.48	0	0	0	0	0	0	10.16	10.16
Inverter	MV1-1	364715	4906166	2	0	0	100.3	100.3	1	4737.71	3.25	0	84.51	0	0.62	0	0	18.19	0	0	0	0	0	0	-3.01	-3.01
Inverter	MV1-2	364753	4906063	2	0	0	100.3	100.3	1	4748.1	3.25	0	84.53	0	0.62	0	0	18.21	0	0	0	0	0	0	-3.04	-3.04
Inverter	MV1-4	364815	4905918	2	0	0	100.3	100.3	1	4759.49	3.25	0	84.55	0	0.62	0	0	18.22	0	0	0	0	0	0	-3.08	-3.08
Inverter	MV1-12	365038	4905386	2	0	0	100.3	100.3	1	4848.87	3.25	0	84.71	0	0.63	0	0	18.36	0	0	0	0	0	0	-3.39	-3.39
Inverter	MV2-1	365842	4906816	2	0	0	97.3	97.3	1	3443.38	3.25	0	81.74	0	0.44	0	0	16.14	0	0	0	0	0	0	-1.01	-1.01
Inverter	MV1-15	365315	4904994	2	0	0	100.3	100.3	1	4870.86	3.25	0	84.75	0	0.63	0	0	18.39	0	0	0	0	0	0	-3.46	-3.46
Inverter	MV1-5	364671	4905892	2	0	0	100.3	100.3	1	4898.86	3.25	0	84.8	0	0.63	0	0	18.43	0	0	0	0	0	0	-3.55	-3.55
Inverter	MV1-8	364788	4905647	2	0	0	100.3	100.3	1	4916.7	3.25	0	84.83	0	0.63	0	0	18.46	0	0	0	0	0	0	-3.61	-3.61
Inverter	MV1-6	364477	4905835	2	0	0	100.3	100.3	1	5097.27	3.25	0	85.15	0	0.65	0	0	18.72	0	0	0	0	0	0	-4.21	-4.21
Inverter	MV1-9	364561	4905646	2	0	0	100.3	100.3	1	5113.35	3.25	0	85.17	0	0.65	0	0	18.75	0	0	0	0	0	0	-4.26	-4.26
Inverter	MV1-11	364655	4905414	2	0	0	100.3	100.3	1	5152.1	3.25	0	85.24	0	0.66	0	0	18.8	0	0	0	0	0	0	-4.39	-4.39
SubstationTransformer	W_ST	369711.17	4906112.3	2.5	0	0	92	92	1	2174.56	3.5	0	77.75	0	-0.12	0	0	4.66	0	0	0	0	0	0	9.69	9.69
Westbrook Inverter Enclosur	W_INV5	369719	4906574	2	0	0	89.1	89.1	1	1747.21	3.25	0	75.85	0	0.85	0	0	7.63	0	0	0	0	0	0	4.74	4.74
Westbrook Inverter Enclosur	W_INV6	369875	4906578	2	0	0	89.1	89.1	1	1812.78	3.25	0	76.17	0	0.86	0	0	7.74	0	0	0	0	0	0	4.29	4.29
Westbrook Inverter Enclosur	W_INV2	369374	4906388	2	0	0	89.1	89.1	1	1819.2	3.25	0	76.2	0	0.86	0	0	7.75	0	0	0	0	0	0	4.25	4.25
Inverter	MV1-7	364925	4905782	2	0	0	97.3	97.3	1	4730.06	3.25	0	84.5	0	0.62	0	0	18.18	0	0	0	0	0	0	-5.98	-5.98
Inverter	MV1-10	365004	4905564	2	0	0	97.3	97.3	1	4777.37	3.25	0	84.58	0	0.62	0	0	18.25	0	0	0	0	0	0	-6.14	-6.14
Inverter	MV1-14	365163	4905049	2	0	0	97.3	97.3	1	4952.24	3.25	0	84.9	0	0.64	0	0	18.51	0	0	0	0	0	0	-6.73	-6.73
Westbrook Inverter Enclosur	W_INV7	369780	4906417	2	0	0	89.1	89.1	1	1915.46	3.25	0	76.65	0	0.89	0	0	7.91	0	0	0	0	0	0	3.62	3.62
Inverter	MV1-13	364731	4905241	2	0	0	97.3	97.3	1	5183.8	3.25	0	85.29	0	0.66	0	0	18.85	0	0	0	0	0	0	-7.49	-7.49
Westbrook Inverter Enclosur	W_INV3	369508	4906164	2	0	0	89.1	89.1	1	2067.38	3.25	0	77.31	0	0.92	0	0	8.16	0	0	0	0	0	0	2.67	2.67
Westbrook Inverter Enclosur	W_INV4	369673	4906164	2	0	0	89.1	89.1	1	2113.35	3.25	0	77.5	0	0.93	0	0	8.23	0	0	0	0	0	0	2.4	2.4
Westbrook Inverter Enclosur	W_INV1	369409	4906578	2	0	0	86.1	86.1	1	1641.73	3.25	0	75.31	0	0.82	0	0	7.45	0	0	0	0	0	0	2.48	2.48
Inverter	MV6-4	370250	4906966	2	0	0	86.1	86.1	1	1729.79	3.25	0	75.76	0	0.84	0	0	7.6	0	0	0	0	0	0	1.86	1.86
Inverter	MV2-2	365977	4906654	2	0	0	89.1	89.1	1	3388.99	3.25	0	81.6	0	1.24	0	0	10.2	0	0	0	0	0	0	-3.98	-3.98
Gardiner Substation	G_Sub	366586.3	4903349.9	2.5	0	0	90.8	90.8	1	5394.26	4.25	0	85.64	0	1.74	2.27	0.38	9.08	0	0	0	0	0	0	-7.95	-7.95
Inverter	MV1-3	364440	4906039	2	0	0	89.1	89.1	1	5040.61	3.25	0	85.05	0	1.65	0	0	12.52	0	0	0	0	0	0	-10.16	-10.16
Westbrook Inverter Transfor	W_INVTR1	369403	4906578	2	0	0	78.2	78.2	1	1640.27	3.25	0	75.3	0	-2.26	0	0	1.03	0	0	0	0	0	0	4.18	4.18
Inverters	G_Inv2	366676.9	4903239.1	2	0	0	87.7	87.7	1	5454.16	3.25	0	85.73	0	2.89	0	0	6.41	0	0	0	0	0	0	-7.38	-7.38
Inverters	G_Inv1	366526.4	4903225.8	2	0	0	87.7	87.7	1	5532.04	4.22	0	85.86	0	3.24	1.44	0.01	6.5	0	0	0	0	0	0	-9.37	-9.37
Inverters	G_Inv4	366732.8	4903105	2	0	0	87.7	87.7	1	5552.55	3.25	0	85.89	0	2.9	0	0	6.52	0	0	0	0	0	0	-7.64	-7.64
Inverters	G_Inv3	366583.7	4903091.4	2	0	0	87.7	87.7	1	5627.56	3.25	0	86.01	0	2.9	0	0	6.59	0	0	0	0	0	0	-7.84	-7.84
Inverters	G_Inv6	366788.5	4902972	2	0	0	87.7	87.7	1	5652.03	3.25	0	86.04	0	2.9	0	0	6.62	0	0	0	0	0	0	-7.91	-7.91
Inverters	G_Inv5	366638.5	4902958.1	2	0	0	87.7	87.7	1	5725.25	3.25	0	86.16	0	2.9	0	0	6.7	0	0	0	0	0	0	-8.1	-8.1
Westbrook Inverter Transfor	W_INVTR5	369725	4906574	2	0	0	77.3	77.3	1	1749.66	3.25	0	75.86	0	-2.31	0	0	1.08	0	0	0	0	0	0	2.71	2.71

Inverters	G_Inv8	366844.5	4902838.5	2	0	0	87.7	87.7	1	5753.75	3.25	0	86.2	0	2.91	0	0	6.72	0	0	0	0	0	0	-8.17	-8.17
Inverters	G_Inv7	366694.6	4902824.7	2	0	0	87.7	87.7	1	5824.44	3.25	0	86.31	0	2.91	0	0	6.8	0	0	0	0	0	0	-8.35	-8.35
Inverters	G_Inv10	366900.7	4902704.8	2	0	0	87.7	87.7	1	5857.4	3.25	0	86.35	0	2.91	0	0	6.83	0	0	0	0	0	0	-8.44	-8.44
Inverters	G_Inv9	366750.9	4902691.8	2	0	0	87.7	87.7	1	5924.96	3.25	0	86.45	0	2.91	0	0	6.9	0	0	0	0	0	0	-8.61	-8.61
Westbrook Inverter Transfor	W_INVTR6	369881	4906578	2	0	0	77.3	77.3	1	1815.65	3.25	0	76.18	0	-2.34	0	0	1.12	0	0	0	0	0	0	2.38	2.38
Westbrook Inverter Transfor	W_INVTR2	369368	4906388	2	0	0	77.3	77.3	1	1818	3.25	0	76.19	0	-2.34	0	0	1.12	0	0	0	0	0	0	2.37	2.37
Westbrook Inverter Transfor	W_INVTR7	369786	4906417	2	0	0	77.3	77.3	1	1917.89	3.25	0	76.66	0	-2.37	0	0	1.17	0	0	0	0	0	0	1.89	1.89
Westbrook Inverter Transfor	W_INVTR3	369514	4906164	2	0	0	77.3	77.3	1	2068.83	3.25	0	77.31	0	-2.43	0	0	1.24	0	0	0	0	0	0	1.22	1.22
Westbrook Inverter Transfor	W_INVTR4	369679	4906164	2	0	0	77.3	77.3	1	2115.25	3.25	0	77.51	0	-2.45	0	0	1.26	0	0	0	0	0	0	1.02	1.02
Inverter Transformer	MV6-1 T	370230	4907364	2	0	0	69.4	69.4	1	1463.87	3.25	0	74.31	0	1.96	0	0	4.39	0	0	0	0	0	0	-11.31	-11.31
Inverter Transformer	MV4-15 T	369170	4908481	2	0	0	56.1	56.1	1	350.67	3.25	0	61.9	0	-0.1	0	0	3.01	0	0	0	0	0	0	-8.75	-8.75
Inverter Transformer	MV6-4 T	370244	4906966	2	0	0	69.4	69.4	1	1725.49	3.25	0	75.74	0	2.07	0	0	4.68	0	0	0	0	0	0	-13.14	-13.14
Inverter Transformer	MV4-14 T	369182	4908507	2	0	0	56.1	56.1	1	379.28	3.25	0	62.58	0	-0.11	0	0	3.13	0	0	0	0	0	0	-9.54	-9.54
Inverter Transformer	MV3-2 T	368677	4907928	2	0	0	56.1	56.1	1	410.04	3.25	0	63.26	0	-0.12	0	0	3.24	0	0	0	0	0	0	-10.33	-10.33
Inverter Transformer	MV4-13 T	369057	4908605	2	0	0	56.1	56.1	1	437.76	3.25	0	63.82	0	-0.12	0	0	3.34	0	0	0	0	0	0	-10.99	-10.99
Inverter Transformer	MV3-4 T	368507	4907925	2	0	0	56.1	56.1	1	557.7	3.25	0	65.93	0	-0.11	0	0	3.73	0	0	0	0	0	0	-13.49	-13.49
Inverter Transformer	MV3-8 T	368685	4907712	2	0	0	56.1	56.1	1	560.45	3.25	0	65.97	0	-0.11	0	0	3.74	0	0	0	0	0	0	-13.54	-13.54
Inverter Transformer	MV4-12 T	369049	4908803	2	0	0	56.1	56.1	1	634.33	3.25	0	67.05	0	-0.1	0	0	3.95	0	0	0	0	0	0	-14.84	-14.84
Inverter Transformer	MV3-9 T	368517	4907703	2	0	0	56.1	56.1	1	677.63	3.25	0	67.62	0	-0.09	0	0	4.07	0	0	0	0	0	0	-15.55	-15.55
Inverter Transformer	MV4-11 T	369269	4908855	2	0	0	56.1	56.1	1	733.04	3.25	0	68.3	0	-0.07	0	0	4.22	0	0	0	0	0	0	-16.39	-16.39
Inverter Transformer	MV2-1 T	365836	4906816	2	0	0	69.4	69.4	1	3448.9	3.25	0	81.75	0	2.64	0	0	6.25	0	0	0	0	0	0	-21.29	-21.29
Inverter Transformer	MV3-5 T	368335	4907843	2	0	0	56.1	56.1	1	748.24	3.25	0	68.48	0	-0.07	0	0	4.26	0	0	0	0	0	0	-16.62	-16.62
Inverter Transformer	MV3-14 T	368678	4907498	2	0	0	56.1	56.1	1	748.66	3.25	0	68.49	0	-0.07	0	0	4.26	0	0	0	0	0	0	-16.62	-16.62
Inverter Transformer	MV4-10 T	369307	4908858	2	0	0	56.1	56.1	1	750.17	3.25	0	68.5	0	-0.07	0	0	4.27	0	0	0	0	0	0	-16.64	-16.64
Inverter Transformer	MV4-7 T	369040	4909001	2	0	0	56.1	56.1	1	831.62	3.25	0	69.4	0	-0.04	0	0	4.48	0	0	0	0	0	0	-17.77	-17.77
Inverter Transformer	MV3-11 T	368340	4907662	2	0	0	56.1	56.1	1	839.22	3.25	0	69.48	0	-0.04	0	0	4.49	0	0	0	0	0	0	-17.87	-17.87
Inverter Transformer	MV3-16 T	368509	4907475	2	0	0	56.1	56.1	1	855.59	3.25	0	69.65	0	-0.04	0	0	4.54	0	0	0	0	0	0	-18.09	-18.09
Inverter Transformer	MV4-8 T	369262	4909001	2	0	0	56.1	56.1	1	868.96	3.25	0	69.78	0	-0.03	0	0	4.57	0	0	0	0	0	0	-18.26	-18.26
Inverter Transformer	MV4-9 T	369284	4909001	2	0	0	56.1	56.1	1	875.64	3.25	0	69.85	0	-0.03	0	0	4.59	0	0	0	0	0	0	-18.34	-18.34
Inverter Transformer	MV3-1 T	368150	4907976	2	0	0	56.1	56.1	1	879.66	3.25	0	69.89	0	-0.03	0	0	4.6	0	0	0	0	0	0	-18.4	-18.4
Inverter Transformer	MV3-20 T	368683	4907317	2	0	0	56.1	56.1	1	912.82	3.25	0	70.21	0	-0.02	0	0	4.68	0	0	0	0	0	0	-18.81	-18.81
Inverter Transformer	MV3-6 T	368156	4907834	2	0	0	56.1	56.1	1	915.86	3.25	0	70.24	0	-0.02	0	0	4.69	0	0	0	0	0	0	-18.85	-18.85
Inverter Transformer	MV3-15 T	368351	4907477	2	0	0	56.1	56.1	1	954.94	3.25	0	70.6	0	0	0	0	4.78	0	0	0	0	0	0	-19.32	-19.32
Inverter Transformer	MV3-10 T	368162	4907669	2	0	0	56.1	56.1	1	983.22	3.25	0	70.85	0	0.01	0	0	4.85	0	0	0	0	0	0	-19.65	-19.65
Inverter Transformer	MV1-7 T	364919	4905782	2	0	0	69.4	69.4	1	4735.24	3.25	0	84.51	0	2.96	0	0	7.2	0	0	0	0	0	0	-25.32	-25.32
Inverter Transformer	MV4-4 T	369033	4909199	2	0	0	56.1	56.1	1	1029.31	3.25	0	71.25	0	0.02	0	0	4.96	0	0	0	0	0	0	-20.17	-20.17
Inverter Transformer	MV1-10 T	365010	4905564	2	0	0	69.4	69.4	1	4772.34	3.25	0	84.57	0	2.97	0	0	7.23	0	0	0	0	0	0	-25.42	-25.42
Inverter Transformer	MV5-6 T	369987	4908507	2	0	0	56.1	56.1	1	1035.38	3.25	0	71.3	0	0.02	0	0	4.97	0	0	0	0	0	0	-20.24	-20.24
Inverter Transformer	MV4-6 T	369249	4909192	2	0	0	56.1	56.1	1	1050.03	3.25	0	71.42	0	0.03	0	0	5.01	0	0	0	0	0	0	-20.4	-20.4
Inverter Transformer	MV3-19 T	368352	4907347	2	0	0	56.1	56.1	1	1052.46	3.25	0	71.44	0	0.03	0	0	5.01	0	0	0	0	0	0	-20.43	-20.43
Inverter Transformer	MV4-5 T	369283	4909199	2	0	0	56.1	56.1	1	1065.12	3.25	0	71.55	0	0.03	0	0	5.04	0	0	0	0	0	0	-20.57	-20.57
Inverter Transformer	MV1-14 T	365157	4905049	2	0	0	69.4	69.4	1	4956.9	3.25	0	84.9	0	3	0	0	7.35	0	0	0	0	0	0	-25.91	-25.91
Inverter Transformer	MV3-17 T	368183	4907472	2	0	0	56.1	56.1	1	1080.66	3.25	0	71.67	0	0.04	0	0	5.08	0	0	0	0	0	0	-20.74	-20.74
Inverter Transformer	MV3-22 T	368661	4907142	2	0	0	56.1	56.1	1	1084.99	3.25	0	71.71	0	0.04	0	0	5.09	0	0	0	0	0	0	-20.78	-20.78
Inverter Transformer	MV3-3 T	367944	4907927	2	0	0	56.1	56.1	1	1091.4	3.25	0	71.76	0	0.04	0	0	5.11	0	0	0	0	0	0	-20.85	-20.85
Inverter Transformer	MV3-21 T	368484	4907206	2	0	0	56.1	56.1	1	1097.21	3.25	0	71.81	0	0.05	0	0	5.12	0	0	0	0	0	0	-20.91	-20.91
Inverter Transformer	MV1-13 T	364725	4905241	2	0	0	69.4	69.4	1	5188.75	3.25	0	85.3	0	3.05	0	0	7.51	0	0	0	0	0	0	-26.51	-26.51
Inverter Transformer	MV3-7 T	367951	4907754	2	0	0	56.1	56.1	1	1135.92	3.25	0	72.11	0	0.06	0	0	5.21	0	0	0	0	0	0	-21.32	-21.32
Inverter Transformer	MV5-5 T	370021	4908690	2	0	0	56.1	56.1	1	1138.67	3.25	0	72.13	0	0.06	0	0	5.21	0	0	0	0	0	0	-21.35	-21.35
Inverter Transformer	MV3-13 T	367958	4907577	2	0	0	56.1	56.1	1	1205.88	3.25	0	72.63	0	0.09	0	0	5.37	0	0	0	0	0	0	-22.02	-22.02
Inverter Transformer	MV5-2 T	370011	4908853	2	0	0	56.1	56.1	1	1213.47	3.25	0	72.68	0	0.09	0	0	5.39	0	0	0	0	0	0	-22.1	-22.1
Inverter Transformer	MV4-1 T	369017	4909397	2	0	0	56.1	56.1	1	1227.04	3.25	0	72.78	0	0.09	0	0	5.42	0	0	0	0	0	0	-22.23	-22.23
Inverter Transformer	MV4-3 T	369234	4909397	2	0	0	56.1	56.1	1	1247.64	3.25	0	72.92	0	0.1	0	0	5.46	0	0	0	0	0	0	-22.43	-22.43
Inverter Transformer	MV4-2 T	369267	4909397	2	0	0	56.1	56.1	1	1254.04	3.25	0	72.97	0	0.1	0	0	5.48	0	0	0	0	0	0	-22.49	-22.49
Inverter Transformer	MV6-2 T	370091	4907339	2	0	0	56.1	56.1	1	1365.08	3.25	0	73.7	0	0.15	0	0	5.72	0	0	0	0	0	0	-23.52	-23.52
Inverter Transformer	MV5-1 T	370015	4909142	2	0	0	56.1	56.1	1	1399.59	3.25	0	73.92	0	0.16	0	0	5.8	0	0	0	0	0	0	-23.82	-23.82
Inverter Transformer	MV5-3 T	370237	4908851	2	0	0	56.1	56.1	1	1405.07	3.25	0	73.95	0	0.16	0	0	5.81	0	0	0	0	0	0	-23.87	-23.87
Inverter Transformer	MV5-4 T	370330	4908707	2	0	0	56.1	56.1	1	1426.91	3.25	0	74.09	0	0.17	0	0	5.86	0	0	0	0	0	0	-24.06	-24.06
Inverter Transformer	MV3-12 T	367674	4907594	2	0	0	56.1	56.1	1	1453.04	3.25	0	74.25	0	0.18	0	0	5.92	0	0	0	0	0	0	-24.28	-24.28
Inverter Transformer	MV3-18 T	367757	4907412	2	0	0	56.1	56.1	1	1462.73	3.25	0	74.3	0	0.18	0	0	5.94	0	0	0	0	0	0	-24.37	-24.37
Inverter Transformer	MV6-3 T	370202	4907140	2	0	0	56.1	56.1	1	1576.88	3.25	0	74.96	0	0.23	0	0	6.18	0	0	0	0	0	0	-25.31	-25.31
Line Reactor	NGR	369421	4908787.5	5	0	0	45.4	45.4	1	742.88	5.25	0	68.42	0	3.4	1.44	0.1	0.3	0	0	0	0	0	0	-28.21	-28.21
Inverter Transformer	MV2-2 T	365982	4906654	2	0	0	56.1	56.1	1	3384.51	3.25	0	81.59	0	0.99	0	0	9.5	0	0	0	0	0	0	-36.03	-36.03
Inverter Transformer	MV2-3 T	365814	4906641	2	0	0	56.1	56.1	1	3541.11	3.25	0	81.98	0	1.06	0	0	9.75	0	0	0	0	0	0	-36.73	-36.73
Inverter Transformer	MV2-4 T	365590	4906628	2	0	0	56.1	56.1	1	3749.73	3.25	0	82.48	0	1.14	0	0	10.08	0	0	0	0	0	0	-37.64	-37.64
Inverter Transformer	MV1-1 T	364721	4906166	2	0	0	56.1	56.1	1	4732.27	3.25	0	84.5	0	1.53	0	0	11.5	0	0	0	0	0	0	-41.47	-41.47
Inverter Transformer	MV1-2 T	364759	4906063	2	0	0	56.1	56.1	1	4742.73	3.25	0	84.52	0	1.53	0	0	11.51	0	0	0	0	0	0	-41.5	-41.5
Inverter Transformer	MV1-4 T	364821	4905918	2	0	0	56.1	56.1	1	4754.21	3.25	0	84.54	0	1.54	0	0	11.53	0	0	0	0	0	0	-41.54	-41.54
Inverter Transformer	MV1-12 T	365044	4905386	2	0	0	56.1	56.1	1	4843.96	3.25	0	84.7	0	1.57	0	0	11.65	0	0	0	0	0	0	-41.86	-41.86
Inverter Transformer	MV1-15 T	365309	4904994	2	0	0	56.1	56.1	1	4875.41	3.25	0	84.76	0	1.58	0	0	11.69	0	0	0	0	0	0	-41.97	-41.97
Inverter Transformer	MV1-5 T	364676	4905892	2	0	0	56.1	56.1	1	4894.44	3.25	0	84.79	0	1.59	0	0	11.71	0	0	0	0	0	0	-42.04	-42.04
Inverter Transformer	MV1-8 T	364782	4905647	2	0	0	56.1	56.1	1	4921.85	3.25	0	84.84	0	1.6	0	0	11.75	0	0	0	0	0	0	-42.13	-42.13
Inverter Transformer	MV1-3 T	364435	4906039	2	0	0	56.1	56.1	1	5045.15	3.25	0	85.06	0	1.64	0	0	11.91	0	0	0	0	0	0	-42.55	-42.55
Inverter Transformer	MV1-6 T	364482	4905835	2	0	0	56.1	56.1	1	5092.83	3.25	0	85.14	0	1.66	0	0	11.98	0	0	0	0	0	0	-42.72	-42.72

	Inverter Transformer	MV1-9 T	364555	4905646	2	0	0	56.1	56.1	1	5118.57	3.25	0	85.18	0	1.67	0	0	12.01	0	0	0	0	0	0	-42.8	-42.8
	Inverter Transformer	MV1-11 T	364649	4905414	2	0	0	56.1	56.1	1	5157.17	3.25	0	85.25	0	1.68	0	0	12.06	0	0	0	0	0	0	-42.93	-42.93
Limit. Valu	0	0																								
Level D/N:	39.3294	39.3294																								

Receiver: Existing Noise Receptor
ID: S-R45*
X: 369359
Y: 4908303
Z: 4.5
Ground: 0

ISO	Description	ID	X	Y	Z	Ground	ReflOrd	LxT	LxN	L/A	Dist.	hm	Freq	Adiv	K0b	Agr	Abar	z	Aatm	Afol	Ahous	Cmet	CmetN	Dc	RL	LtotT	LtotN
	Sol_Luce Substation	S_Substation	369426	4908792	3.5	0	0	112.1	112.1	1	493.57	5.24	0	64.87	0	0.11	7.3	0.35	1.41	0	0	0	0	0	0	38.39	38.39
	Inverter	MV4-10	369312	4908858	2	0	0	100.3	100.3	1	556.99	3.25	0	65.92	0	-0.51	0	0	8.93	0	0	0	0	0	0	25.97	25.97
	Inverter	MV4-11	369264	4908855	2	0	0	100.3	100.3	1	560.12	3.25	0	65.97	0	-0.51	0	0	8.95	0	0	0	0	0	0	25.9	25.9
	DSTATCOM - 10 MVAR #2	DSAT2	369403	4908757	2.5	0	0	96.6	96.6	1	456.13	3.5	0	64.18	0	2.09	0	0	0.68	0	0	0	0	0	0	29.68	29.68
	Inverter	MV4-9	369289	4909001	2	0	0	100.3	100.3	1	701.51	3.25	0	67.92	0	-0.41	0	0	9.74	0	0	0	0	0	0	23.06	23.06
	DSTATCOM - 10 MVAR #1	DSAT1	369437	4908757	2.5	0	0	96.6	96.6	1	460.66	3.5	0	64.27	0	2.1	0	0	0.68	0	0	0	0	0	0	29.59	29.59
	Inverter	MV4-8	369256	4909001	2	0	0	100.3	100.3	1	705.56	3.25	0	67.97	0	-0.41	0	0	9.76	0	0	0	0	0	0	22.99	22.99
	Inverter	MV5-5	370015	4908690	2	0	0	100.3	100.3	1	761.65	3.25	0	68.64	0	-0.37	0	0	10.02	0	0	0	0	0	0	22.03	22.03
	Inverter	MV4-7	369035	4909001	2	0	0	100.3	100.3	1	769.54	3.25	0	68.72	0	-0.37	0	0	10.05	0	0	0	0	0	0	21.9	21.9
	Inverter	MV5-2	370006	4908853	2	0	0	100.3	100.3	1	849.19	3.25	0	69.58	0	-0.32	0	0	10.38	0	0	0	0	0	0	20.68	20.68
	Inverter	MV4-6	369243	4909192	2	0	0	100.3	100.3	1	896.54	3.25	0	70.05	0	-0.3	0	0	10.55	0	0	0	0	0	0	20.01	20.01
	Inverter	MV4-5	369289	4909199	2	0	0	100.3	100.3	1	898.73	3.25	0	70.07	0	-0.3	0	0	10.56	0	0	0	0	0	0	19.98	19.98
	Inverter	MV3-8	368680	4907712	2	0	0	100.3	100.3	1	900.18	3.25	0	70.09	0	-0.3	0	0	10.57	0	0	0	0	0	0	19.96	19.96
	Inverter	MV4-15	369176	4908481	2	0	0	89.1	89.1	1	255.3	3.25	0	59.14	0	0.34	0	0	3.77	0	0	0	0	0	0	25.8	25.8
	Inverter	MV4-4	369027	4909199	2	0	0	100.3	100.3	1	955.53	3.25	0	70.6	0	-0.27	0	0	10.76	0	0	0	0	0	0	19.21	19.21
	Inverter	MV4-14	369176	4908507	2	0	0	89.1	89.1	1	274.06	3.25	0	59.76	0	0.35	0	0	3.93	0	0	0	0	0	0	25.02	25.02
	Inverter	MV5-3	370231	4908851	2	0	0	100.3	100.3	1	1029.9	3.25	0	71.26	0	-0.23	0	0	11.01	0	0	0	0	0	0	18.28	18.28
	Inverter	MV3-9	368512	4907703	2	0	0	100.3	100.3	1	1037.99	3.25	0	71.32	0	-0.23	0	0	11.03	0	0	0	0	0	0	18.18	18.18
	Inverter	MV5-4	370324	4908707	2	0	0	100.3	100.3	1	1046.16	3.25	0	71.39	0	-0.22	0	0	11.06	0	0	0	0	0	0	18.08	18.08
	Inverter	MV3-14	368684	4907498	2	0	0	100.3	100.3	1	1050.55	3.25	0	71.43	0	-0.22	0	0	11.07	0	0	0	0	0	0	18.03	18.03
	Inverter	MV5-1	370020	4909142	2	0	0	100.3	100.3	1	1068.1	3.25	0	71.57	0	-0.21	0	0	11.13	0	0	0	0	0	0	17.82	17.82
	Inverter	MV4-2	369272	4909397	2	0	0	100.3	100.3	1	1097.46	3.25	0	71.81	0	-0.2	0	0	11.22	0	0	0	0	0	0	17.48	17.48
	Inverter	MV4-3	369229	4909397	2	0	0	100.3	100.3	1	1101.7	3.25	0	71.84	0	-0.2	0	0	11.23	0	0	0	0	0	0	17.43	17.43
	Inverter	MV4-1	369011	4909397	2	0	0	100.3	100.3	1	1148.02	3.25	0	72.2	0	-0.18	0	0	11.37	0	0	0	0	0	0	16.92	16.92
	Inverter	MV3-16	368514	4907475	2	0	0	100.3	100.3	1	1183.05	3.25	0	72.46	0	-0.16	0	0	11.48	0	0	0	0	0	0	16.54	16.54
	Inverter	MV3-20	368689	4907317	2	0	0	100.3	100.3	1	1192.1	3.25	0	72.53	0	-0.16	0	0	11.5	0	0	0	0	0	0	16.44	16.44
	Inverter	MV3-11	368346	4907662	2	0	0	100.3	100.3	1	1198.77	3.25	0	72.57	0	-0.15	0	0	11.52	0	0	0	0	0	0	16.37	16.37
	Inverter	MV6-2	370085	4907339	2	0	0	100.3	100.3	1	1206.8	3.25	0	72.63	0	-0.15	0	0	11.55	0	0	0	0	0	0	16.29	16.29
	Inverter	MV3-6	368162	4907834	2	0	0	100.3	100.3	1	1285.6	3.25	0	73.18	0	-0.12	0	0	11.77	0	0	0	0	0	0	15.48	15.48
	Inverter	MV3-15	368357	4907477	2	0	0	100.3	100.3	1	1298.57	3.25	0	73.27	0	-0.11	0	0	11.8	0	0	0	0	0	0	15.35	15.35
	Inverter	MV3-10	368167	4907669	2	0	0	100.3	100.3	1	1350.12	3.25	0	73.61	0	-0.09	0	0	11.94	0	0	0	0	0	0	14.86	14.86
	Inverter	MV3-19	368357	4907347	2	0	0	100.3	100.3	1	1384.9	3.25	0	73.83	0	-0.08	0	0	12.03	0	0	0	0	0	0	14.53	14.53
	Inverter	MV3-21	368478	4907206	2	0	0	100.3	100.3	1	1406.97	3.25	0	73.97	0	-0.07	0	0	12.09	0	0	0	0	0	0	14.33	14.33
	Inverter	MV6-3	370207	4907140	2	0	0	100.3	100.3	1	1439.33	3.25	0	74.16	0	-0.06	0	0	12.17	0	0	0	0	0	0	14.03	14.03
	Inverter	MV3-17	368178	4907472	2	0	0	100.3	100.3	1	1444.07	3.25	0	74.19	0	-0.05	0	0	12.18	0	0	0	0	0	0	13.99	13.99
	Inverter	MV3-3	367939	4907927	2	0	0	100.3	100.3	1	1468.94	3.25	0	74.34	0	-0.05	0	0	12.25	0	0	0	0	0	0	13.77	13.77
	Inverter	MV3-7	367945	4907754	2	0	0	100.3	100.3	1	1516.84	3.25	0	74.62	0	-0.03	0	0	12.37	0	0	0	0	0	0	13.35	13.35
	Fixed Reactor Bank 1	FRB1	369378	4908755	6	0	0	89.8	89.8	1	452.4	5.25	0	64.11	0	-0.76	0	0	1.32	0	0	0	0	0	0	25.11	25.11
	Fixed Reactor Bank 2	FRB2	369464	4908755	6	0	0	89.8	89.8	1	464.04	5.25	0	64.33	0	-0.78	0	0	1.34	0	0	0	0	0	0	24.88	24.88
	Inverter	MV3-13	367963	4907577	2	0	0	100.3	100.3	1	1573.5	3.25	0	74.94	0	-0.01	0	0	12.5	0	0	0	0	0	0	12.88	12.88
	Inverter	MV4-13	369051	4908605	2	0	0	89.1	89.1	1	431.36	3.25	0	63.7	0	0.48	0	0	4.88	0	0	0	0	0	0	20.01	20.01
	Inverter	MV6-1	370235	4907364	2	0	0	97.3	97.3	1	1284.17	3.25	0	73.17	0	-0.12	0	0	11.76	0	0	0	0	0	0	12.5	12.5
	Inverter	MV3-12	367668	4907594	2	0	0	100.3	100.3	1	1833.62	3.25	0	76.27	0	0.08	0	0	13.1	0	0	0	0	0	0	10.86	10.86
	Inverter	MV3-18	367752	4907412	2	0	0	100.3	100.3	1	1837.48	3.25	0	76.28	0	0.08	0	0	13.11	0	0	0	0	0	0	10.83	10.83
	Inverter	MV4-12	369043	4908803	2	0	0	89.1	89.1	1	591.49	3.25	0	66.44	0	0.57	0	0	5.43	0	0	0	0	0	0	16.62	16.62
	Inverter	MV5-6	369982	4908507	2	0	0	89.1	89.1	1	655.55	3.25	0	67.33	0	0.6	0	0	5.59	0	0	0	0	0	0	15.53	15.53
	Inverter	MV3-2	368671	4907928	2	0	0	89.1	89.1	1	783.57	3.25	0	68.88	0	0.64	0	0	5.89	0	0	0	0	0	0	13.66	13.66
	Inverter	MV3-4	368502	4907925	2	0	0	89.1	89.1	1	936.66	3.25	0	70.43	0	0.67	0	0	6.19	0	0	0	0	0	0	11.76	11.76
	Inverter	MV2-3	365820	4906641	2	0	0	100.3	100.3	1	3909.83	3.25	0	82.84	0	0.51	0	0	16.9	0	0	0	0	0	0	0.05	0.05
	Inverter	MV3-5	368340	4907843	2	0	0	89.1	89.1	1	1118.02	3.25	0	71.97	0	0.71	0	0	6.53	0	0	0	0	0	0	9.85	9.85
	Inverter	MV2-4	365586	4906624	2	0	0	100.3	100.3	1	4129.72	3.25	0	83.32	0	0.54	0	0	17.25	0	0	0	0	0	0	-0.81	-0.81
	Inverter	MV3-1	368156	4907976	2	0	0	89.1	89.1	1	1246.65	3.25	0	72.91	0	0.74	0	0	6.77	0	0	0	0	0	0	8.64	8.64
	Inverter	MV3-22	368656	4907142	2	0	0	89.1	89.1	1	1357.25	3.25	0	73.65	0	0.76	0	0	6.96	0	0	0	0	0	0	7.68	7.68
	Inverter	MV1-1	364715	4906166	2	0	0	100.3	100.3	1	5112.09	3.25	0	85.17	0	0.65	0	0	18.74	0	0	0	0	0	0	-4.26	-4.26
	Inverter	MV1-2	364753	4906063	2	0	0	100.3	100.3	1	5121.8	3.25	0	85.19	0	0.65	0	0	18.76	0	0	0	0	0	0	-4.29	-4.29
	Inverter	MV1-4	364815	4905918	2	0	0	100.3	100.3	1	5131.88	3.25	0	85.21	0	0.65	0	0	18.77	0	0	0	0	0	0	-4.32	-4.32
	Inverter	MV1-12	365038	4905386	2	0	0	100.3	100.3	1	5213.44	3.25	0	85.34	0	0.66	0	0	18.89	0	0	0	0	0	0	-4.58	-4.58
	Inverter	MV1-15	365315	4904994	2	0	0	100.3	100.3	1	5225.27	3.25	0	85.36	0	0.66	0	0	18.91	0	0	0	0	0	0	-4.62	-4.62
	Inverter	MV1-5	364671	4905892	2	0	0	100.3	100.3	1	5271.65	3.25	0	85.44	0	0.66	0	0	18.98	0	0	0	0	0	0	-4.77	-4.77
	Inverter	MV1-8	364788	4905647	2	0	0	100.3	100.3	1	5286.62	3.25	0	85.46	0	0.67	0	0	19	0	0	0	0	0	0	-4.81	-4.81
	Inverter	MV2-1	365842	4906816	2	0	0	97.3	97.3	1	3818.44	3.25	0	82.64	0	0.5	0	0	16.76	0	0	0	0	0	0	-2.58	-2.58

Inverter	MV1-6	364477	4905835	2	0	0	100.3	100.3	1	5470.37	3.25	0	85.76	0	0.68	0	0	19.26	0	0	0	0	0	0	-5.39	-5.39
Inverter	MV1-9	364561	4905646	2	0	0	100.3	100.3	1	5484.57	3.25	0	85.78	0	0.68	0	0	19.28	0	0	0	0	0	0	-5.43	-5.43
Inverter	MV1-11	364655	4905414	2	0	0	100.3	100.3	1	5520.32	3.25	0	85.84	0	0.68	0	0	19.33	0	0	0	0	0	0	-5.54	-5.54
SubstationTransformer	W_ST	369711.17	4906112.3	2.5	0	0	92	92	1	2218.86	3.5	0	77.92	0	-0.11	0	0	4.73	0	0	0	0	0	0	9.43	9.43
Westbrook Inverter Enclosur	W_INV5	369719	4906574	2	0	0	89.1	89.1	1	1766.08	3.25	0	75.94	0	0.85	0	0	7.66	0	0	0	0	0	0	4.61	4.61
Westbrook Inverter Enclosur	W_INV6	369875	4906578	2	0	0	89.1	89.1	1	1800.52	3.25	0	76.11	0	0.86	0	0	7.72	0	0	0	0	0	0	4.37	4.37
Westbrook Inverter Enclosur	W_INV2	369374	4906388	2	0	0	89.1	89.1	1	1915.06	3.25	0	76.64	0	0.89	0	0	7.91	0	0	0	0	0	0	3.62	3.62
Westbrook Inverter Enclosur	W_INV7	369780	4906417	2	0	0	89.1	89.1	1	1932.42	3.25	0	76.72	0	0.89	0	0	7.93	0	0	0	0	0	0	3.51	3.51
Inverter	MV1-7	364925	4905782	2	0	0	97.3	97.3	1	5100.57	3.25	0	85.15	0	0.65	0	0	18.73	0	0	0	0	0	0	-7.22	-7.22
Inverter	MV1-10	365004	4905564	2	0	0	97.3	97.3	1	5144.72	3.25	0	85.23	0	0.65	0	0	18.79	0	0	0	0	0	0	-7.36	-7.36
Inverter	MV1-14	365163	4905049	2	0	0	97.3	97.3	1	5309.89	3.25	0	85.5	0	0.67	0	0	19.03	0	0	0	0	0	0	-7.89	-7.89
Westbrook Inverter Enclosur	W_INV3	369508	4906164	2	0	0	89.1	89.1	1	2144.18	3.25	0	77.63	0	0.94	0	0	8.28	0	0	0	0	0	0	2.21	2.21
Inverter	MV1-13	364731	4905241	2	0	0	97.3	97.3	1	5549.26	3.25	0	85.88	0	0.68	0	0	19.37	0	0	0	0	0	0	-8.63	-8.63
Westbrook Inverter Enclosur	W_INV4	369673	4906164	2	0	0	89.1	89.1	1	2161.93	3.25	0	77.7	0	0.95	0	0	8.31	0	0	0	0	0	0	2.11	2.11
Inverter	MV6-4	370250	4906966	2	0	0	86.1	86.1	1	1606.69	3.25	0	75.12	0	0.82	0	0	7.39	0	0	0	0	0	0	2.73	2.73
Westbrook Inverter Enclosur	W_INV1	369409	4906578	2	0	0	86.1	86.1	1	1725.73	3.25	0	75.74	0	0.84	0	0	7.59	0	0	0	0	0	0	1.88	1.88
Inverter	MV2-2	365977	4906654	2	0	0	89.1	89.1	1	3762.6	3.25	0	82.51	0	1.33	0	0	10.74	0	0	0	0	0	0	-5.53	-5.53
Gardiner Substation	G_Sub	366586.3	4903349.9	2.5	0	0	90.8	90.8	1	5676.36	4.25	0	86.08	0	1.81	2.19	0.38	9.39	0	0	0	0	0	0	-8.7	-8.7
Inverter	MV1-3	364440	4906039	2	0	0	89.1	89.1	1	5415	3.25	0	85.67	0	1.74	0	0	13.01	0	0	0	0	0	0	-11.37	-11.37
Westbrook Inverter Transfor	W_INVTR1	369403	4906578	2	0	0	78.2	78.2	1	1725.56	3.25	0	75.74	0	-2.3	0	0	1.07	0	0	0	0	0	0	3.73	3.73
Inverters	G_Inv2	366676.9	4903239.1	2	0	0	87.7	87.7	1	5730.34	3.25	0	86.16	0	2.91	0	0	6.7	0	0	0	0	0	0	-8.11	-8.11
Westbrook Inverter Transfor	W_INVTR5	369725	4906574	2	0	0	77.3	77.3	1	1767.32	3.25	0	75.95	0	-2.32	0	0	1.09	0	0	0	0	0	0	2.62	2.62
Inverters	G_Inv1	366526.4	4903225.8	2	0	0	87.7	87.7	1	5813.91	3.25	0	86.29	0	2.91	0	0	6.79	0	0	0	0	0	0	-8.33	-8.33
Inverters	G_Inv4	366732.8	4903105	2	0	0	87.7	87.7	1	5823.76	3.25	0	86.3	0	2.91	0	0	6.8	0	0	0	0	0	0	-8.35	-8.35
Inverters	G_Inv3	366583.7	4903091.4	2	0	0	87.7	87.7	1	5904.5	3.25	0	86.42	0	2.91	0	0	6.88	0	0	0	0	0	0	-8.56	-8.56
Westbrook Inverter Transfor	W_INVTR6	369881	4906578	2	0	0	77.3	77.3	1	1802.25	3.25	0	76.12	0	-2.33	0	0	1.11	0	0	0	0	0	0	2.45	2.45
Inverters	G_Inv6	366788.5	4902972	2	0	0	87.7	87.7	1	5918.36	3.25	0	86.44	0	2.91	0	0	6.89	0	0	0	0	0	0	-8.59	-8.59
Inverters	G_Inv5	366638.5	4902958.1	2	0	0	87.7	87.7	1	5997.42	3.25	0	86.56	0	2.92	0	0	6.98	0	0	0	0	0	0	-8.79	-8.79
Inverters	G_Inv8	366844.5	4902838.5	2	0	0	87.7	87.7	1	6015.27	3.25	0	86.59	0	2.92	0	0	6.99	0	0	0	0	0	0	-8.84	-8.84
Inverters	G_Inv7	366694.6	4902824.7	2	0	0	87.7	87.7	1	6091.86	3.25	0	86.7	0	2.92	0	0	7.07	0	0	0	0	0	0	-9.03	-9.03
Inverters	G_Inv10	366900.7	4902704.8	2	0	0	87.7	87.7	1	6114.17	3.25	0	86.73	0	2.92	0	0	7.09	0	0	0	0	0	0	-9.08	-9.08
Inverters	G_Inv9	366750.9	4902691.8	2	0	0	87.7	87.7	1	6187.71	3.25	0	86.83	0	2.93	0	0	7.17	0	0	0	0	0	0	-9.27	-9.27
Westbrook Inverter Transfor	W_INVTR2	369368	4906388	2	0	0	77.3	77.3	1	1915.02	3.25	0	76.64	0	-2.37	0	0	1.16	0	0	0	0	0	0	1.91	1.91
Westbrook Inverter Transfor	W_INVTR7	369786	4906417	2	0	0	77.3	77.3	1	1933.74	3.25	0	76.73	0	-2.38	0	0	1.17	0	0	0	0	0	0	1.82	1.82
Westbrook Inverter Transfor	W_INVTR3	369514	4906164	2	0	0	77.3	77.3	1	2144.61	3.25	0	77.63	0	-2.46	0	0	1.28	0	0	0	0	0	0	0.89	0.89
Westbrook Inverter Transfor	W_INVTR4	369679	4906164	2	0	0	77.3	77.3	1	2162.81	3.25	0	77.7	0	-2.46	0	0	1.28	0	0	0	0	0	0	0.82	0.82
Inverter Transformer	MV4-15 T	369170	4908481	2	0	0	56.1	56.1	1	259.64	3.25	0	59.29	0	-0.03	0	0	2.58	0	0	0	0	0	0	-5.78	-5.78
Inverter Transformer	MV4-14 T	369182	4908507	2	0	0	56.1	56.1	1	270.09	3.25	0	59.63	0	-0.04	0	0	2.64	0	0	0	0	0	0	-6.17	-6.17
Inverter Transformer	MV6-1 T	370230	4907364	2	0	0	69.4	69.4	1	1280.77	3.25	0	73.15	0	1.87	0	0	4.18	0	0	0	0	0	0	-9.84	-9.84
Inverter Transformer	MV6-4 T	370244	4906966	2	0	0	69.4	69.4	1	1603.37	3.25	0	75.1	0	2.02	0	0	4.55	0	0	0	0	0	0	-12.32	-12.32
Inverter Transformer	MV4-13 T	369057	4908605	2	0	0	56.1	56.1	1	427.1	3.25	0	63.61	0	-0.12	0	0	3.31	0	0	0	0	0	0	-10.74	-10.74
Inverter Transformer	MV4-10 T	369307	4908858	2	0	0	56.1	56.1	1	557.44	3.25	0	65.92	0	-0.11	0	0	3.73	0	0	0	0	0	0	-13.48	-13.48
Inverter Transformer	MV4-11 T	369269	4908855	2	0	0	56.1	56.1	1	559.29	3.25	0	65.95	0	-0.11	0	0	3.74	0	0	0	0	0	0	-13.52	-13.52
Inverter Transformer	MV4-12 T	369049	4908803	2	0	0	56.1	56.1	1	588.31	3.25	0	66.39	0	-0.11	0	0	3.82	0	0	0	0	0	0	-14.05	-14.05
Inverter Transformer	MV5-6 T	369987	4908507	2	0	0	56.1	56.1	1	660.31	3.25	0	67.39	0	-0.09	0	0	4.03	0	0	0	0	0	0	-15.27	-15.27
Inverter Transformer	MV4-9 T	369284	4909001	2	0	0	56.1	56.1	1	702.02	3.25	0	67.93	0	-0.08	0	0	4.14	0	0	0	0	0	0	-15.93	-15.93
Inverter Transformer	MV4-8 T	369262	4909001	2	0	0	56.1	56.1	1	704.71	3.25	0	67.96	0	-0.08	0	0	4.15	0	0	0	0	0	0	-15.97	-15.97
Inverter Transformer	MV5-5 T	370021	4908690	2	0	0	56.1	56.1	1	766.82	3.25	0	68.69	0	-0.06	0	0	4.31	0	0	0	0	0	0	-16.88	-16.88
Inverter Transformer	MV4-7 T	369040	4909001	2	0	0	56.1	56.1	1	767.44	3.25	0	68.7	0	-0.06	0	0	4.31	0	0	0	0	0	0	-16.89	-16.89
Inverter Transformer	MV3-2 T	368677	4907928	2	0	0	56.1	56.1	1	778.3	3.25	0	68.82	0	-0.06	0	0	4.34	0	0	0	0	0	0	-17.04	-17.04
Inverter Transformer	MV2-1 T	365836	4906816	2	0	0	69.4	69.4	1	3823.96	3.25	0	82.65	0	2.74	0	0	6.54	0	0	0	0	0	0	-22.58	-22.58
Inverter Transformer	MV5-2 T	370011	4908853	2	0	0	56.1	56.1	1	853	3.25	0	69.62	0	-0.04	0	0	4.53	0	0	0	0	0	0	-18.05	-18.05
Inverter Transformer	MV4-6 T	369249	4909192	2	0	0	56.1	56.1	1	895.78	3.25	0	70.04	0	-0.02	0	0	4.64	0	0	0	0	0	0	-18.6	-18.6
Inverter Transformer	MV3-8 T	368685	4907712	2	0	0	56.1	56.1	1	896.42	3.25	0	70.05	0	-0.02	0	0	4.64	0	0	0	0	0	0	-18.61	-18.61
Inverter Transformer	MV4-5 T	369283	4909199	2	0	0	56.1	56.1	1	899.22	3.25	0	70.08	0	-0.02	0	0	4.64	0	0	0	0	0	0	-18.64	-18.64
Inverter Transformer	MV3-4 T	368507	4907925	2	0	0	56.1	56.1	1	932.09	3.25	0	70.39	0	-0.01	0	0	4.72	0	0	0	0	0	0	-19.04	-19.04
Inverter Transformer	MV4-4 T	369033	4909199	2	0	0	56.1	56.1	1	953.47	3.25	0	70.59	0	0	0	0	4.78	0	0	0	0	0	0	-19.3	-19.3
Inverter Transformer	MV3-9 T	368517	4907703	2	0	0	56.1	56.1	1	1033.91	3.25	0	71.29	0	0.02	0	0	4.97	0	0	0	0	0	0	-20.22	-20.22
Inverter Transformer	MV5-3 T	370237	4908851	2	0	0	56.1	56.1	1	1034.99	3.25	0	71.3	0	0.02	0	0	4.97	0	0	0	0	0	0	-20.24	-20.24
Inverter Transformer	MV5-4 T	370330	4908707	2	0	0	56.1	56.1	1	1051.7	3.25	0	71.44	0	0.03	0	0	5.01	0	0	0	0	0	0	-20.42	-20.42
Inverter Transformer	MV3-14 T	368678	4907498	2	0	0	56.1	56.1	1	1054.42	3.25	0	71.46	0	0.03	0	0	5.02	0	0	0	0	0	0	-20.45	-20.45
Inverter Transformer	MV5-1 T	370015	4909142	2	0	0	56.1	56.1	1	1065.02	3.25	0	71.55	0	0.03	0	0	5.04	0	0	0	0	0	0	-20.57	-20.57
Inverter Transformer	MV4-2 T	369267	4909397	2	0	0	56.1	56.1	1	1097.86	3.25	0	71.81	0	0.05	0	0	5.12	0	0	0	0	0	0	-20.92	-20.92
Inverter Transformer	MV4-3 T	369234	4909397	2	0	0	56.1	56.1	1	1101.12	3.25	0	71.84	0	0.05	0	0	5.13	0	0	0	0	0	0	-20.95	-20.95
Inverter Transformer	MV1-7 T	364919	4905782	2	0	0	69.4	69.4	1	5105.79	3.25	0	85.16	0	3.03	0	0	7.45	0	0	0	0	0	0	-26.3	-26.3
Inverter Transformer	MV1-10 T	365010	4905564	2	0	0	69.4	69.4	1	5139.64	3.25	0	85.22	0	3.04	0	0	7.47	0	0	0	0	0	0	-26.38	-26.38
Inverter Transformer	MV3-5 T	368335	4907843	2	0	0	56.1	56.1	1	1122.58	3.25	0	72	0	0.06	0	0	5.18	0	0	0	0	0	0	-21.18	-21.18
Inverter Transformer	MV4-1 T	369017	4909397	2	0	0	56.1	56.1	1	1146.21	3.25	0	72.19	0	0.06	0	0	5.23	0	0	0	0	0	0	-21.42	-21.42
Inverter Transformer	MV1-14 T	365157	4905049	2	0	0	69.4	69.4	1	5314.63	3.25	0	85.51	0	3.07	0	0	7.59	0	0	0	0	0	0	-26.82	-26.82
Inverter Transformer	MV3-16 T	368509	4907475	2	0	0	56.1	56.1	1	1186.63	3.25	0	72.49	0	0.08	0	0	5.32	0	0	0	0	0	0	-21.83	-21.83
Inverter Transformer	MV3-20 T	368683	4907317	2	0	0	56.1	56.1	1	1195.48	3.25	0	72.55	0	0.08	0	0	5.35	0	0	0	0	0	0	-21.92	-21.92
Inverter Transformer	MV1-13 T	364725	4905241	2	0	0	69.4	69.4	1	5554.26	3.25	0	85.89	0	3.12	0	0	7.74	0	0	0	0	0	0	-27.4	-27.4
Inverter Transformer	MV3-11 T	368340	4907662	2	0	0	56.1	56.1	1	1203.85	3.25	0	72.61	0	0.08	0	0	5.36	0	0	0	0	0	0	-22	-22
Inverter Transformer	MV6-2 T	370091	4907339	2	0	0	56.1	56.1	1	1210.42	3.25	0	72.66	0	0.09	0	0	5.38	0	0	0	0	0	0	-22.07	-22.07

	Inverter Transformer	MV3-1 T	368150	4907976	2	0	0	56.1	56.1	1	1252.44	3.25	0	72.96	0	0.1	0	0	5.47	0	0	0	0	0	0	-22.47	-22.47
	Inverter Transformer	MV3-6 T	368156	4907834	2	0	0	56.1	56.1	1	1291.19	3.25	0	73.22	0	0.12	0	0	5.56	0	0	0	0	0	0	-22.84	-22.84
	Inverter Transformer	MV3-15 T	368351	4907477	2	0	0	56.1	56.1	1	1303.21	3.25	0	73.3	0	0.12	0	0	5.59	0	0	0	0	0	0	-22.95	-22.95
	Inverter Transformer	MV3-10 T	368162	4907669	2	0	0	56.1	56.1	1	1354.54	3.25	0	73.64	0	0.14	0	0	5.7	0	0	0	0	0	0	-23.42	-23.42
	Inverter Transformer	MV3-22 T	368661	4907142	2	0	0	56.1	56.1	1	1354.67	3.25	0	73.64	0	0.14	0	0	5.7	0	0	0	0	0	0	-23.42	-23.42
	Inverter Transformer	MV3-19 T	368352	4907347	2	0	0	56.1	56.1	1	1388.52	3.25	0	73.85	0	0.16	0	0	5.78	0	0	0	0	0	0	-23.72	-23.72
	Inverter Transformer	MV3-21 T	368484	4907206	2	0	0	56.1	56.1	1	1403.22	3.25	0	73.94	0	0.16	0	0	5.81	0	0	0	0	0	0	-23.85	-23.85
	Inverter Transformer	MV6-3 T	370202	4907140	2	0	0	56.1	56.1	1	1436.39	3.25	0	74.15	0	0.17	0	0	5.88	0	0	0	0	0	0	-24.14	-24.14
	Inverter Transformer	MV3-17 T	368183	4907472	2	0	0	56.1	56.1	1	1439.98	3.25	0	74.17	0	0.18	0	0	5.89	0	0	0	0	0	0	-24.17	-24.17
	Inverter Transformer	MV3-3 T	367944	4907927	2	0	0	56.1	56.1	1	1464.11	3.25	0	74.31	0	0.18	0	0	5.94	0	0	0	0	0	0	-24.38	-24.38
	Inverter Transformer	MV3-7 T	367951	4907754	2	0	0	56.1	56.1	1	1511.25	3.25	0	74.59	0	0.2	0	0	6.04	0	0	0	0	0	0	-24.77	-24.77
	Inverter Transformer	MV3-13 T	367958	4907577	2	0	0	56.1	56.1	1	1577.94	3.25	0	74.96	0	0.23	0	0	6.18	0	0	0	0	0	0	-25.32	-25.32
	Line Reactor	NGR	369421	4908787.5	5	0	0	45.4	45.4	1	488.45	5.25	0	64.78	0	3.28	1.81	0.12	0.2	0	0	0	0	0	0	-24.71	-24.71
	Inverter Transformer	MV3-12 T	367674	4907594	2	0	0	56.1	56.1	1	1828.09	3.25	0	76.24	0	0.33	0	0	6.7	0	0	0	0	0	0	-27.21	-27.21
	Inverter Transformer	MV3-18 T	367757	4907412	2	0	0	56.1	56.1	1	1833.11	3.25	0	76.26	0	0.33	0	0	6.71	0	0	0	0	0	0	-27.25	-27.25
	Inverter Transformer	MV2-2 T	365982	4906654	2	0	0	56.1	56.1	1	3758.1	3.25	0	82.5	0	1.15	0	0	10.09	0	0	0	0	0	0	-37.68	-37.68
	Inverter Transformer	MV2-3 T	365814	4906641	2	0	0	56.1	56.1	1	3915.26	3.25	0	82.86	0	1.21	0	0	10.33	0	0	0	0	0	0	-38.34	-38.34
	Inverter Transformer	MV2-4 T	365590	4906628	2	0	0	56.1	56.1	1	4124.44	3.25	0	83.31	0	1.29	0	0	10.64	0	0	0	0	0	0	-39.18	-39.18
	Inverter Transformer	MV1-1 T	364721	4906166	2	0	0	56.1	56.1	1	5106.64	3.25	0	85.16	0	1.66	0	0	11.99	0	0	0	0	0	0	-42.76	-42.76
	Inverter Transformer	MV1-2 T	364759	4906063	2	0	0	56.1	56.1	1	5116.41	3.25	0	85.18	0	1.67	0	0	12.01	0	0	0	0	0	0	-42.79	-42.79
	Inverter Transformer	MV1-4 T	364821	4905918	2	0	0	56.1	56.1	1	5126.57	3.25	0	85.2	0	1.67	0	0	12.02	0	0	0	0	0	0	-42.83	-42.83
	Inverter Transformer	MV1-12 T	365044	4905386	2	0	0	56.1	56.1	1	5208.47	3.25	0	85.33	0	1.7	0	0	12.13	0	0	0	0	0	0	-43.1	-43.1
	Inverter Transformer	MV1-15 T	365309	4904994	2	0	0	56.1	56.1	1	5229.91	3.25	0	85.37	0	1.71	0	0	12.15	0	0	0	0	0	0	-43.17	-43.17
	Inverter Transformer	MV1-5 T	364676	4905892	2	0	0	56.1	56.1	1	5267.2	3.25	0	85.43	0	1.72	0	0	12.2	0	0	0	0	0	0	-43.29	-43.29
	Inverter Transformer	MV1-8 T	364782	4905647	2	0	0	56.1	56.1	1	5291.81	3.25	0	85.47	0	1.73	0	0	12.23	0	0	0	0	0	0	-43.38	-43.38
	Inverter Transformer	MV1-3 T	364435	4906039	2	0	0	56.1	56.1	1	5419.55	3.25	0	85.68	0	1.77	0	0	12.39	0	0	0	0	0	0	-43.79	-43.79
	Inverter Transformer	MV1-6 T	364482	4905835	2	0	0	56.1	56.1	1	5465.91	3.25	0	85.75	0	1.79	0	0	12.45	0	0	0	0	0	0	-43.94	-43.94
	Inverter Transformer	MV1-9 T	364555	4905646	2	0	0	56.1	56.1	1	5489.82	3.25	0	85.79	0	1.8	0	0	12.48	0	0	0	0	0	0	-44.01	-44.01
	Inverter Transformer	MV1-11 T	364649	4905414	2	0	0	56.1	56.1	1	5525.43	3.25	0	85.85	0	1.81	0	0	12.53	0	0	0	0	0	0	-44.13	-44.13
Limit. Valu	0	0																								
Level D/N:	41.246	41.246																								

Receiver: Existing Noise Receptor
ID: S-R46
X: 369790
Y: 4908263
Z: 4.5
Ground: 0

ISO	Description	ID	X	Y	Z	Ground	ReflOrd	LxT	LxN	L/A	Dist.	hm	Freq	Adiv	K0b	Agr	Abar	z	Aatm	Afol	Ahous	Cmet	CmetN	Dc	RL	LtotT	LtotN
	Sol_Luce Substation	S_Substation	369426	4908792	3.5	0	0	112.1	112.1	1	642.14	5.24	0	67.15	0	-0.03	5.99	0.29	1.76	0	0	0	0	0	0	37.2	37.2
	Inverter	MV5-5	370015	4908690	2	0	0	100.3	100.3	1	482.66	3.25	0	64.67	0	-0.56	0	0	8.39	0	0	0	0	0	0	27.82	27.82
	Inverter	MV5-2	370006	4908853	2	0	0	100.3	100.3	1	628.3	3.25	0	66.96	0	-0.46	0	0	9.37	0	0	0	0	0	0	24.44	24.44
	Inverter	MV5-4	370324	4908707	2	0	0	100.3	100.3	1	694.48	3.25	0	67.83	0	-0.42	0	0	9.71	0	0	0	0	0	0	23.18	23.18
	Inverter	MV5-3	370231	4908851	2	0	0	100.3	100.3	1	735	3.25	0	68.33	0	-0.39	0	0	9.9	0	0	0	0	0	0	22.48	22.48
	Inverter	MV4-10	369312	4908858	2	0	0	100.3	100.3	1	763.23	3.25	0	68.65	0	-0.37	0	0	10.03	0	0	0	0	0	0	22.01	22.01
	Inverter	MV4-11	369264	4908855	2	0	0	100.3	100.3	1	791.93	3.25	0	68.97	0	-0.36	0	0	10.15	0	0	0	0	0	0	21.55	21.55
	Inverter	MV4-9	369289	4909001	2	0	0	100.3	100.3	1	891.99	4.89	0	70.01	0	0.22	3.86	0.03	10.54	0	0	0	0	0	0	15.69	15.69
	Inverter	MV5-1	370020	4909142	2	0	0	100.3	100.3	1	908.6	3.25	0	70.17	0	-0.29	0	0	10.6	0	0	0	0	0	0	19.84	19.84
	Inverter	MV4-8	369256	4909001	2	0	0	100.3	100.3	1	910.94	3.25	0	70.19	0	-0.29	0	0	10.6	0	0	0	0	0	0	19.81	19.81
	DSTATCOM - 10 MVAR #1	DSAT1	369437	4908757	2.5	0	0	96.6	96.6	1	607.16	3.5	0	66.67	0	2.4	0	0	0.8	0	0	0	0	0	0	26.77	26.77
	DSTATCOM - 10 MVAR #2	DSAT2	369403	4908757	2.5	0	0	96.6	96.6	1	627.54	3.5	0	66.95	0	2.44	0	0	0.81	0	0	0	0	0	0	26.43	26.43
	Inverter	MV6-2	370085	4907339	2	0	0	100.3	100.3	1	969.95	3.25	0	70.74	0	-0.26	0	0	10.81	0	0	0	0	0	0	19.03	19.03
	Inverter	MV4-7	369035	4909001	2	0	0	100.3	100.3	1	1055.78	3.25	0	71.47	0	-0.22	0	0	11.09	0	0	0	0	0	0	17.97	17.97
	Inverter	MV4-5	369289	4909199	2	0	0	100.3	100.3	1	1061.65	3.25	0	71.52	0	-0.22	0	0	11.11	0	0	0	0	0	0	17.9	17.9
	Inverter	MV4-6	369243	4909192	2	0	0	100.3	100.3	1	1078.08	3.25	0	71.65	0	-0.21	0	0	11.16	0	0	0	0	0	0	17.71	17.71
	Inverter	MV5-6	369982	4908507	2	0	0	89.1	89.1	1	310.49	3.25	0	60.84	0	0.38	0	0	4.21	0	0	0	0	0	0	23.63	23.63
	Inverter	MV6-3	370207	4907140	2	0	0	100.3	100.3	1	1197.92	3.25	0	72.57	0	-0.16	0	0	11.52	0	0	0	0	0	0	16.38	16.38
	Inverter	MV4-4	369027	4909199	2	0	0	100.3	100.3	1	1207.59	3.25	0	72.64	0	-0.15	0	0	11.55	0	0	0	0	0	0	16.28	16.28
	Inverter	MV3-8	368680	4907712	2	0	0	100.3	100.3	1	1239.24	3.25	0	72.86	0	-0.14	0	0	11.64	0	0	0	0	0	0	15.95	15.95
	Inverter	MV4-2	369272	4909397	2	0	0	100.3	100.3	1	1246.71	3.25	0	72.92	0	-0.13	0	0	11.66	0	0	0	0	0	0	15.87	15.87
	Inverter	MV4-3	369229	4909397	2	0	0	100.3	100.3	1	1265.18	3.25	0	73.04	0	-0.13	0	0	11.71	0	0	0	0	0	0	15.69	15.69
	Inverter	MV3-14	368684	4907498	2	0	0	100.3	100.3	1	1344.79	3.25	0	73.57	0	-0.09	0	0	11.93	0	0	0	0	0	0	14.91	14.91
	Inverter	MV4-1	369011	4909397	2	0	0	100.3	100.3	1	1375.79	4.57	0	73.77	0	0.53	3.65	0.01	12.01	0	0	0	0	0	0	10.35	10.35
	Inverter	MV3-9	368512	4907703	2	0	0	100.3	100.3	1	1395.31	3.25	0	73.89	0	-0.07	0	0	12.06	0	0	0	0	0	0	14.43	14.43
	Inverter	MV6-1	370235	4907364	2	0	0	97.3	97.3	1	1003.11	3.25	0	71.03	0	-0.24	0	0	10.92	0	0	0	0	0	0	15.61	15.61
	Inverter	MV3-20	368689	4907317	2	0	0	100.3	100.3	1	1451.59	3.25	0	74.24	0	-0.05	0	0	12.2	0	0	0	0	0	0	13.92	13.92
	Inverter	MV3-16	368514	4907475	2	0	0	100.3	100.3	1	1499.71	3.25	0	74.52	0	-0.03	0	0	12.32	0	0	0	0	0	0	13.5	13.5
	Inverter	MV3-11	368346	4907662	2	0	0	100.3	100.3	1	1564.08	3.25	0	74.89	0	-0.01	0	0	12.48	0	0	0	0	0	0	12.96	12.96
	Inverter	MV3-15	368357	4907477	2	0	0	100.3	100.3	1	1634.41	3.25	0	75.27	0	0.01	0	0	12.65	0	0	0	0	0	0	12.38	12.38
	Inverter	MV3-6	368162	4907834	2	0	0	100.3	100.3	1	1683.58	3.25	0	75.52	0	0.03	0	0	12.76	0	0	0	0	0	0	11.99	11.99
	Inverter	MV3-21	368478	4907206	2	0	0	100.3	100.3	1	1684.81	3.25	0	75.53	0	0.03	0	0	12.77	0	0	0	0	0	0	11.98	11.98
	Inverter	MV3-19	368357	4907347	2	0	0	100.3	100.3	1	1700.75	3.25	0	75.61	0	0.04	0	0	12.8	0	0	0	0	0	0	11.86	11.86
	Inverter	MV3-10	368167	4907669	2	0	0	100.3	100.3	1	1728.29	3.25	0	75.75	0	0.05	0	0	12.87	0	0	0	0	0	0	11.65	11.65

Inverter	MV3-17	368178	4907472	2	0	0	100.3	100.3	1	1795.61	3.25	0	76.08	0	0.07	0	0	13.02	0	0	0	0	0	0	11.14	11.14
Inverter	MV3-3	367939	4907927	2	0	0	100.3	100.3	1	1881.25	3.25	0	76.49	0	0.09	0	0	13.21	0	0	0	0	0	0	10.52	10.52
Inverter	MV3-7	367945	4907754	2	0	0	100.3	100.3	1	1913.93	3.25	0	76.64	0	0.1	0	0	13.28	0	0	0	0	0	0	10.29	10.29
Inverter	MV3-13	367963	4907577	2	0	0	100.3	100.3	1	1951.55	3.25	0	76.81	0	0.12	0	0	13.36	0	0	0	0	0	0	10.03	10.03
Fixed Reactor Bank 2	FRB2	369464	4908755	6	0	0	89.8	89.8	1	590.21	5.25	0	66.42	0	-0.89	0	0	1.64	0	0	0	0	0	0	22.6	22.6
Fixed Reactor Bank 1	FRB1	369378	4908755	6	0	0	89.8	89.8	1	641.72	5.25	0	67.15	0	-0.92	0	0	1.76	0	0	0	0	0	0	21.79	21.79
Inverter	MV3-18	367752	4907412	2	0	0	100.3	100.3	1	2208.54	3.25	0	77.88	0	0.19	0	0	13.89	0	0	0	0	0	0	8.35	8.35
Inverter	MV3-12	367668	4907594	2	0	0	100.3	100.3	1	2224.96	3.25	0	77.95	0	0.19	0	0	13.92	0	0	0	0	0	0	8.25	8.25
Inverter	MV4-15	369176	4908481	2	0	0	89.1	89.1	1	651.56	3.25	0	67.28	0	0.6	0	0	5.59	0	0	0	0	0	0	15.6	15.6
Inverter	MV4-14	369176	4908507	2	0	0	89.1	89.1	1	660.71	3.25	0	67.4	0	0.6	0	0	5.61	0	0	0	0	0	0	15.45	15.45
Inverter	MV4-13	369051	4908605	2	0	0	89.1	89.1	1	814.3	3.25	0	69.22	0	0.64	0	0	5.95	0	0	0	0	0	0	13.25	13.25
Inverter	MV4-12	369043	4908803	2	0	0	89.1	89.1	1	921.75	3.25	0	70.29	0	0.67	0	0	6.17	0	0	0	0	0	0	11.93	11.93
Inverter	MV3-2	368671	4907928	2	0	0	89.1	89.1	1	1168.07	3.25	0	72.35	0	0.72	0	0	6.62	0	0	0	0	0	0	9.36	9.36
Inverter	MV2-3	365820	4906641	2	0	0	100.3	100.3	1	4288.57	3.25	0	83.65	0	0.57	0	0	17.5	0	0	0	0	0	0	-1.4	-1.4
Inverter	MV2-4	365586	4906624	2	0	0	100.3	100.3	1	4512.2	3.25	0	84.09	0	0.59	0	0	17.85	0	0	0	0	0	0	-2.22	-2.22
Inverter	MV3-4	368502	4907925	2	0	0	89.1	89.1	1	1331.61	3.25	0	73.49	0	0.76	0	0	6.92	0	0	0	0	0	0	7.9	7.9
Inverter	MV1-1	364715	4906166	2	0	0	100.3	100.3	1	5491.18	3.25	0	85.79	0	0.68	0	0	19.29	0	0	0	0	0	0	-5.45	-5.45
Inverter	MV1-2	364753	4906063	2	0	0	100.3	100.3	1	5496.49	3.25	0	85.8	0	0.68	0	0	19.3	0	0	0	0	0	0	-5.47	-5.47
Inverter	MV1-4	364815	4905918	2	0	0	100.3	100.3	1	5499.97	3.25	0	85.81	0	0.68	0	0	19.3	0	0	0	0	0	0	-5.48	-5.48
Inverter	MV3-5	368340	4907843	2	0	0	89.1	89.1	1	1509.6	3.25	0	74.58	0	0.79	0	0	7.22	0	0	0	0	0	0	6.46	6.46
Inverter	MV1-15	365315	4904994	2	0	0	100.3	100.3	1	5541.84	3.25	0	85.87	0	0.68	0	0	19.36	0	0	0	0	0	0	-5.6	-5.6
Inverter	MV1-12	365038	4905386	2	0	0	100.3	100.3	1	5555.06	3.25	0	85.89	0	0.68	0	0	19.38	0	0	0	0	0	0	-5.64	-5.64
SubstationTransformer	W_ST	369711.17	4906112.3	2.5	0	0	92	92	1	2152.18	3.5	0	77.66	0	-0.13	0	0	4.62	0	0	0	0	0	0	9.82	9.82
Inverter	MV1-5	364671	4905892	2	0	0	100.3	100.3	1	5641.44	3.25	0	86.03	0	0.69	0	0	19.5	0	0	0	0	0	0	-5.9	-5.9
Inverter	MV1-8	364788	4905647	2	0	0	100.3	100.3	1	5644.77	3.25	0	86.03	0	0.69	0	0	19.5	0	0	0	0	0	0	-5.91	-5.91
Inverter	MV3-22	368656	4907142	2	0	0	89.1	89.1	1	1594.55	3.25	0	75.05	0	0.81	0	0	7.37	0	0	0	0	0	0	5.82	5.82
Inverter	MV1-6	364477	4905835	2	0	0	100.3	100.3	1	5841.5	3.25	0	86.33	0	0.7	0	0	19.78	0	0	0	0	0	0	-6.49	-6.49
Inverter	MV1-9	364561	4905646	2	0	0	100.3	100.3	1	5847.32	3.25	0	86.34	0	0.7	0	0	19.78	0	0	0	0	0	0	-6.51	-6.51
Inverter	MV1-11	364655	4905414	2	0	0	100.3	100.3	1	5872.4	3.25	0	86.38	0	0.7	0	0	19.82	0	0	0	0	0	0	-6.58	-6.58
Inverter	MV2-1	365842	4906816	2	0	0	97.3	97.3	1	4204.82	3.25	0	83.47	0	0.55	0	0	17.37	0	0	0	0	0	0	-4.09	-4.09
Inverter	MV3-1	368156	4907976	2	0	0	89.1	89.1	1	1659.02	3.25	0	75.4	0	0.83	0	0	7.48	0	0	0	0	0	0	5.35	5.35
Westbrook Inverter Enclosur	W_INV6	369875	4906578	2	0	0	89.1	89.1	1	1687.14	3.25	0	75.54	0	0.83	0	0	7.53	0	0	0	0	0	0	5.15	5.15
Westbrook Inverter Enclosur	W_INV5	369719	4906574	2	0	0	89.1	89.1	1	1690.49	3.25	0	75.56	0	0.84	0	0	7.53	0	0	0	0	0	0	5.13	5.13
Westbrook Inverter Enclosur	W_INV7	369780	4906417	2	0	0	89.1	89.1	1	1846.03	3.25	0	76.32	0	0.87	0	0	7.79	0	0	0	0	0	0	4.07	4.07
Westbrook Inverter Enclosur	W_INV2	369374	4906388	2	0	0	89.1	89.1	1	1920.6	3.25	0	76.67	0	0.89	0	0	7.92	0	0	0	0	0	0	3.59	3.59
Inverter	MV6-4	370250	4906966	2	0	0	86.1	86.1	1	1376.16	3.25	0	73.77	0	0.77	0	0	6.99	0	0	0	0	0	0	4.53	4.53
Westbrook Inverter Enclosur	W_INV4	369673	4906164	2	0	0	89.1	89.1	1	2102.26	3.25	0	77.45	0	0.93	0	0	8.21	0	0	0	0	0	0	2.46	2.46
Inverter	MV1-7	364925	4905782	2	0	0	97.3	97.3	1	5461.1	3.25	0	85.75	0	0.68	0	0	19.25	0	0	0	0	0	0	-8.36	-8.36
Westbrook Inverter Enclosur	W_INV3	369508	4906164	2	0	0	89.1	89.1	1	2117.86	3.25	0	77.52	0	0.93	0	0	8.24	0	0	0	0	0	0	2.37	2.37
Inverter	MV1-10	365004	4905564	2	0	0	97.3	97.3	1	5494.58	3.25	0	85.8	0	0.68	0	0	19.29	0	0	0	0	0	0	-8.46	-8.46
Inverter	MV1-14	365163	4905049	2	0	0	97.3	97.3	1	5633.73	3.25	0	86.02	0	0.69	0	0	19.49	0	0	0	0	0	0	-8.88	-8.88
Inverter	MV1-13	364731	4905241	2	0	0	97.3	97.3	1	5892.87	3.25	0	86.41	0	0.7	0	0	19.85	0	0	0	0	0	0	-9.64	-9.64
Westbrook Inverter Enclosur	W_INV1	369409	4906578	2	0	0	86.1	86.1	1	1727.54	3.25	0	75.75	0	0.84	0	0	7.59	0	0	0	0	0	0	1.87	1.87
Inverter	MV2-2	365977	4906654	2	0	0	89.1	89.1	1	4138.58	3.25	0	83.34	0	1.43	0	0	11.28	0	0	0	0	0	0	-6.99	-6.99
Gardiner Substation	G_Sub	366586.3	4903349.9	2.5	0	0	90.8	90.8	1	5865.34	4.25	0	86.37	0	1.85	2.14	0.38	9.6	0	0	0	0	0	0	-9.18	-9.18
Inverter	MV1-3	364440	4906039	2	0	0	89.1	89.1	1	5793.85	3.25	0	86.26	0	1.84	0	0	13.5	0	0	0	0	0	0	-12.54	-12.54
Westbrook Inverter Transfor	W_INVTR1	369403	4906578	2	0	0	78.2	78.2	1	1728.87	3.25	0	75.76	0	-2.3	0	0	1.07	0	0	0	0	0	0	3.72	3.72
Westbrook Inverter Transfor	W_INVTR6	369881	4906578	2	0	0	77.3	77.3	1	1687.46	3.25	0	75.54	0	-2.28	0	0	1.05	0	0	0	0	0	0	3.03	3.03
Westbrook Inverter Transfor	W_INVTR5	369725	4906574	2	0	0	77.3	77.3	1	1690.25	3.25	0	75.56	0	-2.29	0	0	1.05	0	0	0	0	0	0	3.02	3.02
Inverters	G_Inv2	366676.9	4903239.1	2	0	0	87.7	87.7	1	5910.24	3.25	0	86.43	0	2.91	0	0	6.89	0	0	0	0	0	0	-8.57	-8.57
Inverters	G_Inv4	366732.8	4903105	2	0	0	87.7	87.7	1	5995.95	3.25	0	86.56	0	2.92	0	0	6.97	0	0	0	0	0	0	-8.79	-8.79
Inverters	G_Inv1	366526.4	4903225.8	2	0	0	87.7	87.7	1	6002.04	3.25	0	86.57	0	2.92	0	0	6.98	0	0	0	0	0	0	-8.8	-8.8
Westbrook Inverter Transfor	W_INVTR7	369786	4906417	2	0	0	77.3	77.3	1	1846.01	3.25	0	76.32	0	-2.35	0	0	1.13	0	0	0	0	0	0	2.23	2.23
Inverters	G_Inv6	366788.5	4902972	2	0	0	87.7	87.7	1	6083.07	3.25	0	86.68	0	2.92	0	0	7.06	0	0	0	0	0	0	-9.01	-9.01
Inverters	G_Inv3	366583.7	4903091.4	2	0	0	87.7	87.7	1	6084.88	3.25	0	86.69	0	2.92	0	0	7.06	0	0	0	0	0	0	-9.01	-9.01
Inverters	G_Inv5	366638.5	4902958.1	2	0	0	87.7	87.7	1	6170.41	3.25	0	86.81	0	2.92	0	0	7.15	0	0	0	0	0	0	-9.22	-9.22
Inverters	G_Inv8	366844.5	4902838.5	2	0	0	87.7	87.7	1	6172.62	3.25	0	86.81	0	2.92	0	0	7.15	0	0	0	0	0	0	-9.23	-9.23
Inverters	G_Inv7	366694.6	4902824.7	2	0	0	87.7	87.7	1	6257.52	3.25	0	86.93	0	2.93	0	0	7.24	0	0	0	0	0	0	-9.44	-9.44
Inverters	G_Inv10	366900.7	4902704.8	2	0	0	87.7	87.7	1	6264.32	3.25	0	86.94	0	2.93	0	0	7.25	0	0	0	0	0	0	-9.45	-9.45
Westbrook Inverter Transfor	W_INVTR2	369368	4906388	2	0	0	77.3	77.3	1	1921.9	3.25	0	76.67	0	-2.38	0	0	1.17	0	0	0	0	0	0	1.88	1.88
Inverters	G_Inv9	366750.9	4902691.8	2	0	0	87.7	87.7	1	6346.21	3.25	0	87.05	0	2.93	0	0	7.33	0	0	0	0	0	0	-9.65	-9.65
Westbrook Inverter Transfor	W_INVTR4	369679	4906164	2	0	0	77.3	77.3	1	2101.93	3.25	0	77.45	0	-2.44	0	0	1.25	0	0	0	0	0	0	1.08	1.08
Westbrook Inverter Transfor	W_INVTR3	369514	4906164	2	0	0	77.3	77.3	1	2117.07	3.25	0	77.51	0	-2.45	0	0	1.26	0	0	0	0	0	0	1.01	1.01
Inverter Transformer	MV6-1 T	370230	4907364	2	0	0	69.4	69.4	1	1000.9	3.25	0	71.01	0	1.68	0	0	3.81	0	0	0	0	0	0	-7.15	-7.15
Inverter Transformer	MV6-4 T	370244	4906966	2	0	0	69.4	69.4	1	1374.17	3.25	0	73.76	0	1.91	0	0	4.29	0	0	0	0	0	0	-10.61	-10.61
Inverter Transformer	MV5-6 T	369987	4908507	2	0	0	56.1	56.1	1	313.61	3.25	0	60.93	0	-0.08	0	0	2.85	0	0	0	0	0	0	-7.64	-7.64
Inverter Transformer	MV5-5 T	370021	4908690	2	0	0	56.1	56.1	1	485.49	3.25	0	64.72	0	-0.12	0	0	3.5	0	0	0	0	0	0	-12.05	-12.05
Inverter Transformer	MV5-2 T	370011	4908853	2	0	0	56.1	56.1	1	630.04	3.25	0	66.99	0	-0.1	0	0	3.94	0	0	0	0	0	0	-14.77	-14.77
Inverter Transformer	MV4-14 T	369182	4908507	2	0	0	56.1	56.1	1	655.14	3.25	0	67.33	0	-0.09	0	0	4.01	0	0	0	0	0	0	-15.19	-15.19
Inverter Transformer	MV4-15 T	369170	4908481	2	0	0	56.1	56.1	1	657.21	3.25	0	67.35	0	-0.09	0	0	4.02	0	0	0	0	0	0	-15.22	-15.22
Inverter Transformer	MV5-4 T	370330	4908707	2	0	0	56.1	56.1	1	699.1	3.25	0	67.89	0	-0.08	0	0	4.13	0	0	0	0	0	0	-15.88	-15.88
Inverter Transformer	MV5-3 T	370237	4908851	2	0	0	56.1	56.1	1	738.62	3.25	0	68.37	0	-0.07	0	0	4.24	0	0	0	0	0	0	-16.48	-16.48
Inverter Transformer	MV4-10 T	369307	4908858	2	0	0	56.1	56.1	1	766.37	3.25	0	68.69	0	-0.06	0	0	4.31	0	0	0	0	0	0	-16.88	-16.88
Inverter Transformer	MV4-11 T	369269	4908855	2	0	0	56.1	56.1	1	788.61	3.25	0	68.94	0	-0.06	0	0	4.37	0	0	0	0	0	0	-17.19	-17.19

	Inverter Transformer	MV4-13 T	369057	4908605	2	0	0	56.1	56.1	1	808.86	3.25	0	69.16	0	-0.05	0	0	4.42	0	0	0	0	0	0	-17.47	-17.47
	Inverter Transformer	MV4-9 T	369284	4909001	2	0	0	56.1	56.1	1	894.81	4.88	0	70.03	0	0.71	3.43	0.03	4.63	0	0	0	0	0	0	-22.74	-22.74
	Inverter Transformer	MV5-1 T	370015	4909142	2	0	0	56.1	56.1	1	907.34	3.25	0	70.16	0	-0.02	0	0	4.66	0	0	0	0	0	0	-18.74	-18.74
	Inverter Transformer	MV4-8 T	369262	4909001	2	0	0	56.1	56.1	1	907.43	4.89	0	70.16	0	0.71	3.42	0.03	4.66	0	0	0	0	0	0	-22.9	-22.9
	Inverter Transformer	MV2-1 T	365836	4906816	2	0	0	69.4	69.4	1	4210.45	3.25	0	83.49	0	2.84	0	0	6.83	0	0	0	0	0	0	-23.81	-23.81
	Inverter Transformer	MV4-12 T	369049	4908803	2	0	0	56.1	56.1	1	916.89	3.25	0	70.25	0	-0.02	0	0	4.69	0	0	0	0	0	0	-18.86	-18.86
	Inverter Transformer	MV6-2 T	370091	4907339	2	0	0	56.1	56.1	1	971.79	3.25	0	70.75	0	0	0	0	4.82	0	0	0	0	0	0	-19.52	-19.52
	Inverter Transformer	MV4-7 T	369040	4909001	2	0	0	56.1	56.1	1	1052.21	3.25	0	71.44	0	0.03	0	0	5.01	0	0	0	0	0	0	-20.43	-20.43
	Inverter Transformer	MV4-5 T	369283	4909199	2	0	0	56.1	56.1	1	1064.5	3.25	0	71.54	0	0.03	0	0	5.04	0	0	0	0	0	0	-20.56	-20.56
	Inverter Transformer	MV4-6 T	369249	4909192	2	0	0	56.1	56.1	1	1075.05	3.25	0	71.63	0	0.04	0	0	5.07	0	0	0	0	0	0	-20.68	-20.68
	Inverter Transformer	MV3-2 T	368677	4907928	2	0	0	56.1	56.1	1	1162.33	3.25	0	72.31	0	0.07	0	0	5.27	0	0	0	0	0	0	-21.59	-21.59
	Inverter Transformer	MV1-7 T	364919	4905782	2	0	0	69.4	69.4	1	5466.44	3.25	0	85.75	0	3.1	0	0	7.69	0	0	0	0	0	0	-27.19	-27.19
	Inverter Transformer	MV1-10 T	365010	4905564	2	0	0	69.4	69.4	1	5489.35	3.25	0	85.79	0	3.1	0	0	7.7	0	0	0	0	0	0	-27.25	-27.25
	Inverter Transformer	MV6-3 T	370202	4907140	2	0	0	56.1	56.1	1	1196.19	3.25	0	72.56	0	0.08	0	0	5.35	0	0	0	0	0	0	-21.93	-21.93
	Inverter Transformer	MV4-4 T	369033	4909199	2	0	0	56.1	56.1	1	1203.81	3.25	0	72.61	0	0.08	0	0	5.36	0	0	0	0	0	0	-22	-22
	Inverter Transformer	MV1-14 T	365157	4905049	2	0	0	69.4	69.4	1	5638.66	3.25	0	86.02	0	3.13	0	0	7.8	0	0	0	0	0	0	-27.6	-27.6
	Inverter Transformer	MV3-8 T	368685	4907712	2	0	0	56.1	56.1	1	1234.76	3.25	0	72.83	0	0.1	0	0	5.43	0	0	0	0	0	0	-22.3	-22.3
	Inverter Transformer	MV4-2 T	369267	4909397	2	0	0	56.1	56.1	1	1248.8	3.25	0	72.93	0	0.1	0	0	5.47	0	0	0	0	0	0	-22.44	-22.44
	Inverter Transformer	MV4-3 T	369234	4909397	2	0	0	56.1	56.1	1	1262.97	3.25	0	73.03	0	0.11	0	0	5.5	0	0	0	0	0	0	-22.57	-22.57
	Inverter Transformer	MV1-13 T	364725	4905241	2	0	0	69.4	69.4	1	5898.03	3.25	0	86.41	0	3.17	0	0	7.96	0	0	0	0	0	0	-28.19	-28.19
	Inverter Transformer	MV3-4 T	368507	4907925	2	0	0	56.1	56.1	1	1326.78	3.25	0	73.46	0	0.13	0	0	5.64	0	0	0	0	0	0	-23.17	-23.17
	Inverter Transformer	MV3-14 T	368678	4907498	2	0	0	56.1	56.1	1	1349.73	3.25	0	73.6	0	0.14	0	0	5.69	0	0	0	0	0	0	-23.38	-23.38
	Inverter Transformer	MV4-1 T	369017	4909397	2	0	0	56.1	56.1	1	1372.4	4.58	0	73.75	0	0.97	3.21	0.01	5.74	0	0	0	0	0	0	-27.61	-27.61
	Inverter Transformer	MV3-9 T	368517	4907703	2	0	0	56.1	56.1	1	1390.73	3.25	0	73.86	0	0.16	0	0	5.78	0	0	0	0	0	0	-23.74	-23.74
	Inverter Transformer	MV3-20 T	368683	4907317	2	0	0	56.1	56.1	1	1456.15	3.25	0	74.26	0	0.18	0	0	5.92	0	0	0	0	0	0	-24.31	-24.31
	Inverter Transformer	MV3-16 T	368509	4907475	2	0	0	56.1	56.1	1	1503.97	3.25	0	74.54	0	0.2	0	0	6.03	0	0	0	0	0	0	-24.71	-24.71
	Inverter Transformer	MV3-5 T	368335	4907843	2	0	0	56.1	56.1	1	1514.41	3.25	0	74.6	0	0.2	0	0	6.05	0	0	0	0	0	0	-24.8	-24.8
	Inverter Transformer	MV3-11 T	368340	4907662	2	0	0	56.1	56.1	1	1569.62	3.25	0	74.92	0	0.23	0	0	6.17	0	0	0	0	0	0	-25.25	-25.25
	Inverter Transformer	MV3-22 T	368661	4907142	2	0	0	56.1	56.1	1	1591	3.25	0	75.03	0	0.24	0	0	6.21	0	0	0	0	0	0	-25.42	-25.42
	Inverter Transformer	MV3-15 T	368351	4907477	2	0	0	56.1	56.1	1	1639.67	3.25	0	75.3	0	0.25	0	0	6.31	0	0	0	0	0	0	-25.8	-25.8
	Inverter Transformer	MV3-1 T	368150	4907976	2	0	0	56.1	56.1	1	1664.92	3.25	0	75.43	0	0.27	0	0	6.37	0	0	0	0	0	0	-26	-26
	Inverter Transformer	MV3-21 T	368484	4907206	2	0	0	56.1	56.1	1	1680.15	3.25	0	75.51	0	0.27	0	0	6.4	0	0	0	0	0	0	-26.12	-26.12
	Inverter Transformer	MV3-6 T	368156	4907834	2	0	0	56.1	56.1	1	1689.38	3.25	0	75.55	0	0.28	0	0	6.42	0	0	0	0	0	0	-26.19	-26.19
	Inverter Transformer	MV3-19 T	368352	4907347	2	0	0	56.1	56.1	1	1704.97	3.25	0	75.63	0	0.28	0	0	6.45	0	0	0	0	0	0	-26.31	-26.31
	Inverter Transformer	MV3-10 T	368162	4907669	2	0	0	56.1	56.1	1	1732.98	3.25	0	75.78	0	0.29	0	0	6.51	0	0	0	0	0	0	-26.52	-26.52
	Inverter Transformer	MV3-17 T	368183	4907472	2	0	0	56.1	56.1	1	1791.13	3.25	0	76.06	0	0.32	0	0	6.63	0	0	0	0	0	0	-26.95	-26.95
	Inverter Transformer	MV3-3 T	367944	4907927	2	0	0	56.1	56.1	1	1876.33	3.25	0	76.47	0	0.35	0	0	6.8	0	0	0	0	0	0	-27.56	-27.56
	Inverter Transformer	MV3-7 T	367951	4907754	2	0	0	56.1	56.1	1	1908.14	3.25	0	76.61	0	0.37	0	0	6.86	0	0	0	0	0	0	-27.78	-27.78
	Inverter Transformer	MV3-13 T	367958	4907577	2	0	0	56.1	56.1	1	1956.23	3.25	0	76.83	0	0.39	0	0	6.96	0	0	0	0	0	0	-28.11	-28.11
	Line Reactor	NGR	369421	4908787.5	5	0	0	45.4	45.4	1	641.3	5.25	0	67.14	0	3.35	1.51	0.1	0.26	0	0	0	0	0	0	-26.91	-26.91
	Inverter Transformer	MV3-18 T	367757	4907412	2	0	0	56.1	56.1	1	2203.93	3.25	0	77.86	0	0.49	0	0	7.44	0	0	0	0	0	0	-29.73	-29.73
	Inverter Transformer	MV3-12 T	367674	4907594	2	0	0	56.1	56.1	1	2219.24	3.25	0	77.92	0	0.5	0	0	7.47	0	0	0	0	0	0	-29.83	-29.83
	Inverter Transformer	MV2-2 T	365982	4906654	2	0	0	56.1	56.1	1	4133.98	3.25	0	83.33	0	1.3	0	0	10.65	0	0	0	0	0	0	-39.22	-39.22
	Inverter Transformer	MV2-3 T	365814	4906641	2	0	0	56.1	56.1	1	4294.12	3.25	0	83.66	0	1.36	0	0	10.88	0	0	0	0	0	0	-39.84	-39.84
	Inverter Transformer	MV2-4 T	365590	4906628	2	0	0	56.1	56.1	1	4507.02	3.25	0	84.08	0	1.44	0	0	11.19	0	0	0	0	0	0	-40.65	-40.65
	Inverter Transformer	MV1-1 T	364721	4906166	2	0	0	56.1	56.1	1	5485.63	3.25	0	85.78	0	1.8	0	0	12.48	0	0	0	0	0	0	-44	-44
	Inverter Transformer	MV1-2 T	364759	4906063	2	0	0	56.1	56.1	1	5490.99	3.25	0	85.79	0	1.8	0	0	12.48	0	0	0	0	0	0	-44.02	-44.02
	Inverter Transformer	MV1-4 T	364821	4905918	2	0	0	56.1	56.1	1	5494.54	3.25	0	85.8	0	1.8	0	0	12.49	0	0	0	0	0	0	-44.03	-44.03
	Inverter Transformer	MV1-15 T	365309	4904994	2	0	0	56.1	56.1	1	5546.69	3.25	0	85.88	0	1.82	0	0	12.55	0	0	0	0	0	0	-44.19	-44.19
	Inverter Transformer	MV1-12 T	365044	4905386	2	0	0	56.1	56.1	1	5549.92	3.25	0	85.89	0	1.82	0	0	12.56	0	0	0	0	0	0	-44.2	-44.2
	Inverter Transformer	MV1-5 T	364676	4905892	2	0	0	56.1	56.1	1	5636.9	3.25	0	86.02	0	1.85	0	0	12.66	0	0	0	0	0	0	-44.47	-44.47
	Inverter Transformer	MV1-8 T	364782	4905647	2	0	0	56.1	56.1	1	5650.09	3.25	0	86.04	0	1.85	0	0	12.68	0	0	0	0	0	0	-44.51	-44.51
	Inverter Transformer	MV1-3 T	364435	4906039	2	0	0	56.1	56.1	1	5798.47	3.25	0	86.27	0	1.9	0	0	12.86	0	0	0	0	0	0	-44.97	-44.97
	Inverter Transformer	MV1-6 T	364482	4905835	2	0	0	56.1	56.1	1	5836.96	3.25	0	86.32	0	1.91	0	0	12.91	0	0	0	0	0	0	-45.09	-45.09
	Inverter Transformer	MV1-9 T	364555	4905646	2	0	0	56.1	56.1	1	5852.68	3.25	0	86.35	0	1.92	0	0	12.93	0	0	0	0	0	0	-45.13	-45.13
	Inverter Transformer	MV1-11 T	364649	4905414	2	0	0	56.1	56.1	1	5877.64	3.25	0	86.38	0	1.93	0	0	12.96	0	0	0	0	0	0	-45.21	-45.21
Limit. Valu	0	0																								
Level D/N:	39.7691	39.7691																								

Receiver: Existing Noise Receptor
ID: S-R47
X: 369881
Y: 4908138
Z: 4.5
Ground: 0

ISO	Description	ID	X	Y	Z	Ground	ReflOrd	LxT	LxN	L/A	Dist.	hm	Freq	Adiv	K0b	Agr	Abar	z	Aatm	Afol	Ahous	Cmet	CmetN	Dc	RL	LtotT	LtotN
	Sol_Luce Substation	S_Substation	369426	4908792	3.5	0	0	112.1	112.1	1	796.71	5.24	0	69.03	0	-0.05	5.41	0.29	2.1	0	0	0	0	0	0	35.59	35.59
	Inverter	MV5-5	370015	4908690	2	0	0	100.3	100.3	1	568.04	3.25	0	66.09	0	-0.5	0	0	9.01	0	0	0	0	0	0	25.72	25.72
	Inverter	MV5-4	370324	4908707	2	0	0	100.3	100.3	1	721.12	3.25	0	68.16	0	-0.4	0	0	9.84	0	0	0	0	0	0	22.71	22.71
	Inverter	MV5-2	370006	4908853	2	0	0	100.3	100.3	1	725.85	3.25	0	68.22	0	-0.4	0	0	9.86	0	0	0	0	0	0	22.63	22.63
	Inverter	MV5-3	370231	4908851	2	0	0	100.3	100.3	1	794.28	3.25	0	69	0	-0.35	0	0	10.16	0	0	0	0	0	0	21.51	21.51
	Inverter	MV6-2	370085	4907339	2	0	0	100.3	100.3	1	824.64	3.25	0	69.33	0	-0.34	0	0	10.28	0	0	0	0	0	0	21.04	21.04
	Inverter	MV4-10	369312	4908858	2	0	0	100.3	100.3	1	917.7	3.25	0	70.25	0	-0.29	0	0	10.63	0	0	0	0	0	0	19.72	19.72

Inverter	MV4-11	369264	4908855	2	0	0	100.3	100.3	1	945.93	3.25	0	70.52	0	-0.27	0	0	10.73	0	0	0	0	0	0	19.34	19.34
Inverter	MV5-1	370020	4909142	2	0	0	100.3	100.3	1	1013.58	3.25	0	71.12	0	-0.24	0	0	10.96	0	0	0	0	0	0	18.48	18.48
Inverter	MV4-9	369289	4909001	2	0	0	100.3	100.3	1	1046.54	4.95	0	71.4	0	0.33	3.78	0.03	11.06	0	0	0	0	0	0	13.74	13.74
Inverter	MV6-3	370207	4907140	2	0	0	100.3	100.3	1	1049.9	3.25	0	71.42	0	-0.22	0	0	11.07	0	0	0	0	0	0	18.04	18.04
Inverter	MV4-8	369256	4909001	2	0	0	100.3	100.3	1	1065.55	3.25	0	71.55	0	-0.21	0	0	11.12	0	0	0	0	0	0	17.85	17.85
DSTATCOM - 10 MVAR #1	DSAT1	369437	4908757	2.5	0	0	96.6	96.6	1	761.77	3.5	0	68.64	0	2.66	0	0	0.91	0	0	0	0	0	0	24.42	24.42
DSTATCOM - 10 MVAR #2	DSAT2	369403	4908757	2.5	0	0	96.6	96.6	1	782.08	3.5	0	68.87	0	2.69	0	0	0.92	0	0	0	0	0	0	24.15	24.15
Inverter	MV6-1	370235	4907364	2	0	0	97.3	97.3	1	851.12	3.25	0	69.6	0	-0.32	0	0	10.38	0	0	0	0	0	0	17.65	17.65
Inverter	MV4-7	369035	4909001	2	0	0	100.3	100.3	1	1208.51	3.25	0	72.64	0	-0.15	0	0	11.55	0	0	0	0	0	0	16.27	16.27
Inverter	MV4-5	369289	4909199	2	0	0	100.3	100.3	1	1214.99	3.25	0	72.69	0	-0.15	0	0	11.57	0	0	0	0	0	0	16.2	16.2
Inverter	MV4-6	369243	4909192	2	0	0	100.3	100.3	1	1232.06	3.25	0	72.81	0	-0.14	0	0	11.62	0	0	0	0	0	0	16.02	16.02
Inverter	MV3-8	368680	4907712	2	0	0	100.3	100.3	1	1274.32	3.25	0	73.11	0	-0.12	0	0	11.73	0	0	0	0	0	0	15.59	15.59
Inverter	MV3-14	368684	4907498	2	0	0	100.3	100.3	1	1357.36	3.25	0	73.65	0	-0.09	0	0	11.96	0	0	0	0	0	0	14.79	14.79
Inverter	MV4-4	369027	4909199	2	0	0	100.3	100.3	1	1362	3.25	0	73.68	0	-0.09	0	0	11.97	0	0	0	0	0	0	14.74	14.74
Inverter	MV5-6	369982	4908507	2	0	0	89.1	89.1	1	382.58	3.25	0	62.65	0	0.44	0	0	4.64	0	0	0	0	0	0	21.32	21.32
Inverter	MV4-2	369272	4909397	2	0	0	100.3	100.3	1	1398.56	3.25	0	73.91	0	-0.07	0	0	12.07	0	0	0	0	0	0	14.4	14.4
Inverter	MV4-3	369229	4909397	2	0	0	100.3	100.3	1	1417.81	3.25	0	74.03	0	-0.06	0	0	12.12	0	0	0	0	0	0	14.23	14.23
Inverter	MV3-9	368512	4907703	2	0	0	100.3	100.3	1	1436.45	3.25	0	74.15	0	-0.06	0	0	12.16	0	0	0	0	0	0	14.06	14.06
Inverter	MV3-20	368689	4907317	2	0	0	100.3	100.3	1	1447.38	3.25	0	74.21	0	-0.05	0	0	12.19	0	0	0	0	0	0	13.96	13.96
Inverter	MV3-16	368514	4907475	2	0	0	100.3	100.3	1	1519.3	3.25	0	74.63	0	-0.03	0	0	12.37	0	0	0	0	0	0	13.33	13.33
Inverter	MV4-1	369011	4909397	2	0	0	100.3	100.3	1	1530.36	4.64	0	74.7	0	0.61	3.6	0.01	12.4	0	0	0	0	0	0	9.01	9.01
Inverter	MV3-11	368346	4907662	2	0	0	100.3	100.3	1	1607.11	3.25	0	75.12	0	0.01	0	0	12.58	0	0	0	0	0	0	12.6	12.6
Inverter	MV3-15	368357	4907477	2	0	0	100.3	100.3	1	1661.18	3.25	0	75.41	0	0.02	0	0	12.71	0	0	0	0	0	0	12.17	12.17
Inverter	MV3-21	368478	4907206	2	0	0	100.3	100.3	1	1684.35	3.25	0	75.53	0	0.03	0	0	12.77	0	0	0	0	0	0	11.99	11.99
Inverter	MV3-19	368357	4907347	2	0	0	100.3	100.3	1	1717.05	3.25	0	75.7	0	0.04	0	0	12.84	0	0	0	0	0	0	11.73	11.73
Inverter	MV3-6	368162	4907834	2	0	0	100.3	100.3	1	1745.68	3.25	0	75.84	0	0.05	0	0	12.91	0	0	0	0	0	0	11.51	11.51
Inverter	MV3-10	368167	4907669	2	0	0	100.3	100.3	1	1777.01	3.25	0	75.99	0	0.06	0	0	12.98	0	0	0	0	0	0	11.28	11.28
Inverter	MV3-17	368178	4907472	2	0	0	100.3	100.3	1	1828.6	3.25	0	76.24	0	0.08	0	0	13.09	0	0	0	0	0	0	10.9	10.9
Inverter	MV3-3	367939	4907927	2	0	0	100.3	100.3	1	1953.43	3.25	0	76.82	0	0.12	0	0	13.36	0	0	0	0	0	0	10.02	10.02
Inverter	MV3-7	367945	4907754	2	0	0	100.3	100.3	1	1973.72	3.25	0	76.91	0	0.12	0	0	13.41	0	0	0	0	0	0	9.88	9.88
Inverter	MV3-13	367963	4907577	2	0	0	100.3	100.3	1	1998.36	3.25	0	77.01	0	0.13	0	0	13.46	0	0	0	0	0	0	9.71	9.71
Inverter	MV3-18	367752	4907412	2	0	0	100.3	100.3	1	2249.38	3.25	0	78.04	0	0.2	0	0	13.97	0	0	0	0	0	0	8.1	8.1
Inverter	MV3-12	367668	4907594	2	0	0	100.3	100.3	1	2278.88	3.25	0	78.15	0	0.2	0	0	14.03	0	0	0	0	0	0	7.92	7.92
Fixed Reactor Bank 2	FRB2	369464	4908755	6	0	0	89.8	89.8	1	744.7	5.25	0	68.44	0	-0.96	0	0	1.98	0	0	0	0	0	0	20.31	20.31
Fixed Reactor Bank 1	FRB1	369378	4908755	6	0	0	89.8	89.8	1	796.05	5.25	0	69.02	0	-0.97	0	0	2.09	0	0	0	0	0	0	19.64	19.64
Inverter	MV4-15	369176	4908481	2	0	0	89.1	89.1	1	784.02	3.25	0	68.89	0	0.64	0	0	5.89	0	0	0	0	0	0	13.65	13.65
Inverter	MV4-14	369176	4908507	2	0	0	89.1	89.1	1	795.73	3.25	0	69.02	0	0.64	0	0	5.91	0	0	0	0	0	0	13.49	13.49
Inverter	MV4-13	369051	4908605	2	0	0	89.1	89.1	1	952.36	3.25	0	70.58	0	0.67	0	0	6.22	0	0	0	0	0	0	11.58	11.58
Inverter	MV4-12	369043	4908803	2	0	0	89.1	89.1	1	1069.8	3.25	0	71.59	0	0.7	0	0	6.45	0	0	0	0	0	0	10.33	10.33
Inverter	MV2-3	365820	4906641	2	0	0	100.3	100.3	1	4328.13	3.25	0	83.73	0	0.57	0	0	17.57	0	0	0	0	0	0	-1.55	-1.55
Inverter	MV3-2	368671	4907928	2	0	0	89.1	89.1	1	1228.09	3.25	0	72.78	0	0.73	0	0	6.73	0	0	0	0	0	0	8.81	8.81
Inverter	MV2-4	365586	4906624	2	0	0	100.3	100.3	1	4554.03	3.25	0	84.17	0	0.6	0	0	17.91	0	0	0	0	0	0	-2.37	-2.37
Inverter	MV3-4	368502	4907925	2	0	0	89.1	89.1	1	1395.36	3.25	0	73.89	0	0.77	0	0	7.03	0	0	0	0	0	0	7.37	7.37
SubstationTransformer	W_ST	369711.17	4906112.3	2.5	0	0	92	92	1	2032.84	3.5	0	77.16	0	-0.16	0	0	4.42	0	0	0	0	0	0	10.55	10.55
Inverter	MV1-1	364715	4906166	2	0	0	100.3	100.3	1	5529.59	3.25	0	85.85	0	0.68	0	0	19.34	0	0	0	0	0	0	-5.57	-5.57
Inverter	MV1-4	364815	4905918	2	0	0	100.3	100.3	1	5531.07	3.25	0	85.86	0	0.68	0	0	19.34	0	0	0	0	0	0	-5.57	-5.57
Inverter	MV1-2	364753	4906063	2	0	0	100.3	100.3	1	5531.91	3.25	0	85.86	0	0.68	0	0	19.35	0	0	0	0	0	0	-5.57	-5.57
Inverter	MV1-15	365315	4904994	2	0	0	100.3	100.3	1	5543.74	3.25	0	85.88	0	0.68	0	0	19.36	0	0	0	0	0	0	-5.61	-5.61
Inverter	MV1-12	365038	4905386	2	0	0	100.3	100.3	1	5570.29	3.25	0	85.92	0	0.68	0	0	19.4	0	0	0	0	0	0	-5.69	-5.69
Inverter	MV1-8	364788	4905647	2	0	0	100.3	100.3	1	5669.54	3.25	0	86.07	0	0.69	0	0	19.54	0	0	0	0	0	0	-5.99	-5.99
Inverter	MV1-5	364671	4905892	2	0	0	100.3	100.3	1	5673.5	3.25	0	86.08	0	0.69	0	0	19.54	0	0	0	0	0	0	-6	-6
Westbrook Inverter Enclosur	W_INV6	369875	4906578	2	0	0	89.1	89.1	1	1560.01	3.25	0	74.86	0	0.81	0	0	7.31	0	0	0	0	0	0	6.08	6.08
Inverter	MV3-5	368340	4907843	2	0	0	89.1	89.1	1	1568.98	3.25	0	74.91	0	0.81	0	0	7.33	0	0	0	0	0	0	6.01	6.01
Westbrook Inverter Enclosur	W_INV5	369719	4906574	2	0	0	89.1	89.1	1	1572.37	3.25	0	74.93	0	0.81	0	0	7.33	0	0	0	0	0	0	5.99	5.99
Inverter	MV3-22	368656	4907142	2	0	0	89.1	89.1	1	1578.81	3.25	0	74.97	0	0.81	0	0	7.34	0	0	0	0	0	0	5.94	5.94
Inverter	MV1-6	364477	4905835	2	0	0	100.3	100.3	1	5874.27	3.25	0	86.38	0	0.7	0	0	19.82	0	0	0	0	0	0	-6.59	-6.59
Inverter	MV1-9	364561	4905646	2	0	0	100.3	100.3	1	5874.73	3.25	0	86.38	0	0.7	0	0	19.82	0	0	0	0	0	0	-6.59	-6.59
Inverter	MV1-11	364655	4905414	2	0	0	100.3	100.3	1	5893.32	3.25	0	86.41	0	0.7	0	0	19.85	0	0	0	0	0	0	-6.64	-6.64
Inverter	MV2-1	365842	4906816	2	0	0	97.3	97.3	1	4249.85	3.25	0	83.57	0	0.56	0	0	17.44	0	0	0	0	0	0	-4.26	-4.26
Westbrook Inverter Enclosur	W_INV7	369780	4906417	2	0	0	89.1	89.1	1	1723.96	3.25	0	75.73	0	0.84	0	0	7.59	0	0	0	0	0	0	4.9	4.9
Inverter	MV3-1	368156	4907976	2	0	0	89.1	89.1	1	1732.59	3.25	0	75.77	0	0.84	0	0	7.6	0	0	0	0	0	0	4.84	4.84
Inverter	MV6-4	370250	4906966	2	0	0	86.1	86.1	1	1228.72	3.25	0	72.79	0	0.73	0	0	6.73	0	0	0	0	0	0	5.8	5.8
Westbrook Inverter Enclosur	W_INV2	369374	4906388	2	0	0	89.1	89.1	1	1821.96	3.25	0	76.21	0	0.87	0	0	7.75	0	0	0	0	0	0	4.23	4.23
Westbrook Inverter Enclosur	W_INV4	369673	4906164	2	0	0	89.1	89.1	1	1984.93	3.25	0	76.95	0	0.9	0	0	8.02	0	0	0	0	0	0	3.18	3.18
Westbrook Inverter Enclosur	W_INV3	369508	4906164	2	0	0	89.1	89.1	1	2008.93	3.25	0	77.06	0	0.91	0	0	8.06	0	0	0	0	0	0	3.03	3.03
Inverter	MV1-7	364925	4905782	2	0	0	97.3	97.3	1	5487.5	3.25	0	85.79	0	0.68	0	0	19.28	0	0	0	0	0	0	-8.44	-8.44
Inverter	MV1-10	365004	4905564	2	0	0	97.3	97.3	1	5514.58	3.25	0	85.83	0	0.68	0	0	19.32	0	0	0	0	0	0	-8.52	-8.52
Inverter	MV1-14	365163	4905049	2	0	0	97.3	97.3	1	5639.28	3.25	0	86.02	0	0.69	0	0	19.5	0	0	0	0	0	0	-8.9	-8.9
Inverter	MV1-13	364731	4905241	2	0	0	97.3	97.3	1	5908.9	3.25	0	86.43	0	0.7	0	0	19.87	0	0	0	0	0	0	-9.69	-9.69
Westbrook Inverter Enclosur	W_INV1	369409	4906578	2	0	0	86.1	86.1	1	1629.84	3.25	0	75.24	0	0.82	0	0	7.43	0	0	0	0	0	0	2.56	2.56
Inverter	MV2-2	365977	4906654	2	0	0	89.1	89.1	1	4176.54	3.25	0	83.42	0	1.44	0	0	11.33	0	0	0	0	0	0	-7.13	-7.13
Gardiner Substation	G_Sub	366586.3	4903349.9	2.5	0	0	90.8	90.8	1	5812.14	4.25	0	86.29	0	1.84	2.16	0.37	9.54	0	0	0	0	0	0	-9.04	-9.04
Westbrook Inverter Transfor	W_INVTR1	369403	4906578	2	0	0	78.2	78.2	1	1631.59	3.25	0	75.25	0	-2.26	0	0	1.02	0	0	0	0	0	0	4.23	4.23
Inverter	MV1-3	364440	4906039	2	0	0	89.1	89.1	1	5831.83	3.25	0	86.32	0	1.84	0	0	13.55	0	0	0	0	0	0	-12.65	-12.65

Westbrook Inverter Transfor	W_INVTR6	369881	4906578	2	0	0	77.3	77.3	1	1560	3.25	0	74.86	0	-2.23	0	0	0.99	0	0	0	0	0	0	3.72	3.72
Westbrook Inverter Transfor	W_INVTR5	369725	4906574	2	0	0	77.3	77.3	1	1571.76	3.25	0	74.93	0	-2.23	0	0	0.99	0	0	0	0	0	0	3.66	3.66
Westbrook Inverter Transfor	W_INVTR7	369786	4906417	2	0	0	77.3	77.3	1	1723.62	3.25	0	75.73	0	-2.3	0	0	1.07	0	0	0	0	0	0	2.84	2.84
Inverters	G_Inv2	366676.9	4903239.1	2	0	0	87.7	87.7	1	5853.67	3.25	0	86.35	0	2.91	0	0	6.83	0	0	0	0	0	0	-8.43	-8.43
Inverters	G_Inv4	366732.8	4903105	2	0	0	87.7	87.7	1	5936.52	3.25	0	86.47	0	2.91	0	0	6.91	0	0	0	0	0	0	-8.64	-8.64
Inverters	G_Inv1	366526.4	4903225.8	2	0	0	87.7	87.7	1	5948.37	3.25	0	86.49	0	2.92	0	0	6.93	0	0	0	0	0	0	-8.67	-8.67
Westbrook Inverter Transfor	W_INVTR2	369368	4906388	2	0	0	77.3	77.3	1	1823.64	3.25	0	76.22	0	-2.34	0	0	1.12	0	0	0	0	0	0	2.34	2.34
Inverters	G_Inv6	366788.5	4902972	2	0	0	87.7	87.7	1	6020.89	3.25	0	86.59	0	2.92	0	0	7	0	0	0	0	0	0	-8.85	-8.85
Inverters	G_Inv3	366583.7	4903091.4	2	0	0	87.7	87.7	1	6028.3	3.25	0	86.6	0	2.92	0	0	7.01	0	0	0	0	0	0	-8.87	-8.87
Inverters	G_Inv8	366844.5	4902838.5	2	0	0	87.7	87.7	1	6107.79	3.25	0	86.72	0	2.92	0	0	7.09	0	0	0	0	0	0	-9.07	-9.07
Inverters	G_Inv5	366638.5	4902958.1	2	0	0	87.7	87.7	1	6111.07	3.25	0	86.72	0	2.92	0	0	7.09	0	0	0	0	0	0	-9.08	-9.08
Inverters	G_Inv7	366694.6	4902824.7	2	0	0	87.7	87.7	1	6195.51	3.25	0	86.84	0	2.93	0	0	7.18	0	0	0	0	0	0	-9.28	-9.28
Inverters	G_Inv10	366900.7	4902704.8	2	0	0	87.7	87.7	1	6196.92	3.25	0	86.84	0	2.93	0	0	7.18	0	0	0	0	0	0	-9.29	-9.29
Inverters	G_Inv9	366750.9	4902691.8	2	0	0	87.7	87.7	1	6281.61	3.25	0	86.96	0	2.93	0	0	7.27	0	0	0	0	0	0	-9.5	-9.5
Westbrook Inverter Transfor	W_INVTR4	369679	4906164	2	0	0	77.3	77.3	1	1984.31	3.25	0	76.95	0	-2.4	0	0	1.2	0	0	0	0	0	0	1.59	1.59
Westbrook Inverter Transfor	W_INVTR3	369514	4906164	2	0	0	77.3	77.3	1	2007.83	3.25	0	77.05	0	-2.41	0	0	1.21	0	0	0	0	0	0	1.48	1.48
Inverter Transformer	MV6-1 T	370230	4907364	2	0	0	69.4	69.4	1	849.05	3.25	0	69.58	0	1.54	0	0	3.59	0	0	0	0	0	0	-5.36	-5.36
Inverter Transformer	MV6-4 T	370244	4906966	2	0	0	69.4	69.4	1	1226.93	3.25	0	72.78	0	1.84	0	0	4.11	0	0	0	0	0	0	-9.37	-9.37
Inverter Transformer	MV5-6 T	369987	4908507	2	0	0	56.1	56.1	1	383.93	3.25	0	62.69	0	-0.11	0	0	3.14	0	0	0	0	0	0	-9.66	-9.66
Inverter Transformer	MV5-5 T	370021	4908690	2	0	0	56.1	56.1	1	569.48	3.25	0	66.11	0	-0.11	0	0	3.77	0	0	0	0	0	0	-13.71	-13.71
Inverter Transformer	MV5-4 T	370330	4908707	2	0	0	56.1	56.1	1	724.82	3.25	0	68.2	0	-0.07	0	0	4.2	0	0	0	0	0	0	-16.27	-16.27
Inverter Transformer	MV5-2 T	370011	4908853	2	0	0	56.1	56.1	1	726.73	3.25	0	68.23	0	-0.07	0	0	4.2	0	0	0	0	0	0	-16.3	-16.3
Inverter Transformer	MV4-15 T	369170	4908481	2	0	0	56.1	56.1	1	789.42	3.25	0	68.95	0	-0.06	0	0	4.37	0	0	0	0	0	0	-17.2	-17.2
Inverter Transformer	MV4-14 T	369182	4908507	2	0	0	56.1	56.1	1	790.42	3.25	0	68.96	0	-0.06	0	0	4.37	0	0	0	0	0	0	-17.21	-17.21
Inverter Transformer	MV5-3 T	370237	4908851	2	0	0	56.1	56.1	1	796.94	3.25	0	69.03	0	-0.05	0	0	4.39	0	0	0	0	0	0	-17.3	-17.3
Inverter Transformer	MV6-2 T	370091	4907339	2	0	0	56.1	56.1	1	826.14	3.25	0	69.34	0	-0.04	0	0	4.46	0	0	0	0	0	0	-17.7	-17.7
Inverter Transformer	MV4-10 T	369307	4908858	2	0	0	56.1	56.1	1	920.81	3.25	0	70.28	0	-0.01	0	0	4.7	0	0	0	0	0	0	-18.91	-18.91
Inverter Transformer	MV2-1 T	365836	4906816	2	0	0	69.4	69.4	1	4255.55	3.25	0	83.58	0	2.85	0	0	6.86	0	0	0	0	0	0	-23.94	-23.94
Inverter Transformer	MV4-11 T	369269	4908855	2	0	0	56.1	56.1	1	942.68	3.25	0	70.49	0	-0.01	0	0	4.75	0	0	0	0	0	0	-19.17	-19.17
Inverter Transformer	MV4-13 T	369057	4908605	2	0	0	56.1	56.1	1	947.14	3.25	0	70.53	0	-0.01	0	0	4.76	0	0	0	0	0	0	-19.23	-19.23
Inverter Transformer	MV5-1 T	370015	4909142	2	0	0	56.1	56.1	1	1012.91	3.25	0	71.11	0	0.02	0	0	4.92	0	0	0	0	0	0	-19.99	-19.99
Inverter Transformer	MV6-3 T	370202	4907140	2	0	0	56.1	56.1	1	1048.36	3.25	0	71.41	0	0.03	0	0	5	0	0	0	0	0	0	-20.38	-20.38
Inverter Transformer	MV4-9 T	369284	4909001	2	0	0	56.1	56.1	1	1049.37	4.94	0	71.42	0	0.8	3.35	0.03	5.01	0	0	0	0	0	0	-24.51	-24.51
Inverter Transformer	MV4-8 T	369262	4909001	2	0	0	56.1	56.1	1	1062.04	4.94	0	71.52	0	0.8	3.34	0.03	5.04	0	0	0	0	0	0	-24.65	-24.65
Inverter Transformer	MV4-12 T	369049	4908803	2	0	0	56.1	56.1	1	1065.11	3.25	0	71.55	0	0.03	0	0	5.04	0	0	0	0	0	0	-20.57	-20.57
Inverter Transformer	MV1-7 T	364919	4905782	2	0	0	69.4	69.4	1	5492.92	3.25	0	85.8	0	3.11	0	0	7.7	0	0	0	0	0	0	-27.25	-27.25
Inverter Transformer	MV1-10 T	365010	4905564	2	0	0	69.4	69.4	1	5509.28	3.25	0	85.82	0	3.11	0	0	7.71	0	0	0	0	0	0	-27.29	-27.29
Inverter Transformer	MV4-7 T	369040	4909001	2	0	0	56.1	56.1	1	1205.01	3.25	0	72.62	0	0.09	0	0	5.37	0	0	0	0	0	0	-22.01	-22.01
Inverter Transformer	MV4-5 T	369283	4909199	2	0	0	56.1	56.1	1	1217.92	3.25	0	72.71	0	0.09	0	0	5.4	0	0	0	0	0	0	-22.14	-22.14
Inverter Transformer	MV1-14 T	365157	4905049	2	0	0	69.4	69.4	1	5644.3	3.25	0	86.03	0	3.13	0	0	7.8	0	0	0	0	0	0	-27.61	-27.61
Inverter Transformer	MV3-2 T	368677	4907928	2	0	0	56.1	56.1	1	1222.18	3.25	0	72.74	0	0.09	0	0	5.41	0	0	0	0	0	0	-22.18	-22.18
Inverter Transformer	MV4-6 T	369249	4909192	2	0	0	56.1	56.1	1	1228.96	3.25	0	72.79	0	0.09	0	0	5.42	0	0	0	0	0	0	-22.25	-22.25
Inverter Transformer	MV3-8 T	368685	4907712	2	0	0	56.1	56.1	1	1269.61	3.25	0	73.07	0	0.11	0	0	5.51	0	0	0	0	0	0	-22.64	-22.64
Inverter Transformer	MV1-13 T	364725	4905241	2	0	0	69.4	69.4	1	5914.13	3.25	0	86.44	0	3.18	0	0	7.97	0	0	0	0	0	0	-28.23	-28.23
Inverter Transformer	MV4-4 T	369033	4909199	2	0	0	56.1	56.1	1	1358.25	3.25	0	73.66	0	0.14	0	0	5.71	0	0	0	0	0	0	-23.45	-23.45
Inverter Transformer	MV3-14 T	368678	4907498	2	0	0	56.1	56.1	1	1362.65	3.25	0	73.69	0	0.15	0	0	5.72	0	0	0	0	0	0	-23.49	-23.49
Inverter Transformer	MV3-4 T	368507	4907925	2	0	0	56.1	56.1	1	1390.41	3.25	0	73.86	0	0.16	0	0	5.78	0	0	0	0	0	0	-23.74	-23.74
Inverter Transformer	MV4-2 T	369267	4909397	2	0	0	56.1	56.1	1	1400.74	3.25	0	73.93	0	0.16	0	0	5.8	0	0	0	0	0	0	-23.83	-23.83
Inverter Transformer	MV4-3 T	369234	4909397	2	0	0	56.1	56.1	1	1415.52	3.25	0	74.02	0	0.17	0	0	5.84	0	0	0	0	0	0	-23.96	-23.96
Inverter Transformer	MV3-9 T	368517	4907703	2	0	0	56.1	56.1	1	1431.69	3.25	0	74.12	0	0.17	0	0	5.87	0	0	0	0	0	0	-24.1	-24.1
Inverter Transformer	MV3-20 T	368683	4907317	2	0	0	56.1	56.1	1	1452.33	3.25	0	74.24	0	0.18	0	0	5.92	0	0	0	0	0	0	-24.28	-24.28
Inverter Transformer	MV3-16 T	368509	4907475	2	0	0	56.1	56.1	1	1523.8	3.25	0	74.66	0	0.21	0	0	6.07	0	0	0	0	0	0	-24.88	-24.88
Inverter Transformer	MV4-1 T	369017	4909397	2	0	0	56.1	56.1	1	1526.95	4.65	0	74.68	0	1.04	3.15	0.01	6.08	0	0	0	0	0	0	-28.89	-28.89
Inverter Transformer	MV3-5 T	368335	4907843	2	0	0	56.1	56.1	1	1573.9	3.25	0	74.94	0	0.23	0	0	6.18	0	0	0	0	0	0	-25.28	-25.28
Inverter Transformer	MV3-22 T	368661	4907142	2	0	0	56.1	56.1	1	1574.94	3.25	0	74.95	0	0.23	0	0	6.18	0	0	0	0	0	0	-25.29	-25.29
Inverter Transformer	MV3-11 T	368340	4907662	2	0	0	56.1	56.1	1	1612.84	3.25	0	75.15	0	0.24	0	0	6.26	0	0	0	0	0	0	-25.59	-25.59
Inverter Transformer	MV3-15 T	368351	4907477	2	0	0	56.1	56.1	1	1666.68	3.25	0	75.44	0	0.27	0	0	6.37	0	0	0	0	0	0	-26.01	-26.01
Inverter Transformer	MV3-21 T	368484	4907206	2	0	0	56.1	56.1	1	1679.36	3.25	0	75.5	0	0.27	0	0	6.4	0	0	0	0	0	0	-26.11	-26.11
Inverter Transformer	MV3-19 T	368352	4907347	2	0	0	56.1	56.1	1	1721.49	3.25	0	75.72	0	0.29	0	0	6.48	0	0	0	0	0	0	-26.43	-26.43
Inverter Transformer	MV3-1 T	368150	4907976	2	0	0	56.1	56.1	1	1738.57	3.25	0	75.8	0	0.3	0	0	6.52	0	0	0	0	0	0	-26.56	-26.56
Inverter Transformer	MV3-6 T	368156	4907834	2	0	0	56.1	56.1	1	1751.58	3.25	0	75.87	0	0.3	0	0	6.54	0	0	0	0	0	0	-26.66	-26.66
Inverter Transformer	MV3-10 T	368162	4907669	2	0	0	56.1	56.1	1	1781.83	3.25	0	76.02	0	0.31	0	0	6.61	0	0	0	0	0	0	-26.88	-26.88
Inverter Transformer	MV3-17 T	368183	4907472	2	0	0	56.1	56.1	1	1823.94	3.25	0	76.22	0	0.33	0	0	6.69	0	0	0	0	0	0	-27.18	-27.18
Inverter Transformer	MV3-3 T	367944	4907927	2	0	0	56.1	56.1	1	1948.46	3.25	0	76.79	0	0.38	0	0	6.94	0	0	0	0	0	0	-28.06	-28.06
Inverter Transformer	MV3-7 T	367951	4907754	2	0	0	56.1	56.1	1	1967.83	3.25	0	76.88	0	0.39	0	0	6.98	0	0	0	0	0	0	-28.19	-28.19
Inverter Transformer	MV3-13 T	367958	4907577	2	0	0	56.1	56.1	1	2003.16	3.25	0	77.03	0	0.41	0	0	7.05	0	0	0	0	0	0	-28.43	-28.43
Inverter Transformer	MV3-18 T	367757	4907412	2	0	0	56.1	56.1	1	2244.65	3.25	0	78.02	0	0.51	0	0	7.52	0	0	0	0	0	0	-29.99	-29.99
Inverter Transformer	MV3-12 T	367674	4907594	2	0	0	56.1	56.1	1	2273.06	3.25	0	78.13	0	0.52	0	0	7.57	0	0	0	0	0	0	-30.16	-30.16
Line Reactor	NGR	369421	4908787.5	5	0	0	45.4	45.4	1	795.9	5.25	0	69.02	0	3.42	1.36	0.1	0.33	0	0	0	0	0	0	-28.77	-28.77
Inverter Transformer	MV2-2 T	365982	4906654	2	0	0	56.1	56.1	1	4171.87	3.25	0	83.41	0	1.31	0	0	10.71	0	0	0	0	0	0	-39.37	-39.37
Inverter Transformer	MV2-3 T	365814	4906641	2	0	0	56.1	56.1	1	4333.76	3.25	0	83.74	0	1.38	0	0	10.94	0	0	0	0	0	0	-40	-40
Inverter Transformer	MV2-4 T	365590	4906628	2	0	0	56.1	56.1	1	4548.93	3.25	0	84.16	0	1.46	0	0	11.24	0	0	0	0	0	0	-40.8	-40.8
Inverter Transformer	MV1-1 T	364721	4906166	2	0	0	56.1	56.1	1	5523.98	3.25	0	85.85	0	1.81	0	0	12.53	0	0	0	0	0	0	-44.12	-44.12
Inverter Transformer	MV1-4 T	364821	4905918	2	0	0	56.1	56.1	1	5525.58	3.25	0	85.85	0	1.81	0	0	12.53	0	0	0	0	0	0	-44.13	-44.13

	Inverter Transformer	MV1-2 T	364759	4906063	2	0	0	56.1	56.1	1	5526.35	3.25	0	85.85	0	1.81	0	0	12.53	0	0	0	0	0	0	-44.13	-44.13
	Inverter Transformer	MV1-15 T	365309	4904994	2	0	0	56.1	56.1	1	5548.69	3.25	0	85.88	0	1.82	0	0	12.56	0	0	0	0	0	0	-44.2	-44.2
	Inverter Transformer	MV1-12 T	365044	4905386	2	0	0	56.1	56.1	1	5565.08	3.25	0	85.91	0	1.82	0	0	12.58	0	0	0	0	0	0	-44.25	-44.25
	Inverter Transformer	MV1-5 T	364676	4905892	2	0	0	56.1	56.1	1	5668.91	3.25	0	86.07	0	1.86	0	0	12.7	0	0	0	0	0	0	-44.57	-44.57
	Inverter Transformer	MV1-8 T	364782	4905647	2	0	0	56.1	56.1	1	5674.94	3.25	0	86.08	0	1.86	0	0	12.71	0	0	0	0	0	0	-44.59	-44.59
	Inverter Transformer	MV1-3 T	364435	4906039	2	0	0	56.1	56.1	1	5836.5	3.25	0	86.32	0	1.91	0	0	12.91	0	0	0	0	0	0	-45.08	-45.08
	Inverter Transformer	MV1-6 T	364482	4905835	2	0	0	56.1	56.1	1	5869.67	3.25	0	86.37	0	1.92	0	0	12.95	0	0	0	0	0	0	-45.18	-45.18
	Inverter Transformer	MV1-9 T	364555	4905646	2	0	0	56.1	56.1	1	5880.17	3.25	0	86.39	0	1.93	0	0	12.96	0	0	0	0	0	0	-45.22	-45.22
	Inverter Transformer	MV1-11 T	364649	4905414	2	0	0	56.1	56.1	1	5898.64	3.25	0	86.42	0	1.93	0	0	12.98	0	0	0	0	0	0	-45.27	-45.27
Limit. Valu	0	0																								
Level D/N:	38.2077	38.2077																								

Receiver: Existing Noise Receptor
ID: S-R48*
X: 370307
Y: 4909226
Z: 4.5
Ground: 0

ISO	Description	ID	X	Y	Z	Ground	ReflOrd	LxT	LxN	L/A	Dist.	hm	Freq	Adiv	K0b	Agr	Abar	z	Aatm	Afol	Ahous	Cmet	CmetN	Dc	RL	LtotT	LtotN
	Sol_Luce Substation	S_Substation	369426	4908792	3.5	0	0	112.1	112.1	1	982.1	5.25	0	70.84	0	0.14	5.81	0.43	2.48	0	0	0	0	0	0	32.81	32.81
	Inverter	MV5-1	370020	4909142	2	0	0	100.3	100.3	1	299.05	3.25	0	60.51	0	-0.65	0	0	6.38	0	0	0	0	0	0	34.06	34.06
	Inverter	MV5-3	370231	4908851	2	0	0	100.3	100.3	1	382.63	3.25	0	62.66	0	-0.63	0	0	7.43	0	0	0	0	0	0	30.85	30.85
	Inverter	MV5-2	370006	4908853	2	0	0	100.3	100.3	1	479.31	3.25	0	64.61	0	-0.57	0	0	8.36	0	0	0	0	0	0	27.91	27.91
	Inverter	MV5-4	370324	4908707	2	0	0	100.3	100.3	1	519.28	3.25	0	65.31	0	-0.54	0	0	8.67	0	0	0	0	0	0	26.87	26.87
	Inverter	MV5-5	370015	4908690	2	0	0	100.3	100.3	1	610.38	3.25	0	66.71	0	-0.47	0	0	9.26	0	0	0	0	0	0	24.81	24.81
	Inverter	MV4-5	369289	4909199	2	0	0	100.3	100.3	1	1018.36	3.25	0	71.16	0	-0.24	0	0	10.97	0	0	0	0	0	0	18.42	18.42
	Inverter	MV4-9	369289	4909001	2	0	0	100.3	100.3	1	1042.57	3.25	0	71.36	0	-0.23	0	0	11.05	0	0	0	0	0	0	18.13	18.13
	Inverter	MV4-2	369272	4909397	2	0	0	100.3	100.3	1	1049.03	3.25	0	71.42	0	-0.22	0	0	11.07	0	0	0	0	0	0	18.05	18.05
	Inverter	MV4-10	369312	4908858	2	0	0	100.3	100.3	1	1060.87	3.25	0	71.51	0	-0.22	0	0	11.11	0	0	0	0	0	0	17.91	17.91
	Inverter	MV4-6	369243	4909192	2	0	0	100.3	100.3	1	1064.55	3.25	0	71.54	0	-0.22	0	0	11.12	0	0	0	0	0	0	17.87	17.87
	Inverter	MV4-8	369256	4909001	2	0	0	100.3	100.3	1	1074.82	3.25	0	71.63	0	-0.21	0	0	11.15	0	0	0	0	0	0	17.74	17.74
	Inverter	MV4-3	369229	4909397	2	0	0	100.3	100.3	1	1091.48	3.25	0	71.76	0	-0.2	0	0	11.2	0	0	0	0	0	0	17.55	17.55
	Inverter	MV4-11	369264	4908855	2	0	0	100.3	100.3	1	1107.02	3.25	0	71.88	0	-0.2	0	0	11.25	0	0	0	0	0	0	17.37	17.37
	Inverter	MV4-4	369027	4909199	2	0	0	100.3	100.3	1	1280.29	3.25	0	73.15	0	-0.12	0	0	11.75	0	0	0	0	0	0	15.53	15.53
	Inverter	MV4-7	369035	4909001	2	0	0	100.3	100.3	1	1291.75	3.25	0	73.22	0	-0.12	0	0	11.78	0	0	0	0	0	0	15.42	15.42
	Inverter	MV4-1	369011	4909397	2	0	0	100.3	100.3	1	1307.23	3.25	0	73.33	0	-0.11	0	0	11.82	0	0	0	0	0	0	15.27	15.27
	DSTATCOM - 10 MVAR #1	DSAT1	369437	4908757	2.5	0	0	96.6	96.6	1	988.36	3.5	0	70.9	0	2.91	0	0	1.07	0	0	0	0	0	0	21.76	21.76
	DSTATCOM - 10 MVAR #2	DSAT2	369403	4908757	2.5	0	0	96.6	96.6	1	1018.42	3.5	0	71.16	0	2.93	0	0	1.09	0	0	0	0	0	0	21.45	21.45
	Inverter	MV6-2	370085	4907339	2	0	0	100.3	100.3	1	1900.02	3.25	0	76.58	0	0.1	0	0	13.25	0	0	0	0	0	0	10.39	10.39
	Inverter	MV6-3	370207	4907140	2	0	0	100.3	100.3	1	2088.4	3.25	0	77.4	0	0.15	0	0	13.65	0	0	0	0	0	0	9.12	9.12
	Inverter	MV3-8	368680	4907712	2	0	0	100.3	100.3	1	2222.46	3.25	0	77.94	0	0.19	0	0	13.92	0	0	0	0	0	0	8.27	8.27
	Inverter	MV3-9	368512	4907703	2	0	0	100.3	100.3	1	2354.05	3.25	0	78.44	0	0.22	0	0	14.18	0	0	0	0	0	0	7.48	7.48
	Inverter	MV3-14	368684	4907498	2	0	0	100.3	100.3	1	2370.68	3.25	0	78.5	0	0.23	0	0	14.21	0	0	0	0	0	0	7.38	7.38
	Inverter	MV3-20	368689	4907317	2	0	0	100.3	100.3	1	2502.44	3.25	0	78.97	0	0.26	0	0	14.46	0	0	0	0	0	0	6.62	6.62
	Inverter	MV3-16	368514	4907475	2	0	0	100.3	100.3	1	2506.16	3.25	0	78.98	0	0.26	0	0	14.47	0	0	0	0	0	0	6.6	6.6
	Inverter	MV3-11	368346	4907662	2	0	0	100.3	100.3	1	2508.31	3.25	0	78.99	0	0.26	0	0	14.47	0	0	0	0	0	0	6.59	6.59
	Inverter	MV3-6	368162	4907834	2	0	0	100.3	100.3	1	2557.09	3.25	0	79.15	0	0.27	0	0	14.57	0	0	0	0	0	0	6.32	6.32
	Inverter	MV3-15	368357	4907477	2	0	0	100.3	100.3	1	2619.45	3.25	0	79.36	0	0.28	0	0	14.68	0	0	0	0	0	0	5.98	5.98
	Inverter	MV6-1	370235	4907364	2	0	0	97.3	97.3	1	1863.39	3.25	0	76.41	0	0.09	0	0	13.17	0	0	0	0	0	0	7.65	7.65
	Inverter	MV3-10	368167	4907669	2	0	0	100.3	100.3	1	2646.48	3.25	0	79.45	0	0.29	0	0	14.73	0	0	0	0	0	0	5.84	5.84
	Inverter	MV3-3	367939	4907927	2	0	0	100.3	100.3	1	2700.89	3.25	0	79.63	0	0.3	0	0	14.83	0	0	0	0	0	0	5.55	5.55
	Inverter	MV3-19	368357	4907347	2	0	0	100.3	100.3	1	2707.98	3.25	0	79.65	0	0.3	0	0	14.85	0	0	0	0	0	0	5.51	5.51
	Inverter	MV3-21	368478	4907206	2	0	0	100.3	100.3	1	2725	3.25	0	79.71	0	0.31	0	0	14.88	0	0	0	0	0	0	5.42	5.42
	Inverter	MV3-17	368178	4907472	2	0	0	100.3	100.3	1	2758.47	3.25	0	79.81	0	0.31	0	0	14.94	0	0	0	0	0	0	5.25	5.25
	Inverter	MV3-7	367945	4907754	2	0	0	100.3	100.3	1	2783.13	3.25	0	79.89	0	0.32	0	0	14.98	0	0	0	0	0	0	5.12	5.12
	Inverter	MV3-13	367963	4907577	2	0	0	100.3	100.3	1	2865.93	3.25	0	80.15	0	0.34	0	0	15.13	0	0	0	0	0	0	4.7	4.7
	Inverter	MV5-6	369982	4908507	2	0	0	89.1	89.1	1	789.05	3.25	0	68.94	0	0.64	0	0	5.9	0	0	0	0	0	0	13.58	13.58
	Inverter	MV3-12	367668	4907594	2	0	0	100.3	100.3	1	3102.86	3.25	0	80.84	0	0.38	0	0	15.55	0	0	0	0	0	0	3.54	3.54
	Inverter	MV3-18	367752	4907412	2	0	0	100.3	100.3	1	3133.47	3.25	0	80.92	0	0.39	0	0	15.61	0	0	0	0	0	0	3.4	3.4
	Fixed Reactor Bank 2	FRB2	369464	4908755	6	0	0	89.8	89.8	1	965.66	5.25	0	70.7	0	-1.01	0	0	2.45	0	0	0	0	0	0	17.64	17.64
	Fixed Reactor Bank 1	FRB1	369378	4908755	6	0	0	89.8	89.8	1	1041.58	5.25	0	71.35	0	-1.02	0	0	2.6	0	0	0	0	0	0	16.84	16.84
	Inverter	MV4-12	369043	4908803	2	0	0	89.1	89.1	1	1332.9	3.25	0	73.5	0	0.76	0	0	6.92	0	0	0	0	0	0	7.89	7.89
	Inverter	MV4-14	369176	4908507	2	0	0	89.1	89.1	1	1340.2	3.25	0	73.54	0	0.76	0	0	6.93	0	0	0	0	0	0	7.83	7.83
	Inverter	MV4-15	369176	4908481	2	0	0	89.1	89.1	1	1354.32	3.25	0	73.63	0	0.76	0	0	6.96	0	0	0	0	0	0	7.71	7.71
	Inverter	MV4-13	369051	4908605	2	0	0	89.1	89.1	1	1401.14	4.9	0	73.93	0	1.53	3.03	0.02	7.04	0	0	0	0	0	0	3.53	3.53
	Inverter	MV2-3	365820	4906641	2	0	0	100.3	100.3	1	5178.36	3.25	0	85.28	0	0.66	0	0	18.84	0	0	0	0	0	0	-4.47	-4.47
	Inverter	MV2-4	365586	4906624	2	0	0	100.3	100.3	1	5390.57	3.25	0	85.63	0	0.67	0	0	19.15	0	0	0	0	0	0	-5.14	-5.14
	Inverter	MV1-1	364715	4906166	2	0	0	100.3	100.3	1	6374.49	3.25	0	87.09	0	0.71	0	0	20.49	0	0	0	0	0	0	-7.98	-7.98
	Inverter	MV1-2	364753	4906063	2	0	0	100.3	100.3	1	6391.52	3.25	0	87.11	0	0.71	0	0	20.52	0	0	0	0	0	0	-8.03	-8.03
	Inverter	MV1-4	364815	4905918	2	0	0	100.3	100.3	1	6411.31	3.25	0	87.14	0	0.71	0	0	20.54	0	0	0	0	0	0	-8.08	-8.08
	Inverter	MV1-12	365038	4905386	2	0	0	100.3	100.3	1	6519.81	3.25	0	87.28	0	0.71	0	0	20.68	0	0	0	0	0	0	-8.37	-8.37
	Inverter	MV1-15	365315	4904994	2	0	0	100.3	100.3	1	6544.46	3.25	0	87.32	0	0.71	0	0	20.72	0	0	0	0	0	0	-8.44	-8.44
	Inverter	MV1-5	364671	4905892	2	0	0	100.3	100.3	1	6548.29	3.25	0	87.32	0	0.71	0	0	20.72	0	0	0	0	0	0	-8.45	-8.45

Inverter	MV1-8	364788	4905647	2	0	0	100.3	100.3	1	6577.89	3.25	0	87.36	0	0.72	0	0	20.76	0	0	0	0	0	0	-8.53	-8.53
Inverter	MV1-6	364477	4905835	2	0	0	100.3	100.3	1	6744.46	3.25	0	87.58	0	0.71	0	0	20.98	0	0	0	0	0	0	-8.96	-8.96
Inverter	MV1-9	364561	4905646	2	0	0	100.3	100.3	1	6770	3.25	0	87.61	0	0.71	0	0	21.01	0	0	0	0	0	0	-9.02	-9.02
Inverter	MV1-11	364655	4905414	2	0	0	100.3	100.3	1	6817.36	3.25	0	87.67	0	0.71	0	0	21.07	0	0	0	0	0	0	-9.14	-9.14
Inverter	MV2-1	365842	4906816	2	0	0	97.3	97.3	1	5073.89	3.25	0	85.11	0	0.65	0	0	18.69	0	0	0	0	0	0	-7.13	-7.13
Inverter	MV3-2	368671	4907928	2	0	0	89.1	89.1	1	2088.37	3.25	0	77.4	0	0.93	0	0	8.19	0	0	0	0	0	0	2.54	2.54
Inverter	MV3-4	368502	4907925	2	0	0	89.1	89.1	1	2225	3.25	0	77.95	0	0.96	0	0	8.41	0	0	0	0	0	0	1.74	1.74
SubstationTransformer	W_ST	369711.17	4906112.3	2.5	0	0	92	92	1	3170.23	3.5	0	81.02	0	0.13	0	0	6.21	0	0	0	0	0	0	4.62	4.62
Inverter	MV3-5	368340	4907843	2	0	0	89.1	89.1	1	2404.53	3.25	0	78.62	0	1	0	0	8.7	0	0	0	0	0	0	0.74	0.74
Inverter	MV1-7	364925	4905782	2	0	0	97.3	97.3	1	6389.61	3.25	0	87.11	0	0.71	0	0	20.51	0	0	0	0	0	0	-11.03	-11.03
Inverter	MV3-1	368156	4907976	2	0	0	89.1	89.1	1	2487.83	3.25	0	78.92	0	1.02	0	0	8.83	0	0	0	0	0	0	0.29	0.29
Inverter	MV1-10	365004	4905564	2	0	0	97.3	97.3	1	6444.54	3.25	0	87.18	0	0.71	0	0	20.59	0	0	0	0	0	0	-11.17	-11.17
Inverter	MV1-14	365163	4905049	2	0	0	97.3	97.3	1	6626.32	3.25	0	87.43	0	0.71	0	0	20.82	0	0	0	0	0	0	-11.65	-11.65
Inverter	MV1-13	364731	4905241	2	0	0	97.3	97.3	1	6853.61	3.25	0	87.72	0	0.71	0	0	21.11	0	0	0	0	0	0	-12.23	-12.23
Inverter	MV3-22	368656	4907142	2	0	0	89.1	89.1	1	2658.73	3.25	0	79.49	0	1.06	0	0	9.09	0	0	0	0	0	0	-0.59	-0.59
Westbrook Inverter Enclosur	W_INV6	369875	4906578	2	0	0	89.1	89.1	1	2683.01	3.25	0	79.57	0	1.07	0	0	9.13	0	0	0	0	0	0	-0.72	-0.72
Westbrook Inverter Enclosur	W_INV5	369719	4906574	2	0	0	89.1	89.1	1	2716.4	3.25	0	79.68	0	1.08	0	0	9.18	0	0	0	0	0	0	-0.88	-0.88
Westbrook Inverter Enclosur	W_INV7	369780	4906417	2	0	0	89.1	89.1	1	2858.01	3.25	0	80.12	0	1.11	0	0	9.4	0	0	0	0	0	0	-1.58	-1.58
Westbrook Inverter Enclosur	W_INV2	369374	4906388	2	0	0	89.1	89.1	1	2987.43	3.25	0	80.51	0	1.14	0	0	9.6	0	0	0	0	0	0	-2.19	-2.19
Westbrook Inverter Enclosur	W_INV4	369673	4906164	2	0	0	89.1	89.1	1	3126.95	3.25	0	80.9	0	1.18	0	0	9.81	0	0	0	0	0	0	-2.83	-2.83
Westbrook Inverter Enclosur	W_INV3	369508	4906164	2	0	0	89.1	89.1	1	3164.53	3.25	0	81.01	0	1.19	0	0	9.87	0	0	0	0	0	0	-3	-3
Inverter	MV6-4	370250	4906966	2	0	0	86.1	86.1	1	2260.72	3.25	0	78.08	0	0.97	0	0	8.47	0	0	0	0	0	0	-1.46	-1.46
Westbrook Inverter Enclosur	W_INV1	369409	4906578	2	0	0	86.1	86.1	1	2796.12	3.25	0	79.93	0	1.1	0	0	9.31	0	0	0	0	0	0	-4.28	-4.28
Inverter	MV2-2	365977	4906654	2	0	0	89.1	89.1	1	5036.28	3.25	0	85.04	0	1.65	0	0	12.51	0	0	0	0	0	0	-10.15	-10.15
Gardiner Substation	G_Sub	366586.3	4903349.9	2.5	0	0	90.8	90.8	1	6955.01	4.25	0	87.85	0	2.05	1.91	0.38	10.71	0	0	0	0	0	0	-11.74	-11.74
Inverter	MV1-3	364440	4906039	2	0	0	89.1	89.1	1	6676.73	3.25	0	87.49	0	2.05	0	0	14.6	0	0	0	0	0	0	-15.08	-15.08
Inverters	G_Inv2	366676.9	4903239.1	2	0	0	87.7	87.7	1	7001.47	3.25	0	87.9	0	2.95	0	0	7.99	0	0	0	0	0	0	-11.19	-11.19
Inverters	G_Inv4	366732.8	4903105	2	0	0	87.7	87.7	1	7088.13	3.25	0	88.01	0	2.95	0	0	8.08	0	0	0	0	0	0	-11.38	-11.38
Inverters	G_Inv1	366526.4	4903225.8	2	0	0	87.7	87.7	1	7091.92	3.25	0	88.02	0	2.95	0	0	8.08	0	0	0	0	0	0	-11.39	-11.39
Inverters	G_Inv6	366788.5	4902972	2	0	0	87.7	87.7	1	7175.82	3.25	0	88.12	0	2.95	0	0	8.17	0	0	0	0	0	0	-11.58	-11.58
Inverters	G_Inv3	366583.7	4903091.4	2	0	0	87.7	87.7	1	7176.09	3.25	0	88.12	0	2.95	0	0	8.17	0	0	0	0	0	0	-11.58	-11.58
Inverters	G_Inv5	366638.5	4902958.1	2	0	0	87.7	87.7	1	7262.54	3.25	0	88.22	0	2.96	0	0	8.25	0	0	0	0	0	0	-11.77	-11.77
Inverters	G_Inv8	366844.5	4902838.5	2	0	0	87.7	87.7	1	7265.61	3.25	0	88.23	0	2.96	0	0	8.25	0	0	0	0	0	0	-11.78	-11.78
Inverters	G_Inv7	366694.6	4902824.7	2	0	0	87.7	87.7	1	7350.24	3.25	0	88.33	0	2.96	0	0	8.34	0	0	0	0	0	0	-11.96	-11.96
Inverters	G_Inv10	366900.7	4902704.8	2	0	0	87.7	87.7	1	7357.24	3.25	0	88.33	0	2.96	0	0	8.35	0	0	0	0	0	0	-11.98	-11.98
Inverters	G_Inv9	366750.9	4902691.8	2	0	0	87.7	87.7	1	7439.2	3.25	0	88.43	0	2.96	0	0	8.43	0	0	0	0	0	0	-12.16	-12.16
Westbrook Inverter Transfor	W_INVTR1	369403	4906578	2	0	0	78.2	78.2	1	2798.06	3.25	0	79.94	0	-2.66	0	0	1.57	0	0	0	0	0	0	-0.61	-0.61
Westbrook Inverter Transfor	W_INVTR6	369881	4906578	2	0	0	77.3	77.3	1	2682.05	3.25	0	79.57	0	-2.62	0	0	1.52	0	0	0	0	0	0	-1.12	-1.12
Westbrook Inverter Transfor	W_INVTR5	369725	4906574	2	0	0	77.3	77.3	1	2715.11	3.25	0	79.68	0	-2.63	0	0	1.53	0	0	0	0	0	0	-1.23	-1.23
Westbrook Inverter Transfor	W_INVTR7	369786	4906417	2	0	0	77.3	77.3	1	2856.91	3.25	0	80.12	0	-2.67	0	0	1.6	0	0	0	0	0	0	-1.7	-1.7
Westbrook Inverter Transfor	W_INVTR2	369368	4906388	2	0	0	77.3	77.3	1	2989.31	3.25	0	80.51	0	-2.71	0	0	1.65	0	0	0	0	0	0	-2.11	-2.11
Westbrook Inverter Transfor	W_INVTR4	369679	4906164	2	0	0	77.3	77.3	1	3125.74	3.25	0	80.9	0	-2.75	0	0	1.71	0	0	0	0	0	0	-2.52	-2.52
Westbrook Inverter Transfor	W_INVTR3	369514	4906164	2	0	0	77.3	77.3	1	3163.02	3.25	0	81	0	-2.76	0	0	1.72	0	0	0	0	0	0	-2.63	-2.63
Inverter Transformer	MV5-1 T	370015	4909142	2	0	0	56.1	56.1	1	303.85	3.25	0	60.65	0	-0.07	0	0	2.8	0	0	0	0	0	0	-7.32	-7.32
Inverter Transformer	MV5-3 T	370237	4908851	2	0	0	56.1	56.1	1	381.49	3.25	0	62.63	0	-0.11	0	0	3.13	0	0	0	0	0	0	-9.6	-9.6
Inverter Transformer	MV6-1 T	370230	4907364	2	0	0	69.4	69.4	1	1863.59	3.25	0	76.41	0	2.12	0	0	4.83	0	0	0	0	0	0	-14.01	-14.01
Inverter Transformer	MV5-2 T	370011	4908853	2	0	0	56.1	56.1	1	476.18	3.25	0	64.56	0	-0.12	0	0	3.47	0	0	0	0	0	0	-11.85	-11.85
Inverter Transformer	MV6-4 T	370244	4906966	2	0	0	69.4	69.4	1	2260.88	3.25	0	78.09	0	2.27	0	0	5.22	0	0	0	0	0	0	-16.22	-16.22
Inverter Transformer	MV5-4 T	370330	4908707	2	0	0	56.1	56.1	1	519.52	3.25	0	65.31	0	-0.12	0	0	3.61	0	0	0	0	0	0	-12.75	-12.75
Inverter Transformer	MV5-5 T	370021	4908690	2	0	0	56.1	56.1	1	607.53	3.25	0	66.67	0	-0.1	0	0	3.88	0	0	0	0	0	0	-14.39	-14.39
Inverter Transformer	MV5-6 T	369987	4908507	2	0	0	56.1	56.1	1	787	3.25	0	68.92	0	-0.06	0	0	4.36	0	0	0	0	0	0	-17.17	-17.17
Inverter Transformer	MV4-5 T	369283	4909199	2	0	0	56.1	56.1	1	1024.36	3.25	0	71.21	0	0.02	0	0	4.95	0	0	0	0	0	0	-20.12	-20.12
Inverter Transformer	MV4-9 T	369284	4909001	2	0	0	56.1	56.1	1	1047.45	3.25	0	71.4	0	0.03	0	0	5	0	0	0	0	0	0	-20.37	-20.37
Inverter Transformer	MV4-2 T	369267	4909397	2	0	0	56.1	56.1	1	1053.97	3.25	0	71.46	0	0.03	0	0	5.02	0	0	0	0	0	0	-20.45	-20.45
Inverter Transformer	MV4-6 T	369249	4909192	2	0	0	56.1	56.1	1	1058.55	3.25	0	71.49	0	0.03	0	0	5.03	0	0	0	0	0	0	-20.5	-20.5
Inverter Transformer	MV4-10 T	369307	4908858	2	0	0	56.1	56.1	1	1065.57	3.25	0	71.55	0	0.03	0	0	5.04	0	0	0	0	0	0	-20.57	-20.57
Inverter Transformer	MV4-8 T	369262	4909001	2	0	0	56.1	56.1	1	1068.95	3.25	0	71.58	0	0.04	0	0	5.05	0	0	0	0	0	0	-20.61	-20.61
Inverter Transformer	MV4-3 T	369234	4909397	2	0	0	56.1	56.1	1	1086.54	3.25	0	71.72	0	0.04	0	0	5.09	0	0	0	0	0	0	-20.8	-20.8
Inverter Transformer	MV2-1 T	365836	4906816	2	0	0	69.4	69.4	1	5079.17	3.25	0	85.12	0	3.03	0	0	7.43	0	0	0	0	0	0	-26.23	-26.23
Inverter Transformer	MV4-11 T	369269	4908855	2	0	0	56.1	56.1	1	1102.31	3.25	0	71.85	0	0.05	0	0	5.13	0	0	0	0	0	0	-20.97	-20.97
Inverter Transformer	MV4-4 T	369033	4909199	2	0	0	56.1	56.1	1	1274.29	3.25	0	73.11	0	0.11	0	0	5.52	0	0	0	0	0	0	-22.68	-22.68
Inverter Transformer	MV4-7 T	369040	4909001	2	0	0	56.1	56.1	1	1286.83	3.25	0	73.19	0	0.12	0	0	5.55	0	0	0	0	0	0	-22.8	-22.8
Inverter Transformer	MV4-1 T	369017	4909397	2	0	0	56.1	56.1	1	1301.29	3.25	0	73.29	0	0.12	0	0	5.58	0	0	0	0	0	0	-22.93	-22.93
Inverter Transformer	MV4-12 T	369049	4908803	2	0	0	56.1	56.1	1	1327.21	3.25	0	73.46	0	0.13	0	0	5.64	0	0	0	0	0	0	-23.17	-23.17
Inverter Transformer	MV4-14 T	369182	4908507	2	0	0	56.1	56.1	1	1335.14	3.25	0	73.51	0	0.13	0	0	5.66	0	0	0	0	0	0	-23.25	-23.25
Inverter Transformer	MV4-15 T	369170	4908481	2	0	0	56.1	56.1	1	1359.34	3.25	0	73.67	0	0.14	0	0	5.71	0	0	0	0	0	0	-23.46	-23.46
Inverter Transformer	MV1-7 T	364919	4905782	2	0	0	69.4	69.4	1	6394.66	3.25	0	87.12	0	3.24	0	0	8.25	0	0	0	0	0	0	-29.26	-29.26
Inverter Transformer	MV1-10 T	365010	4905564	2	0	0	69.4	69.4	1	6439.6	3.25	0	87.18	0	3.25	0	0	8.28	0	0	0	0	0	0	-29.36	-29.36
Inverter Transformer	MV4-13 T	369057	4908605	2	0	0	56.1	56.1	1	1395.76	4.9	0	73.9	0	0.98	3.2	0.02	5.79	0	0	0	0	0	0	-27.81	-27.81
Inverter Transformer	MV1-14 T	365157	4905049	2	0	0	69.4	69.4	1	6630.98	3.25	0	87.43	0	3.27	0	0	8.39	0	0	0	0	0	0	-29.75	-29.75
Inverter Transformer	MV1-13 T	364725	4905241	2	0	0	69.4	69.4	1	6858.5	3.25	0	87.72	0	3.3	0	0	8.52	0	0	0	0	0	0	-30.2	-30.2
Inverter Transformer	MV6-2 T	370091	4907339	2	0	0	56.1	56.1	1	1899.32	3.25	0	76.57	0	0.36	0	0	6.84	0	0	0	0	0	0	-27.72	-27.72
Inverter Transformer	MV3-2 T	368677	4907928	2	0	0	56.1	56.1	1	2083.68	3.25	0	77.38	0	0.44	0	0	7.21	0	0	0	0	0	0	-28.96	-28.96
Inverter Transformer	MV6-3 T	370202	4907140	2	0	0	56.1	56.1	1	2088.64	3.25	0	77.4	0	0.44	0	0	7.22	0	0	0	0	0	0	-29	-29

	Inverter Transformer	MV3-8 T	368685	4907712	2	0	0	56.1	56.1	1	2218.8	3.25	0	77.92	0	0.5	0	0	7.47	0	0	0	0	0	0	-29.83	-29.83
	Inverter Transformer	MV3-4 T	368507	4907925	2	0	0	56.1	56.1	1	2220.95	3.25	0	77.93	0	0.5	0	0	7.47	0	0	0	0	0	0	-29.84	-29.84
	Inverter Transformer	MV3-9 T	368517	4907703	2	0	0	56.1	56.1	1	2350.24	3.25	0	78.42	0	0.55	0	0	7.71	0	0	0	0	0	0	-30.63	-30.63
	Inverter Transformer	MV3-14 T	368678	4907498	2	0	0	56.1	56.1	1	2374.79	3.25	0	78.51	0	0.56	0	0	7.76	0	0	0	0	0	0	-30.78	-30.78
	Inverter Transformer	MV3-5 T	368335	4907843	2	0	0	56.1	56.1	1	2408.63	3.25	0	78.64	0	0.58	0	0	7.82	0	0	0	0	0	0	-30.98	-30.98
	Inverter Transformer	MV3-1 T	368150	4907976	2	0	0	56.1	56.1	1	2493.02	3.25	0	78.93	0	0.61	0	0	7.98	0	0	0	0	0	0	-31.47	-31.47
	Inverter Transformer	MV3-20 T	368683	4907317	2	0	0	56.1	56.1	1	2506.32	3.25	0	78.98	0	0.62	0	0	8	0	0	0	0	0	0	-31.54	-31.54
	Inverter Transformer	MV3-16 T	368509	4907475	2	0	0	56.1	56.1	1	2509.74	3.25	0	78.99	0	0.62	0	0	8.01	0	0	0	0	0	0	-31.56	-31.56
	Inverter Transformer	MV3-11 T	368340	4907662	2	0	0	56.1	56.1	1	2513	3.25	0	79	0	0.62	0	0	8.01	0	0	0	0	0	0	-31.58	-31.58
	Inverter Transformer	MV3-6 T	368156	4907834	2	0	0	56.1	56.1	1	2562.12	3.25	0	79.17	0	0.64	0	0	8.1	0	0	0	0	0	0	-31.86	-31.86
	Inverter Transformer	MV3-15 T	368351	4907477	2	0	0	56.1	56.1	1	2623.92	3.25	0	79.38	0	0.67	0	0	8.21	0	0	0	0	0	0	-32.2	-32.2
	Inverter Transformer	MV3-10 T	368162	4907669	2	0	0	56.1	56.1	1	2650.52	3.25	0	79.47	0	0.68	0	0	8.26	0	0	0	0	0	0	-32.35	-32.35
	Inverter Transformer	MV3-22 T	368661	4907142	2	0	0	56.1	56.1	1	2655.63	3.25	0	79.48	0	0.68	0	0	8.27	0	0	0	0	0	0	-32.38	-32.38
	Inverter Transformer	MV3-3 T	367944	4907927	2	0	0	56.1	56.1	1	2696.51	3.25	0	79.62	0	0.7	0	0	8.34	0	0	0	0	0	0	-32.6	-32.6
	Inverter Transformer	MV3-19 T	368352	4907347	2	0	0	56.1	56.1	1	2711.58	3.25	0	79.66	0	0.71	0	0	8.37	0	0	0	0	0	0	-32.68	-32.68
	Inverter Transformer	MV3-21 T	368484	4907206	2	0	0	56.1	56.1	1	2720.98	3.25	0	79.69	0	0.71	0	0	8.39	0	0	0	0	0	0	-32.73	-32.73
	Inverter Transformer	MV3-17 T	368183	4907472	2	0	0	56.1	56.1	1	2754.61	3.25	0	79.8	0	0.73	0	0	8.44	0	0	0	0	0	0	-32.91	-32.91
	Inverter Transformer	MV3-7 T	367951	4907754	2	0	0	56.1	56.1	1	2778.04	3.25	0	79.87	0	0.74	0	0	8.49	0	0	0	0	0	0	-33.04	-33.04
	Inverter Transformer	MV3-13 T	367958	4907577	2	0	0	56.1	56.1	1	2870.02	3.25	0	80.16	0	0.77	0	0	8.65	0	0	0	0	0	0	-33.52	-33.52
	Inverter Transformer	MV3-12 T	367674	4907594	2	0	0	56.1	56.1	1	3097.76	3.25	0	80.82	0	0.87	0	0	9.03	0	0	0	0	0	0	-34.67	-34.67
	Inverter Transformer	MV3-18 T	367757	4907412	2	0	0	56.1	56.1	1	3129.39	3.25	0	80.91	0	0.88	0	0	9.09	0	0	0	0	0	0	-34.82	-34.82
	Line Reactor	NGR	369421	4908787.5	5	0	0	45.4	45.4	1	988.57	5.25	0	70.9	0	3.47	1.21	0.04	0.41	0	0	0	0	0	0	-30.63	-30.63
	Inverter Transformer	MV2-2 T	365982	4906654	2	0	0	56.1	56.1	1	5031.98	3.25	0	85.03	0	1.64	0	0	11.9	0	0	0	0	0	0	-42.51	-42.51
	Inverter Transformer	MV2-3 T	365814	4906641	2	0	0	56.1	56.1	1	5183.56	3.25	0	85.29	0	1.69	0	0	12.09	0	0	0	0	0	0	-43.02	-43.02
	Inverter Transformer	MV2-4 T	365590	4906628	2	0	0	56.1	56.1	1	5385.14	3.25	0	85.62	0	1.76	0	0	12.35	0	0	0	0	0	0	-43.68	-43.68
	Inverter Transformer	MV1-1 T	364721	4906166	2	0	0	56.1	56.1	1	6369.22	3.25	0	87.08	0	2.08	0	0	13.53	0	0	0	0	0	0	-46.63	-46.63
	Inverter Transformer	MV1-2 T	364759	4906063	2	0	0	56.1	56.1	1	6386.3	3.25	0	87.1	0	2.08	0	0	13.55	0	0	0	0	0	0	-46.68	-46.68
	Inverter Transformer	MV1-4 T	364821	4905918	2	0	0	56.1	56.1	1	6406.17	3.25	0	87.13	0	2.09	0	0	13.57	0	0	0	0	0	0	-46.74	-46.74
	Inverter Transformer	MV1-12 T	365044	4905386	2	0	0	56.1	56.1	1	6514.97	3.25	0	87.28	0	2.12	0	0	13.7	0	0	0	0	0	0	-47.04	-47.04
	Inverter Transformer	MV1-5 T	364676	4905892	2	0	0	56.1	56.1	1	6543.98	3.25	0	87.32	0	2.13	0	0	13.73	0	0	0	0	0	0	-47.12	-47.12
	Inverter Transformer	MV1-15 T	365309	4904994	2	0	0	56.1	56.1	1	6549.03	3.25	0	87.32	0	2.13	0	0	13.74	0	0	0	0	0	0	-47.13	-47.13
	Inverter Transformer	MV1-8 T	364782	4905647	2	0	0	56.1	56.1	1	6582.92	3.25	0	87.37	0	2.14	0	0	13.77	0	0	0	0	0	0	-47.22	-47.22
	Inverter Transformer	MV1-3 T	364435	4906039	2	0	0	56.1	56.1	1	6681.12	3.25	0	87.5	0	2.17	0	0	13.88	0	0	0	0	0	0	-47.49	-47.49
	Inverter Transformer	MV1-6 T	364482	4905835	2	0	0	56.1	56.1	1	6740.14	3.25	0	87.57	0	2.19	0	0	13.95	0	0	0	0	0	0	-47.65	-47.65
	Inverter Transformer	MV1-9 T	364555	4905646	2	0	0	56.1	56.1	1	6775.09	3.25	0	87.62	0	2.2	0	0	13.99	0	0	0	0	0	0	-47.74	-47.74
	Inverter Transformer	MV1-11 T	364649	4905414	2	0	0	56.1	56.1	1	6822.34	3.25	0	87.68	0	2.21	0	0	14.04	0	0	0	0	0	0	-47.87	-47.87
Limit. Valu	0	0																								
Level D/N:	39.1557	39.1557																								

Receiver: Existing Noise Receptor
ID: S-R49*
X: 370209
Y: 4908188
Z: 4.5
Ground: 0

ISO	Description	ID	X	Y	Z	Ground	ReflOrd	LxT	LxN	L/A	Dist.	hm	Freq	Adiv	K0b	Agr	Abar	z	Aatm	Afol	Ahous	Cmet	CmetN	Dc	RL	LtotT	LtotN
	Sol_Luce Substation	S_Substation	369426	4908792	3.5	0	0	112.1	112.1	1	988.89	5.25	0	70.9	0	0.08	5.67	0.38	2.5	0	0	0	0	0	0	32.93	32.93
	Inverter	MV5-4	370324	4908707	2	0	0	100.3	100.3	1	531.59	3.25	0	65.51	0	-0.53	0	0	8.76	0	0	0	0	0	0	26.57	26.57
	Inverter	MV5-5	370015	4908690	2	0	0	100.3	100.3	1	538.19	3.25	0	65.62	0	-0.52	0	0	8.81	0	0	0	0	0	0	26.41	26.41
	Inverter	MV5-3	370231	4908851	2	0	0	100.3	100.3	1	663.37	3.25	0	67.44	0	-0.44	0	0	9.55	0	0	0	0	0	0	23.76	23.76
	Inverter	MV5-2	370006	4908853	2	0	0	100.3	100.3	1	695.3	3.25	0	67.84	0	-0.41	0	0	9.71	0	0	0	0	0	0	23.17	23.17
	Inverter	MV6-2	370085	4907339	2	0	0	100.3	100.3	1	858.01	3.25	0	69.67	0	-0.32	0	0	10.41	0	0	0	0	0	0	20.55	20.55
	Inverter	MV5-1	370020	4909142	2	0	0	100.3	100.3	1	972.54	3.25	0	70.76	0	-0.26	0	0	10.82	0	0	0	0	0	0	18.99	18.99
	Inverter	MV6-3	370207	4907140	2	0	0	100.3	100.3	1	1048	3.25	0	71.41	0	-0.22	0	0	11.07	0	0	0	0	0	0	18.06	18.06
	Inverter	MV4-10	369312	4908858	2	0	0	100.3	100.3	1	1119.6	3.25	0	71.98	0	-0.19	0	0	11.29	0	0	0	0	0	0	17.23	17.23
	Inverter	MV4-11	369264	4908855	2	0	0	100.3	100.3	1	1156.69	3.25	0	72.26	0	-0.17	0	0	11.4	0	0	0	0	0	0	16.82	16.82
	Inverter	MV6-1	370235	4907364	2	0	0	97.3	97.3	1	824.41	3.25	0	69.32	0	-0.34	0	0	10.28	0	0	0	0	0	0	18.05	18.05
	Inverter	MV4-9	369289	4909001	2	0	0	100.3	100.3	1	1227.75	3.25	0	72.78	0	-0.14	0	0	11.6	0	0	0	0	0	0	16.07	16.07
	Inverter	MV4-8	369256	4909001	2	0	0	100.3	100.3	1	1252.67	3.25	0	72.96	0	-0.13	0	0	11.67	0	0	0	0	0	0	15.81	15.81
	Inverter	MV4-5	369289	4909199	2	0	0	100.3	100.3	1	1366.94	3.25	0	73.71	0	-0.08	0	0	11.98	0	0	0	0	0	0	14.7	14.7
	Inverter	MV4-6	369243	4909192	2	0	0	100.3	100.3	1	1393.26	3.25	0	73.88	0	-0.07	0	0	12.05	0	0	0	0	0	0	14.45	14.45
	Inverter	MV4-7	369035	4909001	2	0	0	100.3	100.3	1	1428.02	3.25	0	74.09	0	-0.06	0	0	12.14	0	0	0	0	0	0	14.13	14.13
	Inverter	MV5-6	369982	4908507	2	0	0	89.1	89.1	1	391.53	3.25	0	62.86	0	0.45	0	0	4.69	0	0	0	0	0	0	21.07	21.07
	DSTATCOM - 10 MVAR #1	DSAT1	369437	4908757	2.5	0	0	96.6	96.6	1	959.04	3.5	0	70.64	0	2.88	0	0	1.05	0	0	0	0	0	0	22.06	22.06
	DSTATCOM - 10 MVAR #2	DSAT2	369403	4908757	2.5	0	0	96.6	96.6	1	986.61	3.5	0	70.88	0	2.91	0	0	1.07	0	0	0	0	0	0	21.78	21.78
	Inverter	MV4-2	369272	4909397	2	0	0	100.3	100.3	1	1529.59	3.25	0	74.69	0	-0.02	0	0	12.4	0	0	0	0	0	0	13.25	13.25
	Inverter	MV4-4	369027	4909199	2	0	0	100.3	100.3	1	1555.39	3.25	0	74.84	0	-0.01	0	0	12.46	0	0	0	0	0	0	13.03	13.03
	Inverter	MV4-3	369229	4909397	2	0	0	100.3	100.3	1	1556.31	3.25	0	74.84	0	-0.01	0	0	12.46	0	0	0	0	0	0	13.02	13.02
	Inverter	MV3-8	368680	4907712	2	0	0	100.3	100.3	1	1601.38	3.25	0	75.09	0	0	0	0	12.57	0	0	0	0	0	0	12.65	12.65
	Inverter	MV3-14	368684	4907498	2	0	0	100.3	100.3	1	1673.84	3.25	0	75.47	0	0.03	0	0	12.74	0	0	0	0	0	0	12.07	12.07
	Inverter	MV4-1	369011	4909397	2	0	0	100.3	100.3	1	1702.03	3.25	0	75.62	0	0.04	0	0	12.81	0	0	0	0	0	0	11.85	11.85
	Inverter	MV3-20	368689	4907317	2	0	0	100.3	100.3	1	1751.87	3.25	0	75.87	0	0.05	0	0	12.92	0	0	0	0	0	0	11.47	11.47
	Inverter	MV3-9	368512	4907703	2	0	0	100.3	100.3	1	1764.95	3.25	0	75.93	0	0.06	0	0	12.95	0	0	0	0	0	0	11.37	11.37

Inverter	MV3-16	368514	4907475	2	0	0	100.3	100.3	1	1838.86	3.25	0	76.29	0	0.08	0	0	13.11	0	0	0	0	0	0	10.82	10.82
Inverter	MV3-11	368346	4907662	2	0	0	100.3	100.3	1	1935.83	3.25	0	76.74	0	0.11	0	0	13.33	0	0	0	0	0	0	10.14	10.14
Inverter	MV3-15	368357	4907477	2	0	0	100.3	100.3	1	1983.79	3.25	0	76.95	0	0.12	0	0	13.43	0	0	0	0	0	0	9.81	9.81
Inverter	MV3-21	368478	4907206	2	0	0	100.3	100.3	1	1990.15	3.25	0	76.98	0	0.13	0	0	13.44	0	0	0	0	0	0	9.77	9.77
Inverter	MV3-19	368357	4907347	2	0	0	100.3	100.3	1	2034.01	3.25	0	77.17	0	0.14	0	0	13.53	0	0	0	0	0	0	9.47	9.47
Inverter	MV3-6	368162	4907834	2	0	0	100.3	100.3	1	2077.39	3.25	0	77.35	0	0.15	0	0	13.62	0	0	0	0	0	0	9.19	9.19
Inverter	MV3-10	368167	4907669	2	0	0	100.3	100.3	1	2106.92	3.25	0	77.47	0	0.16	0	0	13.68	0	0	0	0	0	0	9	9
Inverter	MV3-17	368178	4907472	2	0	0	100.3	100.3	1	2153.51	3.25	0	77.66	0	0.17	0	0	13.78	0	0	0	0	0	0	8.7	8.7
Inverter	MV3-3	367939	4907927	2	0	0	100.3	100.3	1	2284.96	3.25	0	78.18	0	0.21	0	0	14.04	0	0	0	0	0	0	7.89	7.89
Inverter	MV3-7	367945	4907754	2	0	0	100.3	100.3	1	2305.22	3.25	0	78.25	0	0.21	0	0	14.08	0	0	0	0	0	0	7.77	7.77
Inverter	MV3-13	367963	4907577	2	0	0	100.3	100.3	1	2327.63	3.25	0	78.34	0	0.22	0	0	14.13	0	0	0	0	0	0	7.63	7.63
Inverter	MV3-18	367752	4907412	2	0	0	100.3	100.3	1	2576.63	3.25	0	79.22	0	0.27	0	0	14.6	0	0	0	0	0	0	6.21	6.21
Inverter	MV3-12	367668	4907594	2	0	0	100.3	100.3	1	2609.51	3.25	0	79.33	0	0.28	0	0	14.66	0	0	0	0	0	0	6.04	6.04
Fixed Reactor Bank 2	FRB2	369464	4908755	6	0	0	89.8	89.8	1	936.22	5.25	0	70.43	0	-1	0	0	2.39	0	0	0	0	0	0	17.96	17.96
Fixed Reactor Bank 1	FRB1	369378	4908755	6	0	0	89.8	89.8	1	1006.01	5.25	0	71.05	0	-1.01	0	0	2.53	0	0	0	0	0	0	17.21	17.21
Inverter	MV4-15	369176	4908481	2	0	0	89.1	89.1	1	1073.75	3.25	0	71.62	0	0.7	0	0	6.45	0	0	0	0	0	0	10.29	10.29
Inverter	MV4-14	369176	4908507	2	0	0	89.1	89.1	1	1081.14	3.25	0	71.68	0	0.7	0	0	6.47	0	0	0	0	0	0	10.21	10.21
Inverter	MV4-13	369051	4908605	2	0	0	89.1	89.1	1	1230.8	3.25	0	72.8	0	0.73	0	0	6.74	0	0	0	0	0	0	8.78	8.78
Inverter	MV2-3	365820	4906641	2	0	0	100.3	100.3	1	4653.66	3.25	0	84.36	0	0.61	0	0	18.06	0	0	0	0	0	0	-2.72	-2.72
Inverter	MV4-12	369043	4908803	2	0	0	89.1	89.1	1	1318.25	3.25	0	73.4	0	0.75	0	0	6.89	0	0	0	0	0	0	8.01	8.01
Inverter	MV2-4	365586	4906624	2	0	0	100.3	100.3	1	4880.39	3.25	0	84.77	0	0.63	0	0	18.4	0	0	0	0	0	0	-3.49	-3.49
SubstationTransformer	W_ST	369711.17	4906112.3	2.5	0	0	92	92	1	2134.59	3.5	0	77.59	0	-0.13	0	0	4.59	0	0	0	0	0	0	9.93	9.93
Inverter	MV3-2	368671	4907928	2	0	0	89.1	89.1	1	1559.82	3.25	0	74.86	0	0.81	0	0	7.31	0	0	0	0	0	0	6.08	6.08
Inverter	MV1-15	365315	4904994	2	0	0	100.3	100.3	1	5844.05	3.25	0	86.33	0	0.7	0	0	19.78	0	0	0	0	0	0	-6.5	-6.5
Inverter	MV1-4	364815	4905918	2	0	0	100.3	100.3	1	5852.19	3.25	0	86.35	0	0.7	0	0	19.79	0	0	0	0	0	0	-6.52	-6.52
Inverter	MV1-1	364715	4906166	2	0	0	100.3	100.3	1	5854.27	3.25	0	86.35	0	0.7	0	0	19.79	0	0	0	0	0	0	-6.53	-6.53
Inverter	MV1-2	364753	4906063	2	0	0	100.3	100.3	1	5855.22	3.25	0	86.35	0	0.7	0	0	19.8	0	0	0	0	0	0	-6.53	-6.53
Inverter	MV1-12	365038	4905386	2	0	0	100.3	100.3	1	5881.36	3.25	0	86.39	0	0.7	0	0	19.83	0	0	0	0	0	0	-6.61	-6.61
Inverter	MV1-8	364788	4905647	2	0	0	100.3	100.3	1	5986.98	3.25	0	86.54	0	0.7	0	0	19.98	0	0	0	0	0	0	-6.91	-6.91
Inverter	MV1-5	364671	4905892	2	0	0	100.3	100.3	1	5995.09	3.25	0	86.56	0	0.7	0	0	19.99	0	0	0	0	0	0	-6.93	-6.93
Westbrook Inverter Enclosur	W_INV6	369875	4906578	2	0	0	89.1	89.1	1	1644.28	3.25	0	75.32	0	0.82	0	0	7.45	0	0	0	0	0	0	5.46	5.46
Westbrook Inverter Enclosur	W_INV5	369719	4906574	2	0	0	89.1	89.1	1	1686.74	3.25	0	75.54	0	0.83	0	0	7.53	0	0	0	0	0	0	5.16	5.16
Inverter	MV1-9	364561	4905646	2	0	0	100.3	100.3	1	6193.68	3.25	0	86.84	0	0.71	0	0	20.25	0	0	0	0	0	0	-7.49	-7.49
Inverter	MV1-6	364477	4905835	2	0	0	100.3	100.3	1	6196.16	3.25	0	86.84	0	0.71	0	0	20.26	0	0	0	0	0	0	-7.5	-7.5
Inverter	MV1-11	364655	4905414	2	0	0	100.3	100.3	1	6208.22	3.25	0	86.86	0	0.71	0	0	20.27	0	0	0	0	0	0	-7.53	-7.53
Inverter	MV6-4	370250	4906966	2	0	0	86.1	86.1	1	1222.69	3.25	0	72.75	0	0.73	0	0	6.72	0	0	0	0	0	0	5.86	5.86
Inverter	MV3-4	368502	4907925	2	0	0	89.1	89.1	1	1727.14	3.25	0	75.75	0	0.84	0	0	7.59	0	0	0	0	0	0	4.87	4.87
Inverter	MV2-1	365842	4906816	2	0	0	97.3	97.3	1	4577.45	3.25	0	84.21	0	0.6	0	0	17.95	0	0	0	0	0	0	-5.45	-5.45
Westbrook Inverter Enclosur	W_INV7	369780	4906417	2	0	0	89.1	89.1	1	1822.22	3.25	0	76.21	0	0.87	0	0	7.75	0	0	0	0	0	0	4.23	4.23
Inverter	MV3-22	368656	4907142	2	0	0	89.1	89.1	1	1872.41	3.25	0	76.45	0	0.88	0	0	7.84	0	0	0	0	0	0	3.9	3.9
Inverter	MV3-5	368340	4907843	2	0	0	89.1	89.1	1	1900.58	3.25	0	76.58	0	0.88	0	0	7.88	0	0	0	0	0	0	3.71	3.71
Westbrook Inverter Enclosur	W_INV2	369374	4906388	2	0	0	89.1	89.1	1	1984.25	3.25	0	76.95	0	0.9	0	0	8.02	0	0	0	0	0	0	3.18	3.18
Inverter	MV3-1	368156	4907976	2	0	0	89.1	89.1	1	2063.92	3.25	0	77.29	0	0.92	0	0	8.15	0	0	0	0	0	0	2.69	2.69
Westbrook Inverter Enclosur	W_INV4	369673	4906164	2	0	0	89.1	89.1	1	2093.77	3.25	0	77.42	0	0.93	0	0	8.2	0	0	0	0	0	0	2.51	2.51
Westbrook Inverter Enclosur	W_INV3	369508	4906164	2	0	0	89.1	89.1	1	2141.96	3.25	0	77.62	0	0.94	0	0	8.28	0	0	0	0	0	0	2.23	2.23
Inverter	MV1-7	364925	4905782	2	0	0	97.3	97.3	1	5805.99	3.25	0	86.28	0	0.7	0	0	19.73	0	0	0	0	0	0	-9.39	-9.39
Inverter	MV1-10	365004	4905564	2	0	0	97.3	97.3	1	5829.01	3.25	0	86.31	0	0.7	0	0	19.76	0	0	0	0	0	0	-9.46	-9.46
Inverter	MV1-14	365163	4905049	2	0	0	97.3	97.3	1	5942.68	3.25	0	86.48	0	0.7	0	0	19.92	0	0	0	0	0	0	-9.79	-9.79
Inverter	MV1-13	364731	4905241	2	0	0	97.3	97.3	1	6220.39	3.25	0	86.88	0	0.71	0	0	20.29	0	0	0	0	0	0	-10.57	-10.57
Westbrook Inverter Enclosur	W_INV1	369409	4906578	2	0	0	86.1	86.1	1	1797.81	3.25	0	76.09	0	0.86	0	0	7.71	0	0	0	0	0	0	1.39	1.39
Inverter	MV2-2	365977	4906654	2	0	0	89.1	89.1	1	4501.44	3.25	0	84.07	0	1.52	0	0	11.79	0	0	0	0	0	0	-8.31	-8.31
Gardiner Substation	G_Sub	366586.3	4903349.9	2.5	0	0	90.8	90.8	1	6044.1	4.25	0	86.63	0	1.89	2.1	0.37	9.79	0	0	0	0	0	0	-9.63	-9.63
Inverter	MV1-3	364440	4906039	2	0	0	89.1	89.1	1	6156.26	3.25	0	86.79	0	1.92	0	0	13.96	0	0	0	0	0	0	-13.61	-13.61
Westbrook Inverter Transfor	W_INVTR1	369403	4906578	2	0	0	78.2	78.2	1	1800.48	3.25	0	76.11	0	-2.33	0	0	1.11	0	0	0	0	0	0	3.36	3.36
Westbrook Inverter Transfor	W_INVTR6	369881	4906578	2	0	0	77.3	77.3	1	1643.07	3.25	0	75.31	0	-2.27	0	0	1.03	0	0	0	0	0	0	3.27	3.27
Westbrook Inverter Transfor	W_INVTR5	369725	4906574	2	0	0	77.3	77.3	1	1685.01	3.25	0	75.53	0	-2.28	0	0	1.05	0	0	0	0	0	0	3.04	3.04
Westbrook Inverter Transfor	W_INVTR7	369786	4906417	2	0	0	77.3	77.3	1	1820.82	3.25	0	76.21	0	-2.34	0	0	1.12	0	0	0	0	0	0	2.36	2.36
Inverters	G_Inv2	366676.9	4903239.1	2	0	0	87.7	87.7	1	6080.08	3.25	0	86.68	0	2.92	0	0	7.06	0	0	0	0	0	0	-9	-9
Inverters	G_Inv4	366732.8	4903105	2	0	0	87.7	87.7	1	6157.99	3.25	0	86.79	0	2.92	0	0	7.14	0	0	0	0	0	0	-9.19	-9.19
Inverters	G_Inv1	366526.4	4903225.8	2	0	0	87.7	87.7	1	6179.4	3.25	0	86.82	0	2.92	0	0	7.16	0	0	0	0	0	0	-9.24	-9.24
Inverters	G_Inv6	366788.5	4902972	2	0	0	87.7	87.7	1	6237.51	3.25	0	86.9	0	2.93	0	0	7.22	0	0	0	0	0	0	-9.39	-9.39
Inverters	G_Inv3	366583.7	4903091.4	2	0	0	87.7	87.7	1	6254.45	3.25	0	86.92	0	2.93	0	0	7.24	0	0	0	0	0	0	-9.43	-9.43
Inverters	G_Inv8	366844.5	4902838.5	2	0	0	87.7	87.7	1	6319.57	3.25	0	87.01	0	2.93	0	0	7.3	0	0	0	0	0	0	-9.59	-9.59
Inverters	G_Inv5	366638.5	4902958.1	2	0	0	87.7	87.7	1	6332.48	3.25	0	87.03	0	2.93	0	0	7.32	0	0	0	0	0	0	-9.62	-9.62
Inverters	G_Inv10	366900.7	4902704.8	2	0	0	87.7	87.7	1	6403.93	3.25	0	87.13	0	2.93	0	0	7.39	0	0	0	0	0	0	-9.79	-9.79
Inverters	G_Inv7	366694.6	4902824.7	2	0	0	87.7	87.7	1	6412.18	3.25	0	87.14	0	2.93	0	0	7.4	0	0	0	0	0	0	-9.81	-9.81
Inverters	G_Inv9	366750.9	4902691.8	2	0	0	87.7	87.7	1	6493.59	3.25	0	87.25	0	2.94	0	0	7.48	0	0	0	0	0	0	-10.01	-10.01
Westbrook Inverter Transfor	W_INVTR2	369368	4906388	2	0	0	77.3	77.3	1	1986.78	3.25	0	76.96	0	-2.4	0	0	1.2	0	0	0	0	0	0	1.58	1.58
Inverter Transformer	MV6-1 T	370230	4907364	2	0	0	69.4	69.4	1	824.27	3.25	0	69.32	0	1.52	0	0	3.55	0	0	0	0	0	0	-5.04	-5.04
Westbrook Inverter Transfor	W_INVTR4	369679	4906164	2	0	0	77.3	77.3	1	2092.24	3.25	0	77.41	0	-2.44	0	0	1.25	0	0	0	0	0	0	1.12	1.12
Westbrook Inverter Transfor	W_INVTR3	369514	4906164	2	0	0	77.3	77.3	1	2140	3.25	0	77.61	0	-2.45	0	0	1.27	0	0	0	0	0	0	0.91	0.91
Inverter Transformer	MV6-4 T	370244	4906966	2	0	0	69.4	69.4	1	1222.5	3.25	0	72.75	0	1.83	0	0	4.1	0	0	0	0	0	0	-9.33	-9.33
Inverter Transformer	MV5-6 T	369987	4908507	2	0	0	56.1	56.1	1	388.65	3.25	0	62.79	0	-0.11	0	0	3.16	0	0	0	0	0	0	-9.78	-9.78
Inverter Transformer	MV5-4 T	370330	4908707	2	0	0	56.1	56.1	1	532.92	3.25	0	65.53	0	-0.11	0	0	3.66	0	0	0	0	0	0	-13.02	-13.02

	Inverter Transformer	MV5-5 T	370021	4908690	2	0	0	56.1	56.1	1	536.05	3.25	0	65.58	0	-0.11	0	0	3.67	0	0	0	0	0	0	-13.08	-13.08
	Inverter Transformer	MV5-3 T	370237	4908851	2	0	0	56.1	56.1	1	663.6	3.25	0	67.44	0	-0.09	0	0	4.03	0	0	0	0	0	0	-15.32	-15.32
	Inverter Transformer	MV5-2 T	370011	4908853	2	0	0	56.1	56.1	1	693.86	3.25	0	67.83	0	-0.08	0	0	4.12	0	0	0	0	0	0	-15.8	-15.8
	Inverter Transformer	MV6-2 T	370091	4907339	2	0	0	56.1	56.1	1	857.16	3.25	0	69.66	0	-0.04	0	0	4.54	0	0	0	0	0	0	-18.11	-18.11
	Inverter Transformer	MV5-1 T	370015	4909142	2	0	0	56.1	56.1	1	973.53	3.25	0	70.77	0	0	0	0	4.83	0	0	0	0	0	0	-19.54	-19.54
	Inverter Transformer	MV2-1 T	365836	4906816	2	0	0	69.4	69.4	1	4583.18	3.25	0	84.22	0	2.92	0	0	7.1	0	0	0	0	0	0	-24.89	-24.89
	Inverter Transformer	MV6-3 T	370202	4907140	2	0	0	56.1	56.1	1	1048.03	3.25	0	71.41	0	0.03	0	0	5	0	0	0	0	0	0	-20.38	-20.38
	Inverter Transformer	MV4-14 T	369182	4908507	2	0	0	56.1	56.1	1	1075.41	3.25	0	71.63	0	0.04	0	0	5.07	0	0	0	0	0	0	-20.68	-20.68
	Inverter Transformer	MV4-15 T	369170	4908481	2	0	0	56.1	56.1	1	1079.53	3.25	0	71.66	0	0.04	0	0	5.08	0	0	0	0	0	0	-20.72	-20.72
	Inverter Transformer	MV4-10 T	369307	4908858	2	0	0	56.1	56.1	1	1123.61	3.25	0	72.01	0	0.06	0	0	5.18	0	0	0	0	0	0	-21.19	-21.19
	Inverter Transformer	MV4-11 T	369269	4908855	2	0	0	56.1	56.1	1	1152.6	3.25	0	72.23	0	0.07	0	0	5.25	0	0	0	0	0	0	-21.49	-21.49
	Inverter Transformer	MV4-13 T	369057	4908605	2	0	0	56.1	56.1	1	1225.15	3.25	0	72.76	0	0.09	0	0	5.41	0	0	0	0	0	0	-22.21	-22.21
	Inverter Transformer	MV4-9 T	369284	4909001	2	0	0	56.1	56.1	1	1231.5	3.25	0	72.81	0	0.1	0	0	5.43	0	0	0	0	0	0	-22.27	-22.27
	Inverter Transformer	MV4-8 T	369262	4909001	2	0	0	56.1	56.1	1	1248.11	3.25	0	72.93	0	0.1	0	0	5.46	0	0	0	0	0	0	-22.43	-22.43
	Inverter Transformer	MV1-7 T	364919	4905782	2	0	0	69.4	69.4	1	5811.45	3.25	0	86.29	0	3.16	0	0	7.9	0	0	0	0	0	0	-28	-28
	Inverter Transformer	MV1-10 T	365010	4905564	2	0	0	69.4	69.4	1	5823.66	3.25	0	86.3	0	3.16	0	0	7.91	0	0	0	0	0	0	-28.02	-28.02
	Inverter Transformer	MV1-14 T	365157	4905049	2	0	0	69.4	69.4	1	5947.78	3.25	0	86.49	0	3.18	0	0	7.99	0	0	0	0	0	0	-28.3	-28.3
	Inverter Transformer	MV4-12 T	369049	4908803	2	0	0	56.1	56.1	1	1312.95	3.25	0	73.36	0	0.13	0	0	5.61	0	0	0	0	0	0	-23.04	-23.04
	Inverter Transformer	MV1-13 T	364725	4905241	2	0	0	69.4	69.4	1	6225.68	3.25	0	86.88	0	3.22	0	0	8.15	0	0	0	0	0	0	-28.91	-28.91
	Inverter Transformer	MV4-5 T	369283	4909199	2	0	0	56.1	56.1	1	1370.99	3.25	0	73.74	0	0.15	0	0	5.74	0	0	0	0	0	0	-23.57	-23.57
	Inverter Transformer	MV4-6 T	369249	4909192	2	0	0	56.1	56.1	1	1389.11	3.25	0	73.85	0	0.16	0	0	5.78	0	0	0	0	0	0	-23.73	-23.73
	Inverter Transformer	MV4-7 T	369040	4909001	2	0	0	56.1	56.1	1	1423.92	3.25	0	74.07	0	0.17	0	0	5.85	0	0	0	0	0	0	-24.03	-24.03
	Inverter Transformer	MV4-2 T	369267	4909397	2	0	0	56.1	56.1	1	1532.66	3.25	0	74.71	0	0.21	0	0	6.09	0	0	0	0	0	0	-24.95	-24.95
	Inverter Transformer	MV4-4 T	369033	4909199	2	0	0	56.1	56.1	1	1550.84	3.25	0	74.81	0	0.22	0	0	6.13	0	0	0	0	0	0	-25.1	-25.1
	Inverter Transformer	MV4-3 T	369234	4909397	2	0	0	56.1	56.1	1	1553.16	3.25	0	74.82	0	0.22	0	0	6.13	0	0	0	0	0	0	-25.12	-25.12
	Inverter Transformer	MV3-2 T	368677	4907928	2	0	0	56.1	56.1	1	1553.91	3.25	0	74.83	0	0.22	0	0	6.13	0	0	0	0	0	0	-25.12	-25.12
	Inverter Transformer	MV3-8 T	368685	4907712	2	0	0	56.1	56.1	1	1596.61	3.25	0	75.06	0	0.24	0	0	6.22	0	0	0	0	0	0	-25.47	-25.47
	Inverter Transformer	MV3-14 T	368678	4907498	2	0	0	56.1	56.1	1	1679.31	3.25	0	75.5	0	0.27	0	0	6.4	0	0	0	0	0	0	-26.11	-26.11
	Inverter Transformer	MV4-1 T	369017	4909397	2	0	0	56.1	56.1	1	1697.81	3.25	0	75.6	0	0.28	0	0	6.43	0	0	0	0	0	0	-26.25	-26.25
	Inverter Transformer	MV3-4 T	368507	4907925	2	0	0	56.1	56.1	1	1722.2	3.25	0	75.72	0	0.29	0	0	6.48	0	0	0	0	0	0	-26.44	-26.44
	Inverter Transformer	MV3-20 T	368683	4907317	2	0	0	56.1	56.1	1	1757.08	3.25	0	75.9	0	0.3	0	0	6.56	0	0	0	0	0	0	-26.7	-26.7
	Inverter Transformer	MV3-9 T	368517	4907703	2	0	0	56.1	56.1	1	1760.14	3.25	0	75.91	0	0.3	0	0	6.56	0	0	0	0	0	0	-26.72	-26.72
	Inverter Transformer	MV3-16 T	368509	4907475	2	0	0	56.1	56.1	1	1843.47	3.25	0	76.31	0	0.34	0	0	6.73	0	0	0	0	0	0	-27.32	-27.32
	Inverter Transformer	MV3-22 T	368661	4907142	2	0	0	56.1	56.1	1	1868.27	3.25	0	76.43	0	0.35	0	0	6.78	0	0	0	0	0	0	-27.5	-27.5
	Inverter Transformer	MV3-5 T	368335	4907843	2	0	0	56.1	56.1	1	1905.49	3.25	0	76.6	0	0.36	0	0	6.86	0	0	0	0	0	0	-27.76	-27.76
	Inverter Transformer	MV3-11 T	368340	4907662	2	0	0	56.1	56.1	1	1941.61	3.25	0	76.76	0	0.38	0	0	6.93	0	0	0	0	0	0	-28.01	-28.01
	Inverter Transformer	MV3-21 T	368484	4907206	2	0	0	56.1	56.1	1	1984.93	3.25	0	76.95	0	0.4	0	0	7.01	0	0	0	0	0	0	-28.31	-28.31
	Inverter Transformer	MV3-15 T	368351	4907477	2	0	0	56.1	56.1	1	1989.39	3.25	0	76.97	0	0.4	0	0	7.02	0	0	0	0	0	0	-28.34	-28.34
	Inverter Transformer	MV3-19 T	368352	4907347	2	0	0	56.1	56.1	1	2038.56	3.25	0	77.19	0	0.42	0	0	7.12	0	0	0	0	0	0	-28.67	-28.67
	Inverter Transformer	MV3-1 T	368150	4907976	2	0	0	56.1	56.1	1	2069.89	3.25	0	77.32	0	0.43	0	0	7.18	0	0	0	0	0	0	-28.87	-28.87
	Inverter Transformer	MV3-6 T	368156	4907834	2	0	0	56.1	56.1	1	2083.3	3.25	0	77.38	0	0.44	0	0	7.21	0	0	0	0	0	0	-28.96	-28.96
	Inverter Transformer	MV3-10 T	368162	4907669	2	0	0	56.1	56.1	1	2111.77	3.25	0	77.49	0	0.45	0	0	7.26	0	0	0	0	0	0	-29.15	-29.15
	Inverter Transformer	MV3-17 T	368183	4907472	2	0	0	56.1	56.1	1	2148.8	3.25	0	77.64	0	0.47	0	0	7.33	0	0	0	0	0	0	-29.39	-29.39
	Inverter Transformer	MV3-3 T	367944	4907927	2	0	0	56.1	56.1	1	2279.99	3.25	0	78.16	0	0.52	0	0	7.58	0	0	0	0	0	0	-30.2	-30.2
	Inverter Transformer	MV3-7 T	367951	4907754	2	0	0	56.1	56.1	1	2299.33	3.25	0	78.23	0	0.53	0	0	7.62	0	0	0	0	0	0	-30.32	-30.32
	Inverter Transformer	MV3-13 T	367958	4907577	2	0	0	56.1	56.1	1	2332.45	3.25	0	78.36	0	0.54	0	0	7.68	0	0	0	0	0	0	-30.52	-30.52
	Inverter Transformer	MV3-18 T	367757	4907412	2	0	0	56.1	56.1	1	2571.86	3.25	0	79.2	0	0.65	0	0	8.12	0	0	0	0	0	0	-31.91	-31.91
	Inverter Transformer	MV3-12 T	367674	4907594	2	0	0	56.1	56.1	1	2603.66	3.25	0	79.31	0	0.66	0	0	8.18	0	0	0	0	0	0	-32.09	-32.09
	Line Reactor	NGR	369421	4908787.5	5	0	0	45.4	45.4	1	990.12	5.25	0	70.91	0	3.46	1.21	0.07	0.41	0	0	0	0	0	0	-30.64	-30.64
	Inverter Transformer	MV2-2 T	365982	4906654	2	0	0	56.1	56.1	1	4496.74	3.25	0	84.06	0	1.44	0	0	11.17	0	0	0	0	0	0	-40.61	-40.61
	Inverter Transformer	MV2-3 T	365814	4906641	2	0	0	56.1	56.1	1	4659.32	3.25	0	84.37	0	1.5	0	0	11.4	0	0	0	0	0	0	-41.2	-41.2
	Inverter Transformer	MV2-4 T	365590	4906628	2	0	0	56.1	56.1	1	4875.32	3.25	0	84.76	0	1.58	0	0	11.69	0	0	0	0	0	0	-41.97	-41.97
	Inverter Transformer	MV1-4 T	364821	4905918	2	0	0	56.1	56.1	1	5846.66	3.25	0	86.34	0	1.92	0	0	12.92	0	0	0	0	0	0	-45.12	-45.12
	Inverter Transformer	MV1-1 T	364721	4906166	2	0	0	56.1	56.1	1	5848.64	3.25	0	86.34	0	1.92	0	0	12.92	0	0	0	0	0	0	-45.12	-45.12
	Inverter Transformer	MV1-15 T	365309	4904994	2	0	0	56.1	56.1	1	5849.07	3.25	0	86.34	0	1.92	0	0	12.92	0	0	0	0	0	0	-45.12	-45.12
	Inverter Transformer	MV1-2 T	364759	4906063	2	0	0	56.1	56.1	1	5849.63	3.25	0	86.34	0	1.92	0	0	12.92	0	0	0	0	0	0	-45.12	-45.12
	Inverter Transformer	MV1-12 T	365044	4905386	2	0	0	56.1	56.1	1	5876.09	3.25	0	86.38	0	1.93	0	0	12.96	0	0	0	0	0	0	-45.2	-45.2
	Inverter Transformer	MV1-5 T	364676	4905892	2	0	0	56.1	56.1	1	5990.47	3.25	0	86.55	0	1.96	0	0	13.09	0	0	0	0	0	0	-45.54	-45.54
	Inverter Transformer	MV1-8 T	364782	4905647	2	0	0	56.1	56.1	1	5992.41	3.25	0	86.55	0	1.96	0	0	13.09	0	0	0	0	0	0	-45.55	-45.55
	Inverter Transformer	MV1-3 T	364435	4906039	2	0	0	56.1	56.1	1	6160.95	3.25	0	86.79	0	2.02	0	0	13.29	0	0	0	0	0	0	-46.04	-46.04
	Inverter Transformer	MV1-6 T	364482	4905835	2	0	0	56.1	56.1	1	6191.54	3.25	0	86.84	0	2.02	0	0	13.33	0	0	0	0	0	0	-46.13	-46.13
	Inverter Transformer	MV1-9 T	364555	4905646	2	0	0	56.1	56.1	1	6199.15	3.25	0	86.85	0	2.03	0	0	13.34	0	0	0	0	0	0	-46.15	-46.15
	Inverter Transformer	MV1-11 T	364649	4905414	2	0	0	56.1	56.1	1	6213.59	3.25	0	86.87	0	2.03	0	0	13.35	0	0	0	0	0	0	-46.19	-46.19
Limit. Valu	0	0																								
Level D/N:	36.7865	36.7865																								

Receiver: Existing Noise Receptor
ID: S-R50
X: 369926
Y: 4908239
Z: 4.5
Ground: 0

ISO	Description	ID	X	Y	Z	Ground	ReflOrd	LxT	LxN	L/A	Dist.	hm	Freq	Adiv	K0b	Agr	Abar	z	Aatm	Afol	Ahous	Cmet	CmetN	Dc	RL	LtotT	LtotN

Sol_Luce Substation	S_Substation	369426	4908792	3.5	0	0	112.1	112.1	1	745.53	5.24	0	68.45	0	0.01	5.92	0.32	1.99	0	0	0	0	0	0	35.71	35.71
Inverter	MV5-5	370015	4908690	2	0	0	100.3	100.3	1	459.7	3.25	0	64.25	0	-0.58	0	0	8.19	0	0	0	0	0	0	28.45	28.45
Inverter	MV5-4	370324	4908707	2	0	0	100.3	100.3	1	614.36	3.25	0	66.77	0	-0.47	0	0	9.29	0	0	0	0	0	0	24.72	24.72
Inverter	MV5-2	370006	4908853	2	0	0	100.3	100.3	1	619.19	3.25	0	66.84	0	-0.46	0	0	9.32	0	0	0	0	0	0	24.63	24.63
Inverter	MV5-3	370231	4908851	2	0	0	100.3	100.3	1	683.79	3.25	0	67.7	0	-0.42	0	0	9.66	0	0	0	0	0	0	23.38	23.38
Inverter	MV4-10	369312	4908858	2	0	0	100.3	100.3	1	871.87	3.25	0	69.81	0	-0.31	0	0	10.46	0	0	0	0	0	0	20.35	20.35
Inverter	MV4-11	369264	4908855	2	0	0	100.3	100.3	1	904.27	3.25	0	70.13	0	-0.29	0	0	10.58	0	0	0	0	0	0	19.9	19.9
Inverter	MV5-1	370020	4909142	2	0	0	100.3	100.3	1	907.88	3.25	0	70.16	0	-0.29	0	0	10.59	0	0	0	0	0	0	19.85	19.85
Inverter	MV6-2	370085	4907339	2	0	0	100.3	100.3	1	913.94	3.25	0	70.22	0	-0.29	0	0	10.62	0	0	0	0	0	0	19.77	19.77
Inverter	MV4-9	369289	4909001	2	0	0	100.3	100.3	1	993.19	3.25	0	70.94	0	-0.25	0	0	10.89	0	0	0	0	0	0	18.73	18.73
Inverter	MV5-6	369982	4908507	2	0	0	89.1	89.1	1	273.8	3.25	0	59.75	0	0.35	0	0	3.93	0	0	0	0	0	0	25.03	25.03
Inverter	MV4-8	369256	4909001	2	0	0	100.3	100.3	1	1014.67	4.92	0	71.13	0	0.31	3.8	0.03	10.96	0	0	0	0	0	0	14.12	14.12
DSTATCOM - 10 MVAR #1	DSAT1	369437	4908757	2.5	0	0	96.6	96.6	1	712.35	3.5	0	68.05	0	2.59	0	0	0.87	0	0	0	0	0	0	25.12	25.12
DSTATCOM - 10 MVAR #2	DSAT2	369403	4908757	2.5	0	0	96.6	96.6	1	736.11	3.5	0	68.34	0	2.62	0	0	0.89	0	0	0	0	0	0	24.78	24.78
Inverter	MV6-3	370207	4907140	2	0	0	100.3	100.3	1	1134.36	3.25	0	72.1	0	-0.18	0	0	11.33	0	0	0	0	0	0	17.07	17.07
Inverter	MV4-5	369289	4909199	2	0	0	100.3	100.3	1	1152.12	3.25	0	72.23	0	-0.18	0	0	11.39	0	0	0	0	0	0	16.87	16.87
Inverter	MV4-7	369035	4909001	2	0	0	100.3	100.3	1	1172.4	3.25	0	72.38	0	-0.17	0	0	11.45	0	0	0	0	0	0	16.65	16.65
Inverter	MV4-6	369243	4909192	2	0	0	100.3	100.3	1	1172.48	3.25	0	72.38	0	-0.17	0	0	11.45	0	0	0	0	0	0	16.65	16.65
Inverter	MV6-1	370235	4907364	2	0	0	97.3	97.3	1	927.96	3.25	0	70.35	0	-0.28	0	0	10.67	0	0	0	0	0	0	16.58	16.58
Inverter	MV4-4	369027	4909199	2	0	0	100.3	100.3	1	1315.22	3.25	0	73.38	0	-0.11	0	0	11.85	0	0	0	0	0	0	15.19	15.19
Inverter	MV4-2	369272	4909397	2	0	0	100.3	100.3	1	1329.92	3.25	0	73.48	0	-0.1	0	0	11.89	0	0	0	0	0	0	15.05	15.05
Inverter	MV4-3	369229	4909397	2	0	0	100.3	100.3	1	1351.58	3.25	0	73.62	0	-0.09	0	0	11.94	0	0	0	0	0	0	14.84	14.84
Inverter	MV3-8	368680	4907712	2	0	0	100.3	100.3	1	1352.87	3.25	0	73.63	0	-0.09	0	0	11.95	0	0	0	0	0	0	14.83	14.83
Inverter	MV3-14	368684	4907498	2	0	0	100.3	100.3	1	1446.25	3.25	0	74.2	0	-0.05	0	0	12.19	0	0	0	0	0	0	13.97	13.97
Inverter	MV4-1	369011	4909397	2	0	0	100.3	100.3	1	1475.87	3.25	0	74.38	0	-0.04	0	0	12.26	0	0	0	0	0	0	13.71	13.71
Inverter	MV3-9	368512	4907703	2	0	0	100.3	100.3	1	1512.18	3.25	0	74.59	0	-0.03	0	0	12.35	0	0	0	0	0	0	13.39	13.39
Inverter	MV3-20	368689	4907317	2	0	0	100.3	100.3	1	1542.81	3.25	0	74.77	0	-0.02	0	0	12.43	0	0	0	0	0	0	13.13	13.13
Inverter	MV3-16	368514	4907475	2	0	0	100.3	100.3	1	1605.44	3.25	0	75.11	0	0	0	0	12.58	0	0	0	0	0	0	12.61	12.61
Inverter	MV3-11	368346	4907662	2	0	0	100.3	100.3	1	1682.06	3.25	0	75.52	0	0.03	0	0	12.76	0	0	0	0	0	0	12	12
Inverter	MV3-15	368357	4907477	2	0	0	100.3	100.3	1	1744.25	3.25	0	75.83	0	0.05	0	0	12.9	0	0	0	0	0	0	11.52	11.52
Inverter	MV3-21	368478	4907206	2	0	0	100.3	100.3	1	1778.71	3.25	0	76	0	0.06	0	0	12.98	0	0	0	0	0	0	11.27	11.27
Inverter	MV3-19	368357	4907347	2	0	0	100.3	100.3	1	1804.84	3.25	0	76.13	0	0.07	0	0	13.04	0	0	0	0	0	0	11.07	11.07
Inverter	MV3-6	368162	4907834	2	0	0	100.3	100.3	1	1809.9	3.25	0	76.15	0	0.07	0	0	13.05	0	0	0	0	0	0	11.04	11.04
Inverter	MV3-10	368167	4907669	2	0	0	100.3	100.3	1	1849.05	3.25	0	76.34	0	0.08	0	0	13.14	0	0	0	0	0	0	10.75	10.75
Inverter	MV3-17	368178	4907472	2	0	0	100.3	100.3	1	1908.87	3.25	0	76.62	0	0.1	0	0	13.27	0	0	0	0	0	0	10.33	10.33
Inverter	MV3-3	367939	4907927	2	0	0	100.3	100.3	1	2011.35	3.25	0	77.07	0	0.13	0	0	13.49	0	0	0	0	0	0	9.62	9.62
Inverter	MV3-7	367945	4907754	2	0	0	100.3	100.3	1	2039.51	3.25	0	77.19	0	0.14	0	0	13.54	0	0	0	0	0	0	9.44	9.44
Inverter	MV3-13	367963	4907577	2	0	0	100.3	100.3	1	2071.62	3.25	0	77.33	0	0.15	0	0	13.61	0	0	0	0	0	0	9.23	9.23
Inverter	MV3-18	367752	4907412	2	0	0	100.3	100.3	1	2325.99	3.25	0	78.33	0	0.22	0	0	14.12	0	0	0	0	0	0	7.64	7.64
Fixed Reactor Bank 2	FRB2	369464	4908755	6	0	0	89.8	89.8	1	692.61	5.25	0	67.81	0	-0.94	0	0	1.87	0	0	0	0	0	0	21.04	21.04
Inverter	MV3-12	367668	4907594	2	0	0	100.3	100.3	1	2348.32	3.25	0	78.42	0	0.22	0	0	14.17	0	0	0	0	0	0	7.51	7.51
Fixed Reactor Bank 1	FRB1	369378	4908755	6	0	0	89.8	89.8	1	752.7	5.25	0	68.53	0	-0.96	0	0	2	0	0	0	0	0	0	20.2	20.2
Inverter	MV4-15	369176	4908481	2	0	0	89.1	89.1	1	788.08	3.25	0	68.93	0	0.64	0	0	5.9	0	0	0	0	0	0	13.59	13.59
Inverter	MV4-14	369176	4908507	2	0	0	89.1	89.1	1	796.45	3.25	0	69.02	0	0.64	0	0	5.91	0	0	0	0	0	0	13.48	13.48
Inverter	MV4-13	369051	4908605	2	0	0	89.1	89.1	1	948.47	3.25	0	70.54	0	0.67	0	0	6.22	0	0	0	0	0	0	11.63	11.63
Inverter	MV4-12	369043	4908803	2	0	0	89.1	89.1	1	1047.76	3.25	0	71.41	0	0.7	0	0	6.4	0	0	0	0	0	0	10.55	10.55
Inverter	MV2-3	365820	4906641	2	0	0	100.3	100.3	1	4406	3.25	0	83.88	0	0.58	0	0	17.69	0	0	0	0	0	0	-1.83	-1.83
Inverter	MV2-4	365586	4906624	2	0	0	100.3	100.3	1	4630.75	3.25	0	84.31	0	0.61	0	0	18.03	0	0	0	0	0	0	-2.64	-2.64
Inverter	MV3-2	368671	4907928	2	0	0	89.1	89.1	1	1292.96	3.25	0	73.23	0	0.75	0	0	6.85	0	0	0	0	0	0	8.23	8.23
Inverter	MV3-4	368502	4907925	2	0	0	89.1	89.1	1	1458.21	3.25	0	74.28	0	0.78	0	0	7.14	0	0	0	0	0	0	6.86	6.86
SubstationTransformer	W_ST	369711.17	4906112.3	2.5	0	0	92	92	1	2137.55	3.5	0	77.6	0	-0.13	0	0	4.6	0	0	0	0	0	0	9.91	9.91
Inverter	MV1-1	364715	4906166	2	0	0	100.3	100.3	1	5608.2	3.25	0	85.98	0	0.69	0	0	19.45	0	0	0	0	0	0	-5.8	-5.8
Inverter	MV1-2	364753	4906063	2	0	0	100.3	100.3	1	5612.03	3.25	0	85.98	0	0.69	0	0	19.46	0	0	0	0	0	0	-5.82	-5.82
Inverter	MV1-4	364815	4905918	2	0	0	100.3	100.3	1	5613.32	3.25	0	85.98	0	0.69	0	0	19.46	0	0	0	0	0	0	-5.82	-5.82
Inverter	MV1-15	365315	4904994	2	0	0	100.3	100.3	1	5638.38	3.25	0	86.02	0	0.69	0	0	19.5	0	0	0	0	0	0	-5.89	-5.89
Inverter	MV1-12	365038	4905386	2	0	0	100.3	100.3	1	5659.7	3.25	0	86.06	0	0.69	0	0	19.52	0	0	0	0	0	0	-5.96	-5.96
Inverter	MV1-8	364788	4905647	2	0	0	100.3	100.3	1	5754.78	3.25	0	86.2	0	0.69	0	0	19.66	0	0	0	0	0	0	-6.24	-6.24
Inverter	MV1-5	364671	4905892	2	0	0	100.3	100.3	1	5755.3	3.25	0	86.2	0	0.69	0	0	19.66	0	0	0	0	0	0	-6.24	-6.24
Inverter	MV1-6	364477	4905835	2	0	0	100.3	100.3	1	5955.74	3.25	0	86.5	0	0.7	0	0	19.93	0	0	0	0	0	0	-6.82	-6.82
Inverter	MV1-9	364561	4905646	2	0	0	100.3	100.3	1	5958.76	3.25	0	86.5	0	0.7	0	0	19.94	0	0	0	0	0	0	-6.83	-6.83
Inverter	MV3-5	368340	4907843	2	0	0	89.1	89.1	1	1634.69	3.25	0	75.27	0	0.82	0	0	7.44	0	0	0	0	0	0	5.53	5.53
Inverter	MV1-11	364655	4905414	2	0	0	100.3	100.3	1	5980.31	3.25	0	86.53	0	0.7	0	0	19.97	0	0	0	0	0	0	-6.89	-6.89
Westbrook Inverter Enclosur	W_INV6	369875	4906578	2	0	0	89.1	89.1	1	1661.78	3.25	0	75.41	0	0.83	0	0	7.48	0	0	0	0	0	0	5.33	5.33
Inverter	MV2-1	365842	4906816	2	0	0	97.3	97.3	1	4324.81	3.25	0	83.72	0	0.57	0	0	17.56	0	0	0	0	0	0	-4.54	-4.54
Westbrook Inverter Enclosur	W_INV5	369719	4906574	2	0	0	89.1	89.1	1	1677.82	3.25	0	75.49	0	0.83	0	0	7.51	0	0	0	0	0	0	5.22	5.22
Inverter	MV3-22	368656	4907142	2	0	0	89.1	89.1	1	1678.19	3.25	0	75.5	0	0.83	0	0	7.51	0	0	0	0	0	0	5.22	5.22
Inverter	MV3-1	368156	4907976	2	0	0	89.1	89.1	1	1789.43	3.25	0	76.05	0	0.86	0	0	7.7	0	0	0	0	0	0	4.45	4.45
Westbrook Inverter Enclosur	W_INV7	369780	4906417	2	0	0	89.1	89.1	1	1827.84	3.25	0	76.24	0	0.87	0	0	7.76	0	0	0	0	0	0	4.19	4.19
Inverter	MV6-4	370250	4906966	2	0	0	86.1	86.1	1	1313.59	3.25	0	73.37	0	0.75	0	0	6.88	0	0	0	0	0	0	5.05	5.05
Westbrook Inverter Enclosur	W_INV2	369374	4906388	2	0	0	89.1	89.1	1	1931.56	3.25	0	76.72	0	0.89	0	0	7.93	0	0	0	0	0	0	3.52	3.52
Westbrook Inverter Enclosur	W_INV4	369673	4906164	2	0	0	89.1	89.1	1	2090.37	3.25	0	77.4	0	0.93	0	0	8.19	0	0	0	0	0	0	2.53	2.53
Westbrook Inverter Enclosur	W_INV3	369508	4906164	2	0	0	89.1	89.1	1	2116.68	3.25	0	77.51	0	0.93	0	0	8.23	0	0	0	0	0	0	2.38	2.38
Inverter	MV1-7	364925	4905782	2	0	0	97.3	97.3	1	5571.97	3.25	0	85.92	0	0.68	0	0	19.4	0	0	0	0	0	0	-8.69	-8.69
Inverter	MV1-10	365004	4905564	2	0	0	97.3	97.3	1	5601.94	3.25	0	85.97	0	0.69	0	0	19.44	0	0	0	0	0	0	-8.79	-8.79

Inverter	MV1-14	365163	4905049	2	0	0	97.3	97.3	1	5732.56	3.25	0	86.17	0	0.69	0	0	19.63	0	0	0	0	0	0	-9.17	-9.17
Inverter	MV1-13	364731	4905241	2	0	0	97.3	97.3	1	5998	3.25	0	86.56	0	0.7	0	0	19.99	0	0	0	0	0	0	-9.94	-9.94
Westbrook Inverter Enclosur	W_INV1	369409	4906578	2	0	0	86.1	86.1	1	1739.6	3.25	0	75.81	0	0.85	0	0	7.61	0	0	0	0	0	0	1.79	1.79
Inverter	MV2-2	365977	4906654	2	0	0	89.1	89.1	1	4255.21	3.25	0	83.58	0	1.46	0	0	11.44	0	0	0	0	0	0	-7.42	-7.42
Gardiner Substation	G_Sub	366586.3	4903349.9	2.5	0	0	90.8	90.8	1	5920.89	4.25	0	86.45	0	1.86	2.13	0.37	9.66	0	0	0	0	0	0	-9.32	-9.32
Inverter	MV1-3	364440	4906039	2	0	0	89.1	89.1	1	5910.69	3.25	0	86.43	0	1.86	0	0	13.65	0	0	0	0	0	0	-12.89	-12.89
Westbrook Inverter Transfor	W_INVTR1	369403	4906578	2	0	0	78.2	78.2	1	1741.39	3.25	0	75.82	0	-2.31	0	0	1.08	0	0	0	0	0	0	3.65	3.65
Westbrook Inverter Transfor	W_INVTR6	369881	4906578	2	0	0	77.3	77.3	1	1661.61	3.25	0	75.41	0	-2.27	0	0	1.04	0	0	0	0	0	0	3.17	3.17
Westbrook Inverter Transfor	W_INVTR5	369725	4906574	2	0	0	77.3	77.3	1	1677.09	3.25	0	75.49	0	-2.28	0	0	1.05	0	0	0	0	0	0	3.08	3.08
Inverters	G_Inv2	366676.9	4903239.1	2	0	0	87.7	87.7	1	5962.86	3.25	0	86.51	0	2.92	0	0	6.94	0	0	0	0	0	0	-8.7	-8.7
Westbrook Inverter Transfor	W_INVTR7	369786	4906417	2	0	0	77.3	77.3	1	1827.37	3.25	0	76.24	0	-2.34	0	0	1.12	0	0	0	0	0	0	2.32	2.32
Inverters	G_Inv4	366732.8	4903105	2	0	0	87.7	87.7	1	6046.03	3.25	0	86.63	0	2.92	0	0	7.03	0	0	0	0	0	0	-8.91	-8.91
Inverters	G_Inv1	366526.4	4903225.8	2	0	0	87.7	87.7	1	6057.18	3.25	0	86.65	0	2.92	0	0	7.04	0	0	0	0	0	0	-8.94	-8.94
Inverters	G_Inv6	366788.5	4902972	2	0	0	87.7	87.7	1	6130.68	3.25	0	86.75	0	2.92	0	0	7.11	0	0	0	0	0	0	-9.12	-9.12
Inverters	G_Inv3	366583.7	4903091.4	2	0	0	87.7	87.7	1	6137.49	3.25	0	86.76	0	2.92	0	0	7.12	0	0	0	0	0	0	-9.14	-9.14
Inverters	G_Inv8	366844.5	4902838.5	2	0	0	87.7	87.7	1	6217.8	3.25	0	86.87	0	2.93	0	0	7.2	0	0	0	0	0	0	-9.34	-9.34
Inverters	G_Inv5	366638.5	4902958.1	2	0	0	87.7	87.7	1	6220.58	3.25	0	86.88	0	2.93	0	0	7.2	0	0	0	0	0	0	-9.35	-9.35
Inverters	G_Inv7	366694.6	4902824.7	2	0	0	87.7	87.7	1	6305.28	3.25	0	86.99	0	2.93	0	0	7.29	0	0	0	0	0	0	-9.55	-9.55
Inverters	G_Inv10	366900.7	4902704.8	2	0	0	87.7	87.7	1	6307.12	3.25	0	87	0	2.93	0	0	7.29	0	0	0	0	0	0	-9.56	-9.56
Westbrook Inverter Transfor	W_INVTR2	369368	4906388	2	0	0	77.3	77.3	1	1933.28	3.25	0	76.73	0	-2.38	0	0	1.17	0	0	0	0	0	0	1.82	1.82
Inverters	G_Inv9	366750.9	4902691.8	2	0	0	87.7	87.7	1	6391.61	3.25	0	87.11	0	2.93	0	0	7.38	0	0	0	0	0	0	-9.76	-9.76
Westbrook Inverter Transfor	W_INVTR4	369679	4906164	2	0	0	77.3	77.3	1	2089.65	3.25	0	77.4	0	-2.44	0	0	1.25	0	0	0	0	0	0	1.13	1.13
Westbrook Inverter Transfor	W_INVTR3	369514	4906164	2	0	0	77.3	77.3	1	2115.51	3.25	0	77.51	0	-2.45	0	0	1.26	0	0	0	0	0	0	1.02	1.02
Inverter Transformer	MV6-1 T	370230	4907364	2	0	0	69.4	69.4	1	926.31	3.25	0	70.34	0	1.62	0	0	3.71	0	0	0	0	0	0	-6.31	-6.31
Inverter Transformer	MV5-6 T	369987	4908507	2	0	0	56.1	56.1	1	274.87	3.25	0	59.78	0	-0.05	0	0	2.66	0	0	0	0	0	0	-6.34	-6.34
Inverter Transformer	MV6-4 T	370244	4906966	2	0	0	69.4	69.4	1	1312.12	3.25	0	73.36	0	1.88	0	0	4.21	0	0	0	0	0	0	-10.11	-10.11
Inverter Transformer	MV5-5 T	370021	4908690	2	0	0	56.1	56.1	1	460.9	3.25	0	64.27	0	-0.12	0	0	3.42	0	0	0	0	0	0	-11.52	-11.52
Inverter Transformer	MV5-4 T	370330	4908707	2	0	0	56.1	56.1	1	618.26	3.25	0	66.82	0	-0.1	0	0	3.91	0	0	0	0	0	0	-14.57	-14.57
Inverter Transformer	MV5-2 T	370011	4908853	2	0	0	56.1	56.1	1	619.86	3.25	0	66.85	0	-0.1	0	0	3.91	0	0	0	0	0	0	-14.6	-14.6
Inverter Transformer	MV5-3 T	370237	4908851	2	0	0	56.1	56.1	1	686.49	3.25	0	67.73	0	-0.08	0	0	4.1	0	0	0	0	0	0	-15.69	-15.69
Inverter Transformer	MV4-14 T	369182	4908507	2	0	0	56.1	56.1	1	790.8	3.25	0	68.96	0	-0.06	0	0	4.37	0	0	0	0	0	0	-17.22	-17.22
Inverter Transformer	MV4-15 T	369170	4908481	2	0	0	56.1	56.1	1	793.79	3.25	0	68.99	0	-0.05	0	0	4.38	0	0	0	0	0	0	-17.26	-17.26
Inverter Transformer	MV4-10 T	369307	4908858	2	0	0	56.1	56.1	1	875.4	3.25	0	69.84	0	-0.03	0	0	4.59	0	0	0	0	0	0	-18.34	-18.34
Inverter Transformer	MV4-11 T	369269	4908855	2	0	0	56.1	56.1	1	900.62	3.25	0	70.09	0	-0.02	0	0	4.65	0	0	0	0	0	0	-18.66	-18.66
Inverter Transformer	MV5-1 T	370015	4909142	2	0	0	56.1	56.1	1	907.38	3.25	0	70.16	0	-0.02	0	0	4.66	0	0	0	0	0	0	-18.74	-18.74
Inverter Transformer	MV6-2 T	370091	4907339	2	0	0	56.1	56.1	1	915	3.25	0	70.23	0	-0.02	0	0	4.68	0	0	0	0	0	0	-18.84	-18.84
Inverter Transformer	MV2-1 T	365836	4906816	2	0	0	69.4	69.4	1	4330.48	3.25	0	83.73	0	2.87	0	0	6.92	0	0	0	0	0	0	-24.16	-24.16
Inverter Transformer	MV4-13 T	369057	4908605	2	0	0	56.1	56.1	1	942.93	3.25	0	70.49	0	-0.01	0	0	4.75	0	0	0	0	0	0	-19.18	-19.18
Inverter Transformer	MV4-9 T	369284	4909001	2	0	0	56.1	56.1	1	996.4	3.25	0	70.97	0	0.01	0	0	4.88	0	0	0	0	0	0	-19.8	-19.8
Inverter Transformer	MV4-8 T	369262	4909001	2	0	0	56.1	56.1	1	1010.72	3.25	0	71.09	0	0.02	0	0	4.91	0	0	0	0	0	0	-19.96	-19.96
Inverter Transformer	MV4-12 T	369049	4908803	2	0	0	56.1	56.1	1	1042.7	3.25	0	71.36	0	0.03	0	0	4.99	0	0	0	0	0	0	-20.32	-20.32
Inverter Transformer	MV6-3 T	370202	4907140	2	0	0	56.1	56.1	1	1133.13	3.25	0	72.09	0	0.06	0	0	5.2	0	0	0	0	0	0	-21.29	-21.29
Inverter Transformer	MV4-5 T	369283	4909199	2	0	0	56.1	56.1	1	1155.45	3.25	0	72.25	0	0.07	0	0	5.25	0	0	0	0	0	0	-21.52	-21.52
Inverter Transformer	MV4-7 T	369040	4909001	2	0	0	56.1	56.1	1	1168.61	3.25	0	72.35	0	0.07	0	0	5.28	0	0	0	0	0	0	-21.65	-21.65
Inverter Transformer	MV4-6 T	369249	4909192	2	0	0	56.1	56.1	1	1168.99	3.25	0	72.36	0	0.07	0	0	5.28	0	0	0	0	0	0	-21.65	-21.65
Inverter Transformer	MV1-7 T	364919	4905782	2	0	0	69.4	69.4	1	5577.36	3.25	0	85.93	0	3.12	0	0	7.76	0	0	0	0	0	0	-27.45	-27.45
Inverter Transformer	MV1-10 T	365010	4905564	2	0	0	69.4	69.4	1	5596.67	3.25	0	85.96	0	3.12	0	0	7.77	0	0	0	0	0	0	-27.5	-27.5
Inverter Transformer	MV1-14 T	365157	4905049	2	0	0	69.4	69.4	1	5737.55	3.25	0	86.17	0	3.15	0	0	7.86	0	0	0	0	0	0	-27.83	-27.83
Inverter Transformer	MV3-2 T	368677	4907928	2	0	0	56.1	56.1	1	1287.14	3.25	0	73.19	0	0.12	0	0	5.55	0	0	0	0	0	0	-22.8	-22.8
Inverter Transformer	MV1-13 T	364725	4905241	2	0	0	69.4	69.4	1	6003.2	3.25	0	86.57	0	3.19	0	0	8.02	0	0	0	0	0	0	-28.43	-28.43
Inverter Transformer	MV4-4 T	369033	4909199	2	0	0	56.1	56.1	1	1311.13	4.72	0	73.35	0	0.94	3.24	0.01	5.61	0	0	0	0	0	0	-27.07	-27.07
Inverter Transformer	MV4-2 T	369267	4909397	2	0	0	56.1	56.1	1	1332.39	3.25	0	73.49	0	0.13	0	0	5.65	0	0	0	0	0	0	-23.22	-23.22
Inverter Transformer	MV3-8 T	368685	4907712	2	0	0	56.1	56.1	1	1348.26	3.25	0	73.6	0	0.14	0	0	5.69	0	0	0	0	0	0	-23.36	-23.36
Inverter Transformer	MV4-3 T	369234	4909397	2	0	0	56.1	56.1	1	1349.01	3.25	0	73.6	0	0.14	0	0	5.69	0	0	0	0	0	0	-23.37	-23.37
Inverter Transformer	MV3-14 T	368678	4907498	2	0	0	56.1	56.1	1	1451.41	3.25	0	74.24	0	0.18	0	0	5.91	0	0	0	0	0	0	-24.27	-24.27
Inverter Transformer	MV3-4 T	368507	4907925	2	0	0	56.1	56.1	1	1453.33	3.25	0	74.25	0	0.18	0	0	5.92	0	0	0	0	0	0	-24.29	-24.29
Inverter Transformer	MV4-1 T	369017	4909397	2	0	0	56.1	56.1	1	1472.16	3.25	0	74.36	0	0.19	0	0	5.96	0	0	0	0	0	0	-24.45	-24.45
Inverter Transformer	MV3-9 T	368517	4907703	2	0	0	56.1	56.1	1	1507.51	3.25	0	74.57	0	0.2	0	0	6.03	0	0	0	0	0	0	-24.74	-24.74
Inverter Transformer	MV3-20 T	368683	4907317	2	0	0	56.1	56.1	1	1547.62	3.25	0	74.79	0	0.22	0	0	6.12	0	0	0	0	0	0	-25.07	-25.07
Inverter Transformer	MV3-16 T	368509	4907475	2	0	0	56.1	56.1	1	1609.84	3.25	0	75.14	0	0.24	0	0	6.25	0	0	0	0	0	0	-25.57	-25.57
Inverter Transformer	MV3-5 T	368335	4907843	2	0	0	56.1	56.1	1	1639.54	3.25	0	75.29	0	0.25	0	0	6.31	0	0	0	0	0	0	-25.8	-25.8
Inverter Transformer	MV3-22 T	368661	4907142	2	0	0	56.1	56.1	1	1674.41	3.25	0	75.48	0	0.27	0	0	6.39	0	0	0	0	0	0	-26.07	-26.07
Inverter Transformer	MV3-11 T	368340	4907662	2	0	0	56.1	56.1	1	1687.7	3.25	0	75.55	0	0.27	0	0	6.41	0	0	0	0	0	0	-26.18	-26.18
Inverter Transformer	MV3-15 T	368351	4907477	2	0	0	56.1	56.1	1	1749.65	3.25	0	75.86	0	0.3	0	0	6.54	0	0	0	0	0	0	-26.64	-26.64
Inverter Transformer	MV3-21 T	368484	4907206	2	0	0	56.1	56.1	1	1773.83	3.25	0	75.98	0	0.31	0	0	6.59	0	0	0	0	0	0	-26.82	-26.82
Inverter Transformer	MV3-1 T	368150	4907976	2	0	0	56.1	56.1	1	1795.37	3.25	0	76.08	0	0.32	0	0	6.63	0	0	0	0	0	0	-26.98	-26.98
Inverter Transformer	MV3-19 T	368352	4907347	2	0	0	56.1	56.1	1	1809.18	3.25	0	76.15	0	0.32	0	0	6.66	0	0	0	0	0	0	-27.08	-27.08
Inverter Transformer	MV3-6 T	368156	4907834	2	0	0	56.1	56.1	1	1815.75	3.25	0	76.18	0	0.33	0	0	6.68	0	0	0	0	0	0	-27.13	-27.13
Inverter Transformer	MV3-10 T	368162	4907669	2	0	0	56.1	56.1	1	1853.81	3.25	0	76.36	0	0.34	0	0	6.75	0	0	0	0	0	0	-27.4	-27.4
Inverter Transformer	MV3-17 T	368183	4907472	2	0	0	56.1	56.1	1	1904.3	3.25	0	76.59	0	0.36	0	0	6.85	0	0	0	0	0	0	-27.75	-27.75
Inverter Transformer	MV3-3 T	367944	4907927	2	0	0	56.1	56.1	1	2006.41	3.25	0	77.05	0	0.41	0	0	7.06	0	0	0	0	0	0	-28.45	-28.45
Inverter Transformer	MV3-7 T	367951	4907754	2	0	0	56.1	56.1	1	2033.68	3.25	0	77.17	0	0.42	0	0	7.11	0	0	0	0	0	0	-28.63	-28.63
Inverter Transformer	MV3-13 T	367958	4907577	2	0	0	56.1	56.1	1	2076.36	3.25	0	77.35	0	0.44	0	0	7.19	0	0	0	0	0	0	-28.92	-28.92
Inverter Transformer	MV3-18 T	367757	4907412	2	0	0	56.1	56.1	1	2321.31	3.25	0	78.31	0	0.54	0	0	7.66	0	0	0	0	0	0	-30.46	-30.46

	Inverter Transformer	MV3-12 T	367674	4907594	2	0	0	56.1	56.1	1	2342.55	3.25	0	78.39	0	0.55	0	0	7.7	0	0	0	0	0	0	-30.58	-30.58
	Line Reactor	NGR	369421	4908787.5	5	0	0	45.4	45.4	1	745.57	5.25	0	68.45	0	3.4	1.37	0.09	0.31	0	0	0	0	0	0	-28.17	-28.17
	Inverter Transformer	MV2-2 T	365982	4906654	2	0	0	56.1	56.1	1	4250.57	3.25	0	83.57	0	1.34	0	0	10.82	0	0	0	0	0	0	-39.68	-39.68
	Inverter Transformer	MV2-3 T	365814	4906641	2	0	0	56.1	56.1	1	4411.59	3.25	0	83.89	0	1.41	0	0	11.05	0	0	0	0	0	0	-40.29	-40.29
	Inverter Transformer	MV2-4 T	365590	4906628	2	0	0	56.1	56.1	1	4625.61	3.25	0	84.3	0	1.49	0	0	11.35	0	0	0	0	0	0	-41.08	-41.08
	Inverter Transformer	MV1-1 T	364721	4906166	2	0	0	56.1	56.1	1	5602.62	3.25	0	85.97	0	1.84	0	0	12.62	0	0	0	0	0	0	-44.37	-44.37
	Inverter Transformer	MV1-2 T	364759	4906063	2	0	0	56.1	56.1	1	5606.5	3.25	0	85.97	0	1.84	0	0	12.63	0	0	0	0	0	0	-44.38	-44.38
	Inverter Transformer	MV1-4 T	364821	4905918	2	0	0	56.1	56.1	1	5607.86	3.25	0	85.98	0	1.84	0	0	12.63	0	0	0	0	0	0	-44.38	-44.38
	Inverter Transformer	MV1-15 T	365309	4904994	2	0	0	56.1	56.1	1	5643.29	3.25	0	86.03	0	1.85	0	0	12.67	0	0	0	0	0	0	-44.49	-44.49
	Inverter Transformer	MV1-12 T	365044	4905386	2	0	0	56.1	56.1	1	5654.51	3.25	0	86.05	0	1.85	0	0	12.69	0	0	0	0	0	0	-44.53	-44.53
	Inverter Transformer	MV1-5 T	364676	4905892	2	0	0	56.1	56.1	1	5750.73	3.25	0	86.19	0	1.88	0	0	12.8	0	0	0	0	0	0	-44.82	-44.82
	Inverter Transformer	MV1-8 T	364782	4905647	2	0	0	56.1	56.1	1	5760.14	3.25	0	86.21	0	1.89	0	0	12.82	0	0	0	0	0	0	-44.85	-44.85
	Inverter Transformer	MV1-3 T	364435	4906039	2	0	0	56.1	56.1	1	5915.33	3.25	0	86.44	0	1.94	0	0	13	0	0	0	0	0	0	-45.32	-45.32
	Inverter Transformer	MV1-6 T	364482	4905835	2	0	0	56.1	56.1	1	5951.16	3.25	0	86.49	0	1.95	0	0	13.04	0	0	0	0	0	0	-45.43	-45.43
	Inverter Transformer	MV1-9 T	364555	4905646	2	0	0	56.1	56.1	1	5964.17	3.25	0	86.51	0	1.95	0	0	13.06	0	0	0	0	0	0	-45.47	-45.47
	Inverter Transformer	MV1-11 T	364649	4905414	2	0	0	56.1	56.1	1	5985.6	3.25	0	86.54	0	1.96	0	0	13.09	0	0	0	0	0	0	-45.53	-45.53
Limit. Valu	0	0																								
Level D/N:	38.8327	38.8327																								

Receiver: Existing Noise Receptor
ID: S-R51
X: 370593
Y: 4908571
Z: 4.5
Ground: 0

ISO	Description	ID	X	Y	Z	Ground	ReflOrd	LxT	LxN	L/A	Dist.	hm	Freq	Adiv	K0b	Agr	Abar	z	Aatm	Afol	Ahous	Cmet	CmetN	Dc	RL	LtotT	LtotN
	Inverter	MV5-4	370324	4908707	2	0	0	100.3	100.3	1	301.44	3.25	0	60.58	0	-0.65	0	0	6.41	0	0	0	0	0	0	33.96	33.96
	Sol_Luce Substation	S_Substation	369426	4908792	3.5	0	0	112.1	112.1	1	1187.74	5.25	0	72.49	0	0.2	5.95	0.46	2.89	0	0	0	0	0	0	30.54	30.54
	Inverter	MV5-3	370231	4908851	2	0	0	100.3	100.3	1	457.66	3.25	0	64.21	0	-0.58	0	0	8.18	0	0	0	0	0	0	28.51	28.51
	Inverter	MV5-5	370015	4908690	2	0	0	100.3	100.3	1	590.13	3.25	0	66.42	0	-0.49	0	0	9.14	0	0	0	0	0	0	25.23	25.23
	Inverter	MV5-2	370006	4908853	2	0	0	100.3	100.3	1	651.23	3.25	0	67.27	0	-0.44	0	0	9.49	0	0	0	0	0	0	23.99	23.99
	Inverter	MV5-1	370020	4909142	2	0	0	100.3	100.3	1	808.94	3.25	0	69.16	0	-0.35	0	0	10.22	0	0	0	0	0	0	21.28	21.28
	Inverter	MV4-10	369312	4908858	2	0	0	100.3	100.3	1	1312.76	3.25	0	73.36	0	-0.11	0	0	11.84	0	0	0	0	0	0	15.21	15.21
	Inverter	MV6-2	370085	4907339	2	0	0	100.3	100.3	1	1332.63	3.25	0	73.49	0	-0.1	0	0	11.89	0	0	0	0	0	0	15.02	15.02
	Inverter	MV4-11	369264	4908855	2	0	0	100.3	100.3	1	1359.01	3.25	0	73.66	0	-0.09	0	0	11.96	0	0	0	0	0	0	14.77	14.77
	Inverter	MV4-9	369289	4909001	2	0	0	100.3	100.3	1	1373.07	3.25	0	73.75	0	-0.08	0	0	12	0	0	0	0	0	0	14.64	14.64
	Inverter	MV4-8	369256	4909001	2	0	0	100.3	100.3	1	1404.45	3.25	0	73.95	0	-0.07	0	0	12.08	0	0	0	0	0	0	14.35	14.35
	Inverter	MV4-5	369289	4909199	2	0	0	100.3	100.3	1	1447.34	3.25	0	74.21	0	-0.05	0	0	12.19	0	0	0	0	0	0	13.96	13.96
	Inverter	MV6-3	370207	4907140	2	0	0	100.3	100.3	1	1482.15	3.25	0	74.42	0	-0.04	0	0	12.28	0	0	0	0	0	0	13.65	13.65
	Inverter	MV4-6	369243	4909192	2	0	0	100.3	100.3	1	1485.98	3.25	0	74.44	0	-0.04	0	0	12.29	0	0	0	0	0	0	13.62	13.62
	Inverter	MV4-2	369272	4909397	2	0	0	100.3	100.3	1	1557.99	3.25	0	74.85	0	-0.01	0	0	12.47	0	0	0	0	0	0	13.01	13.01
	Inverter	MV4-3	369229	4909397	2	0	0	100.3	100.3	1	1594.61	3.25	0	75.05	0	0	0	0	12.56	0	0	0	0	0	0	12.7	12.7
	Inverter	MV4-7	369035	4909001	2	0	0	100.3	100.3	1	1616.25	3.25	0	75.17	0	0.01	0	0	12.61	0	0	0	0	0	0	12.53	12.53
	Inverter	MV4-4	369027	4909199	2	0	0	100.3	100.3	1	1687.23	3.25	0	75.54	0	0.03	0	0	12.77	0	0	0	0	0	0	11.96	11.96
	Inverter	MV6-1	370235	4907364	2	0	0	97.3	97.3	1	1258.98	3.25	0	73	0	-0.13	0	0	11.69	0	0	0	0	0	0	12.75	12.75
	Inverter	MV4-1	369011	4909397	2	0	0	100.3	100.3	1	1784.66	3.25	0	76.03	0	0.06	0	0	12.99	0	0	0	0	0	0	11.22	11.22
	DSTATCOM - 10 MVAR #1	DSAT1	369437	4908757	2.5	0	0	96.6	96.6	1	1170.87	3.5	0	72.37	0	3.01	0	0	1.19	0	0	0	0	0	0	20.06	20.06
	DSTATCOM - 10 MVAR #2	DSAT2	369403	4908757	2.5	0	0	96.6	96.6	1	1204.45	3.5	0	72.62	0	3.02	0	0	1.21	0	0	0	0	0	0	19.78	19.78
	Inverter	MV3-8	368680	4907712	2	0	0	100.3	100.3	1	2097.01	3.25	0	77.43	0	0.16	0	0	13.66	0	0	0	0	0	0	9.06	9.06
	Inverter	MV3-14	368684	4907498	2	0	0	100.3	100.3	1	2189.89	3.25	0	77.81	0	0.18	0	0	13.85	0	0	0	0	0	0	8.47	8.47
	Inverter	MV5-6	369982	4908507	2	0	0	89.1	89.1	1	614.35	3.25	0	66.77	0	0.58	0	0	5.49	0	0	0	0	0	0	16.22	16.22
	Inverter	MV3-9	368512	4907703	2	0	0	100.3	100.3	1	2254.77	3.25	0	78.06	0	0.2	0	0	13.98	0	0	0	0	0	0	8.07	8.07
	Inverter	MV3-20	368689	4907317	2	0	0	100.3	100.3	1	2279.85	3.25	0	78.16	0	0.2	0	0	14.03	0	0	0	0	0	0	7.92	7.92
	Inverter	MV3-16	368514	4907475	2	0	0	100.3	100.3	1	2350.2	3.25	0	78.42	0	0.22	0	0	14.17	0	0	0	0	0	0	7.5	7.5
	Inverter	MV3-11	368346	4907662	2	0	0	100.3	100.3	1	2423.9	3.25	0	78.69	0	0.24	0	0	14.31	0	0	0	0	0	0	7.07	7.07
	Inverter	MV3-15	368357	4907477	2	0	0	100.3	100.3	1	2489.28	3.25	0	78.92	0	0.25	0	0	14.44	0	0	0	0	0	0	6.7	6.7
	Inverter	MV3-21	368478	4907206	2	0	0	100.3	100.3	1	2517.23	3.25	0	79.02	0	0.26	0	0	14.49	0	0	0	0	0	0	6.54	6.54
	Inverter	MV3-6	368162	4907834	2	0	0	100.3	100.3	1	2540.26	3.25	0	79.1	0	0.27	0	0	14.53	0	0	0	0	0	0	6.41	6.41
	Inverter	MV3-19	368357	4907347	2	0	0	100.3	100.3	1	2549.09	3.25	0	79.13	0	0.27	0	0	14.55	0	0	0	0	0	0	6.37	6.37
	Inverter	MV3-10	368167	4907669	2	0	0	100.3	100.3	1	2588.26	3.25	0	79.26	0	0.28	0	0	14.62	0	0	0	0	0	0	6.15	6.15
	Inverter	MV3-17	368178	4907472	2	0	0	100.3	100.3	1	2653.31	3.25	0	79.48	0	0.29	0	0	14.75	0	0	0	0	0	0	5.8	5.8
	Inverter	MV3-3	367939	4907927	2	0	0	100.3	100.3	1	2731.02	3.25	0	79.73	0	0.31	0	0	14.89	0	0	0	0	0	0	5.39	5.39
	Inverter	MV3-7	367945	4907754	2	0	0	100.3	100.3	1	2771.17	3.25	0	79.85	0	0.32	0	0	14.96	0	0	0	0	0	0	5.18	5.18
	Inverter	MV3-13	367963	4907577	2	0	0	100.3	100.3	1	2811.57	3.25	0	79.98	0	0.32	0	0	15.04	0	0	0	0	0	0	4.97	4.97
	Inverter	MV3-18	367752	4907412	2	0	0	100.3	100.3	1	3068.32	3.25	0	80.74	0	0.38	0	0	15.49	0	0	0	0	0	0	3.71	3.71
	Inverter	MV3-12	367668	4907594	2	0	0	100.3	100.3	1	3083.85	3.25	0	80.78	0	0.38	0	0	15.52	0	0	0	0	0	0	3.63	3.63
	Fixed Reactor Bank 2	FRB2	369464	4908755	6	0	0	89.8	89.8	1	1143.9	5.25	0	72.17	0	-1.02	0	0	2.81	0	0	0	0	0	0	15.83	15.83
	Fixed Reactor Bank 1	FRB1	369378	4908755	6	0	0	89.8	89.8	1	1228.85	5.25	0	72.79	0	-1.03	0	0	2.97	0	0	0	0	0	0	15.04	15.04
	Inverter	MV2-3	365820	4906641	2	0	0	100.3	100.3	1	5148.44	3.25	0	85.23	0	0.65	0	0	18.8	0	0	0	0	0	0	-4.37	-4.37
	Inverter	MV4-14	369176	4908507	2	0	0	89.1	89.1	1	1418.45	3.25	0	74.04	0	0.77	0	0	7.07	0	0	0	0	0	0	7.18	7.18
	Inverter	MV4-15	369176	4908481	2	0	0	89.1	89.1	1	1419.86	3.25	0	74.04	0	0.77	0	0	7.07	0	0	0	0	0	0	7.17	7.17
	Inverter	MV2-4	365586	4906624	2	0	0	100.3	100.3	1	5372.23	3.25	0	85.6	0	0.67	0	0	19.12	0	0	0	0	0	0	-5.08	-5.08
	Inverter	MV4-13	369051	4908605	2	0	0	89.1	89.1	1	1542.38	3.25	0	74.76	0	0.8	0	0	7.28	0	0	0	0	0	0	6.21	6.21

Inverter	MV4-12	369043	4908803	2	0	0	89.1	89.1	1	1567.27	3.25	0	74.9	0	0.81	0	0	7.32	0	0	0	0	0	0	6.02	6.02
Inverter	MV1-1	364715	4906166	2	0	0	100.3	100.3	1	6350.98	3.25	0	87.06	0	0.71	0	0	20.46	0	0	0	0	0	0	-7.92	-7.92
Inverter	MV1-2	364753	4906063	2	0	0	100.3	100.3	1	6355.76	3.25	0	87.06	0	0.71	0	0	20.47	0	0	0	0	0	0	-7.93	-7.93
Inverter	MV1-4	364815	4905918	2	0	0	100.3	100.3	1	6357.96	3.25	0	87.07	0	0.71	0	0	20.47	0	0	0	0	0	0	-7.94	-7.94
Inverter	MV1-15	365315	4904994	2	0	0	100.3	100.3	1	6375.91	3.25	0	87.09	0	0.71	0	0	20.5	0	0	0	0	0	0	-7.99	-7.99
Inverter	MV1-12	365038	4905386	2	0	0	100.3	100.3	1	6403.3	3.25	0	87.13	0	0.71	0	0	20.53	0	0	0	0	0	0	-8.06	-8.06
Inverter	MV1-5	364671	4905892	2	0	0	100.3	100.3	1	6499.78	3.25	0	87.26	0	0.71	0	0	20.66	0	0	0	0	0	0	-8.32	-8.32
Inverter	MV1-8	364788	4905647	2	0	0	100.3	100.3	1	6499.83	3.25	0	87.26	0	0.71	0	0	20.66	0	0	0	0	0	0	-8.32	-8.32
Inverter	MV1-6	364477	4905835	2	0	0	100.3	100.3	1	6700.09	3.25	0	87.52	0	0.71	0	0	20.92	0	0	0	0	0	0	-8.84	-8.84
Inverter	MV1-9	364561	4905646	2	0	0	100.3	100.3	1	6703.78	3.25	0	87.53	0	0.71	0	0	20.92	0	0	0	0	0	0	-8.85	-8.85
Inverter	MV1-11	364655	4905414	2	0	0	100.3	100.3	1	6725.06	3.25	0	87.55	0	0.71	0	0	20.95	0	0	0	0	0	0	-8.91	-8.91
SubstationTransformer	W_ST	369711.17	4906112.3	2.5	0	0	92	92	1	2612.08	3.5	0	79.34	0	-0.02	0	0	5.36	0	0	0	0	0	0	7.29	7.29
Inverter	MV2-1	365842	4906816	2	0	0	97.3	97.3	1	5064.78	3.25	0	85.09	0	0.65	0	0	18.68	0	0	0	0	0	0	-7.1	-7.1
Inverter	MV3-2	368671	4907928	2	0	0	89.1	89.1	1	2026.71	3.25	0	77.14	0	0.91	0	0	8.09	0	0	0	0	0	0	2.92	2.92
Westbrook Inverter Enclosur	W_INV6	369875	4906578	2	0	0	89.1	89.1	1	2118.39	3.25	0	77.52	0	0.93	0	0	8.24	0	0	0	0	0	0	2.37	2.37
Westbrook Inverter Enclosur	W_INV5	369719	4906574	2	0	0	89.1	89.1	1	2179.88	3.25	0	77.77	0	0.95	0	0	8.34	0	0	0	0	0	0	2	2
Inverter	MV3-4	368502	4907925	2	0	0	89.1	89.1	1	2188.52	3.25	0	77.8	0	0.95	0	0	8.35	0	0	0	0	0	0	1.95	1.95
Westbrook Inverter Enclosur	W_INV7	369780	4906417	2	0	0	89.1	89.1	1	2302.32	3.25	0	78.24	0	0.98	0	0	8.53	0	0	0	0	0	0	1.3	1.3
Inverter	MV6-4	370250	4906966	2	0	0	86.1	86.1	1	1641.24	3.25	0	75.3	0	0.82	0	0	7.45	0	0	0	0	0	0	2.48	2.48
Inverter	MV3-5	368340	4907843	2	0	0	89.1	89.1	1	2367.7	3.25	0	78.49	0	0.99	0	0	8.64	0	0	0	0	0	0	0.94	0.94
Inverter	MV3-22	368656	4907142	2	0	0	89.1	89.1	1	2407.08	3.25	0	78.63	0	1	0	0	8.7	0	0	0	0	0	0	0.73	0.73
Inverter	MV1-7	364925	4905782	2	0	0	97.3	97.3	1	6317.02	3.25	0	87.01	0	0.71	0	0	20.42	0	0	0	0	0	0	-10.83	-10.83
Inverter	MV1-10	365004	4905564	2	0	0	97.3	97.3	1	6346.57	3.25	0	87.05	0	0.71	0	0	20.46	0	0	0	0	0	0	-10.91	-10.91
Westbrook Inverter Enclosur	W_INV2	369374	4906388	2	0	0	89.1	89.1	1	2500.29	3.25	0	78.96	0	1.03	0	0	8.85	0	0	0	0	0	0	0.23	0.23
Inverter	MV1-14	365163	4905049	2	0	0	97.3	97.3	1	6472.2	3.25	0	87.22	0	0.71	0	0	20.62	0	0	0	0	0	0	-11.25	-11.25
Inverter	MV3-1	368156	4907976	2	0	0	89.1	89.1	1	2508.59	3.25	0	78.99	0	1.03	0	0	8.86	0	0	0	0	0	0	0.18	0.18
Westbrook Inverter Enclosur	W_INV4	369673	4906164	2	0	0	89.1	89.1	1	2576.83	3.25	0	79.22	0	1.04	0	0	8.97	0	0	0	0	0	0	-0.17	-0.17
Inverter	MV1-13	364731	4905241	2	0	0	97.3	97.3	1	6741.81	3.25	0	87.58	0	0.71	0	0	20.97	0	0	0	0	0	0	-11.95	-11.95
Westbrook Inverter Enclosur	W_INV3	369508	4906164	2	0	0	89.1	89.1	1	2640.24	3.25	0	79.43	0	1.06	0	0	9.06	0	0	0	0	0	0	-0.5	-0.5
Westbrook Inverter Enclosur	W_INV1	369409	4906578	2	0	0	86.1	86.1	1	2318.17	3.25	0	78.3	0	0.98	0	0	8.56	0	0	0	0	0	0	-1.79	-1.79
Inverter	MV2-2	365977	4906654	2	0	0	89.1	89.1	1	4998.23	3.25	0	84.98	0	1.64	0	0	12.46	0	0	0	0	0	0	-10.02	-10.02
Gardiner Substation	G_Sub	366586.3	4903349.9	2.5	0	0	90.8	90.8	1	6581.3	4.25	0	87.37	0	1.99	1.99	0.37	10.34	0	0	0	0	0	0	-10.91	-10.91
Inverter	MV1-3	364440	4906039	2	0	0	89.1	89.1	1	6653.6	3.25	0	87.46	0	2.04	0	0	14.57	0	0	0	0	0	0	-15.02	-15.02
Inverters	G_Inv2	366676.9	4903239.1	2	0	0	87.7	87.7	1	6615.51	3.25	0	87.41	0	2.94	0	0	7.6	0	0	0	0	0	0	-10.29	-10.29
Inverters	G_Inv4	366732.8	4903105	2	0	0	87.7	87.7	1	6691.66	3.25	0	87.51	0	2.94	0	0	7.68	0	0	0	0	0	0	-10.47	-10.47
Inverters	G_Inv1	366526.4	4903225.8	2	0	0	87.7	87.7	1	6716.28	3.25	0	87.54	0	2.94	0	0	7.71	0	0	0	0	0	0	-10.53	-10.53
Inverters	G_Inv6	366788.5	4902972	2	0	0	87.7	87.7	1	6769.27	3.25	0	87.61	0	2.94	0	0	7.76	0	0	0	0	0	0	-10.65	-10.65
Inverters	G_Inv3	366583.7	4903091.4	2	0	0	87.7	87.7	1	6789.74	3.25	0	87.64	0	2.94	0	0	7.78	0	0	0	0	0	0	-10.7	-10.7
Inverters	G_Inv8	366844.5	4902838.5	2	0	0	87.7	87.7	1	6849.29	3.25	0	87.71	0	2.95	0	0	7.84	0	0	0	0	0	0	-10.84	-10.84
Westbrook Inverter Transfor	W_INVTR1	369403	4906578	2	0	0	78.2	78.2	1	2321.24	3.25	0	78.31	0	-2.51	0	0	1.36	0	0	0	0	0	0	1.08	1.08
Inverters	G_Inv5	366638.5	4902958.1	2	0	0	87.7	87.7	1	6866.06	3.25	0	87.73	0	2.95	0	0	7.86	0	0	0	0	0	0	-10.88	-10.88
Inverters	G_Inv10	366900.7	4902704.8	2	0	0	87.7	87.7	1	6931.48	3.25	0	87.82	0	2.95	0	0	7.92	0	0	0	0	0	0	-11.03	-11.03
Westbrook Inverter Transfor	W_INVTR6	369881	4906578	2	0	0	77.3	77.3	1	2116.36	3.25	0	77.51	0	-2.45	0	0	1.26	0	0	0	0	0	0	1.01	1.01
Inverters	G_Inv7	366694.6	4902824.7	2	0	0	87.7	87.7	1	6943.88	3.25	0	87.83	0	2.95	0	0	7.93	0	0	0	0	0	0	-11.05	-11.05
Inverters	G_Inv9	366750.9	4902691.8	2	0	0	87.7	87.7	1	7023.3	3.25	0	87.93	0	2.95	0	0	8.01	0	0	0	0	0	0	-11.23	-11.23
Westbrook Inverter Transfor	W_INVTR5	369725	4906574	2	0	0	77.3	77.3	1	2177.48	3.25	0	77.76	0	-2.47	0	0	1.29	0	0	0	0	0	0	0.76	0.76
Westbrook Inverter Transfor	W_INVTR7	369786	4906417	2	0	0	77.3	77.3	1	2300.21	3.25	0	78.24	0	-2.51	0	0	1.35	0	0	0	0	0	0	0.27	0.27
Westbrook Inverter Transfor	W_INVTR2	369368	4906388	2	0	0	77.3	77.3	1	2503.22	3.25	0	78.97	0	-2.57	0	0	1.44	0	0	0	0	0	0	-0.5	-0.5
Westbrook Inverter Transfor	W_INVTR4	369679	4906164	2	0	0	77.3	77.3	1	2574.69	3.25	0	79.21	0	-2.59	0	0	1.47	0	0	0	0	0	0	-0.75	-0.75
Westbrook Inverter Transfor	W_INVTR3	369514	4906164	2	0	0	77.3	77.3	1	2637.78	3.25	0	79.42	0	-2.61	0	0	1.5	0	0	0	0	0	0	-0.97	-0.97
Inverter Transformer	MV6-1 T	370230	4907364	2	0	0	69.4	69.4	1	1260.41	3.25	0	73.01	0	1.86	0	0	4.15	0	0	0	0	0	0	-9.67	-9.67
Inverter Transformer	MV5-4 T	370330	4908707	2	0	0	56.1	56.1	1	296.09	3.25	0	60.43	0	-0.07	0	0	2.77	0	0	0	0	0	0	-7.07	-7.07
Inverter Transformer	MV6-4 T	370244	4906966	2	0	0	69.4	69.4	1	1642.51	3.25	0	75.31	0	2.03	0	0	4.59	0	0	0	0	0	0	-12.59	-12.59
Inverter Transformer	MV5-3 T	370237	4908851	2	0	0	56.1	56.1	1	452.93	3.25	0	64.12	0	-0.12	0	0	3.4	0	0	0	0	0	0	-11.34	-11.34
Inverter Transformer	MV5-5 T	370021	4908690	2	0	0	56.1	56.1	1	584.25	3.25	0	66.33	0	-0.11	0	0	3.81	0	0	0	0	0	0	-13.98	-13.98
Inverter Transformer	MV5-6 T	369987	4908507	2	0	0	56.1	56.1	1	609.38	3.25	0	66.7	0	-0.1	0	0	3.88	0	0	0	0	0	0	-14.42	-14.42
Inverter Transformer	MV5-2 T	370011	4908853	2	0	0	56.1	56.1	1	646.73	3.25	0	67.21	0	-0.09	0	0	3.99	0	0	0	0	0	0	-15.05	-15.05
Inverter Transformer	MV5-1 T	370015	4909142	2	0	0	56.1	56.1	1	812.48	3.25	0	69.2	0	-0.05	0	0	4.43	0	0	0	0	0	0	-17.52	-17.52
Inverter Transformer	MV2-1 T	365836	4906816	2	0	0	69.4	69.4	1	5070.41	3.25	0	85.1	0	3.03	0	0	7.43	0	0	0	0	0	0	-26.21	-26.21
Inverter Transformer	MV4-10 T	369307	4908858	2	0	0	56.1	56.1	1	1317.64	3.25	0	73.4	0	0.13	0	0	5.62	0	0	0	0	0	0	-23.09	-23.09
Inverter Transformer	MV6-2 T	370091	4907339	2	0	0	56.1	56.1	1	1330.35	3.25	0	73.48	0	0.13	0	0	5.65	0	0	0	0	0	0	-23.2	-23.2
Inverter Transformer	MV4-11 T	369269	4908855	2	0	0	56.1	56.1	1	1354.12	3.25	0	73.63	0	0.14	0	0	5.7	0	0	0	0	0	0	-23.42	-23.42
Inverter Transformer	MV1-7 T	364919	4905782	2	0	0	69.4	69.4	1	6322.4	3.25	0	87.02	0	3.23	0	0	8.21	0	0	0	0	0	0	-29.11	-29.11
Inverter Transformer	MV1-10 T	365010	4905564	2	0	0	69.4	69.4	1	6341.29	3.25	0	87.04	0	3.24	0	0	8.22	0	0	0	0	0	0	-29.15	-29.15
Inverter Transformer	MV4-9 T	369284	4909001	2	0	0	56.1	56.1	1	1377.82	3.25	0	73.78	0	0.15	0	0	5.75	0	0	0	0	0	0	-23.63	-23.63
Inverter Transformer	MV4-8 T	369262	4909001	2	0	0	56.1	56.1	1	1398.74	3.25	0	73.91	0	0.16	0	0	5.8	0	0	0	0	0	0	-23.81	-23.81
Inverter Transformer	MV1-14 T	365157	4905049	2	0	0	69.4	69.4	1	6477.24	3.25	0	87.23	0	3.26	0	0	8.3	0	0	0	0	0	0	-29.44	-29.44
Inverter Transformer	MV4-14 T	369182	4908507	2	0	0	56.1	56.1	1	1412.45	3.25	0	74	0	0.16	0	0	5.83	0	0	0	0	0	0	-23.93	-23.93
Inverter Transformer	MV4-15 T	369170	4908481	2	0	0	56.1	56.1	1	1425.85	3.25	0	74.08	0	0.17	0	0	5.86	0	0	0	0	0	0	-24.05	-24.05
Inverter Transformer	MV4-5 T	369283	4909199	2	0	0	56.1	56.1	1	1452.75	3.25	0	74.24	0	0.18	0	0	5.92	0	0	0	0	0	0	-24.28	-24.28
Inverter Transformer	MV1-13 T	364725	4905241	2	0	0	69.4	69.4	1	6747.02	3.25	0	87.58	0	3.29	0	0	8.46	0	0	0	0	0	0	-29.98	-29.98
Inverter Transformer	MV4-6 T	369249	4909192	2	0	0	56.1	56.1	1	1480.53	3.25	0	74.41	0	0.19	0	0	5.98	0	0	0	0	0	0	-24.52	-24.52
Inverter Transformer	MV6-3 T	370202	4907140	2	0	0	56.1	56.1	1	1483.46	3.25	0	74.43	0	0.19	0	0	5.98	0	0	0	0	0	0	-24.54	-24.54
Inverter Transformer	MV4-13 T	369057	4908605	2	0	0	56.1	56.1	1	1536.38	3.25	0	74.73	0	0.21	0	0	6.1	0	0	0	0	0	0	-24.98	-24.98

	Inverter Transformer	MV4-12 T	369049	4908803	2	0	0	56.1	56.1	1	1561.33	3.25	0	74.87	0	0.22	0	0	6.15	0	0	0	0	0	0	-25.18	-25.18
	Inverter Transformer	MV4-2 T	369267	4909397	2	0	0	56.1	56.1	1	1562.23	3.25	0	74.87	0	0.22	0	0	6.15	0	0	0	0	0	0	-25.19	-25.19
	Inverter Transformer	MV4-3 T	369234	4909397	2	0	0	56.1	56.1	1	1590.33	3.25	0	75.03	0	0.23	0	0	6.21	0	0	0	0	0	0	-25.42	-25.42
	Inverter Transformer	MV4-7 T	369040	4909001	2	0	0	56.1	56.1	1	1611.43	3.25	0	75.14	0	0.24	0	0	6.25	0	0	0	0	0	0	-25.58	-25.58
	Inverter Transformer	MV4-4 T	369033	4909199	2	0	0	56.1	56.1	1	1681.66	3.25	0	75.51	0	0.27	0	0	6.4	0	0	0	0	0	0	-26.13	-26.13
	Inverter Transformer	MV4-1 T	369017	4909397	2	0	0	56.1	56.1	1	1779.34	3.25	0	76.01	0	0.31	0	0	6.6	0	0	0	0	0	0	-26.86	-26.86
	Inverter Transformer	MV3-2 T	368677	4907928	2	0	0	56.1	56.1	1	2021.02	3.25	0	77.11	0	0.41	0	0	7.08	0	0	0	0	0	0	-28.55	-28.55
	Inverter Transformer	MV3-8 T	368685	4907712	2	0	0	56.1	56.1	1	2092.45	3.25	0	77.41	0	0.44	0	0	7.22	0	0	0	0	0	0	-29.02	-29.02
	Inverter Transformer	MV3-4 T	368507	4907925	2	0	0	56.1	56.1	1	2183.74	3.25	0	77.78	0	0.48	0	0	7.4	0	0	0	0	0	0	-29.61	-29.61
	Inverter Transformer	MV3-14 T	368678	4907498	2	0	0	56.1	56.1	1	2195.12	3.25	0	77.83	0	0.49	0	0	7.42	0	0	0	0	0	0	-29.68	-29.68
	Inverter Transformer	MV3-9 T	368517	4907703	2	0	0	56.1	56.1	1	2250.16	3.25	0	78.04	0	0.51	0	0	7.53	0	0	0	0	0	0	-30.02	-30.02
	Inverter Transformer	MV3-20 T	368683	4907317	2	0	0	56.1	56.1	1	2284.87	3.25	0	78.18	0	0.52	0	0	7.59	0	0	0	0	0	0	-30.23	-30.23
	Inverter Transformer	MV3-16 T	368509	4907475	2	0	0	56.1	56.1	1	2354.63	3.25	0	78.44	0	0.55	0	0	7.72	0	0	0	0	0	0	-30.66	-30.66
	Inverter Transformer	MV3-5 T	368335	4907843	2	0	0	56.1	56.1	1	2372.46	3.25	0	78.5	0	0.56	0	0	7.76	0	0	0	0	0	0	-30.76	-30.76
	Inverter Transformer	MV3-22 T	368661	4907142	2	0	0	56.1	56.1	1	2403.05	3.25	0	78.62	0	0.58	0	0	7.81	0	0	0	0	0	0	-30.94	-30.94
	Inverter Transformer	MV3-11 T	368340	4907662	2	0	0	56.1	56.1	1	2429.46	3.25	0	78.71	0	0.59	0	0	7.86	0	0	0	0	0	0	-31.1	-31.1
	Inverter Transformer	MV3-15 T	368351	4907477	2	0	0	56.1	56.1	1	2494.68	3.25	0	78.94	0	0.61	0	0	7.98	0	0	0	0	0	0	-31.48	-31.48
	Inverter Transformer	MV3-21 T	368484	4907206	2	0	0	56.1	56.1	1	2512.19	3.25	0	79	0	0.62	0	0	8.01	0	0	0	0	0	0	-31.58	-31.58
	Inverter Transformer	MV3-1 T	368150	4907976	2	0	0	56.1	56.1	1	2514.41	3.25	0	79.01	0	0.62	0	0	8.02	0	0	0	0	0	0	-31.59	-31.59
	Inverter Transformer	MV3-6 T	368156	4907834	2	0	0	56.1	56.1	1	2546.01	3.25	0	79.12	0	0.64	0	0	8.07	0	0	0	0	0	0	-31.77	-31.77
	Inverter Transformer	MV3-19 T	368352	4907347	2	0	0	56.1	56.1	1	2553.48	3.25	0	79.14	0	0.64	0	0	8.09	0	0	0	0	0	0	-31.81	-31.81
	Inverter Transformer	MV3-10 T	368162	4907669	2	0	0	56.1	56.1	1	2592.95	3.25	0	79.28	0	0.66	0	0	8.16	0	0	0	0	0	0	-32.03	-32.03
	Inverter Transformer	MV3-17 T	368183	4907472	2	0	0	56.1	56.1	1	2648.76	3.25	0	79.46	0	0.68	0	0	8.26	0	0	0	0	0	0	-32.34	-32.34
	Inverter Transformer	MV3-3 T	367944	4907927	2	0	0	56.1	56.1	1	2726.16	3.25	0	79.71	0	0.71	0	0	8.39	0	0	0	0	0	0	-32.76	-32.76
	Inverter Transformer	MV3-7 T	367951	4907754	2	0	0	56.1	56.1	1	2765.44	3.25	0	79.84	0	0.73	0	0	8.46	0	0	0	0	0	0	-32.97	-32.97
	Inverter Transformer	MV3-13 T	367958	4907577	2	0	0	56.1	56.1	1	2816.25	3.25	0	79.99	0	0.75	0	0	8.55	0	0	0	0	0	0	-33.24	-33.24
	Inverter Transformer	MV3-18 T	367757	4907412	2	0	0	56.1	56.1	1	3063.69	3.25	0	80.72	0	0.86	0	0	8.98	0	0	0	0	0	0	-34.5	-34.5
	Inverter Transformer	MV3-12 T	367674	4907594	2	0	0	56.1	56.1	1	3078.16	3.25	0	80.77	0	0.86	0	0	9	0	0	0	0	0	0	-34.57	-34.57
	Line Reactor	NGR	369421	4908787.5	5	0	0	45.4	45.4	1	1191.83	5.25	0	72.52	0	3.46	1.2	0.04	0.49	0	0	0	0	0	0	-32.33	-32.33
	Inverter Transformer	MV2-2 T	365982	4906654	2	0	0	56.1	56.1	1	4993.62	3.25	0	84.97	0	1.62	0	0	11.85	0	0	0	0	0	0	-42.38	-42.38
	Inverter Transformer	MV2-3 T	365814	4906641	2	0	0	56.1	56.1	1	5154	3.25	0	85.24	0	1.68	0	0	12.06	0	0	0	0	0	0	-42.92	-42.92
	Inverter Transformer	MV2-4 T	365590	4906628	2	0	0	56.1	56.1	1	5367.05	3.25	0	85.59	0	1.76	0	0	12.33	0	0	0	0	0	0	-43.62	-43.62
	Inverter Transformer	MV1-1 T	364721	4906166	2	0	0	56.1	56.1	1	6345.42	3.25	0	87.05	0	2.07	0	0	13.5	0	0	0	0	0	0	-46.57	-46.57
	Inverter Transformer	MV1-2 T	364759	4906063	2	0	0	56.1	56.1	1	6350.25	3.25	0	87.06	0	2.07	0	0	13.51	0	0	0	0	0	0	-46.58	-46.58
	Inverter Transformer	MV1-4 T	364821	4905918	2	0	0	56.1	56.1	1	6352.51	3.25	0	87.06	0	2.07	0	0	13.51	0	0	0	0	0	0	-46.59	-46.59
	Inverter Transformer	MV1-15 T	365309	4904994	2	0	0	56.1	56.1	1	6380.88	3.25	0	87.1	0	2.08	0	0	13.55	0	0	0	0	0	0	-46.67	-46.67
	Inverter Transformer	MV1-12 T	365044	4905386	2	0	0	56.1	56.1	1	6398.1	3.25	0	87.12	0	2.09	0	0	13.56	0	0	0	0	0	0	-46.71	-46.71
	Inverter Transformer	MV1-5 T	364676	4905892	2	0	0	56.1	56.1	1	6495.22	3.25	0	87.25	0	2.12	0	0	13.67	0	0	0	0	0	0	-46.98	-46.98
	Inverter Transformer	MV1-8 T	364782	4905647	2	0	0	56.1	56.1	1	6505.19	3.25	0	87.27	0	2.12	0	0	13.69	0	0	0	0	0	0	-47.01	-47.01
	Inverter Transformer	MV1-3 T	364435	4906039	2	0	0	56.1	56.1	1	6658.23	3.25	0	87.47	0	2.16	0	0	13.86	0	0	0	0	0	0	-47.43	-47.43
	Inverter Transformer	MV1-6 T	364482	4905835	2	0	0	56.1	56.1	1	6695.52	3.25	0	87.52	0	2.17	0	0	13.9	0	0	0	0	0	0	-47.53	-47.53
	Inverter Transformer	MV1-9 T	364555	4905646	2	0	0	56.1	56.1	1	6709.18	3.25	0	87.53	0	2.18	0	0	13.91	0	0	0	0	0	0	-47.57	-47.57
	Inverter Transformer	MV1-11 T	364649	4905414	2	0	0	56.1	56.1	1	6730.36	3.25	0	87.56	0	2.18	0	0	13.94	0	0	0	0	0	0	-47.62	-47.62
Limit. Valu	0	0																								
Level D/N:	37.6465	37.6465																								

Receiver: Existing Noise Receptor
ID: S-R52
X: 370411
Y: 4909723
Z: 4.5
Ground: 0

ISO	Description	ID	X	Y	Z	Ground	ReflOrd	LxT	LxN	L/A	Dist.	hm	Freq	Adiv	K0b	Agr	Abar	z	Aatm	Afol	Ahous	Cmet	CmetN	Dc	RL	LtotT	LtotN
	Sol_Luce Substation	S_Substation	369426	4908792	3.5	0	0	112.1	112.1	1	1355.35	5.25	0	73.64	0	0	4.64	0.35	3.21	0	0	0	0	0	0	30.58	30.58
	Inverter	MV5-1	370020	4909142	2	0	0	100.3	100.3	1	700.32	3.25	0	67.91	0	-0.41	0	0	9.74	0	0	0	0	0	0	23.08	23.08
	Inverter	MV5-3	370231	4908851	2	0	0	100.3	100.3	1	890.39	3.25	0	69.99	0	-0.3	0	0	10.53	0	0	0	0	0	0	20.09	20.09
	Inverter	MV5-2	370006	4908853	2	0	0	100.3	100.3	1	959.65	3.25	0	70.64	0	-0.27	0	0	10.78	0	0	0	0	0	0	19.16	19.16
	Inverter	MV5-4	370324	4908707	2	0	0	100.3	100.3	1	1019.72	3.25	0	71.17	0	-0.24	0	0	10.98	0	0	0	0	0	0	18.4	18.4
	Inverter	MV5-5	370015	4908690	2	0	0	100.3	100.3	1	1106.31	3.25	0	71.88	0	-0.2	0	0	11.25	0	0	0	0	0	0	17.38	17.38
	Inverter	MV4-2	369272	4909397	2	0	0	100.3	100.3	1	1184.74	3.25	0	72.47	0	-0.16	0	0	11.48	0	0	0	0	0	0	16.52	16.52
	Inverter	MV4-3	369229	4909397	2	0	0	100.3	100.3	1	1226.13	3.25	0	72.77	0	-0.14	0	0	11.6	0	0	0	0	0	0	16.08	16.08
	Inverter	MV4-5	369289	4909199	2	0	0	100.3	100.3	1	1238.33	3.25	0	72.86	0	-0.14	0	0	11.63	0	0	0	0	0	0	15.96	15.96
	Inverter	MV4-6	369243	4909192	2	0	0	100.3	100.3	1	1283.04	3.25	0	73.16	0	-0.12	0	0	11.76	0	0	0	0	0	0	15.51	15.51
	Inverter	MV4-9	369289	4909001	2	0	0	100.3	100.3	1	1334.23	3.25	0	73.5	0	-0.1	0	0	11.9	0	0	0	0	0	0	15.01	15.01
	Inverter	MV4-8	369256	4909001	2	0	0	100.3	100.3	1	1362.1	3.25	0	73.68	0	-0.09	0	0	11.97	0	0	0	0	0	0	14.74	14.74
	Inverter	MV4-10	369312	4908858	2	0	0	100.3	100.3	1	1398.58	3.25	0	73.91	0	-0.07	0	0	12.07	0	0	0	0	0	0	14.4	14.4
	Inverter	MV4-1	369011	4909397	2	0	0	100.3	100.3	1	1437.46	3.25	0	74.15	0	-0.06	0	0	12.17	0	0	0	0	0	0	14.05	14.05
	Inverter	MV4-11	369264	4908855	2	0	0	100.3	100.3	1	1438.42	3.25	0	74.16	0	-0.06	0	0	12.17	0	0	0	0	0	0	14.04	14.04
	Inverter	MV4-4	369027	4909199	2	0	0	100.3	100.3	1	1479.88	3.25	0	74.4	0	-0.04	0	0	12.27	0	0	0	0	0	0	13.67	13.67
	Inverter	MV4-7	369035	4909001	2	0	0	100.3	100.3	1	1553.92	3.25	0	74.83	0	-0.01	0	0	12.46	0	0	0	0	0	0	13.04	13.04
	DSTATCOM - 10 MVAR #1	DSAT1	369437	4908757	2.5	0	0	96.6	96.6	1	1371.8	3.5	0	73.75	0	3.08	0	0	1.32	0	0	0	0	0	0	18.48	18.48
	DSTATCOM - 10 MVAR #2	DSAT2	369403	4908757	2.5	0	0	96.6	96.6	1	1396.15	5.22	0	73.9	0	3.69	0.93	0.16	1.34	0	0	0	0	0	0	16.77	16.77
	Inverter	MV6-2	370085	4907339	2	0	0	100.3	100.3	1	2406.19	3.25	0	78.63	0	0.24	0	0	14.28	0	0	0	0	0	0	7.17	7.17

Inverter	MV6-3	370207	4907140	2	0	0	100.3	100.3	1	2591.04	3.25	0	79.27	0	0.28	0	0	14.63	0	0	0	0	0	0	6.14	6.14
Inverter	MV3-8	368680	4907712	2	0	0	100.3	100.3	1	2653.39	3.25	0	79.48	0	0.29	0	0	14.75	0	0	0	0	0	0	5.8	5.8
Inverter	MV3-9	368512	4907703	2	0	0	100.3	100.3	1	2772.47	3.25	0	79.86	0	0.32	0	0	14.96	0	0	0	0	0	0	5.17	5.17
Inverter	MV3-14	368684	4907498	2	0	0	100.3	100.3	1	2816.59	3.25	0	79.99	0	0.33	0	0	15.04	0	0	0	0	0	0	4.95	4.95
Inverter	MV3-11	368346	4907662	2	0	0	100.3	100.3	1	2917.53	3.25	0	80.3	0	0.35	0	0	15.23	0	0	0	0	0	0	4.44	4.44
Inverter	MV3-6	368162	4907834	2	0	0	100.3	100.3	1	2937.06	3.25	0	80.36	0	0.35	0	0	15.26	0	0	0	0	0	0	4.34	4.34
Inverter	MV3-16	368514	4907475	2	0	0	100.3	100.3	1	2941.45	3.25	0	80.37	0	0.35	0	0	15.27	0	0	0	0	0	0	4.32	4.32
Inverter	MV3-20	368689	4907317	2	0	0	100.3	100.3	1	2958.74	3.25	0	80.42	0	0.35	0	0	15.3	0	0	0	0	0	0	4.24	4.24
Inverter	MV3-10	368167	4907669	2	0	0	100.3	100.3	1	3042.11	3.25	0	80.66	0	0.37	0	0	15.45	0	0	0	0	0	0	3.83	3.83
Inverter	MV3-15	368357	4907477	2	0	0	100.3	100.3	1	3043.59	3.25	0	80.67	0	0.37	0	0	15.45	0	0	0	0	0	0	3.82	3.82
Inverter	MV3-3	367939	4907927	2	0	0	100.3	100.3	1	3055.55	3.25	0	80.7	0	0.37	0	0	15.47	0	0	0	0	0	0	3.77	3.77
Inverter	MV3-19	368357	4907347	2	0	0	100.3	100.3	1	3140.75	3.25	0	80.94	0	0.39	0	0	15.62	0	0	0	0	0	0	3.36	3.36
Inverter	MV3-7	367945	4907754	2	0	0	100.3	100.3	1	3155.65	3.25	0	80.98	0	0.39	0	0	15.64	0	0	0	0	0	0	3.29	3.29
Inverter	MV3-17	368178	4907472	2	0	0	100.3	100.3	1	3170.69	3.25	0	81.02	0	0.39	0	0	15.67	0	0	0	0	0	0	3.22	3.22
Inverter	MV3-21	368478	4907206	2	0	0	100.3	100.3	1	3173.61	3.25	0	81.03	0	0.39	0	0	15.68	0	0	0	0	0	0	3.21	3.21
Inverter	MV3-13	367963	4907577	2	0	0	100.3	100.3	1	3255.46	3.25	0	81.25	0	0.41	0	0	15.82	0	0	0	0	0	0	2.83	2.83
Inverter	MV6-1	370235	4907364	2	0	0	97.3	97.3	1	2365.56	3.25	0	78.48	0	0.23	0	0	14.2	0	0	0	0	0	0	4.41	4.41
Inverter	MV3-12	367668	4907594	2	0	0	100.3	100.3	1	3472.28	3.25	0	81.81	0	0.45	0	0	16.18	0	0	0	0	0	0	1.87	1.87
Inverter	MV3-18	367752	4907412	2	0	0	100.3	100.3	1	3522.93	3.25	0	81.94	0	0.45	0	0	16.27	0	0	0	0	0	0	1.65	1.65
Fixed Reactor Bank 2	FRB2	369464	4908755	6	0	0	89.8	89.8	1	1354.19	5.25	0	73.63	0	-1.03	0	0	3.21	0	0	0	0	0	0	13.96	13.96
Inverter	MV5-6	369982	4908507	2	0	0	89.1	89.1	1	1289.46	3.25	0	73.21	0	0.75	0	0	6.84	0	0	0	0	0	0	8.26	8.26
Fixed Reactor Bank 1	FRB1	369378	4908755	6	0	0	89.8	89.8	1	1415.67	5.28	0	74.02	0	-0.69	4.2	0	3.33	0	0	0	0	0	0	8.91	8.91
Inverter	MV2-3	365820	4906641	2	0	0	100.3	100.3	1	5529.56	3.25	0	85.85	0	0.68	0	0	19.34	0	0	0	0	0	0	-5.57	-5.57
Inverter	MV2-4	365586	4906624	2	0	0	100.3	100.3	1	5734.49	3.25	0	86.17	0	0.69	0	0	19.63	0	0	0	0	0	0	-6.18	-6.18
Inverter	MV4-12	369043	4908803	2	0	0	89.1	89.1	1	1648.58	3.25	0	75.34	0	0.83	0	0	7.46	0	0	0	0	0	0	5.43	5.43
Inverter	MV4-14	369176	4908507	2	0	0	89.1	89.1	1	1733.17	3.25	0	75.78	0	0.85	0	0	7.6	0	0	0	0	0	0	4.83	4.83
Inverter	MV4-15	369176	4908481	2	0	0	89.1	89.1	1	1751.51	3.25	0	75.87	0	0.85	0	0	7.63	0	0	0	0	0	0	4.71	4.71
Inverter	MV4-13	369051	4908605	2	0	0	89.1	89.1	1	1760.55	3.25	0	75.91	0	0.85	0	0	7.65	0	0	0	0	0	0	4.64	4.64
Inverter	MV1-1	364715	4906166	2	0	0	100.3	100.3	1	6715.41	3.25	0	87.54	0	0.71	0	0	20.94	0	0	0	0	0	0	-8.88	-8.88
Inverter	MV1-2	364753	4906063	2	0	0	100.3	100.3	1	6738.59	3.25	0	87.57	0	0.71	0	0	20.97	0	0	0	0	0	0	-8.94	-8.94
Inverter	MV1-4	364815	4905918	2	0	0	100.3	100.3	1	6767.07	3.25	0	87.61	0	0.71	0	0	21	0	0	0	0	0	0	-9.01	-9.01
Inverter	MV1-5	364671	4905892	2	0	0	100.3	100.3	1	6901.03	3.25	0	87.78	0	0.71	0	0	21.17	0	0	0	0	0	0	-9.35	-9.35
Inverter	MV1-12	365038	4905386	2	0	0	100.3	100.3	1	6904.98	3.25	0	87.78	0	0.71	0	0	21.18	0	0	0	0	0	0	-9.36	-9.36
Inverter	MV1-8	364788	4905647	2	0	0	100.3	100.3	1	6944.92	3.25	0	87.83	0	0.71	0	0	21.23	0	0	0	0	0	0	-9.46	-9.46
Inverter	MV1-15	365315	4904994	2	0	0	100.3	100.3	1	6952.17	4.24	0	87.84	0	1.77	2.31	0	21.24	0	0	0	0	0	0	-12.85	-12.85
Inverter	MV1-6	364477	4905835	2	0	0	100.3	100.3	1	7094.29	3.25	0	88.02	0	0.71	0	0	21.42	0	0	0	0	0	0	-9.83	-9.83
Inverter	MV1-9	364561	4905646	2	0	0	100.3	100.3	1	7130.53	3.25	0	88.06	0	0.71	0	0	21.46	0	0	0	0	0	0	-9.92	-9.92
Inverter	MV1-11	364655	4905414	2	0	0	100.3	100.3	1	7190.2	3.25	0	88.13	0	0.7	0	0	21.54	0	0	0	0	0	0	-10.06	-10.06
Inverter	MV2-1	365842	4906816	2	0	0	97.3	97.3	1	5415.39	3.25	0	85.67	0	0.67	0	0	19.18	0	0	0	0	0	0	-8.22	-8.22
Inverter	MV3-2	368671	4907928	2	0	0	89.1	89.1	1	2499.93	3.25	0	78.96	0	1.03	0	0	8.85	0	0	0	0	0	0	0.23	0.23
Inverter	MV1-7	364925	4905782	2	0	0	97.3	97.3	1	6754.83	3.25	0	87.59	0	0.71	0	0	20.99	0	0	0	0	0	0	-11.98	-11.98
Inverter	MV3-4	368502	4907925	2	0	0	89.1	89.1	1	2622.42	4.66	0	79.37	0	1.85	2.76	0.01	9.04	0	0	0	0	0	0	-3.96	-3.96
SubstationTransformer	W_ST	369711.17	4906112.3	2.5	0	0	92	92	1	3677.93	3.5	0	82.31	0	0.25	0	0	6.93	0	0	0	0	0	0	2.48	2.48
Inverter	MV1-10	365004	4905564	2	0	0	97.3	97.3	1	6821.51	3.25	0	87.68	0	0.71	0	0	21.07	0	0	0	0	0	0	-12.15	-12.15
Inverter	MV1-14	365163	4905049	2	0	0	97.3	97.3	1	7027.64	3.25	0	87.94	0	0.71	0	0	21.33	0	0	0	0	0	0	-12.67	-12.67
Inverter	MV3-5	368340	4907843	2	0	0	89.1	89.1	1	2797.04	3.25	0	79.93	0	1.1	0	0	9.31	0	0	0	0	0	0	-1.28	-1.28
Inverter	MV1-13	364731	4905241	2	0	0	97.3	97.3	1	7235.38	3.25	0	88.19	0	0.7	0	0	21.59	0	0	0	0	0	0	-13.17	-13.17
Inverter	MV3-1	368156	4907976	2	0	0	89.1	89.1	1	2852.55	3.25	0	80.1	0	1.11	0	0	9.39	0	0	0	0	0	0	-1.55	-1.55
Inverter	MV3-22	368656	4907142	2	0	0	89.1	89.1	1	3121.15	3.25	0	80.89	0	1.18	0	0	9.8	0	0	0	0	0	0	-2.8	-2.8
Westbrook Inverter Enclosur	W_INV6	369875	4906578	2	0	0	89.1	89.1	1	3190.35	3.25	0	81.08	0	1.19	0	0	9.9	0	0	0	0	0	0	-3.12	-3.12
Westbrook Inverter Enclosur	W_INV5	369719	4906574	2	0	0	89.1	89.1	1	3224.14	3.25	0	81.17	0	1.2	0	0	9.95	0	0	0	0	0	0	-3.27	-3.27
Westbrook Inverter Enclosur	W_INV7	369780	4906417	2	0	0	89.1	89.1	1	3365.68	3.25	0	81.54	0	1.24	0	0	10.16	0	0	0	0	0	0	-3.88	-3.88
Westbrook Inverter Enclosur	W_INV2	369374	4906388	2	0	0	89.1	89.1	1	3492.51	3.25	0	81.86	0	1.27	0	0	10.35	0	0	0	0	0	0	-4.42	-4.42
Westbrook Inverter Enclosur	W_INV4	369673	4906164	2	0	0	89.1	89.1	1	3634.71	3.25	0	82.21	0	1.3	0	0	10.56	0	0	0	0	0	0	-5.01	-5.01
Westbrook Inverter Enclosur	W_INV3	369508	4906164	2	0	0	89.1	89.1	1	3671.77	3.25	0	82.3	0	1.31	0	0	10.61	0	0	0	0	0	0	-5.16	-5.16
Inverter	MV6-4	370250	4906966	2	0	0	86.1	86.1	1	2761.7	3.25	0	79.82	0	1.09	0	0	9.25	0	0	0	0	0	0	-4.11	-4.11
Westbrook Inverter Enclosur	W_INV1	369409	4906578	2	0	0	86.1	86.1	1	3300.76	3.25	0	81.37	0	1.22	0	0	10.07	0	0	0	0	0	0	-6.6	-6.6
Inverter	MV2-2	365977	4906654	2	0	0	89.1	89.1	1	5392.51	3.25	0	85.64	0	1.74	0	0	12.98	0	0	0	0	0	0	-11.3	-11.3
Gardiner Substation	G_Sub	366586.3	4903349.9	2.5	0	0	90.8	90.8	1	7432.68	4.25	0	88.42	0	2.13	1.83	0.38	11.15	0	0	0	0	0	0	-12.75	-12.75
Inverter	MV1-3	364440	4906039	2	0	0	89.1	89.1	1	7016.03	3.25	0	87.92	0	2.13	0	0	15.01	0	0	0	0	0	0	-16	-16
Inverters	G_Inv2	366676.9	4903239.1	2	0	0	87.7	87.7	1	7482.28	3.25	0	88.48	0	2.96	0	0	8.47	0	0	0	0	0	0	-12.25	-12.25
Inverters	G_Inv1	366526.4	4903225.8	2	0	0	87.7	87.7	1	7569.92	3.25	0	88.58	0	2.96	0	0	8.56	0	0	0	0	0	0	-12.44	-12.44
Inverters	G_Inv4	366732.8	4903105	2	0	0	87.7	87.7	1	7571.47	3.25	0	88.58	0	2.96	0	0	8.56	0	0	0	0	0	0	-12.44	-12.44
Inverters	G_Inv3	366583.7	4903091.4	2	0	0	87.7	87.7	1	7656.78	3.25	0	88.68	0	2.96	0	0	8.64	0	0	0	0	0	0	-12.62	-12.62
Inverters	G_Inv6	366788.5	4902972	2	0	0	87.7	87.7	1	7661.5	3.25	0	88.69	0	2.96	0	0	8.65	0	0	0	0	0	0	-12.63	-12.63
Inverters	G_Inv5	366638.5	4902958.1	2	0	0	87.7	87.7	1	7745.68	3.25	0	88.78	0	2.96	0	0	8.73	0	0	0	0	0	0	-12.81	-12.81
Inverters	G_Inv8	366844.5	4902838.5	2	0	0	87.7	87.7	1	7753.47	3.25	0	88.79	0	2.96	0	0	8.74	0	0	0	0	0	0	-12.83	-12.83
Inverters	G_Inv7	366694.6	4902824.7	2	0	0	87.7	87.7	1	7835.7	3.25	0	88.88	0	2.96	0	0	8.82	0	0	0	0	0	0	-13	-13
Inverters	G_Inv10	366900.7	4902704.8	2	0	0	87.7	87.7	1	7847.12	3.25	0	88.89	0	2.96	0	0	8.83	0	0	0	0	0	0	-13.02	-13.02
Inverters	G_Inv9	366750.9	4902691.8	2	0	0	87.7	87.7	1	7926.8	3.25	0	88.98	0	2.96	0	0	8.91	0	0	0	0	0	0	-13.19	-13.19
Westbrook Inverter Transfor	W_INVTR1	369403	4906578	2	0	0	78.2	78.2	1	3302.59	3.25	0	81.38	0	-2.79	0	0	1.78	0	0	0	0	0	0	-2.12	-2.12
Westbrook Inverter Transfor	W_INVTR6	369881	4906578	2	0	0	77.3	77.3	1	3189.35	3.25	0	81.07	0	-2.76	0	0	1.74	0	0	0	0	0	0	-2.7	-2.7
Westbrook Inverter Transfor	W_INVTR5	369725	4906574	2	0	0	77.3	77.3	1	3222.86	3.25	0	81.16	0	-2.77	0	0	1.75	0	0	0	0	0	0	-2.8	-2.8
Westbrook Inverter Transfor	W_INVTR7	369786	4906417	2	0	0	77.3	77.3	1	3364.56	3.25	0	81.54	0	-2.81	0	0	1.81	0	0	0	0	0	0	-3.19	-3.19

Westbrook Inverter Transfor	W_INVTR2	369368	4906388	2	0	0	77.3	77.3	1	3494.29	3.25	0	81.87	0	-2.84	0	0	1.86	0	0	0	0	0	0	-3.54	-3.54
Westbrook Inverter Transfor	W_INVTR4	369679	4906164	2	0	0	77.3	77.3	1	3633.5	3.25	0	82.21	0	-2.88	0	0	1.91	0	0	0	0	0	0	-3.9	-3.9
Westbrook Inverter Transfor	W_INVTR3	369514	4906164	2	0	0	77.3	77.3	1	3670.3	3.25	0	82.29	0	-2.89	0	0	1.93	0	0	0	0	0	0	-4	-4
Inverter Transformer	MV6-1 T	370230	4907364	2	0	0	69.4	69.4	1	2365.93	3.25	0	78.48	0	2.3	0	0	5.32	0	0	0	0	0	0	-16.75	-16.75
Inverter Transformer	MV6-4 T	370244	4906966	2	0	0	69.4	69.4	1	2762.05	3.25	0	79.82	0	2.43	0	0	5.68	0	0	0	0	0	0	-18.59	-18.59
Inverter Transformer	MV5-1 T	370015	4909142	2	0	0	56.1	56.1	1	703.12	3.25	0	67.94	0	-0.08	0	0	4.14	0	0	0	0	0	0	-15.94	-15.94
Inverter Transformer	MV5-3 T	370237	4908851	2	0	0	56.1	56.1	1	889.19	3.25	0	69.98	0	-0.02	0	0	4.62	0	0	0	0	0	0	-18.52	-18.52
Inverter Transformer	MV5-2 T	370011	4908853	2	0	0	56.1	56.1	1	957.55	3.25	0	70.62	0	0	0	0	4.79	0	0	0	0	0	0	-19.35	-19.35
Inverter Transformer	MV5-4 T	370330	4908707	2	0	0	56.1	56.1	1	1019.23	3.25	0	71.17	0	0.02	0	0	4.93	0	0	0	0	0	0	-20.06	-20.06
Inverter Transformer	MV5-5 T	370021	4908690	2	0	0	56.1	56.1	1	1104.17	3.25	0	71.86	0	0.05	0	0	5.13	0	0	0	0	0	0	-20.99	-20.99
Inverter Transformer	MV2-1 T	365836	4906816	2	0	0	69.4	69.4	1	5420.45	3.25	0	85.68	0	3.09	0	0	7.66	0	0	0	0	0	0	-27.08	-27.08
Inverter Transformer	MV4-2 T	369267	4909397	2	0	0	56.1	56.1	1	1189.55	3.25	0	72.51	0	0.08	0	0	5.33	0	0	0	0	0	0	-21.86	-21.86
Inverter Transformer	MV4-3 T	369234	4909397	2	0	0	56.1	56.1	1	1221.32	3.25	0	72.74	0	0.09	0	0	5.4	0	0	0	0	0	0	-22.17	-22.17
Inverter Transformer	MV4-5 T	369283	4909199	2	0	0	56.1	56.1	1	1243.77	3.25	0	72.89	0	0.1	0	0	5.45	0	0	0	0	0	0	-22.39	-22.39
Inverter Transformer	MV4-6 T	369249	4909192	2	0	0	56.1	56.1	1	1277.58	3.25	0	73.13	0	0.11	0	0	5.53	0	0	0	0	0	0	-22.71	-22.71
Inverter Transformer	MV5-6 T	369987	4908507	2	0	0	56.1	56.1	1	1287.8	3.25	0	73.2	0	0.12	0	0	5.55	0	0	0	0	0	0	-22.81	-22.81
Inverter Transformer	MV4-9 T	369284	4909001	2	0	0	56.1	56.1	1	1338.44	3.25	0	73.53	0	0.14	0	0	5.67	0	0	0	0	0	0	-23.28	-23.28
Inverter Transformer	MV4-8 T	369262	4909001	2	0	0	56.1	56.1	1	1357.02	3.25	0	73.65	0	0.14	0	0	5.71	0	0	0	0	0	0	-23.44	-23.44
Inverter Transformer	MV4-10 T	369307	4908858	2	0	0	56.1	56.1	1	1402.51	3.25	0	73.94	0	0.16	0	0	5.81	0	0	0	0	0	0	-23.85	-23.85
Inverter Transformer	MV4-1 T	369017	4909397	2	0	0	56.1	56.1	1	1431.61	3.25	0	74.12	0	0.17	0	0	5.87	0	0	0	0	0	0	-24.1	-24.1
Inverter Transformer	MV4-11 T	369269	4908855	2	0	0	56.1	56.1	1	1434.43	3.25	0	74.13	0	0.17	0	0	5.88	0	0	0	0	0	0	-24.12	-24.12
Inverter Transformer	MV1-7 T	364919	4905782	2	0	0	69.4	69.4	1	6759.7	3.25	0	87.6	0	3.29	0	0	8.47	0	0	0	0	0	0	-30	-30
Inverter Transformer	MV4-4 T	369033	4909199	2	0	0	56.1	56.1	1	1474.27	3.25	0	74.37	0	0.19	0	0	5.96	0	0	0	0	0	0	-24.46	-24.46
Inverter Transformer	MV1-10 T	365010	4905564	2	0	0	69.4	69.4	1	6816.75	3.25	0	87.67	0	3.3	0	0	8.5	0	0	0	0	0	0	-30.12	-30.12
Inverter Transformer	MV1-14 T	365157	4905049	2	0	0	69.4	69.4	1	7032.13	3.25	0	87.94	0	3.32	0	0	8.62	0	0	0	0	0	0	-30.53	-30.53
Inverter Transformer	MV4-7 T	369040	4909001	2	0	0	56.1	56.1	1	1549.49	3.25	0	74.8	0	0.22	0	0	6.12	0	0	0	0	0	0	-25.09	-25.09
Inverter Transformer	MV1-13 T	364725	4905241	2	0	0	69.4	69.4	1	7240.09	3.25	0	88.19	0	3.34	0	0	8.74	0	0	0	0	0	0	-30.92	-30.92
Inverter Transformer	MV4-12 T	369049	4908803	2	0	0	56.1	56.1	1	1643.61	3.25	0	75.32	0	0.26	0	0	6.32	0	0	0	0	0	0	-25.84	-25.84
Inverter Transformer	MV4-14 T	369182	4908507	2	0	0	56.1	56.1	1	1728.9	3.25	0	75.76	0	0.29	0	0	6.5	0	0	0	0	0	0	-26.49	-26.49
Inverter Transformer	MV4-15 T	369170	4908481	2	0	0	56.1	56.1	1	1755.75	3.25	0	75.89	0	0.3	0	0	6.55	0	0	0	0	0	0	-26.69	-26.69
Inverter Transformer	MV4-13 T	369057	4908605	2	0	0	56.1	56.1	1	1755.92	3.25	0	75.89	0	0.3	0	0	6.55	0	0	0	0	0	0	-26.69	-26.69
Inverter Transformer	MV6-2 T	370091	4907339	2	0	0	56.1	56.1	1	2405.38	3.25	0	78.62	0	0.58	0	0	7.82	0	0	0	0	0	0	-30.96	-30.96
Inverter Transformer	MV3-2 T	368677	4907928	2	0	0	56.1	56.1	1	2495.75	3.25	0	78.94	0	0.61	0	0	7.98	0	0	0	0	0	0	-31.48	-31.48
Inverter Transformer	MV6-3 T	370202	4907140	2	0	0	56.1	56.1	1	2591.44	3.25	0	79.27	0	0.66	0	0	8.15	0	0	0	0	0	0	-32.02	-32.02
Inverter Transformer	MV3-4 T	368507	4907925	2	0	0	56.1	56.1	1	2618.78	4.66	0	79.36	0	1.58	2.76	0.01	8.2	0	0	0	0	0	0	-35.85	-35.85
Inverter Transformer	MV3-8 T	368685	4907712	2	0	0	56.1	56.1	1	2650.13	3.25	0	79.47	0	0.68	0	0	8.26	0	0	0	0	0	0	-32.35	-32.35
Inverter Transformer	MV3-9 T	368517	4907703	2	0	0	56.1	56.1	1	2769.05	3.25	0	79.85	0	0.73	0	0	8.47	0	0	0	0	0	0	-32.99	-32.99
Inverter Transformer	MV3-5 T	368335	4907843	2	0	0	56.1	56.1	1	2800.75	3.25	0	79.95	0	0.74	0	0	8.53	0	0	0	0	0	0	-33.16	-33.16
Inverter Transformer	MV3-14 T	368678	4907498	2	0	0	56.1	56.1	1	2820.27	3.25	0	80.01	0	0.75	0	0	8.56	0	0	0	0	0	0	-33.26	-33.26
Inverter Transformer	MV3-1 T	368150	4907976	2	0	0	56.1	56.1	1	2857.3	3.25	0	80.12	0	0.77	0	0	8.62	0	0	0	0	0	0	-33.45	-33.45
Inverter Transformer	MV3-11 T	368340	4907662	2	0	0	56.1	56.1	1	2921.77	3.25	0	80.31	0	0.8	0	0	8.73	0	0	0	0	0	0	-33.79	-33.79
Inverter Transformer	MV3-6 T	368156	4907834	2	0	0	56.1	56.1	1	2941.66	3.25	0	80.37	0	0.81	0	0	8.77	0	0	0	0	0	0	-33.89	-33.89
Inverter Transformer	MV3-16 T	368509	4907475	2	0	0	56.1	56.1	1	2944.68	3.25	0	80.38	0	0.81	0	0	8.77	0	0	0	0	0	0	-33.9	-33.9
Inverter Transformer	MV3-20 T	368683	4907317	2	0	0	56.1	56.1	1	2962.23	3.25	0	80.43	0	0.81	0	0	8.8	0	0	0	0	0	0	-33.99	-33.99
Inverter Transformer	MV3-10 T	368162	4907669	2	0	0	56.1	56.1	1	3045.8	3.25	0	80.67	0	0.85	0	0	8.95	0	0	0	0	0	0	-34.41	-34.41
Inverter Transformer	MV3-15 T	368351	4907477	2	0	0	56.1	56.1	1	3047.64	3.25	0	80.68	0	0.85	0	0	8.95	0	0	0	0	0	0	-34.42	-34.42
Inverter Transformer	MV3-3 T	367944	4907927	2	0	0	56.1	56.1	1	3051.51	3.25	0	80.69	0	0.85	0	0	8.96	0	0	0	0	0	0	-34.44	-34.44
Inverter Transformer	MV3-22 T	368661	4907142	2	0	0	56.1	56.1	1	3118.34	3.25	0	80.88	0	0.88	0	0	9.07	0	0	0	0	0	0	-34.77	-34.77
Inverter Transformer	MV3-19 T	368352	4907347	2	0	0	56.1	56.1	1	3144.02	3.25	0	80.95	0	0.89	0	0	9.11	0	0	0	0	0	0	-34.89	-34.89
Inverter Transformer	MV3-7 T	367951	4907754	2	0	0	56.1	56.1	1	3150.96	3.25	0	80.97	0	0.89	0	0	9.12	0	0	0	0	0	0	-34.93	-34.93
Inverter Transformer	MV3-17 T	368183	4907472	2	0	0	56.1	56.1	1	3167.17	3.25	0	81.01	0	0.9	0	0	9.15	0	0	0	0	0	0	-35	-35
Inverter Transformer	MV3-21 T	368484	4907206	2	0	0	56.1	56.1	1	3169.96	3.25	0	81.02	0	0.9	0	0	9.15	0	0	0	0	0	0	-35.02	-35.02
Inverter Transformer	MV3-13 T	367958	4907577	2	0	0	56.1	56.1	1	3259.22	3.25	0	81.26	0	0.94	0	0	9.3	0	0	0	0	0	0	-35.44	-35.44
Inverter Transformer	MV3-12 T	367674	4907594	2	0	0	56.1	56.1	1	3467.54	3.25	0	81.8	0	1.03	0	0	9.64	0	0	0	0	0	0	-36.4	-36.4
Inverter Transformer	MV3-18 T	367757	4907412	2	0	0	56.1	56.1	1	3519.15	3.25	0	81.93	0	1.05	0	0	9.72	0	0	0	0	0	0	-36.64	-36.64
Line Reactor	NGR	369421	4908787.5	5	0	0	45.4	45.4	1	1362.08	5.25	0	73.68	0	3.45	1.22	0.03	0.56	0	0	0	0	0	0	-33.55	-33.55
Inverter Transformer	MV2-2 T	365982	4906654	2	0	0	56.1	56.1	1	5388.4	3.25	0	85.63	0	1.76	0	0	12.36	0	0	0	0	0	0	-43.69	-43.69
Inverter Transformer	MV2-3 T	365814	4906641	2	0	0	56.1	56.1	1	5534.54	3.25	0	85.86	0	1.81	0	0	12.54	0	0	0	0	0	0	-44.15	-44.15
Inverter Transformer	MV2-4 T	365590	4906628	2	0	0	56.1	56.1	1	5728.97	3.25	0	86.16	0	1.88	0	0	12.78	0	0	0	0	0	0	-44.76	-44.76
Inverter Transformer	MV1-1 T	364721	4906166	2	0	0	56.1	56.1	1	6710.32	3.25	0	87.53	0	2.18	0	0	13.91	0	0	0	0	0	0	-47.57	-47.57
Inverter Transformer	MV1-2 T	364759	4906063	2	0	0	56.1	56.1	1	6733.55	3.25	0	87.56	0	2.19	0	0	13.94	0	0	0	0	0	0	-47.63	-47.63
Inverter Transformer	MV1-4 T	364821	4905918	2	0	0	56.1	56.1	1	6762.11	3.25	0	87.6	0	2.19	0	0	13.97	0	0	0	0	0	0	-47.71	-47.71
Inverter Transformer	MV1-5 T	364676	4905892	2	0	0	56.1	56.1	1	6896.87	3.25	0	87.77	0	2.23	0	0	14.12	0	0	0	0	0	0	-48.06	-48.06
Inverter Transformer	MV1-12 T	365044	4905386	2	0	0	56.1	56.1	1	6900.31	3.25	0	87.78	0	2.23	0	0	14.12	0	0	0	0	0	0	-48.07	-48.07
Inverter Transformer	MV1-8 T	364782	4905647	2	0	0	56.1	56.1	1	6949.78	3.25	0	87.84	0	2.25	0	0	14.18	0	0	0	0	0	0	-48.2	-48.2
Inverter Transformer	MV1-15 T	365309	4904994	2	0	0	56.1	56.1	1	6956.57	4.24	0	87.85	0	3.03	1.59	0	14.18	0	0	0	0	0	0	-50.59	-50.59
Inverter Transformer	MV1-3 T	364435	4906039	2	0	0	56.1	56.1	1	7020.29	3.25	0	87.93	0	2.26	0	0	14.25	0	0	0	0	0	0	-48.39	-48.39
Inverter Transformer	MV1-6 T	364482	4905835	2	0	0	56.1	56.1	1	7090.11	3.25	0	88.01	0	2.28	0	0	14.33	0	0	0	0	0	0	-48.56	-48.56
Inverter Transformer	MV1-9 T	364555	4905646	2	0	0	56.1	56.1	1	7135.45	3.25	0	88.07	0	2.3	0	0	14.37	0	0	0	0	0	0	-48.68	-48.68
Inverter Transformer	MV1-11 T	364649	4905414	2	0	0	56.1	56.1	1	7195.01	3.25	0	88.14	0	2.31	0	0	14.44	0	0	0	0	0	0	-48.83	-48.83
Limit. Valu 0	0																								
Level D/N: 33.4959	33.4959																								

Receiver: Existing Noise Receptor

ID: S-R53
X: 370390
Y: 4909790
Z: 4.5
Ground: 0

ISO	Description	ID	X	Y	Z	Ground	ReflOrd	LxT	LxN	L/A	Dist.	hm	Freq	Adiv	K0b	Agr	Abar	z	Aatm	Afol	Ahous	Cmet	CmetN	Dc	RL	LtotT	LtotN
	Sol_Luce Substation	S_Substation	369426	4908792	3.5	0	0	112.1	112.1	1	1387.55	5.25	0	73.84	0	-0.03	4.48	0.33	3.28	0	0	0	0	0	0	30.5	30.5
	Inverter	MV5-1	370020	4909142	2	0	0	100.3	100.3	1	746.2	3.25	0	68.46	0	-0.38	0	0	9.95	0	0	0	0	0	0	22.29	22.29
	Inverter	MV5-3	370231	4908851	2	0	0	100.3	100.3	1	952.37	3.25	0	70.58	0	-0.27	0	0	10.75	0	0	0	0	0	0	19.26	19.26
	Inverter	MV5-2	370006	4908853	2	0	0	100.3	100.3	1	1012.64	3.25	0	71.11	0	-0.24	0	0	10.95	0	0	0	0	0	0	18.49	18.49
	Inverter	MV5-4	370324	4908707	2	0	0	100.3	100.3	1	1085.01	3.25	0	71.71	0	-0.21	0	0	11.18	0	0	0	0	0	0	17.63	17.63
	Inverter	MV5-5	370015	4908690	2	0	0	100.3	100.3	1	1162.17	3.25	0	72.31	0	-0.17	0	0	11.42	0	0	0	0	0	0	16.76	16.76
	Inverter	MV4-2	369272	4909397	2	0	0	100.3	100.3	1	1185.07	3.25	0	72.47	0	-0.16	0	0	11.48	0	0	0	0	0	0	16.52	16.52
	Inverter	MV4-3	369229	4909397	2	0	0	100.3	100.3	1	1225.71	3.25	0	72.77	0	-0.14	0	0	11.6	0	0	0	0	0	0	16.09	16.09
	Inverter	MV4-5	369289	4909199	2	0	0	100.3	100.3	1	1249.6	3.25	0	72.94	0	-0.13	0	0	11.67	0	0	0	0	0	0	15.84	15.84
	Inverter	MV4-6	369243	4909192	2	0	0	100.3	100.3	1	1293.53	3.25	0	73.24	0	-0.11	0	0	11.79	0	0	0	0	0	0	15.4	15.4
	Inverter	MV4-9	369289	4909001	2	0	0	100.3	100.3	1	1354.52	3.25	0	73.64	0	-0.09	0	0	11.95	0	0	0	0	0	0	14.81	14.81
	Inverter	MV4-8	369256	4909001	2	0	0	100.3	100.3	1	1381.48	3.25	0	73.81	0	-0.08	0	0	12.02	0	0	0	0	0	0	14.56	14.56
	Inverter	MV4-10	369312	4908858	2	0	0	100.3	100.3	1	1425.03	3.25	0	74.08	0	-0.06	0	0	12.14	0	0	0	0	0	0	14.16	14.16
	Inverter	MV4-1	369011	4909397	2	0	0	100.3	100.3	1	1433.91	3.25	0	74.13	0	-0.06	0	0	12.16	0	0	0	0	0	0	14.08	14.08
	Inverter	MV4-11	369264	4908855	2	0	0	100.3	100.3	1	1463.59	3.25	0	74.31	0	-0.05	0	0	12.23	0	0	0	0	0	0	13.82	13.82
	Inverter	MV4-4	369027	4909199	2	0	0	100.3	100.3	1	1485.62	3.25	0	74.44	0	-0.04	0	0	12.29	0	0	0	0	0	0	13.62	13.62
	Inverter	MV4-7	369035	4909001	2	0	0	100.3	100.3	1	1567.98	3.25	0	74.91	0	-0.01	0	0	12.49	0	0	0	0	0	0	12.92	12.92
	DSTATCOM - 10 MVAR #1	DSAT1	369437	4908757	2.5	0	0	96.6	96.6	1	1405.45	3.5	0	73.96	0	3.09	0	0	1.35	0	0	0	0	0	0	18.24	18.24
	DSTATCOM - 10 MVAR #2	DSAT2	369403	4908757	2.5	0	0	96.6	96.6	1	1428.73	5.23	0	74.1	0	3.69	0.93	0.17	1.36	0	0	0	0	0	0	16.55	16.55
	Inverter	MV6-2	370085	4907339	2	0	0	100.3	100.3	1	2469.91	3.25	0	78.85	0	0.25	0	0	14.4	0	0	0	0	0	0	6.81	6.81
	Inverter	MV6-3	370207	4907140	2	0	0	100.3	100.3	1	2656.31	3.25	0	79.49	0	0.29	0	0	14.75	0	0	0	0	0	0	5.78	5.78
	Inverter	MV3-8	368680	4907712	2	0	0	100.3	100.3	1	2691.13	3.25	0	79.6	0	0.3	0	0	14.82	0	0	0	0	0	0	5.6	5.6
	Inverter	MV3-9	368512	4907703	2	0	0	100.3	100.3	1	2807.57	3.25	0	79.97	0	0.32	0	0	15.03	0	0	0	0	0	0	4.99	4.99
	Inverter	MV3-14	368684	4907498	2	0	0	100.3	100.3	1	2857.22	3.25	0	80.12	0	0.33	0	0	15.12	0	0	0	0	0	0	4.74	4.74
	Inverter	MV3-11	368346	4907662	2	0	0	100.3	100.3	1	2950.65	4.59	0	80.4	0	1.12	3.2	0	15.28	0	0	0	0	0	0	0.31	0.31
	Inverter	MV3-6	368162	4907834	2	0	0	100.3	100.3	1	2964.78	3.25	0	80.44	0	0.36	0	0	15.31	0	0	0	0	0	0	4.21	4.21
	Inverter	MV3-16	368514	4907475	2	0	0	100.3	100.3	1	2979.7	3.25	0	80.48	0	0.36	0	0	15.34	0	0	0	0	0	0	4.13	4.13
	Inverter	MV3-20	368689	4907317	2	0	0	100.3	100.3	1	3001.52	3.25	0	80.55	0	0.36	0	0	15.37	0	0	0	0	0	0	4.03	4.03
	Inverter	MV3-10	368167	4907669	2	0	0	100.3	100.3	1	3072.52	3.25	0	80.75	0	0.38	0	0	15.5	0	0	0	0	0	0	3.69	3.69
	Inverter	MV3-3	367939	4907927	2	0	0	100.3	100.3	1	3078.66	3.25	0	80.77	0	0.38	0	0	15.51	0	0	0	0	0	0	3.66	3.66
	Inverter	MV3-15	368357	4907477	2	0	0	100.3	100.3	1	3079.46	3.25	0	80.77	0	0.38	0	0	15.51	0	0	0	0	0	0	3.65	3.65
	Inverter	MV3-19	368357	4907347	2	0	0	100.3	100.3	1	3178.26	3.25	0	81.04	0	0.4	0	0	15.68	0	0	0	0	0	0	3.19	3.19
	Inverter	MV3-7	367945	4907754	2	0	0	100.3	100.3	1	3181.72	3.25	0	81.05	0	0.4	0	0	15.69	0	0	0	0	0	0	3.17	3.17
	Inverter	MV3-17	368178	4907472	2	0	0	100.3	100.3	1	3204.07	4.54	0	81.11	0	1.18	3.14	0	15.73	0	0	0	0	0	0	-0.85	-0.85
	Inverter	MV3-21	368478	4907206	2	0	0	100.3	100.3	1	3214.47	3.25	0	81.14	0	0.4	0	0	15.75	0	0	0	0	0	0	3.02	3.02
	Inverter	MV3-13	367963	4907577	2	0	0	100.3	100.3	1	3284.46	3.25	0	81.33	0	0.41	0	0	15.87	0	0	0	0	0	0	2.7	2.7
	Inverter	MV6-1	370235	4907364	2	0	0	97.3	97.3	1	2430.95	3.25	0	78.72	0	0.24	0	0	14.33	0	0	0	0	0	0	4.03	4.03
	Inverter	MV3-12	367668	4907594	2	0	0	100.3	100.3	1	3497.39	3.25	0	81.87	0	0.45	0	0	16.23	0	0	0	0	0	0	1.76	1.76
	Inverter	MV3-18	367752	4907412	2	0	0	100.3	100.3	1	3551.61	3.25	0	82.01	0	0.46	0	0	16.32	0	0	0	0	0	0	1.53	1.53
	Fixed Reactor Bank 2	FRB2	369464	4908755	6	0	0	89.8	89.8	1	1388.78	5.25	0	73.85	0	-1.03	0	0	3.28	0	0	0	0	0	0	13.68	13.68
	Fixed Reactor Bank 1	FRB1	369378	4908755	6	0	0	89.8	89.8	1	1447.54	5.28	0	74.21	0	-0.69	4.2	0	3.39	0	0	0	0	0	0	8.66	8.66
	Inverter	MV5-6	369982	4908507	2	0	0	89.1	89.1	1	1346.31	3.25	0	73.58	0	0.76	0	0	6.94	0	0	0	0	0	0	7.77	7.77
	Inverter	MV2-3	365820	4906641	2	0	0	100.3	100.3	1	5549.87	3.25	0	85.89	0	0.68	0	0	19.37	0	0	0	0	0	0	-5.63	-5.63
	Inverter	MV2-4	365586	4906624	2	0	0	100.3	100.3	1	5753.43	3.25	0	86.2	0	0.69	0	0	19.66	0	0	0	0	0	0	-6.24	-6.24
	Inverter	MV4-12	369043	4908803	2	0	0	89.1	89.1	1	1669.91	3.25	0	75.45	0	0.83	0	0	7.5	0	0	0	0	0	0	5.28	5.28
	Inverter	MV4-14	369176	4908507	2	0	0	89.1	89.1	1	1766.32	3.25	0	75.94	0	0.85	0	0	7.66	0	0	0	0	0	0	4.6	4.6
	Inverter	MV4-15	369176	4908481	2	0	0	89.1	89.1	1	1785.3	3.25	0	76.03	0	0.86	0	0	7.69	0	0	0	0	0	0	4.48	4.48
	Inverter	MV4-13	369051	4908605	2	0	0	89.1	89.1	1	1788.06	3.25	0	76.05	0	0.86	0	0	7.7	0	0	0	0	0	0	4.46	4.46
	Inverter	MV1-1	364715	4906166	2	0	0	100.3	100.3	1	6733.42	3.25	0	87.56	0	0.71	0	0	20.96	0	0	0	0	0	0	-8.93	-8.93
	Inverter	MV1-2	364753	4906063	2	0	0	100.3	100.3	1	6757.68	3.25	0	87.6	0	0.71	0	0	20.99	0	0	0	0	0	0	-8.99	-8.99
	Inverter	MV1-4	364815	4905918	2	0	0	100.3	100.3	1	6787.71	3.25	0	87.63	0	0.71	0	0	21.03	0	0	0	0	0	0	-9.07	-9.07
	Inverter	MV1-5	364671	4905892	2	0	0	100.3	100.3	1	6921.08	3.25	0	87.8	0	0.71	0	0	21.2	0	0	0	0	0	0	-9.4	-9.4
	Inverter	MV1-12	365038	4905386	2	0	0	100.3	100.3	1	6931.03	3.25	0	87.82	0	0.71	0	0	21.21	0	0	0	0	0	0	-9.43	-9.43
	Inverter	MV1-8	364788	4905647	2	0	0	100.3	100.3	1	6967.56	3.25	0	87.86	0	0.71	0	0	21.26	0	0	0	0	0	0	-9.52	-9.52
	Inverter	MV1-15	365315	4904994	2	0	0	100.3	100.3	1	6982.64	3.25	0	87.88	0	0.71	0	0	21.28	0	0	0	0	0	0	-9.56	-9.56
	Inverter	MV1-6	364477	4905835	2	0	0	100.3	100.3	1	7113.76	3.25	0	88.04	0	0.71	0	0	21.44	0	0	0	0	0	0	-9.88	-9.88
	Inverter	MV1-9	364561	4905646	2	0	0	100.3	100.3	1	7151.92	3.25	0	88.09	0	0.71	0	0	21.49	0	0	0	0	0	0	-9.97	-9.97
	Inverter	MV1-11	364655	4905414	2	0	0	100.3	100.3	1	7213.85	3.25	0	88.16	0	0.7	0	0	21.57	0	0	0	0	0	0	-10.12	-10.12
	Inverter	MV2-1	365842	4906816	2	0	0	97.3	97.3	1	5434.06	3.25	0	85.7	0	0.68	0	0	19.21	0	0	0	0	0	0	-8.27	-8.27
	Inverter	MV3-2	368671	4907928	2	0	0	89.1	89.1	1	2534.17	3.25	0	79.08	0	1.03	0	0	8.9	0	0	0	0	0	0	0.05	0.05
	Inverter	MV1-7	364925	4905782	2	0	0	97.3	97.3	1	6777.19	3.25	0	87.62	0	0.71	0	0	21.02	0	0	0	0	0	0	-12.04	-12.04
	Inverter	MV1-10	365004	4905564	2	0	0	97.3	97.3	1	6846.03	3.25	0	87.71	0	0.71	0	0	21.1	0	0	0	0	0	0	-12.21	-12.21
	Inverter	MV3-4	368502	4907925	2	0	0	89.1	89.1	1	2653.82	3.25	0	79.48	0	1.06	0	0	9.09	0	0	0	0	0	0	-0.57	-0.57
	SubstationTransformer	W_ST	369711.17	4906112.3	2.5	0	0	92	92	1	3739.85	3.5	0	82.46	0	0.27	0	0	7.01	0	0	0	0	0	0	2.24	2.24
	Inverter	MV1-14	365163	4905049	2	0	0	97.3	97.3	1	7056.81	3.25	0	87.97	0	0.71	0	0	21.37	0	0	0	0	0	0	-12.74	-12.74
	Inverter	MV1-13	364731	4905241	2	0	0	97.3	97.3	1	7260.69	3.25	0	88.22	0	0.7	0	0	21.62	0	0	0	0	0	0	-13.23	-13.23
	Inverter	MV3-5	368340	4907843	2	0	0	89.1	89.1	1	2827.25	3.25	0	80.03	0	1.1	0	0	9.35	0	0	0	0	0	0	-1.43	-1.43

Inverter	MV3-1	368156	4907976	2	0	0	89.1	89.1	1	2877.73	3.25	0	80.18	0	1.12	0	0	9.43	0	0	0	0	0	0	-1.67	-1.67
Inverter	MV3-22	368656	4907142	2	0	0	89.1	89.1	1	3165.23	3.25	0	81.01	0	1.19	0	0	9.87	0	0	0	0	0	0	-3	-3
Westbrook Inverter Enclosur	W_INV6	369875	4906578	2	0	0	89.1	89.1	1	3253.03	3.25	0	81.25	0	1.21	0	0	10	0	0	0	0	0	0	-3.39	-3.39
Westbrook Inverter Enclosur	W_INV5	369719	4906574	2	0	0	89.1	89.1	1	3285.26	3.25	0	81.33	0	1.22	0	0	10.05	0	0	0	0	0	0	-3.54	-3.54
Westbrook Inverter Enclosur	W_INV7	369780	4906417	2	0	0	89.1	89.1	1	3427.72	3.25	0	81.7	0	1.25	0	0	10.26	0	0	0	0	0	0	-4.15	-4.15
Westbrook Inverter Enclosur	W_INV2	369374	4906388	2	0	0	89.1	89.1	1	3550.47	3.25	0	82.01	0	1.28	0	0	10.44	0	0	0	0	0	0	-4.67	-4.67
Westbrook Inverter Enclosur	W_INV4	369673	4906164	2	0	0	89.1	89.1	1	3696.21	3.25	0	82.36	0	1.32	0	0	10.65	0	0	0	0	0	0	-5.26	-5.26
Westbrook Inverter Enclosur	W_INV3	369508	4906164	2	0	0	89.1	89.1	1	3731.73	3.25	0	82.44	0	1.33	0	0	10.7	0	0	0	0	0	0	-5.41	-5.41
Inverter	MV6-4	370250	4906966	2	0	0	86.1	86.1	1	2827.47	3.25	0	80.03	0	1.1	0	0	9.35	0	0	0	0	0	0	-4.43	-4.43
Westbrook Inverter Enclosur	W_INV1	369409	4906578	2	0	0	86.1	86.1	1	3358.47	3.25	0	81.52	0	1.23	0	0	10.15	0	0	0	0	0	0	-6.85	-6.85
Inverter	MV2-2	365977	4906654	2	0	0	89.1	89.1	1	5413.79	3.25	0	85.67	0	1.74	0	0	13.01	0	0	0	0	0	0	-11.36	-11.36
Gardiner Substation	G_Sub	366586.3	4903349.9	2.5	0	0	90.8	90.8	1	7479.51	4.25	0	88.48	0	2.13	1.82	0.38	11.19	0	0	0	0	0	0	-12.85	-12.85
Inverter	MV1-3	364440	4906039	2	0	0	89.1	89.1	1	7033.67	3.25	0	87.94	0	2.14	0	0	15.03	0	0	0	0	0	0	-16.05	-16.05
Inverters	G_Inv2	366676.9	4903239.1	2	0	0	87.7	87.7	1	7530.03	3.25	0	88.54	0	2.96	0	0	8.52	0	0	0	0	0	0	-12.35	-12.35
Inverters	G_Inv1	366526.4	4903225.8	2	0	0	87.7	87.7	1	7616.83	3.25	0	88.64	0	2.96	0	0	8.6	0	0	0	0	0	0	-12.54	-12.54
Inverters	G_Inv4	366732.8	4903105	2	0	0	87.7	87.7	1	7620	3.25	0	88.64	0	2.96	0	0	8.6	0	0	0	0	0	0	-12.54	-12.54
Inverters	G_Inv3	366583.7	4903091.4	2	0	0	87.7	87.7	1	7704.49	3.25	0	88.73	0	2.96	0	0	8.69	0	0	0	0	0	0	-12.72	-12.72
Inverters	G_Inv6	366788.5	4902972	2	0	0	87.7	87.7	1	7710.77	3.25	0	88.74	0	2.96	0	0	8.69	0	0	0	0	0	0	-12.74	-12.74
Inverters	G_Inv5	366638.5	4902958.1	2	0	0	87.7	87.7	1	7794.14	3.25	0	88.84	0	2.96	0	0	8.78	0	0	0	0	0	0	-12.91	-12.91
Inverters	G_Inv8	366844.5	4902838.5	2	0	0	87.7	87.7	1	7803.46	3.25	0	88.85	0	2.96	0	0	8.79	0	0	0	0	0	0	-12.93	-12.93
Inverters	G_Inv7	366694.6	4902824.7	2	0	0	87.7	87.7	1	7884.88	3.25	0	88.94	0	2.96	0	0	8.86	0	0	0	0	0	0	-13.1	-13.1
Inverters	G_Inv10	366900.7	4902704.8	2	0	0	87.7	87.7	1	7897.8	3.25	0	88.95	0	2.96	0	0	8.88	0	0	0	0	0	0	-13.13	-13.13
Inverters	G_Inv9	366750.9	4902691.8	2	0	0	87.7	87.7	1	7976.68	3.25	0	89.04	0	2.96	0	0	8.95	0	0	0	0	0	0	-13.29	-13.29
Westbrook Inverter Transfor	W_INVTR1	369403	4906578	2	0	0	78.2	78.2	1	3360.23	3.25	0	81.53	0	-2.81	0	0	1.81	0	0	0	0	0	0	-2.28	-2.28
Westbrook Inverter Transfor	W_INVTR6	369881	4906578	2	0	0	77.3	77.3	1	3252.08	3.25	0	81.24	0	-2.78	0	0	1.76	0	0	0	0	0	0	-2.88	-2.88
Westbrook Inverter Transfor	W_INVTR5	369725	4906574	2	0	0	77.3	77.3	1	3284.04	3.25	0	81.33	0	-2.79	0	0	1.77	0	0	0	0	0	0	-2.97	-2.97
Westbrook Inverter Transfor	W_INVTR7	369786	4906417	2	0	0	77.3	77.3	1	3426.65	3.25	0	81.7	0	-2.83	0	0	1.83	0	0	0	0	0	0	-3.36	-3.36
Westbrook Inverter Transfor	W_INVTR2	369368	4906388	2	0	0	77.3	77.3	1	3552.2	3.25	0	82.01	0	-2.86	0	0	1.88	0	0	0	0	0	0	-3.69	-3.69
Westbrook Inverter Transfor	W_INVTR4	369679	4906164	2	0	0	77.3	77.3	1	3695.05	3.25	0	82.35	0	-2.89	0	0	1.94	0	0	0	0	0	0	-4.06	-4.06
Westbrook Inverter Transfor	W_INVTR3	369514	4906164	2	0	0	77.3	77.3	1	3730.32	3.25	0	82.43	0	-2.9	0	0	1.95	0	0	0	0	0	0	-4.15	-4.15
Inverter Transformer	MV6-1 T	370230	4907364	2	0	0	69.4	69.4	1	2431.27	3.25	0	78.72	0	2.33	0	0	5.38	0	0	0	0	0	0	-17.07	-17.07
Inverter Transformer	MV6-4 T	370244	4906966	2	0	0	69.4	69.4	1	2827.77	3.25	0	80.03	0	2.45	0	0	5.73	0	0	0	0	0	0	-18.87	-18.87
Inverter Transformer	MV5-1 T	370015	4909142	2	0	0	56.1	56.1	1	748.69	3.25	0	68.49	0	-0.07	0	0	4.26	0	0	0	0	0	0	-16.62	-16.62
Inverter Transformer	MV5-3 T	370237	4908851	2	0	0	56.1	56.1	1	951.39	3.25	0	70.57	0	0	0	0	4.77	0	0	0	0	0	0	-19.28	-19.28
Inverter Transformer	MV5-2 T	370011	4908853	2	0	0	56.1	56.1	1	1010.75	3.25	0	71.09	0	0.02	0	0	4.91	0	0	0	0	0	0	-19.96	-19.96
Inverter Transformer	MV5-4 T	370330	4908707	2	0	0	56.1	56.1	1	1084.66	3.25	0	71.71	0	0.04	0	0	5.09	0	0	0	0	0	0	-20.78	-20.78
Inverter Transformer	MV5-5 T	370021	4908690	2	0	0	56.1	56.1	1	1160.24	3.25	0	72.29	0	0.07	0	0	5.26	0	0	0	0	0	0	-21.57	-21.57
Inverter Transformer	MV2-1 T	365836	4906816	2	0	0	69.4	69.4	1	5439.08	3.25	0	85.71	0	3.1	0	0	7.67	0	0	0	0	0	0	-27.12	-27.12
Inverter Transformer	MV4-2 T	369267	4909397	2	0	0	56.1	56.1	1	1189.78	3.25	0	72.51	0	0.08	0	0	5.33	0	0	0	0	0	0	-21.86	-21.86
Inverter Transformer	MV4-3 T	369234	4909397	2	0	0	56.1	56.1	1	1220.98	3.25	0	72.73	0	0.09	0	0	5.4	0	0	0	0	0	0	-22.17	-22.17
Inverter Transformer	MV4-5 T	369283	4909199	2	0	0	56.1	56.1	1	1254.88	3.25	0	72.97	0	0.1	0	0	5.48	0	0	0	0	0	0	-22.5	-22.5
Inverter Transformer	MV4-6 T	369249	4909192	2	0	0	56.1	56.1	1	1288.21	3.25	0	73.2	0	0.12	0	0	5.55	0	0	0	0	0	0	-22.81	-22.81
Inverter Transformer	MV5-6 T	369987	4908507	2	0	0	56.1	56.1	1	1344.81	3.25	0	73.57	0	0.14	0	0	5.68	0	0	0	0	0	0	-23.33	-23.33
Inverter Transformer	MV4-9 T	369284	4909001	2	0	0	56.1	56.1	1	1358.59	3.25	0	73.66	0	0.14	0	0	5.71	0	0	0	0	0	0	-23.46	-23.46
Inverter Transformer	MV4-8 T	369262	4909001	2	0	0	56.1	56.1	1	1376.56	3.25	0	73.78	0	0.15	0	0	5.75	0	0	0	0	0	0	-23.62	-23.62
Inverter Transformer	MV4-1 T	369017	4909397	2	0	0	56.1	56.1	1	1428.14	3.25	0	74.1	0	0.17	0	0	5.86	0	0	0	0	0	0	-24.07	-24.07
Inverter Transformer	MV4-10 T	369307	4908858	2	0	0	56.1	56.1	1	1428.82	3.25	0	74.1	0	0.17	0	0	5.86	0	0	0	0	0	0	-24.08	-24.08
Inverter Transformer	MV4-11 T	369269	4908855	2	0	0	56.1	56.1	1	1459.75	3.25	0	74.29	0	0.18	0	0	5.93	0	0	0	0	0	0	-24.34	-24.34
Inverter Transformer	MV1-7 T	364919	4905782	2	0	0	69.4	69.4	1	6782.03	3.25	0	87.63	0	3.29	0	0	8.48	0	0	0	0	0	0	-30.05	-30.05
Inverter Transformer	MV4-4 T	369033	4909199	2	0	0	56.1	56.1	1	1480.11	3.25	0	74.41	0	0.19	0	0	5.98	0	0	0	0	0	0	-24.51	-24.51
Inverter Transformer	MV1-10 T	365010	4905564	2	0	0	69.4	69.4	1	6841.31	3.25	0	87.7	0	3.3	0	0	8.51	0	0	0	0	0	0	-30.16	-30.16
Inverter Transformer	MV1-14 T	365157	4905049	2	0	0	69.4	69.4	1	7061.26	3.25	0	87.98	0	3.32	0	0	8.64	0	0	0	0	0	0	-30.59	-30.59
Inverter Transformer	MV4-7 T	369040	4909001	2	0	0	56.1	56.1	1	1563.66	3.25	0	74.88	0	0.22	0	0	6.15	0	0	0	0	0	0	-25.2	-25.2
Inverter Transformer	MV1-13 T	364725	4905241	2	0	0	69.4	69.4	1	7265.37	3.25	0	88.23	0	3.34	0	0	8.75	0	0	0	0	0	0	-30.97	-30.97
Inverter Transformer	MV4-12 T	369049	4908803	2	0	0	56.1	56.1	1	1665.07	3.25	0	75.43	0	0.27	0	0	6.37	0	0	0	0	0	0	-26	-26
Inverter Transformer	MV4-14 T	369182	4908507	2	0	0	56.1	56.1	1	1762.2	3.25	0	75.92	0	0.3	0	0	6.57	0	0	0	0	0	0	-26.73	-26.73
Inverter Transformer	MV4-13 T	369057	4908605	2	0	0	56.1	56.1	1	1783.57	3.25	0	76.03	0	0.31	0	0	6.61	0	0	0	0	0	0	-26.89	-26.89
Inverter Transformer	MV4-15 T	369170	4908481	2	0	0	56.1	56.1	1	1789.38	3.25	0	76.05	0	0.32	0	0	6.62	0	0	0	0	0	0	-26.93	-26.93
Inverter Transformer	MV6-2 T	370091	4907339	2	0	0	56.1	56.1	1	2469.17	3.25	0	78.85	0	0.6	0	0	7.93	0	0	0	0	0	0	-31.33	-31.33
Inverter Transformer	MV3-2 T	368677	4907928	2	0	0	56.1	56.1	1	2530.1	3.25	0	79.06	0	0.63	0	0	8.04	0	0	0	0	0	0	-31.68	-31.68
Inverter Transformer	MV3-4 T	368507	4907925	2	0	0	56.1	56.1	1	2650.27	3.25	0	79.47	0	0.68	0	0	8.26	0	0	0	0	0	0	-32.35	-32.35
Inverter Transformer	MV6-3 T	370202	4907140	2	0	0	56.1	56.1	1	2656.66	3.25	0	79.49	0	0.68	0	0	8.27	0	0	0	0	0	0	-32.38	-32.38
Inverter Transformer	MV3-8 T	368685	4907712	2	0	0	56.1	56.1	1	2687.96	3.25	0	79.59	0	0.7	0	0	8.33	0	0	0	0	0	0	-32.55	-32.55
Inverter Transformer	MV3-9 T	368517	4907703	2	0	0	56.1	56.1	1	2804.23	3.25	0	79.96	0	0.75	0	0	8.53	0	0	0	0	0	0	-33.18	-33.18
Inverter Transformer	MV3-5 T	368335	4907843	2	0	0	56.1	56.1	1	2830.87	3.25	0	80.04	0	0.76	0	0	8.58	0	0	0	0	0	0	-33.32	-33.32
Inverter Transformer	MV3-14 T	368678	4907498	2	0	0	56.1	56.1	1	2860.81	3.25	0	80.13	0	0.77	0	0	8.63	0	0	0	0	0	0	-33.47	-33.47
Inverter Transformer	MV3-1 T	368150	4907976	2	0	0	56.1	56.1	1	2882.4	3.25	0	80.2	0	0.78	0	0	8.67	0	0	0	0	0	0	-33.58	-33.58
Inverter Transformer	MV3-11 T	368340	4907662	2	0	0	56.1	56.1	1	2954.81	4.6	0	80.41	0	1.74	2.64	0	8.79	0	0	0	0	0	0	-37.53	-37.53
Inverter Transformer	MV3-6 T	368156	4907834	2	0	0	56.1	56.1	1	2969.29	3.25	0	80.45	0	0.82	0	0	8.82	0	0	0	0	0	0	-34.03	-34.03
Inverter Transformer	MV3-16 T	368509	4907475	2	0	0	56.1	56.1	1	2982.85	3.25	0	80.49	0	0.82	0	0	8.84	0	0	0	0	0	0	-34.1	-34.1
Inverter Transformer	MV3-20 T	368683	4907317	2	0	0	56.1	56.1	1	3004.93	3.25	0	80.56	0	0.83	0	0	8.88	0	0	0	0	0	0	-34.21	-34.21
Inverter Transformer	MV3-3 T	367944	4907927	2	0	0	56.1	56.1	1	3074.69	3.25	0	80.76	0	0.86	0	0	8.99	0	0	0	0	0	0	-34.55	-34.55
Inverter Transformer	MV3-10 T	368162	4907669	2	0	0	56.1	56.1	1	3076.14	3.25	0	80.76	0	0.86	0	0	9	0	0	0	0	0	0	-34.56	-34.56
Inverter Transformer	MV3-15 T	368351	4907477	2	0	0	56.1	56.1	1	3083.42	3.25	0	80.78	0	0.87	0	0	9.01	0	0	0	0	0	0	-34.6	-34.6

	Inverter Transformer	MV3-22 T	368661	4907142	2	0	0	56.1	56.1	1	3162.49	3.25	0	81	0	0.9	0	0	9.14	0	0	0	0	0	0	-34.98	-34.98
	Inverter Transformer	MV3-7 T	367951	4907754	2	0	0	56.1	56.1	1	3177.11	3.25	0	81.04	0	0.9	0	0	9.16	0	0	0	0	0	0	-35.05	-35.05
	Inverter Transformer	MV3-19 T	368352	4907347	2	0	0	56.1	56.1	1	3181.46	3.25	0	81.05	0	0.91	0	0	9.17	0	0	0	0	0	0	-35.07	-35.07
	Inverter Transformer	MV3-17 T	368183	4907472	2	0	0	56.1	56.1	1	3200.62	4.54	0	81.1	0	1.85	2.56	0	9.2	0	0	0	0	0	0	-38.66	-38.66
	Inverter Transformer	MV3-21 T	368484	4907206	2	0	0	56.1	56.1	1	3210.9	3.25	0	81.13	0	0.92	0	0	9.22	0	0	0	0	0	0	-35.21	-35.21
	Inverter Transformer	MV3-13 T	367958	4907577	2	0	0	56.1	56.1	1	3288.16	3.25	0	81.34	0	0.95	0	0	9.35	0	0	0	0	0	0	-35.58	-35.58
	Inverter Transformer	MV3-12 T	367674	4907594	2	0	0	56.1	56.1	1	3492.72	3.25	0	81.86	0	1.04	0	0	9.68	0	0	0	0	0	0	-36.52	-36.52
	Inverter Transformer	MV3-18 T	367757	4907412	2	0	0	56.1	56.1	1	3547.9	3.25	0	82	0	1.06	0	0	9.76	0	0	0	0	0	0	-36.76	-36.76
	Line Reactor	NGR	369421	4908787.5	5	0	0	45.4	45.4	1	1394.26	5.25	0	73.89	0	3.44	1.22	0.03	0.57	0	0	0	0	0	0	-33.77	-33.77
	Inverter Transformer	MV2-2 T	365982	4906654	2	0	0	56.1	56.1	1	5409.71	3.25	0	85.66	0	1.77	0	0	12.38	0	0	0	0	0	0	-43.76	-43.76
	Inverter Transformer	MV2-3 T	365814	4906641	2	0	0	56.1	56.1	1	5554.82	3.25	0	85.89	0	1.82	0	0	12.56	0	0	0	0	0	0	-44.22	-44.22
	Inverter Transformer	MV2-4 T	365590	4906628	2	0	0	56.1	56.1	1	5747.89	3.25	0	86.19	0	1.88	0	0	12.8	0	0	0	0	0	0	-44.82	-44.82
	Inverter Transformer	MV1-1 T	364721	4906166	2	0	0	56.1	56.1	1	6728.37	3.25	0	87.56	0	2.18	0	0	13.93	0	0	0	0	0	0	-47.62	-47.62
	Inverter Transformer	MV1-2 T	364759	4906063	2	0	0	56.1	56.1	1	6752.68	3.25	0	87.59	0	2.19	0	0	13.96	0	0	0	0	0	0	-47.68	-47.68
	Inverter Transformer	MV1-4 T	364821	4905918	2	0	0	56.1	56.1	1	6782.78	3.25	0	87.63	0	2.2	0	0	13.99	0	0	0	0	0	0	-47.76	-47.76
	Inverter Transformer	MV1-5 T	364676	4905892	2	0	0	56.1	56.1	1	6916.95	3.25	0	87.8	0	2.24	0	0	14.14	0	0	0	0	0	0	-48.12	-48.12
	Inverter Transformer	MV1-12 T	365044	4905386	2	0	0	56.1	56.1	1	6926.39	3.25	0	87.81	0	2.24	0	0	14.15	0	0	0	0	0	0	-48.14	-48.14
	Inverter Transformer	MV1-8 T	364782	4905647	2	0	0	56.1	56.1	1	6972.38	3.25	0	87.87	0	2.25	0	0	14.2	0	0	0	0	0	0	-48.26	-48.26
	Inverter Transformer	MV1-15 T	365309	4904994	2	0	0	56.1	56.1	1	6987	3.25	0	87.89	0	2.26	0	0	14.22	0	0	0	0	0	0	-48.3	-48.3
	Inverter Transformer	MV1-3 T	364435	4906039	2	0	0	56.1	56.1	1	7037.9	3.25	0	87.95	0	2.27	0	0	14.27	0	0	0	0	0	0	-48.43	-48.43
	Inverter Transformer	MV1-6 T	364482	4905835	2	0	0	56.1	56.1	1	7109.61	3.25	0	88.04	0	2.29	0	0	14.35	0	0	0	0	0	0	-48.61	-48.61
	Inverter Transformer	MV1-9 T	364555	4905646	2	0	0	56.1	56.1	1	7156.81	3.25	0	88.09	0	2.3	0	0	14.4	0	0	0	0	0	0	-48.73	-48.73
	Inverter Transformer	MV1-11 T	364649	4905414	2	0	0	56.1	56.1	1	7218.62	3.25	0	88.17	0	2.32	0	0	14.46	0	0	0	0	0	0	-48.89	-48.89
Limit. Valu	0	0																								
Level D/N:	33.2429	33.2429																								

Receiver: Existing Noise Receptor
ID: S-R54
X: 370569
Y: 4909511
Z: 4.5
Ground: 0

ISO	Description	ID	X	Y	Z	Ground	ReflOrd	LxT	LxN	L/A	Dist.	hm	Freq	Adiv	K0b	Agr	Abar	z	Aatm	Afol	Ahous	Cmet	CmetN	Dc	RL	LtotT	LtotN
	Sol_Luce Substation	S_Substation	369426	4908792	3.5	0	0	112.1	112.1	1	1350.34	5.25	0	73.61	0	0.08	5.07	0.4	3.21	0	0	0	0	0	0	30.11	30.11
	Inverter	MV5-1	370020	4909142	2	0	0	100.3	100.3	1	661.49	3.25	0	67.41	0	-0.44	0	0	9.54	0	0	0	0	0	0	23.79	23.79
	Inverter	MV5-3	370231	4908851	2	0	0	100.3	100.3	1	741.52	3.25	0	68.4	0	-0.39	0	0	9.93	0	0	0	0	0	0	22.37	22.37
	Inverter	MV5-4	370324	4908707	2	0	0	100.3	100.3	1	840.5	3.25	0	69.49	0	-0.33	0	0	10.34	0	0	0	0	0	0	20.81	20.81
	Inverter	MV5-2	370006	4908853	2	0	0	100.3	100.3	1	865.99	3.25	0	69.75	0	-0.31	0	0	10.44	0	0	0	0	0	0	20.44	20.44
	Inverter	MV5-5	370015	4908690	2	0	0	100.3	100.3	1	990.44	3.25	0	70.92	0	-0.25	0	0	10.88	0	0	0	0	0	0	18.77	18.77
	Inverter	MV4-2	369272	4909397	2	0	0	100.3	100.3	1	1302	3.25	0	73.29	0	-0.11	0	0	11.81	0	0	0	0	0	0	15.32	15.32
	Inverter	MV4-5	369289	4909199	2	0	0	100.3	100.3	1	1317.48	3.25	0	73.39	0	-0.1	0	0	11.85	0	0	0	0	0	0	15.17	15.17
	Inverter	MV4-3	369229	4909397	2	0	0	100.3	100.3	1	1344.84	3.25	0	73.57	0	-0.09	0	0	11.93	0	0	0	0	0	0	14.91	14.91
	Inverter	MV4-6	369243	4909192	2	0	0	100.3	100.3	1	1363.83	3.25	0	73.7	0	-0.09	0	0	11.98	0	0	0	0	0	0	14.73	14.73
	Inverter	MV4-9	369289	4909001	2	0	0	100.3	100.3	1	1377.86	3.25	0	73.78	0	-0.08	0	0	12.01	0	0	0	0	0	0	14.59	14.59
	Inverter	MV4-8	369256	4909001	2	0	0	100.3	100.3	1	1408.57	3.25	0	73.98	0	-0.07	0	0	12.09	0	0	0	0	0	0	14.31	14.31
	Inverter	MV4-10	369312	4908858	2	0	0	100.3	100.3	1	1416.5	3.25	0	74.02	0	-0.07	0	0	12.11	0	0	0	0	0	0	14.24	14.24
	Inverter	MV4-11	369264	4908855	2	0	0	100.3	100.3	1	1460.61	3.25	0	74.29	0	-0.05	0	0	12.23	0	0	0	0	0	0	13.84	13.84
	Inverter	MV4-1	369011	4909397	2	0	0	100.3	100.3	1	1562.17	3.25	0	74.87	0	-0.01	0	0	12.48	0	0	0	0	0	0	12.97	12.97
	Inverter	MV4-4	369027	4909199	2	0	0	100.3	100.3	1	1573.25	3.25	0	74.94	0	-0.01	0	0	12.5	0	0	0	0	0	0	12.88	12.88
	Inverter	MV4-7	369035	4909001	2	0	0	100.3	100.3	1	1616.56	3.25	0	75.17	0	0.01	0	0	12.61	0	0	0	0	0	0	12.52	12.52
	DSTATCOM - 10 MVAR #1	DSAT1	369437	4908757	2.5	0	0	96.6	96.6	1	1360.13	3.5	0	73.67	0	3.08	0	0	1.32	0	0	0	0	0	0	18.57	18.57
	DSTATCOM - 10 MVAR #2	DSAT2	369403	4908757	2.5	0	0	96.6	96.6	1	1388.55	3.5	0	73.85	0	3.08	0	0	1.33	0	0	0	0	0	0	18.36	18.36
	Inverter	MV6-2	370085	4907339	2	0	0	100.3	100.3	1	2225.27	3.25	0	77.95	0	0.19	0	0	13.92	0	0	0	0	0	0	8.25	8.25
	Inverter	MV6-3	370207	4907140	2	0	0	100.3	100.3	1	2398.48	3.25	0	78.6	0	0.23	0	0	14.26	0	0	0	0	0	0	7.22	7.22
	Inverter	MV3-8	368680	4907712	2	0	0	100.3	100.3	1	2608.59	3.25	0	79.33	0	0.28	0	0	14.66	0	0	0	0	0	0	6.04	6.04
	Inverter	MV3-9	368512	4907703	2	0	0	100.3	100.3	1	2738.63	3.25	0	79.75	0	0.31	0	0	14.9	0	0	0	0	0	0	5.35	5.35
	Inverter	MV3-14	368684	4907498	2	0	0	100.3	100.3	1	2757.79	3.25	0	79.81	0	0.31	0	0	14.94	0	0	0	0	0	0	5.25	5.25
	Inverter	MV3-20	368689	4907317	2	0	0	100.3	100.3	1	2889.3	3.25	0	80.22	0	0.34	0	0	15.18	0	0	0	0	0	0	4.58	4.58
	Inverter	MV3-11	368346	4907662	2	0	0	100.3	100.3	1	2891.46	3.25	0	80.22	0	0.34	0	0	15.18	0	0	0	0	0	0	4.57	4.57
	Inverter	MV3-16	368514	4907475	2	0	0	100.3	100.3	1	2892.81	3.25	0	80.23	0	0.34	0	0	15.18	0	0	0	0	0	0	4.56	4.56
	Inverter	MV3-6	368162	4907834	2	0	0	100.3	100.3	1	2933.6	3.25	0	80.35	0	0.35	0	0	15.25	0	0	0	0	0	0	4.36	4.36
	Inverter	MV3-15	368357	4907477	2	0	0	100.3	100.3	1	3005.01	3.25	0	80.56	0	0.36	0	0	15.38	0	0	0	0	0	0	4.01	4.01
	Inverter	MV3-10	368167	4907669	2	0	0	100.3	100.3	1	3026.97	3.25	0	80.62	0	0.37	0	0	15.42	0	0	0	0	0	0	3.9	3.9
	Inverter	MV6-1	370235	4907364	2	0	0	97.3	97.3	1	2172.83	3.25	0	77.74	0	0.18	0	0	13.82	0	0	0	0	0	0	5.58	5.58
	Inverter	MV3-3	367939	4907927	2	0	0	100.3	100.3	1	3070.17	3.25	0	80.74	0	0.38	0	0	15.5	0	0	0	0	0	0	3.7	3.7
	Inverter	MV3-19	368357	4907347	2	0	0	100.3	100.3	1	3094.49	3.25	0	80.81	0	0.38	0	0	15.54	0	0	0	0	0	0	3.58	3.58
	Inverter	MV3-21	368478	4907206	2	0	0	100.3	100.3	1	3112.12	3.25	0	80.86	0	0.38	0	0	15.57	0	0	0	0	0	0	3.5	3.5
	Inverter	MV3-17	368178	4907472	2	0	0	100.3	100.3	1	3142.36	3.25	0	80.95	0	0.39	0	0	15.62	0	0	0	0	0	0	3.36	3.36
	Inverter	MV3-7	367945	4907754	2	0	0	100.3	100.3	1	3157.92	3.25	0	80.99	0	0.39	0	0	15.65	0	0	0	0	0	0	3.28	3.28
	Inverter	MV3-13	367963	4907577	2	0	0	100.3	100.3	1	3245.24	3.25	0	81.22	0	0.41	0	0	15.8	0	0	0	0	0	0	2.88	2.88
	Inverter	MV3-12	367668	4907594	2	0	0	100.3	100.3	1	3477.17	3.25	0	81.82	0	0.45	0	0	16.19	0	0	0	0	0	0	1.85	1.85
	Inverter	MV3-18	367752	4907412	2	0	0	100.3	100.3	1	3513.02	3.25	0	81.91	0	0.45	0	0	16.25	0	0	0	0	0	0	1.69	1.69
	Inverter	MV5-6	369982	4908507	2	0	0	89.1	89.1	1	1163.01	3.25	0	72.31	0	0.72	0	0	6.62	0	0	0	0	0	0	9.41	9.41

Fixed Reactor Bank 2	FRB2	369464	4908755	6	0	0	89.8	89.8	1	1338.87	5.25	0	73.53	0	-1.03	0	0	3.18	0	0	0	0	0	0	14.09	14.09
Fixed Reactor Bank 1	FRB1	369378	4908755	6	0	0	89.8	89.8	1	1410.68	5.28	0	73.99	0	-0.69	4.2	0	3.32	0	0	0	0	0	0	8.95	8.95
Inverter	MV2-3	365820	4906641	2	0	0	100.3	100.3	1	5548.87	3.25	0	85.88	0	0.68	0	0	19.37	0	0	0	0	0	0	-5.62	-5.62
Inverter	MV2-4	365586	4906624	2	0	0	100.3	100.3	1	5758.91	3.25	0	86.21	0	0.69	0	0	19.66	0	0	0	0	0	0	-6.25	-6.25
Inverter	MV4-12	369043	4908803	2	0	0	89.1	89.1	1	1682.24	3.25	0	75.52	0	0.83	0	0	7.52	0	0	0	0	0	0	5.19	5.19
Inverter	MV4-14	369176	4908507	2	0	0	89.1	89.1	1	1717.11	3.25	0	75.7	0	0.84	0	0	7.58	0	0	0	0	0	0	4.94	4.94
Inverter	MV4-15	369176	4908481	2	0	0	89.1	89.1	1	1732.44	3.25	0	75.77	0	0.84	0	0	7.6	0	0	0	0	0	0	4.84	4.84
Inverter	MV4-13	369051	4908605	2	0	0	89.1	89.1	1	1767.81	3.25	0	75.95	0	0.85	0	0	7.66	0	0	0	0	0	0	4.59	4.59
Inverter	MV1-1	364715	4906166	2	0	0	100.3	100.3	1	6742.28	3.25	0	87.58	0	0.71	0	0	20.97	0	0	0	0	0	0	-8.95	-8.95
Inverter	MV1-2	364753	4906063	2	0	0	100.3	100.3	1	6761.25	3.25	0	87.6	0	0.71	0	0	21	0	0	0	0	0	0	-9	-9
Inverter	MV1-4	364815	4905918	2	0	0	100.3	100.3	1	6783.67	4.25	0	87.63	0	1.76	2.34	0	21.03	0	0	0	0	0	0	-12.44	-12.44
Inverter	MV1-12	365038	4905386	2	0	0	100.3	100.3	1	6899.83	3.25	0	87.78	0	0.71	0	0	21.17	0	0	0	0	0	0	-9.35	-9.35
Inverter	MV1-5	364671	4905892	2	0	0	100.3	100.3	1	6919.8	3.25	0	87.8	0	0.71	0	0	21.2	0	0	0	0	0	0	-9.4	-9.4
Inverter	MV1-15	365315	4904994	2	0	0	100.3	100.3	1	6928.77	3.25	0	87.81	0	0.71	0	0	21.21	0	0	0	0	0	0	-9.42	-9.42
Inverter	MV1-8	364788	4905647	2	0	0	100.3	100.3	1	6953.45	3.25	0	87.84	0	0.71	0	0	21.24	0	0	0	0	0	0	-9.48	-9.48
Inverter	MV1-6	364477	4905835	2	0	0	100.3	100.3	1	7115.16	3.25	0	88.04	0	0.71	0	0	21.44	0	0	0	0	0	0	-9.88	-9.88
Inverter	MV1-9	364561	4905646	2	0	0	100.3	100.3	1	7143.83	3.25	0	88.08	0	0.71	0	0	21.48	0	0	0	0	0	0	-9.95	-9.95
Inverter	MV1-11	364655	4905414	2	0	0	100.3	100.3	1	7194.5	3.25	0	88.14	0	0.7	0	0	21.54	0	0	0	0	0	0	-10.07	-10.07
Inverter	MV2-1	365842	4906816	2	0	0	97.3	97.3	1	5441.28	3.25	0	85.71	0	0.68	0	0	19.22	0	0	0	0	0	0	-8.3	-8.3
Inverter	MV3-2	368671	4907928	2	0	0	89.1	89.1	1	2471.5	3.25	0	78.86	0	1.02	0	0	8.8	0	0	0	0	0	0	0.38	0.38
SubstationTransformer	W_ST	369711.17	4906112.3	2.5	0	0	92	92	1	3505.32	3.5	0	81.89	0	0.21	0	0	6.69	0	0	0	0	0	0	3.18	3.18
Inverter	MV3-4	368502	4907925	2	0	0	89.1	89.1	1	2605.36	3.25	0	79.32	0	1.05	0	0	9.01	0	0	0	0	0	0	-0.32	-0.32
Inverter	MV1-7	364925	4905782	2	0	0	97.3	97.3	1	6764.63	3.25	0	87.6	0	0.71	0	0	21	0	0	0	0	0	0	-12.01	-12.01
Inverter	MV1-10	365004	4905564	2	0	0	97.3	97.3	1	6822.61	3.25	0	87.68	0	0.71	0	0	21.07	0	0	0	0	0	0	-12.16	-12.16
Inverter	MV1-14	365163	4905049	2	0	0	97.3	97.3	1	7009.59	3.25	0	87.91	0	0.71	0	0	21.31	0	0	0	0	0	0	-12.62	-12.62
Inverter	MV3-5	368340	4907843	2	0	0	89.1	89.1	1	2784	3.25	0	79.89	0	1.09	0	0	9.29	0	0	0	0	0	0	-1.22	-1.22
Inverter	MV1-13	364731	4905241	2	0	0	97.3	97.3	1	7232.92	3.25	0	88.19	0	0.7	0	0	21.59	0	0	0	0	0	0	-13.17	-13.17
Inverter	MV3-1	368156	4907976	2	0	0	89.1	89.1	1	2859.86	4.59	0	80.13	0	1.91	2.7	0.01	9.4	0	0	0	0	0	0	-5.08	-5.08
Westbrook Inverter Enclosur	W_INV6	369875	4906578	2	0	0	89.1	89.1	1	3013.99	3.25	0	80.58	0	1.15	0	0	9.64	0	0	0	0	0	0	-2.31	-2.31
Inverter	MV3-22	368656	4907142	2	0	0	89.1	89.1	1	3044.95	3.25	0	80.67	0	1.16	0	0	9.69	0	0	0	0	0	0	-2.46	-2.46
Westbrook Inverter Enclosur	W_INV5	369719	4906574	2	0	0	89.1	89.1	1	3057.53	3.25	0	80.71	0	1.16	0	0	9.7	0	0	0	0	0	0	-2.51	-2.51
Westbrook Inverter Enclosur	W_INV7	369780	4906417	2	0	0	89.1	89.1	1	3193.02	3.25	0	81.08	0	1.19	0	0	9.91	0	0	0	0	0	0	-3.13	-3.13
Westbrook Inverter Enclosur	W_INV2	369374	4906388	2	0	0	89.1	89.1	1	3343.82	3.25	0	81.48	0	1.23	0	0	10.13	0	0	0	0	0	0	-3.79	-3.79
Westbrook Inverter Enclosur	W_INV4	369673	4906164	2	0	0	89.1	89.1	1	3464.86	3.25	0	81.79	0	1.26	0	0	10.31	0	0	0	0	0	0	-4.31	-4.31
Westbrook Inverter Enclosur	W_INV3	369508	4906164	2	0	0	89.1	89.1	1	3511.14	3.25	0	81.91	0	1.27	0	0	10.38	0	0	0	0	0	0	-4.5	-4.5
Inverter	MV6-4	370250	4906966	2	0	0	86.1	86.1	1	2564.92	3.25	0	79.18	0	1.04	0	0	8.95	0	0	0	0	0	0	-3.11	-3.11
Westbrook Inverter Enclosur	W_INV1	369409	4906578	2	0	0	86.1	86.1	1	3154.06	3.25	0	80.98	0	1.18	0	0	9.85	0	0	0	0	0	0	-5.95	-5.95
Inverter	MV2-2	365977	4906654	2	0	0	89.1	89.1	1	5408.23	4.31	0	85.66	0	2.51	2.16	0	13	0	0	0	0	0	0	-14.28	-14.28
Gardiner Substation	G_Sub	366586.3	4903349.9	2.5	0	0	90.8	90.8	1	7336.28	4.25	0	88.31	0	2.11	1.84	0.38	11.06	0	0	0	0	0	0	-12.55	-12.55
Inverter	MV1-3	364440	4906039	2	0	0	89.1	89.1	1	7044.11	3.25	0	87.96	0	2.14	0	0	15.04	0	0	0	0	0	0	-16.08	-16.08
Inverters	G_Inv2	366676.9	4903239.1	2	0	0	87.7	87.7	1	7381.41	3.25	0	88.36	0	2.96	0	0	8.37	0	0	0	0	0	0	-12.03	-12.03
Inverters	G_Inv4	366732.8	4903105	2	0	0	87.7	87.7	1	7466.81	3.25	0	88.46	0	2.96	0	0	8.45	0	0	0	0	0	0	-12.22	-12.22
Inverters	G_Inv1	366526.4	4903225.8	2	0	0	87.7	87.7	1	7473.04	3.25	0	88.47	0	2.96	0	0	8.46	0	0	0	0	0	0	-12.23	-12.23
Inverters	G_Inv6	366788.5	4902972	2	0	0	87.7	87.7	1	7553.19	3.25	0	88.56	0	2.96	0	0	8.54	0	0	0	0	0	0	-12.4	-12.4
Inverters	G_Inv3	366583.7	4903091.4	2	0	0	87.7	87.7	1	7556.05	3.25	0	88.57	0	2.96	0	0	8.54	0	0	0	0	0	0	-12.41	-12.41
Inverters	G_Inv5	366638.5	4902958.1	2	0	0	87.7	87.7	1	7641.29	3.25	0	88.66	0	2.96	0	0	8.63	0	0	0	0	0	0	-12.59	-12.59
Inverters	G_Inv8	366844.5	4902838.5	2	0	0	87.7	87.7	1	7641.61	3.25	0	88.66	0	2.96	0	0	8.63	0	0	0	0	0	0	-12.59	-12.59
Inverters	G_Inv7	366694.6	4902824.7	2	0	0	87.7	87.7	1	7727.72	3.25	0	88.76	0	2.96	0	0	8.71	0	0	0	0	0	0	-12.77	-12.77
Inverters	G_Inv10	366900.7	4902704.8	2	0	0	87.7	87.7	1	7731.8	3.25	0	88.77	0	2.96	0	0	8.71	0	0	0	0	0	0	-12.78	-12.78
Inverters	G_Inv9	366750.9	4902691.8	2	0	0	87.7	87.7	1	7815.33	3.25	0	88.86	0	2.96	0	0	8.8	0	0	0	0	0	0	-12.96	-12.96
Westbrook Inverter Transfor	W_INVTR1	369403	4906578	2	0	0	78.2	78.2	1	3156.27	3.25	0	80.98	0	-2.76	0	0	1.72	0	0	0	0	0	0	-1.71	-1.71
Westbrook Inverter Transfor	W_INVTR6	369881	4906578	2	0	0	77.3	77.3	1	3012.61	3.25	0	80.58	0	-2.72	0	0	1.66	0	0	0	0	0	0	-2.18	-2.18
Westbrook Inverter Transfor	W_INVTR5	369725	4906574	2	0	0	77.3	77.3	1	3055.87	3.25	0	80.7	0	-2.73	0	0	1.68	0	0	0	0	0	0	-2.31	-2.31
Westbrook Inverter Transfor	W_INVTR7	369786	4906417	2	0	0	77.3	77.3	1	3191.54	3.25	0	81.08	0	-2.77	0	0	1.74	0	0	0	0	0	0	-2.71	-2.71
Westbrook Inverter Transfor	W_INVTR2	369368	4906388	2	0	0	77.3	77.3	1	3345.97	3.25	0	81.49	0	-2.81	0	0	1.8	0	0	0	0	0	0	-3.14	-3.14
Westbrook Inverter Transfor	W_INVTR4	369679	4906164	2	0	0	77.3	77.3	1	3463.31	3.25	0	81.79	0	-2.83	0	0	1.85	0	0	0	0	0	0	-3.46	-3.46
Westbrook Inverter Transfor	W_INVTR3	369514	4906164	2	0	0	77.3	77.3	1	3509.34	3.25	0	81.9	0	-2.85	0	0	1.87	0	0	0	0	0	0	-3.58	-3.58
Inverter Transformer	MV6-1 T	370230	4907364	2	0	0	69.4	69.4	1	2173.6	3.25	0	77.74	0	2.24	0	0	5.14	0	0	0	0	0	0	-15.77	-15.77
Inverter Transformer	MV6-4 T	370244	4906966	2	0	0	69.4	69.4	1	2565.67	3.25	0	79.18	0	2.37	0	0	5.5	0	0	0	0	0	0	-17.71	-17.71
Inverter Transformer	MV5-1 T	370015	4909142	2	0	0	56.1	56.1	1	665.64	3.25	0	67.46	0	-0.09	0	0	4.04	0	0	0	0	0	0	-15.36	-15.36
Inverter Transformer	MV5-3 T	370237	4908851	2	0	0	56.1	56.1	1	738.8	3.25	0	68.37	0	-0.07	0	0	4.24	0	0	0	0	0	0	-16.48	-16.48
Inverter Transformer	MV5-4 T	370330	4908707	2	0	0	56.1	56.1	1	838.77	3.25	0	69.47	0	-0.04	0	0	4.49	0	0	0	0	0	0	-17.87	-17.87
Inverter Transformer	MV5-2 T	370011	4908853	2	0	0	56.1	56.1	1	862.75	3.25	0	69.72	0	-0.03	0	0	4.55	0	0	0	0	0	0	-18.18	-18.18
Inverter Transformer	MV5-5 T	370021	4908690	2	0	0	56.1	56.1	1	987.09	3.25	0	70.89	0	0.01	0	0	4.86	0	0	0	0	0	0	-19.69	-19.69
Inverter Transformer	MV5-6 T	369987	4908507	2	0	0	56.1	56.1	1	1160.49	3.25	0	72.29	0	0.07	0	0	5.27	0	0	0	0	0	0	-21.57	-21.57
Inverter Transformer	MV2-1 T	365836	4906816	2	0	0	69.4	69.4	1	5446.5	3.25	0	85.72	0	3.1	0	0	7.67	0	0	0	0	0	0	-27.14	-27.14
Inverter Transformer	MV4-2 T	369267	4909397	2	0	0	56.1	56.1	1	1306.98	3.25	0	73.33	0	0.12	0	0	5.6	0	0	0	0	0	0	-22.99	-22.99
Inverter Transformer	MV4-5 T	369283	4909199	2	0	0	56.1	56.1	1	1323.31	3.25	0	73.43	0	0.13	0	0	5.63	0	0	0	0	0	0	-23.14	-23.14
Inverter Transformer	MV4-3 T	369234	4909397	2	0	0	56.1	56.1	1	1339.86	3.25	0	73.54	0	0.14	0	0	5.67	0	0	0	0	0	0	-23.29	-23.29
Inverter Transformer	MV4-6 T	369249	4909192	2	0	0	56.1	56.1	1	1358	3.25	0	73.66	0	0.14	0	0	5.71	0	0	0	0	0	0	-23.45	-23.45
Inverter Transformer	MV4-9 T	369284	4909001	2	0	0	56.1	56.1	1	1382.51	3.25	0	73.81	0	0.15	0	0	5.76	0	0	0	0	0	0	-23.67	-23.67
Inverter Transformer	MV4-8 T	369262	4909001	2	0	0	56.1	56.1	1	1402.98	3.25	0	73.94	0	0.16	0	0	5.81	0	0	0	0	0	0	-23.85	-23.85
Inverter Transformer	MV4-10 T	369307	4908858	2	0	0	56.1	56.1	1	1420.94	3.25	0	74.05	0	0.17	0	0	5.85	0	0	0	0	0	0	-24.01	-24.01
Inverter Transformer	MV4-11 T	369269	4908855	2	0	0	56.1	56.1	1	1456.14	3.25	0	74.26	0	0.18	0	0	5.92	0	0	0	0	0	0	-24.31	-24.31

	Inverter Transformer	MV1-7 T	364919	4905782	2	0	0	69.4	69.4	1	6769.63	3.25	0	87.61	0	3.29	0	0	8.47	0	0	0	0	0	0	-30.02	-30.02
	Inverter Transformer	MV1-10 T	365010	4905564	2	0	0	69.4	69.4	1	6817.72	3.25	0	87.67	0	3.3	0	0	8.5	0	0	0	0	0	0	-30.12	-30.12
	Inverter Transformer	MV1-14 T	365157	4905049	2	0	0	69.4	69.4	1	7014.21	3.25	0	87.92	0	3.32	0	0	8.61	0	0	0	0	0	0	-30.5	-30.5
	Inverter Transformer	MV4-1 T	369017	4909397	2	0	0	56.1	56.1	1	1556.18	3.25	0	74.84	0	0.22	0	0	6.14	0	0	0	0	0	0	-25.14	-25.14
	Inverter Transformer	MV1-13 T	364725	4905241	2	0	0	69.4	69.4	1	7237.77	3.25	0	88.19	0	3.34	0	0	8.73	0	0	0	0	0	0	-30.92	-30.92
	Inverter Transformer	MV4-4 T	369033	4909199	2	0	0	56.1	56.1	1	1567.37	3.25	0	74.9	0	0.23	0	0	6.16	0	0	0	0	0	0	-25.23	-25.23
	Inverter Transformer	MV4-7 T	369040	4909001	2	0	0	56.1	56.1	1	1611.81	3.25	0	75.15	0	0.24	0	0	6.26	0	0	0	0	0	0	-25.59	-25.59
	Inverter Transformer	MV4-12 T	369049	4908803	2	0	0	56.1	56.1	1	1676.8	3.25	0	75.49	0	0.27	0	0	6.39	0	0	0	0	0	0	-26.09	-26.09
	Inverter Transformer	MV4-14 T	369182	4908507	2	0	0	56.1	56.1	1	1712.25	3.25	0	75.67	0	0.28	0	0	6.46	0	0	0	0	0	0	-26.36	-26.36
	Inverter Transformer	MV4-15 T	369170	4908481	2	0	0	56.1	56.1	1	1737.27	3.25	0	75.8	0	0.29	0	0	6.52	0	0	0	0	0	0	-26.55	-26.55
	Inverter Transformer	MV4-13 T	369057	4908605	2	0	0	56.1	56.1	1	1762.66	3.25	0	75.92	0	0.31	0	0	6.57	0	0	0	0	0	0	-26.74	-26.74
	Inverter Transformer	MV6-2 T	370091	4907339	2	0	0	56.1	56.1	1	2223.98	3.25	0	77.94	0	0.5	0	0	7.48	0	0	0	0	0	0	-29.86	-29.86
	Inverter Transformer	MV6-3 T	370202	4907140	2	0	0	56.1	56.1	1	2399.24	3.25	0	78.6	0	0.57	0	0	7.8	0	0	0	0	0	0	-30.92	-30.92
	Inverter Transformer	MV3-2 T	368677	4907928	2	0	0	56.1	56.1	1	2466.89	3.25	0	78.84	0	0.6	0	0	7.93	0	0	0	0	0	0	-31.32	-31.32
	Inverter Transformer	MV3-4 T	368507	4907925	2	0	0	56.1	56.1	1	2601.39	3.25	0	79.3	0	0.66	0	0	8.17	0	0	0	0	0	0	-32.08	-32.08
	Inverter Transformer	MV3-8 T	368685	4907712	2	0	0	56.1	56.1	1	2604.97	3.25	0	79.32	0	0.66	0	0	8.18	0	0	0	0	0	0	-32.1	-32.1
	Inverter Transformer	MV3-9 T	368517	4907703	2	0	0	56.1	56.1	1	2734.88	3.25	0	79.74	0	0.72	0	0	8.41	0	0	0	0	0	0	-32.81	-32.81
	Inverter Transformer	MV3-14 T	368678	4907498	2	0	0	56.1	56.1	1	2761.89	3.25	0	79.82	0	0.73	0	0	8.46	0	0	0	0	0	0	-32.95	-32.95
	Inverter Transformer	MV3-5 T	368335	4907843	2	0	0	56.1	56.1	1	2788.01	3.25	0	79.91	0	0.74	0	0	8.5	0	0	0	0	0	0	-33.09	-33.09
	Inverter Transformer	MV3-1 T	368150	4907976	2	0	0	56.1	56.1	1	2864.92	4.6	0	80.14	0	1.7	2.68	0.01	8.64	0	0	0	0	0	0	-37.09	-37.09
	Inverter Transformer	MV3-20 T	368683	4907317	2	0	0	56.1	56.1	1	2893.21	3.25	0	80.23	0	0.78	0	0	8.69	0	0	0	0	0	0	-33.64	-33.64
	Inverter Transformer	MV3-11 T	368340	4907662	2	0	0	56.1	56.1	1	2896.07	3.25	0	80.24	0	0.79	0	0	8.69	0	0	0	0	0	0	-33.65	-33.65
	Inverter Transformer	MV3-16 T	368509	4907475	2	0	0	56.1	56.1	1	2896.36	3.25	0	80.24	0	0.79	0	0	8.69	0	0	0	0	0	0	-33.66	-33.66
	Inverter Transformer	MV3-6 T	368156	4907834	2	0	0	56.1	56.1	1	2938.52	3.25	0	80.36	0	0.8	0	0	8.76	0	0	0	0	0	0	-33.87	-33.87
	Inverter Transformer	MV3-15 T	368351	4907477	2	0	0	56.1	56.1	1	3009.43	3.25	0	80.57	0	0.83	0	0	8.88	0	0	0	0	0	0	-34.23	-34.23
	Inverter Transformer	MV3-10 T	368162	4907669	2	0	0	56.1	56.1	1	3030.94	3.25	0	80.63	0	0.84	0	0	8.92	0	0	0	0	0	0	-34.34	-34.34
	Inverter Transformer	MV3-22 T	368661	4907142	2	0	0	56.1	56.1	1	3041.81	3.25	0	80.66	0	0.85	0	0	8.94	0	0	0	0	0	0	-34.39	-34.39
	Inverter Transformer	MV3-3 T	367944	4907927	2	0	0	56.1	56.1	1	3065.89	3.25	0	80.73	0	0.86	0	0	8.98	0	0	0	0	0	0	-34.51	-34.51
	Inverter Transformer	MV3-19 T	368352	4907347	2	0	0	56.1	56.1	1	3098.06	3.25	0	80.82	0	0.87	0	0	9.03	0	0	0	0	0	0	-34.67	-34.67
	Inverter Transformer	MV3-21 T	368484	4907206	2	0	0	56.1	56.1	1	3108.1	3.25	0	80.85	0	0.88	0	0	9.05	0	0	0	0	0	0	-34.72	-34.72
	Inverter Transformer	MV3-17 T	368183	4907472	2	0	0	56.1	56.1	1	3138.55	3.25	0	80.93	0	0.89	0	0	9.1	0	0	0	0	0	0	-34.87	-34.87
	Inverter Transformer	MV3-7 T	367951	4907754	2	0	0	56.1	56.1	1	3152.93	3.25	0	80.97	0	0.89	0	0	9.12	0	0	0	0	0	0	-34.94	-34.94
	Inverter Transformer	MV3-13 T	367958	4907577	2	0	0	56.1	56.1	1	3249.26	3.25	0	81.24	0	0.94	0	0	9.28	0	0	0	0	0	0	-35.4	-35.4
	Inverter Transformer	MV3-12 T	367674	4907594	2	0	0	56.1	56.1	1	3472.16	3.25	0	81.81	0	1.03	0	0	9.64	0	0	0	0	0	0	-36.43	-36.43
	Inverter Transformer	MV3-18 T	367757	4907412	2	0	0	56.1	56.1	1	3509.01	3.25	0	81.9	0	1.04	0	0	9.7	0	0	0	0	0	0	-36.59	-36.59
	Line Reactor	NGR	369421	4908787.5	5	0	0	45.4	45.4	1	1356.97	5.25	0	73.65	0	3.45	1.22	0.04	0.56	0	0	0	0	0	0	-33.52	-33.52
	Inverter Transformer	MV2-2 T	365982	4906654	2	0	0	56.1	56.1	1	5403.98	4.31	0	85.65	0	2.65	1.93	0	12.37	0	0	0	0	0	0	-46.55	-46.55
	Inverter Transformer	MV2-3 T	365814	4906641	2	0	0	56.1	56.1	1	5554	3.25	0	85.89	0	1.82	0	0	12.56	0	0	0	0	0	0	-44.22	-44.22
	Inverter Transformer	MV2-4 T	365590	4906628	2	0	0	56.1	56.1	1	5753.45	3.25	0	86.2	0	1.89	0	0	12.81	0	0	0	0	0	0	-44.83	-44.83
	Inverter Transformer	MV1-1 T	364721	4906166	2	0	0	56.1	56.1	1	6737.07	3.25	0	87.57	0	2.19	0	0	13.94	0	0	0	0	0	0	-47.64	-47.64
	Inverter Transformer	MV1-2 T	364759	4906063	2	0	0	56.1	56.1	1	6756.09	3.25	0	87.59	0	2.19	0	0	13.96	0	0	0	0	0	0	-47.69	-47.69
	Inverter Transformer	MV1-4 T	364821	4905918	2	0	0	56.1	56.1	1	6778.58	4.25	0	87.62	0	2.99	1.63	0	13.99	0	0	0	0	0	0	-50.17	-50.17
	Inverter Transformer	MV1-12 T	365044	4905386	2	0	0	56.1	56.1	1	6895.02	3.25	0	87.77	0	2.23	0	0	14.12	0	0	0	0	0	0	-48.06	-48.06
	Inverter Transformer	MV1-5 T	364676	4905892	2	0	0	56.1	56.1	1	6915.53	3.25	0	87.8	0	2.24	0	0	14.14	0	0	0	0	0	0	-48.11	-48.11
	Inverter Transformer	MV1-15 T	365309	4904994	2	0	0	56.1	56.1	1	6933.32	3.25	0	87.82	0	2.24	0	0	14.16	0	0	0	0	0	0	-48.16	-48.16
	Inverter Transformer	MV1-8 T	364782	4905647	2	0	0	56.1	56.1	1	6958.44	3.25	0	87.85	0	2.25	0	0	14.18	0	0	0	0	0	0	-48.22	-48.22
	Inverter Transformer	MV1-3 T	364435	4906039	2	0	0	56.1	56.1	1	7048.46	3.25	0	87.96	0	2.27	0	0	14.28	0	0	0	0	0	0	-48.46	-48.46
	Inverter Transformer	MV1-6 T	364482	4905835	2	0	0	56.1	56.1	1	7110.88	3.25	0	88.04	0	2.29	0	0	14.35	0	0	0	0	0	0	-48.62	-48.62
	Inverter Transformer	MV1-9 T	364555	4905646	2	0	0	56.1	56.1	1	7148.88	3.25	0	88.08	0	2.3	0	0	14.39	0	0	0	0	0	0	-48.71	-48.71
	Inverter Transformer	MV1-11 T	364649	4905414	2	0	0	56.1	56.1	1	7199.43	3.25	0	88.15	0	2.31	0	0	14.44	0	0	0	0	0	0	-48.84	-48.84
Limit. Valu	0	0																								
Level D/N:	33.6264	33.6264																								

Receiver: Existing Noise Receptor
ID: S-R55
X: 370520
Y: 4909722
Z: 4.5
Ground: 0

ISO	Description	ID	X	Y	Z	Ground	ReflOrd	LxT	LxN	L/A	Dist.	hm	Freq	Adiv	K0b	Agr	Abar	z	Aatm	Afol	Ahous	Cmet	CmetN	Dc	RL	LtotT	LtotN
	Sol_Luce Substation	S_Substation	369426	4908792	3.5	0	0	112.1	112.1	1	1435.87	5.25	0	74.14	0	0.02	4.62	0.36	3.37	0	0	0	0	0	0	29.93	29.93
	Inverter	MV5-1	370020	4909142	2	0	0	100.3	100.3	1	765.77	3.25	0	68.68	0	-0.37	0	0	10.04	0	0	0	0	0	0	21.96	21.96
	Inverter	MV5-3	370231	4908851	2	0	0	100.3	100.3	1	917.7	3.25	0	70.25	0	-0.29	0	0	10.63	0	0	0	0	0	0	19.72	19.72
	Inverter	MV5-2	370006	4908853	2	0	0	100.3	100.3	1	1009.64	3.25	0	71.08	0	-0.24	0	0	10.94	0	0	0	0	0	0	18.53	18.53
	Inverter	MV5-4	370324	4908707	2	0	0	100.3	100.3	1	1033.75	3.25	0	71.29	0	-0.23	0	0	11.02	0	0	0	0	0	0	18.23	18.23
	Inverter	MV5-5	370015	4908690	2	0	0	100.3	100.3	1	1148.94	3.25	0	72.21	0	-0.18	0	0	11.38	0	0	0	0	0	0	16.91	16.91
	Inverter	MV4-2	369272	4909397	2	0	0	100.3	100.3	1	1289.63	3.25	0	73.21	0	-0.12	0	0	11.78	0	0	0	0	0	0	15.44	15.44
	Inverter	MV4-3	369229	4909397	2	0	0	100.3	100.3	1	1331.28	3.25	0	73.49	0	-0.1	0	0	11.89	0	0	0	0	0	0	15.04	15.04
	Inverter	MV4-5	369289	4909199	2	0	0	100.3	100.3	1	1337.5	3.25	0	73.53	0	-0.1	0	0	11.91	0	0	0	0	0	0	14.98	14.98
	Inverter	MV4-6	369243	4909192	2	0	0	100.3	100.3	1	1382.62	3.25	0	73.81	0	-0.08	0	0	12.03	0	0	0	0	0	0	14.55	14.55
	Inverter	MV4-9	369289	4909001	2	0	0	100.3	100.3	1	1426.61	3.25	0	74.09	0	-0.06	0	0	12.14	0	0	0	0	0	0	14.15	14.15
	Inverter	MV4-8	369256	4909001	2	0	0	100.3	100.3	1	1455.18	3.25	0	74.26	0	-0.05	0	0	12.21	0	0	0	0	0	0	13.89	13.89
	Inverter	MV4-10	369312	4908858	2	0	0	100.3	100.3	1	1485.18	3.25	0	74.44	0	-0.04	0	0	12.29	0	0	0	0	0	0	13.63	13.63

Inverter	MV4-11	369264	4908855	2	0	0	100.3	100.3	1	1526.18	3.25	0	74.67	0	-0.02	0	0	12.39	0	0	0	0	0	0	13.27	13.27
Inverter	MV4-1	369011	4909397	2	0	0	100.3	100.3	1	1543.6	3.25	0	74.77	0	-0.02	0	0	12.43	0	0	0	0	0	0	13.13	13.13
Inverter	MV4-4	369027	4909199	2	0	0	100.3	100.3	1	1581.96	3.25	0	74.98	0	0	0	0	12.52	0	0	0	0	0	0	12.81	12.81
Inverter	MV4-7	369035	4909001	2	0	0	100.3	100.3	1	1650.78	3.25	0	75.35	0	0.02	0	0	12.69	0	0	0	0	0	0	12.25	12.25
DSTATCOM - 10 MVAR #1	DSAT1	369437	4908757	2.5	0	0	96.6	96.6	1	1450.56	3.5	0	74.23	0	3.1	0	0	1.37	0	0	0	0	0	0	17.93	17.93
DSTATCOM - 10 MVAR #2	DSAT2	369403	4908757	2.5	0	0	96.6	96.6	1	1476.12	3.5	0	74.38	0	3.11	0	0	1.39	0	0	0	0	0	0	17.75	17.75
Inverter	MV6-2	370085	4907339	2	0	0	100.3	100.3	1	2422.38	3.25	0	78.68	0	0.24	0	0	14.31	0	0	0	0	0	0	7.08	7.08
Inverter	MV6-3	370207	4907140	2	0	0	100.3	100.3	1	2600.9	3.25	0	79.3	0	0.28	0	0	14.65	0	0	0	0	0	0	6.08	6.08
Inverter	MV3-8	368680	4907712	2	0	0	100.3	100.3	1	2725.01	3.25	0	79.71	0	0.31	0	0	14.88	0	0	0	0	0	0	5.42	5.42
Inverter	MV3-9	368512	4907703	2	0	0	100.3	100.3	1	2847.53	3.25	0	80.09	0	0.33	0	0	15.1	0	0	0	0	0	0	4.79	4.79
Inverter	MV3-14	368684	4907498	2	0	0	100.3	100.3	1	2883.93	3.25	0	80.2	0	0.34	0	0	15.17	0	0	0	0	0	0	4.61	4.61
Inverter	MV3-11	368346	4907662	2	0	0	100.3	100.3	1	2994.98	3.25	0	80.53	0	0.36	0	0	15.36	0	0	0	0	0	0	4.06	4.06
Inverter	MV3-16	368514	4907475	2	0	0	100.3	100.3	1	3012.15	3.25	0	80.58	0	0.36	0	0	15.39	0	0	0	0	0	0	3.98	3.98
Inverter	MV3-6	368162	4907834	2	0	0	100.3	100.3	1	3020.71	3.25	0	80.6	0	0.37	0	0	15.41	0	0	0	0	0	0	3.94	3.94
Inverter	MV3-20	368689	4907317	2	0	0	100.3	100.3	1	3022.68	3.25	0	80.61	0	0.37	0	0	15.41	0	0	0	0	0	0	3.93	3.93
Inverter	MV3-15	368357	4907477	2	0	0	100.3	100.3	1	3117.47	3.25	0	80.88	0	0.38	0	0	15.58	0	0	0	0	0	0	3.47	3.47
Inverter	MV3-10	368167	4907669	2	0	0	100.3	100.3	1	3122.73	3.25	0	80.89	0	0.39	0	0	15.59	0	0	0	0	0	0	3.45	3.45
Inverter	MV3-3	367939	4907927	2	0	0	100.3	100.3	1	3143.82	3.25	0	80.95	0	0.39	0	0	15.62	0	0	0	0	0	0	3.35	3.35
Inverter	MV3-19	368357	4907347	2	0	0	100.3	100.3	1	3212.35	3.25	0	81.14	0	0.4	0	0	15.74	0	0	0	0	0	0	3.03	3.03
Inverter	MV3-21	368478	4907206	2	0	0	100.3	100.3	1	3240.37	3.25	0	81.21	0	0.41	0	0	15.79	0	0	0	0	0	0	2.9	2.9
Inverter	MV3-7	367945	4907754	2	0	0	100.3	100.3	1	3240.93	3.25	0	81.21	0	0.41	0	0	15.79	0	0	0	0	0	0	2.9	2.9
Inverter	MV3-17	368178	4907472	2	0	0	100.3	100.3	1	3247.69	3.25	0	81.23	0	0.41	0	0	15.8	0	0	0	0	0	0	2.87	2.87
Inverter	MV3-13	367963	4907577	2	0	0	100.3	100.3	1	3337.56	4.54	0	81.47	0	1.22	3.1	0	15.96	0	0	0	0	0	0	-1.43	-1.43
Inverter	MV6-1	370235	4907364	2	0	0	97.3	97.3	1	2375.16	3.25	0	78.51	0	0.23	0	0	14.22	0	0	0	0	0	0	4.35	4.35
Inverter	MV3-12	367668	4907594	2	0	0	100.3	100.3	1	3558.41	3.25	0	82.03	0	0.46	0	0	16.33	0	0	0	0	0	0	1.5	1.5
Inverter	MV3-18	367752	4907412	2	0	0	100.3	100.3	1	3605.26	4.5	0	82.14	0	1.28	3.04	0	16.41	0	0	0	0	0	0	-2.55	-2.55
Fixed Reactor Bank 2	FRB2	369464	4908755	6	0	0	89.8	89.8	1	1431.86	5.25	0	74.12	0	-1.03	0	0	3.36	0	0	0	0	0	0	13.33	13.33
Inverter	MV5-6	369982	4908507	2	0	0	89.1	89.1	1	1328.79	3.25	0	73.47	0	0.75	0	0	6.91	0	0	0	0	0	0	7.92	7.92
Fixed Reactor Bank 1	FRB1	369378	4908755	6	0	0	89.8	89.8	1	1496.41	5.29	0	74.5	0	-0.68	4.19	0	3.48	0	0	0	0	0	0	8.29	8.29
Inverter	MV2-3	365820	4906641	2	0	0	100.3	100.3	1	5619.84	3.25	0	85.99	0	0.69	0	0	19.47	0	0	0	0	0	0	-5.84	-5.84
Inverter	MV2-4	365586	4906624	2	0	0	100.3	100.3	1	5825.97	3.25	0	86.31	0	0.7	0	0	19.76	0	0	0	0	0	0	-6.45	-6.45
Inverter	MV4-12	369043	4908803	2	0	0	89.1	89.1	1	1739.57	3.25	0	75.81	0	0.85	0	0	7.61	0	0	0	0	0	0	4.79	4.79
Inverter	MV4-14	369176	4908507	2	0	0	89.1	89.1	1	1811.79	3.25	0	76.16	0	0.86	0	0	7.74	0	0	0	0	0	0	4.3	4.3
Inverter	MV4-15	369176	4908481	2	0	0	89.1	89.1	1	1829.32	3.25	0	76.25	0	0.87	0	0	7.76	0	0	0	0	0	0	4.18	4.18
Inverter	MV4-13	369051	4908605	2	0	0	89.1	89.1	1	1845.44	3.25	0	76.32	0	0.87	0	0	7.79	0	0	0	0	0	0	4.07	4.07
Inverter	MV1-1	364715	4906166	2	0	0	100.3	100.3	1	6807.58	3.25	0	87.66	0	0.71	0	0	21.06	0	0	0	0	0	0	-9.12	-9.12
Inverter	MV1-2	364753	4906063	2	0	0	100.3	100.3	1	6829.83	3.25	0	87.69	0	0.71	0	0	21.08	0	0	0	0	0	0	-9.17	-9.17
Inverter	MV1-4	364815	4905918	2	0	0	100.3	100.3	1	6856.93	3.25	0	87.72	0	0.71	0	0	21.12	0	0	0	0	0	0	-9.24	-9.24
Inverter	MV1-12	365038	4905386	2	0	0	100.3	100.3	1	6989.51	3.25	0	87.89	0	0.71	0	0	21.29	0	0	0	0	0	0	-9.57	-9.57
Inverter	MV1-5	364671	4905892	2	0	0	100.3	100.3	1	6991.4	3.25	0	87.89	0	0.71	0	0	21.29	0	0	0	0	0	0	-9.58	-9.58
Inverter	MV1-15	365315	4904994	2	0	0	100.3	100.3	1	7031.79	3.25	0	87.94	0	0.71	0	0	21.34	0	0	0	0	0	0	-9.68	-9.68
Inverter	MV1-8	364788	4905647	2	0	0	100.3	100.3	1	7032.88	3.25	0	87.94	0	0.71	0	0	21.34	0	0	0	0	0	0	-9.68	-9.68
Inverter	MV1-6	364477	4905835	2	0	0	100.3	100.3	1	7185.17	3.25	0	88.13	0	0.7	0	0	21.53	0	0	0	0	0	0	-10.05	-10.05
Inverter	MV1-9	364561	4905646	2	0	0	100.3	100.3	1	7219.66	3.25	0	88.17	0	0.7	0	0	21.57	0	0	0	0	0	0	-10.13	-10.13
Inverter	MV1-11	364655	4905414	2	0	0	100.3	100.3	1	7277.16	3.25	0	88.24	0	0.7	0	0	21.64	0	0	0	0	0	0	-10.27	-10.27
Inverter	MV2-1	365842	4906816	2	0	0	97.3	97.3	1	5507.13	3.25	0	85.82	0	0.68	0	0	19.31	0	0	0	0	0	0	-8.5	-8.5
Inverter	MV3-2	368671	4907928	2	0	0	89.1	89.1	1	2576.28	3.25	0	79.22	0	1.04	0	0	8.97	0	0	0	0	0	0	-0.17	-0.17
SubstationTransformer	W_ST	369711.17	4906112.3	2.5	0	0	92	92	1	3699.24	3.5	0	82.36	0	0.26	0	0	6.96	0	0	0	0	0	0	2.4	2.4
Inverter	MV1-7	364925	4905782	2	0	0	97.3	97.3	1	6843.07	3.25	0	87.71	0	0.71	0	0	21.1	0	0	0	0	0	0	-12.21	-12.21
Inverter	MV1-10	365004	4905564	2	0	0	97.3	97.3	1	6907.62	3.25	0	87.79	0	0.71	0	0	21.18	0	0	0	0	0	0	-12.37	-12.37
Inverter	MV3-4	368502	4907925	2	0	0	89.1	89.1	1	2702.14	3.25	0	79.63	0	1.07	0	0	9.16	0	0	0	0	0	0	-0.81	-0.81
Inverter	MV1-14	365163	4905049	2	0	0	97.3	97.3	1	7108.75	3.25	0	88.04	0	0.71	0	0	21.44	0	0	0	0	0	0	-12.87	-12.87
Inverter	MV1-13	364731	4905241	2	0	0	97.3	97.3	1	7320.65	3.25	0	88.29	0	0.7	0	0	21.7	0	0	0	0	0	0	-13.37	-13.37
Inverter	MV3-5	368340	4907843	2	0	0	89.1	89.1	1	2878.03	4.62	0	80.18	0	1.91	2.7	0.01	9.43	0	0	0	0	0	0	-5.17	-5.17
Inverter	MV3-1	368156	4907976	2	0	0	89.1	89.1	1	2938.88	3.25	0	80.36	0	1.13	0	0	9.52	0	0	0	0	0	0	-1.96	-1.96
Inverter	MV3-22	368656	4907142	2	0	0	89.1	89.1	1	3182.91	3.25	0	81.06	0	1.19	0	0	9.89	0	0	0	0	0	0	-3.08	-3.08
Westbrook Inverter Enclosur	W_INV6	369875	4906578	2	0	0	89.1	89.1	1	3209.48	3.25	0	81.13	0	1.2	0	0	9.93	0	0	0	0	0	0	-3.2	-3.2
Westbrook Inverter Enclosur	W_INV5	369719	4906574	2	0	0	89.1	89.1	1	3248.31	3.25	0	81.23	0	1.21	0	0	9.99	0	0	0	0	0	0	-3.37	-3.37
Westbrook Inverter Enclosur	W_INV7	369780	4906417	2	0	0	89.1	89.1	1	3386.83	3.25	0	81.6	0	1.24	0	0	10.2	0	0	0	0	0	0	-3.98	-3.98
Westbrook Inverter Enclosur	W_INV2	369374	4906388	2	0	0	89.1	89.1	1	3525.46	3.25	0	81.94	0	1.28	0	0	10.4	0	0	0	0	0	0	-4.56	-4.56
Westbrook Inverter Enclosur	W_INV4	369673	4906164	2	0	0	89.1	89.1	1	3657.43	3.25	0	82.26	0	1.31	0	0	10.59	0	0	0	0	0	0	-5.11	-5.11
Westbrook Inverter Enclosur	W_INV3	369508	4906164	2	0	0	89.1	89.1	1	3699.12	3.25	0	82.36	0	1.32	0	0	10.65	0	0	0	0	0	0	-5.28	-5.28
Inverter	MV6-4	370250	4906966	2	0	0	86.1	86.1	1	2769.2	3.25	0	79.85	0	1.09	0	0	9.26	0	0	0	0	0	0	-4.14	-4.14
Westbrook Inverter Enclosur	W_INV1	369409	4906578	2	0	0	86.1	86.1	1	3334.53	3.25	0	81.46	0	1.23	0	0	10.12	0	0	0	0	0	0	-6.75	-6.75
Inverter	MV2-2	365977	4906654	2	0	0	89.1	89.1	1	5481.92	3.25	0	85.78	0	1.76	0	0	13.1	0	0	0	0	0	0	-11.58	-11.58
Gardiner Substation	G_Sub	366586.3	4903349.9	2.5	0	0	90.8	90.8	1	7488.5	4.25	0	88.49	0	2.14	1.82	0.38	11.2	0	0	0	0	0	0	-12.87	-12.87
Inverter	MV1-3	364440	4906039	2	0	0	89.1	89.1	1	7108.51	3.25	0	88.04	0	2.15	0	0	15.11	0	0	0	0	0	0	-16.25	-16.25
Inverters	G_Inv2	366676.9	4903239.1	2	0	0	87.7	87.7	1	7536.41	3.25	0	88.54	0	2.96	0	0	8.52	0	0	0	0	0	0	-12.37	-12.37
Inverters	G_Inv4	366732.8	4903105	2	0	0	87.7	87.7	1	7624.14	3.25	0	88.64	0	2.96	0	0	8.61	0	0	0	0	0	0	-12.55	-12.55
Inverters	G_Inv1	366526.4	4903225.8	2	0	0	87.7	87.7	1	7625.58	3.25	0	88.65	0	2.96	0	0	8.61	0	0	0	0	0	0	-12.56	-12.56
Inverters	G_Inv3	366583.7	4903091.4	2	0	0	87.7	87.7	1	7710.99	3.25	0	88.74	0	2.96	0	0	8.69	0	0	0	0	0	0	-12.74	-12.74
Inverters	G_Inv6	366788.5	4902972	2	0	0	87.7	87.7	1	7712.76	3.25	0	88.74	0	2.96	0	0	8.7	0	0	0	0	0	0	-12.74	-12.74
Inverters	G_Inv5	366638.5	4902958.1	2	0	0	87.7	87.7	1	7798.49	3.25	0	88.84	0	2.96	0	0	8.78	0	0	0	0	0	0	-12.92	-12.92
Inverters	G_Inv8	366844.5	4902838.5	2	0	0	87.7	87.7	1	7803.32	3.25	0	88.85	0	2.96	0	0	8.78	0	0	0	0	0	0	-12.93	-12.93

Inverters	G_Inv7	366694.6	4902824.7	2	0	0	87.7	87.7	1	7887.11	3.25	0	88.94	0	2.96	0	0	8.87	0	0	0	0	0	0	-13.11	-13.11
Inverters	G_Inv10	366900.7	4902704.8	2	0	0	87.7	87.7	1	7895.6	3.25	0	88.95	0	2.96	0	0	8.88	0	0	0	0	0	0	-13.13	-13.13
Inverters	G_Inv9	366750.9	4902691.8	2	0	0	87.7	87.7	1	7976.83	3.25	0	89.04	0	2.96	0	0	8.95	0	0	0	0	0	0	-13.29	-13.29
Westbrook Inverter Transfor	W_INVTR1	369403	4906578	2	0	0	78.2	78.2	1	3336.53	3.25	0	81.47	0	-2.8	0	0	1.8	0	0	0	0	0	0	-2.22	-2.22
Westbrook Inverter Transfor	W_INVTR6	369881	4906578	2	0	0	77.3	77.3	1	3208.28	3.25	0	81.13	0	-2.77	0	0	1.74	0	0	0	0	0	0	-2.76	-2.76
Westbrook Inverter Transfor	W_INVTR5	369725	4906574	2	0	0	77.3	77.3	1	3246.83	3.25	0	81.23	0	-2.78	0	0	1.76	0	0	0	0	0	0	-2.87	-2.87
Westbrook Inverter Transfor	W_INVTR7	369786	4906417	2	0	0	77.3	77.3	1	3385.53	3.25	0	81.59	0	-2.82	0	0	1.82	0	0	0	0	0	0	-3.25	-3.25
Westbrook Inverter Transfor	W_INVTR2	369368	4906388	2	0	0	77.3	77.3	1	3527.42	3.25	0	81.95	0	-2.85	0	0	1.87	0	0	0	0	0	0	-3.63	-3.63
Westbrook Inverter Transfor	W_INVTR4	369679	4906164	2	0	0	77.3	77.3	1	3656.04	3.25	0	82.26	0	-2.88	0	0	1.92	0	0	0	0	0	0	-3.96	-3.96
Westbrook Inverter Transfor	W_INVTR3	369514	4906164	2	0	0	77.3	77.3	1	3697.49	3.25	0	82.36	0	-2.89	0	0	1.94	0	0	0	0	0	0	-4.06	-4.06
Inverter Transformer	MV6-1 T	370230	4907364	2	0	0	69.4	69.4	1	2375.77	3.25	0	78.52	0	2.31	0	0	5.33	0	0	0	0	0	0	-16.8	-16.8
Inverter Transformer	MV6-4 T	370244	4906966	2	0	0	69.4	69.4	1	2769.79	3.25	0	79.85	0	2.44	0	0	5.68	0	0	0	0	0	0	-18.62	-18.62
Inverter Transformer	MV5-1 T	370015	4909142	2	0	0	56.1	56.1	1	769.05	3.25	0	68.72	0	-0.06	0	0	4.32	0	0	0	0	0	0	-16.91	-16.91
Inverter Transformer	MV5-3 T	370237	4908851	2	0	0	56.1	56.1	1	915.83	3.25	0	70.24	0	-0.02	0	0	4.69	0	0	0	0	0	0	-18.85	-18.85
Inverter Transformer	MV5-2 T	370011	4908853	2	0	0	56.1	56.1	1	1007.1	3.25	0	71.06	0	0.01	0	0	4.91	0	0	0	0	0	0	-19.92	-19.92
Inverter Transformer	MV5-4 T	370330	4908707	2	0	0	56.1	56.1	1	1032.63	3.25	0	71.28	0	0.02	0	0	4.97	0	0	0	0	0	0	-20.21	-20.21
Inverter Transformer	MV5-5 T	370021	4908690	2	0	0	56.1	56.1	1	1146.31	3.25	0	72.19	0	0.06	0	0	5.23	0	0	0	0	0	0	-21.42	-21.42
Inverter Transformer	MV2-1 T	365836	4906816	2	0	0	69.4	69.4	1	5512.23	3.25	0	85.83	0	3.11	0	0	7.72	0	0	0	0	0	0	-27.3	-27.3
Inverter Transformer	MV4-2 T	369267	4909397	2	0	0	56.1	56.1	1	1294.47	3.25	0	73.24	0	0.12	0	0	5.57	0	0	0	0	0	0	-22.87	-22.87
Inverter Transformer	MV4-3 T	369234	4909397	2	0	0	56.1	56.1	1	1326.43	3.25	0	73.45	0	0.13	0	0	5.64	0	0	0	0	0	0	-23.17	-23.17
Inverter Transformer	MV5-6 T	369987	4908507	2	0	0	56.1	56.1	1	1326.77	3.25	0	73.46	0	0.13	0	0	5.64	0	0	0	0	0	0	-23.17	-23.17
Inverter Transformer	MV4-5 T	369283	4909199	2	0	0	56.1	56.1	1	1343.02	3.25	0	73.56	0	0.14	0	0	5.68	0	0	0	0	0	0	-23.32	-23.32
Inverter Transformer	MV4-6 T	369249	4909192	2	0	0	56.1	56.1	1	1377.08	3.25	0	73.78	0	0.15	0	0	5.75	0	0	0	0	0	0	-23.62	-23.62
Inverter Transformer	MV4-9 T	369284	4909001	2	0	0	56.1	56.1	1	1430.92	3.25	0	74.11	0	0.17	0	0	5.87	0	0	0	0	0	0	-24.09	-24.09
Inverter Transformer	MV4-8 T	369262	4909001	2	0	0	56.1	56.1	1	1449.97	3.25	0	74.23	0	0.18	0	0	5.91	0	0	0	0	0	0	-24.26	-24.26
Inverter Transformer	MV1-7 T	364919	4905782	2	0	0	69.4	69.4	1	6847.98	3.25	0	87.71	0	3.3	0	0	8.52	0	0	0	0	0	0	-30.18	-30.18
Inverter Transformer	MV4-10 T	369307	4908858	2	0	0	56.1	56.1	1	1489.25	3.25	0	74.46	0	0.19	0	0	5.99	0	0	0	0	0	0	-24.59	-24.59
Inverter Transformer	MV1-10 T	365010	4905564	2	0	0	69.4	69.4	1	6902.83	3.25	0	87.78	0	3.31	0	0	8.55	0	0	0	0	0	0	-30.28	-30.28
Inverter Transformer	MV4-11 T	369269	4908855	2	0	0	56.1	56.1	1	1522.07	3.25	0	74.65	0	0.21	0	0	6.07	0	0	0	0	0	0	-24.86	-24.86
Inverter Transformer	MV4-1 T	369017	4909397	2	0	0	56.1	56.1	1	1537.74	3.25	0	74.74	0	0.21	0	0	6.1	0	0	0	0	0	0	-24.99	-24.99
Inverter Transformer	MV1-14 T	365157	4905049	2	0	0	69.4	69.4	1	7113.28	3.25	0	88.04	0	3.33	0	0	8.66	0	0	0	0	0	0	-30.69	-30.69
Inverter Transformer	MV4-4 T	369033	4909199	2	0	0	56.1	56.1	1	1576.29	3.25	0	74.95	0	0.23	0	0	6.18	0	0	0	0	0	0	-25.3	-25.3
Inverter Transformer	MV1-13 T	364725	4905241	2	0	0	69.4	69.4	1	7325.39	3.25	0	88.3	0	3.35	0	0	8.78	0	0	0	0	0	0	-31.08	-31.08
Inverter Transformer	MV4-7 T	369040	4909001	2	0	0	56.1	56.1	1	1646.28	3.25	0	75.33	0	0.26	0	0	6.33	0	0	0	0	0	0	-25.86	-25.86
Inverter Transformer	MV4-12 T	369049	4908803	2	0	0	56.1	56.1	1	1734.48	3.25	0	75.78	0	0.29	0	0	6.51	0	0	0	0	0	0	-26.53	-26.53
Inverter Transformer	MV4-14 T	369182	4908507	2	0	0	56.1	56.1	1	1807.34	3.25	0	76.14	0	0.32	0	0	6.66	0	0	0	0	0	0	-27.06	-27.06
Inverter Transformer	MV4-15 T	369170	4908481	2	0	0	56.1	56.1	1	1833.74	3.25	0	76.27	0	0.33	0	0	6.71	0	0	0	0	0	0	-27.25	-27.25
Inverter Transformer	MV4-13 T	369057	4908605	2	0	0	56.1	56.1	1	1840.67	3.25	0	76.3	0	0.34	0	0	6.73	0	0	0	0	0	0	-27.3	-27.3
Inverter Transformer	MV6-2 T	370091	4907339	2	0	0	56.1	56.1	1	2421.31	3.25	0	78.68	0	0.58	0	0	7.85	0	0	0	0	0	0	-31.05	-31.05
Inverter Transformer	MV3-2 T	368677	4907928	2	0	0	56.1	56.1	1	2571.98	3.25	0	79.21	0	0.65	0	0	8.12	0	0	0	0	0	0	-31.91	-31.91
Inverter Transformer	MV6-3 T	370202	4907140	2	0	0	56.1	56.1	1	2601.51	3.25	0	79.3	0	0.66	0	0	8.17	0	0	0	0	0	0	-32.08	-32.08
Inverter Transformer	MV3-4 T	368507	4907925	2	0	0	56.1	56.1	1	2698.4	3.25	0	79.62	0	0.7	0	0	8.35	0	0	0	0	0	0	-32.61	-32.61
Inverter Transformer	MV3-8 T	368685	4907712	2	0	0	56.1	56.1	1	2721.64	3.25	0	79.7	0	0.71	0	0	8.39	0	0	0	0	0	0	-32.74	-32.74
Inverter Transformer	MV3-9 T	368517	4907703	2	0	0	56.1	56.1	1	2844.01	3.25	0	80.08	0	0.76	0	0	8.6	0	0	0	0	0	0	-33.38	-33.38
Inverter Transformer	MV3-5 T	368335	4907843	2	0	0	56.1	56.1	1	2881.82	4.63	0	80.19	0	1.71	2.67	0.01	8.67	0	0	0	0	0	0	-37.18	-37.18
Inverter Transformer	MV3-14 T	368678	4907498	2	0	0	56.1	56.1	1	2887.76	3.25	0	80.21	0	0.78	0	0	8.68	0	0	0	0	0	0	-33.61	-33.61
Inverter Transformer	MV3-1 T	368150	4907976	2	0	0	56.1	56.1	1	2943.71	3.25	0	80.38	0	0.81	0	0	8.77	0	0	0	0	0	0	-33.9	-33.9
Inverter Transformer	MV3-11 T	368340	4907662	2	0	0	56.1	56.1	1	2999.33	3.25	0	80.54	0	0.83	0	0	8.87	0	0	0	0	0	0	-34.18	-34.18
Inverter Transformer	MV3-16 T	368509	4907475	2	0	0	56.1	56.1	1	3015.48	3.25	0	80.59	0	0.84	0	0	8.89	0	0	0	0	0	0	-34.26	-34.26
Inverter Transformer	MV3-6 T	368156	4907834	2	0	0	56.1	56.1	1	3025.4	3.25	0	80.62	0	0.84	0	0	8.91	0	0	0	0	0	0	-34.31	-34.31
Inverter Transformer	MV3-20 T	368683	4907317	2	0	0	56.1	56.1	1	3026.32	3.25	0	80.62	0	0.84	0	0	8.91	0	0	0	0	0	0	-34.31	-34.31
Inverter Transformer	MV3-15 T	368351	4907477	2	0	0	56.1	56.1	1	3121.63	3.25	0	80.89	0	0.88	0	0	9.07	0	0	0	0	0	0	-34.78	-34.78
Inverter Transformer	MV3-10 T	368162	4907669	2	0	0	56.1	56.1	1	3126.5	3.25	0	80.9	0	0.88	0	0	9.08	0	0	0	0	0	0	-34.81	-34.81
Inverter Transformer	MV3-3 T	367944	4907927	2	0	0	56.1	56.1	1	3139.71	3.25	0	80.94	0	0.89	0	0	9.1	0	0	0	0	0	0	-34.87	-34.87
Inverter Transformer	MV3-22 T	368661	4907142	2	0	0	56.1	56.1	1	3179.98	3.25	0	81.05	0	0.91	0	0	9.17	0	0	0	0	0	0	-35.07	-35.07
Inverter Transformer	MV3-19 T	368352	4907347	2	0	0	56.1	56.1	1	3215.72	3.25	0	81.15	0	0.92	0	0	9.23	0	0	0	0	0	0	-35.24	-35.24
Inverter Transformer	MV3-7 T	367951	4907754	2	0	0	56.1	56.1	1	3236.17	3.25	0	81.2	0	0.93	0	0	9.26	0	0	0	0	0	0	-35.33	-35.33
Inverter Transformer	MV3-21 T	368484	4907206	2	0	0	56.1	56.1	1	3236.6	3.25	0	81.2	0	0.93	0	0	9.26	0	0	0	0	0	0	-35.34	-35.34
Inverter Transformer	MV3-17 T	368183	4907472	2	0	0	56.1	56.1	1	3244.08	3.25	0	81.22	0	0.93	0	0	9.28	0	0	0	0	0	0	-35.37	-35.37
Inverter Transformer	MV3-13 T	367958	4907577	2	0	0	56.1	56.1	1	3341.39	4.54	0	81.48	0	1.91	2.52	0	9.43	0	0	0	0	0	0	-39.28	-39.28
Inverter Transformer	MV3-12 T	367674	4907594	2	0	0	56.1	56.1	1	3553.6	3.25	0	82.01	0	1.06	0	0	9.77	0	0	0	0	0	0	-36.79	-36.79
Inverter Transformer	MV3-18 T	367757	4907412	2	0	0	56.1	56.1	1	3601.43	4.5	0	82.13	0	2.02	2.43	0	9.85	0	0	0	0	0	0	-40.37	-40.37
Line Reactor	NGR	369421	4908787.5	5	0	0	45.4	45.4	1	1442.6	5.25	0	74.18	0	3.44	1.22	0.03	0.59	0	0	0	0	0	0	-34.08	-34.08
Inverter Transformer	MV2-2 T	365982	4906654	2	0	0	56.1	56.1	1	5477.78	3.25	0	85.77	0	1.79	0	0	12.47	0	0	0	0	0	0	-43.97	-43.97
Inverter Transformer	MV2-3 T	365814	4906641	2	0	0	56.1	56.1	1	5624.86	3.25	0	86	0	1.84	0	0	12.65	0	0	0	0	0	0	-44.44	-44.44
Inverter Transformer	MV2-4 T	365590	4906628	2	0	0	56.1	56.1	1	5820.46	3.25	0	86.3	0	1.91	0	0	12.89	0	0	0	0	0	0	-45.04	-45.04
Inverter Transformer	MV1-1 T	364721	4906166	2	0	0	56.1	56.1	1	6802.47	3.25	0	87.65	0	2.2	0	0	14.02	0	0	0	0	0	0	-47.82	-47.82
Inverter Transformer	MV1-2 T	364759	4906063	2	0	0	56.1	56.1	1	6824.76	3.25	0	87.68	0	2.21	0	0	14.04	0	0	0	0	0	0	-47.87	-47.87
Inverter Transformer	MV1-4 T	364821	4905918	2	0	0	56.1	56.1	1	6851.94	3.25	0	87.72	0	2.22	0	0	14.07	0	0	0	0	0	0	-47.95	-47.95
Inverter Transformer	MV1-12 T	365044	4905386	2	0	0	56.1	56.1	1	6984.8	3.25	0	87.88	0	2.26	0	0	14.21	0	0	0	0	0	0	-48.29	-48.29
Inverter Transformer	MV1-5 T	364676	4905892	2	0	0	56.1	56.1	1	6987.22	3.25	0	87.89	0	2.26	0	0	14.22	0	0	0	0	0	0	-48.3	-48.3
Inverter Transformer	MV1-15 T	365309	4904994	2	0	0	56.1	56.1	1	7036.23	3.25	0	87.95	0	2.27	0	0	14.27	0	0	0	0	0	0	-48.43	-48.43
Inverter Transformer	MV1-8 T	364782	4905647	2	0	0	56.1	56.1	1	7037.77	3.25	0	87.95	0	2.27	0	0	14.27	0	0	0	0	0	0	-48.43	-48.43
Inverter Transformer	MV1-3 T	364435	4906039	2	0	0	56.1	56.1	1	7112.79	3.25	0	88.04	0	2.29	0	0	14.35	0	0	0	0	0	0	-48.62	-48.62

	Inverter Transformer	MV1-6 T	364482	4905835	2	0	0	56.1	56.1	1	7180.96	3.25	0	88.12	0	2.31	0	0	14.42	0	0	0	0	0	0	-48.8	-48.8
	Inverter Transformer	MV1-9 T	364555	4905646	2	0	0	56.1	56.1	1	7224.61	3.25	0	88.18	0	2.32	0	0	14.47	0	0	0	0	0	0	-48.91	-48.91
	Inverter Transformer	MV1-11 T	364649	4905414	2	0	0	56.1	56.1	1	7282	3.25	0	88.25	0	2.33	0	0	14.53	0	0	0	0	0	0	-49.05	-49.05
Limit. Valu	0		0																							
Level D/N:	32.8534		32.8534																							

Receiver: Existing Noise Receptor
ID: S-R56
X: 370503
Y: 4909791
Z: 4.5
Ground: 0

ISO	Description	ID	X	Y	Z	Ground	ReflOrd	LxT	LxN	L/A	Dist.	hm	Freq	Adiv	K0b	Agr	Abar	z	Aatm	Afol	Ahous	Cmet	CmetN	Dc	RL	LtotT	LtotN
	Sol_Luce Substation	S_Substation	369426	4908792	3.5	0	0	112.1	112.1	1	1468.99	5.25	0	74.34	0	0	4.48	0.35	3.43	0	0	0	0	0	0	29.83	29.83
	Inverter	MV5-1	370020	4909142	2	0	0	100.3	100.3	1	809.01	3.25	0	69.16	0	-0.35	0	0	10.22	0	0	0	0	0	0	21.28	21.28
	Inverter	MV5-3	370231	4908851	2	0	0	100.3	100.3	1	978.57	3.25	0	70.81	0	-0.26	0	0	10.84	0	0	0	0	0	0	18.92	18.92
	Inverter	MV5-2	370006	4908853	2	0	0	100.3	100.3	1	1061.54	3.25	0	71.52	0	-0.22	0	0	11.11	0	0	0	0	0	0	17.9	17.9
	Inverter	MV5-4	370324	4908707	2	0	0	100.3	100.3	1	1098.68	3.25	0	71.82	0	-0.2	0	0	11.22	0	0	0	0	0	0	17.47	17.47
	Inverter	MV5-5	370015	4908690	2	0	0	100.3	100.3	1	1204.31	3.25	0	72.61	0	-0.15	0	0	11.54	0	0	0	0	0	0	16.31	16.31
	Inverter	MV4-2	369272	4909397	2	0	0	100.3	100.3	1	1292.52	3.25	0	73.23	0	-0.11	0	0	11.78	0	0	0	0	0	0	15.41	15.41
	Inverter	MV4-3	369229	4909397	2	0	0	100.3	100.3	1	1333.54	3.25	0	73.5	0	-0.1	0	0	11.9	0	0	0	0	0	0	15.01	15.01
	Inverter	MV4-5	369289	4909199	2	0	0	100.3	100.3	1	1350.65	3.25	0	73.61	0	-0.09	0	0	11.94	0	0	0	0	0	0	14.85	14.85
	Inverter	MV4-6	369243	4909192	2	0	0	100.3	100.3	1	1395.14	3.25	0	73.89	0	-0.07	0	0	12.06	0	0	0	0	0	0	14.43	14.43
	Inverter	MV4-9	369289	4909001	2	0	0	100.3	100.3	1	1448.41	3.25	0	74.22	0	-0.05	0	0	12.2	0	0	0	0	0	0	13.95	13.95
	Inverter	MV4-8	369256	4909001	2	0	0	100.3	100.3	1	1476.18	3.25	0	74.38	0	-0.04	0	0	12.27	0	0	0	0	0	0	13.71	13.71
	Inverter	MV4-10	369312	4908858	2	0	0	100.3	100.3	1	1512.94	3.25	0	74.6	0	-0.03	0	0	12.36	0	0	0	0	0	0	13.39	13.39
	Inverter	MV4-1	369011	4909397	2	0	0	100.3	100.3	1	1543.15	3.25	0	74.77	0	-0.02	0	0	12.43	0	0	0	0	0	0	13.13	13.13
	Inverter	MV4-11	369264	4908855	2	0	0	100.3	100.3	1	1552.81	3.25	0	74.82	0	-0.01	0	0	12.45	0	0	0	0	0	0	13.05	13.05
	Inverter	MV4-4	369027	4909199	2	0	0	100.3	100.3	1	1590.3	3.25	0	75.03	0	0	0	0	12.54	0	0	0	0	0	0	12.74	12.74
	Inverter	MV4-7	369035	4909001	2	0	0	100.3	100.3	1	1667.07	3.25	0	75.44	0	0.03	0	0	12.73	0	0	0	0	0	0	12.12	12.12
	DSTATCOM - 10 MVAR #1	DSAT1	369437	4908757	2.5	0	0	96.6	96.6	1	1485.1	3.5	0	74.44	0	3.11	0	0	1.4	0	0	0	0	0	0	17.69	17.69
	DSTATCOM - 10 MVAR #2	DSAT2	369403	4908757	2.5	0	0	96.6	96.6	1	1509.69	5.23	0	74.58	0	3.7	0.92	0.16	1.41	0	0	0	0	0	0	16.02	16.02
	Inverter	MV6-2	370085	4907339	2	0	0	100.3	100.3	1	2487.37	3.25	0	78.91	0	0.25	0	0	14.43	0	0	0	0	0	0	6.71	6.71
	Inverter	MV6-3	370207	4907140	2	0	0	100.3	100.3	1	2667.48	3.25	0	79.52	0	0.29	0	0	14.77	0	0	0	0	0	0	5.72	5.72
	Inverter	MV3-8	368680	4907712	2	0	0	100.3	100.3	1	2765.06	3.25	0	79.83	0	0.31	0	0	14.95	0	0	0	0	0	0	5.21	5.21
	Inverter	MV3-9	368512	4907703	2	0	0	100.3	100.3	1	2885.11	3.25	0	80.2	0	0.34	0	0	15.17	0	0	0	0	0	0	4.6	4.6
	Inverter	MV3-14	368684	4907498	2	0	0	100.3	100.3	1	2926.88	3.25	0	80.33	0	0.35	0	0	15.24	0	0	0	0	0	0	4.39	4.39
	Inverter	MV3-11	368346	4907662	2	0	0	100.3	100.3	1	3030.73	3.25	0	80.63	0	0.37	0	0	15.43	0	0	0	0	0	0	3.89	3.89
	Inverter	MV3-6	368162	4907834	2	0	0	100.3	100.3	1	3051.25	3.25	0	80.69	0	0.37	0	0	15.46	0	0	0	0	0	0	3.79	3.79
	Inverter	MV3-16	368514	4907475	2	0	0	100.3	100.3	1	3052.86	3.25	0	80.69	0	0.37	0	0	15.47	0	0	0	0	0	0	3.78	3.78
	Inverter	MV3-20	368689	4907317	2	0	0	100.3	100.3	1	3067.78	3.25	0	80.74	0	0.37	0	0	15.49	0	0	0	0	0	0	3.71	3.71
	Inverter	MV3-10	368167	4907669	2	0	0	100.3	100.3	1	3155.91	3.25	0	80.98	0	0.39	0	0	15.65	0	0	0	0	0	0	3.29	3.29
	Inverter	MV3-15	368357	4907477	2	0	0	100.3	100.3	1	3155.93	3.25	0	80.98	0	0.39	0	0	15.65	0	0	0	0	0	0	3.29	3.29
	Inverter	MV3-3	367939	4907927	2	0	0	100.3	100.3	1	3169.95	3.25	0	81.02	0	0.39	0	0	15.67	0	0	0	0	0	0	3.23	3.23
	Inverter	MV3-19	368357	4907347	2	0	0	100.3	100.3	1	3252.45	3.25	0	81.24	0	0.41	0	0	15.81	0	0	0	0	0	0	2.85	2.85
	Inverter	MV3-7	367945	4907754	2	0	0	100.3	100.3	1	3269.98	3.25	0	81.29	0	0.41	0	0	15.84	0	0	0	0	0	0	2.77	2.77
	Inverter	MV3-21	368478	4907206	2	0	0	100.3	100.3	1	3283.73	3.25	0	81.33	0	0.41	0	0	15.87	0	0	0	0	0	0	2.71	2.71
	Inverter	MV3-17	368178	4907472	2	0	0	100.3	100.3	1	3283.81	3.25	0	81.33	0	0.41	0	0	15.87	0	0	0	0	0	0	2.7	2.7
	Inverter	MV3-13	367963	4907577	2	0	0	100.3	100.3	1	3369.48	3.25	0	81.55	0	0.43	0	0	16.01	0	0	0	0	0	0	2.32	2.32
	Inverter	MV6-1	370235	4907364	2	0	0	97.3	97.3	1	2441.75	3.25	0	78.75	0	0.24	0	0	14.35	0	0	0	0	0	0	3.97	3.97
	Inverter	MV3-12	367668	4907594	2	0	0	100.3	100.3	1	3586.65	3.25	0	82.09	0	0.47	0	0	16.38	0	0	0	0	0	0	1.38	1.38
	Inverter	MV3-18	367752	4907412	2	0	0	100.3	100.3	1	3636.98	3.25	0	82.21	0	0.47	0	0	16.46	0	0	0	0	0	0	1.17	1.17
	Fixed Reactor Bank 2	FRB2	369464	4908755	6	0	0	89.8	89.8	1	1467.25	5.25	0	74.33	0	-1.03	0	0	3.42	0	0	0	0	0	0	13.05	13.05
	Inverter	MV5-6	369982	4908507	2	0	0	89.1	89.1	1	1385.68	3.25	0	73.83	0	0.77	0	0	7.01	0	0	0	0	0	0	7.45	7.45
	Fixed Reactor Bank 1	FRB1	369378	4908755	6	0	0	89.8	89.8	1	1529.35	5.28	0	74.69	0	-0.68	4.19	0	3.54	0	0	0	0	0	0	8.04	8.04
	Inverter	MV2-3	365820	4906641	2	0	0	100.3	100.3	1	5643.85	3.25	0	86.03	0	0.69	0	0	19.5	0	0	0	0	0	0	-5.91	-5.91
	Inverter	MV2-4	365586	4906624	2	0	0	100.3	100.3	1	5848.66	3.25	0	86.34	0	0.7	0	0	19.79	0	0	0	0	0	0	-6.51	-6.51
	Inverter	MV4-12	369043	4908803	2	0	0	89.1	89.1	1	1762.88	3.25	0	75.92	0	0.85	0	0	7.65	0	0	0	0	0	0	4.63	4.63
	Inverter	MV4-14	369176	4908507	2	0	0	89.1	89.1	1	1846.51	3.25	0	76.33	0	0.87	0	0	7.79	0	0	0	0	0	0	4.07	4.07
	Inverter	MV4-15	369176	4908481	2	0	0	89.1	89.1	1	1864.68	3.25	0	76.41	0	0.88	0	0	7.82	0	0	0	0	0	0	3.95	3.95
	Inverter	MV1-1	364715	4906166	2	0	0	100.3	100.3	1	6829.46	3.25	0	87.69	0	0.71	0	0	21.08	0	0	0	0	0	0	-9.17	-9.17
	Inverter	MV4-13	369051	4908605	2	0	0	89.1	89.1	1	1874.81	3.25	0	76.46	0	0.88	0	0	7.84	0	0	0	0	0	0	3.88	3.88
	Inverter	MV1-2	364753	4906063	2	0	0	100.3	100.3	1	6852.77	3.25	0	87.72	0	0.71	0	0	21.11	0	0	0	0	0	0	-9.23	-9.23
	Inverter	MV1-4	364815	4905918	2	0	0	100.3	100.3	1	6881.39	3.25	0	87.75	0	0.71	0	0	21.15	0	0	0	0	0	0	-9.3	-9.3
	Inverter	MV1-5	364671	4905892	2	0	0	100.3	100.3	1	7015.3	3.25	0	87.92	0	0.71	0	0	21.32	0	0	0	0	0	0	-9.64	-9.64
	Inverter	MV1-12	365038	4905386	2	0	0	100.3	100.3	1	7019.28	3.25	0	87.93	0	0.71	0	0	21.32	0	0	0	0	0	0	-9.65	-9.65
	Inverter	MV1-8	364788	4905647	2	0	0	100.3	100.3	1	7059.32	3.25	0	87.98	0	0.71	0	0	21.37	0	0	0	0	0	0	-9.74	-9.74
	Inverter	MV1-15	365315	4904994	2	0	0	100.3	100.3	1	7065.87	4.26	0	87.98	0	1.77	2.29	0	21.38	0	0	0	0	0	0	-13.12	-13.12
	Inverter	MV1-6	364477	4905835	2	0	0	100.3	100.3	1	7208.51	3.25	0	88.16	0	0.7	0	0	21.56	0	0	0	0	0	0	-10.11	-10.11
	Inverter	MV1-9	364561	4905646	2	0	0	100.3	100.3	1	7244.89	3.25	0	88.2	0	0.7	0	0	21.6	0	0	0	0	0	0	-10.19	-10.19
	Inverter	MV1-11	364655	4905414	2	0	0	100.3	100.3	1	7304.6	3.25	0	88.27	0	0.7	0	0	21.68	0	0	0	0	0	0	-10.34	-10.34
	Inverter	MV2-1	365842	4906816	2	0	0	97.3	97.3	1	5529.52	3.25	0	85.85	0	0.68	0	0	19.34	0	0	0	0	0	0	-8.57	-8.57
	Inverter	MV3-2	368671	4907928	2	0	0	89.1	89.1	1	2612.85	3.25	0	79.34	0	1.05	0	0	9.02	0	0	0	0	0	0	-0.36	-0.36

Inverter	MV1-7	364925	4905782	2	0	0	97.3	97.3	1	6869.22	3.25	0	87.74	0	0.71	0	0	21.13	0	0	0	0	0	0	-12.27	-12.27
Inverter	MV1-10	365004	4905564	2	0	0	97.3	97.3	1	6935.89	3.25	0	87.82	0	0.71	0	0	21.22	0	0	0	0	0	0	-12.44	-12.44
SubstationTransformer	W_ST	369711.17	4906112.3	2.5	0	0	92	92	1	3762.98	3.5	0	82.51	0	0.27	0	0	7.05	0	0	0	0	0	0	2.15	2.15
Inverter	MV3-4	368502	4907925	2	0	0	89.1	89.1	1	2736.05	4.68	0	79.74	0	1.87	2.73	0.01	9.21	0	0	0	0	0	0	-4.5	-4.5
Inverter	MV1-14	365163	4905049	2	0	0	97.3	97.3	1	7141.58	3.25	0	88.08	0	0.71	0	0	21.48	0	0	0	0	0	0	-12.95	-12.95
Inverter	MV1-13	364731	4905241	2	0	0	97.3	97.3	1	7349.73	3.25	0	88.33	0	0.7	0	0	21.73	0	0	0	0	0	0	-13.44	-13.44
Inverter	MV3-5	368340	4907843	2	0	0	89.1	89.1	1	2910.89	3.25	0	80.28	0	1.13	0	0	9.48	0	0	0	0	0	0	-1.83	-1.83
Inverter	MV3-1	368156	4907976	2	0	0	89.1	89.1	1	2966.92	3.25	0	80.45	0	1.14	0	0	9.57	0	0	0	0	0	0	-2.09	-2.09
Inverter	MV3-22	368656	4907142	2	0	0	89.1	89.1	1	3229.34	3.25	0	81.18	0	1.2	0	0	9.96	0	0	0	0	0	0	-3.29	-3.29
Westbrook Inverter Enclosur	W_INV6	369875	4906578	2	0	0	89.1	89.1	1	3273.8	3.25	0	81.3	0	1.21	0	0	10.03	0	0	0	0	0	0	-3.49	-3.49
Westbrook Inverter Enclosur	W_INV5	369719	4906574	2	0	0	89.1	89.1	1	3311.16	3.25	0	81.4	0	1.22	0	0	10.08	0	0	0	0	0	0	-3.65	-3.65
Westbrook Inverter Enclosur	W_INV7	369780	4906417	2	0	0	89.1	89.1	1	3450.6	3.25	0	81.76	0	1.26	0	0	10.29	0	0	0	0	0	0	-4.25	-4.25
Westbrook Inverter Enclosur	W_INV2	369374	4906388	2	0	0	89.1	89.1	1	3585.39	3.25	0	82.09	0	1.29	0	0	10.49	0	0	0	0	0	0	-4.81	-4.81
Westbrook Inverter Enclosur	W_INV4	369673	4906164	2	0	0	89.1	89.1	1	3720.76	3.25	0	82.41	0	1.32	0	0	10.68	0	0	0	0	0	0	-5.36	-5.36
Westbrook Inverter Enclosur	W_INV3	369508	4906164	2	0	0	89.1	89.1	1	3761.01	3.25	0	82.51	0	1.33	0	0	10.74	0	0	0	0	0	0	-5.52	-5.52
Inverter	MV6-4	370250	4906966	2	0	0	86.1	86.1	1	2836.31	3.25	0	80.06	0	1.11	0	0	9.37	0	0	0	0	0	0	-4.47	-4.47
Westbrook Inverter Enclosur	W_INV1	369409	4906578	2	0	0	86.1	86.1	1	3394.14	3.25	0	81.61	0	1.24	0	0	10.21	0	0	0	0	0	0	-7.01	-7.01
Inverter	MV2-2	365977	4906654	2	0	0	89.1	89.1	1	5506.85	3.25	0	85.82	0	1.76	0	0	13.13	0	0	0	0	0	0	-11.66	-11.66
Gardiner Substation	G_Sub	366586.3	4903349.9	2.5	0	0	90.8	90.8	1	7538.46	4.25	0	88.55	0	2.14	1.81	0.38	11.25	0	0	0	0	0	0	-12.97	-12.97
Inverter	MV1-3	364440	4906039	2	0	0	89.1	89.1	1	7130.04	3.25	0	88.06	0	2.16	0	0	15.14	0	0	0	0	0	0	-16.3	-16.3
Inverters	G_Inv2	366676.9	4903239.1	2	0	0	87.7	87.7	1	7587.26	3.25	0	88.6	0	2.96	0	0	8.57	0	0	0	0	0	0	-12.47	-12.47
Inverters	G_Inv1	366526.4	4903225.8	2	0	0	87.7	87.7	1	7675.62	3.25	0	88.7	0	2.96	0	0	8.66	0	0	0	0	0	0	-12.66	-12.66
Inverters	G_Inv4	366732.8	4903105	2	0	0	87.7	87.7	1	7675.74	3.25	0	88.7	0	2.96	0	0	8.66	0	0	0	0	0	0	-12.66	-12.66
Inverters	G_Inv3	366583.7	4903091.4	2	0	0	87.7	87.7	1	7761.8	3.25	0	88.8	0	2.96	0	0	8.74	0	0	0	0	0	0	-12.85	-12.85
Inverters	G_Inv6	366788.5	4902972	2	0	0	87.7	87.7	1	7765.07	3.25	0	88.8	0	2.96	0	0	8.75	0	0	0	0	0	0	-12.85	-12.85
Inverters	G_Inv5	366638.5	4902958.1	2	0	0	87.7	87.7	1	7850.02	3.25	0	88.9	0	2.96	0	0	8.83	0	0	0	0	0	0	-13.03	-13.03
Inverters	G_Inv8	366844.5	4902838.5	2	0	0	87.7	87.7	1	7856.33	3.25	0	88.9	0	2.96	0	0	8.84	0	0	0	0	0	0	-13.04	-13.04
Inverters	G_Inv7	366694.6	4902824.7	2	0	0	87.7	87.7	1	7939.35	3.25	0	89	0	2.96	0	0	8.92	0	0	0	0	0	0	-13.22	-13.22
Inverters	G_Inv10	366900.7	4902704.8	2	0	0	87.7	87.7	1	7949.26	3.25	0	89.01	0	2.96	0	0	8.93	0	0	0	0	0	0	-13.24	-13.24
Inverters	G_Inv9	366750.9	4902691.8	2	0	0	87.7	87.7	1	8029.75	3.25	0	89.09	0	2.96	0	0	9.01	0	0	0	0	0	0	-13.4	-13.4
Westbrook Inverter Transfor	W_INVTR1	369403	4906578	2	0	0	78.2	78.2	1	3396.08	3.25	0	81.62	0	-2.82	0	0	1.82	0	0	0	0	0	0	-2.38	-2.38
Westbrook Inverter Transfor	W_INVTR6	369881	4906578	2	0	0	77.3	77.3	1	3272.65	3.25	0	81.3	0	-2.79	0	0	1.77	0	0	0	0	0	0	-2.94	-2.94
Westbrook Inverter Transfor	W_INVTR5	369725	4906574	2	0	0	77.3	77.3	1	3309.74	3.25	0	81.4	0	-2.8	0	0	1.78	0	0	0	0	0	0	-3.04	-3.04
Westbrook Inverter Transfor	W_INVTR7	369786	4906417	2	0	0	77.3	77.3	1	3449.34	3.25	0	81.75	0	-2.83	0	0	1.84	0	0	0	0	0	0	-3.42	-3.42
Westbrook Inverter Transfor	W_INVTR2	369368	4906388	2	0	0	77.3	77.3	1	3587.29	3.25	0	82.1	0	-2.87	0	0	1.9	0	0	0	0	0	0	-3.78	-3.78
Westbrook Inverter Transfor	W_INVTR4	369679	4906164	2	0	0	77.3	77.3	1	3719.42	3.25	0	82.41	0	-2.9	0	0	1.95	0	0	0	0	0	0	-4.12	-4.12
Westbrook Inverter Transfor	W_INVTR3	369514	4906164	2	0	0	77.3	77.3	1	3759.42	3.25	0	82.5	0	-2.91	0	0	1.96	0	0	0	0	0	0	-4.22	-4.22
Inverter Transformer	MV6-1 T	370230	4907364	2	0	0	69.4	69.4	1	2442.31	3.25	0	78.76	0	2.33	0	0	5.39	0	0	0	0	0	0	-17.12	-17.12
Inverter Transformer	MV6-4 T	370244	4906966	2	0	0	69.4	69.4	1	2836.85	3.25	0	80.06	0	2.46	0	0	5.74	0	0	0	0	0	0	-18.91	-18.91
Inverter Transformer	MV5-1 T	370015	4909142	2	0	0	56.1	56.1	1	812	3.25	0	69.19	0	-0.05	0	0	4.43	0	0	0	0	0	0	-17.51	-17.51
Inverter Transformer	MV5-3 T	370237	4908851	2	0	0	56.1	56.1	1	976.91	3.25	0	70.8	0	0	0	0	4.83	0	0	0	0	0	0	-19.58	-19.58
Inverter Transformer	MV5-2 T	370011	4908853	2	0	0	56.1	56.1	1	1059.2	3.25	0	71.5	0	0.03	0	0	5.03	0	0	0	0	0	0	-20.5	-20.5
Inverter Transformer	MV5-4 T	370330	4908707	2	0	0	56.1	56.1	1	1097.72	3.25	0	71.81	0	0.05	0	0	5.12	0	0	0	0	0	0	-20.92	-20.92
Inverter Transformer	MV2-1 T	365836	4906816	2	0	0	69.4	69.4	1	5534.57	3.25	0	85.86	0	3.11	0	0	7.73	0	0	0	0	0	0	-27.35	-27.35
Inverter Transformer	MV5-5 T	370021	4908690	2	0	0	56.1	56.1	1	1201.89	3.25	0	72.6	0	0.08	0	0	5.36	0	0	0	0	0	0	-21.98	-21.98
Inverter Transformer	MV4-2 T	369267	4909397	2	0	0	56.1	56.1	1	1297.28	3.25	0	73.26	0	0.12	0	0	5.57	0	0	0	0	0	0	-22.9	-22.9
Inverter Transformer	MV4-3 T	369234	4909397	2	0	0	56.1	56.1	1	1328.76	3.25	0	73.47	0	0.13	0	0	5.64	0	0	0	0	0	0	-23.19	-23.19
Inverter Transformer	MV4-5 T	369283	4909199	2	0	0	56.1	56.1	1	1356.05	3.25	0	73.65	0	0.14	0	0	5.71	0	0	0	0	0	0	-23.43	-23.43
Inverter Transformer	MV5-6 T	369987	4908507	2	0	0	56.1	56.1	1	1383.81	3.25	0	73.82	0	0.15	0	0	5.77	0	0	0	0	0	0	-23.68	-23.68
Inverter Transformer	MV4-6 T	369249	4909192	2	0	0	56.1	56.1	1	1389.72	3.25	0	73.86	0	0.16	0	0	5.78	0	0	0	0	0	0	-23.73	-23.73
Inverter Transformer	MV4-9 T	369284	4909001	2	0	0	56.1	56.1	1	1452.61	3.25	0	74.24	0	0.18	0	0	5.92	0	0	0	0	0	0	-24.28	-24.28
Inverter Transformer	MV4-8 T	369262	4909001	2	0	0	56.1	56.1	1	1471.12	3.25	0	74.35	0	0.19	0	0	5.96	0	0	0	0	0	0	-24.44	-24.44
Inverter Transformer	MV1-7 T	364919	4905782	2	0	0	69.4	69.4	1	6874.09	3.25	0	87.74	0	3.3	0	0	8.53	0	0	0	0	0	0	-30.23	-30.23
Inverter Transformer	MV1-10 T	365010	4905564	2	0	0	69.4	69.4	1	6931.13	3.25	0	87.82	0	3.31	0	0	8.56	0	0	0	0	0	0	-30.34	-30.34
Inverter Transformer	MV4-10 T	369307	4908858	2	0	0	56.1	56.1	1	1516.88	3.25	0	74.62	0	0.21	0	0	6.05	0	0	0	0	0	0	-24.82	-24.82
Inverter Transformer	MV4-1 T	369017	4909397	2	0	0	56.1	56.1	1	1537.35	3.25	0	74.74	0	0.21	0	0	6.1	0	0	0	0	0	0	-24.99	-24.99
Inverter Transformer	MV1-14 T	365157	4905049	2	0	0	69.4	69.4	1	7146.07	3.25	0	88.08	0	3.33	0	0	8.68	0	0	0	0	0	0	-30.75	-30.75
Inverter Transformer	MV4-11 T	369269	4908855	2	0	0	56.1	56.1	1	1548.82	3.25	0	74.8	0	0.22	0	0	6.12	0	0	0	0	0	0	-25.08	-25.08
Inverter Transformer	MV4-4 T	369033	4909199	2	0	0	56.1	56.1	1	1584.73	3.25	0	75	0	0.23	0	0	6.2	0	0	0	0	0	0	-25.37	-25.37
Inverter Transformer	MV1-13 T	364725	4905241	2	0	0	69.4	69.4	1	7354.44	3.25	0	88.33	0	3.35	0	0	8.8	0	0	0	0	0	0	-31.13	-31.13
Inverter Transformer	MV4-7 T	369040	4909001	2	0	0	56.1	56.1	1	1662.67	3.25	0	75.42	0	0.26	0	0	6.36	0	0	0	0	0	0	-25.98	-25.98
Inverter Transformer	MV4-12 T	369049	4908803	2	0	0	56.1	56.1	1	1757.92	3.25	0	75.9	0	0.3	0	0	6.56	0	0	0	0	0	0	-26.7	-26.7
Inverter Transformer	MV4-14 T	369182	4908507	2	0	0	56.1	56.1	1	1842.2	3.25	0	76.31	0	0.34	0	0	6.73	0	0	0	0	0	0	-27.32	-27.32
Inverter Transformer	MV4-15 T	369170	4908481	2	0	0	56.1	56.1	1	1868.96	3.25	0	76.43	0	0.35	0	0	6.78	0	0	0	0	0	0	-27.51	-27.51
Inverter Transformer	MV4-13 T	369057	4908605	2	0	0	56.1	56.1	1	1870.17	3.25	0	76.44	0	0.35	0	0	6.79	0	0	0	0	0	0	-27.51	-27.51
Inverter Transformer	MV6-2 T	370091	4907339	2	0	0	56.1	56.1	1	2486.37	3.25	0	78.91	0	0.61	0	0	7.96	0	0	0	0	0	0	-31.43	-31.43
Inverter Transformer	MV3-2 T	368677	4907928	2	0	0	56.1	56.1	1	2608.65	3.25	0	79.33	0	0.66	0	0	8.19	0	0	0	0	0	0	-32.12	-32.12
Inverter Transformer	MV6-3 T	370202	4907140	2	0	0	56.1	56.1	1	2668.03	3.25	0	79.52	0	0.69	0	0	8.29	0	0	0	0	0	0	-32.45	-32.45
Inverter Transformer	MV3-4 T	368507	4907925	2	0	0	56.1	56.1	1	2732.39	4.68	0	79.73	0	1.64	2.72	0.01	8.41	0	0	0	0	0	0	-36.44	-36.44
Inverter Transformer	MV3-8 T	368685	4907712	2	0	0	56.1	56.1	1	2761.77	3.25	0	79.82	0	0.73	0	0	8.46	0	0	0	0	0	0	-32.95	-32.95
Inverter Transformer	MV3-9 T	368517	4907703	2	0	0	56.1	56.1	1	2881.66	3.25	0	80.19	0	0.78	0	0	8.67	0	0	0	0	0	0	-33.58	-33.58
Inverter Transformer	MV3-5 T	368335	4907843	2	0	0	56.1	56.1	1	2914.61	3.25	0	80.29	0	0.79	0	0	8.72	0	0	0	0	0	0	-33.75	-33.75
Inverter Transformer	MV3-14 T	368678	4907498	2	0	0	56.1	56.1	1	2930.61	3.25	0	80.34	0	0.8	0	0	8.75	0	0	0	0	0	0	-33.83	-33.83
Inverter Transformer	MV3-1 T	368150	4907976	2	0	0	56.1	56.1	1	2971.67	3.25	0	80.46	0	0.82	0	0	8.82	0	0	0	0	0	0	-34.04	-34.04

	Inverter Transformer	MV3-11 T	368340	4907662	2	0	0	56.1	56.1	1	3035	3.25	0	80.64	0	0.84	0	0	8.93	0	0	0	0	0	0	-34.36	-34.36
	Inverter Transformer	MV3-6 T	368156	4907834	2	0	0	56.1	56.1	1	3055.86	3.25	0	80.7	0	0.85	0	0	8.96	0	0	0	0	0	0	-34.46	-34.46
	Inverter Transformer	MV3-16 T	368509	4907475	2	0	0	56.1	56.1	1	3056.12	3.25	0	80.7	0	0.85	0	0	8.96	0	0	0	0	0	0	-34.46	-34.46
	Inverter Transformer	MV3-20 T	368683	4907317	2	0	0	56.1	56.1	1	3071.33	3.25	0	80.75	0	0.86	0	0	8.99	0	0	0	0	0	0	-34.54	-34.54
	Inverter Transformer	MV3-10 T	368162	4907669	2	0	0	56.1	56.1	1	3159.62	3.25	0	80.99	0	0.9	0	0	9.14	0	0	0	0	0	0	-34.97	-34.97
	Inverter Transformer	MV3-15 T	368351	4907477	2	0	0	56.1	56.1	1	3160.02	3.25	0	80.99	0	0.9	0	0	9.14	0	0	0	0	0	0	-34.97	-34.97
	Inverter Transformer	MV3-3 T	367944	4907927	2	0	0	56.1	56.1	1	3165.91	3.25	0	81.01	0	0.9	0	0	9.15	0	0	0	0	0	0	-35	-35
	Inverter Transformer	MV3-22 T	368661	4907142	2	0	0	56.1	56.1	1	3226.48	3.25	0	81.17	0	0.93	0	0	9.25	0	0	0	0	0	0	-35.29	-35.29
	Inverter Transformer	MV3-19 T	368352	4907347	2	0	0	56.1	56.1	1	3255.76	3.25	0	81.25	0	0.94	0	0	9.29	0	0	0	0	0	0	-35.43	-35.43
	Inverter Transformer	MV3-7 T	367951	4907754	2	0	0	56.1	56.1	1	3265.28	3.25	0	81.28	0	0.94	0	0	9.31	0	0	0	0	0	0	-35.47	-35.47
	Inverter Transformer	MV3-21 T	368484	4907206	2	0	0	56.1	56.1	1	3280.03	3.25	0	81.32	0	0.95	0	0	9.33	0	0	0	0	0	0	-35.54	-35.54
	Inverter Transformer	MV3-17 T	368183	4907472	2	0	0	56.1	56.1	1	3280.27	3.25	0	81.32	0	0.95	0	0	9.33	0	0	0	0	0	0	-35.54	-35.54
	Inverter Transformer	MV3-13 T	367958	4907577	2	0	0	56.1	56.1	1	3373.25	3.25	0	81.56	0	0.99	0	0	9.49	0	0	0	0	0	0	-35.97	-35.97
	Inverter Transformer	MV3-12 T	367674	4907594	2	0	0	56.1	56.1	1	3581.91	3.25	0	82.08	0	1.07	0	0	9.82	0	0	0	0	0	0	-36.91	-36.91
	Inverter Transformer	MV3-18 T	367757	4907412	2	0	0	56.1	56.1	1	3633.2	3.25	0	82.21	0	1.1	0	0	9.9	0	0	0	0	0	0	-37.14	-37.14
	Line Reactor	NGR	369421	4908787.5	5	0	0	45.4	45.4	1	1475.72	5.25	0	74.38	0	3.43	1.23	0.03	0.6	0	0	0	0	0	0	-34.29	-34.29
	Inverter Transformer	MV2-2 T	365982	4906654	2	0	0	56.1	56.1	1	5502.75	3.25	0	85.81	0	1.8	0	0	12.5	0	0	0	0	0	0	-44.05	-44.05
	Inverter Transformer	MV2-3 T	365814	4906641	2	0	0	56.1	56.1	1	5648.83	3.25	0	86.04	0	1.85	0	0	12.68	0	0	0	0	0	0	-44.51	-44.51
	Inverter Transformer	MV2-4 T	365590	4906628	2	0	0	56.1	56.1	1	5843.13	3.25	0	86.33	0	1.91	0	0	12.92	0	0	0	0	0	0	-45.1	-45.1
	Inverter Transformer	MV1-1 T	364721	4906166	2	0	0	56.1	56.1	1	6824.38	3.25	0	87.68	0	2.21	0	0	14.04	0	0	0	0	0	0	-47.87	-47.87
	Inverter Transformer	MV1-2 T	364759	4906063	2	0	0	56.1	56.1	1	6847.74	3.25	0	87.71	0	2.22	0	0	14.07	0	0	0	0	0	0	-47.94	-47.94
	Inverter Transformer	MV1-4 T	364821	4905918	2	0	0	56.1	56.1	1	6876.43	3.25	0	87.75	0	2.23	0	0	14.1	0	0	0	0	0	0	-48.01	-48.01
	Inverter Transformer	MV1-5 T	364676	4905892	2	0	0	56.1	56.1	1	7011.14	3.25	0	87.92	0	2.26	0	0	14.24	0	0	0	0	0	0	-48.36	-48.36
	Inverter Transformer	MV1-12 T	365044	4905386	2	0	0	56.1	56.1	1	7014.61	3.25	0	87.92	0	2.26	0	0	14.25	0	0	0	0	0	0	-48.37	-48.37
	Inverter Transformer	MV1-8 T	364782	4905647	2	0	0	56.1	56.1	1	7064.18	3.25	0	87.98	0	2.28	0	0	14.3	0	0	0	0	0	0	-48.5	-48.5
	Inverter Transformer	MV1-15 T	365309	4904994	2	0	0	56.1	56.1	1	7070.28	4.26	0	87.99	0	3.05	1.57	0	14.3	0	0	0	0	0	0	-50.86	-50.86
	Inverter Transformer	MV1-3 T	364435	4906039	2	0	0	56.1	56.1	1	7134.29	3.25	0	88.07	0	2.3	0	0	14.37	0	0	0	0	0	0	-48.68	-48.68
	Inverter Transformer	MV1-6 T	364482	4905835	2	0	0	56.1	56.1	1	7204.33	3.25	0	88.15	0	2.31	0	0	14.45	0	0	0	0	0	0	-48.85	-48.85
	Inverter Transformer	MV1-9 T	364555	4905646	2	0	0	56.1	56.1	1	7249.81	3.25	0	88.21	0	2.33	0	0	14.49	0	0	0	0	0	0	-48.97	-48.97
	Inverter Transformer	MV1-11 T	364649	4905414	2	0	0	56.1	56.1	1	7309.41	3.25	0	88.28	0	2.34	0	0	14.56	0	0	0	0	0	0	-49.12	-49.12
Limit. Valu	0	0																								
Level D/N:	32.5715	32.5715																								

Receiver: Existing Noise Receptor
ID: S-R57
X: 370395
Y: 4909912
Z: 4.5
Ground: 0

ISO	Description	ID	X	Y	Z	Ground	ReflOrd	LxT	LxN	L/A	Dist.	hm	Freq	Adiv	K0b	Agr	Abar	z	Aatm	Afol	Ahous	Cmet	CmetN	Dc	RL	LtotT	LtotN
	Sol_Luce Substation	S_Substation	369426	4908792	3.5	0	0	112.1	112.1	1	1481	5.25	0	74.41	0	-0.05	4.24	0.31	3.45	0	0	0	0	0	0	30.03	30.03
	Inverter	MV5-1	370020	4909142	2	0	0	100.3	100.3	1	856.46	3.25	0	69.65	0	-0.32	0	0	10.4	0	0	0	0	0	0	20.57	20.57
	Inverter	MV5-3	370231	4908851	2	0	0	100.3	100.3	1	1073.6	3.25	0	71.62	0	-0.21	0	0	11.15	0	0	0	0	0	0	17.76	17.76
	Inverter	MV5-2	370006	4908853	2	0	0	100.3	100.3	1	1128.19	3.25	0	72.05	0	-0.19	0	0	11.31	0	0	0	0	0	0	17.14	17.14
	Inverter	MV5-4	370324	4908707	2	0	0	100.3	100.3	1	1207.09	3.25	0	72.63	0	-0.15	0	0	11.55	0	0	0	0	0	0	16.28	16.28
	Inverter	MV4-2	369272	4909397	2	0	0	100.3	100.3	1	1235.46	3.25	0	72.84	0	-0.14	0	0	11.63	0	0	0	0	0	0	15.99	15.99
	Inverter	MV4-3	369229	4909397	2	0	0	100.3	100.3	1	1274.67	3.25	0	73.11	0	-0.12	0	0	11.74	0	0	0	0	0	0	15.59	15.59
	Inverter	MV5-5	370015	4908690	2	0	0	100.3	100.3	1	1279.72	3.25	0	73.14	0	-0.12	0	0	11.75	0	0	0	0	0	0	15.54	15.54
	Inverter	MV4-5	369289	4909199	2	0	0	100.3	100.3	1	1315.91	3.25	0	73.38	0	-0.11	0	0	11.85	0	0	0	0	0	0	15.18	15.18
	Inverter	MV4-6	369243	4909192	2	0	0	100.3	100.3	1	1358.5	3.25	0	73.66	0	-0.09	0	0	11.96	0	0	0	0	0	0	14.78	14.78
	Inverter	MV4-9	369289	4909001	2	0	0	100.3	100.3	1	1432.89	3.25	0	74.12	0	-0.06	0	0	12.16	0	0	0	0	0	0	14.09	14.09
	Inverter	MV4-8	369256	4909001	2	0	0	100.3	100.3	1	1458.51	3.25	0	74.28	0	-0.05	0	0	12.22	0	0	0	0	0	0	13.86	13.86
	Inverter	MV4-1	369011	4909397	2	0	0	100.3	100.3	1	1476.72	3.25	0	74.39	0	-0.04	0	0	12.27	0	0	0	0	0	0	13.7	13.7
	Inverter	MV4-10	369312	4908858	2	0	0	100.3	100.3	1	1511.23	3.25	0	74.59	0	-0.03	0	0	12.35	0	0	0	0	0	0	13.4	13.4
	Inverter	MV4-4	369027	4909199	2	0	0	100.3	100.3	1	1542.66	3.25	0	74.77	0	-0.02	0	0	12.43	0	0	0	0	0	0	13.13	13.13
	Inverter	MV4-11	369264	4908855	2	0	0	100.3	100.3	1	1548.04	3.25	0	74.8	0	-0.02	0	0	12.44	0	0	0	0	0	0	13.09	13.09
	Inverter	MV4-7	369035	4909001	2	0	0	100.3	100.3	1	1636.93	3.25	0	75.28	0	0.02	0	0	12.66	0	0	0	0	0	0	12.36	12.36
	DSTATCOM - 10 MVAR #1	DSAT1	369437	4908757	2.5	0	0	96.6	96.6	1	1500.6	3.5	0	74.53	0	3.11	0	0	1.41	0	0	0	0	0	0	17.59	17.59
	DSTATCOM - 10 MVAR #2	DSAT2	369403	4908757	2.5	0	0	96.6	96.6	1	1522.53	5.23	0	74.65	0	3.7	0.92	0.18	1.42	0	0	0	0	0	0	15.93	15.93
	Inverter	MV6-2	370085	4907339	2	0	0	100.3	100.3	1	2591.61	3.25	0	79.27	0	0.28	0	0	14.63	0	0	0	0	0	0	6.13	6.13
	Inverter	MV6-3	370207	4907140	2	0	0	100.3	100.3	1	2778.37	3.25	0	79.88	0	0.32	0	0	14.97	0	0	0	0	0	0	5.14	5.14
	Inverter	MV3-8	368680	4907712	2	0	0	100.3	100.3	1	2789.49	3.25	0	79.91	0	0.32	0	0	15	0	0	0	0	0	0	5.09	5.09
	Inverter	MV3-9	368512	4907703	2	0	0	100.3	100.3	1	2902.65	3.25	0	80.26	0	0.34	0	0	15.2	0	0	0	0	0	0	4.51	4.51
	Inverter	MV3-14	368684	4907498	2	0	0	100.3	100.3	1	2958.87	3.25	0	80.42	0	0.35	0	0	15.3	0	0	0	0	0	0	4.24	4.24
	Inverter	MV3-11	368346	4907662	2	0	0	100.3	100.3	1	3043.17	3.25	0	80.67	0	0.37	0	0	15.45	0	0	0	0	0	0	3.83	3.83
	Inverter	MV3-6	368162	4907834	2	0	0	100.3	100.3	1	3050.31	3.25	0	80.69	0	0.37	0	0	15.46	0	0	0	0	0	0	3.79	3.79
	Inverter	MV3-16	368514	4907475	2	0	0	100.3	100.3	1	3078.5	3.25	0	80.77	0	0.38	0	0	15.51	0	0	0	0	0	0	3.66	3.66
	Inverter	MV3-20	368689	4907317	2	0	0	100.3	100.3	1	3105.55	3.25	0	80.84	0	0.38	0	0	15.56	0	0	0	0	0	0	3.53	3.53
	Inverter	MV3-3	367939	4907927	2	0	0	100.3	100.3	1	3157.87	3.25	0	80.99	0	0.39	0	0	15.65	0	0	0	0	0	0	3.28	3.28
	Inverter	MV3-10	368167	4907669	2	0	0	100.3	100.3	1	3161.49	3.25	0	81	0	0.39	0	0	15.65	0	0	0	0	0	0	3.27	3.27
	Inverter	MV3-15	368357	4907477	2	0	0	100.3	100.3	1	3175.32	3.25	0	81.04	0	0.39	0	0	15.68	0	0	0	0	0	0	3.2	3.2
	Inverter	MV3-7	367945	4907754	2	0	0	100.3	100.3	1	3264.88	3.25	0	81.28	0	0.41	0	0	15.83	0	0	0	0	0	0	2.79	2.79
	Inverter	MV3-19	368357	4907347	2	0	0	100.3	100.3	1	3276.08	3.25	0	81.31	0	0.41	0	0	15.85	0	0	0	0	0	0	2.74	2.74

Inverter	MV3-17	368178	4907472	2	0	0	100.3	100.3	1	3296.77	3.25	0	81.36	0	0.42	0	0	15.89	0	0	0	0	0	0	2.65	2.65
Inverter	MV3-21	368478	4907206	2	0	0	100.3	100.3	1	3316.22	3.25	0	81.41	0	0.42	0	0	15.92	0	0	0	0	0	0	2.56	2.56
Inverter	MV3-13	367963	4907577	2	0	0	100.3	100.3	1	3371.48	3.25	0	81.56	0	0.43	0	0	16.01	0	0	0	0	0	0	2.31	2.31
Inverter	MV3-12	367668	4907594	2	0	0	100.3	100.3	1	3579.06	3.25	0	82.08	0	0.46	0	0	16.36	0	0	0	0	0	0	1.41	1.41
Inverter	MV6-1	370235	4907364	2	0	0	97.3	97.3	1	2553.02	3.25	0	79.14	0	0.27	0	0	14.56	0	0	0	0	0	0	3.34	3.34
Inverter	MV3-18	367752	4907412	2	0	0	100.3	100.3	1	3638.06	3.25	0	82.22	0	0.47	0	0	16.46	0	0	0	0	0	0	1.16	1.16
Fixed Reactor Bank 2	FRB2	369464	4908755	6	0	0	89.8	89.8	1	1485.06	5.25	0	74.43	0	-1.03	0	0	3.46	0	0	0	0	0	0	12.91	12.91
Fixed Reactor Bank 1	FRB1	369378	4908755	6	0	0	89.8	89.8	1	1540.44	5.28	0	74.75	0	-0.68	4.19	0	3.56	0	0	0	0	0	0	7.96	7.96
Inverter	MV5-6	369982	4908507	2	0	0	89.1	89.1	1	1464.45	3.25	0	74.31	0	0.78	0	0	7.15	0	0	0	0	0	0	6.81	6.81
Inverter	MV2-3	365820	4906641	2	0	0	100.3	100.3	1	5624.06	3.25	0	86	0	0.69	0	0	19.47	0	0	0	0	0	0	-5.85	-5.85
Inverter	MV2-4	365586	4906624	2	0	0	100.3	100.3	1	5825.58	3.25	0	86.31	0	0.7	0	0	19.75	0	0	0	0	0	0	-6.45	-6.45
Inverter	MV4-12	369043	4908803	2	0	0	89.1	89.1	1	1748.65	3.25	0	75.85	0	0.85	0	0	7.63	0	0	0	0	0	0	4.73	4.73
Inverter	MV4-14	369176	4908507	2	0	0	89.1	89.1	1	1860.11	5.01	0	76.39	0	1.65	2.93	0.02	7.82	0	0	0	0	0	0	0.28	0.28
Inverter	MV1-1	364715	4906166	2	0	0	100.3	100.3	1	6804.04	3.25	0	87.66	0	0.71	0	0	21.05	0	0	0	0	0	0	-9.11	-9.11
Inverter	MV1-2	364753	4906063	2	0	0	100.3	100.3	1	6829.86	3.25	0	87.69	0	0.71	0	0	21.08	0	0	0	0	0	0	-9.17	-9.17
Inverter	MV4-13	369051	4908605	2	0	0	89.1	89.1	1	1874.72	3.25	0	76.46	0	0.88	0	0	7.84	0	0	0	0	0	0	3.88	3.88
Inverter	MV1-4	364815	4905918	2	0	0	100.3	100.3	1	6862.1	3.25	0	87.73	0	0.71	0	0	21.13	0	0	0	0	0	0	-9.25	-9.25
Inverter	MV4-15	369176	4908481	2	0	0	89.1	89.1	1	1879.82	3.25	0	76.48	0	0.88	0	0	7.85	0	0	0	0	0	0	3.85	3.85
Inverter	MV1-5	364671	4905892	2	0	0	100.3	100.3	1	6994.61	3.25	0	87.9	0	0.71	0	0	21.29	0	0	0	0	0	0	-9.59	-9.59
Inverter	MV1-12	365038	4905386	2	0	0	100.3	100.3	1	7013	3.25	0	87.92	0	0.71	0	0	21.32	0	0	0	0	0	0	-9.63	-9.63
Inverter	MV1-8	364788	4905647	2	0	0	100.3	100.3	1	7044.76	3.25	0	87.96	0	0.71	0	0	21.36	0	0	0	0	0	0	-9.71	-9.71
Inverter	MV1-15	365315	4904994	2	0	0	100.3	100.3	1	7070.58	3.25	0	87.99	0	0.71	0	0	21.39	0	0	0	0	0	0	-9.77	-9.77
Inverter	MV1-6	364477	4905835	2	0	0	100.3	100.3	1	7186.42	3.25	0	88.13	0	0.7	0	0	21.53	0	0	0	0	0	0	-10.05	-10.05
Inverter	MV1-9	364561	4905646	2	0	0	100.3	100.3	1	7227.33	3.25	0	88.18	0	0.7	0	0	21.58	0	0	0	0	0	0	-10.15	-10.15
Inverter	MV1-11	364655	4905414	2	0	0	100.3	100.3	1	7292.44	3.25	0	88.26	0	0.7	0	0	21.66	0	0	0	0	0	0	-10.31	-10.31
Inverter	MV2-1	365842	4906816	2	0	0	97.3	97.3	1	5505.91	3.25	0	85.82	0	0.68	0	0	19.31	0	0	0	0	0	0	-8.49	-8.49
Inverter	MV3-2	368671	4907928	2	0	0	89.1	89.1	1	2628.39	4.71	0	79.39	0	1.85	2.76	0.01	9.05	0	0	0	0	0	0	-3.98	-3.98
Inverter	MV1-7	364925	4905782	2	0	0	97.3	97.3	1	6854.04	3.25	0	87.72	0	0.71	0	0	21.11	0	0	0	0	0	0	-12.23	-12.23
Inverter	MV1-10	365004	4905564	2	0	0	97.3	97.3	1	6925.89	3.25	0	87.81	0	0.71	0	0	21.21	0	0	0	0	0	0	-12.41	-12.41
Inverter	MV3-4	368502	4907925	2	0	0	89.1	89.1	1	2744.38	3.25	0	79.77	0	1.08	0	0	9.23	0	0	0	0	0	0	-1.02	-1.02
SubstationTransformer	W_ST	369711.17	4906112.3	2.5	0	0	92	92	1	3860.77	3.5	0	82.73	0	0.3	0	0	7.18	0	0	0	0	0	0	1.77	1.77
Inverter	MV1-14	365163	4905049	2	0	0	97.3	97.3	1	7143.01	3.25	0	88.08	0	0.71	0	0	21.48	0	0	0	0	0	0	-12.95	-12.95
Inverter	MV1-13	364731	4905241	2	0	0	97.3	97.3	1	7341.6	3.25	0	88.32	0	0.7	0	0	21.72	0	0	0	0	0	0	-13.42	-13.42
Inverter	MV3-5	368340	4907843	2	0	0	89.1	89.1	1	2916.13	3.25	0	80.3	0	1.13	0	0	9.49	0	0	0	0	0	0	-1.85	-1.85
Inverter	MV3-1	368156	4907976	2	0	0	89.1	89.1	1	2959.94	3.25	0	80.43	0	1.14	0	0	9.56	0	0	0	0	0	0	-2.06	-2.06
Inverter	MV3-22	368656	4907142	2	0	0	89.1	89.1	1	3270.63	3.25	0	81.29	0	1.21	0	0	10.02	0	0	0	0	0	0	-3.47	-3.47
Westbrook Inverter Enclosur	W_INV6	369875	4906578	2	0	0	89.1	89.1	1	3374.31	3.25	0	81.56	0	1.24	0	0	10.18	0	0	0	0	0	0	-3.92	-3.92
Westbrook Inverter Enclosur	W_INV5	369719	4906574	2	0	0	89.1	89.1	1	3405.76	3.25	0	81.64	0	1.25	0	0	10.22	0	0	0	0	0	0	-4.06	-4.06
Westbrook Inverter Enclosur	W_INV7	369780	4906417	2	0	0	89.1	89.1	1	3548.7	3.25	0	82	0	1.28	0	0	10.43	0	0	0	0	0	0	-4.66	-4.66
Westbrook Inverter Enclosur	W_INV2	369374	4906388	2	0	0	89.1	89.1	1	3668.93	3.25	0	82.29	0	1.31	0	0	10.61	0	0	0	0	0	0	-5.15	-5.15
Westbrook Inverter Enclosur	W_INV4	369673	4906164	2	0	0	89.1	89.1	1	3816.91	3.25	0	82.63	0	1.35	0	0	10.82	0	0	0	0	0	0	-5.75	-5.75
Westbrook Inverter Enclosur	W_INV3	369508	4906164	2	0	0	89.1	89.1	1	3851.53	3.25	0	82.71	0	1.36	0	0	10.87	0	0	0	0	0	0	-5.88	-5.88
Inverter	MV6-4	370250	4906966	2	0	0	86.1	86.1	1	2949.57	3.25	0	80.4	0	1.13	0	0	9.54	0	0	0	0	0	0	-5.01	-5.01
Westbrook Inverter Enclosur	W_INV1	369409	4906578	2	0	0	86.1	86.1	1	3476.75	3.25	0	81.82	0	1.26	0	0	10.33	0	0	0	0	0	0	-7.36	-7.36
Inverter	MV2-2	365977	4906654	2	0	0	89.1	89.1	1	5489.38	3.25	0	85.79	0	1.76	0	0	13.11	0	0	0	0	0	0	-11.6	-11.6
Gardiner Substation	G_Sub	366586.3	4903349.9	2.5	0	0	90.8	90.8	1	7587.32	4.25	0	88.6	0	2.15	1.8	0.38	11.29	0	0	0	0	0	0	-13.07	-13.07
Inverter	MV1-3	364440	4906039	2	0	0	89.1	89.1	1	7103.67	3.25	0	88.03	0	2.15	0	0	15.11	0	0	0	0	0	0	-16.23	-16.23
Inverters	G_Inv2	366676.9	4903239.1	2	0	0	87.7	87.7	1	7638.84	3.25	0	88.66	0	2.96	0	0	8.62	0	0	0	0	0	0	-12.58	-12.58
Inverters	G_Inv1	366526.4	4903225.8	2	0	0	87.7	87.7	1	7724.72	3.25	0	88.76	0	2.96	0	0	8.71	0	0	0	0	0	0	-12.77	-12.77
Inverters	G_Inv4	366732.8	4903105	2	0	0	87.7	87.7	1	7729.62	3.25	0	88.76	0	2.96	0	0	8.71	0	0	0	0	0	0	-12.78	-12.78
Inverters	G_Inv3	366583.7	4903091.4	2	0	0	87.7	87.7	1	7813.23	3.25	0	88.86	0	2.96	0	0	8.79	0	0	0	0	0	0	-12.95	-12.95
Inverters	G_Inv6	366788.5	4902972	2	0	0	87.7	87.7	1	7821.15	3.25	0	88.87	0	2.96	0	0	8.8	0	0	0	0	0	0	-12.97	-12.97
Inverters	G_Inv5	366638.5	4902958.1	2	0	0	87.7	87.7	1	7903.67	3.25	0	88.96	0	2.96	0	0	8.88	0	0	0	0	0	0	-13.14	-13.14
Inverters	G_Inv8	366844.5	4902838.5	2	0	0	87.7	87.7	1	7914.57	3.25	0	88.97	0	2.96	0	0	8.89	0	0	0	0	0	0	-13.17	-13.17
Inverters	G_Inv7	366694.6	4902824.7	2	0	0	87.7	87.7	1	7995.17	3.25	0	89.06	0	2.96	0	0	8.97	0	0	0	0	0	0	-13.33	-13.33
Inverters	G_Inv10	366900.7	4902704.8	2	0	0	87.7	87.7	1	8009.61	3.25	0	89.07	0	2.96	0	0	8.99	0	0	0	0	0	0	-13.36	-13.36
Inverters	G_Inv9	366750.9	4902691.8	2	0	0	87.7	87.7	1	8087.69	3.25	0	89.16	0	2.96	0	0	9.06	0	0	0	0	0	0	-13.52	-13.52
Westbrook Inverter Transfor	W_INVTR1	369403	4906578	2	0	0	78.2	78.2	1	3478.45	3.25	0	81.83	0	-2.84	0	0	1.85	0	0	0	0	0	0	-2.6	-2.6
Westbrook Inverter Transfor	W_INVTR6	369881	4906578	2	0	0	77.3	77.3	1	3373.39	3.25	0	81.56	0	-2.81	0	0	1.81	0	0	0	0	0	0	-3.22	-3.22
Westbrook Inverter Transfor	W_INVTR5	369725	4906574	2	0	0	77.3	77.3	1	3404.58	3.25	0	81.64	0	-2.82	0	0	1.82	0	0	0	0	0	0	-3.3	-3.3
Westbrook Inverter Transfor	W_INVTR7	369786	4906417	2	0	0	77.3	77.3	1	3547.66	3.25	0	82	0	-2.86	0	0	1.88	0	0	0	0	0	0	-3.68	-3.68
Westbrook Inverter Transfor	W_INVTR2	369368	4906388	2	0	0	77.3	77.3	1	3670.6	3.25	0	82.29	0	-2.89	0	0	1.93	0	0	0	0	0	0	-4	-4
Westbrook Inverter Transfor	W_INVTR4	369679	4906164	2	0	0	77.3	77.3	1	3815.78	3.25	0	82.63	0	-2.92	0	0	1.98	0	0	0	0	0	0	-4.35	-4.35
Westbrook Inverter Transfor	W_INVTR3	369514	4906164	2	0	0	77.3	77.3	1	3850.15	3.25	0	82.71	0	-2.93	0	0	2	0	0	0	0	0	0	-4.44	-4.44
Inverter Transformer	MV6-1 T	370230	4907364	2	0	0	69.4	69.4	1	2553.34	3.25	0	79.14	0	2.37	0	0	5.49	0	0	0	0	0	0	-17.65	-17.65
Inverter Transformer	MV6-4 T	370244	4906966	2	0	0	69.4	69.4	1	2949.87	3.25	0	80.4	0	2.49	0	0	5.84	0	0	0	0	0	0	-19.38	-19.38
Inverter Transformer	MV5-1 T	370015	4909142	2	0	0	56.1	56.1	1	858.67	3.25	0	69.68	0	-0.03	0	0	4.54	0	0	0	0	0	0	-18.13	-18.13
Inverter Transformer	MV5-3 T	370237	4908851	2	0	0	56.1	56.1	1	1072.7	3.25	0	71.61	0	0.04	0	0	5.06	0	0	0	0	0	0	-20.65	-20.65
Inverter Transformer	MV5-2 T	370011	4908853	2	0	0	56.1	56.1	1	1126.47	3.25	0	72.03	0	0.06	0	0	5.19	0	0	0	0	0	0	-21.22	-21.22
Inverter Transformer	MV2-1 T	365836	4906816	2	0	0	69.4	69.4	1	5510.87	3.25	0	85.82	0	3.11	0	0	7.71	0	0	0	0	0	0	-27.3	-27.3
Inverter Transformer	MV5-4 T	370330	4908707	2	0	0	56.1	56.1	1	1206.75	3.25	0	72.63	0	0.09	0	0	5.37	0	0	0	0	0	0	-22.03	-22.03
Inverter Transformer	MV4-2 T	369267	4909397	2	0	0	56.1	56.1	1	1240.01	3.25	0	72.87	0	0.1	0	0	5.45	0	0	0	0	0	0	-22.35	-22.35
Inverter Transformer	MV4-3 T	369234	4909397	2	0	0	56.1	56.1	1	1270.1	3.25	0	73.08	0	0.11	0	0	5.51	0	0	0	0	0	0	-22.64	-22.64
Inverter Transformer	MV5-5 T	370021	4908690	2	0	0	56.1	56.1	1	1277.95	3.25	0	73.13	0	0.11	0	0	5.53	0	0	0	0	0	0	-22.72	-22.72

Inverter Transformer	MV4-5 T	369283	4909199	2	0	0	56.1	56.1	1	1320.95	3.25	0	73.42	0	0.13	0	0	5.63	0	0	0	0	0	0	-23.12	-23.12
Inverter Transformer	MV4-6 T	369249	4909192	2	0	0	56.1	56.1	1	1353.41	3.25	0	73.63	0	0.14	0	0	5.7	0	0	0	0	0	0	-23.41	-23.41
Inverter Transformer	MV4-9 T	369284	4909001	2	0	0	56.1	56.1	1	1436.75	3.25	0	74.15	0	0.17	0	0	5.88	0	0	0	0	0	0	-24.14	-24.14
Inverter Transformer	MV4-8 T	369262	4909001	2	0	0	56.1	56.1	1	1453.83	3.25	0	74.25	0	0.18	0	0	5.92	0	0	0	0	0	0	-24.29	-24.29
Inverter Transformer	MV5-6 T	369987	4908507	2	0	0	56.1	56.1	1	1463.04	3.25	0	74.31	0	0.18	0	0	5.94	0	0	0	0	0	0	-24.37	-24.37
Inverter Transformer	MV4-1 T	369017	4909397	2	0	0	56.1	56.1	1	1471.09	3.25	0	74.35	0	0.19	0	0	5.96	0	0	0	0	0	0	-24.44	-24.44
Inverter Transformer	MV1-7 T	364919	4905782	2	0	0	69.4	69.4	1	6858.83	3.25	0	87.72	0	3.3	0	0	8.52	0	0	0	0	0	0	-30.2	-30.2
Inverter Transformer	MV1-10 T	365010	4905564	2	0	0	69.4	69.4	1	6921.22	3.25	0	87.8	0	3.31	0	0	8.56	0	0	0	0	0	0	-30.32	-30.32
Inverter Transformer	MV4-10 T	369307	4908858	2	0	0	56.1	56.1	1	1514.82	3.25	0	74.61	0	0.2	0	0	6.05	0	0	0	0	0	0	-24.8	-24.8
Inverter Transformer	MV4-4 T	369033	4909199	2	0	0	56.1	56.1	1	1537.34	3.25	0	74.74	0	0.21	0	0	6.1	0	0	0	0	0	0	-24.99	-24.99
Inverter Transformer	MV4-11 T	369269	4908855	2	0	0	56.1	56.1	1	1544.39	3.25	0	74.78	0	0.22	0	0	6.11	0	0	0	0	0	0	-25.05	-25.05
Inverter Transformer	MV1-14 T	365157	4905049	2	0	0	69.4	69.4	1	7147.41	3.25	0	88.08	0	3.33	0	0	8.68	0	0	0	0	0	0	-30.75	-30.75
Inverter Transformer	MV1-13 T	364725	4905241	2	0	0	69.4	69.4	1	7346.23	3.25	0	88.32	0	3.35	0	0	8.79	0	0	0	0	0	0	-31.12	-31.12
Inverter Transformer	MV4-7 T	369040	4909001	2	0	0	56.1	56.1	1	1632.77	3.25	0	75.26	0	0.25	0	0	6.3	0	0	0	0	0	0	-25.75	-25.75
Inverter Transformer	MV4-12 T	369049	4908803	2	0	0	56.1	56.1	1	1744.02	3.25	0	75.83	0	0.3	0	0	6.53	0	0	0	0	0	0	-26.6	-26.6
Inverter Transformer	MV4-14 T	369182	4908507	2	0	0	56.1	56.1	1	1856.18	5.01	0	76.37	0	1.21	3.03	0.02	6.76	0	0	0	0	0	0	-31.31	-31.31
Inverter Transformer	MV4-13 T	369057	4908605	2	0	0	56.1	56.1	1	1870.43	3.25	0	76.44	0	0.35	0	0	6.79	0	0	0	0	0	0	-27.52	-27.52
Inverter Transformer	MV4-15 T	369170	4908481	2	0	0	56.1	56.1	1	1883.72	4.99	0	76.5	0	1.22	3.02	0.02	6.81	0	0	0	0	0	0	-31.5	-31.5
Inverter Transformer	MV6-2 T	370091	4907339	2	0	0	56.1	56.1	1	2590.9	3.25	0	79.27	0	0.66	0	0	8.15	0	0	0	0	0	0	-32.02	-32.02
Inverter Transformer	MV3-2 T	368677	4907928	2	0	0	56.1	56.1	1	2624.46	4.72	0	79.38	0	1.59	2.76	0.01	8.21	0	0	0	0	0	0	-35.88	-35.88
Inverter Transformer	MV3-4 T	368507	4907925	2	0	0	56.1	56.1	1	2740.93	3.25	0	79.76	0	0.72	0	0	8.42	0	0	0	0	0	0	-32.84	-32.84
Inverter Transformer	MV6-3 T	370202	4907140	2	0	0	56.1	56.1	1	2778.71	3.25	0	79.88	0	0.74	0	0	8.49	0	0	0	0	0	0	-33.04	-33.04
Inverter Transformer	MV3-8 T	368685	4907712	2	0	0	56.1	56.1	1	2786.41	3.25	0	79.9	0	0.74	0	0	8.5	0	0	0	0	0	0	-33.08	-33.08
Inverter Transformer	MV3-9 T	368517	4907703	2	0	0	56.1	56.1	1	2899.41	3.25	0	80.25	0	0.79	0	0	8.7	0	0	0	0	0	0	-33.67	-33.67
Inverter Transformer	MV3-5 T	368335	4907843	2	0	0	56.1	56.1	1	2919.65	3.25	0	80.31	0	0.8	0	0	8.73	0	0	0	0	0	0	-33.77	-33.77
Inverter Transformer	MV3-14 T	368678	4907498	2	0	0	56.1	56.1	1	2962.35	3.25	0	80.43	0	0.81	0	0	8.8	0	0	0	0	0	0	-33.99	-33.99
Inverter Transformer	MV3-1 T	368150	4907976	2	0	0	56.1	56.1	1	2964.48	3.25	0	80.44	0	0.81	0	0	8.81	0	0	0	0	0	0	-34	-34
Inverter Transformer	MV3-11 T	368340	4907662	2	0	0	56.1	56.1	1	3047.22	3.25	0	80.68	0	0.85	0	0	8.95	0	0	0	0	0	0	-34.42	-34.42
Inverter Transformer	MV3-6 T	368156	4907834	2	0	0	56.1	56.1	1	3054.7	3.25	0	80.7	0	0.85	0	0	8.96	0	0	0	0	0	0	-34.45	-34.45
Inverter Transformer	MV3-16 T	368509	4907475	2	0	0	56.1	56.1	1	3081.55	3.25	0	80.78	0	0.86	0	0	9.01	0	0	0	0	0	0	-34.59	-34.59
Inverter Transformer	MV3-20 T	368683	4907317	2	0	0	56.1	56.1	1	3108.85	3.25	0	80.85	0	0.88	0	0	9.05	0	0	0	0	0	0	-34.72	-34.72
Inverter Transformer	MV3-3 T	367944	4907927	2	0	0	56.1	56.1	1	3153.99	3.25	0	80.98	0	0.9	0	0	9.13	0	0	0	0	0	0	-34.94	-34.94
Inverter Transformer	MV3-10 T	368162	4907669	2	0	0	56.1	56.1	1	3165.02	3.25	0	81.01	0	0.9	0	0	9.14	0	0	0	0	0	0	-34.99	-34.99
Inverter Transformer	MV3-15 T	368351	4907477	2	0	0	56.1	56.1	1	3179.18	3.25	0	81.05	0	0.91	0	0	9.17	0	0	0	0	0	0	-35.06	-35.06
Inverter Transformer	MV3-7 T	367951	4907754	2	0	0	56.1	56.1	1	3260.38	3.25	0	81.27	0	0.94	0	0	9.3	0	0	0	0	0	0	-35.45	-35.45
Inverter Transformer	MV3-22 T	368661	4907142	2	0	0	56.1	56.1	1	3267.98	3.25	0	81.29	0	0.94	0	0	9.31	0	0	0	0	0	0	-35.48	-35.48
Inverter Transformer	MV3-19 T	368352	4907347	2	0	0	56.1	56.1	1	3279.19	3.25	0	81.32	0	0.95	0	0	9.33	0	0	0	0	0	0	-35.54	-35.54
Inverter Transformer	MV3-17 T	368183	4907472	2	0	0	56.1	56.1	1	3293.41	3.25	0	81.35	0	0.95	0	0	9.36	0	0	0	0	0	0	-35.6	-35.6
Inverter Transformer	MV3-21 T	368484	4907206	2	0	0	56.1	56.1	1	3312.76	3.25	0	81.4	0	0.96	0	0	9.39	0	0	0	0	0	0	-35.69	-35.69
Inverter Transformer	MV3-13 T	367958	4907577	2	0	0	56.1	56.1	1	3375.09	3.25	0	81.57	0	0.99	0	0	9.49	0	0	0	0	0	0	-35.98	-35.98
Inverter Transformer	MV3-12 T	367674	4907594	2	0	0	56.1	56.1	1	3574.49	3.25	0	82.06	0	1.07	0	0	9.81	0	0	0	0	0	0	-36.88	-36.88
Inverter Transformer	MV3-18 T	367757	4907412	2	0	0	56.1	56.1	1	3634.43	3.25	0	82.21	0	1.1	0	0	9.9	0	0	0	0	0	0	-37.14	-37.14
Line Reactor	NGR	369421	4908787.5	5	0	0	45.4	45.4	1	1487.67	5.25	0	74.45	0	3.43	1.23	0.03	0.61	0	0	0	0	0	0	-34.37	-34.37
Inverter Transformer	MV2-2 T	365982	4906654	2	0	0	56.1	56.1	1	5485.36	3.25	0	85.78	0	1.8	0	0	12.48	0	0	0	0	0	0	-44	-44
Inverter Transformer	MV2-3 T	365814	4906641	2	0	0	56.1	56.1	1	5628.94	3.25	0	86.01	0	1.84	0	0	12.66	0	0	0	0	0	0	-44.45	-44.45
Inverter Transformer	MV2-4 T	365590	4906628	2	0	0	56.1	56.1	1	5820.02	3.25	0	86.3	0	1.91	0	0	12.89	0	0	0	0	0	0	-45.03	-45.03
Inverter Transformer	MV1-1 T	364721	4906166	2	0	0	56.1	56.1	1	6799.03	3.25	0	87.65	0	2.2	0	0	14.01	0	0	0	0	0	0	-47.81	-47.81
Inverter Transformer	MV1-2 T	364759	4906063	2	0	0	56.1	56.1	1	6824.9	3.25	0	87.68	0	2.21	0	0	14.04	0	0	0	0	0	0	-47.87	-47.87
Inverter Transformer	MV1-4 T	364821	4905918	2	0	0	56.1	56.1	1	6857.22	3.25	0	87.72	0	2.22	0	0	14.08	0	0	0	0	0	0	-47.96	-47.96
Inverter Transformer	MV1-5 T	364676	4905892	2	0	0	56.1	56.1	1	6990.52	3.25	0	87.89	0	2.26	0	0	14.22	0	0	0	0	0	0	-48.31	-48.31
Inverter Transformer	MV1-12 T	365044	4905386	2	0	0	56.1	56.1	1	7008.42	3.25	0	87.91	0	2.26	0	0	14.24	0	0	0	0	0	0	-48.35	-48.35
Inverter Transformer	MV1-8 T	364782	4905647	2	0	0	56.1	56.1	1	7049.54	3.25	0	87.96	0	2.27	0	0	14.28	0	0	0	0	0	0	-48.46	-48.46
Inverter Transformer	MV1-15 T	365309	4904994	2	0	0	56.1	56.1	1	7074.89	3.25	0	87.99	0	2.28	0	0	14.31	0	0	0	0	0	0	-48.53	-48.53
Inverter Transformer	MV1-3 T	364435	4906039	2	0	0	56.1	56.1	1	7107.86	3.25	0	88.03	0	2.29	0	0	14.34	0	0	0	0	0	0	-48.61	-48.61
Inverter Transformer	MV1-6 T	364482	4905835	2	0	0	56.1	56.1	1	7182.3	3.25	0	88.13	0	2.31	0	0	14.42	0	0	0	0	0	0	-48.8	-48.8
Inverter Transformer	MV1-9 T	364555	4905646	2	0	0	56.1	56.1	1	7232.18	3.25	0	88.19	0	2.32	0	0	14.48	0	0	0	0	0	0	-48.92	-48.92
Inverter Transformer	MV1-11 T	364649	4905414	2	0	0	56.1	56.1	1	7297.16	3.25	0	88.26	0	2.34	0	0	14.54	0	0	0	0	0	0	-49.09	-49.09
Limit. Valu 0	0																								
Level D/N: 32.5481	32.5481																								

Receiver: Existing Noise Receptor
ID: S-R58
X: 370317
Y: 4910062
Z: 4.5
Ground: 0

ISO	Description	ID	X	Y	Z	Ground	ReflOrd	LxT	LxN	L/A	Dist.	hm	Freq	Adiv	K0b	Agr	Abar	z	Aatm	Afol	Ahous	Cmet	CmetN	Dc	RL	LtotT	LtotN
	Sol_Luce Substation	S_Substation	369426	4908792	3.5	0	0	112.1	112.1	1	1551.38	5.25	0	74.81	0	-0.09	3.98	0.28	3.58	0	0	0	0	0	0	29.79	29.79
	Inverter	MV5-1	370020	4909142	2	0	0	100.3	100.3	1	966.76	3.25	0	70.71	0	-0.26	0	0	10.8	0	0	0	0	0	0	19.07	19.07
	Inverter	MV5-3	370231	4908851	2	0	0	100.3	100.3	1	1214.05	3.25	0	72.68	0	-0.15	0	0	11.57	0	0	0	0	0	0	16.21	16.21
	Inverter	MV4-2	369272	4909397	2	0	0	100.3	100.3	1	1238.65	3.25	0	72.86	0	-0.14	0	0	11.64	0	0	0	0	0	0	15.96	15.96
	Inverter	MV5-2	370006	4908853	2	0	0	100.3	100.3	1	1248.36	3.25	0	72.93	0	-0.13	0	0	11.66	0	0	0	0	0	0	15.86	15.86
	Inverter	MV4-3	369229	4909397	2	0	0	100.3	100.3	1	1275.14	3.25	0	73.11	0	-0.12	0	0	11.74	0	0	0	0	0	0	15.59	15.59

Inverter	MV4-5	369289	4909199	2	0	0	100.3	100.3	1	1342.22	3.25	0	73.56	0	-0.09	0	0	11.92	0	0	0	0	0	0	14.93	14.93
Inverter	MV5-4	370324	4908707	2	0	0	100.3	100.3	1	1355.02	3.25	0	73.64	0	-0.09	0	0	11.95	0	0	0	0	0	0	14.81	14.81
Inverter	MV4-6	369243	4909192	2	0	0	100.3	100.3	1	1382.17	3.25	0	73.81	0	-0.08	0	0	12.02	0	0	0	0	0	0	14.55	14.55
Inverter	MV5-5	370015	4908690	2	0	0	100.3	100.3	1	1404.85	3.25	0	73.95	0	-0.07	0	0	12.08	0	0	0	0	0	0	14.35	14.35
Inverter	MV4-1	369011	4909397	2	0	0	100.3	100.3	1	1465.56	3.25	0	74.32	0	-0.05	0	0	12.24	0	0	0	0	0	0	13.8	13.8
Inverter	MV4-9	369289	4909001	2	0	0	100.3	100.3	1	1477.33	3.25	0	74.39	0	-0.04	0	0	12.27	0	0	0	0	0	0	13.7	13.7
Inverter	MV4-8	369256	4909001	2	0	0	100.3	100.3	1	1500.48	3.25	0	74.52	0	-0.03	0	0	12.33	0	0	0	0	0	0	13.49	13.49
Inverter	MV4-4	369027	4909199	2	0	0	100.3	100.3	1	1552.06	3.25	0	74.82	0	-0.01	0	0	12.45	0	0	0	0	0	0	13.06	13.06
Inverter	MV4-10	369312	4908858	2	0	0	100.3	100.3	1	1568.33	3.25	0	74.91	0	-0.01	0	0	12.49	0	0	0	0	0	0	12.92	12.92
Inverter	MV4-11	369264	4908855	2	0	0	100.3	100.3	1	1601.77	3.25	0	75.09	0	0	0	0	12.57	0	0	0	0	0	0	12.64	12.64
Inverter	MV4-7	369035	4909001	2	0	0	100.3	100.3	1	1664.11	3.25	0	75.42	0	0.02	0	0	12.72	0	0	0	0	0	0	12.14	12.14
DSTATCOM - 10 MVAR #1	DSAT1	369437	4908757	2.5	0	0	96.6	96.6	1	1573.99	3.5	0	74.94	0	3.13	0	0	1.45	0	0	0	0	0	0	17.11	17.11
DSTATCOM - 10 MVAR #2	DSAT2	369403	4908757	2.5	0	0	96.6	96.6	1	1593.24	5.24	0	75.05	0	3.71	0.92	0.19	1.47	0	0	0	0	0	0	15.49	15.49
Inverter	MV6-2	370085	4907339	2	0	0	100.3	100.3	1	2732.87	3.25	0	79.73	0	0.31	0	0	14.89	0	0	0	0	0	0	5.38	5.38
Inverter	MV3-8	368680	4907712	2	0	0	100.3	100.3	1	2863.96	4.68	0	80.14	0	1.09	3.22	0.01	15.13	0	0	0	0	0	0	0.73	0.73
Inverter	MV6-3	370207	4907140	2	0	0	100.3	100.3	1	2924.07	3.25	0	80.32	0	0.35	0	0	15.24	0	0	0	0	0	0	4.41	4.41
Inverter	MV3-9	368512	4907703	2	0	0	100.3	100.3	1	2970.34	3.25	0	80.46	0	0.36	0	0	15.32	0	0	0	0	0	0	4.18	4.18
Inverter	MV3-14	368684	4907498	2	0	0	100.3	100.3	1	3039.87	3.25	0	80.66	0	0.37	0	0	15.44	0	0	0	0	0	0	3.84	3.84
Inverter	MV3-6	368162	4907834	2	0	0	100.3	100.3	1	3099.68	3.25	0	80.83	0	0.38	0	0	15.55	0	0	0	0	0	0	3.56	3.56
Inverter	MV3-11	368346	4907662	2	0	0	100.3	100.3	1	3105.62	3.25	0	80.84	0	0.38	0	0	15.56	0	0	0	0	0	0	3.53	3.53
Inverter	MV3-16	368514	4907475	2	0	0	100.3	100.3	1	3153.31	4.62	0	80.98	0	1.17	3.15	0	15.64	0	0	0	0	0	0	-0.62	-0.62
Inverter	MV3-20	368689	4907317	2	0	0	100.3	100.3	1	3191.46	3.25	0	81.08	0	0.4	0	0	15.71	0	0	0	0	0	0	3.13	3.13
Inverter	MV3-3	367939	4907927	2	0	0	100.3	100.3	1	3195.8	3.25	0	81.09	0	0.4	0	0	15.71	0	0	0	0	0	0	3.11	3.11
Inverter	MV3-10	368167	4907669	2	0	0	100.3	100.3	1	3216.98	3.25	0	81.15	0	0.4	0	0	15.75	0	0	0	0	0	0	3.01	3.01
Inverter	MV3-15	368357	4907477	2	0	0	100.3	100.3	1	3244.05	3.25	0	81.22	0	0.41	0	0	15.8	0	0	0	0	0	0	2.89	2.89
Inverter	MV3-7	367945	4907754	2	0	0	100.3	100.3	1	3309.57	3.25	0	81.4	0	0.42	0	0	15.91	0	0	0	0	0	0	2.59	2.59
Inverter	MV3-19	368357	4907347	2	0	0	100.3	100.3	1	3348.56	3.25	0	81.5	0	0.43	0	0	15.98	0	0	0	0	0	0	2.41	2.41
Inverter	MV3-17	368178	4907472	2	0	0	100.3	100.3	1	3359.08	3.25	0	81.52	0	0.43	0	0	15.99	0	0	0	0	0	0	2.37	2.37
Inverter	MV3-21	368478	4907206	2	0	0	100.3	100.3	1	3396.86	3.25	0	81.62	0	0.43	0	0	16.06	0	0	0	0	0	0	2.2	2.2
Inverter	MV3-13	367963	4907577	2	0	0	100.3	100.3	1	3422.94	3.25	0	81.69	0	0.44	0	0	16.1	0	0	0	0	0	0	2.08	2.08
Inverter	MV3-12	367668	4907594	2	0	0	100.3	100.3	1	3620.53	3.25	0	82.18	0	0.47	0	0	16.43	0	0	0	0	0	0	1.23	1.23
Inverter	MV3-18	367752	4907412	2	0	0	100.3	100.3	1	3688.05	3.25	0	82.34	0	0.48	0	0	16.54	0	0	0	0	0	0	0.95	0.95
Inverter	MV6-1	370235	4907364	2	0	0	97.3	97.3	1	2699.25	3.25	0	79.62	0	0.3	0	0	14.83	0	0	0	0	0	0	2.56	2.56
Fixed Reactor Bank 2	FRB2	369464	4908755	6	0	0	89.8	89.8	1	1560.72	5.25	0	74.87	0	-1.02	0	0	3.59	0	0	0	0	0	0	12.34	12.34
Fixed Reactor Bank 1	FRB1	369378	4908755	6	0	0	89.8	89.8	1	1609.34	5.25	0	75.13	0	-1.02	0	0	3.68	0	0	0	0	0	0	11.98	11.98
Inverter	MV2-3	365820	4906641	2	0	0	100.3	100.3	1	5650.33	3.25	0	86.04	0	0.69	0	0	19.51	0	0	0	0	0	0	-5.93	-5.93
Inverter	MV5-6	369982	4908507	2	0	0	89.1	89.1	1	1590.68	3.25	0	75.03	0	0.81	0	0	7.36	0	0	0	0	0	0	5.85	5.85
Inverter	MV2-4	365586	4906624	2	0	0	100.3	100.3	1	5848.27	3.25	0	86.34	0	0.7	0	0	19.79	0	0	0	0	0	0	-6.51	-6.51
Inverter	MV4-12	369043	4908803	2	0	0	89.1	89.1	1	1791.13	3.25	0	76.06	0	0.86	0	0	7.7	0	0	0	0	0	0	4.44	4.44
Inverter	MV1-1	364715	4906166	2	0	0	100.3	100.3	1	6823.58	3.25	0	87.68	0	0.71	0	0	21.08	0	0	0	0	0	0	-9.16	-9.16
Inverter	MV1-2	364753	4906063	2	0	0	100.3	100.3	1	6852.01	3.25	0	87.72	0	0.71	0	0	21.11	0	0	0	0	0	0	-9.23	-9.23
Inverter	MV1-4	364815	4905918	2	0	0	100.3	100.3	1	6888.01	3.25	0	87.76	0	0.71	0	0	21.16	0	0	0	0	0	0	-9.32	-9.32
Inverter	MV1-5	364671	4905892	2	0	0	100.3	100.3	1	7018.99	3.25	0	87.93	0	0.71	0	0	21.32	0	0	0	0	0	0	-9.65	-9.65
Inverter	MV4-14	369176	4908507	2	0	0	89.1	89.1	1	1928.71	3.25	0	76.71	0	0.89	0	0	7.93	0	0	0	0	0	0	3.53	3.53
Inverter	MV4-13	369051	4908605	2	0	0	89.1	89.1	1	1930.18	3.25	0	76.71	0	0.89	0	0	7.93	0	0	0	0	0	0	3.52	3.52
Inverter	MV1-12	365038	4905386	2	0	0	100.3	100.3	1	7052.15	3.25	0	87.97	0	0.71	0	0	21.36	0	0	0	0	0	0	-9.73	-9.73
Inverter	MV1-8	364788	4905647	2	0	0	100.3	100.3	1	7075.46	3.25	0	88	0	0.71	0	0	21.39	0	0	0	0	0	0	-9.78	-9.78
Inverter	MV1-15	365315	4904994	2	0	0	100.3	100.3	1	7120.72	3.25	0	88.05	0	0.71	0	0	21.45	0	0	0	0	0	0	-9.89	-9.89
Inverter	MV4-15	369176	4908481	2	0	0	89.1	89.1	1	1949.73	3.25	0	76.8	0	0.9	0	0	7.96	0	0	0	0	0	0	3.4	3.4
Inverter	MV1-6	364477	4905835	2	0	0	100.3	100.3	1	7209.24	3.25	0	88.16	0	0.7	0	0	21.56	0	0	0	0	0	0	-10.11	-10.11
Inverter	MV1-9	364561	4905646	2	0	0	100.3	100.3	1	7254.83	3.25	0	88.21	0	0.7	0	0	21.62	0	0	0	0	0	0	-10.22	-10.22
Inverter	MV1-11	364655	4905414	2	0	0	100.3	100.3	1	7325.45	3.25	0	88.3	0	0.7	0	0	21.7	0	0	0	0	0	0	-10.39	-10.39
Inverter	MV2-1	365842	4906816	2	0	0	97.3	97.3	1	5528.3	3.25	0	85.85	0	0.68	0	0	19.34	0	0	0	0	0	0	-8.56	-8.56
Inverter	MV1-7	364925	4905782	2	0	0	97.3	97.3	1	6884.19	3.25	0	87.76	0	0.71	0	0	21.15	0	0	0	0	0	0	-12.31	-12.31
Inverter	MV1-10	365004	4905564	2	0	0	97.3	97.3	1	6961.32	3.25	0	87.85	0	0.71	0	0	21.25	0	0	0	0	0	0	-12.5	-12.5
Inverter	MV3-2	368671	4907928	2	0	0	89.1	89.1	1	2695.05	3.25	0	79.61	0	1.07	0	0	9.15	0	0	0	0	0	0	-0.78	-0.78
Inverter	MV1-14	365163	4905049	2	0	0	97.3	97.3	1	7189.85	3.25	0	88.13	0	0.7	0	0	21.54	0	0	0	0	0	0	-13.06	-13.06
Inverter	MV3-4	368502	4907925	2	0	0	89.1	89.1	1	2803.75	3.25	0	79.95	0	1.1	0	0	9.32	0	0	0	0	0	0	-1.31	-1.31
Inverter	MV1-13	364731	4905241	2	0	0	97.3	97.3	1	7378.72	3.25	0	88.36	0	0.7	0	0	21.77	0	0	0	0	0	0	-13.51	-13.51
SubstationTransformer	W_ST	369711.17	4906112.3	2.5	0	0	92	92	1	3995.92	3.5	0	83.03	0	0.33	0	0	7.36	0	0	0	0	0	0	1.25	1.25
Inverter	MV3-5	368340	4907843	2	0	0	89.1	89.1	1	2971.95	3.25	0	80.46	0	1.14	0	0	9.57	0	0	0	0	0	0	-2.12	-2.12
Inverter	MV3-1	368156	4907976	2	0	0	89.1	89.1	1	3003.55	3.25	0	80.55	0	1.15	0	0	9.62	0	0	0	0	0	0	-2.26	-2.26
Inverter	MV3-22	368656	4907142	2	0	0	89.1	89.1	1	3359.36	3.25	0	81.53	0	1.23	0	0	10.16	0	0	0	0	0	0	-3.86	-3.86
Westbrook Inverter Enclosur	W_INV6	369875	4906578	2	0	0	89.1	89.1	1	3511.93	3.25	0	81.91	0	1.27	0	0	10.38	0	0	0	0	0	0	-4.51	-4.51
Westbrook Inverter Enclosur	W_INV5	369719	4906574	2	0	0	89.1	89.1	1	3538.89	3.25	0	81.98	0	1.28	0	0	10.42	0	0	0	0	0	0	-4.62	-4.62
Westbrook Inverter Enclosur	W_INV7	369780	4906417	2	0	0	89.1	89.1	1	3684.35	3.25	0	82.33	0	1.31	0	0	10.63	0	0	0	0	0	0	-5.22	-5.22
Westbrook Inverter Enclosur	W_INV2	369374	4906388	2	0	0	89.1	89.1	1	3793.09	3.25	0	82.58	0	1.34	0	0	10.79	0	0	0	0	0	0	-5.65	-5.65
Westbrook Inverter Enclosur	W_INV4	369673	4906164	2	0	0	89.1	89.1	1	3950.84	3.25	0	82.93	0	1.38	0	0	11.01	0	0	0	0	0	0	-6.27	-6.27
Westbrook Inverter Enclosur	W_INV3	369508	4906164	2	0	0	89.1	89.1	1	3981.07	3.25	0	83	0	1.39	0	0	11.06	0	0	0	0	0	0	-6.39	-6.39
Inverter	MV6-4	370250	4906966	2	0	0	86.1	86.1	1	3096.73	3.25	0	80.82	0	1.17	0	0	9.76	0	0	0	0	0	0	-5.69	-5.69
Westbrook Inverter Enclosur	W_INV1	369409	4906578	2	0	0	86.1	86.1	1	3600.38	3.25	0	82.13	0	1.29	0	0	10.51	0	0	0	0	0	0	-7.87	-7.87
Inverter	MV2-2	365977	4906654	2	0	0	89.1	89.1	1	5518.16	3.25	0	85.84	0	1.77	0	0	13.15	0	0	0	0	0	0	-11.69	-11.69
Gardiner Substation	G_Sub	366586.3	4903349.9	2.5	0	0	90.8	90.8	1	7679.22	4.25	0	88.71	0	2.16	1.78	0.38	11.37	0	0	0	0	0	0	-13.25	-13.25
Inverter	MV1-3	364440	4906039	2	0	0	89.1	89.1	1	7122.05	3.25	0	88.05	0	2.16	0	0	15.13	0	0	0	0	0	0	-16.28	-16.28

Inverters	G_Inv2	366676.9	4903239.1	2	0	0	87.7	87.7	1	7733.19	3.25	0	88.77	0	2.96	0	0	8.72	0	0	0	0	0	0	-12.79	-12.79
Inverters	G_Inv1	366526.4	4903225.8	2	0	0	87.7	87.7	1	7816.8	3.25	0	88.86	0	2.96	0	0	8.8	0	0	0	0	0	0	-12.96	-12.96
Inverters	G_Inv4	366732.8	4903105	2	0	0	87.7	87.7	1	7826	3.25	0	88.87	0	2.96	0	0	8.81	0	0	0	0	0	0	-12.98	-12.98
Inverters	G_Inv3	366583.7	4903091.4	2	0	0	87.7	87.7	1	7907.39	3.25	0	88.96	0	2.96	0	0	8.89	0	0	0	0	0	0	-13.15	-13.15
Inverters	G_Inv6	366788.5	4902972	2	0	0	87.7	87.7	1	7919.5	3.25	0	88.97	0	2.96	0	0	8.9	0	0	0	0	0	0	-13.18	-13.18
Inverters	G_Inv5	366638.5	4902958.1	2	0	0	87.7	87.7	1	7999.8	3.25	0	89.06	0	2.96	0	0	8.98	0	0	0	0	0	0	-13.34	-13.34
Inverters	G_Inv8	366844.5	4902838.5	2	0	0	87.7	87.7	1	8014.81	3.25	0	89.08	0	2.96	0	0	8.99	0	0	0	0	0	0	-13.37	-13.37
Inverters	G_Inv7	366694.6	4902824.7	2	0	0	87.7	87.7	1	8093.23	3.25	0	89.16	0	2.96	0	0	9.07	0	0	0	0	0	0	-13.53	-13.53
Inverters	G_Inv10	366900.7	4902704.8	2	0	0	87.7	87.7	1	8111.69	3.25	0	89.18	0	2.96	0	0	9.09	0	0	0	0	0	0	-13.57	-13.57
Inverters	G_Inv9	366750.9	4902691.8	2	0	0	87.7	87.7	1	8187.61	3.25	0	89.26	0	2.96	0	0	9.16	0	0	0	0	0	0	-13.73	-13.73
Westbrook Inverter Transfor	W_INVTR1	369403	4906578	2	0	0	78.2	78.2	1	3601.9	3.25	0	82.13	0	-2.87	0	0	1.9	0	0	0	0	0	0	-2.92	-2.92
Westbrook Inverter Transfor	W_INVTR6	369881	4906578	2	0	0	77.3	77.3	1	3511.18	3.25	0	81.91	0	-2.85	0	0	1.87	0	0	0	0	0	0	-3.59	-3.59
Westbrook Inverter Transfor	W_INVTR5	369725	4906574	2	0	0	77.3	77.3	1	3537.88	3.25	0	81.97	0	-2.85	0	0	1.88	0	0	0	0	0	0	-3.66	-3.66
Westbrook Inverter Transfor	W_INVTR7	369786	4906417	2	0	0	77.3	77.3	1	3683.48	3.25	0	82.33	0	-2.89	0	0	1.93	0	0	0	0	0	0	-4.03	-4.03
Westbrook Inverter Transfor	W_INVTR2	369368	4906388	2	0	0	77.3	77.3	1	3794.59	3.25	0	82.58	0	-2.92	0	0	1.98	0	0	0	0	0	0	-4.3	-4.3
Westbrook Inverter Transfor	W_INVTR4	369679	4906164	2	0	0	77.3	77.3	1	3949.87	3.25	0	82.93	0	-2.95	0	0	2.04	0	0	0	0	0	0	-4.67	-4.67
Westbrook Inverter Transfor	W_INVTR3	369514	4906164	2	0	0	77.3	77.3	1	3979.85	3.25	0	83	0	-2.96	0	0	2.05	0	0	0	0	0	0	-4.74	-4.74
Inverter Transformer	MV6-1 T	370230	4907364	2	0	0	69.4	69.4	1	2699.4	3.25	0	79.63	0	2.41	0	0	5.62	0	0	0	0	0	0	-18.31	-18.31
Inverter Transformer	MV6-4 T	370244	4906966	2	0	0	69.4	69.4	1	3096.86	3.25	0	80.82	0	2.54	0	0	5.96	0	0	0	0	0	0	-19.97	-19.97
Inverter Transformer	MV5-1 T	370015	4909142	2	0	0	56.1	56.1	1	968.3	3.25	0	70.72	0	0	0	0	4.81	0	0	0	0	0	0	-19.48	-19.48
Inverter Transformer	MV2-1 T	365836	4906816	2	0	0	69.4	69.4	1	5533.16	3.25	0	85.86	0	3.11	0	0	7.73	0	0	0	0	0	0	-27.35	-27.35
Inverter Transformer	MV5-3 T	370237	4908851	2	0	0	56.1	56.1	1	1213.64	3.25	0	72.68	0	0.09	0	0	5.39	0	0	0	0	0	0	-22.1	-22.1
Inverter Transformer	MV4-2 T	369267	4909397	2	0	0	56.1	56.1	1	1242.87	3.25	0	72.89	0	0.1	0	0	5.45	0	0	0	0	0	0	-22.38	-22.38
Inverter Transformer	MV5-2 T	370011	4908853	2	0	0	56.1	56.1	1	1247.13	3.25	0	72.92	0	0.1	0	0	5.46	0	0	0	0	0	0	-22.42	-22.42
Inverter Transformer	MV4-3 T	369234	4909397	2	0	0	56.1	56.1	1	1270.87	3.25	0	73.08	0	0.11	0	0	5.52	0	0	0	0	0	0	-22.65	-22.65
Inverter Transformer	MV4-5 T	369283	4909199	2	0	0	56.1	56.1	1	1346.82	3.25	0	73.59	0	0.14	0	0	5.68	0	0	0	0	0	0	-23.35	-23.35
Inverter Transformer	MV5-4 T	370330	4908707	2	0	0	56.1	56.1	1	1355.06	3.25	0	73.64	0	0.14	0	0	5.7	0	0	0	0	0	0	-23.43	-23.43
Inverter Transformer	MV4-6 T	369249	4909192	2	0	0	56.1	56.1	1	1377.51	3.25	0	73.78	0	0.15	0	0	5.75	0	0	0	0	0	0	-23.63	-23.63
Inverter Transformer	MV5-5 T	370021	4908690	2	0	0	56.1	56.1	1	1403.57	3.25	0	73.94	0	0.16	0	0	5.81	0	0	0	0	0	0	-23.86	-23.86
Inverter Transformer	MV4-1 T	369017	4909397	2	0	0	56.1	56.1	1	1460.22	3.25	0	74.29	0	0.18	0	0	5.93	0	0	0	0	0	0	-24.35	-24.35
Inverter Transformer	MV4-9 T	369284	4909001	2	0	0	56.1	56.1	1	1480.82	3.25	0	74.41	0	0.19	0	0	5.98	0	0	0	0	0	0	-24.52	-24.52
Inverter Transformer	MV1-7 T	364919	4905782	2	0	0	69.4	69.4	1	6888.89	3.25	0	87.76	0	3.31	0	0	8.54	0	0	0	0	0	0	-30.26	-30.26
Inverter Transformer	MV4-8 T	369262	4909001	2	0	0	56.1	56.1	1	1496.25	3.25	0	74.5	0	0.2	0	0	6.01	0	0	0	0	0	0	-24.65	-24.65
Inverter Transformer	MV1-10 T	365010	4905564	2	0	0	69.4	69.4	1	6956.74	3.25	0	87.85	0	3.31	0	0	8.58	0	0	0	0	0	0	-30.39	-30.39
Inverter Transformer	MV4-4 T	369033	4909199	2	0	0	56.1	56.1	1	1547.07	3.25	0	74.79	0	0.22	0	0	6.12	0	0	0	0	0	0	-25.07	-25.07
Inverter Transformer	MV1-14 T	365157	4905049	2	0	0	69.4	69.4	1	7194.15	3.25	0	88.14	0	3.34	0	0	8.71	0	0	0	0	0	0	-30.84	-30.84
Inverter Transformer	MV4-10 T	369307	4908858	2	0	0	56.1	56.1	1	1571.53	3.25	0	74.93	0	0.23	0	0	6.17	0	0	0	0	0	0	-25.27	-25.27
Inverter Transformer	MV5-6 T	369987	4908507	2	0	0	56.1	56.1	1	1589.63	3.25	0	75.03	0	0.23	0	0	6.21	0	0	0	0	0	0	-25.41	-25.41
Inverter Transformer	MV1-13 T	364725	4905241	2	0	0	69.4	69.4	1	7383.26	3.25	0	88.36	0	3.36	0	0	8.81	0	0	0	0	0	0	-31.18	-31.18
Inverter Transformer	MV4-11 T	369269	4908855	2	0	0	56.1	56.1	1	1598.49	3.25	0	75.07	0	0.24	0	0	6.23	0	0	0	0	0	0	-25.48	-25.48
Inverter Transformer	MV4-7 T	369040	4909001	2	0	0	56.1	56.1	1	1660.26	3.25	0	75.4	0	0.26	0	0	6.36	0	0	0	0	0	0	-25.96	-25.96
Inverter Transformer	MV4-12 T	369049	4908803	2	0	0	56.1	56.1	1	1786.87	3.25	0	76.04	0	0.32	0	0	6.62	0	0	0	0	0	0	-26.92	-26.92
Inverter Transformer	MV4-14 T	369182	4908507	2	0	0	56.1	56.1	1	1925.16	3.25	0	76.69	0	0.37	0	0	6.9	0	0	0	0	0	0	-27.9	-27.9
Inverter Transformer	MV4-13 T	369057	4908605	2	0	0	56.1	56.1	1	1926.25	3.25	0	76.69	0	0.37	0	0	6.9	0	0	0	0	0	0	-27.91	-27.91
Inverter Transformer	MV4-15 T	369170	4908481	2	0	0	56.1	56.1	1	1953.25	3.25	0	76.82	0	0.38	0	0	6.95	0	0	0	0	0	0	-28.09	-28.09
Inverter Transformer	MV3-2 T	368677	4907928	2	0	0	56.1	56.1	1	2691.39	3.25	0	79.6	0	0.7	0	0	8.33	0	0	0	0	0	0	-32.57	-32.57
Inverter Transformer	MV6-2 T	370091	4907339	2	0	0	56.1	56.1	1	2732.36	3.25	0	79.73	0	0.72	0	0	8.41	0	0	0	0	0	0	-32.79	-32.79
Inverter Transformer	MV3-4 T	368507	4907925	2	0	0	56.1	56.1	1	2800.51	3.25	0	79.94	0	0.74	0	0	8.53	0	0	0	0	0	0	-33.16	-33.16
Inverter Transformer	MV3-8 T	368685	4907712	2	0	0	56.1	56.1	1	2861.11	4.68	0	80.13	0	1.7	2.68	0.01	8.63	0	0	0	0	0	0	-37.08	-37.08
Inverter Transformer	MV6-3 T	370202	4907140	2	0	0	56.1	56.1	1	2924.26	3.25	0	80.32	0	0.8	0	0	8.74	0	0	0	0	0	0	-33.8	-33.8
Inverter Transformer	MV3-9 T	368517	4907703	2	0	0	56.1	56.1	1	2967.3	3.25	0	80.45	0	0.82	0	0	8.81	0	0	0	0	0	0	-34.02	-34.02
Inverter Transformer	MV3-5 T	368335	4907843	2	0	0	56.1	56.1	1	2975.28	3.25	0	80.47	0	0.82	0	0	8.83	0	0	0	0	0	0	-34.06	-34.06
Inverter Transformer	MV3-1 T	368150	4907976	2	0	0	56.1	56.1	1	3007.87	3.25	0	80.57	0	0.83	0	0	8.88	0	0	0	0	0	0	-34.22	-34.22
Inverter Transformer	MV3-14 T	368678	4907498	2	0	0	56.1	56.1	1	3043.09	3.25	0	80.67	0	0.85	0	0	8.94	0	0	0	0	0	0	-34.4	-34.4
Inverter Transformer	MV3-6 T	368156	4907834	2	0	0	56.1	56.1	1	3103.85	3.25	0	80.84	0	0.87	0	0	9.04	0	0	0	0	0	0	-34.7	-34.7
Inverter Transformer	MV3-11 T	368340	4907662	2	0	0	56.1	56.1	1	3109.43	3.25	0	80.85	0	0.88	0	0	9.05	0	0	0	0	0	0	-34.72	-34.72
Inverter Transformer	MV3-16 T	368509	4907475	2	0	0	56.1	56.1	1	3156.17	4.62	0	80.98	0	1.83	2.58	0	9.13	0	0	0	0	0	0	-38.46	-38.46
Inverter Transformer	MV3-3 T	367944	4907927	2	0	0	56.1	56.1	1	3192.08	3.25	0	81.08	0	0.91	0	0	9.19	0	0	0	0	0	0	-35.12	-35.12
Inverter Transformer	MV3-20 T	368683	4907317	2	0	0	56.1	56.1	1	3194.52	3.25	0	81.09	0	0.91	0	0	9.19	0	0	0	0	0	0	-35.14	-35.14
Inverter Transformer	MV3-10 T	368162	4907669	2	0	0	56.1	56.1	1	3220.32	3.25	0	81.16	0	0.92	0	0	9.24	0	0	0	0	0	0	-35.26	-35.26
Inverter Transformer	MV3-15 T	368351	4907477	2	0	0	56.1	56.1	1	3247.67	3.25	0	81.23	0	0.93	0	0	9.28	0	0	0	0	0	0	-35.39	-35.39
Inverter Transformer	MV3-7 T	367951	4907754	2	0	0	56.1	56.1	1	3305.27	3.25	0	81.38	0	0.96	0	0	9.38	0	0	0	0	0	0	-35.66	-35.66
Inverter Transformer	MV3-19 T	368352	4907347	2	0	0	56.1	56.1	1	3351.49	3.25	0	81.5	0	0.98	0	0	9.45	0	0	0	0	0	0	-35.87	-35.87
Inverter Transformer	MV3-17 T	368183	4907472	2	0	0	56.1	56.1	1	3355.9	3.25	0	81.52	0	0.98	0	0	9.46	0	0	0	0	0	0	-35.89	-35.89
Inverter Transformer	MV3-22 T	368661	4907142	2	0	0	56.1	56.1	1	3356.89	3.25	0	81.52	0	0.98	0	0	9.46	0	0	0	0	0	0	-35.9	-35.9
Inverter Transformer	MV3-21 T	368484	4907206	2	0	0	56.1	56.1	1	3393.62	3.25	0	81.61	0	1	0	0	9.52	0	0	0	0	0	0	-36.07	-36.07
Inverter Transformer	MV3-13 T	367958	4907577	2	0	0	56.1	56.1	1	3426.38	3.25	0	81.7	0	1.01	0	0	9.57	0	0	0	0	0	0	-36.22	-36.22
Inverter Transformer	MV3-12 T	367674	4907594	2	0	0	56.1	56.1	1	3616.14	3.25	0	82.16	0	1.09	0	0	9.87	0	0	0	0	0	0	-37.06	-37.06
Inverter Transformer	MV3-18 T	367757	4907412	2	0	0	56.1	56.1	1	3684.58	3.25	0	82.33	0	1.12	0	0	9.98	0	0	0	0	0	0	-37.36	-37.36
Line Reactor	NGR	369421	4908787.5	5	0	0	45.4	45.4	1	1557.94	4.75	0	74.85	0	3.25	0	0	0.64	0	0	0	0	0	0	-33.38	-33.38
Inverter Transformer	MV2-2 T	365982	4906654	2	0	0	56.1	56.1	1	5514.23	3.25	0	85.83	0	1.81	0	0	12.51	0	0	0	0	0	0	-44.09	-44.09
Inverter Transformer	MV2-3 T	365814	4906641	2	0	0	56.1	56.1	1	5655.11	3.25	0	86.05	0	1.85	0	0	12.69	0	0	0	0	0	0	-44.53	-44.53
Inverter Transformer	MV2-4 T	365590	4906628	2	0	0	56.1	56.1	1	5842.68	3.25	0	86.33	0	1.91	0	0	12.92	0	0	0	0	0	0	-45.1	-45.1
Inverter Transformer	MV1-1 T	364721	4906166	2	0	0	56.1	56.1	1	6818.65	3.25	0	87.67	0	2.21	0	0	14.03	0	0	0	0	0	0	-47.86	-47.86

	Inverter Transformer	MV1-2 T	364759	4906063	2	0	0	56.1	56.1	1	6847.14	3.25	0	87.71	0	2.22	0	0	14.06	0	0	0	0	0	0	-47.93	-47.93
	Inverter Transformer	MV1-4 T	364821	4905918	2	0	0	56.1	56.1	1	6883.22	3.25	0	87.76	0	2.23	0	0	14.1	0	0	0	0	0	0	-48.03	-48.03
	Inverter Transformer	MV1-5 T	364676	4905892	2	0	0	56.1	56.1	1	7014.97	3.25	0	87.92	0	2.26	0	0	14.25	0	0	0	0	0	0	-48.37	-48.37
	Inverter Transformer	MV1-12 T	365044	4905386	2	0	0	56.1	56.1	1	7047.66	3.25	0	87.96	0	2.27	0	0	14.28	0	0	0	0	0	0	-48.46	-48.46
	Inverter Transformer	MV1-8 T	364782	4905647	2	0	0	56.1	56.1	1	7080.15	3.25	0	88	0	2.28	0	0	14.32	0	0	0	0	0	0	-48.54	-48.54
	Inverter Transformer	MV1-15 T	365309	4904994	2	0	0	56.1	56.1	1	7124.93	3.25	0	88.06	0	2.29	0	0	14.36	0	0	0	0	0	0	-48.65	-48.65
	Inverter Transformer	MV1-3 T	364435	4906039	2	0	0	56.1	56.1	1	7126.18	3.25	0	88.06	0	2.29	0	0	14.36	0	0	0	0	0	0	-48.66	-48.66
	Inverter Transformer	MV1-6 T	364482	4905835	2	0	0	56.1	56.1	1	7205.19	3.25	0	88.15	0	2.31	0	0	14.45	0	0	0	0	0	0	-48.86	-48.86
	Inverter Transformer	MV1-9 T	364555	4905646	2	0	0	56.1	56.1	1	7259.59	3.25	0	88.22	0	2.33	0	0	14.51	0	0	0	0	0	0	-48.99	-48.99
	Inverter Transformer	MV1-11 T	364649	4905414	2	0	0	56.1	56.1	1	7330.08	3.25	0	88.3	0	2.35	0	0	14.58	0	0	0	0	0	0	-49.17	-49.17
Limit. Valu	0	0																								
Level D/N:	32.1364	32.1364																								

Receiver: Existing Noise Receptor
ID: S-R59
X: 370341
Y: 4910151
Z: 4.5
Ground: 0

ISO	Description	ID	X	Y	Z	Ground	ReflOrd	LxT	LxN	L/A	Dist.	hm	Freq	Adiv	K0b	Agr	Abar	z	Aatm	Afol	Ahous	Cmet	CmetN	Dc	RL	LtotT	LtotN
	Sol_Luce Substation	S_Substation	369426	4908792	3.5	0	0	112.1	112.1	1	1638.32	5.25	0	75.29	0	-0.08	3.88	0.27	3.74	0	0	0	0	0	0	29.25	29.25
	Inverter	MV5-1	370020	4909142	2	0	0	100.3	100.3	1	1058.83	3.25	0	71.5	0	-0.22	0	0	11.1	0	0	0	0	0	0	17.93	17.93
	Inverter	MV5-3	370231	4908851	2	0	0	100.3	100.3	1	1304.65	3.25	0	73.31	0	-0.11	0	0	11.82	0	0	0	0	0	0	15.29	15.29
	Inverter	MV4-2	369272	4909397	2	0	0	100.3	100.3	1	1308.16	3.25	0	73.33	0	-0.11	0	0	11.83	0	0	0	0	0	0	15.26	15.26
	Inverter	MV5-2	370006	4908853	2	0	0	100.3	100.3	1	1340.54	3.25	0	73.55	0	-0.1	0	0	11.91	0	0	0	0	0	0	14.95	14.95
	Inverter	MV4-3	369229	4909397	2	0	0	100.3	100.3	1	1343.53	3.25	0	73.56	0	-0.09	0	0	11.92	0	0	0	0	0	0	14.92	14.92
	Inverter	MV4-5	369289	4909199	2	0	0	100.3	100.3	1	1418.81	3.25	0	74.04	0	-0.06	0	0	12.12	0	0	0	0	0	0	14.22	14.22
	Inverter	MV5-4	370324	4908707	2	0	0	100.3	100.3	1	1444.1	3.25	0	74.19	0	-0.05	0	0	12.18	0	0	0	0	0	0	13.99	13.99
	Inverter	MV4-6	369243	4909192	2	0	0	100.3	100.3	1	1457.84	3.25	0	74.27	0	-0.05	0	0	12.22	0	0	0	0	0	0	13.87	13.87
	Inverter	MV5-5	370015	4908690	2	0	0	100.3	100.3	1	1496.93	3.25	0	74.5	0	-0.03	0	0	12.32	0	0	0	0	0	0	13.53	13.53
	Inverter	MV4-1	369011	4909397	2	0	0	100.3	100.3	1	1528.86	3.25	0	74.69	0	-0.02	0	0	12.4	0	0	0	0	0	0	13.25	13.25
	Inverter	MV4-9	369289	4909001	2	0	0	100.3	100.3	1	1558.59	3.25	0	74.85	0	-0.01	0	0	12.47	0	0	0	0	0	0	13	13
	Inverter	MV4-8	369256	4909001	2	0	0	100.3	100.3	1	1581.05	3.25	0	74.98	0	0	0	0	12.52	0	0	0	0	0	0	12.81	12.81
	Inverter	MV4-4	369027	4909199	2	0	0	100.3	100.3	1	1622.62	3.25	0	75.2	0	0.01	0	0	12.62	0	0	0	0	0	0	12.48	12.48
	Inverter	MV4-10	369312	4908858	2	0	0	100.3	100.3	1	1652.48	3.25	0	75.36	0	0.02	0	0	12.69	0	0	0	0	0	0	12.24	12.24
	Inverter	MV4-11	369264	4908855	2	0	0	100.3	100.3	1	1685.1	3.25	0	75.53	0	0.03	0	0	12.77	0	0	0	0	0	0	11.98	11.98
	Inverter	MV4-7	369035	4909001	2	0	0	100.3	100.3	1	1740.16	3.25	0	75.81	0	0.05	0	0	12.89	0	0	0	0	0	0	11.56	11.56
	DSTATCOM - 10 MVAR #1	DSAT1	369437	4908757	2.5	0	0	96.6	96.6	1	1661.46	3.5	0	75.41	0	3.15	0	0	1.51	0	0	0	0	0	0	16.56	16.56
	DSTATCOM - 10 MVAR #2	DSAT2	369403	4908757	2.5	0	0	96.6	96.6	1	1680.2	5.24	0	75.51	0	3.72	0.91	0.19	1.52	0	0	0	0	0	0	14.97	14.97
	Inverter	MV6-2	370085	4907339	2	0	0	100.3	100.3	1	2823.63	3.25	0	80.02	0	0.33	0	0	15.06	0	0	0	0	0	0	4.91	4.91
	Inverter	MV3-8	368680	4907712	2	0	0	100.3	100.3	1	2950.87	4.7	0	80.4	0	1.12	3.2	0.01	15.29	0	0	0	0	0	0	0.31	0.31
	Inverter	MV6-3	370207	4907140	2	0	0	100.3	100.3	1	3013.98	3.25	0	80.58	0	0.36	0	0	15.4	0	0	0	0	0	0	3.97	3.97
	Inverter	MV3-9	368512	4907703	2	0	0	100.3	100.3	1	3055.81	3.25	0	80.7	0	0.37	0	0	15.47	0	0	0	0	0	0	3.77	3.77
	Inverter	MV3-14	368684	4907498	2	0	0	100.3	100.3	1	3127.95	3.25	0	80.91	0	0.39	0	0	15.6	0	0	0	0	0	0	3.42	3.42
	Inverter	MV3-6	368162	4907834	2	0	0	100.3	100.3	1	3180.65	3.25	0	81.05	0	0.4	0	0	15.69	0	0	0	0	0	0	3.18	3.18
	Inverter	MV3-11	368346	4907662	2	0	0	100.3	100.3	1	3189.85	3.25	0	81.08	0	0.4	0	0	15.7	0	0	0	0	0	0	3.14	3.14
	Inverter	MV3-16	368514	4907475	2	0	0	100.3	100.3	1	3240.2	4.63	0	81.21	0	1.19	3.13	0	15.79	0	0	0	0	0	0	-1.01	-1.01
	Inverter	MV3-3	367939	4907927	2	0	0	100.3	100.3	1	3273.5	3.25	0	81.3	0	0.41	0	0	15.85	0	0	0	0	0	0	2.75	2.75
	Inverter	MV3-20	368689	4907317	2	0	0	100.3	100.3	1	3280.35	3.25	0	81.32	0	0.41	0	0	15.86	0	0	0	0	0	0	2.72	2.72
	Inverter	MV3-10	368167	4907669	2	0	0	100.3	100.3	1	3299.49	3.25	0	81.37	0	0.42	0	0	15.89	0	0	0	0	0	0	2.63	2.63
	Inverter	MV3-15	368357	4907477	2	0	0	100.3	100.3	1	3329.65	3.25	0	81.45	0	0.42	0	0	15.94	0	0	0	0	0	0	2.5	2.5
	Inverter	MV3-7	367945	4907754	2	0	0	100.3	100.3	1	3389.16	3.25	0	81.6	0	0.43	0	0	16.04	0	0	0	0	0	0	2.23	2.23
	Inverter	MV3-19	368357	4907347	2	0	0	100.3	100.3	1	3434.92	3.25	0	81.72	0	0.44	0	0	16.12	0	0	0	0	0	0	2.03	2.03
	Inverter	MV3-17	368178	4907472	2	0	0	100.3	100.3	1	3443.2	3.25	0	81.74	0	0.44	0	0	16.14	0	0	0	0	0	0	2	2
	Inverter	MV3-21	368478	4907206	2	0	0	100.3	100.3	1	3484.8	3.25	0	81.84	0	0.45	0	0	16.21	0	0	0	0	0	0	1.81	1.81
	Inverter	MV3-13	367963	4907577	2	0	0	100.3	100.3	1	3504.34	3.25	0	81.89	0	0.45	0	0	16.24	0	0	0	0	0	0	1.73	1.73
	Inverter	MV3-12	367668	4907594	2	0	0	100.3	100.3	1	3699.08	3.25	0	82.36	0	0.48	0	0	16.56	0	0	0	0	0	0	0.91	0.91
	Inverter	MV3-18	367752	4907412	2	0	0	100.3	100.3	1	3768.96	3.25	0	82.52	0	0.49	0	0	16.68	0	0	0	0	0	0	0.62	0.62
	Inverter	MV6-1	370235	4907364	2	0	0	97.3	97.3	1	2789.02	3.25	0	79.91	0	0.32	0	0	14.99	0	0	0	0	0	0	2.09	2.09
	Fixed Reactor Bank 2	FRB2	369464	4908755	6	0	0	89.8	89.8	1	1648.62	5.25	0	75.34	0	-1.02	0	0	3.75	0	0	0	0	0	0	11.7	11.7
	Fixed Reactor Bank 1	FRB1	369378	4908755	6	0	0	89.8	89.8	1	1695.93	5.25	0	75.59	0	-1.02	0	0	3.84	0	0	0	0	0	0	11.37	11.37
	Inverter	MV2-3	365820	4906641	2	0	0	100.3	100.3	1	5723.6	3.25	0	86.15	0	0.69	0	0	19.61	0	0	0	0	0	0	-6.15	-6.15
	Inverter	MV2-4	365586	4906624	2	0	0	100.3	100.3	1	5920.28	3.25	0	86.45	0	0.7	0	0	19.88	0	0	0	0	0	0	-6.72	-6.72
	Inverter	MV5-6	369982	4908507	2	0	0	89.1	89.1	1	1682.74	3.25	0	75.52	0	0.83	0	0	7.52	0	0	0	0	0	0	5.18	5.18
	Inverter	MV4-12	369043	4908803	2	0	0	89.1	89.1	1	1871.34	3.25	0	76.44	0	0.88	0	0	7.83	0	0	0	0	0	0	3.9	3.9
	Inverter	MV1-1	364715	4906166	2	0	0	100.3	100.3	1	6894.35	3.25	0	87.77	0	0.71	0	0	21.17	0	0	0	0	0	0	-9.34	-9.34
	Inverter	MV1-2	364753	4906063	2	0	0	100.3	100.3	1	6923.69	3.25	0	87.81	0	0.71	0	0	21.2	0	0	0	0	0	0	-9.41	-9.41
	Inverter	MV1-4	364815	4905918	2	0	0	100.3	100.3	1	6960.96	3.25	0	87.85	0	0.71	0	0	21.25	0	0	0	0	0	0	-9.5	-9.5
	Inverter	MV1-5	364671	4905892	2	0	0	100.3	100.3	1	7091.4	3.25	0	88.01	0	0.71	0	0	21.41	0	0	0	0	0	0	-9.82	-9.82
	Inverter	MV1-12	365038	4905386	2	0	0	100.3	100.3	1	7129.31	3.25	0	88.06	0	0.71	0	0	21.46	0	0	0	0	0	0	-9.92	-9.92
	Inverter	MV1-8	364788	4905647	2	0	0	100.3	100.3	1	7149.95	3.25	0	88.09	0	0.71	0	0	21.49	0	0	0	0	0	0	-9.97	-9.97
	Inverter	MV1-15	365315	4904994	2	0	0	100.3	100.3	1	7201.06	3.25	0	88.15	0	0.7	0	0	21.55	0	0	0	0	0	0	-10.09	-10.09
	Inverter	MV1-6	364477	4905835	2	0	0	100.3	100.3	1	7281.1	3.25	0	88.24	0	0.7	0	0	21.65	0	0	0	0	0	0	-10.28	-10.28

Inverter	MV1-9	364561	4905646	2	0	0	100.3	100.3	1	7328.26	3.25	0	88.3	0	0.7	0	0	21.71	0	0	0	0	0	0	-10.39	-10.39
Inverter	MV4-13	369051	4908605	2	0	0	89.1	89.1	1	2013.51	3.25	0	77.08	0	0.91	0	0	8.07	0	0	0	0	0	0	3	3
Inverter	MV4-14	369176	4908507	2	0	0	89.1	89.1	1	2014.94	3.25	0	77.09	0	0.91	0	0	8.07	0	0	0	0	0	0	2.99	2.99
Inverter	MV1-11	364655	4905414	2	0	0	100.3	100.3	1	7400.66	3.25	0	88.39	0	0.69	0	0	21.79	0	0	0	0	0	0	-10.56	-10.56
Inverter	MV4-15	369176	4908481	2	0	0	89.1	89.1	1	2036.21	3.25	0	77.18	0	0.92	0	0	8.1	0	0	0	0	0	0	2.86	2.86
Inverter	MV2-1	365842	4906816	2	0	0	97.3	97.3	1	5600.29	3.25	0	85.96	0	0.69	0	0	19.44	0	0	0	0	0	0	-8.78	-8.78
Inverter	MV1-7	364925	4905782	2	0	0	97.3	97.3	1	6958.54	3.25	0	87.85	0	0.71	0	0	21.25	0	0	0	0	0	0	-12.5	-12.5
Inverter	MV1-10	365004	4905564	2	0	0	97.3	97.3	1	7037.34	3.25	0	87.95	0	0.71	0	0	21.35	0	0	0	0	0	0	-12.69	-12.69
Inverter	MV3-2	368671	4907928	2	0	0	89.1	89.1	1	2780.4	3.25	0	79.88	0	1.09	0	0	9.28	0	0	0	0	0	0	-1.2	-1.2
Inverter	MV1-14	365163	4905049	2	0	0	97.3	97.3	1	7269.26	3.25	0	88.23	0	0.7	0	0	21.63	0	0	0	0	0	0	-13.25	-13.25
Inverter	MV1-13	364731	4905241	2	0	0	97.3	97.3	1	7455.21	3.25	0	88.45	0	0.69	0	0	21.86	0	0	0	0	0	0	-13.69	-13.69
Inverter	MV3-4	368502	4907925	2	0	0	89.1	89.1	1	2887.39	3.25	0	80.21	0	1.12	0	0	9.45	0	0	0	0	0	0	-1.72	-1.72
SubstationTransformer	W_ST	369711.17	4906112.3	2.5	0	0	92	92	1	4087.55	3.5	0	83.23	0	0.35	0	0	7.48	0	0	0	0	0	0	0.91	0.91
Inverter	MV3-5	368340	4907843	2	0	0	89.1	89.1	1	3054.65	3.25	0	80.7	0	1.16	0	0	9.7	0	0	0	0	0	0	-2.5	-2.5
Inverter	MV3-1	368156	4907976	2	0	0	89.1	89.1	1	3082.99	3.25	0	80.78	0	1.17	0	0	9.74	0	0	0	0	0	0	-2.63	-2.63
Inverter	MV3-22	368656	4907142	2	0	0	89.1	89.1	1	3448.67	3.25	0	81.75	0	1.26	0	0	10.29	0	0	0	0	0	0	-4.24	-4.24
Westbrook Inverter Enclosur	W_INV6	369875	4906578	2	0	0	89.1	89.1	1	3603.26	3.25	0	82.13	0	1.29	0	0	10.51	0	0	0	0	0	0	-4.88	-4.88
Westbrook Inverter Enclosur	W_INV5	369719	4906574	2	0	0	89.1	89.1	1	3630.68	3.25	0	82.2	0	1.3	0	0	10.55	0	0	0	0	0	0	-5	-5
Westbrook Inverter Enclosur	W_INV7	369780	4906417	2	0	0	89.1	89.1	1	3775.91	3.25	0	82.54	0	1.34	0	0	10.76	0	0	0	0	0	0	-5.58	-5.58
Westbrook Inverter Enclosur	W_INV2	369374	4906388	2	0	0	89.1	89.1	1	3885.26	3.25	0	82.79	0	1.36	0	0	10.92	0	0	0	0	0	0	-6.02	-6.02
Westbrook Inverter Enclosur	W_INV4	369673	4906164	2	0	0	89.1	89.1	1	4042.57	3.25	0	83.13	0	1.4	0	0	11.15	0	0	0	0	0	0	-6.62	-6.62
Westbrook Inverter Enclosur	W_INV3	369508	4906164	2	0	0	89.1	89.1	1	4073.09	3.25	0	83.2	0	1.41	0	0	11.19	0	0	0	0	0	0	-6.74	-6.74
Inverter	MV6-4	370250	4906966	2	0	0	86.1	86.1	1	3186.3	3.25	0	81.07	0	1.19	0	0	9.9	0	0	0	0	0	0	-6.1	-6.1
Westbrook Inverter Enclosur	W_INV1	369409	4906578	2	0	0	86.1	86.1	1	3692.55	3.25	0	82.35	0	1.32	0	0	10.64	0	0	0	0	0	0	-8.25	-8.25
Inverter	MV2-2	365977	4906654	2	0	0	89.1	89.1	1	5592.27	3.25	0	85.95	0	1.79	0	0	13.24	0	0	0	0	0	0	-11.92	-11.92
Gardiner Substation	G_Sub	366586.3	4903349.9	2.5	0	0	90.8	90.8	1	7768.7	4.25	0	88.81	0	2.17	1.77	0.38	11.45	0	0	0	0	0	0	-13.43	-13.43
Inverter	MV1-3	364440	4906039	2	0	0	89.1	89.1	1	7192.38	3.25	0	88.14	0	2.17	0	0	15.21	0	0	0	0	0	0	-16.47	-16.47
Inverters	G_Inv2	366676.9	4903239.1	2	0	0	87.7	87.7	1	7823.04	3.25	0	88.87	0	2.96	0	0	8.8	0	0	0	0	0	0	-12.97	-12.97
Inverters	G_Inv1	366526.4	4903225.8	2	0	0	87.7	87.7	1	7906.3	3.25	0	88.96	0	2.96	0	0	8.89	0	0	0	0	0	0	-13.15	-13.15
Inverters	G_Inv4	366732.8	4903105	2	0	0	87.7	87.7	1	7916.14	3.25	0	88.97	0	2.96	0	0	8.9	0	0	0	0	0	0	-13.17	-13.17
Inverters	G_Inv3	366583.7	4903091.4	2	0	0	87.7	87.7	1	7997.2	3.25	0	89.06	0	2.96	0	0	8.97	0	0	0	0	0	0	-13.34	-13.34
Inverters	G_Inv6	366788.5	4902972	2	0	0	87.7	87.7	1	8009.89	3.25	0	89.07	0	2.96	0	0	8.99	0	0	0	0	0	0	-13.36	-13.36
Inverters	G_Inv5	366638.5	4902958.1	2	0	0	87.7	87.7	1	8089.89	3.25	0	89.16	0	2.96	0	0	9.06	0	0	0	0	0	0	-13.53	-13.53
Inverters	G_Inv8	366844.5	4902838.5	2	0	0	87.7	87.7	1	8105.44	3.25	0	89.18	0	2.96	0	0	9.08	0	0	0	0	0	0	-13.56	-13.56
Inverters	G_Inv7	366694.6	4902824.7	2	0	0	87.7	87.7	1	8183.58	3.25	0	89.26	0	2.96	0	0	9.16	0	0	0	0	0	0	-13.72	-13.72
Inverters	G_Inv10	366900.7	4902704.8	2	0	0	87.7	87.7	1	8202.53	3.25	0	89.28	0	2.96	0	0	9.17	0	0	0	0	0	0	-13.76	-13.76
Inverters	G_Inv9	366750.9	4902691.8	2	0	0	87.7	87.7	1	8278.19	3.25	0	89.36	0	2.96	0	0	9.25	0	0	0	0	0	0	-13.91	-13.91
Westbrook Inverter Transfor	W_INVTR1	369403	4906578	2	0	0	78.2	78.2	1	3694.07	3.25	0	82.35	0	-2.89	0	0	1.94	0	0	0	0	0	0	-3.15	-3.15
Westbrook Inverter Transfor	W_INVTR6	369881	4906578	2	0	0	77.3	77.3	1	3602.49	3.25	0	82.13	0	-2.87	0	0	1.9	0	0	0	0	0	0	-3.82	-3.82
Westbrook Inverter Transfor	W_INVTR5	369725	4906574	2	0	0	77.3	77.3	1	3629.65	3.25	0	82.2	0	-2.88	0	0	1.91	0	0	0	0	0	0	-3.89	-3.89
Westbrook Inverter Transfor	W_INVTR7	369786	4906417	2	0	0	77.3	77.3	1	3775.02	3.25	0	82.54	0	-2.91	0	0	1.97	0	0	0	0	0	0	-4.26	-4.26
Westbrook Inverter Transfor	W_INVTR2	369368	4906388	2	0	0	77.3	77.3	1	3886.76	3.25	0	82.79	0	-2.94	0	0	2.01	0	0	0	0	0	0	-4.53	-4.53
Westbrook Inverter Transfor	W_INVTR4	369679	4906164	2	0	0	77.3	77.3	1	4041.59	3.25	0	83.13	0	-2.97	0	0	2.07	0	0	0	0	0	0	-4.89	-4.89
Westbrook Inverter Transfor	W_INVTR3	369514	4906164	2	0	0	77.3	77.3	1	4071.87	3.25	0	83.2	0	-2.98	0	0	2.08	0	0	0	0	0	0	-4.96	-4.96
Inverter Transformer	MV6-1 T	370230	4907364	2	0	0	69.4	69.4	1	2789.21	3.25	0	79.91	0	2.44	0	0	5.7	0	0	0	0	0	0	-18.7	-18.7
Inverter Transformer	MV6-4 T	370244	4906966	2	0	0	69.4	69.4	1	3186.48	3.25	0	81.07	0	2.56	0	0	6.04	0	0	0	0	0	0	-20.32	-20.32
Inverter Transformer	MV5-1 T	370015	4909142	2	0	0	56.1	56.1	1	1060.36	3.25	0	71.51	0	0.03	0	0	5.03	0	0	0	0	0	0	-20.52	-20.52
Inverter Transformer	MV2-1 T	365836	4906816	2	0	0	69.4	69.4	1	5605.11	3.25	0	85.97	0	3.12	0	0	7.77	0	0	0	0	0	0	-27.52	-27.52
Inverter Transformer	MV5-3 T	370237	4908851	2	0	0	56.1	56.1	1	1304.16	3.25	0	73.31	0	0.12	0	0	5.59	0	0	0	0	0	0	-22.96	-22.96
Inverter Transformer	MV4-2 T	369267	4909397	2	0	0	56.1	56.1	1	1312.25	3.25	0	73.36	0	0.13	0	0	5.61	0	0	0	0	0	0	-23.04	-23.04
Inverter Transformer	MV5-2 T	370011	4908853	2	0	0	56.1	56.1	1	1339.29	3.25	0	73.54	0	0.14	0	0	5.67	0	0	0	0	0	0	-23.28	-23.28
Inverter Transformer	MV4-3 T	369234	4909397	2	0	0	56.1	56.1	1	1339.39	3.25	0	73.54	0	0.14	0	0	5.67	0	0	0	0	0	0	-23.28	-23.28
Inverter Transformer	MV4-5 T	369283	4909199	2	0	0	56.1	56.1	1	1423.26	3.25	0	74.07	0	0.17	0	0	5.85	0	0	0	0	0	0	-24.03	-24.03
Inverter Transformer	MV5-4 T	370330	4908707	2	0	0	56.1	56.1	1	1444.04	3.25	0	74.19	0	0.18	0	0	5.9	0	0	0	0	0	0	-24.21	-24.21
Inverter Transformer	MV4-6 T	369249	4909192	2	0	0	56.1	56.1	1	1453.32	3.25	0	74.25	0	0.18	0	0	5.92	0	0	0	0	0	0	-24.29	-24.29
Inverter Transformer	MV5-5 T	370021	4908690	2	0	0	56.1	56.1	1	1495.64	3.25	0	74.5	0	0.2	0	0	6.01	0	0	0	0	0	0	-24.64	-24.64
Inverter Transformer	MV1-7 T	364919	4905782	2	0	0	69.4	69.4	1	6963.21	3.25	0	87.86	0	3.31	0	0	8.58	0	0	0	0	0	0	-30.4	-30.4
Inverter Transformer	MV1-10 T	365010	4905564	2	0	0	69.4	69.4	1	7032.79	3.25	0	87.94	0	3.32	0	0	8.62	0	0	0	0	0	0	-30.53	-30.53
Inverter Transformer	MV4-1 T	369017	4909397	2	0	0	56.1	56.1	1	1523.65	3.25	0	74.66	0	0.21	0	0	6.07	0	0	0	0	0	0	-24.88	-24.88
Inverter Transformer	MV4-9 T	369284	4909001	2	0	0	56.1	56.1	1	1561.97	3.25	0	74.87	0	0.22	0	0	6.15	0	0	0	0	0	0	-25.19	-25.19
Inverter Transformer	MV1-14 T	365157	4905049	2	0	0	69.4	69.4	1	7273.53	3.25	0	88.23	0	3.35	0	0	8.75	0	0	0	0	0	0	-30.98	-30.98
Inverter Transformer	MV4-8 T	369262	4909001	2	0	0	56.1	56.1	1	1576.94	3.25	0	74.96	0	0.23	0	0	6.18	0	0	0	0	0	0	-25.31	-25.31
Inverter Transformer	MV1-13 T	364725	4905241	2	0	0	69.4	69.4	1	7459.73	3.25	0	88.45	0	3.36	0	0	8.86	0	0	0	0	0	0	-31.32	-31.32
Inverter Transformer	MV4-4 T	369033	4909199	2	0	0	56.1	56.1	1	1617.77	3.25	0	75.18	0	0.25	0	0	6.27	0	0	0	0	0	0	-25.63	-25.63
Inverter Transformer	MV4-10 T	369307	4908858	2	0	0	56.1	56.1	1	1655.6	3.25	0	75.38	0	0.26	0	0	6.35	0	0	0	0	0	0	-25.93	-25.93
Inverter Transformer	MV5-6 T	369987	4908507	2	0	0	56.1	56.1	1	1681.68	3.25	0	75.51	0	0.27	0	0	6.4	0	0	0	0	0	0	-26.13	-26.13
Inverter Transformer	MV4-11 T	369269	4908855	2	0	0	56.1	56.1	1	1681.91	3.25	0	75.52	0	0.27	0	0	6.4	0	0	0	0	0	0	-26.13	-26.13
Inverter Transformer	MV4-7 T	369040	4909001	2	0	0	56.1	56.1	1	1736.41	3.25	0	75.79	0	0.29	0	0	6.51	0	0	0	0	0	0	-26.54	-26.54
Inverter Transformer	MV4-12 T	369049	4908803	2	0	0	56.1	56.1	1	1867.18	3.25	0	76.42	0	0.35	0	0	6.78	0	0	0	0	0	0	-27.49	-27.49
Inverter Transformer	MV4-13 T	369057	4908605	2	0	0	56.1	56.1	1	2009.67	3.25	0	77.06	0	0.41	0	0	7.06	0	0	0	0	0	0	-28.47	-28.47
Inverter Transformer	MV4-14 T	369182	4908507	2	0	0	56.1	56.1	1	2011.47	3.25	0	77.07	0	0.41	0	0	7.07	0	0	0	0	0	0	-28.49	-28.49
Inverter Transformer	MV4-15 T	369170	4908481	2	0	0	56.1	56.1	1	2039.64	3.25	0	77.19	0	0.42	0	0	7.12	0	0	0	0	0	0	-28.67	-28.67
Inverter Transformer	MV3-2 T	368677	4907928	2	0	0	56.1	56.1	1	2776.8	3.25	0	79.87	0	0.73	0	0	8.48	0	0	0	0	0	0	-33.03	-33.03
Inverter Transformer	MV6-2 T	370091	4907339	2	0	0	56.1	56.1	1	2823.09	3.25	0	80.01	0	0.75	0	0	8.56	0	0	0	0	0	0	-33.27	-33.27

	Inverter Transformer	MV3-4 T	368507	4907925	2	0	0	56.1	56.1	1	2884.2	3.25	0	80.2	0	0.78	0	0	8.67	0	0	0	0	0	0	-33.59	-33.59
	Inverter Transformer	MV3-8 T	368685	4907712	2	0	0	56.1	56.1	1	2948.06	4.7	0	80.39	0	1.74	2.65	0.01	8.78	0	0	0	0	0	0	-37.5	-37.5
	Inverter Transformer	MV6-3 T	370202	4907140	2	0	0	56.1	56.1	1	3014.21	3.25	0	80.58	0	0.84	0	0	8.89	0	0	0	0	0	0	-34.25	-34.25
	Inverter Transformer	MV3-9 T	368517	4907703	2	0	0	56.1	56.1	1	3052.82	3.25	0	80.69	0	0.85	0	0	8.96	0	0	0	0	0	0	-34.45	-34.45
	Inverter Transformer	MV3-5 T	368335	4907843	2	0	0	56.1	56.1	1	3057.93	3.25	0	80.71	0	0.85	0	0	8.97	0	0	0	0	0	0	-34.47	-34.47
	Inverter Transformer	MV3-1 T	368150	4907976	2	0	0	56.1	56.1	1	3087.25	3.25	0	80.79	0	0.87	0	0	9.02	0	0	0	0	0	0	-34.62	-34.62
	Inverter Transformer	MV3-14 T	368678	4907498	2	0	0	56.1	56.1	1	3131.13	3.25	0	80.91	0	0.89	0	0	9.09	0	0	0	0	0	0	-34.83	-34.83
	Inverter Transformer	MV3-6 T	368156	4907834	2	0	0	56.1	56.1	1	3184.76	3.25	0	81.06	0	0.91	0	0	9.18	0	0	0	0	0	0	-35.09	-35.09
	Inverter Transformer	MV3-11 T	368340	4907662	2	0	0	56.1	56.1	1	3193.61	3.25	0	81.09	0	0.91	0	0	9.19	0	0	0	0	0	0	-35.13	-35.13
	Inverter Transformer	MV3-16 T	368509	4907475	2	0	0	56.1	56.1	1	3243.02	4.63	0	81.22	0	1.87	2.55	0	9.27	0	0	0	0	0	0	-38.85	-38.85
	Inverter Transformer	MV3-3 T	367944	4907927	2	0	0	56.1	56.1	1	3269.83	3.25	0	81.29	0	0.94	0	0	9.32	0	0	0	0	0	0	-35.49	-35.49
	Inverter Transformer	MV3-20 T	368683	4907317	2	0	0	56.1	56.1	1	3283.37	3.25	0	81.33	0	0.95	0	0	9.34	0	0	0	0	0	0	-35.56	-35.56
	Inverter Transformer	MV3-10 T	368162	4907669	2	0	0	56.1	56.1	1	3302.78	3.25	0	81.38	0	0.96	0	0	9.37	0	0	0	0	0	0	-35.65	-35.65
	Inverter Transformer	MV3-15 T	368351	4907477	2	0	0	56.1	56.1	1	3333.22	3.25	0	81.46	0	0.97	0	0	9.42	0	0	0	0	0	0	-35.79	-35.79
	Inverter Transformer	MV3-7 T	367951	4907754	2	0	0	56.1	56.1	1	3384.92	3.25	0	81.59	0	0.99	0	0	9.5	0	0	0	0	0	0	-36.03	-36.03
	Inverter Transformer	MV3-19 T	368352	4907347	2	0	0	56.1	56.1	1	3437.81	3.25	0	81.73	0	1.01	0	0	9.59	0	0	0	0	0	0	-36.27	-36.27
	Inverter Transformer	MV3-17 T	368183	4907472	2	0	0	56.1	56.1	1	3440.06	3.25	0	81.73	0	1.02	0	0	9.59	0	0	0	0	0	0	-36.28	-36.28
	Inverter Transformer	MV3-22 T	368661	4907142	2	0	0	56.1	56.1	1	3446.23	3.25	0	81.75	0	1.02	0	0	9.6	0	0	0	0	0	0	-36.31	-36.31
	Inverter Transformer	MV3-21 T	368484	4907206	2	0	0	56.1	56.1	1	3481.59	3.25	0	81.84	0	1.03	0	0	9.66	0	0	0	0	0	0	-36.47	-36.47
	Inverter Transformer	MV3-13 T	367958	4907577	2	0	0	56.1	56.1	1	3507.73	3.25	0	81.9	0	1.04	0	0	9.7	0	0	0	0	0	0	-36.59	-36.59
	Inverter Transformer	MV3-12 T	367674	4907594	2	0	0	56.1	56.1	1	3694.75	3.25	0	82.35	0	1.12	0	0	9.99	0	0	0	0	0	0	-37.41	-37.41
	Inverter Transformer	MV3-18 T	367757	4907412	2	0	0	56.1	56.1	1	3765.53	3.25	0	82.52	0	1.15	0	0	10.1	0	0	0	0	0	0	-37.71	-37.71
	Inverter Transformer	MV2-2 T	365982	4906654	2	0	0	56.1	56.1	1	5588.37	3.25	0	85.95	0	1.83	0	0	12.61	0	0	0	0	0	0	-44.32	-44.32
	Line Reactor	NGR	369421	4908787.5	5	0	0	45.4	45.4	1	1644.85	4.75	0	75.32	0	3.24	0	0	0.67	0	0	0	0	0	0	-33.88	-33.88
	Inverter Transformer	MV2-3 T	365814	4906641	2	0	0	56.1	56.1	1	5728.34	3.25	0	86.16	0	1.88	0	0	12.78	0	0	0	0	0	0	-44.76	-44.76
	Inverter Transformer	MV2-4 T	365590	4906628	2	0	0	56.1	56.1	1	5914.69	3.25	0	86.44	0	1.94	0	0	13	0	0	0	0	0	0	-45.32	-45.32
	Inverter Transformer	MV1-1 T	364721	4906166	2	0	0	56.1	56.1	1	6889.46	3.25	0	87.76	0	2.23	0	0	14.11	0	0	0	0	0	0	-48.04	-48.04
	Inverter Transformer	MV1-2 T	364759	4906063	2	0	0	56.1	56.1	1	6918.85	3.25	0	87.8	0	2.24	0	0	14.14	0	0	0	0	0	0	-48.12	-48.12
	Inverter Transformer	MV1-4 T	364821	4905918	2	0	0	56.1	56.1	1	6956.2	3.25	0	87.85	0	2.25	0	0	14.18	0	0	0	0	0	0	-48.22	-48.22
	Inverter Transformer	MV1-5 T	364676	4905892	2	0	0	56.1	56.1	1	7087.41	3.25	0	88.01	0	2.28	0	0	14.32	0	0	0	0	0	0	-48.56	-48.56
	Inverter Transformer	MV1-12 T	365044	4905386	2	0	0	56.1	56.1	1	7124.85	3.25	0	88.06	0	2.29	0	0	14.36	0	0	0	0	0	0	-48.65	-48.65
	Inverter Transformer	MV1-8 T	364782	4905647	2	0	0	56.1	56.1	1	7154.61	3.25	0	88.09	0	2.3	0	0	14.39	0	0	0	0	0	0	-48.73	-48.73
	Inverter Transformer	MV1-3 T	364435	4906039	2	0	0	56.1	56.1	1	7196.48	3.25	0	88.14	0	2.31	0	0	14.44	0	0	0	0	0	0	-48.83	-48.83
	Inverter Transformer	MV1-15 T	365309	4904994	2	0	0	56.1	56.1	1	7205.25	3.25	0	88.15	0	2.31	0	0	14.45	0	0	0	0	0	0	-48.86	-48.86
	Inverter Transformer	MV1-6 T	364482	4905835	2	0	0	56.1	56.1	1	7277.07	3.25	0	88.24	0	2.33	0	0	14.52	0	0	0	0	0	0	-49.04	-49.04
	Inverter Transformer	MV1-9 T	364555	4905646	2	0	0	56.1	56.1	1	7333	3.25	0	88.31	0	2.35	0	0	14.58	0	0	0	0	0	0	-49.18	-49.18
	Inverter Transformer	MV1-11 T	364649	4905414	2	0	0	56.1	56.1	1	7405.27	3.25	0	88.39	0	2.37	0	0	14.66	0	0	0	0	0	0	-49.36	-49.36
Limit. Valu	0	0																								
Level D/N:	31.5234	31.5234																								

Receiver: Existing Noise Receptor
ID: S-R60
X: 370336
Y: 4910182
Z: 4.5
Ground: 0

ISO	Description	ID	X	Y	Z	Ground	ReflOrd	LxT	LxN	L/A	Dist.	hm	Freq	Adiv	K0b	Agr	Abar	z	Aatm	Afol	Ahous	Cmet	CmetN	Dc	RL	LtotT	LtotN
	Sol_Luce Substation	S_Substation	369426	4908792	3.5	0	0	112.1	112.1	1	1661.39	5.25	0	75.41	0	-0.08	3.85	0.26	3.78	0	0	0	0	0	0	29.12	29.12
	Inverter	MV5-1	370020	4909142	2	0	0	100.3	100.3	1	1086.95	3.25	0	71.72	0	-0.2	0	0	11.19	0	0	0	0	0	0	17.6	17.6
	Inverter	MV4-2	369272	4909397	2	0	0	100.3	100.3	1	1322.24	3.25	0	73.43	0	-0.1	0	0	11.87	0	0	0	0	0	0	15.12	15.12
	Inverter	MV5-3	370231	4908851	2	0	0	100.3	100.3	1	1335.14	3.25	0	73.51	0	-0.1	0	0	11.9	0	0	0	0	0	0	15	15
	Inverter	MV4-3	369229	4909397	2	0	0	100.3	100.3	1	1357.09	3.25	0	73.65	0	-0.09	0	0	11.96	0	0	0	0	0	0	14.79	14.79
	Inverter	MV5-2	370006	4908853	2	0	0	100.3	100.3	1	1369.36	3.25	0	73.73	0	-0.08	0	0	11.99	0	0	0	0	0	0	14.67	14.67
	Inverter	MV4-5	369289	4909199	2	0	0	100.3	100.3	1	1436.14	3.25	0	74.14	0	-0.06	0	0	12.16	0	0	0	0	0	0	14.06	14.06
	Inverter	MV4-6	369243	4909192	2	0	0	100.3	100.3	1	1474.71	3.25	0	74.37	0	-0.04	0	0	12.26	0	0	0	0	0	0	13.72	13.72
	Inverter	MV5-4	370324	4908707	2	0	0	100.3	100.3	1	1475.05	3.25	0	74.38	0	-0.04	0	0	12.26	0	0	0	0	0	0	13.72	13.72
	Inverter	MV5-5	370015	4908690	2	0	0	100.3	100.3	1	1526.14	3.25	0	74.67	0	-0.02	0	0	12.39	0	0	0	0	0	0	13.27	13.27
	Inverter	MV4-1	369011	4909397	2	0	0	100.3	100.3	1	1540.08	3.25	0	74.75	0	-0.02	0	0	12.42	0	0	0	0	0	0	13.16	13.16
	Inverter	MV4-9	369289	4909001	2	0	0	100.3	100.3	1	1578.28	3.25	0	74.96	0	-0.01	0	0	12.52	0	0	0	0	0	0	12.84	12.84
	Inverter	MV4-8	369256	4909001	2	0	0	100.3	100.3	1	1600.36	3.25	0	75.08	0	0	0	0	12.57	0	0	0	0	0	0	12.66	12.66
	Inverter	MV4-4	369027	4909199	2	0	0	100.3	100.3	1	1637	3.25	0	75.28	0	0.02	0	0	12.66	0	0	0	0	0	0	12.36	12.36
	Inverter	MV4-10	369312	4908858	2	0	0	100.3	100.3	1	1673.79	3.25	0	75.47	0	0.03	0	0	12.74	0	0	0	0	0	0	12.07	12.07
	Inverter	MV4-11	369264	4908855	2	0	0	100.3	100.3	1	1705.91	3.25	0	75.64	0	0.04	0	0	12.82	0	0	0	0	0	0	11.82	11.82
	Inverter	MV4-7	369035	4909001	2	0	0	100.3	100.3	1	1757.09	3.25	0	75.9	0	0.06	0	0	12.93	0	0	0	0	0	0	11.43	11.43
	DSTATCOM - 10 MVAR #1	DSAT1	369437	4908757	2.5	0	0	96.6	96.6	1	1684.88	3.5	0	75.53	0	3.15	0	0	1.52	0	0	0	0	0	0	16.42	16.42
	DSTATCOM - 10 MVAR #2	DSAT2	369403	4908757	2.5	0	0	96.6	96.6	1	1703.27	5.24	0	75.63	0	3.72	0.91	0.19	1.54	0	0	0	0	0	0	14.84	14.84
	Inverter	MV6-2	370085	4907339	2	0	0	100.3	100.3	1	2854.06	3.25	0	80.11	0	0.33	0	0	15.11	0	0	0	0	0	0	4.76	4.76
	Inverter	MV3-8	368680	4907712	2	0	0	100.3	100.3	1	2973.76	3.25	0	80.47	0	0.36	0	0	15.33	0	0	0	0	0	0	4.16	4.16
	Inverter	MV6-3	370207	4907140	2	0	0	100.3	100.3	1	3044.74	3.25	0	80.67	0	0.37	0	0	15.45	0	0	0	0	0	0	3.82	3.82
	Inverter	MV3-9	368512	4907703	2	0	0	100.3	100.3	1	3077.73	3.25	0	80.76	0	0.38	0	0	15.51	0	0	0	0	0	0	3.66	3.66
	Inverter	MV3-14	368684	4907498	2	0	0	100.3	100.3	1	3151.66	3.25	0	80.97	0	0.39	0	0	15.64	0	0	0	0	0	0	3.31	3.31
	Inverter	MV3-6	368162	4907834	2	0	0	100.3	100.3	1	3199.9	3.25	0	81.1	0	0.4	0	0	15.72	0	0	0	0	0	0	3.09	3.09
	Inverter	MV3-11	368346	4907662	2	0	0	100.3	100.3	1	3211	3.25	0	81.13	0	0.4	0	0	15.74	0	0	0	0	0	0	3.04	3.04

Inverter	MV3-16	368514	4907475	2	0	0	100.3	100.3	1	3263.06	3.25	0	81.27	0	0.41	0	0	15.83	0	0	0	0	0	0	2.8	2.8
Inverter	MV3-3	367939	4907927	2	0	0	100.3	100.3	1	3290.99	3.25	0	81.35	0	0.42	0	0	15.88	0	0	0	0	0	0	2.67	2.67
Inverter	MV3-20	368689	4907317	2	0	0	100.3	100.3	1	3304.67	3.25	0	81.38	0	0.42	0	0	15.9	0	0	0	0	0	0	2.61	2.61
Inverter	MV3-10	368167	4907669	2	0	0	100.3	100.3	1	3319.6	3.25	0	81.42	0	0.42	0	0	15.93	0	0	0	0	0	0	2.54	2.54
Inverter	MV3-15	368357	4907477	2	0	0	100.3	100.3	1	3351.64	3.25	0	81.51	0	0.43	0	0	15.98	0	0	0	0	0	0	2.4	2.4
Inverter	MV3-7	367945	4907754	2	0	0	100.3	100.3	1	3407.65	3.25	0	81.65	0	0.44	0	0	16.08	0	0	0	0	0	0	2.15	2.15
Inverter	MV3-19	368357	4907347	2	0	0	100.3	100.3	1	3457.41	3.25	0	81.78	0	0.44	0	0	16.16	0	0	0	0	0	0	1.93	1.93
Inverter	MV3-17	368178	4907472	2	0	0	100.3	100.3	1	3464.26	3.25	0	81.79	0	0.45	0	0	16.17	0	0	0	0	0	0	1.9	1.9
Inverter	MV3-21	368478	4907206	2	0	0	100.3	100.3	1	3508.38	3.25	0	81.9	0	0.45	0	0	16.25	0	0	0	0	0	0	1.71	1.71
Inverter	MV3-13	367963	4907577	2	0	0	100.3	100.3	1	3523.8	3.25	0	81.94	0	0.45	0	0	16.27	0	0	0	0	0	0	1.65	1.65
Inverter	MV3-12	367668	4907594	2	0	0	100.3	100.3	1	3716.98	3.25	0	82.4	0	0.49	0	0	16.59	0	0	0	0	0	0	0.83	0.83
Inverter	MV3-18	367752	4907412	2	0	0	100.3	100.3	1	3788.13	3.25	0	82.57	0	0.5	0	0	16.71	0	0	0	0	0	0	0.54	0.54
Inverter	MV6-1	370235	4907364	2	0	0	97.3	97.3	1	2819.81	3.25	0	80	0	0.33	0	0	15.05	0	0	0	0	0	0	1.93	1.93
Fixed Reactor Bank 2	FRB2	369464	4908755	6	0	0	89.8	89.8	1	1672.34	5.25	0	75.47	0	-1.02	0	0	3.8	0	0	0	0	0	0	11.53	11.53
Inverter	MV2-3	365820	4906641	2	0	0	100.3	100.3	1	5738.72	3.25	0	86.18	0	0.69	0	0	19.63	0	0	0	0	0	0	-6.19	-6.19
Fixed Reactor Bank 1	FRB1	369378	4908755	6	0	0	89.8	89.8	1	1718.75	5.25	0	75.7	0	-1.02	0	0	3.88	0	0	0	0	0	0	11.21	11.21
Inverter	MV2-4	365586	4906624	2	0	0	100.3	100.3	1	5934.8	3.25	0	86.47	0	0.7	0	0	19.9	0	0	0	0	0	0	-6.76	-6.76
Inverter	MV5-6	369982	4908507	2	0	0	89.1	89.1	1	1712	3.25	0	75.67	0	0.84	0	0	7.57	0	0	0	0	0	0	4.98	4.98
Inverter	MV4-12	369043	4908803	2	0	0	89.1	89.1	1	1890.37	3.25	0	76.53	0	0.88	0	0	7.87	0	0	0	0	0	0	3.78	3.78
Inverter	MV1-1	364715	4906166	2	0	0	100.3	100.3	1	6908.25	3.25	0	87.79	0	0.71	0	0	21.18	0	0	0	0	0	0	-9.37	-9.37
Inverter	MV1-2	364753	4906063	2	0	0	100.3	100.3	1	6938.02	3.25	0	87.82	0	0.71	0	0	21.22	0	0	0	0	0	0	-9.45	-9.45
Inverter	MV1-4	364815	4905918	2	0	0	100.3	100.3	1	6975.9	3.25	0	87.87	0	0.71	0	0	21.27	0	0	0	0	0	0	-9.54	-9.54
Inverter	MV1-5	364671	4905892	2	0	0	100.3	100.3	1	7106.08	3.25	0	88.03	0	0.71	0	0	21.43	0	0	0	0	0	0	-9.86	-9.86
Inverter	MV1-12	365038	4905386	2	0	0	100.3	100.3	1	7146.36	3.25	0	88.08	0	0.71	0	0	21.48	0	0	0	0	0	0	-9.96	-9.96
Inverter	MV1-8	364788	4905647	2	0	0	100.3	100.3	1	7165.65	3.25	0	88.11	0	0.7	0	0	21.51	0	0	0	0	0	0	-10	-10
Inverter	MV1-15	365315	4904994	2	0	0	100.3	100.3	1	7219.82	3.25	0	88.17	0	0.7	0	0	21.57	0	0	0	0	0	0	-10.13	-10.13
Inverter	MV1-6	364477	4905835	2	0	0	100.3	100.3	1	7295.5	3.25	0	88.26	0	0.7	0	0	21.67	0	0	0	0	0	0	-10.31	-10.31
Inverter	MV1-9	364561	4905646	2	0	0	100.3	100.3	1	7343.43	3.25	0	88.32	0	0.7	0	0	21.72	0	0	0	0	0	0	-10.43	-10.43
Inverter	MV1-11	364655	4905414	2	0	0	100.3	100.3	1	7416.71	3.25	0	88.4	0	0.69	0	0	21.81	0	0	0	0	0	0	-10.6	-10.6
Inverter	MV4-13	369051	4908605	2	0	0	89.1	89.1	1	2034.25	3.25	0	77.17	0	0.91	0	0	8.1	0	0	0	0	0	0	2.87	2.87
Inverter	MV4-14	369176	4908507	2	0	0	89.1	89.1	1	2037.46	3.25	0	77.18	0	0.92	0	0	8.11	0	0	0	0	0	0	2.85	2.85
Inverter	MV4-15	369176	4908481	2	0	0	89.1	89.1	1	2058.88	3.25	0	77.27	0	0.92	0	0	8.14	0	0	0	0	0	0	2.72	2.72
Inverter	MV2-1	365842	4906816	2	0	0	97.3	97.3	1	5614.8	3.25	0	85.99	0	0.69	0	0	19.46	0	0	0	0	0	0	-8.82	-8.82
Inverter	MV1-7	364925	4905782	2	0	0	97.3	97.3	1	6974.16	3.25	0	87.87	0	0.71	0	0	21.27	0	0	0	0	0	0	-12.53	-12.53
Inverter	MV1-10	365004	4905564	2	0	0	97.3	97.3	1	7053.8	3.25	0	87.97	0	0.71	0	0	21.37	0	0	0	0	0	0	-12.73	-12.73
Inverter	MV3-2	368671	4907928	2	0	0	89.1	89.1	1	2802.28	3.25	0	79.95	0	1.1	0	0	9.32	0	0	0	0	0	0	-1.31	-1.31
Inverter	MV1-14	365163	4905049	2	0	0	97.3	97.3	1	7287.5	3.25	0	88.25	0	0.7	0	0	21.66	0	0	0	0	0	0	-13.3	-13.3
Inverter	MV1-13	364731	4905241	2	0	0	97.3	97.3	1	7471.91	3.25	0	88.47	0	0.69	0	0	21.88	0	0	0	0	0	0	-13.73	-13.73
Inverter	MV3-4	368502	4907925	2	0	0	89.1	89.1	1	2908.2	3.25	0	80.27	0	1.12	0	0	9.48	0	0	0	0	0	0	-1.82	-1.82
SubstationTransformer	W_ST	369711.17	4906112.3	2.5	0	0	92	92	1	4117.42	3.5	0	83.29	0	0.36	0	0	7.52	0	0	0	0	0	0	0.8	0.8
Inverter	MV3-5	368340	4907843	2	0	0	89.1	89.1	1	3074.89	3.25	0	80.76	0	1.17	0	0	9.73	0	0	0	0	0	0	-2.59	-2.59
Inverter	MV3-1	368156	4907976	2	0	0	89.1	89.1	1	3101.43	3.25	0	80.83	0	1.17	0	0	9.77	0	0	0	0	0	0	-2.72	-2.72
Inverter	MV3-22	368656	4907142	2	0	0	89.1	89.1	1	3473.33	3.25	0	81.81	0	1.26	0	0	10.32	0	0	0	0	0	0	-4.34	-4.34
Westbrook Inverter Enclosur	W_INV6	369875	4906578	2	0	0	89.1	89.1	1	3633.37	3.25	0	82.21	0	1.3	0	0	10.56	0	0	0	0	0	0	-5.01	-5.01
Westbrook Inverter Enclosur	W_INV5	369719	4906574	2	0	0	89.1	89.1	1	3660.38	3.25	0	82.27	0	1.31	0	0	10.6	0	0	0	0	0	0	-5.12	-5.12
Westbrook Inverter Enclosur	W_INV7	369780	4906417	2	0	0	89.1	89.1	1	3805.83	3.25	0	82.61	0	1.34	0	0	10.81	0	0	0	0	0	0	-5.7	-5.7
Westbrook Inverter Enclosur	W_INV2	369374	4906388	2	0	0	89.1	89.1	1	3914.06	3.25	0	82.85	0	1.37	0	0	10.96	0	0	0	0	0	0	-6.13	-6.13
Westbrook Inverter Enclosur	W_INV4	369673	4906164	2	0	0	89.1	89.1	1	4072.33	3.25	0	83.2	0	1.41	0	0	11.19	0	0	0	0	0	0	-6.74	-6.74
Westbrook Inverter Enclosur	W_INV3	369508	4906164	2	0	0	89.1	89.1	1	4102.43	3.25	0	83.26	0	1.42	0	0	11.23	0	0	0	0	0	0	-6.85	-6.85
Inverter	MV6-4	370250	4906966	2	0	0	86.1	86.1	1	3217.15	3.25	0	81.15	0	1.2	0	0	9.94	0	0	0	0	0	0	-6.24	-6.24
Westbrook Inverter Enclosur	W_INV1	369409	4906578	2	0	0	86.1	86.1	1	3721.31	3.25	0	82.41	0	1.32	0	0	10.68	0	0	0	0	0	0	-8.36	-8.36
Inverter	MV2-2	365977	4906654	2	0	0	89.1	89.1	1	5607.82	3.25	0	85.98	0	1.79	0	0	13.26	0	0	0	0	0	0	-11.97	-11.97
Gardiner Substation	G_Sub	366586.3	4903349.9	2.5	0	0	90.8	90.8	1	7793.45	4.25	0	88.83	0	2.18	1.77	0.38	11.47	0	0	0	0	0	0	-13.47	-13.47
Inverter	MV1-3	364440	4906039	2	0	0	89.1	89.1	1	7206.06	3.25	0	88.15	0	2.18	0	0	15.23	0	0	0	0	0	0	-16.5	-16.5
Inverters	G_Inv2	366676.9	4903239.1	2	0	0	87.7	87.7	1	7848.11	3.25	0	88.9	0	2.96	0	0	8.83	0	0	0	0	0	0	-13.03	-13.03
Inverters	G_Inv1	366526.4	4903225.8	2	0	0	87.7	87.7	1	7931.06	3.25	0	88.99	0	2.96	0	0	8.91	0	0	0	0	0	0	-13.2	-13.2
Inverters	G_Inv4	366732.8	4903105	2	0	0	87.7	87.7	1	7941.47	3.25	0	89	0	2.96	0	0	8.92	0	0	0	0	0	0	-13.22	-13.22
Inverters	G_Inv3	366583.7	4903091.4	2	0	0	87.7	87.7	1	8022.24	3.25	0	89.09	0	2.96	0	0	9	0	0	0	0	0	0	-13.39	-13.39
Inverters	G_Inv6	366788.5	4902972	2	0	0	87.7	87.7	1	8035.48	3.25	0	89.1	0	2.96	0	0	9.01	0	0	0	0	0	0	-13.42	-13.42
Inverters	G_Inv5	366638.5	4902958.1	2	0	0	87.7	87.7	1	8115.19	3.25	0	89.19	0	2.96	0	0	9.09	0	0	0	0	0	0	-13.58	-13.58
Inverters	G_Inv8	366844.5	4902838.5	2	0	0	87.7	87.7	1	8131.27	3.25	0	89.2	0	2.96	0	0	9.11	0	0	0	0	0	0	-13.61	-13.61
Inverters	G_Inv7	366694.6	4902824.7	2	0	0	87.7	87.7	1	8209.12	3.25	0	89.29	0	2.96	0	0	9.18	0	0	0	0	0	0	-13.77	-13.77
Inverters	G_Inv10	366900.7	4902704.8	2	0	0	87.7	87.7	1	8228.6	3.25	0	89.31	0	2.96	0	0	9.2	0	0	0	0	0	0	-13.81	-13.81
Inverters	G_Inv9	366750.9	4902691.8	2	0	0	87.7	87.7	1	8303.98	3.25	0	89.39	0	2.96	0	0	9.27	0	0	0	0	0	0	-13.96	-13.96
Westbrook Inverter Transfor	W_INVTR1	369403	4906578	2	0	0	78.2	78.2	1	3722.81	3.25	0	82.42	0	-2.9	0	0	1.95	0	0	0	0	0	0	-3.23	-3.23
Westbrook Inverter Transfor	W_INVTR6	369881	4906578	2	0	0	77.3	77.3	1	3632.61	3.25	0	82.2	0	-2.88	0	0	1.91	0	0	0	0	0	0	-3.9	-3.9
Westbrook Inverter Transfor	W_INVTR5	369725	4906574	2	0	0	77.3	77.3	1	3659.37	3.25	0	82.27	0	-2.88	0	0	1.92	0	0	0	0	0	0	-3.97	-3.97
Westbrook Inverter Transfor	W_INVTR7	369786	4906417	2	0	0	77.3	77.3	1	3804.96	3.25	0	82.61	0	-2.92	0	0	1.98	0	0	0	0	0	0	-4.33	-4.33
Westbrook Inverter Transfor	W_INVTR2	369368	4906388	2	0	0	77.3	77.3	1	3915.54	3.25	0	82.86	0	-2.94	0	0	2.02	0	0	0	0	0	0	-4.59	-4.59
Westbrook Inverter Transfor	W_INVTR4	369679	4906164	2	0	0	77.3	77.3	1	4071.36	3.25	0	83.19	0	-2.98	0	0	2.08	0	0	0	0	0	0	-4.96	-4.96
Westbrook Inverter Transfor	W_INVTR3	369514	4906164	2	0	0	77.3	77.3	1	4101.22	3.25	0	83.26	0	-2.99	0	0	2.09	0	0	0	0	0	0	-5.02	-5.02
Inverter Transformer	MV6-1 T	370230	4907364	2	0	0	69.4	69.4	1	2819.99	3.25	0	80	0	2.45	0	0	5.73	0	0	0	0	0	0	-18.83	-18.83
Inverter Transformer	MV6-4 T	370244	4906966	2	0	0	69.4	69.4	1	3217.32	3.25	0	81.15	0	2.57	0	0	6.06	0	0	0	0	0	0	-20.44	-20.44
Inverter Transformer	MV5-1 T	370015	4909142	2	0	0	56.1	56.1	1	1088.42	3.25	0	71.74	0	0.04	0	0	5.1	0	0	0	0	0	0	-20.82	-20.82

Inverter Transformer	MV2-1 T	365836	4906816	2	0	0	69.4	69.4	1	5619.61	3.25	0	85.99	0	3.13	0	0	7.78	0	0	0	0	0	0	-27.55	-27.55
Inverter Transformer	MV4-2 T	369267	4909397	2	0	0	56.1	56.1	1	1326.27	3.25	0	73.45	0	0.13	0	0	5.64	0	0	0	0	0	0	-23.16	-23.16
Inverter Transformer	MV5-3 T	370237	4908851	2	0	0	56.1	56.1	1	1334.68	3.25	0	73.51	0	0.13	0	0	5.66	0	0	0	0	0	0	-23.24	-23.24
Inverter Transformer	MV4-3 T	369234	4909397	2	0	0	56.1	56.1	1	1353.01	3.25	0	73.63	0	0.14	0	0	5.7	0	0	0	0	0	0	-23.41	-23.41
Inverter Transformer	MV5-2 T	370011	4908853	2	0	0	56.1	56.1	1	1368.16	3.25	0	73.72	0	0.15	0	0	5.73	0	0	0	0	0	0	-23.54	-23.54
Inverter Transformer	MV4-5 T	369283	4909199	2	0	0	56.1	56.1	1	1440.52	3.25	0	74.17	0	0.18	0	0	5.89	0	0	0	0	0	0	-24.18	-24.18
Inverter Transformer	MV4-6 T	369249	4909192	2	0	0	56.1	56.1	1	1470.26	3.25	0	74.35	0	0.19	0	0	5.95	0	0	0	0	0	0	-24.43	-24.43
Inverter Transformer	MV5-4 T	370330	4908707	2	0	0	56.1	56.1	1	1475.01	3.25	0	74.38	0	0.19	0	0	5.96	0	0	0	0	0	0	-24.47	-24.47
Inverter Transformer	MV1-7 T	364919	4905782	2	0	0	69.4	69.4	1	6978.82	3.25	0	87.88	0	3.32	0	0	8.59	0	0	0	0	0	0	-30.43	-30.43
Inverter Transformer	MV5-5 T	370021	4908690	2	0	0	56.1	56.1	1	1524.89	3.25	0	74.66	0	0.21	0	0	6.07	0	0	0	0	0	0	-24.89	-24.89
Inverter Transformer	MV1-10 T	365010	4905564	2	0	0	69.4	69.4	1	7049.27	3.25	0	87.96	0	3.32	0	0	8.63	0	0	0	0	0	0	-30.56	-30.56
Inverter Transformer	MV4-1 T	369017	4909397	2	0	0	56.1	56.1	1	1534.92	3.25	0	74.72	0	0.21	0	0	6.09	0	0	0	0	0	0	-24.97	-24.97
Inverter Transformer	MV1-14 T	365157	4905049	2	0	0	69.4	69.4	1	7291.76	3.25	0	88.26	0	3.35	0	0	8.76	0	0	0	0	0	0	-31.02	-31.02
Inverter Transformer	MV4-9 T	369284	4909001	2	0	0	56.1	56.1	1	1581.6	3.25	0	74.98	0	0.23	0	0	6.19	0	0	0	0	0	0	-25.35	-25.35
Inverter Transformer	MV4-8 T	369262	4909001	2	0	0	56.1	56.1	1	1596.32	3.25	0	75.06	0	0.24	0	0	6.22	0	0	0	0	0	0	-25.46	-25.46
Inverter Transformer	MV1-13 T	364725	4905241	2	0	0	69.4	69.4	1	7476.42	3.25	0	88.47	0	3.36	0	0	8.86	0	0	0	0	0	0	-31.35	-31.35
Inverter Transformer	MV4-4 T	369033	4909199	2	0	0	56.1	56.1	1	1632.21	3.25	0	75.26	0	0.25	0	0	6.3	0	0	0	0	0	0	-25.75	-25.75
Inverter Transformer	MV4-10 T	369307	4908858	2	0	0	56.1	56.1	1	1676.85	3.25	0	75.49	0	0.27	0	0	6.39	0	0	0	0	0	0	-26.09	-26.09
Inverter Transformer	MV4-11 T	369269	4908855	2	0	0	56.1	56.1	1	1702.77	3.25	0	75.62	0	0.28	0	0	6.44	0	0	0	0	0	0	-26.29	-26.29
Inverter Transformer	MV5-6 T	369987	4908507	2	0	0	56.1	56.1	1	1710.97	3.25	0	75.66	0	0.28	0	0	6.46	0	0	0	0	0	0	-26.35	-26.35
Inverter Transformer	MV4-7 T	369040	4909001	2	0	0	56.1	56.1	1	1753.39	3.25	0	75.88	0	0.3	0	0	6.55	0	0	0	0	0	0	-26.67	-26.67
Inverter Transformer	MV4-12 T	369049	4908803	2	0	0	56.1	56.1	1	1886.27	3.25	0	76.51	0	0.36	0	0	6.82	0	0	0	0	0	0	-27.63	-27.63
Inverter Transformer	MV4-13 T	369057	4908605	2	0	0	56.1	56.1	1	2030.46	3.25	0	77.15	0	0.42	0	0	7.1	0	0	0	0	0	0	-28.61	-28.61
Inverter Transformer	MV4-14 T	369182	4908507	2	0	0	56.1	56.1	1	2034.05	3.25	0	77.17	0	0.42	0	0	7.11	0	0	0	0	0	0	-28.64	-28.64
Inverter Transformer	MV4-15 T	369170	4908481	2	0	0	56.1	56.1	1	2062.27	3.25	0	77.29	0	0.43	0	0	7.17	0	0	0	0	0	0	-28.82	-28.82
Inverter Transformer	MV3-2 T	368677	4907928	2	0	0	56.1	56.1	1	2798.71	3.25	0	79.94	0	0.74	0	0	8.52	0	0	0	0	0	0	-33.15	-33.15
Inverter Transformer	MV6-2 T	370091	4907339	2	0	0	56.1	56.1	1	2853.54	3.25	0	80.11	0	0.77	0	0	8.62	0	0	0	0	0	0	-33.43	-33.43
Inverter Transformer	MV3-4 T	368507	4907925	2	0	0	56.1	56.1	1	2905.05	3.25	0	80.26	0	0.79	0	0	8.71	0	0	0	0	0	0	-33.7	-33.7
Inverter Transformer	MV3-8 T	368685	4907712	2	0	0	56.1	56.1	1	2970.98	3.25	0	80.46	0	0.82	0	0	8.82	0	0	0	0	0	0	-34.04	-34.04
Inverter Transformer	MV6-3 T	370202	4907140	2	0	0	56.1	56.1	1	3044.95	3.25	0	80.67	0	0.85	0	0	8.94	0	0	0	0	0	0	-34.41	-34.41
Inverter Transformer	MV3-9 T	368517	4907703	2	0	0	56.1	56.1	1	3074.77	3.25	0	80.76	0	0.86	0	0	8.99	0	0	0	0	0	0	-34.55	-34.55
Inverter Transformer	MV3-5 T	368335	4907843	2	0	0	56.1	56.1	1	3078.14	3.25	0	80.77	0	0.86	0	0	9	0	0	0	0	0	0	-34.57	-34.57
Inverter Transformer	MV3-1 T	368150	4907976	2	0	0	56.1	56.1	1	3105.65	3.25	0	80.84	0	0.87	0	0	9.05	0	0	0	0	0	0	-34.71	-34.71
Inverter Transformer	MV3-14 T	368678	4907498	2	0	0	56.1	56.1	1	3154.81	3.25	0	80.98	0	0.9	0	0	9.13	0	0	0	0	0	0	-34.94	-34.94
Inverter Transformer	MV3-6 T	368156	4907834	2	0	0	56.1	56.1	1	3203.98	3.25	0	81.11	0	0.92	0	0	9.21	0	0	0	0	0	0	-35.18	-35.18
Inverter Transformer	MV3-11 T	368340	4907662	2	0	0	56.1	56.1	1	3214.72	3.25	0	81.14	0	0.92	0	0	9.23	0	0	0	0	0	0	-35.23	-35.23
Inverter Transformer	MV3-16 T	368509	4907475	2	0	0	56.1	56.1	1	3265.85	3.25	0	81.28	0	0.94	0	0	9.31	0	0	0	0	0	0	-35.47	-35.47
Inverter Transformer	MV3-3 T	367944	4907927	2	0	0	56.1	56.1	1	3287.35	3.25	0	81.34	0	0.95	0	0	9.35	0	0	0	0	0	0	-35.58	-35.58
Inverter Transformer	MV3-20 T	368683	4907317	2	0	0	56.1	56.1	1	3307.66	3.25	0	81.39	0	0.96	0	0	9.38	0	0	0	0	0	0	-35.67	-35.67
Inverter Transformer	MV3-10 T	368162	4907669	2	0	0	56.1	56.1	1	3322.87	3.25	0	81.43	0	0.97	0	0	9.4	0	0	0	0	0	0	-35.74	-35.74
Inverter Transformer	MV3-15 T	368351	4907477	2	0	0	56.1	56.1	1	3355.18	3.25	0	81.51	0	0.98	0	0	9.46	0	0	0	0	0	0	-35.89	-35.89
Inverter Transformer	MV3-7 T	367951	4907754	2	0	0	56.1	56.1	1	3403.44	3.25	0	81.64	0	1	0	0	9.53	0	0	0	0	0	0	-36.11	-36.11
Inverter Transformer	MV3-19 T	368352	4907347	2	0	0	56.1	56.1	1	3460.27	3.25	0	81.78	0	1.02	0	0	9.62	0	0	0	0	0	0	-36.37	-36.37
Inverter Transformer	MV3-17 T	368183	4907472	2	0	0	56.1	56.1	1	3461.14	3.25	0	81.78	0	1.02	0	0	9.63	0	0	0	0	0	0	-36.38	-36.38
Inverter Transformer	MV3-22 T	368661	4907142	2	0	0	56.1	56.1	1	3470.91	3.25	0	81.81	0	1.03	0	0	9.64	0	0	0	0	0	0	-36.42	-36.42
Inverter Transformer	MV3-21 T	368484	4907206	2	0	0	56.1	56.1	1	3505.21	3.25	0	81.89	0	1.04	0	0	9.7	0	0	0	0	0	0	-36.57	-36.57
Inverter Transformer	MV3-13 T	367958	4907577	2	0	0	56.1	56.1	1	3527.17	3.25	0	81.95	0	1.05	0	0	9.73	0	0	0	0	0	0	-36.67	-36.67
Inverter Transformer	MV3-12 T	367674	4907594	2	0	0	56.1	56.1	1	3712.68	3.25	0	82.39	0	1.13	0	0	10.02	0	0	0	0	0	0	-37.48	-37.48
Inverter Transformer	MV3-18 T	367757	4907412	2	0	0	56.1	56.1	1	3784.73	3.25	0	82.56	0	1.16	0	0	10.13	0	0	0	0	0	0	-37.79	-37.79
Inverter Transformer	MV2-2 T	365982	4906654	2	0	0	56.1	56.1	1	5603.94	3.25	0	85.97	0	1.84	0	0	12.62	0	0	0	0	0	0	-44.37	-44.37
Line Reactor	NGR	369421	4908787.5	5	0	0	45.4	45.4	1	1667.89	4.75	0	75.44	0	3.23	0	0	0.68	0	0	0	0	0	0	-34.01	-34.01
Inverter Transformer	MV2-3 T	365814	4906641	2	0	0	56.1	56.1	1	5743.45	3.25	0	86.18	0	1.88	0	0	12.8	0	0	0	0	0	0	-44.8	-44.8
Inverter Transformer	MV2-4 T	365590	4906628	2	0	0	56.1	56.1	1	5929.2	3.25	0	86.46	0	1.94	0	0	13.02	0	0	0	0	0	0	-45.36	-45.36
Inverter Transformer	MV1-1 T	364721	4906166	2	0	0	56.1	56.1	1	6903.37	3.25	0	87.78	0	2.23	0	0	14.13	0	0	0	0	0	0	-48.08	-48.08
Inverter Transformer	MV1-2 T	364759	4906063	2	0	0	56.1	56.1	1	6933.19	3.25	0	87.82	0	2.24	0	0	14.16	0	0	0	0	0	0	-48.16	-48.16
Inverter Transformer	MV1-4 T	364821	4905918	2	0	0	56.1	56.1	1	6971.15	3.25	0	87.87	0	2.25	0	0	14.2	0	0	0	0	0	0	-48.26	-48.26
Inverter Transformer	MV1-5 T	364676	4905892	2	0	0	56.1	56.1	1	7102.09	3.25	0	88.03	0	2.29	0	0	14.34	0	0	0	0	0	0	-48.6	-48.6
Inverter Transformer	MV1-12 T	365044	4905386	2	0	0	56.1	56.1	1	7141.91	3.25	0	88.08	0	2.3	0	0	14.38	0	0	0	0	0	0	-48.7	-48.7
Inverter Transformer	MV1-8 T	364782	4905647	2	0	0	56.1	56.1	1	7170.3	3.25	0	88.11	0	2.31	0	0	14.41	0	0	0	0	0	0	-48.77	-48.77
Inverter Transformer	MV1-3 T	364435	4906039	2	0	0	56.1	56.1	1	7210.15	3.25	0	88.16	0	2.32	0	0	14.45	0	0	0	0	0	0	-48.87	-48.87
Inverter Transformer	MV1-15 T	365309	4904994	2	0	0	56.1	56.1	1	7223.99	3.25	0	88.18	0	2.32	0	0	14.47	0	0	0	0	0	0	-48.9	-48.9
Inverter Transformer	MV1-6 T	364482	4905835	2	0	0	56.1	56.1	1	7291.48	3.25	0	88.26	0	2.34	0	0	14.54	0	0	0	0	0	0	-49.07	-49.07
Inverter Transformer	MV1-9 T	364555	4905646	2	0	0	56.1	56.1	1	7348.15	3.25	0	88.32	0	2.35	0	0	14.6	0	0	0	0	0	0	-49.21	-49.21
Inverter Transformer	MV1-11 T	364649	4905414	2	0	0	56.1	56.1	1	7421.31	3.25	0	88.41	0	2.37	0	0	14.67	0	0	0	0	0	0	-49.39	-49.39
Limit. Valu 0	0																									
Level D/N: 31.3791	31.3791																									

Receiver: Existing Noise Receptor
ID: S-R61
X: 370297
Y: 4910239
Z: 4.5
Ground: 0

ISO	Description	ID	X	Y	Z	Ground	ReflOrd	LxT	LxN	L/A	Dist.	hm	Freq	Adiv	K0b	Agr	Abar	z	Aatm	Afol	Ahous	Cmet	CmetN	Dc	RL	LtotT	LtotN
	Sol_Luce Substation	S_Substation	369426	4908792	3.5	0	0	112.1	112.1	1	1688.92	4	0	75.55	0	-0.72	0	0	3.83	0	0	0	0	0	0	33.42	33.42
	Inverter	MV5-1	370020	4909142	2	0	0	100.3	100.3	1	1131.43	3.25	0	72.07	0	-0.18	0	0	11.32	0	0	0	0	0	0	17.1	17.1
	Inverter	MV4-2	369272	4909397	2	0	0	100.3	100.3	1	1326.5	3.25	0	73.45	0	-0.1	0	0	11.88	0	0	0	0	0	0	15.08	15.08
	Inverter	MV4-3	369229	4909397	2	0	0	100.3	100.3	1	1360	3.25	0	73.67	0	-0.09	0	0	11.97	0	0	0	0	0	0	14.76	14.76
	Inverter	MV5-3	370231	4908851	2	0	0	100.3	100.3	1	1389.57	3.25	0	73.86	0	-0.08	0	0	12.04	0	0	0	0	0	0	14.49	14.49
	Inverter	MV5-2	370006	4908853	2	0	0	100.3	100.3	1	1416.22	3.25	0	74.02	0	-0.07	0	0	12.11	0	0	0	0	0	0	14.24	14.24
	Inverter	MV4-5	369289	4909199	2	0	0	100.3	100.3	1	1448.33	3.25	0	74.22	0	-0.05	0	0	12.19	0	0	0	0	0	0	13.95	13.95
	Inverter	MV4-6	369243	4909192	2	0	0	100.3	100.3	1	1485.64	3.25	0	74.44	0	-0.04	0	0	12.29	0	0	0	0	0	0	13.62	13.62
	Inverter	MV5-4	370324	4908707	2	0	0	100.3	100.3	1	1532.24	3.25	0	74.71	0	-0.02	0	0	12.4	0	0	0	0	0	0	13.22	13.22
	Inverter	MV4-1	369011	4909397	2	0	0	100.3	100.3	1	1537.13	3.25	0	74.73	0	-0.02	0	0	12.42	0	0	0	0	0	0	13.18	13.18
	Inverter	MV5-5	370015	4908690	2	0	0	100.3	100.3	1	1574.46	3.25	0	74.94	0	-0.01	0	0	12.51	0	0	0	0	0	0	12.87	12.87
	Inverter	MV4-9	369289	4909001	2	0	0	100.3	100.3	1	1596.47	3.25	0	75.06	0	0	0	0	12.56	0	0	0	0	0	0	12.69	12.69
	Inverter	MV4-8	369256	4909001	2	0	0	100.3	100.3	1	1617.51	3.25	0	75.18	0	0.01	0	0	12.61	0	0	0	0	0	0	12.52	12.52
	Inverter	MV4-4	369027	4909199	2	0	0	100.3	100.3	1	1641.5	3.25	0	75.3	0	0.02	0	0	12.67	0	0	0	0	0	0	12.32	12.32
	Inverter	MV4-10	369312	4908858	2	0	0	100.3	100.3	1	1696.29	3.25	0	75.59	0	0.04	0	0	12.79	0	0	0	0	0	0	11.89	11.89
	Inverter	MV4-11	369264	4908855	2	0	0	100.3	100.3	1	1727.01	3.25	0	75.75	0	0.05	0	0	12.86	0	0	0	0	0	0	11.66	11.66
	Inverter	MV4-7	369035	4909001	2	0	0	100.3	100.3	1	1767.85	3.25	0	75.95	0	0.06	0	0	12.96	0	0	0	0	0	0	11.35	11.35
	DSTATCOM - 10 MVAR #1	DSAT1	369437	4908757	2.5	0	0	96.6	96.6	1	1713.45	3.5	0	75.68	0	3.16	0	0	1.54	0	0	0	0	0	0	16.25	16.25
	DSTATCOM - 10 MVAR #2	DSAT2	369403	4908757	2.5	0	0	96.6	96.6	1	1730.77	5.23	0	75.76	0	3.72	0.91	0.2	1.55	0	0	0	0	0	0	14.68	14.68
	Inverter	MV6-2	370085	4907339	2	0	0	100.3	100.3	1	2907.74	3.25	0	80.27	0	0.34	0	0	15.21	0	0	0	0	0	0	4.49	4.49
	Inverter	MV3-8	368680	4907712	2	0	0	100.3	100.3	1	3000.07	3.25	0	80.54	0	0.36	0	0	15.37	0	0	0	0	0	0	4.04	4.04
	Inverter	MV6-3	370207	4907140	2	0	0	100.3	100.3	1	3100.31	3.25	0	80.83	0	0.38	0	0	15.55	0	0	0	0	0	0	3.55	3.55
	Inverter	MV3-9	368512	4907703	2	0	0	100.3	100.3	1	3101.21	3.25	0	80.83	0	0.38	0	0	15.55	0	0	0	0	0	0	3.55	3.55
	Inverter	MV3-14	368684	4907498	2	0	0	100.3	100.3	1	3180.39	3.25	0	81.05	0	0.4	0	0	15.69	0	0	0	0	0	0	3.18	3.18
	Inverter	MV3-6	368162	4907834	2	0	0	100.3	100.3	1	3215.94	3.25	0	81.15	0	0.4	0	0	15.75	0	0	0	0	0	0	3.01	3.01
	Inverter	MV3-11	368346	4907662	2	0	0	100.3	100.3	1	3232.23	3.25	0	81.19	0	0.41	0	0	15.78	0	0	0	0	0	0	2.94	2.94
	Inverter	MV3-16	368514	4907475	2	0	0	100.3	100.3	1	3289.19	3.25	0	81.34	0	0.42	0	0	15.87	0	0	0	0	0	0	2.68	2.68
	Inverter	MV3-3	367939	4907927	2	0	0	100.3	100.3	1	3302.35	3.25	0	81.38	0	0.42	0	0	15.9	0	0	0	0	0	0	2.62	2.62
	Inverter	MV3-20	368689	4907317	2	0	0	100.3	100.3	1	3335.23	3.25	0	81.46	0	0.42	0	0	15.95	0	0	0	0	0	0	2.47	2.47
	Inverter	MV3-10	368167	4907669	2	0	0	100.3	100.3	1	3337.93	3.25	0	81.47	0	0.42	0	0	15.96	0	0	0	0	0	0	2.46	2.46
	Inverter	MV3-15	368357	4907477	2	0	0	100.3	100.3	1	3375.24	3.25	0	81.57	0	0.43	0	0	16.02	0	0	0	0	0	0	2.29	2.29
	Inverter	MV3-7	367945	4907754	2	0	0	100.3	100.3	1	3421.57	3.25	0	81.68	0	0.44	0	0	16.1	0	0	0	0	0	0	2.09	2.09
	Inverter	MV3-19	368357	4907347	2	0	0	100.3	100.3	1	3482.42	3.25	0	81.84	0	0.45	0	0	16.2	0	0	0	0	0	0	1.82	1.82
	Inverter	MV3-17	368178	4907472	2	0	0	100.3	100.3	1	3485.18	3.25	0	81.84	0	0.45	0	0	16.21	0	0	0	0	0	0	1.81	1.81
	Inverter	MV3-21	368478	4907206	2	0	0	100.3	100.3	1	3536.64	4.6	0	81.97	0	1.26	3.05	0	16.29	0	0	0	0	0	0	-2.27	-2.27
	Inverter	MV3-13	367963	4907577	2	0	0	100.3	100.3	1	3540.31	3.25	0	81.98	0	0.46	0	0	16.3	0	0	0	0	0	0	1.57	1.57
	Inverter	MV3-12	367668	4907594	2	0	0	100.3	100.3	1	3729.3	3.25	0	82.43	0	0.49	0	0	16.61	0	0	0	0	0	0	0.78	0.78
	Inverter	MV3-18	367752	4907412	2	0	0	100.3	100.3	1	3803.81	3.25	0	82.6	0	0.5	0	0	16.73	0	0	0	0	0	0	0.48	0.48
	Inverter	MV6-1	370235	4907364	2	0	0	97.3	97.3	1	2875.67	3.25	0	80.17	0	0.34	0	0	15.15	0	0	0	0	0	0	1.65	1.65
	Fixed Reactor Bank 2	FRB2	369464	4908755	6	0	0	89.8	89.8	1	1701.81	5.25	0	75.62	0	-1.02	0	0	3.85	0	0	0	0	0	0	11.33	11.33
	Inverter	MV2-3	365820	4906641	2	0	0	100.3	100.3	1	5743.62	3.25	0	86.18	0	0.69	0	0	19.64	0	0	0	0	0	0	-6.21	-6.21
	Fixed Reactor Bank 1	FRB1	369378	4908755	6	0	0	89.8	89.8	1	1745.51	5.25	0	75.84	0	-1.01	0	0	3.93	0	0	0	0	0	0	11.03	11.03
	Inverter	MV2-4	365586	4906624	2	0	0	100.3	100.3	1	5938.16	3.25	0	86.47	0	0.7	0	0	19.91	0	0	0	0	0	0	-6.77	-6.77
	Inverter	MV5-6	369982	4908507	2	0	0	89.1	89.1	1	1760.41	3.25	0	75.91	0	0.85	0	0	7.65	0	0	0	0	0	0	4.64	4.64
	Inverter	MV1-1	364715	4906166	2	0	0	100.3	100.3	1	6910	3.25	0	87.79	0	0.71	0	0	21.19	0	0	0	0	0	0	-9.38	-9.38
	Inverter	MV1-2	364753	4906063	2	0	0	100.3	100.3	1	6940.82	3.25	0	87.83	0	0.71	0	0	21.22	0	0	0	0	0	0	-9.45	-9.45
	Inverter	MV4-12	369043	4908803	2	0	0	89.1	89.1	1	1906.47	3.25	0	76.6	0	0.89	0	0	7.89	0	0	0	0	0	0	3.68	3.68
	Inverter	MV1-4	364815	4905918	2	0	0	100.3	100.3	1	6980.21	3.25	0	87.88	0	0.71	0	0	21.27	0	0	0	0	0	0	-9.55	-9.55
	Inverter	MV1-5	364671	4905892	2	0	0	100.3	100.3	1	7109.73	3.25	0	88.04	0	0.71	0	0	21.44	0	0	0	0	0	0	-9.87	-9.87
	Inverter	MV1-12	365038	4905386	2	0	0	100.3	100.3	1	7156.03	3.25	0	88.09	0	0.71	0	0	21.49	0	0	0	0	0	0	-9.98	-9.98
	Inverter	MV1-8	364788	4905647	2	0	0	100.3	100.3	1	7171.86	3.25	0	88.11	0	0.7	0	0	21.51	0	0	0	0	0	0	-10.02	-10.02
	Inverter	MV1-15	365315	4904994	2	0	0	100.3	100.3	1	7233.97	3.25	0	88.19	0	0.7	0	0	21.59	0	0	0	0	0	0	-10.17	-10.17
	Inverter	MV1-6	364477	4905835	2	0	0	100.3	100.3	1	7298.47	3.25	0	88.26	0	0.7	0	0	21.67	0	0	0	0	0	0	-10.32	-10.32
	Inverter	MV1-9	364561	4905646	2	0	0	100.3	100.3	1	7348.29	3.25	0	88.32	0	0.7	0	0	21.73	0	0	0	0	0	0	-10.44	-10.44
	Inverter	MV1-11	364655	4905414	2	0	0	100.3	100.3	1	7423.8	3.25	0	88.41	0	0.69	0	0	21.82	0	0	0	0	0	0	-10.62	-10.62
	Inverter	MV4-13	369051	4908605	2	0	0	89.1	89.1	1	2054.87	3.25	0	77.26	0	0.92	0	0	8.13	0	0	0	0	0	0	2.75	2.75
	Inverter	MV4-14	369176	4908507	2	0	0	89.1	89.1	1	2063.12	3.25	0	77.29	0	0.92	0	0	8.15	0	0	0	0	0	0	2.7	2.7
	Inverter	MV4-15	369176	4908481	2	0	0	89.1	89.1	1	2085	3.25	0	77.38	0	0.93	0	0	8.18	0	0	0	0	0	0	2.57	2.57
	Inverter	MV2-1	365842	4906816	2	0	0	97.3	97.3	1	5618.18	3.25	0	85.99	0	0.69	0	0	19.47	0	0	0	0	0	0	-8.83	-8.83
	Inverter	MV1-7	364925	4905782	2	0	0	97.3	97.3	1	6980.2	3.25	0	87.88	0	0.71	0	0	21.27	0	0	0	0	0	0	-12.55	-12.55
	Inverter	MV1-10	365004	4905564	2	0	0	97.3	97.3	1	7061.97	3.25	0	87.98	0	0.71	0	0	21.38	0	0	0	0	0	0	-12.75	-12.75
	Inverter	MV1-14	365163	4905049	2	0	0	97.3	97.3	1	7300.28	3.25	0	88.27	0	0.7	0	0	21.67	0	0	0	0	0	0	-13.33	-13.33
	Inverter	MV3-2	368671	4907928	2	0	0	89.1	89.1	1	2825.7	3.25	0	80.02	0	1.1	0	0	9.35	0	0	0	0	0	0	-1.42	-1.42
	Inverter	MV1-13	364731	4905241	2	0	0	97.3	97.3	1	7480.67	3.25	0	88.48	0	0.69	0	0	21.89	0	0	0	0	0	0	-13.75	-13.75
	Inverter	MV3-4	368502	4907925	2	0	0	89.1	89.1	1	2928.59	3.25	0	80.33	0	1.13	0	0	9.51	0	0	0	0	0	0	-1.91	-1.91
	SubstationTransformer	W_ST	369711.17	4906112.3	2.5	0	0	92	92	1	4168.11	3.5	0	83.4	0	0.37	0	0	7.59	0	0	0	0	0	0	0.62	0.62
	Inverter	MV3-5	368340	4907843	2	0	0	89.1	89.1	1	3093.65	3.25	0	80.81	0	1.17	0	0	9.76	0	0	0	0	0	0	-2.68	-2.68
	Inverter	MV3-1	368156	4907976	2	0	0	89.1	89.1	1	3115.29	3.25	0	80.87	0	1.17	0	0	9.79	0	0	0	0	0	0	-2.78	-2.78
	Inverter	MV3-22	368656	4907142	2	0	0	89.1	89.1	1	3504.9	3.25	0	81.89	0	1.27	0	0	10.37	0	0	0	0	0	0	-4.48	-4.48
	Westbrook Inverter Enclosur	W_INV6	369875	4906578	2	0	0	89.1	89.1	1	3685.24	3.25	0	82.33	0	1.31	0	0	10.63	0	0	0	0	0	0	-5.22	-5.22
	Westbrook Inverter Enclosur	W_INV5	369719	4906574	2	0	0	89.1	89.1	1	3710.3	3.25	0	82.39	0	1.32	0	0	10.67	0	0	0	0	0	0	-5.32	-5.32
	Westbrook Inverter Enclosur	W_INV7	369780	4906417	2	0	0	89.1	89.1	1	3856.81	3.25	0	82.72	0	1.36	0	0	10.88	0	0	0	0	0	0	-5.9	-5.9
	Westbrook Inverter Enclosur	W_INV2	369374	4906388	2	0	0	89.1	89.1	1	3960.07	3.25	0	82.95	0	1.38	0	0	11.03	0	0	0	0	0	0	-6.31	-6.31

Westbrook Inverter Enclosur	W_INV4	369673	4906164	2	0	0	89.1	89.1	1	4122.5	3.25	0	83.3	0	1.42	0	0	11.26	0	0	0	0	0	0	-6.93	-6.93
Westbrook Inverter Enclosur	W_INV3	369508	4906164	2	0	0	89.1	89.1	1	4150.68	3.25	0	83.36	0	1.43	0	0	11.3	0	0	0	0	0	0	-7.03	-7.03
Inverter	MV6-4	370250	4906966	2	0	0	86.1	86.1	1	3273.34	3.25	0	81.3	0	1.21	0	0	10.03	0	0	0	0	0	0	-6.48	-6.48
Westbrook Inverter Enclosur	W_INV1	369409	4906578	2	0	0	86.1	86.1	1	3767.16	3.25	0	82.52	0	1.33	0	0	10.75	0	0	0	0	0	0	-8.55	-8.55
Inverter	MV2-2	365977	4906654	2	0	0	89.1	89.1	1	5613.79	3.25	0	85.99	0	1.79	0	0	13.27	0	0	0	0	0	0	-11.99	-11.99
Gardiner Substation	G_Sub	366586.3	4903349.9	2.5	0	0	90.8	90.8	1	7824.9	4.25	0	88.87	0	2.18	1.76	0.38	11.5	0	0	0	0	0	0	-13.54	-13.54
Inverter	MV1-3	364440	4906039	2	0	0	89.1	89.1	1	7207.25	3.25	0	88.16	0	2.18	0	0	15.23	0	0	0	0	0	0	-16.51	-16.51
Inverters	G_Inv2	366676.9	4903239.1	2	0	0	87.7	87.7	1	7880.59	3.25	0	88.93	0	2.96	0	0	8.86	0	0	0	0	0	0	-13.09	-13.09
Inverters	G_Inv1	366526.4	4903225.8	2	0	0	87.7	87.7	1	7962.56	3.25	0	89.02	0	2.96	0	0	8.94	0	0	0	0	0	0	-13.27	-13.27
Inverters	G_Inv4	366732.8	4903105	2	0	0	87.7	87.7	1	7974.8	3.25	0	89.03	0	2.96	0	0	8.95	0	0	0	0	0	0	-13.29	-13.29
Inverters	G_Inv3	366583.7	4903091.4	2	0	0	87.7	87.7	1	8054.61	3.25	0	89.12	0	2.96	0	0	9.03	0	0	0	0	0	0	-13.46	-13.46
Inverters	G_Inv6	366788.5	4902972	2	0	0	87.7	87.7	1	8069.63	3.25	0	89.14	0	2.96	0	0	9.05	0	0	0	0	0	0	-13.49	-13.49
Inverters	G_Inv5	366638.5	4902958.1	2	0	0	87.7	87.7	1	8148.38	3.25	0	89.22	0	2.96	0	0	9.12	0	0	0	0	0	0	-13.65	-13.65
Inverters	G_Inv8	366844.5	4902838.5	2	0	0	87.7	87.7	1	8166.22	3.25	0	89.24	0	2.96	0	0	9.14	0	0	0	0	0	0	-13.68	-13.68
Inverters	G_Inv7	366694.6	4902824.7	2	0	0	87.7	87.7	1	8243.13	3.25	0	89.32	0	2.96	0	0	9.21	0	0	0	0	0	0	-13.84	-13.84
Inverters	G_Inv10	366900.7	4902704.8	2	0	0	87.7	87.7	1	8264.32	3.25	0	89.34	0	2.96	0	0	9.23	0	0	0	0	0	0	-13.88	-13.88
Inverters	G_Inv9	366750.9	4902691.8	2	0	0	87.7	87.7	1	8338.77	3.25	0	89.42	0	2.96	0	0	9.31	0	0	0	0	0	0	-14.03	-14.03
Westbrook Inverter Transfor	W_INVTR1	369403	4906578	2	0	0	78.2	78.2	1	3768.58	3.25	0	82.52	0	-2.91	0	0	1.97	0	0	0	0	0	0	-3.34	-3.34
Westbrook Inverter Transfor	W_INVTR6	369881	4906578	2	0	0	77.3	77.3	1	3684.56	3.25	0	82.33	0	-2.89	0	0	1.93	0	0	0	0	0	0	-4.03	-4.03
Westbrook Inverter Transfor	W_INVTR5	369725	4906574	2	0	0	77.3	77.3	1	3709.37	3.25	0	82.39	0	-2.89	0	0	1.94	0	0	0	0	0	0	-4.09	-4.09
Westbrook Inverter Transfor	W_INVTR7	369786	4906417	2	0	0	77.3	77.3	1	3856.01	3.25	0	82.72	0	-2.93	0	0	2	0	0	0	0	0	0	-4.45	-4.45
Westbrook Inverter Transfor	W_INVTR2	369368	4906388	2	0	0	77.3	77.3	1	3961.47	3.25	0	82.96	0	-2.95	0	0	2.04	0	0	0	0	0	0	-4.7	-4.7
Westbrook Inverter Transfor	W_INVTR4	369679	4906164	2	0	0	77.3	77.3	1	4121.6	3.25	0	83.3	0	-2.99	0	0	2.1	0	0	0	0	0	0	-5.07	-5.07
Westbrook Inverter Transfor	W_INVTR3	369514	4906164	2	0	0	77.3	77.3	1	4149.54	3.25	0	83.36	0	-3	0	0	2.11	0	0	0	0	0	0	-5.13	-5.13
Inverter Transformer	MV6-1 T	370230	4907364	2	0	0	69.4	69.4	1	2875.78	3.25	0	80.18	0	2.47	0	0	5.78	0	0	0	0	0	0	-19.07	-19.07
Inverter Transformer	MV6-4 T	370244	4906966	2	0	0	69.4	69.4	1	3273.43	3.25	0	81.3	0	2.59	0	0	6.11	0	0	0	0	0	0	-20.65	-20.65
Inverter Transformer	MV5-1 T	370015	4909142	2	0	0	56.1	56.1	1	1132.67	3.25	0	72.08	0	0.06	0	0	5.2	0	0	0	0	0	0	-21.28	-21.28
Inverter Transformer	MV2-1 T	365836	4906816	2	0	0	69.4	69.4	1	5622.94	3.25	0	86	0	3.13	0	0	7.79	0	0	0	0	0	0	-27.56	-27.56
Inverter Transformer	MV4-2 T	369267	4909397	2	0	0	56.1	56.1	1	1330.36	3.25	0	73.48	0	0.13	0	0	5.65	0	0	0	0	0	0	-23.2	-23.2
Inverter Transformer	MV4-3 T	369234	4909397	2	0	0	56.1	56.1	1	1356.07	3.25	0	73.65	0	0.14	0	0	5.71	0	0	0	0	0	0	-23.43	-23.43
Inverter Transformer	MV5-3 T	370237	4908851	2	0	0	56.1	56.1	1	1389.3	3.25	0	73.86	0	0.16	0	0	5.78	0	0	0	0	0	0	-23.73	-23.73
Inverter Transformer	MV5-2 T	370011	4908853	2	0	0	56.1	56.1	1	1415.2	3.25	0	74.02	0	0.17	0	0	5.83	0	0	0	0	0	0	-23.96	-23.96
Inverter Transformer	MV4-5 T	369283	4909199	2	0	0	56.1	56.1	1	1452.52	3.25	0	74.24	0	0.18	0	0	5.92	0	0	0	0	0	0	-24.28	-24.28
Inverter Transformer	MV4-6 T	369249	4909192	2	0	0	56.1	56.1	1	1481.39	3.25	0	74.41	0	0.19	0	0	5.98	0	0	0	0	0	0	-24.52	-24.52
Inverter Transformer	MV1-7 T	364919	4905782	2	0	0	69.4	69.4	1	6984.82	3.25	0	87.88	0	3.32	0	0	8.59	0	0	0	0	0	0	-30.44	-30.44
Inverter Transformer	MV1-10 T	365010	4905564	2	0	0	69.4	69.4	1	7057.48	3.25	0	87.97	0	3.32	0	0	8.63	0	0	0	0	0	0	-30.58	-30.58
Inverter Transformer	MV4-1 T	369017	4909397	2	0	0	56.1	56.1	1	1532.11	3.25	0	74.71	0	0.21	0	0	6.09	0	0	0	0	0	0	-24.95	-24.95
Inverter Transformer	MV5-4 T	370330	4908707	2	0	0	56.1	56.1	1	1532.36	3.25	0	74.71	0	0.21	0	0	6.09	0	0	0	0	0	0	-24.95	-24.95
Inverter Transformer	MV5-5 T	370021	4908690	2	0	0	56.1	56.1	1	1573.4	3.25	0	74.94	0	0.23	0	0	6.17	0	0	0	0	0	0	-25.28	-25.28
Inverter Transformer	MV1-14 T	365157	4905049	2	0	0	69.4	69.4	1	7304.5	3.25	0	88.27	0	3.35	0	0	8.77	0	0	0	0	0	0	-31.04	-31.04
Inverter Transformer	MV4-9 T	369284	4909001	2	0	0	56.1	56.1	1	1599.63	3.25	0	75.08	0	0.24	0	0	6.23	0	0	0	0	0	0	-25.49	-25.49
Inverter Transformer	MV4-8 T	369262	4909001	2	0	0	56.1	56.1	1	1613.65	3.25	0	75.16	0	0.24	0	0	6.26	0	0	0	0	0	0	-25.6	-25.6
Inverter Transformer	MV1-13 T	364725	4905241	2	0	0	69.4	69.4	1	7485.13	3.25	0	88.48	0	3.36	0	0	8.87	0	0	0	0	0	0	-31.37	-31.37
Inverter Transformer	MV4-4 T	369033	4909199	2	0	0	56.1	56.1	1	1636.86	3.25	0	75.28	0	0.25	0	0	6.31	0	0	0	0	0	0	-25.78	-25.78
Inverter Transformer	MV4-10 T	369307	4908858	2	0	0	56.1	56.1	1	1699.2	3.25	0	75.6	0	0.28	0	0	6.44	0	0	0	0	0	0	-26.26	-26.26
Inverter Transformer	MV4-11 T	369269	4908855	2	0	0	56.1	56.1	1	1724.02	3.25	0	75.73	0	0.29	0	0	6.49	0	0	0	0	0	0	-26.45	-26.45
Inverter Transformer	MV5-6 T	369987	4908507	2	0	0	56.1	56.1	1	1759.53	3.25	0	75.91	0	0.3	0	0	6.56	0	0	0	0	0	0	-26.71	-26.71
Inverter Transformer	MV4-7 T	369040	4909001	2	0	0	56.1	56.1	1	1764.28	3.25	0	75.93	0	0.31	0	0	6.57	0	0	0	0	0	0	-26.75	-26.75
Inverter Transformer	MV4-12 T	369049	4908803	2	0	0	56.1	56.1	1	1902.53	3.25	0	76.59	0	0.36	0	0	6.85	0	0	0	0	0	0	-27.74	-27.74
Inverter Transformer	MV4-13 T	369057	4908605	2	0	0	56.1	56.1	1	2051.23	3.25	0	77.24	0	0.43	0	0	7.14	0	0	0	0	0	0	-28.75	-28.75
Inverter Transformer	MV4-14 T	369182	4908507	2	0	0	56.1	56.1	1	2059.87	3.25	0	77.28	0	0.43	0	0	7.16	0	0	0	0	0	0	-28.81	-28.81
Inverter Transformer	MV4-15 T	369170	4908481	2	0	0	56.1	56.1	1	2088.23	3.25	0	77.4	0	0.44	0	0	7.22	0	0	0	0	0	0	-28.99	-28.99
Inverter Transformer	MV3-2 T	368677	4907928	2	0	0	56.1	56.1	1	2822.26	3.25	0	80.01	0	0.75	0	0	8.56	0	0	0	0	0	0	-33.27	-33.27
Inverter Transformer	MV6-2 T	370091	4907339	2	0	0	56.1	56.1	1	2907.31	3.25	0	80.27	0	0.79	0	0	8.71	0	0	0	0	0	0	-33.71	-33.71
Inverter Transformer	MV3-4 T	368507	4907925	2	0	0	56.1	56.1	1	2925.53	3.25	0	80.32	0	0.8	0	0	8.74	0	0	0	0	0	0	-33.8	-33.8
Inverter Transformer	MV3-8 T	368685	4907712	2	0	0	56.1	56.1	1	2997.38	3.25	0	80.53	0	0.83	0	0	8.86	0	0	0	0	0	0	-34.17	-34.17
Inverter Transformer	MV3-5 T	368335	4907843	2	0	0	56.1	56.1	1	3096.82	3.25	0	80.82	0	0.87	0	0	9.03	0	0	0	0	0	0	-34.66	-34.66
Inverter Transformer	MV3-9 T	368517	4907703	2	0	0	56.1	56.1	1	3098.34	3.25	0	80.82	0	0.87	0	0	9.03	0	0	0	0	0	0	-34.67	-34.67
Inverter Transformer	MV6-3 T	370202	4907140	2	0	0	56.1	56.1	1	3100.46	3.25	0	80.83	0	0.87	0	0	9.04	0	0	0	0	0	0	-34.68	-34.68
Inverter Transformer	MV3-1 T	368150	4907976	2	0	0	56.1	56.1	1	3119.42	3.25	0	80.88	0	0.88	0	0	9.07	0	0	0	0	0	0	-34.77	-34.77
Inverter Transformer	MV3-14 T	368678	4907498	2	0	0	56.1	56.1	1	3183.43	3.25	0	81.06	0	0.91	0	0	9.18	0	0	0	0	0	0	-35.08	-35.08
Inverter Transformer	MV3-6 T	368156	4907834	2	0	0	56.1	56.1	1	3219.92	3.25	0	81.16	0	0.92	0	0	9.24	0	0	0	0	0	0	-35.26	-35.26
Inverter Transformer	MV3-11 T	368340	4907662	2	0	0	56.1	56.1	1	3235.86	3.25	0	81.2	0	0.93	0	0	9.26	0	0	0	0	0	0	-35.33	-35.33
Inverter Transformer	MV3-16 T	368509	4907475	2	0	0	56.1	56.1	1	3291.91	3.25	0	81.35	0	0.95	0	0	9.35	0	0	0	0	0	0	-35.6	-35.6
Inverter Transformer	MV3-3 T	367944	4907927	2	0	0	56.1	56.1	1	3298.78	3.25	0	81.37	0	0.96	0	0	9.36	0	0	0	0	0	0	-35.63	-35.63
Inverter Transformer	MV3-20 T	368683	4907317	2	0	0	56.1	56.1	1	3338.13	3.25	0	81.47	0	0.97	0	0	9.43	0	0	0	0	0	0	-35.81	-35.81
Inverter Transformer	MV3-10 T	368162	4907669	2	0	0	56.1	56.1	1	3341.13	3.25	0	81.48	0	0.97	0	0	9.43	0	0	0	0	0	0	-35.83	-35.83
Inverter Transformer	MV3-15 T	368351	4907477	2	0	0	56.1	56.1	1	3378.69	3.25	0	81.57	0	0.99	0	0	9.49	0	0	0	0	0	0	-36	-36
Inverter Transformer	MV3-7 T	367951	4907754	2	0	0	56.1	56.1	1	3417.45	3.25	0	81.67	0	1.01	0	0	9.56	0	0	0	0	0	0	-36.18	-36.18
Inverter Transformer	MV3-17 T	368183	4907472	2	0	0	56.1	56.1	1	3482.14	3.25	0	81.84	0	1.03	0	0	9.66	0	0	0	0	0	0	-36.47	-36.47
Inverter Transformer	MV3-19 T	368352	4907347	2	0	0	56.1	56.1	1	3485.21	3.25	0	81.84	0	1.03	0	0	9.66	0	0	0	0	0	0	-36.48	-36.48
Inverter Transformer	MV3-22 T	368661	4907142	2	0	0	56.1	56.1	1	3502.56	3.25	0	81.89	0	1.04	0	0	9.69	0	0	0	0	0	0	-36.56	-36.56
Inverter Transformer	MV3-21 T	368484	4907206	2	0	0	56.1	56.1	1	3533.56	4.6	0	81.96	0	1.99	2.45	0	9.74	0	0	0	0	0	0	-40.09	-40.09
Inverter Transformer	MV3-13 T	367958	4907577	2	0	0	56.1	56.1	1	3543.61	3.25	0	81.99	0	1.06	0	0	9.76	0	0	0	0	0	0	-36.75	-36.75

	Inverter Transformer	MV3-12 T	367674	4907594	2	0	0	56.1	56.1	1	3725.07	3.25	0	82.42	0	1.13	0	0	10.04	0	0	0	0	0	0	-37.54	-37.54
	Inverter Transformer	MV3-18 T	367757	4907412	2	0	0	56.1	56.1	1	3800.47	3.25	0	82.6	0	1.16	0	0	10.15	0	0	0	0	0	0	-37.86	-37.86
	Inverter Transformer	MV2-2 T	365982	4906654	2	0	0	56.1	56.1	1	5609.94	3.25	0	85.98	0	1.84	0	0	12.63	0	0	0	0	0	0	-44.39	-44.39
	Inverter Transformer	MV2-3 T	365814	4906641	2	0	0	56.1	56.1	1	5748.3	3.25	0	86.19	0	1.88	0	0	12.8	0	0	0	0	0	0	-44.82	-44.82
	Line Reactor	NGR	369421	4908787.5	5	0	0	45.4	45.4	1	1695.35	4.75	0	75.59	0	3.23	0	0	0.69	0	0	0	0	0	0	-34.16	-34.16
	Inverter Transformer	MV2-4 T	365590	4906628	2	0	0	56.1	56.1	1	5932.55	3.25	0	86.46	0	1.94	0	0	13.02	0	0	0	0	0	0	-45.37	-45.37
	Inverter Transformer	MV1-1 T	364721	4906166	2	0	0	56.1	56.1	1	6905.15	3.25	0	87.78	0	2.23	0	0	14.13	0	0	0	0	0	0	-48.09	-48.09
	Inverter Transformer	MV1-2 T	364759	4906063	2	0	0	56.1	56.1	1	6936.02	3.25	0	87.82	0	2.24	0	0	14.16	0	0	0	0	0	0	-48.17	-48.17
	Inverter Transformer	MV1-4 T	364821	4905918	2	0	0	56.1	56.1	1	6975.5	3.25	0	87.87	0	2.25	0	0	14.2	0	0	0	0	0	0	-48.27	-48.27
	Inverter Transformer	MV1-5 T	364676	4905892	2	0	0	56.1	56.1	1	7105.78	3.25	0	88.03	0	2.29	0	0	14.34	0	0	0	0	0	0	-48.6	-48.6
	Inverter Transformer	MV1-12 T	365044	4905386	2	0	0	56.1	56.1	1	7151.62	3.25	0	88.09	0	2.3	0	0	14.39	0	0	0	0	0	0	-48.72	-48.72
	Inverter Transformer	MV1-8 T	364782	4905647	2	0	0	56.1	56.1	1	7176.47	3.25	0	88.12	0	2.31	0	0	14.42	0	0	0	0	0	0	-48.78	-48.78
	Inverter Transformer	MV1-3 T	364435	4906039	2	0	0	56.1	56.1	1	7211.31	3.25	0	88.16	0	2.32	0	0	14.45	0	0	0	0	0	0	-48.87	-48.87
	Inverter Transformer	MV1-15 T	365309	4904994	2	0	0	56.1	56.1	1	7238.11	3.25	0	88.19	0	2.32	0	0	14.48	0	0	0	0	0	0	-48.94	-48.94
	Inverter Transformer	MV1-6 T	364482	4905835	2	0	0	56.1	56.1	1	7294.48	3.25	0	88.26	0	2.34	0	0	14.54	0	0	0	0	0	0	-49.08	-49.08
	Inverter Transformer	MV1-9 T	364555	4905646	2	0	0	56.1	56.1	1	7352.97	3.25	0	88.33	0	2.35	0	0	14.6	0	0	0	0	0	0	-49.23	-49.23
	Inverter Transformer	MV1-11 T	364649	4905414	2	0	0	56.1	56.1	1	7428.36	3.25	0	88.42	0	2.37	0	0	14.68	0	0	0	0	0	0	-49.41	-49.41
Limit. Valu	0	0																								
Level D/N:	34.3583	34.3583																								

Receiver: Existing Noise Receptor
ID: S-R62
X: 370457
Y: 4909994
Z: 4.5
Ground: 0

ISO	Description	ID	X	Y	Z	Ground	ReflOrd	LxT	LxN	L/A	Dist.	hm	Freq	Adiv	K0b	Agr	Abar	z	Aatm	Afol	Ahous	Cmet	CmetN	Dc	RL	LtotT	LtotN
	Sol_Luce Substation	S_Substation	369426	4908792	3.5	0	0	112.1	112.1	1	1583.59	5.25	0	74.99	0	-0.05	4.11	0.31	3.64	0	0	0	0	0	0	29.38	29.38
	Inverter	MV5-1	370020	4909142	2	0	0	100.3	100.3	1	957.54	3.25	0	70.62	0	-0.27	0	0	10.77	0	0	0	0	0	0	19.19	19.19
	Inverter	MV5-3	370231	4908851	2	0	0	100.3	100.3	1	1165.13	3.25	0	72.33	0	-0.17	0	0	11.42	0	0	0	0	0	0	16.73	16.73
	Inverter	MV5-2	370006	4908853	2	0	0	100.3	100.3	1	1226.9	3.25	0	72.78	0	-0.14	0	0	11.6	0	0	0	0	0	0	16.08	16.08
	Inverter	MV5-4	370324	4908707	2	0	0	100.3	100.3	1	1293.86	3.25	0	73.24	0	-0.11	0	0	11.79	0	0	0	0	0	0	15.4	15.4
	Inverter	MV4-2	369272	4909397	2	0	0	100.3	100.3	1	1326.89	3.25	0	73.46	0	-0.1	0	0	11.88	0	0	0	0	0	0	15.08	15.08
	Inverter	MV4-3	369229	4909397	2	0	0	100.3	100.3	1	1365.43	3.25	0	73.71	0	-0.09	0	0	11.98	0	0	0	0	0	0	14.71	14.71
	Inverter	MV5-5	370015	4908690	2	0	0	100.3	100.3	1	1376.88	3.25	0	73.78	0	-0.08	0	0	12.01	0	0	0	0	0	0	14.6	14.6
	Inverter	MV4-5	369289	4909199	2	0	0	100.3	100.3	1	1412.89	3.25	0	74	0	-0.07	0	0	12.1	0	0	0	0	0	0	14.27	14.27
	Inverter	MV4-6	369243	4909192	2	0	0	100.3	100.3	1	1454.99	3.25	0	74.26	0	-0.05	0	0	12.21	0	0	0	0	0	0	13.89	13.89
	Inverter	MV4-9	369289	4909001	2	0	0	100.3	100.3	1	1533.06	3.25	0	74.71	0	-0.02	0	0	12.41	0	0	0	0	0	0	13.22	13.22
	Inverter	MV4-8	369256	4909001	2	0	0	100.3	100.3	1	1558.35	3.25	0	74.85	0	-0.01	0	0	12.47	0	0	0	0	0	0	13	13
	Inverter	MV4-1	369011	4909397	2	0	0	100.3	100.3	1	1564.39	3.25	0	74.89	0	-0.01	0	0	12.48	0	0	0	0	0	0	12.95	12.95
	Inverter	MV4-10	369312	4908858	2	0	0	100.3	100.3	1	1612.93	3.25	0	75.15	0	0.01	0	0	12.6	0	0	0	0	0	0	12.55	12.55
	Inverter	MV4-4	369027	4909199	2	0	0	100.3	100.3	1	1636.13	3.25	0	75.28	0	0.02	0	0	12.65	0	0	0	0	0	0	12.37	12.37
	Inverter	MV4-11	369264	4908855	2	0	0	100.3	100.3	1	1649.42	3.25	0	75.35	0	0.02	0	0	12.68	0	0	0	0	0	0	12.26	12.26
	Inverter	MV4-7	369035	4909001	2	0	0	100.3	100.3	1	1734.4	3.25	0	75.78	0	0.05	0	0	12.88	0	0	0	0	0	0	11.6	11.6
	DSTATCOM - 10 MVAR #1	DSAT1	369437	4908757	2.5	0	0	96.6	96.6	1	1603.3	3.5	0	75.1	0	3.14	0	0	1.47	0	0	0	0	0	0	16.92	16.92
	DSTATCOM - 10 MVAR #2	DSAT2	369403	4908757	2.5	0	0	96.6	96.6	1	1625.14	5.23	0	75.22	0	3.71	0.91	0.18	1.49	0	0	0	0	0	0	15.3	15.3
	Inverter	MV6-2	370085	4907339	2	0	0	100.3	100.3	1	2680.94	3.25	0	79.57	0	0.3	0	0	14.8	0	0	0	0	0	0	5.65	5.65
	Inverter	MV6-3	370207	4907140	2	0	0	100.3	100.3	1	2864.93	3.25	0	80.14	0	0.34	0	0	15.13	0	0	0	0	0	0	4.7	4.7
	Inverter	MV3-8	368680	4907712	2	0	0	100.3	100.3	1	2892.28	3.25	0	80.22	0	0.34	0	0	15.18	0	0	0	0	0	0	4.57	4.57
	Inverter	MV3-9	368512	4907703	2	0	0	100.3	100.3	1	3005.28	4.66	0	80.56	0	1.13	3.19	0.01	15.38	0	0	0	0	0	0	0.06	0.06
	Inverter	MV3-14	368684	4907498	2	0	0	100.3	100.3	1	3061.63	3.25	0	80.72	0	0.37	0	0	15.48	0	0	0	0	0	0	3.74	3.74
	Inverter	MV3-11	368346	4907662	2	0	0	100.3	100.3	1	3145.56	3.25	0	80.95	0	0.39	0	0	15.63	0	0	0	0	0	0	3.34	3.34
	Inverter	MV3-6	368162	4907834	2	0	0	100.3	100.3	1	3151.61	3.25	0	80.97	0	0.39	0	0	15.64	0	0	0	0	0	0	3.31	3.31
	Inverter	MV3-16	368514	4907475	2	0	0	100.3	100.3	1	3181.29	3.25	0	81.05	0	0.4	0	0	15.69	0	0	0	0	0	0	3.17	3.17
	Inverter	MV3-20	368689	4907317	2	0	0	100.3	100.3	1	3208.14	3.25	0	81.13	0	0.4	0	0	15.74	0	0	0	0	0	0	3.05	3.05
	Inverter	MV3-3	367939	4907927	2	0	0	100.3	100.3	1	3257.73	3.25	0	81.26	0	0.41	0	0	15.82	0	0	0	0	0	0	2.82	2.82
	Inverter	MV3-10	368167	4907669	2	0	0	100.3	100.3	1	3263.39	3.25	0	81.27	0	0.41	0	0	15.83	0	0	0	0	0	0	2.8	2.8
	Inverter	MV3-15	368357	4907477	2	0	0	100.3	100.3	1	3278	3.25	0	81.31	0	0.41	0	0	15.86	0	0	0	0	0	0	2.73	2.73
	Inverter	MV3-7	367945	4907754	2	0	0	100.3	100.3	1	3365.67	3.25	0	81.54	0	0.43	0	0	16.01	0	0	0	0	0	0	2.34	2.34
	Inverter	MV3-19	368357	4907347	2	0	0	100.3	100.3	1	3378.85	3.25	0	81.58	0	0.43	0	0	16.03	0	0	0	0	0	0	2.28	2.28
	Inverter	MV3-17	368178	4907472	2	0	0	100.3	100.3	1	3399.17	3.25	0	81.63	0	0.43	0	0	16.06	0	0	0	0	0	0	2.19	2.19
	Inverter	MV3-21	368478	4907206	2	0	0	100.3	100.3	1	3418.98	3.25	0	81.68	0	0.44	0	0	16.1	0	0	0	0	0	0	2.1	2.1
	Inverter	MV3-13	367963	4907577	2	0	0	100.3	100.3	1	3473.03	3.25	0	81.81	0	0.45	0	0	16.19	0	0	0	0	0	0	1.87	1.87
	Inverter	MV3-12	367668	4907594	2	0	0	100.3	100.3	1	3679.47	3.25	0	82.32	0	0.48	0	0	16.53	0	0	0	0	0	0	0.99	0.99
	Inverter	MV6-1	370235	4907364	2	0	0	97.3	97.3	1	2639.35	3.25	0	79.43	0	0.29	0	0	14.72	0	0	0	0	0	0	2.87	2.87
	Inverter	MV3-18	367752	4907412	2	0	0	100.3	100.3	1	3739.49	3.25	0	82.46	0	0.49	0	0	16.63	0	0	0	0	0	0	0.74	0.74
	Fixed Reactor Bank 2	FRB2	369464	4908755	6	0	0	89.8	89.8	1	1587.82	5.25	0	75.02	0	-1.02	0	0	3.64	0	0	0	0	0	0	12.14	12.14
	Fixed Reactor Bank 1	FRB1	369378	4908755	6	0	0	89.8	89.8	1	1642.97	5.28	0	75.31	0	-0.66	4.17	0	3.74	0	0	0	0	0	0	7.21	7.21
	Inverter	MV5-6	369982	4908507	2	0	0	89.1	89.1	1	1561.03	3.25	0	74.87	0	0.81	0	0	7.31	0	0	0	0	0	0	6.07	6.07
	Inverter	MV2-3	365820	4906641	2	0	0	100.3	100.3	1	5722.27	3.25	0	86.15	0	0.69	0	0	19.61	0	0	0	0	0	0	-6.14	-6.14
	Inverter	MV2-4	365586	4906624	2	0	0	100.3	100.3	1	5923.14	3.25	0	86.45	0	0.7	0	0	19.89	0	0	0	0	0	0	-6.73	-6.73
	Inverter	MV4-12	369043	4908803	2	0	0	89.1	89.1	1	1848.75	3.25	0	76.34	0	0.87	0	0	7.8	0	0	0	0	0	0	4.05	4.05
	Inverter	MV1-1	364715	4906166	2	0	0	100.3	100.3	1	6901.03	3.25	0	87.78	0	0.71	0	0	21.17	0	0	0	0	0	0	-9.35	-9.35

Inverter	MV1-2	364753	4906063	2	0	0	100.3	100.3	1	6927.36	3.25	0	87.81	0	0.71	0	0	21.21	0	0	0	0	0	0	-9.42	-9.42
Inverter	MV1-4	364815	4905918	2	0	0	100.3	100.3	1	6960.31	3.25	0	87.85	0	0.71	0	0	21.25	0	0	0	0	0	0	-9.5	-9.5
Inverter	MV1-5	364671	4905892	2	0	0	100.3	100.3	1	7092.55	3.25	0	88.02	0	0.71	0	0	21.41	0	0	0	0	0	0	-9.83	-9.83
Inverter	MV1-12	365038	4905386	2	0	0	100.3	100.3	1	7113.31	3.25	0	88.04	0	0.71	0	0	21.44	0	0	0	0	0	0	-9.88	-9.88
Inverter	MV1-8	364788	4905647	2	0	0	100.3	100.3	1	7143.81	3.25	0	88.08	0	0.71	0	0	21.48	0	0	0	0	0	0	-9.95	-9.95
Inverter	MV4-14	369176	4908507	2	0	0	89.1	89.1	1	1962.69	5.02	0	76.86	0	1.67	2.9	0.02	7.98	0	0	0	0	0	0	-0.36	-0.36
Inverter	MV1-15	365315	4904994	2	0	0	100.3	100.3	1	7172.18	3.25	0	88.11	0	0.7	0	0	21.51	0	0	0	0	0	0	-10.02	-10.02
Inverter	MV4-13	369051	4908605	2	0	0	89.1	89.1	1	1976.4	3.25	0	76.92	0	0.9	0	0	8.01	0	0	0	0	0	0	3.23	3.23
Inverter	MV4-15	369176	4908481	2	0	0	89.1	89.1	1	1982.46	5	0	76.94	0	1.68	2.9	0.02	8.02	0	0	0	0	0	0	-0.48	-0.48
Inverter	MV1-6	364477	4905835	2	0	0	100.3	100.3	1	7284.07	3.25	0	88.25	0	0.7	0	0	21.65	0	0	0	0	0	0	-10.29	-10.29
Inverter	MV1-9	364561	4905646	2	0	0	100.3	100.3	1	7325.84	3.25	0	88.3	0	0.7	0	0	21.7	0	0	0	0	0	0	-10.39	-10.39
Inverter	MV1-11	364655	4905414	2	0	0	100.3	100.3	1	7391.86	3.25	0	88.38	0	0.7	0	0	21.78	0	0	0	0	0	0	-10.54	-10.54
Inverter	MV2-1	365842	4906816	2	0	0	97.3	97.3	1	5603.38	3.25	0	85.97	0	0.69	0	0	19.45	0	0	0	0	0	0	-8.79	-8.79
Inverter	MV1-7	364925	4905782	2	0	0	97.3	97.3	1	6952.98	3.25	0	87.84	0	0.71	0	0	21.24	0	0	0	0	0	0	-12.48	-12.48
Inverter	MV1-10	365004	4905564	2	0	0	97.3	97.3	1	7025.68	3.25	0	87.93	0	0.71	0	0	21.33	0	0	0	0	0	0	-12.66	-12.66
Inverter	MV3-2	368671	4907928	2	0	0	89.1	89.1	1	2730.96	4.73	0	79.73	0	1.87	2.73	0.01	9.21	0	0	0	0	0	0	-4.48	-4.48
Inverter	MV1-14	365163	4905049	2	0	0	97.3	97.3	1	7244.27	3.25	0	88.2	0	0.7	0	0	21.6	0	0	0	0	0	0	-13.19	-13.19
SubstationTransformer	W_ST	369711.17	4906112.3	2.5	0	0	92	92	1	3952.73	3.5	0	82.94	0	0.32	0	0	7.3	0	0	0	0	0	0	1.42	1.42
Inverter	MV3-4	368502	4907925	2	0	0	89.1	89.1	1	2846.54	3.25	0	80.09	0	1.11	0	0	9.38	0	0	0	0	0	0	-1.52	-1.52
Inverter	MV1-13	364731	4905241	2	0	0	97.3	97.3	1	7441.65	3.25	0	88.43	0	0.69	0	0	21.84	0	0	0	0	0	0	-13.66	-13.66
Inverter	MV3-5	368340	4907843	2	0	0	89.1	89.1	1	3018.03	3.25	0	80.59	0	1.15	0	0	9.64	0	0	0	0	0	0	-2.33	-2.33
Inverter	MV3-1	368156	4907976	2	0	0	89.1	89.1	1	3060.54	3.25	0	80.72	0	1.16	0	0	9.71	0	0	0	0	0	0	-2.53	-2.53
Inverter	MV3-22	368656	4907142	2	0	0	89.1	89.1	1	3373.06	3.25	0	81.56	0	1.24	0	0	10.18	0	0	0	0	0	0	-3.92	-3.92
Westbrook Inverter Enclosur	W_INV6	369875	4906578	2	0	0	89.1	89.1	1	3465.23	3.25	0	81.79	0	1.26	0	0	10.31	0	0	0	0	0	0	-4.31	-4.31
Westbrook Inverter Enclosur	W_INV5	369719	4906574	2	0	0	89.1	89.1	1	3498.72	3.25	0	81.88	0	1.27	0	0	10.36	0	0	0	0	0	0	-4.45	-4.45
Westbrook Inverter Enclosur	W_INV7	369780	4906417	2	0	0	89.1	89.1	1	3640.5	3.25	0	82.22	0	1.3	0	0	10.57	0	0	0	0	0	0	-5.04	-5.04
Westbrook Inverter Enclosur	W_INV2	369374	4906388	2	0	0	89.1	89.1	1	3765.12	3.25	0	82.52	0	1.33	0	0	10.75	0	0	0	0	0	0	-5.54	-5.54
Westbrook Inverter Enclosur	W_INV4	369673	4906164	2	0	0	89.1	89.1	1	3909.42	3.25	0	82.84	0	1.37	0	0	10.96	0	0	0	0	0	0	-6.11	-6.11
Westbrook Inverter Enclosur	W_INV3	369508	4906164	2	0	0	89.1	89.1	1	3945.82	3.25	0	82.92	0	1.38	0	0	11.01	0	0	0	0	0	0	-6.25	-6.25
Inverter	MV6-4	370250	4906966	2	0	0	86.1	86.1	1	3035.07	3.25	0	80.64	0	1.16	0	0	9.67	0	0	0	0	0	0	-5.41	-5.41
Westbrook Inverter Enclosur	W_INV1	369409	4906578	2	0	0	86.1	86.1	1	3573.15	3.25	0	82.06	0	1.29	0	0	10.47	0	0	0	0	0	0	-7.76	-7.76
Inverter	MV2-2	365977	4906654	2	0	0	89.1	89.1	1	5588.02	3.25	0	85.95	0	1.78	0	0	13.24	0	0	0	0	0	0	-11.91	-11.91
Gardiner Substation	G_Sub	366586.3	4903349.9	2.5	0	0	90.8	90.8	1	7689.37	4.25	0	88.72	0	2.16	1.78	0.38	11.38	0	0	0	0	0	0	-13.27	-13.27
Inverter	MV1-3	364440	4906039	2	0	0	89.1	89.1	1	7200.44	3.25	0	88.15	0	2.18	0	0	15.22	0	0	0	0	0	0	-16.49	-16.49
Inverters	G_Inv2	366676.9	4903239.1	2	0	0	87.7	87.7	1	7740.66	3.25	0	88.78	0	2.96	0	0	8.72	0	0	0	0	0	0	-12.8	-12.8
Inverters	G_Inv1	366526.4	4903225.8	2	0	0	87.7	87.7	1	7826.76	3.25	0	88.87	0	2.96	0	0	8.81	0	0	0	0	0	0	-12.98	-12.98
Inverters	G_Inv4	366732.8	4903105	2	0	0	87.7	87.7	1	7831.22	3.25	0	88.88	0	2.96	0	0	8.81	0	0	0	0	0	0	-12.99	-12.99
Inverters	G_Inv3	366583.7	4903091.4	2	0	0	87.7	87.7	1	7915.07	3.25	0	88.97	0	2.96	0	0	8.89	0	0	0	0	0	0	-13.17	-13.17
Inverters	G_Inv6	366788.5	4902972	2	0	0	87.7	87.7	1	7922.52	3.25	0	88.98	0	2.96	0	0	8.9	0	0	0	0	0	0	-13.18	-13.18
Inverters	G_Inv5	366638.5	4902958.1	2	0	0	87.7	87.7	1	8005.3	3.25	0	89.07	0	2.96	0	0	8.98	0	0	0	0	0	0	-13.35	-13.35
Inverters	G_Inv8	366844.5	4902838.5	2	0	0	87.7	87.7	1	8015.69	3.25	0	89.08	0	2.96	0	0	8.99	0	0	0	0	0	0	-13.38	-13.38
Inverters	G_Inv7	366694.6	4902824.7	2	0	0	87.7	87.7	1	8096.57	3.25	0	89.17	0	2.96	0	0	9.07	0	0	0	0	0	0	-13.54	-13.54
Inverters	G_Inv10	366900.7	4902704.8	2	0	0	87.7	87.7	1	8110.47	3.25	0	89.18	0	2.96	0	0	9.08	0	0	0	0	0	0	-13.57	-13.57
Inverters	G_Inv9	366750.9	4902691.8	2	0	0	87.7	87.7	1	8188.85	3.25	0	89.26	0	2.96	0	0	9.16	0	0	0	0	0	0	-13.73	-13.73
Westbrook Inverter Transfor	W_INVTR1	369403	4906578	2	0	0	78.2	78.2	1	3574.91	3.25	0	82.07	0	-2.86	0	0	1.89	0	0	0	0	0	0	-2.85	-2.85
Westbrook Inverter Transfor	W_INVTR6	369881	4906578	2	0	0	77.3	77.3	1	3464.22	3.25	0	81.79	0	-2.84	0	0	1.85	0	0	0	0	0	0	-3.46	-3.46
Westbrook Inverter Transfor	W_INVTR5	369725	4906574	2	0	0	77.3	77.3	1	3497.46	3.25	0	81.88	0	-2.84	0	0	1.86	0	0	0	0	0	0	-3.55	-3.55
Westbrook Inverter Transfor	W_INVTR7	369786	4906417	2	0	0	77.3	77.3	1	3639.39	3.25	0	82.22	0	-2.88	0	0	1.92	0	0	0	0	0	0	-3.92	-3.92
Westbrook Inverter Transfor	W_INVTR2	369368	4906388	2	0	0	77.3	77.3	1	3766.85	3.25	0	82.52	0	-2.91	0	0	1.97	0	0	0	0	0	0	-4.24	-4.24
Westbrook Inverter Transfor	W_INVTR4	369679	4906164	2	0	0	77.3	77.3	1	3908.22	3.25	0	82.84	0	-2.94	0	0	2.02	0	0	0	0	0	0	-4.58	-4.58
Westbrook Inverter Transfor	W_INVTR3	369514	4906164	2	0	0	77.3	77.3	1	3944.38	3.25	0	82.92	0	-2.95	0	0	2.03	0	0	0	0	0	0	-4.66	-4.66
Inverter Transformer	MV6-1 T	370230	4907364	2	0	0	69.4	69.4	1	2639.78	3.25	0	79.43	0	2.39	0	0	5.57	0	0	0	0	0	0	-18.04	-18.04
Inverter Transformer	MV6-4 T	370244	4906966	2	0	0	69.4	69.4	1	3035.48	3.25	0	80.64	0	2.52	0	0	5.91	0	0	0	0	0	0	-19.72	-19.72
Inverter Transformer	MV5-1 T	370015	4909142	2	0	0	56.1	56.1	1	959.83	3.25	0	70.64	0	0	0	0	4.79	0	0	0	0	0	0	-19.38	-19.38
Inverter Transformer	MV5-3 T	370237	4908851	2	0	0	56.1	56.1	1	1163.98	3.25	0	72.32	0	0.07	0	0	5.27	0	0	0	0	0	0	-21.6	-21.6
Inverter Transformer	MV2-1 T	365836	4906816	2	0	0	69.4	69.4	1	5608.33	3.25	0	85.98	0	3.13	0	0	7.78	0	0	0	0	0	0	-27.53	-27.53
Inverter Transformer	MV5-2 T	370011	4908853	2	0	0	56.1	56.1	1	1225.07	3.25	0	72.76	0	0.09	0	0	5.41	0	0	0	0	0	0	-22.21	-22.21
Inverter Transformer	MV5-4 T	370330	4908707	2	0	0	56.1	56.1	1	1293.25	3.25	0	73.23	0	0.12	0	0	5.57	0	0	0	0	0	0	-22.86	-22.86
Inverter Transformer	MV4-2 T	369267	4909397	2	0	0	56.1	56.1	1	1331.36	3.25	0	73.49	0	0.13	0	0	5.65	0	0	0	0	0	0	-23.21	-23.21
Inverter Transformer	MV4-3 T	369234	4909397	2	0	0	56.1	56.1	1	1360.94	3.25	0	73.68	0	0.14	0	0	5.72	0	0	0	0	0	0	-23.48	-23.48
Inverter Transformer	MV5-5 T	370021	4908690	2	0	0	56.1	56.1	1	1374.96	3.25	0	73.77	0	0.15	0	0	5.75	0	0	0	0	0	0	-23.6	-23.6
Inverter Transformer	MV4-5 T	369283	4909199	2	0	0	56.1	56.1	1	1417.85	3.25	0	74.03	0	0.17	0	0	5.84	0	0	0	0	0	0	-23.98	-23.98
Inverter Transformer	MV4-6 T	369249	4909192	2	0	0	56.1	56.1	1	1449.99	3.25	0	74.23	0	0.18	0	0	5.91	0	0	0	0	0	0	-24.26	-24.26
Inverter Transformer	MV1-7 T	364919	4905782	2	0	0	69.4	69.4	1	6957.76	3.25	0	87.85	0	3.31	0	0	8.58	0	0	0	0	0	0	-30.39	-30.39
Inverter Transformer	MV1-10 T	365010	4905564	2	0	0	69.4	69.4	1	7021.02	3.25	0	87.93	0	3.32	0	0	8.61	0	0	0	0	0	0	-30.51	-30.51
Inverter Transformer	MV4-9 T	369284	4909001	2	0	0	56.1	56.1	1	1536.87	3.25	0	74.73	0	0.21	0	0	6.1	0	0	0	0	0	0	-24.98	-24.98
Inverter Transformer	MV4-8 T	369262	4909001	2	0	0	56.1	56.1	1	1553.73	3.25	0	74.83	0	0.22	0	0	6.13	0	0	0	0	0	0	-25.12	-25.12
Inverter Transformer	MV4-1 T	369017	4909397	2	0	0	56.1	56.1	1	1558.85	3.25	0	74.86	0	0.22	0	0	6.14	0	0	0	0	0	0	-25.16	-25.16
Inverter Transformer	MV5-6 T	369987	4908507	2	0	0	56.1	56.1	1	1559.51	3.25	0	74.86	0	0.22	0	0	6.14	0	0	0	0	0	0	-25.17	-25.17
Inverter Transformer	MV1-14 T	365157	4905049	2	0	0	69.4	69.4	1	7248.66	3.25	0	88.21	0	3.34	0	0	8.74	0	0	0	0	0	0	-30.94	-30.94
Inverter Transformer	MV1-13 T	364725	4905241	2	0	0	69.4	69.4	1	7446.26	3.25	0	88.44	0	3.36	0	0	8.85	0	0	0	0	0	0	-31.3	-31.3
Inverter Transformer	MV4-10 T	369307	4908858	2	0	0	56.1	56.1	1	1616.48	3.25	0	75.17	0	0.25	0	0	6.26	0	0	0	0	0	0	-25.62	-25.62
Inverter Transformer	MV4-4 T	369033	4909199	2	0	0	56.1	56.1	1	1630.89	3.25	0	75.25	0	0.25	0	0	6.3	0	0	0	0	0	0	-25.74	-25.74
Inverter Transformer	MV4-11 T	369269	4908855	2	0	0	56.1	56.1	1	1645.8	3.25	0	75.33	0	0.26	0	0	6.33	0	0	0	0	0	0	-25.85	-25.85

	Inverter Transformer	MV4-7 T	369040	4909001	2	0	0	56.1	56.1	1	1730.3	3.25	0	75.76	0	0.29	0	0	6.5	0	0	0	0	0	0	-26.5	-26.5
	Inverter Transformer	MV4-12 T	369049	4908803	2	0	0	56.1	56.1	1	1844.17	3.25	0	76.32	0	0.34	0	0	6.73	0	0	0	0	0	0	-27.33	-27.33
	Inverter Transformer	MV4-14 T	369182	4908507	2	0	0	56.1	56.1	1	1958.78	5.03	0	76.84	0	1.26	3	0.02	6.96	0	0	0	0	0	0	-32	-32
	Inverter Transformer	MV4-13 T	369057	4908605	2	0	0	56.1	56.1	1	1972.14	3.25	0	76.9	0	0.39	0	0	6.99	0	0	0	0	0	0	-28.22	-28.22
	Inverter Transformer	MV4-15 T	369170	4908481	2	0	0	56.1	56.1	1	1986.34	5	0	76.96	0	1.28	2.99	0.02	7.02	0	0	0	0	0	0	-32.18	-32.18
	Inverter Transformer	MV6-2 T	370091	4907339	2	0	0	56.1	56.1	1	2680.11	3.25	0	79.56	0	0.69	0	0	8.31	0	0	0	0	0	0	-32.51	-32.51
	Inverter Transformer	MV3-2 T	368677	4907928	2	0	0	56.1	56.1	1	2727.04	4.73	0	79.71	0	1.63	2.72	0.01	8.4	0	0	0	0	0	0	-36.41	-36.41
	Inverter Transformer	MV3-4 T	368507	4907925	2	0	0	56.1	56.1	1	2843.11	3.25	0	80.08	0	0.76	0	0	8.6	0	0	0	0	0	0	-33.38	-33.38
	Inverter Transformer	MV6-3 T	370202	4907140	2	0	0	56.1	56.1	1	2865.37	3.25	0	80.14	0	0.77	0	0	8.64	0	0	0	0	0	0	-33.5	-33.5
	Inverter Transformer	MV3-8 T	368685	4907712	2	0	0	56.1	56.1	1	2889.21	3.25	0	80.22	0	0.78	0	0	8.68	0	0	0	0	0	0	-33.62	-33.62
	Inverter Transformer	MV3-9 T	368517	4907703	2	0	0	56.1	56.1	1	3002.05	4.66	0	80.55	0	1.76	2.63	0.01	8.87	0	0	0	0	0	0	-37.75	-37.75
	Inverter Transformer	MV3-5 T	368335	4907843	2	0	0	56.1	56.1	1	3021.54	3.25	0	80.6	0	0.84	0	0	8.9	0	0	0	0	0	0	-34.29	-34.29
	Inverter Transformer	MV3-1 T	368150	4907976	2	0	0	56.1	56.1	1	3065.06	3.25	0	80.73	0	0.86	0	0	8.98	0	0	0	0	0	0	-34.51	-34.51
	Inverter Transformer	MV3-14 T	368678	4907498	2	0	0	56.1	56.1	1	3065.1	3.25	0	80.73	0	0.86	0	0	8.98	0	0	0	0	0	0	-34.51	-34.51
	Inverter Transformer	MV3-11 T	368340	4907662	2	0	0	56.1	56.1	1	3149.59	3.25	0	80.97	0	0.89	0	0	9.12	0	0	0	0	0	0	-34.92	-34.92
	Inverter Transformer	MV3-6 T	368156	4907834	2	0	0	56.1	56.1	1	3155.98	3.25	0	80.98	0	0.9	0	0	9.13	0	0	0	0	0	0	-34.95	-34.95
	Inverter Transformer	MV3-16 T	368509	4907475	2	0	0	56.1	56.1	1	3184.35	3.25	0	81.06	0	0.91	0	0	9.18	0	0	0	0	0	0	-35.09	-35.09
	Inverter Transformer	MV3-20 T	368683	4907317	2	0	0	56.1	56.1	1	3211.45	3.25	0	81.13	0	0.92	0	0	9.22	0	0	0	0	0	0	-35.22	-35.22
	Inverter Transformer	MV3-3 T	367944	4907927	2	0	0	56.1	56.1	1	3253.87	3.25	0	81.25	0	0.94	0	0	9.29	0	0	0	0	0	0	-35.42	-35.42
	Inverter Transformer	MV3-10 T	368162	4907669	2	0	0	56.1	56.1	1	3266.9	3.25	0	81.28	0	0.94	0	0	9.31	0	0	0	0	0	0	-35.48	-35.48
	Inverter Transformer	MV3-15 T	368351	4907477	2	0	0	56.1	56.1	1	3281.85	3.25	0	81.32	0	0.95	0	0	9.34	0	0	0	0	0	0	-35.55	-35.55
	Inverter Transformer	MV3-7 T	367951	4907754	2	0	0	56.1	56.1	1	3361.2	3.25	0	81.53	0	0.98	0	0	9.47	0	0	0	0	0	0	-35.92	-35.92
	Inverter Transformer	MV3-22 T	368661	4907142	2	0	0	56.1	56.1	1	3370.39	3.25	0	81.55	0	0.99	0	0	9.48	0	0	0	0	0	0	-35.96	-35.96
	Inverter Transformer	MV3-19 T	368352	4907347	2	0	0	56.1	56.1	1	3381.96	3.25	0	81.58	0	0.99	0	0	9.5	0	0	0	0	0	0	-36.01	-36.01
	Inverter Transformer	MV3-17 T	368183	4907472	2	0	0	56.1	56.1	1	3395.82	3.25	0	81.62	0	1	0	0	9.52	0	0	0	0	0	0	-36.08	-36.08
	Inverter Transformer	MV3-21 T	368484	4907206	2	0	0	56.1	56.1	1	3415.51	3.25	0	81.67	0	1	0	0	9.55	0	0	0	0	0	0	-36.17	-36.17
	Inverter Transformer	MV3-13 T	367958	4907577	2	0	0	56.1	56.1	1	3476.62	3.25	0	81.82	0	1.03	0	0	9.65	0	0	0	0	0	0	-36.45	-36.45
	Inverter Transformer	MV3-12 T	367674	4907594	2	0	0	56.1	56.1	1	3674.93	3.25	0	82.3	0	1.11	0	0	9.96	0	0	0	0	0	0	-37.32	-37.32
	Inverter Transformer	MV3-18 T	367757	4907412	2	0	0	56.1	56.1	1	3735.87	3.25	0	82.45	0	1.14	0	0	10.06	0	0	0	0	0	0	-37.58	-37.58
	Line Reactor	NGR	369421	4908787.5	5	0	0	45.4	45.4	1	1590.26	5.25	0	75.03	0	3.42	1.24	0.03	0.65	0	0	0	0	0	0	-34.99	-34.99
	Inverter Transformer	MV2-2 T	365982	4906654	2	0	0	56.1	56.1	1	5584.02	3.25	0	85.94	0	1.83	0	0	12.6	0	0	0	0	0	0	-44.31	-44.31
	Inverter Transformer	MV2-3 T	365814	4906641	2	0	0	56.1	56.1	1	5727.13	3.25	0	86.16	0	1.88	0	0	12.78	0	0	0	0	0	0	-44.75	-44.75
	Inverter Transformer	MV2-4 T	365590	4906628	2	0	0	56.1	56.1	1	5917.57	3.25	0	86.44	0	1.94	0	0	13	0	0	0	0	0	0	-45.33	-45.33
	Inverter Transformer	MV1-1 T	364721	4906166	2	0	0	56.1	56.1	1	6896.03	3.25	0	87.77	0	2.23	0	0	14.12	0	0	0	0	0	0	-48.06	-48.06
	Inverter Transformer	MV1-2 T	364759	4906063	2	0	0	56.1	56.1	1	6922.43	3.25	0	87.81	0	2.24	0	0	14.15	0	0	0	0	0	0	-48.13	-48.13
	Inverter Transformer	MV1-4 T	364821	4905918	2	0	0	56.1	56.1	1	6955.45	3.25	0	87.85	0	2.25	0	0	14.18	0	0	0	0	0	0	-48.22	-48.22
	Inverter Transformer	MV1-5 T	364676	4905892	2	0	0	56.1	56.1	1	7088.47	3.25	0	88.01	0	2.28	0	0	14.32	0	0	0	0	0	0	-48.56	-48.56
	Inverter Transformer	MV1-12 T	365044	4905386	2	0	0	56.1	56.1	1	7108.74	3.25	0	88.04	0	2.29	0	0	14.35	0	0	0	0	0	0	-48.61	-48.61
	Inverter Transformer	MV1-8 T	364782	4905647	2	0	0	56.1	56.1	1	7148.57	3.25	0	88.08	0	2.3	0	0	14.39	0	0	0	0	0	0	-48.71	-48.71
	Inverter Transformer	MV1-15 T	365309	4904994	2	0	0	56.1	56.1	1	7176.48	3.25	0	88.12	0	2.31	0	0	14.42	0	0	0	0	0	0	-48.78	-48.78
	Inverter Transformer	MV1-3 T	364435	4906039	2	0	0	56.1	56.1	1	7204.62	3.25	0	88.15	0	2.31	0	0	14.45	0	0	0	0	0	0	-48.86	-48.86
	Inverter Transformer	MV1-6 T	364482	4905835	2	0	0	56.1	56.1	1	7279.97	3.25	0	88.24	0	2.33	0	0	14.53	0	0	0	0	0	0	-49.04	-49.04
	Inverter Transformer	MV1-9 T	364555	4905646	2	0	0	56.1	56.1	1	7330.67	3.25	0	88.3	0	2.35	0	0	14.58	0	0	0	0	0	0	-49.17	-49.17
	Inverter Transformer	MV1-11 T	364649	4905414	2	0	0	56.1	56.1	1	7396.57	3.25	0	88.38	0	2.36	0	0	14.65	0	0	0	0	0	0	-49.33	-49.33
Limit. Valu	0	0																								
Level D/N:	31.7852	31.7852																								

Receiver: Existing Noise Receptor
ID: S-R63
X: 370445
Y: 4910024
Z: 4.5
Ground: 0

ISO	Description	ID	X	Y	Z	Ground	ReflOrd	LxT	LxN	L/A	Dist.	hm	Freq	Adiv	K0b	Agr	Abar	z	Aatm	Afol	Ahous	Cmet	CmetN	Dc	RL	LtotT	LtotN
	Sol_Luce Substation	S_Substation	369426	4908792	3.5	0	0	112.1	112.1	1	1598.81	5.25	0	75.08	0	-0.05	4.06	0.31	3.66	0	0	0	0	0	0	29.32	29.32
	Inverter	MV5-1	370020	4909142	2	0	0	100.3	100.3	1	979.06	3.25	0	70.82	0	-0.26	0	0	10.84	0	0	0	0	0	0	18.91	18.91
	Inverter	MV5-3	370231	4908851	2	0	0	100.3	100.3	1	1192.36	3.25	0	72.53	0	-0.16	0	0	11.5	0	0	0	0	0	0	16.44	16.44
	Inverter	MV5-2	370006	4908853	2	0	0	100.3	100.3	1	1250.59	3.25	0	72.94	0	-0.13	0	0	11.67	0	0	0	0	0	0	15.83	15.83
	Inverter	MV5-4	370324	4908707	2	0	0	100.3	100.3	1	1322.55	3.25	0	73.43	0	-0.1	0	0	11.87	0	0	0	0	0	0	15.12	15.12
	Inverter	MV4-2	369272	4909397	2	0	0	100.3	100.3	1	1330.06	3.25	0	73.48	0	-0.1	0	0	11.89	0	0	0	0	0	0	15.05	15.05
	Inverter	MV4-3	369229	4909397	2	0	0	100.3	100.3	1	1368.13	3.25	0	73.72	0	-0.08	0	0	11.99	0	0	0	0	0	0	14.69	14.69
	Inverter	MV5-5	370015	4908690	2	0	0	100.3	100.3	1	1401.59	3.25	0	73.93	0	-0.07	0	0	12.08	0	0	0	0	0	0	14.38	14.38
	Inverter	MV4-5	369289	4909199	2	0	0	100.3	100.3	1	1420.2	3.25	0	74.05	0	-0.06	0	0	12.12	0	0	0	0	0	0	14.21	14.21
	Inverter	MV4-6	369243	4909192	2	0	0	100.3	100.3	1	1461.86	3.25	0	74.3	0	-0.05	0	0	12.23	0	0	0	0	0	0	13.83	13.83
	Inverter	MV4-9	369289	4909001	2	0	0	100.3	100.3	1	1543.66	3.25	0	74.77	0	-0.02	0	0	12.43	0	0	0	0	0	0	13.13	13.13
	Inverter	MV4-1	369011	4909397	2	0	0	100.3	100.3	1	1565.09	3.25	0	74.89	0	-0.01	0	0	12.48	0	0	0	0	0	0	12.95	12.95
	Inverter	MV4-8	369256	4909001	2	0	0	100.3	100.3	1	1568.52	3.25	0	74.91	0	-0.01	0	0	12.49	0	0	0	0	0	0	12.92	12.92
	Inverter	MV4-10	369312	4908858	2	0	0	100.3	100.3	1	1625.81	3.25	0	75.22	0	0.01	0	0	12.63	0	0	0	0	0	0	12.45	12.45
	Inverter	MV4-4	369027	4909199	2	0	0	100.3	100.3	1	1640.54	3.25	0	75.3	0	0.02	0	0	12.66	0	0	0	0	0	0	12.33	12.33
	Inverter	MV4-11	369264	4908855	2	0	0	100.3	100.3	1	1661.72	3.25	0	75.41	0	0.02	0	0	12.71	0	0	0	0	0	0	12.16	12.16
	Inverter	MV4-7	369035	4909001	2	0	0	100.3	100.3	1	1742.02	3.25	0	75.82	0	0.05	0	0	12.9	0	0	0	0	0	0	11.54	11.54
	DSTATCOM - 10 MVAR #1	DSAT1	369437	4908757	2.5	0	0	96.6	96.6	1	1619.06	3.5	0	75.19	0	3.14	0	0	1.48	0	0	0	0	0	0	16.82	16.82
	DSTATCOM - 10 MVAR #2	DSAT2	369403	4908757	2.5	0	0	96.6	96.6	1	1640.44	5.23	0	75.3	0	3.71	0.91	0.18	1.5	0	0	0	0	0	0	15.21	15.21

Inverter	MV6-2	370085	4907339	2	0	0	100.3	100.3	1	2709.03	3.25	0	79.66	0	0.3	0	0	14.85	0	0	0	0	0	0	5.5	5.5
Inverter	MV6-3	370207	4907140	2	0	0	100.3	100.3	1	2893.8	3.25	0	80.23	0	0.34	0	0	15.18	0	0	0	0	0	0	4.56	4.56
Inverter	MV3-8	368680	4907712	2	0	0	100.3	100.3	1	2908.71	3.25	0	80.27	0	0.34	0	0	15.21	0	0	0	0	0	0	4.48	4.48
Inverter	MV3-9	368512	4907703	2	0	0	100.3	100.3	1	3020.52	4.67	0	80.6	0	1.13	3.18	0.01	15.41	0	0	0	0	0	0	-0.01	-0.01
Inverter	MV3-14	368684	4907498	2	0	0	100.3	100.3	1	3079.25	3.25	0	80.77	0	0.38	0	0	15.51	0	0	0	0	0	0	3.65	3.65
Inverter	MV3-11	368346	4907662	2	0	0	100.3	100.3	1	3159.88	3.25	0	80.99	0	0.39	0	0	15.65	0	0	0	0	0	0	3.27	3.27
Inverter	MV3-6	368162	4907834	2	0	0	100.3	100.3	1	3163.57	3.25	0	81	0	0.39	0	0	15.66	0	0	0	0	0	0	3.26	3.26
Inverter	MV3-16	368514	4907475	2	0	0	100.3	100.3	1	3197.84	3.25	0	81.1	0	0.4	0	0	15.72	0	0	0	0	0	0	3.1	3.1
Inverter	MV3-20	368689	4907317	2	0	0	100.3	100.3	1	3226.67	3.25	0	81.18	0	0.4	0	0	15.77	0	0	0	0	0	0	2.97	2.97
Inverter	MV3-3	367939	4907927	2	0	0	100.3	100.3	1	3267.64	3.25	0	81.28	0	0.41	0	0	15.84	0	0	0	0	0	0	2.78	2.78
Inverter	MV3-10	368167	4907669	2	0	0	100.3	100.3	1	3276.48	3.25	0	81.31	0	0.41	0	0	15.85	0	0	0	0	0	0	2.74	2.74
Inverter	MV3-15	368357	4907477	2	0	0	100.3	100.3	1	3293.47	4.61	0	81.35	0	1.21	3.11	0	15.88	0	0	0	0	0	0	-1.24	-1.24
Inverter	MV3-7	367945	4907754	2	0	0	100.3	100.3	1	3376.82	3.25	0	81.57	0	0.43	0	0	16.02	0	0	0	0	0	0	2.29	2.29
Inverter	MV3-19	368357	4907347	2	0	0	100.3	100.3	1	3395.01	3.25	0	81.62	0	0.43	0	0	16.05	0	0	0	0	0	0	2.21	2.21
Inverter	MV3-17	368178	4907472	2	0	0	100.3	100.3	1	3413.5	3.25	0	81.66	0	0.44	0	0	16.09	0	0	0	0	0	0	2.13	2.13
Inverter	MV3-21	368478	4907206	2	0	0	100.3	100.3	1	3436.6	3.25	0	81.72	0	0.44	0	0	16.12	0	0	0	0	0	0	2.02	2.02
Inverter	MV3-13	367963	4907577	2	0	0	100.3	100.3	1	3485.42	3.25	0	81.85	0	0.45	0	0	16.21	0	0	0	0	0	0	1.81	1.81
Inverter	MV3-12	367668	4907594	2	0	0	100.3	100.3	1	3690.07	3.25	0	82.34	0	0.48	0	0	16.55	0	0	0	0	0	0	0.94	0.94
Inverter	MV3-18	367752	4907412	2	0	0	100.3	100.3	1	3751.64	3.25	0	82.48	0	0.49	0	0	16.65	0	0	0	0	0	0	0.69	0.69
Inverter	MV6-1	370235	4907364	2	0	0	97.3	97.3	1	2668.28	3.25	0	79.52	0	0.29	0	0	14.77	0	0	0	0	0	0	2.72	2.72
Fixed Reactor Bank 2	FRB2	369464	4908755	6	0	0	89.8	89.8	1	1603.97	5.25	0	75.1	0	-1.02	0	0	3.67	0	0	0	0	0	0	12.02	12.02
Fixed Reactor Bank 1	FRB1	369378	4908755	6	0	0	89.8	89.8	1	1657.97	5.28	0	75.39	0	-0.66	4.17	0	3.77	0	0	0	0	0	0	7.11	7.11
Inverter	MV2-3	365820	4906641	2	0	0	100.3	100.3	1	5730.21	3.25	0	86.16	0	0.69	0	0	19.62	0	0	0	0	0	0	-6.17	-6.17
Inverter	MV5-6	369982	4908507	2	0	0	89.1	89.1	1	1586.08	3.25	0	75.01	0	0.81	0	0	7.36	0	0	0	0	0	0	5.88	5.88
Inverter	MV2-4	365586	4906624	2	0	0	100.3	100.3	1	5930.42	3.25	0	86.46	0	0.7	0	0	19.9	0	0	0	0	0	0	-6.75	-6.75
Inverter	MV4-12	369043	4908803	2	0	0	89.1	89.1	1	1859.15	3.25	0	76.39	0	0.87	0	0	7.81	0	0	0	0	0	0	3.98	3.98
Inverter	MV1-1	364715	4906166	2	0	0	100.3	100.3	1	6907.75	3.25	0	87.79	0	0.71	0	0	21.18	0	0	0	0	0	0	-9.37	-9.37
Inverter	MV1-2	364753	4906063	2	0	0	100.3	100.3	1	6934.58	3.25	0	87.82	0	0.71	0	0	21.22	0	0	0	0	0	0	-9.44	-9.44
Inverter	MV1-4	364815	4905918	2	0	0	100.3	100.3	1	6968.22	3.25	0	87.86	0	0.71	0	0	21.26	0	0	0	0	0	0	-9.52	-9.52
Inverter	MV1-5	364671	4905892	2	0	0	100.3	100.3	1	7100.18	3.25	0	88.03	0	0.71	0	0	21.42	0	0	0	0	0	0	-9.84	-9.84
Inverter	MV1-12	365038	4905386	2	0	0	100.3	100.3	1	7123.67	3.25	0	88.05	0	0.71	0	0	21.45	0	0	0	0	0	0	-9.9	-9.9
Inverter	MV1-8	364788	4905647	2	0	0	100.3	100.3	1	7152.61	3.25	0	88.09	0	0.71	0	0	21.49	0	0	0	0	0	0	-9.97	-9.97
Inverter	MV1-15	365315	4904994	2	0	0	100.3	100.3	1	7184.55	3.25	0	88.13	0	0.7	0	0	21.53	0	0	0	0	0	0	-10.05	-10.05
Inverter	MV4-14	369176	4908507	2	0	0	89.1	89.1	1	1977.79	5.01	0	76.92	0	1.68	2.9	0.02	8.01	0	0	0	0	0	0	-0.45	-0.45
Inverter	MV4-13	369051	4908605	2	0	0	89.1	89.1	1	1989.17	3.25	0	76.97	0	0.9	0	0	8.03	0	0	0	0	0	0	3.15	3.15
Inverter	MV1-6	364477	4905835	2	0	0	100.3	100.3	1	7291.42	3.25	0	88.26	0	0.7	0	0	21.66	0	0	0	0	0	0	-10.3	-10.3
Inverter	MV4-15	369176	4908481	2	0	0	89.1	89.1	1	1997.8	5.01	0	77.01	0	1.68	2.9	0.02	8.04	0	0	0	0	0	0	-0.58	-0.58
Inverter	MV1-9	364561	4905646	2	0	0	100.3	100.3	1	7334.05	3.25	0	88.31	0	0.7	0	0	21.71	0	0	0	0	0	0	-10.41	-10.41
Inverter	MV1-11	364655	4905414	2	0	0	100.3	100.3	1	7401.09	3.25	0	88.39	0	0.69	0	0	21.79	0	0	0	0	0	0	-10.56	-10.56
Inverter	MV2-1	365842	4906816	2	0	0	97.3	97.3	1	5610.6	3.25	0	85.98	0	0.69	0	0	19.46	0	0	0	0	0	0	-8.81	-8.81
Inverter	MV1-7	364925	4905782	2	0	0	97.3	97.3	1	6961.68	3.25	0	87.85	0	0.71	0	0	21.25	0	0	0	0	0	0	-12.5	-12.5
Inverter	MV1-10	365004	4905564	2	0	0	97.3	97.3	1	7035.35	3.25	0	87.95	0	0.71	0	0	21.34	0	0	0	0	0	0	-12.69	-12.69
Inverter	MV3-2	368671	4907928	2	0	0	89.1	89.1	1	2745.96	3.25	0	79.77	0	1.09	0	0	9.23	0	0	0	0	0	0	-1.03	-1.03
Inverter	MV1-14	365163	4905049	2	0	0	97.3	97.3	1	7256.04	3.25	0	88.21	0	0.7	0	0	21.62	0	0	0	0	0	0	-13.22	-13.22
SubstationTransformer	W_ST	369711.17	4906112.3	2.5	0	0	92	92	1	3979.97	3.5	0	83	0	0.33	0	0	7.34	0	0	0	0	0	0	1.31	1.31
Inverter	MV3-4	368502	4907925	2	0	0	89.1	89.1	1	2860.25	3.25	0	80.13	0	1.11	0	0	9.4	0	0	0	0	0	0	-1.59	-1.59
Inverter	MV1-13	364731	4905241	2	0	0	97.3	97.3	1	7451.64	3.25	0	88.45	0	0.69	0	0	21.86	0	0	0	0	0	0	-13.68	-13.68
Inverter	MV3-5	368340	4907843	2	0	0	89.1	89.1	1	3031.14	3.25	0	80.63	0	1.15	0	0	9.66	0	0	0	0	0	0	-2.39	-2.39
Inverter	MV3-1	368156	4907976	2	0	0	89.1	89.1	1	3071.45	3.25	0	80.75	0	1.16	0	0	9.73	0	0	0	0	0	0	-2.58	-2.58
Inverter	MV3-22	368656	4907142	2	0	0	89.1	89.1	1	3392.12	3.25	0	81.61	0	1.24	0	0	10.2	0	0	0	0	0	0	-4	-4
Westbrook Inverter Enclosur	W_INV6	369875	4906578	2	0	0	89.1	89.1	1	3492.82	3.25	0	81.86	0	1.27	0	0	10.35	0	0	0	0	0	0	-4.43	-4.43
Westbrook Inverter Enclosur	W_INV5	369719	4906574	2	0	0	89.1	89.1	1	3525.56	3.25	0	81.94	0	1.28	0	0	10.4	0	0	0	0	0	0	-4.56	-4.56
Westbrook Inverter Enclosur	W_INV7	369780	4906417	2	0	0	89.1	89.1	1	3667.79	3.25	0	82.29	0	1.31	0	0	10.61	0	0	0	0	0	0	-5.15	-5.15
Westbrook Inverter Enclosur	W_INV2	369374	4906388	2	0	0	89.1	89.1	1	3790.45	3.25	0	82.57	0	1.34	0	0	10.78	0	0	0	0	0	0	-5.64	-5.64
Westbrook Inverter Enclosur	W_INV4	369673	4906164	2	0	0	89.1	89.1	1	3936.44	3.25	0	82.9	0	1.38	0	0	10.99	0	0	0	0	0	0	-6.21	-6.21
Westbrook Inverter Enclosur	W_INV3	369508	4906164	2	0	0	89.1	89.1	1	3972.1	3.25	0	82.98	0	1.39	0	0	11.04	0	0	0	0	0	0	-6.35	-6.35
Inverter	MV6-4	370250	4906966	2	0	0	86.1	86.1	1	3064.21	3.25	0	80.73	0	1.16	0	0	9.71	0	0	0	0	0	0	-5.55	-5.55
Westbrook Inverter Enclosur	W_INV1	369409	4906578	2	0	0	86.1	86.1	1	3598.36	3.25	0	82.12	0	1.29	0	0	10.51	0	0	0	0	0	0	-7.86	-7.86
Inverter	MV2-2	365977	4906654	2	0	0	89.1	89.1	1	5596.42	3.25	0	85.96	0	1.79	0	0	13.25	0	0	0	0	0	0	-11.93	-11.93
Gardiner Substation	G_Sub	366586.3	4903349.9	2.5	0	0	90.8	90.8	1	7709.29	4.25	0	88.74	0	2.16	1.78	0.38	11.4	0	0	0	0	0	0	-13.31	-13.31
Inverter	MV1-3	364440	4906039	2	0	0	89.1	89.1	1	7206.96	3.25	0	88.16	0	2.18	0	0	15.23	0	0	0	0	0	0	-16.5	-16.5
Inverters	G_Inv2	366676.9	4903239.1	2	0	0	87.7	87.7	1	7761.02	3.25	0	88.8	0	2.96	0	0	8.74	0	0	0	0	0	0	-12.84	-12.84
Inverters	G_Inv1	366526.4	4903225.8	2	0	0	87.7	87.7	1	7846.72	3.25	0	88.89	0	2.96	0	0	8.83	0	0	0	0	0	0	-13.02	-13.02
Inverters	G_Inv4	366732.8	4903105	2	0	0	87.7	87.7	1	7851.94	3.25	0	88.9	0	2.96	0	0	8.83	0	0	0	0	0	0	-13.03	-13.03
Inverters	G_Inv3	366583.7	4903091.4	2	0	0	87.7	87.7	1	7935.4	3.25	0	88.99	0	2.96	0	0	8.91	0	0	0	0	0	0	-13.21	-13.21
Inverters	G_Inv6	366788.5	4902972	2	0	0	87.7	87.7	1	7943.6	3.25	0	89	0	2.96	0	0	8.92	0	0	0	0	0	0	-13.23	-13.23
Inverters	G_Inv5	366638.5	4902958.1	2	0	0	87.7	87.7	1	8025.98	3.25	0	89.09	0	2.96	0	0	9	0	0	0	0	0	0	-13.4	-13.4
Inverters	G_Inv8	366844.5	4902838.5	2	0	0	87.7	87.7	1	8037.1	3.25	0	89.1	0	2.96	0	0	9.01	0	0	0	0	0	0	-13.42	-13.42
Inverters	G_Inv7	366694.6	4902824.7	2	0	0	87.7	87.7	1	8117.6	3.25	0	89.19	0	2.96	0	0	9.09	0	0	0	0	0	0	-13.58	-13.58
Inverters	G_Inv10	366900.7	4902704.8	2	0	0	87.7	87.7	1	8132.2	3.25	0	89.2	0	2.96	0	0	9.11	0	0	0	0	0	0	-13.61	-13.61
Inverters	G_Inv9	366750.9	4902691.8	2	0	0	87.7	87.7	1	8210.21	3.25	0	89.29	0	2.96	0	0	9.18	0	0	0	0	0	0	-13.77	-13.77
Westbrook Inverter Transfor	W_INVTR1	369403	4906578	2	0	0	78.2	78.2	1	3600.1	3.25	0	82.13	0	-2.87	0	0	1.9	0	0	0	0	0	0	-2.92	-2.92
Westbrook Inverter Transfor	W_INVTR6	369881	4906578	2	0	0	77.3	77.3	1	3491.85	3.25	0	81.86	0	-2.84	0	0	1.86	0	0	0	0	0	0	-3.54	-3.54
Westbrook Inverter Transfor	W_INVTR5	369725	4906574	2	0	0	77.3	77.3	1	3524.33	3.25	0	81.94	0	-2.85	0	0	1.87	0	0	0	0	0	0	-3.62	-3.62

Westbrook Inverter Transfor	W_INVTR7	369786	4906417	2	0	0	77.3	77.3	1	3666.71	3.25	0	82.29	0	-2.88	0	0	1.93	0	0	0	0	0	0	-3.99	-3.99
Westbrook Inverter Transfor	W_INVTR2	369368	4906388	2	0	0	77.3	77.3	1	3792.15	3.25	0	82.58	0	-2.91	0	0	1.98	0	0	0	0	0	0	-4.3	-4.3
Westbrook Inverter Transfor	W_INVTR4	369679	4906164	2	0	0	77.3	77.3	1	3935.27	3.25	0	82.9	0	-2.95	0	0	2.03	0	0	0	0	0	0	-4.64	-4.64
Westbrook Inverter Transfor	W_INVTR3	369514	4906164	2	0	0	77.3	77.3	1	3970.69	3.25	0	82.98	0	-2.96	0	0	2.04	0	0	0	0	0	0	-4.72	-4.72
Inverter Transformer	MV6-1 T	370230	4907364	2	0	0	69.4	69.4	1	2668.68	3.25	0	79.53	0	2.4	0	0	5.59	0	0	0	0	0	0	-18.17	-18.17
Inverter Transformer	MV6-4 T	370244	4906966	2	0	0	69.4	69.4	1	3064.6	3.25	0	80.73	0	2.53	0	0	5.94	0	0	0	0	0	0	-19.84	-19.84
Inverter Transformer	MV5-1 T	370015	4909142	2	0	0	56.1	56.1	1	981.24	3.25	0	70.84	0	0.01	0	0	4.84	0	0	0	0	0	0	-19.63	-19.63
Inverter Transformer	MV5-3 T	370237	4908851	2	0	0	56.1	56.1	1	1191.3	3.25	0	72.52	0	0.08	0	0	5.34	0	0	0	0	0	0	-21.88	-21.88
Inverter Transformer	MV2-1 T	365836	4906816	2	0	0	69.4	69.4	1	5615.53	3.25	0	85.99	0	3.13	0	0	7.78	0	0	0	0	0	0	-27.54	-27.54
Inverter Transformer	MV5-2 T	370011	4908853	2	0	0	56.1	56.1	1	1248.84	3.25	0	72.93	0	0.1	0	0	5.47	0	0	0	0	0	0	-22.44	-22.44
Inverter Transformer	MV5-4 T	370330	4908707	2	0	0	56.1	56.1	1	1322.01	3.25	0	73.42	0	0.13	0	0	5.63	0	0	0	0	0	0	-23.13	-23.13
Inverter Transformer	MV4-2 T	369267	4909397	2	0	0	56.1	56.1	1	1334.47	3.25	0	73.51	0	0.13	0	0	5.66	0	0	0	0	0	0	-23.24	-23.24
Inverter Transformer	MV4-3 T	369234	4909397	2	0	0	56.1	56.1	1	1363.69	3.25	0	73.69	0	0.15	0	0	5.72	0	0	0	0	0	0	-23.5	-23.5
Inverter Transformer	MV5-5 T	370021	4908690	2	0	0	56.1	56.1	1	1399.76	3.25	0	73.92	0	0.16	0	0	5.8	0	0	0	0	0	0	-23.82	-23.82
Inverter Transformer	MV4-5 T	369283	4909199	2	0	0	56.1	56.1	1	1425.09	3.25	0	74.08	0	0.17	0	0	5.86	0	0	0	0	0	0	-24.04	-24.04
Inverter Transformer	MV4-6 T	369249	4909192	2	0	0	56.1	56.1	1	1456.93	3.25	0	74.27	0	0.18	0	0	5.93	0	0	0	0	0	0	-24.32	-24.32
Inverter Transformer	MV1-7 T	364919	4905782	2	0	0	69.4	69.4	1	6966.44	3.25	0	87.86	0	3.31	0	0	8.58	0	0	0	0	0	0	-30.41	-30.41
Inverter Transformer	MV1-10 T	365010	4905564	2	0	0	69.4	69.4	1	7030.71	3.25	0	87.94	0	3.32	0	0	8.62	0	0	0	0	0	0	-30.53	-30.53
Inverter Transformer	MV4-9 T	369284	4909001	2	0	0	56.1	56.1	1	1547.4	3.25	0	74.79	0	0.22	0	0	6.12	0	0	0	0	0	0	-25.07	-25.07
Inverter Transformer	MV4-1 T	369017	4909397	2	0	0	56.1	56.1	1	1559.59	3.25	0	74.86	0	0.22	0	0	6.14	0	0	0	0	0	0	-25.17	-25.17
Inverter Transformer	MV4-8 T	369262	4909001	2	0	0	56.1	56.1	1	1563.98	3.25	0	74.88	0	0.22	0	0	6.15	0	0	0	0	0	0	-25.2	-25.2
Inverter Transformer	MV1-14 T	365157	4905049	2	0	0	69.4	69.4	1	7260.41	3.25	0	88.22	0	3.34	0	0	8.75	0	0	0	0	0	0	-30.96	-30.96
Inverter Transformer	MV5-6 T	369987	4908507	2	0	0	56.1	56.1	1	1584.63	3.25	0	75	0	0.23	0	0	6.2	0	0	0	0	0	0	-25.37	-25.37
Inverter Transformer	MV1-13 T	364725	4905241	2	0	0	69.4	69.4	1	7456.24	3.25	0	88.45	0	3.36	0	0	8.85	0	0	0	0	0	0	-31.32	-31.32
Inverter Transformer	MV4-10 T	369307	4908858	2	0	0	56.1	56.1	1	1629.3	3.25	0	75.24	0	0.25	0	0	6.29	0	0	0	0	0	0	-25.72	-25.72
Inverter Transformer	MV4-4 T	369033	4909199	2	0	0	56.1	56.1	1	1635.35	3.25	0	75.27	0	0.25	0	0	6.3	0	0	0	0	0	0	-25.77	-25.77
Inverter Transformer	MV4-11 T	369269	4908855	2	0	0	56.1	56.1	1	1658.17	3.25	0	75.39	0	0.26	0	0	6.35	0	0	0	0	0	0	-25.95	-25.95
Inverter Transformer	MV4-7 T	369040	4909001	2	0	0	56.1	56.1	1	1737.98	3.25	0	75.8	0	0.29	0	0	6.52	0	0	0	0	0	0	-26.55	-26.55
Inverter Transformer	MV4-12 T	369049	4908803	2	0	0	56.1	56.1	1	1854.63	3.25	0	76.37	0	0.34	0	0	6.75	0	0	0	0	0	0	-27.4	-27.4
Inverter Transformer	MV4-14 T	369182	4908507	2	0	0	56.1	56.1	1	1973.95	5.02	0	76.91	0	1.27	2.99	0.02	6.99	0	0	0	0	0	0	-32.1	-32.1
Inverter Transformer	MV4-13 T	369057	4908605	2	0	0	56.1	56.1	1	1984.97	3.25	0	76.96	0	0.4	0	0	7.01	0	0	0	0	0	0	-28.31	-28.31
Inverter Transformer	MV4-15 T	369170	4908481	2	0	0	56.1	56.1	1	2001.62	5.01	0	77.03	0	1.28	2.98	0.02	7.05	0	0	0	0	0	0	-32.28	-32.28
Inverter Transformer	MV6-2 T	370091	4907339	2	0	0	56.1	56.1	1	2708.24	3.25	0	79.65	0	0.71	0	0	8.36	0	0	0	0	0	0	-32.66	-32.66
Inverter Transformer	MV3-2 T	368677	4907928	2	0	0	56.1	56.1	1	2742.09	3.25	0	79.76	0	0.72	0	0	8.42	0	0	0	0	0	0	-32.85	-32.85
Inverter Transformer	MV3-4 T	368507	4907925	2	0	0	56.1	56.1	1	2856.86	3.25	0	80.12	0	0.77	0	0	8.62	0	0	0	0	0	0	-33.45	-33.45
Inverter Transformer	MV6-3 T	370202	4907140	2	0	0	56.1	56.1	1	2894.22	3.25	0	80.23	0	0.78	0	0	8.69	0	0	0	0	0	0	-33.64	-33.64
Inverter Transformer	MV3-8 T	368685	4907712	2	0	0	56.1	56.1	1	2905.68	3.25	0	80.26	0	0.79	0	0	8.71	0	0	0	0	0	0	-33.7	-33.7
Inverter Transformer	MV3-9 T	368517	4907703	2	0	0	56.1	56.1	1	3017.32	4.67	0	80.59	0	1.77	2.62	0.01	8.9	0	0	0	0	0	0	-37.82	-37.82
Inverter Transformer	MV3-5 T	368335	4907843	2	0	0	56.1	56.1	1	3034.61	3.25	0	80.64	0	0.84	0	0	8.93	0	0	0	0	0	0	-34.35	-34.35
Inverter Transformer	MV3-1 T	368150	4907976	2	0	0	56.1	56.1	1	3075.93	3.25	0	80.76	0	0.86	0	0	9	0	0	0	0	0	0	-34.56	-34.56
Inverter Transformer	MV3-14 T	368678	4907498	2	0	0	56.1	56.1	1	3082.69	3.25	0	80.78	0	0.86	0	0	9.01	0	0	0	0	0	0	-34.59	-34.59
Inverter Transformer	MV3-11 T	368340	4907662	2	0	0	56.1	56.1	1	3163.87	3.25	0	81	0	0.9	0	0	9.14	0	0	0	0	0	0	-34.99	-34.99
Inverter Transformer	MV3-6 T	368156	4907834	2	0	0	56.1	56.1	1	3167.91	3.25	0	81.02	0	0.9	0	0	9.15	0	0	0	0	0	0	-35.01	-35.01
Inverter Transformer	MV3-16 T	368509	4907475	2	0	0	56.1	56.1	1	3200.86	3.25	0	81.11	0	0.91	0	0	9.2	0	0	0	0	0	0	-35.17	-35.17
Inverter Transformer	MV3-20 T	368683	4907317	2	0	0	56.1	56.1	1	3229.94	3.25	0	81.18	0	0.93	0	0	9.25	0	0	0	0	0	0	-35.3	-35.3
Inverter Transformer	MV3-3 T	367944	4907927	2	0	0	56.1	56.1	1	3263.8	3.25	0	81.27	0	0.94	0	0	9.31	0	0	0	0	0	0	-35.46	-35.46
Inverter Transformer	MV3-10 T	368162	4907669	2	0	0	56.1	56.1	1	3279.96	3.25	0	81.32	0	0.95	0	0	9.33	0	0	0	0	0	0	-35.54	-35.54
Inverter Transformer	MV3-15 T	368351	4907477	2	0	0	56.1	56.1	1	3297.28	4.61	0	81.36	0	1.89	2.53	0	9.36	0	0	0	0	0	0	-39.09	-39.09
Inverter Transformer	MV3-7 T	367951	4907754	2	0	0	56.1	56.1	1	3372.38	3.25	0	81.56	0	0.99	0	0	9.48	0	0	0	0	0	0	-35.97	-35.97
Inverter Transformer	MV3-22 T	368661	4907142	2	0	0	56.1	56.1	1	3389.48	3.25	0	81.6	0	0.99	0	0	9.51	0	0	0	0	0	0	-36.05	-36.05
Inverter Transformer	MV3-19 T	368352	4907347	2	0	0	56.1	56.1	1	3398.09	3.25	0	81.62	0	1	0	0	9.53	0	0	0	0	0	0	-36.09	-36.09
Inverter Transformer	MV3-17 T	368183	4907472	2	0	0	56.1	56.1	1	3410.18	3.25	0	81.66	0	1	0	0	9.54	0	0	0	0	0	0	-36.14	-36.14
Inverter Transformer	MV3-21 T	368484	4907206	2	0	0	56.1	56.1	1	3433.17	3.25	0	81.71	0	1.01	0	0	9.58	0	0	0	0	0	0	-36.25	-36.25
Inverter Transformer	MV3-13 T	367958	4907577	2	0	0	56.1	56.1	1	3488.98	3.25	0	81.85	0	1.04	0	0	9.67	0	0	0	0	0	0	-36.5	-36.5
Inverter Transformer	MV3-12 T	367674	4907594	2	0	0	56.1	56.1	1	3685.56	3.25	0	82.33	0	1.12	0	0	9.98	0	0	0	0	0	0	-37.37	-37.37
Inverter Transformer	MV3-18 T	367757	4907412	2	0	0	56.1	56.1	1	3748.05	3.25	0	82.48	0	1.14	0	0	10.07	0	0	0	0	0	0	-37.63	-37.63
Line Reactor	NGR	369421	4908787.5	5	0	0	45.4	45.4	1	1605.46	5.25	0	75.11	0	3.42	1.24	0.03	0.66	0	0	0	0	0	0	-35.07	-35.07
Inverter Transformer	MV2-2 T	365982	4906654	2	0	0	56.1	56.1	1	5592.43	3.25	0	85.95	0	1.83	0	0	12.61	0	0	0	0	0	0	-44.34	-44.34
Inverter Transformer	MV2-3 T	365814	4906641	2	0	0	56.1	56.1	1	5735.06	3.25	0	86.17	0	1.88	0	0	12.78	0	0	0	0	0	0	-44.78	-44.78
Inverter Transformer	MV2-4 T	365590	4906628	2	0	0	56.1	56.1	1	5924.85	3.25	0	86.45	0	1.94	0	0	13.01	0	0	0	0	0	0	-45.35	-45.35
Inverter Transformer	MV1-1 T	364721	4906166	2	0	0	56.1	56.1	1	6902.78	3.25	0	87.78	0	2.23	0	0	14.12	0	0	0	0	0	0	-48.08	-48.08
Inverter Transformer	MV1-2 T	364759	4906063	2	0	0	56.1	56.1	1	6929.66	3.25	0	87.81	0	2.24	0	0	14.15	0	0	0	0	0	0	-48.15	-48.15
Inverter Transformer	MV1-4 T	364821	4905918	2	0	0	56.1	56.1	1	6963.38	3.25	0	87.86	0	2.25	0	0	14.19	0	0	0	0	0	0	-48.24	-48.24
Inverter Transformer	MV1-5 T	364676	4905892	2	0	0	56.1	56.1	1	7096.11	3.25	0	88.02	0	2.29	0	0	14.33	0	0	0	0	0	0	-48.58	-48.58
Inverter Transformer	MV1-12 T	365044	4905386	2	0	0	56.1	56.1	1	7119.12	3.25	0	88.05	0	2.29	0	0	14.36	0	0	0	0	0	0	-48.64	-48.64
Inverter Transformer	MV1-8 T	364782	4905647	2	0	0	56.1	56.1	1	7157.35	3.25	0	88.1	0	2.3	0	0	14.4	0	0	0	0	0	0	-48.74	-48.74
Inverter Transformer	MV1-15 T	365309	4904994	2	0	0	56.1	56.1	1	7188.84	3.25	0	88.13	0	2.31	0	0	14.43	0	0	0	0	0	0	-48.82	-48.82
Inverter Transformer	MV1-3 T	364435	4906039	2	0	0	56.1	56.1	1	7211.13	3.25	0	88.16	0	2.32	0	0	14.45	0	0	0	0	0	0	-48.87	-48.87
Inverter Transformer	MV1-6 T	364482	4905835	2	0	0	56.1	56.1	1	7287.32	3.25	0	88.25	0	2.34	0	0	14.53	0	0	0	0	0	0	-49.06	-49.06
Inverter Transformer	MV1-9 T	364555	4905646	2	0	0	56.1	56.1	1	7338.87	3.25	0	88.31	0	2.35	0	0	14.59	0	0	0	0	0	0	-49.19	-49.19
Inverter Transformer	MV1-11 T	364649	4905414	2	0	0	56.1	56.1	1	7405.79	3.25	0	88.39	0	2.37	0	0	14.66	0	0	0	0	0	0	-49.36	-49.36
Limit. Valu 0	0																								
Level D/N: 31.689	31.689																								

Receiver: Existing Noise Receptor
ID: S-R64
X: 370482
Y: 4909935
Z: 4.5
Ground: 0

ISO	Description	ID	X	Y	Z	Ground	ReflOrd	LxT	LxN	L/A	Dist.	hm	Freq	Adiv	K0b	Agr	Abar	z	Aatm	Afol	Ahous	Cmet	CmetN	Dc	RL	LtotT	LtotN
	Sol_Luce Substation	S_Substation	369426	4908792	3.5	0	0	112.1	112.1	1	1556.14	5.25	0	74.84	0	-0.03	4.21	0.33	3.59	0	0	0	0	0	0	29.47	29.47
	Inverter	MV5-1	370020	4909142	2	0	0	100.3	100.3	1	917.77	3.25	0	70.25	0	-0.29	0	0	10.63	0	0	0	0	0	0	19.72	19.72
	Inverter	MV5-3	370231	4908851	2	0	0	100.3	100.3	1	1112.68	3.25	0	71.93	0	-0.19	0	0	11.27	0	0	0	0	0	0	17.31	17.31
	Inverter	MV5-2	370006	4908853	2	0	0	100.3	100.3	1	1182.08	3.25	0	72.45	0	-0.16	0	0	11.47	0	0	0	0	0	0	16.55	16.55
	Inverter	MV5-4	370324	4908707	2	0	0	100.3	100.3	1	1238.13	3.25	0	72.86	0	-0.14	0	0	11.63	0	0	0	0	0	0	15.96	15.96
	Inverter	MV4-2	369272	4909397	2	0	0	100.3	100.3	1	1324.22	3.25	0	73.44	0	-0.1	0	0	11.87	0	0	0	0	0	0	15.1	15.1
	Inverter	MV5-5	370015	4908690	2	0	0	100.3	100.3	1	1329.71	3.25	0	73.48	0	-0.1	0	0	11.89	0	0	0	0	0	0	15.05	15.05
	Inverter	MV4-3	369229	4909397	2	0	0	100.3	100.3	1	1363.62	3.25	0	73.69	0	-0.09	0	0	11.98	0	0	0	0	0	0	14.73	14.73
	Inverter	MV4-5	369289	4909199	2	0	0	100.3	100.3	1	1401.77	3.25	0	73.93	0	-0.07	0	0	12.08	0	0	0	0	0	0	14.37	14.37
	Inverter	MV4-6	369243	4909192	2	0	0	100.3	100.3	1	1444.71	3.25	0	74.2	0	-0.05	0	0	12.19	0	0	0	0	0	0	13.99	13.99
	Inverter	MV4-9	369289	4909001	2	0	0	100.3	100.3	1	1515.13	3.25	0	74.61	0	-0.03	0	0	12.36	0	0	0	0	0	0	13.37	13.37
	Inverter	MV4-8	369256	4909001	2	0	0	100.3	100.3	1	1541.25	3.25	0	74.76	0	-0.02	0	0	12.43	0	0	0	0	0	0	13.15	13.15
	Inverter	MV4-1	369011	4909397	2	0	0	100.3	100.3	1	1566.3	3.25	0	74.9	0	-0.01	0	0	12.49	0	0	0	0	0	0	12.94	12.94
	Inverter	MV4-10	369312	4908858	2	0	0	100.3	100.3	1	1590.23	3.25	0	75.03	0	0	0	0	12.54	0	0	0	0	0	0	12.74	12.74
	Inverter	MV4-11	369264	4908855	2	0	0	100.3	100.3	1	1627.86	3.25	0	75.23	0	0.01	0	0	12.63	0	0	0	0	0	0	12.43	12.43
	Inverter	MV4-4	369027	4909199	2	0	0	100.3	100.3	1	1630.56	3.25	0	75.25	0	0.01	0	0	12.64	0	0	0	0	0	0	12.41	12.41
	Inverter	MV4-7	369035	4909001	2	0	0	100.3	100.3	1	1722.26	3.25	0	75.72	0	0.04	0	0	12.85	0	0	0	0	0	0	11.69	11.69
	DSTATCOM - 10 MVAR #1	DSAT1	369437	4908757	2.5	0	0	96.6	96.6	1	1574.71	3.5	0	74.94	0	3.13	0	0	1.45	0	0	0	0	0	0	17.1	17.1
	DSTATCOM - 10 MVAR #2	DSAT2	369403	4908757	2.5	0	0	96.6	96.6	1	1597.48	5.23	0	75.07	0	3.71	0.92	0.17	1.47	0	0	0	0	0	0	15.47	15.47
	Inverter	MV6-2	370085	4907339	2	0	0	100.3	100.3	1	2626.18	3.25	0	79.39	0	0.29	0	0	14.7	0	0	0	0	0	0	5.95	5.95
	Inverter	MV6-3	370207	4907140	2	0	0	100.3	100.3	1	2808.5	3.25	0	79.97	0	0.32	0	0	15.03	0	0	0	0	0	0	4.99	4.99
	Inverter	MV3-8	368680	4907712	2	0	0	100.3	100.3	1	2861.63	3.25	0	80.13	0	0.33	0	0	15.13	0	0	0	0	0	0	4.72	4.72
	Inverter	MV3-9	368512	4907703	2	0	0	100.3	100.3	1	2977.03	3.25	0	80.48	0	0.36	0	0	15.33	0	0	0	0	0	0	4.15	4.15
	Inverter	MV3-14	368684	4907498	2	0	0	100.3	100.3	1	3028.49	3.25	0	80.62	0	0.37	0	0	15.42	0	0	0	0	0	0	3.9	3.9
	Inverter	MV3-11	368346	4907662	2	0	0	100.3	100.3	1	3119.14	4.62	0	80.88	0	1.16	3.16	0	15.58	0	0	0	0	0	0	-0.47	-0.47
	Inverter	MV3-6	368162	4907834	2	0	0	100.3	100.3	1	3129.95	3.25	0	80.91	0	0.39	0	0	15.6	0	0	0	0	0	0	3.41	3.41
	Inverter	MV3-16	368514	4907475	2	0	0	100.3	100.3	1	3150.34	3.25	0	80.97	0	0.39	0	0	15.64	0	0	0	0	0	0	3.32	3.32
	Inverter	MV3-20	368689	4907317	2	0	0	100.3	100.3	1	3173.13	3.25	0	81.03	0	0.39	0	0	15.68	0	0	0	0	0	0	3.21	3.21
	Inverter	MV3-10	368167	4907669	2	0	0	100.3	100.3	1	3239.44	3.25	0	81.21	0	0.41	0	0	15.79	0	0	0	0	0	0	2.91	2.91
	Inverter	MV3-3	367939	4907927	2	0	0	100.3	100.3	1	3240.2	3.25	0	81.21	0	0.41	0	0	15.79	0	0	0	0	0	0	2.9	2.9
	Inverter	MV3-15	368357	4907477	2	0	0	100.3	100.3	1	3249.21	3.25	0	81.24	0	0.41	0	0	15.81	0	0	0	0	0	0	2.86	2.86
	Inverter	MV3-7	367945	4907754	2	0	0	100.3	100.3	1	3345.61	3.25	0	81.49	0	0.43	0	0	15.97	0	0	0	0	0	0	2.43	2.43
	Inverter	MV3-19	368357	4907347	2	0	0	100.3	100.3	1	3348.64	3.25	0	81.5	0	0.43	0	0	15.98	0	0	0	0	0	0	2.41	2.41
	Inverter	MV3-17	368178	4907472	2	0	0	100.3	100.3	1	3372.65	4.58	0	81.56	0	1.23	3.09	0	16.02	0	0	0	0	0	0	-1.58	-1.58
	Inverter	MV3-21	368478	4907206	2	0	0	100.3	100.3	1	3385.77	3.25	0	81.59	0	0.43	0	0	16.04	0	0	0	0	0	0	2.25	2.25
	Inverter	MV3-13	367963	4907577	2	0	0	100.3	100.3	1	3450.44	3.25	0	81.76	0	0.44	0	0	16.15	0	0	0	0	0	0	1.96	1.96
	Inverter	MV6-1	370235	4907364	2	0	0	97.3	97.3	1	2582.84	3.25	0	79.24	0	0.28	0	0	14.61	0	0	0	0	0	0	3.18	3.18
	Inverter	MV3-12	367668	4907594	2	0	0	100.3	100.3	1	3660.45	3.25	0	82.27	0	0.48	0	0	16.5	0	0	0	0	0	0	1.07	1.07
	Inverter	MV3-18	367752	4907412	2	0	0	100.3	100.3	1	3717.32	3.25	0	82.4	0	0.49	0	0	16.59	0	0	0	0	0	0	0.83	0.83
	Fixed Reactor Bank 2	FRB2	369464	4908755	6	0	0	89.8	89.8	1	1558.44	5.25	0	74.85	0	-1.02	0	0	3.59	0	0	0	0	0	0	12.36	12.36
	Fixed Reactor Bank 1	FRB1	369378	4908755	6	0	0	89.8	89.8	1	1615.93	5.28	0	75.17	0	-0.67	4.17	0	3.69	0	0	0	0	0	0	7.41	7.41
	Inverter	MV5-6	369982	4908507	2	0	0	89.1	89.1	1	1513.01	3.25	0	74.6	0	0.8	0	0	7.23	0	0	0	0	0	0	6.44	6.44
	Inverter	MV2-3	365820	4906641	2	0	0	100.3	100.3	1	5708.3	3.25	0	86.13	0	0.69	0	0	19.59	0	0	0	0	0	0	-6.1	-6.1
	Inverter	MV2-4	365586	4906624	2	0	0	100.3	100.3	1	5910.46	3.25	0	86.43	0	0.7	0	0	19.87	0	0	0	0	0	0	-6.69	-6.69
	Inverter	MV4-12	369043	4908803	2	0	0	89.1	89.1	1	1830.89	3.25	0	76.25	0	0.87	0	0	7.77	0	0	0	0	0	0	4.17	4.17
	Inverter	MV1-1	364715	4906166	2	0	0	100.3	100.3	1	6889.39	3.25	0	87.76	0	0.71	0	0	21.16	0	0	0	0	0	0	-9.32	-9.32
	Inverter	MV1-2	364753	4906063	2	0	0	100.3	100.3	1	6914.75	3.25	0	87.8	0	0.71	0	0	21.19	0	0	0	0	0	0	-9.39	-9.39
	Inverter	MV1-4	364815	4905918	2	0	0	100.3	100.3	1	6946.31	3.25	0	87.84	0	0.71	0	0	21.23	0	0	0	0	0	0	-9.47	-9.47
	Inverter	MV4-14	369176	4908507	2	0	0	89.1	89.1	1	1935.16	5.01	0	76.73	0	1.67	2.91	0.02	7.94	0	0	0	0	0	0	-0.19	-0.19
	Inverter	MV1-5	364671	4905892	2	0	0	100.3	100.3	1	7079.09	3.25	0	88	0	0.71	0	0	21.4	0	0	0	0	0	0	-9.79	-9.79
	Inverter	MV1-12	365038	4905386	2	0	0	100.3	100.3	1	7094.4	3.25	0	88.02	0	0.71	0	0	21.42	0	0	0	0	0	0	-9.83	-9.83
	Inverter	MV1-8	364788	4905647	2	0	0	100.3	100.3	1	7128.01	3.25	0	88.06	0	0.71	0	0	21.46	0	0	0	0	0	0	-9.91	-9.91
	Inverter	MV4-13	369051	4908605	2	0	0	89.1	89.1	1	1953.63	3.25	0	76.82	0	0.9	0	0	7.97	0	0	0	0	0	0	3.38	3.38
	Inverter	MV4-15	369176	4908481	2	0	0	89.1	89.1	1	1954.42	3.25	0	76.82	0	0.9	0	0	7.97	0	0	0	0	0	0	3.37	3.37
	Inverter	MV1-15	365315	4904994	2	0	0	100.3	100.3	1	7149.22	3.25	0	88.09	0	0.71	0	0	21.49	0	0	0	0	0	0	-9.96	-9.96
	Inverter	MV1-6	364477	4905835	2	0	0	100.3	100.3	1	7271.18	3.25	0	88.23	0	0.7	0	0	21.64	0	0	0	0	0	0	-10.26	-10.26
	Inverter	MV1-9	364561	4905646	2	0	0	100.3	100.3	1	7311.21	3.25	0	88.28	0	0.7	0	0	21.69	0	0	0	0	0	0	-10.35	-10.35
	Inverter	MV1-11	364655	4905414	2	0	0	100.3	100.3	1	7375.19	3.25	0	88.36	0	0.7	0	0	21.76	0	0	0	0	0	0	-10.5	-10.5
	Inverter	MV2-1	365842	4906816	2	0	0	97.3	97.3	1	5590.86	3.25	0	85.95	0	0.69	0	0	19.43	0	0	0	0	0	0	-8.75	-8.75
	Inverter	MV1-7	364925	4905782	2	0	0	97.3	97.3	1	6937.41	3.25	0	87.82	0	0.71	0	0	21.22	0	0	0	0	0	0	-12.44	-12.44
	Inverter	MV3-2	368671	4907928	2	0	0	89.1	89.1	1	2703.29	3.25	0	79.64	0	1.07	0	0	9.16	0	0	0	0	0	0	-0.82	-0.82
	Inverter	MV1-10	365004	4905564	2	0	0	97.3	97.3	1	7008.15	3.25	0	87.91	0	0.71	0	0	21.31	0	0	0	0	0	0	-12.62	-12.62
	SubstationTransformer	W_ST	369711.17	4906112.3	2.5	0	0	92	92	1	3899.67	3.5	0	82.82	0	0.31	0	0	7.23	0	0	0	0	0	0	1.62	1.62
	Inverter	MV1-14	365163	4905049	2	0	0	97.3	97.3	1	7222.52	3.25	0	88.17	0	0.7	0	0	21.58	0	0	0	0	0	0	-13.14	-13.14
	Inverter	MV3-4	368502	4907925	2	0	0	89.1	89.1	1	2821.44	3.25	0	80.01	0	1.1	0	0	9.34	0	0	0	0	0	0	-1.4	-1.4
	Inverter	MV1-13	364731	4905241	2	0	0	97.3	97.3	1	7423.45	3.25	0	88.41	0	0.69	0	0	21.82	0	0	0	0	0	0	-13.62	-13.62

Inverter	MV3-5	368340	4907843	2	0	0	89.1	89.1	1	2994.1	3.25	0	80.53	0	1.15	0	0	9.61	0	0	0	0	0	0	-2.22	-2.22
Inverter	MV3-1	368156	4907976	2	0	0	89.1	89.1	1	3041.05	3.25	0	80.66	0	1.16	0	0	9.68	0	0	0	0	0	0	-2.44	-2.44
Inverter	MV3-22	368656	4907142	2	0	0	89.1	89.1	1	3336.93	3.25	0	81.47	0	1.23	0	0	10.12	0	0	0	0	0	0	-3.76	-3.76
Westbrook Inverter Enclosur	W_INV6	369875	4906578	2	0	0	89.1	89.1	1	3411.44	3.25	0	81.66	0	1.25	0	0	10.23	0	0	0	0	0	0	-4.08	-4.08
Westbrook Inverter Enclosur	W_INV5	369719	4906574	2	0	0	89.1	89.1	1	3446.52	3.25	0	81.75	0	1.26	0	0	10.28	0	0	0	0	0	0	-4.23	-4.23
Westbrook Inverter Enclosur	W_INV7	369780	4906417	2	0	0	89.1	89.1	1	3587.36	3.25	0	82.1	0	1.29	0	0	10.49	0	0	0	0	0	0	-4.82	-4.82
Westbrook Inverter Enclosur	W_INV2	369374	4906388	2	0	0	89.1	89.1	1	3716.03	3.25	0	82.4	0	1.32	0	0	10.68	0	0	0	0	0	0	-5.34	-5.34
Westbrook Inverter Enclosur	W_INV4	369673	4906164	2	0	0	89.1	89.1	1	3856.8	3.25	0	82.72	0	1.36	0	0	10.88	0	0	0	0	0	0	-5.9	-5.9
Westbrook Inverter Enclosur	W_INV3	369508	4906164	2	0	0	89.1	89.1	1	3894.76	3.25	0	82.81	0	1.37	0	0	10.93	0	0	0	0	0	0	-6.05	-6.05
Inverter	MV6-4	370250	4906966	2	0	0	86.1	86.1	1	2978.05	3.25	0	80.48	0	1.14	0	0	9.58	0	0	0	0	0	0	-5.15	-5.15
Westbrook Inverter Enclosur	W_INV1	369409	4906578	2	0	0	86.1	86.1	1	3524.31	3.25	0	81.94	0	1.28	0	0	10.4	0	0	0	0	0	0	-7.56	-7.56
Inverter	MV2-2	365977	4906654	2	0	0	89.1	89.1	1	5573.15	3.25	0	85.92	0	1.78	0	0	13.22	0	0	0	0	0	0	-11.86	-11.86
Gardiner Substation	G_Sub	366586.3	4903349.9	2.5	0	0	90.8	90.8	1	7651.15	4.25	0	88.67	0	2.16	1.79	0.38	11.35	0	0	0	0	0	0	-13.19	-13.19
Inverter	MV1-3	364440	4906039	2	0	0	89.1	89.1	1	7189.2	3.25	0	88.13	0	2.17	0	0	15.21	0	0	0	0	0	0	-16.46	-16.46
Inverters	G_Inv2	366676.9	4903239.1	2	0	0	87.7	87.7	1	7701.55	3.25	0	88.73	0	2.96	0	0	8.69	0	0	0	0	0	0	-12.72	-12.72
Inverters	G_Inv1	366526.4	4903225.8	2	0	0	87.7	87.7	1	7788.46	3.25	0	88.83	0	2.96	0	0	8.77	0	0	0	0	0	0	-12.9	-12.9
Inverters	G_Inv4	366732.8	4903105	2	0	0	87.7	87.7	1	7791.37	3.25	0	88.83	0	2.96	0	0	8.77	0	0	0	0	0	0	-12.91	-12.91
Inverters	G_Inv3	366583.7	4903091.4	2	0	0	87.7	87.7	1	7876.01	3.25	0	88.93	0	2.96	0	0	8.86	0	0	0	0	0	0	-13.09	-13.09
Inverters	G_Inv6	366788.5	4902972	2	0	0	87.7	87.7	1	7881.96	3.25	0	88.93	0	2.96	0	0	8.86	0	0	0	0	0	0	-13.1	-13.1
Inverters	G_Inv5	366638.5	4902958.1	2	0	0	87.7	87.7	1	7965.53	3.25	0	89.02	0	2.96	0	0	8.94	0	0	0	0	0	0	-13.27	-13.27
Inverters	G_Inv8	366844.5	4902838.5	2	0	0	87.7	87.7	1	7974.44	3.25	0	89.03	0	2.96	0	0	8.95	0	0	0	0	0	0	-13.29	-13.29
Inverters	G_Inv7	366694.6	4902824.7	2	0	0	87.7	87.7	1	8056.1	3.25	0	89.12	0	2.96	0	0	9.03	0	0	0	0	0	0	-13.46	-13.46
Inverters	G_Inv10	366900.7	4902704.8	2	0	0	87.7	87.7	1	8068.55	3.25	0	89.14	0	2.96	0	0	9.04	0	0	0	0	0	0	-13.48	-13.48
Inverters	G_Inv9	366750.9	4902691.8	2	0	0	87.7	87.7	1	8147.7	3.25	0	89.22	0	2.96	0	0	9.12	0	0	0	0	0	0	-13.65	-13.65
Westbrook Inverter Transfor	W_INVTR1	369403	4906578	2	0	0	78.2	78.2	1	3526.14	3.25	0	81.95	0	-2.85	0	0	1.87	0	0	0	0	0	0	-2.73	-2.73
Westbrook Inverter Transfor	W_INVTR6	369881	4906578	2	0	0	77.3	77.3	1	3410.37	3.25	0	81.66	0	-2.82	0	0	1.83	0	0	0	0	0	0	-3.32	-3.32
Westbrook Inverter Transfor	W_INVTR5	369725	4906574	2	0	0	77.3	77.3	1	3445.2	3.25	0	81.74	0	-2.83	0	0	1.84	0	0	0	0	0	0	-3.41	-3.41
Westbrook Inverter Transfor	W_INVTR7	369786	4906417	2	0	0	77.3	77.3	1	3586.19	3.25	0	82.09	0	-2.87	0	0	1.9	0	0	0	0	0	0	-3.78	-3.78
Westbrook Inverter Transfor	W_INVTR2	369368	4906388	2	0	0	77.3	77.3	1	3717.82	3.25	0	82.41	0	-2.9	0	0	1.95	0	0	0	0	0	0	-4.11	-4.11
Westbrook Inverter Transfor	W_INVTR4	369679	4906164	2	0	0	77.3	77.3	1	3855.55	3.25	0	82.72	0	-2.93	0	0	2	0	0	0	0	0	0	-4.45	-4.45
Westbrook Inverter Transfor	W_INVTR3	369514	4906164	2	0	0	77.3	77.3	1	3893.26	3.25	0	82.81	0	-2.94	0	0	2.01	0	0	0	0	0	0	-4.54	-4.54
Inverter Transformer	MV6-1 T	370230	4907364	2	0	0	69.4	69.4	1	2583.32	3.25	0	79.24	0	2.38	0	0	5.52	0	0	0	0	0	0	-17.79	-17.79
Inverter Transformer	MV6-4 T	370244	4906966	2	0	0	69.4	69.4	1	2978.53	3.25	0	80.48	0	2.5	0	0	5.86	0	0	0	0	0	0	-19.49	-19.49
Inverter Transformer	MV5-1 T	370015	4909142	2	0	0	56.1	56.1	1	920.3	3.25	0	70.28	0	-0.01	0	0	4.7	0	0	0	0	0	0	-18.9	-18.9
Inverter Transformer	MV5-3 T	370237	4908851	2	0	0	56.1	56.1	1	1111.34	3.25	0	71.92	0	0.05	0	0	5.15	0	0	0	0	0	0	-21.06	-21.06
Inverter Transformer	MV5-2 T	370011	4908853	2	0	0	56.1	56.1	1	1180.07	3.25	0	72.44	0	0.08	0	0	5.31	0	0	0	0	0	0	-21.77	-21.77
Inverter Transformer	MV2-1 T	365836	4906816	2	0	0	69.4	69.4	1	5595.85	3.25	0	85.96	0	3.12	0	0	7.77	0	0	0	0	0	0	-27.5	-27.5
Inverter Transformer	MV5-4 T	370330	4908707	2	0	0	56.1	56.1	1	1237.37	3.25	0	72.85	0	0.1	0	0	5.44	0	0	0	0	0	0	-22.33	-22.33
Inverter Transformer	MV5-5 T	370021	4908690	2	0	0	56.1	56.1	1	1327.61	3.25	0	73.46	0	0.13	0	0	5.64	0	0	0	0	0	0	-23.18	-23.18
Inverter Transformer	MV4-2 T	369267	4909397	2	0	0	56.1	56.1	1	1328.79	3.25	0	73.47	0	0.13	0	0	5.64	0	0	0	0	0	0	-23.19	-23.19
Inverter Transformer	MV4-3 T	369234	4909397	2	0	0	56.1	56.1	1	1359.03	3.25	0	73.66	0	0.14	0	0	5.71	0	0	0	0	0	0	-23.46	-23.46
Inverter Transformer	MV4-5 T	369283	4909199	2	0	0	56.1	56.1	1	1406.88	3.25	0	73.97	0	0.16	0	0	5.82	0	0	0	0	0	0	-23.89	-23.89
Inverter Transformer	MV4-6 T	369249	4909192	2	0	0	56.1	56.1	1	1439.56	3.25	0	74.16	0	0.17	0	0	5.89	0	0	0	0	0	0	-24.17	-24.17
Inverter Transformer	MV1-7 T	364919	4905782	2	0	0	69.4	69.4	1	6942.22	3.25	0	87.83	0	3.31	0	0	8.57	0	0	0	0	0	0	-30.36	-30.36
Inverter Transformer	MV5-6 T	369987	4908507	2	0	0	56.1	56.1	1	1511.36	3.25	0	74.59	0	0.2	0	0	6.04	0	0	0	0	0	0	-24.77	-24.77
Inverter Transformer	MV1-10 T	365010	4905564	2	0	0	69.4	69.4	1	7003.46	3.25	0	87.91	0	3.32	0	0	8.6	0	0	0	0	0	0	-30.48	-30.48
Inverter Transformer	MV4-9 T	369284	4909001	2	0	0	56.1	56.1	1	1519.07	3.25	0	74.63	0	0.21	0	0	6.06	0	0	0	0	0	0	-24.84	-24.84
Inverter Transformer	MV4-8 T	369262	4909001	2	0	0	56.1	56.1	1	1536.48	3.25	0	74.73	0	0.21	0	0	6.1	0	0	0	0	0	0	-24.98	-24.98
Inverter Transformer	MV4-1 T	369017	4909397	2	0	0	56.1	56.1	1	1560.67	3.25	0	74.87	0	0.22	0	0	6.15	0	0	0	0	0	0	-25.18	-25.18
Inverter Transformer	MV1-14 T	365157	4905049	2	0	0	69.4	69.4	1	7226.94	3.25	0	88.18	0	3.34	0	0	8.73	0	0	0	0	0	0	-30.9	-30.9
Inverter Transformer	MV4-10 T	369307	4908858	2	0	0	56.1	56.1	1	1593.91	3.25	0	75.05	0	0.24	0	0	6.22	0	0	0	0	0	0	-25.44	-25.44
Inverter Transformer	MV1-13 T	364725	4905241	2	0	0	69.4	69.4	1	7428.1	3.25	0	88.42	0	3.36	0	0	8.84	0	0	0	0	0	0	-31.26	-31.26
Inverter Transformer	MV4-11 T	369269	4908855	2	0	0	56.1	56.1	1	1624.12	3.25	0	75.21	0	0.25	0	0	6.28	0	0	0	0	0	0	-25.68	-25.68
Inverter Transformer	MV4-4 T	369033	4909199	2	0	0	56.1	56.1	1	1625.21	3.25	0	75.22	0	0.25	0	0	6.28	0	0	0	0	0	0	-25.69	-25.69
Inverter Transformer	MV4-7 T	369040	4909001	2	0	0	56.1	56.1	1	1718.06	3.25	0	75.7	0	0.29	0	0	6.48	0	0	0	0	0	0	-26.41	-26.41
Inverter Transformer	MV4-12 T	369049	4908803	2	0	0	56.1	56.1	1	1826.18	3.25	0	76.23	0	0.33	0	0	6.7	0	0	0	0	0	0	-27.2	-27.2
Inverter Transformer	MV4-14 T	369182	4908507	2	0	0	56.1	56.1	1	1931.11	3.25	0	76.72	0	0.38	0	0	6.91	0	0	0	0	0	0	-27.94	-27.94
Inverter Transformer	MV4-13 T	369057	4908605	2	0	0	56.1	56.1	1	1949.24	3.25	0	76.8	0	0.38	0	0	6.94	0	0	0	0	0	0	-28.06	-28.06
Inverter Transformer	MV4-15 T	369170	4908481	2	0	0	56.1	56.1	1	1958.43	3.25	0	76.84	0	0.39	0	0	6.96	0	0	0	0	0	0	-28.13	-28.13
Inverter Transformer	MV6-2 T	370091	4907339	2	0	0	56.1	56.1	1	2625.28	3.25	0	79.38	0	0.67	0	0	8.22	0	0	0	0	0	0	-32.21	-32.21
Inverter Transformer	MV3-2 T	368677	4907928	2	0	0	56.1	56.1	1	2699.27	3.25	0	79.62	0	0.7	0	0	8.35	0	0	0	0	0	0	-32.62	-32.62
Inverter Transformer	MV6-3 T	370202	4907140	2	0	0	56.1	56.1	1	2808.99	3.25	0	79.97	0	0.75	0	0	8.54	0	0	0	0	0	0	-33.2	-33.2
Inverter Transformer	MV3-4 T	368507	4907925	2	0	0	56.1	56.1	1	2817.93	3.25	0	80	0	0.75	0	0	8.56	0	0	0	0	0	0	-33.25	-33.25
Inverter Transformer	MV3-8 T	368685	4907712	2	0	0	56.1	56.1	1	2858.49	3.25	0	80.12	0	0.77	0	0	8.63	0	0	0	0	0	0	-33.46	-33.46
Inverter Transformer	MV3-9 T	368517	4907703	2	0	0	56.1	56.1	1	2973.73	3.25	0	80.47	0	0.82	0	0	8.82	0	0	0	0	0	0	-34.05	-34.05
Inverter Transformer	MV3-5 T	368335	4907843	2	0	0	56.1	56.1	1	2997.68	3.25	0	80.54	0	0.83	0	0	8.86	0	0	0	0	0	0	-34.17	-34.17
Inverter Transformer	MV3-14 T	368678	4907498	2	0	0	56.1	56.1	1	3032.06	3.25	0	80.63	0	0.84	0	0	8.92	0	0	0	0	0	0	-34.34	-34.34
Inverter Transformer	MV3-1 T	368150	4907976	2	0	0	56.1	56.1	1	3045.64	3.25	0	80.67	0	0.85	0	0	8.95	0	0	0	0	0	0	-34.41	-34.41
Inverter Transformer	MV3-11 T	368340	4907662	2	0	0	56.1	56.1	1	3123.25	3.25	0	80.89	0	0.88	0	0	9.08	0	0	0	0	0	0	-34.79	-34.79
Inverter Transformer	MV3-6 T	368156	4907834	2	0	0	56.1	56.1	1	3134.4	3.25	0	80.92	0	0.89	0	0	9.09	0	0	0	0	0	0	-34.85	-34.85
Inverter Transformer	MV3-16 T	368509	4907475	2	0	0	56.1	56.1	1	3153.46	3.25	0	80.98	0	0.89	0	0	9.13	0	0	0	0	0	0	-34.94	-34.94
Inverter Transformer	MV3-20 T	368683	4907317	2	0	0	56.1	56.1	1	3176.53	3.25	0	81.04	0	0.9	0	0	9.16	0	0	0	0	0	0	-35.05	-35.05
Inverter Transformer	MV3-3 T	367944	4907927	2	0	0	56.1	56.1	1	3236.28	3.25	0	81.2	0	0.93	0	0	9.26	0	0	0	0	0	0	-35.33	-35.33
Inverter Transformer	MV3-10 T	368162	4907669	2	0	0	56.1	56.1	1	3243.02	3.25	0	81.22	0	0.93	0	0	9.27	0	0	0	0	0	0	-35.37	-35.37

	Inverter Transformer	MV3-15 T	368351	4907477	2	0	0	56.1	56.1	1	3253.14	3.25	0	81.25	0	0.94	0	0	9.29	0	0	0	0	0	0	-35.41	-35.41
	Inverter Transformer	MV3-22 T	368661	4907142	2	0	0	56.1	56.1	1	3334.2	3.25	0	81.46	0	0.97	0	0	9.42	0	0	0	0	0	0	-35.79	-35.79
	Inverter Transformer	MV3-7 T	367951	4907754	2	0	0	56.1	56.1	1	3341.07	3.25	0	81.48	0	0.97	0	0	9.43	0	0	0	0	0	0	-35.83	-35.83
	Inverter Transformer	MV3-19 T	368352	4907347	2	0	0	56.1	56.1	1	3351.81	3.25	0	81.51	0	0.98	0	0	9.45	0	0	0	0	0	0	-35.88	-35.88
	Inverter Transformer	MV3-17 T	368183	4907472	2	0	0	56.1	56.1	1	3369.24	4.58	0	81.55	0	1.92	2.51	0	9.48	0	0	0	0	0	0	-39.4	-39.4
	Inverter Transformer	MV3-21 T	368484	4907206	2	0	0	56.1	56.1	1	3382.23	3.25	0	81.58	0	0.99	0	0	9.5	0	0	0	0	0	0	-36.02	-36.02
	Inverter Transformer	MV3-13 T	367958	4907577	2	0	0	56.1	56.1	1	3454.09	3.25	0	81.77	0	1.02	0	0	9.61	0	0	0	0	0	0	-36.34	-36.34
	Inverter Transformer	MV3-12 T	367674	4907594	2	0	0	56.1	56.1	1	3655.84	3.25	0	82.26	0	1.1	0	0	9.93	0	0	0	0	0	0	-37.24	-37.24
	Inverter Transformer	MV3-18 T	367757	4907412	2	0	0	56.1	56.1	1	3713.65	3.25	0	82.4	0	1.13	0	0	10.02	0	0	0	0	0	0	-37.49	-37.49
	Line Reactor	NGR	369421	4908787.5	5	0	0	45.4	45.4	1	1562.84	5.25	0	74.88	0	3.42	1.24	0.03	0.64	0	0	0	0	0	0	-34.82	-34.82
	Inverter Transformer	MV2-2 T	365982	4906654	2	0	0	56.1	56.1	1	5569.11	3.25	0	85.92	0	1.82	0	0	12.58	0	0	0	0	0	0	-44.26	-44.26
	Inverter Transformer	MV2-3 T	365814	4906641	2	0	0	56.1	56.1	1	5713.2	3.25	0	86.14	0	1.87	0	0	12.76	0	0	0	0	0	0	-44.71	-44.71
	Inverter Transformer	MV2-4 T	365590	4906628	2	0	0	56.1	56.1	1	5904.91	3.25	0	86.42	0	1.93	0	0	12.99	0	0	0	0	0	0	-45.29	-45.29
	Inverter Transformer	MV1-1 T	364721	4906166	2	0	0	56.1	56.1	1	6884.37	3.25	0	87.76	0	2.23	0	0	14.1	0	0	0	0	0	0	-48.03	-48.03
	Inverter Transformer	MV1-2 T	364759	4906063	2	0	0	56.1	56.1	1	6909.78	3.25	0	87.79	0	2.23	0	0	14.13	0	0	0	0	0	0	-48.1	-48.1
	Inverter Transformer	MV1-4 T	364821	4905918	2	0	0	56.1	56.1	1	6941.41	3.25	0	87.83	0	2.24	0	0	14.17	0	0	0	0	0	0	-48.18	-48.18
	Inverter Transformer	MV1-5 T	364676	4905892	2	0	0	56.1	56.1	1	7074.99	3.25	0	87.99	0	2.28	0	0	14.31	0	0	0	0	0	0	-48.53	-48.53
	Inverter Transformer	MV1-12 T	365044	4905386	2	0	0	56.1	56.1	1	7089.8	3.25	0	88.01	0	2.28	0	0	14.33	0	0	0	0	0	0	-48.56	-48.56
	Inverter Transformer	MV1-8 T	364782	4905647	2	0	0	56.1	56.1	1	7132.81	3.25	0	88.07	0	2.3	0	0	14.37	0	0	0	0	0	0	-48.67	-48.67
	Inverter Transformer	MV1-15 T	365309	4904994	2	0	0	56.1	56.1	1	7153.56	3.25	0	88.09	0	2.3	0	0	14.39	0	0	0	0	0	0	-48.73	-48.73
	Inverter Transformer	MV1-3 T	364435	4906039	2	0	0	56.1	56.1	1	7193.4	3.25	0	88.14	0	2.31	0	0	14.44	0	0	0	0	0	0	-48.83	-48.83
	Inverter Transformer	MV1-6 T	364482	4905835	2	0	0	56.1	56.1	1	7267.05	3.25	0	88.23	0	2.33	0	0	14.51	0	0	0	0	0	0	-49.01	-49.01
	Inverter Transformer	MV1-9 T	364555	4905646	2	0	0	56.1	56.1	1	7316.07	3.25	0	88.29	0	2.34	0	0	14.56	0	0	0	0	0	0	-49.13	-49.13
	Inverter Transformer	MV1-11 T	364649	4905414	2	0	0	56.1	56.1	1	7379.93	3.25	0	88.36	0	2.36	0	0	14.63	0	0	0	0	0	0	-49.29	-49.29
Limit. Valu	0	0																								
Level D/N:	31.9574	31.9574																								

Receiver: Existing Noise Receptor
ID: S-R65
X: 370485
Y: 4909857
Z: 4.5
Ground: 0

ISO	Description	ID	X	Y	Z	Ground	ReflOrd	LxT	LxN	L/A	Dist.	hm	Freq	Adiv	K0b	Agr	Abar	z	Aatm	Afol	Ahous	Cmet	CmetN	Dc	RL	LtotT	LtotN
	Sol_Luce Substation	S_Substation	369426	4908792	3.5	0	0	112.1	112.1	1	1501.9	5.25	0	74.53	0	-0.02	4.35	0.34	3.49	0	0	0	0	0	0	29.73	29.73
	Inverter	MV5-1	370020	4909142	2	0	0	100.3	100.3	1	852.91	3.25	0	69.62	0	-0.32	0	0	10.39	0	0	0	0	0	0	20.63	20.63
	Inverter	MV5-3	370231	4908851	2	0	0	100.3	100.3	1	1037.57	3.25	0	71.32	0	-0.23	0	0	11.03	0	0	0	0	0	0	18.19	18.19
	Inverter	MV5-2	370006	4908853	2	0	0	100.3	100.3	1	1112.41	3.25	0	71.93	0	-0.19	0	0	11.27	0	0	0	0	0	0	17.31	17.31
	Inverter	MV5-4	370324	4908707	2	0	0	100.3	100.3	1	1161.22	3.25	0	72.3	0	-0.17	0	0	11.41	0	0	0	0	0	0	16.77	16.77
	Inverter	MV5-5	370015	4908690	2	0	0	100.3	100.3	1	1258.09	3.25	0	72.99	0	-0.13	0	0	11.69	0	0	0	0	0	0	15.76	15.76
	Inverter	MV4-2	369272	4909397	2	0	0	100.3	100.3	1	1297.3	3.25	0	73.26	0	-0.11	0	0	11.8	0	0	0	0	0	0	15.37	15.37
	Inverter	MV4-3	369229	4909397	2	0	0	100.3	100.3	1	1337.59	3.25	0	73.53	0	-0.1	0	0	11.91	0	0	0	0	0	0	14.98	14.98
	Inverter	MV4-5	369289	4909199	2	0	0	100.3	100.3	1	1365.06	3.25	0	73.7	0	-0.09	0	0	11.98	0	0	0	0	0	0	14.71	14.71
	Inverter	MV4-6	369243	4909192	2	0	0	100.3	100.3	1	1408.83	3.25	0	73.98	0	-0.07	0	0	12.09	0	0	0	0	0	0	14.31	14.31
	Inverter	MV4-9	369289	4909001	2	0	0	100.3	100.3	1	1470.77	3.25	0	74.35	0	-0.04	0	0	12.25	0	0	0	0	0	0	13.75	13.75
	Inverter	MV4-8	369256	4909001	2	0	0	100.3	100.3	1	1497.73	3.25	0	74.51	0	-0.03	0	0	12.32	0	0	0	0	0	0	13.52	13.52
	Inverter	MV4-10	369312	4908858	2	0	0	100.3	100.3	1	1540.76	3.25	0	74.75	0	-0.02	0	0	12.42	0	0	0	0	0	0	13.15	13.15
	Inverter	MV4-1	369011	4909397	2	0	0	100.3	100.3	1	1544.11	3.25	0	74.77	0	-0.02	0	0	12.43	0	0	0	0	0	0	13.12	13.12
	Inverter	MV4-11	369264	4908855	2	0	0	100.3	100.3	1	1579.51	3.25	0	74.97	0	0	0	0	12.52	0	0	0	0	0	0	12.83	12.83
	Inverter	MV4-4	369027	4909199	2	0	0	100.3	100.3	1	1599.6	3.25	0	75.08	0	0	0	0	12.57	0	0	0	0	0	0	12.66	12.66
	Inverter	MV4-7	369035	4909001	2	0	0	100.3	100.3	1	1683.82	3.25	0	75.53	0	0.03	0	0	12.77	0	0	0	0	0	0	11.99	11.99
	DSTATCOM - 10 MVAR #1	DSAT1	369437	4908757	2.5	0	0	96.6	96.6	1	1519.31	3.5	0	74.63	0	3.12	0	0	1.42	0	0	0	0	0	0	17.46	17.46
	DSTATCOM - 10 MVAR #2	DSAT2	369403	4908757	2.5	0	0	96.6	96.6	1	1542.96	5.23	0	74.77	0	3.71	0.92	0.17	1.43	0	0	0	0	0	0	15.81	15.81
	Inverter	MV6-2	370085	4907339	2	0	0	100.3	100.3	1	2549.57	3.25	0	79.13	0	0.27	0	0	14.55	0	0	0	0	0	0	6.36	6.36
	Inverter	MV6-3	370207	4907140	2	0	0	100.3	100.3	1	2731.19	3.25	0	79.73	0	0.31	0	0	14.89	0	0	0	0	0	0	5.39	5.39
	Inverter	MV3-8	368680	4907712	2	0	0	100.3	100.3	1	2803.4	3.25	0	79.95	0	0.32	0	0	15.02	0	0	0	0	0	0	5.02	5.02
	Inverter	MV3-9	368512	4907703	2	0	0	100.3	100.3	1	2921.04	3.25	0	80.31	0	0.35	0	0	15.23	0	0	0	0	0	0	4.42	4.42
	Inverter	MV3-14	368684	4907498	2	0	0	100.3	100.3	1	2967.91	3.25	0	80.45	0	0.36	0	0	15.32	0	0	0	0	0	0	4.19	4.19
	Inverter	MV3-11	368346	4907662	2	0	0	100.3	100.3	1	3064.86	3.25	0	80.73	0	0.37	0	0	15.49	0	0	0	0	0	0	3.72	3.72
	Inverter	MV3-6	368162	4907834	2	0	0	100.3	100.3	1	3080.4	3.25	0	80.77	0	0.38	0	0	15.51	0	0	0	0	0	0	3.65	3.65
	Inverter	MV3-16	368514	4907475	2	0	0	100.3	100.3	1	3091.73	3.25	0	80.8	0	0.38	0	0	15.53	0	0	0	0	0	0	3.6	3.6
	Inverter	MV3-20	368689	4907317	2	0	0	100.3	100.3	1	3110.82	3.25	0	80.86	0	0.38	0	0	15.57	0	0	0	0	0	0	3.5	3.5
	Inverter	MV3-10	368167	4907669	2	0	0	100.3	100.3	1	3187.55	3.25	0	81.07	0	0.4	0	0	15.7	0	0	0	0	0	0	3.15	3.15
	Inverter	MV3-15	368357	4907477	2	0	0	100.3	100.3	1	3192.61	3.25	0	81.08	0	0.4	0	0	15.71	0	0	0	0	0	0	3.12	3.12
	Inverter	MV3-3	367939	4907927	2	0	0	100.3	100.3	1	3194.84	3.25	0	81.09	0	0.4	0	0	15.71	0	0	0	0	0	0	3.11	3.11
	Inverter	MV3-19	368357	4907347	2	0	0	100.3	100.3	1	3290.67	3.25	0	81.35	0	0.42	0	0	15.88	0	0	0	0	0	0	2.67	2.67
	Inverter	MV3-7	367945	4907754	2	0	0	100.3	100.3	1	3297.61	3.25	0	81.36	0	0.42	0	0	15.89	0	0	0	0	0	0	2.64	2.64
	Inverter	MV3-17	368178	4907472	2	0	0	100.3	100.3	1	3318.2	3.25	0	81.42	0	0.42	0	0	15.92	0	0	0	0	0	0	2.55	2.55
	Inverter	MV3-21	368478	4907206	2	0	0	100.3	100.3	1	3325.03	3.25	0	81.44	0	0.42	0	0	15.94	0	0	0	0	0	0	2.52	2.52
	Inverter	MV3-13	367963	4907577	2	0	0	100.3	100.3	1	3399.84	3.25	0	81.63	0	0.43	0	0	16.06	0	0	0	0	0	0	2.19	2.19
	Inverter	MV6-1	370235	4907364	2	0	0	97.3	97.3	1	2505.5	3.25	0	78.98	0	0.26	0	0	14.47	0	0	0	0	0	0	3.61	3.61
	Inverter	MV3-12	367668	4907594	2	0	0	100.3	100.3	1	3613.4	3.25	0	82.16	0	0.47	0	0	16.42	0	0	0	0	0	0	1.26	1.26
	Inverter	MV3-18	367752	4907412	2	0	0	100.3	100.3	1	3667.06	3.25	0	82.29	0	0.48	0	0	16.51	0	0	0	0	0	0	1.04	1.04

Fixed Reactor Bank 2	FRB2	369464	4908755	6	0	0	89.8	89.8	1	1502.28	5.25	0	74.54	0	-1.03	0	0	3.49	0	0	0	0	0	0	12.78	12.78
Fixed Reactor Bank 1	FRB1	369378	4908755	6	0	0	89.8	89.8	1	1562	5.28	0	74.87	0	-0.67	4.18	0	3.6	0	0	0	0	0	0	7.8	7.8
Inverter	MV5-6	369982	4908507	2	0	0	89.1	89.1	1	1440.66	3.25	0	74.17	0	0.78	0	0	7.11	0	0	0	0	0	0	7	7
Inverter	MV2-3	365820	4906641	2	0	0	100.3	100.3	1	5666.12	3.25	0	86.07	0	0.69	0	0	19.53	0	0	0	0	0	0	-5.98	-5.98
Inverter	MV2-4	365586	4906624	2	0	0	100.3	100.3	1	5869.62	3.25	0	86.37	0	0.7	0	0	19.82	0	0	0	0	0	0	-6.58	-6.58
Inverter	MV4-12	369043	4908803	2	0	0	89.1	89.1	1	1786.14	3.25	0	76.04	0	0.86	0	0	7.69	0	0	0	0	0	0	4.47	4.47
Inverter	MV1-1	364715	4906166	2	0	0	100.3	100.3	1	6849.55	3.25	0	87.71	0	0.71	0	0	21.11	0	0	0	0	0	0	-9.22	-9.22
Inverter	MV4-14	369176	4908507	2	0	0	89.1	89.1	1	1880.42	3.25	0	76.49	0	0.88	0	0	7.85	0	0	0	0	0	0	3.84	3.84
Inverter	MV1-2	364753	4906063	2	0	0	100.3	100.3	1	6873.88	3.25	0	87.74	0	0.71	0	0	21.14	0	0	0	0	0	0	-9.28	-9.28
Inverter	MV1-4	364815	4905918	2	0	0	100.3	100.3	1	6903.96	3.25	0	87.78	0	0.71	0	0	21.18	0	0	0	0	0	0	-9.36	-9.36
Inverter	MV4-15	369176	4908481	2	0	0	89.1	89.1	1	1899.17	3.25	0	76.57	0	0.88	0	0	7.88	0	0	0	0	0	0	3.72	3.72
Inverter	MV4-13	369051	4908605	2	0	0	89.1	89.1	1	1903.65	3.25	0	76.59	0	0.88	0	0	7.89	0	0	0	0	0	0	3.69	3.69
Inverter	MV1-5	364671	4905892	2	0	0	100.3	100.3	1	7037.32	3.25	0	87.95	0	0.71	0	0	21.35	0	0	0	0	0	0	-9.69	-9.69
Inverter	MV1-12	365038	4905386	2	0	0	100.3	100.3	1	7046.96	3.25	0	87.96	0	0.71	0	0	21.36	0	0	0	0	0	0	-9.71	-9.71
Inverter	MV1-8	364788	4905647	2	0	0	100.3	100.3	1	7083.78	3.25	0	88.01	0	0.71	0	0	21.4	0	0	0	0	0	0	-9.8	-9.8
Inverter	MV1-15	365315	4904994	2	0	0	100.3	100.3	1	7097.72	3.25	0	88.02	0	0.71	0	0	21.42	0	0	0	0	0	0	-9.84	-9.84
Inverter	MV1-6	364477	4905835	2	0	0	100.3	100.3	1	7229.98	3.25	0	88.18	0	0.7	0	0	21.59	0	0	0	0	0	0	-10.16	-10.16
Inverter	MV1-9	364561	4905646	2	0	0	100.3	100.3	1	7268.17	3.25	0	88.23	0	0.7	0	0	21.63	0	0	0	0	0	0	-10.25	-10.25
Inverter	MV1-11	364655	4905414	2	0	0	100.3	100.3	1	7330.02	3.25	0	88.3	0	0.7	0	0	21.71	0	0	0	0	0	0	-10.4	-10.4
Inverter	MV2-1	365842	4906816	2	0	0	97.3	97.3	1	5550.24	3.25	0	85.89	0	0.68	0	0	19.37	0	0	0	0	0	0	-8.63	-8.63
Inverter	MV3-2	368671	4907928	2	0	0	89.1	89.1	1	2647.95	3.25	0	79.46	0	1.06	0	0	9.08	0	0	0	0	0	0	-0.54	-0.54
Inverter	MV1-7	364925	4905782	2	0	0	97.3	97.3	1	6893.42	3.25	0	87.77	0	0.71	0	0	21.16	0	0	0	0	0	0	-12.33	-12.33
Inverter	MV1-10	365004	4905564	2	0	0	97.3	97.3	1	6962.13	3.25	0	87.85	0	0.71	0	0	21.25	0	0	0	0	0	0	-12.51	-12.51
SubstationTransformer	W_ST	369711.17	4906112.3	2.5	0	0	92	92	1	3823.85	3.5	0	82.65	0	0.29	0	0	7.13	0	0	0	0	0	0	1.91	1.91
Inverter	MV3-4	368502	4907925	2	0	0	89.1	89.1	1	2768.56	3.25	0	79.85	0	1.09	0	0	9.26	0	0	0	0	0	0	-1.14	-1.14
Inverter	MV1-14	365163	4905049	2	0	0	97.3	97.3	1	7172.21	3.25	0	88.11	0	0.7	0	0	21.51	0	0	0	0	0	0	-13.02	-13.02
Inverter	MV1-13	364731	4905241	2	0	0	97.3	97.3	1	7376.72	3.25	0	88.36	0	0.7	0	0	21.77	0	0	0	0	0	0	-13.51	-13.51
Inverter	MV3-5	368340	4907843	2	0	0	89.1	89.1	1	2942.32	3.25	0	80.37	0	1.13	0	0	9.53	0	0	0	0	0	0	-1.98	-1.98
Inverter	MV3-1	368156	4907976	2	0	0	89.1	89.1	1	2993.73	3.25	0	80.52	0	1.15	0	0	9.61	0	0	0	0	0	0	-2.22	-2.22
Inverter	MV3-22	368656	4907142	2	0	0	89.1	89.1	1	3273.6	3.25	0	81.3	0	1.21	0	0	10.03	0	0	0	0	0	0	-3.48	-3.48
Westbrook Inverter Enclosur	W_INV6	369875	4906578	2	0	0	89.1	89.1	1	3335.26	3.25	0	81.46	0	1.23	0	0	10.12	0	0	0	0	0	0	-3.75	-3.75
Westbrook Inverter Enclosur	W_INV5	369719	4906574	2	0	0	89.1	89.1	1	3371.18	3.25	0	81.56	0	1.24	0	0	10.17	0	0	0	0	0	0	-3.91	-3.91
Westbrook Inverter Enclosur	W_INV7	369780	4906417	2	0	0	89.1	89.1	1	3511.5	3.25	0	81.91	0	1.27	0	0	10.38	0	0	0	0	0	0	-4.5	-4.5
Westbrook Inverter Enclosur	W_INV2	369374	4906388	2	0	0	89.1	89.1	1	3642.57	3.25	0	82.23	0	1.3	0	0	10.57	0	0	0	0	0	0	-5.05	-5.05
Westbrook Inverter Enclosur	W_INV4	369673	4906164	2	0	0	89.1	89.1	1	3781.22	3.25	0	82.55	0	1.34	0	0	10.77	0	0	0	0	0	0	-5.6	-5.6
Westbrook Inverter Enclosur	W_INV3	369508	4906164	2	0	0	89.1	89.1	1	3820.05	3.25	0	82.64	0	1.35	0	0	10.83	0	0	0	0	0	0	-5.76	-5.76
Inverter	MV6-4	370250	4906966	2	0	0	86.1	86.1	1	2900.54	3.25	0	80.25	0	1.12	0	0	9.47	0	0	0	0	0	0	-4.78	-4.78
Westbrook Inverter Enclosur	W_INV1	369409	4906578	2	0	0	86.1	86.1	1	3451.03	3.25	0	81.76	0	1.26	0	0	10.29	0	0	0	0	0	0	-7.25	-7.25
Inverter	MV2-2	365977	4906654	2	0	0	89.1	89.1	1	5530.03	3.25	0	85.85	0	1.77	0	0	13.16	0	0	0	0	0	0	-11.73	-11.73
Gardiner Substation	G_Sub	366586.3	4903349.9	2.5	0	0	90.8	90.8	1	7585.66	4.25	0	88.6	0	2.15	1.8	0.38	11.29	0	0	0	0	0	0	-13.06	-13.06
Inverter	MV1-3	364440	4906039	2	0	0	89.1	89.1	1	7149.77	3.25	0	88.09	0	2.16	0	0	15.16	0	0	0	0	0	0	-16.35	-16.35
Inverters	G_Inv2	366676.9	4903239.1	2	0	0	87.7	87.7	1	7635.33	3.25	0	88.66	0	2.96	0	0	8.62	0	0	0	0	0	0	-12.58	-12.58
Inverters	G_Inv1	366526.4	4903225.8	2	0	0	87.7	87.7	1	7722.91	3.25	0	88.76	0	2.96	0	0	8.71	0	0	0	0	0	0	-12.76	-12.76
Inverters	G_Inv4	366732.8	4903105	2	0	0	87.7	87.7	1	7724.54	3.25	0	88.76	0	2.96	0	0	8.71	0	0	0	0	0	0	-12.77	-12.77
Inverters	G_Inv3	366583.7	4903091.4	2	0	0	87.7	87.7	1	7809.83	3.25	0	88.85	0	2.96	0	0	8.79	0	0	0	0	0	0	-12.95	-12.95
Inverters	G_Inv6	366788.5	4902972	2	0	0	87.7	87.7	1	7814.56	3.25	0	88.86	0	2.96	0	0	8.8	0	0	0	0	0	0	-12.96	-12.96
Inverters	G_Inv5	366638.5	4902958.1	2	0	0	87.7	87.7	1	7898.76	3.25	0	88.95	0	2.96	0	0	8.88	0	0	0	0	0	0	-13.13	-13.13
Inverters	G_Inv8	366844.5	4902838.5	2	0	0	87.7	87.7	1	7906.49	3.25	0	88.96	0	2.96	0	0	8.89	0	0	0	0	0	0	-13.15	-13.15
Inverters	G_Inv7	366694.6	4902824.7	2	0	0	87.7	87.7	1	7988.77	3.25	0	89.05	0	2.96	0	0	8.97	0	0	0	0	0	0	-13.32	-13.32
Inverters	G_Inv10	366900.7	4902704.8	2	0	0	87.7	87.7	1	8000.07	3.25	0	89.06	0	2.96	0	0	8.98	0	0	0	0	0	0	-13.34	-13.34
Inverters	G_Inv9	366750.9	4902691.8	2	0	0	87.7	87.7	1	8079.83	3.25	0	89.15	0	2.96	0	0	9.06	0	0	0	0	0	0	-13.51	-13.51
Westbrook Inverter Transfor	W_INVTR1	369403	4906578	2	0	0	78.2	78.2	1	3452.91	3.25	0	81.76	0	-2.83	0	0	1.84	0	0	0	0	0	0	-2.53	-2.53
Westbrook Inverter Transfor	W_INVTR6	369881	4906578	2	0	0	77.3	77.3	1	3334.17	3.25	0	81.46	0	-2.8	0	0	1.79	0	0	0	0	0	0	-3.11	-3.11
Westbrook Inverter Transfor	W_INVTR5	369725	4906574	2	0	0	77.3	77.3	1	3369.82	3.25	0	81.55	0	-2.81	0	0	1.81	0	0	0	0	0	0	-3.21	-3.21
Westbrook Inverter Transfor	W_INVTR7	369786	4906417	2	0	0	77.3	77.3	1	3510.3	3.25	0	81.91	0	-2.85	0	0	1.87	0	0	0	0	0	0	-3.58	-3.58
Westbrook Inverter Transfor	W_INVTR2	369368	4906388	2	0	0	77.3	77.3	1	3644.4	3.25	0	82.23	0	-2.88	0	0	1.92	0	0	0	0	0	0	-3.93	-3.93
Westbrook Inverter Transfor	W_INVTR4	369679	4906164	2	0	0	77.3	77.3	1	3779.93	3.25	0	82.55	0	-2.91	0	0	1.97	0	0	0	0	0	0	-4.27	-4.27
Westbrook Inverter Transfor	W_INVTR3	369514	4906164	2	0	0	77.3	77.3	1	3818.52	3.25	0	82.64	0	-2.92	0	0	1.99	0	0	0	0	0	0	-4.36	-4.36
Inverter Transformer	MV6-1 T	370230	4907364	2	0	0	69.4	69.4	1	2506.01	3.25	0	78.98	0	2.35	0	0	5.45	0	0	0	0	0	0	-17.43	-17.43
Inverter Transformer	MV6-4 T	370244	4906966	2	0	0	69.4	69.4	1	2901.03	3.25	0	80.25	0	2.48	0	0	5.8	0	0	0	0	0	0	-19.18	-19.18
Inverter Transformer	MV5-1 T	370015	4909142	2	0	0	56.1	56.1	1	855.65	3.25	0	69.65	0	-0.04	0	0	4.54	0	0	0	0	0	0	-18.09	-18.09
Inverter Transformer	MV5-3 T	370237	4908851	2	0	0	56.1	56.1	1	1036.12	3.25	0	71.31	0	0.02	0	0	4.97	0	0	0	0	0	0	-20.25	-20.25
Inverter Transformer	MV5-2 T	370011	4908853	2	0	0	56.1	56.1	1	1110.27	3.25	0	71.91	0	0.05	0	0	5.15	0	0	0	0	0	0	-21.05	-21.05
Inverter Transformer	MV5-4 T	370330	4908707	2	0	0	56.1	56.1	1	1160.4	3.25	0	72.29	0	0.07	0	0	5.26	0	0	0	0	0	0	-21.57	-21.57
Inverter Transformer	MV2-1 T	365836	4906816	2	0	0	69.4	69.4	1	5555.26	3.25	0	85.89	0	3.12	0	0	7.74	0	0	0	0	0	0	-27.4	-27.4
Inverter Transformer	MV5-5 T	370021	4908690	2	0	0	56.1	56.1	1	1255.86	3.25	0	72.98	0	0.1	0	0	5.48	0	0	0	0	0	0	-22.51	-22.51
Inverter Transformer	MV4-2 T	369267	4909397	2	0	0	56.1	56.1	1	1301.97	3.25	0	73.29	0	0.12	0	0	5.59	0	0	0	0	0	0	-22.94	-22.94
Inverter Transformer	MV4-3 T	369234	4909397	2	0	0	56.1	56.1	1	1332.89	3.25	0	73.5	0	0.13	0	0	5.65	0	0	0	0	0	0	-23.22	-23.22
Inverter Transformer	MV4-5 T	369283	4909199	2	0	0	56.1	56.1	1	1370.32	3.25	0	73.74	0	0.15	0	0	5.74	0	0	0	0	0	0	-23.56	-23.56
Inverter Transformer	MV4-6 T	369249	4909192	2	0	0	56.1	56.1	1	1403.54	3.25	0	73.94	0	0.16	0	0	5.81	0	0	0	0	0	0	-23.86	-23.86
Inverter Transformer	MV5-6 T	369987	4908507	2	0	0	56.1	56.1	1	1438.93	3.25	0	74.16	0	0.17	0	0	5.89	0	0	0	0	0	0	-24.16	-24.16
Inverter Transformer	MV4-9 T	369284	4909001	2	0	0	56.1	56.1	1	1474.84	3.25	0	74.37	0	0.19	0	0	5.96	0	0	0	0	0	0	-24.47	-24.47
Inverter Transformer	MV4-8 T	369262	4909001	2	0	0	56.1	56.1	1	1492.81	3.25	0	74.48	0	0.2	0	0	6	0	0	0	0	0	0	-24.62	-24.62
Inverter Transformer	MV1-7 T	364919	4905782	2	0	0	69.4	69.4	1	6898.26	3.25	0	87.77	0	3.31	0	0	8.54	0	0	0	0	0	0	-30.27	-30.27

	Inverter Transformer	MV1-10 T	365010	4905564	2	0	0	69.4	69.4	1	6957.4	3.25	0	87.85	0	3.31	0	0	8.58	0	0	0	0	0	0	-30.39	-30.39
	Inverter Transformer	MV4-1 T	369017	4909397	2	0	0	56.1	56.1	1	1538.39	3.25	0	74.74	0	0.21	0	0	6.1	0	0	0	0	0	0	-25	-25
	Inverter Transformer	MV4-10 T	369307	4908858	2	0	0	56.1	56.1	1	1544.57	3.25	0	74.78	0	0.22	0	0	6.11	0	0	0	0	0	0	-25.05	-25.05
	Inverter Transformer	MV1-14 T	365157	4905049	2	0	0	69.4	69.4	1	7176.66	3.25	0	88.12	0	3.34	0	0	8.7	0	0	0	0	0	0	-30.8	-30.8
	Inverter Transformer	MV4-11 T	369269	4908855	2	0	0	56.1	56.1	1	1575.65	3.25	0	74.95	0	0.23	0	0	6.18	0	0	0	0	0	0	-25.3	-25.3
	Inverter Transformer	MV4-4 T	369033	4909199	2	0	0	56.1	56.1	1	1594.14	3.25	0	75.05	0	0.24	0	0	6.22	0	0	0	0	0	0	-25.45	-25.45
	Inverter Transformer	MV1-13 T	364725	4905241	2	0	0	69.4	69.4	1	7381.4	3.25	0	88.36	0	3.36	0	0	8.81	0	0	0	0	0	0	-31.18	-31.18
	Inverter Transformer	MV4-7 T	369040	4909001	2	0	0	56.1	56.1	1	1679.51	3.25	0	75.5	0	0.27	0	0	6.4	0	0	0	0	0	0	-26.11	-26.11
	Inverter Transformer	MV4-12 T	369049	4908803	2	0	0	56.1	56.1	1	1781.3	3.25	0	76.01	0	0.31	0	0	6.61	0	0	0	0	0	0	-26.87	-26.87
	Inverter Transformer	MV4-14 T	369182	4908507	2	0	0	56.1	56.1	1	1876.25	3.25	0	76.47	0	0.35	0	0	6.8	0	0	0	0	0	0	-27.56	-27.56
	Inverter Transformer	MV4-13 T	369057	4908605	2	0	0	56.1	56.1	1	1899.13	3.25	0	76.57	0	0.36	0	0	6.84	0	0	0	0	0	0	-27.72	-27.72
	Inverter Transformer	MV4-15 T	369170	4908481	2	0	0	56.1	56.1	1	1903.31	3.25	0	76.59	0	0.36	0	0	6.85	0	0	0	0	0	0	-27.75	-27.75
	Inverter Transformer	MV6-2 T	370091	4907339	2	0	0	56.1	56.1	1	2548.64	3.25	0	79.13	0	0.64	0	0	8.08	0	0	0	0	0	0	-31.78	-31.78
	Inverter Transformer	MV3-2 T	368677	4907928	2	0	0	56.1	56.1	1	2643.84	3.25	0	79.44	0	0.68	0	0	8.25	0	0	0	0	0	0	-32.31	-32.31
	Inverter Transformer	MV6-3 T	370202	4907140	2	0	0	56.1	56.1	1	2731.7	3.25	0	79.73	0	0.72	0	0	8.4	0	0	0	0	0	0	-32.79	-32.79
	Inverter Transformer	MV3-4 T	368507	4907925	2	0	0	56.1	56.1	1	2764.98	3.25	0	79.83	0	0.73	0	0	8.46	0	0	0	0	0	0	-32.97	-32.97
	Inverter Transformer	MV3-8 T	368685	4907712	2	0	0	56.1	56.1	1	2800.18	3.25	0	79.94	0	0.74	0	0	8.52	0	0	0	0	0	0	-33.15	-33.15
	Inverter Transformer	MV3-9 T	368517	4907703	2	0	0	56.1	56.1	1	2917.66	3.25	0	80.3	0	0.79	0	0	8.73	0	0	0	0	0	0	-33.76	-33.76
	Inverter Transformer	MV3-5 T	368335	4907843	2	0	0	56.1	56.1	1	2945.96	3.25	0	80.38	0	0.81	0	0	8.78	0	0	0	0	0	0	-33.91	-33.91
	Inverter Transformer	MV3-14 T	368678	4907498	2	0	0	56.1	56.1	1	2971.55	3.25	0	80.46	0	0.82	0	0	8.82	0	0	0	0	0	0	-34.04	-34.04
	Inverter Transformer	MV3-1 T	368150	4907976	2	0	0	56.1	56.1	1	2998.4	3.25	0	80.54	0	0.83	0	0	8.87	0	0	0	0	0	0	-34.17	-34.17
	Inverter Transformer	MV3-11 T	368340	4907662	2	0	0	56.1	56.1	1	3069.05	3.25	0	80.74	0	0.86	0	0	8.98	0	0	0	0	0	0	-34.53	-34.53
	Inverter Transformer	MV3-6 T	368156	4907834	2	0	0	56.1	56.1	1	3084.93	3.25	0	80.78	0	0.87	0	0	9.01	0	0	0	0	0	0	-34.6	-34.6
	Inverter Transformer	MV3-16 T	368509	4907475	2	0	0	56.1	56.1	1	3094.92	3.25	0	80.81	0	0.87	0	0	9.03	0	0	0	0	0	0	-34.65	-34.65
	Inverter Transformer	MV3-20 T	368683	4907317	2	0	0	56.1	56.1	1	3114.29	3.25	0	80.87	0	0.88	0	0	9.06	0	0	0	0	0	0	-34.75	-34.75
	Inverter Transformer	MV3-3 T	367944	4907927	2	0	0	56.1	56.1	1	3190.86	3.25	0	81.08	0	0.91	0	0	9.19	0	0	0	0	0	0	-35.12	-35.12
	Inverter Transformer	MV3-10 T	368162	4907669	2	0	0	56.1	56.1	1	3191.19	3.25	0	81.08	0	0.91	0	0	9.19	0	0	0	0	0	0	-35.12	-35.12
	Inverter Transformer	MV3-15 T	368351	4907477	2	0	0	56.1	56.1	1	3196.62	3.25	0	81.09	0	0.91	0	0	9.2	0	0	0	0	0	0	-35.15	-35.15
	Inverter Transformer	MV3-22 T	368661	4907142	2	0	0	56.1	56.1	1	3270.81	3.25	0	81.29	0	0.94	0	0	9.32	0	0	0	0	0	0	-35.5	-35.5
	Inverter Transformer	MV3-7 T	367951	4907754	2	0	0	56.1	56.1	1	3292.99	3.25	0	81.35	0	0.95	0	0	9.36	0	0	0	0	0	0	-35.6	-35.6
	Inverter Transformer	MV3-19 T	368352	4907347	2	0	0	56.1	56.1	1	3293.9	3.25	0	81.35	0	0.95	0	0	9.36	0	0	0	0	0	0	-35.61	-35.61
	Inverter Transformer	MV3-17 T	368183	4907472	2	0	0	56.1	56.1	1	3314.73	3.25	0	81.41	0	0.96	0	0	9.39	0	0	0	0	0	0	-35.7	-35.7
	Inverter Transformer	MV3-21 T	368484	4907206	2	0	0	56.1	56.1	1	3321.42	3.25	0	81.43	0	0.97	0	0	9.4	0	0	0	0	0	0	-35.73	-35.73
	Inverter Transformer	MV3-13 T	367958	4907577	2	0	0	56.1	56.1	1	3403.55	3.25	0	81.64	0	1	0	0	9.53	0	0	0	0	0	0	-36.11	-36.11
	Inverter Transformer	MV3-12 T	367674	4907594	2	0	0	56.1	56.1	1	3608.73	3.25	0	82.15	0	1.08	0	0	9.86	0	0	0	0	0	0	-37.03	-37.03
	Inverter Transformer	MV3-18 T	367757	4907412	2	0	0	56.1	56.1	1	3663.33	3.25	0	82.28	0	1.11	0	0	9.94	0	0	0	0	0	0	-37.27	-37.27
	Line Reactor	NGR	369421	4908787.5	5	0	0	45.4	45.4	1	1508.62	5.25	0	74.57	0	3.43	1.23	0.03	0.62	0	0	0	0	0	0	-34.5	-34.5
	Inverter Transformer	MV2-2 T	365982	4906654	2	0	0	56.1	56.1	1	5525.96	3.25	0	85.85	0	1.81	0	0	12.53	0	0	0	0	0	0	-44.13	-44.13
	Inverter Transformer	MV2-3 T	365814	4906641	2	0	0	56.1	56.1	1	5671.06	3.25	0	86.07	0	1.86	0	0	12.71	0	0	0	0	0	0	-44.58	-44.58
	Inverter Transformer	MV2-4 T	365590	4906628	2	0	0	56.1	56.1	1	5864.08	3.25	0	86.36	0	1.92	0	0	12.94	0	0	0	0	0	0	-45.17	-45.17
	Inverter Transformer	MV1-1 T	364721	4906166	2	0	0	56.1	56.1	1	6844.5	3.25	0	87.71	0	2.22	0	0	14.06	0	0	0	0	0	0	-47.93	-47.93
	Inverter Transformer	MV1-2 T	364759	4906063	2	0	0	56.1	56.1	1	6868.88	3.25	0	87.74	0	2.22	0	0	14.09	0	0	0	0	0	0	-47.99	-47.99
	Inverter Transformer	MV1-4 T	364821	4905918	2	0	0	56.1	56.1	1	6899.03	3.25	0	87.78	0	2.23	0	0	14.12	0	0	0	0	0	0	-48.07	-48.07
	Inverter Transformer	MV1-5 T	364676	4905892	2	0	0	56.1	56.1	1	7033.19	3.25	0	87.94	0	2.27	0	0	14.27	0	0	0	0	0	0	-48.42	-48.42
	Inverter Transformer	MV1-12 T	365044	4905386	2	0	0	56.1	56.1	1	7042.32	3.25	0	87.95	0	2.27	0	0	14.28	0	0	0	0	0	0	-48.44	-48.44
	Inverter Transformer	MV1-8 T	364782	4905647	2	0	0	56.1	56.1	1	7088.6	3.25	0	88.01	0	2.28	0	0	14.32	0	0	0	0	0	0	-48.56	-48.56
	Inverter Transformer	MV1-15 T	365309	4904994	2	0	0	56.1	56.1	1	7102.09	3.25	0	88.03	0	2.29	0	0	14.34	0	0	0	0	0	0	-48.6	-48.6
	Inverter Transformer	MV1-3 T	364435	4906039	2	0	0	56.1	56.1	1	7153.99	3.25	0	88.09	0	2.3	0	0	14.39	0	0	0	0	0	0	-48.73	-48.73
	Inverter Transformer	MV1-6 T	364482	4905835	2	0	0	56.1	56.1	1	7225.82	3.25	0	88.18	0	2.32	0	0	14.47	0	0	0	0	0	0	-48.91	-48.91
	Inverter Transformer	MV1-9 T	364555	4905646	2	0	0	56.1	56.1	1	7273.06	3.25	0	88.23	0	2.33	0	0	14.52	0	0	0	0	0	0	-49.03	-49.03
	Inverter Transformer	MV1-11 T	364649	4905414	2	0	0	56.1	56.1	1	7334.79	3.25	0	88.31	0	2.35	0	0	14.58	0	0	0	0	0	0	-49.18	-49.18
Limit. Valu	0	0																								
Level D/N:	32.3436	32.3436																								

Receiver: Existing Noise Receptor
ID: S-R66
X: 364464
Y: 4906724
Z: 4.5
Ground: 0

ISO	Description	ID	X	Y	Z	Ground	ReflOrd	LxT	LxN	L/A	Dist.	hm	Freq	Adiv	K0b	Agr	Abar	z	Aatm	Afol	Ahous	Cmet	CmetN	Dc	RL	LtotT	LtotN
	Inverter	MV1-1	364715	4906166	2	0	0	100.3	100.3	1	611.86	3.25	0	66.73	0	-0.47	0	0	9.27	0	0	0	0	0	0	24.78	24.78
	Inverter	MV1-2	364753	4906063	2	0	0	100.3	100.3	1	721.42	3.25	0	68.16	0	-0.4	0	0	9.84	0	0	0	0	0	0	22.71	22.71
	Inverter	MV1-5	364671	4905892	2	0	0	100.3	100.3	1	857.37	3.25	0	69.66	0	-0.32	0	0	10.41	0	0	0	0	0	0	20.56	20.56
	Inverter	MV1-4	364815	4905918	2	0	0	100.3	100.3	1	879.12	3.25	0	69.88	0	-0.31	0	0	10.49	0	0	0	0	0	0	20.25	20.25
	Inverter	MV1-6	364477	4905835	2	0	0	100.3	100.3	1	889.1	3.25	0	69.98	0	-0.3	0	0	10.53	0	0	0	0	0	0	20.11	20.11
	Inverter	MV1-9	364561	4905646	2	0	0	100.3	100.3	1	1082.36	3.25	0	71.69	0	-0.21	0	0	11.17	0	0	0	0	0	0	17.66	17.66
	Inverter	MV1-8	364788	4905647	2	0	0	100.3	100.3	1	1124.68	3.25	0	72.02	0	-0.19	0	0	11.3	0	0	0	0	0	0	17.18	17.18
	Inverter	MV2-4	365586	4906624	2	0	0	100.3	100.3	1	1126.45	3.25	0	72.03	0	-0.19	0	0	11.31	0	0	0	0	0	0	17.16	17.16
	Inverter	MV1-11	364655	4905414	2	0	0	100.3	100.3	1	1323.85	3.25	0	73.44	0	-0.1	0	0	11.87	0	0	0	0	0	0	15.11	15.11
	Inverter	MV2-3	365820	4906641	2	0	0	100.3	100.3	1	1358.54	3.25	0	73.66	0	-0.09	0	0	11.96	0	0	0	0	0	0	14.78	14.78
	Sol_Luce Substation	S_Substation	369426	4908792	3.5	0	0	112.1	112.1	1	5375.69	5.25	0	85.61	0	1	2.78	0.3	9.06	0	0	0	0	0	0	13.63	13.63
	Inverter	MV1-12	365038	4905386	2	0	0	100.3	100.3	1	1455.93	3.25	0	74.26	0	-0.05	0	0	12.21	0	0	0	0	0	0	13.89	13.89

Inverter	MV1-7	364925	4905782	2	0	0	97.3	97.3	1	1048.76	3.25	0	71.41	0	-0.22	0	0	11.07	0	0	0	0	0	0	15.05	15.05
Inverter	MV1-10	365004	4905564	2	0	0	97.3	97.3	1	1279.53	3.25	0	73.14	0	-0.12	0	0	11.75	0	0	0	0	0	0	12.54	12.54
Inverter	MV1-15	365315	4904994	2	0	0	100.3	100.3	1	1927.98	3.25	0	76.7	0	0.11	0	0	13.31	0	0	0	0	0	0	10.19	10.19
Inverter	MV2-1	365842	4906816	2	0	0	97.3	97.3	1	1381.07	3.25	0	73.8	0	-0.08	0	0	12.02	0	0	0	0	0	0	11.57	11.57
Inverter	MV1-13	364731	4905241	2	0	0	97.3	97.3	1	1506.85	3.25	0	74.56	0	-0.03	0	0	12.34	0	0	0	0	0	0	10.44	10.44
Inverter	MV1-3	364440	4906039	2	0	0	89.1	89.1	1	685.42	3.25	0	67.72	0	0.61	0	0	5.67	0	0	0	0	0	0	15.06	15.06
Inverter	MV1-14	365163	4905049	2	0	0	97.3	97.3	1	1815	3.25	0	76.18	0	0.07	0	0	13.06	0	0	0	0	0	0	8	8
Inverter	MV3-12	367668	4907594	2	0	0	100.3	100.3	1	3320.02	3.25	0	81.42	0	0.42	0	0	15.93	0	0	0	0	0	0	2.54	2.54
Inverter	MV3-18	367752	4907412	2	0	0	100.3	100.3	1	3359.21	3.25	0	81.52	0	0.43	0	0	15.99	0	0	0	0	0	0	2.37	2.37
Inverter	MV3-13	367963	4907577	2	0	0	100.3	100.3	1	3601.47	3.25	0	82.13	0	0.47	0	0	16.4	0	0	0	0	0	0	1.31	1.31
Inverter	MV3-7	367945	4907754	2	0	0	100.3	100.3	1	3630.19	3.25	0	82.2	0	0.47	0	0	16.45	0	0	0	0	0	0	1.19	1.19
Inverter	MV3-3	367939	4907927	2	0	0	100.3	100.3	1	3677.34	3.25	0	82.31	0	0.48	0	0	16.53	0	0	0	0	0	0	1	1
Inverter	MV3-17	368178	4907472	2	0	0	100.3	100.3	1	3788.58	3.25	0	82.57	0	0.5	0	0	16.71	0	0	0	0	0	0	0.54	0.54
Inverter	MV3-10	368167	4907669	2	0	0	100.3	100.3	1	3821.68	3.25	0	82.65	0	0.5	0	0	16.76	0	0	0	0	0	0	0.4	0.4
Inverter	MV3-6	368162	4907834	2	0	0	100.3	100.3	1	3861	3.25	0	82.73	0	0.51	0	0	16.83	0	0	0	0	0	0	0.25	0.25
Inverter	MV3-19	368357	4907347	2	0	0	100.3	100.3	1	3942.54	3.25	0	82.92	0	0.52	0	0	16.96	0	0	0	0	0	0	-0.08	-0.08
Inverter	MV3-15	368357	4907477	2	0	0	100.3	100.3	1	3965.16	3.25	0	82.97	0	0.52	0	0	16.99	0	0	0	0	0	0	-0.17	-0.17
Inverter	MV3-11	368346	4907662	2	0	0	100.3	100.3	1	3993.72	3.25	0	83.03	0	0.53	0	0	17.04	0	0	0	0	0	0	-0.28	-0.28
Inverter	MV3-21	368478	4907206	2	0	0	100.3	100.3	1	4042.84	3.25	0	83.13	0	0.53	0	0	17.12	0	0	0	0	0	0	-0.47	-0.47
Inverter	MV3-16	368514	4907475	2	0	0	100.3	100.3	1	4119.04	3.25	0	83.3	0	0.54	0	0	17.24	0	0	0	0	0	0	-0.76	-0.76
Inverter	MV3-9	368512	4907703	2	0	0	100.3	100.3	1	4164.7	3.25	0	83.39	0	0.55	0	0	17.31	0	0	0	0	0	0	-0.94	-0.94
Inverter	MV3-20	368689	4907317	2	0	0	100.3	100.3	1	4266.41	3.25	0	83.6	0	0.56	0	0	17.47	0	0	0	0	0	0	-1.32	-1.32
Inverter	MV3-14	368684	4907498	2	0	0	100.3	100.3	1	4290.39	3.25	0	83.65	0	0.57	0	0	17.51	0	0	0	0	0	0	-1.41	-1.41
Inverter	MV3-8	368680	4907712	2	0	0	100.3	100.3	1	4330.22	3.25	0	83.73	0	0.57	0	0	17.57	0	0	0	0	0	0	-1.56	-1.56
Inverter	MV4-7	369035	4909001	2	0	0	100.3	100.3	1	5106.74	3.25	0	85.16	0	0.65	0	0	18.74	0	0	0	0	0	0	-4.24	-4.24
Inverter	MV4-4	369027	4909199	2	0	0	100.3	100.3	1	5191.01	3.25	0	85.31	0	0.66	0	0	18.86	0	0	0	0	0	0	-4.51	-4.51
Inverter	MV4-11	369264	4908855	2	0	0	100.3	100.3	1	5251.78	3.25	0	85.41	0	0.66	0	0	18.95	0	0	0	0	0	0	-4.7	-4.7
Inverter	MV4-1	369011	4909397	2	0	0	100.3	100.3	1	5274.48	3.25	0	85.44	0	0.66	0	0	18.98	0	0	0	0	0	0	-4.78	-4.78
Inverter	MV4-10	369312	4908858	2	0	0	100.3	100.3	1	5296.89	3.25	0	85.48	0	0.67	0	0	19.01	0	0	0	0	0	0	-4.85	-4.85
Inverter	MV4-8	369256	4909001	2	0	0	100.3	100.3	1	5305.47	3.25	0	85.49	0	0.67	0	0	19.02	0	0	0	0	0	0	-4.87	-4.87
Inverter	MV4-9	369289	4909001	2	0	0	100.3	100.3	1	5335.29	3.25	0	85.54	0	0.67	0	0	19.07	0	0	0	0	0	0	-4.97	-4.97
Inverter	MV4-6	369243	4909192	2	0	0	100.3	100.3	1	5378.65	3.25	0	85.61	0	0.67	0	0	19.13	0	0	0	0	0	0	-5.1	-5.1
Inverter	MV4-5	369289	4909199	2	0	0	100.3	100.3	1	5422.75	3.25	0	85.68	0	0.68	0	0	19.19	0	0	0	0	0	0	-5.24	-5.24
Inverter	MV4-3	369229	4909397	2	0	0	100.3	100.3	1	5463.53	3.25	0	85.75	0	0.68	0	0	19.25	0	0	0	0	0	0	-5.36	-5.36
Inverter	MV4-2	369272	4909397	2	0	0	100.3	100.3	1	5501.07	3.25	0	85.81	0	0.68	0	0	19.3	0	0	0	0	0	0	-5.48	-5.48
Inverter	MV2-2	365977	4906654	2	0	0	89.1	89.1	1	1514.62	3.25	0	74.61	0	0.8	0	0	7.23	0	0	0	0	0	0	6.42	6.42
Inverter	MV6-2	370085	4907339	2	0	0	100.3	100.3	1	5654.54	3.25	0	86.05	0	0.69	0	0	19.52	0	0	0	0	0	0	-5.94	-5.94
Inverter	MV6-3	370207	4907140	2	0	0	100.3	100.3	1	5758.05	3.25	0	86.21	0	0.69	0	0	19.66	0	0	0	0	0	0	-6.25	-6.25
Inverter	MV5-5	370015	4908690	2	0	0	100.3	100.3	1	5888.87	3.25	0	86.4	0	0.7	0	0	19.84	0	0	0	0	0	0	-6.63	-6.63
Inverter	MV5-2	370006	4908853	2	0	0	100.3	100.3	1	5936.87	3.25	0	86.47	0	0.7	0	0	19.91	0	0	0	0	0	0	-6.77	-6.77
Inverter	MV5-1	370020	4909142	2	0	0	100.3	100.3	1	6059.36	3.25	0	86.65	0	0.71	0	0	20.07	0	0	0	0	0	0	-7.12	-7.12
Inverter	MV5-3	370231	4908851	2	0	0	100.3	100.3	1	6146.74	3.25	0	86.77	0	0.71	0	0	20.19	0	0	0	0	0	0	-7.36	-7.36
Inverter	MV5-4	370324	4908707	2	0	0	100.3	100.3	1	6186.43	3.25	0	86.83	0	0.71	0	0	20.24	0	0	0	0	0	0	-7.47	-7.47
DSTATCOM - 10 MVAR #2	DSAT2	369403	4908757	2.5	0	0	96.6	96.6	1	5341.05	3.5	0	85.55	0	3.72	0	0	3.52	0	0	0	0	0	0	3.84	3.84
Inverter	MV6-1	370235	4907364	2	0	0	97.3	97.3	1	5806.38	3.25	0	86.28	0	0.7	0	0	19.73	0	0	0	0	0	0	-9.39	-9.39
DSTATCOM - 10 MVAR #1	DSAT1	369437	4908757	2.5	0	0	96.6	96.6	1	5372.51	3.5	0	85.6	0	3.72	0	0	3.54	0	0	0	0	0	0	3.77	3.77
Gardiner Substation	G_Sub	366586.3	4903349.9	2.5	0	0	90.8	90.8	1	3986.06	4.25	0	83.01	0	1.36	2.61	0.27	7.35	0	0	0	0	0	0	-3.55	-3.55
SubstationTransformer	W_ST	369711.17	4906112.3	2.5	0	0	92	92	1	5282.71	4.25	0	85.46	0	1.71	2.26	0.29	8.95	0	0	0	0	0	0	-6.4	-6.4
Inverter	MV3-1	368156	4907976	2	0	0	89.1	89.1	1	3898.51	3.25	0	82.82	0	1.37	0	0	10.94	0	0	0	0	0	0	-6.07	-6.07
Inverter	MV3-5	368340	4907843	2	0	0	89.1	89.1	1	4034.3	3.25	0	83.12	0	1.4	0	0	11.13	0	0	0	0	0	0	-6.59	-6.59
Inverter	MV3-22	368656	4907142	2	0	0	89.1	89.1	1	4212.79	3.25	0	83.49	0	1.44	0	0	11.39	0	0	0	0	0	0	-7.26	-7.26
Inverter	MV3-4	368502	4907925	2	0	0	89.1	89.1	1	4212.82	3.25	0	83.49	0	1.44	0	0	11.39	0	0	0	0	0	0	-7.26	-7.26
Inverter	MV3-2	368671	4907928	2	0	0	89.1	89.1	1	4375.9	3.25	0	83.82	0	1.49	0	0	11.61	0	0	0	0	0	0	-7.86	-7.86
Inverters	G_Inv1	366526.4	4903225.8	2	0	0	87.7	87.7	1	4060.9	3.25	0	83.17	0	2.8	0	0	4.94	0	0	0	0	0	0	-3.25	-3.25
Inverters	G_Inv2	366676.9	4903239.1	2	0	0	87.7	87.7	1	4128.13	3.25	0	83.32	0	2.8	0	0	5.01	0	0	0	0	0	0	-3.47	-3.47
Fixed Reactor Bank 1	FRB1	369378	4908755	6	0	0	89.8	89.8	1	5317.18	5.25	0	85.51	0	-0.52	0	0	8.99	0	0	0	0	0	0	-4.21	-4.21
Westbrook Inverter Enclosur	W_INV2	369374	4906388	2	0	0	89.1	89.1	1	4921.48	3.25	0	84.84	0	1.62	0	0	12.36	0	0	0	0	0	0	-9.76	-9.76
Inverters	G_Inv3	366583.7	4903091.4	2	0	0	87.7	87.7	1	4205.82	3.25	0	83.48	0	2.81	0	0	5.1	0	0	0	0	0	0	-3.72	-3.72
Inverter	MV4-13	369051	4908605	2	0	0	89.1	89.1	1	4957.69	3.25	0	84.91	0	1.63	0	0	12.41	0	0	0	0	0	0	-9.88	-9.88
Fixed Reactor Bank 2	FRB2	369464	4908755	6	0	0	89.8	89.8	1	5396.75	5.25	0	85.64	0	-0.51	0	0	9.08	0	0	0	0	0	0	-4.44	-4.44
Inverters	G_Inv4	366732.8	4903105	2	0	0	87.7	87.7	1	4271.37	3.25	0	83.61	0	2.81	0	0	5.17	0	0	0	0	0	0	-3.93	-3.93
Inverter	MV4-12	369043	4908803	2	0	0	89.1	89.1	1	5028.87	3.25	0	85.03	0	1.65	0	0	12.5	0	0	0	0	0	0	-10.12	-10.12
Inverter	MV4-15	369176	4908481	2	0	0	89.1	89.1	1	5028.92	3.25	0	85.03	0	1.65	0	0	12.5	0	0	0	0	0	0	-10.12	-10.12
Inverter	MV4-14	369176	4908507	2	0	0	89.1	89.1	1	5038.06	3.25	0	85.05	0	1.65	0	0	12.51	0	0	0	0	0	0	-10.15	-10.15
Westbrook Inverter Enclosur	W_INV3	369508	4906164	2	0	0	89.1	89.1	1	5074.99	3.25	0	85.11	0	1.66	0	0	12.56	0	0	0	0	0	0	-10.27	-10.27
Inverters	G_Inv5	366638.5	4902958.1	2	0	0	87.7	87.7	1	4348.62	3.25	0	83.77	0	2.82	0	0	5.25	0	0	0	0	0	0	-4.18	-4.18
Inverters	G_Inv6	366788.5	4902972	2	0	0	87.7	87.7	1	4413.71	3.25	0	83.9	0	2.82	0	0	5.32	0	0	0	0	0	0	-4.38	-4.38
Westbrook Inverter Enclosur	W_INV4	369673	4906164	2	0	0	89.1	89.1	1	5239.02	3.25	0	85.38	0	1.7	0	0	12.78	0	0	0	0	0	0	-10.81	-10.81
Westbrook Inverter Enclosur	W_INV5	369719	4906574	2	0	0	89.1	89.1	1	5257.14	3.25	0	85.41	0	1.7	0	0	12.8	0	0	0	0	0	0	-10.87	-10.87
Inverters	G_Inv7	366694.6	4902824.7	2	0	0	87.7	87.7	1	4492.23	3.25	0	84.05	0	2.83	0	0	5.4	0	0	0	0	0	0	-4.62	-4.62
Westbrook Inverter Enclosur	W_INV7	369780	4906417	2	0	0	89.1	89.1	1	5324.86	3.25	0	85.53	0	1.72	0	0	12.89	0	0	0	0	0	0	-11.08	-11.08
Inverters	G_Inv8	366844.5	4902838.5	2	0	0	87.7	87.7	1	4556.74	3.25	0	84.17	0	2.84	0	0	5.47	0	0	0	0	0	0	-4.82	-4.82
Westbrook Inverter Enclosur	W_INV6	369875	4906578	2	0	0	89.1	89.1	1	5412.97	3.25	0	85.67	0	1.74	0	0	13.01	0	0	0	0	0	0	-11.36	-11.36
Inverters	G_Inv9	366750.9	4902691.8	2	0	0	87.7	87.7	1	4635.57	3.25	0	84.32	0	2.84	0	0	5.55	0	0	0	0	0	0	-5.06	-5.06

Inverters	G_Inv10	366900.7	4902704.8	2	0	0	87.7	87.7	1	4700.16	3.25	0	84.44	0	2.85	0	0	5.62	0	0	0	0	0	0	-5.25	-5.25
Inverter	MV5-6	369982	4908507	2	0	0	89.1	89.1	1	5798.92	3.25	0	86.27	0	1.84	0	0	13.51	0	0	0	0	0	0	-12.55	-12.55
Westbrook Inverter Enclosur	W_INV1	369409	4906578	2	0	0	86.1	86.1	1	4947.16	3.25	0	84.89	0	1.63	0	0	12.39	0	0	0	0	0	0	-12.85	-12.85
Inverter	MV6-4	370250	4906966	2	0	0	86.1	86.1	1	5791.06	3.25	0	86.26	0	1.83	0	0	13.5	0	0	0	0	0	0	-15.53	-15.53
Inverter Transformer	MV1-7 T	364919	4905782	2	0	0	69.4	69.4	1	1046.13	3.25	0	71.39	0	1.72	0	0	3.87	0	0	0	0	0	0	-7.64	-7.64
Inverter Transformer	MV1-10 T	365010	4905564	2	0	0	69.4	69.4	1	1282.08	3.25	0	73.16	0	1.87	0	0	4.18	0	0	0	0	0	0	-9.85	-9.85
Inverter Transformer	MV2-1 T	365836	4906816	2	0	0	69.4	69.4	1	1375.08	3.25	0	73.77	0	1.91	0	0	4.29	0	0	0	0	0	0	-10.62	-10.62
Inverter Transformer	MV1-13 T	364725	4905241	2	0	0	69.4	69.4	1	1505.79	3.25	0	74.56	0	1.98	0	0	4.44	0	0	0	0	0	0	-11.62	-11.62
Westbrook Inverter Transfor	W_INVTR1	369403	4906578	2	0	0	78.2	78.2	1	4941.16	3.25	0	84.88	0	-3.17	0	0	2.39	0	0	0	0	0	0	-5.86	-5.86
Inverter Transformer	MV1-14 T	365157	4905049	2	0	0	69.4	69.4	1	1812.7	3.25	0	76.17	0	2.1	0	0	4.77	0	0	0	0	0	0	-13.69	-13.69
Westbrook Inverter Transfor	W_INVTR2	369368	4906388	2	0	0	77.3	77.3	1	4915.5	3.25	0	84.83	0	-3.16	0	0	2.38	0	0	0	0	0	0	-6.71	-6.71
Westbrook Inverter Transfor	W_INVTR3	369514	4906164	2	0	0	77.3	77.3	1	5080.96	3.25	0	85.12	0	-3.19	0	0	2.44	0	0	0	0	0	0	-7.02	-7.02
Westbrook Inverter Transfor	W_INVTR4	369679	4906164	2	0	0	77.3	77.3	1	5244.98	3.25	0	85.39	0	-3.23	0	0	2.5	0	0	0	0	0	0	-7.32	-7.32
Westbrook Inverter Transfor	W_INVTR5	369725	4906574	2	0	0	77.3	77.3	1	5263.14	3.25	0	85.42	0	-3.23	0	0	2.5	0	0	0	0	0	0	-7.36	-7.36
Westbrook Inverter Transfor	W_INVTR7	369786	4906417	2	0	0	77.3	77.3	1	5330.85	3.25	0	85.54	0	-3.24	0	0	2.52	0	0	0	0	0	0	-7.48	-7.48
Westbrook Inverter Transfor	W_INVTR6	369881	4906578	2	0	0	77.3	77.3	1	5418.97	3.25	0	85.68	0	-3.26	0	0	2.55	0	0	0	0	0	0	-7.63	-7.63
Inverter Transformer	MV1-1 T	364721	4906166	2	0	0	56.1	56.1	1	614.34	3.25	0	66.77	0	-0.1	0	0	3.9	0	0	0	0	0	0	-14.51	-14.51
Inverter Transformer	MV1-3 T	364435	4906039	2	0	0	56.1	56.1	1	685.62	3.25	0	67.72	0	-0.08	0	0	4.09	0	0	0	0	0	0	-15.67	-15.67
Inverter Transformer	MV1-2 T	364759	4906063	2	0	0	56.1	56.1	1	723.85	3.25	0	68.19	0	-0.07	0	0	4.2	0	0	0	0	0	0	-16.26	-16.26
Inverter Transformer	MV1-5 T	364676	4905892	2	0	0	56.1	56.1	1	858.59	3.25	0	69.68	0	-0.03	0	0	4.54	0	0	0	0	0	0	-18.13	-18.13
Inverter Transformer	MV1-4 T	364821	4905918	2	0	0	56.1	56.1	1	881.53	3.25	0	69.9	0	-0.03	0	0	4.6	0	0	0	0	0	0	-18.42	-18.42
Inverter Transformer	MV1-6 T	364482	4905835	2	0	0	56.1	56.1	1	889.19	3.25	0	69.98	0	-0.02	0	0	4.62	0	0	0	0	0	0	-18.52	-18.52
Inverter Transformer	MV1-9 T	364555	4905646	2	0	0	56.1	56.1	1	1081.84	3.25	0	71.68	0	0.04	0	0	5.08	0	0	0	0	0	0	-20.75	-20.75
Inverter Transformer	MV1-8 T	364782	4905647	2	0	0	56.1	56.1	1	1122.97	3.25	0	72.01	0	0.06	0	0	5.18	0	0	0	0	0	0	-21.18	-21.18
Inverter Transformer	MV2-4 T	365590	4906628	2	0	0	56.1	56.1	1	1130.09	3.25	0	72.06	0	0.06	0	0	5.19	0	0	0	0	0	0	-21.26	-21.26
Inverter Transformer	MV6-4 T	370244	4906966	2	0	0	69.4	69.4	1	5785.06	3.25	0	86.25	0	3.15	0	0	7.89	0	0	0	0	0	0	-27.94	-27.94
Inverter Transformer	MV6-1 T	370230	4907364	2	0	0	69.4	69.4	1	5801.41	3.25	0	86.27	0	3.16	0	0	7.9	0	0	0	0	0	0	-27.97	-27.97
Inverter Transformer	MV1-11 T	364649	4905414	2	0	0	56.1	56.1	1	1323	3.25	0	73.43	0	0.13	0	0	5.63	0	0	0	0	0	0	-23.13	-23.13
Inverter Transformer	MV2-3 T	365814	4906641	2	0	0	56.1	56.1	1	1352.55	3.25	0	73.62	0	0.14	0	0	5.7	0	0	0	0	0	0	-23.4	-23.4
Inverter Transformer	MV1-12 T	365044	4905386	2	0	0	56.1	56.1	1	1458.3	3.25	0	74.28	0	0.18	0	0	5.93	0	0	0	0	0	0	-24.33	-24.33
Inverter Transformer	MV2-2 T	365982	4906654	2	0	0	56.1	56.1	1	1519.62	3.25	0	74.63	0	0.21	0	0	6.06	0	0	0	0	0	0	-24.84	-24.84
Inverter Transformer	MV1-15 T	365309	4904994	2	0	0	56.1	56.1	1	1925.34	3.25	0	76.69	0	0.37	0	0	6.9	0	0	0	0	0	0	-27.9	-27.9
Inverter Transformer	MV3-12 T	367674	4907594	2	0	0	56.1	56.1	1	3325.81	3.25	0	81.44	0	0.97	0	0	9.41	0	0	0	0	0	0	-35.76	-35.76
Inverter Transformer	MV3-18 T	367757	4907412	2	0	0	56.1	56.1	1	3364.1	3.25	0	81.54	0	0.98	0	0	9.47	0	0	0	0	0	0	-35.93	-35.93
Inverter Transformer	MV3-13 T	367958	4907577	2	0	0	56.1	56.1	1	3596.62	3.25	0	82.12	0	1.08	0	0	9.84	0	0	0	0	0	0	-36.98	-36.98
Inverter Transformer	MV3-7 T	367951	4907754	2	0	0	56.1	56.1	1	3635.94	3.25	0	82.21	0	1.1	0	0	9.9	0	0	0	0	0	0	-37.15	-37.15
Inverter Transformer	MV3-3 T	367944	4907927	2	0	0	56.1	56.1	1	3682.07	3.25	0	82.32	0	1.12	0	0	9.97	0	0	0	0	0	0	-37.35	-37.35
Inverter Transformer	MV3-17 T	368183	4907472	2	0	0	56.1	56.1	1	3793.48	3.25	0	82.58	0	1.16	0	0	10.14	0	0	0	0	0	0	-37.83	-37.83
Inverter Transformer	MV3-10 T	368162	4907669	2	0	0	56.1	56.1	1	3816.84	3.25	0	82.63	0	1.17	0	0	10.18	0	0	0	0	0	0	-37.93	-37.93
Inverter Transformer	MV3-6 T	368156	4907834	2	0	0	56.1	56.1	1	3855.25	3.25	0	82.72	0	1.19	0	0	10.24	0	0	0	0	0	0	-38.09	-38.09
Inverter Transformer	MV3-1 T	368150	4907976	2	0	0	56.1	56.1	1	3892.83	3.25	0	82.81	0	1.2	0	0	10.29	0	0	0	0	0	0	-38.24	-38.24
Inverter Transformer	MV3-19 T	368352	4907347	2	0	0	56.1	56.1	1	3937.6	3.25	0	82.9	0	1.22	0	0	10.36	0	0	0	0	0	0	-38.43	-38.43
Inverter Transformer	MV3-15 T	368351	4907477	2	0	0	56.1	56.1	1	3959.27	3.25	0	82.95	0	1.23	0	0	10.39	0	0	0	0	0	0	-38.52	-38.52
Inverter Transformer	MV3-11 T	368340	4907662	2	0	0	56.1	56.1	1	3987.88	3.25	0	83.01	0	1.24	0	0	10.44	0	0	0	0	0	0	-38.63	-38.63
Inverter Transformer	MV3-5 T	368335	4907843	2	0	0	56.1	56.1	1	4029.49	3.25	0	83.11	0	1.26	0	0	10.5	0	0	0	0	0	0	-38.8	-38.8
Inverter Transformer	MV3-21 T	368484	4907206	2	0	0	56.1	56.1	1	4048.79	3.25	0	83.15	0	1.26	0	0	10.53	0	0	0	0	0	0	-38.88	-38.88
Inverter Transformer	MV3-16 T	368509	4907475	2	0	0	56.1	56.1	1	4114.13	3.25	0	83.29	0	1.29	0	0	10.62	0	0	0	0	0	0	-39.14	-39.14
Inverter Transformer	MV3-9 T	368517	4907703	2	0	0	56.1	56.1	1	4169.56	3.25	0	83.4	0	1.31	0	0	10.7	0	0	0	0	0	0	-39.36	-39.36
Inverter Transformer	MV3-4 T	368507	4907925	2	0	0	56.1	56.1	1	4217.61	3.25	0	83.5	0	1.33	0	0	10.77	0	0	0	0	0	0	-39.55	-39.55
Inverter Transformer	MV3-22 T	368661	4907142	2	0	0	56.1	56.1	1	4217.76	3.25	0	83.5	0	1.33	0	0	10.77	0	0	0	0	0	0	-39.55	-39.55
Inverter Transformer	MV3-20 T	368683	4907317	2	0	0	56.1	56.1	1	4260.47	3.25	0	83.59	0	1.35	0	0	10.84	0	0	0	0	0	0	-39.71	-39.71
Inverter Transformer	MV3-14 T	368678	4907498	2	0	0	56.1	56.1	1	4284.49	3.25	0	83.64	0	1.36	0	0	10.87	0	0	0	0	0	0	-39.81	-39.81
Inverter Transformer	MV3-8 T	368685	4907712	2	0	0	56.1	56.1	1	4335.09	3.25	0	83.74	0	1.38	0	0	10.94	0	0	0	0	0	0	-40	-40
Inverter Transformer	MV3-2 T	368677	4907928	2	0	0	56.1	56.1	1	4381.67	3.25	0	83.83	0	1.39	0	0	11.01	0	0	0	0	0	0	-40.18	-40.18
Inverter Transformer	MV4-13 T	369057	4908605	2	0	0	56.1	56.1	1	4963.25	3.25	0	84.92	0	1.61	0	0	11.81	0	0	0	0	0	0	-42.27	-42.27
Inverter Transformer	MV4-15 T	369170	4908481	2	0	0	56.1	56.1	1	5023.29	3.25	0	85.02	0	1.63	0	0	11.88	0	0	0	0	0	0	-42.48	-42.48
Inverter Transformer	MV4-12 T	369049	4908803	2	0	0	56.1	56.1	1	5034.33	3.25	0	85.04	0	1.64	0	0	11.9	0	0	0	0	0	0	-42.52	-42.52
Inverter Transformer	MV4-14 T	369182	4908507	2	0	0	56.1	56.1	1	5043.67	3.25	0	85.05	0	1.64	0	0	11.91	0	0	0	0	0	0	-42.55	-42.55
Inverter Transformer	MV4-7 T	369040	4909001	2	0	0	56.1	56.1	1	5111.21	3.25	0	85.17	0	1.67	0	0	12	0	0	0	0	0	0	-42.78	-42.78
Inverter Transformer	MV4-4 T	369033	4909199	2	0	0	56.1	56.1	1	5196.29	3.25	0	85.31	0	1.7	0	0	12.11	0	0	0	0	0	0	-43.06	-43.06
Inverter Transformer	MV4-11 T	369269	4908855	2	0	0	56.1	56.1	1	5256.35	3.25	0	85.41	0	1.72	0	0	12.19	0	0	0	0	0	0	-43.26	-43.26
Inverter Transformer	MV4-1 T	369017	4909397	2	0	0	56.1	56.1	1	5279.65	3.25	0	85.45	0	1.72	0	0	12.22	0	0	0	0	0	0	-43.34	-43.34
Inverter Transformer	MV4-10 T	369307	4908858	2	0	0	56.1	56.1	1	5292.32	3.25	0	85.47	0	1.73	0	0	12.23	0	0	0	0	0	0	-43.38	-43.38
Inverter Transformer	MV4-8 T	369262	4909001	2	0	0	56.1	56.1	1	5310.89	3.25	0	85.5	0	1.74	0	0	12.26	0	0	0	0	0	0	-43.44	-43.44
Inverter Transformer	MV4-9 T	369284	4909001	2	0	0	56.1	56.1	1	5330.77	3.25	0	85.54	0	1.74	0	0	12.28	0	0	0	0	0	0	-43.5	-43.5
Inverter Transformer	MV4-6 T	369249	4909192	2	0	0	56.1	56.1	1	5383.98	3.25	0	85.62	0	1.76	0	0	12.35	0	0	0	0	0	0	-43.67	-43.67
Inverter Transformer	MV4-5 T	369283	4909199	2	0	0	56.1	56.1	1	5417.42	3.25	0	85.68	0	1.77	0	0	12.39	0	0	0	0	0	0	-43.78	-43.78
Inverter Transformer	MV4-3 T	369234	4909397	2	0	0	56.1	56.1	1	5467.89	3.25	0	85.76	0	1.79	0	0	12.46	0	0	0	0	0	0	-43.94	-43.94
Inverter Transformer	MV4-2 T	369267	4909397	2	0	0	56.1	56.1	1	5496.7	3.25	0	85.8	0	1.8	0	0	12.49	0	0	0	0	0	0	-44.03	-44.03
Inverter Transformer	MV6-2 T	370091	4907339	2	0	0	56.1	56.1	1	5660.51	3.25	0	86.06	0	1.85	0	0	12.69	0	0	0	0	0	0	-44.55	-44.55
Inverter Transformer	MV6-3 T	370202	4907140	2	0	0	56.1	56.1	1	5753.06	3.25	0	86.2	0	1.89	0	0	12.81	0	0	0	0	0	0	-44.83	-44.83
Inverter Transformer	MV5-6 T	369987	4908507	2	0	0	56.1	56.1	1	5803.67	3.25	0	86.27	0	1.9	0	0	12.87	0	0	0	0	0	0	-44.99	-44.99
Inverter Transformer	MV5-5 T	370021	4908690	2	0	0	56.1	56.1	1	5894.52	3.25	0	86.41	0	1.93	0	0	12.98	0	0	0	0	0	0	-45.26	-45.26
Inverter Transformer	MV5-2 T	370011	4908853	2	0	0	56.1	56.1	1	5941.54	3.25	0	86.48	0	1.95	0	0	13.03	0	0	0	0	0	0	-45.4	-45.4

	Inverter Transformer	MV5-1 T	370015	4909142	2	0	0	56.1	56.1	1	6054.78	3.25	0	86.64	0	1.98	0	0	13.17	0	0	0	0	0	0	-45.73	-45.73
	Inverter Transformer	MV5-3 T	370237	4908851	2	0	0	56.1	56.1	1	6152.37	3.25	0	86.78	0	2.01	0	0	13.28	0	0	0	0	0	0	-46.02	-46.02
	Inverter Transformer	MV5-4 T	370330	4908707	2	0	0	56.1	56.1	1	6192.11	3.25	0	86.84	0	2.02	0	0	13.33	0	0	0	0	0	0	-46.13	-46.13
	Line Reactor	NGR	369421	4908787.5	5	0	0	45.4	45.4	1	5369.35	5.25	0	85.6	0	3.25	1.36	0.1	2.2	0	0	0	0	0	0	-47.05	-47.05
Limit. Valu	0	0																								
Level D/N:	30.9613	30.9613																								

Receiver: Existing Noise Receptor
ID: S-R67
X: 364563
Y: 4906932
Z: 4.5
Ground: 0

ISO	Description	ID	X	Y	Z	Ground	ReflOrd	LxT	LxN	L/A	Dist.	hm	Freq	Adiv	K0b	Agr	Abar	z	Aatm	Afol	Ahous	Cmet	CmetN	Dc	RL	LtotT	LtotN
	Inverter	MV1-1	364715	4906166	2	0	0	100.3	100.3	1	780.94	3.25	0	68.85	0	-0.36	0	0	10.1	0	0	0	0	0	0	21.72	21.72
	Inverter	MV1-2	364753	4906063	2	0	0	100.3	100.3	1	889.53	3.25	0	69.98	0	-0.3	0	0	10.53	0	0	0	0	0	0	20.1	20.1
	Inverter	MV1-4	364815	4905918	2	0	0	100.3	100.3	1	1044.85	3.25	0	71.38	0	-0.22	0	0	11.06	0	0	0	0	0	0	18.1	18.1
	Inverter	MV1-5	364671	4905892	2	0	0	100.3	100.3	1	1045.6	3.25	0	71.39	0	-0.22	0	0	11.06	0	0	0	0	0	0	18.09	18.09
	Inverter	MV2-4	365586	4906624	2	0	0	100.3	100.3	1	1068.36	3.25	0	71.57	0	-0.21	0	0	11.13	0	0	0	0	0	0	17.82	17.82
	Inverter	MV1-6	364477	4905835	2	0	0	100.3	100.3	1	1100.37	3.25	0	71.83	0	-0.2	0	0	11.23	0	0	0	0	0	0	17.45	17.45
	Inverter	MV1-9	364561	4905646	2	0	0	100.3	100.3	1	1286	3.25	0	73.18	0	-0.12	0	0	11.77	0	0	0	0	0	0	15.48	15.48
	Inverter	MV2-3	365820	4906641	2	0	0	100.3	100.3	1	1290.25	3.25	0	73.21	0	-0.12	0	0	11.78	0	0	0	0	0	0	15.44	15.44
	Inverter	MV1-8	364788	4905647	2	0	0	100.3	100.3	1	1304.55	3.25	0	73.31	0	-0.11	0	0	11.82	0	0	0	0	0	0	15.3	15.3
	Sol_Luce Substation	S_Substation	369426	4908792	3.5	0	0	112.1	112.1	1	5206.57	5.25	0	85.33	0	0.95	2.82	0.31	8.86	0	0	0	0	0	0	14.11	14.11
	Inverter	MV1-11	364655	4905414	2	0	0	100.3	100.3	1	1520.79	3.25	0	74.64	0	-0.03	0	0	12.38	0	0	0	0	0	0	13.32	13.32
	Inverter	MV1-12	365038	4905386	2	0	0	100.3	100.3	1	1617.33	3.25	0	75.18	0	0.01	0	0	12.61	0	0	0	0	0	0	12.52	12.52
	Inverter	MV1-7	364925	4905782	2	0	0	97.3	97.3	1	1205.63	3.25	0	72.62	0	-0.15	0	0	11.54	0	0	0	0	0	0	13.3	13.3
	Inverter	MV2-1	365842	4906816	2	0	0	97.3	97.3	1	1284.25	3.25	0	73.17	0	-0.12	0	0	11.76	0	0	0	0	0	0	12.5	12.5
	Inverter	MV1-10	365004	4905564	2	0	0	97.3	97.3	1	1437.33	3.25	0	74.15	0	-0.06	0	0	12.17	0	0	0	0	0	0	11.05	11.05
	Inverter	MV1-15	365315	4904994	2	0	0	100.3	100.3	1	2078.79	3.25	0	77.36	0	0.15	0	0	13.63	0	0	0	0	0	0	9.18	9.18
	Inverter	MV1-13	364731	4905241	2	0	0	97.3	97.3	1	1699.33	3.25	0	75.61	0	0.04	0	0	12.8	0	0	0	0	0	0	8.87	8.87
	Inverter	MV1-14	365163	4905049	2	0	0	97.3	97.3	1	1976.28	3.25	0	76.92	0	0.12	0	0	13.41	0	0	0	0	0	0	6.86	6.86
	Inverter	MV3-12	367668	4907594	2	0	0	100.3	100.3	1	3174.79	3.25	0	81.03	0	0.39	0	0	15.68	0	0	0	0	0	0	3.21	3.21
	Inverter	MV3-18	367752	4907412	2	0	0	100.3	100.3	1	3224.92	3.25	0	81.17	0	0.4	0	0	15.76	0	0	0	0	0	0	2.97	2.97
	Inverter	MV1-3	364440	4906039	2	0	0	89.1	89.1	1	901.43	3.25	0	70.1	0	0.66	0	0	6.13	0	0	0	0	0	0	12.17	12.17
	Inverter	MV3-13	367963	4907577	2	0	0	100.3	100.3	1	3460.64	3.25	0	81.78	0	0.44	0	0	16.17	0	0	0	0	0	0	1.92	1.92
	Inverter	MV3-7	367945	4907754	2	0	0	100.3	100.3	1	3480.46	3.25	0	81.83	0	0.45	0	0	16.2	0	0	0	0	0	0	1.83	1.83
	Inverter	MV3-3	367939	4907927	2	0	0	100.3	100.3	1	3519.57	3.25	0	81.93	0	0.45	0	0	16.26	0	0	0	0	0	0	1.66	1.66
	Inverter	MV3-17	368178	4907472	2	0	0	100.3	100.3	1	3655.11	3.25	0	82.26	0	0.48	0	0	16.49	0	0	0	0	0	0	1.09	1.09
	Inverter	MV3-10	368167	4907669	2	0	0	100.3	100.3	1	3678.59	3.25	0	82.31	0	0.48	0	0	16.53	0	0	0	0	0	0	0.99	0.99
	Inverter	MV3-6	368162	4907834	2	0	0	100.3	100.3	1	3710.31	3.25	0	82.39	0	0.48	0	0	16.58	0	0	0	0	0	0	0.86	0.86
	Inverter	MV3-19	368357	4907347	2	0	0	100.3	100.3	1	3816.63	3.25	0	82.63	0	0.5	0	0	16.75	0	0	0	0	0	0	0.42	0.42
	Inverter	MV3-15	368357	4907477	2	0	0	100.3	100.3	1	3832.94	3.25	0	82.67	0	0.5	0	0	16.78	0	0	0	0	0	0	0.36	0.36
	Inverter	MV3-11	368346	4907662	2	0	0	100.3	100.3	1	3852.79	3.25	0	82.72	0	0.51	0	0	16.81	0	0	0	0	0	0	0.28	0.28
	Inverter	MV3-21	368478	4907206	2	0	0	100.3	100.3	1	3924.58	3.25	0	82.88	0	0.52	0	0	16.93	0	0	0	0	0	0	-0.01	-0.01
	Inverter	MV3-16	368514	4907475	2	0	0	100.3	100.3	1	3988.14	3.25	0	83.02	0	0.53	0	0	17.03	0	0	0	0	0	0	-0.26	-0.26
	Inverter	MV3-9	368512	4907703	2	0	0	100.3	100.3	1	4023.56	3.25	0	83.09	0	0.53	0	0	17.09	0	0	0	0	0	0	-0.4	-0.4
	Inverter	MV3-20	368689	4907317	2	0	0	100.3	100.3	1	4143.92	3.25	0	83.35	0	0.55	0	0	17.28	0	0	0	0	0	0	-0.86	-0.86
	Inverter	MV3-14	368684	4907498	2	0	0	100.3	100.3	1	4159.69	3.25	0	83.38	0	0.55	0	0	17.3	0	0	0	0	0	0	-0.92	-0.92
	Inverter	MV3-8	368680	4907712	2	0	0	100.3	100.3	1	4190.24	3.25	0	83.44	0	0.55	0	0	17.35	0	0	0	0	0	0	-1.04	-1.04
	Inverter	MV4-7	369035	4909001	2	0	0	100.3	100.3	1	4927.43	3.25	0	84.85	0	0.64	0	0	18.47	0	0	0	0	0	0	-3.65	-3.65
	Inverter	MV4-4	369027	4909199	2	0	0	100.3	100.3	1	5006.65	3.25	0	84.99	0	0.64	0	0	18.59	0	0	0	0	0	0	-3.91	-3.91
	Inverter	MV4-11	369264	4908855	2	0	0	100.3	100.3	1	5079.11	3.25	0	85.12	0	0.65	0	0	18.7	0	0	0	0	0	0	-4.15	-4.15
	Inverter	MV4-1	369011	4909397	2	0	0	100.3	100.3	1	5085.36	3.25	0	85.13	0	0.65	0	0	18.71	0	0	0	0	0	0	-4.17	-4.17
	Inverter	MV4-10	369312	4908858	2	0	0	100.3	100.3	1	5124.69	3.25	0	85.19	0	0.65	0	0	18.76	0	0	0	0	0	0	-4.3	-4.3
	Inverter	MV4-8	369256	4909001	2	0	0	100.3	100.3	1	5128.84	3.25	0	85.2	0	0.65	0	0	18.77	0	0	0	0	0	0	-4.31	-4.31
	Inverter	MV4-9	369289	4909001	2	0	0	100.3	100.3	1	5159.05	3.25	0	85.25	0	0.66	0	0	18.81	0	0	0	0	0	0	-4.41	-4.41
	Inverter	MV4-6	369243	4909192	2	0	0	100.3	100.3	1	5197.12	3.25	0	85.32	0	0.66	0	0	18.87	0	0	0	0	0	0	-4.53	-4.53
	Inverter	MV4-5	369289	4909199	2	0	0	100.3	100.3	1	5241.6	3.25	0	85.39	0	0.66	0	0	18.93	0	0	0	0	0	0	-4.67	-4.67
	Inverter	MV2-2	365977	4906654	2	0	0	89.1	89.1	1	1441.07	3.25	0	74.17	0	0.78	0	0	7.11	0	0	0	0	0	0	7	7
	Inverter	MV4-3	369229	4909397	2	0	0	100.3	100.3	1	5277.1	3.25	0	85.45	0	0.66	0	0	18.98	0	0	0	0	0	0	-4.78	-4.78
	Inverter	MV4-2	369272	4909397	2	0	0	100.3	100.3	1	5315.16	3.25	0	85.51	0	0.67	0	0	19.04	0	0	0	0	0	0	-4.9	-4.9
	Inverter	MV6-2	370085	4907339	2	0	0	100.3	100.3	1	5536.98	3.25	0	85.87	0	0.68	0	0	19.35	0	0	0	0	0	0	-5.59	-5.59
	Inverter	MV6-3	370207	4907140	2	0	0	100.3	100.3	1	5647.83	3.25	0	86.04	0	0.69	0	0	19.51	0	0	0	0	0	0	-5.92	-5.92
	Inverter	MV5-5	370015	4908690	2	0	0	100.3	100.3	1	5728.43	3.25	0	86.16	0	0.69	0	0	19.62	0	0	0	0	0	0	-6.16	-6.16
	Inverter	MV5-2	370006	4908853	2	0	0	100.3	100.3	1	5772.04	3.25	0	86.23	0	0.7	0	0	19.68	0	0	0	0	0	0	-6.29	-6.29
	Inverter	MV5-1	370020	4909142	2	0	0	100.3	100.3	1	5887.53	3.25	0	86.4	0	0.7	0	0	19.84	0	0	0	0	0	0	-6.63	-6.63
	Inverter	MV5-3	370231	4908851	2	0	0	100.3	100.3	1	5984.04	3.25	0	86.54	0	0.7	0	0	19.97	0	0	0	0	0	0	-6.9	-6.9
	Inverter	MV5-4	370324	4908707	2	0	0	100.3	100.3	1	6028.25	3.25	0	86.6	0	0.71	0	0	20.03	0	0	0	0	0	0	-7.03	-7.03
	DSTATCOM - 10 MVAR #2	DSAT2	369403	4908757	2.5	0	0	96.6	96.6	1	5172.64	3.5	0	85.27	0	3.7	0	0	3.44	0	0	0	0	0	0	4.22	4.22
	DSTATCOM - 10 MVAR #1	DSAT1	369437	4908757	2.5	0	0	96.6	96.6	1	5204.47	3.5	0	85.33	0	3.71	0	0	3.45	0	0	0	0	0	0	4.14	4.14
	Inverter	MV6-1	370235	4907364	2	0	0	97.3	97.3	1	5688.43	3.25	0	86.1	0	0.69	0	0	19.56	0	0	0	0	0	0	-9.04	-9.04
	Gardiner Substation	G_Sub	366586.3	4903349.9	2.5	0	0	90.8	90.8	1	4114.02	4.25	0	83.29	0	1.39	2.58	0.28	7.52	0	0	0	0	0	0	-4	-4

SubstationTransformer	W_ST	369711.17	4906112.3	2.5	0	0	92	92	1	5213.02	4.25	0	85.34	0	1.69	2.28	0.28	8.87	0	0	0	0	0	0	-6.21	-6.21
Inverter	MV3-1	368156	4907976	2	0	0	89.1	89.1	1	3741.6	3.25	0	82.46	0	1.33	0	0	10.71	0	0	0	0	0	0	-5.45	-5.45
Inverter	MV3-5	368340	4907843	2	0	0	89.1	89.1	1	3885.31	3.25	0	82.79	0	1.36	0	0	10.92	0	0	0	0	0	0	-6.02	-6.02
Inverter	MV3-4	368502	4907925	2	0	0	89.1	89.1	1	4062.24	3.25	0	83.18	0	1.41	0	0	11.17	0	0	0	0	0	0	-6.7	-6.7
Inverter	MV3-22	368656	4907142	2	0	0	89.1	89.1	1	4098.38	3.25	0	83.25	0	1.42	0	0	11.22	0	0	0	0	0	0	-6.84	-6.84
Inverter	MV3-2	368671	4907928	2	0	0	89.1	89.1	1	4227.02	3.25	0	83.52	0	1.45	0	0	11.41	0	0	0	0	0	0	-7.32	-7.32
Fixed Reactor Bank 1	FRB1	369378	4908755	6	0	0	89.8	89.8	1	5148.55	5.25	0	85.23	0	-0.54	0	0	8.79	0	0	0	0	0	0	-3.71	-3.71
Inverter	MV4-13	369051	4908605	2	0	0	89.1	89.1	1	4789.68	3.25	0	84.61	0	1.59	0	0	12.18	0	0	0	0	0	0	-9.32	-9.32
Fixed Reactor Bank 2	FRB2	369464	4908755	6	0	0	89.8	89.8	1	5229.07	5.25	0	85.37	0	-0.53	0	0	8.89	0	0	0	0	0	0	-3.95	-3.95
Westbrook Inverter Enclosur	W_INV2	369374	4906388	2	0	0	89.1	89.1	1	4841.66	3.25	0	84.7	0	1.6	0	0	12.25	0	0	0	0	0	0	-9.49	-9.49
Inverter	MV4-12	369043	4908803	2	0	0	89.1	89.1	1	4855	3.25	0	84.72	0	1.6	0	0	12.27	0	0	0	0	0	0	-9.54	-9.54
Inverter	MV4-15	369176	4908481	2	0	0	89.1	89.1	1	4866.13	3.25	0	84.74	0	1.61	0	0	12.28	0	0	0	0	0	0	-9.58	-9.58
Inverter	MV4-14	369176	4908507	2	0	0	89.1	89.1	1	4874.46	3.25	0	84.76	0	1.61	0	0	12.3	0	0	0	0	0	0	-9.6	-9.6
Inverters	G_Inv1	366526.4	4903225.8	2	0	0	87.7	87.7	1	4194.15	3.25	0	83.45	0	2.81	0	0	5.08	0	0	0	0	0	0	-3.68	-3.68
Inverters	G_Inv2	366676.9	4903239.1	2	0	0	87.7	87.7	1	4255.13	3.25	0	83.58	0	2.81	0	0	5.15	0	0	0	0	0	0	-3.88	-3.88
Westbrook Inverter Enclosur	W_INV3	369508	4906164	2	0	0	89.1	89.1	1	5004.28	3.25	0	84.99	0	1.64	0	0	12.47	0	0	0	0	0	0	-10.04	-10.04
Inverters	G_Inv3	366583.7	4903091.4	2	0	0	87.7	87.7	1	4339.75	3.25	0	83.75	0	2.82	0	0	5.24	0	0	0	0	0	0	-4.15	-4.15
Inverters	G_Inv4	366732.8	4903105	2	0	0	87.7	87.7	1	4399.31	3.25	0	83.87	0	2.82	0	0	5.3	0	0	0	0	0	0	-4.33	-4.33
Westbrook Inverter Enclosur	W_INV4	369673	4906164	2	0	0	89.1	89.1	1	5167.39	3.25	0	85.27	0	1.68	0	0	12.69	0	0	0	0	0	0	-10.58	-10.58
Westbrook Inverter Enclosur	W_INV5	369719	4906574	2	0	0	89.1	89.1	1	5168.41	3.25	0	85.27	0	1.68	0	0	12.69	0	0	0	0	0	0	-10.58	-10.58
Westbrook Inverter Enclosur	W_INV7	369780	4906417	2	0	0	89.1	89.1	1	5242.36	3.25	0	85.39	0	1.7	0	0	12.79	0	0	0	0	0	0	-10.82	-10.82
Inverters	G_Inv5	366638.5	4902958.1	2	0	0	87.7	87.7	1	4483.26	3.25	0	84.03	0	2.83	0	0	5.39	0	0	0	0	0	0	-4.59	-4.59
Westbrook Inverter Enclosur	W_INV6	369875	4906578	2	0	0	89.1	89.1	1	5323.78	3.25	0	85.52	0	1.72	0	0	12.89	0	0	0	0	0	0	-11.08	-11.08
Inverters	G_Inv6	366788.5	4902972	2	0	0	87.7	87.7	1	4542.52	3.25	0	84.15	0	2.83	0	0	5.46	0	0	0	0	0	0	-4.78	-4.78
Inverters	G_Inv7	366694.6	4902824.7	2	0	0	87.7	87.7	1	4627.49	3.25	0	84.31	0	2.84	0	0	5.55	0	0	0	0	0	0	-5.03	-5.03
Inverters	G_Inv8	366844.5	4902838.5	2	0	0	87.7	87.7	1	4686.36	3.25	0	84.42	0	2.84	0	0	5.61	0	0	0	0	0	0	-5.21	-5.21
Inverters	G_Inv9	366750.9	4902691.8	2	0	0	87.7	87.7	1	4771.39	3.25	0	84.57	0	2.85	0	0	5.7	0	0	0	0	0	0	-5.46	-5.46
Inverter	MV5-6	369982	4908507	2	0	0	89.1	89.1	1	5643.24	3.25	0	86.03	0	1.8	0	0	13.31	0	0	0	0	0	0	-12.08	-12.08
Inverters	G_Inv10	366900.7	4902704.8	2	0	0	87.7	87.7	1	4830.53	3.25	0	84.68	0	2.85	0	0	5.76	0	0	0	0	0	0	-5.64	-5.64
Westbrook Inverter Enclosur	W_INV1	369409	4906578	2	0	0	86.1	86.1	1	4858.91	3.25	0	84.73	0	1.6	0	0	12.27	0	0	0	0	0	0	-12.55	-12.55
Inverter	MV6-4	370250	4906966	2	0	0	86.1	86.1	1	5687.1	3.25	0	86.1	0	1.81	0	0	13.36	0	0	0	0	0	0	-15.21	-15.21
Inverter Transformer	MV1-7 T	364919	4905782	2	0	0	69.4	69.4	1	1203.84	3.25	0	72.61	0	1.82	0	0	4.08	0	0	0	0	0	0	-9.17	-9.17
Inverter Transformer	MV2-1 T	365836	4906816	2	0	0	69.4	69.4	1	1278.28	3.25	0	73.13	0	1.87	0	0	4.17	0	0	0	0	0	0	-9.82	-9.82
Inverter Transformer	MV1-10 T	365010	4905564	2	0	0	69.4	69.4	1	1439.18	3.25	0	74.16	0	1.95	0	0	4.36	0	0	0	0	0	0	-11.12	-11.12
Inverter Transformer	MV1-13 T	364725	4905241	2	0	0	69.4	69.4	1	1698.74	3.25	0	75.6	0	2.06	0	0	4.65	0	0	0	0	0	0	-12.96	-12.96
Westbrook Inverter Transfor	W_INVTR1	369403	4906578	2	0	0	78.2	78.2	1	4852.93	3.25	0	84.72	0	-3.15	0	0	2.36	0	0	0	0	0	0	-5.69	-5.69
Westbrook Inverter Transfor	W_INVTR2	369368	4906388	2	0	0	77.3	77.3	1	4835.7	3.25	0	84.69	0	-3.14	0	0	2.36	0	0	0	0	0	0	-6.56	-6.56
Inverter Transformer	MV1-14 T	365157	4905049	2	0	0	69.4	69.4	1	1974.47	3.25	0	76.91	0	2.16	0	0	4.94	0	0	0	0	0	0	-14.66	-14.66
Westbrook Inverter Transfor	W_INVTR3	369514	4906164	2	0	0	77.3	77.3	1	5010.21	3.25	0	85	0	-3.18	0	0	2.42	0	0	0	0	0	0	-6.89	-6.89
Westbrook Inverter Transfor	W_INVTR4	369679	4906164	2	0	0	77.3	77.3	1	5173.32	3.25	0	85.28	0	-3.21	0	0	2.47	0	0	0	0	0	0	-7.19	-7.19
Westbrook Inverter Transfor	W_INVTR5	369725	4906574	2	0	0	77.3	77.3	1	5174.4	3.25	0	85.28	0	-3.21	0	0	2.47	0	0	0	0	0	0	-7.2	-7.2
Westbrook Inverter Transfor	W_INVTR7	369786	4906417	2	0	0	77.3	77.3	1	5248.33	3.25	0	85.4	0	-3.23	0	0	2.5	0	0	0	0	0	0	-7.33	-7.33
Westbrook Inverter Transfor	W_INVTR6	369881	4906578	2	0	0	77.3	77.3	1	5329.77	3.25	0	85.53	0	-3.24	0	0	2.52	0	0	0	0	0	0	-7.47	-7.47
Inverter Transformer	MV1-1 T	364721	4906166	2	0	0	56.1	56.1	1	782.13	3.25	0	68.87	0	-0.06	0	0	4.35	0	0	0	0	0	0	-17.1	-17.1
Inverter Transformer	MV1-2 T	364759	4906063	2	0	0	56.1	56.1	1	890.83	3.25	0	70	0	-0.02	0	0	4.62	0	0	0	0	0	0	-18.54	-18.54
Inverter Transformer	MV1-3 T	364435	4906039	2	0	0	56.1	56.1	1	902.13	3.25	0	70.11	0	-0.02	0	0	4.65	0	0	0	0	0	0	-18.68	-18.68
Inverter Transformer	MV1-5 T	364676	4905892	2	0	0	56.1	56.1	1	1046.12	3.25	0	71.39	0	0.03	0	0	5	0	0	0	0	0	0	-20.36	-20.36
Inverter Transformer	MV1-4 T	364821	4905918	2	0	0	56.1	56.1	1	1046.31	3.25	0	71.39	0	0.03	0	0	5	0	0	0	0	0	0	-20.36	-20.36
Inverter Transformer	MV2-4 T	365590	4906628	2	0	0	56.1	56.1	1	1071.05	3.25	0	71.6	0	0.04	0	0	5.06	0	0	0	0	0	0	-20.63	-20.63
Inverter Transformer	MV1-6 T	364482	4905835	2	0	0	56.1	56.1	1	1099.99	3.25	0	71.83	0	0.05	0	0	5.13	0	0	0	0	0	0	-20.94	-20.94
Inverter Transformer	MV6-4 T	370244	4906966	2	0	0	69.4	69.4	1	5681.1	3.25	0	86.09	0	3.14	0	0	7.82	0	0	0	0	0	0	-27.7	-27.7
Inverter Transformer	MV6-1 T	370230	4907364	2	0	0	69.4	69.4	1	5683.44	3.25	0	86.09	0	3.14	0	0	7.82	0	0	0	0	0	0	-27.7	-27.7
Inverter Transformer	MV2-3 T	365814	4906641	2	0	0	56.1	56.1	1	1284.4	3.25	0	73.17	0	0.12	0	0	5.55	0	0	0	0	0	0	-22.78	-22.78
Inverter Transformer	MV1-9 T	364555	4905646	2	0	0	56.1	56.1	1	1286.03	3.25	0	73.19	0	0.12	0	0	5.55	0	0	0	0	0	0	-22.79	-22.79
Inverter Transformer	MV1-8 T	364782	4905647	2	0	0	56.1	56.1	1	1303.53	3.25	0	73.3	0	0.12	0	0	5.59	0	0	0	0	0	0	-22.96	-22.96
Inverter Transformer	MV2-2 T	365982	4906654	2	0	0	56.1	56.1	1	1445.98	3.25	0	74.2	0	0.18	0	0	5.9	0	0	0	0	0	0	-24.22	-24.22
Inverter Transformer	MV1-11 T	364649	4905414	2	0	0	56.1	56.1	1	1520.44	3.25	0	74.64	0	0.21	0	0	6.06	0	0	0	0	0	0	-24.85	-24.85
Inverter Transformer	MV1-12 T	365044	4905386	2	0	0	56.1	56.1	1	1619.1	3.25	0	75.19	0	0.25	0	0	6.27	0	0	0	0	0	0	-25.64	-25.64
Inverter Transformer	MV1-15 T	365309	4904994	2	0	0	56.1	56.1	1	2076.62	3.25	0	77.35	0	0.44	0	0	7.19	0	0	0	0	0	0	-28.92	-28.92
Inverter Transformer	MV3-12 T	367674	4907594	2	0	0	56.1	56.1	1	3180.66	3.25	0	81.05	0	0.91	0	0	9.17	0	0	0	0	0	0	-35.07	-35.07
Inverter Transformer	MV3-18 T	367757	4907412	2	0	0	56.1	56.1	1	3229.87	3.25	0	81.18	0	0.93	0	0	9.25	0	0	0	0	0	0	-35.3	-35.3
Inverter Transformer	MV3-13 T	367958	4907577	2	0	0	56.1	56.1	1	3455.73	3.25	0	81.77	0	1.02	0	0	9.62	0	0	0	0	0	0	-36.35	-36.35
Inverter Transformer	MV3-7 T	367951	4907754	2	0	0	56.1	56.1	1	3486.29	3.25	0	81.85	0	1.03	0	0	9.67	0	0	0	0	0	0	-36.49	-36.49
Inverter Transformer	MV3-3 T	367944	4907927	2	0	0	56.1	56.1	1	3524.37	3.25	0	81.94	0	1.05	0	0	9.73	0	0	0	0	0	0	-36.66	-36.66
Inverter Transformer	MV3-17 T	368183	4907472	2	0	0	56.1	56.1	1	3660.06	3.25	0	82.27	0	1.11	0	0	9.94	0	0	0	0	0	0	-37.26	-37.26
Inverter Transformer	MV3-10 T	368162	4907669	2	0	0	56.1	56.1	1	3673.69	3.25	0	82.3	0	1.11	0	0	9.96	0	0	0	0	0	0	-37.32	-37.32
Inverter Transformer	MV3-6 T	368156	4907834	2	0	0	56.1	56.1	1	3704.49	3.25	0	82.37	0	1.12	0	0	10.01	0	0	0	0	0	0	-37.45	-37.45
Inverter Transformer	MV3-1 T	368150	4907976	2	0	0	56.1	56.1	1	3735.84	3.25	0	82.45	0	1.14	0	0	10.06	0	0	0	0	0	0	-37.58	-37.58
Inverter Transformer	MV3-19 T	368352	4907347	2	0	0	56.1	56.1	1	3811.66	3.25	0	82.62	0	1.17	0	0	10.17	0	0	0	0	0	0	-37.9	-37.9
Inverter Transformer	MV3-15 T	368351	4907477	2	0	0	56.1	56.1	1	3827.01	3.25	0	82.66	0	1.17	0	0	10.2	0	0	0	0	0	0	-37.97	-37.97
Inverter Transformer	MV3-11 T	368340	4907662	2	0	0	56.1	56.1	1	3846.9	3.25	0	82.7	0	1.18	0	0	10.23	0	0	0	0	0	0	-38.05	-38.05
Inverter Transformer	MV3-5 T	368335	4907843	2	0	0	56.1	56.1	1	3880.45	3.25	0	82.78	0	1.2	0	0	10.28	0	0	0	0	0	0	-38.19	-38.19
Inverter Transformer	MV3-21 T	368484	4907206	2	0	0	56.1	56.1	1	3930.56	3.25	0	82.89	0	1.22	0	0	10.35	0	0	0	0	0	0	-38.4	-38.4
Inverter Transformer	MV3-16 T	368509	4907475	2	0	0	56.1	56.1	1	3983.19	3.25	0	83	0	1.24	0	0	10.43	0	0	0	0	0	0	-38.61	-38.61

	Inverter Transformer	MV3-9 T	368517	4907703	2	0	0	56.1	56.1	1	4028.47	3.25	0	83.1	0	1.26	0	0	10.5	0	0	0	0	0	0	-38.8	-38.8
	Inverter Transformer	MV3-4 T	368507	4907925	2	0	0	56.1	56.1	1	4067.09	3.25	0	83.19	0	1.27	0	0	10.55	0	0	0	0	0	0	-38.95	-38.95
	Inverter Transformer	MV3-22 T	368661	4907142	2	0	0	56.1	56.1	1	4103.38	3.25	0	83.26	0	1.29	0	0	10.61	0	0	0	0	0	0	-39.1	-39.1
	Inverter Transformer	MV3-20 T	368683	4907317	2	0	0	56.1	56.1	1	4137.95	3.25	0	83.34	0	1.3	0	0	10.66	0	0	0	0	0	0	-39.23	-39.23
	Inverter Transformer	MV3-14 T	368678	4907498	2	0	0	56.1	56.1	1	4153.74	3.25	0	83.37	0	1.31	0	0	10.68	0	0	0	0	0	0	-39.3	-39.3
	Inverter Transformer	MV3-8 T	368685	4907712	2	0	0	56.1	56.1	1	4195.15	3.25	0	83.45	0	1.32	0	0	10.74	0	0	0	0	0	0	-39.46	-39.46
	Inverter Transformer	MV3-2 T	368677	4907928	2	0	0	56.1	56.1	1	4232.85	3.25	0	83.53	0	1.34	0	0	10.8	0	0	0	0	0	0	-39.61	-39.61
	Inverter Transformer	MV4-13 T	369057	4908605	2	0	0	56.1	56.1	1	4795.31	3.25	0	84.62	0	1.55	0	0	11.58	0	0	0	0	0	0	-41.69	-41.69
	Inverter Transformer	MV4-15 T	369170	4908481	2	0	0	56.1	56.1	1	4860.44	3.25	0	84.73	0	1.57	0	0	11.67	0	0	0	0	0	0	-41.92	-41.92
	Inverter Transformer	MV4-12 T	369049	4908803	2	0	0	56.1	56.1	1	4860.54	3.25	0	84.73	0	1.57	0	0	11.67	0	0	0	0	0	0	-41.92	-41.92
	Inverter Transformer	MV4-14 T	369182	4908507	2	0	0	56.1	56.1	1	4880.14	3.25	0	84.77	0	1.58	0	0	11.7	0	0	0	0	0	0	-41.99	-41.99
	Inverter Transformer	MV4-7 T	369040	4909001	2	0	0	56.1	56.1	1	4931.97	3.25	0	84.86	0	1.6	0	0	11.76	0	0	0	0	0	0	-42.17	-42.17
	Inverter Transformer	MV4-4 T	369033	4909199	2	0	0	56.1	56.1	1	5012.01	3.25	0	85	0	1.63	0	0	11.87	0	0	0	0	0	0	-42.44	-42.44
	Inverter Transformer	MV4-11 T	369269	4908855	2	0	0	56.1	56.1	1	5083.74	3.25	0	85.12	0	1.66	0	0	11.96	0	0	0	0	0	0	-42.68	-42.68
	Inverter Transformer	MV4-1 T	369017	4909397	2	0	0	56.1	56.1	1	5090.61	3.25	0	85.14	0	1.66	0	0	11.97	0	0	0	0	0	0	-42.71	-42.71
	Inverter Transformer	MV4-10 T	369307	4908858	2	0	0	56.1	56.1	1	5120.06	3.25	0	85.19	0	1.67	0	0	12.01	0	0	0	0	0	0	-42.81	-42.81
	Inverter Transformer	MV4-8 T	369262	4909001	2	0	0	56.1	56.1	1	5134.33	3.25	0	85.21	0	1.67	0	0	12.03	0	0	0	0	0	0	-42.85	-42.85
	Inverter Transformer	MV4-9 T	369284	4909001	2	0	0	56.1	56.1	1	5154.47	3.25	0	85.24	0	1.68	0	0	12.06	0	0	0	0	0	0	-42.92	-42.92
	Inverter Transformer	MV4-6 T	369249	4909192	2	0	0	56.1	56.1	1	5202.52	3.25	0	85.32	0	1.7	0	0	12.12	0	0	0	0	0	0	-43.08	-43.08
	Inverter Transformer	MV4-5 T	369283	4909199	2	0	0	56.1	56.1	1	5236.19	3.25	0	85.38	0	1.71	0	0	12.16	0	0	0	0	0	0	-43.19	-43.19
	Inverter Transformer	MV4-3 T	369234	4909397	2	0	0	56.1	56.1	1	5281.52	3.25	0	85.46	0	1.73	0	0	12.22	0	0	0	0	0	0	-43.34	-43.34
	Inverter Transformer	MV4-2 T	369267	4909397	2	0	0	56.1	56.1	1	5310.73	3.25	0	85.5	0	1.74	0	0	12.26	0	0	0	0	0	0	-43.44	-43.44
	Inverter Transformer	MV6-2 T	370091	4907339	2	0	0	56.1	56.1	1	5542.96	3.25	0	85.87	0	1.82	0	0	12.55	0	0	0	0	0	0	-44.18	-44.18
	Inverter Transformer	MV6-3 T	370202	4907140	2	0	0	56.1	56.1	1	5642.84	3.25	0	86.03	0	1.85	0	0	12.67	0	0	0	0	0	0	-44.49	-44.49
	Inverter Transformer	MV5-6 T	369987	4908507	2	0	0	56.1	56.1	1	5648.04	3.25	0	86.04	0	1.85	0	0	12.68	0	0	0	0	0	0	-44.51	-44.51
	Inverter Transformer	MV5-5 T	370021	4908690	2	0	0	56.1	56.1	1	5734.14	3.25	0	86.17	0	1.88	0	0	12.78	0	0	0	0	0	0	-44.77	-44.77
	Inverter Transformer	MV5-2 T	370011	4908853	2	0	0	56.1	56.1	1	5776.76	3.25	0	86.23	0	1.89	0	0	12.84	0	0	0	0	0	0	-44.9	-44.9
	Inverter Transformer	MV5-1 T	370015	4909142	2	0	0	56.1	56.1	1	5882.89	3.25	0	86.39	0	1.93	0	0	12.96	0	0	0	0	0	0	-45.22	-45.22
	Inverter Transformer	MV5-3 T	370237	4908851	2	0	0	56.1	56.1	1	5989.73	3.25	0	86.55	0	1.96	0	0	13.09	0	0	0	0	0	0	-45.54	-45.54
	Inverter Transformer	MV5-4 T	370330	4908707	2	0	0	56.1	56.1	1	6033.98	3.25	0	86.61	0	1.98	0	0	13.14	0	0	0	0	0	0	-45.67	-45.67
	Line Reactor	NGR	369421	4908787.5	5	0	0	45.4	45.4	1	5200.29	5.25	0	85.32	0	3.26	1.35	0.11	2.13	0	0	0	0	0	0	-46.7	-46.7
Limit. Valu	0	0																								
Level D/N:	29.0345	29.0345																								

Receiver: Existing Noise Receptor
ID: S-R68
X: 364633
Y: 4906961
Z: 4.5
Ground: 0

ISO	Description	ID	X	Y	Z	Ground	ReflOrd	LxT	LxN	L/A	Dist.	hm	Freq	Adiv	K0b	Agr	Abar	z	Aatm	Afol	Ahous	Cmet	CmetN	Dc	RL	LtotT	LtotN
	Inverter	MV1-1	364715	4906166	2	0	0	100.3	100.3	1	799.22	3.25	0	69.05	0	-0.35	0	0	10.18	0	0	0	0	0	0	21.43	21.43
	Inverter	MV1-2	364753	4906063	2	0	0	100.3	100.3	1	905.99	3.25	0	70.14	0	-0.29	0	0	10.59	0	0	0	0	0	0	19.88	19.88
	Inverter	MV2-4	365586	4906624	2	0	0	100.3	100.3	1	1010.83	3.25	0	71.09	0	-0.24	0	0	10.95	0	0	0	0	0	0	18.51	18.51
	Inverter	MV1-4	364815	4905918	2	0	0	100.3	100.3	1	1058.76	3.25	0	71.5	0	-0.22	0	0	11.1	0	0	0	0	0	0	17.93	17.93
	Inverter	MV1-5	364671	4905892	2	0	0	100.3	100.3	1	1069.68	3.25	0	71.59	0	-0.21	0	0	11.13	0	0	0	0	0	0	17.8	17.8
	Inverter	MV1-6	364477	4905835	2	0	0	100.3	100.3	1	1136.76	3.25	0	72.11	0	-0.18	0	0	11.34	0	0	0	0	0	0	17.04	17.04
	Inverter	MV2-3	365820	4906641	2	0	0	100.3	100.3	1	1229.38	3.25	0	72.79	0	-0.14	0	0	11.61	0	0	0	0	0	0	16.05	16.05
	Inverter	MV1-9	364561	4905646	2	0	0	100.3	100.3	1	1316.97	3.25	0	73.39	0	-0.1	0	0	11.85	0	0	0	0	0	0	15.17	15.17
	Inverter	MV1-8	364788	4905647	2	0	0	100.3	100.3	1	1323.11	3.25	0	73.43	0	-0.1	0	0	11.87	0	0	0	0	0	0	15.11	15.11
	Sol_Luce Substation	S_Substation	369426	4908792	3.5	0	0	112.1	112.1	1	5130.83	5.25	0	85.2	0	0.93	2.84	0.31	8.77	0	0	0	0	0	0	14.33	14.33
	Inverter	MV1-11	364655	4905414	2	0	0	100.3	100.3	1	1547.16	3.25	0	74.79	0	-0.02	0	0	12.44	0	0	0	0	0	0	13.1	13.1
	Inverter	MV1-12	365038	4905386	2	0	0	100.3	100.3	1	1626.24	3.25	0	75.22	0	0.01	0	0	12.63	0	0	0	0	0	0	12.45	12.45
	Inverter	MV1-7	364925	4905782	2	0	0	97.3	97.3	1	1214.62	3.25	0	72.69	0	-0.15	0	0	11.57	0	0	0	0	0	0	13.2	13.2
	Inverter	MV2-1	365842	4906816	2	0	0	97.3	97.3	1	1217.67	3.25	0	72.71	0	-0.15	0	0	11.58	0	0	0	0	0	0	13.17	13.17
	Inverter	MV1-10	365004	4905564	2	0	0	97.3	97.3	1	1445.43	3.25	0	74.2	0	-0.05	0	0	12.19	0	0	0	0	0	0	10.98	10.98
	Inverter	MV1-15	365315	4904994	2	0	0	100.3	100.3	1	2081.88	3.25	0	77.37	0	0.15	0	0	13.63	0	0	0	0	0	0	9.16	9.16
	Inverter	MV1-13	364731	4905241	2	0	0	97.3	97.3	1	1722.79	3.25	0	75.72	0	0.04	0	0	12.85	0	0	0	0	0	0	8.69	8.69
	Inverter	MV1-14	365163	4905049	2	0	0	97.3	97.3	1	1984.1	3.25	0	76.95	0	0.12	0	0	13.43	0	0	0	0	0	0	6.81	6.81
	Inverter	MV3-12	367668	4907594	2	0	0	100.3	100.3	1	3100.31	3.25	0	80.83	0	0.38	0	0	15.55	0	0	0	0	0	0	3.55	3.55
	Inverter	MV3-18	367752	4907412	2	0	0	100.3	100.3	1	3151.44	3.25	0	80.97	0	0.39	0	0	15.64	0	0	0	0	0	0	3.31	3.31
	Inverter	MV3-13	367963	4907577	2	0	0	100.3	100.3	1	3386.5	3.25	0	81.6	0	0.43	0	0	16.04	0	0	0	0	0	0	2.24	2.24
	Inverter	MV3-7	367945	4907754	2	0	0	100.3	100.3	1	3405.61	3.25	0	81.64	0	0.44	0	0	16.07	0	0	0	0	0	0	2.16	2.16
	Inverter	MV1-3	364440	4906039	2	0	0	89.1	89.1	1	941.99	3.25	0	70.48	0	0.67	0	0	6.2	0	0	0	0	0	0	11.7	11.7
	Inverter	MV3-3	367939	4907927	2	0	0	100.3	100.3	1	3444.24	3.25	0	81.74	0	0.44	0	0	16.14	0	0	0	0	0	0	1.99	1.99
	Inverter	MV3-17	368178	4907472	2	0	0	100.3	100.3	1	3581.64	3.25	0	82.08	0	0.46	0	0	16.37	0	0	0	0	0	0	1.4	1.4
	Inverter	MV3-10	368167	4907669	2	0	0	100.3	100.3	1	3604.22	3.25	0	82.14	0	0.47	0	0	16.4	0	0	0	0	0	0	1.3	1.3
	Inverter	MV3-6	368162	4907834	2	0	0	100.3	100.3	1	3635.38	3.25	0	82.21	0	0.47	0	0	16.46	0	0	0	0	0	0	1.17	1.17
	Inverter	MV3-19	368357	4907347	2	0	0	100.3	100.3	1	3743.95	3.25	0	82.47	0	0.49	0	0	16.63	0	0	0	0	0	0	0.72	0.72
	Inverter	MV3-15	368357	4907477	2	0	0	100.3	100.3	1	3759.58	3.25	0	82.5	0	0.49	0	0	16.66	0	0	0	0	0	0	0.66	0.66
	Inverter	MV3-11	368346	4907662	2	0	0	100.3	100.3	1	3778.59	3.25	0	82.55	0	0.49	0	0	16.69	0	0	0	0	0	0	0.58	0.58
	Inverter	MV3-21	368478	4907206	2	0	0	100.3	100.3	1	3852.8	3.25	0	82.72	0	0.51	0	0	16.81	0	0	0	0	0	0	0.28	0.28
	Inverter	MV3-16	368514	4907475	2	0	0	100.3	100.3	1	3914.89	3.25	0	82.85	0	0.51	0	0	16.91	0	0	0	0	0	0	0.03	0.03

Inverter	MV3-9	368512	4907703	2	0	0	100.3	100.3	1	3949.33	3.25	0	82.93	0	0.52	0	0	16.97	0	0	0	0	0	0	-0.11	-0.11
Inverter	MV3-20	368689	4907317	2	0	0	100.3	100.3	1	4071.59	3.25	0	83.2	0	0.54	0	0	17.16	0	0	0	0	0	0	-0.58	-0.58
Inverter	MV3-14	368684	4907498	2	0	0	100.3	100.3	1	4086.44	3.25	0	83.23	0	0.54	0	0	17.19	0	0	0	0	0	0	-0.64	-0.64
Inverter	MV3-8	368680	4907712	2	0	0	100.3	100.3	1	4116.09	3.25	0	83.29	0	0.54	0	0	17.23	0	0	0	0	0	0	-0.75	-0.75
Inverter	MV4-7	369035	4909001	2	0	0	100.3	100.3	1	4851.72	3.25	0	84.72	0	0.63	0	0	18.36	0	0	0	0	0	0	-3.4	-3.4
Inverter	MV4-4	369027	4909199	2	0	0	100.3	100.3	1	4931.11	3.25	0	84.86	0	0.64	0	0	18.48	0	0	0	0	0	0	-3.66	-3.66
Inverter	MV4-11	369264	4908855	2	0	0	100.3	100.3	1	5003.34	3.25	0	84.99	0	0.64	0	0	18.59	0	0	0	0	0	0	-3.9	-3.9
Inverter	MV4-1	369011	4909397	2	0	0	100.3	100.3	1	5010.09	3.25	0	85	0	0.64	0	0	18.6	0	0	0	0	0	0	-3.92	-3.92
Inverter	MV2-2	365977	4906654	2	0	0	89.1	89.1	1	1378.62	3.25	0	73.79	0	0.77	0	0	7	0	0	0	0	0	0	7.51	7.51
Inverter	MV4-10	369312	4908858	2	0	0	100.3	100.3	1	5048.93	3.25	0	85.06	0	0.65	0	0	18.65	0	0	0	0	0	0	-4.05	-4.05
Inverter	MV4-8	369256	4909001	2	0	0	100.3	100.3	1	5053.09	3.25	0	85.07	0	0.65	0	0	18.66	0	0	0	0	0	0	-4.06	-4.06
Inverter	MV4-9	369289	4909001	2	0	0	100.3	100.3	1	5083.3	3.25	0	85.12	0	0.65	0	0	18.7	0	0	0	0	0	0	-4.16	-4.16
Inverter	MV4-6	369243	4909192	2	0	0	100.3	100.3	1	5121.47	3.25	0	85.19	0	0.65	0	0	18.76	0	0	0	0	0	0	-4.29	-4.29
Inverter	MV4-5	369289	4909199	2	0	0	100.3	100.3	1	5165.94	3.25	0	85.26	0	0.66	0	0	18.82	0	0	0	0	0	0	-4.43	-4.43
Inverter	MV4-3	369229	4909397	2	0	0	100.3	100.3	1	5201.66	3.25	0	85.32	0	0.66	0	0	18.87	0	0	0	0	0	0	-4.54	-4.54
Inverter	MV4-2	369272	4909397	2	0	0	100.3	100.3	1	5239.7	3.25	0	85.39	0	0.66	0	0	18.93	0	0	0	0	0	0	-4.67	-4.67
Inverter	MV6-2	370085	4907339	2	0	0	100.3	100.3	1	5465.09	3.25	0	85.75	0	0.68	0	0	19.25	0	0	0	0	0	0	-5.37	-5.37
Inverter	MV6-3	370207	4907140	2	0	0	100.3	100.3	1	5576.87	3.25	0	85.93	0	0.69	0	0	19.41	0	0	0	0	0	0	-5.71	-5.71
Inverter	MV5-5	370015	4908690	2	0	0	100.3	100.3	1	5652.91	3.25	0	86.05	0	0.69	0	0	19.52	0	0	0	0	0	0	-5.94	-5.94
Inverter	MV5-2	370006	4908853	2	0	0	100.3	100.3	1	5696.38	3.25	0	86.11	0	0.69	0	0	19.58	0	0	0	0	0	0	-6.07	-6.07
Inverter	MV5-1	370020	4909142	2	0	0	100.3	100.3	1	5811.76	3.25	0	86.29	0	0.7	0	0	19.74	0	0	0	0	0	0	-6.41	-6.41
Inverter	MV5-3	370231	4908851	2	0	0	100.3	100.3	1	5908.44	3.25	0	86.43	0	0.7	0	0	19.87	0	0	0	0	0	0	-6.69	-6.69
Inverter	MV5-4	370324	4908707	2	0	0	100.3	100.3	1	5952.81	3.25	0	86.49	0	0.7	0	0	19.93	0	0	0	0	0	0	-6.81	-6.81
DSTATCOM - 10 MVAR #2	DSAT2	369403	4908757	2.5	0	0	96.6	96.6	1	5096.91	3.5	0	85.15	0	3.7	0	0	3.4	0	0	0	0	0	0	4.39	4.39
DSTATCOM - 10 MVAR #1	DSAT1	369437	4908757	2.5	0	0	96.6	96.6	1	5128.75	3.5	0	85.2	0	3.7	0	0	3.41	0	0	0	0	0	0	4.32	4.32
Inverter	MV6-1	370235	4907364	2	0	0	97.3	97.3	1	5616.48	3.25	0	85.99	0	0.69	0	0	19.46	0	0	0	0	0	0	-8.83	-8.83
Gardiner Substation	G_Sub	366586.3	4903349.9	2.5	0	0	90.8	90.8	1	4105.54	4.25	0	83.27	0	1.39	2.58	0.29	7.5	0	0	0	0	0	0	-3.97	-3.97
Inverter	MV3-1	368156	4907976	2	0	0	89.1	89.1	1	3666.3	3.25	0	82.28	0	1.31	0	0	10.61	0	0	0	0	0	0	-5.14	-5.14
SubstationTransformer	W_ST	369711.17	4906112.3	2.5	0	0	92	92	1	5148.61	4.25	0	85.23	0	1.68	2.3	0.28	8.79	0	0	0	0	0	0	-6.03	-6.03
Inverter	MV3-5	368340	4907843	2	0	0	89.1	89.1	1	3810.48	3.25	0	82.62	0	1.35	0	0	10.81	0	0	0	0	0	0	-5.72	-5.72
Inverter	MV3-4	368502	4907925	2	0	0	89.1	89.1	1	3987.29	3.25	0	83.01	0	1.39	0	0	11.07	0	0	0	0	0	0	-6.41	-6.41
Inverter	MV3-22	368656	4907142	2	0	0	89.1	89.1	1	4027.07	3.25	0	83.1	0	1.4	0	0	11.12	0	0	0	0	0	0	-6.56	-6.56
Inverter	MV3-2	368671	4907928	2	0	0	89.1	89.1	1	4152.17	3.25	0	83.37	0	1.43	0	0	11.3	0	0	0	0	0	0	-7.04	-7.04
Fixed Reactor Bank 1	FRB1	369378	4908755	6	0	0	89.8	89.8	1	5072.82	5.25	0	85.1	0	-0.56	0	0	8.71	0	0	0	0	0	0	-3.48	-3.48
Inverter	MV4-13	369051	4908605	2	0	0	89.1	89.1	1	4713.97	3.25	0	84.47	0	1.57	0	0	12.08	0	0	0	0	0	0	-9.06	-9.06
Fixed Reactor Bank 2	FRB2	369464	4908755	6	0	0	89.8	89.8	1	5153.35	5.25	0	85.24	0	-0.54	0	0	8.8	0	0	0	0	0	0	-3.72	-3.72
Westbrook Inverter Enclosur	W_INV2	369374	4906388	2	0	0	89.1	89.1	1	4775.5	3.25	0	84.58	0	1.58	0	0	12.16	0	0	0	0	0	0	-9.27	-9.27
Inverter	MV4-12	369043	4908803	2	0	0	89.1	89.1	1	4779.23	3.25	0	84.59	0	1.59	0	0	12.17	0	0	0	0	0	0	-9.28	-9.28
Inverter	MV4-15	369176	4908481	2	0	0	89.1	89.1	1	4790.54	3.25	0	84.61	0	1.59	0	0	12.18	0	0	0	0	0	0	-9.32	-9.32
Inverter	MV4-14	369176	4908507	2	0	0	89.1	89.1	1	4798.85	3.25	0	84.62	0	1.59	0	0	12.19	0	0	0	0	0	0	-9.35	-9.35
Inverters	G_Inv1	366526.4	4903225.8	2	0	0	87.7	87.7	1	4187.68	3.25	0	83.44	0	2.81	0	0	5.08	0	0	0	0	0	0	-3.66	-3.66
Westbrook Inverter Enclosur	W_INV3	369508	4906164	2	0	0	89.1	89.1	1	4939.72	3.25	0	84.87	0	1.62	0	0	12.38	0	0	0	0	0	0	-9.82	-9.82
Inverters	G_Inv2	366676.9	4903239.1	2	0	0	87.7	87.7	1	4246.18	3.25	0	83.56	0	2.81	0	0	5.14	0	0	0	0	0	0	-3.85	-3.85
Inverters	G_Inv3	366583.7	4903091.4	2	0	0	87.7	87.7	1	4333.48	3.25	0	83.74	0	2.82	0	0	5.23	0	0	0	0	0	0	-4.13	-4.13
Westbrook Inverter Enclosur	W_INV5	369719	4906574	2	0	0	89.1	89.1	1	5100.7	3.25	0	85.15	0	1.66	0	0	12.6	0	0	0	0	0	0	-10.36	-10.36
Westbrook Inverter Enclosur	W_INV4	369673	4906164	2	0	0	89.1	89.1	1	5102.63	3.25	0	85.16	0	1.67	0	0	12.6	0	0	0	0	0	0	-10.36	-10.36
Inverters	G_Inv4	366732.8	4903105	2	0	0	87.7	87.7	1	4390.66	3.25	0	83.85	0	2.82	0	0	5.29	0	0	0	0	0	0	-4.31	-4.31
Westbrook Inverter Enclosur	W_INV7	369780	4906417	2	0	0	89.1	89.1	1	5175.67	3.25	0	85.28	0	1.68	0	0	12.7	0	0	0	0	0	0	-10.6	-10.6
Westbrook Inverter Enclosur	W_INV6	369875	4906578	2	0	0	89.1	89.1	1	5255.97	3.25	0	85.41	0	1.7	0	0	12.8	0	0	0	0	0	0	-10.86	-10.86
Inverters	G_Inv5	366638.5	4902958.1	2	0	0	87.7	87.7	1	4477.19	3.25	0	84.02	0	2.83	0	0	5.39	0	0	0	0	0	0	-4.58	-4.58
Inverters	G_Inv6	366788.5	4902972	2	0	0	87.7	87.7	1	4534.13	4.13	0	84.13	0	3.2	1.49	0	5.45	0	0	0	0	0	0	-6.6	-6.6
Inverters	G_Inv7	366694.6	4902824.7	2	0	0	87.7	87.7	1	4621.6	3.25	0	84.3	0	2.84	0	0	5.54	0	0	0	0	0	0	-5.02	-5.02
Inverters	G_Inv8	366844.5	4902838.5	2	0	0	87.7	87.7	1	4678.22	3.25	0	84.4	0	2.84	0	0	5.6	0	0	0	0	0	0	-5.19	-5.19
Inverter	MV5-6	369982	4908507	2	0	0	89.1	89.1	1	5567.94	3.25	0	85.91	0	1.78	0	0	13.21	0	0	0	0	0	0	-11.85	-11.85
Inverters	G_Inv9	366750.9	4902691.8	2	0	0	87.7	87.7	1	4765.67	3.25	0	84.56	0	2.85	0	0	5.69	0	0	0	0	0	0	-5.44	-5.44
Inverters	G_Inv10	366900.7	4902704.8	2	0	0	87.7	87.7	1	4822.62	3.25	0	84.67	0	2.85	0	0	5.75	0	0	0	0	0	0	-5.61	-5.61
Westbrook Inverter Enclosur	W_INV1	369409	4906578	2	0	0	86.1	86.1	1	4791.33	3.25	0	84.61	0	1.59	0	0	12.18	0	0	0	0	0	0	-12.32	-12.32
Inverter	MV6-4	370250	4906966	2	0	0	86.1	86.1	1	5617	3.25	0	85.99	0	1.79	0	0	13.27	0	0	0	0	0	0	-15	-15
Inverter Transformer	MV2-1 T	365836	4906816	2	0	0	69.4	69.4	1	1211.71	3.25	0	72.67	0	1.83	0	0	4.09	0	0	0	0	0	0	-9.24	-9.24
Inverter Transformer	MV1-7 T	364919	4905782	2	0	0	69.4	69.4	1	1213.2	3.25	0	72.68	0	1.83	0	0	4.09	0	0	0	0	0	0	-9.25	-9.25
Inverter Transformer	MV1-10 T	365010	4905564	2	0	0	69.4	69.4	1	1446.98	3.25	0	74.21	0	1.95	0	0	4.37	0	0	0	0	0	0	-11.18	-11.18
Westbrook Inverter Transfor	W_INVTR1	369403	4906578	2	0	0	78.2	78.2	1	4785.35	3.25	0	84.6	0	-3.13	0	0	2.34	0	0	0	0	0	0	-5.56	-5.56
Inverter Transformer	MV1-13 T	364725	4905241	2	0	0	69.4	69.4	1	1722.46	3.25	0	75.72	0	2.07	0	0	4.68	0	0	0	0	0	0	-13.12	-13.12
Westbrook Inverter Transfor	W_INVTR2	369368	4906388	2	0	0	77.3	77.3	1	4769.55	3.25	0	84.57	0	-3.13	0	0	2.33	0	0	0	0	0	0	-6.43	-6.43
Westbrook Inverter Transfor	W_INVTR3	369514	4906164	2	0	0	77.3	77.3	1	4945.64	3.25	0	84.88	0	-3.17	0	0	2.39	0	0	0	0	0	0	-6.77	-6.77
Inverter Transformer	MV1-14 T	365157	4905049	2	0	0	69.4	69.4	1	1982.51	3.25	0	76.94	0	2.17	0	0	4.95	0	0	0	0	0	0	-14.71	-14.71
Westbrook Inverter Transfor	W_INVTR5	369725	4906574	2	0	0	77.3	77.3	1	5106.69	3.25	0	85.16	0	-3.2	0	0	2.45	0	0	0	0	0	0	-7.07	-7.07
Westbrook Inverter Transfor	W_INVTR4	369679	4906164	2	0	0	77.3	77.3	1	5108.55	3.25	0	85.17	0	-3.2	0	0	2.45	0	0	0	0	0	0	-7.08	-7.08
Westbrook Inverter Transfor	W_INVTR7	369786	4906417	2	0	0	77.3	77.3	1	5181.64	3.25	0	85.29	0	-3.21	0	0	2.47	0	0	0	0	0	0	-7.21	-7.21
Westbrook Inverter Transfor	W_INVTR6	369881	4906578	2	0	0	77.3	77.3	1	5261.96	3.25	0	85.42	0	-3.23	0	0	2.5	0	0	0	0	0	0	-7.35	-7.35
Inverter Transformer	MV1-1 T	364721	4906166	2	0	0	56.1	56.1	1	799.86	3.25	0	69.06	0	-0.05	0	0	4.39	0	0	0	0	0	0	-17.34	-17.34
Inverter Transformer	MV1-2 T	364759	4906063	2	0	0	56.1	56.1	1	906.8	3.25	0	70.15	0	-0.02	0	0	4.66	0	0	0	0	0	0	-18.74	-18.74
Inverter Transformer	MV1-3 T	364435	4906039	2	0	0	56.1	56.1	1	943.02	3.25	0	70.49	0	-0.01	0	0	4.75	0	0	0	0	0	0	-19.18	-19.18
Inverter Transformer	MV2-4 T	365590	4906628	2	0	0	56.1	56.1	1	1013.28	3.25	0	71.11	0	0.02	0	0	4.92	0	0	0	0	0	0	-19.99	-19.99

	Inverter Transformer	MV1-4 T	364821	4905918	2	0	0	56.1	56.1	1	1059.81	3.25	0	71.5	0	0.03	0	0	5.03	0	0	0	0	0	0	-20.51	-20.51
	Inverter Transformer	MV1-5 T	364676	4905892	2	0	0	56.1	56.1	1	1069.87	3.25	0	71.59	0	0.04	0	0	5.05	0	0	0	0	0	0	-20.62	-20.62
	Inverter Transformer	MV1-6 T	364482	4905835	2	0	0	56.1	56.1	1	1136.08	3.25	0	72.11	0	0.06	0	0	5.21	0	0	0	0	0	0	-21.32	-21.32
	Inverter Transformer	MV6-4 T	370244	4906966	2	0	0	69.4	69.4	1	5611	3.25	0	85.98	0	3.13	0	0	7.78	0	0	0	0	0	0	-27.53	-27.53
	Inverter Transformer	MV6-1 T	370230	4907364	2	0	0	69.4	69.4	1	5611.49	3.25	0	85.98	0	3.13	0	0	7.78	0	0	0	0	0	0	-27.54	-27.54
	Inverter Transformer	MV2-3 T	365814	4906641	2	0	0	56.1	56.1	1	1223.59	3.25	0	72.75	0	0.09	0	0	5.41	0	0	0	0	0	0	-22.2	-22.2
	Inverter Transformer	MV1-9 T	364555	4905646	2	0	0	56.1	56.1	1	1317.31	3.25	0	73.39	0	0.13	0	0	5.62	0	0	0	0	0	0	-23.08	-23.08
	Inverter Transformer	MV1-8 T	364782	4905647	2	0	0	56.1	56.1	1	1322.42	3.25	0	73.43	0	0.13	0	0	5.63	0	0	0	0	0	0	-23.13	-23.13
	Inverter Transformer	MV2-2 T	365982	4906654	2	0	0	56.1	56.1	1	1383.49	3.25	0	73.82	0	0.15	0	0	5.77	0	0	0	0	0	0	-23.68	-23.68
	Inverter Transformer	MV1-11 T	364649	4905414	2	0	0	56.1	56.1	1	1547.08	3.25	0	74.79	0	0.22	0	0	6.12	0	0	0	0	0	0	-25.07	-25.07
	Inverter Transformer	MV1-12 T	365044	4905386	2	0	0	56.1	56.1	1	1627.74	3.25	0	75.23	0	0.25	0	0	6.29	0	0	0	0	0	0	-25.71	-25.71
	Inverter Transformer	MV1-15 T	365309	4904994	2	0	0	56.1	56.1	1	2079.92	3.25	0	77.36	0	0.44	0	0	7.2	0	0	0	0	0	0	-28.94	-28.94
	Inverter Transformer	MV3-12 T	367674	4907594	2	0	0	56.1	56.1	1	3106.18	3.25	0	80.84	0	0.87	0	0	9.05	0	0	0	0	0	0	-34.71	-34.71
	Inverter Transformer	MV3-18 T	367757	4907412	2	0	0	56.1	56.1	1	3156.39	3.25	0	80.98	0	0.9	0	0	9.13	0	0	0	0	0	0	-34.95	-34.95
	Inverter Transformer	MV3-13 T	367958	4907577	2	0	0	56.1	56.1	1	3381.58	3.25	0	81.58	0	0.99	0	0	9.5	0	0	0	0	0	0	-36.01	-36.01
	Inverter Transformer	MV3-7 T	367951	4907754	2	0	0	56.1	56.1	1	3411.45	3.25	0	81.66	0	1	0	0	9.55	0	0	0	0	0	0	-36.15	-36.15
	Inverter Transformer	MV3-3 T	367944	4907927	2	0	0	56.1	56.1	1	3449.04	3.25	0	81.75	0	1.02	0	0	9.61	0	0	0	0	0	0	-36.32	-36.32
	Inverter Transformer	MV3-17 T	368183	4907472	2	0	0	56.1	56.1	1	3586.59	3.25	0	82.09	0	1.08	0	0	9.82	0	0	0	0	0	0	-36.94	-36.94
	Inverter Transformer	MV3-10 T	368162	4907669	2	0	0	56.1	56.1	1	3599.32	3.25	0	82.12	0	1.08	0	0	9.84	0	0	0	0	0	0	-36.99	-36.99
	Inverter Transformer	MV3-6 T	368156	4907834	2	0	0	56.1	56.1	1	3629.55	3.25	0	82.2	0	1.09	0	0	9.89	0	0	0	0	0	0	-37.12	-37.12
	Inverter Transformer	MV3-1 T	368150	4907976	2	0	0	56.1	56.1	1	3660.54	3.25	0	82.27	0	1.11	0	0	9.94	0	0	0	0	0	0	-37.26	-37.26
	Inverter Transformer	MV3-19 T	368352	4907347	2	0	0	56.1	56.1	1	3738.98	3.25	0	82.46	0	1.14	0	0	10.06	0	0	0	0	0	0	-37.6	-37.6
	Inverter Transformer	MV3-15 T	368351	4907477	2	0	0	56.1	56.1	1	3753.64	3.25	0	82.49	0	1.14	0	0	10.08	0	0	0	0	0	0	-37.66	-37.66
	Inverter Transformer	MV3-11 T	368340	4907662	2	0	0	56.1	56.1	1	3772.7	3.25	0	82.53	0	1.15	0	0	10.11	0	0	0	0	0	0	-37.74	-37.74
	Inverter Transformer	MV3-5 T	368335	4907843	2	0	0	56.1	56.1	1	3805.62	3.25	0	82.61	0	1.17	0	0	10.16	0	0	0	0	0	0	-37.88	-37.88
	Inverter Transformer	MV3-21 T	368484	4907206	2	0	0	56.1	56.1	1	3858.79	3.25	0	82.73	0	1.19	0	0	10.24	0	0	0	0	0	0	-38.1	-38.1
	Inverter Transformer	MV3-16 T	368509	4907475	2	0	0	56.1	56.1	1	3909.93	3.25	0	82.84	0	1.21	0	0	10.32	0	0	0	0	0	0	-38.31	-38.31
	Inverter Transformer	MV3-9 T	368517	4907703	2	0	0	56.1	56.1	1	3954.24	3.25	0	82.94	0	1.23	0	0	10.39	0	0	0	0	0	0	-38.5	-38.5
	Inverter Transformer	MV3-4 T	368507	4907925	2	0	0	56.1	56.1	1	3992.14	3.25	0	83.02	0	1.24	0	0	10.44	0	0	0	0	0	0	-38.65	-38.65
	Inverter Transformer	MV3-22 T	368661	4907142	2	0	0	56.1	56.1	1	4032.07	3.25	0	83.11	0	1.26	0	0	10.5	0	0	0	0	0	0	-38.81	-38.81
	Inverter Transformer	MV3-20 T	368683	4907317	2	0	0	56.1	56.1	1	4065.62	3.25	0	83.18	0	1.27	0	0	10.55	0	0	0	0	0	0	-38.95	-38.95
	Inverter Transformer	MV3-14 T	368678	4907498	2	0	0	56.1	56.1	1	4080.49	3.25	0	83.21	0	1.28	0	0	10.57	0	0	0	0	0	0	-39.01	-39.01
	Inverter Transformer	MV3-8 T	368685	4907712	2	0	0	56.1	56.1	1	4121.01	3.25	0	83.3	0	1.29	0	0	10.63	0	0	0	0	0	0	-39.17	-39.17
	Inverter Transformer	MV3-2 T	368677	4907928	2	0	0	56.1	56.1	1	4158.01	3.25	0	83.38	0	1.31	0	0	10.69	0	0	0	0	0	0	-39.31	-39.31
	Inverter Transformer	MV4-13 T	369057	4908605	2	0	0	56.1	56.1	1	4719.59	3.25	0	84.48	0	1.52	0	0	11.48	0	0	0	0	0	0	-41.42	-41.42
	Inverter Transformer	MV4-12 T	369049	4908803	2	0	0	56.1	56.1	1	4784.77	3.25	0	84.6	0	1.55	0	0	11.57	0	0	0	0	0	0	-41.65	-41.65
	Inverter Transformer	MV4-15 T	369170	4908481	2	0	0	56.1	56.1	1	4784.85	3.25	0	84.6	0	1.55	0	0	11.57	0	0	0	0	0	0	-41.65	-41.65
	Inverter Transformer	MV4-14 T	369182	4908507	2	0	0	56.1	56.1	1	4804.53	3.25	0	84.63	0	1.55	0	0	11.59	0	0	0	0	0	0	-41.72	-41.72
	Inverter Transformer	MV4-7 T	369040	4909001	2	0	0	56.1	56.1	1	4856.26	3.25	0	84.73	0	1.57	0	0	11.66	0	0	0	0	0	0	-41.9	-41.9
	Inverter Transformer	MV4-4 T	369033	4909199	2	0	0	56.1	56.1	1	4936.46	3.25	0	84.87	0	1.6	0	0	11.77	0	0	0	0	0	0	-42.18	-42.18
	Inverter Transformer	MV4-11 T	369269	4908855	2	0	0	56.1	56.1	1	5007.97	3.25	0	84.99	0	1.63	0	0	11.86	0	0	0	0	0	0	-42.43	-42.43
	Inverter Transformer	MV4-1 T	369017	4909397	2	0	0	56.1	56.1	1	5015.33	3.25	0	85.01	0	1.63	0	0	11.87	0	0	0	0	0	0	-42.45	-42.45
	Inverter Transformer	MV4-10 T	369307	4908858	2	0	0	56.1	56.1	1	5044.29	3.25	0	85.06	0	1.64	0	0	11.91	0	0	0	0	0	0	-42.55	-42.55
	Inverter Transformer	MV4-8 T	369262	4909001	2	0	0	56.1	56.1	1	5058.58	3.25	0	85.08	0	1.65	0	0	11.93	0	0	0	0	0	0	-42.6	-42.6
	Inverter Transformer	MV4-9 T	369284	4909001	2	0	0	56.1	56.1	1	5078.72	3.25	0	85.12	0	1.65	0	0	11.96	0	0	0	0	0	0	-42.67	-42.67
	Inverter Transformer	MV4-6 T	369249	4909192	2	0	0	56.1	56.1	1	5126.87	3.25	0	85.2	0	1.67	0	0	12.02	0	0	0	0	0	0	-42.83	-42.83
	Inverter Transformer	MV4-5 T	369283	4909199	2	0	0	56.1	56.1	1	5160.54	3.25	0	85.25	0	1.68	0	0	12.06	0	0	0	0	0	0	-42.94	-42.94
	Inverter Transformer	MV4-3 T	369234	4909397	2	0	0	56.1	56.1	1	5206.08	3.25	0	85.33	0	1.7	0	0	12.12	0	0	0	0	0	0	-43.09	-43.09
	Inverter Transformer	MV4-2 T	369267	4909397	2	0	0	56.1	56.1	1	5235.27	3.25	0	85.38	0	1.71	0	0	12.16	0	0	0	0	0	0	-43.19	-43.19
	Inverter Transformer	MV6-2 T	370091	4907339	2	0	0	56.1	56.1	1	5471.07	3.25	0	85.76	0	1.79	0	0	12.46	0	0	0	0	0	0	-43.95	-43.95
	Inverter Transformer	MV6-3 T	370202	4907140	2	0	0	56.1	56.1	1	5571.88	3.25	0	85.92	0	1.82	0	0	12.58	0	0	0	0	0	0	-44.27	-44.27
	Inverter Transformer	MV5-6 T	369987	4908507	2	0	0	56.1	56.1	1	5572.74	3.25	0	85.92	0	1.83	0	0	12.59	0	0	0	0	0	0	-44.27	-44.27
	Inverter Transformer	MV5-5 T	370021	4908690	2	0	0	56.1	56.1	1	5658.62	3.25	0	86.05	0	1.85	0	0	12.69	0	0	0	0	0	0	-44.54	-44.54
	Inverter Transformer	MV5-2 T	370011	4908853	2	0	0	56.1	56.1	1	5701.1	3.25	0	86.12	0	1.87	0	0	12.74	0	0	0	0	0	0	-44.67	-44.67
	Inverter Transformer	MV5-1 T	370015	4909142	2	0	0	56.1	56.1	1	5807.12	3.25	0	86.28	0	1.9	0	0	12.87	0	0	0	0	0	0	-45	-45
	Inverter Transformer	MV5-3 T	370237	4908851	2	0	0	56.1	56.1	1	5914.13	3.25	0	86.44	0	1.94	0	0	13	0	0	0	0	0	0	-45.32	-45.32
	Inverter Transformer	MV5-4 T	370330	4908707	2	0	0	56.1	56.1	1	5958.55	3.25	0	86.5	0	1.95	0	0	13.05	0	0	0	0	0	0	-45.45	-45.45
	Line Reactor	NGR	369421	4908787.5	5	0	0	45.4	45.4	1	5124.55	5.25	0	85.19	0	3.26	1.35	0.11	2.1	0	0	0	0	0	0	-46.55	-46.55
Limit. Valu	0	0																								
Level D/N:	28.9733	28.9733																								

Receiver: Existing Noise Receptor
ID: S-R69
X: 364753
Y: 4906886
Z: 4.5
Ground: 0

ISO	Description	ID	X	Y	Z	Ground	ReflOrd	LxT	LxN	L/A	Dist.	hm	Freq	Adiv	K0b	Agr	Abar	z	Aatm	Afol	Ahous	Cmet	CmetN	Dc	RL	LtotT	LtotN
	Inverter	MV1-1	364715	4906166	2	0	0	100.3	100.3	1	721.01	3.25	0	68.16	0	-0.4	0	0	9.84	0	0	0	0	0	0	22.71	22.71
	Inverter	MV1-2	364753	4906063	2	0	0	100.3	100.3	1	823	3.25	0	69.31	0	-0.34	0	0	10.27	0	0	0	0	0	0	21.07	21.07
	Inverter	MV2-4	365586	4906624	2	0	0	100.3	100.3	1	873.23	3.25	0	69.82	0	-0.31	0	0	10.47	0	0	0	0	0	0	20.33	20.33
	Inverter	MV1-4	364815	4905918	2	0	0	100.3	100.3	1	969.99	3.25	0	70.74	0	-0.26	0	0	10.81	0	0	0	0	0	0	19.03	19.03
	Inverter	MV1-5	364671	4905892	2	0	0	100.3	100.3	1	997.38	3.25	0	70.98	0	-0.25	0	0	10.9	0	0	0	0	0	0	18.68	18.68

Inverter	MV1-6	364477	4905835	2	0	0	100.3	100.3	1	1086.64	3.25	0	71.72	0	-0.21	0	0	11.19	0	0	0	0	0	0	17.61	17.61
Inverter	MV2-3	365820	4906641	2	0	0	100.3	100.3	1	1094.77	3.25	0	71.79	0	-0.2	0	0	11.21	0	0	0	0	0	0	17.51	17.51
Inverter	MV1-8	364788	4905647	2	0	0	100.3	100.3	1	1239.5	3.25	0	72.86	0	-0.14	0	0	11.64	0	0	0	0	0	0	15.95	15.95
Inverter	MV1-9	364561	4905646	2	0	0	100.3	100.3	1	1254.78	3.25	0	72.97	0	-0.13	0	0	11.68	0	0	0	0	0	0	15.79	15.79
Sol_Luce Substation	S_Substation	369426	4908792	3.5	0	0	112.1	112.1	1	5046.76	5.25	0	85.06	0	0.91	2.86	0.3	8.68	0	0	0	0	0	0	14.58	14.58
Inverter	MV1-11	364655	4905414	2	0	0	100.3	100.3	1	1475.26	3.25	0	74.38	0	-0.04	0	0	12.26	0	0	0	0	0	0	13.71	13.71
Inverter	MV1-12	365038	4905386	2	0	0	100.3	100.3	1	1526.84	3.25	0	74.68	0	-0.02	0	0	12.39	0	0	0	0	0	0	13.27	13.27
Inverter	MV2-1	365842	4906816	2	0	0	97.3	97.3	1	1091.25	3.25	0	71.76	0	-0.2	0	0	11.2	0	0	0	0	0	0	14.55	14.55
Inverter	MV1-7	364925	4905782	2	0	0	97.3	97.3	1	1117.32	3.25	0	71.96	0	-0.19	0	0	11.28	0	0	0	0	0	0	14.26	14.26
Inverter	MV1-10	365004	4905564	2	0	0	97.3	97.3	1	1345.62	3.25	0	73.58	0	-0.09	0	0	11.93	0	0	0	0	0	0	11.9	11.9
Inverter	MV1-15	365315	4904994	2	0	0	100.3	100.3	1	1973.71	3.25	0	76.91	0	0.12	0	0	13.41	0	0	0	0	0	0	9.88	9.88
Inverter	MV1-13	364731	4905241	2	0	0	97.3	97.3	1	1645.15	3.25	0	75.32	0	0.02	0	0	12.67	0	0	0	0	0	0	9.29	9.29
Inverter	MV1-14	365163	4905049	2	0	0	97.3	97.3	1	1882.2	3.25	0	76.49	0	0.09	0	0	13.21	0	0	0	0	0	0	7.51	7.51
Inverter	MV3-12	367668	4907594	2	0	0	100.3	100.3	1	2999.75	3.25	0	80.54	0	0.36	0	0	15.37	0	0	0	0	0	0	4.04	4.04
Inverter	MV3-18	367752	4907412	2	0	0	100.3	100.3	1	3044.78	3.25	0	80.67	0	0.37	0	0	15.45	0	0	0	0	0	0	3.82	3.82
Inverter	MV3-13	367963	4907577	2	0	0	100.3	100.3	1	3283.53	3.25	0	81.33	0	0.41	0	0	15.87	0	0	0	0	0	0	2.71	2.71
Inverter	MV1-3	364440	4906039	2	0	0	89.1	89.1	1	902.99	3.25	0	70.11	0	0.66	0	0	6.13	0	0	0	0	0	0	12.15	12.15
Inverter	MV3-7	367945	4907754	2	0	0	100.3	100.3	1	3307.91	3.25	0	81.39	0	0.42	0	0	15.91	0	0	0	0	0	0	2.6	2.6
Inverter	MV3-3	367939	4907927	2	0	0	100.3	100.3	1	3351.76	3.25	0	81.51	0	0.43	0	0	15.98	0	0	0	0	0	0	2.4	2.4
Inverter	MV3-17	368178	4907472	2	0	0	100.3	100.3	1	3474.77	3.25	0	81.82	0	0.45	0	0	16.19	0	0	0	0	0	0	1.86	1.86
Inverter	MV3-10	368167	4907669	2	0	0	100.3	100.3	1	3502.64	3.25	0	81.89	0	0.45	0	0	16.24	0	0	0	0	0	0	1.74	1.74
Inverter	MV3-6	368162	4907834	2	0	0	100.3	100.3	1	3538.36	3.25	0	81.98	0	0.46	0	0	16.3	0	0	0	0	0	0	1.58	1.58
Inverter	MV3-19	368357	4907347	2	0	0	100.3	100.3	1	3633.37	3.25	0	82.21	0	0.47	0	0	16.45	0	0	0	0	0	0	1.18	1.18
Inverter	MV3-15	368357	4907477	2	0	0	100.3	100.3	1	3652.14	3.25	0	82.25	0	0.48	0	0	16.48	0	0	0	0	0	0	1.1	1.1
Inverter	MV3-11	368346	4907662	2	0	0	100.3	100.3	1	3675.84	3.25	0	82.31	0	0.48	0	0	16.52	0	0	0	0	0	0	1	1
Inverter	MV3-21	368478	4907206	2	0	0	100.3	100.3	1	3738.72	3.25	0	82.45	0	0.49	0	0	16.63	0	0	0	0	0	0	0.74	0.74
Inverter	MV3-16	368514	4907475	2	0	0	100.3	100.3	1	3806.84	3.25	0	82.61	0	0.5	0	0	16.74	0	0	0	0	0	0	0.46	0.46
Inverter	MV3-9	368512	4907703	2	0	0	100.3	100.3	1	3846.76	3.25	0	82.7	0	0.51	0	0	16.8	0	0	0	0	0	0	0.3	0.3
Inverter	MV3-20	368689	4907317	2	0	0	100.3	100.3	1	3959.53	3.25	0	82.95	0	0.52	0	0	16.98	0	0	0	0	0	0	-0.15	-0.15
Inverter	MV3-14	368684	4907498	2	0	0	100.3	100.3	1	3978.36	3.25	0	82.99	0	0.52	0	0	17.01	0	0	0	0	0	0	-0.22	-0.22
Inverter	MV3-8	368680	4907712	2	0	0	100.3	100.3	1	4012.93	3.25	0	83.07	0	0.53	0	0	17.07	0	0	0	0	0	0	-0.36	-0.36
Inverter	MV2-2	365977	4906654	2	0	0	89.1	89.1	1	1245.8	3.25	0	72.91	0	0.74	0	0	6.76	0	0	0	0	0	0	8.65	8.65
Inverter	MV4-7	369035	4909001	2	0	0	100.3	100.3	1	4775.85	3.25	0	84.58	0	0.62	0	0	18.25	0	0	0	0	0	0	-3.14	-3.14
Inverter	MV4-4	369027	4909199	2	0	0	100.3	100.3	1	4859.74	3.25	0	84.73	0	0.63	0	0	18.37	0	0	0	0	0	0	-3.42	-3.42
Inverter	MV4-11	369264	4908855	2	0	0	100.3	100.3	1	4922	3.25	0	84.84	0	0.63	0	0	18.47	0	0	0	0	0	0	-3.63	-3.63
Inverter	MV4-1	369011	4909397	2	0	0	100.3	100.3	1	4943.25	3.25	0	84.88	0	0.64	0	0	18.5	0	0	0	0	0	0	-3.7	-3.7
Inverter	MV4-10	369312	4908858	2	0	0	100.3	100.3	1	4967.22	3.25	0	84.92	0	0.64	0	0	18.53	0	0	0	0	0	0	-3.78	-3.78
Inverter	MV4-8	369256	4909001	2	0	0	100.3	100.3	1	4974.96	3.25	0	84.94	0	0.64	0	0	18.54	0	0	0	0	0	0	-3.81	-3.81
Inverter	MV4-9	369289	4909001	2	0	0	100.3	100.3	1	5004.85	3.25	0	84.99	0	0.64	0	0	18.59	0	0	0	0	0	0	-3.91	-3.91
Inverter	MV4-6	369243	4909192	2	0	0	100.3	100.3	1	5047.55	3.25	0	85.06	0	0.65	0	0	18.65	0	0	0	0	0	0	-4.05	-4.05
Inverter	MV4-5	369289	4909199	2	0	0	100.3	100.3	1	5091.69	3.25	0	85.14	0	0.65	0	0	18.71	0	0	0	0	0	0	-4.19	-4.19
Inverter	MV4-3	369229	4909397	2	0	0	100.3	100.3	1	5132.22	3.25	0	85.21	0	0.65	0	0	18.77	0	0	0	0	0	0	-4.32	-4.32
Inverter	MV4-2	369272	4909397	2	0	0	100.3	100.3	1	5169.77	3.25	0	85.27	0	0.66	0	0	18.83	0	0	0	0	0	0	-4.44	-4.44
Inverter	MV6-2	370085	4907339	2	0	0	100.3	100.3	1	5351.21	3.25	0	85.57	0	0.67	0	0	19.09	0	0	0	0	0	0	-5.02	-5.02
Inverter	MV6-3	370207	4907140	2	0	0	100.3	100.3	1	5459.91	3.25	0	85.74	0	0.68	0	0	19.24	0	0	0	0	0	0	-5.35	-5.35
Inverter	MV5-5	370015	4908690	2	0	0	100.3	100.3	1	5562.65	3.25	0	85.91	0	0.68	0	0	19.39	0	0	0	0	0	0	-5.67	-5.67
Inverter	MV5-2	370006	4908853	2	0	0	100.3	100.3	1	5609.2	3.25	0	85.98	0	0.69	0	0	19.45	0	0	0	0	0	0	-5.81	-5.81
Inverter	MV5-1	370020	4909142	2	0	0	100.3	100.3	1	5729.82	3.25	0	86.16	0	0.69	0	0	19.62	0	0	0	0	0	0	-6.17	-6.17
Inverter	MV5-3	370231	4908851	2	0	0	100.3	100.3	1	5819.77	3.25	0	86.3	0	0.7	0	0	19.75	0	0	0	0	0	0	-6.43	-6.43
Inverter	MV5-4	370324	4908707	2	0	0	100.3	100.3	1	5861.07	3.25	0	86.36	0	0.7	0	0	19.8	0	0	0	0	0	0	-6.55	-6.55
DSTATCOM - 10 MVAR #2	DSAT2	369403	4908757	2.5	0	0	96.6	96.6	1	5012.3	3.5	0	85	0	3.69	0	0	3.36	0	0	0	0	0	0	4.59	4.59
DSTATCOM - 10 MVAR #1	DSAT1	369437	4908757	2.5	0	0	96.6	96.6	1	5043.86	3.5	0	85.06	0	3.69	0	0	3.37	0	0	0	0	0	0	4.51	4.51
Inverter	MV6-1	370235	4907364	2	0	0	97.3	97.3	1	5502.8	3.25	0	85.81	0	0.68	0	0	19.3	0	0	0	0	0	0	-8.48	-8.48
Gardiner Substation	G_Sub	366586.3	4903349.9	2.5	0	0	90.8	90.8	1	3983.09	4.25	0	83	0	1.36	2.63	0.29	7.34	0	0	0	0	0	0	-3.55	-3.55
Inverter	MV3-1	368156	4907976	2	0	0	89.1	89.1	1	3573.31	3.25	0	82.06	0	1.29	0	0	10.47	0	0	0	0	0	0	-4.76	-4.76
SubstationTransformer	W_ST	369711.17	4906112.3	2.5	0	0	92	92	1	5018.18	4.25	0	85.01	0	1.64	2.33	0.28	8.64	0	0	0	0	0	0	-5.65	-5.65
Inverter	MV3-5	368340	4907843	2	0	0	89.1	89.1	1	3712.47	3.25	0	82.39	0	1.32	0	0	10.67	0	0	0	0	0	0	-5.33	-5.33
Inverter	MV3-4	368502	4907925	2	0	0	89.1	89.1	1	3890.31	3.25	0	82.8	0	1.37	0	0	10.93	0	0	0	0	0	0	-6.04	-6.04
Inverter	MV3-22	368656	4907142	2	0	0	89.1	89.1	1	3911.39	3.25	0	82.85	0	1.37	0	0	10.96	0	0	0	0	0	0	-6.12	-6.12
Inverter	MV3-2	368671	4907928	2	0	0	89.1	89.1	1	4054.19	3.25	0	83.16	0	1.41	0	0	11.16	0	0	0	0	0	0	-6.67	-6.67
Fixed Reactor Bank 1	FRB1	369378	4908755	6	0	0	89.8	89.8	1	4988.37	5.25	0	84.96	0	-0.57	0	0	8.61	0	0	0	0	0	0	-3.22	-3.22
Inverter	MV4-13	369051	4908605	2	0	0	89.1	89.1	1	4629.01	3.25	0	84.31	0	1.55	0	0	11.96	0	0	0	0	0	0	-8.76	-8.76
Westbrook Inverter Enclosur	W_INV2	369374	4906388	2	0	0	89.1	89.1	1	4647.76	3.25	0	84.34	0	1.55	0	0	11.99	0	0	0	0	0	0	-8.83	-8.83
Fixed Reactor Bank 2	FRB2	369464	4908755	6	0	0	89.8	89.8	1	5068.2	5.25	0	85.1	0	-0.56	0	0	8.7	0	0	0	0	0	0	-3.46	-3.46
Inverter	MV4-12	369043	4908803	2	0	0	89.1	89.1	1	4698.83	3.25	0	84.44	0	1.57	0	0	12.06	0	0	0	0	0	0	-9	-9
Inverter	MV4-15	369176	4908481	2	0	0	89.1	89.1	1	4701.8	3.25	0	84.45	0	1.57	0	0	12.06	0	0	0	0	0	0	-9.01	-9.01
Inverter	MV4-14	369176	4908507	2	0	0	89.1	89.1	1	4710.69	3.25	0	84.46	0	1.57	0	0	12.07	0	0	0	0	0	0	-9.05	-9.05
Inverters	G_Inv1	366526.4	4903225.8	2	0	0	87.7	87.7	1	4067.19	3.25	0	83.19	0	2.8	0	0	4.95	0	0	0	0	0	0	-3.27	-3.27
Westbrook Inverter Enclosur	W_INV3	369508	4906164	2	0	0	89.1	89.1	1	4809.5	3.25	0	84.64	0	1.59	0	0	12.21	0	0	0	0	0	0	-9.38	-9.38
Inverters	G_Inv2	366676.9	4903239.1	2	0	0	87.7	87.7	1	4123.26	3.25	0	83.3	0	2.8	0	0	5.01	0	0	0	0	0	0	-3.45	-3.45
Inverters	G_Inv3	366583.7	4903091.4	2	0	0	87.7	87.7	1	4213.13	3.25	0	83.49	0	2.81	0	0	5.1	0	0	0	0	0	0	-3.74	-3.74
Westbrook Inverter Enclosur	W_INV4	369673	4906164	2	0	0	89.1	89.1	1	4972.69	3.25	0	84.93	0	1.63	0	0	12.43	0	0	0	0	0	0	-9.93	-9.93
Westbrook Inverter Enclosur	W_INV5	369719	4906574	2	0	0	89.1	89.1	1	4975.79	3.25	0	84.94	0	1.63	0	0	12.43	0	0	0	0	0	0	-9.94	-9.94
Inverters	G_Inv4	366732.8	4903105	2	0	0	87.7	87.7	1	4267.97	3.25	0	83.6	0	2.81	0	0	5.16	0	0	0	0	0	0	-3.92	-3.92

Westbrook Inverter Enclosur	W_INV7	369780	4906417	2	0	0	89.1	89.1	1	5048.83	3.25	0	85.06	0	1.65	0	0	12.53	0	0	0	0	0	0	-10.19	-10.19
Inverters	G_Inv5	366638.5	4902958.1	2	0	0	87.7	87.7	1	4357.01	3.25	0	83.78	0	2.82	0	0	5.26	0	0	0	0	0	0	-4.2	-4.2
Westbrook Inverter Enclosur	W_INV6	369875	4906578	2	0	0	89.1	89.1	1	5131.25	3.25	0	85.2	0	1.67	0	0	12.64	0	0	0	0	0	0	-10.46	-10.46
Inverters	G_Inv6	366788.5	4902972	2	0	0	87.7	87.7	1	4411.65	3.25	0	83.89	0	2.82	0	0	5.32	0	0	0	0	0	0	-4.37	-4.37
Inverters	G_Inv7	366694.6	4902824.7	2	0	0	87.7	87.7	1	4501.55	3.25	0	84.07	0	2.83	0	0	5.41	0	0	0	0	0	0	-4.65	-4.65
Inverters	G_Inv8	366844.5	4902838.5	2	0	0	87.7	87.7	1	4555.94	3.25	0	84.17	0	2.84	0	0	5.47	0	0	0	0	0	0	-4.82	-4.82
Inverters	G_Inv9	366750.9	4902691.8	2	0	0	87.7	87.7	1	4645.74	3.25	0	84.34	0	2.84	0	0	5.57	0	0	0	0	0	0	-5.09	-5.09
Inverter	MV5-6	369982	4908507	2	0	0	89.1	89.1	1	5474.49	3.25	0	85.77	0	1.76	0	0	13.09	0	0	0	0	0	0	-11.56	-11.56
Inverters	G_Inv10	366900.7	4902704.8	2	0	0	87.7	87.7	1	4700.54	3.25	0	84.44	0	2.85	0	0	5.62	0	0	0	0	0	0	-5.25	-5.25
Westbrook Inverter Enclosur	W_INV1	369409	4906578	2	0	0	86.1	86.1	1	4666.18	3.25	0	84.38	0	1.56	0	0	12.01	0	0	0	0	0	0	-11.89	-11.89
Inverter	MV6-4	370250	4906966	2	0	0	86.1	86.1	1	5497.58	3.25	0	85.8	0	1.76	0	0	13.12	0	0	0	0	0	0	-14.63	-14.63
Inverter Transformer	MV2-1 T	365836	4906816	2	0	0	69.4	69.4	1	1085.26	3.25	0	71.71	0	1.75	0	0	3.93	0	0	0	0	0	0	-8.04	-8.04
Inverter Transformer	MV1-7 T	364919	4905782	2	0	0	69.4	69.4	1	1116.41	3.25	0	71.96	0	1.77	0	0	3.97	0	0	0	0	0	0	-8.34	-8.34
Inverter Transformer	MV1-10 T	365010	4905564	2	0	0	69.4	69.4	1	1346.75	3.25	0	73.59	0	1.9	0	0	4.26	0	0	0	0	0	0	-10.39	-10.39
Inverter Transformer	MV1-13 T	364725	4905241	2	0	0	69.4	69.4	1	1645.24	3.25	0	75.32	0	2.03	0	0	4.6	0	0	0	0	0	0	-12.6	-12.6
Westbrook Inverter Transfor	W_INVTR1	369403	4906578	2	0	0	78.2	78.2	1	4660.19	3.25	0	84.37	0	-3.11	0	0	2.3	0	0	0	0	0	0	-5.31	-5.31
Westbrook Inverter Transfor	W_INVTR2	369368	4906388	2	0	0	77.3	77.3	1	4641.79	3.25	0	84.33	0	-3.1	0	0	2.29	0	0	0	0	0	0	-6.18	-6.18
Inverter Transformer	MV1-14 T	365157	4905049	2	0	0	69.4	69.4	1	1880.9	3.25	0	76.49	0	2.13	0	0	4.84	0	0	0	0	0	0	-14.11	-14.11
Westbrook Inverter Transfor	W_INVTR3	369514	4906164	2	0	0	77.3	77.3	1	4815.43	3.25	0	84.65	0	-3.14	0	0	2.35	0	0	0	0	0	0	-6.52	-6.52
Westbrook Inverter Transfor	W_INVTR4	369679	4906164	2	0	0	77.3	77.3	1	4978.63	3.25	0	84.94	0	-3.17	0	0	2.41	0	0	0	0	0	0	-6.83	-6.83
Westbrook Inverter Transfor	W_INVTR5	369725	4906574	2	0	0	77.3	77.3	1	4981.78	3.25	0	84.95	0	-3.17	0	0	2.41	0	0	0	0	0	0	-6.84	-6.84
Westbrook Inverter Transfor	W_INVTR7	369786	4906417	2	0	0	77.3	77.3	1	5054.81	3.25	0	85.07	0	-3.19	0	0	2.43	0	0	0	0	0	0	-6.98	-6.98
Westbrook Inverter Transfor	W_INVTR6	369881	4906578	2	0	0	77.3	77.3	1	5137.24	3.25	0	85.21	0	-3.2	0	0	2.46	0	0	0	0	0	0	-7.13	-7.13
Inverter Transformer	MV1-1 T	364721	4906166	2	0	0	56.1	56.1	1	720.72	3.25	0	68.16	0	-0.08	0	0	4.19	0	0	0	0	0	0	-16.21	-16.21
Inverter Transformer	MV1-2 T	364759	4906063	2	0	0	56.1	56.1	1	823.03	3.25	0	69.31	0	-0.05	0	0	4.45	0	0	0	0	0	0	-17.66	-17.66
Inverter Transformer	MV2-4 T	365590	4906628	2	0	0	56.1	56.1	1	875.86	3.25	0	69.85	0	-0.03	0	0	4.59	0	0	0	0	0	0	-18.35	-18.35
Inverter Transformer	MV1-3 T	364435	4906039	2	0	0	56.1	56.1	1	904.73	3.25	0	70.13	0	-0.02	0	0	4.66	0	0	0	0	0	0	-18.71	-18.71
Inverter Transformer	MV1-4 T	364821	4905918	2	0	0	56.1	56.1	1	970.39	3.25	0	70.74	0	0	0	0	4.82	0	0	0	0	0	0	-19.5	-19.5
Inverter Transformer	MV1-5 T	364676	4905892	2	0	0	56.1	56.1	1	996.98	3.25	0	70.97	0	0.01	0	0	4.88	0	0	0	0	0	0	-19.81	-19.81
Inverter Transformer	MV1-6 T	364482	4905835	2	0	0	56.1	56.1	1	1085.38	3.25	0	71.71	0	0.04	0	0	5.09	0	0	0	0	0	0	-20.79	-20.79
Inverter Transformer	MV2-3 T	365814	4906641	2	0	0	56.1	56.1	1	1088.92	3.25	0	71.74	0	0.04	0	0	5.1	0	0	0	0	0	0	-20.82	-20.82
Inverter Transformer	MV6-4 T	370244	4906966	2	0	0	69.4	69.4	1	5491.58	3.25	0	85.79	0	3.11	0	0	7.7	0	0	0	0	0	0	-27.25	-27.25
Inverter Transformer	MV6-1 T	370230	4907364	2	0	0	69.4	69.4	1	5497.82	3.25	0	85.8	0	3.11	0	0	7.71	0	0	0	0	0	0	-27.27	-27.27
Inverter Transformer	MV1-8 T	364782	4905647	2	0	0	56.1	56.1	1	1239.34	3.25	0	72.86	0	0.1	0	0	5.44	0	0	0	0	0	0	-22.35	-22.35
Inverter Transformer	MV2-2 T	365982	4906654	2	0	0	56.1	56.1	1	1250.71	3.25	0	72.94	0	0.1	0	0	5.47	0	0	0	0	0	0	-22.46	-22.46
Inverter Transformer	MV1-9 T	364555	4905646	2	0	0	56.1	56.1	1	1255.71	3.25	0	72.98	0	0.1	0	0	5.48	0	0	0	0	0	0	-22.51	-22.51
Inverter Transformer	MV1-11 T	364649	4905414	2	0	0	56.1	56.1	1	1475.67	3.25	0	74.38	0	0.19	0	0	5.97	0	0	0	0	0	0	-24.48	-24.48
Inverter Transformer	MV1-12 T	365044	4905386	2	0	0	56.1	56.1	1	1527.97	3.25	0	74.68	0	0.21	0	0	6.08	0	0	0	0	0	0	-24.91	-24.91
Inverter Transformer	MV1-15 T	365309	4904994	2	0	0	56.1	56.1	1	1972.01	3.25	0	76.9	0	0.39	0	0	6.99	0	0	0	0	0	0	-28.22	-28.22
Inverter Transformer	MV3-12 T	367674	4907594	2	0	0	56.1	56.1	1	3005.58	3.25	0	80.56	0	0.83	0	0	8.88	0	0	0	0	0	0	-34.21	-34.21
Inverter Transformer	MV3-18 T	367757	4907412	2	0	0	56.1	56.1	1	3049.7	3.25	0	80.69	0	0.85	0	0	8.95	0	0	0	0	0	0	-34.43	-34.43
Inverter Transformer	MV3-13 T	367958	4907577	2	0	0	56.1	56.1	1	3278.64	3.25	0	81.31	0	0.95	0	0	9.33	0	0	0	0	0	0	-35.53	-35.53
Inverter Transformer	MV3-7 T	367951	4907754	2	0	0	56.1	56.1	1	3313.7	3.25	0	81.41	0	0.96	0	0	9.39	0	0	0	0	0	0	-35.7	-35.7
Inverter Transformer	MV3-3 T	367944	4907927	2	0	0	56.1	56.1	1	3356.51	3.25	0	81.52	0	0.98	0	0	9.46	0	0	0	0	0	0	-35.9	-35.9
Inverter Transformer	MV3-17 T	368183	4907472	2	0	0	56.1	56.1	1	3479.7	3.25	0	81.83	0	1.03	0	0	9.66	0	0	0	0	0	0	-36.46	-36.46
Inverter Transformer	MV3-10 T	368162	4907669	2	0	0	56.1	56.1	1	3497.77	3.25	0	81.88	0	1.04	0	0	9.68	0	0	0	0	0	0	-36.54	-36.54
Inverter Transformer	MV3-6 T	368156	4907834	2	0	0	56.1	56.1	1	3532.58	3.25	0	81.96	0	1.05	0	0	9.74	0	0	0	0	0	0	-36.7	-36.7
Inverter Transformer	MV3-1 T	368150	4907976	2	0	0	56.1	56.1	1	3567.59	3.25	0	82.05	0	1.07	0	0	9.79	0	0	0	0	0	0	-36.85	-36.85
Inverter Transformer	MV3-19 T	368352	4907347	2	0	0	56.1	56.1	1	3628.41	3.25	0	82.19	0	1.09	0	0	9.89	0	0	0	0	0	0	-37.12	-37.12
Inverter Transformer	MV3-15 T	368351	4907477	2	0	0	56.1	56.1	1	3646.22	3.25	0	82.24	0	1.1	0	0	9.92	0	0	0	0	0	0	-37.2	-37.2
Inverter Transformer	MV3-11 T	368340	4907662	2	0	0	56.1	56.1	1	3669.98	3.25	0	82.29	0	1.11	0	0	9.95	0	0	0	0	0	0	-37.3	-37.3
Inverter Transformer	MV3-5 T	368335	4907843	2	0	0	56.1	56.1	1	3707.64	3.25	0	82.38	0	1.13	0	0	10.01	0	0	0	0	0	0	-37.46	-37.46
Inverter Transformer	MV3-21 T	368484	4907206	2	0	0	56.1	56.1	1	3744.7	3.25	0	82.47	0	1.14	0	0	10.07	0	0	0	0	0	0	-37.62	-37.62
Inverter Transformer	MV3-16 T	368509	4907475	2	0	0	56.1	56.1	1	3801.9	3.25	0	82.6	0	1.16	0	0	10.16	0	0	0	0	0	0	-37.86	-37.86
Inverter Transformer	MV3-9 T	368517	4907703	2	0	0	56.1	56.1	1	3851.65	3.25	0	82.71	0	1.18	0	0	10.23	0	0	0	0	0	0	-38.07	-38.07
Inverter Transformer	MV3-4 T	368507	4907925	2	0	0	56.1	56.1	1	3895.13	3.25	0	82.81	0	1.2	0	0	10.3	0	0	0	0	0	0	-38.25	-38.25
Inverter Transformer	MV3-22 T	368661	4907142	2	0	0	56.1	56.1	1	3916.38	3.25	0	82.86	0	1.21	0	0	10.33	0	0	0	0	0	0	-38.34	-38.34
Inverter Transformer	MV3-20 T	368683	4907317	2	0	0	56.1	56.1	1	3953.56	3.25	0	82.94	0	1.23	0	0	10.39	0	0	0	0	0	0	-38.49	-38.49
Inverter Transformer	MV3-14 T	368678	4907498	2	0	0	56.1	56.1	1	3972.43	3.25	0	82.98	0	1.23	0	0	10.41	0	0	0	0	0	0	-38.57	-38.57
Inverter Transformer	MV3-8 T	368685	4907712	2	0	0	56.1	56.1	1	4017.82	3.25	0	83.08	0	1.25	0	0	10.48	0	0	0	0	0	0	-38.75	-38.75
Inverter Transformer	MV3-2 T	368677	4907928	2	0	0	56.1	56.1	1	4059.99	3.25	0	83.17	0	1.27	0	0	10.54	0	0	0	0	0	0	-38.92	-38.92
Inverter Transformer	MV4-13 T	369057	4908605	2	0	0	56.1	56.1	1	4634.59	3.25	0	84.32	0	1.49	0	0	11.36	0	0	0	0	0	0	-41.11	-41.11
Inverter Transformer	MV4-15 T	369170	4908481	2	0	0	56.1	56.1	1	4696.16	3.25	0	84.43	0	1.51	0	0	11.45	0	0	0	0	0	0	-41.34	-41.34
Inverter Transformer	MV4-12 T	369049	4908803	2	0	0	56.1	56.1	1	4704.31	3.25	0	84.45	0	1.52	0	0	11.46	0	0	0	0	0	0	-41.37	-41.37
Inverter Transformer	MV4-14 T	369182	4908507	2	0	0	56.1	56.1	1	4716.32	3.25	0	84.47	0	1.52	0	0	11.47	0	0	0	0	0	0	-41.41	-41.41
Inverter Transformer	MV4-7 T	369040	4909001	2	0	0	56.1	56.1	1	4780.33	3.25	0	84.59	0	1.55	0	0	11.56	0	0	0	0	0	0	-41.64	-41.64
Inverter Transformer	MV4-4 T	369033	4909199	2	0	0	56.1	56.1	1	4865.02	3.25	0	84.74	0	1.58	0	0	11.67	0	0	0	0	0	0	-41.93	-41.93
Inverter Transformer	MV4-11 T	369269	4908855	2	0	0	56.1	56.1	1	4926.58	3.25	0	84.85	0	1.6	0	0	11.76	0	0	0	0	0	0	-42.15	-42.15
Inverter Transformer	MV4-1 T	369017	4909397	2	0	0	56.1	56.1	1	4948.42	3.25	0	84.89	0	1.61	0	0	11.79	0	0	0	0	0	0	-42.22	-42.22
Inverter Transformer	MV4-10 T	369307	4908858	2	0	0	56.1	56.1	1	4962.63	3.25	0	84.91	0	1.61	0	0	11.8	0	0	0	0	0	0	-42.27	-42.27
Inverter Transformer	MV4-8 T	369262	4909001	2	0	0	56.1	56.1	1	4980.39	3.25	0	84.95	0	1.62	0	0	11.83	0	0	0	0	0	0	-42.33	-42.33
Inverter Transformer	MV4-9 T	369284	4909001	2	0	0	56.1	56.1	1	5000.32	3.25	0	84.98	0	1.63	0	0	11.85	0	0	0	0	0	0	-42.4	-42.4
Inverter Transformer	MV4-6 T	369249	4909192	2	0	0	56.1	56.1	1	5052.89	3.25	0	85.07	0	1.64	0	0	11.92	0	0	0	0	0	0	-42.58	-42.58
Inverter Transformer	MV4-5 T	369283	4909199	2	0	0	56.1	56.1	1	5086.34	3.25	0	85.13	0	1.66	0	0	11.97	0	0	0	0	0	0	-42.69	-42.69

	Inverter Transformer	MV4-3 T	369234	4909397	2	0	0	56.1	56.1	1	5136.58	3.25	0	85.21	0	1.67	0	0	12.03	0	0	0	0	0	0	-42.86	-42.86
	Inverter Transformer	MV4-2 T	369267	4909397	2	0	0	56.1	56.1	1	5165.4	3.25	0	85.26	0	1.68	0	0	12.07	0	0	0	0	0	0	-42.96	-42.96
	Inverter Transformer	MV6-2 T	370091	4907339	2	0	0	56.1	56.1	1	5357.19	3.25	0	85.58	0	1.75	0	0	12.32	0	0	0	0	0	0	-43.59	-43.59
	Inverter Transformer	MV6-3 T	370202	4907140	2	0	0	56.1	56.1	1	5454.92	3.25	0	85.74	0	1.79	0	0	12.44	0	0	0	0	0	0	-43.9	-43.9
	Inverter Transformer	MV5-6 T	369987	4908507	2	0	0	56.1	56.1	1	5479.27	3.25	0	85.77	0	1.79	0	0	12.47	0	0	0	0	0	0	-43.98	-43.98
	Inverter Transformer	MV5-5 T	370021	4908690	2	0	0	56.1	56.1	1	5568.33	3.25	0	85.91	0	1.82	0	0	12.58	0	0	0	0	0	0	-44.26	-44.26
	Inverter Transformer	MV5-2 T	370011	4908853	2	0	0	56.1	56.1	1	5613.88	3.25	0	85.99	0	1.84	0	0	12.64	0	0	0	0	0	0	-44.4	-44.4
	Inverter Transformer	MV5-1 T	370015	4909142	2	0	0	56.1	56.1	1	5725.22	3.25	0	86.16	0	1.88	0	0	12.77	0	0	0	0	0	0	-44.75	-44.75
	Inverter Transformer	MV5-3 T	370237	4908851	2	0	0	56.1	56.1	1	5825.42	3.25	0	86.31	0	1.91	0	0	12.89	0	0	0	0	0	0	-45.05	-45.05
	Inverter Transformer	MV5-4 T	370330	4908707	2	0	0	56.1	56.1	1	5866.77	3.25	0	86.37	0	1.92	0	0	12.94	0	0	0	0	0	0	-45.18	-45.18
	Line Reactor	NGR	369421	4908787.5	5	0	0	45.4	45.4	1	5040.43	5.25	0	85.05	0	3.26	1.35	0.1	2.06	0	0	0	0	0	0	-46.37	-46.37
Limit. Valu	0	0																								
Level D/N:	30.0298	30.0298																								

Receiver: Existing Noise Receptor
ID: S-R70
X: 364844
Y: 4906873
Z: 4.5
Ground: 0

ISO	Description	ID	X	Y	Z	Ground	ReflOrd	LxT	LxN	L/A	Dist.	hm	Freq	Adiv	K0b	Agr	Abar	z	Aatm	Afol	Ahous	Cmet	CmetN	Dc	RL	LtotT	LtotN
	Inverter	MV1-1	364715	4906166	2	0	0	100.3	100.3	1	718.68	3.25	0	68.13	0	-0.4	0	0	9.83	0	0	0	0	0	0	22.76	22.76
	Inverter	MV2-4	365586	4906624	2	0	0	100.3	100.3	1	782.67	3.25	0	68.87	0	-0.36	0	0	10.11	0	0	0	0	0	0	21.69	21.69
	Inverter	MV1-2	364753	4906063	2	0	0	100.3	100.3	1	815.1	3.25	0	69.22	0	-0.34	0	0	10.24	0	0	0	0	0	0	21.19	21.19
	Inverter	MV1-4	364815	4905918	2	0	0	100.3	100.3	1	955.44	3.25	0	70.6	0	-0.27	0	0	10.76	0	0	0	0	0	0	19.22	19.22
	Inverter	MV1-5	364671	4905892	2	0	0	100.3	100.3	1	996.14	3.25	0	70.97	0	-0.25	0	0	10.9	0	0	0	0	0	0	18.7	18.7
	Inverter	MV2-3	365820	4906641	2	0	0	100.3	100.3	1	1003.2	3.25	0	71.03	0	-0.24	0	0	10.92	0	0	0	0	0	0	18.61	18.61
	Inverter	MV1-6	364477	4905835	2	0	0	100.3	100.3	1	1100.97	3.25	0	71.84	0	-0.2	0	0	11.23	0	0	0	0	0	0	17.44	17.44
	Inverter	MV1-8	364788	4905647	2	0	0	100.3	100.3	1	1227.28	3.25	0	72.78	0	-0.14	0	0	11.6	0	0	0	0	0	0	16.07	16.07
	Inverter	MV1-9	364561	4905646	2	0	0	100.3	100.3	1	1259.22	3.25	0	73	0	-0.13	0	0	11.69	0	0	0	0	0	0	15.75	15.75
	Sol_Luce Substation	S_Substation	369426	4908792	3.5	0	0	112.1	112.1	1	4967.62	5.25	0	84.92	0	0.89	2.87	0.3	8.58	0	0	0	0	0	0	14.81	14.81
	Inverter	MV2-1	365842	4906816	2	0	0	97.3	97.3	1	999.63	3.25	0	71	0	-0.25	0	0	10.91	0	0	0	0	0	0	15.65	15.65
	Inverter	MV1-11	364655	4905414	2	0	0	100.3	100.3	1	1471.19	3.25	0	74.35	0	-0.04	0	0	12.25	0	0	0	0	0	0	13.75	13.75
	Inverter	MV1-12	365038	4905386	2	0	0	100.3	100.3	1	1499.6	3.25	0	74.52	0	-0.03	0	0	12.32	0	0	0	0	0	0	13.5	13.5
	Inverter	MV1-7	364925	4905782	2	0	0	97.3	97.3	1	1094.01	3.25	0	71.78	0	-0.2	0	0	11.21	0	0	0	0	0	0	14.52	14.52
	Inverter	MV1-10	365004	4905564	2	0	0	97.3	97.3	1	1318.74	3.25	0	73.4	0	-0.1	0	0	11.86	0	0	0	0	0	0	12.16	12.16
	Inverter	MV1-15	365315	4904994	2	0	0	100.3	100.3	1	1937.13	3.25	0	76.74	0	0.11	0	0	13.33	0	0	0	0	0	0	10.13	10.13
	Inverter	MV1-13	364731	4905241	2	0	0	97.3	97.3	1	1635.91	3.25	0	75.28	0	0.02	0	0	12.65	0	0	0	0	0	0	9.37	9.37
	Inverter	MV1-14	365163	4905049	2	0	0	97.3	97.3	1	1851.69	3.25	0	76.35	0	0.09	0	0	13.14	0	0	0	0	0	0	7.73	7.73
	Inverter	MV3-12	367668	4907594	2	0	0	100.3	100.3	1	2914.59	3.25	0	80.29	0	0.35	0	0	15.22	0	0	0	0	0	0	4.45	4.45
	Inverter	MV3-18	367752	4907412	2	0	0	100.3	100.3	1	2957.53	3.25	0	80.42	0	0.35	0	0	15.3	0	0	0	0	0	0	4.24	4.24
	Inverter	MV3-13	367963	4907577	2	0	0	100.3	100.3	1	3197.47	3.25	0	81.1	0	0.4	0	0	15.72	0	0	0	0	0	0	3.1	3.1
	Inverter	MV3-7	367945	4907754	2	0	0	100.3	100.3	1	3223.72	3.25	0	81.17	0	0.4	0	0	15.76	0	0	0	0	0	0	2.98	2.98
	Inverter	MV3-3	367939	4907927	2	0	0	100.3	100.3	1	3269.55	3.25	0	81.29	0	0.41	0	0	15.84	0	0	0	0	0	0	2.77	2.77
	Inverter	MV1-3	364440	4906039	2	0	0	89.1	89.1	1	926.7	3.25	0	70.34	0	0.67	0	0	6.17	0	0	0	0	0	0	11.88	11.88
	Inverter	MV3-17	368178	4907472	2	0	0	100.3	100.3	1	3387.38	3.25	0	81.6	0	0.43	0	0	16.04	0	0	0	0	0	0	2.24	2.24
	Inverter	MV3-10	368167	4907669	2	0	0	100.3	100.3	1	3417.01	3.25	0	81.67	0	0.44	0	0	16.09	0	0	0	0	0	0	2.11	2.11
	Inverter	MV3-6	368162	4907834	2	0	0	100.3	100.3	1	3454.37	3.25	0	81.77	0	0.44	0	0	16.15	0	0	0	0	0	0	1.95	1.95
	Inverter	MV3-19	368357	4907347	2	0	0	100.3	100.3	1	3544.83	3.25	0	81.99	0	0.46	0	0	16.31	0	0	0	0	0	0	1.56	1.56
	Inverter	MV3-15	368357	4907477	2	0	0	100.3	100.3	1	3564.55	3.25	0	82.04	0	0.46	0	0	16.34	0	0	0	0	0	0	1.47	1.47
	Inverter	MV3-11	368346	4907662	2	0	0	100.3	100.3	1	3589.78	3.25	0	82.1	0	0.47	0	0	16.38	0	0	0	0	0	0	1.36	1.36
	Inverter	MV3-21	368478	4907206	2	0	0	100.3	100.3	1	3649.23	3.25	0	82.24	0	0.48	0	0	16.48	0	0	0	0	0	0	1.11	1.11
	Inverter	MV3-16	368514	4907475	2	0	0	100.3	100.3	1	3719.05	3.25	0	82.41	0	0.49	0	0	16.59	0	0	0	0	0	0	0.82	0.82
	Inverter	MV3-9	368512	4907703	2	0	0	100.3	100.3	1	3760.74	3.25	0	82.51	0	0.49	0	0	16.66	0	0	0	0	0	0	0.65	0.65
	Inverter	MV3-20	368689	4907317	2	0	0	100.3	100.3	1	3870.55	3.25	0	82.76	0	0.51	0	0	16.84	0	0	0	0	0	0	0.21	0.21
	Inverter	MV3-14	368684	4907498	2	0	0	100.3	100.3	1	3890.53	3.25	0	82.8	0	0.51	0	0	16.87	0	0	0	0	0	0	0.13	0.13
	Inverter	MV3-8	368680	4907712	2	0	0	100.3	100.3	1	3926.68	3.25	0	82.88	0	0.52	0	0	16.93	0	0	0	0	0	0	-0.02	-0.02
	Inverter	MV2-2	365977	4906654	2	0	0	89.1	89.1	1	1153.97	3.25	0	72.24	0	0.72	0	0	6.6	0	0	0	0	0	0	9.5	9.5
	Inverter	MV4-7	369035	4909001	2	0	0	100.3	100.3	1	4700.31	3.25	0	84.44	0	0.61	0	0	18.13	0	0	0	0	0	0	-2.88	-2.88
	Inverter	MV4-4	369027	4909199	2	0	0	100.3	100.3	1	4786.21	3.25	0	84.6	0	0.62	0	0	18.26	0	0	0	0	0	0	-3.17	-3.17
	Inverter	MV4-11	369264	4908855	2	0	0	100.3	100.3	1	4844.04	3.25	0	84.7	0	0.63	0	0	18.35	0	0	0	0	0	0	-3.37	-3.37
	Inverter	MV4-1	369011	4909397	2	0	0	100.3	100.3	1	4871.8	3.25	0	84.75	0	0.63	0	0	18.39	0	0	0	0	0	0	-3.46	-3.46
	Inverter	MV4-10	369312	4908858	2	0	0	100.3	100.3	1	4889.1	3.25	0	84.78	0	0.63	0	0	18.42	0	0	0	0	0	0	-3.52	-3.52
	Inverter	MV4-8	369256	4909001	2	0	0	100.3	100.3	1	4898.38	3.25	0	84.8	0	0.63	0	0	18.43	0	0	0	0	0	0	-3.55	-3.55
	Inverter	MV4-9	369289	4909001	2	0	0	100.3	100.3	1	4928.12	3.25	0	84.85	0	0.64	0	0	18.47	0	0	0	0	0	0	-3.65	-3.65
	Inverter	MV4-6	369243	4909192	2	0	0	100.3	100.3	1	4972.82	3.25	0	84.93	0	0.64	0	0	18.54	0	0	0	0	0	0	-3.8	-3.8
	Inverter	MV4-5	369289	4909199	2	0	0	100.3	100.3	1	5016.8	3.25	0	85.01	0	0.64	0	0	18.6	0	0	0	0	0	0	-3.94	-3.94
	Inverter	MV4-3	369229	4909397	2	0	0	100.3	100.3	1	5059.53	3.25	0	85.08	0	0.65	0	0	18.67	0	0	0	0	0	0	-4.08	-4.08
	Inverter	MV4-2	369272	4909397	2	0	0	100.3	100.3	1	5096.84	3.25	0	85.15	0	0.65	0	0	18.72	0	0	0	0	0	0	-4.21	-4.21
	Inverter	MV6-2	370085	4907339	2	0	0	100.3	100.3	1	5261.68	3.25	0	85.42	0	0.66	0	0	18.96	0	0	0	0	0	0	-4.74	-4.74
	Inverter	MV6-3	370207	4907140	2	0	0	100.3	100.3	1	5369.64	3.25	0	85.6	0	0.67	0	0	19.12	0	0	0	0	0	0	-5.07	-5.07
	Inverter	MV5-5	370015	4908690	2	0	0	100.3	100.3	1	5480.94	3.25	0	85.78	0	0.68	0	0	19.27	0	0	0	0	0	0	-5.42	-5.42
	Inverter	MV5-2	370006	4908853	2	0	0	100.3	100.3	1	5528.71	3.25	0	85.85	0	0.68	0	0	19.34	0	0	0	0	0	0	-5.56	-5.56

Inverter	MV5-1	370020	4909142	2	0	0	100.3	100.3	1	5651.49	3.25	0	86.04	0	0.69	0	0	19.51	0	0	0	0	0	0	-5.93	-5.93
Inverter	MV5-3	370231	4908851	2	0	0	100.3	100.3	1	5738.66	3.25	0	86.18	0	0.69	0	0	19.63	0	0	0	0	0	0	-6.19	-6.19
Inverter	MV5-4	370324	4908707	2	0	0	100.3	100.3	1	5778.75	3.25	0	86.24	0	0.7	0	0	19.69	0	0	0	0	0	0	-6.31	-6.31
DSTATCOM - 10 MVAR #2	DSAT2	369403	4908757	2.5	0	0	96.6	96.6	1	4932.94	3.5	0	84.86	0	3.68	0	0	3.32	0	0	0	0	0	0	4.77	4.77
DSTATCOM - 10 MVAR #1	DSAT1	369437	4908757	2.5	0	0	96.6	96.6	1	4964.38	3.5	0	84.92	0	3.68	0	0	3.33	0	0	0	0	0	0	4.7	4.7
Inverter	MV6-1	370235	4907364	2	0	0	97.3	97.3	1	5413.31	3.25	0	85.67	0	0.67	0	0	19.18	0	0	0	0	0	0	-8.21	-8.21
Gardiner Substation	G_Sub	366586.3	4903349.9	2.5	0	0	90.8	90.8	1	3930.37	4.25	0	82.89	0	1.34	2.65	0.3	7.27	0	0	0	0	0	0	-3.38	-3.38
Inverter	MV3-1	368156	4907976	2	0	0	89.1	89.1	1	3490.84	3.25	0	81.86	0	1.27	0	0	10.35	0	0	0	0	0	0	-4.42	-4.42
SubstationTransformer	W_ST	369711.17	4906112.3	2.5	0	0	92	92	1	4926.26	4.25	0	84.85	0	1.62	2.35	0.28	8.53	0	0	0	0	0	0	-5.38	-5.38
Inverter	MV3-5	368340	4907843	2	0	0	89.1	89.1	1	3628.07	3.25	0	82.19	0	1.3	0	0	10.55	0	0	0	0	0	0	-4.99	-4.99
Inverter	MV3-4	368502	4907925	2	0	0	89.1	89.1	1	3806.27	3.25	0	82.61	0	1.34	0	0	10.81	0	0	0	0	0	0	-5.7	-5.7
Inverter	MV3-22	368656	4907142	2	0	0	89.1	89.1	1	3821.48	3.25	0	82.64	0	1.35	0	0	10.83	0	0	0	0	0	0	-5.76	-5.76
Inverter	MV3-2	368671	4907928	2	0	0	89.1	89.1	1	3969.76	3.25	0	82.98	0	1.38	0	0	11.04	0	0	0	0	0	0	-6.34	-6.34
Fixed Reactor Bank 1	FRB1	369378	4908755	6	0	0	89.8	89.8	1	4909.08	5.25	0	84.82	0	-0.58	0	0	8.51	0	0	0	0	0	0	-2.97	-2.97
Inverter	MV4-13	369051	4908605	2	0	0	89.1	89.1	1	4549.58	3.25	0	84.16	0	1.53	0	0	11.85	0	0	0	0	0	0	-8.48	-8.48
Westbrook Inverter Enclosur	W_INV2	369374	4906388	2	0	0	89.1	89.1	1	4555.89	3.25	0	84.17	0	1.53	0	0	11.86	0	0	0	0	0	0	-8.5	-8.5
Fixed Reactor Bank 2	FRB2	369464	4908755	6	0	0	89.8	89.8	1	4988.62	5.25	0	84.96	0	-0.57	0	0	8.61	0	0	0	0	0	0	-3.22	-3.22
Inverter	MV4-15	369176	4908481	2	0	0	89.1	89.1	1	4620.81	3.25	0	84.29	0	1.55	0	0	11.95	0	0	0	0	0	0	-8.73	-8.73
Inverter	MV4-12	369043	4908803	2	0	0	89.1	89.1	1	4621.31	3.25	0	84.3	0	1.55	0	0	11.95	0	0	0	0	0	0	-8.73	-8.73
Inverter	MV4-14	369176	4908507	2	0	0	89.1	89.1	1	4629.92	3.25	0	84.31	0	1.55	0	0	11.96	0	0	0	0	0	0	-8.76	-8.76
Westbrook Inverter Enclosur	W_INV3	369508	4906164	2	0	0	89.1	89.1	1	4717.58	3.25	0	84.47	0	1.57	0	0	12.08	0	0	0	0	0	0	-9.07	-9.07
Inverters	G_Inv1	366526.4	4903225.8	2	0	0	87.7	87.7	1	4016.53	3.25	0	83.08	0	2.79	0	0	4.89	0	0	0	0	0	0	-3.1	-3.1
Inverters	G_Inv2	366676.9	4903239.1	2	0	0	87.7	87.7	1	4069.98	3.25	0	83.19	0	2.8	0	0	4.95	0	0	0	0	0	0	-3.28	-3.28
Westbrook Inverter Enclosur	W_INV4	369673	4906164	2	0	0	89.1	89.1	1	4880.77	3.25	0	84.77	0	1.61	0	0	12.3	0	0	0	0	0	0	-9.63	-9.63
Westbrook Inverter Enclosur	W_INV5	369719	4906574	2	0	0	89.1	89.1	1	4884.16	3.25	0	84.78	0	1.61	0	0	12.31	0	0	0	0	0	0	-9.64	-9.64
Inverters	G_Inv3	366583.7	4903091.4	2	0	0	87.7	87.7	1	4162.58	3.25	0	83.39	0	2.81	0	0	5.05	0	0	0	0	0	0	-3.58	-3.58
Inverters	G_Inv4	366732.8	4903105	2	0	0	87.7	87.7	1	4214.9	3.25	0	83.5	0	2.81	0	0	5.11	0	0	0	0	0	0	-3.75	-3.75
Westbrook Inverter Enclosur	W_INV7	369780	4906417	2	0	0	89.1	89.1	1	4957.02	3.25	0	84.9	0	1.63	0	0	12.41	0	0	0	0	0	0	-9.88	-9.88
Westbrook Inverter Enclosur	W_INV6	369875	4906578	2	0	0	89.1	89.1	1	5039.64	3.25	0	85.05	0	1.65	0	0	12.52	0	0	0	0	0	0	-10.16	-10.16
Inverters	G_Inv5	366638.5	4902958.1	2	0	0	87.7	87.7	1	4306.59	3.25	0	83.68	0	2.82	0	0	5.2	0	0	0	0	0	0	-4.04	-4.04
Inverters	G_Inv6	366788.5	4902972	2	0	0	87.7	87.7	1	4358.77	3.25	0	83.79	0	2.82	0	0	5.26	0	0	0	0	0	0	-4.21	-4.21
Inverters	G_Inv7	366694.6	4902824.7	2	0	0	87.7	87.7	1	4451.23	3.25	0	83.97	0	2.83	0	0	5.36	0	0	0	0	0	0	-4.5	-4.5
Inverters	G_Inv8	366844.5	4902838.5	2	0	0	87.7	87.7	1	4503.24	4.09	0	84.07	0	3.2	1.49	0	5.41	0	0	0	0	0	0	-6.51	-6.51
Inverter	MV5-6	369982	4908507	2	0	0	89.1	89.1	1	5391.57	3.25	0	85.63	0	1.74	0	0	12.98	0	0	0	0	0	0	-11.29	-11.29
Inverters	G_Inv9	366750.9	4902691.8	2	0	0	87.7	87.7	1	4595.51	3.25	0	84.25	0	2.84	0	0	5.51	0	0	0	0	0	0	-4.94	-4.94
Inverters	G_Inv10	366900.7	4902704.8	2	0	0	87.7	87.7	1	4648	3.25	0	84.35	0	2.84	0	0	5.57	0	0	0	0	0	0	-5.09	-5.09
Westbrook Inverter Enclosur	W_INV1	369409	4906578	2	0	0	86.1	86.1	1	4574.52	3.25	0	84.21	0	1.53	0	0	11.89	0	0	0	0	0	0	-11.57	-11.57
Inverter	MV6-4	370250	4906966	2	0	0	86.1	86.1	1	5406.8	3.25	0	85.66	0	1.74	0	0	13	0	0	0	0	0	0	-14.34	-14.34
Inverter Transformer	MV2-1 T	365836	4906816	2	0	0	69.4	69.4	1	993.64	3.25	0	70.94	0	1.68	0	0	3.8	0	0	0	0	0	0	-7.07	-7.07
Inverter Transformer	MV1-7 T	364919	4905782	2	0	0	69.4	69.4	1	1093.58	3.25	0	71.78	0	1.75	0	0	3.94	0	0	0	0	0	0	-8.12	-8.12
Inverter Transformer	MV1-10 T	365010	4905564	2	0	0	69.4	69.4	1	1319.49	3.25	0	73.41	0	1.89	0	0	4.22	0	0	0	0	0	0	-10.17	-10.17
Inverter Transformer	MV1-13 T	364725	4905241	2	0	0	69.4	69.4	1	1636.33	3.25	0	75.28	0	2.03	0	0	4.59	0	0	0	0	0	0	-12.54	-12.54
Westbrook Inverter Transfor	W_INVTR1	369403	4906578	2	0	0	78.2	78.2	1	4568.54	3.25	0	84.2	0	-3.09	0	0	2.26	0	0	0	0	0	0	-5.13	-5.13
Westbrook Inverter Transfor	W_INVTR2	369368	4906388	2	0	0	77.3	77.3	1	4549.92	3.25	0	84.16	0	-3.08	0	0	2.26	0	0	0	0	0	0	-5.99	-5.99
Inverter Transformer	MV1-14 T	365157	4905049	2	0	0	69.4	69.4	1	1850.66	3.25	0	76.35	0	2.12	0	0	4.81	0	0	0	0	0	0	-13.93	-13.93
Westbrook Inverter Transfor	W_INVTR3	369514	4906164	2	0	0	77.3	77.3	1	4723.51	3.25	0	84.49	0	-3.12	0	0	2.32	0	0	0	0	0	0	-6.34	-6.34
Westbrook Inverter Transfor	W_INVTR4	369679	4906164	2	0	0	77.3	77.3	1	4886.71	3.25	0	84.78	0	-3.15	0	0	2.37	0	0	0	0	0	0	-6.66	-6.66
Westbrook Inverter Transfor	W_INVTR5	369725	4906574	2	0	0	77.3	77.3	1	4890.15	3.25	0	84.79	0	-3.16	0	0	2.38	0	0	0	0	0	0	-6.67	-6.67
Westbrook Inverter Transfor	W_INVTR7	369786	4906417	2	0	0	77.3	77.3	1	4962.99	3.25	0	84.91	0	-3.17	0	0	2.4	0	0	0	0	0	0	-6.8	-6.8
Westbrook Inverter Transfor	W_INVTR6	369881	4906578	2	0	0	77.3	77.3	1	5045.63	3.25	0	85.06	0	-3.19	0	0	2.43	0	0	0	0	0	0	-6.96	-6.96
Inverter Transformer	MV1-1 T	364721	4906166	2	0	0	56.1	56.1	1	717.62	3.25	0	68.12	0	-0.08	0	0	4.18	0	0	0	0	0	0	-16.16	-16.16
Inverter Transformer	MV2-4 T	365590	4906628	2	0	0	56.1	56.1	1	785.21	3.25	0	68.9	0	-0.06	0	0	4.36	0	0	0	0	0	0	-17.14	-17.14
Inverter Transformer	MV1-2 T	364759	4906063	2	0	0	56.1	56.1	1	814.45	3.25	0	69.22	0	-0.05	0	0	4.43	0	0	0	0	0	0	-17.54	-17.54
Inverter Transformer	MV1-3 T	364435	4906039	2	0	0	56.1	56.1	1	928.89	3.25	0	70.36	0	-0.01	0	0	4.72	0	0	0	0	0	0	-19.01	-19.01
Inverter Transformer	MV1-4 T	364821	4905918	2	0	0	56.1	56.1	1	955.28	3.25	0	70.6	0	0	0	0	4.78	0	0	0	0	0	0	-19.32	-19.32
Inverter Transformer	MV1-5 T	364676	4905892	2	0	0	56.1	56.1	1	995.28	3.25	0	70.96	0	0.01	0	0	4.88	0	0	0	0	0	0	-19.79	-19.79
Inverter Transformer	MV2-3 T	365814	4906641	2	0	0	56.1	56.1	1	997.36	3.25	0	70.98	0	0.01	0	0	4.88	0	0	0	0	0	0	-19.81	-19.81
Inverter Transformer	MV1-6 T	364482	4905835	2	0	0	56.1	56.1	1	1099.32	3.25	0	71.82	0	0.05	0	0	5.12	0	0	0	0	0	0	-20.93	-20.93
Inverter Transformer	MV2-2 T	365982	4906654	2	0	0	56.1	56.1	1	1158.88	3.25	0	72.28	0	0.07	0	0	5.26	0	0	0	0	0	0	-21.55	-21.55
Inverter Transformer	MV6-4 T	370244	4906966	2	0	0	69.4	69.4	1	5400.8	3.25	0	85.65	0	3.09	0	0	7.64	0	0	0	0	0	0	-27.03	-27.03
Inverter Transformer	MV6-1 T	370230	4907364	2	0	0	69.4	69.4	1	5408.33	3.25	0	85.66	0	3.09	0	0	7.65	0	0	0	0	0	0	-27.05	-27.05
Inverter Transformer	MV1-8 T	364782	4905647	2	0	0	56.1	56.1	1	1227.57	3.25	0	72.78	0	0.09	0	0	5.42	0	0	0	0	0	0	-22.23	-22.23
Inverter Transformer	MV1-9 T	364555	4905646	2	0	0	56.1	56.1	1	1260.58	3.25	0	73.01	0	0.11	0	0	5.49	0	0	0	0	0	0	-22.55	-22.55
Inverter Transformer	MV1-11 T	364649	4905414	2	0	0	56.1	56.1	1	1471.98	3.25	0	74.36	0	0.19	0	0	5.96	0	0	0	0	0	0	-24.44	-24.44
Inverter Transformer	MV1-12 T	365044	4905386	2	0	0	56.1	56.1	1	1500.39	3.25	0	74.52	0	0.2	0	0	6.02	0	0	0	0	0	0	-24.68	-24.68
Inverter Transformer	MV1-15 T	365309	4904994	2	0	0	56.1	56.1	1	1935.68	3.25	0	76.74	0	0.38	0	0	6.92	0	0	0	0	0	0	-27.97	-27.97
Inverter Transformer	MV3-12 T	367674	4907594	2	0	0	56.1	56.1	1	2920.4	3.25	0	80.31	0	0.8	0	0	8.73	0	0	0	0	0	0	-33.78	-33.78
Inverter Transformer	MV3-18 T	367757	4907412	2	0	0	56.1	56.1	1	2962.45	3.25	0	80.43	0	0.81	0	0	8.8	0	0	0	0	0	0	-33.99	-33.99
Inverter Transformer	MV3-13 T	367958	4907577	2	0	0	56.1	56.1	1	3192.59	3.25	0	81.08	0	0.91	0	0	9.19	0	0	0	0	0	0	-35.13	-35.13
Inverter Transformer	MV3-7 T	367951	4907754	2	0	0	56.1	56.1	1	3229.49	3.25	0	81.18	0	0.93	0	0	9.25	0	0	0	0	0	0	-35.3	-35.3
Inverter Transformer	MV3-3 T	367944	4907927	2	0	0	56.1	56.1	1	3274.28	3.25	0	81.3	0	0.95	0	0	9.32	0	0	0	0	0	0	-35.51	-35.51
Inverter Transformer	MV3-17 T	368183	4907472	2	0	0	56.1	56.1	1	3392.3	3.25	0	81.61	0	1	0	0	9.52	0	0	0	0	0	0	-36.06	-36.06
Inverter Transformer	MV3-10 T	368162	4907669	2	0	0	56.1	56.1	1	3412.15	3.25	0	81.66	0	1	0	0	9.55	0	0	0	0	0	0	-36.15	-36.15
Inverter Transformer	MV3-6 T	368156	4907834	2	0	0	56.1	56.1	1	3448.6	3.25	0	81.75	0	1.02	0	0	9.61	0	0	0	0	0	0	-36.32	-36.32

	Inverter Transformer	MV3-1 T	368150	4907976	2	0	0	56.1	56.1	1	3485.15	3.25	0	81.84	0	1.03	0	0	9.66	0	0	0	0	0	0	-36.48	-36.48
	Inverter Transformer	MV3-19 T	368352	4907347	2	0	0	56.1	56.1	1	3539.88	3.25	0	81.98	0	1.06	0	0	9.75	0	0	0	0	0	0	-36.73	-36.73
	Inverter Transformer	MV3-15 T	368351	4907477	2	0	0	56.1	56.1	1	3558.63	3.25	0	82.03	0	1.06	0	0	9.78	0	0	0	0	0	0	-36.81	-36.81
	Inverter Transformer	MV3-11 T	368340	4907662	2	0	0	56.1	56.1	1	3583.93	3.25	0	82.09	0	1.07	0	0	9.82	0	0	0	0	0	0	-36.92	-36.92
	Inverter Transformer	MV3-5 T	368335	4907843	2	0	0	56.1	56.1	1	3623.26	3.25	0	82.18	0	1.09	0	0	9.88	0	0	0	0	0	0	-37.1	-37.1
	Inverter Transformer	MV3-21 T	368484	4907206	2	0	0	56.1	56.1	1	3655.2	3.25	0	82.26	0	1.1	0	0	9.93	0	0	0	0	0	0	-37.24	-37.24
	Inverter Transformer	MV3-16 T	368509	4907475	2	0	0	56.1	56.1	1	3714.11	3.25	0	82.4	0	1.13	0	0	10.02	0	0	0	0	0	0	-37.49	-37.49
	Inverter Transformer	MV3-9 T	368517	4907703	2	0	0	56.1	56.1	1	3765.61	3.25	0	82.52	0	1.15	0	0	10.1	0	0	0	0	0	0	-37.71	-37.71
	Inverter Transformer	MV3-4 T	368507	4907925	2	0	0	56.1	56.1	1	3811.07	3.25	0	82.62	0	1.17	0	0	10.17	0	0	0	0	0	0	-37.9	-37.9
	Inverter Transformer	MV3-22 T	368661	4907142	2	0	0	56.1	56.1	1	3826.47	3.25	0	82.66	0	1.17	0	0	10.19	0	0	0	0	0	0	-37.97	-37.97
	Inverter Transformer	MV3-20 T	368683	4907317	2	0	0	56.1	56.1	1	3864.59	3.25	0	82.74	0	1.19	0	0	10.25	0	0	0	0	0	0	-38.13	-38.13
	Inverter Transformer	MV3-14 T	368678	4907498	2	0	0	56.1	56.1	1	3884.61	3.25	0	82.79	0	1.2	0	0	10.28	0	0	0	0	0	0	-38.21	-38.21
	Inverter Transformer	MV3-8 T	368685	4907712	2	0	0	56.1	56.1	1	3931.57	3.25	0	82.89	0	1.22	0	0	10.35	0	0	0	0	0	0	-38.4	-38.4
	Inverter Transformer	MV3-2 T	368677	4907928	2	0	0	56.1	56.1	1	3975.54	3.25	0	82.99	0	1.23	0	0	10.42	0	0	0	0	0	0	-38.58	-38.58
	Inverter Transformer	MV4-13 T	369057	4908605	2	0	0	56.1	56.1	1	4555.13	3.25	0	84.17	0	1.46	0	0	11.25	0	0	0	0	0	0	-40.82	-40.82
	Inverter Transformer	MV4-15 T	369170	4908481	2	0	0	56.1	56.1	1	4615.19	3.25	0	84.28	0	1.48	0	0	11.34	0	0	0	0	0	0	-41.04	-41.04
	Inverter Transformer	MV4-12 T	369049	4908803	2	0	0	56.1	56.1	1	4626.76	3.25	0	84.31	0	1.49	0	0	11.35	0	0	0	0	0	0	-41.09	-41.09
	Inverter Transformer	MV4-14 T	369182	4908507	2	0	0	56.1	56.1	1	4635.54	3.25	0	84.32	0	1.49	0	0	11.36	0	0	0	0	0	0	-41.12	-41.12
	Inverter Transformer	MV4-7 T	369040	4909001	2	0	0	56.1	56.1	1	4704.76	3.25	0	84.45	0	1.52	0	0	11.46	0	0	0	0	0	0	-41.37	-41.37
	Inverter Transformer	MV4-4 T	369033	4909199	2	0	0	56.1	56.1	1	4791.45	3.25	0	84.61	0	1.55	0	0	11.58	0	0	0	0	0	0	-41.68	-41.68
	Inverter Transformer	MV4-11 T	369269	4908855	2	0	0	56.1	56.1	1	4848.6	3.25	0	84.71	0	1.57	0	0	11.65	0	0	0	0	0	0	-41.88	-41.88
	Inverter Transformer	MV4-1 T	369017	4909397	2	0	0	56.1	56.1	1	4876.94	3.25	0	84.76	0	1.58	0	0	11.69	0	0	0	0	0	0	-41.98	-41.98
	Inverter Transformer	MV4-10 T	369307	4908858	2	0	0	56.1	56.1	1	4884.53	3.25	0	84.78	0	1.58	0	0	11.7	0	0	0	0	0	0	-42	-42
	Inverter Transformer	MV4-8 T	369262	4909001	2	0	0	56.1	56.1	1	4903.79	3.25	0	84.81	0	1.59	0	0	11.73	0	0	0	0	0	0	-42.07	-42.07
	Inverter Transformer	MV4-9 T	369284	4909001	2	0	0	56.1	56.1	1	4923.62	3.25	0	84.85	0	1.6	0	0	11.75	0	0	0	0	0	0	-42.14	-42.14
	Inverter Transformer	MV4-6 T	369249	4909192	2	0	0	56.1	56.1	1	4978.13	3.25	0	84.94	0	1.62	0	0	11.83	0	0	0	0	0	0	-42.33	-42.33
	Inverter Transformer	MV4-5 T	369283	4909199	2	0	0	56.1	56.1	1	5011.49	3.25	0	85	0	1.63	0	0	11.87	0	0	0	0	0	0	-42.44	-42.44
	Inverter Transformer	MV4-3 T	369234	4909397	2	0	0	56.1	56.1	1	5063.86	3.25	0	85.09	0	1.65	0	0	11.94	0	0	0	0	0	0	-42.62	-42.62
	Inverter Transformer	MV4-2 T	369267	4909397	2	0	0	56.1	56.1	1	5092.5	3.25	0	85.14	0	1.66	0	0	11.98	0	0	0	0	0	0	-42.71	-42.71
	Inverter Transformer	MV6-2 T	370091	4907339	2	0	0	56.1	56.1	1	5267.65	3.25	0	85.43	0	1.72	0	0	12.2	0	0	0	0	0	0	-43.3	-43.3
	Inverter Transformer	MV6-3 T	370202	4907140	2	0	0	56.1	56.1	1	5364.65	3.25	0	85.59	0	1.75	0	0	12.33	0	0	0	0	0	0	-43.61	-43.61
	Inverter Transformer	MV5-6 T	369987	4908507	2	0	0	56.1	56.1	1	5396.33	3.25	0	85.64	0	1.77	0	0	12.37	0	0	0	0	0	0	-43.71	-43.71
	Inverter Transformer	MV5-5 T	370021	4908690	2	0	0	56.1	56.1	1	5486.6	3.25	0	85.79	0	1.8	0	0	12.48	0	0	0	0	0	0	-44	-44
	Inverter Transformer	MV5-2 T	370011	4908853	2	0	0	56.1	56.1	1	5533.38	3.25	0	85.86	0	1.81	0	0	12.54	0	0	0	0	0	0	-44.15	-44.15
	Inverter Transformer	MV5-1 T	370015	4909142	2	0	0	56.1	56.1	1	5646.91	3.25	0	86.04	0	1.85	0	0	12.68	0	0	0	0	0	0	-44.5	-44.5
	Inverter Transformer	MV5-3 T	370237	4908851	2	0	0	56.1	56.1	1	5744.3	3.25	0	86.18	0	1.88	0	0	12.8	0	0	0	0	0	0	-44.8	-44.8
	Inverter Transformer	MV5-4 T	370330	4908707	2	0	0	56.1	56.1	1	5784.44	3.25	0	86.25	0	1.9	0	0	12.84	0	0	0	0	0	0	-44.93	-44.93
	Line Reactor	NGR	369421	4908787.5	5	0	0	45.4	45.4	1	4961.27	5.25	0	84.91	0	3.26	1.35	0.1	2.03	0	0	0	0	0	0	-46.2	-46.2
Limit. Valu	0	0																								
Level D/N:	30.3712	30.3712																								

Receiver: Existing Noise Receptor
ID: S-R71
X: 364782
Y: 4906767
Z: 4.5
Ground: 0

ISO	Description	ID	X	Y	Z	Ground	ReflOrd	LxT	LxN	L/A	Dist.	hm	Freq	Adiv	K0b	Agr	Abar	z	Aatm	Afol	Ahous	Cmet	CmetN	Dc	RL	LtotT	LtotN
	Inverter	MV1-1	364715	4906166	2	0	0	100.3	100.3	1	604.73	3.25	0	66.63	0	-0.48	0	0	9.23	0	0	0	0	0	0	24.92	24.92
	Inverter	MV1-2	364753	4906063	2	0	0	100.3	100.3	1	704.6	3.25	0	67.96	0	-0.41	0	0	9.76	0	0	0	0	0	0	23	23
	Inverter	MV2-4	365586	4906624	2	0	0	100.3	100.3	1	816.62	3.25	0	69.24	0	-0.34	0	0	10.25	0	0	0	0	0	0	21.17	21.17
	Inverter	MV1-4	364815	4905918	2	0	0	100.3	100.3	1	849.64	3.25	0	69.58	0	-0.32	0	0	10.38	0	0	0	0	0	0	20.67	20.67
	Inverter	MV1-5	364671	4905892	2	0	0	100.3	100.3	1	882.02	3.25	0	69.91	0	-0.31	0	0	10.5	0	0	0	0	0	0	20.21	20.21
	Inverter	MV1-6	364477	4905835	2	0	0	100.3	100.3	1	980.64	3.25	0	70.83	0	-0.26	0	0	10.85	0	0	0	0	0	0	18.89	18.89
	Inverter	MV2-3	365820	4906641	2	0	0	100.3	100.3	1	1045.62	3.25	0	71.39	0	-0.22	0	0	11.06	0	0	0	0	0	0	18.09	18.09
	Inverter	MV1-8	364788	4905647	2	0	0	100.3	100.3	1	1120.02	3.25	0	71.98	0	-0.19	0	0	11.29	0	0	0	0	0	0	17.23	17.23
	Inverter	MV1-9	364561	4905646	2	0	0	100.3	100.3	1	1142.58	3.25	0	72.16	0	-0.18	0	0	11.36	0	0	0	0	0	0	16.98	16.98
	Sol_Luce Substation	S_Substation	369426	4908792	3.5	0	0	112.1	112.1	1	5066.3	5.25	0	85.09	0	0.92	2.85	0.3	8.7	0	0	0	0	0	0	14.52	14.52
	Inverter	MV1-11	364655	4905414	2	0	0	100.3	100.3	1	1358.95	3.25	0	73.66	0	-0.09	0	0	11.96	0	0	0	0	0	0	14.77	14.77
	Inverter	MV1-12	365038	4905386	2	0	0	100.3	100.3	1	1404.53	3.25	0	73.95	0	-0.07	0	0	12.08	0	0	0	0	0	0	14.35	14.35
	Inverter	MV1-7	364925	4905782	2	0	0	97.3	97.3	1	995.33	3.25	0	70.96	0	-0.25	0	0	10.9	0	0	0	0	0	0	15.71	15.71
	Inverter	MV2-1	365842	4906816	2	0	0	97.3	97.3	1	1061.13	3.25	0	71.52	0	-0.22	0	0	11.11	0	0	0	0	0	0	14.91	14.91
	Inverter	MV1-10	365004	4905564	2	0	0	97.3	97.3	1	1223.31	3.25	0	72.75	0	-0.14	0	0	11.59	0	0	0	0	0	0	13.11	13.11
	Inverter	MV1-15	365315	4904994	2	0	0	100.3	100.3	1	1851.38	3.25	0	76.35	0	0.09	0	0	13.14	0	0	0	0	0	0	10.73	10.73
	Inverter	MV1-13	364731	4905241	2	0	0	97.3	97.3	1	1526.85	3.25	0	74.68	0	-0.02	0	0	12.39	0	0	0	0	0	0	10.27	10.27
	Inverter	MV1-14	365163	4905049	2	0	0	97.3	97.3	1	1759.74	3.25	0	75.91	0	0.06	0	0	12.94	0	0	0	0	0	0	8.41	8.41
	Inverter	MV1-3	364440	4906039	2	0	0	89.1	89.1	1	804.33	3.25	0	69.11	0	0.64	0	0	5.93	0	0	0	0	0	0	13.38	13.38
	Inverter	MV3-12	367668	4907594	2	0	0	100.3	100.3	1	3002.15	3.25	0	80.55	0	0.36	0	0	15.38	0	0	0	0	0	0	4.02	4.02
	Inverter	MV3-18	367752	4907412	2	0	0	100.3	100.3	1	3039.23	3.25	0	80.66	0	0.37	0	0	15.44	0	0	0	0	0	0	3.85	3.85
	Inverter	MV3-13	367963	4907577	2	0	0	100.3	100.3	1	3282.51	3.25	0	81.32	0	0.41	0	0	15.86	0	0	0	0	0	0	2.71	2.71
	Inverter	MV3-7	367945	4907754	2	0	0	100.3	100.3	1	3313.42	3.25	0	81.41	0	0.42	0	0	15.92	0	0	0	0	0	0	2.57	2.57
	Inverter	MV3-3	367939	4907927	2	0	0	100.3	100.3	1	3363.37	3.25	0	81.54	0	0.43	0	0	16	0	0	0	0	0	0	2.35	2.35
	Inverter	MV3-17	368178	4907472	2	0	0	100.3	100.3	1	3468.41	3.25	0	81.8	0	0.45	0	0	16.18	0	0	0	0	0	0	1.89	1.89

Inverter	MV3-10	368167	4907669	2	0	0	100.3	100.3	1	3503.12	3.25	0	81.89	0	0.45	0	0	16.24	0	0	0	0	0	0	1.73	1.73
Inverter	MV3-6	368162	4907834	2	0	0	100.3	100.3	1	3544.42	3.25	0	81.99	0	0.46	0	0	16.31	0	0	0	0	0	0	1.56	1.56
Inverter	MV3-19	368357	4907347	2	0	0	100.3	100.3	1	3621.74	3.25	0	82.18	0	0.47	0	0	16.43	0	0	0	0	0	0	1.23	1.23
Inverter	MV3-15	368357	4907477	2	0	0	100.3	100.3	1	3644.82	3.25	0	82.23	0	0.47	0	0	16.47	0	0	0	0	0	0	1.13	1.13
Inverter	MV3-11	368346	4907662	2	0	0	100.3	100.3	1	3674.66	3.25	0	82.3	0	0.48	0	0	16.52	0	0	0	0	0	0	1.01	1.01
Inverter	MV3-21	368478	4907206	2	0	0	100.3	100.3	1	3721.98	3.25	0	82.42	0	0.49	0	0	16.6	0	0	0	0	0	0	0.81	0.81
Inverter	MV3-16	368514	4907475	2	0	0	100.3	100.3	1	3798.56	3.25	0	82.59	0	0.5	0	0	16.72	0	0	0	0	0	0	0.5	0.5
Inverter	MV3-9	368512	4907703	2	0	0	100.3	100.3	1	3845.65	3.25	0	82.7	0	0.5	0	0	16.8	0	0	0	0	0	0	0.31	0.31
Inverter	MV3-20	368689	4907317	2	0	0	100.3	100.3	1	3945.52	3.25	0	82.92	0	0.52	0	0	16.96	0	0	0	0	0	0	-0.09	-0.09
Inverter	MV3-14	368684	4907498	2	0	0	100.3	100.3	1	3969.88	3.25	0	82.98	0	0.52	0	0	17	0	0	0	0	0	0	-0.19	-0.19
Inverter	MV3-8	368680	4907712	2	0	0	100.3	100.3	1	4010.91	3.25	0	83.06	0	0.53	0	0	17.07	0	0	0	0	0	0	-0.35	-0.35
Inverter	MV2-2	365977	4906654	2	0	0	89.1	89.1	1	1200.33	3.25	0	72.59	0	0.73	0	0	6.68	0	0	0	0	0	0	9.06	9.06
Inverter	MV4-7	369035	4909001	2	0	0	100.3	100.3	1	4804.04	3.25	0	84.63	0	0.62	0	0	18.29	0	0	0	0	0	0	-3.23	-3.23
Inverter	MV4-4	369027	4909199	2	0	0	100.3	100.3	1	4892.31	3.25	0	84.79	0	0.63	0	0	18.42	0	0	0	0	0	0	-3.53	-3.53
Inverter	MV4-11	369264	4908855	2	0	0	100.3	100.3	1	4944.5	3.25	0	84.88	0	0.64	0	0	18.5	0	0	0	0	0	0	-3.71	-3.71
Inverter	MV4-1	369011	4909397	2	0	0	100.3	100.3	1	4980.1	3.25	0	84.94	0	0.64	0	0	18.55	0	0	0	0	0	0	-3.82	-3.82
Inverter	MV4-10	369312	4908858	2	0	0	100.3	100.3	1	4989.31	3.25	0	84.96	0	0.64	0	0	18.56	0	0	0	0	0	0	-3.85	-3.85
Inverter	MV4-8	369256	4909001	2	0	0	100.3	100.3	1	5000.74	3.25	0	84.98	0	0.64	0	0	18.58	0	0	0	0	0	0	-3.89	-3.89
Inverter	MV4-9	369289	4909001	2	0	0	100.3	100.3	1	5030.29	3.25	0	85.03	0	0.64	0	0	18.62	0	0	0	0	0	0	-3.99	-3.99
Inverter	MV4-6	369243	4909192	2	0	0	100.3	100.3	1	5077.51	3.25	0	85.11	0	0.65	0	0	18.69	0	0	0	0	0	0	-4.14	-4.14
Inverter	MV4-5	369289	4909199	2	0	0	100.3	100.3	1	5121.3	3.25	0	85.19	0	0.65	0	0	18.76	0	0	0	0	0	0	-4.29	-4.29
Inverter	MV4-3	369229	4909397	2	0	0	100.3	100.3	1	5166.5	3.25	0	85.26	0	0.66	0	0	18.82	0	0	0	0	0	0	-4.43	-4.43
Inverter	MV4-2	369272	4909397	2	0	0	100.3	100.3	1	5203.56	3.25	0	85.33	0	0.66	0	0	18.88	0	0	0	0	0	0	-4.55	-4.55
Inverter	MV6-2	370085	4907339	2	0	0	100.3	100.3	1	5333.76	3.25	0	85.54	0	0.67	0	0	19.06	0	0	0	0	0	0	-4.96	-4.96
Inverter	MV6-3	370207	4907140	2	0	0	100.3	100.3	1	5437.81	3.25	0	85.71	0	0.68	0	0	19.21	0	0	0	0	0	0	-5.29	-5.29
Inverter	MV5-5	370015	4908690	2	0	0	100.3	100.3	1	5575.14	3.25	0	85.93	0	0.68	0	0	19.41	0	0	0	0	0	0	-5.7	-5.7
Inverter	MV5-2	370006	4908853	2	0	0	100.3	100.3	1	5625.08	3.25	0	86	0	0.69	0	0	19.48	0	0	0	0	0	0	-5.85	-5.85
Inverter	MV5-1	370020	4909142	2	0	0	100.3	100.3	1	5751.28	3.25	0	86.2	0	0.69	0	0	19.65	0	0	0	0	0	0	-6.23	-6.23
Inverter	MV5-3	370231	4908851	2	0	0	100.3	100.3	1	5833.92	3.25	0	86.32	0	0.7	0	0	19.77	0	0	0	0	0	0	-6.47	-6.47
Inverter	MV5-4	370324	4908707	2	0	0	100.3	100.3	1	5871.74	3.25	0	86.38	0	0.7	0	0	19.82	0	0	0	0	0	0	-6.58	-6.58
DSTATCOM - 10 MVAR #2	DSAT2	369403	4908757	2.5	0	0	96.6	96.6	1	5031.28	3.5	0	85.03	0	3.69	0	0	3.37	0	0	0	0	0	0	4.54	4.54
DSTATCOM - 10 MVAR #1	DSAT1	369437	4908757	2.5	0	0	96.6	96.6	1	5062.52	3.5	0	85.09	0	3.69	0	0	3.38	0	0	0	0	0	0	4.47	4.47
Inverter	MV6-1	370235	4907364	2	0	0	97.3	97.3	1	5485.58	3.25	0	85.78	0	0.68	0	0	19.28	0	0	0	0	0	0	-8.43	-8.43
Gardiner Substation	G_Sub	366586.3	4903349.9	2.5	0	0	90.8	90.8	1	3864.2	4.25	0	82.74	0	1.32	2.66	0.29	7.18	0	0	0	0	0	0	-3.13	-3.13
SubstationTransformer	W_ST	369711.17	4906112.3	2.5	0	0	92	92	1	4972.46	4.25	0	84.93	0	1.63	2.34	0.29	8.59	0	0	0	0	0	0	-5.52	-5.52
Inverter	MV3-1	368156	4907976	2	0	0	89.1	89.1	1	3584.07	3.25	0	82.09	0	1.29	0	0	10.49	0	0	0	0	0	0	-4.81	-4.81
Inverter	MV3-5	368340	4907843	2	0	0	89.1	89.1	1	3717.14	3.25	0	82.4	0	1.32	0	0	10.68	0	0	0	0	0	0	-5.35	-5.35
Inverter	MV3-22	368656	4907142	2	0	0	89.1	89.1	1	3892.11	3.25	0	82.8	0	1.37	0	0	10.93	0	0	0	0	0	0	-6.04	-6.04
Inverter	MV3-4	368502	4907925	2	0	0	89.1	89.1	1	3896.07	3.25	0	82.81	0	1.37	0	0	10.94	0	0	0	0	0	0	-6.06	-6.06
Inverter	MV3-2	368671	4907928	2	0	0	89.1	89.1	1	4058.6	3.25	0	83.17	0	1.41	0	0	11.17	0	0	0	0	0	0	-6.68	-6.68
Westbrook Inverter Enclosur	W_INV2	369374	4906388	2	0	0	89.1	89.1	1	4607.61	3.25	0	84.27	0	1.54	0	0	11.93	0	0	0	0	0	0	-8.69	-8.69
Fixed Reactor Bank 1	FRB1	369378	4908755	6	0	0	89.8	89.8	1	5007.53	5.25	0	84.99	0	-0.57	0	0	8.63	0	0	0	0	0	0	-3.28	-3.28
Inverters	G_Inv1	366526.4	4903225.8	2	0	0	87.7	87.7	1	3947.54	3.25	0	82.93	0	2.79	0	0	4.82	0	0	0	0	0	0	-2.87	-2.87
Inverter	MV4-13	369051	4908605	2	0	0	89.1	89.1	1	4647.86	3.25	0	84.35	0	1.55	0	0	11.99	0	0	0	0	0	0	-8.83	-8.83
Fixed Reactor Bank 2	FRB2	369464	4908755	6	0	0	89.8	89.8	1	5086.58	5.25	0	85.13	0	-0.55	0	0	8.72	0	0	0	0	0	0	-3.52	-3.52
Inverters	G_Inv2	366676.9	4903239.1	2	0	0	87.7	87.7	1	4004.59	3.25	0	83.05	0	2.79	0	0	4.88	0	0	0	0	0	0	-3.06	-3.06
Inverter	MV4-15	369176	4908481	2	0	0	89.1	89.1	1	4716.46	3.25	0	84.47	0	1.57	0	0	12.08	0	0	0	0	0	0	-9.07	-9.07
Inverter	MV4-12	369043	4908803	2	0	0	89.1	89.1	1	4722.44	3.25	0	84.48	0	1.57	0	0	12.09	0	0	0	0	0	0	-9.09	-9.09
Inverter	MV4-14	369176	4908507	2	0	0	89.1	89.1	1	4725.98	3.25	0	84.49	0	1.57	0	0	12.09	0	0	0	0	0	0	-9.1	-9.1
Westbrook Inverter Enclosur	W_INV3	369508	4906164	2	0	0	89.1	89.1	1	4764.31	3.25	0	84.56	0	1.58	0	0	12.15	0	0	0	0	0	0	-9.23	-9.23
Inverters	G_Inv3	366583.7	4903091.4	2	0	0	87.7	87.7	1	4093.43	3.25	0	83.24	0	2.8	0	0	4.97	0	0	0	0	0	0	-3.36	-3.36
Inverters	G_Inv4	366732.8	4903105	2	0	0	87.7	87.7	1	4149.2	3.25	0	83.36	0	2.8	0	0	5.03	0	0	0	0	0	0	-3.54	-3.54
Westbrook Inverter Enclosur	W_INV4	369673	4906164	2	0	0	89.1	89.1	1	4928.03	3.25	0	84.85	0	1.62	0	0	12.37	0	0	0	0	0	0	-9.78	-9.78
Westbrook Inverter Enclosur	W_INV5	369719	4906574	2	0	0	89.1	89.1	1	4940.77	3.25	0	84.88	0	1.63	0	0	12.38	0	0	0	0	0	0	-9.83	-9.83
Inverters	G_Inv5	366638.5	4902958.1	2	0	0	87.7	87.7	1	4237.25	3.25	0	83.54	0	2.81	0	0	5.13	0	0	0	0	0	0	-3.82	-3.82
Westbrook Inverter Enclosur	W_INV7	369780	4906417	2	0	0	89.1	89.1	1	5010.24	3.25	0	85	0	1.64	0	0	12.48	0	0	0	0	0	0	-10.06	-10.06
Inverters	G_Inv6	366788.5	4902972	2	0	0	87.7	87.7	1	4292.79	4.12	0	83.65	0	3.19	1.5	0	5.19	0	0	0	0	0	0	-5.87	-5.87
Westbrook Inverter Enclosur	W_INV6	369875	4906578	2	0	0	89.1	89.1	1	5096.51	3.25	0	85.15	0	1.66	0	0	12.59	0	0	0	0	0	0	-10.34	-10.34
Inverters	G_Inv7	366694.6	4902824.7	2	0	0	87.7	87.7	1	4381.75	3.25	0	83.83	0	2.82	0	0	5.28	0	0	0	0	0	0	-4.28	-4.28
Inverters	G_Inv8	366844.5	4902838.5	2	0	0	87.7	87.7	1	4437.01	3.25	0	83.94	0	2.83	0	0	5.34	0	0	0	0	0	0	-4.45	-4.45
Inverters	G_Inv9	366750.9	4902691.8	2	0	0	87.7	87.7	1	4525.91	3.25	0	84.11	0	2.83	0	0	5.44	0	0	0	0	0	0	-4.72	-4.72
Inverters	G_Inv10	366900.7	4902704.8	2	0	0	87.7	87.7	1	4581.52	3.25	0	84.22	0	2.84	0	0	5.5	0	0	0	0	0	0	-4.89	-4.89
Inverter	MV5-6	369982	4908507	2	0	0	89.1	89.1	1	5483.39	3.25	0	85.78	0	1.76	0	0	13.1	0	0	0	0	0	0	-11.58	-11.58
Westbrook Inverter Enclosur	W_INV1	369409	4906578	2	0	0	86.1	86.1	1	4630.86	3.25	0	84.31	0	1.55	0	0	11.96	0	0	0	0	0	0	-11.77	-11.77
Inverter	MV6-4	370250	4906966	2	0	0	86.1	86.1	1	5471.62	3.25	0	85.76	0	1.76	0	0	13.09	0	0	0	0	0	0	-14.55	-14.55
Inverter Transformer	MV1-7 T	364919	4905782	2	0	0	69.4	69.4	1	994.48	3.25	0	70.95	0	1.68	0	0	3.8	0	0	0	0	0	0	-7.08	-7.08
Inverter Transformer	MV2-1 T	365836	4906816	2	0	0	69.4	69.4	1	1055.14	3.25	0	71.47	0	1.73	0	0	3.89	0	0	0	0	0	0	-7.73	-7.73
Inverter Transformer	MV1-10 T	365010	4905564	2	0	0	69.4	69.4	1	1224.42	3.25	0	72.76	0	1.84	0	0	4.11	0	0	0	0	0	0	-9.35	-9.35
Inverter Transformer	MV1-13 T	364725	4905241	2	0	0	69.4	69.4	1	1527.07	3.25	0	74.68	0	1.98	0	0	4.46	0	0	0	0	0	0	-11.78	-11.78
Westbrook Inverter Transfor	W_INVTR1	369403	4906578	2	0	0	78.2	78.2	1	4624.86	3.25	0	84.3	0	-3.1	0	0	2.28	0	0	0	0	0	0	-5.24	-5.24
Inverter Transformer	MV1-14 T	365157	4905049	2	0	0	69.4	69.4	1	1758.45	3.25	0	75.9	0	2.08	0	0	4.72	0	0	0	0	0	0	-13.35	-13.35
Westbrook Inverter Transfor	W_INVTR2	369368	4906388	2	0	0	77.3	77.3	1	4601.63	3.25	0	84.26	0	-3.1	0	0	2.27	0	0	0	0	0	0	-6.1	-6.1
Westbrook Inverter Transfor	W_INVTR3	369514	4906164	2	0	0	77.3	77.3	1	4770.27	3.25	0	84.57	0	-3.13	0	0	2.33	0	0	0	0	0	0	-6.43	-6.43
Westbrook Inverter Transfor	W_INVTR4	369679	4906164	2	0	0	77.3	77.3	1	4933.99	3.25	0	84.86	0	-3.16	0	0	2.39	0	0	0	0	0	0	-6.75	-6.75

Westbrook Inverter Transfor	W_INVTR5	369725	4906574	2	0	0	77.3	77.3	1	4946.77	3.25	0	84.89	0	-3.17	0	0	2.39	0	0	0	0	0	0	-6.77	-6.77
Westbrook Inverter Transfor	W_INVTR7	369786	4906417	2	0	0	77.3	77.3	1	5016.23	3.25	0	85.01	0	-3.18	0	0	2.42	0	0	0	0	0	0	-6.9	-6.9
Westbrook Inverter Transfor	W_INVTR6	369881	4906578	2	0	0	77.3	77.3	1	5102.5	3.25	0	85.16	0	-3.2	0	0	2.45	0	0	0	0	0	0	-7.06	-7.06
Inverter Transformer	MV1-1 T	364721	4906166	2	0	0	56.1	56.1	1	604.09	3.25	0	66.62	0	-0.1	0	0	3.87	0	0	0	0	0	0	-14.33	-14.33
Inverter Transformer	MV1-2 T	364759	4906063	2	0	0	56.1	56.1	1	704.38	3.25	0	67.96	0	-0.08	0	0	4.15	0	0	0	0	0	0	-15.96	-15.96
Inverter Transformer	MV1-3 T	364435	4906039	2	0	0	56.1	56.1	1	806.47	3.25	0	69.13	0	-0.05	0	0	4.41	0	0	0	0	0	0	-17.43	-17.43
Inverter Transformer	MV2-4 T	365590	4906628	2	0	0	56.1	56.1	1	819.87	3.25	0	69.27	0	-0.05	0	0	4.45	0	0	0	0	0	0	-17.62	-17.62
Inverter Transformer	MV1-4 T	364821	4905918	2	0	0	56.1	56.1	1	849.9	3.25	0	69.59	0	-0.04	0	0	4.52	0	0	0	0	0	0	-18.01	-18.01
Inverter Transformer	MV1-5 T	364676	4905892	2	0	0	56.1	56.1	1	881.4	3.25	0	69.9	0	-0.03	0	0	4.6	0	0	0	0	0	0	-18.42	-18.42
Inverter Transformer	MV1-6 T	364482	4905835	2	0	0	56.1	56.1	1	979.1	3.25	0	70.82	0	0	0	0	4.84	0	0	0	0	0	0	-19.6	-19.6
Inverter Transformer	MV2-3 T	365814	4906641	2	0	0	56.1	56.1	1	1039.67	3.25	0	71.34	0	0.03	0	0	4.98	0	0	0	0	0	0	-20.29	-20.29
Inverter Transformer	MV1-8 T	364782	4905647	2	0	0	56.1	56.1	1	1120	3.25	0	71.98	0	0.05	0	0	5.17	0	0	0	0	0	0	-21.15	-21.15
Inverter Transformer	MV1-9 T	364555	4905646	2	0	0	56.1	56.1	1	1143.76	3.25	0	72.17	0	0.06	0	0	5.23	0	0	0	0	0	0	-21.4	-21.4
Inverter Transformer	MV6-4 T	370244	4906966	2	0	0	69.4	69.4	1	5465.62	3.25	0	85.75	0	3.1	0	0	7.69	0	0	0	0	0	0	-27.19	-27.19
Inverter Transformer	MV6-1 T	370230	4907364	2	0	0	69.4	69.4	1	5480.61	3.25	0	85.78	0	3.1	0	0	7.7	0	0	0	0	0	0	-27.22	-27.22
Inverter Transformer	MV2-2 T	365982	4906654	2	0	0	56.1	56.1	1	1205.31	3.25	0	72.62	0	0.09	0	0	5.37	0	0	0	0	0	0	-22.02	-22.02
Inverter Transformer	MV1-11 T	364649	4905414	2	0	0	56.1	56.1	1	1359.52	3.25	0	73.67	0	0.14	0	0	5.71	0	0	0	0	0	0	-23.47	-23.47
Inverter Transformer	MV1-12 T	365044	4905386	2	0	0	56.1	56.1	1	1405.64	3.25	0	73.96	0	0.16	0	0	5.81	0	0	0	0	0	0	-23.87	-23.87
Inverter Transformer	MV1-15 T	365309	4904994	2	0	0	56.1	56.1	1	1849.67	3.25	0	76.34	0	0.34	0	0	6.74	0	0	0	0	0	0	-27.37	-27.37
Inverter Transformer	MV3-12 T	367674	4907594	2	0	0	56.1	56.1	1	3007.92	3.25	0	80.57	0	0.83	0	0	8.88	0	0	0	0	0	0	-34.22	-34.22
Inverter Transformer	MV3-18 T	367757	4907412	2	0	0	56.1	56.1	1	3044.12	3.25	0	80.67	0	0.85	0	0	8.94	0	0	0	0	0	0	-34.4	-34.4
Inverter Transformer	MV3-13 T	367958	4907577	2	0	0	56.1	56.1	1	3277.66	3.25	0	81.31	0	0.95	0	0	9.33	0	0	0	0	0	0	-35.53	-35.53
Inverter Transformer	MV3-7 T	367951	4907754	2	0	0	56.1	56.1	1	3319.15	3.25	0	81.42	0	0.96	0	0	9.4	0	0	0	0	0	0	-35.72	-35.72
Inverter Transformer	MV3-3 T	367944	4907927	2	0	0	56.1	56.1	1	3368.06	3.25	0	81.55	0	0.99	0	0	9.48	0	0	0	0	0	0	-35.95	-35.95
Inverter Transformer	MV3-17 T	368183	4907472	2	0	0	56.1	56.1	1	3473.3	3.25	0	81.81	0	1.03	0	0	9.65	0	0	0	0	0	0	-36.43	-36.43
Inverter Transformer	MV3-10 T	368162	4907669	2	0	0	56.1	56.1	1	3498.29	3.25	0	81.88	0	1.04	0	0	9.68	0	0	0	0	0	0	-36.54	-36.54
Inverter Transformer	MV3-6 T	368156	4907834	2	0	0	56.1	56.1	1	3538.7	3.25	0	81.98	0	1.06	0	0	9.75	0	0	0	0	0	0	-36.72	-36.72
Inverter Transformer	MV3-1 T	368150	4907976	2	0	0	56.1	56.1	1	3578.42	3.25	0	82.07	0	1.07	0	0	9.81	0	0	0	0	0	0	-36.9	-36.9
Inverter Transformer	MV3-19 T	368352	4907347	2	0	0	56.1	56.1	1	3616.81	3.25	0	82.17	0	1.09	0	0	9.87	0	0	0	0	0	0	-37.07	-37.07
Inverter Transformer	MV3-15 T	368351	4907477	2	0	0	56.1	56.1	1	3638.94	3.25	0	82.22	0	1.1	0	0	9.91	0	0	0	0	0	0	-37.16	-37.16
Inverter Transformer	MV3-11 T	368340	4907662	2	0	0	56.1	56.1	1	3668.84	3.25	0	82.29	0	1.11	0	0	9.95	0	0	0	0	0	0	-37.29	-37.29
Inverter Transformer	MV3-5 T	368335	4907843	2	0	0	56.1	56.1	1	3712.36	3.25	0	82.39	0	1.13	0	0	10.02	0	0	0	0	0	0	-37.48	-37.48
Inverter Transformer	MV3-21 T	368484	4907206	2	0	0	56.1	56.1	1	3727.94	3.25	0	82.43	0	1.13	0	0	10.04	0	0	0	0	0	0	-37.55	-37.55
Inverter Transformer	MV3-16 T	368509	4907475	2	0	0	56.1	56.1	1	3793.65	3.25	0	82.58	0	1.16	0	0	10.14	0	0	0	0	0	0	-37.83	-37.83
Inverter Transformer	MV3-9 T	368517	4907703	2	0	0	56.1	56.1	1	3850.5	3.25	0	82.71	0	1.18	0	0	10.23	0	0	0	0	0	0	-38.07	-38.07
Inverter Transformer	MV3-22 T	368661	4907142	2	0	0	56.1	56.1	1	3897.09	3.25	0	82.81	0	1.2	0	0	10.3	0	0	0	0	0	0	-38.26	-38.26
Inverter Transformer	MV3-4 T	368507	4907925	2	0	0	56.1	56.1	1	3900.85	3.25	0	82.82	0	1.2	0	0	10.31	0	0	0	0	0	0	-38.28	-38.28
Inverter Transformer	MV3-20 T	368683	4907317	2	0	0	56.1	56.1	1	3939.58	3.25	0	82.91	0	1.22	0	0	10.36	0	0	0	0	0	0	-38.44	-38.44
Inverter Transformer	MV3-14 T	368678	4907498	2	0	0	56.1	56.1	1	3963.99	3.25	0	82.96	0	1.23	0	0	10.4	0	0	0	0	0	0	-38.54	-38.54
Inverter Transformer	MV3-8 T	368685	4907712	2	0	0	56.1	56.1	1	4015.77	3.25	0	83.08	0	1.25	0	0	10.48	0	0	0	0	0	0	-38.75	-38.75
Inverter Transformer	MV3-2 T	368677	4907928	2	0	0	56.1	56.1	1	4064.35	3.25	0	83.18	0	1.27	0	0	10.55	0	0	0	0	0	0	-38.94	-38.94
Inverter Transformer	MV4-13 T	369057	4908605	2	0	0	56.1	56.1	1	4653.37	3.25	0	84.36	0	1.5	0	0	11.39	0	0	0	0	0	0	-41.18	-41.18
Inverter Transformer	MV4-15 T	369170	4908481	2	0	0	56.1	56.1	1	4710.88	3.25	0	84.46	0	1.52	0	0	11.47	0	0	0	0	0	0	-41.39	-41.39
Inverter Transformer	MV4-12 T	369049	4908803	2	0	0	56.1	56.1	1	4727.85	3.25	0	84.49	0	1.53	0	0	11.49	0	0	0	0	0	0	-41.45	-41.45
Inverter Transformer	MV4-14 T	369182	4908507	2	0	0	56.1	56.1	1	4731.55	3.25	0	84.5	0	1.53	0	0	11.49	0	0	0	0	0	0	-41.46	-41.46
Inverter Transformer	MV4-7 T	369040	4909001	2	0	0	56.1	56.1	1	4808.46	3.25	0	84.64	0	1.56	0	0	11.6	0	0	0	0	0	0	-41.74	-41.74
Inverter Transformer	MV4-4 T	369033	4909199	2	0	0	56.1	56.1	1	4897.51	3.25	0	84.8	0	1.59	0	0	11.72	0	0	0	0	0	0	-42.05	-42.05
Inverter Transformer	MV4-11 T	369269	4908855	2	0	0	56.1	56.1	1	4949.03	3.25	0	84.89	0	1.61	0	0	11.79	0	0	0	0	0	0	-42.23	-42.23
Inverter Transformer	MV4-10 T	369307	4908858	2	0	0	56.1	56.1	1	4984.77	3.25	0	84.95	0	1.62	0	0	11.83	0	0	0	0	0	0	-42.35	-42.35
Inverter Transformer	MV4-1 T	369017	4909397	2	0	0	56.1	56.1	1	4985.19	3.25	0	84.95	0	1.62	0	0	11.83	0	0	0	0	0	0	-42.35	-42.35
Inverter Transformer	MV4-8 T	369262	4909001	2	0	0	56.1	56.1	1	5006.11	3.25	0	84.99	0	1.63	0	0	11.86	0	0	0	0	0	0	-42.42	-42.42
Inverter Transformer	MV4-9 T	369284	4909001	2	0	0	56.1	56.1	1	5025.81	3.25	0	85.02	0	1.63	0	0	11.89	0	0	0	0	0	0	-42.49	-42.49
Inverter Transformer	MV4-6 T	369249	4909192	2	0	0	56.1	56.1	1	5082.79	3.25	0	85.12	0	1.66	0	0	11.96	0	0	0	0	0	0	-42.68	-42.68
Inverter Transformer	MV4-5 T	369283	4909199	2	0	0	56.1	56.1	1	5116.02	3.25	0	85.18	0	1.67	0	0	12.01	0	0	0	0	0	0	-42.79	-42.79
Inverter Transformer	MV4-3 T	369234	4909397	2	0	0	56.1	56.1	1	5170.8	3.25	0	85.27	0	1.69	0	0	12.08	0	0	0	0	0	0	-42.98	-42.98
Inverter Transformer	MV4-2 T	369267	4909397	2	0	0	56.1	56.1	1	5199.24	3.25	0	85.32	0	1.7	0	0	12.11	0	0	0	0	0	0	-43.07	-43.07
Inverter Transformer	MV6-2 T	370091	4907339	2	0	0	56.1	56.1	1	5339.73	3.25	0	85.55	0	1.75	0	0	12.29	0	0	0	0	0	0	-43.53	-43.53
Inverter Transformer	MV6-3 T	370202	4907140	2	0	0	56.1	56.1	1	5432.82	3.25	0	85.7	0	1.78	0	0	12.41	0	0	0	0	0	0	-43.83	-43.83
Inverter Transformer	MV5-6 T	369987	4908507	2	0	0	56.1	56.1	1	5488.14	3.25	0	85.79	0	1.8	0	0	12.48	0	0	0	0	0	0	-44.01	-44.01
Inverter Transformer	MV5-5 T	370021	4908690	2	0	0	56.1	56.1	1	5580.78	3.25	0	85.93	0	1.83	0	0	12.6	0	0	0	0	0	0	-44.3	-44.3
Inverter Transformer	MV5-2 T	370011	4908853	2	0	0	56.1	56.1	1	5629.73	3.25	0	86.01	0	1.84	0	0	12.66	0	0	0	0	0	0	-44.45	-44.45
Inverter Transformer	MV5-1 T	370015	4909142	2	0	0	56.1	56.1	1	5746.73	3.25	0	86.19	0	1.88	0	0	12.8	0	0	0	0	0	0	-44.81	-44.81
Inverter Transformer	MV5-3 T	370237	4908851	2	0	0	56.1	56.1	1	5839.53	3.25	0	86.33	0	1.91	0	0	12.91	0	0	0	0	0	0	-45.09	-45.09
Inverter Transformer	MV5-4 T	370330	4908707	2	0	0	56.1	56.1	1	5877.41	3.25	0	86.38	0	1.93	0	0	12.96	0	0	0	0	0	0	-45.21	-45.21
Line Reactor	NGR	369421	4908787.5	5	0	0	45.4	45.4	1	5059.92	5.25	0	85.08	0	3.26	1.35	0.1	2.07	0	0	0	0	0	0	-46.41	-46.41
Limit. Valu	0	0																								
Level D/N:	31.4257	31.4257																								

Receiver: Existing Noise Receptor
ID: S-R72
X: 365003
Y: 4906937
Z: 4.5
Ground: 0

ISO	Description	ID	X	Y	Z	Ground	ReflOrd	LxT	LxN	L/A	Dist.	hm	Freq	Adiv	K0b	Agr	Abar	z	Aatm	Afol	Ahous	Cmet	CmetN	Dc	RL	LtotT	LtotN
	Inverter	MV2-4	365586	4906624	2	0	0	100.3	100.3	1	661.71	3.25	0	67.41	0	-0.44	0	0	9.55	0	0	0	0	0	0	23.79	23.79
	Inverter	MV1-1	364715	4906166	2	0	0	100.3	100.3	1	823.04	3.25	0	69.31	0	-0.34	0	0	10.27	0	0	0	0	0	0	21.07	21.07
	Inverter	MV2-3	365820	4906641	2	0	0	100.3	100.3	1	868.97	3.25	0	69.78	0	-0.31	0	0	10.45	0	0	0	0	0	0	20.39	20.39
	Inverter	MV1-2	364753	4906063	2	0	0	100.3	100.3	1	909.06	3.25	0	70.17	0	-0.29	0	0	10.6	0	0	0	0	0	0	19.83	19.83
	Inverter	MV1-4	364815	4905918	2	0	0	100.3	100.3	1	1036.2	3.25	0	71.31	0	-0.23	0	0	11.03	0	0	0	0	0	0	18.2	18.2
	Inverter	MV1-5	364671	4905892	2	0	0	100.3	100.3	1	1096.47	3.25	0	71.8	0	-0.2	0	0	11.22	0	0	0	0	0	0	17.49	17.49
	Inverter	MV2-1	365842	4906816	2	0	0	97.3	97.3	1	847.68	3.25	0	69.56	0	-0.32	0	0	10.37	0	0	0	0	0	0	17.7	17.7
	Inverter	MV1-6	364477	4905835	2	0	0	100.3	100.3	1	1221.1	3.25	0	72.74	0	-0.14	0	0	11.59	0	0	0	0	0	0	16.14	16.14
	Sol_Luce Substation	S_Substation	369426	4908792	3.5	0	0	112.1	112.1	1	4796.24	5.25	0	84.62	0	0.84	2.91	0.3	8.38	0	0	0	0	0	0	15.33	15.33
	Inverter	MV1-8	364788	4905647	2	0	0	100.3	100.3	1	1307.8	3.25	0	73.33	0	-0.11	0	0	11.83	0	0	0	0	0	0	15.26	15.26
	Inverter	MV1-9	364561	4905646	2	0	0	100.3	100.3	1	1364.57	3.25	0	73.7	0	-0.09	0	0	11.98	0	0	0	0	0	0	14.72	14.72
	Inverter	MV1-12	365038	4905386	2	0	0	100.3	100.3	1	1551.4	3.25	0	74.81	0	-0.01	0	0	12.45	0	0	0	0	0	0	13.06	13.06
	Inverter	MV1-11	364655	4905414	2	0	0	100.3	100.3	1	1562.25	3.25	0	74.88	0	-0.01	0	0	12.48	0	0	0	0	0	0	12.97	12.97
	Inverter	MV1-7	364925	4905782	2	0	0	97.3	97.3	1	1157.63	3.25	0	72.27	0	-0.17	0	0	11.4	0	0	0	0	0	0	13.81	13.81
	Inverter	MV1-10	365004	4905564	2	0	0	97.3	97.3	1	1373	3.25	0	73.75	0	-0.08	0	0	12	0	0	0	0	0	0	11.64	11.64
	Inverter	MV1-15	365315	4904994	2	0	0	100.3	100.3	1	1967.89	3.25	0	76.88	0	0.12	0	0	13.39	0	0	0	0	0	0	9.92	9.92
	Inverter	MV1-13	364731	4905241	2	0	0	97.3	97.3	1	1717.67	3.25	0	75.7	0	0.04	0	0	12.84	0	0	0	0	0	0	8.73	8.73
	Inverter	MV1-14	365163	4905049	2	0	0	97.3	97.3	1	1894.77	3.25	0	76.55	0	0.1	0	0	13.24	0	0	0	0	0	0	7.43	7.43
	Inverter	MV3-12	367668	4907594	2	0	0	100.3	100.3	1	2744.79	3.25	0	79.77	0	0.31	0	0	14.91	0	0	0	0	0	0	5.32	5.32
	Inverter	MV3-18	367752	4907412	2	0	0	100.3	100.3	1	2789.74	3.25	0	79.91	0	0.32	0	0	15	0	0	0	0	0	0	5.09	5.09
	Inverter	MV3-13	367963	4907577	2	0	0	100.3	100.3	1	3028.4	3.25	0	80.62	0	0.37	0	0	15.42	0	0	0	0	0	0	3.9	3.9
	Inverter	MV3-7	367945	4907754	2	0	0	100.3	100.3	1	3053.34	3.25	0	80.7	0	0.37	0	0	15.47	0	0	0	0	0	0	3.78	3.78
	Inverter	MV3-3	367939	4907927	2	0	0	100.3	100.3	1	3098.42	3.25	0	80.82	0	0.38	0	0	15.55	0	0	0	0	0	0	3.56	3.56
	Inverter	MV3-17	368178	4907472	2	0	0	100.3	100.3	1	3219.76	3.25	0	81.16	0	0.4	0	0	15.76	0	0	0	0	0	0	3	3
	Inverter	MV3-10	368167	4907669	2	0	0	100.3	100.3	1	3247.57	3.25	0	81.23	0	0.41	0	0	15.8	0	0	0	0	0	0	2.87	2.87
	Inverter	MV3-6	368162	4907834	2	0	0	100.3	100.3	1	3283.88	3.25	0	81.33	0	0.41	0	0	15.87	0	0	0	0	0	0	2.7	2.7
	Inverter	MV3-19	368357	4907347	2	0	0	100.3	100.3	1	3378.97	3.25	0	81.58	0	0.43	0	0	16.03	0	0	0	0	0	0	2.28	2.28
	Inverter	MV3-15	368357	4907477	2	0	0	100.3	100.3	1	3397.19	3.25	0	81.62	0	0.43	0	0	16.06	0	0	0	0	0	0	2.2	2.2
	Inverter	MV3-11	368346	4907662	2	0	0	100.3	100.3	1	3420.71	3.25	0	81.68	0	0.44	0	0	16.1	0	0	0	0	0	0	2.09	2.09
	Inverter	MV3-21	368478	4907206	2	0	0	100.3	100.3	1	3485.4	3.25	0	81.85	0	0.45	0	0	16.21	0	0	0	0	0	0	1.81	1.81
	Inverter	MV3-16	368514	4907475	2	0	0	100.3	100.3	1	3551.98	3.25	0	82.01	0	0.46	0	0	16.32	0	0	0	0	0	0	1.53	1.53
	Inverter	MV3-9	368512	4907703	2	0	0	100.3	100.3	1	3591.64	3.25	0	82.11	0	0.47	0	0	16.38	0	0	0	0	0	0	1.36	1.36
	Inverter	MV3-20	368689	4907317	2	0	0	100.3	100.3	1	3705.54	3.25	0	82.38	0	0.48	0	0	16.57	0	0	0	0	0	0	0.88	0.88
	Inverter	MV2-2	365977	4906654	2	0	0	89.1	89.1	1	1014.28	3.25	0	71.12	0	0.69	0	0	6.34	0	0	0	0	0	0	10.9	10.9
	Inverter	MV3-14	368684	4907498	2	0	0	100.3	100.3	1	3723.5	3.25	0	82.42	0	0.49	0	0	16.6	0	0	0	0	0	0	0.81	0.81
	Inverter	MV3-8	368680	4907712	2	0	0	100.3	100.3	1	3757.79	3.25	0	82.5	0	0.49	0	0	16.66	0	0	0	0	0	0	0.66	0.66
	Inverter	MV1-3	364440	4906039	2	0	0	89.1	89.1	1	1059.9	3.25	0	71.51	0	0.7	0	0	6.43	0	0	0	0	0	0	10.43	10.43
	Inverter	MV4-7	369035	4909001	2	0	0	100.3	100.3	1	4529.58	3.25	0	84.12	0	0.59	0	0	17.88	0	0	0	0	0	0	-2.28	-2.28
	Inverter	MV4-4	369027	4909199	2	0	0	100.3	100.3	1	4616.19	3.25	0	84.29	0	0.6	0	0	18.01	0	0	0	0	0	0	-2.58	-2.58
	Inverter	MV4-11	369264	4908855	2	0	0	100.3	100.3	1	4672.78	3.25	0	84.39	0	0.61	0	0	18.09	0	0	0	0	0	0	-2.78	-2.78
	Inverter	MV4-1	369011	4909397	2	0	0	100.3	100.3	1	4702.73	3.25	0	84.45	0	0.61	0	0	18.14	0	0	0	0	0	0	-2.89	-2.89
	Inverter	MV4-10	369312	4908858	2	0	0	100.3	100.3	1	4717.81	3.25	0	84.47	0	0.61	0	0	18.16	0	0	0	0	0	0	-2.94	-2.94
	Inverter	MV4-8	369256	4909001	2	0	0	100.3	100.3	1	4727.38	3.25	0	84.49	0	0.62	0	0	18.18	0	0	0	0	0	0	-2.97	-2.97
	Inverter	MV4-9	369289	4909001	2	0	0	100.3	100.3	1	4757.09	3.25	0	84.55	0	0.62	0	0	18.22	0	0	0	0	0	0	-3.07	-3.07
	Inverter	MV4-6	369243	4909192	2	0	0	100.3	100.3	1	4802.36	3.25	0	84.63	0	0.62	0	0	18.29	0	0	0	0	0	0	-3.23	-3.23
	Inverter	MV4-5	369289	4909199	2	0	0	100.3	100.3	1	4846.28	3.25	0	84.71	0	0.63	0	0	18.35	0	0	0	0	0	0	-3.38	-3.38
	Inverter	MV4-3	369229	4909397	2	0	0	100.3	100.3	1	4889.86	3.25	0	84.79	0	0.63	0	0	18.42	0	0	0	0	0	0	-3.52	-3.52
	Inverter	MV4-2	369272	4909397	2	0	0	100.3	100.3	1	4927.06	3.25	0	84.85	0	0.64	0	0	18.47	0	0	0	0	0	0	-3.65	-3.65
	Inverter	MV6-2	370085	4907339	2	0	0	100.3	100.3	1	5097.88	3.25	0	85.15	0	0.65	0	0	18.72	0	0	0	0	0	0	-4.21	-4.21
	Inverter	MV6-3	370207	4907140	2	0	0	100.3	100.3	1	5207.96	3.25	0	85.33	0	0.66	0	0	18.88	0	0	0	0	0	0	-4.56	-4.56
	Inverter	MV5-5	370015	4908690	2	0	0	100.3	100.3	1	5309.72	3.25	0	85.5	0	0.67	0	0	19.03	0	0	0	0	0	0	-4.89	-4.89
	Inverter	MV5-2	370006	4908853	2	0	0	100.3	100.3	1	5357.34	3.25	0	85.58	0	0.67	0	0	19.1	0	0	0	0	0	0	-5.04	-5.04
	Inverter	MV5-1	370020	4909142	2	0	0	100.3	100.3	1	5480.18	3.25	0	85.78	0	0.68	0	0	19.27	0	0	0	0	0	0	-5.42	-5.42
	Inverter	MV5-3	370231	4908851	2	0	0	100.3	100.3	1	5567.35	3.25	0	85.91	0	0.68	0	0	19.4	0	0	0	0	0	0	-5.68	-5.68
	Inverter	MV5-4	370324	4908707	2	0	0	100.3	100.3	1	5607.67	3.25	0	85.98	0	0.69	0	0	19.45	0	0	0	0	0	0	-5.8	-5.8
	DSTATCOM - 10 MVAR #2	DSAT2	369403	4908757	2.5	0	0	96.6	96.6	1	4761.55	3.5	0	84.55	0	3.66	0	0	3.23	0	0	0	0	0	0	5.18	5.18
	DSTATCOM - 10 MVAR #1	DSAT1	369437	4908757	2.5	0	0	96.6	96.6	1	4792.99	3.5	0	84.61	0	3.66	0	0	3.25	0	0	0	0	0	0	5.11	5.11
	Inverter	MV6-1	370235	4907364	2	0	0	97.3	97.3	1	5249.4	3.25	0	85.4	0	0.66	0	0	18.94	0	0	0	0	0	0	-7.7	-7.7
	Gardiner Substation	G_Sub	366586.3	4903349.9	2.5	0	0	90.8	90.8	1	3920.99	4.25	0	82.87	0	1.34	2.66	0.31	7.26	0	0	0	0	0	0	-3.36	-3.36
	Inverter	MV3-1	368156	4907976	2	0	0	89.1	89.1	1	3319.78	3.25	0	81.42	0	1.22	0	0	10.1	0	0	0	0	0	0	-3.69	-3.69
	SubstationTransformer	W_ST	369711.17	4906112.3	2.5	0	0	92	92	1	4779.86	4.25	0	84.59	0	1.58	2.39	0.28	8.36	0	0	0	0	0	0	-4.94	-4.94
	Inverter	MV3-5	368340	4907843	2	0	0	89.1	89.1	1	3457.8	3.25	0	81.78	0	1.26	0	0	10.3	0	0	0	0	0	0	-4.28	-4.28
	Inverter	MV3-4	368502	4907925	2	0	0	89.1	89.1	1	3635.82	3.25	0	82.21	0	1.3	0	0	10.56	0	0	0	0	0	0	-5.02	-5.02
	Inverter	MV3-22	368656	4907142	2	0	0	89.1	89.1	1	3658.75	3.25	0	82.27	0	1.31	0	0	10.59	0	0	0	0	0	0	-5.11	-5.11
	Inverter	MV3-2	368671	4907928	2	0	0	89.1	89.1	1	3799.51	3.25	0	82.59	0	1.34	0	0	10.8	0	0	0	0	0	0	-5.68	-5.68
	Fixed Reactor Bank 1	FRB1	369378	4908755	6	0	0	89.8	89.8	1	4737.69	5.25	0	84.51	0	-0.61	0	0	8.3	0	0	0	0	0	0	-2.43	-2.43
	Inverter	MV4-13	369051	4908605	2	0	0	89.1	89.1	1	4378.19	3.25	0	83.83	0	1.49	0	0	11.62	0	0	0	0	0	0	-7.87	-7.87
	Westbrook Inverter Enclosur	W_INV2	369374	4906388	2	0	0	89.1	89.1	1	4405.34	3.25	0	83.88	0	1.49	0	0	11.65	0	0	0	0	0	0	-7.97	-7.97
	Fixed Reactor Bank 2	FRB2	369464	4908755	6	0	0	89.8	89.8	1	4817.22	5.25	0	84.66	0	-0.6	0	0	8.4	0	0	0	0	0	0	-2.69	-2.69
	Inverter	MV4-15	369176	4908481	2	0	0	89.1	89.1	1	4449.48	3.25	0	83.97	0	1.5	0	0	11.71	0	0	0	0	0	0	-8.13	-8.13
	Inverter	MV4-12	369043	4908803	2	0	0	89.1	89.1	1	4450.12	3.25	0	83.97	0	1.5	0	0	11.72	0	0	0	0	0	0	-8.13	-8.13
	Inverter	MV4-14	369176	4908507	2	0	0	89.1	89.1	1	4458.57	3.25	0	83.98	0	1.51	0	0	11.73	0	0	0	0	0	0	-8.16	-8.16

Westbrook Inverter Enclosur	W_INV3	369508	4906164	2	0	0	89.1	89.1	1	4570.84	3.25	0	84.2	0	1.53	0	0	11.88	0	0	0	0	0	0	-8.56	-8.56
Inverters	G_Inv1	366526.4	4903225.8	2	0	0	87.7	87.7	1	4011.7	3.25	0	83.07	0	2.79	0	0	4.89	0	0	0	0	0	0	-3.09	-3.09
Westbrook Inverter Enclosur	W_INV5	369719	4906574	2	0	0	89.1	89.1	1	4729.95	3.25	0	84.5	0	1.57	0	0	12.1	0	0	0	0	0	0	-9.11	-9.11
Westbrook Inverter Enclosur	W_INV4	369673	4906164	2	0	0	89.1	89.1	1	4733.54	3.25	0	84.5	0	1.57	0	0	12.1	0	0	0	0	0	0	-9.12	-9.12
Inverters	G_Inv2	366676.9	4903239.1	2	0	0	87.7	87.7	1	4059.11	3.25	0	83.17	0	2.8	0	0	4.94	0	0	0	0	0	0	-3.24	-3.24
Westbrook Inverter Enclosur	W_INV7	369780	4906417	2	0	0	89.1	89.1	1	4805.22	3.25	0	84.63	0	1.59	0	0	12.2	0	0	0	0	0	0	-9.37	-9.37
Inverters	G_Inv3	366583.7	4903091.4	2	0	0	87.7	87.7	1	4157.79	3.25	0	83.38	0	2.8	0	0	5.04	0	0	0	0	0	0	-3.57	-3.57
Westbrook Inverter Enclosur	W_INV6	369875	4906578	2	0	0	89.1	89.1	1	4885.21	3.25	0	84.78	0	1.61	0	0	12.31	0	0	0	0	0	0	-9.64	-9.64
Inverters	G_Inv4	366732.8	4903105	2	0	0	87.7	87.7	1	4204.34	3.25	0	83.47	0	2.81	0	0	5.09	0	0	0	0	0	0	-3.72	-3.72
Inverters	G_Inv5	366638.5	4902958.1	2	0	0	87.7	87.7	1	4301.92	3.25	0	83.67	0	2.82	0	0	5.2	0	0	0	0	0	0	-4.03	-4.03
Inverters	G_Inv6	366788.5	4902972	2	0	0	87.7	87.7	1	4348.48	3.25	0	83.77	0	2.82	0	0	5.25	0	0	0	0	0	0	-4.17	-4.17
Inverter	MV5-6	369982	4908507	2	0	0	89.1	89.1	1	5220.67	3.25	0	85.35	0	1.69	0	0	12.76	0	0	0	0	0	0	-10.75	-10.75
Inverters	G_Inv7	366694.6	4902824.7	2	0	0	87.7	87.7	1	4446.63	3.25	0	83.96	0	2.83	0	0	5.35	0	0	0	0	0	0	-4.48	-4.48
Inverters	G_Inv8	366844.5	4902838.5	2	0	0	87.7	87.7	1	4493.2	3.25	0	84.05	0	2.83	0	0	5.4	0	0	0	0	0	0	-4.62	-4.62
Inverters	G_Inv9	366750.9	4902691.8	2	0	0	87.7	87.7	1	4590.96	3.25	0	84.24	0	2.84	0	0	5.51	0	0	0	0	0	0	-4.92	-4.92
Inverters	G_Inv10	366900.7	4902704.8	2	0	0	87.7	87.7	1	4638.19	3.25	0	84.33	0	2.84	0	0	5.56	0	0	0	0	0	0	-5.07	-5.07
Westbrook Inverter Enclosur	W_INV1	369409	4906578	2	0	0	86.1	86.1	1	4420.6	3.25	0	83.91	0	1.5	0	0	11.67	0	0	0	0	0	0	-11.02	-11.02
Inverter	MV6-4	370250	4906966	2	0	0	86.1	86.1	1	5247.08	3.25	0	85.4	0	1.7	0	0	12.79	0	0	0	0	0	0	-13.83	-13.83
Inverter Transformer	MV2-1 T	365836	4906816	2	0	0	69.4	69.4	1	841.75	3.25	0	69.5	0	1.53	0	0	3.58	0	0	0	0	0	0	-5.27	-5.27
Inverter Transformer	MV1-7 T	364919	4905782	2	0	0	69.4	69.4	1	1158.05	3.25	0	72.27	0	1.8	0	0	4.02	0	0	0	0	0	0	-8.74	-8.74
Inverter Transformer	MV1-10 T	365010	4905564	2	0	0	69.4	69.4	1	1373.02	3.25	0	73.75	0	1.91	0	0	4.29	0	0	0	0	0	0	-10.6	-10.6
Westbrook Inverter Transfor	W_INVTR1	369403	4906578	2	0	0	78.2	78.2	1	4414.62	3.25	0	83.9	0	-3.06	0	0	2.21	0	0	0	0	0	0	-4.81	-4.81
Inverter Transformer	MV1-13 T	364725	4905241	2	0	0	69.4	69.4	1	1718.63	3.25	0	75.7	0	2.06	0	0	4.67	0	0	0	0	0	0	-13.09	-13.09
Westbrook Inverter Transfor	W_INVTR2	369368	4906388	2	0	0	77.3	77.3	1	4399.39	3.25	0	83.87	0	-3.05	0	0	2.2	0	0	0	0	0	0	-5.68	-5.68
Westbrook Inverter Transfor	W_INVTR3	369514	4906164	2	0	0	77.3	77.3	1	4576.75	3.25	0	84.21	0	-3.09	0	0	2.27	0	0	0	0	0	0	-6.05	-6.05
Westbrook Inverter Transfor	W_INVTR5	369725	4906574	2	0	0	77.3	77.3	1	4735.93	3.25	0	84.51	0	-3.12	0	0	2.32	0	0	0	0	0	0	-6.36	-6.36
Westbrook Inverter Transfor	W_INVTR4	369679	4906164	2	0	0	77.3	77.3	1	4739.46	3.25	0	84.51	0	-3.12	0	0	2.32	0	0	0	0	0	0	-6.37	-6.37
Inverter Transformer	MV1-14 T	365157	4905049	2	0	0	69.4	69.4	1	1894.27	3.25	0	76.55	0	2.13	0	0	4.86	0	0	0	0	0	0	-14.19	-14.19
Westbrook Inverter Transfor	W_INVTR7	369786	4906417	2	0	0	77.3	77.3	1	4811.18	3.25	0	84.65	0	-3.14	0	0	2.35	0	0	0	0	0	0	-6.51	-6.51
Westbrook Inverter Transfor	W_INVTR6	369881	4906578	2	0	0	77.3	77.3	1	4891.19	3.25	0	84.79	0	-3.16	0	0	2.38	0	0	0	0	0	0	-6.67	-6.67
Inverter Transformer	MV2-4 T	365590	4906628	2	0	0	56.1	56.1	1	663.37	3.25	0	67.44	0	-0.09	0	0	4.03	0	0	0	0	0	0	-15.32	-15.32
Inverter Transformer	MV1-1 T	364721	4906166	2	0	0	56.1	56.1	1	820.96	3.25	0	69.29	0	-0.05	0	0	4.45	0	0	0	0	0	0	-17.63	-17.63
Inverter Transformer	MV2-3 T	365814	4906641	2	0	0	56.1	56.1	1	863.33	3.25	0	69.72	0	-0.03	0	0	4.56	0	0	0	0	0	0	-18.19	-18.19
Inverter Transformer	MV1-2 T	364759	4906063	2	0	0	56.1	56.1	1	907.42	3.25	0	70.16	0	-0.02	0	0	4.66	0	0	0	0	0	0	-18.74	-18.74
Inverter Transformer	MV2-2 T	365982	4906654	2	0	0	56.1	56.1	1	1019.09	3.25	0	71.16	0	0.02	0	0	4.93	0	0	0	0	0	0	-20.06	-20.06
Inverter Transformer	MV1-4 T	364821	4905918	2	0	0	56.1	56.1	1	1035.13	3.25	0	71.3	0	0.02	0	0	4.97	0	0	0	0	0	0	-20.24	-20.24
Inverter Transformer	MV1-3 T	364435	4906039	2	0	0	56.1	56.1	1	1062.56	3.25	0	71.53	0	0.03	0	0	5.04	0	0	0	0	0	0	-20.54	-20.54
Inverter Transformer	MV1-5 T	364676	4905892	2	0	0	56.1	56.1	1	1094.97	3.25	0	71.79	0	0.05	0	0	5.11	0	0	0	0	0	0	-20.89	-20.89
Inverter Transformer	MV6-4 T	370244	4906966	2	0	0	69.4	69.4	1	5241.08	3.25	0	85.39	0	3.06	0	0	7.54	0	0	0	0	0	0	-26.64	-26.64
Inverter Transformer	MV6-1 T	370230	4907364	2	0	0	69.4	69.4	1	5244.41	3.25	0	85.39	0	3.06	0	0	7.54	0	0	0	0	0	0	-26.65	-26.65
Inverter Transformer	MV1-6 T	364482	4905835	2	0	0	56.1	56.1	1	1218.95	3.25	0	72.72	0	0.09	0	0	5.4	0	0	0	0	0	0	-22.15	-22.15
Inverter Transformer	MV1-8 T	364782	4905647	2	0	0	56.1	56.1	1	1308.8	3.25	0	73.34	0	0.12	0	0	5.6	0	0	0	0	0	0	-23	-23
Inverter Transformer	MV1-9 T	364555	4905646	2	0	0	56.1	56.1	1	1366.53	3.25	0	73.71	0	0.15	0	0	5.73	0	0	0	0	0	0	-23.53	-23.53
Inverter Transformer	MV1-12 T	365044	4905386	2	0	0	56.1	56.1	1	1551.54	3.25	0	74.82	0	0.22	0	0	6.13	0	0	0	0	0	0	-25.1	-25.1
Inverter Transformer	MV1-11 T	364649	4905414	2	0	0	56.1	56.1	1	1563.6	3.25	0	74.88	0	0.22	0	0	6.15	0	0	0	0	0	0	-25.2	-25.2
Inverter Transformer	MV1-15 T	365309	4904994	2	0	0	56.1	56.1	1	1966.95	3.25	0	76.88	0	0.39	0	0	6.98	0	0	0	0	0	0	-28.19	-28.19
Inverter Transformer	MV3-12 T	367674	4907594	2	0	0	56.1	56.1	1	2750.62	3.25	0	79.79	0	0.72	0	0	8.44	0	0	0	0	0	0	-32.89	-32.89
Inverter Transformer	MV3-18 T	367757	4907412	2	0	0	56.1	56.1	1	2794.66	3.25	0	79.93	0	0.74	0	0	8.51	0	0	0	0	0	0	-33.13	-33.13
Inverter Transformer	MV3-13 T	367958	4907577	2	0	0	56.1	56.1	1	3023.51	3.25	0	80.61	0	0.84	0	0	8.91	0	0	0	0	0	0	-34.3	-34.3
Inverter Transformer	MV3-7 T	367951	4907754	2	0	0	56.1	56.1	1	3059.12	3.25	0	80.71	0	0.85	0	0	8.97	0	0	0	0	0	0	-34.48	-34.48
Inverter Transformer	MV3-3 T	367944	4907927	2	0	0	56.1	56.1	1	3103.16	3.25	0	80.84	0	0.87	0	0	9.04	0	0	0	0	0	0	-34.69	-34.69
Inverter Transformer	MV3-17 T	368183	4907472	2	0	0	56.1	56.1	1	3224.69	3.25	0	81.17	0	0.92	0	0	9.24	0	0	0	0	0	0	-35.28	-35.28
Inverter Transformer	MV3-10 T	368162	4907669	2	0	0	56.1	56.1	1	3242.7	3.25	0	81.22	0	0.93	0	0	9.27	0	0	0	0	0	0	-35.37	-35.37
Inverter Transformer	MV3-6 T	368156	4907834	2	0	0	56.1	56.1	1	3278.11	3.25	0	81.31	0	0.95	0	0	9.33	0	0	0	0	0	0	-35.53	-35.53
Inverter Transformer	MV3-1 T	368150	4907976	2	0	0	56.1	56.1	1	3314.08	3.25	0	81.41	0	0.96	0	0	9.39	0	0	0	0	0	0	-35.7	-35.7
Inverter Transformer	MV3-19 T	368352	4907347	2	0	0	56.1	56.1	1	3374	3.25	0	81.56	0	0.99	0	0	9.49	0	0	0	0	0	0	-35.98	-35.98
Inverter Transformer	MV3-15 T	368351	4907477	2	0	0	56.1	56.1	1	3391.27	3.25	0	81.61	0	0.99	0	0	9.51	0	0	0	0	0	0	-36.06	-36.06
Inverter Transformer	MV3-11 T	368340	4907662	2	0	0	56.1	56.1	1	3414.85	3.25	0	81.67	0	1	0	0	9.55	0	0	0	0	0	0	-36.17	-36.17
Inverter Transformer	MV3-5 T	368335	4907843	2	0	0	56.1	56.1	1	3452.98	3.25	0	81.76	0	1.02	0	0	9.61	0	0	0	0	0	0	-36.34	-36.34
Inverter Transformer	MV3-21 T	368484	4907206	2	0	0	56.1	56.1	1	3491.38	3.25	0	81.86	0	1.04	0	0	9.67	0	0	0	0	0	0	-36.51	-36.51
Inverter Transformer	MV3-16 T	368509	4907475	2	0	0	56.1	56.1	1	3547.04	3.25	0	82	0	1.06	0	0	9.76	0	0	0	0	0	0	-36.76	-36.76
Inverter Transformer	MV3-9 T	368517	4907703	2	0	0	56.1	56.1	1	3596.52	3.25	0	82.12	0	1.08	0	0	9.84	0	0	0	0	0	0	-36.98	-36.98
Inverter Transformer	MV3-4 T	368507	4907925	2	0	0	56.1	56.1	1	3640.63	3.25	0	82.22	0	1.1	0	0	9.91	0	0	0	0	0	0	-37.17	-37.17
Inverter Transformer	MV3-22 T	368661	4907142	2	0	0	56.1	56.1	1	3663.74	3.25	0	82.28	0	1.11	0	0	9.94	0	0	0	0	0	0	-37.27	-37.27
Inverter Transformer	MV3-20 T	368683	4907317	2	0	0	56.1	56.1	1	3699.57	3.25	0	82.36	0	1.12	0	0	10	0	0	0	0	0	0	-37.43	-37.43
Inverter Transformer	MV3-14 T	368678	4907498	2	0	0	56.1	56.1	1	3717.57	3.25	0	82.41	0	1.13	0	0	10.03	0	0	0	0	0	0	-37.5	-37.5
Inverter Transformer	MV3-8 T	368685	4907712	2	0	0	56.1	56.1	1	3762.68	3.25	0	82.51	0	1.15	0	0	10.1	0	0	0	0	0	0	-37.7	-37.7
Inverter Transformer	MV3-2 T	368677	4907928	2	0	0	56.1	56.1	1	3805.31	3.25	0	82.61	0	1.17	0	0	10.16	0	0	0	0	0	0	-37.88	-37.88
Inverter Transformer	MV4-13 T	369057	4908605	2	0	0	56.1	56.1	1	4383.74	3.25	0	83.84	0	1.39	0	0	11.01	0	0	0	0	0	0	-40.19	-40.19
Inverter Transformer	MV4-15 T	369170	4908481	2	0	0	56.1	56.1	1	4443.85	3.25	0	83.96	0	1.42	0	0	11.1	0	0	0	0	0	0	-40.41	-40.41
Inverter Transformer	MV4-12 T	369049	4908803	2	0	0	56.1	56.1	1	4455.57	3.25	0	83.98	0	1.42	0	0	11.11	0	0	0	0	0	0	-40.46	-40.46
Inverter Transformer	MV4-14 T	369182	4908507	2	0	0	56.1	56.1	1	4464.18	3.25	0	83.99	0	1.43	0	0	11.13	0	0	0	0	0	0	-40.49	-40.49
Inverter Transformer	MV4-7 T	369040	4909001	2	0	0	56.1	56.1	1	4534.03	3.25	0	84.13	0	1.45	0	0	11.22	0	0	0	0	0	0	-40.75	-40.75
Inverter Transformer	MV4-4 T	369033	4909199	2	0	0	56.1	56.1	1	4621.42	3.25	0	84.3	0	1.49	0	0	11.34	0	0	0	0	0	0	-41.07	-41.07

	Inverter Transformer	MV4-11 T	369269	4908855	2	0	0	56.1	56.1	1	4677.34	3.25	0	84.4	0	1.51	0	0	11.42	0	0	0	0	0	0	-41.27	-41.27
	Inverter Transformer	MV4-1 T	369017	4909397	2	0	0	56.1	56.1	1	4707.84	3.25	0	84.46	0	1.52	0	0	11.46	0	0	0	0	0	0	-41.38	-41.38
	Inverter Transformer	MV4-10 T	369307	4908858	2	0	0	56.1	56.1	1	4713.24	3.25	0	84.47	0	1.52	0	0	11.47	0	0	0	0	0	0	-41.4	-41.4
	Inverter Transformer	MV4-8 T	369262	4909001	2	0	0	56.1	56.1	1	4732.78	3.25	0	84.5	0	1.53	0	0	11.5	0	0	0	0	0	0	-41.47	-41.47
	Inverter Transformer	MV4-9 T	369284	4909001	2	0	0	56.1	56.1	1	4752.58	3.25	0	84.54	0	1.53	0	0	11.52	0	0	0	0	0	0	-41.54	-41.54
	Inverter Transformer	MV4-6 T	369249	4909192	2	0	0	56.1	56.1	1	4807.66	3.25	0	84.64	0	1.56	0	0	11.6	0	0	0	0	0	0	-41.73	-41.73
	Inverter Transformer	MV4-5 T	369283	4909199	2	0	0	56.1	56.1	1	4840.98	3.25	0	84.7	0	1.57	0	0	11.64	0	0	0	0	0	0	-41.85	-41.85
	Inverter Transformer	MV4-3 T	369234	4909397	2	0	0	56.1	56.1	1	4894.18	3.25	0	84.79	0	1.59	0	0	11.71	0	0	0	0	0	0	-42.04	-42.04
	Inverter Transformer	MV4-2 T	369267	4909397	2	0	0	56.1	56.1	1	4922.73	3.25	0	84.84	0	1.6	0	0	11.75	0	0	0	0	0	0	-42.13	-42.13
	Inverter Transformer	MV6-2 T	370091	4907339	2	0	0	56.1	56.1	1	5103.86	3.25	0	85.16	0	1.66	0	0	11.99	0	0	0	0	0	0	-42.75	-42.75
	Inverter Transformer	MV6-3 T	370202	4907140	2	0	0	56.1	56.1	1	5202.96	3.25	0	85.33	0	1.7	0	0	12.12	0	0	0	0	0	0	-43.08	-43.08
	Inverter Transformer	MV5-6 T	369987	4908507	2	0	0	56.1	56.1	1	5225.43	3.25	0	85.36	0	1.71	0	0	12.15	0	0	0	0	0	0	-43.16	-43.16
	Inverter Transformer	MV5-5 T	370021	4908690	2	0	0	56.1	56.1	1	5315.39	3.25	0	85.51	0	1.74	0	0	12.26	0	0	0	0	0	0	-43.45	-43.45
	Inverter Transformer	MV5-2 T	370011	4908853	2	0	0	56.1	56.1	1	5362.01	3.25	0	85.59	0	1.75	0	0	12.32	0	0	0	0	0	0	-43.6	-43.6
	Inverter Transformer	MV5-1 T	370015	4909142	2	0	0	56.1	56.1	1	5475.6	3.25	0	85.77	0	1.79	0	0	12.46	0	0	0	0	0	0	-43.97	-43.97
	Inverter Transformer	MV5-3 T	370237	4908851	2	0	0	56.1	56.1	1	5572.98	3.25	0	85.92	0	1.83	0	0	12.59	0	0	0	0	0	0	-44.27	-44.27
	Inverter Transformer	MV5-4 T	370330	4908707	2	0	0	56.1	56.1	1	5613.36	3.25	0	85.98	0	1.84	0	0	12.64	0	0	0	0	0	0	-44.4	-44.4
	Line Reactor	NGR	369421	4908787.5	5	0	0	45.4	45.4	1	4789.89	5.25	0	84.61	0	3.27	1.35	0.1	1.96	0	0	0	0	0	0	-45.83	-45.83
Limit. Valu	0	0																								
Level D/N:	30.3175	30.3175																								

Receiver: Existing Noise Receptor
ID: S-R73
X: 365336
Y: 4907105
Z: 4.5
Ground: 0

ISO	Description	ID	X	Y	Z	Ground	ReflOrd	LxT	LxN	L/A	Dist.	hm	Freq	Adiv	K0b	Agr	Abar	z	Aatm	Afol	Ahous	Cmet	CmetN	Dc	RL	LtotT	LtotN
	Inverter	MV2-4	365586	4906624	2	0	0	100.3	100.3	1	542.1	3.25	0	65.68	0	-0.52	0	0	8.83	0	0	0	0	0	0	26.32	26.32
	Inverter	MV2-3	365820	4906641	2	0	0	100.3	100.3	1	670.49	3.25	0	67.53	0	-0.43	0	0	9.59	0	0	0	0	0	0	23.62	23.62
	Inverter	MV2-1	365842	4906816	2	0	0	97.3	97.3	1	582.72	3.25	0	66.31	0	-0.49	0	0	9.1	0	0	0	0	0	0	22.39	22.39
	Inverter	MV1-1	364715	4906166	2	0	0	100.3	100.3	1	1125.77	3.25	0	72.03	0	-0.19	0	0	11.31	0	0	0	0	0	0	17.16	17.16
	Sol_Luce Substation	S_Substation	369426	4908792	3.5	0	0	112.1	112.1	1	4424.26	5.25	0	83.92	0	0.73	3	0.3	7.92	0	0	0	0	0	0	16.51	16.51
	Inverter	MV1-2	364753	4906063	2	0	0	100.3	100.3	1	1194.01	3.25	0	72.54	0	-0.16	0	0	11.51	0	0	0	0	0	0	16.42	16.42
	Inverter	MV1-4	364815	4905918	2	0	0	100.3	100.3	1	1296.31	3.25	0	73.25	0	-0.11	0	0	11.8	0	0	0	0	0	0	15.38	15.38
	Inverter	MV1-5	364671	4905892	2	0	0	100.3	100.3	1	1383.33	3.25	0	73.82	0	-0.08	0	0	12.03	0	0	0	0	0	0	14.54	14.54
	Inverter	MV1-6	364477	4905835	2	0	0	100.3	100.3	1	1533.23	3.25	0	74.71	0	-0.02	0	0	12.41	0	0	0	0	0	0	13.21	13.21
	Inverter	MV1-8	364788	4905647	2	0	0	100.3	100.3	1	1557.59	3.25	0	74.85	0	-0.01	0	0	12.47	0	0	0	0	0	0	13.01	13.01
	Inverter	MV1-9	364561	4905646	2	0	0	100.3	100.3	1	1652.06	3.25	0	75.36	0	0.02	0	0	12.69	0	0	0	0	0	0	12.24	12.24
	Inverter	MV1-12	365038	4905386	2	0	0	100.3	100.3	1	1744.64	3.25	0	75.83	0	0.05	0	0	12.9	0	0	0	0	0	0	11.52	11.52
	Inverter	MV1-11	364655	4905414	2	0	0	100.3	100.3	1	1822.98	3.25	0	76.22	0	0.08	0	0	13.08	0	0	0	0	0	0	10.94	10.94
	Inverter	MV1-7	364925	4905782	2	0	0	97.3	97.3	1	1385.37	3.25	0	73.83	0	-0.08	0	0	12.03	0	0	0	0	0	0	11.53	11.53
	Inverter	MV1-15	365315	4904994	2	0	0	100.3	100.3	1	2111.11	3.25	0	77.49	0	0.16	0	0	13.69	0	0	0	0	0	0	8.97	8.97
	Inverter	MV1-10	365004	4905564	2	0	0	97.3	97.3	1	1576.36	3.25	0	74.95	0	-0.01	0	0	12.51	0	0	0	0	0	0	9.85	9.85
	Inverter	MV3-12	367668	4907594	2	0	0	100.3	100.3	1	2382.72	3.25	0	78.54	0	0.23	0	0	14.23	0	0	0	0	0	0	7.31	7.31
	Inverter	MV3-18	367752	4907412	2	0	0	100.3	100.3	1	2435.43	3.25	0	78.73	0	0.24	0	0	14.33	0	0	0	0	0	0	7	7
	Inverter	MV3-13	367963	4907577	2	0	0	100.3	100.3	1	2669.07	3.25	0	79.53	0	0.29	0	0	14.77	0	0	0	0	0	0	5.72	5.72
	Inverter	MV3-7	367945	4907754	2	0	0	100.3	100.3	1	2688.51	3.25	0	79.59	0	0.3	0	0	14.81	0	0	0	0	0	0	5.61	5.61
	Inverter	MV3-3	367939	4907927	2	0	0	100.3	100.3	1	2729.71	3.25	0	79.72	0	0.31	0	0	14.89	0	0	0	0	0	0	5.4	5.4
	Inverter	MV1-13	364731	4905241	2	0	0	97.3	97.3	1	1959.73	3.25	0	76.84	0	0.12	0	0	13.38	0	0	0	0	0	0	6.97	6.97
	Inverter	MV2-2	365977	4906654	2	0	0	89.1	89.1	1	783.77	3.25	0	68.88	0	0.64	0	0	5.89	0	0	0	0	0	0	13.65	13.65
	Inverter	MV3-17	368178	4907472	2	0	0	100.3	100.3	1	2865.6	3.25	0	80.14	0	0.34	0	0	15.13	0	0	0	0	0	0	4.7	4.7
	Inverter	MV3-10	368167	4907669	2	0	0	100.3	100.3	1	2886.64	3.25	0	80.21	0	0.34	0	0	15.17	0	0	0	0	0	0	4.59	4.59
	Inverter	MV1-14	365163	4905049	2	0	0	97.3	97.3	1	2063.27	3.25	0	77.29	0	0.15	0	0	13.59	0	0	0	0	0	0	6.28	6.28
	Inverter	MV3-6	368162	4907834	2	0	0	100.3	100.3	1	2918.51	3.25	0	80.3	0	0.35	0	0	15.23	0	0	0	0	0	0	4.44	4.44
	Inverter	MV3-19	368357	4907347	2	0	0	100.3	100.3	1	3030.68	3.25	0	80.63	0	0.37	0	0	15.43	0	0	0	0	0	0	3.89	3.89
	Inverter	MV3-15	368357	4907477	2	0	0	100.3	100.3	1	3043.82	3.25	0	80.67	0	0.37	0	0	15.45	0	0	0	0	0	0	3.82	3.82
	Inverter	MV3-11	368346	4907662	2	0	0	100.3	100.3	1	3061.1	3.25	0	80.72	0	0.37	0	0	15.48	0	0	0	0	0	0	3.74	3.74
	Inverter	MV3-21	368478	4907206	2	0	0	100.3	100.3	1	3143.62	3.25	0	80.95	0	0.39	0	0	15.62	0	0	0	0	0	0	3.35	3.35
	Inverter	MV3-16	368514	4907475	2	0	0	100.3	100.3	1	3199.47	3.25	0	81.1	0	0.4	0	0	15.72	0	0	0	0	0	0	3.09	3.09
	Inverter	MV3-9	368512	4907703	2	0	0	100.3	100.3	1	3231.81	3.25	0	81.19	0	0.41	0	0	15.78	0	0	0	0	0	0	2.94	2.94
	Inverter	MV3-20	368689	4907317	2	0	0	100.3	100.3	1	3359.7	3.25	0	81.53	0	0.43	0	0	15.99	0	0	0	0	0	0	2.36	2.36
	Inverter	MV3-14	368684	4907498	2	0	0	100.3	100.3	1	3370.99	3.25	0	81.56	0	0.43	0	0	16.01	0	0	0	0	0	0	2.31	2.31
	Inverter	MV3-8	368680	4907712	2	0	0	100.3	100.3	1	3398.65	3.25	0	81.63	0	0.43	0	0	16.06	0	0	0	0	0	0	2.19	2.19
	Inverter	MV4-7	369035	4909001	2	0	0	100.3	100.3	1	4156.61	3.25	0	83.37	0	0.55	0	0	17.3	0	0	0	0	0	0	-0.91	-0.91
	Inverter	MV4-4	369027	4909199	2	0	0	100.3	100.3	1	4243.62	3.25	0	83.55	0	0.56	0	0	17.43	0	0	0	0	0	0	-1.24	-1.24
	Inverter	MV4-11	369264	4908855	2	0	0	100.3	100.3	1	4300.2	3.25	0	83.67	0	0.57	0	0	17.52	0	0	0	0	0	0	-1.45	-1.45
	Inverter	MV4-1	369011	4909397	2	0	0	100.3	100.3	1	4331.15	3.25	0	83.73	0	0.57	0	0	17.57	0	0	0	0	0	0	-1.56	-1.56
	Inverter	MV4-10	369312	4908858	2	0	0	100.3	100.3	1	4345.3	3.25	0	83.76	0	0.57	0	0	17.59	0	0	0	0	0	0	-1.61	-1.61
	Inverter	MV4-8	369256	4909001	2	0	0	100.3	100.3	1	4354.45	3.25	0	83.78	0	0.57	0	0	17.61	0	0	0	0	0	0	-1.65	-1.65
	Inverter	MV4-9	369289	4909001	2	0	0	100.3	100.3	1	4384.18	3.25	0	83.84	0	0.58	0	0	17.65	0	0	0	0	0	0	-1.75	-1.75
	Inverter	MV4-6	369243	4909192	2	0	0	100.3	100.3	1	4429.47	3.25	0	83.93	0	0.58	0	0	17.72	0	0	0	0	0	0	-1.92	-1.92
	Inverter	MV4-5	369289	4909199	2	0	0	100.3	100.3	1	4473.37	3.25	0	84.01	0	0.59	0	0	17.79	0	0	0	0	0	0	-2.08	-2.08

Inverter	MV4-3	369229	4909397	2	0	0	100.3	100.3	1	4517.6	3.25	0	84.1	0	0.59	0	0	17.86	0	0	0	0	0	0	-2.24	-2.24
Inverter	MV4-2	369272	4909397	2	0	0	100.3	100.3	1	4554.71	3.25	0	84.17	0	0.6	0	0	17.91	0	0	0	0	0	0	-2.37	-2.37
Inverter	MV6-2	370085	4907339	2	0	0	100.3	100.3	1	4754.76	3.25	0	84.54	0	0.62	0	0	18.22	0	0	0	0	0	0	-3.07	-3.07
Inverter	MV6-3	370207	4907140	2	0	0	100.3	100.3	1	4871.13	3.25	0	84.75	0	0.63	0	0	18.39	0	0	0	0	0	0	-3.46	-3.46
Inverter	MV5-5	370015	4908690	2	0	0	100.3	100.3	1	4940.17	3.25	0	84.87	0	0.64	0	0	18.49	0	0	0	0	0	0	-3.69	-3.69
Inverter	MV5-2	370006	4908853	2	0	0	100.3	100.3	1	4986.42	3.25	0	84.96	0	0.64	0	0	18.56	0	0	0	0	0	0	-3.84	-3.84
Inverter	MV1-3	364440	4906039	2	0	0	89.1	89.1	1	1392.54	3.25	0	73.88	0	0.77	0	0	7.02	0	0	0	0	0	0	7.39	7.39
Inverter	MV5-1	370020	4909142	2	0	0	100.3	100.3	1	5107.76	3.25	0	85.16	0	0.65	0	0	18.74	0	0	0	0	0	0	-4.24	-4.24
Inverter	MV5-3	370231	4908851	2	0	0	100.3	100.3	1	5197.07	3.25	0	85.32	0	0.66	0	0	18.87	0	0	0	0	0	0	-4.53	-4.53
Inverter	MV5-4	370324	4908707	2	0	0	100.3	100.3	1	5238.95	3.25	0	85.38	0	0.66	0	0	18.93	0	0	0	0	0	0	-4.66	-4.66
DSTATCOM - 10 MVAR #2	DSAT2	369403	4908757	2.5	0	0	96.6	96.6	1	4389.71	3.5	0	83.85	0	3.62	0	0	3.04	0	0	0	0	0	0	6.12	6.12
DSTATCOM - 10 MVAR #1	DSAT1	369437	4908757	2.5	0	0	96.6	96.6	1	4421.23	3.5	0	83.91	0	3.62	0	0	3.06	0	0	0	0	0	0	6.04	6.04
Inverter	MV6-1	370235	4907364	2	0	0	97.3	97.3	1	4905.84	3.25	0	84.81	0	0.63	0	0	18.44	0	0	0	0	0	0	-6.58	-6.58
Inverter	MV3-1	368156	4907976	2	0	0	89.1	89.1	1	2951.45	3.25	0	80.4	0	1.13	0	0	9.54	0	0	0	0	0	0	-2.02	-2.02
Inverter	MV3-5	368340	4907843	2	0	0	89.1	89.1	1	3093.33	3.25	0	80.81	0	1.17	0	0	9.76	0	0	0	0	0	0	-2.68	-2.68
SubstationTransformer	W_ST	369711.17	4906112.3	2.5	0	0	92	92	1	4486.38	4.25	0	84.04	0	1.5	2.47	0.28	7.99	0	0	0	0	0	0	-4.03	-4.03
Gardiner Substation	G_Sub	366586.3	4903349.9	2.5	0	0	90.8	90.8	1	3957.78	4.25	0	82.95	0	1.36	2.67	0.33	7.31	0	0	0	0	0	0	-3.51	-3.51
Inverter	MV3-4	368502	4907925	2	0	0	89.1	89.1	1	3270.47	3.25	0	81.29	0	1.21	0	0	10.02	0	0	0	0	0	0	-3.47	-3.47
Inverter	MV3-22	368656	4907142	2	0	0	89.1	89.1	1	3320.21	3.25	0	81.42	0	1.23	0	0	10.1	0	0	0	0	0	0	-3.69	-3.69
Inverter	MV3-2	368671	4907928	2	0	0	89.1	89.1	1	3435.05	3.25	0	81.72	0	1.25	0	0	10.27	0	0	0	0	0	0	-4.18	-4.18
Inverter	MV4-13	369051	4908605	2	0	0	89.1	89.1	1	4006.4	3.25	0	83.06	0	1.39	0	0	11.09	0	0	0	0	0	0	-6.48	-6.48
Fixed Reactor Bank 1	FRB1	369378	4908755	6	0	0	89.8	89.8	1	4365.81	5.25	0	83.8	0	-0.67	0	0	7.84	0	0	0	0	0	0	-1.2	-1.2
Inverter	MV4-12	369043	4908803	2	0	0	89.1	89.1	1	4077.38	3.25	0	83.21	0	1.41	0	0	11.19	0	0	0	0	0	0	-6.76	-6.76
Inverter	MV4-15	369176	4908481	2	0	0	89.1	89.1	1	4079.09	3.25	0	83.21	0	1.41	0	0	11.2	0	0	0	0	0	0	-6.76	-6.76
Inverter	MV4-14	369176	4908507	2	0	0	89.1	89.1	1	4087.93	3.25	0	83.23	0	1.41	0	0	11.21	0	0	0	0	0	0	-6.8	-6.8
Fixed Reactor Bank 2	FRB2	369464	4908755	6	0	0	89.8	89.8	1	4445.55	5.25	0	83.96	0	-0.65	0	0	7.94	0	0	0	0	0	0	-1.47	-1.47
Westbrook Inverter Enclosur	W_INV2	369374	4906388	2	0	0	89.1	89.1	1	4101.16	3.25	0	83.26	0	1.42	0	0	11.23	0	0	0	0	0	0	-6.85	-6.85
Westbrook Inverter Enclosur	W_INV3	369508	4906164	2	0	0	89.1	89.1	1	4276.81	3.25	0	83.62	0	1.46	0	0	11.47	0	0	0	0	0	0	-7.5	-7.5
Westbrook Inverter Enclosur	W_INV5	369719	4906574	2	0	0	89.1	89.1	1	4415.05	3.25	0	83.9	0	1.49	0	0	11.67	0	0	0	0	0	0	-8	-8
Westbrook Inverter Enclosur	W_INV4	369673	4906164	2	0	0	89.1	89.1	1	4437.91	3.25	0	83.94	0	1.5	0	0	11.7	0	0	0	0	0	0	-8.09	-8.09
Westbrook Inverter Enclosur	W_INV7	369780	4906417	2	0	0	89.1	89.1	1	4496.94	3.25	0	84.06	0	1.52	0	0	11.78	0	0	0	0	0	0	-8.3	-8.3
Westbrook Inverter Enclosur	W_INV6	369875	4906578	2	0	0	89.1	89.1	1	4569.49	3.25	0	84.2	0	1.53	0	0	11.88	0	0	0	0	0	0	-8.55	-8.55
Inverters	G_Inv1	366526.4	4903225.8	2	0	0	87.7	87.7	1	4057.74	3.25	0	83.17	0	2.8	0	0	4.94	0	0	0	0	0	0	-3.24	-3.24
Inverters	G_Inv2	366676.9	4903239.1	2	0	0	87.7	87.7	1	4091.85	3.25	0	83.24	0	2.8	0	0	4.97	0	0	0	0	0	0	-3.35	-3.35
Inverter	MV5-6	369982	4908507	2	0	0	89.1	89.1	1	4852.93	3.25	0	84.72	0	1.6	0	0	12.27	0	0	0	0	0	0	-9.53	-9.53
Inverters	G_Inv3	366583.7	4903091.4	2	0	0	87.7	87.7	1	4203.06	3.25	0	83.47	0	2.81	0	0	5.09	0	0	0	0	0	0	-3.71	-3.71
Inverters	G_Inv4	366732.8	4903105	2	0	0	87.7	87.7	1	4236.87	3.25	0	83.54	0	2.81	0	0	5.13	0	0	0	0	0	0	-3.82	-3.82
Inverters	G_Inv5	366638.5	4902958.1	2	0	0	87.7	87.7	1	4346.64	3.25	0	83.76	0	2.82	0	0	5.25	0	0	0	0	0	0	-4.17	-4.17
Inverters	G_Inv6	366788.5	4902972	2	0	0	87.7	87.7	1	4380.8	3.25	0	83.83	0	2.82	0	0	5.28	0	0	0	0	0	0	-4.28	-4.28
Inverters	G_Inv7	366694.6	4902824.7	2	0	0	87.7	87.7	1	4490.74	3.25	0	84.05	0	2.83	0	0	5.4	0	0	0	0	0	0	-4.62	-4.62
Inverters	G_Inv8	366844.5	4902838.5	2	0	0	87.7	87.7	1	4525.33	3.25	0	84.11	0	2.83	0	0	5.44	0	0	0	0	0	0	-4.72	-4.72
Inverters	G_Inv9	366750.9	4902691.8	2	0	0	87.7	87.7	1	4634.47	3.25	0	84.32	0	2.84	0	0	5.55	0	0	0	0	0	0	-5.05	-5.05
Inverters	G_Inv10	366900.7	4902704.8	2	0	0	87.7	87.7	1	4670.12	3.25	0	84.39	0	2.84	0	0	5.59	0	0	0	0	0	0	-5.16	-5.16
Inverter Transformer	MV2-1 T	365836	4906816	2	0	0	69.4	69.4	1	577.52	3.25	0	66.23	0	1.18	0	0	3.12	0	0	0	0	0	0	-1.18	-1.18
Westbrook Inverter Enclosur	W_INV1	369409	4906578	2	0	0	86.1	86.1	1	4106.95	3.25	0	83.27	0	1.42	0	0	11.24	0	0	0	0	0	0	-9.87	-9.87
Inverter	MV6-4	370250	4906966	2	0	0	86.1	86.1	1	4915.97	3.25	0	84.83	0	1.62	0	0	12.35	0	0	0	0	0	0	-12.74	-12.74
Inverter Transformer	MV1-7 T	364919	4905782	2	0	0	69.4	69.4	1	1387.16	3.25	0	73.84	0	1.92	0	0	4.3	0	0	0	0	0	0	-10.72	-10.72
Westbrook Inverter Transfor	W_INVTR1	369403	4906578	2	0	0	78.2	78.2	1	4101	3.25	0	83.26	0	-2.99	0	0	2.09	0	0	0	0	0	0	-4.12	-4.12
Inverter Transformer	MV1-10 T	365010	4905564	2	0	0	69.4	69.4	1	1575.11	3.25	0	74.95	0	2.01	0	0	4.52	0	0	0	0	0	0	-12.12	-12.12
Westbrook Inverter Transfor	W_INVTR2	369368	4906388	2	0	0	77.3	77.3	1	4095.26	3.25	0	83.25	0	-2.98	0	0	2.09	0	0	0	0	0	0	-5.01	-5.01
Westbrook Inverter Transfor	W_INVTR3	369514	4906164	2	0	0	77.3	77.3	1	4282.66	3.25	0	83.63	0	-3.03	0	0	2.16	0	0	0	0	0	0	-5.43	-5.43
Westbrook Inverter Transfor	W_INVTR5	369725	4906574	2	0	0	77.3	77.3	1	4421.01	3.25	0	83.91	0	-3.06	0	0	2.21	0	0	0	0	0	0	-5.72	-5.72
Westbrook Inverter Transfor	W_INVTR4	369679	4906164	2	0	0	77.3	77.3	1	4443.77	3.25	0	83.96	0	-3.06	0	0	2.22	0	0	0	0	0	0	-5.77	-5.77
Westbrook Inverter Transfor	W_INVTR7	369786	4906417	2	0	0	77.3	77.3	1	4502.87	3.25	0	84.07	0	-3.07	0	0	2.24	0	0	0	0	0	0	-5.89	-5.89
Westbrook Inverter Transfor	W_INVTR6	369881	4906578	2	0	0	77.3	77.3	1	4575.45	3.25	0	84.21	0	-3.09	0	0	2.27	0	0	0	0	0	0	-6.04	-6.04
Inverter Transformer	MV1-13 T	364725	4905241	2	0	0	69.4	69.4	1	1961.59	3.25	0	76.85	0	2.16	0	0	4.93	0	0	0	0	0	0	-14.59	-14.59
Inverter Transformer	MV1-14 T	365157	4905049	2	0	0	69.4	69.4	1	2063.78	3.25	0	77.29	0	2.2	0	0	5.03	0	0	0	0	0	0	-15.17	-15.17
Inverter Transformer	MV2-4 T	365590	4906628	2	0	0	56.1	56.1	1	540.42	3.25	0	65.65	0	-0.11	0	0	3.68	0	0	0	0	0	0	-13.16	-13.16
Inverter Transformer	MV2-3 T	365814	4906641	2	0	0	56.1	56.1	1	666.17	3.25	0	67.47	0	-0.09	0	0	4.04	0	0	0	0	0	0	-15.37	-15.37
Inverter Transformer	MV2-2 T	365982	4906654	2	0	0	56.1	56.1	1	787.86	3.25	0	68.93	0	-0.06	0	0	4.36	0	0	0	0	0	0	-17.18	-17.18
Inverter Transformer	MV6-1 T	370230	4907364	2	0	0	69.4	69.4	1	4900.85	3.25	0	84.81	0	2.99	0	0	7.32	0	0	0	0	0	0	-25.76	-25.76
Inverter Transformer	MV6-4 T	370244	4906966	2	0	0	69.4	69.4	1	4909.97	3.25	0	84.82	0	2.99	0	0	7.32	0	0	0	0	0	0	-25.79	-25.79
Inverter Transformer	MV1-1 T	364721	4906166	2	0	0	56.1	56.1	1	1122.48	3.25	0	72	0	0.06	0	0	5.18	0	0	0	0	0	0	-21.18	-21.18
Inverter Transformer	MV1-2 T	364759	4906063	2	0	0	56.1	56.1	1	1191.09	3.25	0	72.52	0	0.08	0	0	5.34	0	0	0	0	0	0	-21.88	-21.88
Inverter Transformer	MV1-4 T	364821	4905918	2	0	0	56.1	56.1	1	1293.91	3.25	0	73.24	0	0.12	0	0	5.57	0	0	0	0	0	0	-22.87	-22.87
Inverter Transformer	MV1-5 T	364676	4905892	2	0	0	56.1	56.1	1	1380.93	3.25	0	73.8	0	0.15	0	0	5.76	0	0	0	0	0	0	-23.66	-23.66
Inverter Transformer	MV1-3 T	364435	4906039	2	0	0	56.1	56.1	1	1395.77	3.25	0	73.9	0	0.16	0	0	5.79	0	0	0	0	0	0	-23.79	-23.79
Inverter Transformer	MV1-6 T	364482	4905835	2	0	0	56.1	56.1	1	1530.43	3.25	0	74.7	0	0.21	0	0	6.08	0	0	0	0	0	0	-24.93	-24.93
Inverter Transformer	MV1-8 T	364782	4905647	2	0	0	56.1	56.1	1	1559.71	3.25	0	74.86	0	0.22	0	0	6.15	0	0	0	0	0	0	-25.17	-25.17
Inverter Transformer	MV1-9 T	364555	4905646	2	0	0	56.1	56.1	1	1654.89	3.25	0	75.38	0	0.26	0	0	6.35	0	0	0	0	0	0	-25.92	-25.92
Inverter Transformer	MV1-12 T	365044	4905386	2	0	0	56.1	56.1	1	1743.63	3.25	0	75.83	0	0.3	0	0	6.53	0	0	0	0	0	0	-26.6	-26.6
Inverter Transformer	MV1-11 T	364649	4905414	2	0	0	56.1	56.1	1	1825.23	3.25	0	76.23	0	0.33	0	0	6.69	0	0	0	0	0	0	-27.19	-27.19
Inverter Transformer	MV1-15 T	365309	4904994	2	0	0	56.1	56.1	1	2111.17	3.25	0	77.49	0	0.45	0	0	7.26	0	0	0	0	0	0	-29.14	-29.14
Inverter Transformer	MV3-12 T	367674	4907594	2	0	0	56.1	56.1	1	2388.59	3.25	0	78.56	0	0.57	0	0	7.78	0	0	0	0	0	0	-30.86	-30.86

	Inverter Transformer	MV3-18 T	367757	4907412	2	0	0	56.1	56.1	1	2440.39	3.25	0	78.75	0	0.59	0	0	7.88	0	0	0	0	0	0	-31.16	-31.16
	Inverter Transformer	MV3-13 T	367958	4907577	2	0	0	56.1	56.1	1	2664.15	3.25	0	79.51	0	0.69	0	0	8.28	0	0	0	0	0	0	-32.42	-32.42
	Inverter Transformer	MV3-7 T	367951	4907754	2	0	0	56.1	56.1	1	2694.33	3.25	0	79.61	0	0.7	0	0	8.34	0	0	0	0	0	0	-32.59	-32.59
	Inverter Transformer	MV3-3 T	367944	4907927	2	0	0	56.1	56.1	1	2734.48	3.25	0	79.74	0	0.72	0	0	8.41	0	0	0	0	0	0	-32.81	-32.81
	Inverter Transformer	MV3-17 T	368183	4907472	2	0	0	56.1	56.1	1	2870.56	3.25	0	80.16	0	0.77	0	0	8.65	0	0	0	0	0	0	-33.52	-33.52
	Inverter Transformer	MV3-10 T	368162	4907669	2	0	0	56.1	56.1	1	2881.73	3.25	0	80.19	0	0.78	0	0	8.67	0	0	0	0	0	0	-33.58	-33.58
	Inverter Transformer	MV3-6 T	368156	4907834	2	0	0	56.1	56.1	1	2912.7	3.25	0	80.29	0	0.79	0	0	8.72	0	0	0	0	0	0	-33.74	-33.74
	Inverter Transformer	MV3-1 T	368150	4907976	2	0	0	56.1	56.1	1	2945.72	3.25	0	80.38	0	0.81	0	0	8.78	0	0	0	0	0	0	-33.91	-33.91
	Inverter Transformer	MV3-19 T	368352	4907347	2	0	0	56.1	56.1	1	3025.69	3.25	0	80.62	0	0.84	0	0	8.91	0	0	0	0	0	0	-34.31	-34.31
	Inverter Transformer	MV3-15 T	368351	4907477	2	0	0	56.1	56.1	1	3037.86	3.25	0	80.65	0	0.85	0	0	8.93	0	0	0	0	0	0	-34.37	-34.37
	Inverter Transformer	MV3-11 T	368340	4907662	2	0	0	56.1	56.1	1	3055.2	3.25	0	80.7	0	0.85	0	0	8.96	0	0	0	0	0	0	-34.46	-34.46
	Inverter Transformer	MV3-5 T	368335	4907843	2	0	0	56.1	56.1	1	3088.47	3.25	0	80.79	0	0.87	0	0	9.02	0	0	0	0	0	0	-34.62	-34.62
	Inverter Transformer	MV3-21 T	368484	4907206	2	0	0	56.1	56.1	1	3149.62	3.25	0	80.97	0	0.89	0	0	9.12	0	0	0	0	0	0	-34.92	-34.92
	Inverter Transformer	MV3-16 T	368509	4907475	2	0	0	56.1	56.1	1	3194.5	3.25	0	81.09	0	0.91	0	0	9.19	0	0	0	0	0	0	-35.14	-35.14
	Inverter Transformer	MV3-9 T	368517	4907703	2	0	0	56.1	56.1	1	3236.72	3.25	0	81.2	0	0.93	0	0	9.26	0	0	0	0	0	0	-35.34	-35.34
	Inverter Transformer	MV3-4 T	368507	4907925	2	0	0	56.1	56.1	1	3275.31	3.25	0	81.31	0	0.95	0	0	9.33	0	0	0	0	0	0	-35.52	-35.52
	Inverter Transformer	MV3-22 T	368661	4907142	2	0	0	56.1	56.1	1	3325.21	3.25	0	81.44	0	0.97	0	0	9.41	0	0	0	0	0	0	-35.75	-35.75
	Inverter Transformer	MV3-20 T	368683	4907317	2	0	0	56.1	56.1	1	3353.71	3.25	0	81.51	0	0.98	0	0	9.45	0	0	0	0	0	0	-35.88	-35.88
	Inverter Transformer	MV3-14 T	368678	4907498	2	0	0	56.1	56.1	1	3365.03	3.25	0	81.54	0	0.98	0	0	9.47	0	0	0	0	0	0	-35.94	-35.94
	Inverter Transformer	MV3-8 T	368685	4907712	2	0	0	56.1	56.1	1	3403.57	3.25	0	81.64	0	1	0	0	9.53	0	0	0	0	0	0	-36.11	-36.11
	Inverter Transformer	MV3-2 T	368677	4907928	2	0	0	56.1	56.1	1	3440.87	3.25	0	81.73	0	1.02	0	0	9.59	0	0	0	0	0	0	-36.28	-36.28
	Inverter Transformer	MV4-13 T	369057	4908605	2	0	0	56.1	56.1	1	4011.96	3.25	0	83.07	0	1.25	0	0	10.47	0	0	0	0	0	0	-38.73	-38.73
	Inverter Transformer	MV4-15 T	369170	4908481	2	0	0	56.1	56.1	1	4073.44	3.25	0	83.2	0	1.27	0	0	10.56	0	0	0	0	0	0	-38.98	-38.98
	Inverter Transformer	MV4-12 T	369049	4908803	2	0	0	56.1	56.1	1	4082.84	3.25	0	83.22	0	1.28	0	0	10.58	0	0	0	0	0	0	-39.02	-39.02
	Inverter Transformer	MV4-14 T	369182	4908507	2	0	0	56.1	56.1	1	4093.57	3.25	0	83.24	0	1.28	0	0	10.59	0	0	0	0	0	0	-39.06	-39.06
	Inverter Transformer	MV4-7 T	369040	4909001	2	0	0	56.1	56.1	1	4161.06	3.25	0	83.38	0	1.31	0	0	10.69	0	0	0	0	0	0	-39.33	-39.33
	Inverter Transformer	MV4-4 T	369033	4909199	2	0	0	56.1	56.1	1	4248.84	3.25	0	83.57	0	1.34	0	0	10.82	0	0	0	0	0	0	-39.67	-39.67
	Inverter Transformer	MV4-11 T	369269	4908855	2	0	0	56.1	56.1	1	4304.76	3.25	0	83.68	0	1.36	0	0	10.9	0	0	0	0	0	0	-39.88	-39.88
	Inverter Transformer	MV4-1 T	369017	4909397	2	0	0	56.1	56.1	1	4336.25	3.25	0	83.74	0	1.38	0	0	10.94	0	0	0	0	0	0	-40	-40
	Inverter Transformer	MV4-10 T	369307	4908858	2	0	0	56.1	56.1	1	4340.72	3.25	0	83.75	0	1.38	0	0	10.95	0	0	0	0	0	0	-40.02	-40.02
	Inverter Transformer	MV4-8 T	369262	4909001	2	0	0	56.1	56.1	1	4359.85	3.25	0	83.79	0	1.39	0	0	10.98	0	0	0	0	0	0	-40.09	-40.09
	Inverter Transformer	MV4-9 T	369284	4909001	2	0	0	56.1	56.1	1	4379.67	3.25	0	83.83	0	1.39	0	0	11.01	0	0	0	0	0	0	-40.17	-40.17
	Inverter Transformer	MV4-6 T	369249	4909192	2	0	0	56.1	56.1	1	4434.77	3.25	0	83.94	0	1.41	0	0	11.08	0	0	0	0	0	0	-40.38	-40.38
	Inverter Transformer	MV4-5 T	369283	4909199	2	0	0	56.1	56.1	1	4468.07	3.25	0	84	0	1.43	0	0	11.13	0	0	0	0	0	0	-40.5	-40.5
	Inverter Transformer	MV4-3 T	369234	4909397	2	0	0	56.1	56.1	1	4521.91	3.25	0	84.11	0	1.45	0	0	11.21	0	0	0	0	0	0	-40.7	-40.7
	Inverter Transformer	MV4-2 T	369267	4909397	2	0	0	56.1	56.1	1	4550.39	3.25	0	84.16	0	1.46	0	0	11.25	0	0	0	0	0	0	-40.81	-40.81
	Inverter Transformer	MV6-2 T	370091	4907339	2	0	0	56.1	56.1	1	4760.75	3.25	0	84.55	0	1.54	0	0	11.53	0	0	0	0	0	0	-41.57	-41.57
	Inverter Transformer	MV5-6 T	369987	4908507	2	0	0	56.1	56.1	1	4857.72	3.25	0	84.73	0	1.57	0	0	11.67	0	0	0	0	0	0	-41.91	-41.91
	Inverter Transformer	MV6-3 T	370202	4907140	2	0	0	56.1	56.1	1	4866.13	3.25	0	84.74	0	1.58	0	0	11.68	0	0	0	0	0	0	-41.94	-41.94
	Inverter Transformer	MV5-5 T	370021	4908690	2	0	0	56.1	56.1	1	4945.85	3.25	0	84.88	0	1.61	0	0	11.78	0	0	0	0	0	0	-42.21	-42.21
	Inverter Transformer	MV5-2 T	370011	4908853	2	0	0	56.1	56.1	1	4991.11	3.25	0	84.96	0	1.62	0	0	11.84	0	0	0	0	0	0	-42.37	-42.37
	Inverter Transformer	MV5-1 T	370015	4909142	2	0	0	56.1	56.1	1	5103.18	3.25	0	85.16	0	1.66	0	0	11.99	0	0	0	0	0	0	-42.75	-42.75
	Inverter Transformer	MV5-3 T	370237	4908851	2	0	0	56.1	56.1	1	5202.72	3.25	0	85.32	0	1.7	0	0	12.12	0	0	0	0	0	0	-43.08	-43.08
	Inverter Transformer	MV5-4 T	370330	4908707	2	0	0	56.1	56.1	1	5244.66	3.25	0	85.39	0	1.71	0	0	12.17	0	0	0	0	0	0	-43.22	-43.22
	Line Reactor	NGR	369421	4908787.5	5	0	0	45.4	45.4	1	4417.92	5.25	0	83.9	0	3.28	1.34	0.1	1.81	0	0	0	0	0	0	-44.98	-44.98
Limit. Valu	0	0																								
Level D/N:	31.0402	31.0402																								

Receiver: Existing Noise Receptor
ID: S-R74
X: 365816
Y: 4907350
Z: 4.5
Ground: 0

ISO	Description	ID	X	Y	Z	Ground	ReflOrd	LxT	LxN	L/A	Dist.	hm	Freq	Adiv	K0b	Agr	Abar	z	Aatm	Afol	Ahous	Cmet	CmetN	Dc	RL	LtotT	LtotN
	Inverter	MV2-3	365820	4906641	2	0	0	100.3	100.3	1	709.02	3.25	0	68.01	0	-0.41	0	0	9.78	0	0	0	0	0	0	22.92	22.92
	Inverter	MV2-1	365842	4906816	2	0	0	97.3	97.3	1	534.64	3.25	0	65.56	0	-0.53	0	0	8.78	0	0	0	0	0	0	23.5	23.5
	Inverter	MV2-4	365586	4906624	2	0	0	100.3	100.3	1	761.57	3.25	0	68.63	0	-0.37	0	0	10.02	0	0	0	0	0	0	22.03	22.03
	Sol_Luce Substation	S_Substation	369426	4908792	3.5	0	0	112.1	112.1	1	3887.35	5.25	0	82.79	0	0.57	3.14	0.3	7.21	0	0	0	0	0	0	18.37	18.37
	Inverter	MV1-1	364715	4906166	2	0	0	100.3	100.3	1	1616.81	3.25	0	75.17	0	0.01	0	0	12.61	0	0	0	0	0	0	12.52	12.52
	Inverter	MV1-2	364753	4906063	2	0	0	100.3	100.3	1	1669.23	3.25	0	75.45	0	0.03	0	0	12.73	0	0	0	0	0	0	12.1	12.1
	Inverter	MV1-4	364815	4905918	2	0	0	100.3	100.3	1	1747.18	3.25	0	75.85	0	0.05	0	0	12.91	0	0	0	0	0	0	11.5	11.5
	Inverter	MV1-5	364671	4905892	2	0	0	100.3	100.3	1	1853.86	3.25	0	76.36	0	0.09	0	0	13.15	0	0	0	0	0	0	10.72	10.72
	Inverter	MV3-12	367668	4907594	2	0	0	100.3	100.3	1	1868.01	3.25	0	76.43	0	0.09	0	0	13.18	0	0	0	0	0	0	10.62	10.62
	Inverter	MV3-18	367752	4907412	2	0	0	100.3	100.3	1	1936.99	3.25	0	76.74	0	0.11	0	0	13.33	0	0	0	0	0	0	10.13	10.13
	Inverter	MV1-8	364788	4905647	2	0	0	100.3	100.3	1	1989.22	3.25	0	76.97	0	0.13	0	0	13.44	0	0	0	0	0	0	9.77	9.77
	Inverter	MV1-6	364477	4905835	2	0	0	100.3	100.3	1	2021.92	3.25	0	77.12	0	0.14	0	0	13.51	0	0	0	0	0	0	9.55	9.55
	Inverter	MV1-12	365038	4905386	2	0	0	100.3	100.3	1	2112.48	3.25	0	77.5	0	0.16	0	0	13.7	0	0	0	0	0	0	8.96	8.96
	Inverter	MV1-9	364561	4905646	2	0	0	100.3	100.3	1	2116.28	3.25	0	77.51	0	0.16	0	0	13.7	0	0	0	0	0	0	8.94	8.94
	Inverter	MV3-13	367963	4907577	2	0	0	100.3	100.3	1	2158.97	3.25	0	77.68	0	0.17	0	0	13.79	0	0	0	0	0	0	8.66	8.66
	Inverter	MV3-7	367945	4907754	2	0	0	100.3	100.3	1	2166.99	3.25	0	77.72	0	0.18	0	0	13.81	0	0	0	0	0	0	8.61	8.61
	Inverter	MV3-3	367939	4907927	2	0	0	100.3	100.3	1	2200.01	3.25	0	77.85	0	0.18	0	0	13.87	0	0	0	0	0	0	8.41	8.41
	Inverter	MV1-11	364655	4905414	2	0	0	100.3	100.3	1	2257.44	3.25	0	78.07	0	0.2	0	0	13.99	0	0	0	0	0	0	8.05	8.05

Inverter	MV3-17	368178	4907472	2	0	0	100.3	100.3	1	2365.15	3.25	0	78.48	0	0.23	0	0	14.2	0	0	0	0	0	0	7.41	7.41
Inverter	MV3-10	368167	4907669	2	0	0	100.3	100.3	1	2372.54	3.25	0	78.5	0	0.23	0	0	14.21	0	0	0	0	0	0	7.37	7.37
Inverter	MV3-6	368162	4907834	2	0	0	100.3	100.3	1	2395.41	3.25	0	78.59	0	0.23	0	0	14.26	0	0	0	0	0	0	7.23	7.23
Inverter	MV1-15	365315	4904994	2	0	0	100.3	100.3	1	2408.68	3.25	0	78.64	0	0.24	0	0	14.28	0	0	0	0	0	0	7.16	7.16
Inverter	MV3-19	368357	4907347	2	0	0	100.3	100.3	1	2541	3.25	0	79.1	0	0.27	0	0	14.54	0	0	0	0	0	0	6.41	6.41
Inverter	MV3-15	368357	4907477	2	0	0	100.3	100.3	1	2544.17	3.25	0	79.11	0	0.27	0	0	14.54	0	0	0	0	0	0	6.39	6.39
Inverter	MV1-7	364925	4905782	2	0	0	97.3	97.3	1	1803.47	3.25	0	76.12	0	0.07	0	0	13.04	0	0	0	0	0	0	8.08	8.08
Inverter	MV3-11	368346	4907662	2	0	0	100.3	100.3	1	2549.17	3.25	0	79.13	0	0.27	0	0	14.55	0	0	0	0	0	0	6.36	6.36
Inverter	MV2-2	365977	4906654	2	0	0	89.1	89.1	1	714.38	3.25	0	68.08	0	0.62	0	0	5.73	0	0	0	0	0	0	14.63	14.63
Inverter	MV3-21	368478	4907206	2	0	0	100.3	100.3	1	2665.89	3.25	0	79.52	0	0.29	0	0	14.77	0	0	0	0	0	0	5.73	5.73
Inverter	MV3-16	368514	4907475	2	0	0	100.3	100.3	1	2700.9	3.25	0	79.63	0	0.3	0	0	14.83	0	0	0	0	0	0	5.55	5.55
Inverter	MV3-9	368512	4907703	2	0	0	100.3	100.3	1	2719.01	3.25	0	79.69	0	0.31	0	0	14.87	0	0	0	0	0	0	5.45	5.45
Inverter	MV1-10	365004	4905564	2	0	0	97.3	97.3	1	1961.92	3.25	0	76.85	0	0.12	0	0	13.38	0	0	0	0	0	0	6.96	6.96
Inverter	MV3-14	368684	4907498	2	0	0	100.3	100.3	1	2871.82	3.25	0	80.16	0	0.34	0	0	15.14	0	0	0	0	0	0	4.67	4.67
Inverter	MV3-20	368689	4907317	2	0	0	100.3	100.3	1	2873.19	3.25	0	80.17	0	0.34	0	0	15.15	0	0	0	0	0	0	4.66	4.66
Inverter	MV3-8	368680	4907712	2	0	0	100.3	100.3	1	2886.79	3.25	0	80.21	0	0.34	0	0	15.17	0	0	0	0	0	0	4.59	4.59
Inverter	MV1-13	364731	4905241	2	0	0	97.3	97.3	1	2371.73	3.25	0	78.5	0	0.23	0	0	14.21	0	0	0	0	0	0	4.37	4.37
Inverter	MV1-14	365163	4905049	2	0	0	97.3	97.3	1	2391.86	3.25	0	78.57	0	0.23	0	0	14.25	0	0	0	0	0	0	4.25	4.25
Inverter	MV4-7	369035	4909001	2	0	0	100.3	100.3	1	3617.7	3.25	0	82.17	0	0.47	0	0	16.43	0	0	0	0	0	0	1.25	1.25
Inverter	MV4-4	369027	4909199	2	0	0	100.3	100.3	1	3705.31	3.25	0	82.38	0	0.48	0	0	16.57	0	0	0	0	0	0	0.88	0.88
Inverter	MV4-11	369264	4908855	2	0	0	100.3	100.3	1	3762.15	3.25	0	82.51	0	0.49	0	0	16.66	0	0	0	0	0	0	0.65	0.65
Inverter	MV4-1	369011	4909397	2	0	0	100.3	100.3	1	3794.5	3.25	0	82.58	0	0.5	0	0	16.72	0	0	0	0	0	0	0.51	0.51
Inverter	MV4-10	369312	4908858	2	0	0	100.3	100.3	1	3807.37	3.25	0	82.61	0	0.5	0	0	16.74	0	0	0	0	0	0	0.46	0.46
Inverter	MV4-8	369256	4909001	2	0	0	100.3	100.3	1	3815.68	3.25	0	82.63	0	0.5	0	0	16.75	0	0	0	0	0	0	0.43	0.43
Inverter	MV4-9	369289	4909001	2	0	0	100.3	100.3	1	3845.46	3.25	0	82.7	0	0.5	0	0	16.8	0	0	0	0	0	0	0.31	0.31
Inverter	MV4-6	369243	4909192	2	0	0	100.3	100.3	1	3890.67	3.25	0	82.8	0	0.51	0	0	16.87	0	0	0	0	0	0	0.13	0.13
Inverter	MV4-5	369289	4909199	2	0	0	100.3	100.3	1	3934.53	3.25	0	82.9	0	0.52	0	0	16.94	0	0	0	0	0	0	-0.05	-0.05
Inverter	MV4-3	369229	4909397	2	0	0	100.3	100.3	1	3979.8	3.25	0	83	0	0.52	0	0	17.02	0	0	0	0	0	0	-0.23	-0.23
Inverter	MV4-2	369272	4909397	2	0	0	100.3	100.3	1	4016.73	3.25	0	83.08	0	0.53	0	0	17.08	0	0	0	0	0	0	-0.37	-0.37
Inverter	MV6-2	370085	4907339	2	0	0	100.3	100.3	1	4269.01	3.25	0	83.61	0	0.56	0	0	17.47	0	0	0	0	0	0	-1.33	-1.33
Inverter	MV6-3	370207	4907140	2	0	0	100.3	100.3	1	4396.02	3.25	0	83.86	0	0.58	0	0	17.67	0	0	0	0	0	0	-1.8	-1.8
Inverter	MV5-5	370015	4908690	2	0	0	100.3	100.3	1	4407.63	3.25	0	83.88	0	0.58	0	0	17.69	0	0	0	0	0	0	-1.84	-1.84
Inverter	MV5-2	370006	4908853	2	0	0	100.3	100.3	1	4451.42	3.25	0	83.97	0	0.59	0	0	17.76	0	0	0	0	0	0	-2	-2
Inverter	MV5-1	370020	4909142	2	0	0	100.3	100.3	1	4570	3.25	0	84.2	0	0.6	0	0	17.94	0	0	0	0	0	0	-2.42	-2.42
Inverter	MV5-3	370231	4908851	2	0	0	100.3	100.3	1	4663.18	3.25	0	84.37	0	0.61	0	0	18.08	0	0	0	0	0	0	-2.75	-2.75
Inverter	MV5-4	370324	4908707	2	0	0	100.3	100.3	1	4707.81	3.25	0	84.46	0	0.61	0	0	18.15	0	0	0	0	0	0	-2.9	-2.9
DSTATCOM - 10 MVAR #2	DSAT2	369403	4908757	2.5	0	0	96.6	96.6	1	3853.08	3.5	0	82.72	0	3.55	0	0	2.76	0	0	0	0	0	0	7.6	7.6
DSTATCOM - 10 MVAR #1	DSAT1	369437	4908757	2.5	0	0	96.6	96.6	1	3884.75	3.5	0	82.79	0	3.55	0	0	2.78	0	0	0	0	0	0	7.51	7.51
Inverter	MV6-1	370235	4907364	2	0	0	97.3	97.3	1	4419.02	3.25	0	83.91	0	0.58	0	0	17.71	0	0	0	0	0	0	-4.88	-4.88
Inverter	MV1-3	364440	4906039	2	0	0	89.1	89.1	1	1900.55	3.25	0	76.58	0	0.88	0	0	7.88	0	0	0	0	0	0	3.71	3.71
Inverter	MV3-1	368156	4907976	2	0	0	89.1	89.1	1	2422.29	3.25	0	78.68	0	1.01	0	0	8.72	0	0	0	0	0	0	0.64	0.64
Inverter	MV3-5	368340	4907843	2	0	0	89.1	89.1	1	2571.7	3.25	0	79.2	0	1.04	0	0	8.96	0	0	0	0	0	0	-0.15	-0.15
Inverter	MV3-4	368502	4907925	2	0	0	89.1	89.1	1	2746.86	3.25	0	79.78	0	1.09	0	0	9.23	0	0	0	0	0	0	-1.03	-1.03
Inverter	MV3-22	368656	4907142	2	0	0	89.1	89.1	1	2847.61	3.25	0	80.09	0	1.11	0	0	9.38	0	0	0	0	0	0	-1.53	-1.53
Inverter	MV3-2	368671	4907928	2	0	0	89.1	89.1	1	2912.92	3.25	0	80.29	0	1.13	0	0	9.48	0	0	0	0	0	0	-1.84	-1.84
SubstationTransformer	W_ST	369711.17	4906112.3	2.5	0	0	92	92	1	4087.09	4.25	0	83.23	0	1.39	2.58	0.27	7.48	0	0	0	0	0	0	-2.7	-2.7
Gardiner Substation	G_Sub	366586.3	4903349.9	2.5	0	0	90.8	90.8	1	4073.59	4.25	0	83.2	0	1.4	2.66	0.35	7.46	0	0	0	0	0	0	-3.95	-3.95
Inverter	MV4-13	369051	4908605	2	0	0	89.1	89.1	1	3469.91	3.25	0	81.81	0	1.26	0	0	10.32	0	0	0	0	0	0	-4.33	-4.33
Fixed Reactor Bank 1	FRB1	369378	4908755	6	0	0	89.8	89.8	1	3829.08	5.25	0	82.66	0	-0.75	0	0	7.14	0	0	0	0	0	0	0.73	0.73
Inverter	MV4-12	369043	4908803	2	0	0	89.1	89.1	1	3539.03	3.25	0	81.98	0	1.28	0	0	10.42	0	0	0	0	0	0	-4.62	-4.62
Inverter	MV4-15	369176	4908481	2	0	0	89.1	89.1	1	3545.25	3.25	0	81.99	0	1.28	0	0	10.43	0	0	0	0	0	0	-4.64	-4.64
Inverter	MV4-14	369176	4908507	2	0	0	89.1	89.1	1	3553.63	3.25	0	82.01	0	1.28	0	0	10.44	0	0	0	0	0	0	-4.68	-4.68
Fixed Reactor Bank 2	FRB2	369464	4908755	6	0	0	89.8	89.8	1	3909.21	5.25	0	82.84	0	-0.74	0	0	7.24	0	0	0	0	0	0	0.43	0.43
Westbrook Inverter Enclosur	W_INV2	369374	4906388	2	0	0	89.1	89.1	1	3685.76	3.25	0	82.33	0	1.31	0	0	10.63	0	0	0	0	0	0	-5.22	-5.22
Westbrook Inverter Enclosur	W_INV3	369508	4906164	2	0	0	89.1	89.1	1	3877.82	3.25	0	82.77	0	1.36	0	0	10.91	0	0	0	0	0	0	-5.99	-5.99
Westbrook Inverter Enclosur	W_INV5	369719	4906574	2	0	0	89.1	89.1	1	3979.4	3.25	0	83	0	1.39	0	0	11.06	0	0	0	0	0	0	-6.38	-6.38
Westbrook Inverter Enclosur	W_INV4	369673	4906164	2	0	0	89.1	89.1	1	4035.23	3.25	0	83.12	0	1.4	0	0	11.13	0	0	0	0	0	0	-6.6	-6.6
Westbrook Inverter Enclosur	W_INV7	369780	4906417	2	0	0	89.1	89.1	1	4072.32	3.25	0	83.2	0	1.41	0	0	11.19	0	0	0	0	0	0	-6.74	-6.74
Westbrook Inverter Enclosur	W_INV6	369875	4906578	2	0	0	89.1	89.1	1	4131.76	3.25	0	83.32	0	1.42	0	0	11.27	0	0	0	0	0	0	-6.96	-6.96
Inverter	MV5-6	369982	4908507	2	0	0	89.1	89.1	1	4323.68	3.25	0	83.72	0	1.47	0	0	11.54	0	0	0	0	0	0	-7.67	-7.67
Inverters	G_Inv1	366526.4	4903225.8	2	0	0	87.7	87.7	1	4184.94	3.25	0	83.43	0	2.81	0	0	5.07	0	0	0	0	0	0	-3.65	-3.65
Inverters	G_Inv2	366676.9	4903239.1	2	0	0	87.7	87.7	1	4200.08	3.25	0	83.47	0	2.81	0	0	5.09	0	0	0	0	0	0	-3.7	-3.7
Inverters	G_Inv3	366583.7	4903091.4	2	0	0	87.7	87.7	1	4327.24	3.25	0	83.72	0	2.82	0	0	5.23	0	0	0	0	0	0	-4.11	-4.11
Inverters	G_Inv4	366732.8	4903105	2	0	0	87.7	87.7	1	4342.87	3.25	0	83.76	0	2.82	0	0	5.24	0	0	0	0	0	0	-4.16	-4.16
Inverter Transformer	MV2-1 T	365836	4906816	2	0	0	69.4	69.4	1	534.38	3.25	0	65.56	0	1.11	0	0	3.03	0	0	0	0	0	0	-0.35	-0.35
Westbrook Inverter Enclosur	W_INV1	369409	4906578	2	0	0	86.1	86.1	1	3675	3.25	0	82.31	0	1.31	0	0	10.62	0	0	0	0	0	0	-8.18	-8.18
Inverters	G_Inv5	366638.5	4902958.1	2	0	0	87.7	87.7	1	4468.25	3.25	0	84	0	2.83	0	0	5.38	0	0	0	0	0	0	-4.55	-4.55
Inverters	G_Inv6	366788.5	4902972	2	0	0	87.7	87.7	1	4484.71	3.25	0	84.03	0	2.83	0	0	5.39	0	0	0	0	0	0	-4.6	-4.6
Inverters	G_Inv7	366694.6	4902824.7	2	0	0	87.7	87.7	1	4609.8	3.25	0	84.27	0	2.84	0	0	5.53	0	0	0	0	0	0	-4.98	-4.98
Inverters	G_Inv8	366844.5	4902838.5	2	0	0	87.7	87.7	1	4627.25	3.25	0	84.31	0	2.84	0	0	5.55	0	0	0	0	0	0	-5.03	-5.03
Inverters	G_Inv9	366750.9	4902691.8	2	0	0	87.7	87.7	1	4751.09	3.25	0	84.54	0	2.85	0	0	5.68	0	0	0	0	0	0	-5.4	-5.4
Inverters	G_Inv10	366900.7	4902704.8	2	0	0	87.7	87.7	1	4770.16	3.25	0	84.57	0	2.85	0	0	5.7	0	0	0	0	0	0	-5.46	-5.46
Inverter	MV6-4	370250	4906966	2	0	0	86.1	86.1	1	4450.6	3.25	0	83.97	0	1.5	0	0	11.72	0	0	0	0	0	0	-11.13	-11.13
Westbrook Inverter Transfor	W_INVTR1	369403	4906578	2	0	0	78.2	78.2	1	3669.14	3.25	0	82.29	0	-2.89	0	0	1.93	0	0	0	0	0	0	-3.09	-3.09

Westbrook Inverter Transfor	W_INVTR2	369368	4906388	2	0	0	77.3	77.3	1	3679.97	3.25	0	82.32	0	-2.89	0	0	1.93	0	0	0	0	0	0	-4.02	-4.02
Westbrook Inverter Transfor	W_INVTR3	369514	4906164	2	0	0	77.3	77.3	1	3883.53	3.25	0	82.78	0	-2.94	0	0	2.01	0	0	0	0	0	0	-4.52	-4.52
Westbrook Inverter Transfor	W_INVTR5	369725	4906574	2	0	0	77.3	77.3	1	3985.28	3.25	0	83.01	0	-2.96	0	0	2.05	0	0	0	0	0	0	-4.76	-4.76
Westbrook Inverter Transfor	W_INVTR4	369679	4906164	2	0	0	77.3	77.3	1	4040.96	3.25	0	83.13	0	-2.97	0	0	2.07	0	0	0	0	0	0	-4.89	-4.89
Westbrook Inverter Transfor	W_INVTR7	369786	4906417	2	0	0	77.3	77.3	1	4078.16	3.25	0	83.21	0	-2.98	0	0	2.08	0	0	0	0	0	0	-4.97	-4.97
Westbrook Inverter Transfor	W_INVTR6	369881	4906578	2	0	0	77.3	77.3	1	4137.66	3.25	0	83.34	0	-2.99	0	0	2.11	0	0	0	0	0	0	-5.11	-5.11
Inverter Transformer	MV1-7 T	364919	4905782	2	0	0	69.4	69.4	1	1806.44	3.25	0	76.14	0	2.1	0	0	4.77	0	0	0	0	0	0	-13.65	-13.65
Inverter Transformer	MV1-10 T	365010	4905564	2	0	0	69.4	69.4	1	1959.45	3.25	0	76.84	0	2.16	0	0	4.92	0	0	0	0	0	0	-14.58	-14.58
Inverter Transformer	MV1-13 T	364725	4905241	2	0	0	69.4	69.4	1	2374.48	3.25	0	78.51	0	2.31	0	0	5.33	0	0	0	0	0	0	-16.79	-16.79
Inverter Transformer	MV1-14 T	365157	4905049	2	0	0	69.4	69.4	1	2393.51	3.25	0	78.58	0	2.31	0	0	5.34	0	0	0	0	0	0	-16.89	-16.89
Inverter Transformer	MV2-3 T	365814	4906641	2	0	0	56.1	56.1	1	709.01	3.25	0	68.01	0	-0.08	0	0	4.16	0	0	0	0	0	0	-16.03	-16.03
Inverter Transformer	MV2-2 T	365982	4906654	2	0	0	56.1	56.1	1	715.53	3.25	0	68.09	0	-0.08	0	0	4.17	0	0	0	0	0	0	-16.13	-16.13
Inverter Transformer	MV2-4 T	365590	4906628	2	0	0	56.1	56.1	1	756.55	3.25	0	68.58	0	-0.07	0	0	4.28	0	0	0	0	0	0	-16.74	-16.74
Inverter Transformer	MV6-1 T	370230	4907364	2	0	0	69.4	69.4	1	4414.02	3.25	0	83.9	0	2.89	0	0	6.98	0	0	0	0	0	0	-24.41	-24.41
Inverter Transformer	MV6-4 T	370244	4906966	2	0	0	69.4	69.4	1	4444.62	3.25	0	83.96	0	2.89	0	0	7	0	0	0	0	0	0	-24.5	-24.5
Inverter Transformer	MV1-1 T	364721	4906166	2	0	0	56.1	56.1	1	1612.73	3.25	0	75.15	0	0.24	0	0	6.26	0	0	0	0	0	0	-25.59	-25.59
Inverter Transformer	MV1-2 T	364759	4906063	2	0	0	56.1	56.1	1	1665.42	3.25	0	75.43	0	0.27	0	0	6.37	0	0	0	0	0	0	-26	-26
Inverter Transformer	MV1-4 T	364821	4905918	2	0	0	56.1	56.1	1	1743.75	3.25	0	75.83	0	0.3	0	0	6.53	0	0	0	0	0	0	-26.6	-26.6
Inverter Transformer	MV1-5 T	364676	4905892	2	0	0	56.1	56.1	1	1850.78	3.25	0	76.35	0	0.34	0	0	6.75	0	0	0	0	0	0	-27.38	-27.38
Inverter Transformer	MV3-12 T	367674	4907594	2	0	0	56.1	56.1	1	1873.95	3.25	0	76.46	0	0.35	0	0	6.79	0	0	0	0	0	0	-27.54	-27.54
Inverter Transformer	MV1-3 T	364435	4906039	2	0	0	56.1	56.1	1	1904.18	3.25	0	76.59	0	0.36	0	0	6.85	0	0	0	0	0	0	-27.75	-27.75
Inverter Transformer	MV3-18 T	367757	4907412	2	0	0	56.1	56.1	1	1941.99	3.25	0	76.76	0	0.38	0	0	6.93	0	0	0	0	0	0	-28.02	-28.02
Inverter Transformer	MV1-8 T	364782	4905647	2	0	0	56.1	56.1	1	1992.33	3.25	0	76.99	0	0.4	0	0	7.03	0	0	0	0	0	0	-28.36	-28.36
Inverter Transformer	MV1-6 T	364482	4905835	2	0	0	56.1	56.1	1	2018.61	3.25	0	77.1	0	0.41	0	0	7.08	0	0	0	0	0	0	-28.53	-28.53
Inverter Transformer	MV1-12 T	365044	4905386	2	0	0	56.1	56.1	1	2110.28	3.25	0	77.49	0	0.45	0	0	7.26	0	0	0	0	0	0	-29.14	-29.14
Inverter Transformer	MV1-9 T	364555	4905646	2	0	0	56.1	56.1	1	2119.85	3.25	0	77.53	0	0.45	0	0	7.28	0	0	0	0	0	0	-29.2	-29.2
Inverter Transformer	MV3-13 T	367958	4907577	2	0	0	56.1	56.1	1	2154	3.25	0	77.66	0	0.47	0	0	7.34	0	0	0	0	0	0	-29.42	-29.42
Inverter Transformer	MV3-7 T	367951	4907754	2	0	0	56.1	56.1	1	2172.89	3.25	0	77.74	0	0.48	0	0	7.38	0	0	0	0	0	0	-29.54	-29.54
Inverter Transformer	MV3-3 T	367944	4907927	2	0	0	56.1	56.1	1	2204.84	3.25	0	77.87	0	0.49	0	0	7.44	0	0	0	0	0	0	-29.74	-29.74
Inverter Transformer	MV1-11 T	364649	4905414	2	0	0	56.1	56.1	1	2260.53	3.25	0	78.08	0	0.51	0	0	7.55	0	0	0	0	0	0	-30.09	-30.09
Inverter Transformer	MV3-10 T	368162	4907669	2	0	0	56.1	56.1	1	2367.59	3.25	0	78.49	0	0.56	0	0	7.75	0	0	0	0	0	0	-30.73	-30.73
Inverter Transformer	MV3-17 T	368183	4907472	2	0	0	56.1	56.1	1	2370.14	3.25	0	78.5	0	0.56	0	0	7.75	0	0	0	0	0	0	-30.75	-30.75
Inverter Transformer	MV3-6 T	368156	4907834	2	0	0	56.1	56.1	1	2389.53	3.25	0	78.57	0	0.57	0	0	7.79	0	0	0	0	0	0	-30.86	-30.86
Inverter Transformer	MV1-15 T	365309	4904994	2	0	0	56.1	56.1	1	2409.94	3.25	0	78.64	0	0.58	0	0	7.82	0	0	0	0	0	0	-30.98	-30.98
Inverter Transformer	MV3-1 T	368150	4907976	2	0	0	56.1	56.1	1	2416.49	3.25	0	78.66	0	0.58	0	0	7.84	0	0	0	0	0	0	-31.02	-31.02
Inverter Transformer	MV3-19 T	368352	4907347	2	0	0	56.1	56.1	1	2536	3.25	0	79.08	0	0.63	0	0	8.05	0	0	0	0	0	0	-31.71	-31.71
Inverter Transformer	MV3-15 T	368351	4907477	2	0	0	56.1	56.1	1	2538.18	3.25	0	79.09	0	0.63	0	0	8.06	0	0	0	0	0	0	-31.72	-31.72
Inverter Transformer	MV3-11 T	368340	4907662	2	0	0	56.1	56.1	1	2543.21	3.25	0	79.11	0	0.63	0	0	8.07	0	0	0	0	0	0	-31.75	-31.75
Inverter Transformer	MV3-5 T	368335	4907843	2	0	0	56.1	56.1	1	2566.79	3.25	0	79.19	0	0.65	0	0	8.11	0	0	0	0	0	0	-31.88	-31.88
Inverter Transformer	MV3-21 T	368484	4907206	2	0	0	56.1	56.1	1	2671.88	3.25	0	79.54	0	0.69	0	0	8.3	0	0	0	0	0	0	-32.47	-32.47
Inverter Transformer	MV3-16 T	368509	4907475	2	0	0	56.1	56.1	1	2695.9	3.25	0	79.61	0	0.7	0	0	8.34	0	0	0	0	0	0	-32.6	-32.6
Inverter Transformer	MV3-9 T	368517	4907703	2	0	0	56.1	56.1	1	2723.97	3.25	0	79.7	0	0.71	0	0	8.39	0	0	0	0	0	0	-32.75	-32.75
Inverter Transformer	MV3-4 T	368507	4907925	2	0	0	56.1	56.1	1	2751.75	3.25	0	79.79	0	0.72	0	0	8.44	0	0	0	0	0	0	-32.9	-32.9
Inverter Transformer	MV3-22 T	368661	4907142	2	0	0	56.1	56.1	1	2852.59	3.25	0	80.1	0	0.77	0	0	8.62	0	0	0	0	0	0	-33.43	-33.43
Inverter Transformer	MV3-14 T	368678	4907498	2	0	0	56.1	56.1	1	2865.83	3.25	0	80.14	0	0.77	0	0	8.64	0	0	0	0	0	0	-33.5	-33.5
Inverter Transformer	MV3-20 T	368683	4907317	2	0	0	56.1	56.1	1	2867.19	3.25	0	80.15	0	0.77	0	0	8.64	0	0	0	0	0	0	-33.5	-33.5
Inverter Transformer	MV3-8 T	368685	4907712	2	0	0	56.1	56.1	1	2891.75	3.25	0	80.22	0	0.78	0	0	8.68	0	0	0	0	0	0	-33.63	-33.63
Inverter Transformer	MV3-2 T	368677	4907928	2	0	0	56.1	56.1	1	2918.8	3.25	0	80.3	0	0.8	0	0	8.73	0	0	0	0	0	0	-33.77	-33.77
Inverter Transformer	MV4-13 T	369057	4908605	2	0	0	56.1	56.1	1	3475.5	3.25	0	81.82	0	1.03	0	0	9.65	0	0	0	0	0	0	-36.44	-36.44
Inverter Transformer	MV4-15 T	369170	4908481	2	0	0	56.1	56.1	1	3539.56	3.25	0	81.98	0	1.06	0	0	9.75	0	0	0	0	0	0	-36.73	-36.73
Inverter Transformer	MV4-12 T	369049	4908803	2	0	0	56.1	56.1	1	3544.5	3.25	0	81.99	0	1.06	0	0	9.76	0	0	0	0	0	0	-36.75	-36.75
Inverter Transformer	MV4-14 T	369182	4908507	2	0	0	56.1	56.1	1	3559.3	3.25	0	82.03	0	1.06	0	0	9.78	0	0	0	0	0	0	-36.81	-36.81
Inverter Transformer	MV4-7 T	369040	4909001	2	0	0	56.1	56.1	1	3622.15	3.25	0	82.18	0	1.09	0	0	9.88	0	0	0	0	0	0	-37.09	-37.09
Inverter Transformer	MV4-4 T	369033	4909199	2	0	0	56.1	56.1	1	3710.51	3.25	0	82.39	0	1.13	0	0	10.02	0	0	0	0	0	0	-37.47	-37.47
Inverter Transformer	MV4-11 T	369269	4908855	2	0	0	56.1	56.1	1	3766.73	3.25	0	82.52	0	1.15	0	0	10.1	0	0	0	0	0	0	-37.71	-37.71
Inverter Transformer	MV4-1 T	369017	4909397	2	0	0	56.1	56.1	1	3799.55	3.25	0	82.59	0	1.16	0	0	10.15	0	0	0	0	0	0	-37.85	-37.85
Inverter Transformer	MV4-10 T	369307	4908858	2	0	0	56.1	56.1	1	3802.78	3.25	0	82.6	0	1.16	0	0	10.16	0	0	0	0	0	0	-37.87	-37.87
Inverter Transformer	MV4-8 T	369262	4909001	2	0	0	56.1	56.1	1	3821.09	3.25	0	82.64	0	1.17	0	0	10.19	0	0	0	0	0	0	-37.94	-37.94
Inverter Transformer	MV4-9 T	369284	4909001	2	0	0	56.1	56.1	1	3840.94	3.25	0	82.69	0	1.18	0	0	10.22	0	0	0	0	0	0	-38.03	-38.03
Inverter Transformer	MV4-6 T	369249	4909192	2	0	0	56.1	56.1	1	3895.95	3.25	0	82.81	0	1.2	0	0	10.3	0	0	0	0	0	0	-38.26	-38.26
Inverter Transformer	MV4-5 T	369283	4909199	2	0	0	56.1	56.1	1	3929.24	3.25	0	82.89	0	1.22	0	0	10.35	0	0	0	0	0	0	-38.39	-38.39
Inverter Transformer	MV4-3 T	369234	4909397	2	0	0	56.1	56.1	1	3984.09	3.25	0	83.01	0	1.24	0	0	10.43	0	0	0	0	0	0	-38.62	-38.62
Inverter Transformer	MV4-2 T	369267	4909397	2	0	0	56.1	56.1	1	4012.43	3.25	0	83.07	0	1.25	0	0	10.47	0	0	0	0	0	0	-38.73	-38.73
Inverter Transformer	MV6-2 T	370091	4907339	2	0	0	56.1	56.1	1	4275.01	3.25	0	83.62	0	1.35	0	0	10.86	0	0	0	0	0	0	-39.77	-39.77
Inverter Transformer	MV5-6 T	369987	4908507	2	0	0	56.1	56.1	1	4328.5	3.25	0	83.73	0	1.37	0	0	10.93	0	0	0	0	0	0	-39.98	-39.98
Inverter Transformer	MV6-3 T	370202	4907140	2	0	0	56.1	56.1	1	4391.03	3.25	0	83.85	0	1.4	0	0	11.02	0	0	0	0	0	0	-40.21	-40.21
Inverter Transformer	MV5-5 T	370021	4908690	2	0	0	56.1	56.1	1	4413.35	3.25	0	83.9	0	1.41	0	0	11.05	0	0	0	0	0	0	-40.3	-40.3
Inverter Transformer	MV5-2 T	370011	4908853	2	0	0	56.1	56.1	1	4456.12	3.25	0	83.98	0	1.42	0	0	11.11	0	0	0	0	0	0	-40.46	-40.46
Inverter Transformer	MV5-1 T	370015	4909142	2	0	0	56.1	56.1	1	4565.4	3.25	0	84.19	0	1.46	0	0	11.27	0	0	0	0	0	0	-40.86	-40.86
Inverter Transformer	MV5-3 T	370237	4908851	2	0	0	56.1	56.1	1	4668.86	3.25	0	84.38	0	1.5	0	0	11.41	0	0	0	0	0	0	-41.24	-41.24
Inverter Transformer	MV5-4 T	370330	4908707	2	0	0	56.1	56.1	1	4713.56	3.25	0	84.47	0	1.52	0	0	11.47	0	0	0	0	0	0	-41.4	-41.4
Line Reactor	NGR	369421	4908787.5	5	0	0	45.4	45.4	1	3881.03	5.25	0	82.78	0	3.29	1.34	0.1	1.59	0	0	0	0	0	0	-43.64	-43.64
Limit. Valu 0	0																								
Level D/N: 29.7327	29.7327																								

Receiver: Existing Noise Receptor
ID: S-R75
X: 366052
Y: 4907446
Z: 4.5
Ground: 0

ISO	Description	ID	X	Y	Z	Ground	ReflOrd	LxT	LxN	L/A	Dist.	hm	Freq	Adiv	K0b	Agr	Abar	z	Aatm	Afol	Ahous	Cmet	CmetN	Dc	RL	LtotT	LtotN
	Inverter	MV2-3	365820	4906641	2	0	0	100.3	100.3	1	837.77	3.25	0	69.46	0	-0.33	0	0	10.33	0	0	0	0	0	0	20.85	20.85
	Sol_Luce Substation	S_Substation	369426	4908792	3.5	0	0	112.1	112.1	1	3632.57	5.25	0	82.2	0	0.49	3.2	0.3	6.87	0	0	0	0	0	0	19.32	19.32
	Inverter	MV2-1	365842	4906816	2	0	0	97.3	97.3	1	664.08	3.25	0	67.44	0	-0.43	0	0	9.56	0	0	0	0	0	0	20.74	20.74
	Inverter	MV2-4	365586	4906624	2	0	0	100.3	100.3	1	944.91	3.25	0	70.51	0	-0.27	0	0	10.72	0	0	0	0	0	0	19.35	19.35
	Inverter	MV3-12	367668	4907594	2	0	0	100.3	100.3	1	1622.77	3.25	0	75.21	0	0.01	0	0	12.62	0	0	0	0	0	0	12.47	12.47
	Inverter	MV3-18	367752	4907412	2	0	0	100.3	100.3	1	1700.34	3.25	0	75.61	0	0.04	0	0	12.8	0	0	0	0	0	0	11.86	11.86
	Inverter	MV1-1	364715	4906166	2	0	0	100.3	100.3	1	1850.94	3.25	0	76.35	0	0.09	0	0	13.14	0	0	0	0	0	0	10.74	10.74
	Inverter	MV1-2	364753	4906063	2	0	0	100.3	100.3	1	1897.39	3.25	0	76.56	0	0.1	0	0	13.24	0	0	0	0	0	0	10.41	10.41
	Inverter	MV3-13	367963	4907577	2	0	0	100.3	100.3	1	1915.49	3.25	0	76.65	0	0.1	0	0	13.28	0	0	0	0	0	0	10.28	10.28
	Inverter	MV3-7	367945	4907754	2	0	0	100.3	100.3	1	1917.89	3.25	0	76.66	0	0.11	0	0	13.29	0	0	0	0	0	0	10.26	10.26
	Inverter	MV3-3	367939	4907927	2	0	0	100.3	100.3	1	1947.34	3.25	0	76.79	0	0.11	0	0	13.35	0	0	0	0	0	0	10.06	10.06
	Inverter	MV1-4	364815	4905918	2	0	0	100.3	100.3	1	1965.95	3.25	0	76.87	0	0.12	0	0	13.39	0	0	0	0	0	0	9.93	9.93
	Inverter	MV1-5	364671	4905892	2	0	0	100.3	100.3	1	2078.96	3.25	0	77.36	0	0.15	0	0	13.63	0	0	0	0	0	0	9.18	9.18
	Inverter	MV3-17	368178	4907472	2	0	0	100.3	100.3	1	2126.16	3.25	0	77.55	0	0.16	0	0	13.72	0	0	0	0	0	0	8.87	8.87
	Inverter	MV3-10	368167	4907669	2	0	0	100.3	100.3	1	2126.73	3.25	0	77.55	0	0.16	0	0	13.72	0	0	0	0	0	0	8.87	8.87
	Inverter	MV3-6	368162	4907834	2	0	0	100.3	100.3	1	2145.38	3.25	0	77.63	0	0.17	0	0	13.76	0	0	0	0	0	0	8.75	8.75
	Inverter	MV1-8	364788	4905647	2	0	0	100.3	100.3	1	2198.66	3.25	0	77.84	0	0.18	0	0	13.87	0	0	0	0	0	0	8.42	8.42
	Inverter	MV1-6	364477	4905835	2	0	0	100.3	100.3	1	2252.99	3.25	0	78.06	0	0.2	0	0	13.98	0	0	0	0	0	0	8.08	8.08
	Inverter	MV1-12	365038	4905386	2	0	0	100.3	100.3	1	2296.04	3.25	0	78.22	0	0.21	0	0	14.06	0	0	0	0	0	0	7.82	7.82
	Inverter	MV3-11	368346	4907662	2	0	0	100.3	100.3	1	2304.15	3.25	0	78.25	0	0.21	0	0	14.08	0	0	0	0	0	0	7.77	7.77
	Inverter	MV3-15	368357	4907477	2	0	0	100.3	100.3	1	2305.21	3.25	0	78.25	0	0.21	0	0	14.08	0	0	0	0	0	0	7.77	7.77
	Inverter	MV3-19	368357	4907347	2	0	0	100.3	100.3	1	2307.13	3.25	0	78.26	0	0.21	0	0	14.09	0	0	0	0	0	0	7.75	7.75
	Inverter	MV1-9	364561	4905646	2	0	0	100.3	100.3	1	2337.32	3.25	0	78.37	0	0.22	0	0	14.15	0	0	0	0	0	0	7.57	7.57
	Inverter	MV3-21	368478	4907206	2	0	0	100.3	100.3	1	2437.84	3.25	0	78.74	0	0.24	0	0	14.34	0	0	0	0	0	0	6.99	6.99
	Inverter	MV3-16	368514	4907475	2	0	0	100.3	100.3	1	2462.17	3.25	0	78.83	0	0.25	0	0	14.39	0	0	0	0	0	0	6.85	6.85
	Inverter	MV1-11	364655	4905414	2	0	0	100.3	100.3	1	2465.9	3.25	0	78.84	0	0.25	0	0	14.39	0	0	0	0	0	0	6.83	6.83
	Inverter	MV3-9	368512	4907703	2	0	0	100.3	100.3	1	2473.39	3.25	0	78.87	0	0.25	0	0	14.41	0	0	0	0	0	0	6.79	6.79
	Inverter	MV1-15	365315	4904994	2	0	0	100.3	100.3	1	2560.37	3.25	0	79.17	0	0.27	0	0	14.57	0	0	0	0	0	0	6.3	6.3
	Inverter	MV3-14	368684	4907498	2	0	0	100.3	100.3	1	2632.51	3.25	0	79.41	0	0.29	0	0	14.71	0	0	0	0	0	0	5.91	5.91
	Inverter	MV3-20	368689	4907317	2	0	0	100.3	100.3	1	2640.15	3.25	0	79.43	0	0.29	0	0	14.72	0	0	0	0	0	0	5.87	5.87
	Inverter	MV3-8	368680	4907712	2	0	0	100.3	100.3	1	2641.43	3.25	0	79.44	0	0.29	0	0	14.72	0	0	0	0	0	0	5.86	5.86
	Inverter	MV1-7	364925	4905782	2	0	0	97.3	97.3	1	2009.73	3.25	0	77.06	0	0.13	0	0	13.48	0	0	0	0	0	0	6.63	6.63
	Inverter	MV2-2	365977	4906654	2	0	0	89.1	89.1	1	795.55	3.25	0	69.01	0	0.64	0	0	5.91	0	0	0	0	0	0	13.5	13.5
	Inverter	MV1-10	365004	4905564	2	0	0	97.3	97.3	1	2154.12	3.25	0	77.67	0	0.17	0	0	13.78	0	0	0	0	0	0	5.69	5.69
	Inverter	MV4-7	369035	4909001	2	0	0	100.3	100.3	1	3363.97	3.25	0	81.54	0	0.43	0	0	16	0	0	0	0	0	0	2.34	2.34
	Inverter	MV4-4	369027	4909199	2	0	0	100.3	100.3	1	3453.06	3.25	0	81.76	0	0.44	0	0	16.15	0	0	0	0	0	0	1.95	1.95
	Inverter	MV4-11	369264	4908855	2	0	0	100.3	100.3	1	3507.45	3.25	0	81.9	0	0.45	0	0	16.24	0	0	0	0	0	0	1.72	1.72
	Inverter	MV4-1	369011	4909397	2	0	0	100.3	100.3	1	3544.3	3.25	0	81.99	0	0.46	0	0	16.31	0	0	0	0	0	0	1.56	1.56
	Inverter	MV4-10	369312	4908858	2	0	0	100.3	100.3	1	3552.65	3.25	0	82.01	0	0.46	0	0	16.32	0	0	0	0	0	0	1.52	1.52
	Inverter	MV4-8	369256	4909001	2	0	0	100.3	100.3	1	3561.41	3.25	0	82.03	0	0.46	0	0	16.33	0	0	0	0	0	0	1.48	1.48
	Inverter	MV4-9	369289	4909001	2	0	0	100.3	100.3	1	3591.13	3.25	0	82.1	0	0.47	0	0	16.38	0	0	0	0	0	0	1.36	1.36
	Inverter	MV1-14	365163	4905049	2	0	0	97.3	97.3	1	2556.55	3.25	0	79.15	0	0.27	0	0	14.56	0	0	0	0	0	0	3.32	3.32
	Inverter	MV1-13	364731	4905241	2	0	0	97.3	97.3	1	2570.42	3.25	0	79.2	0	0.27	0	0	14.59	0	0	0	0	0	0	3.25	3.25
	Inverter	MV4-6	369243	4909192	2	0	0	100.3	100.3	1	3637.44	3.25	0	82.22	0	0.47	0	0	16.46	0	0	0	0	0	0	1.16	1.16
	Inverter	MV4-5	369289	4909199	2	0	0	100.3	100.3	1	3681.19	3.25	0	82.32	0	0.48	0	0	16.53	0	0	0	0	0	0	0.98	0.98
	Inverter	MV4-3	369229	4909397	2	0	0	100.3	100.3	1	3728.24	3.25	0	82.43	0	0.49	0	0	16.61	0	0	0	0	0	0	0.79	0.79
	Inverter	MV4-2	369272	4909397	2	0	0	100.3	100.3	1	3764.94	3.25	0	82.52	0	0.49	0	0	16.67	0	0	0	0	0	0	0.63	0.63
	Inverter	MV6-2	370085	4907339	2	0	0	100.3	100.3	1	4034.42	3.25	0	83.12	0	0.53	0	0	17.1	0	0	0	0	0	0	-0.44	-0.44
	Inverter	MV5-5	370015	4908690	2	0	0	100.3	100.3	1	4153.66	3.25	0	83.37	0	0.55	0	0	17.29	0	0	0	0	0	0	-0.9	-0.9
	Inverter	MV6-3	370207	4907140	2	0	0	100.3	100.3	1	4166.25	3.25	0	83.39	0	0.55	0	0	17.31	0	0	0	0	0	0	-0.94	-0.94
	Inverter	MV5-2	370006	4908853	2	0	0	100.3	100.3	1	4196.88	3.25	0	83.46	0	0.55	0	0	17.36	0	0	0	0	0	0	-1.06	-1.06
	Inverter	MV5-1	370020	4909142	2	0	0	100.3	100.3	1	4315.26	3.25	0	83.7	0	0.57	0	0	17.55	0	0	0	0	0	0	-1.5	-1.5
	Inverter	MV5-3	370231	4908851	2	0	0	100.3	100.3	1	4408.86	3.25	0	83.89	0	0.58	0	0	17.69	0	0	0	0	0	0	-1.84	-1.84
	Inverter	MV5-4	370324	4908707	2	0	0	100.3	100.3	1	4454.22	3.25	0	83.98	0	0.59	0	0	17.76	0	0	0	0	0	0	-2.01	-2.01
	DSTATCOM - 10 MVAR #2	DSAT2	369403	4908757	2.5	0	0	96.6	96.6	1	3598.32	3.5	0	82.12	0	3.51	0	0	2.63	0	0	0	0	0	0	8.37	8.37
	DSTATCOM - 10 MVAR #1	DSAT1	369437	4908757	2.5	0	0	96.6	96.6	1	3630.01	3.5	0	82.2	0	3.52	0	0	2.64	0	0	0	0	0	0	8.27	8.27
	Inverter	MV6-1	370235	4907364	2	0	0	97.3	97.3	1	4183.8	3.25	0	83.43	0	0.55	0	0	17.34	0	0	0	0	0	0	-4.01	-4.01
	Inverter	MV1-3	364440	4906039	2	0	0	89.1	89.1	1	2139.67	3.25	0	77.61	0	0.94	0	0	8.27	0	0	0	0	0	0	2.24	2.24
	Inverter	MV3-1	368156	4907976	2	0	0	89.1	89.1	1	2169.73	3.25	0	77.73	0	0.95	0	0	8.32	0	0	0	0	0	0	2.06	2.06
	Inverter	MV3-5	368340	4907843	2	0	0	89.1	89.1	1	2322.19	3.25	0	78.32	0	0.98	0	0	8.56	0	0	0	0	0	0	1.19	1.19
	Inverter	MV3-4	368502	4907925	2	0	0	89.1	89.1	1	2496.39	3.25	0	78.95	0	1.02	0	0	8.84	0	0	0	0	0	0	0.25	0.25
	Inverter	MV3-22	368656	4907142	2	0	0	89.1	89.1	1	2621.69	3.25	0	79.37	0	1.06	0	0	9.04	0	0	0	0	0	0	-0.4	-0.4
	Inverter	MV3-2	368671	4907928	2	0	0	89.1	89.1	1	2662.99	3.25	0	79.51	0	1.07	0	0	9.1	0	0	0	0	0	0	-0.61	-0.61
	SubstationTransformer	W_ST	369711.17	4906112.3	2.5	0	0	92	92	1	3894.66	4.25	0	82.81	0	1.33	2.64	0.27	7.22	0	0	0	0	0	0	-2.03	-2.03
	Inverter	MV4-13	369051	4908605	2	0	0	89.1	89.1	1	3215.17	3.25	0	81.14	0	1.2	0	0	9.94	0	0	0	0	0	0	-3.23	-3.23

Inverter	MV4-12	369043	4908803	2	0	0	89.1	89.1	1	3284.44	3.25	0	81.33	0	1.22	0	0	10.04	0	0	0	0	0	0	-3.53	-3.53
Fixed Reactor Bank 1	FRB1	369378	4908755	6	0	0	89.8	89.8	1	3574.32	5.25	0	82.06	0	-0.79	0	0	6.79	0	0	0	0	0	0	1.71	1.71
Inverter	MV4-15	369176	4908481	2	0	0	89.1	89.1	1	3290.99	3.25	0	81.35	0	1.22	0	0	10.05	0	0	0	0	0	0	-3.56	-3.56
Inverter	MV4-14	369176	4908507	2	0	0	89.1	89.1	1	3299.26	3.25	0	81.37	0	1.22	0	0	10.07	0	0	0	0	0	0	-3.6	-3.6
Fixed Reactor Bank 2	FRB2	369464	4908755	6	0	0	89.8	89.8	1	3654.48	5.25	0	82.26	0	-0.78	0	0	6.9	0	0	0	0	0	0	1.4	1.4
Gardiner Substation	G_Sub	366586.3	4903349.9	2.5	0	0	90.8	90.8	1	4130.8	4.25	0	83.32	0	1.42	2.65	0.36	7.54	0	0	0	0	0	0	-4.15	-4.15
Westbrook Inverter Enclosur	W_INV2	369374	4906388	2	0	0	89.1	89.1	1	3486.41	3.25	0	81.85	0	1.27	0	0	10.34	0	0	0	0	0	0	-4.4	-4.4
Westbrook Inverter Enclosur	W_INV3	369508	4906164	2	0	0	89.1	89.1	1	3686.12	3.25	0	82.33	0	1.31	0	0	10.63	0	0	0	0	0	0	-5.22	-5.22
Westbrook Inverter Enclosur	W_INV5	369719	4906574	2	0	0	89.1	89.1	1	3769.25	3.25	0	82.53	0	1.34	0	0	10.75	0	0	0	0	0	0	-5.56	-5.56
Westbrook Inverter Enclosur	W_INV4	369673	4906164	2	0	0	89.1	89.1	1	3841.25	3.25	0	82.69	0	1.35	0	0	10.86	0	0	0	0	0	0	-5.84	-5.84
Westbrook Inverter Enclosur	W_INV7	369780	4906417	2	0	0	89.1	89.1	1	3867.41	3.25	0	82.75	0	1.36	0	0	10.9	0	0	0	0	0	0	-5.95	-5.95
Westbrook Inverter Enclosur	W_INV6	369875	4906578	2	0	0	89.1	89.1	1	3920.3	3.25	0	82.87	0	1.37	0	0	10.97	0	0	0	0	0	0	-6.15	-6.15
Inverter	MV5-6	369982	4908507	2	0	0	89.1	89.1	1	4070.7	3.25	0	83.19	0	1.41	0	0	11.18	0	0	0	0	0	0	-6.73	-6.73
Westbrook Inverter Enclosur	W_INV1	369409	4906578	2	0	0	86.1	86.1	1	3467.4	3.25	0	81.8	0	1.26	0	0	10.31	0	0	0	0	0	0	-7.32	-7.32
Inverters	G_Inv1	366526.4	4903225.8	2	0	0	87.7	87.7	1	4246.78	3.25	0	83.56	0	2.81	0	0	5.14	0	0	0	0	0	0	-3.85	-3.85
Inverters	G_Inv2	366676.9	4903239.1	2	0	0	87.7	87.7	1	4253.06	3.25	0	83.57	0	2.81	0	0	5.15	0	0	0	0	0	0	-3.87	-3.87
Inverters	G_Inv3	366583.7	4903091.4	2	0	0	87.7	87.7	1	4386.94	3.25	0	83.84	0	2.82	0	0	5.29	0	0	0	0	0	0	-4.3	-4.3
Inverters	G_Inv4	366732.8	4903105	2	0	0	87.7	87.7	1	4394.06	3.25	0	83.86	0	2.82	0	0	5.3	0	0	0	0	0	0	-4.32	-4.32
Inverters	G_Inv5	366638.5	4902958.1	2	0	0	87.7	87.7	1	4526.06	4.14	0	84.11	0	3.2	1.49	0	5.44	0	0	0	0	0	0	-6.58	-6.58
Inverters	G_Inv6	366788.5	4902972	2	0	0	87.7	87.7	1	4534.22	3.25	0	84.13	0	2.83	0	0	5.45	0	0	0	0	0	0	-4.75	-4.75
Inverters	G_Inv7	366694.6	4902824.7	2	0	0	87.7	87.7	1	4665.76	3.25	0	84.38	0	2.84	0	0	5.59	0	0	0	0	0	0	-5.15	-5.15
Inverters	G_Inv8	366844.5	4902838.5	2	0	0	87.7	87.7	1	4675.16	3.25	0	84.4	0	2.84	0	0	5.6	0	0	0	0	0	0	-5.18	-5.18
Inverters	G_Inv9	366750.9	4902691.8	2	0	0	87.7	87.7	1	4805.3	3.25	0	84.63	0	2.85	0	0	5.73	0	0	0	0	0	0	-5.56	-5.56
Inverters	G_Inv10	366900.7	4902704.8	2	0	0	87.7	87.7	1	4816.56	3.25	0	84.65	0	2.85	0	0	5.75	0	0	0	0	0	0	-5.59	-5.59
Inverter	MV6-4	370250	4906966	2	0	0	86.1	86.1	1	4225.35	3.25	0	83.52	0	1.45	0	0	11.4	0	0	0	0	0	0	-10.31	-10.31
Inverter Transformer	MV2-1 T	365836	4906816	2	0	0	69.4	69.4	1	666	3.25	0	67.47	0	1.31	0	0	3.29	0	0	0	0	0	0	-2.72	-2.72
Westbrook Inverter Transfor	W_INVTR1	369403	4906578	2	0	0	78.2	78.2	1	3461.59	3.25	0	81.79	0	-2.83	0	0	1.85	0	0	0	0	0	0	-2.56	-2.56
Westbrook Inverter Transfor	W_INVTR2	369368	4906388	2	0	0	77.3	77.3	1	3480.69	3.25	0	81.83	0	-2.84	0	0	1.85	0	0	0	0	0	0	-3.51	-3.51
Westbrook Inverter Transfor	W_INVTR3	369514	4906164	2	0	0	77.3	77.3	1	3691.74	3.25	0	82.34	0	-2.89	0	0	1.94	0	0	0	0	0	0	-4.05	-4.05
Westbrook Inverter Transfor	W_INVTR5	369725	4906574	2	0	0	77.3	77.3	1	3775.09	3.25	0	82.54	0	-2.91	0	0	1.97	0	0	0	0	0	0	-4.26	-4.26
Westbrook Inverter Transfor	W_INVTR4	369679	4906164	2	0	0	77.3	77.3	1	3846.9	3.25	0	82.7	0	-2.93	0	0	2	0	0	0	0	0	0	-4.43	-4.43
Westbrook Inverter Transfor	W_INVTR7	369786	4906417	2	0	0	77.3	77.3	1	3873.19	3.25	0	82.76	0	-2.93	0	0	2.01	0	0	0	0	0	0	-4.49	-4.49
Westbrook Inverter Transfor	W_INVTR6	369881	4906578	2	0	0	77.3	77.3	1	3926.15	3.25	0	82.88	0	-2.95	0	0	2.03	0	0	0	0	0	0	-4.62	-4.62
Inverter Transformer	MV1-7 T	364919	4905782	2	0	0	69.4	69.4	1	2013.1	3.25	0	77.08	0	2.18	0	0	4.98	0	0	0	0	0	0	-14.88	-14.88
Inverter Transformer	MV1-10 T	365010	4905564	2	0	0	69.4	69.4	1	2151.21	3.25	0	77.65	0	2.23	0	0	5.11	0	0	0	0	0	0	-15.65	-15.65
Inverter Transformer	MV1-14 T	365157	4905049	2	0	0	69.4	69.4	1	2558.64	3.25	0	79.16	0	2.37	0	0	5.5	0	0	0	0	0	0	-17.67	-17.67
Inverter Transformer	MV1-13 T	364725	4905241	2	0	0	69.4	69.4	1	2573.51	3.25	0	79.21	0	2.37	0	0	5.51	0	0	0	0	0	0	-17.74	-17.74
Inverter Transformer	MV2-2 T	365982	4906654	2	0	0	56.1	56.1	1	795.09	3.25	0	69.01	0	-0.05	0	0	4.38	0	0	0	0	0	0	-17.28	-17.28
Inverter Transformer	MV2-3 T	365814	4906641	2	0	0	56.1	56.1	1	839.45	3.25	0	69.48	0	-0.04	0	0	4.5	0	0	0	0	0	0	-17.88	-17.88
Inverter Transformer	MV6-1 T	370230	4907364	2	0	0	69.4	69.4	1	4178.81	3.25	0	83.42	0	2.83	0	0	6.81	0	0	0	0	0	0	-23.71	-23.71
Inverter Transformer	MV6-4 T	370244	4906966	2	0	0	69.4	69.4	1	4219.39	3.25	0	83.5	0	2.84	0	0	6.84	0	0	0	0	0	0	-23.83	-23.83
Inverter Transformer	MV2-4 T	365590	4906628	2	0	0	56.1	56.1	1	939.45	3.25	0	70.46	0	-0.01	0	0	4.74	0	0	0	0	0	0	-19.13	-19.13
Inverter Transformer	MV3-12 T	367674	4907594	2	0	0	56.1	56.1	1	1628.74	3.25	0	75.24	0	0.25	0	0	6.29	0	0	0	0	0	0	-25.72	-25.72
Inverter Transformer	MV3-18 T	367757	4907412	2	0	0	56.1	56.1	1	1705.34	3.25	0	75.64	0	0.28	0	0	6.45	0	0	0	0	0	0	-26.31	-26.31
Inverter Transformer	MV1-1 T	364721	4906166	2	0	0	56.1	56.1	1	1846.61	3.25	0	76.33	0	0.34	0	0	6.74	0	0	0	0	0	0	-27.35	-27.35
Inverter Transformer	MV1-2 T	364759	4906063	2	0	0	56.1	56.1	1	1893.29	3.25	0	76.54	0	0.36	0	0	6.83	0	0	0	0	0	0	-27.68	-27.68
Inverter Transformer	MV3-13 T	367958	4907577	2	0	0	56.1	56.1	1	1910.5	3.25	0	76.62	0	0.37	0	0	6.87	0	0	0	0	0	0	-27.8	-27.8
Inverter Transformer	MV3-7 T	367951	4907754	2	0	0	56.1	56.1	1	1923.82	3.25	0	76.68	0	0.37	0	0	6.89	0	0	0	0	0	0	-27.89	-27.89
Inverter Transformer	MV3-3 T	367944	4907927	2	0	0	56.1	56.1	1	1952.19	3.25	0	76.81	0	0.38	0	0	6.95	0	0	0	0	0	0	-28.09	-28.09
Inverter Transformer	MV1-4 T	364821	4905918	2	0	0	56.1	56.1	1	1962.18	3.25	0	76.85	0	0.39	0	0	6.97	0	0	0	0	0	0	-28.15	-28.15
Inverter Transformer	MV1-5 T	364676	4905892	2	0	0	56.1	56.1	1	2075.64	3.25	0	77.34	0	0.44	0	0	7.19	0	0	0	0	0	0	-28.91	-28.91
Inverter Transformer	MV3-10 T	368162	4907669	2	0	0	56.1	56.1	1	2121.75	3.25	0	77.53	0	0.46	0	0	7.28	0	0	0	0	0	0	-29.21	-29.21
Inverter Transformer	MV3-17 T	368183	4907472	2	0	0	56.1	56.1	1	2131.16	3.25	0	77.57	0	0.46	0	0	7.3	0	0	0	0	0	0	-29.27	-29.27
Inverter Transformer	MV3-6 T	368156	4907834	2	0	0	56.1	56.1	1	2139.48	3.25	0	77.61	0	0.46	0	0	7.31	0	0	0	0	0	0	-29.33	-29.33
Inverter Transformer	MV1-3 T	364435	4906039	2	0	0	56.1	56.1	1	2143.44	3.25	0	77.62	0	0.46	0	0	7.32	0	0	0	0	0	0	-29.35	-29.35
Inverter Transformer	MV3-1 T	368150	4907976	2	0	0	56.1	56.1	1	2163.91	3.25	0	77.7	0	0.47	0	0	7.36	0	0	0	0	0	0	-29.48	-29.48
Inverter Transformer	MV1-8 T	364782	4905647	2	0	0	56.1	56.1	1	2202.11	3.25	0	77.86	0	0.49	0	0	7.43	0	0	0	0	0	0	-29.72	-29.72
Inverter Transformer	MV1-6 T	364482	4905835	2	0	0	56.1	56.1	1	2249.49	3.25	0	78.04	0	0.51	0	0	7.52	0	0	0	0	0	0	-30.02	-30.02
Inverter Transformer	MV1-12 T	365044	4905386	2	0	0	56.1	56.1	1	2293.4	3.25	0	78.21	0	0.53	0	0	7.61	0	0	0	0	0	0	-30.29	-30.29
Inverter Transformer	MV3-11 T	368340	4907662	2	0	0	56.1	56.1	1	2298.17	3.25	0	78.23	0	0.53	0	0	7.62	0	0	0	0	0	0	-30.32	-30.32
Inverter Transformer	MV3-15 T	368351	4907477	2	0	0	56.1	56.1	1	2299.21	3.25	0	78.23	0	0.53	0	0	7.62	0	0	0	0	0	0	-30.32	-30.32
Inverter Transformer	MV3-19 T	368352	4907347	2	0	0	56.1	56.1	1	2302.13	3.25	0	78.24	0	0.53	0	0	7.62	0	0	0	0	0	0	-30.34	-30.34
Inverter Transformer	MV3-5 T	368335	4907843	2	0	0	56.1	56.1	1	2317.26	3.25	0	78.3	0	0.54	0	0	7.65	0	0	0	0	0	0	-30.43	-30.43
Inverter Transformer	MV1-9 T	364555	4905646	2	0	0	56.1	56.1	1	2341.16	3.25	0	78.39	0	0.55	0	0	7.7	0	0	0	0	0	0	-30.58	-30.58
Inverter Transformer	MV3-21 T	368484	4907206	2	0	0	56.1	56.1	1	2443.81	3.25	0	78.76	0	0.59	0	0	7.89	0	0	0	0	0	0	-31.18	-31.18
Inverter Transformer	MV3-16 T	368509	4907475	2	0	0	56.1	56.1	1	2457.17	3.25	0	78.81	0	0.6	0	0	7.91	0	0	0	0	0	0	-31.26	-31.26
Inverter Transformer	MV1-11 T	364649	4905414	2	0	0	56.1	56.1	1	2469.3	3.25	0	78.85	0	0.6	0	0	7.93	0	0	0	0	0	0	-31.33	-31.33
Inverter Transformer	MV3-9 T	368517	4907703	2	0	0	56.1	56.1	1	2478.36	3.25	0	78.88	0	0.61	0	0	7.95	0	0	0	0	0	0	-31.38	-31.38
Inverter Transformer	MV3-4 T	368507	4907925	2	0	0	56.1	56.1	1	2501.29	3.25	0	78.96	0	0.62	0	0	7.99	0	0	0	0	0	0	-31.51	-31.51
Inverter Transformer	MV1-15 T	365309	4904994	2	0	0	56.1	56.1	1	2562.1	3.25	0	79.17	0	0.64	0	0	8.1	0	0	0	0	0	0	-31.86	-31.86
Inverter Transformer	MV3-14 T	368678	4907498	2	0	0	56.1	56.1	1	2626.52	3.25	0	79.39	0	0.67	0	0	8.22	0	0	0	0	0	0	-32.22	-32.22
Inverter Transformer	MV3-22 T	368661	4907142	2	0	0	56.1	56.1	1	2626.65	3.25	0	79.39	0	0.67	0	0	8.22	0	0	0	0	0	0	-32.22	-32.22
Inverter Transformer	MV3-20 T	368683	4907317	2	0	0	56.1	56.1	1	2634.16	3.25	0	79.41	0	0.67	0	0	8.23	0	0	0	0	0	0	-32.26	-32.26
Inverter Transformer	MV3-8 T	368685	4907712	2	0	0	56.1	56.1	1	2646.4	3.25	0	79.45	0	0.68	0	0	8.25	0	0	0	0	0	0	-32.33	-32.33

	Inverter Transformer	MV3-2 T	368677	4907928	2	0	0	56.1	56.1	1	2668.89	3.25	0	79.53	0	0.69	0	0	8.29	0	0	0	0	0	0	-32.45	-32.45
	Inverter Transformer	MV4-13 T	369057	4908605	2	0	0	56.1	56.1	1	3220.76	3.25	0	81.16	0	0.92	0	0	9.24	0	0	0	0	0	0	-35.26	-35.26
	Inverter Transformer	MV4-15 T	369170	4908481	2	0	0	56.1	56.1	1	3285.29	3.25	0	81.33	0	0.95	0	0	9.34	0	0	0	0	0	0	-35.57	-35.57
	Inverter Transformer	MV4-12 T	369049	4908803	2	0	0	56.1	56.1	1	3289.9	3.25	0	81.34	0	0.95	0	0	9.35	0	0	0	0	0	0	-35.59	-35.59
	Inverter Transformer	MV4-14 T	369182	4908507	2	0	0	56.1	56.1	1	3304.94	3.25	0	81.38	0	0.96	0	0	9.37	0	0	0	0	0	0	-35.66	-35.66
	Inverter Transformer	MV4-7 T	369040	4909001	2	0	0	56.1	56.1	1	3368.41	3.25	0	81.55	0	0.99	0	0	9.48	0	0	0	0	0	0	-35.95	-35.95
	Inverter Transformer	MV4-4 T	369033	4909199	2	0	0	56.1	56.1	1	3458.23	3.25	0	81.78	0	1.02	0	0	9.62	0	0	0	0	0	0	-36.36	-36.36
	Inverter Transformer	MV4-11 T	369269	4908855	2	0	0	56.1	56.1	1	3512.03	3.25	0	81.91	0	1.04	0	0	9.71	0	0	0	0	0	0	-36.6	-36.6
	Inverter Transformer	MV4-10 T	369307	4908858	2	0	0	56.1	56.1	1	3548.07	3.25	0	82	0	1.06	0	0	9.76	0	0	0	0	0	0	-36.76	-36.76
	Inverter Transformer	MV4-1 T	369017	4909397	2	0	0	56.1	56.1	1	3549.31	3.25	0	82	0	1.06	0	0	9.77	0	0	0	0	0	0	-36.77	-36.77
	Inverter Transformer	MV4-8 T	369262	4909001	2	0	0	56.1	56.1	1	3566.81	3.25	0	82.05	0	1.07	0	0	9.79	0	0	0	0	0	0	-36.85	-36.85
	Inverter Transformer	MV4-9 T	369284	4909001	2	0	0	56.1	56.1	1	3586.62	3.25	0	82.09	0	1.08	0	0	9.82	0	0	0	0	0	0	-36.94	-36.94
	Inverter Transformer	MV4-6 T	369249	4909192	2	0	0	56.1	56.1	1	3642.71	3.25	0	82.23	0	1.1	0	0	9.91	0	0	0	0	0	0	-37.18	-37.18
	Inverter Transformer	MV4-5 T	369283	4909199	2	0	0	56.1	56.1	1	3675.92	3.25	0	82.31	0	1.11	0	0	9.96	0	0	0	0	0	0	-37.32	-37.32
	Inverter Transformer	MV4-3 T	369234	4909397	2	0	0	56.1	56.1	1	3732.5	3.25	0	82.44	0	1.14	0	0	10.05	0	0	0	0	0	0	-37.57	-37.57
	Inverter Transformer	MV4-2 T	369267	4909397	2	0	0	56.1	56.1	1	3760.67	3.25	0	82.51	0	1.15	0	0	10.09	0	0	0	0	0	0	-37.69	-37.69
	Inverter Transformer	MV6-2 T	370091	4907339	2	0	0	56.1	56.1	1	4040.42	3.25	0	83.13	0	1.26	0	0	10.51	0	0	0	0	0	0	-38.85	-38.85
	Inverter Transformer	MV5-6 T	369987	4908507	2	0	0	56.1	56.1	1	4075.53	3.25	0	83.2	0	1.27	0	0	10.57	0	0	0	0	0	0	-38.99	-38.99
	Inverter Transformer	MV5-5 T	370021	4908690	2	0	0	56.1	56.1	1	4159.39	3.25	0	83.38	0	1.31	0	0	10.69	0	0	0	0	0	0	-39.32	-39.32
	Inverter Transformer	MV6-3 T	370202	4907140	2	0	0	56.1	56.1	1	4161.27	3.25	0	83.38	0	1.31	0	0	10.69	0	0	0	0	0	0	-39.33	-39.33
	Inverter Transformer	MV5-2 T	370011	4908853	2	0	0	56.1	56.1	1	4201.59	3.25	0	83.47	0	1.32	0	0	10.75	0	0	0	0	0	0	-39.48	-39.48
	Inverter Transformer	MV5-1 T	370015	4909142	2	0	0	56.1	56.1	1	4310.66	3.25	0	83.69	0	1.37	0	0	10.91	0	0	0	0	0	0	-39.91	-39.91
	Inverter Transformer	MV5-3 T	370237	4908851	2	0	0	56.1	56.1	1	4414.55	3.25	0	83.9	0	1.41	0	0	11.06	0	0	0	0	0	0	-40.3	-40.3
	Inverter Transformer	MV5-4 T	370330	4908707	2	0	0	56.1	56.1	1	4459.98	3.25	0	83.99	0	1.42	0	0	11.12	0	0	0	0	0	0	-40.47	-40.47
	Line Reactor	NGR	369421	4908787.5	5	0	0	45.4	45.4	1	3626.26	5.25	0	82.19	0	3.3	1.33	0.1	1.48	0	0	0	0	0	0	-42.95	-42.95
Limit. Valu	0	0																								
Level D/N:	28.5143	28.5143																								

Receiver: Existing Noise Receptor
ID: S-R76
X: 366134
Y: 4907377
Z: 4.5
Ground: 0

ISO	Description	ID	X	Y	Z	Ground	ReflOrd	LxT	LxN	L/A	Dist.	hm	Freq	Adiv	K0b	Agr	Abar	z	Aatm	Afol	Ahous	Cmet	CmetN	Dc	RL	LtotT	LtotN
	Inverter	MV2-3	365820	4906641	2	0	0	100.3	100.3	1	800.19	3.25	0	69.06	0	-0.35	0	0	10.18	0	0	0	0	0	0	21.42	21.42
	Inverter	MV2-1	365842	4906816	2	0	0	97.3	97.3	1	632.45	3.25	0	67.02	0	-0.46	0	0	9.39	0	0	0	0	0	0	21.36	21.36
	Sol_Luce Substation	S_Substation	369426	4908792	3.5	0	0	112.1	112.1	1	3583.22	5.25	0	82.09	0	0.47	3.21	0.3	6.8	0	0	0	0	0	0	19.51	19.51
	Inverter	MV2-4	365586	4906624	2	0	0	100.3	100.3	1	931.3	3.25	0	70.38	0	-0.28	0	0	10.68	0	0	0	0	0	0	19.53	19.53
	Inverter	MV3-12	367668	4907594	2	0	0	100.3	100.3	1	1549.27	3.25	0	74.8	0	-0.02	0	0	12.45	0	0	0	0	0	0	13.08	13.08
	Inverter	MV3-18	367752	4907412	2	0	0	100.3	100.3	1	1618.38	3.25	0	75.18	0	0.01	0	0	12.61	0	0	0	0	0	0	12.51	12.51
	Inverter	MV3-13	367963	4907577	2	0	0	100.3	100.3	1	1839.9	3.25	0	76.3	0	0.08	0	0	13.12	0	0	0	0	0	0	10.82	10.82
	Inverter	MV3-7	367945	4907754	2	0	0	100.3	100.3	1	1849.83	3.25	0	76.34	0	0.08	0	0	13.14	0	0	0	0	0	0	10.75	10.75
	Inverter	MV1-1	364715	4906166	2	0	0	100.3	100.3	1	1865.5	3.25	0	76.42	0	0.09	0	0	13.17	0	0	0	0	0	0	10.63	10.63
	Inverter	MV3-3	367939	4907927	2	0	0	100.3	100.3	1	1886.94	3.25	0	76.52	0	0.1	0	0	13.22	0	0	0	0	0	0	10.48	10.48
	Inverter	MV1-2	364753	4906063	2	0	0	100.3	100.3	1	1906.24	3.25	0	76.6	0	0.1	0	0	13.26	0	0	0	0	0	0	10.34	10.34
	Inverter	MV1-4	364815	4905918	2	0	0	100.3	100.3	1	1966.84	3.25	0	76.88	0	0.12	0	0	13.39	0	0	0	0	0	0	9.93	9.93
	Inverter	MV3-17	368178	4907472	2	0	0	100.3	100.3	1	2046.21	3.25	0	77.22	0	0.14	0	0	13.56	0	0	0	0	0	0	9.39	9.39
	Inverter	MV3-10	368167	4907669	2	0	0	100.3	100.3	1	2053.86	3.25	0	77.25	0	0.14	0	0	13.57	0	0	0	0	0	0	9.34	9.34
	Inverter	MV3-6	368162	4907834	2	0	0	100.3	100.3	1	2078.86	3.25	0	77.36	0	0.15	0	0	13.63	0	0	0	0	0	0	9.18	9.18
	Inverter	MV1-5	364671	4905892	2	0	0	100.3	100.3	1	2084.61	3.25	0	77.38	0	0.15	0	0	13.64	0	0	0	0	0	0	9.14	9.14
	Inverter	MV1-8	364788	4905647	2	0	0	100.3	100.3	1	2191.94	3.25	0	77.82	0	0.18	0	0	13.86	0	0	0	0	0	0	8.46	8.46
	Inverter	MV3-19	368357	4907347	2	0	0	100.3	100.3	1	2223.2	3.25	0	77.94	0	0.19	0	0	13.92	0	0	0	0	0	0	8.26	8.26
	Inverter	MV3-15	368357	4907477	2	0	0	100.3	100.3	1	2225.25	3.25	0	77.95	0	0.19	0	0	13.92	0	0	0	0	0	0	8.25	8.25
	Inverter	MV3-11	368346	4907662	2	0	0	100.3	100.3	1	2230.29	3.25	0	77.97	0	0.19	0	0	13.93	0	0	0	0	0	0	8.22	8.22
	Inverter	MV1-6	364477	4905835	2	0	0	100.3	100.3	1	2263.5	3.25	0	78.1	0	0.2	0	0	14	0	0	0	0	0	0	8.02	8.02
	Inverter	MV1-12	365038	4905386	2	0	0	100.3	100.3	1	2272.73	3.25	0	78.13	0	0.2	0	0	14.02	0	0	0	0	0	0	7.96	7.96
	Inverter	MV1-9	364561	4905646	2	0	0	100.3	100.3	1	2338.95	3.25	0	78.38	0	0.22	0	0	14.15	0	0	0	0	0	0	7.56	7.56
	Inverter	MV3-21	368478	4907206	2	0	0	100.3	100.3	1	2350.23	3.25	0	78.42	0	0.22	0	0	14.17	0	0	0	0	0	0	7.5	7.5
	Inverter	MV3-16	368514	4907475	2	0	0	100.3	100.3	1	2382.02	3.25	0	78.54	0	0.23	0	0	14.23	0	0	0	0	0	0	7.31	7.31
	Inverter	MV3-9	368512	4907703	2	0	0	100.3	100.3	1	2400.24	3.25	0	78.61	0	0.23	0	0	14.27	0	0	0	0	0	0	7.21	7.21
	Inverter	MV1-11	364655	4905414	2	0	0	100.3	100.3	1	2457.81	3.25	0	78.81	0	0.25	0	0	14.38	0	0	0	0	0	0	6.88	6.88
	Inverter	MV1-15	365315	4904994	2	0	0	100.3	100.3	1	2519.81	3.25	0	79.03	0	0.26	0	0	14.5	0	0	0	0	0	0	6.53	6.53
	Inverter	MV3-14	368684	4907498	2	0	0	100.3	100.3	1	2552.87	3.25	0	79.14	0	0.27	0	0	14.56	0	0	0	0	0	0	6.34	6.34
	Inverter	MV3-20	368689	4907317	2	0	0	100.3	100.3	1	2555.71	3.25	0	79.15	0	0.27	0	0	14.56	0	0	0	0	0	0	6.33	6.33
	Inverter	MV3-8	368680	4907712	2	0	0	100.3	100.3	1	2567.95	3.25	0	79.19	0	0.27	0	0	14.59	0	0	0	0	0	0	6.26	6.26
	Inverter	MV2-2	365977	4906654	2	0	0	89.1	89.1	1	739.85	3.25	0	68.38	0	0.62	0	0	5.79	0	0	0	0	0	0	14.26	14.26
	Inverter	MV1-7	364925	4905782	2	0	0	97.3	97.3	1	2001.43	3.25	0	77.03	0	0.13	0	0	13.46	0	0	0	0	0	0	6.69	6.69
	Inverter	MV1-10	365004	4905564	2	0	0	97.3	97.3	1	2136.32	3.25	0	77.59	0	0.17	0	0	13.74	0	0	0	0	0	0	5.81	5.81
	Inverter	MV4-7	369035	4909001	2	0	0	100.3	100.3	1	3324.63	3.25	0	81.43	0	0.42	0	0	15.94	0	0	0	0	0	0	2.52	2.52
	Inverter	MV4-4	369027	4909199	2	0	0	100.3	100.3	1	3418.94	3.25	0	81.68	0	0.44	0	0	16.1	0	0	0	0	0	0	2.1	2.1
	Inverter	MV4-11	369264	4908855	2	0	0	100.3	100.3	1	3461.41	3.25	0	81.79	0	0.44	0	0	16.17	0	0	0	0	0	0	1.92	1.92
	Inverter	MV4-10	369312	4908858	2	0	0	100.3	100.3	1	3506.14	3.25	0	81.9	0	0.45	0	0	16.24	0	0	0	0	0	0	1.72	1.72

Inverter	MV4-1	369011	4909397	2	0	0	100.3	100.3	1	3515.33	3.25	0	81.92	0	0.45	0	0	16.26	0	0	0	0	0	0	1.68	1.68
Inverter	MV4-8	369256	4909001	2	0	0	100.3	100.3	1	3519.13	3.25	0	81.93	0	0.45	0	0	16.26	0	0	0	0	0	0	1.67	1.67
Inverter	MV4-9	369289	4909001	2	0	0	100.3	100.3	1	3548.44	3.25	0	82	0	0.46	0	0	16.31	0	0	0	0	0	0	1.54	1.54
Inverter	MV1-14	365163	4905049	2	0	0	97.3	97.3	1	2522.39	3.25	0	79.04	0	0.26	0	0	14.5	0	0	0	0	0	0	3.51	3.51
Inverter	MV4-6	369243	4909192	2	0	0	100.3	100.3	1	3600.02	3.25	0	82.13	0	0.47	0	0	16.4	0	0	0	0	0	0	1.32	1.32
Inverter	MV1-13	364731	4905241	2	0	0	97.3	97.3	1	2555.56	3.25	0	79.15	0	0.27	0	0	14.56	0	0	0	0	0	0	3.33	3.33
Inverter	MV4-5	369289	4909199	2	0	0	100.3	100.3	1	3643.31	3.25	0	82.23	0	0.47	0	0	16.47	0	0	0	0	0	0	1.14	1.14
Inverter	MV4-3	369229	4909397	2	0	0	100.3	100.3	1	3695.87	3.25	0	82.35	0	0.48	0	0	16.56	0	0	0	0	0	0	0.92	0.92
Inverter	MV4-2	369272	4909397	2	0	0	100.3	100.3	1	3731.95	3.25	0	82.44	0	0.49	0	0	16.62	0	0	0	0	0	0	0.77	0.77
Inverter	MV6-2	370085	4907339	2	0	0	100.3	100.3	1	3951.18	3.25	0	82.93	0	0.52	0	0	16.97	0	0	0	0	0	0	-0.11	-0.11
Inverter	MV6-3	370207	4907140	2	0	0	100.3	100.3	1	4079.89	3.25	0	83.21	0	0.54	0	0	17.18	0	0	0	0	0	0	-0.61	-0.61
Inverter	MV5-5	370015	4908690	2	0	0	100.3	100.3	1	4097.09	3.25	0	83.25	0	0.54	0	0	17.2	0	0	0	0	0	0	-0.68	-0.68
Inverter	MV5-2	370006	4908853	2	0	0	100.3	100.3	1	4143.79	3.25	0	83.35	0	0.55	0	0	17.28	0	0	0	0	0	0	-0.86	-0.86
Inverter	MV5-1	370020	4909142	2	0	0	100.3	100.3	1	4268.05	3.25	0	83.6	0	0.56	0	0	17.47	0	0	0	0	0	0	-1.33	-1.33
Inverter	MV5-3	370231	4908851	2	0	0	100.3	100.3	1	4354.09	3.25	0	83.78	0	0.57	0	0	17.61	0	0	0	0	0	0	-1.64	-1.64
Inverter	MV5-4	370324	4908707	2	0	0	100.3	100.3	1	4396.02	3.25	0	83.86	0	0.58	0	0	17.67	0	0	0	0	0	0	-1.8	-1.8
DSTATCOM - 10 MVAR #2	DSAT2	369403	4908757	2.5	0	0	96.6	96.6	1	3548.35	3.5	0	82	0	3.5	0	0	2.6	0	0	0	0	0	0	8.53	8.53
DSTATCOM - 10 MVAR #1	DSAT1	369437	4908757	2.5	0	0	96.6	96.6	1	3579.69	3.5	0	82.08	0	3.51	0	0	2.62	0	0	0	0	0	0	8.43	8.43
Inverter	MV6-1	370235	4907364	2	0	0	97.3	97.3	1	4101.02	3.25	0	83.26	0	0.54	0	0	17.21	0	0	0	0	0	0	-3.7	-3.7
Inverter	MV3-1	368156	4907976	2	0	0	89.1	89.1	1	2108.86	3.25	0	77.48	0	0.93	0	0	8.22	0	0	0	0	0	0	2.42	2.42
Inverter	MV1-3	364440	4906039	2	0	0	89.1	89.1	1	2158.68	3.25	0	77.68	0	0.94	0	0	8.3	0	0	0	0	0	0	2.13	2.13
Inverter	MV3-5	368340	4907843	2	0	0	89.1	89.1	1	2254.68	3.25	0	78.06	0	0.97	0	0	8.46	0	0	0	0	0	0	1.57	1.57
Inverter	MV3-4	368502	4907925	2	0	0	89.1	89.1	1	2430.58	3.25	0	78.71	0	1.01	0	0	8.74	0	0	0	0	0	0	0.6	0.6
Inverter	MV3-22	368656	4907142	2	0	0	89.1	89.1	1	2532.93	3.25	0	79.07	0	1.03	0	0	8.9	0	0	0	0	0	0	0.05	0.05
Inverter	MV3-2	368671	4907928	2	0	0	89.1	89.1	1	2596.15	3.25	0	79.29	0	1.05	0	0	9	0	0	0	0	0	0	-0.27	-0.27
SubstationTransformer	W_ST	369711.17	4906112.3	2.5	0	0	92	92	1	3794.17	4.25	0	82.58	0	1.3	2.67	0.27	7.09	0	0	0	0	0	0	-1.67	-1.67
Inverter	MV4-13	369051	4908605	2	0	0	89.1	89.1	1	3164.95	3.25	0	81.01	0	1.19	0	0	9.87	0	0	0	0	0	0	-3	-3
Inverter	MV4-15	369176	4908481	2	0	0	89.1	89.1	1	3236.14	3.25	0	81.2	0	1.2	0	0	9.97	0	0	0	0	0	0	-3.32	-3.32
Inverter	MV4-12	369043	4908803	2	0	0	89.1	89.1	1	3239.72	3.25	0	81.21	0	1.21	0	0	9.98	0	0	0	0	0	0	-3.34	-3.34
Fixed Reactor Bank 1	FRB1	369378	4908755	6	0	0	89.8	89.8	1	3524.55	5.25	0	81.94	0	-0.8	0	0	6.72	0	0	0	0	0	0	1.91	1.91
Inverter	MV4-14	369176	4908507	2	0	0	89.1	89.1	1	3245.1	3.25	0	81.22	0	1.21	0	0	9.99	0	0	0	0	0	0	-3.36	-3.36
Fixed Reactor Bank 2	FRB2	369464	4908755	6	0	0	89.8	89.8	1	3603.86	5.25	0	82.14	0	-0.78	0	0	6.83	0	0	0	0	0	0	1.6	1.6
Gardiner Substation	G_Sub	366586.3	4903349.9	2.5	0	0	90.8	90.8	1	4052.42	4.25	0	83.15	0	1.4	2.68	0.36	7.43	0	0	0	0	0	0	-3.9	-3.9
Westbrook Inverter Enclosur	W_INV2	369374	4906388	2	0	0	89.1	89.1	1	3387.58	3.25	0	81.6	0	1.24	0	0	10.2	0	0	0	0	0	0	-3.98	-3.98
Westbrook Inverter Enclosur	W_INV3	369508	4906164	2	0	0	89.1	89.1	1	3585.42	3.25	0	82.09	0	1.29	0	0	10.49	0	0	0	0	0	0	-4.81	-4.81
Westbrook Inverter Enclosur	W_INV5	369719	4906574	2	0	0	89.1	89.1	1	3673.83	3.25	0	82.3	0	1.31	0	0	10.62	0	0	0	0	0	0	-5.17	-5.17
Westbrook Inverter Enclosur	W_INV4	369673	4906164	2	0	0	89.1	89.1	1	3741.11	3.25	0	82.46	0	1.33	0	0	10.71	0	0	0	0	0	0	-5.44	-5.44
Westbrook Inverter Enclosur	W_INV7	369780	4906417	2	0	0	89.1	89.1	1	3770.27	3.25	0	82.53	0	1.34	0	0	10.76	0	0	0	0	0	0	-5.56	-5.56
Westbrook Inverter Enclosur	W_INV6	369875	4906578	2	0	0	89.1	89.1	1	3825.37	3.25	0	82.65	0	1.35	0	0	10.84	0	0	0	0	0	0	-5.78	-5.78
Inverter	MV5-6	369982	4908507	2	0	0	89.1	89.1	1	4010.49	3.25	0	83.06	0	1.39	0	0	11.1	0	0	0	0	0	0	-6.5	-6.5
Westbrook Inverter Enclosur	W_INV1	369409	4906578	2	0	0	86.1	86.1	1	3371.06	3.25	0	81.56	0	1.24	0	0	10.17	0	0	0	0	0	0	-6.91	-6.91
Inverters	G_Inv1	366526.4	4903225.8	2	0	0	87.7	87.7	1	4169.71	3.25	0	83.4	0	2.81	0	0	5.06	0	0	0	0	0	0	-3.6	-3.6
Inverters	G_Inv2	366676.9	4903239.1	2	0	0	87.7	87.7	1	4173.36	3.25	0	83.41	0	2.81	0	0	5.06	0	0	0	0	0	0	-3.62	-3.62
Inverters	G_Inv3	366583.7	4903091.4	2	0	0	87.7	87.7	1	4309.13	3.25	0	83.69	0	2.82	0	0	5.21	0	0	0	0	0	0	-4.05	-4.05
Inverters	G_Inv4	366732.8	4903105	2	0	0	87.7	87.7	1	4313.76	3.25	0	83.7	0	2.82	0	0	5.21	0	0	0	0	0	0	-4.07	-4.07
Inverters	G_Inv5	366638.5	4902958.1	2	0	0	87.7	87.7	1	4447.61	3.25	0	83.96	0	2.83	0	0	5.35	0	0	0	0	0	0	-4.48	-4.48
Inverters	G_Inv6	366788.5	4902972	2	0	0	87.7	87.7	1	4453.36	3.25	0	83.97	0	2.83	0	0	5.36	0	0	0	0	0	0	-4.5	-4.5
Inverters	G_Inv7	366694.6	4902824.7	2	0	0	87.7	87.7	1	4586.69	3.25	0	84.23	0	2.84	0	0	5.5	0	0	0	0	0	0	-4.91	-4.91
Inverters	G_Inv8	366844.5	4902838.5	2	0	0	87.7	87.7	1	4593.78	3.25	0	84.24	0	2.84	0	0	5.51	0	0	0	0	0	0	-4.93	-4.93
Inverters	G_Inv9	366750.9	4902691.8	2	0	0	87.7	87.7	1	4725.64	3.25	0	84.49	0	2.85	0	0	5.65	0	0	0	0	0	0	-5.33	-5.33
Inverters	G_Inv10	366900.7	4902704.8	2	0	0	87.7	87.7	1	4734.69	3.25	0	84.51	0	2.85	0	0	5.66	0	0	0	0	0	0	-5.35	-5.35
Inverter	MV6-4	370250	4906966	2	0	0	86.1	86.1	1	4136.47	3.25	0	83.33	0	1.43	0	0	11.28	0	0	0	0	0	0	-9.98	-9.98
Inverter Transformer	MV2-1 T	365836	4906816	2	0	0	69.4	69.4	1	635.24	3.25	0	67.06	0	1.27	0	0	3.23	0	0	0	0	0	0	-2.21	-2.21
Westbrook Inverter Transfor	W_INVTR1	369403	4906578	2	0	0	78.2	78.2	1	3365.23	3.25	0	81.54	0	-2.81	0	0	1.81	0	0	0	0	0	0	-2.3	-2.3
Westbrook Inverter Transfor	W_INVTR2	369368	4906388	2	0	0	77.3	77.3	1	3381.85	3.25	0	81.58	0	-2.81	0	0	1.81	0	0	0	0	0	0	-3.24	-3.24
Westbrook Inverter Transfor	W_INVTR3	369514	4906164	2	0	0	77.3	77.3	1	3591.07	3.25	0	82.1	0	-2.87	0	0	1.9	0	0	0	0	0	0	-3.79	-3.79
Westbrook Inverter Transfor	W_INVTR5	369725	4906574	2	0	0	77.3	77.3	1	3679.69	3.25	0	82.32	0	-2.89	0	0	1.93	0	0	0	0	0	0	-4.02	-4.02
Westbrook Inverter Transfor	W_INVTR4	369679	4906164	2	0	0	77.3	77.3	1	3746.79	3.25	0	82.47	0	-2.9	0	0	1.96	0	0	0	0	0	0	-4.19	-4.19
Westbrook Inverter Transfor	W_INVTR7	369786	4906417	2	0	0	77.3	77.3	1	3776.07	3.25	0	82.54	0	-2.91	0	0	1.97	0	0	0	0	0	0	-4.26	-4.26
Westbrook Inverter Transfor	W_INVTR6	369881	4906578	2	0	0	77.3	77.3	1	3831.24	3.25	0	82.67	0	-2.92	0	0	1.99	0	0	0	0	0	0	-4.39	-4.39
Inverter Transformer	MV1-7 T	364919	4905782	2	0	0	69.4	69.4	1	2005.06	3.25	0	77.04	0	2.18	0	0	4.97	0	0	0	0	0	0	-14.84	-14.84
Inverter Transformer	MV1-10 T	365010	4905564	2	0	0	69.4	69.4	1	2133.16	3.25	0	77.58	0	2.22	0	0	5.1	0	0	0	0	0	0	-15.55	-15.55
Inverter Transformer	MV1-14 T	365157	4905049	2	0	0	69.4	69.4	1	2524.7	3.25	0	79.04	0	2.36	0	0	5.47	0	0	0	0	0	0	-17.52	-17.52
Inverter Transformer	MV1-13 T	364725	4905241	2	0	0	69.4	69.4	1	2558.86	3.25	0	79.16	0	2.37	0	0	5.5	0	0	0	0	0	0	-17.67	-17.67
Inverter Transformer	MV2-2 T	365982	4906654	2	0	0	56.1	56.1	1	738.81	3.25	0	68.37	0	-0.07	0	0	4.24	0	0	0	0	0	0	-16.48	-16.48
Inverter Transformer	MV2-3 T	365814	4906641	2	0	0	56.1	56.1	1	802.56	3.25	0	69.09	0	-0.05	0	0	4.4	0	0	0	0	0	0	-17.38	-17.38
Inverter Transformer	MV6-1 T	370230	4907364	2	0	0	69.4	69.4	1	4096.02	3.25	0	83.25	0	2.81	0	0	6.75	0	0	0	0	0	0	-23.45	-23.45
Inverter Transformer	MV6-4 T	370244	4906966	2	0	0	69.4	69.4	1	4130.5	3.25	0	83.32	0	2.82	0	0	6.77	0	0	0	0	0	0	-23.56	-23.56
Inverter Transformer	MV2-4 T	365590	4906628	2	0	0	56.1	56.1	1	925.71	3.25	0	70.33	0	-0.01	0	0	4.71	0	0	0	0	0	0	-18.97	-18.97
Inverter Transformer	MV3-12 T	367674	4907594	2	0	0	56.1	56.1	1	1555.22	3.25	0	74.84	0	0.22	0	0	6.14	0	0	0	0	0	0	-25.13	-25.13
Inverter Transformer	MV3-18 T	367757	4907412	2	0	0	56.1	56.1	1	1623.38	3.25	0	75.21	0	0.25	0	0	6.28	0	0	0	0	0	0	-25.68	-25.68
Inverter Transformer	MV3-13 T	367958	4907577	2	0	0	56.1	56.1	1	1834.93	3.25	0	76.27	0	0.33	0	0	6.71	0	0	0	0	0	0	-27.26	-27.26
Inverter Transformer	MV3-7 T	367951	4907754	2	0	0	56.1	56.1	1	1855.7	3.25	0	76.37	0	0.34	0	0	6.76	0	0	0	0	0	0	-27.41	-27.41
Inverter Transformer	MV1-1 T	364721	4906166	2	0	0	56.1	56.1	1	1860.94	3.25	0	76.39	0	0.35	0	0	6.77	0	0	0	0	0	0	-27.45	-27.45

	Inverter Transformer	MV3-3 T	367944	4907927	2	0	0	56.1	56.1	1	1891.72	3.25	0	76.54	0	0.36	0	0	6.83	0	0	0	0	0	0	-27.67	-27.67
	Inverter Transformer	MV1-2 T	364759	4906063	2	0	0	56.1	56.1	1	1901.9	3.25	0	76.58	0	0.36	0	0	6.85	0	0	0	0	0	0	-27.74	-27.74
	Inverter Transformer	MV1-4 T	364821	4905918	2	0	0	56.1	56.1	1	1962.82	3.25	0	76.86	0	0.39	0	0	6.97	0	0	0	0	0	0	-28.16	-28.16
	Inverter Transformer	MV3-10 T	368162	4907669	2	0	0	56.1	56.1	1	2048.92	3.25	0	77.23	0	0.42	0	0	7.14	0	0	0	0	0	0	-28.74	-28.74
	Inverter Transformer	MV3-17 T	368183	4907472	2	0	0	56.1	56.1	1	2051.2	3.25	0	77.24	0	0.43	0	0	7.14	0	0	0	0	0	0	-28.75	-28.75
	Inverter Transformer	MV3-6 T	368156	4907834	2	0	0	56.1	56.1	1	2073	3.25	0	77.33	0	0.43	0	0	7.19	0	0	0	0	0	0	-28.89	-28.89
	Inverter Transformer	MV1-5 T	364676	4905892	2	0	0	56.1	56.1	1	2081.1	3.25	0	77.37	0	0.44	0	0	7.2	0	0	0	0	0	0	-28.95	-28.95
	Inverter Transformer	MV3-1 T	368150	4907976	2	0	0	56.1	56.1	1	2103.11	3.25	0	77.46	0	0.45	0	0	7.24	0	0	0	0	0	0	-29.09	-29.09
	Inverter Transformer	MV1-3 T	364435	4906039	2	0	0	56.1	56.1	1	2162.6	3.25	0	77.7	0	0.47	0	0	7.36	0	0	0	0	0	0	-29.47	-29.47
	Inverter Transformer	MV1-8 T	364782	4905647	2	0	0	56.1	56.1	1	2195.63	3.25	0	77.83	0	0.49	0	0	7.42	0	0	0	0	0	0	-29.68	-29.68
	Inverter Transformer	MV3-19 T	368352	4907347	2	0	0	56.1	56.1	1	2218.2	3.25	0	77.92	0	0.5	0	0	7.47	0	0	0	0	0	0	-29.82	-29.82
	Inverter Transformer	MV3-15 T	368351	4907477	2	0	0	56.1	56.1	1	2219.26	3.25	0	77.92	0	0.5	0	0	7.47	0	0	0	0	0	0	-29.83	-29.83
	Inverter Transformer	MV3-11 T	368340	4907662	2	0	0	56.1	56.1	1	2224.34	3.25	0	77.94	0	0.5	0	0	7.48	0	0	0	0	0	0	-29.86	-29.86
	Inverter Transformer	MV3-5 T	368335	4907843	2	0	0	56.1	56.1	1	2249.79	3.25	0	78.04	0	0.51	0	0	7.53	0	0	0	0	0	0	-30.02	-30.02
	Inverter Transformer	MV1-6 T	364482	4905835	2	0	0	56.1	56.1	1	2259.84	3.25	0	78.08	0	0.51	0	0	7.54	0	0	0	0	0	0	-30.08	-30.08
	Inverter Transformer	MV1-12 T	365044	4905386	2	0	0	56.1	56.1	1	2269.84	3.25	0	78.12	0	0.52	0	0	7.56	0	0	0	0	0	0	-30.14	-30.14
	Inverter Transformer	MV1-9 T	364555	4905646	2	0	0	56.1	56.1	1	2342.99	3.25	0	78.4	0	0.55	0	0	7.7	0	0	0	0	0	0	-30.59	-30.59
	Inverter Transformer	MV3-21 T	368484	4907206	2	0	0	56.1	56.1	1	2356.21	3.25	0	78.44	0	0.56	0	0	7.72	0	0	0	0	0	0	-30.67	-30.67
	Inverter Transformer	MV3-16 T	368509	4907475	2	0	0	56.1	56.1	1	2377.02	3.25	0	78.52	0	0.56	0	0	7.76	0	0	0	0	0	0	-30.79	-30.79
	Inverter Transformer	MV3-9 T	368517	4907703	2	0	0	56.1	56.1	1	2405.2	3.25	0	78.62	0	0.58	0	0	7.82	0	0	0	0	0	0	-30.96	-30.96
	Inverter Transformer	MV3-4 T	368507	4907925	2	0	0	56.1	56.1	1	2435.45	3.25	0	78.73	0	0.59	0	0	7.87	0	0	0	0	0	0	-31.13	-31.13
	Inverter Transformer	MV1-11 T	364649	4905414	2	0	0	56.1	56.1	1	2461.42	3.25	0	78.82	0	0.6	0	0	7.92	0	0	0	0	0	0	-31.28	-31.28
	Inverter Transformer	MV1-15 T	365309	4904994	2	0	0	56.1	56.1	1	2521.77	3.25	0	79.03	0	0.63	0	0	8.03	0	0	0	0	0	0	-31.63	-31.63
	Inverter Transformer	MV3-22 T	368661	4907142	2	0	0	56.1	56.1	1	2537.9	3.25	0	79.09	0	0.63	0	0	8.06	0	0	0	0	0	0	-31.72	-31.72
	Inverter Transformer	MV3-14 T	368678	4907498	2	0	0	56.1	56.1	1	2546.88	3.25	0	79.12	0	0.64	0	0	8.07	0	0	0	0	0	0	-31.77	-31.77
	Inverter Transformer	MV3-20 T	368683	4907317	2	0	0	56.1	56.1	1	2549.71	3.25	0	79.13	0	0.64	0	0	8.08	0	0	0	0	0	0	-31.79	-31.79
	Inverter Transformer	MV3-8 T	368685	4907712	2	0	0	56.1	56.1	1	2572.9	3.25	0	79.21	0	0.65	0	0	8.12	0	0	0	0	0	0	-31.92	-31.92
	Inverter Transformer	MV3-2 T	368677	4907928	2	0	0	56.1	56.1	1	2602.01	3.25	0	79.31	0	0.66	0	0	8.17	0	0	0	0	0	0	-32.08	-32.08
	Inverter Transformer	MV4-13 T	369057	4908605	2	0	0	56.1	56.1	1	3170.48	3.25	0	81.02	0	0.9	0	0	9.15	0	0	0	0	0	0	-35.02	-35.02
	Inverter Transformer	MV4-15 T	369170	4908481	2	0	0	56.1	56.1	1	3230.5	3.25	0	81.19	0	0.93	0	0	9.25	0	0	0	0	0	0	-35.31	-35.31
	Inverter Transformer	MV4-12 T	369049	4908803	2	0	0	56.1	56.1	1	3245.11	3.25	0	81.22	0	0.93	0	0	9.28	0	0	0	0	0	0	-35.38	-35.38
	Inverter Transformer	MV4-14 T	369182	4908507	2	0	0	56.1	56.1	1	3250.72	3.25	0	81.24	0	0.94	0	0	9.29	0	0	0	0	0	0	-35.4	-35.4
	Inverter Transformer	MV4-7 T	369040	4909001	2	0	0	56.1	56.1	1	3329	3.25	0	81.45	0	0.97	0	0	9.41	0	0	0	0	0	0	-35.77	-35.77
	Inverter Transformer	MV4-4 T	369033	4909199	2	0	0	56.1	56.1	1	3424.02	3.25	0	81.69	0	1.01	0	0	9.57	0	0	0	0	0	0	-36.21	-36.21
	Inverter Transformer	MV4-11 T	369269	4908855	2	0	0	56.1	56.1	1	3465.94	3.25	0	81.8	0	1.03	0	0	9.63	0	0	0	0	0	0	-36.4	-36.4
	Inverter Transformer	MV4-10 T	369307	4908858	2	0	0	56.1	56.1	1	3501.61	3.25	0	81.89	0	1.04	0	0	9.69	0	0	0	0	0	0	-36.56	-36.56
	Inverter Transformer	MV4-1 T	369017	4909397	2	0	0	56.1	56.1	1	3520.24	3.25	0	81.93	0	1.05	0	0	9.72	0	0	0	0	0	0	-36.64	-36.64
	Inverter Transformer	MV4-8 T	369262	4909001	2	0	0	56.1	56.1	1	3524.45	3.25	0	81.94	0	1.05	0	0	9.73	0	0	0	0	0	0	-36.66	-36.66
	Inverter Transformer	MV4-9 T	369284	4909001	2	0	0	56.1	56.1	1	3543.99	3.25	0	81.99	0	1.06	0	0	9.76	0	0	0	0	0	0	-36.75	-36.75
	Inverter Transformer	MV4-6 T	369249	4909192	2	0	0	56.1	56.1	1	3605.2	3.25	0	82.14	0	1.08	0	0	9.85	0	0	0	0	0	0	-37.02	-37.02
	Inverter Transformer	MV4-5 T	369283	4909199	2	0	0	56.1	56.1	1	3638.12	3.25	0	82.22	0	1.1	0	0	9.9	0	0	0	0	0	0	-37.16	-37.16
	Inverter Transformer	MV4-3 T	369234	4909397	2	0	0	56.1	56.1	1	3700.05	3.25	0	82.36	0	1.12	0	0	10	0	0	0	0	0	0	-37.43	-37.43
	Inverter Transformer	MV4-2 T	369267	4909397	2	0	0	56.1	56.1	1	3727.75	3.25	0	82.43	0	1.13	0	0	10.04	0	0	0	0	0	0	-37.55	-37.55
	Inverter Transformer	MV6-2 T	370091	4907339	2	0	0	56.1	56.1	1	3957.18	3.25	0	82.95	0	1.23	0	0	10.39	0	0	0	0	0	0	-38.51	-38.51
	Inverter Transformer	MV5-6 T	369987	4908507	2	0	0	56.1	56.1	1	4015.29	3.25	0	83.07	0	1.25	0	0	10.48	0	0	0	0	0	0	-38.74	-38.74
	Inverter Transformer	MV6-3 T	370202	4907140	2	0	0	56.1	56.1	1	4074.9	3.25	0	83.2	0	1.27	0	0	10.57	0	0	0	0	0	0	-38.98	-38.98
	Inverter Transformer	MV5-5 T	370021	4908690	2	0	0	56.1	56.1	1	4102.77	3.25	0	83.26	0	1.28	0	0	10.61	0	0	0	0	0	0	-39.09	-39.09
	Inverter Transformer	MV5-2 T	370011	4908853	2	0	0	56.1	56.1	1	4148.46	3.25	0	83.36	0	1.3	0	0	10.67	0	0	0	0	0	0	-39.28	-39.28
	Inverter Transformer	MV5-1 T	370015	4909142	2	0	0	56.1	56.1	1	4263.5	3.25	0	83.6	0	1.35	0	0	10.84	0	0	0	0	0	0	-39.73	-39.73
	Inverter Transformer	MV5-3 T	370237	4908851	2	0	0	56.1	56.1	1	4359.74	3.25	0	83.79	0	1.39	0	0	10.98	0	0	0	0	0	0	-40.09	-40.09
	Inverter Transformer	MV5-4 T	370330	4908707	2	0	0	56.1	56.1	1	4401.74	3.25	0	83.87	0	1.4	0	0	11.04	0	0	0	0	0	0	-40.25	-40.25
	Line Reactor	NGR	369421	4908787.5	5	0	0	45.4	45.4	1	3576.85	5.25	0	82.07	0	3.3	1.33	0.1	1.46	0	0	0	0	0	0	-42.81	-42.81
Limit. Valu	0	0																								
Level D/N:	28.9026	28.9026																								

Receiver: Existing Noise Receptor
ID: S-R77
X: 366362
Y: 4906199
Z: 4.5
Ground: 0

ISO	Description	ID	X	Y	Z	Ground	ReflOrd	LxT	LxN	L/A	Dist.	hm	Freq	Adiv	K0b	Agr	Abar	z	Aatm	Afol	Ahous	Cmet	CmetN	Dc	RL	LtotT	LtotN
	Inverter	MV2-3	365820	4906641	2	0	0	100.3	100.3	1	699.38	3.25	0	67.89	0	-0.41	0	0	9.73	0	0	0	0	0	0	23.1	23.1
	Inverter	MV2-4	365586	4906624	2	0	0	100.3	100.3	1	884.76	3.25	0	69.94	0	-0.3	0	0	10.51	0	0	0	0	0	0	20.17	20.17
	Sol_Luce Substation	S_Substation	369426	4908792	3.5	0	0	112.1	112.1	1	4013.94	5.25	0	83.07	0	0.6	3.1	0.25	7.38	0	0	0	0	0	0	17.91	17.91
	Inverter	MV2-1	365842	4906816	2	0	0	97.3	97.3	1	806.9	3.25	0	69.14	0	-0.35	0	0	10.21	0	0	0	0	0	0	18.31	18.31
	Inverter	MV1-12	365038	4905386	2	0	0	100.3	100.3	1	1553.69	3.25	0	74.83	0	-0.01	0	0	12.46	0	0	0	0	0	0	13.04	13.04
	Inverter	MV1-4	364815	4905918	2	0	0	100.3	100.3	1	1572.32	3.25	0	74.93	0	-0.01	0	0	12.5	0	0	0	0	0	0	12.89	12.89
	Inverter	MV1-15	365315	4904994	2	0	0	100.3	100.3	1	1596.32	3.25	0	75.06	0	0	0	0	12.56	0	0	0	0	0	0	12.69	12.69
	Inverter	MV1-2	364753	4906063	2	0	0	100.3	100.3	1	1614.74	3.25	0	75.16	0	0.01	0	0	12.6	0	0	0	0	0	0	12.54	12.54
	Inverter	MV1-1	364715	4906166	2	0	0	100.3	100.3	1	1647.33	3.25	0	75.34	0	0.02	0	0	12.68	0	0	0	0	0	0	12.28	12.28
	Inverter	MV1-8	364788	4905647	2	0	0	100.3	100.3	1	1667.99	3.25	0	75.44	0	0.03	0	0	12.73	0	0	0	0	0	0	12.11	12.11
	Inverter	MV1-5	364671	4905892	2	0	0	100.3	100.3	1	1718.64	3.25	0	75.7	0	0.04	0	0	12.85	0	0	0	0	0	0	11.72	11.72

Inverter	MV3-18	367752	4907412	2	0	0	100.3	100.3	1	1844.85	3.25	0	76.32	0	0.08	0	0	13.13	0	0	0	0	0	0	10.78	10.78
Inverter	MV1-11	364655	4905414	2	0	0	100.3	100.3	1	1878.85	3.25	0	76.48	0	0.09	0	0	13.2	0	0	0	0	0	0	10.54	10.54
Inverter	MV1-9	364561	4905646	2	0	0	100.3	100.3	1	1883.99	3.25	0	76.5	0	0.1	0	0	13.21	0	0	0	0	0	0	10.5	10.5
Inverter	MV3-12	367668	4907594	2	0	0	100.3	100.3	1	1910.93	3.25	0	76.62	0	0.1	0	0	13.27	0	0	0	0	0	0	10.31	10.31
Inverter	MV1-6	364477	4905835	2	0	0	100.3	100.3	1	1919.82	3.25	0	76.67	0	0.11	0	0	13.29	0	0	0	0	0	0	10.25	10.25
Inverter	MV3-13	367963	4907577	2	0	0	100.3	100.3	1	2112.37	3.25	0	77.5	0	0.16	0	0	13.7	0	0	0	0	0	0	8.96	8.96
Inverter	MV1-7	364925	4905782	2	0	0	97.3	97.3	1	1496.28	3.25	0	74.5	0	-0.03	0	0	12.32	0	0	0	0	0	0	10.53	10.53
Inverter	MV1-10	365004	4905564	2	0	0	97.3	97.3	1	1499.13	3.25	0	74.52	0	-0.03	0	0	12.32	0	0	0	0	0	0	10.51	10.51
Inverter	MV2-2	365977	4906654	2	0	0	89.1	89.1	1	596.03	3.25	0	66.51	0	0.57	0	0	5.44	0	0	0	0	0	0	16.54	16.54
Inverter	MV3-17	368178	4907472	2	0	0	100.3	100.3	1	2217.74	3.25	0	77.92	0	0.19	0	0	13.91	0	0	0	0	0	0	8.3	8.3
Inverter	MV3-7	367945	4907754	2	0	0	100.3	100.3	1	2218.99	3.25	0	77.92	0	0.19	0	0	13.91	0	0	0	0	0	0	8.29	8.29
Inverter	MV3-19	368357	4907347	2	0	0	100.3	100.3	1	2301.72	3.25	0	78.24	0	0.21	0	0	14.08	0	0	0	0	0	0	7.79	7.79
Inverter	MV3-10	368167	4907669	2	0	0	100.3	100.3	1	2327.86	3.25	0	78.34	0	0.22	0	0	14.13	0	0	0	0	0	0	7.63	7.63
Inverter	MV3-3	367939	4907927	2	0	0	100.3	100.3	1	2339.43	3.25	0	78.38	0	0.22	0	0	14.15	0	0	0	0	0	0	7.56	7.56
Inverter	MV3-21	368478	4907206	2	0	0	100.3	100.3	1	2343.4	3.25	0	78.4	0	0.22	0	0	14.16	0	0	0	0	0	0	7.54	7.54
Inverter	MV1-14	365163	4905049	2	0	0	97.3	97.3	1	1661.36	3.25	0	75.41	0	0.02	0	0	12.71	0	0	0	0	0	0	9.17	9.17
Inverter	MV3-15	368357	4907477	2	0	0	100.3	100.3	1	2369.24	3.25	0	78.49	0	0.23	0	0	14.21	0	0	0	0	0	0	7.39	7.39
Inverter	MV3-6	368162	4907834	2	0	0	100.3	100.3	1	2431.71	3.25	0	78.72	0	0.24	0	0	14.33	0	0	0	0	0	0	7.02	7.02
Inverter	MV3-11	368346	4907662	2	0	0	100.3	100.3	1	2465.08	3.25	0	78.84	0	0.25	0	0	14.39	0	0	0	0	0	0	6.83	6.83
Inverter	MV3-16	368514	4907475	2	0	0	100.3	100.3	1	2501.86	3.25	0	78.97	0	0.26	0	0	14.46	0	0	0	0	0	0	6.63	6.63
Inverter	MV3-20	368689	4907317	2	0	0	100.3	100.3	1	2581.64	3.25	0	79.24	0	0.28	0	0	14.61	0	0	0	0	0	0	6.19	6.19
Inverter	MV3-9	368512	4907703	2	0	0	100.3	100.3	1	2623.84	3.25	0	79.38	0	0.28	0	0	14.69	0	0	0	0	0	0	5.96	5.96
Inverter	MV3-14	368684	4907498	2	0	0	100.3	100.3	1	2660.66	3.25	0	79.5	0	0.29	0	0	14.76	0	0	0	0	0	0	5.76	5.76
Inverter	MV1-13	364731	4905241	2	0	0	97.3	97.3	1	1891.54	3.25	0	76.54	0	0.1	0	0	13.23	0	0	0	0	0	0	7.45	7.45
Inverter	MV3-8	368680	4907712	2	0	0	100.3	100.3	1	2768.09	3.25	0	79.84	0	0.32	0	0	14.96	0	0	0	0	0	0	5.2	5.2
Inverter	MV4-7	369035	4909001	2	0	0	100.3	100.3	1	3872.48	3.25	0	82.76	0	0.51	0	0	16.84	0	0	0	0	0	0	0.2	0.2
Inverter	MV6-2	370085	4907339	2	0	0	100.3	100.3	1	3893.63	3.25	0	82.81	0	0.51	0	0	16.88	0	0	0	0	0	0	0.12	0.12
Inverter	MV4-11	369264	4908855	2	0	0	100.3	100.3	1	3933.95	3.25	0	82.9	0	0.52	0	0	16.94	0	0	0	0	0	0	-0.04	-0.04
Inverter	MV6-3	370207	4907140	2	0	0	100.3	100.3	1	3958.47	3.25	0	82.95	0	0.52	0	0	16.98	0	0	0	0	0	0	-0.14	-0.14
Inverter	MV4-10	369312	4908858	2	0	0	100.3	100.3	1	3971.5	3.25	0	82.98	0	0.52	0	0	17	0	0	0	0	0	0	-0.19	-0.19
Inverter	MV4-4	369027	4909199	2	0	0	100.3	100.3	1	4012.76	3.25	0	83.07	0	0.53	0	0	17.07	0	0	0	0	0	0	-0.35	-0.35
Inverter	MV4-8	369256	4909001	2	0	0	100.3	100.3	1	4028.21	3.25	0	83.1	0	0.53	0	0	17.09	0	0	0	0	0	0	-0.41	-0.41
Inverter	MV4-9	369289	4909001	2	0	0	100.3	100.3	1	4051.98	3.25	0	83.15	0	0.53	0	0	17.13	0	0	0	0	0	0	-0.51	-0.51
Inverter	MV4-1	369011	4909397	2	0	0	100.3	100.3	1	4152.64	3.25	0	83.37	0	0.55	0	0	17.29	0	0	0	0	0	0	-0.89	-0.89
Inverter	MV4-6	369243	4909192	2	0	0	100.3	100.3	1	4154.3	3.25	0	83.37	0	0.55	0	0	17.29	0	0	0	0	0	0	-0.9	-0.9
Inverter	MV4-5	369289	4909199	2	0	0	100.3	100.3	1	4191.34	3.25	0	83.45	0	0.55	0	0	17.35	0	0	0	0	0	0	-1.04	-1.04
Inverter	MV4-3	369229	4909397	2	0	0	100.3	100.3	1	4294.99	3.25	0	83.66	0	0.57	0	0	17.51	0	0	0	0	0	0	-1.43	-1.43
Inverter	MV4-2	369272	4909397	2	0	0	100.3	100.3	1	4323.81	3.25	0	83.72	0	0.57	0	0	17.56	0	0	0	0	0	0	-1.53	-1.53
Inverter	MV5-5	370015	4908690	2	0	0	100.3	100.3	1	4421.48	3.25	0	83.91	0	0.58	0	0	17.71	0	0	0	0	0	0	-1.89	-1.89
Inverter	MV5-2	370006	4908853	2	0	0	100.3	100.3	1	4508.04	3.25	0	84.08	0	0.59	0	0	17.84	0	0	0	0	0	0	-2.2	-2.2
Inverter	MV5-4	370324	4908707	2	0	0	100.3	100.3	1	4689.08	3.25	0	84.42	0	0.61	0	0	18.12	0	0	0	0	0	0	-2.84	-2.84
Inverter	MV5-3	370231	4908851	2	0	0	100.3	100.3	1	4690.66	3.25	0	84.42	0	0.61	0	0	18.12	0	0	0	0	0	0	-2.84	-2.84
Inverter	MV5-1	370020	4909142	2	0	0	100.3	100.3	1	4694.91	3.25	0	84.43	0	0.61	0	0	18.13	0	0	0	0	0	0	-2.86	-2.86
Inverter	MV6-1	370235	4907364	2	0	0	97.3	97.3	1	4044.42	3.25	0	83.14	0	0.53	0	0	17.12	0	0	0	0	0	0	-3.48	-3.48
DSTATCOM - 10 MVAR #2	DSAT2	369403	4908757	2.5	0	0	96.6	96.6	1	3973.8	3.5	0	82.98	0	3.56	0	0	2.83	0	0	0	0	0	0	7.25	7.25
DSTATCOM - 10 MVAR #1	DSAT1	369437	4908757	2.5	0	0	96.6	96.6	1	3999.87	3.5	0	83.04	0	3.57	0	0	2.84	0	0	0	0	0	0	7.18	7.18
Inverter	MV1-3	364440	4906039	2	0	0	89.1	89.1	1	1928.65	3.25	0	76.71	0	0.89	0	0	7.93	0	0	0	0	0	0	3.53	3.53
Gardiner Substation	G_Sub	366586.3	4903349.9	2.5	0	0	90.8	90.8	1	2857.92	4.25	0	80.12	0	1.11	3.35	0.37	5.74	0	0	0	0	0	0	0.45	0.45
SubstationTransformer	W_ST	369711.17	4906112.3	2.5	0	0	92	92	1	3350.29	4.25	0	81.5	0	1.17	2.85	0.29	6.47	0	0	0	0	0	0	-0.02	-0.02
Inverter	MV3-22	368656	4907142	2	0	0	89.1	89.1	1	2480.26	3.25	0	78.89	0	1.02	0	0	8.81	0	0	0	0	0	0	0.33	0.33
Inverter	MV3-1	368156	4907976	2	0	0	89.1	89.1	1	2525.11	3.25	0	79.05	0	1.03	0	0	8.89	0	0	0	0	0	0	0.1	0.1
Inverter	MV3-5	368340	4907843	2	0	0	89.1	89.1	1	2572.01	3.25	0	79.21	0	1.04	0	0	8.96	0	0	0	0	0	0	-0.15	-0.15
Inverter	MV3-4	368502	4907925	2	0	0	89.1	89.1	1	2749.31	3.25	0	79.78	0	1.09	0	0	9.23	0	0	0	0	0	0	-1.05	-1.05
Inverter	MV3-2	368671	4907928	2	0	0	89.1	89.1	1	2884.6	3.25	0	80.2	0	1.12	0	0	9.44	0	0	0	0	0	0	-1.7	-1.7
Westbrook Inverter Enclosur	W_INV2	369374	4906388	2	0	0	89.1	89.1	1	3017.92	3.25	0	80.59	0	1.15	0	0	9.64	0	0	0	0	0	0	-2.33	-2.33
Westbrook Inverter Enclosur	W_INV3	369508	4906164	2	0	0	89.1	89.1	1	3146.2	3.25	0	80.96	0	1.18	0	0	9.84	0	0	0	0	0	0	-2.92	-2.92
Westbrook Inverter Enclosur	W_INV4	369673	4906164	2	0	0	89.1	89.1	1	3311.19	3.25	0	81.4	0	1.22	0	0	10.08	0	0	0	0	0	0	-3.65	-3.65
Westbrook Inverter Enclosur	W_INV5	369719	4906574	2	0	0	89.1	89.1	1	3377.88	3.25	0	81.57	0	1.24	0	0	10.18	0	0	0	0	0	0	-3.94	-3.94
Westbrook Inverter Enclosur	W_INV7	369780	4906417	2	0	0	89.1	89.1	1	3424.95	3.25	0	81.69	0	1.25	0	0	10.25	0	0	0	0	0	0	-4.14	-4.14
Inverters	G_Inv2	366676.9	4903239.1	2	0	0	87.7	87.7	1	2976.6	3.25	0	80.47	0	2.7	0	0	3.75	0	0	0	0	0	0	0.74	0.74
Inverters	G_Inv1	366526.4	4903225.8	2	0	0	87.7	87.7	1	2977.74	3.25	0	80.48	0	2.7	0	0	3.75	0	0	0	0	0	0	0.74	0.74
Westbrook Inverter Enclosur	W_INV6	369875	4906578	2	0	0	89.1	89.1	1	3533.39	3.25	0	81.96	0	1.28	0	0	10.41	0	0	0	0	0	0	-4.59	-4.59
Inverter	MV4-13	369051	4908605	2	0	0	89.1	89.1	1	3608.26	3.25	0	82.15	0	1.3	0	0	10.52	0	0	0	0	0	0	-4.9	-4.9
Inverter	MV4-15	369176	4908481	2	0	0	89.1	89.1	1	3623	3.25	0	82.18	0	1.3	0	0	10.54	0	0	0	0	0	0	-4.97	-4.97
Inverter	MV4-14	369176	4908507	2	0	0	89.1	89.1	1	3639.43	3.25	0	82.22	0	1.3	0	0	10.57	0	0	0	0	0	0	-5.03	-5.03
Fixed Reactor Bank 1	FRB1	369378	4908755	6	0	0	89.8	89.8	1	3953.4	5.25	0	82.94	0	-0.73	0	0	7.3	0	0	0	0	0	0	0.26	0.26
Inverters	G_Inv3	366583.7	4903091.4	2	0	0	87.7	87.7	1	3115.5	3.25	0	80.87	0	2.71	0	0	3.9	0	0	0	0	0	0	0.18	0.18
Inverters	G_Inv4	366732.8	4903105	2	0	0	87.7	87.7	1	3116.14	3.25	0	80.87	0	2.71	0	0	3.9	0	0	0	0	0	0	0.17	0.17
Fixed Reactor Bank 2	FRB2	369464	4908755	6	0	0	89.8	89.8	1	4019.4	5.25	0	83.08	0	-0.72	0	0	7.39	0	0	0	0	0	0	0.02	0.02
Inverter	MV4-12	369043	4908803	2	0	0	89.1	89.1	1	3737.46	3.25	0	82.45	0	1.33	0	0	10.71	0	0	0	0	0	0	-5.43	-5.43
Inverters	G_Inv5	366638.5	4902958.1	2	0	0	87.7	87.7	1	3252.67	3.25	0	81.24	0	2.72	0	0	4.06	0	0	0	0	0	0	-0.36	-0.36
Inverters	G_Inv6	366788.5	4902972	2	0	0	87.7	87.7	1	3255.06	3.25	0	81.25	0	2.72	0	0	4.06	0	0	0	0	0	0	-0.37	-0.37
Inverters	G_Inv7	366694.6	4902824.7	2	0	0	87.7	87.7	1	3390.65	3.25	0	81.61	0	2.74	0	0	4.21	0	0	0	0	0	0	-0.89	-0.89
Inverters	G_Inv8	366844.5	4902838.5	2	0	0	87.7	87.7	1	3394.96	3.25	0	81.62	0	2.74	0	0	4.21	0	0	0	0	0	0	-0.91	-0.91

Inverters	G_Inv9	366750.9	4902691.8	2	0	0	87.7	87.7	1	3528.7	3.25	0	81.95	0	2.75	0	0	4.36	0	0	0	0	0	0	-1.4	-1.4
Inverters	G_Inv10	366900.7	4902704.8	2	0	0	87.7	87.7	1	3535.48	3.25	0	81.97	0	2.75	0	0	4.37	0	0	0	0	0	0	-1.43	-1.43
Inverter	MV5-6	369982	4908507	2	0	0	89.1	89.1	1	4293.17	3.25	0	83.66	0	1.46	0	0	11.5	0	0	0	0	0	0	-7.56	-7.56
Westbrook Inverter Enclosur	W_INV1	369409	4906578	2	0	0	86.1	86.1	1	3070.48	3.25	0	80.74	0	1.16	0	0	9.72	0	0	0	0	0	0	-5.57	-5.57
Inverter	MV6-4	370250	4906966	2	0	0	86.1	86.1	1	3962.93	3.25	0	82.96	0	1.38	0	0	11.03	0	0	0	0	0	0	-9.32	-9.32
Inverter Transformer	MV2-1 T	365836	4906816	2	0	0	69.4	69.4	1	810.78	3.25	0	69.18	0	1.5	0	0	3.53	0	0	0	0	0	0	-4.86	-4.86
Westbrook Inverter Transfor	W_INVTR1	369403	4906578	2	0	0	78.2	78.2	1	3064.53	3.25	0	80.73	0	-2.73	0	0	1.68	0	0	0	0	0	0	-1.44	-1.44
Westbrook Inverter Transfor	W_INVTR2	369368	4906388	2	0	0	77.3	77.3	1	3011.94	3.25	0	80.58	0	-2.72	0	0	1.66	0	0	0	0	0	0	-2.18	-2.18
Westbrook Inverter Transfor	W_INVTR3	369514	4906164	2	0	0	77.3	77.3	1	3152.2	3.25	0	80.97	0	-2.76	0	0	1.72	0	0	0	0	0	0	-2.6	-2.6
Westbrook Inverter Transfor	W_INVTR4	369679	4906164	2	0	0	77.3	77.3	1	3317.19	3.25	0	81.42	0	-2.8	0	0	1.79	0	0	0	0	0	0	-3.06	-3.06
Westbrook Inverter Transfor	W_INVTR5	369725	4906574	2	0	0	77.3	77.3	1	3383.84	3.25	0	81.59	0	-2.81	0	0	1.81	0	0	0	0	0	0	-3.25	-3.25
Westbrook Inverter Transfor	W_INVTR7	369786	4906417	2	0	0	77.3	77.3	1	3430.93	3.25	0	81.71	0	-2.83	0	0	1.83	0	0	0	0	0	0	-3.37	-3.37
Westbrook Inverter Transfor	W_INVTR6	369881	4906578	2	0	0	77.3	77.3	1	3539.35	3.25	0	81.98	0	-2.85	0	0	1.88	0	0	0	0	0	0	-3.66	-3.66
Inverter Transformer	MV1-10 T	365010	4905564	2	0	0	69.4	69.4	1	1493.7	3.25	0	74.49	0	1.97	0	0	4.43	0	0	0	0	0	0	-11.53	-11.53
Inverter Transformer	MV1-7 T	364919	4905782	2	0	0	69.4	69.4	1	1502.05	3.25	0	74.53	0	1.97	0	0	4.44	0	0	0	0	0	0	-11.59	-11.59
Inverter Transformer	MV1-14 T	365157	4905049	2	0	0	69.4	69.4	1	1665.69	3.25	0	75.43	0	2.04	0	0	4.62	0	0	0	0	0	0	-12.74	-12.74
Inverter Transformer	MV1-13 T	364725	4905241	2	0	0	69.4	69.4	1	1896.72	3.25	0	76.56	0	2.13	0	0	4.86	0	0	0	0	0	0	-14.21	-14.21
Inverter Transformer	MV2-2 T	365982	4906654	2	0	0	56.1	56.1	1	592.82	3.25	0	66.46	0	-0.11	0	0	3.83	0	0	0	0	0	0	-14.13	-14.13
Inverter Transformer	MV2-3 T	365814	4906641	2	0	0	56.1	56.1	1	704.04	3.25	0	67.95	0	-0.08	0	0	4.14	0	0	0	0	0	0	-15.96	-15.96
Inverter Transformer	MV6-4 T	370244	4906966	2	0	0	69.4	69.4	1	3957.05	3.25	0	82.95	0	2.77	0	0	6.64	0	0	0	0	0	0	-23.02	-23.02
Inverter Transformer	MV6-1 T	370230	4907364	2	0	0	69.4	69.4	1	4039.64	3.25	0	83.13	0	2.8	0	0	6.71	0	0	0	0	0	0	-23.28	-23.28
Inverter Transformer	MV2-4 T	365590	4906628	2	0	0	56.1	56.1	1	883.19	3.25	0	69.92	0	-0.03	0	0	4.6	0	0	0	0	0	0	-18.44	-18.44
Inverter Transformer	MV1-12 T	365044	4905386	2	0	0	56.1	56.1	1	1548.58	3.25	0	74.8	0	0.22	0	0	6.12	0	0	0	0	0	0	-25.08	-25.08
Inverter Transformer	MV1-4 T	364821	4905918	2	0	0	56.1	56.1	1	1566.41	3.25	0	74.9	0	0.23	0	0	6.16	0	0	0	0	0	0	-25.22	-25.22
Inverter Transformer	MV1-15 T	365309	4904994	2	0	0	56.1	56.1	1	1600.26	3.25	0	75.08	0	0.24	0	0	6.23	0	0	0	0	0	0	-25.5	-25.5
Inverter Transformer	MV1-2 T	364759	4906063	2	0	0	56.1	56.1	1	1608.76	3.25	0	75.13	0	0.24	0	0	6.25	0	0	0	0	0	0	-25.56	-25.56
Inverter Transformer	MV1-1 T	364721	4906166	2	0	0	56.1	56.1	1	1641.33	3.25	0	75.3	0	0.26	0	0	6.32	0	0	0	0	0	0	-25.82	-25.82
Inverter Transformer	MV1-8 T	364782	4905647	2	0	0	56.1	56.1	1	1673.65	3.25	0	75.47	0	0.27	0	0	6.38	0	0	0	0	0	0	-26.07	-26.07
Inverter Transformer	MV1-5 T	364676	4905892	2	0	0	56.1	56.1	1	1713.72	3.25	0	75.68	0	0.28	0	0	6.47	0	0	0	0	0	0	-26.37	-26.37
Inverter Transformer	MV3-18 T	367757	4907412	2	0	0	56.1	56.1	1	1848.62	3.25	0	76.34	0	0.34	0	0	6.74	0	0	0	0	0	0	-27.36	-27.36
Inverter Transformer	MV1-11 T	364649	4905414	2	0	0	56.1	56.1	1	1884.3	3.25	0	76.5	0	0.36	0	0	6.81	0	0	0	0	0	0	-27.61	-27.61
Inverter Transformer	MV1-9 T	364555	4905646	2	0	0	56.1	56.1	1	1889.73	3.25	0	76.53	0	0.36	0	0	6.82	0	0	0	0	0	0	-27.65	-27.65
Inverter Transformer	MV1-6 T	364482	4905835	2	0	0	56.1	56.1	1	1914.92	3.25	0	76.64	0	0.37	0	0	6.88	0	0	0	0	0	0	-27.83	-27.83
Inverter Transformer	MV3-12 T	367674	4907594	2	0	0	56.1	56.1	1	1915.04	3.25	0	76.64	0	0.37	0	0	6.88	0	0	0	0	0	0	-27.83	-27.83
Inverter Transformer	MV1-3 T	364435	4906039	2	0	0	56.1	56.1	1	1933.63	3.25	0	76.73	0	0.38	0	0	6.91	0	0	0	0	0	0	-27.96	-27.96
Inverter Transformer	MV3-13 T	367958	4907577	2	0	0	56.1	56.1	1	2108.58	3.25	0	77.48	0	0.45	0	0	7.26	0	0	0	0	0	0	-29.13	-29.13
Inverter Transformer	MV3-17 T	368183	4907472	2	0	0	56.1	56.1	1	2221.84	3.25	0	77.93	0	0.5	0	0	7.47	0	0	0	0	0	0	-29.85	-29.85
Inverter Transformer	MV3-7 T	367951	4907754	2	0	0	56.1	56.1	1	2223.28	3.25	0	77.94	0	0.5	0	0	7.47	0	0	0	0	0	0	-29.85	-29.85
Inverter Transformer	MV3-19 T	368352	4907347	2	0	0	56.1	56.1	1	2297.39	3.25	0	78.22	0	0.53	0	0	7.61	0	0	0	0	0	0	-30.31	-30.31
Inverter Transformer	MV3-10 T	368162	4907669	2	0	0	56.1	56.1	1	2323.98	3.25	0	78.32	0	0.54	0	0	7.66	0	0	0	0	0	0	-30.47	-30.47
Inverter Transformer	MV3-3 T	367944	4907927	2	0	0	56.1	56.1	1	2342.8	3.25	0	78.39	0	0.55	0	0	7.7	0	0	0	0	0	0	-30.59	-30.59
Inverter Transformer	MV3-21 T	368484	4907206	2	0	0	56.1	56.1	1	2348.82	3.25	0	78.42	0	0.55	0	0	7.71	0	0	0	0	0	0	-30.62	-30.62
Inverter Transformer	MV3-15 T	368351	4907477	2	0	0	56.1	56.1	1	2364.19	3.25	0	78.47	0	0.56	0	0	7.74	0	0	0	0	0	0	-30.71	-30.71
Inverter Transformer	MV3-6 T	368156	4907834	2	0	0	56.1	56.1	1	2427.28	3.25	0	78.7	0	0.59	0	0	7.86	0	0	0	0	0	0	-31.09	-31.09
Inverter Transformer	MV3-11 T	368340	4907662	2	0	0	56.1	56.1	1	2460.26	3.25	0	78.82	0	0.6	0	0	7.92	0	0	0	0	0	0	-31.28	-31.28
Inverter Transformer	MV3-22 T	368661	4907142	2	0	0	56.1	56.1	1	2484.89	3.25	0	78.91	0	0.61	0	0	7.96	0	0	0	0	0	0	-31.42	-31.42
Inverter Transformer	MV3-16 T	368509	4907475	2	0	0	56.1	56.1	1	2497.56	3.25	0	78.95	0	0.62	0	0	7.99	0	0	0	0	0	0	-31.49	-31.49
Inverter Transformer	MV3-1 T	368150	4907976	2	0	0	56.1	56.1	1	2520.85	3.25	0	79.03	0	0.63	0	0	8.03	0	0	0	0	0	0	-31.63	-31.63
Inverter Transformer	MV3-5 T	368335	4907843	2	0	0	56.1	56.1	1	2568.16	3.25	0	79.19	0	0.65	0	0	8.11	0	0	0	0	0	0	-31.89	-31.89
Inverter Transformer	MV3-20 T	368683	4907317	2	0	0	56.1	56.1	1	2576.23	3.25	0	79.22	0	0.65	0	0	8.13	0	0	0	0	0	0	-31.94	-31.94
Inverter Transformer	MV3-9 T	368517	4907703	2	0	0	56.1	56.1	1	2627.94	3.25	0	79.39	0	0.67	0	0	8.22	0	0	0	0	0	0	-32.23	-32.23
Inverter Transformer	MV3-14 T	368678	4907498	2	0	0	56.1	56.1	1	2655.42	3.25	0	79.48	0	0.68	0	0	8.27	0	0	0	0	0	0	-32.38	-32.38
Inverter Transformer	MV3-4 T	368507	4907925	2	0	0	56.1	56.1	1	2753.2	3.25	0	79.8	0	0.72	0	0	8.44	0	0	0	0	0	0	-32.91	-32.91
Inverter Transformer	MV3-8 T	368685	4907712	2	0	0	56.1	56.1	1	2772.27	3.25	0	79.86	0	0.73	0	0	8.48	0	0	0	0	0	0	-33.01	-33.01
Inverter Transformer	MV3-2 T	368677	4907928	2	0	0	56.1	56.1	1	2889.41	3.25	0	80.22	0	0.78	0	0	8.68	0	0	0	0	0	0	-33.62	-33.62
Inverter Transformer	MV4-13 T	369057	4908605	2	0	0	56.1	56.1	1	3612.74	3.25	0	82.16	0	1.09	0	0	9.87	0	0	0	0	0	0	-37.05	-37.05
Inverter Transformer	MV4-15 T	369170	4908481	2	0	0	56.1	56.1	1	3618.34	3.25	0	82.17	0	1.09	0	0	9.87	0	0	0	0	0	0	-37.07	-37.07
Inverter Transformer	MV4-14 T	369182	4908507	2	0	0	56.1	56.1	1	3644.07	3.25	0	82.23	0	1.1	0	0	9.91	0	0	0	0	0	0	-37.19	-37.19
Inverter Transformer	MV4-12 T	369049	4908803	2	0	0	56.1	56.1	1	3741.76	3.25	0	82.46	0	1.14	0	0	10.06	0	0	0	0	0	0	-37.61	-37.61
Inverter Transformer	MV4-7 T	369040	4909001	2	0	0	56.1	56.1	1	3875.94	3.25	0	82.77	0	1.19	0	0	10.27	0	0	0	0	0	0	-38.17	-38.17
Inverter Transformer	MV6-2 T	370091	4907339	2	0	0	56.1	56.1	1	3899.36	3.25	0	82.82	0	1.2	0	0	10.3	0	0	0	0	0	0	-38.27	-38.27
Inverter Transformer	MV4-11 T	369269	4908855	2	0	0	56.1	56.1	1	3937.64	3.25	0	82.9	0	1.22	0	0	10.36	0	0	0	0	0	0	-38.43	-38.43
Inverter Transformer	MV6-3 T	370202	4907140	2	0	0	56.1	56.1	1	3953.62	3.25	0	82.94	0	1.23	0	0	10.39	0	0	0	0	0	0	-38.49	-38.49
Inverter Transformer	MV4-10 T	369307	4908858	2	0	0	56.1	56.1	1	3967.78	3.25	0	82.97	0	1.23	0	0	10.41	0	0	0	0	0	0	-38.55	-38.55
Inverter Transformer	MV4-4 T	369033	4909199	2	0	0	56.1	56.1	1	4016.75	3.25	0	83.08	0	1.25	0	0	10.48	0	0	0	0	0	0	-38.75	-38.75
Inverter Transformer	MV4-8 T	369262	4909001	2	0	0	56.1	56.1	1	4032.52	3.25	0	83.11	0	1.26	0	0	10.5	0	0	0	0	0	0	-38.81	-38.81
Inverter Transformer	MV4-9 T	369284	4909001	2	0	0	56.1	56.1	1	4048.37	3.25	0	83.15	0	1.26	0	0	10.53	0	0	0	0	0	0	-38.88	-38.88
Inverter Transformer	MV4-1 T	369017	4909397	2	0	0	56.1	56.1	1	4156.47	3.25	0	83.37	0	1.31	0	0	10.69	0	0	0	0	0	0	-39.31	-39.31
Inverter Transformer	MV4-6 T	369249	4909192	2	0	0	56.1	56.1	1	4158.46	3.25	0	83.38	0	1.31	0	0	10.69	0	0	0	0	0	0	-39.32	-39.32
Inverter Transformer	MV4-5 T	369283	4909199	2	0	0	56.1	56.1	1	4187.15	3.25	0	83.44	0	1.32	0	0	10.73	0	0	0	0	0	0	-39.43	-39.43
Inverter Transformer	MV5-6 T	369987	4908507	2	0	0	56.1	56.1	1	4297.38	3.25	0	83.66	0	1.36	0	0	10.89	0	0	0	0	0	0	-39.86	-39.86
Inverter Transformer	MV4-3 T	369234	4909397	2	0	0	56.1	56.1	1	4298.32	3.25	0	83.67	0	1.36	0	0	10.89	0	0	0	0	0	0	-39.86	-39.86
Inverter Transformer	MV4-2 T	369267	4909397	2	0	0	56.1	56.1	1	4320.44	3.25	0	83.71	0	1.37	0	0	10.92	0	0	0	0	0	0	-39.94	-39.94
Inverter Transformer	MV5-5 T	370021	4908690	2	0	0	56.1	56.1	1	4426.44	3.25	0	83.92	0	1.41	0	0	11.07	0	0	0	0	0	0	-40.35	-40.35

	Inverter Transformer	MV5-2 T	370011	4908853	2	0	0	56.1	56.1	1	4512.09	3.25	0	84.09	0	1.44	0	0	11.19	0	0	0	0	0	0	-40.67	-40.67
	Inverter Transformer	MV5-1 T	370015	4909142	2	0	0	56.1	56.1	1	4691.02	3.25	0	84.43	0	1.51	0	0	11.44	0	0	0	0	0	0	-41.32	-41.32
	Inverter Transformer	MV5-4 T	370330	4908707	2	0	0	56.1	56.1	1	4694.16	3.25	0	84.43	0	1.51	0	0	11.44	0	0	0	0	0	0	-41.33	-41.33
	Inverter Transformer	MV5-3 T	370237	4908851	2	0	0	56.1	56.1	1	4695.61	3.25	0	84.43	0	1.51	0	0	11.45	0	0	0	0	0	0	-41.33	-41.33
	Line Reactor	NGR	369421	4908787.5	5	0	0	45.4	45.4	1	4007.22	5.25	0	83.06	0	3.29	1.34	0.09	1.64	0	0	0	0	0	0	-43.97	-43.97
Limit. Valu	0	0																								
Level D/N:	29.2079	29.2079																								

Receiver: Existing Noise Receptor
ID: S-R78
X: 366440
Y: 4906141
Z: 4.5
Ground: 0

ISO	Description	ID	X	Y	Z	Ground	ReflOrd	LxT	LxN	L/A	Dist.	hm	Freq	Adiv	K0b	Agr	Abar	z	Aatm	Afol	Ahous	Cmet	CmetN	Dc	RL	LtotT	LtotN
	Inverter	MV2-3	365820	4906641	2	0	0	100.3	100.3	1	796.5	3.25	0	69.02	0	-0.35	0	0	10.17	0	0	0	0	0	0	21.48	21.48
	Inverter	MV2-4	365586	4906624	2	0	0	100.3	100.3	1	981.13	3.25	0	70.83	0	-0.26	0	0	10.85	0	0	0	0	0	0	18.88	18.88
	Sol_Luce Substation	S_Substation	369426	4908792	3.5	0	0	112.1	112.1	1	3992.99	5.25	0	83.03	0	0.6	3.11	0.25	7.36	0	0	0	0	0	0	17.99	17.99
	Inverter	MV2-1	365842	4906816	2	0	0	97.3	97.3	1	901.8	3.25	0	70.1	0	-0.3	0	0	10.57	0	0	0	0	0	0	16.93	16.93
	Inverter	MV1-12	365038	4905386	2	0	0	100.3	100.3	1	1592.37	3.25	0	75.04	0	0	0	0	12.55	0	0	0	0	0	0	12.72	12.72
	Inverter	MV1-15	365315	4904994	2	0	0	100.3	100.3	1	1606.62	3.25	0	75.12	0	0	0	0	12.58	0	0	0	0	0	0	12.61	12.61
	Inverter	MV1-4	364815	4905918	2	0	0	100.3	100.3	1	1640.23	3.25	0	75.3	0	0.02	0	0	12.66	0	0	0	0	0	0	12.33	12.33
	Inverter	MV1-2	364753	4906063	2	0	0	100.3	100.3	1	1688.8	3.25	0	75.55	0	0.03	0	0	12.78	0	0	0	0	0	0	11.95	11.95
	Inverter	MV1-8	364788	4905647	2	0	0	100.3	100.3	1	1724.28	3.25	0	75.73	0	0.04	0	0	12.86	0	0	0	0	0	0	11.68	11.68
	Inverter	MV1-1	364715	4906166	2	0	0	100.3	100.3	1	1725.18	3.25	0	75.74	0	0.05	0	0	12.86	0	0	0	0	0	0	11.67	11.67
	Inverter	MV1-5	364671	4905892	2	0	0	100.3	100.3	1	1786.44	3.25	0	76.04	0	0.06	0	0	13	0	0	0	0	0	0	11.21	11.21
	Inverter	MV3-18	367752	4907412	2	0	0	100.3	100.3	1	1826.69	3.25	0	76.23	0	0.08	0	0	13.09	0	0	0	0	0	0	10.91	10.91
	Inverter	MV3-12	367668	4907594	2	0	0	100.3	100.3	1	1902.42	3.25	0	76.59	0	0.1	0	0	13.25	0	0	0	0	0	0	10.37	10.37
	Inverter	MV1-11	364655	4905414	2	0	0	100.3	100.3	1	1927.37	3.25	0	76.7	0	0.11	0	0	13.31	0	0	0	0	0	0	10.2	10.2
	Inverter	MV1-9	364561	4905646	2	0	0	100.3	100.3	1	1943.11	3.25	0	76.77	0	0.11	0	0	13.34	0	0	0	0	0	0	10.09	10.09
	Inverter	MV1-6	364477	4905835	2	0	0	100.3	100.3	1	1986.71	3.25	0	76.96	0	0.13	0	0	13.43	0	0	0	0	0	0	9.79	9.79
	Inverter	MV3-13	367963	4907577	2	0	0	100.3	100.3	1	2093.23	3.25	0	77.42	0	0.16	0	0	13.66	0	0	0	0	0	0	9.08	9.08
	Inverter	MV1-10	365004	4905564	2	0	0	97.3	97.3	1	1547.59	3.25	0	74.79	0	-0.02	0	0	12.44	0	0	0	0	0	0	10.09	10.09
	Inverter	MV3-17	368178	4907472	2	0	0	100.3	100.3	1	2189.11	3.25	0	77.81	0	0.18	0	0	13.85	0	0	0	0	0	0	8.47	8.47
	Inverter	MV1-7	364925	4905782	2	0	0	97.3	97.3	1	1556.96	3.25	0	74.85	0	-0.01	0	0	12.46	0	0	0	0	0	0	10.01	10.01
	Inverter	MV3-7	367945	4907754	2	0	0	100.3	100.3	1	2206.08	3.25	0	77.87	0	0.19	0	0	13.89	0	0	0	0	0	0	8.37	8.37
	Inverter	MV3-19	368357	4907347	2	0	0	100.3	100.3	1	2264.8	3.25	0	78.1	0	0.2	0	0	14	0	0	0	0	0	0	8.01	8.01
	Inverter	MV3-21	368478	4907206	2	0	0	100.3	100.3	1	2299.49	3.25	0	78.23	0	0.21	0	0	14.07	0	0	0	0	0	0	7.8	7.8
	Inverter	MV3-10	368167	4907669	2	0	0	100.3	100.3	1	2305.93	3.25	0	78.26	0	0.21	0	0	14.08	0	0	0	0	0	0	7.76	7.76
	Inverter	MV3-3	367939	4907927	2	0	0	100.3	100.3	1	2331.7	3.25	0	78.35	0	0.22	0	0	14.13	0	0	0	0	0	0	7.61	7.61
	Inverter	MV3-15	368357	4907477	2	0	0	100.3	100.3	1	2336.62	3.25	0	78.37	0	0.22	0	0	14.14	0	0	0	0	0	0	7.58	7.58
	Inverter	MV1-14	365163	4905049	2	0	0	97.3	97.3	1	1680.24	3.25	0	75.51	0	0.03	0	0	12.76	0	0	0	0	0	0	9.02	9.02
	Inverter	MV3-6	368162	4907834	2	0	0	100.3	100.3	1	2414.86	3.25	0	78.66	0	0.24	0	0	14.3	0	0	0	0	0	0	7.12	7.12
	Inverter	MV3-11	368346	4907662	2	0	0	100.3	100.3	1	2438.5	3.25	0	78.74	0	0.24	0	0	14.34	0	0	0	0	0	0	6.99	6.99
	Inverter	MV3-16	368514	4907475	2	0	0	100.3	100.3	1	2465.98	3.25	0	78.84	0	0.25	0	0	14.39	0	0	0	0	0	0	6.83	6.83
	Inverter	MV2-2	365977	4906654	2	0	0	89.1	89.1	1	691.05	3.25	0	67.79	0	0.61	0	0	5.68	0	0	0	0	0	0	14.98	14.98
	Inverter	MV3-20	368689	4907317	2	0	0	100.3	100.3	1	2537.91	3.25	0	79.09	0	0.27	0	0	14.53	0	0	0	0	0	0	6.43	6.43
	Inverter	MV3-9	368512	4907703	2	0	0	100.3	100.3	1	2594.81	3.25	0	79.28	0	0.28	0	0	14.64	0	0	0	0	0	0	6.11	6.11
	Inverter	MV3-14	368684	4907498	2	0	0	100.3	100.3	1	2622.4	3.25	0	79.37	0	0.28	0	0	14.69	0	0	0	0	0	0	5.97	5.97
	Inverter	MV1-13	364731	4905241	2	0	0	97.3	97.3	1	1931.5	3.25	0	76.72	0	0.11	0	0	13.32	0	0	0	0	0	0	7.17	7.17
	Inverter	MV3-8	368680	4907712	2	0	0	100.3	100.3	1	2735.99	3.25	0	79.74	0	0.31	0	0	14.9	0	0	0	0	0	0	5.36	5.36
	Inverter	MV6-2	370085	4907339	2	0	0	100.3	100.3	1	3836.83	3.25	0	82.68	0	0.5	0	0	16.79	0	0	0	0	0	0	0.34	0.34
	Inverter	MV4-7	369035	4909001	2	0	0	100.3	100.3	1	3861.82	3.25	0	82.74	0	0.51	0	0	16.83	0	0	0	0	0	0	0.24	0.24
	Inverter	MV6-3	370207	4907140	2	0	0	100.3	100.3	1	3897.22	3.25	0	82.82	0	0.51	0	0	16.88	0	0	0	0	0	0	0.1	0.1
	Inverter	MV4-11	369264	4908855	2	0	0	100.3	100.3	1	3916.73	3.25	0	82.86	0	0.52	0	0	16.92	0	0	0	0	0	0	0.02	0.02
	Inverter	MV4-10	369312	4908858	2	0	0	100.3	100.3	1	3953.54	3.25	0	82.94	0	0.52	0	0	16.97	0	0	0	0	0	0	-0.12	-0.12
	Inverter	MV4-4	369027	4909199	2	0	0	100.3	100.3	1	4005.49	3.25	0	83.05	0	0.53	0	0	17.06	0	0	0	0	0	0	-0.33	-0.33
	Inverter	MV4-8	369256	4909001	2	0	0	100.3	100.3	1	4013.66	3.25	0	83.07	0	0.53	0	0	17.07	0	0	0	0	0	0	-0.36	-0.36
	Inverter	MV4-9	369289	4909001	2	0	0	100.3	100.3	1	4036.88	3.25	0	83.12	0	0.53	0	0	17.11	0	0	0	0	0	0	-0.45	-0.45
	Inverter	MV4-6	369243	4909192	2	0	0	100.3	100.3	1	4143.12	3.25	0	83.35	0	0.55	0	0	17.28	0	0	0	0	0	0	-0.86	-0.86
	Inverter	MV4-1	369011	4909397	2	0	0	100.3	100.3	1	4148.68	3.25	0	83.36	0	0.55	0	0	17.28	0	0	0	0	0	0	-0.88	-0.88
	Inverter	MV4-5	369289	4909199	2	0	0	100.3	100.3	1	4179.49	3.25	0	83.42	0	0.55	0	0	17.33	0	0	0	0	0	0	-0.99	-0.99
	Inverter	MV4-3	369229	4909397	2	0	0	100.3	100.3	1	4287.2	3.25	0	83.64	0	0.57	0	0	17.5	0	0	0	0	0	0	-1.4	-1.4
	Inverter	MV4-2	369272	4909397	2	0	0	100.3	100.3	1	4315.29	3.25	0	83.7	0	0.57	0	0	17.55	0	0	0	0	0	0	-1.5	-1.5
	Inverter	MV5-5	370015	4908690	2	0	0	100.3	100.3	1	4390.68	3.25	0	83.85	0	0.58	0	0	17.66	0	0	0	0	0	0	-1.78	-1.78
	Inverter	MV5-2	370006	4908853	2	0	0	100.3	100.3	1	4480.1	3.25	0	84.03	0	0.59	0	0	17.8	0	0	0	0	0	0	-2.1	-2.1
	Inverter	MV5-4	370324	4908707	2	0	0	100.3	100.3	1	4655.09	3.25	0	84.36	0	0.61	0	0	18.07	0	0	0	0	0	0	-2.72	-2.72
	Inverter	MV5-3	370231	4908851	2	0	0	100.3	100.3	1	4660.02	3.25	0	84.37	0	0.61	0	0	18.07	0	0	0	0	0	0	-2.74	-2.74
	Inverter	MV5-1	370020	4909142	2	0	0	100.3	100.3	1	4671.45	3.25	0	84.39	0	0.61	0	0	18.09	0	0	0	0	0	0	-2.78	-2.78
	Inverter	MV6-1	370235	4907364	2	0	0	97.3	97.3	1	3987.2	3.25	0	83.01	0	0.53	0	0	17.03	0	0	0	0	0	0	-3.25	-3.25
	DSTATCOM - 10 MVAR #2	DSAT2	369403	4908757	2.5	0	0	96.6	96.6	1	3952.57	3.5	0	82.94	0	3.56	0	0	2.82	0	0	0	0	0	0	7.32	7.32
	DSTATCOM - 10 MVAR #1	DSAT1	369437	4908757	2.5	0	0	96.6	96.6	1	3978.12	3.5	0	82.99	0	3.57	0	0	2.83	0	0	0	0	0	0	7.24	7.24
	Inverter	MV1-3	364440	4906039	2	0	0	89.1	89.1	1	2002.6	3.25	0	77.03	0	0.91	0	0	8.05	0	0	0	0	0	0	3.07	3.07

Gardiner Substation	G_Sub	366586.3	4903349.9	2.5	0	0	90.8	90.8	1	2794.93	4.25	0	79.93	0	1.1	3.42	0.37	5.65	0	0	0	0	0	0	0.68	0.68
SubstationTransformer	W_ST	369711.17	4906112.3	2.5	0	0	92	92	1	3271.3	4.25	0	81.29	0	1.15	2.88	0.29	6.36	0	0	0	0	0	0	0.29	0.29
Inverter	MV3-22	368656	4907142	2	0	0	89.1	89.1	1	2431.6	3.25	0	78.72	0	1.01	0	0	8.74	0	0	0	0	0	0	0.59	0.59
Inverter	MV3-1	368156	4907976	2	0	0	89.1	89.1	1	2512.35	3.25	0	79	0	1.03	0	0	8.87	0	0	0	0	0	0	0.16	0.16
Inverter	MV3-5	368340	4907843	2	0	0	89.1	89.1	1	2550.85	3.25	0	79.13	0	1.04	0	0	8.93	0	0	0	0	0	0	-0.04	-0.04
Inverter	MV3-4	368502	4907925	2	0	0	89.1	89.1	1	2726.63	3.25	0	79.71	0	1.08	0	0	9.2	0	0	0	0	0	0	-0.93	-0.93
Inverter	MV3-2	368671	4907928	2	0	0	89.1	89.1	1	2858.45	3.25	0	80.12	0	1.11	0	0	9.4	0	0	0	0	0	0	-1.58	-1.58
Westbrook Inverter Enclosur	W_INV2	369374	4906388	2	0	0	89.1	89.1	1	2944.38	3.25	0	80.38	0	1.13	0	0	9.53	0	0	0	0	0	0	-1.99	-1.99
Westbrook Inverter Enclosur	W_INV3	369508	4906164	2	0	0	89.1	89.1	1	3068.09	3.25	0	80.74	0	1.16	0	0	9.72	0	0	0	0	0	0	-2.56	-2.56
Westbrook Inverter Enclosur	W_INV4	369673	4906164	2	0	0	89.1	89.1	1	3233.08	3.25	0	81.19	0	1.2	0	0	9.97	0	0	0	0	0	0	-3.31	-3.31
Westbrook Inverter Enclosur	W_INV5	369719	4906574	2	0	0	89.1	89.1	1	3307.47	3.25	0	81.39	0	1.22	0	0	10.08	0	0	0	0	0	0	-3.63	-3.63
Westbrook Inverter Enclosur	W_INV7	369780	4906417	2	0	0	89.1	89.1	1	3351.39	3.25	0	81.5	0	1.23	0	0	10.14	0	0	0	0	0	0	-3.82	-3.82
Inverters	G_Inv2	366676.9	4903239.1	2	0	0	87.7	87.7	1	2911.55	3.25	0	80.28	0	2.69	0	0	3.68	0	0	0	0	0	0	1.01	1.01
Inverters	G_Inv1	366526.4	4903225.8	2	0	0	87.7	87.7	1	2916.48	3.25	0	80.3	0	2.69	0	0	3.68	0	0	0	0	0	0	0.99	0.99
Westbrook Inverter Enclosur	W_INV6	369875	4906578	2	0	0	89.1	89.1	1	3462.69	3.25	0	81.79	0	1.26	0	0	10.31	0	0	0	0	0	0	-4.3	-4.3
Inverters	G_Inv4	366732.8	4903105	2	0	0	87.7	87.7	1	3050.09	3.25	0	80.69	0	2.7	0	0	3.83	0	0	0	0	0	0	0.44	0.44
Inverters	G_Inv3	366583.7	4903091.4	2	0	0	87.7	87.7	1	3052.98	3.25	0	80.69	0	2.7	0	0	3.83	0	0	0	0	0	0	0.43	0.43
Inverter	MV4-13	369051	4908605	2	0	0	89.1	89.1	1	3590.07	3.25	0	82.1	0	1.29	0	0	10.49	0	0	0	0	0	0	-4.83	-4.83
Inverter	MV4-15	369176	4908481	2	0	0	89.1	89.1	1	3600.18	3.25	0	82.13	0	1.29	0	0	10.51	0	0	0	0	0	0	-4.87	-4.87
Inverter	MV4-14	369176	4908507	2	0	0	89.1	89.1	1	3617.13	3.25	0	82.17	0	1.3	0	0	10.53	0	0	0	0	0	0	-4.94	-4.94
Fixed Reactor Bank 1	FRB1	369378	4908755	6	0	0	89.8	89.8	1	3932.54	5.25	0	82.89	0	-0.73	0	0	7.28	0	0	0	0	0	0	0.34	0.34
Fixed Reactor Bank 2	FRB2	369464	4908755	6	0	0	89.8	89.8	1	3997.2	5.25	0	83.04	0	-0.72	0	0	7.36	0	0	0	0	0	0	0.1	0.1
Inverter	MV4-12	369043	4908803	2	0	0	89.1	89.1	1	3723.15	3.25	0	82.42	0	1.32	0	0	10.69	0	0	0	0	0	0	-5.37	-5.37
Inverters	G_Inv6	366788.5	4902972	2	0	0	87.7	87.7	1	3188.11	3.25	0	81.07	0	2.72	0	0	3.98	0	0	0	0	0	0	-0.11	-0.11
Inverters	G_Inv5	366638.5	4902958.1	2	0	0	87.7	87.7	1	3189.08	3.25	0	81.07	0	2.72	0	0	3.99	0	0	0	0	0	0	-0.12	-0.12
Inverters	G_Inv7	366694.6	4902824.7	2	0	0	87.7	87.7	1	3326.06	3.25	0	81.44	0	2.73	0	0	4.14	0	0	0	0	0	0	-0.65	-0.65
Inverters	G_Inv8	366844.5	4902838.5	2	0	0	87.7	87.7	1	3327.18	3.25	0	81.44	0	2.73	0	0	4.14	0	0	0	0	0	0	-0.65	-0.65
Inverters	G_Inv9	366750.9	4902691.8	2	0	0	87.7	87.7	1	3463.18	3.25	0	81.79	0	2.74	0	0	4.29	0	0	0	0	0	0	-1.16	-1.16
Inverters	G_Inv10	366900.7	4902704.8	2	0	0	87.7	87.7	1	3466.95	3.25	0	81.8	0	2.74	0	0	4.29	0	0	0	0	0	0	-1.18	-1.18
Westbrook Inverter Enclosur	W_INV1	369409	4906578	2	0	0	86.1	86.1	1	3000.99	3.25	0	80.55	0	1.15	0	0	9.62	0	0	0	0	0	0	-5.25	-5.25
Inverter	MV5-6	369982	4908507	2	0	0	89.1	89.1	1	4259.55	3.25	0	83.59	0	1.46	0	0	11.45	0	0	0	0	0	0	-7.44	-7.44
Inverter	MV6-4	370250	4906966	2	0	0	86.1	86.1	1	3898.3	3.25	0	82.82	0	1.37	0	0	10.94	0	0	0	0	0	0	-9.07	-9.07
Inverter Transformer	MV2-1 T	365836	4906816	2	0	0	69.4	69.4	1	905.79	3.25	0	70.14	0	1.6	0	0	3.68	0	0	0	0	0	0	-6.07	-6.07
Westbrook Inverter Transfor	W_INVTR1	369403	4906578	2	0	0	78.2	78.2	1	2995.05	3.25	0	80.53	0	-2.71	0	0	1.65	0	0	0	0	0	0	-1.23	-1.23
Westbrook Inverter Transfor	W_INVTR2	369368	4906388	2	0	0	77.3	77.3	1	2938.4	3.25	0	80.36	0	-2.7	0	0	1.63	0	0	0	0	0	0	-1.95	-1.95
Westbrook Inverter Transfor	W_INVTR3	369514	4906164	2	0	0	77.3	77.3	1	3074.09	3.25	0	80.75	0	-2.73	0	0	1.69	0	0	0	0	0	0	-2.37	-2.37
Westbrook Inverter Transfor	W_INVTR4	369679	4906164	2	0	0	77.3	77.3	1	3239.08	3.25	0	81.21	0	-2.78	0	0	1.76	0	0	0	0	0	0	-2.85	-2.85
Westbrook Inverter Transfor	W_INVTR5	369725	4906574	2	0	0	77.3	77.3	1	3313.42	3.25	0	81.41	0	-2.8	0	0	1.79	0	0	0	0	0	0	-3.05	-3.05
Westbrook Inverter Transfor	W_INVTR7	369786	4906417	2	0	0	77.3	77.3	1	3357.36	3.25	0	81.52	0	-2.81	0	0	1.8	0	0	0	0	0	0	-3.17	-3.17
Westbrook Inverter Transfor	W_INVTR6	369881	4906578	2	0	0	77.3	77.3	1	3468.64	3.25	0	81.8	0	-2.84	0	0	1.85	0	0	0	0	0	0	-3.47	-3.47
Inverter Transformer	MV1-10 T	365010	4905564	2	0	0	69.4	69.4	1	1542.02	3.25	0	74.76	0	1.99	0	0	4.48	0	0	0	0	0	0	-11.88	-11.88
Inverter Transformer	MV1-7 T	364919	4905782	2	0	0	69.4	69.4	1	1562.8	3.25	0	74.88	0	2	0	0	4.5	0	0	0	0	0	0	-12.03	-12.03
Inverter Transformer	MV1-14 T	365157	4905049	2	0	0	69.4	69.4	1	1684.8	3.25	0	75.53	0	2.05	0	0	4.64	0	0	0	0	0	0	-12.87	-12.87
Inverter Transformer	MV1-13 T	364725	4905241	2	0	0	69.4	69.4	1	1936.81	3.25	0	76.74	0	2.15	0	0	4.9	0	0	0	0	0	0	-14.44	-14.44
Inverter Transformer	MV2-2 T	365982	4906654	2	0	0	56.1	56.1	1	687.71	3.25	0	67.75	0	-0.08	0	0	4.1	0	0	0	0	0	0	-15.71	-15.71
Inverter Transformer	MV2-3 T	365814	4906641	2	0	0	56.1	56.1	1	801.18	3.25	0	69.07	0	-0.05	0	0	4.4	0	0	0	0	0	0	-17.36	-17.36
Inverter Transformer	MV6-4 T	370244	4906966	2	0	0	69.4	69.4	1	3892.43	3.25	0	82.8	0	2.76	0	0	6.6	0	0	0	0	0	0	-22.81	-22.81
Inverter Transformer	MV6-1 T	370230	4907364	2	0	0	69.4	69.4	1	3982.44	3.25	0	83	0	2.78	0	0	6.66	0	0	0	0	0	0	-23.1	-23.1
Inverter Transformer	MV2-4 T	365590	4906628	2	0	0	56.1	56.1	1	979.63	3.25	0	70.82	0	0.01	0	0	4.84	0	0	0	0	0	0	-19.61	-19.61
Inverter Transformer	MV1-12 T	365044	4905386	2	0	0	56.1	56.1	1	1587.09	3.25	0	75.01	0	0.23	0	0	6.2	0	0	0	0	0	0	-25.39	-25.39
Inverter Transformer	MV1-15 T	365309	4904994	2	0	0	56.1	56.1	1	1610.83	3.25	0	75.14	0	0.24	0	0	6.25	0	0	0	0	0	0	-25.58	-25.58
Inverter Transformer	MV1-4 T	364821	4905918	2	0	0	56.1	56.1	1	1634.29	3.25	0	75.27	0	0.25	0	0	6.3	0	0	0	0	0	0	-25.76	-25.76
Inverter Transformer	MV1-2 T	364759	4906063	2	0	0	56.1	56.1	1	1682.81	3.25	0	75.52	0	0.27	0	0	6.4	0	0	0	0	0	0	-26.14	-26.14
Inverter Transformer	MV1-1 T	364721	4906166	2	0	0	56.1	56.1	1	1719.18	3.25	0	75.71	0	0.29	0	0	6.48	0	0	0	0	0	0	-26.41	-26.41
Inverter Transformer	MV1-8 T	364782	4905647	2	0	0	56.1	56.1	1	1730.03	3.25	0	75.76	0	0.29	0	0	6.5	0	0	0	0	0	0	-26.5	-26.5
Inverter Transformer	MV1-5 T	364676	4905892	2	0	0	56.1	56.1	1	1781.49	3.25	0	76.02	0	0.31	0	0	6.61	0	0	0	0	0	0	-26.88	-26.88
Inverter Transformer	MV3-18 T	367757	4907412	2	0	0	56.1	56.1	1	1830.28	3.25	0	76.25	0	0.33	0	0	6.71	0	0	0	0	0	0	-27.23	-27.23
Inverter Transformer	MV3-12 T	367674	4907594	2	0	0	56.1	56.1	1	1906.3	3.25	0	76.6	0	0.36	0	0	6.86	0	0	0	0	0	0	-27.77	-27.77
Inverter Transformer	MV1-11 T	364649	4905414	2	0	0	56.1	56.1	1	1932.93	3.25	0	76.72	0	0.38	0	0	6.91	0	0	0	0	0	0	-27.95	-27.95
Inverter Transformer	MV1-9 T	364555	4905646	2	0	0	56.1	56.1	1	1948.91	3.25	0	76.8	0	0.38	0	0	6.94	0	0	0	0	0	0	-28.06	-28.06
Inverter Transformer	MV1-6 T	364482	4905835	2	0	0	56.1	56.1	1	1981.77	3.25	0	76.94	0	0.4	0	0	7.01	0	0	0	0	0	0	-28.29	-28.29
Inverter Transformer	MV1-3 T	364435	4906039	2	0	0	56.1	56.1	1	2007.59	3.25	0	77.05	0	0.41	0	0	7.06	0	0	0	0	0	0	-28.46	-28.46
Inverter Transformer	MV3-13 T	367958	4907577	2	0	0	56.1	56.1	1	2089.6	3.25	0	77.4	0	0.44	0	0	7.22	0	0	0	0	0	0	-29	-29
Inverter Transformer	MV3-17 T	368183	4907472	2	0	0	56.1	56.1	1	2193.08	3.25	0	77.82	0	0.49	0	0	7.42	0	0	0	0	0	0	-29.67	-29.67
Inverter Transformer	MV3-7 T	367951	4907754	2	0	0	56.1	56.1	1	2210.18	3.25	0	77.89	0	0.49	0	0	7.45	0	0	0	0	0	0	-29.77	-29.77
Inverter Transformer	MV3-19 T	368352	4907347	2	0	0	56.1	56.1	1	2260.57	3.25	0	78.08	0	0.51	0	0	7.55	0	0	0	0	0	0	-30.09	-30.09
Inverter Transformer	MV3-10 T	368162	4907669	2	0	0	56.1	56.1	1	2302.19	3.25	0	78.24	0	0.53	0	0	7.62	0	0	0	0	0	0	-30.34	-30.34
Inverter Transformer	MV3-21 T	368484	4907206	2	0	0	56.1	56.1	1	2304.81	3.25	0	78.25	0	0.53	0	0	7.63	0	0	0	0	0	0	-30.36	-30.36
Inverter Transformer	MV3-15 T	368351	4907477	2	0	0	56.1	56.1	1	2331.7	3.25	0	78.35	0	0.54	0	0	7.68	0	0	0	0	0	0	-30.52	-30.52
Inverter Transformer	MV3-3 T	367944	4907927	2	0	0	56.1	56.1	1	2334.91	3.25	0	78.37	0	0.55	0	0	7.69	0	0	0	0	0	0	-30.54	-30.54
Inverter Transformer	MV3-6 T	368156	4907834	2	0	0	56.1	56.1	1	2410.58	3.25	0	78.64	0	0.58	0	0	7.83	0	0	0	0	0	0	-30.99	-30.99
Inverter Transformer	MV3-11 T	368340	4907662	2	0	0	56.1	56.1	1	2433.81	3.25	0	78.73	0	0.59	0	0	7.87	0	0	0	0	0	0	-31.12	-31.12
Inverter Transformer	MV3-22 T	368661	4907142	2	0	0	56.1	56.1	1	2436.15	3.25	0	78.73	0	0.59	0	0	7.87	0	0	0	0	0	0	-31.14	-31.14
Inverter Transformer	MV3-16 T	368509	4907475	2	0	0	56.1	56.1	1	2461.77	3.25	0	78.82	0	0.6	0	0	7.92	0	0	0	0	0	0	-31.29	-31.29

	Inverter Transformer	MV3-1 T	368150	4907976	2	0	0	56.1	56.1	1	2508.25	3.25	0	78.99	0	0.62	0	0	8	0	0	0	0	0	0	-31.55	-31.55
	Inverter Transformer	MV3-20 T	368683	4907317	2	0	0	56.1	56.1	1	2532.59	3.25	0	79.07	0	0.63	0	0	8.05	0	0	0	0	0	0	-31.69	-31.69
	Inverter Transformer	MV3-5 T	368335	4907843	2	0	0	56.1	56.1	1	2547.12	3.25	0	79.12	0	0.64	0	0	8.08	0	0	0	0	0	0	-31.77	-31.77
	Inverter Transformer	MV3-9 T	368517	4907703	2	0	0	56.1	56.1	1	2598.8	3.25	0	79.3	0	0.66	0	0	8.17	0	0	0	0	0	0	-32.06	-32.06
	Inverter Transformer	MV3-14 T	368678	4907498	2	0	0	56.1	56.1	1	2617.27	3.25	0	79.36	0	0.67	0	0	8.2	0	0	0	0	0	0	-32.17	-32.17
	Inverter Transformer	MV3-4 T	368507	4907925	2	0	0	56.1	56.1	1	2730.41	3.25	0	79.72	0	0.71	0	0	8.4	0	0	0	0	0	0	-32.78	-32.78
	Inverter Transformer	MV3-8 T	368685	4907712	2	0	0	56.1	56.1	1	2740.09	3.25	0	79.76	0	0.72	0	0	8.42	0	0	0	0	0	0	-32.84	-32.84
	Inverter Transformer	MV3-2 T	368677	4907928	2	0	0	56.1	56.1	1	2863.14	3.25	0	80.14	0	0.77	0	0	8.63	0	0	0	0	0	0	-33.48	-33.48
	Inverter Transformer	MV4-13 T	369057	4908605	2	0	0	56.1	56.1	1	3594.44	3.25	0	82.11	0	1.08	0	0	9.84	0	0	0	0	0	0	-36.97	-36.97
	Inverter Transformer	MV4-15 T	369170	4908481	2	0	0	56.1	56.1	1	3595.62	3.25	0	82.12	0	1.08	0	0	9.84	0	0	0	0	0	0	-36.97	-36.97
	Inverter Transformer	MV4-14 T	369182	4908507	2	0	0	56.1	56.1	1	3621.67	3.25	0	82.18	0	1.09	0	0	9.88	0	0	0	0	0	0	-37.09	-37.09
	Inverter Transformer	MV4-12 T	369049	4908803	2	0	0	56.1	56.1	1	3727.35	3.25	0	82.43	0	1.13	0	0	10.04	0	0	0	0	0	0	-37.55	-37.55
	Inverter Transformer	MV6-2 T	370091	4907339	2	0	0	56.1	56.1	1	3842.53	3.25	0	82.69	0	1.18	0	0	10.22	0	0	0	0	0	0	-38.03	-38.03
	Inverter Transformer	MV4-7 T	369040	4909001	2	0	0	56.1	56.1	1	3865.18	3.25	0	82.74	0	1.19	0	0	10.25	0	0	0	0	0	0	-38.13	-38.13
	Inverter Transformer	MV6-3 T	370202	4907140	2	0	0	56.1	56.1	1	3892.38	3.25	0	82.8	0	1.2	0	0	10.29	0	0	0	0	0	0	-38.24	-38.24
	Inverter Transformer	MV4-11 T	369269	4908855	2	0	0	56.1	56.1	1	3920.34	3.25	0	82.87	0	1.21	0	0	10.34	0	0	0	0	0	0	-38.36	-38.36
	Inverter Transformer	MV4-10 T	369307	4908858	2	0	0	56.1	56.1	1	3949.91	3.25	0	82.93	0	1.22	0	0	10.38	0	0	0	0	0	0	-38.48	-38.48
	Inverter Transformer	MV4-4 T	369033	4909199	2	0	0	56.1	56.1	1	4009.37	3.25	0	83.06	0	1.25	0	0	10.47	0	0	0	0	0	0	-38.72	-38.72
	Inverter Transformer	MV4-8 T	369262	4909001	2	0	0	56.1	56.1	1	4017.87	3.25	0	83.08	0	1.25	0	0	10.48	0	0	0	0	0	0	-38.75	-38.75
	Inverter Transformer	MV4-9 T	369284	4909001	2	0	0	56.1	56.1	1	4033.35	3.25	0	83.11	0	1.26	0	0	10.5	0	0	0	0	0	0	-38.82	-38.82
	Inverter Transformer	MV4-6 T	369249	4909192	2	0	0	56.1	56.1	1	4147.18	3.25	0	83.36	0	1.3	0	0	10.67	0	0	0	0	0	0	-39.27	-39.27
	Inverter Transformer	MV4-1 T	369017	4909397	2	0	0	56.1	56.1	1	4152.41	3.25	0	83.37	0	1.3	0	0	10.68	0	0	0	0	0	0	-39.29	-39.29
	Inverter Transformer	MV4-5 T	369283	4909199	2	0	0	56.1	56.1	1	4175.41	3.25	0	83.41	0	1.31	0	0	10.71	0	0	0	0	0	0	-39.38	-39.38
	Inverter Transformer	MV5-6 T	369987	4908507	2	0	0	56.1	56.1	1	4263.7	3.25	0	83.6	0	1.35	0	0	10.84	0	0	0	0	0	0	-39.73	-39.73
	Inverter Transformer	MV4-3 T	369234	4909397	2	0	0	56.1	56.1	1	4290.45	3.25	0	83.65	0	1.36	0	0	10.88	0	0	0	0	0	0	-39.83	-39.83
	Inverter Transformer	MV4-2 T	369267	4909397	2	0	0	56.1	56.1	1	4312.01	3.25	0	83.69	0	1.37	0	0	10.91	0	0	0	0	0	0	-39.91	-39.91
	Inverter Transformer	MV5-5 T	370021	4908690	2	0	0	56.1	56.1	1	4395.56	3.25	0	83.86	0	1.4	0	0	11.03	0	0	0	0	0	0	-40.23	-40.23
	Inverter Transformer	MV5-2 T	370011	4908853	2	0	0	56.1	56.1	1	4484.08	3.25	0	84.03	0	1.43	0	0	11.15	0	0	0	0	0	0	-40.56	-40.56
	Inverter Transformer	MV5-4 T	370330	4908707	2	0	0	56.1	56.1	1	4660.09	3.25	0	84.37	0	1.5	0	0	11.4	0	0	0	0	0	0	-41.21	-41.21
	Inverter Transformer	MV5-3 T	370237	4908851	2	0	0	56.1	56.1	1	4664.9	3.25	0	84.38	0	1.5	0	0	11.4	0	0	0	0	0	0	-41.22	-41.22
	Inverter Transformer	MV5-1 T	370015	4909142	2	0	0	56.1	56.1	1	4667.62	3.25	0	84.38	0	1.5	0	0	11.41	0	0	0	0	0	0	-41.23	-41.23
	Line Reactor	NGR	369421	4908787.5	5	0	0	45.4	45.4	1	3986.27	5.25	0	83.01	0	3.29	1.34	0.08	1.63	0	0	0	0	0	0	-43.91	-43.91
Limit. Valu	0	0																								
Level D/N:	28.4475	28.4475																								

Receiver: Existing Noise Receptor
ID: S-R79
X: 366468
Y: 4906056
Z: 4.5
Ground: 0

ISO	Description	ID	X	Y	Z	Ground	ReflOrd	LxT	LxN	L/A	Dist.	hm	Freq	Adiv	K0b	Agr	Abar	z	Aatm	Afol	Ahous	Cmet	CmetN	Dc	RL	LtotT	LtotN
	Inverter	MV2-3	365820	4906641	2	0	0	100.3	100.3	1	873	3.25	0	69.82	0	-0.31	0	0	10.47	0	0	0	0	0	0	20.34	20.34
	Sol_Luce Substation	S_Substation	369426	4908792	3.5	0	0	112.1	112.1	1	4029.33	5.25	0	83.1	0	0.61	3.1	0.24	7.4	0	0	0	0	0	0	17.86	17.86
	Inverter	MV2-4	365586	4906624	2	0	0	100.3	100.3	1	1049.07	3.25	0	71.42	0	-0.22	0	0	11.07	0	0	0	0	0	0	18.05	18.05
	Inverter	MV2-1	365842	4906816	2	0	0	97.3	97.3	1	984.62	3.25	0	70.87	0	-0.25	0	0	10.86	0	0	0	0	0	0	15.84	15.84
	Inverter	MV1-15	365315	4904994	2	0	0	100.3	100.3	1	1567.56	3.25	0	74.9	0	-0.01	0	0	12.49	0	0	0	0	0	0	12.93	12.93
	Inverter	MV1-12	365038	4905386	2	0	0	100.3	100.3	1	1579.18	3.25	0	74.97	0	0	0	0	12.52	0	0	0	0	0	0	12.83	12.83
	Inverter	MV1-4	364815	4905918	2	0	0	100.3	100.3	1	1658.75	3.25	0	75.4	0	0.02	0	0	12.71	0	0	0	0	0	0	12.19	12.19
	Inverter	MV1-2	364753	4906063	2	0	0	100.3	100.3	1	1715.02	3.25	0	75.69	0	0.04	0	0	12.84	0	0	0	0	0	0	11.75	11.75
	Inverter	MV1-8	364788	4905647	2	0	0	100.3	100.3	1	1729.07	3.25	0	75.76	0	0.05	0	0	12.87	0	0	0	0	0	0	11.64	11.64
	Inverter	MV1-1	364715	4906166	2	0	0	100.3	100.3	1	1756.45	3.25	0	75.89	0	0.06	0	0	12.93	0	0	0	0	0	0	11.43	11.43
	Inverter	MV1-5	364671	4905892	2	0	0	100.3	100.3	1	1804.47	3.25	0	76.13	0	0.07	0	0	13.04	0	0	0	0	0	0	11.08	11.08
	Inverter	MV3-18	367752	4907412	2	0	0	100.3	100.3	1	1867.46	3.25	0	76.43	0	0.09	0	0	13.18	0	0	0	0	0	0	10.62	10.62
	Inverter	MV1-11	364655	4905414	2	0	0	100.3	100.3	1	1923.31	3.25	0	76.68	0	0.11	0	0	13.3	0	0	0	0	0	0	10.23	10.23
	Inverter	MV1-9	364561	4905646	2	0	0	100.3	100.3	1	1950.58	3.25	0	76.8	0	0.12	0	0	13.36	0	0	0	0	0	0	10.04	10.04
	Inverter	MV3-12	367668	4907594	2	0	0	100.3	100.3	1	1950.76	3.25	0	76.8	0	0.12	0	0	13.36	0	0	0	0	0	0	10.04	10.04
	Inverter	MV1-6	364477	4905835	2	0	0	100.3	100.3	1	2003.23	3.25	0	77.03	0	0.13	0	0	13.47	0	0	0	0	0	0	9.68	9.68
	Inverter	MV3-13	367963	4907577	2	0	0	100.3	100.3	1	2132.71	3.25	0	77.58	0	0.17	0	0	13.74	0	0	0	0	0	0	8.83	8.83
	Inverter	MV1-10	365004	4905564	2	0	0	97.3	97.3	1	1544.46	3.25	0	74.78	0	-0.02	0	0	12.43	0	0	0	0	0	0	10.12	10.12
	Inverter	MV1-7	364925	4905782	2	0	0	97.3	97.3	1	1567.14	3.25	0	74.9	0	-0.01	0	0	12.49	0	0	0	0	0	0	9.93	9.93
	Inverter	MV3-17	368178	4907472	2	0	0	100.3	100.3	1	2220.17	3.25	0	77.93	0	0.19	0	0	13.91	0	0	0	0	0	0	8.28	8.28
	Inverter	MV3-7	367945	4907754	2	0	0	100.3	100.3	1	2250.5	3.25	0	78.05	0	0.2	0	0	13.97	0	0	0	0	0	0	8.1	8.1
	Inverter	MV3-19	368357	4907347	2	0	0	100.3	100.3	1	2288.01	3.25	0	78.19	0	0.21	0	0	14.05	0	0	0	0	0	0	7.87	7.87
	Inverter	MV3-21	368478	4907206	2	0	0	100.3	100.3	1	2315.73	3.25	0	78.29	0	0.21	0	0	14.1	0	0	0	0	0	0	7.7	7.7
	Inverter	MV1-14	365163	4905049	2	0	0	97.3	97.3	1	1648.36	3.25	0	75.34	0	0.02	0	0	12.68	0	0	0	0	0	0	9.27	9.27
	Inverter	MV3-10	368167	4907669	2	0	0	100.3	100.3	1	2342.73	3.25	0	78.39	0	0.22	0	0	14.16	0	0	0	0	0	0	7.54	7.54
	Inverter	MV3-15	368357	4907477	2	0	0	100.3	100.3	1	2363.8	3.25	0	78.47	0	0.22	0	0	14.2	0	0	0	0	0	0	7.42	7.42
	Inverter	MV3-3	367939	4907927	2	0	0	100.3	100.3	1	2380.02	3.25	0	78.53	0	0.23	0	0	14.23	0	0	0	0	0	0	7.32	7.32
	Inverter	MV3-6	368162	4907834	2	0	0	100.3	100.3	1	2455.79	3.25	0	78.8	0	0.25	0	0	14.37	0	0	0	0	0	0	6.89	6.89
	Inverter	MV3-11	368346	4907662	2	0	0	100.3	100.3	1	2471.06	3.25	0	78.86	0	0.25	0	0	14.4	0	0	0	0	0	0	6.8	6.8
	Inverter	MV3-16	368514	4907475	2	0	0	100.3	100.3	1	2489.92	3.25	0	78.92	0	0.25	0	0	14.44	0	0	0	0	0	0	6.69	6.69
	Inverter	MV3-20	368689	4907317	2	0	0	100.3	100.3	1	2554.01	3.25	0	79.14	0	0.27	0	0	14.56	0	0	0	0	0	0	6.34	6.34

Inverter	MV3-9	368512	4907703	2	0	0	100.3	100.3	1	2624.99	3.25	0	79.38	0	0.29	0	0	14.69	0	0	0	0	0	0	5.95	5.95
Inverter	MV3-14	368684	4907498	2	0	0	100.3	100.3	1	2643.87	3.25	0	79.44	0	0.29	0	0	14.73	0	0	0	0	0	0	5.85	5.85
Inverter	MV1-13	364731	4905241	2	0	0	97.3	97.3	1	1918.7	3.25	0	76.66	0	0.11	0	0	13.29	0	0	0	0	0	0	7.26	7.26
Inverter	MV3-8	368680	4907712	2	0	0	100.3	100.3	1	2763.2	3.25	0	79.83	0	0.31	0	0	14.95	0	0	0	0	0	0	5.22	5.22
Inverter	MV2-2	365977	4906654	2	0	0	89.1	89.1	1	773.75	3.25	0	68.77	0	0.63	0	0	5.87	0	0	0	0	0	0	13.79	13.79
Inverter	MV6-2	370085	4907339	2	0	0	100.3	100.3	1	3837.81	3.25	0	82.68	0	0.5	0	0	16.79	0	0	0	0	0	0	0.34	0.34
Inverter	MV6-3	370207	4907140	2	0	0	100.3	100.3	1	3892.97	3.25	0	82.81	0	0.51	0	0	16.88	0	0	0	0	0	0	0.12	0.12
Inverter	MV4-7	369035	4909001	2	0	0	100.3	100.3	1	3906.73	3.25	0	82.84	0	0.51	0	0	16.9	0	0	0	0	0	0	0.06	0.06
Inverter	MV4-11	369264	4908855	2	0	0	100.3	100.3	1	3956.26	3.25	0	82.95	0	0.52	0	0	16.98	0	0	0	0	0	0	-0.13	-0.13
Inverter	MV4-10	369312	4908858	2	0	0	100.3	100.3	1	3992.44	3.25	0	83.02	0	0.53	0	0	17.04	0	0	0	0	0	0	-0.28	-0.28
Inverter	MV4-4	369027	4909199	2	0	0	100.3	100.3	1	4053.02	3.25	0	83.16	0	0.53	0	0	17.13	0	0	0	0	0	0	-0.51	-0.51
Inverter	MV4-8	369256	4909001	2	0	0	100.3	100.3	1	4055.36	3.25	0	83.16	0	0.53	0	0	17.14	0	0	0	0	0	0	-0.52	-0.52
Inverter	MV4-9	369289	4909001	2	0	0	100.3	100.3	1	4078.12	3.25	0	83.21	0	0.54	0	0	17.17	0	0	0	0	0	0	-0.61	-0.61
Inverter	MV4-6	369243	4909192	2	0	0	100.3	100.3	1	4187.5	3.25	0	83.44	0	0.55	0	0	17.35	0	0	0	0	0	0	-1.02	-1.02
Inverter	MV4-1	369011	4909397	2	0	0	100.3	100.3	1	4198.71	3.25	0	83.46	0	0.55	0	0	17.36	0	0	0	0	0	0	-1.07	-1.07
Inverter	MV4-5	369289	4909199	2	0	0	100.3	100.3	1	4223.33	3.25	0	83.51	0	0.56	0	0	17.4	0	0	0	0	0	0	-1.16	-1.16
Inverter	MV4-3	369229	4909397	2	0	0	100.3	100.3	1	4334.21	3.25	0	83.74	0	0.57	0	0	17.57	0	0	0	0	0	0	-1.57	-1.57
Inverter	MV4-2	369272	4909397	2	0	0	100.3	100.3	1	4361.73	3.25	0	83.79	0	0.57	0	0	17.62	0	0	0	0	0	0	-1.67	-1.67
Inverter	MV5-5	370015	4908690	2	0	0	100.3	100.3	1	4418.05	3.25	0	83.9	0	0.58	0	0	17.7	0	0	0	0	0	0	-1.88	-1.88
Inverter	MV5-2	370006	4908853	2	0	0	100.3	100.3	1	4510.06	3.25	0	84.08	0	0.59	0	0	17.85	0	0	0	0	0	0	-2.21	-2.21
Inverter	MV5-4	370324	4908707	2	0	0	100.3	100.3	1	4679.37	3.25	0	84.4	0	0.61	0	0	18.1	0	0	0	0	0	0	-2.81	-2.81
Inverter	MV5-3	370231	4908851	2	0	0	100.3	100.3	1	4687.45	3.25	0	84.42	0	0.61	0	0	18.11	0	0	0	0	0	0	-2.83	-2.83
Inverter	MV5-1	370020	4909142	2	0	0	100.3	100.3	1	4705.33	3.25	0	84.45	0	0.61	0	0	18.14	0	0	0	0	0	0	-2.9	-2.9
Inverter	MV6-1	370235	4907364	2	0	0	97.3	97.3	1	3987.63	3.25	0	83.01	0	0.53	0	0	17.03	0	0	0	0	0	0	-3.26	-3.26
DSTATCOM - 10 MVAR #2	DSAT2	369403	4908757	2.5	0	0	96.6	96.6	1	3988.69	3.5	0	83.02	0	3.57	0	0	2.83	0	0	0	0	0	0	7.21	7.21
DSTATCOM - 10 MVAR #1	DSAT1	369437	4908757	2.5	0	0	96.6	96.6	1	4013.77	3.5	0	83.07	0	3.57	0	0	2.85	0	0	0	0	0	0	7.14	7.14
Inverter	MV1-3	364440	4906039	2	0	0	89.1	89.1	1	2028.07	3.25	0	77.14	0	0.91	0	0	8.09	0	0	0	0	0	0	2.91	2.91
Gardiner Substation	G_Sub	366586.3	4903349.9	2.5	0	0	90.8	90.8	1	2708.69	4.25	0	79.66	0	1.09	3.49	0.37	5.51	0	0	0	0	0	0	1.03	1.03
SubstationTransformer	W_ST	369711.17	4906112.3	2.5	0	0	92	92	1	3243.66	4.25	0	81.22	0	1.14	2.89	0.29	6.32	0	0	0	0	0	0	0.4	0.4
Inverter	MV3-22	368656	4907142	2	0	0	89.1	89.1	1	2442.69	3.25	0	78.76	0	1.01	0	0	8.76	0	0	0	0	0	0	0.53	0.53
Inverter	MV3-1	368156	4907976	2	0	0	89.1	89.1	1	2556.51	3.25	0	79.15	0	1.04	0	0	8.93	0	0	0	0	0	0	-0.07	-0.07
Inverter	MV3-5	368340	4907843	2	0	0	89.1	89.1	1	2588	3.25	0	79.26	0	1.05	0	0	8.98	0	0	0	0	0	0	-0.23	-0.23
Inverter	MV3-4	368502	4907925	2	0	0	89.1	89.1	1	2762.3	3.25	0	79.83	0	1.09	0	0	9.25	0	0	0	0	0	0	-1.11	-1.11
Inverter	MV3-2	368671	4907928	2	0	0	89.1	89.1	1	2890.95	3.25	0	80.22	0	1.12	0	0	9.45	0	0	0	0	0	0	-1.73	-1.73
Westbrook Inverter Enclosur	W_INV2	369374	4906388	2	0	0	89.1	89.1	1	2924.9	3.25	0	80.32	0	1.13	0	0	9.5	0	0	0	0	0	0	-1.9	-1.9
Westbrook Inverter Enclosur	W_INV3	369508	4906164	2	0	0	89.1	89.1	1	3041.92	3.25	0	80.66	0	1.16	0	0	9.68	0	0	0	0	0	0	-2.44	-2.44
Westbrook Inverter Enclosur	W_INV4	369673	4906164	2	0	0	89.1	89.1	1	3206.82	3.25	0	81.12	0	1.2	0	0	9.93	0	0	0	0	0	0	-3.19	-3.19
Westbrook Inverter Enclosur	W_INV5	369719	4906574	2	0	0	89.1	89.1	1	3292.01	3.25	0	81.35	0	1.22	0	0	10.06	0	0	0	0	0	0	-3.56	-3.56
Inverters	G_Inv2	366676.9	4903239.1	2	0	0	87.7	87.7	1	2824.64	3.25	0	80.02	0	2.68	0	0	3.58	0	0	0	0	0	0	1.38	1.38
Inverters	G_Inv1	366526.4	4903225.8	2	0	0	87.7	87.7	1	2830.8	3.25	0	80.04	0	2.68	0	0	3.59	0	0	0	0	0	0	1.36	1.36
Westbrook Inverter Enclosur	W_INV7	369780	4906417	2	0	0	89.1	89.1	1	3331.62	3.25	0	81.45	0	1.23	0	0	10.11	0	0	0	0	0	0	-3.74	-3.74
Westbrook Inverter Enclosur	W_INV6	369875	4906578	2	0	0	89.1	89.1	1	3446.76	3.25	0	81.75	0	1.26	0	0	10.28	0	0	0	0	0	0	-4.23	-4.23
Inverters	G_Inv4	366732.8	4903105	2	0	0	87.7	87.7	1	2962.86	3.25	0	80.43	0	2.69	0	0	3.73	0	0	0	0	0	0	0.8	0.8
Inverters	G_Inv3	366583.7	4903091.4	2	0	0	87.7	87.7	1	2966.86	3.25	0	80.45	0	2.69	0	0	3.74	0	0	0	0	0	0	0.78	0.78
Inverter	MV4-13	369051	4908605	2	0	0	89.1	89.1	1	3628.95	3.25	0	82.2	0	1.3	0	0	10.55	0	0	0	0	0	0	-4.99	-4.99
Inverter	MV4-15	369176	4908481	2	0	0	89.1	89.1	1	3635.09	3.25	0	82.21	0	1.3	0	0	10.56	0	0	0	0	0	0	-5.01	-5.01
Inverters	G_Inv6	366788.5	4902972	2	0	0	87.7	87.7	1	3100.61	3.25	0	80.83	0	2.71	0	0	3.89	0	0	0	0	0	0	0.24	0.24
Inverters	G_Inv5	366638.5	4902958.1	2	0	0	87.7	87.7	1	3102.59	3.25	0	80.83	0	2.71	0	0	3.89	0	0	0	0	0	0	0.23	0.23
Inverter	MV4-14	369176	4908507	2	0	0	89.1	89.1	1	3652.49	3.25	0	82.25	0	1.31	0	0	10.59	0	0	0	0	0	0	-5.09	-5.09
Fixed Reactor Bank 1	FRB1	369378	4908755	6	0	0	89.8	89.8	1	3968.97	5.25	0	82.97	0	-0.73	0	0	7.32	0	0	0	0	0	0	0.21	0.21
Fixed Reactor Bank 2	FRB2	369464	4908755	6	0	0	89.8	89.8	1	4032.45	5.25	0	83.11	0	-0.72	0	0	7.41	0	0	0	0	0	0	-0.03	-0.03
Inverter	MV4-12	369043	4908803	2	0	0	89.1	89.1	1	3765.19	3.25	0	82.52	0	1.33	0	0	10.75	0	0	0	0	0	0	-5.54	-5.54
Inverters	G_Inv7	366694.6	4902824.7	2	0	0	87.7	87.7	1	3239.24	3.25	0	81.21	0	2.72	0	0	4.04	0	0	0	0	0	0	-0.31	-0.31
Inverters	G_Inv8	366844.5	4902838.5	2	0	0	87.7	87.7	1	3239.45	3.25	0	81.21	0	2.72	0	0	4.04	0	0	0	0	0	0	-0.31	-0.31
Inverters	G_Inv9	366750.9	4902691.8	2	0	0	87.7	87.7	1	3376.07	3.25	0	81.57	0	2.74	0	0	4.19	0	0	0	0	0	0	-0.84	-0.84
Inverters	G_Inv10	366900.7	4902704.8	2	0	0	87.7	87.7	1	3379.02	3.25	0	81.58	0	2.74	0	0	4.2	0	0	0	0	0	0	-0.85	-0.85
Westbrook Inverter Enclosur	W_INV1	369409	4906578	2	0	0	86.1	86.1	1	2986.97	3.25	0	80.5	0	1.14	0	0	9.6	0	0	0	0	0	0	-5.19	-5.19
Inverter	MV5-6	369982	4908507	2	0	0	89.1	89.1	1	4284.34	3.25	0	83.64	0	1.46	0	0	11.49	0	0	0	0	0	0	-7.53	-7.53
Inverter	MV6-4	370250	4906966	2	0	0	86.1	86.1	1	3889.94	3.25	0	82.8	0	1.37	0	0	10.93	0	0	0	0	0	0	-9.03	-9.03
Inverter Transformer	MV2-1 T	365836	4906816	2	0	0	69.4	69.4	1	988.45	3.25	0	70.9	0	1.67	0	0	3.79	0	0	0	0	0	0	-7.02	-7.02
Westbrook Inverter Transfor	W_INVTR1	369403	4906578	2	0	0	78.2	78.2	1	2981.06	3.25	0	80.49	0	-2.71	0	0	1.65	0	0	0	0	0	0	-1.19	-1.19
Westbrook Inverter Transfor	W_INVTR2	369368	4906388	2	0	0	77.3	77.3	1	2918.94	3.25	0	80.3	0	-2.69	0	0	1.62	0	0	0	0	0	0	-1.89	-1.89
Westbrook Inverter Transfor	W_INVTR3	369514	4906164	2	0	0	77.3	77.3	1	3047.92	3.25	0	80.68	0	-2.73	0	0	1.68	0	0	0	0	0	0	-2.29	-2.29
Westbrook Inverter Transfor	W_INVTR4	369679	4906164	2	0	0	77.3	77.3	1	3212.82	3.25	0	81.14	0	-2.77	0	0	1.75	0	0	0	0	0	0	-2.77	-2.77
Westbrook Inverter Transfor	W_INVTR5	369725	4906574	2	0	0	77.3	77.3	1	3297.94	3.25	0	81.36	0	-2.79	0	0	1.78	0	0	0	0	0	0	-3.01	-3.01
Westbrook Inverter Transfor	W_INVTR7	369786	4906417	2	0	0	77.3	77.3	1	3337.58	3.25	0	81.47	0	-2.8	0	0	1.8	0	0	0	0	0	0	-3.12	-3.12
Westbrook Inverter Transfor	W_INVTR6	369881	4906578	2	0	0	77.3	77.3	1	3452.69	3.25	0	81.76	0	-2.83	0	0	1.84	0	0	0	0	0	0	-3.43	-3.43
Inverter Transformer	MV1-10 T	365010	4905564	2	0	0	69.4	69.4	1	1538.78	3.25	0	74.74	0	1.99	0	0	4.48	0	0	0	0	0	0	-11.86	-11.86
Inverter Transformer	MV1-7 T	364919	4905782	2	0	0	69.4	69.4	1	1573.05	3.25	0	74.93	0	2	0	0	4.52	0	0	0	0	0	0	-12.11	-12.11
Inverter Transformer	MV1-14 T	365157	4905049	2	0	0	69.4	69.4	1	1653.11	3.25	0	75.37	0	2.04	0	0	4.6	0	0	0	0	0	0	-12.66	-12.66
Inverter Transformer	MV1-13 T	364725	4905241	2	0	0	69.4	69.4	1	1924.13	3.25	0	76.68	0	2.14	0	0	4.89	0	0	0	0	0	0	-14.37	-14.37
Inverter Transformer	MV2-2 T	365982	4906654	2	0	0	56.1	56.1	1	770.59	3.25	0	68.74	0	-0.06	0	0	4.32	0	0	0	0	0	0	-16.94	-16.94
Inverter Transformer	MV6-4 T	370244	4906966	2	0	0	69.4	69.4	1	3884.11	3.25	0	82.79	0	2.76	0	0	6.59	0	0	0	0	0	0	-22.78	-22.78
Inverter Transformer	MV6-1 T	370230	4907364	2	0	0	69.4	69.4	1	3982.9	3.25	0	83	0	2.78	0	0	6.66	0	0	0	0	0	0	-23.1	-23.1

	Inverter Transformer	MV2-3 T	365814	4906641	2	0	0	56.1	56.1	1	877.47	3.25	0	69.86	0	-0.03	0	0	4.59	0	0	0	0	0	0	-18.37	-18.37
	Inverter Transformer	MV2-4 T	365590	4906628	2	0	0	56.1	56.1	1	1047.89	3.25	0	71.41	0	0.03	0	0	5	0	0	0	0	0	0	-20.38	-20.38
	Inverter Transformer	MV1-15 T	365309	4904994	2	0	0	56.1	56.1	1	1571.98	3.25	0	74.93	0	0.23	0	0	6.17	0	0	0	0	0	0	-25.27	-25.27
	Inverter Transformer	MV1-12 T	365044	4905386	2	0	0	56.1	56.1	1	1573.75	3.25	0	74.94	0	0.23	0	0	6.17	0	0	0	0	0	0	-25.28	-25.28
	Inverter Transformer	MV1-4 T	364821	4905918	2	0	0	56.1	56.1	1	1652.77	3.25	0	75.36	0	0.26	0	0	6.34	0	0	0	0	0	0	-25.91	-25.91
	Inverter Transformer	MV1-2 T	364759	4906063	2	0	0	56.1	56.1	1	1709.02	3.25	0	75.65	0	0.28	0	0	6.46	0	0	0	0	0	0	-26.34	-26.34
	Inverter Transformer	MV1-8 T	364782	4905647	2	0	0	56.1	56.1	1	1734.9	3.25	0	75.79	0	0.29	0	0	6.51	0	0	0	0	0	0	-26.53	-26.53
	Inverter Transformer	MV1-1 T	364721	4906166	2	0	0	56.1	56.1	1	1750.46	3.25	0	75.86	0	0.3	0	0	6.54	0	0	0	0	0	0	-26.65	-26.65
	Inverter Transformer	MV1-5 T	364676	4905892	2	0	0	56.1	56.1	1	1799.49	3.25	0	76.1	0	0.32	0	0	6.64	0	0	0	0	0	0	-27.01	-27.01
	Inverter Transformer	MV3-18 T	367757	4907412	2	0	0	56.1	56.1	1	1870.9	3.25	0	76.44	0	0.35	0	0	6.79	0	0	0	0	0	0	-27.52	-27.52
	Inverter Transformer	MV1-11 T	364649	4905414	2	0	0	56.1	56.1	1	1928.97	3.25	0	76.71	0	0.37	0	0	6.9	0	0	0	0	0	0	-27.93	-27.93
	Inverter Transformer	MV3-12 T	367674	4907594	2	0	0	56.1	56.1	1	1954.45	3.25	0	76.82	0	0.38	0	0	6.95	0	0	0	0	0	0	-28.1	-28.1
	Inverter Transformer	MV1-9 T	364555	4905646	2	0	0	56.1	56.1	1	1956.44	3.25	0	76.83	0	0.39	0	0	6.96	0	0	0	0	0	0	-28.11	-28.11
	Inverter Transformer	MV1-6 T	364482	4905835	2	0	0	56.1	56.1	1	1998.26	3.25	0	77.01	0	0.4	0	0	7.04	0	0	0	0	0	0	-28.4	-28.4
	Inverter Transformer	MV1-3 T	364435	4906039	2	0	0	56.1	56.1	1	2033.07	3.25	0	77.16	0	0.42	0	0	7.11	0	0	0	0	0	0	-28.63	-28.63
	Inverter Transformer	MV3-13 T	367958	4907577	2	0	0	56.1	56.1	1	2129.21	3.25	0	77.56	0	0.46	0	0	7.3	0	0	0	0	0	0	-29.26	-29.26
	Inverter Transformer	MV3-17 T	368183	4907472	2	0	0	56.1	56.1	1	2224.03	3.25	0	77.94	0	0.5	0	0	7.48	0	0	0	0	0	0	-29.86	-29.86
	Inverter Transformer	MV3-7 T	367951	4907754	2	0	0	56.1	56.1	1	2254.44	3.25	0	78.06	0	0.51	0	0	7.53	0	0	0	0	0	0	-30.05	-30.05
	Inverter Transformer	MV3-19 T	368352	4907347	2	0	0	56.1	56.1	1	2283.89	3.25	0	78.17	0	0.52	0	0	7.59	0	0	0	0	0	0	-30.23	-30.23
	Inverter Transformer	MV3-21 T	368484	4907206	2	0	0	56.1	56.1	1	2320.94	3.25	0	78.31	0	0.54	0	0	7.66	0	0	0	0	0	0	-30.45	-30.45
	Inverter Transformer	MV3-10 T	368162	4907669	2	0	0	56.1	56.1	1	2339.1	3.25	0	78.38	0	0.55	0	0	7.69	0	0	0	0	0	0	-30.56	-30.56
	Inverter Transformer	MV3-15 T	368351	4907477	2	0	0	56.1	56.1	1	2359.01	3.25	0	78.45	0	0.56	0	0	7.73	0	0	0	0	0	0	-30.68	-30.68
	Inverter Transformer	MV3-3 T	367944	4907927	2	0	0	56.1	56.1	1	2383.11	3.25	0	78.54	0	0.57	0	0	7.77	0	0	0	0	0	0	-30.83	-30.83
	Inverter Transformer	MV3-22 T	368661	4907142	2	0	0	56.1	56.1	1	2447.17	3.25	0	78.77	0	0.59	0	0	7.89	0	0	0	0	0	0	-31.2	-31.2
	Inverter Transformer	MV3-6 T	368156	4907834	2	0	0	56.1	56.1	1	2451.66	3.25	0	78.79	0	0.6	0	0	7.9	0	0	0	0	0	0	-31.23	-31.23
	Inverter Transformer	MV3-11 T	368340	4907662	2	0	0	56.1	56.1	1	2466.5	3.25	0	78.84	0	0.6	0	0	7.93	0	0	0	0	0	0	-31.31	-31.31
	Inverter Transformer	MV3-16 T	368509	4907475	2	0	0	56.1	56.1	1	2485.81	3.25	0	78.91	0	0.61	0	0	7.96	0	0	0	0	0	0	-31.42	-31.42
	Inverter Transformer	MV3-20 T	368683	4907317	2	0	0	56.1	56.1	1	2548.79	3.25	0	79.13	0	0.64	0	0	8.08	0	0	0	0	0	0	-31.78	-31.78
	Inverter Transformer	MV3-1 T	368150	4907976	2	0	0	56.1	56.1	1	2552.55	3.25	0	79.14	0	0.64	0	0	8.08	0	0	0	0	0	0	-31.8	-31.8
	Inverter Transformer	MV3-5 T	368335	4907843	2	0	0	56.1	56.1	1	2584.39	3.25	0	79.25	0	0.65	0	0	8.14	0	0	0	0	0	0	-31.98	-31.98
	Inverter Transformer	MV3-9 T	368517	4907703	2	0	0	56.1	56.1	1	2628.88	3.25	0	79.4	0	0.67	0	0	8.22	0	0	0	0	0	0	-32.23	-32.23
	Inverter Transformer	MV3-14 T	368678	4907498	2	0	0	56.1	56.1	1	2638.84	3.25	0	79.43	0	0.68	0	0	8.24	0	0	0	0	0	0	-32.29	-32.29
	Inverter Transformer	MV3-4 T	368507	4907925	2	0	0	56.1	56.1	1	2765.99	3.25	0	79.84	0	0.73	0	0	8.46	0	0	0	0	0	0	-32.97	-32.97
	Inverter Transformer	MV3-8 T	368685	4907712	2	0	0	56.1	56.1	1	2767.21	3.25	0	79.84	0	0.73	0	0	8.47	0	0	0	0	0	0	-32.98	-32.98
	Inverter Transformer	MV3-2 T	368677	4907928	2	0	0	56.1	56.1	1	2895.53	3.25	0	80.23	0	0.79	0	0	8.69	0	0	0	0	0	0	-33.65	-33.65
	Inverter Transformer	MV4-15 T	369170	4908481	2	0	0	56.1	56.1	1	3630.62	3.25	0	82.2	0	1.09	0	0	9.89	0	0	0	0	0	0	-37.13	-37.13
	Inverter Transformer	MV4-13 T	369057	4908605	2	0	0	56.1	56.1	1	3633.23	3.25	0	82.21	0	1.1	0	0	9.9	0	0	0	0	0	0	-37.14	-37.14
	Inverter Transformer	MV4-14 T	369182	4908507	2	0	0	56.1	56.1	1	3656.94	3.25	0	82.26	0	1.1	0	0	9.93	0	0	0	0	0	0	-37.24	-37.24
	Inverter Transformer	MV4-12 T	369049	4908803	2	0	0	56.1	56.1	1	3769.29	3.25	0	82.53	0	1.15	0	0	10.11	0	0	0	0	0	0	-37.72	-37.72
	Inverter Transformer	MV6-2 T	370091	4907339	2	0	0	56.1	56.1	1	3843.47	3.25	0	82.69	0	1.18	0	0	10.22	0	0	0	0	0	0	-38.04	-38.04
	Inverter Transformer	MV6-3 T	370202	4907140	2	0	0	56.1	56.1	1	3888.16	3.25	0	82.79	0	1.2	0	0	10.29	0	0	0	0	0	0	-38.22	-38.22
	Inverter Transformer	MV4-7 T	369040	4909001	2	0	0	56.1	56.1	1	3910.01	3.25	0	82.84	0	1.21	0	0	10.32	0	0	0	0	0	0	-38.31	-38.31
	Inverter Transformer	MV4-11 T	369269	4908855	2	0	0	56.1	56.1	1	3959.8	3.25	0	82.95	0	1.23	0	0	10.4	0	0	0	0	0	0	-38.52	-38.52
	Inverter Transformer	MV4-10 T	369307	4908858	2	0	0	56.1	56.1	1	3988.88	3.25	0	83.02	0	1.24	0	0	10.44	0	0	0	0	0	0	-38.64	-38.64
	Inverter Transformer	MV4-4 T	369033	4909199	2	0	0	56.1	56.1	1	4056.81	3.25	0	83.16	0	1.27	0	0	10.54	0	0	0	0	0	0	-38.91	-38.91
	Inverter Transformer	MV4-8 T	369262	4909001	2	0	0	56.1	56.1	1	4059.49	3.25	0	83.17	0	1.27	0	0	10.54	0	0	0	0	0	0	-38.92	-38.92
	Inverter Transformer	MV4-9 T	369284	4909001	2	0	0	56.1	56.1	1	4074.66	3.25	0	83.2	0	1.27	0	0	10.57	0	0	0	0	0	0	-38.98	-38.98
	Inverter Transformer	MV4-6 T	369249	4909192	2	0	0	56.1	56.1	1	4191.48	3.25	0	83.45	0	1.32	0	0	10.74	0	0	0	0	0	0	-39.44	-39.44
	Inverter Transformer	MV4-1 T	369017	4909397	2	0	0	56.1	56.1	1	4202.34	3.25	0	83.47	0	1.32	0	0	10.75	0	0	0	0	0	0	-39.49	-39.49
	Inverter Transformer	MV4-5 T	369283	4909199	2	0	0	56.1	56.1	1	4219.32	3.25	0	83.5	0	1.33	0	0	10.78	0	0	0	0	0	0	-39.55	-39.55
	Inverter Transformer	MV5-6 T	369987	4908507	2	0	0	56.1	56.1	1	4288.45	3.25	0	83.65	0	1.36	0	0	10.88	0	0	0	0	0	0	-39.82	-39.82
	Inverter Transformer	MV4-3 T	369234	4909397	2	0	0	56.1	56.1	1	4337.4	3.25	0	83.74	0	1.38	0	0	10.95	0	0	0	0	0	0	-40.01	-40.01
	Inverter Transformer	MV4-2 T	369267	4909397	2	0	0	56.1	56.1	1	4358.52	3.25	0	83.79	0	1.39	0	0	10.98	0	0	0	0	0	0	-40.09	-40.09
	Inverter Transformer	MV5-5 T	370021	4908690	2	0	0	56.1	56.1	1	4422.87	3.25	0	83.91	0	1.41	0	0	11.07	0	0	0	0	0	0	-40.33	-40.33
	Inverter Transformer	MV5-2 T	370011	4908853	2	0	0	56.1	56.1	1	4513.99	3.25	0	84.09	0	1.44	0	0	11.19	0	0	0	0	0	0	-40.67	-40.67
	Inverter Transformer	MV5-4 T	370330	4908707	2	0	0	56.1	56.1	1	4684.32	3.25	0	84.41	0	1.51	0	0	11.43	0	0	0	0	0	0	-41.29	-41.29
	Inverter Transformer	MV5-3 T	370237	4908851	2	0	0	56.1	56.1	1	4692.27	3.25	0	84.43	0	1.51	0	0	11.44	0	0	0	0	0	0	-41.32	-41.32
	Inverter Transformer	MV5-1 T	370015	4909142	2	0	0	56.1	56.1	1	4701.55	3.25	0	84.44	0	1.52	0	0	11.45	0	0	0	0	0	0	-41.36	-41.36
	Line Reactor	NGR	369421	4908787.5	5	0	0	45.4	45.4	1	4022.6	5.25	0	83.09	0	3.29	1.34	0.08	1.65	0	0	0	0	0	0	-44.01	-44.01
Limit. Valu	0	0																								
Level D/N:	27.9759	27.9759																								

Receiver: Existing Noise Receptor
ID: S-R80
X: 366343
Y: 4906081
Z: 4.5
Ground: 0

ISO	Description	ID	X	Y	Z	Ground	ReflOrd	LxT	LxN	L/A	Dist.	hm	Freq	Adiv	K0b	Agr	Abar	z	Aatm	Afol	Ahous	Cmet	CmetN	Dc	RL	LtotT	LtotN
	Inverter	MV2-3	365820	4906641	2	0	0	100.3	100.3	1	766.25	3.25	0	68.69	0	-0.37	0	0	10.04	0	0	0	0	0	0	21.96	21.96
	Inverter	MV2-4	365586	4906624	2	0	0	100.3	100.3	1	931.61	3.25	0	70.38	0	-0.28	0	0	10.68	0	0	0	0	0	0	19.53	19.53
	Sol_Luce Substation	S_Substation	369426	4908792	3.5	0	0	112.1	112.1	1	4105.41	5.25	0	83.27	0	0.63	3.08	0.25	7.5	0	0	0	0	0	0	17.59	17.59
	Inverter	MV2-1	365842	4906816	2	0	0	97.3	97.3	1	889.51	3.25	0	69.98	0	-0.3	0	0	10.53	0	0	0	0	0	0	17.1	17.1

Inverter	MV1-12	365038	4905386	2	0	0	100.3	100.3	1	1478.53	3.25	0	74.4	0	-0.04	0	0	12.27	0	0	0	0	0	0	13.69	13.69
Inverter	MV1-15	365315	4904994	2	0	0	100.3	100.3	1	1496.11	3.25	0	74.5	0	-0.03	0	0	12.31	0	0	0	0	0	0	13.53	13.53
Inverter	MV1-4	364815	4905918	2	0	0	100.3	100.3	1	1536.67	3.25	0	74.73	0	-0.02	0	0	12.42	0	0	0	0	0	0	13.19	13.19
Inverter	MV1-2	364753	4906063	2	0	0	100.3	100.3	1	1590.1	3.25	0	75.03	0	0	0	0	12.54	0	0	0	0	0	0	12.74	12.74
Inverter	MV1-8	364788	4905647	2	0	0	100.3	100.3	1	1614.43	3.25	0	75.16	0	0.01	0	0	12.6	0	0	0	0	0	0	12.54	12.54
Inverter	MV1-1	364715	4906166	2	0	0	100.3	100.3	1	1630.22	3.25	0	75.24	0	0.01	0	0	12.64	0	0	0	0	0	0	12.41	12.41
Inverter	MV1-5	364671	4905892	2	0	0	100.3	100.3	1	1682.65	3.25	0	75.52	0	0.03	0	0	12.76	0	0	0	0	0	0	12	12
Inverter	MV1-11	364655	4905414	2	0	0	100.3	100.3	1	1815	3.25	0	76.18	0	0.07	0	0	13.06	0	0	0	0	0	0	11	11
Inverter	MV1-9	364561	4905646	2	0	0	100.3	100.3	1	1834.33	3.25	0	76.27	0	0.08	0	0	13.11	0	0	0	0	0	0	10.86	10.86
Inverter	MV1-6	364477	4905835	2	0	0	100.3	100.3	1	1882.15	3.25	0	76.49	0	0.09	0	0	13.21	0	0	0	0	0	0	10.51	10.51
Inverter	MV3-18	367752	4907412	2	0	0	100.3	100.3	1	1938.26	3.25	0	76.75	0	0.11	0	0	13.33	0	0	0	0	0	0	10.12	10.12
Inverter	MV3-12	367668	4907594	2	0	0	100.3	100.3	1	2011.17	3.25	0	77.07	0	0.13	0	0	13.49	0	0	0	0	0	0	9.63	9.63
Inverter	MV1-10	365004	4905564	2	0	0	97.3	97.3	1	1435.35	3.25	0	74.14	0	-0.06	0	0	12.16	0	0	0	0	0	0	11.07	11.07
Inverter	MV1-7	364925	4905782	2	0	0	97.3	97.3	1	1449.18	3.25	0	74.22	0	-0.05	0	0	12.2	0	0	0	0	0	0	10.95	10.95
Inverter	MV3-13	367963	4907577	2	0	0	100.3	100.3	1	2205.09	3.25	0	77.87	0	0.19	0	0	13.88	0	0	0	0	0	0	8.38	8.38
Inverter	MV1-14	365163	4905049	2	0	0	97.3	97.3	1	1567.62	3.25	0	74.9	0	-0.01	0	0	12.49	0	0	0	0	0	0	9.93	9.93
Inverter	MV3-17	368178	4907472	2	0	0	100.3	100.3	1	2302.63	3.25	0	78.24	0	0.21	0	0	14.08	0	0	0	0	0	0	7.78	7.78
Inverter	MV3-7	367945	4907754	2	0	0	100.3	100.3	1	2316.32	3.25	0	78.3	0	0.21	0	0	14.1	0	0	0	0	0	0	7.7	7.7
Inverter	MV3-19	368357	4907347	2	0	0	100.3	100.3	1	2378.86	3.25	0	78.53	0	0.23	0	0	14.23	0	0	0	0	0	0	7.33	7.33
Inverter	MV3-21	368478	4907206	2	0	0	100.3	100.3	1	2413.27	3.25	0	78.65	0	0.24	0	0	14.29	0	0	0	0	0	0	7.13	7.13
Inverter	MV3-10	368167	4907669	2	0	0	100.3	100.3	1	2418.41	3.25	0	78.67	0	0.24	0	0	14.3	0	0	0	0	0	0	7.1	7.1
Inverter	MV3-3	367939	4907927	2	0	0	100.3	100.3	1	2440.27	3.25	0	78.75	0	0.24	0	0	14.34	0	0	0	0	0	0	6.98	6.98
Inverter	MV3-15	368357	4907477	2	0	0	100.3	100.3	1	2450.51	3.25	0	78.79	0	0.25	0	0	14.36	0	0	0	0	0	0	6.92	6.92
Inverter	MV2-2	365977	4906654	2	0	0	89.1	89.1	1	679.92	3.25	0	67.65	0	0.61	0	0	5.65	0	0	0	0	0	0	15.15	15.15
Inverter	MV3-6	368162	4907834	2	0	0	100.3	100.3	1	2526.22	3.25	0	79.05	0	0.26	0	0	14.51	0	0	0	0	0	0	6.49	6.49
Inverter	MV3-11	368346	4907662	2	0	0	100.3	100.3	1	2551.78	3.25	0	79.14	0	0.27	0	0	14.56	0	0	0	0	0	0	6.35	6.35
Inverter	MV1-13	364731	4905241	2	0	0	97.3	97.3	1	1817.73	3.25	0	76.19	0	0.07	0	0	13.07	0	0	0	0	0	0	7.98	7.98
Inverter	MV3-16	368514	4907475	2	0	0	100.3	100.3	1	2580.02	3.25	0	79.23	0	0.28	0	0	14.61	0	0	0	0	0	0	6.2	6.2
Inverter	MV3-20	368689	4907317	2	0	0	100.3	100.3	1	2651.68	3.25	0	79.47	0	0.29	0	0	14.74	0	0	0	0	0	0	5.81	5.81
Inverter	MV3-9	368512	4907703	2	0	0	100.3	100.3	1	2708.4	3.25	0	79.65	0	0.3	0	0	14.85	0	0	0	0	0	0	5.51	5.51
Inverter	MV3-14	368684	4907498	2	0	0	100.3	100.3	1	2736.45	3.25	0	79.74	0	0.31	0	0	14.9	0	0	0	0	0	0	5.36	5.36
Inverter	MV3-8	368680	4907712	2	0	0	100.3	100.3	1	2849.87	3.25	0	80.1	0	0.33	0	0	15.1	0	0	0	0	0	0	4.78	4.78
Inverter	MV6-2	370085	4907339	2	0	0	100.3	100.3	1	3947.8	3.25	0	82.93	0	0.52	0	0	16.96	0	0	0	0	0	0	-0.1	-0.1
Inverter	MV4-7	369035	4909001	2	0	0	100.3	100.3	1	3971.56	3.25	0	82.98	0	0.52	0	0	17	0	0	0	0	0	0	-0.19	-0.19
Inverter	MV6-3	370207	4907140	2	0	0	100.3	100.3	1	4006.49	3.25	0	83.06	0	0.53	0	0	17.06	0	0	0	0	0	0	-0.33	-0.33
Inverter	MV4-11	369264	4908855	2	0	0	100.3	100.3	1	4028.32	3.25	0	83.1	0	0.53	0	0	17.09	0	0	0	0	0	0	-0.42	-0.42
Inverter	MV4-10	369312	4908858	2	0	0	100.3	100.3	1	4065.3	3.25	0	83.18	0	0.54	0	0	17.15	0	0	0	0	0	0	-0.56	-0.56
Inverter	MV4-4	369027	4909199	2	0	0	100.3	100.3	1	4114.1	3.25	0	83.29	0	0.54	0	0	17.23	0	0	0	0	0	0	-0.75	-0.75
Inverter	MV4-8	369256	4909001	2	0	0	100.3	100.3	1	4124.56	3.25	0	83.31	0	0.54	0	0	17.25	0	0	0	0	0	0	-0.79	-0.79
Inverter	MV4-9	369289	4909001	2	0	0	100.3	100.3	1	4147.93	3.25	0	83.36	0	0.55	0	0	17.28	0	0	0	0	0	0	-0.88	-0.88
Inverter	MV4-6	369243	4909192	2	0	0	100.3	100.3	1	4253.04	3.25	0	83.57	0	0.56	0	0	17.45	0	0	0	0	0	0	-1.27	-1.27
Inverter	MV4-1	369011	4909397	2	0	0	100.3	100.3	1	4256.06	3.25	0	83.58	0	0.56	0	0	17.45	0	0	0	0	0	0	-1.28	-1.28
Inverter	MV4-5	369289	4909199	2	0	0	100.3	100.3	1	4289.62	3.25	0	83.65	0	0.57	0	0	17.51	0	0	0	0	0	0	-1.41	-1.41
Inverter	MV4-3	369229	4909397	2	0	0	100.3	100.3	1	4396	3.25	0	83.86	0	0.58	0	0	17.67	0	0	0	0	0	0	-1.8	-1.8
Inverter	MV4-2	369272	4909397	2	0	0	100.3	100.3	1	4424.35	3.25	0	83.92	0	0.58	0	0	17.71	0	0	0	0	0	0	-1.9	-1.9
Inverter	MV5-5	370015	4908690	2	0	0	100.3	100.3	1	4504.49	3.25	0	84.07	0	0.59	0	0	17.84	0	0	0	0	0	0	-2.19	-2.19
Inverter	MV5-2	370006	4908853	2	0	0	100.3	100.3	1	4593.64	3.25	0	84.24	0	0.6	0	0	17.97	0	0	0	0	0	0	-2.51	-2.51
Inverter	MV5-4	370324	4908707	2	0	0	100.3	100.3	1	4769.09	3.25	0	84.57	0	0.62	0	0	18.24	0	0	0	0	0	0	-3.11	-3.11
Inverter	MV5-3	370231	4908851	2	0	0	100.3	100.3	1	4773.83	3.25	0	84.58	0	0.62	0	0	18.24	0	0	0	0	0	0	-3.13	-3.13
Inverter	MV5-1	370020	4909142	2	0	0	100.3	100.3	1	4784.36	3.25	0	84.6	0	0.62	0	0	18.26	0	0	0	0	0	0	-3.17	-3.17
Inverter	MV6-1	370235	4907364	2	0	0	97.3	97.3	1	4098.02	3.25	0	83.25	0	0.54	0	0	17.2	0	0	0	0	0	0	-3.68	-3.68
DSTATCOM - 10 MVAR #2	DSAT2	369403	4908757	2.5	0	0	96.6	96.6	1	4065.04	3.5	0	83.18	0	3.58	0	0	2.87	0	0	0	0	0	0	7	7
DSTATCOM - 10 MVAR #1	DSAT1	369437	4908757	2.5	0	0	96.6	96.6	1	4090.7	3.5	0	83.24	0	3.58	0	0	2.89	0	0	0	0	0	0	6.93	6.93
Inverter	MV1-3	364440	4906039	2	0	0	89.1	89.1	1	1903.47	3.25	0	76.59	0	0.88	0	0	7.89	0	0	0	0	0	0	3.7	3.7
Gardiner Substation	G_Sub	366586.3	4903349.9	2.5	0	0	90.8	90.8	1	2741.92	4.25	0	79.76	0	1.09	3.44	0.37	5.57	0	0	0	0	0	0	0.92	0.92
SubstationTransformer	W_ST	369711.17	4906112.3	2.5	0	0	92	92	1	3368.32	4.25	0	81.55	0	1.18	2.84	0.29	6.5	0	0	0	0	0	0	-0.09	-0.09
Inverter	MV3-22	368656	4907142	2	0	0	89.1	89.1	1	2544.74	3.25	0	79.11	0	1.04	0	0	8.92	0	0	0	0	0	0	-0.01	-0.01
Inverter	MV3-1	368156	4907976	2	0	0	89.1	89.1	1	2622.59	3.25	0	79.37	0	1.06	0	0	9.04	0	0	0	0	0	0	-0.41	-0.41
Inverter	MV3-5	368340	4907843	2	0	0	89.1	89.1	1	2663.2	3.25	0	79.51	0	1.07	0	0	9.1	0	0	0	0	0	0	-0.62	-0.62
Inverter	MV3-4	368502	4907925	2	0	0	89.1	89.1	1	2839.3	3.25	0	80.06	0	1.11	0	0	9.37	0	0	0	0	0	0	-1.49	-1.49
Inverter	MV3-2	368671	4907928	2	0	0	89.1	89.1	1	2971.7	3.25	0	80.46	0	1.14	0	0	9.57	0	0	0	0	0	0	-2.12	-2.12
Westbrook Inverter Enclosur	W_INV2	369374	4906388	2	0	0	89.1	89.1	1	3046.51	3.25	0	80.68	0	1.16	0	0	9.69	0	0	0	0	0	0	-2.46	-2.46
Westbrook Inverter Enclosur	W_INV3	369508	4906164	2	0	0	89.1	89.1	1	3166.09	3.25	0	81.01	0	1.19	0	0	9.87	0	0	0	0	0	0	-3.01	-3.01
Westbrook Inverter Enclosur	W_INV4	369673	4906164	2	0	0	89.1	89.1	1	3331.04	3.25	0	81.45	0	1.23	0	0	10.11	0	0	0	0	0	0	-3.73	-3.73
Inverters	G_Inv1	366526.4	4903225.8	2	0	0	87.7	87.7	1	2861.09	3.25	0	80.13	0	2.68	0	0	3.62	0	0	0	0	0	0	1.23	1.23
Inverters	G_Inv2	366676.9	4903239.1	2	0	0	87.7	87.7	1	2861.45	3.25	0	80.13	0	2.68	0	0	3.62	0	0	0	0	0	0	1.23	1.23
Westbrook Inverter Enclosur	W_INV5	369719	4906574	2	0	0	89.1	89.1	1	3411.81	3.25	0	81.66	0	1.25	0	0	10.23	0	0	0	0	0	0	-4.08	-4.08
Westbrook Inverter Enclosur	W_INV7	369780	4906417	2	0	0	89.1	89.1	1	3453.39	3.25	0	81.76	0	1.26	0	0	10.29	0	0	0	0	0	0	-4.26	-4.26
Inverters	G_Inv3	366583.7	4903091.4	2	0	0	87.7	87.7	1	2999.28	3.25	0	80.54	0	2.7	0	0	3.77	0	0	0	0	0	0	0.65	0.65
Inverters	G_Inv4	366732.8	4903105	2	0	0	87.7	87.7	1	3001.42	3.25	0	80.55	0	2.7	0	0	3.78	0	0	0	0	0	0	0.64	0.64
Westbrook Inverter Enclosur	W_INV6	369875	4906578	2	0	0	89.1	89.1	1	3566.8	3.25	0	82.05	0	1.29	0	0	10.46	0	0	0	0	0	0	-4.73	-4.73
Inverters	G_Inv5	366638.5	4902958.1	2	0	0	87.7	87.7	1	3136.85	3.25	0	80.93	0	2.71	0	0	3.93	0	0	0	0	0	0	0.09	0.09
Inverters	G_Inv6	366788.5	4902972	2	0	0	87.7	87.7	1	3140.76	3.25	0	80.94	0	2.71	0	0	3.93	0	0	0	0	0	0	0.08	0.08
Inverter	MV4-13	369051	4908605	2	0	0	89.1	89.1	1	3701.87	3.25	0	82.37	0	1.32	0	0	10.66	0	0	0	0	0	0	-5.29	-5.29

Inverter	MV4-15	369176	4908481	2	0	0	89.1	89.1	1	3712.94	3.25	0	82.39	0	1.32	0	0	10.67	0	0	0	0	0	0	-5.33	-5.33
Fixed Reactor Bank 1	FRB1	369378	4908755	6	0	0	89.8	89.8	1	4044.94	5.25	0	83.14	0	-0.72	0	0	7.42	0	0	0	0	0	0	-0.07	-0.07
Inverter	MV4-14	369176	4908507	2	0	0	89.1	89.1	1	3729.8	3.25	0	82.43	0	1.33	0	0	10.7	0	0	0	0	0	0	-5.4	-5.4
Fixed Reactor Bank 2	FRB2	369464	4908755	6	0	0	89.8	89.8	1	4109.86	5.25	0	83.28	0	-0.71	0	0	7.51	0	0	0	0	0	0	-0.3	-0.3
Inverter	MV4-12	369043	4908803	2	0	0	89.1	89.1	1	3833.97	3.25	0	82.67	0	1.35	0	0	10.85	0	0	0	0	0	0	-5.81	-5.81
Inverters	G_Inv7	366694.6	4902824.7	2	0	0	87.7	87.7	1	3275.23	3.25	0	81.3	0	2.73	0	0	4.08	0	0	0	0	0	0	-0.45	-0.45
Inverters	G_Inv8	366844.5	4902838.5	2	0	0	87.7	87.7	1	3281.05	3.25	0	81.32	0	2.73	0	0	4.09	0	0	0	0	0	0	-0.47	-0.47
Inverters	G_Inv9	366750.9	4902691.8	2	0	0	87.7	87.7	1	3413.66	3.25	0	81.66	0	2.74	0	0	4.23	0	0	0	0	0	0	-0.98	-0.98
Inverters	G_Inv10	366900.7	4902704.8	2	0	0	87.7	87.7	1	3421.95	3.25	0	81.69	0	2.74	0	0	4.24	0	0	0	0	0	0	-1.01	-1.01
Inverter	MV5-6	369982	4908507	2	0	0	89.1	89.1	1	4373.53	3.25	0	83.82	0	1.48	0	0	11.61	0	0	0	0	0	0	-7.85	-7.85
Westbrook Inverter Enclosur	W_INV1	369409	4906578	2	0	0	86.1	86.1	1	3106.02	3.25	0	80.84	0	1.17	0	0	9.78	0	0	0	0	0	0	-5.74	-5.74
Inverter	MV6-4	370250	4906966	2	0	0	86.1	86.1	1	4005.98	3.25	0	83.05	0	1.39	0	0	11.09	0	0	0	0	0	0	-9.48	-9.48
Inverter Transformer	MV2-1 T	365836	4906816	2	0	0	69.4	69.4	1	892.91	3.25	0	70.02	0	1.59	0	0	3.66	0	0	0	0	0	0	-5.91	-5.91
Westbrook Inverter Transfor	W_INVTR1	369403	4906578	2	0	0	78.2	78.2	1	3100.1	3.25	0	80.83	0	-2.74	0	0	1.7	0	0	0	0	0	0	-1.54	-1.54
Westbrook Inverter Transfor	W_INVTR2	369368	4906388	2	0	0	77.3	77.3	1	3040.54	3.25	0	80.66	0	-2.73	0	0	1.67	0	0	0	0	0	0	-2.27	-2.27
Westbrook Inverter Transfor	W_INVTR3	369514	4906164	2	0	0	77.3	77.3	1	3172.09	3.25	0	81.03	0	-2.76	0	0	1.73	0	0	0	0	0	0	-2.65	-2.65
Westbrook Inverter Transfor	W_INVTR4	369679	4906164	2	0	0	77.3	77.3	1	3337.03	3.25	0	81.47	0	-2.8	0	0	1.8	0	0	0	0	0	0	-3.12	-3.12
Westbrook Inverter Transfor	W_INVTR5	369725	4906574	2	0	0	77.3	77.3	1	3417.74	3.25	0	81.67	0	-2.82	0	0	1.83	0	0	0	0	0	0	-3.34	-3.34
Westbrook Inverter Transfor	W_INVTR7	369786	4906417	2	0	0	77.3	77.3	1	3459.36	3.25	0	81.78	0	-2.83	0	0	1.85	0	0	0	0	0	0	-3.45	-3.45
Westbrook Inverter Transfor	W_INVTR6	369881	4906578	2	0	0	77.3	77.3	1	3572.74	3.25	0	82.06	0	-2.86	0	0	1.89	0	0	0	0	0	0	-3.75	-3.75
Inverter Transformer	MV1-10 T	365010	4905564	2	0	0	69.4	69.4	1	1429.75	3.25	0	74.11	0	1.94	0	0	4.35	0	0	0	0	0	0	-11.05	-11.05
Inverter Transformer	MV1-7 T	364919	4905782	2	0	0	69.4	69.4	1	1455.05	3.25	0	74.26	0	1.95	0	0	4.38	0	0	0	0	0	0	-11.24	-11.24
Inverter Transformer	MV1-14 T	365157	4905049	2	0	0	69.4	69.4	1	1572.14	3.25	0	74.93	0	2	0	0	4.52	0	0	0	0	0	0	-12.1	-12.1
Inverter Transformer	MV1-13 T	364725	4905241	2	0	0	69.4	69.4	1	1823.06	3.25	0	76.22	0	2.11	0	0	4.78	0	0	0	0	0	0	-13.76	-13.76
Inverter Transformer	MV2-2 T	365982	4906654	2	0	0	56.1	56.1	1	677.24	3.25	0	67.61	0	-0.09	0	0	4.07	0	0	0	0	0	0	-15.54	-15.54
Inverter Transformer	MV2-3 T	365814	4906641	2	0	0	56.1	56.1	1	770.36	3.25	0	68.73	0	-0.06	0	0	4.32	0	0	0	0	0	0	-16.93	-16.93
Inverter Transformer	MV6-4 T	370244	4906966	2	0	0	69.4	69.4	1	4000.13	3.25	0	83.04	0	2.79	0	0	6.68	0	0	0	0	0	0	-23.15	-23.15
Inverter Transformer	MV6-1 T	370230	4907364	2	0	0	69.4	69.4	1	4093.27	3.25	0	83.24	0	2.81	0	0	6.75	0	0	0	0	0	0	-23.45	-23.45
Inverter Transformer	MV2-4 T	365590	4906628	2	0	0	56.1	56.1	1	930.71	3.25	0	70.38	0	-0.01	0	0	4.72	0	0	0	0	0	0	-19.03	-19.03
Inverter Transformer	MV1-12 T	365044	4905386	2	0	0	56.1	56.1	1	1473.24	3.25	0	74.37	0	0.19	0	0	5.96	0	0	0	0	0	0	-24.46	-24.46
Inverter Transformer	MV1-15 T	365309	4904994	2	0	0	56.1	56.1	1	1500.24	3.25	0	74.52	0	0.2	0	0	6.02	0	0	0	0	0	0	-24.68	-24.68
Inverter Transformer	MV1-4 T	364821	4905918	2	0	0	56.1	56.1	1	1530.71	3.25	0	74.7	0	0.21	0	0	6.08	0	0	0	0	0	0	-24.93	-24.93
Inverter Transformer	MV1-2 T	364759	4906063	2	0	0	56.1	56.1	1	1584.1	3.25	0	75	0	0.23	0	0	6.2	0	0	0	0	0	0	-25.37	-25.37
Inverter Transformer	MV1-8 T	364782	4905647	2	0	0	56.1	56.1	1	1620.21	3.25	0	75.19	0	0.25	0	0	6.27	0	0	0	0	0	0	-25.65	-25.65
Inverter Transformer	MV1-1 T	364721	4906166	2	0	0	56.1	56.1	1	1624.23	3.25	0	75.21	0	0.25	0	0	6.28	0	0	0	0	0	0	-25.68	-25.68
Inverter Transformer	MV1-5 T	364676	4905892	2	0	0	56.1	56.1	1	1677.68	3.25	0	75.49	0	0.27	0	0	6.39	0	0	0	0	0	0	-26.1	-26.1
Inverter Transformer	MV1-11 T	364649	4905414	2	0	0	56.1	56.1	1	1820.59	3.25	0	76.2	0	0.33	0	0	6.69	0	0	0	0	0	0	-27.16	-27.16
Inverter Transformer	MV1-9 T	364555	4905646	2	0	0	56.1	56.1	1	1840.16	3.25	0	76.3	0	0.34	0	0	6.73	0	0	0	0	0	0	-27.3	-27.3
Inverter Transformer	MV1-6 T	364482	4905835	2	0	0	56.1	56.1	1	1877.19	3.25	0	76.47	0	0.35	0	0	6.8	0	0	0	0	0	0	-27.56	-27.56
Inverter Transformer	MV1-3 T	364435	4906039	2	0	0	56.1	56.1	1	1908.46	3.25	0	76.61	0	0.37	0	0	6.86	0	0	0	0	0	0	-27.78	-27.78
Inverter Transformer	MV3-18 T	367757	4907412	2	0	0	56.1	56.1	1	1941.9	3.25	0	76.76	0	0.38	0	0	6.93	0	0	0	0	0	0	-28.01	-28.01
Inverter Transformer	MV3-12 T	367674	4907594	2	0	0	56.1	56.1	1	2015.13	3.25	0	77.09	0	0.41	0	0	7.07	0	0	0	0	0	0	-28.51	-28.51
Inverter Transformer	MV3-13 T	367958	4907577	2	0	0	56.1	56.1	1	2201.42	3.25	0	77.85	0	0.49	0	0	7.43	0	0	0	0	0	0	-29.72	-29.72
Inverter Transformer	MV3-17 T	368183	4907472	2	0	0	56.1	56.1	1	2306.62	3.25	0	78.26	0	0.53	0	0	7.63	0	0	0	0	0	0	-30.37	-30.37
Inverter Transformer	MV3-7 T	367951	4907754	2	0	0	56.1	56.1	1	2320.47	3.25	0	78.31	0	0.54	0	0	7.66	0	0	0	0	0	0	-30.45	-30.45
Inverter Transformer	MV3-19 T	368352	4907347	2	0	0	56.1	56.1	1	2374.62	3.25	0	78.51	0	0.56	0	0	7.76	0	0	0	0	0	0	-30.78	-30.78
Inverter Transformer	MV3-10 T	368162	4907669	2	0	0	56.1	56.1	1	2414.65	3.25	0	78.66	0	0.58	0	0	7.83	0	0	0	0	0	0	-31.01	-31.01
Inverter Transformer	MV3-21 T	368484	4907206	2	0	0	56.1	56.1	1	2418.58	3.25	0	78.67	0	0.58	0	0	7.84	0	0	0	0	0	0	-31.03	-31.03
Inverter Transformer	MV3-3 T	367944	4907927	2	0	0	56.1	56.1	1	2443.55	3.25	0	78.76	0	0.59	0	0	7.89	0	0	0	0	0	0	-31.18	-31.18
Inverter Transformer	MV3-15 T	368351	4907477	2	0	0	56.1	56.1	1	2445.59	3.25	0	78.77	0	0.59	0	0	7.89	0	0	0	0	0	0	-31.19	-31.19
Inverter Transformer	MV3-6 T	368156	4907834	2	0	0	56.1	56.1	1	2521.9	3.25	0	79.03	0	0.63	0	0	8.03	0	0	0	0	0	0	-31.63	-31.63
Inverter Transformer	MV3-11 T	368340	4907662	2	0	0	56.1	56.1	1	2547.07	3.25	0	79.12	0	0.64	0	0	8.07	0	0	0	0	0	0	-31.77	-31.77
Inverter Transformer	MV3-22 T	368661	4907142	2	0	0	56.1	56.1	1	2549.28	3.25	0	79.13	0	0.64	0	0	8.08	0	0	0	0	0	0	-31.79	-31.79
Inverter Transformer	MV3-16 T	368509	4907475	2	0	0	56.1	56.1	1	2575.81	3.25	0	79.22	0	0.65	0	0	8.13	0	0	0	0	0	0	-31.94	-31.94
Inverter Transformer	MV3-1 T	368150	4907976	2	0	0	56.1	56.1	1	2618.45	3.25	0	79.36	0	0.67	0	0	8.2	0	0	0	0	0	0	-32.17	-32.17
Inverter Transformer	MV3-20 T	368683	4907317	2	0	0	56.1	56.1	1	2646.38	3.25	0	79.45	0	0.68	0	0	8.25	0	0	0	0	0	0	-32.33	-32.33
Inverter Transformer	MV3-5 T	368335	4907843	2	0	0	56.1	56.1	1	2659.46	3.25	0	79.5	0	0.68	0	0	8.28	0	0	0	0	0	0	-32.4	-32.4
Inverter Transformer	MV3-9 T	368517	4907703	2	0	0	56.1	56.1	1	2712.41	3.25	0	79.67	0	0.71	0	0	8.37	0	0	0	0	0	0	-32.69	-32.69
Inverter Transformer	MV3-14 T	368678	4907498	2	0	0	56.1	56.1	1	2731.32	3.25	0	79.73	0	0.72	0	0	8.4	0	0	0	0	0	0	-32.79	-32.79
Inverter Transformer	MV3-4 T	368507	4907925	2	0	0	56.1	56.1	1	2843.1	3.25	0	80.08	0	0.76	0	0	8.6	0	0	0	0	0	0	-33.38	-33.38
Inverter Transformer	MV3-8 T	368685	4907712	2	0	0	56.1	56.1	1	2853.97	3.25	0	80.11	0	0.77	0	0	8.62	0	0	0	0	0	0	-33.44	-33.44
Inverter Transformer	MV3-2 T	368677	4907928	2	0	0	56.1	56.1	1	2976.4	3.25	0	80.47	0	0.82	0	0	8.83	0	0	0	0	0	0	-34.06	-34.06
Inverter Transformer	MV4-13 T	369057	4908605	2	0	0	56.1	56.1	1	3706.26	3.25	0	82.38	0	1.13	0	0	10.01	0	0	0	0	0	0	-37.46	-37.46
Inverter Transformer	MV4-15 T	369170	4908481	2	0	0	56.1	56.1	1	3708.36	3.25	0	82.38	0	1.13	0	0	10.01	0	0	0	0	0	0	-37.46	-37.46
Inverter Transformer	MV4-14 T	369182	4908507	2	0	0	56.1	56.1	1	3734.35	3.25	0	82.44	0	1.14	0	0	10.05	0	0	0	0	0	0	-37.58	-37.58
Inverter Transformer	MV4-12 T	369049	4908803	2	0	0	56.1	56.1	1	3838.19	3.25	0	82.68	0	1.18	0	0	10.21	0	0	0	0	0	0	-38.01	-38.01
Inverter Transformer	MV6-2 T	370091	4907339	2	0	0	56.1	56.1	1	3953.49	3.25	0	82.94	0	1.23	0	0	10.39	0	0	0	0	0	0	-38.49	-38.49
Inverter Transformer	MV4-7 T	369040	4909001	2	0	0	56.1	56.1	1	3974.95	3.25	0	82.99	0	1.23	0	0	10.42	0	0	0	0	0	0	-38.58	-38.58
Inverter Transformer	MV6-3 T	370202	4907140	2	0	0	56.1	56.1	1	4001.67	3.25	0	83.04	0	1.24	0	0	10.46	0	0	0	0	0	0	-38.69	-38.69
Inverter Transformer	MV4-11 T	369269	4908855	2	0	0	56.1	56.1	1	4031.94	3.25	0	83.11	0	1.26	0	0	10.5	0	0	0	0	0	0	-38.81	-38.81
Inverter Transformer	MV4-10 T	369307	4908858	2	0	0	56.1	56.1	1	4061.65	3.25	0	83.17	0	1.27	0	0	10.55	0	0	0	0	0	0	-38.93	-38.93
Inverter Transformer	MV4-4 T	369033	4909199	2	0	0	56.1	56.1	1	4118.01	3.25	0	83.29	0	1.29	0	0	10.63	0	0	0	0	0	0	-39.16	-39.16
Inverter Transformer	MV4-8 T	369262	4909001	2	0	0	56.1	56.1	1	4128.8	3.25	0	83.32	0	1.3	0	0	10.64	0	0	0	0	0	0	-39.2	-39.2
Inverter Transformer	MV4-9 T	369284	4909001	2	0	0	56.1	56.1	1	4144.38	3.25	0	83.35	0	1.3	0	0	10.67	0	0	0	0	0	0	-39.26	-39.26

	Inverter Transformer	MV4-6 T	369249	4909192	2	0	0	56.1	56.1	1	4257.13	3.25	0	83.58	0	1.35	0	0	10.83	0	0	0	0	0	0	-39.7	-39.7
	Inverter Transformer	MV4-1 T	369017	4909397	2	0	0	56.1	56.1	1	4259.83	3.25	0	83.59	0	1.35	0	0	10.83	0	0	0	0	0	0	-39.71	-39.71
	Inverter Transformer	MV4-5 T	369283	4909199	2	0	0	56.1	56.1	1	4285.5	3.25	0	83.64	0	1.36	0	0	10.87	0	0	0	0	0	0	-39.81	-39.81
	Inverter Transformer	MV5-6 T	369987	4908507	2	0	0	56.1	56.1	1	4377.7	3.25	0	83.82	0	1.39	0	0	11	0	0	0	0	0	0	-40.16	-40.16
	Inverter Transformer	MV4-3 T	369234	4909397	2	0	0	56.1	56.1	1	4399.29	3.25	0	83.87	0	1.4	0	0	11.03	0	0	0	0	0	0	-40.24	-40.24
	Inverter Transformer	MV4-2 T	369267	4909397	2	0	0	56.1	56.1	1	4421.04	3.25	0	83.91	0	1.41	0	0	11.06	0	0	0	0	0	0	-40.33	-40.33
	Inverter Transformer	MV5-5 T	370021	4908690	2	0	0	56.1	56.1	1	4509.39	3.25	0	84.08	0	1.44	0	0	11.19	0	0	0	0	0	0	-40.66	-40.66
	Inverter Transformer	MV5-2 T	370011	4908853	2	0	0	56.1	56.1	1	4597.63	3.25	0	84.25	0	1.48	0	0	11.31	0	0	0	0	0	0	-40.98	-40.98
	Inverter Transformer	MV5-4 T	370330	4908707	2	0	0	56.1	56.1	1	4774.1	3.25	0	84.58	0	1.54	0	0	11.55	0	0	0	0	0	0	-41.61	-41.61
	Inverter Transformer	MV5-3 T	370237	4908851	2	0	0	56.1	56.1	1	4778.72	3.25	0	84.59	0	1.54	0	0	11.56	0	0	0	0	0	0	-41.63	-41.63
	Inverter Transformer	MV5-1 T	370015	4909142	2	0	0	56.1	56.1	1	4780.51	3.25	0	84.59	0	1.55	0	0	11.56	0	0	0	0	0	0	-41.64	-41.64
	Line Reactor	NGR	369421	4908787.5	5	0	0	45.4	45.4	1	4098.69	5.25	0	83.25	0	3.28	1.34	0.08	1.68	0	0	0	0	0	0	-44.2	-44.2
Limit. Valu	0	0																								
Level D/N:	28.7278	28.7278																								

Receiver: Existing Noise Receptor
ID: S-R81
X: 370458
Y: 4909412
Z: 4.5
Ground: 0

ISO	Description	ID	X	Y	Z	Ground	ReflOrd	LxT	LxN	L/A	Dist.	hm	Freq	Adiv	K0b	Agr	Abar	z	Aatm	Afol	Ahous	Cmet	CmetN	Dc	RL	LtotT	LtotN
	Sol_Luce Substation	S_Substation	369426	4908792	3.5	0	0	112.1	112.1	1	1203.92	5.25	0	72.61	0	0.11	5.44	0.41	2.92	0	0	0	0	0	0	31	31
	Inverter	MV5-1	370020	4909142	2	0	0	100.3	100.3	1	514.54	3.25	0	65.23	0	-0.54	0	0	8.64	0	0	0	0	0	0	26.99	26.99
	Inverter	MV5-3	370231	4908851	2	0	0	100.3	100.3	1	605.19	3.25	0	66.64	0	-0.47	0	0	9.23	0	0	0	0	0	0	24.91	24.91
	Inverter	MV5-4	370324	4908707	2	0	0	100.3	100.3	1	717.63	3.25	0	68.12	0	-0.4	0	0	9.82	0	0	0	0	0	0	22.77	22.77
	Inverter	MV5-2	370006	4908853	2	0	0	100.3	100.3	1	718.88	3.25	0	68.13	0	-0.4	0	0	9.83	0	0	0	0	0	0	22.75	22.75
	Inverter	MV5-5	370015	4908690	2	0	0	100.3	100.3	1	847.08	3.25	0	69.56	0	-0.33	0	0	10.37	0	0	0	0	0	0	20.71	20.71
	Inverter	MV4-2	369272	4909397	2	0	0	100.3	100.3	1	1186.1	3.25	0	72.48	0	-0.16	0	0	11.49	0	0	0	0	0	0	16.5	16.5
	Inverter	MV4-5	369289	4909199	2	0	0	100.3	100.3	1	1188.25	3.25	0	72.5	0	-0.16	0	0	11.49	0	0	0	0	0	0	16.48	16.48
	Inverter	MV4-3	369229	4909397	2	0	0	100.3	100.3	1	1229.09	3.25	0	72.79	0	-0.14	0	0	11.61	0	0	0	0	0	0	16.05	16.05
	Inverter	MV4-6	369243	4909192	2	0	0	100.3	100.3	1	1234.76	3.25	0	72.83	0	-0.14	0	0	11.62	0	0	0	0	0	0	15.99	15.99
	Inverter	MV4-9	369289	4909001	2	0	0	100.3	100.3	1	1239.15	3.25	0	72.86	0	-0.14	0	0	11.64	0	0	0	0	0	0	15.95	15.95
	Inverter	MV4-8	369256	4909001	2	0	0	100.3	100.3	1	1270.33	3.25	0	73.08	0	-0.12	0	0	11.72	0	0	0	0	0	0	15.63	15.63
	Inverter	MV4-10	369312	4908858	2	0	0	100.3	100.3	1	1272.89	3.25	0	73.1	0	-0.12	0	0	11.73	0	0	0	0	0	0	15.61	15.61
	Inverter	MV4-11	369264	4908855	2	0	0	100.3	100.3	1	1317.53	3.25	0	73.4	0	-0.1	0	0	11.85	0	0	0	0	0	0	15.17	15.17
	Inverter	MV4-4	369027	4909199	2	0	0	100.3	100.3	1	1446.77	3.25	0	74.21	0	-0.05	0	0	12.19	0	0	0	0	0	0	13.97	13.97
	Inverter	MV4-1	369011	4909397	2	0	0	100.3	100.3	1	1447.08	3.25	0	74.21	0	-0.05	0	0	12.19	0	0	0	0	0	0	13.96	13.96
	Inverter	MV4-7	369035	4909001	2	0	0	100.3	100.3	1	1481.17	3.25	0	74.41	0	-0.04	0	0	12.28	0	0	0	0	0	0	13.66	13.66
	DSTATCOM - 10 MVAR #1	DSAT1	369437	4908757	2.5	0	0	96.6	96.6	1	1213.04	3.5	0	72.68	0	3.03	0	0	1.22	0	0	0	0	0	0	19.71	19.71
	DSTATCOM - 10 MVAR #2	DSAT2	369403	4908757	2.5	0	0	96.6	96.6	1	1241.79	3.5	0	72.88	0	3.04	0	0	1.24	0	0	0	0	0	0	19.47	19.47
	Inverter	MV6-2	370085	4907339	2	0	0	100.3	100.3	1	2106.29	3.25	0	77.47	0	0.16	0	0	13.68	0	0	0	0	0	0	9	9
	Inverter	MV6-3	370207	4907140	2	0	0	100.3	100.3	1	2285.82	3.25	0	78.18	0	0.21	0	0	14.04	0	0	0	0	0	0	7.88	7.88
	Inverter	MV3-8	368680	4907712	2	0	0	100.3	100.3	1	2459.94	3.25	0	78.82	0	0.25	0	0	14.38	0	0	0	0	0	0	6.86	6.86
	Inverter	MV3-9	368512	4907703	2	0	0	100.3	100.3	1	2589.9	3.25	0	79.27	0	0.28	0	0	14.63	0	0	0	0	0	0	6.14	6.14
	Inverter	MV3-14	368684	4907498	2	0	0	100.3	100.3	1	2609.69	3.25	0	79.33	0	0.28	0	0	14.66	0	0	0	0	0	0	6.03	6.03
	Inverter	MV3-20	368689	4907317	2	0	0	100.3	100.3	1	2741.97	3.25	0	79.76	0	0.31	0	0	14.91	0	0	0	0	0	0	5.33	5.33
	Inverter	MV3-11	368346	4907662	2	0	0	100.3	100.3	1	2742.82	3.25	0	79.76	0	0.31	0	0	14.91	0	0	0	0	0	0	5.33	5.33
	Inverter	MV3-16	368514	4907475	2	0	0	100.3	100.3	1	2744.29	3.25	0	79.77	0	0.31	0	0	14.91	0	0	0	0	0	0	5.32	5.32
	Inverter	MV3-6	368162	4907834	2	0	0	100.3	100.3	1	2785.98	3.25	0	79.9	0	0.32	0	0	14.99	0	0	0	0	0	0	5.1	5.1
	Inverter	MV3-15	368357	4907477	2	0	0	100.3	100.3	1	2856.3	3.25	0	80.12	0	0.33	0	0	15.12	0	0	0	0	0	0	4.75	4.75
	Inverter	MV3-10	368167	4907669	2	0	0	100.3	100.3	1	2878.67	3.25	0	80.18	0	0.34	0	0	15.16	0	0	0	0	0	0	4.63	4.63
	Inverter	MV6-1	370235	4907364	2	0	0	97.3	97.3	1	2060.11	3.25	0	77.28	0	0.15	0	0	13.59	0	0	0	0	0	0	6.3	6.3
	Inverter	MV3-3	367939	4907927	2	0	0	100.3	100.3	1	2924.14	4.52	0	80.32	0	1.11	3.21	0	15.24	0	0	0	0	0	0	0.44	0.44
	Inverter	MV3-19	368357	4907347	2	0	0	100.3	100.3	1	2945.92	3.25	0	80.38	0	0.35	0	0	15.28	0	0	0	0	0	0	4.3	4.3
	Inverter	MV3-21	368478	4907206	2	0	0	100.3	100.3	1	2964.26	3.25	0	80.44	0	0.36	0	0	15.31	0	0	0	0	0	0	4.21	4.21
	Inverter	MV3-17	368178	4907472	2	0	0	100.3	100.3	1	2993.66	3.25	0	80.52	0	0.36	0	0	15.36	0	0	0	0	0	0	4.07	4.07
	Inverter	MV3-7	367945	4907754	2	0	0	100.3	100.3	1	3010.67	3.25	0	80.57	0	0.36	0	0	15.39	0	0	0	0	0	0	3.98	3.98
	Inverter	MV3-13	367963	4907577	2	0	0	100.3	100.3	1	3097.14	3.25	0	80.82	0	0.38	0	0	15.54	0	0	0	0	0	0	3.57	3.57
	Inverter	MV3-12	367668	4907594	2	0	0	100.3	100.3	1	3330.05	3.25	0	81.45	0	0.42	0	0	15.94	0	0	0	0	0	0	2.5	2.5
	Inverter	MV3-18	367752	4907412	2	0	0	100.3	100.3	1	3364.88	3.25	0	81.54	0	0.43	0	0	16	0	0	0	0	0	0	2.34	2.34
	Inverter	MV5-6	369982	4908507	2	0	0	89.1	89.1	1	1022.55	3.25	0	71.19	0	0.69	0	0	6.36	0	0	0	0	0	0	10.82	10.82
	Fixed Reactor Bank 2	FRB2	369464	4908755	6	0	0	89.8	89.8	1	1191.51	5.25	0	72.52	0	-1.03	0	0	2.9	0	0	0	0	0	0	15.38	15.38
	Fixed Reactor Bank 1	FRB1	369378	4908755	6	0	0	89.8	89.8	1	1264.14	5.29	0	73.04	0	-0.7	4.23	0	3.04	0	0	0	0	0	0	10.17	10.17
	Inverter	MV2-3	365820	4906641	2	0	0	100.3	100.3	1	5402.73	4.28	0	85.65	0	1.61	2.62	0	19.16	0	0	0	0	0	0	-8.74	-8.74
	Inverter	MV2-4	365586	4906624	2	0	0	100.3	100.3	1	5613.32	3.25	0	85.98	0	0.69	0	0	19.46	0	0	0	0	0	0	-5.82	-5.82
	Inverter	MV4-12	369043	4908803	2	0	0	89.1	89.1	1	1540.49	3.25	0	74.75	0	0.8	0	0	7.28	0	0	0	0	0	0	6.23	6.23
	Inverter	MV4-14	369176	4908507	2	0	0	89.1	89.1	1	1569.25	3.25	0	74.91	0	0.81	0	0	7.33	0	0	0	0	0	0	6.01	6.01
	Inverter	MV4-15	369176	4908481	2	0	0	89.1	89.1	1	1584.39	3.25	0	75	0	0.81	0	0	7.35	0	0	0	0	0	0	5.9	5.9
	Inverter	MV4-13	369051	4908605	2	0	0	89.1	89.1	1	1622.01	3.25	0	75.2	0	0.82	0	0	7.42	0	0	0	0	0	0	5.62	5.62
	Inverter	MV1-1	364715	4906166	2	0	0	100.3	100.3	1	6596.86	3.25	0	87.39	0	0.72	0	0	20.78	0	0	0	0	0	0	-8.57	-8.57
	Inverter	MV1-2	364753	4906063	2	0	0	100.3	100.3	1	6615.35	4.23	0	87.41	0	1.74	2.38	0	20.81	0	0	0	0	0	0	-12.03	-12.03
	Inverter	MV1-4	364815	4905918	2	0	0	100.3	100.3	1	6637.13	3.25	0	87.44	0	0.71	0	0	20.84	0	0	0	0	0	0	-8.68	-8.68

Inverter	MV1-12	365038	4905386	2	0	0	100.3	100.3	1	6751.67	3.25	0	87.59	0	0.71	0	0	20.98	0	0	0	0	0	0	-8.97	-8.97
Inverter	MV1-5	364671	4905892	2	0	0	100.3	100.3	1	6773.46	4.22	0	87.62	0	1.76	2.35	0	21.01	0	0	0	0	0	0	-12.42	-12.42
Inverter	MV1-15	365315	4904994	2	0	0	100.3	100.3	1	6780.06	3.25	0	87.62	0	0.71	0	0	21.02	0	0	0	0	0	0	-9.05	-9.05
Inverter	MV1-8	364788	4905647	2	0	0	100.3	100.3	1	6806.18	3.25	0	87.66	0	0.71	0	0	21.05	0	0	0	0	0	0	-9.11	-9.11
Inverter	MV1-6	364477	4905835	2	0	0	100.3	100.3	1	6969.02	4.22	0	87.86	0	1.77	2.31	0	21.26	0	0	0	0	0	0	-12.89	-12.89
Inverter	MV1-9	364561	4905646	2	0	0	100.3	100.3	1	6996.95	3.25	0	87.9	0	0.71	0	0	21.3	0	0	0	0	0	0	-9.59	-9.59
Inverter	MV1-11	364655	4905414	2	0	0	100.3	100.3	1	7046.9	3.25	0	87.96	0	0.71	0	0	21.36	0	0	0	0	0	0	-9.71	-9.71
Inverter	MV2-1	365842	4906816	2	0	0	97.3	97.3	1	5295.91	3.25	0	85.48	0	0.67	0	0	19.01	0	0	0	0	0	0	-7.84	-7.84
Inverter	MV3-2	368671	4907928	2	0	0	89.1	89.1	1	2322.85	3.25	0	78.32	0	0.98	0	0	8.57	0	0	0	0	0	0	1.19	1.19
SubstationTransformer	W_ST	369711.17	4906112.3	2.5	0	0	92	92	1	3383.19	3.5	0	81.59	0	0.18	0	0	6.52	0	0	0	0	0	0	3.69	3.69
Inverter	MV3-4	368502	4907925	2	0	0	89.1	89.1	1	2457.05	3.25	0	78.81	0	1.02	0	0	8.78	0	0	0	0	0	0	0.46	0.46
Inverter	MV1-7	364925	4905782	2	0	0	97.3	97.3	1	6617.48	3.25	0	87.41	0	0.71	0	0	20.81	0	0	0	0	0	0	-11.63	-11.63
Inverter	MV1-10	365004	4905564	2	0	0	97.3	97.3	1	6674.82	3.25	0	87.49	0	0.71	0	0	20.89	0	0	0	0	0	0	-11.78	-11.78
Inverter	MV3-5	368340	4907843	2	0	0	89.1	89.1	1	2635.85	3.25	0	79.42	0	1.06	0	0	9.06	0	0	0	0	0	0	-0.48	-0.48
Inverter	MV1-14	365163	4905049	2	0	0	97.3	97.3	1	6860.96	3.25	0	87.73	0	0.71	0	0	21.12	0	0	0	0	0	0	-12.25	-12.25
Inverter	MV3-1	368156	4907976	2	0	0	89.1	89.1	1	2713.17	3.25	0	79.67	0	1.08	0	0	9.18	0	0	0	0	0	0	-0.87	-0.87
Inverter	MV1-13	364731	4905241	2	0	0	97.3	97.3	1	7084.9	3.25	0	88.01	0	0.71	0	0	21.41	0	0	0	0	0	0	-12.81	-12.81
Westbrook Inverter Enclosur	W_INV6	369875	4906578	2	0	0	89.1	89.1	1	2893.35	3.25	0	80.23	0	1.12	0	0	9.45	0	0	0	0	0	0	-1.75	-1.75
Inverter	MV3-22	368656	4907142	2	0	0	89.1	89.1	1	2898.29	3.25	0	80.24	0	1.12	0	0	9.46	0	0	0	0	0	0	-1.77	-1.77
Westbrook Inverter Enclosur	W_INV5	369719	4906574	2	0	0	89.1	89.1	1	2932.64	3.25	0	80.35	0	1.13	0	0	9.51	0	0	0	0	0	0	-1.93	-1.93
Westbrook Inverter Enclosur	W_INV7	369780	4906417	2	0	0	89.1	89.1	1	3070.78	3.25	0	80.74	0	1.16	0	0	9.72	0	0	0	0	0	0	-2.58	-2.58
Westbrook Inverter Enclosur	W_INV2	369374	4906388	2	0	0	89.1	89.1	1	3212.42	3.25	0	81.14	0	1.2	0	0	9.94	0	0	0	0	0	0	-3.21	-3.21
Westbrook Inverter Enclosur	W_INV4	369673	4906164	2	0	0	89.1	89.1	1	3341.52	3.25	0	81.48	0	1.23	0	0	10.13	0	0	0	0	0	0	-3.78	-3.78
Westbrook Inverter Enclosur	W_INV3	369508	4906164	2	0	0	89.1	89.1	1	3384.08	3.25	0	81.59	0	1.24	0	0	10.19	0	0	0	0	0	0	-3.96	-3.96
Inverter	MV6-4	370250	4906966	2	0	0	86.1	86.1	1	2454.83	3.25	0	78.8	0	1.01	0	0	8.77	0	0	0	0	0	0	-2.53	-2.53
Westbrook Inverter Enclosur	W_INV1	369409	4906578	2	0	0	86.1	86.1	1	3021.91	3.25	0	80.61	0	1.15	0	0	9.65	0	0	0	0	0	0	-5.35	-5.35
Inverter	MV2-2	365977	4906654	2	0	0	89.1	89.1	1	5261.74	3.25	0	85.42	0	1.7	0	0	12.81	0	0	0	0	0	0	-10.88	-10.88
Gardiner Substation	G_Sub	366586.3	4903349.9	2.5	0	0	90.8	90.8	1	7192.99	4.25	0	88.14	0	2.09	1.87	0.38	10.93	0	0	0	0	0	0	-12.25	-12.25
Inverter	MV1-3	364440	4906039	2	0	0	89.1	89.1	1	6898.8	3.25	0	87.78	0	2.1	0	0	14.87	0	0	0	0	0	0	-15.69	-15.69
Inverters	G_Inv2	366676.9	4903239.1	2	0	0	87.7	87.7	1	7238.88	3.25	0	88.19	0	2.96	0	0	8.23	0	0	0	0	0	0	-11.72	-11.72
Inverters	G_Inv4	366732.8	4903105	2	0	0	87.7	87.7	1	7324.98	3.25	0	88.3	0	2.96	0	0	8.31	0	0	0	0	0	0	-11.91	-11.91
Inverters	G_Inv1	366526.4	4903225.8	2	0	0	87.7	87.7	1	7329.84	3.25	0	88.3	0	2.96	0	0	8.32	0	0	0	0	0	0	-11.92	-11.92
Inverters	G_Inv6	366788.5	4902972	2	0	0	87.7	87.7	1	7412.07	3.25	0	88.4	0	2.96	0	0	8.4	0	0	0	0	0	0	-12.1	-12.1
Inverters	G_Inv3	366583.7	4903091.4	2	0	0	87.7	87.7	1	7413.51	3.25	0	88.4	0	2.96	0	0	8.4	0	0	0	0	0	0	-12.1	-12.1
Inverters	G_Inv5	366638.5	4902958.1	2	0	0	87.7	87.7	1	7499.43	3.25	0	88.5	0	2.96	0	0	8.49	0	0	0	0	0	0	-12.29	-12.29
Inverters	G_Inv8	366844.5	4902838.5	2	0	0	87.7	87.7	1	7501.22	3.25	0	88.5	0	2.96	0	0	8.49	0	0	0	0	0	0	-12.29	-12.29
Inverters	G_Inv7	366694.6	4902824.7	2	0	0	87.7	87.7	1	7586.55	3.25	0	88.6	0	2.96	0	0	8.57	0	0	0	0	0	0	-12.47	-12.47
Inverters	G_Inv10	366900.7	4902704.8	2	0	0	87.7	87.7	1	7592.16	3.25	0	88.61	0	2.96	0	0	8.58	0	0	0	0	0	0	-12.49	-12.49
Inverters	G_Inv9	366750.9	4902691.8	2	0	0	87.7	87.7	1	7674.87	3.25	0	88.7	0	2.96	0	0	8.66	0	0	0	0	0	0	-12.66	-12.66
Westbrook Inverter Transfor	W_INVTR1	369403	4906578	2	0	0	78.2	78.2	1	3024	3.25	0	80.61	0	-2.72	0	0	1.67	0	0	0	0	0	0	-1.32	-1.32
Westbrook Inverter Transfor	W_INVTR6	369881	4906578	2	0	0	77.3	77.3	1	2892.14	3.25	0	80.22	0	-2.68	0	0	1.61	0	0	0	0	0	0	-1.81	-1.81
Westbrook Inverter Transfor	W_INVTR5	369725	4906574	2	0	0	77.3	77.3	1	2931.13	3.25	0	80.34	0	-2.7	0	0	1.63	0	0	0	0	0	0	-1.93	-1.93
Westbrook Inverter Transfor	W_INVTR7	369786	4906417	2	0	0	77.3	77.3	1	3069.46	3.25	0	80.74	0	-2.73	0	0	1.69	0	0	0	0	0	0	-2.35	-2.35
Westbrook Inverter Transfor	W_INVTR2	369368	4906388	2	0	0	77.3	77.3	1	3214.45	3.25	0	81.14	0	-2.77	0	0	1.75	0	0	0	0	0	0	-2.78	-2.78
Westbrook Inverter Transfor	W_INVTR4	369679	4906164	2	0	0	77.3	77.3	1	3340.11	3.25	0	81.48	0	-2.8	0	0	1.8	0	0	0	0	0	0	-3.13	-3.13
Westbrook Inverter Transfor	W_INVTR3	369514	4906164	2	0	0	77.3	77.3	1	3382.4	3.25	0	81.58	0	-2.81	0	0	1.81	0	0	0	0	0	0	-3.24	-3.24
Inverter Transformer	MV6-1 T	370230	4907364	2	0	0	69.4	69.4	1	2060.65	3.25	0	77.28	0	2.2	0	0	5.03	0	0	0	0	0	0	-15.15	-15.15
Inverter Transformer	MV5-1 T	370015	4909142	2	0	0	56.1	56.1	1	518.8	3.25	0	65.3	0	-0.12	0	0	3.61	0	0	0	0	0	0	-12.74	-12.74
Inverter Transformer	MV6-4 T	370244	4906966	2	0	0	69.4	69.4	1	2455.34	3.25	0	78.8	0	2.33	0	0	5.4	0	0	0	0	0	0	-17.19	-17.19
Inverter Transformer	MV5-3 T	370237	4908851	2	0	0	56.1	56.1	1	602.97	3.25	0	66.61	0	-0.1	0	0	3.86	0	0	0	0	0	0	-14.31	-14.31
Inverter Transformer	MV5-2 T	370011	4908853	2	0	0	56.1	56.1	1	715.75	3.25	0	68.1	0	-0.08	0	0	4.18	0	0	0	0	0	0	-16.14	-16.14
Inverter Transformer	MV5-4 T	370330	4908707	2	0	0	56.1	56.1	1	716.53	3.25	0	68.1	0	-0.08	0	0	4.18	0	0	0	0	0	0	-16.15	-16.15
Inverter Transformer	MV5-5 T	370021	4908690	2	0	0	56.1	56.1	1	843.95	3.25	0	69.53	0	-0.04	0	0	4.51	0	0	0	0	0	0	-17.94	-17.94
Inverter Transformer	MV5-6 T	369987	4908507	2	0	0	56.1	56.1	1	1020.23	3.25	0	71.17	0	0.02	0	0	4.94	0	0	0	0	0	0	-20.07	-20.07
Inverter Transformer	MV2-1 T	365836	4906816	2	0	0	69.4	69.4	1	5301.14	3.25	0	85.49	0	3.07	0	0	7.58	0	0	0	0	0	0	-26.79	-26.79
Inverter Transformer	MV4-2 T	369267	4909397	2	0	0	56.1	56.1	1	1191.1	3.25	0	72.52	0	0.08	0	0	5.34	0	0	0	0	0	0	-21.88	-21.88
Inverter Transformer	MV4-5 T	369283	4909199	2	0	0	56.1	56.1	1	1194.15	3.25	0	72.54	0	0.08	0	0	5.34	0	0	0	0	0	0	-21.91	-21.91
Inverter Transformer	MV4-3 T	369234	4909397	2	0	0	56.1	56.1	1	1224.09	3.25	0	72.76	0	0.09	0	0	5.41	0	0	0	0	0	0	-22.2	-22.2
Inverter Transformer	MV4-6 T	369249	4909192	2	0	0	56.1	56.1	1	1228.86	3.25	0	72.79	0	0.09	0	0	5.42	0	0	0	0	0	0	-22.25	-22.25
Inverter Transformer	MV4-9 T	369284	4909001	2	0	0	56.1	56.1	1	1243.87	3.25	0	72.9	0	0.1	0	0	5.45	0	0	0	0	0	0	-22.39	-22.39
Inverter Transformer	MV4-8 T	369262	4909001	2	0	0	56.1	56.1	1	1264.65	3.25	0	73.04	0	0.11	0	0	5.5	0	0	0	0	0	0	-22.59	-22.59
Inverter Transformer	MV4-10 T	369307	4908858	2	0	0	56.1	56.1	1	1277.39	3.25	0	73.13	0	0.11	0	0	5.53	0	0	0	0	0	0	-22.71	-22.71
Inverter Transformer	MV4-11 T	369269	4908855	2	0	0	56.1	56.1	1	1313	3.25	0	73.37	0	0.13	0	0	5.61	0	0	0	0	0	0	-23.04	-23.04
Inverter Transformer	MV1-7 T	364919	4905782	2	0	0	69.4	69.4	1	6622.49	3.25	0	87.42	0	3.27	0	0	8.39	0	0	0	0	0	0	-29.73	-29.73
Inverter Transformer	MV4-4 T	369033	4909199	2	0	0	56.1	56.1	1	1440.83	3.25	0	74.17	0	0.18	0	0	5.89	0	0	0	0	0	0	-24.18	-24.18
Inverter Transformer	MV4-1 T	369017	4909397	2	0	0	56.1	56.1	1	1441.08	3.25	0	74.17	0	0.18	0	0	5.89	0	0	0	0	0	0	-24.18	-24.18
Inverter Transformer	MV1-10 T	365010	4905564	2	0	0	69.4	69.4	1	6669.92	3.25	0	87.48	0	3.28	0	0	8.41	0	0	0	0	0	0	-29.83	-29.83
Inverter Transformer	MV4-7 T	369040	4909001	2	0	0	56.1	56.1	1	1476.36	3.25	0	74.38	0	0.19	0	0	5.97	0	0	0	0	0	0	-24.48	-24.48
Inverter Transformer	MV1-14 T	365157	4905049	2	0	0	69.4	69.4	1	6865.59	3.25	0	87.73	0	3.3	0	0	8.53	0	0	0	0	0	0	-30.21	-30.21
Inverter Transformer	MV1-13 T	364725	4905241	2	0	0	69.4	69.4	1	7089.75	3.25	0	88.01	0	3.33	0	0	8.65	0	0	0	0	0	0	-30.64	-30.64
Inverter Transformer	MV4-12 T	369049	4908803	2	0	0	56.1	56.1	1	1534.98	3.25	0	74.72	0	0.21	0	0	6.09	0	0	0	0	0	0	-24.97	-24.97
Inverter Transformer	MV4-14 T	369182	4908507	2	0	0	56.1	56.1	1	1564.36	3.25	0	74.89	0	0.22	0	0	6.15	0	0	0	0	0	0	-25.21	-25.21
Inverter Transformer	MV4-15 T	369170	4908481	2	0	0	56.1	56.1	1	1589.25	3.25	0	75.02	0	0.23	0	0	6.21	0	0	0	0	0	0	-25.41	-25.41
Inverter Transformer	MV4-13 T	369057	4908605	2	0	0	56.1	56.1	1	1616.8	3.25	0	75.17	0	0.25	0	0	6.27	0	0	0	0	0	0	-25.63	-25.63

	Inverter Transformer	MV6-2 T	370091	4907339	2	0	0	56.1	56.1	1	2105.24	3.25	0	77.47	0	0.45	0	0	7.25	0	0	0	0	0	0	-29.1	-29.1
	Inverter Transformer	MV6-3 T	370202	4907140	2	0	0	56.1	56.1	1	2286.38	3.25	0	78.18	0	0.53	0	0	7.59	0	0	0	0	0	0	-30.24	-30.24
	Inverter Transformer	MV3-2 T	368677	4907928	2	0	0	56.1	56.1	1	2318.24	3.25	0	78.3	0	0.54	0	0	7.65	0	0	0	0	0	0	-30.44	-30.44
	Inverter Transformer	MV3-4 T	368507	4907925	2	0	0	56.1	56.1	1	2453.07	3.25	0	78.79	0	0.6	0	0	7.9	0	0	0	0	0	0	-31.24	-31.24
	Inverter Transformer	MV3-8 T	368685	4907712	2	0	0	56.1	56.1	1	2456.33	3.25	0	78.81	0	0.6	0	0	7.91	0	0	0	0	0	0	-31.25	-31.25
	Inverter Transformer	MV3-9 T	368517	4907703	2	0	0	56.1	56.1	1	2586.15	3.25	0	79.25	0	0.65	0	0	8.15	0	0	0	0	0	0	-31.99	-31.99
	Inverter Transformer	MV3-14 T	368678	4907498	2	0	0	56.1	56.1	1	2613.77	3.25	0	79.35	0	0.67	0	0	8.19	0	0	0	0	0	0	-32.15	-32.15
	Inverter Transformer	MV3-5 T	368335	4907843	2	0	0	56.1	56.1	1	2639.87	3.25	0	79.43	0	0.68	0	0	8.24	0	0	0	0	0	0	-32.29	-32.29
	Inverter Transformer	MV3-1 T	368150	4907976	2	0	0	56.1	56.1	1	2718.27	3.25	0	79.69	0	0.71	0	0	8.38	0	0	0	0	0	0	-32.72	-32.72
	Inverter Transformer	MV3-20 T	368683	4907317	2	0	0	56.1	56.1	1	2745.84	3.25	0	79.77	0	0.72	0	0	8.43	0	0	0	0	0	0	-32.87	-32.87
	Inverter Transformer	MV3-11 T	368340	4907662	2	0	0	56.1	56.1	1	2747.44	3.25	0	79.78	0	0.72	0	0	8.43	0	0	0	0	0	0	-32.87	-32.87
	Inverter Transformer	MV3-16 T	368509	4907475	2	0	0	56.1	56.1	1	2747.83	3.25	0	79.78	0	0.72	0	0	8.43	0	0	0	0	0	0	-32.88	-32.88
	Inverter Transformer	MV3-6 T	368156	4907834	2	0	0	56.1	56.1	1	2790.93	3.25	0	79.91	0	0.74	0	0	8.51	0	0	0	0	0	0	-33.11	-33.11
	Inverter Transformer	MV3-15 T	368351	4907477	2	0	0	56.1	56.1	1	2860.71	3.25	0	80.13	0	0.77	0	0	8.63	0	0	0	0	0	0	-33.47	-33.47
	Inverter Transformer	MV3-10 T	368162	4907669	2	0	0	56.1	56.1	1	2882.65	3.25	0	80.2	0	0.78	0	0	8.67	0	0	0	0	0	0	-33.58	-33.58
	Inverter Transformer	MV3-22 T	368661	4907142	2	0	0	56.1	56.1	1	2895.19	3.25	0	80.23	0	0.79	0	0	8.69	0	0	0	0	0	0	-33.65	-33.65
	Inverter Transformer	MV3-3 T	367944	4907927	2	0	0	56.1	56.1	1	2919.83	4.52	0	80.31	0	1.72	2.66	0	8.73	0	0	0	0	0	0	-37.36	-37.36
	Inverter Transformer	MV3-19 T	368352	4907347	2	0	0	56.1	56.1	1	2949.49	3.25	0	80.39	0	0.81	0	0	8.78	0	0	0	0	0	0	-33.93	-33.93
	Inverter Transformer	MV3-21 T	368484	4907206	2	0	0	56.1	56.1	1	2960.26	3.25	0	80.43	0	0.81	0	0	8.8	0	0	0	0	0	0	-33.98	-33.98
	Inverter Transformer	MV3-17 T	368183	4907472	2	0	0	56.1	56.1	1	2989.85	3.25	0	80.51	0	0.83	0	0	8.85	0	0	0	0	0	0	-34.13	-34.13
	Inverter Transformer	MV3-7 T	367951	4907754	2	0	0	56.1	56.1	1	3005.66	3.25	0	80.56	0	0.83	0	0	8.88	0	0	0	0	0	0	-34.21	-34.21
	Inverter Transformer	MV3-13 T	367958	4907577	2	0	0	56.1	56.1	1	3101.17	3.25	0	80.83	0	0.87	0	0	9.04	0	0	0	0	0	0	-34.68	-34.68
	Inverter Transformer	MV3-12 T	367674	4907594	2	0	0	56.1	56.1	1	3325.02	3.25	0	81.44	0	0.97	0	0	9.41	0	0	0	0	0	0	-35.75	-35.75
	Inverter Transformer	MV3-18 T	367757	4907412	2	0	0	56.1	56.1	1	3360.86	3.25	0	81.53	0	0.98	0	0	9.47	0	0	0	0	0	0	-35.92	-35.92
	Line Reactor	NGR	369421	4908787.5	5	0	0	45.4	45.4	1	1210.52	5.25	0	72.66	0	3.46	1.2	0.04	0.5	0	0	0	0	0	0	-32.47	-32.47
	Inverter Transformer	MV2-2 T	365982	4906654	2	0	0	56.1	56.1	1	5257.48	3.25	0	85.42	0	1.72	0	0	12.19	0	0	0	0	0	0	-43.26	-43.26
	Inverter Transformer	MV2-3 T	365814	4906641	2	0	0	56.1	56.1	1	5407.88	4.28	0	85.66	0	2.65	1.93	0	12.38	0	0	0	0	0	0	-46.56	-46.56
	Inverter Transformer	MV2-4 T	365590	4906628	2	0	0	56.1	56.1	1	5607.86	3.25	0	85.98	0	1.84	0	0	12.63	0	0	0	0	0	0	-44.38	-44.38
	Inverter Transformer	MV1-1 T	364721	4906166	2	0	0	56.1	56.1	1	6591.64	3.25	0	87.38	0	2.14	0	0	13.78	0	0	0	0	0	0	-47.25	-47.25
	Inverter Transformer	MV1-2 T	364759	4906063	2	0	0	56.1	56.1	1	6610.17	4.23	0	87.4	0	2.96	1.66	0	13.8	0	0	0	0	0	0	-49.76	-49.76
	Inverter Transformer	MV1-4 T	364821	4905918	2	0	0	56.1	56.1	1	6632.03	3.25	0	87.43	0	2.16	0	0	13.83	0	0	0	0	0	0	-47.36	-47.36
	Inverter Transformer	MV1-12 T	365044	4905386	2	0	0	56.1	56.1	1	6746.86	3.25	0	87.58	0	2.19	0	0	13.95	0	0	0	0	0	0	-47.67	-47.67
	Inverter Transformer	MV1-5 T	364676	4905892	2	0	0	56.1	56.1	1	6769.19	4.22	0	87.61	0	2.99	1.63	0	13.98	0	0	0	0	0	0	-50.15	-50.15
	Inverter Transformer	MV1-15 T	365309	4904994	2	0	0	56.1	56.1	1	6784.61	3.25	0	87.63	0	2.2	0	0	14	0	0	0	0	0	0	-47.77	-47.77
	Inverter Transformer	MV1-8 T	364782	4905647	2	0	0	56.1	56.1	1	6811.18	3.25	0	87.66	0	2.21	0	0	14.03	0	0	0	0	0	0	-47.84	-47.84
	Inverter Transformer	MV1-3 T	364435	4906039	2	0	0	56.1	56.1	1	6903.16	3.25	0	87.78	0	2.23	0	0	14.13	0	0	0	0	0	0	-48.08	-48.08
	Inverter Transformer	MV1-6 T	364482	4905835	2	0	0	56.1	56.1	1	6964.73	4.22	0	87.86	0	3.03	1.59	0	14.19	0	0	0	0	0	0	-50.61	-50.61
	Inverter Transformer	MV1-9 T	364555	4905646	2	0	0	56.1	56.1	1	7002.01	3.25	0	87.9	0	2.26	0	0	14.23	0	0	0	0	0	0	-48.34	-48.34
	Inverter Transformer	MV1-11 T	364649	4905414	2	0	0	56.1	56.1	1	7051.84	3.25	0	87.97	0	2.27	0	0	14.29	0	0	0	0	0	0	-48.47	-48.47
Limit. Valu	0	0																								
Level D/N:	35.1738	35.1738																								

Receiver: Existing Noise Receptor
ID: S-R82
X: 370407
Y: 4909521
Z: 4.5
Ground: 0

ISO	Description	ID	X	Y	Z	Ground	ReflOrd	LxT	LxN	L/A	Dist.	hm	Freq	Adiv	K0b	Agr	Abar	z	Aatm	Afol	Ahous	Cmet	CmetN	Dc	RL	LtotT	LtotN
	Sol_Luce Substation	S_Substation	369426	4908792	3.5	0	0	112.1	112.1	1	1222.21	5.25	0	72.74	0	0.06	5.18	0.38	2.96	0	0	0	0	0	0	31.12	31.12
	Inverter	MV5-1	370020	4909142	2	0	0	100.3	100.3	1	541.68	3.25	0	65.67	0	-0.52	0	0	8.83	0	0	0	0	0	0	26.33	26.33
	Inverter	MV5-3	370231	4908851	2	0	0	100.3	100.3	1	692.74	3.25	0	67.81	0	-0.42	0	0	9.7	0	0	0	0	0	0	23.21	23.21
	Inverter	MV5-2	370006	4908853	2	0	0	100.3	100.3	1	779.12	3.25	0	68.83	0	-0.36	0	0	10.09	0	0	0	0	0	0	21.75	21.75
	Inverter	MV5-4	370324	4908707	2	0	0	100.3	100.3	1	818.22	3.25	0	69.26	0	-0.34	0	0	10.25	0	0	0	0	0	0	21.14	21.14
	Inverter	MV5-5	370015	4908690	2	0	0	100.3	100.3	1	918.82	3.25	0	70.26	0	-0.29	0	0	10.63	0	0	0	0	0	0	19.7	19.7
	Inverter	MV4-2	369272	4909397	2	0	0	100.3	100.3	1	1141.76	3.25	0	72.15	0	-0.18	0	0	11.36	0	0	0	0	0	0	16.99	16.99
	Inverter	MV4-5	369289	4909199	2	0	0	100.3	100.3	1	1163.45	3.25	0	72.31	0	-0.17	0	0	11.42	0	0	0	0	0	0	16.75	16.75
	Inverter	MV4-3	369229	4909397	2	0	0	100.3	100.3	1	1184.51	3.25	0	72.47	0	-0.16	0	0	11.48	0	0	0	0	0	0	16.52	16.52
	Inverter	MV4-6	369243	4909192	2	0	0	100.3	100.3	1	1209.6	3.25	0	72.65	0	-0.15	0	0	11.55	0	0	0	0	0	0	16.26	16.26
	Inverter	MV4-9	369289	4909001	2	0	0	100.3	100.3	1	1233.02	3.25	0	72.82	0	-0.14	0	0	11.62	0	0	0	0	0	0	16.01	16.01
	Inverter	MV4-8	369256	4909001	2	0	0	100.3	100.3	1	1263.02	3.25	0	73.03	0	-0.13	0	0	11.7	0	0	0	0	0	0	15.71	15.71
	Inverter	MV4-10	369312	4908858	2	0	0	100.3	100.3	1	1280.08	3.25	0	73.14	0	-0.12	0	0	11.75	0	0	0	0	0	0	15.54	15.54
	Inverter	MV4-11	369264	4908855	2	0	0	100.3	100.3	1	1322.88	3.25	0	73.43	0	-0.1	0	0	11.87	0	0	0	0	0	0	15.12	15.12
	Inverter	MV4-1	369011	4909397	2	0	0	100.3	100.3	1	1401.5	3.25	0	73.93	0	-0.07	0	0	12.07	0	0	0	0	0	0	14.38	14.38
	Inverter	MV4-4	369027	4909199	2	0	0	100.3	100.3	1	1417.07	3.25	0	74.03	0	-0.06	0	0	12.12	0	0	0	0	0	0	14.23	14.23
	Inverter	MV4-7	369035	4909001	2	0	0	100.3	100.3	1	1467.24	3.25	0	74.33	0	-0.05	0	0	12.24	0	0	0	0	0	0	13.79	13.79
	DSTATCOM - 10 MVAR #1	DSAT1	369437	4908757	2.5	0	0	96.6	96.6	1	1234.75	3.5	0	72.83	0	3.04	0	0	1.23	0	0	0	0	0	0	19.53	19.53
	DSTATCOM - 10 MVAR #2	DSAT2	369403	4908757	2.5	0	0	96.6	96.6	1	1261.63	3.5	0	73.02	0	3.05	0	0	1.25	0	0	0	0	0	0	19.31	19.31
	Inverter	MV6-2	370085	4907339	2	0	0	100.3	100.3	1	2205.63	3.25	0	77.87	0	0.19	0	0	13.88	0	0	0	0	0	0	8.37	8.37
	Inverter	MV6-3	370207	4907140	2	0	0	100.3	100.3	1	2389.39	3.25	0	78.57	0	0.23	0	0	14.25	0	0	0	0	0	0	7.27	7.27
	Inverter	MV3-8	368680	4907712	2	0	0	100.3	100.3	1	2501	3.25	0	78.96	0	0.26	0	0	14.46	0	0	0	0	0	0	6.63	6.63
	Inverter	MV3-9	368512	4907703	2	0	0	100.3	100.3	1	2626.05	3.25	0	79.39	0	0.29	0	0	14.69	0	0	0	0	0	0	5.95	5.95
	Inverter	MV3-14	368684	4907498	2	0	0	100.3	100.3	1	2657.3	3.25	0	79.49	0	0.29	0	0	14.75	0	0	0	0	0	0	5.78	5.78

Inverter	MV3-11	368346	4907662	2	0	0	100.3	100.3	1	2775.54	3.25	0	79.87	0	0.32	0	0	14.97	0	0	0	0	0	0	5.16	5.16
Inverter	MV3-16	368514	4907475	2	0	0	100.3	100.3	1	2787.4	3.25	0	79.9	0	0.32	0	0	14.99	0	0	0	0	0	0	5.1	5.1
Inverter	MV3-20	368689	4907317	2	0	0	100.3	100.3	1	2794.48	3.25	0	79.93	0	0.32	0	0	15	0	0	0	0	0	0	5.06	5.06
Inverter	MV3-6	368162	4907834	2	0	0	100.3	100.3	1	2808.2	4.55	0	79.97	0	1.08	3.24	0	15.03	0	0	0	0	0	0	1	1
Inverter	MV3-15	368357	4907477	2	0	0	100.3	100.3	1	2894.9	3.25	0	80.23	0	0.34	0	0	15.19	0	0	0	0	0	0	4.55	4.55
Inverter	MV3-10	368167	4907669	2	0	0	100.3	100.3	1	2906.46	3.25	0	80.27	0	0.34	0	0	15.21	0	0	0	0	0	0	4.5	4.5
Inverter	MV3-3	367939	4907927	2	0	0	100.3	100.3	1	2938	3.25	0	80.36	0	0.35	0	0	15.26	0	0	0	0	0	0	4.34	4.34
Inverter	MV3-19	368357	4907347	2	0	0	100.3	100.3	1	2988.11	3.25	0	80.51	0	0.36	0	0	15.35	0	0	0	0	0	0	4.09	4.09
Inverter	MV3-21	368478	4907206	2	0	0	100.3	100.3	1	3013.35	3.25	0	80.58	0	0.36	0	0	15.4	0	0	0	0	0	0	3.97	3.97
Inverter	MV3-17	368178	4907472	2	0	0	100.3	100.3	1	3027.68	3.25	0	80.62	0	0.37	0	0	15.42	0	0	0	0	0	0	3.9	3.9
Inverter	MV3-7	367945	4907754	2	0	0	100.3	100.3	1	3030.47	3.25	0	80.63	0	0.37	0	0	15.43	0	0	0	0	0	0	3.89	3.89
Inverter	MV6-1	370235	4907364	2	0	0	97.3	97.3	1	2163.85	3.25	0	77.7	0	0.17	0	0	13.8	0	0	0	0	0	0	5.63	5.63
Inverter	MV3-13	367963	4907577	2	0	0	100.3	100.3	1	3122.86	3.25	0	80.89	0	0.39	0	0	15.59	0	0	0	0	0	0	3.45	3.45
Inverter	MV3-12	367668	4907594	2	0	0	100.3	100.3	1	3348.95	3.25	0	81.5	0	0.43	0	0	15.98	0	0	0	0	0	0	2.41	2.41
Inverter	MV3-18	367752	4907412	2	0	0	100.3	100.3	1	3390.71	3.25	0	81.61	0	0.43	0	0	16.05	0	0	0	0	0	0	2.23	2.23
Inverter	MV5-6	369982	4908507	2	0	0	89.1	89.1	1	1099.47	3.25	0	71.82	0	0.71	0	0	6.5	0	0	0	0	0	0	10.03	10.03
Fixed Reactor Bank 2	FRB2	369464	4908755	6	0	0	89.8	89.8	1	1214.91	5.25	0	72.69	0	-1.03	0	0	2.95	0	0	0	0	0	0	15.17	15.17
Fixed Reactor Bank 1	FRB1	369378	4908755	6	0	0	89.8	89.8	1	1282.81	5.29	0	73.16	0	-0.7	4.22	0	3.08	0	0	0	0	0	0	10.01	10.01
Inverter	MV2-3	365820	4906641	2	0	0	100.3	100.3	1	5416.18	3.25	0	85.67	0	0.67	0	0	19.18	0	0	0	0	0	0	-5.22	-5.22
Inverter	MV2-4	365586	4906624	2	0	0	100.3	100.3	1	5624.47	3.25	0	86	0	0.69	0	0	19.48	0	0	0	0	0	0	-5.85	-5.85
Inverter	MV4-12	369043	4908803	2	0	0	89.1	89.1	1	1541.44	3.25	0	74.76	0	0.8	0	0	7.28	0	0	0	0	0	0	6.22	6.22
Inverter	MV4-14	369176	4908507	2	0	0	89.1	89.1	1	1594.86	3.25	0	75.05	0	0.81	0	0	7.37	0	0	0	0	0	0	5.82	5.82
Inverter	MV4-15	369176	4908481	2	0	0	89.1	89.1	1	1611.51	3.25	0	75.14	0	0.82	0	0	7.4	0	0	0	0	0	0	5.7	5.7
Inverter	MV4-13	369051	4908605	2	0	0	89.1	89.1	1	1636.4	3.25	0	75.28	0	0.82	0	0	7.44	0	0	0	0	0	0	5.52	5.52
Inverter	MV1-1	364715	4906166	2	0	0	100.3	100.3	1	6607.19	3.25	0	87.4	0	0.72	0	0	20.8	0	0	0	0	0	0	-8.6	-8.6
Inverter	MV1-2	364753	4906063	2	0	0	100.3	100.3	1	6627.63	3.25	0	87.43	0	0.71	0	0	20.82	0	0	0	0	0	0	-8.65	-8.65
Inverter	MV1-4	364815	4905918	2	0	0	100.3	100.3	1	6652.22	3.25	0	87.46	0	0.71	0	0	20.86	0	0	0	0	0	0	-8.72	-8.72
Inverter	MV1-12	365038	4905386	2	0	0	100.3	100.3	1	6776.75	3.25	0	87.62	0	0.71	0	0	21.02	0	0	0	0	0	0	-9.04	-9.04
Inverter	MV1-5	364671	4905892	2	0	0	100.3	100.3	1	6787.59	3.25	0	87.63	0	0.71	0	0	21.03	0	0	0	0	0	0	-9.07	-9.07
Inverter	MV1-15	365315	4904994	2	0	0	100.3	100.3	1	6813.38	3.25	0	87.67	0	0.71	0	0	21.06	0	0	0	0	0	0	-9.13	-9.13
Inverter	MV1-8	364788	4905647	2	0	0	100.3	100.3	1	6825.03	3.25	0	87.68	0	0.71	0	0	21.08	0	0	0	0	0	0	-9.16	-9.16
Inverter	MV1-6	364477	4905835	2	0	0	100.3	100.3	1	6982.23	3.25	0	87.88	0	0.71	0	0	21.28	0	0	0	0	0	0	-9.55	-9.55
Inverter	MV1-9	364561	4905646	2	0	0	100.3	100.3	1	7013.65	3.25	0	87.92	0	0.71	0	0	21.32	0	0	0	0	0	0	-9.63	-9.63
Inverter	MV1-11	364655	4905414	2	0	0	100.3	100.3	1	7067.74	3.25	0	87.99	0	0.71	0	0	21.38	0	0	0	0	0	0	-9.77	-9.77
Inverter	MV2-1	365842	4906816	2	0	0	97.3	97.3	1	5306.25	3.25	0	85.5	0	0.67	0	0	19.02	0	0	0	0	0	0	-7.88	-7.88
Inverter	MV3-2	368671	4907928	2	0	0	89.1	89.1	1	2356.13	3.25	0	78.44	0	0.99	0	0	8.62	0	0	0	0	0	0	1	1
Inverter	MV3-4	368502	4907925	2	0	0	89.1	89.1	1	2485.21	3.25	0	78.91	0	1.02	0	0	8.82	0	0	0	0	0	0	0.31	0.31
SubstationTransformer	W_ST	369711.17	4906112.3	2.5	0	0	92	92	1	3479.03	3.5	0	81.83	0	0.2	0	0	6.65	0	0	0	0	0	0	3.29	3.29
Inverter	MV1-7	364925	4905782	2	0	0	97.3	97.3	1	6635.7	3.25	0	87.44	0	0.71	0	0	20.84	0	0	0	0	0	0	-11.68	-11.68
Inverter	MV1-10	365004	4905564	2	0	0	97.3	97.3	1	6697.03	4.23	0	87.52	0	1.75	2.36	0	20.91	0	0	0	0	0	0	-15.23	-15.23
Inverter	MV3-5	368340	4907843	2	0	0	89.1	89.1	1	2662.36	3.25	0	79.51	0	1.06	0	0	9.1	0	0	0	0	0	0	-0.61	-0.61
Inverter	MV1-14	365163	4905049	2	0	0	97.3	97.3	1	6891.9	3.25	0	87.77	0	0.71	0	0	21.16	0	0	0	0	0	0	-12.33	-12.33
Inverter	MV3-1	368156	4907976	2	0	0	89.1	89.1	1	2730.21	3.25	0	79.72	0	1.08	0	0	9.2	0	0	0	0	0	0	-0.95	-0.95
Inverter	MV1-13	364731	4905241	2	0	0	97.3	97.3	1	7108.82	4.22	0	88.04	0	1.77	2.28	0	21.44	0	0	0	0	0	0	-16.22	-16.22
Inverter	MV3-22	368656	4907142	2	0	0	89.1	89.1	1	2953.92	3.25	0	80.41	0	1.14	0	0	9.55	0	0	0	0	0	0	-2.03	-2.03
Westbrook Inverter Enclosur	W_INV6	369875	4906578	2	0	0	89.1	89.1	1	2990.7	3.25	0	80.52	0	1.14	0	0	9.6	0	0	0	0	0	0	-2.2	-2.2
Westbrook Inverter Enclosur	W_INV5	369719	4906574	2	0	0	89.1	89.1	1	3026.25	3.25	0	80.62	0	1.15	0	0	9.66	0	0	0	0	0	0	-2.37	-2.37
Westbrook Inverter Enclosur	W_INV7	369780	4906417	2	0	0	89.1	89.1	1	3166.69	3.25	0	81.01	0	1.19	0	0	9.87	0	0	0	0	0	0	-3.01	-3.01
Westbrook Inverter Enclosur	W_INV2	369374	4906388	2	0	0	89.1	89.1	1	3298.91	3.25	0	81.37	0	1.22	0	0	10.07	0	0	0	0	0	0	-3.59	-3.59
Westbrook Inverter Enclosur	W_INV4	369673	4906164	2	0	0	89.1	89.1	1	3436.31	3.25	0	81.72	0	1.25	0	0	10.27	0	0	0	0	0	0	-4.19	-4.19
Westbrook Inverter Enclosur	W_INV3	369508	4906164	2	0	0	89.1	89.1	1	3475.29	3.25	0	81.82	0	1.26	0	0	10.33	0	0	0	0	0	0	-4.35	-4.35
Inverter	MV6-4	370250	4906966	2	0	0	86.1	86.1	1	2559.82	3.25	0	79.16	0	1.04	0	0	8.94	0	0	0	0	0	0	-3.09	-3.09
Westbrook Inverter Enclosur	W_INV1	369409	4906578	2	0	0	86.1	86.1	1	3107.61	3.25	0	80.85	0	1.17	0	0	9.78	0	0	0	0	0	0	-5.74	-5.74
Inverter	MV2-2	365977	4906654	2	0	0	89.1	89.1	1	5276.8	3.25	0	85.45	0	1.71	0	0	12.83	0	0	0	0	0	0	-10.93	-10.93
Gardiner Substation	G_Sub	366586.3	4903349.9	2.5	0	0	90.8	90.8	1	7258.11	4.25	0	88.22	0	2.1	1.86	0.38	10.99	0	0	0	0	0	0	-12.39	-12.39
Inverter	MV1-3	364440	4906039	2	0	0	89.1	89.1	1	6908.65	3.25	0	87.79	0	2.11	0	0	14.88	0	0	0	0	0	0	-15.71	-15.71
Inverters	G_Inv2	366676.9	4903239.1	2	0	0	87.7	87.7	1	7305.88	3.25	0	88.27	0	2.96	0	0	8.29	0	0	0	0	0	0	-11.86	-11.86
Inverters	G_Inv4	366732.8	4903105	2	0	0	87.7	87.7	1	7393.57	3.25	0	88.38	0	2.96	0	0	8.38	0	0	0	0	0	0	-12.06	-12.06
Inverters	G_Inv1	366526.4	4903225.8	2	0	0	87.7	87.7	1	7395.17	3.25	0	88.38	0	2.96	0	0	8.38	0	0	0	0	0	0	-12.06	-12.06
Inverters	G_Inv3	366583.7	4903091.4	2	0	0	87.7	87.7	1	7480.47	3.25	0	88.48	0	2.96	0	0	8.47	0	0	0	0	0	0	-12.24	-12.24
Inverters	G_Inv6	366788.5	4902972	2	0	0	87.7	87.7	1	7482.18	3.25	0	88.48	0	2.96	0	0	8.47	0	0	0	0	0	0	-12.25	-12.25
Inverters	G_Inv5	366638.5	4902958.1	2	0	0	87.7	87.7	1	7567.91	3.25	0	88.58	0	2.96	0	0	8.55	0	0	0	0	0	0	-12.43	-12.43
Inverters	G_Inv8	366844.5	4902838.5	2	0	0	87.7	87.7	1	7572.79	3.25	0	88.59	0	2.96	0	0	8.56	0	0	0	0	0	0	-12.44	-12.44
Inverters	G_Inv7	366694.6	4902824.7	2	0	0	87.7	87.7	1	7656.52	3.25	0	88.68	0	2.96	0	0	8.64	0	0	0	0	0	0	-12.62	-12.62
Inverters	G_Inv10	366900.7	4902704.8	2	0	0	87.7	87.7	1	7665.16	3.25	0	88.69	0	2.96	0	0	8.65	0	0	0	0	0	0	-12.64	-12.64
Inverters	G_Inv9	366750.9	4902691.8	2	0	0	87.7	87.7	1	7746.29	3.25	0	88.78	0	2.96	0	0	8.73	0	0	0	0	0	0	-12.81	-12.81
Westbrook Inverter Transfor	W_INVTR1	369403	4906578	2	0	0	78.2	78.2	1	3109.55	3.25	0	80.85	0	-2.74	0	0	1.7	0	0	0	0	0	0	-1.57	-1.57
Westbrook Inverter Transfor	W_INVTR6	369881	4906578	2	0	0	77.3	77.3	1	2989.64	3.25	0	80.51	0	-2.71	0	0	1.65	0	0	0	0	0	0	-2.11	-2.11
Westbrook Inverter Transfor	W_INVTR5	369725	4906574	2	0	0	77.3	77.3	1	3024.89	3.25	0	80.61	0	-2.72	0	0	1.67	0	0	0	0	0	0	-2.22	-2.22
Westbrook Inverter Transfor	W_INVTR7	369786	4906417	2	0	0	77.3	77.3	1	3165.51	3.25	0	81.01	0	-2.76	0	0	1.73	0	0	0	0	0	0	-2.63	-2.63
Westbrook Inverter Transfor	W_INVTR2	369368	4906388	2	0	0	77.3	77.3	1	3300.79	3.25	0	81.37	0	-2.79	0	0	1.78	0	0	0	0	0	0	-3.02	-3.02
Westbrook Inverter Transfor	W_INVTR4	369679	4906164	2	0	0	77.3	77.3	1	3435.03	3.25	0	81.72	0	-2.83	0	0	1.84	0	0	0	0	0	0	-3.38	-3.38
Westbrook Inverter Transfor	W_INVTR3	369514	4906164	2	0	0	77.3	77.3	1	3473.74	3.25	0	81.82	0	-2.84	0	0	1.85	0	0	0	0	0	0	-3.49	-3.49
Inverter Transformer	MV6-1 T	370230	4907364	2	0	0	69.4	69.4	1	2164.25	3.25	0	77.71	0	2.23	0	0	5.13	0	0	0	0	0	0	-15.72	-15.72

Inverter Transformer	MV5-1 T	370015	4909142	2	0	0	56.1	56.1	1	545.26	3.25	0	65.73	0	-0.11	0	0	3.69	0	0	0	0	0	0	-13.25	-13.25
Inverter Transformer	MV6-4 T	370244	4906966	2	0	0	69.4	69.4	1	2560.2	3.25	0	79.17	0	2.37	0	0	5.5	0	0	0	0	0	0	-17.68	-17.68
Inverter Transformer	MV5-3 T	370237	4908851	2	0	0	56.1	56.1	1	691.24	3.25	0	67.79	0	-0.08	0	0	4.11	0	0	0	0	0	0	-15.76	-15.76
Inverter Transformer	MV5-2 T	370011	4908853	2	0	0	56.1	56.1	1	776.56	3.25	0	68.8	0	-0.06	0	0	4.33	0	0	0	0	0	0	-17.02	-17.02
Inverter Transformer	MV5-4 T	370330	4908707	2	0	0	56.1	56.1	1	817.64	3.25	0	69.25	0	-0.05	0	0	4.44	0	0	0	0	0	0	-17.59	-17.59
Inverter Transformer	MV5-5 T	370021	4908690	2	0	0	56.1	56.1	1	916.28	3.25	0	70.24	0	-0.02	0	0	4.69	0	0	0	0	0	0	-18.85	-18.85
Inverter Transformer	MV5-6 T	369987	4908507	2	0	0	56.1	56.1	1	1097.54	3.25	0	71.81	0	0.05	0	0	5.12	0	0	0	0	0	0	-20.92	-20.92
Inverter Transformer	MV4-2 T	369267	4909397	2	0	0	56.1	56.1	1	1146.73	3.25	0	72.19	0	0.06	0	0	5.23	0	0	0	0	0	0	-21.43	-21.43
Inverter Transformer	MV2-1 T	365836	4906816	2	0	0	69.4	69.4	1	5311.41	3.25	0	85.5	0	3.07	0	0	7.59	0	0	0	0	0	0	-26.81	-26.81
Inverter Transformer	MV4-5 T	369283	4909199	2	0	0	56.1	56.1	1	1169.22	3.25	0	72.36	0	0.07	0	0	5.29	0	0	0	0	0	0	-21.66	-21.66
Inverter Transformer	MV4-3 T	369234	4909397	2	0	0	56.1	56.1	1	1179.54	3.25	0	72.43	0	0.08	0	0	5.31	0	0	0	0	0	0	-21.76	-21.76
Inverter Transformer	MV4-6 T	369249	4909192	2	0	0	56.1	56.1	1	1203.83	3.25	0	72.61	0	0.08	0	0	5.36	0	0	0	0	0	0	-22	-22
Inverter Transformer	MV4-9 T	369284	4909001	2	0	0	56.1	56.1	1	1237.55	3.25	0	72.85	0	0.1	0	0	5.44	0	0	0	0	0	0	-22.33	-22.33
Inverter Transformer	MV4-8 T	369262	4909001	2	0	0	56.1	56.1	1	1257.55	3.25	0	72.99	0	0.1	0	0	5.49	0	0	0	0	0	0	-22.52	-22.52
Inverter Transformer	MV4-10 T	369307	4908858	2	0	0	56.1	56.1	1	1284.36	3.25	0	73.17	0	0.12	0	0	5.55	0	0	0	0	0	0	-22.78	-22.78
Inverter Transformer	MV4-11 T	369269	4908855	2	0	0	56.1	56.1	1	1318.56	3.25	0	73.4	0	0.13	0	0	5.62	0	0	0	0	0	0	-23.09	-23.09
Inverter Transformer	MV4-1 T	369017	4909397	2	0	0	56.1	56.1	1	1395.52	3.25	0	73.89	0	0.16	0	0	5.79	0	0	0	0	0	0	-23.79	-23.79
Inverter Transformer	MV4-4 T	369033	4909199	2	0	0	56.1	56.1	1	1411.23	3.25	0	73.99	0	0.16	0	0	5.83	0	0	0	0	0	0	-23.92	-23.92
Inverter Transformer	MV1-7 T	364919	4905782	2	0	0	69.4	69.4	1	6640.65	3.25	0	87.44	0	3.28	0	0	8.4	0	0	0	0	0	0	-29.77	-29.77
Inverter Transformer	MV1-10 T	365010	4905564	2	0	0	69.4	69.4	1	6692.19	4.23	0	87.51	0	3.9	0.7	0	8.43	0	0	0	0	0	0	-31.18	-31.18
Inverter Transformer	MV4-7 T	369040	4909001	2	0	0	56.1	56.1	1	1462.56	3.25	0	74.3	0	0.18	0	0	5.94	0	0	0	0	0	0	-24.37	-24.37
Inverter Transformer	MV1-14 T	365157	4905049	2	0	0	69.4	69.4	1	6896.47	3.25	0	87.77	0	3.31	0	0	8.54	0	0	0	0	0	0	-30.27	-30.27
Inverter Transformer	MV4-12 T	369049	4908803	2	0	0	56.1	56.1	1	1536.13	3.25	0	74.73	0	0.21	0	0	6.1	0	0	0	0	0	0	-24.98	-24.98
Inverter Transformer	MV1-13 T	364725	4905241	2	0	0	69.4	69.4	1	7113.62	4.22	0	88.04	0	3.92	0.67	0	8.67	0	0	0	0	0	0	-31.95	-31.95
Inverter Transformer	MV4-14 T	369182	4908507	2	0	0	56.1	56.1	1	1590.23	3.25	0	75.03	0	0.23	0	0	6.21	0	0	0	0	0	0	-25.42	-25.42
Inverter Transformer	MV4-15 T	369170	4908481	2	0	0	56.1	56.1	1	1616.1	3.25	0	75.17	0	0.25	0	0	6.26	0	0	0	0	0	0	-25.62	-25.62
Inverter Transformer	MV4-13 T	369057	4908605	2	0	0	56.1	56.1	1	1631.43	3.25	0	75.25	0	0.25	0	0	6.3	0	0	0	0	0	0	-25.74	-25.74
Inverter Transformer	MV6-2 T	370091	4907339	2	0	0	56.1	56.1	1	2204.76	3.25	0	77.87	0	0.49	0	0	7.44	0	0	0	0	0	0	-29.74	-29.74
Inverter Transformer	MV3-2 T	368677	4907928	2	0	0	56.1	56.1	1	2351.71	3.25	0	78.43	0	0.55	0	0	7.72	0	0	0	0	0	0	-30.64	-30.64
Inverter Transformer	MV6-3 T	370202	4907140	2	0	0	56.1	56.1	1	2389.81	3.25	0	78.57	0	0.57	0	0	7.79	0	0	0	0	0	0	-30.87	-30.87
Inverter Transformer	MV3-4 T	368507	4907925	2	0	0	56.1	56.1	1	2481.38	3.25	0	78.89	0	0.61	0	0	7.96	0	0	0	0	0	0	-31.4	-31.4
Inverter Transformer	MV3-8 T	368685	4907712	2	0	0	56.1	56.1	1	2497.55	3.25	0	78.95	0	0.62	0	0	7.99	0	0	0	0	0	0	-31.49	-31.49
Inverter Transformer	MV3-9 T	368517	4907703	2	0	0	56.1	56.1	1	2622.45	3.25	0	79.37	0	0.67	0	0	8.21	0	0	0	0	0	0	-32.2	-32.2
Inverter Transformer	MV3-14 T	368678	4907498	2	0	0	56.1	56.1	1	2661.2	3.25	0	79.5	0	0.69	0	0	8.28	0	0	0	0	0	0	-32.41	-32.41
Inverter Transformer	MV3-5 T	368335	4907843	2	0	0	56.1	56.1	1	2666.25	3.25	0	79.52	0	0.69	0	0	8.29	0	0	0	0	0	0	-32.44	-32.44
Inverter Transformer	MV3-1 T	368150	4907976	2	0	0	56.1	56.1	1	2735.16	3.25	0	79.74	0	0.72	0	0	8.41	0	0	0	0	0	0	-32.81	-32.81
Inverter Transformer	MV3-11 T	368340	4907662	2	0	0	56.1	56.1	1	2780	3.25	0	79.88	0	0.74	0	0	8.49	0	0	0	0	0	0	-33.05	-33.05
Inverter Transformer	MV3-16 T	368509	4907475	2	0	0	56.1	56.1	1	2790.79	3.25	0	79.91	0	0.74	0	0	8.51	0	0	0	0	0	0	-33.1	-33.1
Inverter Transformer	MV3-20 T	368683	4907317	2	0	0	56.1	56.1	1	2798.18	3.25	0	79.94	0	0.74	0	0	8.52	0	0	0	0	0	0	-33.14	-33.14
Inverter Transformer	MV3-6 T	368156	4907834	2	0	0	56.1	56.1	1	2813	4.55	0	79.98	0	1.67	2.69	0	8.55	0	0	0	0	0	0	-36.84	-36.84
Inverter Transformer	MV3-15 T	368351	4907477	2	0	0	56.1	56.1	1	2899.15	3.25	0	80.25	0	0.79	0	0	8.7	0	0	0	0	0	0	-33.67	-33.67
Inverter Transformer	MV3-10 T	368162	4907669	2	0	0	56.1	56.1	1	2910.32	3.25	0	80.28	0	0.79	0	0	8.72	0	0	0	0	0	0	-33.73	-33.73
Inverter Transformer	MV3-3 T	367944	4907927	2	0	0	56.1	56.1	1	2933.8	3.25	0	80.35	0	0.8	0	0	8.76	0	0	0	0	0	0	-33.85	-33.85
Inverter Transformer	MV3-22 T	368661	4907142	2	0	0	56.1	56.1	1	2950.96	3.25	0	80.4	0	0.81	0	0	8.78	0	0	0	0	0	0	-33.93	-33.93
Inverter Transformer	MV3-19 T	368352	4907347	2	0	0	56.1	56.1	1	2991.54	3.25	0	80.52	0	0.83	0	0	8.85	0	0	0	0	0	0	-34.14	-34.14
Inverter Transformer	MV3-21 T	368484	4907206	2	0	0	56.1	56.1	1	3009.51	3.25	0	80.57	0	0.83	0	0	8.88	0	0	0	0	0	0	-34.23	-34.23
Inverter Transformer	MV3-17 T	368183	4907472	2	0	0	56.1	56.1	1	3024	3.25	0	80.61	0	0.84	0	0	8.91	0	0	0	0	0	0	-34.3	-34.3
Inverter Transformer	MV3-7 T	367951	4907754	2	0	0	56.1	56.1	1	3025.6	3.25	0	80.62	0	0.84	0	0	8.91	0	0	0	0	0	0	-34.31	-34.31
Inverter Transformer	MV3-13 T	367958	4907577	2	0	0	56.1	56.1	1	3126.78	3.25	0	80.9	0	0.88	0	0	9.08	0	0	0	0	0	0	-34.81	-34.81
Inverter Transformer	MV3-12 T	367674	4907594	2	0	0	56.1	56.1	1	3344.04	3.25	0	81.49	0	0.98	0	0	9.44	0	0	0	0	0	0	-35.84	-35.84
Inverter Transformer	MV3-18 T	367757	4907412	2	0	0	56.1	56.1	1	3386.8	3.25	0	81.6	0	0.99	0	0	9.51	0	0	0	0	0	0	-36.04	-36.04
Line Reactor	NGR	369421	4908787.5	5	0	0	45.4	45.4	1	1228.91	5.25	0	72.79	0	3.46	1.21	0.04	0.5	0	0	0	0	0	0	-32.61	-32.61
Inverter Transformer	MV2-2 T	365982	4906654	2	0	0	56.1	56.1	1	5272.6	3.25	0	85.44	0	1.72	0	0	12.21	0	0	0	0	0	0	-43.31	-43.31
Inverter Transformer	MV2-3 T	365814	4906641	2	0	0	56.1	56.1	1	5421.26	3.25	0	85.68	0	1.77	0	0	12.4	0	0	0	0	0	0	-43.79	-43.79
Inverter Transformer	MV2-4 T	365590	4906628	2	0	0	56.1	56.1	1	5618.98	3.25	0	85.99	0	1.84	0	0	12.64	0	0	0	0	0	0	-44.42	-44.42
Inverter Transformer	MV1-1 T	364721	4906166	2	0	0	56.1	56.1	1	6602.02	3.25	0	87.39	0	2.15	0	0	13.79	0	0	0	0	0	0	-47.28	-47.28
Inverter Transformer	MV1-2 T	364759	4906063	2	0	0	56.1	56.1	1	6622.51	3.25	0	87.42	0	2.15	0	0	13.82	0	0	0	0	0	0	-47.33	-47.33
Inverter Transformer	MV1-4 T	364821	4905918	2	0	0	56.1	56.1	1	6647.18	3.25	0	87.45	0	2.16	0	0	13.84	0	0	0	0	0	0	-47.4	-47.4
Inverter Transformer	MV1-12 T	365044	4905386	2	0	0	56.1	56.1	1	6772	3.25	0	87.61	0	2.2	0	0	13.98	0	0	0	0	0	0	-47.73	-47.73
Inverter Transformer	MV1-5 T	364676	4905892	2	0	0	56.1	56.1	1	6783.36	3.25	0	87.63	0	2.2	0	0	13.99	0	0	0	0	0	0	-47.76	-47.76
Inverter Transformer	MV1-15 T	365309	4904994	2	0	0	56.1	56.1	1	6817.87	3.25	0	87.67	0	2.21	0	0	14.03	0	0	0	0	0	0	-47.86	-47.86
Inverter Transformer	MV1-8 T	364782	4905647	2	0	0	56.1	56.1	1	6829.97	3.25	0	87.69	0	2.21	0	0	14.05	0	0	0	0	0	0	-47.89	-47.89
Inverter Transformer	MV1-3 T	364435	4906039	2	0	0	56.1	56.1	1	6912.97	3.25	0	87.79	0	2.24	0	0	14.14	0	0	0	0	0	0	-48.11	-48.11
Inverter Transformer	MV1-6 T	364482	4905835	2	0	0	56.1	56.1	1	6977.98	3.25	0	87.87	0	2.25	0	0	14.21	0	0	0	0	0	0	-48.28	-48.28
Inverter Transformer	MV1-9 T	364555	4905646	2	0	0	56.1	56.1	1	7018.66	3.25	0	87.93	0	2.26	0	0	14.25	0	0	0	0	0	0	-48.38	-48.38
Inverter Transformer	MV1-11 T	364649	4905414	2	0	0	56.1	56.1	1	7072.62	3.25	0	87.99	0	2.28	0	0	14.31	0	0	0	0	0	0	-48.52	-48.52
Limit. Valu 0		0																							
Level D/N: 34.8271		34.8271																							

Receiver: Existing Noise Receptor
ID: S-R83
X: 370423
Y: 4909650
Z: 4.5

Ground: 0

ISO	Description	ID	X	Y	Z	Ground	ReflOrd	LxT	LxN	L/A	Dist.	hm	Freq	Adiv	K0b	Agr	Abar	z	Aatm	Afol	Ahous	Cmet	CmetN	Dc	RL	LtotT	LtotN
	Sol_Luce Substation	S_Substation	369426	4908792	3.5	0	0	112.1	112.1	1	1315.36	5.25	0	73.38	0	0.02	4.82	0.36	3.14	0	0	0	0	0	0	30.71	30.71
	Inverter	MV5-1	370020	4909142	2	0	0	100.3	100.3	1	648.44	3.25	0	67.24	0	-0.45	0	0	9.48	0	0	0	0	0	0	24.04	24.04
	Inverter	MV5-3	370231	4908851	2	0	0	100.3	100.3	1	821.75	3.25	0	69.29	0	-0.34	0	0	10.27	0	0	0	0	0	0	21.09	21.09
	Inverter	MV5-2	370006	4908853	2	0	0	100.3	100.3	1	899.5	3.25	0	70.08	0	-0.3	0	0	10.56	0	0	0	0	0	0	19.97	19.97
	Inverter	MV5-4	370324	4908707	2	0	0	100.3	100.3	1	948.19	3.25	0	70.54	0	-0.27	0	0	10.74	0	0	0	0	0	0	19.31	19.31
	Inverter	MV5-5	370015	4908690	2	0	0	100.3	100.3	1	1043.11	3.25	0	71.37	0	-0.23	0	0	11.05	0	0	0	0	0	0	18.12	18.12
	Inverter	MV4-2	369272	4909397	2	0	0	100.3	100.3	1	1178.48	3.25	0	72.43	0	-0.16	0	0	11.46	0	0	0	0	0	0	16.59	16.59
	Inverter	MV4-5	369289	4909199	2	0	0	100.3	100.3	1	1220.39	3.25	0	72.73	0	-0.15	0	0	11.58	0	0	0	0	0	0	16.14	16.14
	Inverter	MV4-3	369229	4909397	2	0	0	100.3	100.3	1	1220.51	3.25	0	72.73	0	-0.15	0	0	11.58	0	0	0	0	0	0	16.14	16.14
	Inverter	MV4-6	369243	4909192	2	0	0	100.3	100.3	1	1265.77	3.25	0	73.05	0	-0.13	0	0	11.71	0	0	0	0	0	0	15.68	15.68
	Inverter	MV4-9	369289	4909001	2	0	0	100.3	100.3	1	1306.58	3.25	0	73.32	0	-0.11	0	0	11.82	0	0	0	0	0	0	15.28	15.28
	Inverter	MV4-8	369256	4909001	2	0	0	100.3	100.3	1	1335.33	3.25	0	73.51	0	-0.1	0	0	11.9	0	0	0	0	0	0	15	15
	Inverter	MV4-10	369312	4908858	2	0	0	100.3	100.3	1	1364.4	3.25	0	73.7	0	-0.09	0	0	11.98	0	0	0	0	0	0	14.72	14.72
	Inverter	MV4-11	369264	4908855	2	0	0	100.3	100.3	1	1405.46	3.25	0	73.96	0	-0.07	0	0	12.09	0	0	0	0	0	0	14.34	14.34
	Inverter	MV4-1	369011	4909397	2	0	0	100.3	100.3	1	1434.49	3.25	0	74.13	0	-0.06	0	0	12.16	0	0	0	0	0	0	14.08	14.08
	Inverter	MV4-4	369027	4909199	2	0	0	100.3	100.3	1	1467.05	3.25	0	74.33	0	-0.05	0	0	12.24	0	0	0	0	0	0	13.79	13.79
	Inverter	MV4-7	369035	4909001	2	0	0	100.3	100.3	1	1532.24	3.25	0	74.71	0	-0.02	0	0	12.4	0	0	0	0	0	0	13.22	13.22
	DSTATCOM - 10 MVAR #1	DSAT1	369437	4908757	2.5	0	0	96.6	96.6	1	1330.28	3.5	0	73.48	0	3.07	0	0	1.3	0	0	0	0	0	0	18.79	18.79
	DSTATCOM - 10 MVAR #2	DSAT2	369403	4908757	2.5	0	0	96.6	96.6	1	1355.67	3.5	0	73.64	0	3.07	0	0	1.31	0	0	0	0	0	0	18.6	18.6
	Inverter	MV6-2	370085	4907339	2	0	0	100.3	100.3	1	2335.59	3.25	0	78.37	0	0.22	0	0	14.14	0	0	0	0	0	0	7.58	7.58
	Inverter	MV6-3	370207	4907140	2	0	0	100.3	100.3	1	2519.28	3.25	0	79.03	0	0.26	0	0	14.49	0	0	0	0	0	0	6.53	6.53
	Inverter	MV3-8	368680	4907712	2	0	0	100.3	100.3	1	2606.51	3.25	0	79.32	0	0.28	0	0	14.66	0	0	0	0	0	0	6.05	6.05
	Inverter	MV3-9	368512	4907703	2	0	0	100.3	100.3	1	2728.14	3.25	0	79.72	0	0.31	0	0	14.88	0	0	0	0	0	0	5.4	5.4
	Inverter	MV3-14	368684	4907498	2	0	0	100.3	100.3	1	2766.81	3.25	0	79.84	0	0.32	0	0	14.95	0	0	0	0	0	0	5.2	5.2
	Inverter	MV3-11	368346	4907662	2	0	0	100.3	100.3	1	2875.08	3.25	0	80.17	0	0.34	0	0	15.15	0	0	0	0	0	0	4.65	4.65
	Inverter	MV3-16	368514	4907475	2	0	0	100.3	100.3	1	2893.94	3.25	0	80.23	0	0.34	0	0	15.18	0	0	0	0	0	0	4.56	4.56
	Inverter	MV3-6	368162	4907834	2	0	0	100.3	100.3	1	2900	3.25	0	80.25	0	0.34	0	0	15.19	0	0	0	0	0	0	4.53	4.53
	Inverter	MV3-20	368689	4907317	2	0	0	100.3	100.3	1	2906.83	3.25	0	80.27	0	0.34	0	0	15.21	0	0	0	0	0	0	4.49	4.49
	Inverter	MV3-15	368357	4907477	2	0	0	100.3	100.3	1	2998.38	3.25	0	80.54	0	0.36	0	0	15.37	0	0	0	0	0	0	4.04	4.04
	Inverter	MV3-10	368167	4907669	2	0	0	100.3	100.3	1	3002.32	3.25	0	80.55	0	0.36	0	0	15.38	0	0	0	0	0	0	4.02	4.02
	Inverter	MV3-3	367939	4907927	2	0	0	100.3	100.3	1	3023.08	3.25	0	80.61	0	0.37	0	0	15.41	0	0	0	0	0	0	3.92	3.92
	Inverter	MV3-19	368357	4907347	2	0	0	100.3	100.3	1	3093.89	3.25	0	80.81	0	0.38	0	0	15.54	0	0	0	0	0	0	3.58	3.58
	Inverter	MV3-7	367945	4907754	2	0	0	100.3	100.3	1	3120.15	3.25	0	80.88	0	0.38	0	0	15.58	0	0	0	0	0	0	3.46	3.46
	Inverter	MV3-21	368478	4907206	2	0	0	100.3	100.3	1	3123.49	3.25	0	80.89	0	0.39	0	0	15.59	0	0	0	0	0	0	3.45	3.45
	Inverter	MV3-17	368178	4907472	2	0	0	100.3	100.3	1	3127.89	3.25	0	80.91	0	0.39	0	0	15.6	0	0	0	0	0	0	3.42	3.42
	Inverter	MV3-13	367963	4907577	2	0	0	100.3	100.3	1	3216.98	4.51	0	81.15	0	1.19	3.13	0	15.75	0	0	0	0	0	0	-0.91	-0.91
	Inverter	MV6-1	370235	4907364	2	0	0	97.3	97.3	1	2293.72	3.25	0	78.21	0	0.21	0	0	14.06	0	0	0	0	0	0	4.83	4.83
	Inverter	MV3-12	367668	4907594	2	0	0	100.3	100.3	1	3437.61	3.25	0	81.73	0	0.44	0	0	16.13	0	0	0	0	0	0	2.02	2.02
	Inverter	MV3-18	367752	4907412	2	0	0	100.3	100.3	1	3484.67	3.25	0	81.84	0	0.45	0	0	16.21	0	0	0	0	0	0	1.81	1.81
	Fixed Reactor Bank 2	FRB2	369464	4908755	6	0	0	89.8	89.8	1	1311.76	5.25	0	73.36	0	-1.03	0	0	3.13	0	0	0	0	0	0	14.32	14.32
	Inverter	MV5-6	369982	4908507	2	0	0	89.1	89.1	1	1225.13	3.25	0	72.76	0	0.73	0	0	6.73	0	0	0	0	0	0	8.83	8.83
	Fixed Reactor Bank 1	FRB1	369378	4908755	6	0	0	89.8	89.8	1	1375.88	5.29	0	73.77	0	-0.69	4.21	0	3.25	0	0	0	0	0	0	9.23	9.23
	Inverter	MV2-3	365820	4906641	2	0	0	100.3	100.3	1	5499.25	3.25	0	85.81	0	0.68	0	0	19.3	0	0	0	0	0	0	-5.47	-5.47
	Inverter	MV2-4	365586	4906624	2	0	0	100.3	100.3	1	5705.55	3.25	0	86.13	0	0.69	0	0	19.59	0	0	0	0	0	0	-6.09	-6.09
	Inverter	MV4-12	369043	4908803	2	0	0	89.1	89.1	1	1619.2	3.25	0	75.19	0	0.82	0	0	7.41	0	0	0	0	0	0	5.64	5.64
	Inverter	MV4-14	369176	4908507	2	0	0	89.1	89.1	1	1691.59	3.25	0	75.57	0	0.84	0	0	7.53	0	0	0	0	0	0	5.12	5.12
	Inverter	MV4-15	369176	4908481	2	0	0	89.1	89.1	1	1709.26	3.25	0	75.66	0	0.84	0	0	7.56	0	0	0	0	0	0	5	5
	Inverter	MV4-13	369051	4908605	2	0	0	89.1	89.1	1	1724.65	3.25	0	75.73	0	0.84	0	0	7.59	0	0	0	0	0	0	4.89	4.89
	Inverter	MV1-1	364715	4906166	2	0	0	100.3	100.3	1	6687.27	3.25	0	87.5	0	0.71	0	0	20.9	0	0	0	0	0	0	-8.81	-8.81
	Inverter	MV1-2	364753	4906063	2	0	0	100.3	100.3	1	6709.36	3.25	0	87.53	0	0.71	0	0	20.93	0	0	0	0	0	0	-8.87	-8.87
	Inverter	MV1-4	364815	4905918	2	0	0	100.3	100.3	1	6736.28	3.25	0	87.57	0	0.71	0	0	20.96	0	0	0	0	0	0	-8.94	-8.94
	Inverter	MV1-12	365038	4905386	2	0	0	100.3	100.3	1	6868.76	3.25	0	87.74	0	0.71	0	0	21.13	0	0	0	0	0	0	-9.27	-9.27
	Inverter	MV1-5	364671	4905892	2	0	0	100.3	100.3	1	6870.81	3.25	0	87.74	0	0.71	0	0	21.14	0	0	0	0	0	0	-9.28	-9.28
	Inverter	MV1-15	365315	4904994	2	0	0	100.3	100.3	1	6911.58	3.25	0	87.79	0	0.71	0	0	21.19	0	0	0	0	0	0	-9.38	-9.38
	Inverter	MV1-8	364788	4905647	2	0	0	100.3	100.3	1	6912.11	3.25	0	87.79	0	0.71	0	0	21.19	0	0	0	0	0	0	-9.38	-9.38
	Inverter	MV1-6	364477	4905835	2	0	0	100.3	100.3	1	7064.64	3.25	0	87.98	0	0.71	0	0	21.38	0	0	0	0	0	0	-9.76	-9.76
	Inverter	MV1-9	364561	4905646	2	0	0	100.3	100.3	1	7098.95	3.25	0	88.02	0	0.71	0	0	21.42	0	0	0	0	0	0	-9.84	-9.84
	Inverter	MV1-11	364655	4905414	2	0	0	100.3	100.3	1	7156.36	3.25	0	88.09	0	0.71	0	0	21.49	0	0	0	0	0	0	-9.98	-9.98
	Inverter	MV2-1	365842	4906816	2	0	0	97.3	97.3	1	5386.75	3.25	0	85.63	0	0.67	0	0	19.14	0	0	0	0	0	0	-8.13	-8.13
	Inverter	MV3-2	368671	4907928	2	0	0	89.1	89.1	1	2456.58	3.25	0	78.81	0	1.02	0	0	8.78	0	0	0	0	0	0	0.46	0.46
	SubstationTransformer	W_ST	369711.17	4906112.3	2.5	0	0	92	92	1	3608.63	3.5	0	82.15	0	0.24	0	0	6.83	0	0	0	0	0	0	2.76	2.76
	Inverter	MV3-4	368502	4907925	2	0	0	89.1	89.1	1	2581.84	3.25	0	79.24	0	1.05	0	0	8.97	0	0	0	0	0	0	-0.2	-0.2
	Inverter	MV1-7	364925	4905782	2	0	0	97.3	97.3	1	6722.31	3.25	0	87.55	0	0.71	0	0	20.95	0	0	0	0	0	0	-11.9	-11.9
	Inverter	MV1-10	365004	4905564	2	0	0	97.3	97.3	1	6786.82	3.25	0	87.63	0	0.71	0	0	21.03	0	0	0	0	0	0	-12.06	-12.06
	Inverter	MV1-14	365163	4905049	2	0	0	97.3	97.3	1	6988.33	4.24	0	87.89	0	1.77	2.31	0	21.28	0	0	0	0	0	0	-15.93	-15.93
	Inverter	MV3-5	368340	4907843	2	0	0	89.1	89.1	1	2757.56	4.6	0	79.81	0	1.88	2.73	0.01	9.25	0	0	0	0	0	0	-4.61	-4.61
	Inverter	MV1-13	364731	4905241	2	0	0	97.3	97.3	1	7199.87	3.25	0	88.15	0	0.7	0	0	21.55	0	0	0	0	0	0	-13.09	-13.09
	Inverter	MV3-1	368156	4907976	2	0	0	89.1	89.1	1	2818.08	3.25	0	80	0	1.1	0	0	9.34	0	0	0	0	0	0	-1.38	-1.38
	Inverter	MV3-22	368656	4907142	2	0	0	89.1	89.1	1	3067.96	3.25	0	80.74	0	1.16	0	0	9.72	0	0	0	0	0	0	-2.56	-2.56
	Westbrook Inverter Enclosur	W_INV6	369875	4906578	2	0	0	89.1	89.1	1	3120.5	3.25	0	80.88	0	1.18	0	0	9.8	0	0	0	0	0	0	-2.8	-2.8
	Westbrook Inverter Enclosur	W_INV5	369719	4906574	2	0	0	89.1	89.1	1	3155.53	3.25	0	80.98	0	1.18	0	0	9.85	0	0	0	0	0	0	-2.96	-2.96

Westbrook Inverter Enclosur	W_INV7	369780	4906417	2	0	0	89.1	89.1	1	3296.32	3.25	0	81.36	0	1.22	0	0	10.06	0	0	0	0	0	0	-3.58	-3.58
Westbrook Inverter Enclosur	W_INV2	369374	4906388	2	0	0	89.1	89.1	1	3426.52	3.25	0	81.7	0	1.25	0	0	10.25	0	0	0	0	0	0	-4.14	-4.14
Westbrook Inverter Enclosur	W_INV4	369673	4906164	2	0	0	89.1	89.1	1	3565.77	3.25	0	82.04	0	1.29	0	0	10.46	0	0	0	0	0	0	-4.73	-4.73
Westbrook Inverter Enclosur	W_INV3	369508	4906164	2	0	0	89.1	89.1	1	3604.08	3.25	0	82.14	0	1.29	0	0	10.51	0	0	0	0	0	0	-4.89	-4.89
Inverter	MV6-4	370250	4906966	2	0	0	86.1	86.1	1	2689.57	3.25	0	79.59	0	1.07	0	0	9.14	0	0	0	0	0	0	-3.75	-3.75
Westbrook Inverter Enclosur	W_INV1	369409	4906578	2	0	0	86.1	86.1	1	3235.02	3.25	0	81.2	0	1.2	0	0	9.97	0	0	0	0	0	0	-6.31	-6.31
Inverter	MV2-2	365977	4906654	2	0	0	89.1	89.1	1	5361.24	3.25	0	85.59	0	1.73	0	0	12.94	0	0	0	0	0	0	-11.2	-11.2
Gardiner Substation	G_Sub	366586.3	4903349.9	2.5	0	0	90.8	90.8	1	7376.42	4.25	0	88.36	0	2.12	1.84	0.38	11.1	0	0	0	0	0	0	-12.64	-12.64
Inverter	MV1-3	364440	4906039	2	0	0	89.1	89.1	1	6988.25	3.25	0	87.89	0	2.12	0	0	14.97	0	0	0	0	0	0	-15.93	-15.93
Inverters	G_Inv2	366676.9	4903239.1	2	0	0	87.7	87.7	1	7425.15	3.25	0	88.41	0	2.96	0	0	8.41	0	0	0	0	0	0	-12.12	-12.12
Inverters	G_Inv1	366526.4	4903225.8	2	0	0	87.7	87.7	1	7513.58	3.25	0	88.52	0	2.96	0	0	8.5	0	0	0	0	0	0	-12.32	-12.32
Inverters	G_Inv4	366732.8	4903105	2	0	0	87.7	87.7	1	7513.63	3.25	0	88.52	0	2.96	0	0	8.5	0	0	0	0	0	0	-12.32	-12.32
Inverters	G_Inv3	366583.7	4903091.4	2	0	0	87.7	87.7	1	7599.7	3.25	0	88.62	0	2.96	0	0	8.58	0	0	0	0	0	0	-12.5	-12.5
Inverters	G_Inv6	366788.5	4902972	2	0	0	87.7	87.7	1	7602.98	3.25	0	88.62	0	2.96	0	0	8.59	0	0	0	0	0	0	-12.51	-12.51
Inverters	G_Inv5	366638.5	4902958.1	2	0	0	87.7	87.7	1	7687.91	3.25	0	88.72	0	2.96	0	0	8.67	0	0	0	0	0	0	-12.69	-12.69
Inverters	G_Inv8	366844.5	4902838.5	2	0	0	87.7	87.7	1	7694.3	3.25	0	88.72	0	2.96	0	0	8.68	0	0	0	0	0	0	-12.7	-12.7
Inverters	G_Inv7	366694.6	4902824.7	2	0	0	87.7	87.7	1	7777.25	3.25	0	88.82	0	2.96	0	0	8.76	0	0	0	0	0	0	-12.88	-12.88
Inverters	G_Inv10	366900.7	4902704.8	2	0	0	87.7	87.7	1	7787.32	3.25	0	88.83	0	2.96	0	0	8.77	0	0	0	0	0	0	-12.9	-12.9
Inverters	G_Inv9	366750.9	4902691.8	2	0	0	87.7	87.7	1	7867.71	3.25	0	88.92	0	2.96	0	0	8.85	0	0	0	0	0	0	-13.07	-13.07
Westbrook Inverter Transfor	W_INVTR1	369403	4906578	2	0	0	78.2	78.2	1	3236.91	3.25	0	81.2	0	-2.78	0	0	1.76	0	0	0	0	0	0	-1.94	-1.94
Westbrook Inverter Transfor	W_INVTR6	369881	4906578	2	0	0	77.3	77.3	1	3119.45	3.25	0	80.88	0	-2.75	0	0	1.71	0	0	0	0	0	0	-2.5	-2.5
Westbrook Inverter Transfor	W_INVTR5	369725	4906574	2	0	0	77.3	77.3	1	3154.2	3.25	0	80.98	0	-2.76	0	0	1.72	0	0	0	0	0	0	-2.6	-2.6
Westbrook Inverter Transfor	W_INVTR7	369786	4906417	2	0	0	77.3	77.3	1	3295.16	3.25	0	81.36	0	-2.79	0	0	1.78	0	0	0	0	0	0	-3	-3
Westbrook Inverter Transfor	W_INVTR2	369368	4906388	2	0	0	77.3	77.3	1	3428.36	3.25	0	81.7	0	-2.83	0	0	1.83	0	0	0	0	0	0	-3.37	-3.37
Westbrook Inverter Transfor	W_INVTR4	369679	4906164	2	0	0	77.3	77.3	1	3564.51	3.25	0	82.04	0	-2.86	0	0	1.89	0	0	0	0	0	0	-3.73	-3.73
Westbrook Inverter Transfor	W_INVTR3	369514	4906164	2	0	0	77.3	77.3	1	3602.57	3.25	0	82.13	0	-2.87	0	0	1.9	0	0	0	0	0	0	-3.82	-3.82
Inverter Transformer	MV6-1 T	370230	4907364	2	0	0	69.4	69.4	1	2294.13	3.25	0	78.21	0	2.28	0	0	5.25	0	0	0	0	0	0	-16.39	-16.39
Inverter Transformer	MV6-4 T	370244	4906966	2	0	0	69.4	69.4	1	2689.96	3.25	0	79.59	0	2.41	0	0	5.61	0	0	0	0	0	0	-18.27	-18.27
Inverter Transformer	MV5-1 T	370015	4909142	2	0	0	56.1	56.1	1	651.56	3.25	0	67.28	0	-0.09	0	0	4	0	0	0	0	0	0	-15.13	-15.13
Inverter Transformer	MV5-3 T	370237	4908851	2	0	0	56.1	56.1	1	820.37	3.25	0	69.28	0	-0.05	0	0	4.45	0	0	0	0	0	0	-17.62	-17.62
Inverter Transformer	MV5-2 T	370011	4908853	2	0	0	56.1	56.1	1	897.2	3.25	0	70.06	0	-0.02	0	0	4.64	0	0	0	0	0	0	-18.62	-18.62
Inverter Transformer	MV5-4 T	370330	4908707	2	0	0	56.1	56.1	1	947.58	3.25	0	70.53	0	-0.01	0	0	4.76	0	0	0	0	0	0	-19.23	-19.23
Inverter Transformer	MV5-5 T	370021	4908690	2	0	0	56.1	56.1	1	1040.77	3.25	0	71.35	0	0.03	0	0	4.99	0	0	0	0	0	0	-20.3	-20.3
Inverter Transformer	MV2-1 T	365836	4906816	2	0	0	69.4	69.4	1	5391.86	3.25	0	85.63	0	3.09	0	0	7.64	0	0	0	0	0	0	-27.01	-27.01
Inverter Transformer	MV4-2 T	369267	4909397	2	0	0	56.1	56.1	1	1183.36	3.25	0	72.46	0	0.08	0	0	5.32	0	0	0	0	0	0	-21.8	-21.8
Inverter Transformer	MV4-3 T	369234	4909397	2	0	0	56.1	56.1	1	1215.62	3.25	0	72.7	0	0.09	0	0	5.39	0	0	0	0	0	0	-22.12	-22.12
Inverter Transformer	MV5-6 T	369987	4908507	2	0	0	56.1	56.1	1	1223.34	3.25	0	72.75	0	0.09	0	0	5.41	0	0	0	0	0	0	-22.19	-22.19
Inverter Transformer	MV4-5 T	369283	4909199	2	0	0	56.1	56.1	1	1225.97	3.25	0	72.77	0	0.09	0	0	5.41	0	0	0	0	0	0	-22.22	-22.22
Inverter Transformer	MV4-6 T	369249	4909192	2	0	0	56.1	56.1	1	1260.18	3.25	0	73.01	0	0.11	0	0	5.49	0	0	0	0	0	0	-22.55	-22.55
Inverter Transformer	MV4-9 T	369284	4909001	2	0	0	56.1	56.1	1	1310.93	3.25	0	73.35	0	0.13	0	0	5.61	0	0	0	0	0	0	-23.02	-23.02
Inverter Transformer	MV4-8 T	369262	4909001	2	0	0	56.1	56.1	1	1330.09	3.25	0	73.48	0	0.13	0	0	5.65	0	0	0	0	0	0	-23.2	-23.2
Inverter Transformer	MV4-10 T	369307	4908858	2	0	0	56.1	56.1	1	1368.48	3.25	0	73.72	0	0.15	0	0	5.73	0	0	0	0	0	0	-23.55	-23.55
Inverter Transformer	MV4-11 T	369269	4908855	2	0	0	56.1	56.1	1	1401.34	3.25	0	73.93	0	0.16	0	0	5.8	0	0	0	0	0	0	-23.84	-23.84
Inverter Transformer	MV4-1 T	369017	4909397	2	0	0	56.1	56.1	1	1428.58	3.25	0	74.1	0	0.17	0	0	5.86	0	0	0	0	0	0	-24.07	-24.07
Inverter Transformer	MV1-7 T	364919	4905782	2	0	0	69.4	69.4	1	6727.22	3.25	0	87.56	0	3.29	0	0	8.45	0	0	0	0	0	0	-29.94	-29.94
Inverter Transformer	MV4-4 T	369033	4909199	2	0	0	56.1	56.1	1	1461.34	3.25	0	74.3	0	0.18	0	0	5.93	0	0	0	0	0	0	-24.35	-24.35
Inverter Transformer	MV1-10 T	365010	4905564	2	0	0	69.4	69.4	1	6782.03	3.25	0	87.63	0	3.29	0	0	8.48	0	0	0	0	0	0	-30.05	-30.05
Inverter Transformer	MV1-14 T	365157	4905049	2	0	0	69.4	69.4	1	6992.85	4.24	0	87.89	0	3.92	0.68	0	8.6	0	0	0	0	0	0	-31.73	-31.73
Inverter Transformer	MV4-7 T	369040	4909001	2	0	0	56.1	56.1	1	1527.71	3.25	0	74.68	0	0.21	0	0	6.08	0	0	0	0	0	0	-24.91	-24.91
Inverter Transformer	MV1-13 T	364725	4905241	2	0	0	69.4	69.4	1	7204.62	3.25	0	88.15	0	3.34	0	0	8.72	0	0	0	0	0	0	-30.86	-30.86
Inverter Transformer	MV4-12 T	369049	4908803	2	0	0	56.1	56.1	1	1614.09	3.25	0	75.16	0	0.24	0	0	6.26	0	0	0	0	0	0	-25.6	-25.6
Inverter Transformer	MV4-14 T	369182	4908507	2	0	0	56.1	56.1	1	1687.17	3.25	0	75.54	0	0.27	0	0	6.41	0	0	0	0	0	0	-26.17	-26.17
Inverter Transformer	MV4-15 T	369170	4908481	2	0	0	56.1	56.1	1	1713.64	3.25	0	75.68	0	0.28	0	0	6.47	0	0	0	0	0	0	-26.37	-26.37
Inverter Transformer	MV4-13 T	369057	4908605	2	0	0	56.1	56.1	1	1719.88	3.25	0	75.71	0	0.29	0	0	6.48	0	0	0	0	0	0	-26.42	-26.42
Inverter Transformer	MV6-2 T	370091	4907339	2	0	0	56.1	56.1	1	2334.73	3.25	0	78.36	0	0.55	0	0	7.68	0	0	0	0	0	0	-30.54	-30.54
Inverter Transformer	MV3-2 T	368677	4907928	2	0	0	56.1	56.1	1	2452.31	3.25	0	78.79	0	0.6	0	0	7.9	0	0	0	0	0	0	-31.23	-31.23
Inverter Transformer	MV6-3 T	370202	4907140	2	0	0	56.1	56.1	1	2519.71	3.25	0	79.03	0	0.62	0	0	8.03	0	0	0	0	0	0	-31.62	-31.62
Inverter Transformer	MV3-4 T	368507	4907925	2	0	0	56.1	56.1	1	2578.12	3.25	0	79.23	0	0.65	0	0	8.13	0	0	0	0	0	0	-31.95	-31.95
Inverter Transformer	MV3-8 T	368685	4907712	2	0	0	56.1	56.1	1	2603.17	3.25	0	79.31	0	0.66	0	0	8.18	0	0	0	0	0	0	-32.09	-32.09
Inverter Transformer	MV3-9 T	368517	4907703	2	0	0	56.1	56.1	1	2724.64	3.25	0	79.71	0	0.71	0	0	8.39	0	0	0	0	0	0	-32.75	-32.75
Inverter Transformer	MV3-5 T	368335	4907843	2	0	0	56.1	56.1	1	2761.34	4.6	0	79.82	0	1.65	2.71	0.01	8.46	0	0	0	0	0	0	-36.58	-36.58
Inverter Transformer	MV3-14 T	368678	4907498	2	0	0	56.1	56.1	1	2770.58	3.25	0	79.85	0	0.73	0	0	8.47	0	0	0	0	0	0	-33	-33
Inverter Transformer	MV3-1 T	368150	4907976	2	0	0	56.1	56.1	1	2822.91	3.25	0	80.01	0	0.75	0	0	8.56	0	0	0	0	0	0	-33.27	-33.27
Inverter Transformer	MV3-11 T	368340	4907662	2	0	0	56.1	56.1	1	2879.42	3.25	0	80.19	0	0.78	0	0	8.66	0	0	0	0	0	0	-33.57	-33.57
Inverter Transformer	MV3-16 T	368509	4907475	2	0	0	56.1	56.1	1	2897.24	3.25	0	80.24	0	0.79	0	0	8.69	0	0	0	0	0	0	-33.66	-33.66
Inverter Transformer	MV3-6 T	368156	4907834	2	0	0	56.1	56.1	1	2904.68	3.25	0	80.26	0	0.79	0	0	8.71	0	0	0	0	0	0	-33.7	-33.7
Inverter Transformer	MV3-20 T	368683	4907317	2	0	0	56.1	56.1	1	2910.41	3.25	0	80.28	0	0.79	0	0	8.72	0	0	0	0	0	0	-33.73	-33.73
Inverter Transformer	MV3-15 T	368351	4907477	2	0	0	56.1	56.1	1	3002.52	3.25	0	80.55	0	0.83	0	0	8.87	0	0	0	0	0	0	-34.19	-34.19
Inverter Transformer	MV3-10 T	368162	4907669	2	0	0	56.1	56.1	1	3006.08	3.25	0	80.56	0	0.83	0	0	8.88	0	0	0	0	0	0	-34.21	-34.21
Inverter Transformer	MV3-3 T	367944	4907927	2	0	0	56.1	56.1	1	3018.97	3.25	0	80.6	0	0.84	0	0	8.9	0	0	0	0	0	0	-34.28	-34.28
Inverter Transformer	MV3-22 T	368661	4907142	2	0	0	56.1	56.1	1	3065.08	3.25	0	80.73	0	0.86	0	0	8.98	0	0	0	0	0	0	-34.51	-34.51
Inverter Transformer	MV3-19 T	368352	4907347	2	0	0	56.1	56.1	1	3097.23	3.25	0	80.82	0	0.87	0	0	9.03	0	0	0	0	0	0	-34.66	-34.66
Inverter Transformer	MV3-7 T	367951	4907754	2	0	0	56.1	56.1	1	3115.38	3.25	0	80.87	0	0.88	0	0	9.06	0	0	0	0	0	0	-34.75	-34.75
Inverter Transformer	MV3-21 T	368484	4907206	2	0	0	56.1	56.1	1	3119.75	3.25	0	80.88	0	0.88	0	0	9.07	0	0	0	0	0	0	-34.77	-34.77

	Inverter Transformer	MV3-17 T	368183	4907472	2	0	0	56.1	56.1	1	3124.31	3.25	0	80.9	0	0.88	0	0	9.08	0	0	0	0	0	0	-34.8	-34.8
	Inverter Transformer	MV3-13 T	367958	4907577	2	0	0	56.1	56.1	1	3220.8	3.25	0	81.16	0	0.92	0	0	9.24	0	0	0	0	0	0	-35.26	-35.26
	Inverter Transformer	MV3-12 T	367674	4907594	2	0	0	56.1	56.1	1	3432.8	3.25	0	81.71	0	1.01	0	0	9.58	0	0	0	0	0	0	-36.25	-36.25
	Inverter Transformer	MV3-18 T	367757	4907412	2	0	0	56.1	56.1	1	3480.83	3.25	0	81.83	0	1.03	0	0	9.66	0	0	0	0	0	0	-36.46	-36.46
	Line Reactor	NGR	369421	4908787.5	5	0	0	45.4	45.4	1	1322.09	5.25	0	73.43	0	3.45	1.21	0.03	0.54	0	0	0	0	0	0	-33.28	-33.28
	Inverter Transformer	MV2-2 T	365982	4906654	2	0	0	56.1	56.1	1	5357.1	3.25	0	85.58	0	1.75	0	0	12.32	0	0	0	0	0	0	-43.59	-43.59
	Inverter Transformer	MV2-3 T	365814	4906641	2	0	0	56.1	56.1	1	5504.27	3.25	0	85.81	0	1.8	0	0	12.5	0	0	0	0	0	0	-44.06	-44.06
	Inverter Transformer	MV2-4 T	365590	4906628	2	0	0	56.1	56.1	1	5700.03	3.25	0	86.12	0	1.87	0	0	12.74	0	0	0	0	0	0	-44.67	-44.67
	Inverter Transformer	MV1-1 T	364721	4906166	2	0	0	56.1	56.1	1	6682.15	3.25	0	87.5	0	2.17	0	0	13.88	0	0	0	0	0	0	-47.49	-47.49
	Inverter Transformer	MV1-2 T	364759	4906063	2	0	0	56.1	56.1	1	6704.29	3.25	0	87.53	0	2.18	0	0	13.91	0	0	0	0	0	0	-47.55	-47.55
	Inverter Transformer	MV1-4 T	364821	4905918	2	0	0	56.1	56.1	1	6731.29	3.25	0	87.56	0	2.18	0	0	13.94	0	0	0	0	0	0	-47.63	-47.63
	Inverter Transformer	MV1-12 T	365044	4905386	2	0	0	56.1	56.1	1	6864.06	3.25	0	87.73	0	2.22	0	0	14.08	0	0	0	0	0	0	-47.98	-47.98
	Inverter Transformer	MV1-5 T	364676	4905892	2	0	0	56.1	56.1	1	6866.63	3.25	0	87.73	0	2.22	0	0	14.09	0	0	0	0	0	0	-47.98	-47.98
	Inverter Transformer	MV1-15 T	365309	4904994	2	0	0	56.1	56.1	1	6916.02	3.25	0	87.8	0	2.24	0	0	14.14	0	0	0	0	0	0	-48.11	-48.11
	Inverter Transformer	MV1-8 T	364782	4905647	2	0	0	56.1	56.1	1	6917	3.25	0	87.8	0	2.24	0	0	14.14	0	0	0	0	0	0	-48.12	-48.12
	Inverter Transformer	MV1-3 T	364435	4906039	2	0	0	56.1	56.1	1	6992.53	3.25	0	87.89	0	2.26	0	0	14.22	0	0	0	0	0	0	-48.31	-48.31
	Inverter Transformer	MV1-6 T	364482	4905835	2	0	0	56.1	56.1	1	7060.43	3.25	0	87.98	0	2.28	0	0	14.29	0	0	0	0	0	0	-48.49	-48.49
	Inverter Transformer	MV1-9 T	364555	4905646	2	0	0	56.1	56.1	1	7103.9	3.25	0	88.03	0	2.29	0	0	14.34	0	0	0	0	0	0	-48.6	-48.6
	Inverter Transformer	MV1-11 T	364649	4905414	2	0	0	56.1	56.1	1	7161.2	3.25	0	88.1	0	2.3	0	0	14.4	0	0	0	0	0	0	-48.75	-48.75
Limit. Valu	0	0																								
Level D/N:	33.8779	33.8779																								

Receiver: Existing Noise Receptor
ID: S-R84
X: 370557
Y: 4909609
Z: 4.5
Ground: 0

ISO	Description	ID	X	Y	Z	Ground	ReflOrd	LxT	LxN	L/A	Dist.	hm	Freq	Adiv	K0b	Agr	Abar	z	Aatm	Afol	Ahous	Cmet	CmetN	Dc	RL	LtotT	LtotN
	Sol_Luce Substation	S_Substation	369426	4908792	3.5	0	0	112.1	112.1	1	1395.22	5.25	0	73.89	0	0.06	4.85	0.39	3.29	0	0	0	0	0	0	29.98	29.98
	Inverter	MV5-1	370020	4909142	2	0	0	100.3	100.3	1	711.66	3.25	0	68.05	0	-0.4	0	0	9.79	0	0	0	0	0	0	22.88	22.88
	Inverter	MV5-3	370231	4908851	2	0	0	100.3	100.3	1	825.13	3.25	0	69.33	0	-0.34	0	0	10.28	0	0	0	0	0	0	21.04	21.04
	Inverter	MV5-4	370324	4908707	2	0	0	100.3	100.3	1	931.61	3.25	0	70.38	0	-0.28	0	0	10.68	0	0	0	0	0	0	19.53	19.53
	Inverter	MV5-2	370006	4908853	2	0	0	100.3	100.3	1	935.49	3.25	0	70.42	0	-0.28	0	0	10.69	0	0	0	0	0	0	19.48	19.48
	Inverter	MV5-5	370015	4908690	2	0	0	100.3	100.3	1	1066.93	3.25	0	71.56	0	-0.21	0	0	11.13	0	0	0	0	0	0	17.84	17.84
	Inverter	MV4-2	369272	4909397	2	0	0	100.3	100.3	1	1302.37	3.25	0	73.29	0	-0.11	0	0	11.81	0	0	0	0	0	0	15.32	15.32
	Inverter	MV4-5	369289	4909199	2	0	0	100.3	100.3	1	1332.64	3.25	0	73.49	0	-0.1	0	0	11.89	0	0	0	0	0	0	15.02	15.02
	Inverter	MV4-3	369229	4909397	2	0	0	100.3	100.3	1	1344.82	3.25	0	73.57	0	-0.09	0	0	11.93	0	0	0	0	0	0	14.91	14.91
	Inverter	MV4-6	369243	4909192	2	0	0	100.3	100.3	1	1378.58	3.25	0	73.79	0	-0.08	0	0	12.02	0	0	0	0	0	0	14.59	14.59
	Inverter	MV4-9	369289	4909001	2	0	0	100.3	100.3	1	1406.23	3.25	0	73.96	0	-0.07	0	0	12.09	0	0	0	0	0	0	14.33	14.33
	Inverter	MV4-8	369256	4909001	2	0	0	100.3	100.3	1	1436.06	3.25	0	74.14	0	-0.06	0	0	12.16	0	0	0	0	0	0	14.06	14.06
	Inverter	MV4-10	369312	4908858	2	0	0	100.3	100.3	1	1453.97	3.25	0	74.25	0	-0.05	0	0	12.21	0	0	0	0	0	0	13.9	13.9
	Inverter	MV4-11	369264	4908855	2	0	0	100.3	100.3	1	1496.79	3.25	0	74.5	0	-0.03	0	0	12.32	0	0	0	0	0	0	13.53	13.53
	Inverter	MV4-1	369011	4909397	2	0	0	100.3	100.3	1	1560.47	3.25	0	74.87	0	-0.01	0	0	12.47	0	0	0	0	0	0	12.99	12.99
	Inverter	MV4-4	369027	4909199	2	0	0	100.3	100.3	1	1583.98	3.25	0	75	0	0	0	0	12.53	0	0	0	0	0	0	12.79	12.79
	Inverter	MV4-7	369035	4909001	2	0	0	100.3	100.3	1	1638.95	3.25	0	75.29	0	0.02	0	0	12.66	0	0	0	0	0	0	12.34	12.34
	DSTATCOM - 10 MVAR #1	DSAT1	369437	4908757	2.5	0	0	96.6	96.6	1	1407.23	3.5	0	73.97	0	3.09	0	0	1.35	0	0	0	0	0	0	18.23	18.23
	DSTATCOM - 10 MVAR #2	DSAT2	369403	4908757	2.5	0	0	96.6	96.6	1	1434.44	3.5	0	74.13	0	3.1	0	0	1.36	0	0	0	0	0	0	18.04	18.04
	Inverter	MV6-2	370085	4907339	2	0	0	100.3	100.3	1	2318.55	3.25	0	78.3	0	0.21	0	0	14.11	0	0	0	0	0	0	7.69	7.69
	Inverter	MV6-3	370207	4907140	2	0	0	100.3	100.3	1	2493.69	3.25	0	78.94	0	0.26	0	0	14.45	0	0	0	0	0	0	6.67	6.67
	Inverter	MV3-8	368680	4907712	2	0	0	100.3	100.3	1	2668.66	3.25	0	79.53	0	0.29	0	0	14.77	0	0	0	0	0	0	5.72	5.72
	Inverter	MV3-9	368512	4907703	2	0	0	100.3	100.3	1	2795.51	3.25	0	79.93	0	0.32	0	0	15.01	0	0	0	0	0	0	5.06	5.06
	Inverter	MV3-14	368684	4907498	2	0	0	100.3	100.3	1	2822.14	3.25	0	80.01	0	0.33	0	0	15.05	0	0	0	0	0	0	4.92	4.92
	Inverter	MV3-11	368346	4907662	2	0	0	100.3	100.3	1	2946.07	3.25	0	80.38	0	0.35	0	0	15.28	0	0	0	0	0	0	4.3	4.3
	Inverter	MV3-16	368514	4907475	2	0	0	100.3	100.3	1	2954.29	3.25	0	80.41	0	0.35	0	0	15.29	0	0	0	0	0	0	4.26	4.26
	Inverter	MV3-20	368689	4907317	2	0	0	100.3	100.3	1	2956.8	3.25	0	80.42	0	0.35	0	0	15.3	0	0	0	0	0	0	4.25	4.25
	Inverter	MV3-6	368162	4907834	2	0	0	100.3	100.3	1	2981.05	3.25	0	80.49	0	0.36	0	0	15.34	0	0	0	0	0	0	4.13	4.13
	Inverter	MV3-15	368357	4907477	2	0	0	100.3	100.3	1	3063.56	3.25	0	80.72	0	0.37	0	0	15.48	0	0	0	0	0	0	3.73	3.73
	Inverter	MV3-10	368167	4907669	2	0	0	100.3	100.3	1	3078.26	3.25	0	80.77	0	0.38	0	0	15.51	0	0	0	0	0	0	3.66	3.66
	Inverter	MV3-3	367939	4907927	2	0	0	100.3	100.3	1	3111.76	3.25	0	80.86	0	0.38	0	0	15.57	0	0	0	0	0	0	3.5	3.5
	Inverter	MV3-19	368357	4907347	2	0	0	100.3	100.3	1	3155.42	3.25	0	80.98	0	0.39	0	0	15.64	0	0	0	0	0	0	3.3	3.3
	Inverter	MV3-21	368478	4907206	2	0	0	100.3	100.3	1	3177.52	3.25	0	81.04	0	0.4	0	0	15.68	0	0	0	0	0	0	3.19	3.19
	Inverter	MV3-17	368178	4907472	2	0	0	100.3	100.3	1	3197.88	3.25	0	81.1	0	0.4	0	0	15.72	0	0	0	0	0	0	3.1	3.1
	Inverter	MV6-1	370235	4907364	2	0	0	97.3	97.3	1	2267.98	3.25	0	78.11	0	0.2	0	0	14.01	0	0	0	0	0	0	4.99	4.99
	Inverter	MV3-7	367945	4907754	2	0	0	100.3	100.3	1	3203.68	4.55	0	81.11	0	1.18	3.14	0	15.73	0	0	0	0	0	0	-0.85	-0.85
	Inverter	MV3-13	367963	4907577	2	0	0	100.3	100.3	1	3295.13	3.25	0	81.36	0	0.42	0	0	15.88	0	0	0	0	0	0	2.65	2.65
	Inverter	MV3-12	367668	4907594	2	0	0	100.3	100.3	1	3522.29	3.25	0	81.94	0	0.45	0	0	16.27	0	0	0	0	0	0	1.65	1.65
	Inverter	MV3-18	367752	4907412	2	0	0	100.3	100.3	1	3562.98	3.25	0	82.04	0	0.46	0	0	16.34	0	0	0	0	0	0	1.48	1.48
	Inverter	MV5-6	369982	4908507	2	0	0	89.1	89.1	1	1242.99	3.25	0	72.89	0	0.74	0	0	6.76	0	0	0	0	0	0	8.67	8.67
	Fixed Reactor Bank 2	FRB2	369464	4908755	6	0	0	89.8	89.8	1	1387.07	5.25	0	73.84	0	-1.03	0	0	3.27	0	0	0	0	0	0	13.69	13.69
	Fixed Reactor Bank 1	FRB1	369378	4908755	6	0	0	89.8	89.8	1	1455.8	5.28	0	74.26	0	-0.69	4.2	0	3.4	0	0	0	0	0	0	8.6	8.6
	Inverter	MV2-3	365820	4906641	2	0	0	100.3	100.3	1	5590.01	3.25	0	85.95	0	0.69	0	0	19.43	0	0	0	0	0	0	-5.75	-5.75
	Inverter	MV2-4	365586	4906624	2	0	0	100.3	100.3	1	5798.37	3.25	0	86.27	0	0.7	0	0	19.72	0	0	0	0	0	0	-6.37	-6.37

Inverter	MV4-12	369043	4908803	2	0	0	89.1	89.1	1	1715.18	3.25	0	75.69	0	0.84	0	0	7.57	0	0	0	0	0	0	4.96	4.96
Inverter	MV4-14	369176	4908507	2	0	0	89.1	89.1	1	1766.8	3.25	0	75.94	0	0.85	0	0	7.66	0	0	0	0	0	0	4.6	4.6
Inverter	MV4-15	369176	4908481	2	0	0	89.1	89.1	1	1783.13	3.25	0	76.02	0	0.86	0	0	7.69	0	0	0	0	0	0	4.49	4.49
Inverter	MV4-13	369051	4908605	2	0	0	89.1	89.1	1	1809.99	3.25	0	76.15	0	0.86	0	0	7.73	0	0	0	0	0	0	4.31	4.31
Inverter	MV1-1	364715	4906166	2	0	0	100.3	100.3	1	6781.09	3.25	0	87.63	0	0.71	0	0	21.02	0	0	0	0	0	0	-9.05	-9.05
Inverter	MV1-2	364753	4906063	2	0	0	100.3	100.3	1	6801.51	3.25	0	87.65	0	0.71	0	0	21.05	0	0	0	0	0	0	-9.1	-9.1
Inverter	MV1-4	364815	4905918	2	0	0	100.3	100.3	1	6825.98	3.25	0	87.68	0	0.71	0	0	21.08	0	0	0	0	0	0	-9.16	-9.16
Inverter	MV1-12	365038	4905386	2	0	0	100.3	100.3	1	6949.32	3.25	0	87.84	0	0.71	0	0	21.24	0	0	0	0	0	0	-9.47	-9.47
Inverter	MV1-5	364671	4905892	2	0	0	100.3	100.3	1	6961.4	3.25	0	87.85	0	0.71	0	0	21.25	0	0	0	0	0	0	-9.5	-9.5
Inverter	MV1-15	365315	4904994	2	0	0	100.3	100.3	1	6984.04	3.25	0	87.88	0	0.71	0	0	21.28	0	0	0	0	0	0	-9.56	-9.56
Inverter	MV1-8	364788	4905647	2	0	0	100.3	100.3	1	6998.49	3.25	0	87.9	0	0.71	0	0	21.3	0	0	0	0	0	0	-9.6	-9.6
Inverter	MV1-6	364477	4905835	2	0	0	100.3	100.3	1	7156.08	3.25	0	88.09	0	0.71	0	0	21.49	0	0	0	0	0	0	-9.98	-9.98
Inverter	MV1-9	364561	4905646	2	0	0	100.3	100.3	1	7187.31	3.25	0	88.13	0	0.7	0	0	21.53	0	0	0	0	0	0	-10.06	-10.06
Inverter	MV1-11	364655	4905414	2	0	0	100.3	100.3	1	7240.97	4.24	0	88.2	0	1.78	2.26	0	21.6	0	0	0	0	0	0	-13.52	-13.52
Inverter	MV2-1	365842	4906816	2	0	0	97.3	97.3	1	5480.15	3.25	0	85.78	0	0.68	0	0	19.27	0	0	0	0	0	0	-8.42	-8.42
Inverter	MV3-2	368671	4907928	2	0	0	89.1	89.1	1	2526.41	3.25	0	79.05	0	1.03	0	0	8.89	0	0	0	0	0	0	0.09	0.09
SubstationTransformer	W_ST	369711.17	4906112.3	2.5	0	0	92	92	1	3597.58	3.5	0	82.12	0	0.23	0	0	6.82	0	0	0	0	0	0	2.81	2.81
Inverter	MV1-7	364925	4905782	2	0	0	97.3	97.3	1	6809.21	3.25	0	87.66	0	0.71	0	0	21.06	0	0	0	0	0	0	-12.12	-12.12
Inverter	MV1-10	365004	4905564	2	0	0	97.3	97.3	1	6870.07	4.26	0	87.74	0	1.76	2.33	0	21.14	0	0	0	0	0	0	-15.65	-15.65
Inverter	MV3-4	368502	4907925	2	0	0	89.1	89.1	1	2656.86	3.25	0	79.49	0	1.06	0	0	9.09	0	0	0	0	0	0	-0.58	-0.58
Inverter	MV1-14	365163	4905049	2	0	0	97.3	97.3	1	7063.2	3.25	0	87.98	0	0.71	0	0	21.38	0	0	0	0	0	0	-12.75	-12.75
Inverter	MV1-13	364731	4905241	2	0	0	97.3	97.3	1	7281.6	3.25	0	88.24	0	0.7	0	0	21.65	0	0	0	0	0	0	-13.28	-13.28
Inverter	MV3-5	368340	4907843	2	0	0	89.1	89.1	1	2834.4	3.25	0	80.05	0	1.11	0	0	9.36	0	0	0	0	0	0	-1.46	-1.46
Inverter	MV3-1	368156	4907976	2	0	0	89.1	89.1	1	2903.7	3.25	0	80.26	0	1.12	0	0	9.47	0	0	0	0	0	0	-1.8	-1.8
Westbrook Inverter Enclosur	W_INV6	369875	4906578	2	0	0	89.1	89.1	1	3106.78	3.25	0	80.85	0	1.17	0	0	9.78	0	0	0	0	0	0	-2.74	-2.74
Inverter	MV3-22	368656	4907142	2	0	0	89.1	89.1	1	3114.47	3.25	0	80.87	0	1.17	0	0	9.79	0	0	0	0	0	0	-2.77	-2.77
Westbrook Inverter Enclosur	W_INV5	369719	4906574	2	0	0	89.1	89.1	1	3148.57	3.25	0	80.96	0	1.18	0	0	9.84	0	0	0	0	0	0	-2.93	-2.93
Westbrook Inverter Enclosur	W_INV7	369780	4906417	2	0	0	89.1	89.1	1	3285.21	3.25	0	81.33	0	1.22	0	0	10.05	0	0	0	0	0	0	-3.54	-3.54
Westbrook Inverter Enclosur	W_INV2	369374	4906388	2	0	0	89.1	89.1	1	3431.38	3.25	0	81.71	0	1.25	0	0	10.26	0	0	0	0	0	0	-4.17	-4.17
Westbrook Inverter Enclosur	W_INV4	369673	4906164	2	0	0	89.1	89.1	1	3556.61	3.25	0	82.02	0	1.28	0	0	10.45	0	0	0	0	0	0	-4.69	-4.69
Westbrook Inverter Enclosur	W_INV3	369508	4906164	2	0	0	89.1	89.1	1	3601.17	3.25	0	82.13	0	1.29	0	0	10.51	0	0	0	0	0	0	-4.88	-4.88
Inverter	MV6-4	370250	4906966	2	0	0	86.1	86.1	1	2660.77	3.25	0	79.5	0	1.06	0	0	9.1	0	0	0	0	0	0	-3.6	-3.6
Westbrook Inverter Enclosur	W_INV1	369409	4906578	2	0	0	86.1	86.1	1	3241.12	3.25	0	81.21	0	1.21	0	0	9.98	0	0	0	0	0	0	-6.34	-6.34
Inverter	MV2-2	365977	4906654	2	0	0	89.1	89.1	1	5450.54	3.25	0	85.73	0	1.75	0	0	13.06	0	0	0	0	0	0	-11.48	-11.48
Gardiner Substation	G_Sub	366586.3	4903349.9	2.5	0	0	90.8	90.8	1	7412.34	4.25	0	88.4	0	2.12	1.83	0.38	11.13	0	0	0	0	0	0	-12.71	-12.71
Inverter	MV1-3	364440	4906039	2	0	0	89.1	89.1	1	7082.56	3.25	0	88	0	2.15	0	0	15.08	0	0	0	0	0	0	-16.18	-16.18
Inverters	G_Inv2	366676.9	4903239.1	2	0	0	87.7	87.7	1	7458.61	3.25	0	88.45	0	2.96	0	0	8.45	0	0	0	0	0	0	-12.2	-12.2
Inverters	G_Inv4	366732.8	4903105	2	0	0	87.7	87.7	1	7544.97	3.25	0	88.55	0	2.96	0	0	8.53	0	0	0	0	0	0	-12.38	-12.38
Inverters	G_Inv1	366526.4	4903225.8	2	0	0	87.7	87.7	1	7549.24	3.25	0	88.56	0	2.96	0	0	8.54	0	0	0	0	0	0	-12.39	-12.39
Inverters	G_Inv6	366788.5	4902972	2	0	0	87.7	87.7	1	7632.26	3.25	0	88.65	0	2.96	0	0	8.62	0	0	0	0	0	0	-12.57	-12.57
Inverters	G_Inv3	366583.7	4903091.4	2	0	0	87.7	87.7	1	7633.23	3.25	0	88.65	0	2.96	0	0	8.62	0	0	0	0	0	0	-12.57	-12.57
Inverters	G_Inv5	366638.5	4902958.1	2	0	0	87.7	87.7	1	7719.4	3.25	0	88.75	0	2.96	0	0	8.7	0	0	0	0	0	0	-12.76	-12.76
Inverters	G_Inv8	366844.5	4902838.5	2	0	0	87.7	87.7	1	7721.55	3.25	0	88.75	0	2.96	0	0	8.7	0	0	0	0	0	0	-12.76	-12.76
Inverters	G_Inv7	366694.6	4902824.7	2	0	0	87.7	87.7	1	7806.72	3.25	0	88.85	0	2.96	0	0	8.79	0	0	0	0	0	0	-12.94	-12.94
Inverters	G_Inv10	366900.7	4902704.8	2	0	0	87.7	87.7	1	7812.59	3.25	0	88.86	0	2.96	0	0	8.79	0	0	0	0	0	0	-12.95	-12.95
Inverters	G_Inv9	366750.9	4902691.8	2	0	0	87.7	87.7	1	7895.19	3.25	0	88.95	0	2.96	0	0	8.87	0	0	0	0	0	0	-13.13	-13.13
Westbrook Inverter Transfor	W_INVTR1	369403	4906578	2	0	0	78.2	78.2	1	3243.25	3.25	0	81.22	0	-2.78	0	0	1.76	0	0	0	0	0	0	-1.96	-1.96
Westbrook Inverter Transfor	W_INVTR6	369881	4906578	2	0	0	77.3	77.3	1	3105.47	3.25	0	80.84	0	-2.74	0	0	1.7	0	0	0	0	0	0	-2.46	-2.46
Westbrook Inverter Transfor	W_INVTR5	369725	4906574	2	0	0	77.3	77.3	1	3146.98	3.25	0	80.96	0	-2.75	0	0	1.72	0	0	0	0	0	0	-2.58	-2.58
Westbrook Inverter Transfor	W_INVTR7	369786	4906417	2	0	0	77.3	77.3	1	3283.8	3.25	0	81.33	0	-2.79	0	0	1.77	0	0	0	0	0	0	-2.97	-2.97
Westbrook Inverter Transfor	W_INVTR2	369368	4906388	2	0	0	77.3	77.3	1	3433.45	3.25	0	81.71	0	-2.83	0	0	1.83	0	0	0	0	0	0	-3.38	-3.38
Westbrook Inverter Transfor	W_INVTR4	369679	4906164	2	0	0	77.3	77.3	1	3555.13	3.25	0	82.02	0	-2.86	0	0	1.88	0	0	0	0	0	0	-3.7	-3.7
Westbrook Inverter Transfor	W_INVTR3	369514	4906164	2	0	0	77.3	77.3	1	3599.43	3.25	0	82.12	0	-2.87	0	0	1.9	0	0	0	0	0	0	-3.82	-3.82
Inverter Transformer	MV6-1 T	370230	4907364	2	0	0	69.4	69.4	1	2268.69	3.25	0	78.12	0	2.27	0	0	5.23	0	0	0	0	0	0	-16.26	-16.26
Inverter Transformer	MV6-4 T	370244	4906966	2	0	0	69.4	69.4	1	2661.47	3.25	0	79.5	0	2.4	0	0	5.59	0	0	0	0	0	0	-18.14	-18.14
Inverter Transformer	MV5-1 T	370015	4909142	2	0	0	56.1	56.1	1	715.44	3.25	0	68.09	0	-0.08	0	0	4.17	0	0	0	0	0	0	-16.13	-16.13
Inverter Transformer	MV5-3 T	370237	4908851	2	0	0	56.1	56.1	1	822.78	3.25	0	69.31	0	-0.05	0	0	4.45	0	0	0	0	0	0	-17.65	-17.65
Inverter Transformer	MV5-4 T	370330	4908707	2	0	0	56.1	56.1	1	930.13	3.25	0	70.37	0	-0.01	0	0	4.72	0	0	0	0	0	0	-19.02	-19.02
Inverter Transformer	MV5-2 T	370011	4908853	2	0	0	56.1	56.1	1	932.55	3.25	0	70.39	0	-0.01	0	0	4.73	0	0	0	0	0	0	-19.05	-19.05
Inverter Transformer	MV5-5 T	370021	4908690	2	0	0	56.1	56.1	1	1063.89	3.25	0	71.54	0	0.03	0	0	5.04	0	0	0	0	0	0	-20.55	-20.55
Inverter Transformer	MV2-1 T	365836	4906816	2	0	0	69.4	69.4	1	5485.32	3.25	0	85.78	0	3.1	0	0	7.7	0	0	0	0	0	0	-27.24	-27.24
Inverter Transformer	MV5-6 T	369987	4908507	2	0	0	56.1	56.1	1	1240.69	3.25	0	72.87	0	0.1	0	0	5.45	0	0	0	0	0	0	-22.36	-22.36
Inverter Transformer	MV4-2 T	369267	4909397	2	0	0	56.1	56.1	1	1307.31	3.25	0	73.33	0	0.12	0	0	5.6	0	0	0	0	0	0	-22.99	-22.99
Inverter Transformer	MV4-5 T	369283	4909199	2	0	0	56.1	56.1	1	1338.35	3.25	0	73.53	0	0.14	0	0	5.67	0	0	0	0	0	0	-23.27	-23.27
Inverter Transformer	MV4-3 T	369234	4909397	2	0	0	56.1	56.1	1	1339.88	3.25	0	73.54	0	0.14	0	0	5.67	0	0	0	0	0	0	-23.29	-23.29
Inverter Transformer	MV4-6 T	369249	4909192	2	0	0	56.1	56.1	1	1372.87	3.25	0	73.75	0	0.15	0	0	5.74	0	0	0	0	0	0	-23.59	-23.59
Inverter Transformer	MV4-9 T	369284	4909001	2	0	0	56.1	56.1	1	1410.74	3.25	0	73.99	0	0.16	0	0	5.82	0	0	0	0	0	0	-23.92	-23.92
Inverter Transformer	MV4-8 T	369262	4909001	2	0	0	56.1	56.1	1	1430.63	3.25	0	74.11	0	0.17	0	0	5.87	0	0	0	0	0	0	-24.09	-24.09
Inverter Transformer	MV4-10 T	369307	4908858	2	0	0	56.1	56.1	1	1458.25	3.25	0	74.28	0	0.18	0	0	5.93	0	0	0	0	0	0	-24.33	-24.33
Inverter Transformer	MV1-7 T	364919	4905782	2	0	0	69.4	69.4	1	6814.17	3.25	0	87.67	0	3.3	0	0	8.5	0	0	0	0	0	0	-30.11	-30.11
Inverter Transformer	MV1-10 T	365010	4905564	2	0	0	69.4	69.4	1	6865.22	4.26	0	87.73	0	3.91	0.68	0	8.53	0	0	0	0	0	0	-31.5	-31.5
Inverter Transformer	MV4-11 T	369269	4908855	2	0	0	56.1	56.1	1	1492.47	3.25	0	74.48	0	0.2	0	0	6	0	0	0	0	0	0	-24.62	-24.62
Inverter Transformer	MV1-14 T	365157	4905049	2	0	0	69.4	69.4	1	7067.79	3.25	0	87.99	0	3.32	0	0	8.64	0	0	0	0	0	0	-30.6	-30.6
Inverter Transformer	MV4-1 T	369017	4909397	2	0	0	56.1	56.1	1	1554.53	3.25	0	74.83	0	0.22	0	0	6.13	0	0	0	0	0	0	-25.13	-25.13

Inverter Transformer	MV1-13 T	364725	4905241	2	0	0	69.4	69.4	1	7286.4	3.25	0	88.25	0	3.35	0	0	8.76	0	0	0	0	0	0	-31.01	-31.01
Inverter Transformer	MV4-4 T	369033	4909199	2	0	0	56.1	56.1	1	1578.19	3.25	0	74.96	0	0.23	0	0	6.18	0	0	0	0	0	0	-25.32	-25.32
Inverter Transformer	MV4-7 T	369040	4909001	2	0	0	56.1	56.1	1	1634.31	3.25	0	75.27	0	0.25	0	0	6.3	0	0	0	0	0	0	-25.76	-25.76
Inverter Transformer	MV4-12 T	369049	4908803	2	0	0	56.1	56.1	1	1709.88	3.25	0	75.66	0	0.28	0	0	6.46	0	0	0	0	0	0	-26.34	-26.34
Inverter Transformer	MV4-14 T	369182	4908507	2	0	0	56.1	56.1	1	1762.11	3.25	0	75.92	0	0.3	0	0	6.57	0	0	0	0	0	0	-26.73	-26.73
Inverter Transformer	MV4-15 T	369170	4908481	2	0	0	56.1	56.1	1	1787.78	3.25	0	76.05	0	0.32	0	0	6.62	0	0	0	0	0	0	-26.92	-26.92
Inverter Transformer	MV4-13 T	369057	4908605	2	0	0	56.1	56.1	1	1805	3.25	0	76.13	0	0.32	0	0	6.65	0	0	0	0	0	0	-27.05	-27.05
Inverter Transformer	MV6-2 T	370091	4907339	2	0	0	56.1	56.1	1	2317.34	3.25	0	78.3	0	0.54	0	0	7.65	0	0	0	0	0	0	-30.43	-30.43
Inverter Transformer	MV6-3 T	370202	4907140	2	0	0	56.1	56.1	1	2494.39	3.25	0	78.94	0	0.61	0	0	7.98	0	0	0	0	0	0	-31.47	-31.47
Inverter Transformer	MV3-2 T	368677	4907928	2	0	0	56.1	56.1	1	2521.94	3.25	0	79.03	0	0.63	0	0	8.03	0	0	0	0	0	0	-31.63	-31.63
Inverter Transformer	MV3-4 T	368507	4907925	2	0	0	56.1	56.1	1	2652.99	3.25	0	79.47	0	0.68	0	0	8.27	0	0	0	0	0	0	-32.36	-32.36
Inverter Transformer	MV3-8 T	368685	4907712	2	0	0	56.1	56.1	1	2665.15	3.25	0	79.51	0	0.69	0	0	8.29	0	0	0	0	0	0	-32.43	-32.43
Inverter Transformer	MV3-9 T	368517	4907703	2	0	0	56.1	56.1	1	2791.85	3.25	0	79.92	0	0.74	0	0	8.51	0	0	0	0	0	0	-33.11	-33.11
Inverter Transformer	MV3-14 T	368678	4907498	2	0	0	56.1	56.1	1	2826.12	3.25	0	80.02	0	0.76	0	0	8.57	0	0	0	0	0	0	-33.29	-33.29
Inverter Transformer	MV3-5 T	368335	4907843	2	0	0	56.1	56.1	1	2838.32	3.25	0	80.06	0	0.76	0	0	8.59	0	0	0	0	0	0	-33.35	-33.35
Inverter Transformer	MV3-1 T	368150	4907976	2	0	0	56.1	56.1	1	2908.67	3.25	0	80.27	0	0.79	0	0	8.71	0	0	0	0	0	0	-33.72	-33.72
Inverter Transformer	MV3-11 T	368340	4907662	2	0	0	56.1	56.1	1	2950.58	3.25	0	80.4	0	0.81	0	0	8.78	0	0	0	0	0	0	-33.93	-33.93
Inverter Transformer	MV3-16 T	368509	4907475	2	0	0	56.1	56.1	1	2957.75	3.25	0	80.42	0	0.81	0	0	8.8	0	0	0	0	0	0	-33.97	-33.97
Inverter Transformer	MV3-20 T	368683	4907317	2	0	0	56.1	56.1	1	2960.6	3.25	0	80.43	0	0.81	0	0	8.8	0	0	0	0	0	0	-33.98	-33.98
Inverter Transformer	MV3-6 T	368156	4907834	2	0	0	56.1	56.1	1	2985.87	3.25	0	80.5	0	0.82	0	0	8.84	0	0	0	0	0	0	-34.11	-34.11
Inverter Transformer	MV3-15 T	368351	4907477	2	0	0	56.1	56.1	1	3067.88	3.25	0	80.74	0	0.86	0	0	8.98	0	0	0	0	0	0	-34.52	-34.52
Inverter Transformer	MV3-10 T	368162	4907669	2	0	0	56.1	56.1	1	3082.15	3.25	0	80.78	0	0.86	0	0	9.01	0	0	0	0	0	0	-34.59	-34.59
Inverter Transformer	MV3-3 T	367944	4907927	2	0	0	56.1	56.1	1	3107.56	3.25	0	80.85	0	0.88	0	0	9.05	0	0	0	0	0	0	-34.71	-34.71
Inverter Transformer	MV3-22 T	368661	4907142	2	0	0	56.1	56.1	1	3111.42	3.25	0	80.86	0	0.88	0	0	9.06	0	0	0	0	0	0	-34.73	-34.73
Inverter Transformer	MV3-19 T	368352	4907347	2	0	0	56.1	56.1	1	3158.9	3.25	0	80.99	0	0.9	0	0	9.13	0	0	0	0	0	0	-34.96	-34.96
Inverter Transformer	MV3-21 T	368484	4907206	2	0	0	56.1	56.1	1	3173.6	3.25	0	81.03	0	0.9	0	0	9.16	0	0	0	0	0	0	-35.03	-35.03
Inverter Transformer	MV3-17 T	368183	4907472	2	0	0	56.1	56.1	1	3194.16	3.25	0	81.09	0	0.91	0	0	9.19	0	0	0	0	0	0	-35.13	-35.13
Inverter Transformer	MV3-7 T	367951	4907754	2	0	0	56.1	56.1	1	3198.79	4.55	0	81.1	0	1.85	2.56	0	9.2	0	0	0	0	0	0	-38.65	-38.65
Inverter Transformer	MV3-13 T	367958	4907577	2	0	0	56.1	56.1	1	3299.07	3.25	0	81.37	0	0.96	0	0	9.36	0	0	0	0	0	0	-35.63	-35.63
Inverter Transformer	MV3-12 T	367674	4907594	2	0	0	56.1	56.1	1	3517.37	3.25	0	81.92	0	1.05	0	0	9.72	0	0	0	0	0	0	-36.63	-36.63
Inverter Transformer	MV3-18 T	367757	4907412	2	0	0	56.1	56.1	1	3559.05	3.25	0	82.03	0	1.06	0	0	9.78	0	0	0	0	0	0	-36.81	-36.81
Line Reactor	NGR	369421	4908787.5	5	0	0	45.4	45.4	1	1401.91	5.25	0	73.93	0	3.44	1.22	0.04	0.57	0	0	0	0	0	0	-33.82	-33.82
Inverter Transformer	MV2-2 T	365982	4906654	2	0	0	56.1	56.1	1	5446.34	3.25	0	85.72	0	1.78	0	0	12.43	0	0	0	0	0	0	-43.87	-43.87
Inverter Transformer	MV2-3 T	365814	4906641	2	0	0	56.1	56.1	1	5595.09	3.25	0	85.96	0	1.83	0	0	12.61	0	0	0	0	0	0	-44.34	-44.34
Inverter Transformer	MV2-4 T	365590	4906628	2	0	0	56.1	56.1	1	5792.88	3.25	0	86.26	0	1.9	0	0	12.86	0	0	0	0	0	0	-44.95	-44.95
Inverter Transformer	MV1-1 T	364721	4906166	2	0	0	56.1	56.1	1	6775.92	3.25	0	87.62	0	2.2	0	0	13.99	0	0	0	0	0	0	-47.74	-47.74
Inverter Transformer	MV1-2 T	364759	4906063	2	0	0	56.1	56.1	1	6796.39	3.25	0	87.65	0	2.2	0	0	14.01	0	0	0	0	0	0	-47.8	-47.8
Inverter Transformer	MV1-4 T	364821	4905918	2	0	0	56.1	56.1	1	6820.94	3.25	0	87.68	0	2.21	0	0	14.04	0	0	0	0	0	0	-47.86	-47.86
Inverter Transformer	MV1-12 T	365044	4905386	2	0	0	56.1	56.1	1	6944.56	3.25	0	87.83	0	2.24	0	0	14.17	0	0	0	0	0	0	-48.19	-48.19
Inverter Transformer	MV1-5 T	364676	4905892	2	0	0	56.1	56.1	1	6957.17	3.25	0	87.85	0	2.25	0	0	14.18	0	0	0	0	0	0	-48.22	-48.22
Inverter Transformer	MV1-15 T	365309	4904994	2	0	0	56.1	56.1	1	6988.54	3.25	0	87.89	0	2.26	0	0	14.22	0	0	0	0	0	0	-48.3	-48.3
Inverter Transformer	MV1-8 T	364782	4905647	2	0	0	56.1	56.1	1	7003.43	3.25	0	87.91	0	2.26	0	0	14.23	0	0	0	0	0	0	-48.34	-48.34
Inverter Transformer	MV1-3 T	364435	4906039	2	0	0	56.1	56.1	1	7086.87	3.25	0	88.01	0	2.28	0	0	14.32	0	0	0	0	0	0	-48.56	-48.56
Inverter Transformer	MV1-6 T	364482	4905835	2	0	0	56.1	56.1	1	7151.83	3.25	0	88.09	0	2.3	0	0	14.39	0	0	0	0	0	0	-48.72	-48.72
Inverter Transformer	MV1-9 T	364555	4905646	2	0	0	56.1	56.1	1	7192.31	3.25	0	88.14	0	2.31	0	0	14.43	0	0	0	0	0	0	-48.82	-48.82
Inverter Transformer	MV1-11 T	364649	4905414	2	0	0	56.1	56.1	1	7245.86	4.24	0	88.2	0	3.09	1.54	0	14.49	0	0	0	0	0	0	-51.26	-51.26
Limit. Valu 0	0																								
Level D/N: 33.1927	33.1927																								

Receiver: Existing Noise Receptor
ID: S-R85
X: 364389
Y: 4904208
Z: 4.5
Ground: 0

ISO	Description	ID	X	Y	Z	Ground	ReflOrd	LxT	LxN	L/A	Dist.	hm	Freq	Adiv	K0b	Agr	Abar	z	Aatm	Afol	Ahous	Cmet	CmetN	Dc	RL	LtotT	LtotN
	Inverter	MV1-15	365315	4904994	2	0	0	100.3	100.3	1	1214.61	3.25	0	72.69	0	-0.15	0	0	11.57	0	0	0	0	0	0	16.2	16.2
	Inverter	MV1-11	364655	4905414	2	0	0	100.3	100.3	1	1234.99	3.25	0	72.83	0	-0.14	0	0	11.63	0	0	0	0	0	0	15.99	15.99
	Inverter	MV1-12	365038	4905386	2	0	0	100.3	100.3	1	1344.95	3.25	0	73.57	0	-0.09	0	0	11.93	0	0	0	0	0	0	14.91	14.91
	Inverter	MV1-9	364561	4905646	2	0	0	100.3	100.3	1	1448.25	3.25	0	74.22	0	-0.05	0	0	12.19	0	0	0	0	0	0	13.95	13.95
	Inverter	MV1-8	364788	4905647	2	0	0	100.3	100.3	1	1493.29	3.25	0	74.48	0	-0.04	0	0	12.31	0	0	0	0	0	0	13.56	13.56
	Inverter	MV1-13	364731	4905241	2	0	0	97.3	97.3	1	1088.14	3.25	0	71.73	0	-0.2	0	0	11.19	0	0	0	0	0	0	14.59	14.59
	Inverter	MV1-14	365163	4905049	2	0	0	97.3	97.3	1	1142.96	3.25	0	72.16	0	-0.18	0	0	11.36	0	0	0	0	0	0	13.97	13.97
	Inverter	MV1-6	364477	4905835	2	0	0	100.3	100.3	1	1629.38	3.25	0	75.24	0	0.01	0	0	12.64	0	0	0	0	0	0	12.42	12.42
	Inverter	MV1-5	364671	4905892	2	0	0	100.3	100.3	1	1707.45	3.25	0	75.65	0	0.04	0	0	12.82	0	0	0	0	0	0	11.81	11.81
	Sol_Luce Substation	S_Substation	369426	4908792	3.5	0	0	112.1	112.1	1	6810.61	5.25	0	87.66	0	1.34	2.48	0.24	10.57	0	0	0	0	0	0	10.02	10.02
	Inverter	MV1-4	364815	4905918	2	0	0	100.3	100.3	1	1762.27	3.25	0	75.92	0	0.06	0	0	12.94	0	0	0	0	0	0	11.39	11.39
	Inverter	MV1-2	364753	4906063	2	0	0	100.3	100.3	1	1890.38	3.25	0	76.53	0	0.1	0	0	13.23	0	0	0	0	0	0	10.46	10.46
	Inverter	MV1-1	364715	4906166	2	0	0	100.3	100.3	1	1984.95	3.25	0	76.96	0	0.12	0	0	13.43	0	0	0	0	0	0	9.8	9.8
	Inverter	MV1-10	365004	4905564	2	0	0	97.3	97.3	1	1488.95	3.25	0	74.46	0	-0.04	0	0	12.3	0	0	0	0	0	0	10.59	10.59
	Inverter	MV1-7	364925	4905782	2	0	0	97.3	97.3	1	1662.76	3.25	0	75.42	0	0.02	0	0	12.72	0	0	0	0	0	0	9.16	9.16
	Inverter	MV2-4	365586	4906624	2	0	0	100.3	100.3	1	2696.27	3.25	0	79.62	0	0.3	0	0	14.82	0	0	0	0	0	0	5.57	5.57
	Inverter	MV2-3	365820	4906641	2	0	0	100.3	100.3	1	2822.63	3.25	0	80.01	0	0.33	0	0	15.06	0	0	0	0	0	0	4.92	4.92

Inverter	MV2-1	365842	4906816	2	0	0	97.3	97.3	1	2985.44	3.25	0	80.5	0	0.36	0	0	15.35	0	0	0	0	0	0	1.11	1.11
Inverter	MV3-18	367752	4907412	2	0	0	100.3	100.3	1	4644.93	3.25	0	84.34	0	0.61	0	0	18.05	0	0	0	0	0	0	-2.69	-2.69
Inverter	MV3-12	367668	4907594	2	0	0	100.3	100.3	1	4713.47	3.25	0	84.47	0	0.61	0	0	18.15	0	0	0	0	0	0	-2.92	-2.92
Inverter	MV3-13	367963	4907577	2	0	0	100.3	100.3	1	4911.58	3.25	0	84.82	0	0.63	0	0	18.45	0	0	0	0	0	0	-3.6	-3.6
Inverter	MV3-17	368178	4907472	2	0	0	100.3	100.3	1	5001.02	3.25	0	84.98	0	0.64	0	0	18.58	0	0	0	0	0	0	-3.89	-3.89
Inverter	MV3-7	367945	4907754	2	0	0	100.3	100.3	1	5021.88	3.25	0	85.02	0	0.64	0	0	18.61	0	0	0	0	0	0	-3.96	-3.96
Inverter	MV3-19	368357	4907347	2	0	0	100.3	100.3	1	5059.48	3.25	0	85.08	0	0.65	0	0	18.67	0	0	0	0	0	0	-4.08	-4.08
Inverter	MV3-21	368478	4907206	2	0	0	100.3	100.3	1	5070.3	3.25	0	85.1	0	0.65	0	0	18.68	0	0	0	0	0	0	-4.12	-4.12
Inverter	MV3-10	368167	4907669	2	0	0	100.3	100.3	1	5123.65	3.25	0	85.19	0	0.65	0	0	18.76	0	0	0	0	0	0	-4.29	-4.29
Inverter	MV3-15	368357	4907477	2	0	0	100.3	100.3	1	5141.15	3.25	0	85.22	0	0.65	0	0	18.79	0	0	0	0	0	0	-4.35	-4.35
Inverter	MV3-3	367939	4907927	2	0	0	100.3	100.3	1	5141.35	3.25	0	85.22	0	0.65	0	0	18.79	0	0	0	0	0	0	-4.35	-4.35
Inverter	MV3-6	368162	4907834	2	0	0	100.3	100.3	1	5232.92	3.25	0	85.37	0	0.66	0	0	18.92	0	0	0	0	0	0	-4.64	-4.64
Inverter	MV3-11	368346	4907662	2	0	0	100.3	100.3	1	5252.43	3.25	0	85.41	0	0.66	0	0	18.95	0	0	0	0	0	0	-4.71	-4.71
Inverter	MV3-16	368514	4907475	2	0	0	100.3	100.3	1	5262.03	3.25	0	85.42	0	0.66	0	0	18.96	0	0	0	0	0	0	-4.74	-4.74
Inverter	MV3-20	368689	4907317	2	0	0	100.3	100.3	1	5306.21	3.25	0	85.5	0	0.67	0	0	19.02	0	0	0	0	0	0	-4.88	-4.88
Inverter	MV3-9	368512	4907703	2	0	0	100.3	100.3	1	5405.01	3.25	0	85.66	0	0.67	0	0	19.17	0	0	0	0	0	0	-5.18	-5.18
Inverter	MV3-14	368684	4907498	2	0	0	100.3	100.3	1	5410.28	3.25	0	85.66	0	0.67	0	0	19.17	0	0	0	0	0	0	-5.2	-5.2
Inverter	MV3-8	368680	4907712	2	0	0	100.3	100.3	1	5539.92	3.25	0	85.87	0	0.68	0	0	19.36	0	0	0	0	0	0	-5.6	-5.6
Inverter	MV6-2	370085	4907339	2	0	0	100.3	100.3	1	6499.81	3.25	0	87.26	0	0.71	0	0	20.66	0	0	0	0	0	0	-8.32	-8.32
Inverter	MV6-3	370207	4907140	2	0	0	100.3	100.3	1	6515.04	3.25	0	87.28	0	0.71	0	0	20.68	0	0	0	0	0	0	-8.36	-8.36
Inverter	MV4-7	369035	4909001	2	0	0	100.3	100.3	1	6675.19	3.25	0	87.49	0	0.71	0	0	20.89	0	0	0	0	0	0	-8.78	-8.78
Inverter	MV1-3	364440	4906039	2	0	0	89.1	89.1	1	1831.71	3.25	0	76.26	0	0.87	0	0	7.77	0	0	0	0	0	0	4.16	4.16
Inverter	MV4-11	369264	4908855	2	0	0	100.3	100.3	1	6735	3.25	0	87.57	0	0.71	0	0	20.96	0	0	0	0	0	0	-8.93	-8.93
Inverter	MV4-10	369312	4908858	2	0	0	100.3	100.3	1	6771.89	3.25	0	87.61	0	0.71	0	0	21.01	0	0	0	0	0	0	-9.03	-9.03
Inverter	MV4-4	369027	4909199	2	0	0	100.3	100.3	1	6813.31	3.25	0	87.67	0	0.71	0	0	21.06	0	0	0	0	0	0	-9.13	-9.13
Inverter	MV4-8	369256	4909001	2	0	0	100.3	100.3	1	6830.85	3.25	0	87.69	0	0.71	0	0	21.09	0	0	0	0	0	0	-9.18	-9.18
Inverter	MV4-9	369289	4909001	2	0	0	100.3	100.3	1	6854.4	3.25	0	87.72	0	0.71	0	0	21.12	0	0	0	0	0	0	-9.24	-9.24
Inverter	MV4-1	369011	4909397	2	0	0	100.3	100.3	1	6949	3.25	0	87.84	0	0.71	0	0	21.24	0	0	0	0	0	0	-9.47	-9.47
Inverter	MV4-6	369243	4909192	2	0	0	100.3	100.3	1	6957.12	3.25	0	87.85	0	0.71	0	0	21.25	0	0	0	0	0	0	-9.49	-9.49
Inverter	MV4-5	369289	4909199	2	0	0	100.3	100.3	1	6994.29	3.25	0	87.89	0	0.71	0	0	21.29	0	0	0	0	0	0	-9.58	-9.58
Gardiner Substation	G_Sub	366586.3	4903349.9	2.5	0	0	90.8	90.8	1	2358.91	4.25	0	78.45	0	0.94	3.48	0.31	4.96	0	0	0	0	0	0	2.94	2.94
Inverter	MV4-3	369229	4909397	2	0	0	100.3	100.3	1	7095.87	3.25	0	88.02	0	0.71	0	0	21.42	0	0	0	0	0	0	-9.83	-9.83
Inverter	MV4-2	369272	4909397	2	0	0	100.3	100.3	1	7125.27	3.25	0	88.06	0	0.71	0	0	21.46	0	0	0	0	0	0	-9.91	-9.91
Inverter	MV5-5	370015	4908690	2	0	0	100.3	100.3	1	7193.07	3.25	0	88.14	0	0.7	0	0	21.54	0	0	0	0	0	0	-10.07	-10.07
Inverter	MV5-2	370006	4908853	2	0	0	100.3	100.3	1	7288.81	3.25	0	88.25	0	0.7	0	0	21.66	0	0	0	0	0	0	-10.3	-10.3
Inverter	MV5-4	370324	4908707	2	0	0	100.3	100.3	1	7447.5	3.25	0	88.44	0	0.69	0	0	21.85	0	0	0	0	0	0	-10.67	-10.67
Inverter	MV5-3	370231	4908851	2	0	0	100.3	100.3	1	7462.33	3.25	0	88.46	0	0.69	0	0	21.87	0	0	0	0	0	0	-10.71	-10.71
Inverter	MV5-1	370020	4909142	2	0	0	100.3	100.3	1	7486.82	3.25	0	88.49	0	0.69	0	0	21.9	0	0	0	0	0	0	-10.76	-10.76
Inverter	MV6-1	370235	4907364	2	0	0	97.3	97.3	1	6643.5	3.25	0	87.45	0	0.71	0	0	20.85	0	0	0	0	0	0	-11.7	-11.7
Inverters	G_Inv1	366526.4	4903225.8	2	0	0	87.7	87.7	1	2352.28	3.25	0	78.43	0	2.63	0	0	3.04	0	0	0	0	0	0	3.56	3.56
DSTATCOM - 10 MVAR #2	DSAT2	369403	4908757	2.5	0	0	96.6	96.6	1	6770.05	3.5	0	87.61	0	3.82	0	0	4.2	0	0	0	0	0	0	0.99	0.99
DSTATCOM - 10 MVAR #1	DSAT1	369437	4908757	2.5	0	0	96.6	96.6	1	6795.27	3.5	0	87.64	0	3.83	0	0	4.22	0	0	0	0	0	0	0.94	0.94
Inverters	G_Inv3	366583.7	4903091.4	2	0	0	87.7	87.7	1	2462.42	3.25	0	78.83	0	2.64	0	0	3.17	0	0	0	0	0	0	3.03	3.03
Inverter	MV2-2	365977	4906654	2	0	0	89.1	89.1	1	2916.28	3.25	0	80.3	0	1.13	0	0	9.49	0	0	0	0	0	0	-1.85	-1.85
Inverters	G_Inv2	366676.9	4903239.1	2	0	0	87.7	87.7	1	2484.6	3.25	0	78.91	0	2.64	0	0	3.19	0	0	0	0	0	0	2.92	2.92
Inverters	G_Inv5	366638.5	4902958.1	2	0	0	87.7	87.7	1	2573.42	3.25	0	79.21	0	2.65	0	0	3.29	0	0	0	0	0	0	2.5	2.5
Inverters	G_Inv4	366732.8	4903105	2	0	0	87.7	87.7	1	2590.37	3.25	0	79.27	0	2.65	0	0	3.31	0	0	0	0	0	0	2.43	2.43
Inverters	G_Inv7	366694.6	4902824.7	2	0	0	87.7	87.7	1	2688.74	3.25	0	79.59	0	2.66	0	0	3.43	0	0	0	0	0	0	1.98	1.98
Inverters	G_Inv6	366788.5	4902972	2	0	0	87.7	87.7	1	2699.13	3.25	0	79.62	0	2.67	0	0	3.44	0	0	0	0	0	0	1.93	1.93
Inverters	G_Inv9	366750.9	4902691.8	2	0	0	87.7	87.7	1	2806.68	3.25	0	79.96	0	2.68	0	0	3.56	0	0	0	0	0	0	1.46	1.46
Inverters	G_Inv8	366844.5	4902838.5	2	0	0	87.7	87.7	1	2811.59	3.25	0	79.98	0	2.68	0	0	3.56	0	0	0	0	0	0	1.44	1.44
Inverters	G_Inv10	366900.7	4902704.8	2	0	0	87.7	87.7	1	2927.16	3.25	0	80.33	0	2.69	0	0	3.69	0	0	0	0	0	0	0.95	0.95
SubstationTransformer	W_ST	369711.17	4906112.3	2.5	0	0	92	92	1	5652.59	4.25	0	86.04	0	1.8	2.18	0.27	9.37	0	0	0	0	0	0	-7.41	-7.41
Inverter	MV3-22	368656	4907142	2	0	0	89.1	89.1	1	5178.38	3.25	0	85.28	0	1.68	0	0	12.7	0	0	0	0	0	0	-10.61	-10.61
Inverter	MV3-1	368156	4907976	2	0	0	89.1	89.1	1	5328.05	3.25	0	85.53	0	1.72	0	0	12.9	0	0	0	0	0	0	-11.09	-11.09
Inverter	MV3-5	368340	4907843	2	0	0	89.1	89.1	1	5368.76	3.25	0	85.6	0	1.73	0	0	12.95	0	0	0	0	0	0	-11.22	-11.22
Westbrook Inverter Enclosur	W_INV2	369374	4906388	2	0	0	89.1	89.1	1	5440.83	3.25	0	85.71	0	1.75	0	0	13.05	0	0	0	0	0	0	-11.45	-11.45
Westbrook Inverter Enclosur	W_INV3	369508	4906164	2	0	0	89.1	89.1	1	5479.97	3.25	0	85.78	0	1.76	0	0	13.1	0	0	0	0	0	0	-11.57	-11.57
Inverter	MV3-4	368502	4907925	2	0	0	89.1	89.1	1	5543.72	3.25	0	85.88	0	1.77	0	0	13.18	0	0	0	0	0	0	-11.77	-11.77
Westbrook Inverter Enclosur	W_INV4	369673	4906164	2	0	0	89.1	89.1	1	5634.41	3.25	0	86.02	0	1.8	0	0	13.3	0	0	0	0	0	0	-12.05	-12.05
Inverter	MV3-2	368671	4907928	2	0	0	89.1	89.1	1	5672.21	3.25	0	86.08	0	1.81	0	0	13.35	0	0	0	0	0	0	-12.17	-12.17
Westbrook Inverter Enclosur	W_INV7	369780	4906417	2	0	0	89.1	89.1	1	5826.03	3.25	0	86.31	0	1.84	0	0	13.54	0	0	0	0	0	0	-12.63	-12.63
Westbrook Inverter Enclosur	W_INV5	369719	4906574	2	0	0	89.1	89.1	1	5831.54	3.25	0	86.32	0	1.84	0	0	13.55	0	0	0	0	0	0	-12.65	-12.65
Westbrook Inverter Enclosur	W_INV6	369875	4906578	2	0	0	89.1	89.1	1	5976.04	3.25	0	86.53	0	1.88	0	0	13.73	0	0	0	0	0	0	-13.08	-13.08
Fixed Reactor Bank 1	FRB1	369378	4908755	6	0	0	89.8	89.8	1	6750.21	5.25	0	87.59	0	-0.32	0	0	10.51	0	0	0	0	0	0	-8	-8
Fixed Reactor Bank 2	FRB2	369464	4908755	6	0	0	89.8	89.8	1	6814.02	5.25	0	87.67	0	-0.31	0	0	10.57	0	0	0	0	0	0	-8.15	-8.15
Inverter	MV4-13	369051	4908605	2	0	0	89.1	89.1	1	6408.42	3.25	0	87.14	0	1.99	0	0	14.27	0	0	0	0	0	0	-14.33	-14.33
Inverter	MV4-15	369176	4908481	2	0	0	89.1	89.1	1	6416.69	3.25	0	87.15	0	1.99	0	0	14.28	0	0	0	0	0	0	-14.36	-14.36
Inverter	MV4-14	369176	4908507	2	0	0	89.1	89.1	1	6434.03	3.25	0	87.17	0	1.99	0	0	14.3	0	0	0	0	0	0	-14.41	-14.41
Inverter	MV4-12	369043	4908803	2	0	0	89.1	89.1	1	6540.16	3.25	0	87.31	0	2.02	0	0	14.43	0	0	0	0	0	0	-14.7	-14.7
Inverter	MV5-6	369982	4908507	2	0	0	89.1	89.1	1	7054.29	3.25	0	87.97	0	2.14	0	0	15.05	0	0	0	0	0	0	-16.1	-16.1
Westbrook Inverter Enclosur	W_INV1	369409	4906578	2	0	0	86.1	86.1	1	5551.33	3.25	0	85.89	0	1.78	0	0	13.19	0	0	0	0	0	0	-14.79	-14.79
Inverter	MV6-4	370250	4906966	2	0	0	86.1	86.1	1	6477.49	3.25	0	87.23	0	2	0	0	14.36	0	0	0	0	0	0	-17.53	-17.53
Inverter Transformer	MV1-13 T	364725	4905241	2	0	0	69.4	69.4	1	1086.27	3.25	0	71.72	0	1.75	0	0	3.93	0	0	0	0	0	0	-8.05	-8.05

Inverter Transformer	MV1-14 T	365157	4905049	2	0	0	69.4	69.4	1	1138.91	3.25	0	72.13	0	1.78	0	0	4	0	0	0	0	0	0	-8.56	-8.56
Inverter Transformer	MV1-10 T	365010	4905564	2	0	0	69.4	69.4	1	1491.44	3.25	0	74.47	0	1.97	0	0	4.42	0	0	0	0	0	0	-11.52	-11.52
Inverter Transformer	MV1-7 T	364919	4905782	2	0	0	69.4	69.4	1	1660.84	3.25	0	75.41	0	2.04	0	0	4.61	0	0	0	0	0	0	-12.71	-12.71
Westbrook Inverter Transfor	W_INVTR1	369403	4906578	2	0	0	78.2	78.2	1	5545.91	3.25	0	85.88	0	-3.28	0	0	2.6	0	0	0	0	0	0	-6.95	-6.95
Westbrook Inverter Transfor	W_INVTR2	369368	4906388	2	0	0	77.3	77.3	1	5435.33	3.25	0	85.7	0	-3.26	0	0	2.56	0	0	0	0	0	0	-7.66	-7.66
Westbrook Inverter Transfor	W_INVTR3	369514	4906164	2	0	0	77.3	77.3	1	5485.58	3.25	0	85.78	0	-3.27	0	0	2.58	0	0	0	0	0	0	-7.75	-7.75
Westbrook Inverter Transfor	W_INVTR4	369679	4906164	2	0	0	77.3	77.3	1	5640.04	3.25	0	86.03	0	-3.3	0	0	2.63	0	0	0	0	0	0	-8.01	-8.01
Westbrook Inverter Transfor	W_INVTR7	369786	4906417	2	0	0	77.3	77.3	1	5831.58	3.25	0	86.32	0	-3.34	0	0	2.69	0	0	0	0	0	0	-8.32	-8.32
Westbrook Inverter Transfor	W_INVTR5	369725	4906574	2	0	0	77.3	77.3	1	5837.02	3.25	0	86.32	0	-3.34	0	0	2.69	0	0	0	0	0	0	-8.33	-8.33
Westbrook Inverter Transfor	W_INVTR6	369881	4906578	2	0	0	77.3	77.3	1	5981.55	3.25	0	86.54	0	-3.36	0	0	2.74	0	0	0	0	0	0	-8.57	-8.57
Inverter Transformer	MV2-1 T	365836	4906816	2	0	0	69.4	69.4	1	2982.53	3.25	0	80.49	0	2.5	0	0	5.87	0	0	0	0	0	0	-19.51	-19.51
Inverter Transformer	MV1-15 T	365309	4904994	2	0	0	56.1	56.1	1	1210.04	3.25	0	72.66	0	0.09	0	0	5.38	0	0	0	0	0	0	-22.06	-22.06
Inverter Transformer	MV1-11 T	364649	4905414	2	0	0	56.1	56.1	1	1233.71	3.25	0	72.82	0	0.1	0	0	5.43	0	0	0	0	0	0	-22.29	-22.29
Inverter Transformer	MV1-12 T	365044	4905386	2	0	0	56.1	56.1	1	1347.86	3.25	0	73.59	0	0.14	0	0	5.69	0	0	0	0	0	0	-23.36	-23.36
Inverter Transformer	MV6-4 T	370244	4906966	2	0	0	69.4	69.4	1	6472.06	3.25	0	87.22	0	3.25	0	0	8.3	0	0	0	0	0	0	-29.42	-29.42
Inverter Transformer	MV6-1 T	370230	4907364	2	0	0	69.4	69.4	1	6639.1	3.25	0	87.44	0	3.28	0	0	8.4	0	0	0	0	0	0	-29.76	-29.76
Inverter Transformer	MV1-9 T	364555	4905646	2	0	0	56.1	56.1	1	1447.55	3.25	0	74.21	0	0.18	0	0	5.9	0	0	0	0	0	0	-24.24	-24.24
Inverter Transformer	MV1-8 T	364782	4905647	2	0	0	56.1	56.1	1	1491.7	3.25	0	74.47	0	0.2	0	0	6	0	0	0	0	0	0	-24.61	-24.61
Inverter Transformer	MV1-6 T	364482	4905835	2	0	0	56.1	56.1	1	1629.66	3.25	0	75.24	0	0.25	0	0	6.29	0	0	0	0	0	0	-25.73	-25.73
Inverter Transformer	MV1-5 T	364676	4905892	2	0	0	56.1	56.1	1	1708.28	3.25	0	75.65	0	0.28	0	0	6.46	0	0	0	0	0	0	-26.33	-26.33
Inverter Transformer	MV1-4 T	364821	4905918	2	0	0	56.1	56.1	1	1763.73	3.25	0	75.93	0	0.31	0	0	6.57	0	0	0	0	0	0	-26.75	-26.75
Inverter Transformer	MV1-3 T	364435	4906039	2	0	0	56.1	56.1	1	1831.58	3.25	0	76.26	0	0.33	0	0	6.71	0	0	0	0	0	0	-27.24	-27.24
Inverter Transformer	MV1-2 T	364759	4906063	2	0	0	56.1	56.1	1	1891.54	3.25	0	76.54	0	0.36	0	0	6.83	0	0	0	0	0	0	-27.66	-27.66
Inverter Transformer	MV1-1 T	364721	4906166	2	0	0	56.1	56.1	1	1985.95	3.25	0	76.96	0	0.4	0	0	7.02	0	0	0	0	0	0	-28.31	-28.31
Inverter Transformer	MV2-4 T	365590	4906628	2	0	0	56.1	56.1	1	2701.63	3.25	0	79.63	0	0.7	0	0	8.35	0	0	0	0	0	0	-32.63	-32.63
Inverter Transformer	MV2-3 T	365814	4906641	2	0	0	56.1	56.1	1	2819.6	3.25	0	80	0	0.75	0	0	8.56	0	0	0	0	0	0	-33.26	-33.26
Inverter Transformer	MV2-2 T	365982	4906654	2	0	0	56.1	56.1	1	2919	3.25	0	80.3	0	0.8	0	0	8.73	0	0	0	0	0	0	-33.77	-33.77
Inverter Transformer	MV3-18 T	367757	4907412	2	0	0	56.1	56.1	1	4648.55	3.25	0	84.35	0	1.5	0	0	11.38	0	0	0	0	0	0	-41.17	-41.17
Inverter Transformer	MV3-12 T	367674	4907594	2	0	0	56.1	56.1	1	4717.65	3.25	0	84.47	0	1.52	0	0	11.48	0	0	0	0	0	0	-41.41	-41.41
Inverter Transformer	MV3-13 T	367958	4907577	2	0	0	56.1	56.1	1	4907.95	3.25	0	84.82	0	1.59	0	0	11.73	0	0	0	0	0	0	-42.08	-42.08
Inverter Transformer	MV3-17 T	368183	4907472	2	0	0	56.1	56.1	1	5004.81	3.25	0	84.99	0	1.63	0	0	11.86	0	0	0	0	0	0	-42.42	-42.42
Inverter Transformer	MV3-7 T	367951	4907754	2	0	0	56.1	56.1	1	5026.13	3.25	0	85.02	0	1.63	0	0	11.89	0	0	0	0	0	0	-42.49	-42.49
Inverter Transformer	MV3-19 T	368352	4907347	2	0	0	56.1	56.1	1	5055.56	3.25	0	85.08	0	1.65	0	0	11.93	0	0	0	0	0	0	-42.59	-42.59
Inverter Transformer	MV3-21 T	368484	4907206	2	0	0	56.1	56.1	1	5075.14	3.25	0	85.11	0	1.65	0	0	11.95	0	0	0	0	0	0	-42.66	-42.66
Inverter Transformer	MV3-10 T	368162	4907669	2	0	0	56.1	56.1	1	5119.97	3.25	0	85.19	0	1.67	0	0	12.01	0	0	0	0	0	0	-42.81	-42.81
Inverter Transformer	MV3-15 T	368351	4907477	2	0	0	56.1	56.1	1	5136.52	3.25	0	85.21	0	1.67	0	0	12.03	0	0	0	0	0	0	-42.86	-42.86
Inverter Transformer	MV3-3 T	367944	4907927	2	0	0	56.1	56.1	1	5144.8	3.25	0	85.23	0	1.68	0	0	12.04	0	0	0	0	0	0	-42.89	-42.89
Inverter Transformer	MV3-22 T	368661	4907142	2	0	0	56.1	56.1	1	5182.5	3.25	0	85.29	0	1.69	0	0	12.09	0	0	0	0	0	0	-43.02	-43.02
Inverter Transformer	MV3-6 T	368156	4907834	2	0	0	56.1	56.1	1	5228.59	3.25	0	85.37	0	1.71	0	0	12.15	0	0	0	0	0	0	-43.17	-43.17
Inverter Transformer	MV3-11 T	368340	4907662	2	0	0	56.1	56.1	1	5247.91	3.25	0	85.4	0	1.71	0	0	12.18	0	0	0	0	0	0	-43.23	-43.23
Inverter Transformer	MV3-16 T	368509	4907475	2	0	0	56.1	56.1	1	5258.11	3.25	0	85.42	0	1.72	0	0	12.19	0	0	0	0	0	0	-43.26	-43.26
Inverter Transformer	MV3-20 T	368683	4907317	2	0	0	56.1	56.1	1	5301.35	3.25	0	85.49	0	1.73	0	0	12.24	0	0	0	0	0	0	-43.41	-43.41
Inverter Transformer	MV3-1 T	368150	4907976	2	0	0	56.1	56.1	1	5323.81	3.25	0	85.52	0	1.74	0	0	12.27	0	0	0	0	0	0	-43.48	-43.48
Inverter Transformer	MV3-5 T	368335	4907843	2	0	0	56.1	56.1	1	5365.09	3.25	0	85.59	0	1.75	0	0	12.33	0	0	0	0	0	0	-43.61	-43.61
Inverter Transformer	MV3-14 T	368678	4907498	2	0	0	56.1	56.1	1	5405.52	3.25	0	85.66	0	1.77	0	0	12.38	0	0	0	0	0	0	-43.74	-43.74
Inverter Transformer	MV3-9 T	368517	4907703	2	0	0	56.1	56.1	1	5408.83	3.25	0	85.66	0	1.77	0	0	12.38	0	0	0	0	0	0	-43.75	-43.75
Inverter Transformer	MV3-8 T	368685	4907712	2	0	0	56.1	56.1	1	5543.79	3.25	0	85.88	0	1.82	0	0	12.55	0	0	0	0	0	0	-44.18	-44.18
Inverter Transformer	MV3-4 T	368507	4907925	2	0	0	56.1	56.1	1	5547.43	3.25	0	85.88	0	1.82	0	0	12.55	0	0	0	0	0	0	-44.19	-44.19
Inverter Transformer	MV3-2 T	368677	4907928	2	0	0	56.1	56.1	1	5676.74	3.25	0	86.08	0	1.86	0	0	12.71	0	0	0	0	0	0	-44.6	-44.6
Inverter Transformer	MV4-15 T	369170	4908481	2	0	0	56.1	56.1	1	6412.21	3.25	0	87.14	0	2.09	0	0	13.58	0	0	0	0	0	0	-46.75	-46.75
Inverter Transformer	MV4-13 T	369057	4908605	2	0	0	56.1	56.1	1	6412.79	3.25	0	87.14	0	2.09	0	0	13.58	0	0	0	0	0	0	-46.76	-46.76
Inverter Transformer	MV4-14 T	369182	4908507	2	0	0	56.1	56.1	1	6438.5	3.25	0	87.18	0	2.1	0	0	13.61	0	0	0	0	0	0	-46.83	-46.83
Inverter Transformer	MV6-2 T	370091	4907339	2	0	0	56.1	56.1	1	6505.07	3.25	0	87.27	0	2.12	0	0	13.69	0	0	0	0	0	0	-47.01	-47.01
Inverter Transformer	MV6-3 T	370202	4907140	2	0	0	56.1	56.1	1	6510.58	3.25	0	87.27	0	2.12	0	0	13.69	0	0	0	0	0	0	-47.03	-47.03
Inverter Transformer	MV4-12 T	369049	4908803	2	0	0	56.1	56.1	1	6544.44	3.25	0	87.32	0	2.13	0	0	13.73	0	0	0	0	0	0	-47.12	-47.12
Inverter Transformer	MV4-7 T	369040	4909001	2	0	0	56.1	56.1	1	6678.67	3.25	0	87.49	0	2.17	0	0	13.88	0	0	0	0	0	0	-47.48	-47.48
Inverter Transformer	MV4-11 T	369269	4908855	2	0	0	56.1	56.1	1	6738.62	3.25	0	87.57	0	2.19	0	0	13.95	0	0	0	0	0	0	-47.65	-47.65
Inverter Transformer	MV4-10 T	369307	4908858	2	0	0	56.1	56.1	1	6768.25	3.25	0	87.61	0	2.2	0	0	13.98	0	0	0	0	0	0	-47.72	-47.72
Inverter Transformer	MV4-4 T	369033	4909199	2	0	0	56.1	56.1	1	6817.39	3.25	0	87.67	0	2.21	0	0	14.03	0	0	0	0	0	0	-47.85	-47.85
Inverter Transformer	MV4-8 T	369262	4909001	2	0	0	56.1	56.1	1	6835.13	3.25	0	87.69	0	2.21	0	0	14.05	0	0	0	0	0	0	-47.9	-47.9
Inverter Transformer	MV4-9 T	369284	4909001	2	0	0	56.1	56.1	1	6850.83	3.25	0	87.71	0	2.22	0	0	14.07	0	0	0	0	0	0	-47.94	-47.94
Inverter Transformer	MV4-1 T	369017	4909397	2	0	0	56.1	56.1	1	6952.99	3.25	0	87.84	0	2.25	0	0	14.18	0	0	0	0	0	0	-48.21	-48.21
Inverter Transformer	MV4-6 T	369249	4909192	2	0	0	56.1	56.1	1	6961.31	3.25	0	87.85	0	2.25	0	0	14.19	0	0	0	0	0	0	-48.23	-48.23
Inverter Transformer	MV4-5 T	369283	4909199	2	0	0	56.1	56.1	1	6990.09	3.25	0	87.89	0	2.26	0	0	14.22	0	0	0	0	0	0	-48.31	-48.31
Inverter Transformer	MV5-6 T	369987	4908507	2	0	0	56.1	56.1	1	7058.26	3.25	0	87.97	0	2.28	0	0	14.29	0	0	0	0	0	0	-48.48	-48.48
Inverter Transformer	MV4-3 T	369234	4909397	2	0	0	56.1	56.1	1	7099.28	3.25	0	88.02	0	2.29	0	0	14.34	0	0	0	0	0	0	-48.59	-48.59
Inverter Transformer	MV4-2 T	369267	4909397	2	0	0	56.1	56.1	1	7121.84	3.25	0	88.05	0	2.29	0	0	14.36	0	0	0	0	0	0	-48.65	-48.65
Inverter Transformer	MV5-5 T	370021	4908690	2	0	0	56.1	56.1	1	7197.76	3.25	0	88.14	0	2.31	0	0	14.44	0	0	0	0	0	0	-48.84	-48.84
Inverter Transformer	MV5-2 T	370011	4908853	2	0	0	56.1	56.1	1	7292.66	3.25	0	88.26	0	2.34	0	0	14.54	0	0	0	0	0	0	-49.08	-49.08
Inverter Transformer	MV5-4 T	370330	4908707	2	0	0	56.1	56.1	1	7452.28	3.25	0	88.45	0	2.38	0	0	14.71	0	0	0	0	0	0	-49.47	-49.47
Inverter Transformer	MV5-3 T	370237	4908851	2	0	0	56.1	56.1	1	7467.03	3.25	0	88.46	0	2.38	0	0	14.72	0	0	0	0	0	0	-49.51	-49.51
Inverter Transformer	MV5-1 T	370015	4909142	2	0	0	56.1	56.1	1	7483.06	3.25	0	88.48	0	2.39	0	0	14.74	0	0	0	0	0	0	-49.55	-49.55
Line Reactor	NGR	369421	4908787.5	5	0	0	45.4	45.4	1	6803.88	5.25	0	87.66	0	3.22	1.37	0.08	2.78	0	0	0	0	0	0	-49.67	-49.67
Limit. Valu 0	0																									

Level D/N: 25.4985 25.4985

Receiver: Existing Noise Receptor
ID: S-R86
X: 364051
Y: 4906031
Z: 4.5
Ground: 0

ISO	Description	ID	X	Y	Z	Ground	ReflOrd	LxT	LxN	L/A	Dist.	hm	Freq	Adiv	K0b	Agr	Abar	z	Aatm	Afol	Ahous	Cmet	CmetN	Dc	RL	LtotT	LtotN
	Inverter	MV1-6	364477	4905835	2	0	0	100.3	100.3	1	468.93	3.25	0	64.42	0	-0.57	0	0	8.27	0	0	0	0	0	0	28.19	28.19
	Inverter	MV1-5	364671	4905892	2	0	0	100.3	100.3	1	635.4	3.25	0	67.06	0	-0.45	0	0	9.41	0	0	0	0	0	0	24.3	24.3
	Inverter	MV1-9	364561	4905646	2	0	0	100.3	100.3	1	639.01	3.25	0	67.11	0	-0.45	0	0	9.43	0	0	0	0	0	0	24.23	24.23
	Inverter	MV1-1	364715	4906166	2	0	0	100.3	100.3	1	677.59	3.25	0	67.62	0	-0.43	0	0	9.63	0	0	0	0	0	0	23.49	23.49
	Inverter	MV1-2	364753	4906063	2	0	0	100.3	100.3	1	702.73	3.25	0	67.94	0	-0.41	0	0	9.75	0	0	0	0	0	0	23.04	23.04
	Inverter	MV1-4	364815	4905918	2	0	0	100.3	100.3	1	772.32	3.25	0	68.76	0	-0.37	0	0	10.06	0	0	0	0	0	0	21.86	21.86
	Inverter	MV1-8	364788	4905647	2	0	0	100.3	100.3	1	831.04	3.25	0	69.39	0	-0.33	0	0	10.3	0	0	0	0	0	0	20.95	20.95
	Inverter	MV1-11	364655	4905414	2	0	0	100.3	100.3	1	863.43	3.25	0	69.72	0	-0.32	0	0	10.43	0	0	0	0	0	0	20.47	20.47
	Inverter	MV1-12	365038	4905386	2	0	0	100.3	100.3	1	1179.07	3.25	0	72.43	0	-0.16	0	0	11.46	0	0	0	0	0	0	16.58	16.58
	Inverter	MV1-7	364925	4905782	2	0	0	97.3	97.3	1	908.78	3.25	0	70.17	0	-0.29	0	0	10.6	0	0	0	0	0	0	16.84	16.84
	Inverter	MV1-3	364440	4906039	2	0	0	89.1	89.1	1	389.09	3.25	0	62.8	0	0.45	0	0	4.68	0	0	0	0	0	0	21.13	21.13
	Inverter	MV1-13	364731	4905241	2	0	0	97.3	97.3	1	1042.36	3.25	0	71.36	0	-0.23	0	0	11.05	0	0	0	0	0	0	15.13	15.13
	Inverter	MV1-10	365004	4905564	2	0	0	97.3	97.3	1	1061.27	3.25	0	71.52	0	-0.22	0	0	11.11	0	0	0	0	0	0	14.9	14.9
	Sol_Luce Substation	S_Substation	369426	4908792	3.5	0	0	112.1	112.1	1	6042.66	5.25	0	86.62	0	1.17	2.63	0.29	9.79	0	0	0	0	0	0	11.86	11.86
	Inverter	MV1-15	365315	4904994	2	0	0	100.3	100.3	1	1634.95	3.25	0	75.27	0	0.01	0	0	12.65	0	0	0	0	0	0	12.38	12.38
	Inverter	MV2-4	365586	4906624	2	0	0	100.3	100.3	1	1645.56	3.25	0	75.33	0	0.02	0	0	12.68	0	0	0	0	0	0	12.29	12.29
	Inverter	MV2-3	365820	4906641	2	0	0	100.3	100.3	1	1871.22	3.25	0	76.44	0	0.09	0	0	13.19	0	0	0	0	0	0	10.59	10.59
	Inverter	MV1-14	365163	4905049	2	0	0	97.3	97.3	1	1483.53	3.25	0	74.43	0	-0.04	0	0	12.28	0	0	0	0	0	0	10.64	10.64
	Inverter	MV2-1	365842	4906816	2	0	0	97.3	97.3	1	1955.48	3.25	0	76.83	0	0.12	0	0	13.37	0	0	0	0	0	0	7	7
	Inverter	MV3-12	367668	4907594	2	0	0	100.3	100.3	1	3940.26	3.25	0	82.91	0	0.52	0	0	16.95	0	0	0	0	0	0	-0.07	-0.07
	Inverter	MV3-18	367752	4907412	2	0	0	100.3	100.3	1	3950.26	3.25	0	82.93	0	0.52	0	0	16.97	0	0	0	0	0	0	-0.11	-0.11
	Inverter	MV3-13	367963	4907577	2	0	0	100.3	100.3	1	4206.41	3.25	0	83.48	0	0.55	0	0	17.38	0	0	0	0	0	0	-1.1	-1.1
	Inverter	MV3-7	367945	4907754	2	0	0	100.3	100.3	1	4258.17	3.25	0	83.58	0	0.56	0	0	17.46	0	0	0	0	0	0	-1.29	-1.29
	Inverter	MV3-3	367939	4907927	2	0	0	100.3	100.3	1	4325.66	3.25	0	83.72	0	0.57	0	0	17.56	0	0	0	0	0	0	-1.54	-1.54
	Inverter	MV3-17	368178	4907472	2	0	0	100.3	100.3	1	4371.34	3.25	0	83.81	0	0.58	0	0	17.63	0	0	0	0	0	0	-1.71	-1.71
	Inverter	MV3-10	368167	4907669	2	0	0	100.3	100.3	1	4429.96	3.25	0	83.93	0	0.58	0	0	17.72	0	0	0	0	0	0	-1.92	-1.92
	Inverter	MV3-6	368162	4907834	2	0	0	100.3	100.3	1	4489	3.25	0	84.04	0	0.59	0	0	17.81	0	0	0	0	0	0	-2.13	-2.13
	Inverter	MV3-19	368357	4907347	2	0	0	100.3	100.3	1	4502.61	3.25	0	84.07	0	0.59	0	0	17.83	0	0	0	0	0	0	-2.18	-2.18
	Inverter	MV3-15	368357	4907477	2	0	0	100.3	100.3	1	4542.31	3.25	0	84.15	0	0.6	0	0	17.89	0	0	0	0	0	0	-2.32	-2.32
	Inverter	MV3-21	368478	4907206	2	0	0	100.3	100.3	1	4580.28	3.25	0	84.22	0	0.6	0	0	17.95	0	0	0	0	0	0	-2.46	-2.46
	Inverter	MV3-11	368346	4907662	2	0	0	100.3	100.3	1	4594.26	3.25	0	84.24	0	0.6	0	0	17.97	0	0	0	0	0	0	-2.51	-2.51
	Inverter	MV3-16	368514	4907475	2	0	0	100.3	100.3	1	4690.79	3.25	0	84.42	0	0.61	0	0	18.12	0	0	0	0	0	0	-2.84	-2.84
	Inverter	MV3-9	368512	4907703	2	0	0	100.3	100.3	1	4764.04	3.25	0	84.56	0	0.62	0	0	18.23	0	0	0	0	0	0	-3.1	-3.1
	Inverter	MV3-20	368689	4907317	2	0	0	100.3	100.3	1	4812.99	3.25	0	84.65	0	0.62	0	0	18.3	0	0	0	0	0	0	-3.26	-3.26
	Inverter	MV3-14	368684	4907498	2	0	0	100.3	100.3	1	4859.71	3.25	0	84.73	0	0.63	0	0	18.37	0	0	0	0	0	0	-3.42	-3.42
	Inverter	MV3-8	368680	4907712	2	0	0	100.3	100.3	1	4924.77	3.25	0	84.85	0	0.64	0	0	18.47	0	0	0	0	0	0	-3.64	-3.64
	Inverter	MV4-7	369035	4909001	2	0	0	100.3	100.3	1	5801.82	3.25	0	86.27	0	0.7	0	0	19.72	0	0	0	0	0	0	-6.38	-6.38
	Inverter	MV4-4	369027	4909199	2	0	0	100.3	100.3	1	5898.88	3.25	0	86.42	0	0.7	0	0	19.86	0	0	0	0	0	0	-6.66	-6.66
	Inverter	MV4-11	369264	4908855	2	0	0	100.3	100.3	1	5928.77	3.25	0	86.46	0	0.7	0	0	19.9	0	0	0	0	0	0	-6.75	-6.75
	Inverter	MV4-10	369312	4908858	2	0	0	100.3	100.3	1	5972.44	3.25	0	86.52	0	0.7	0	0	19.96	0	0	0	0	0	0	-6.87	-6.87
	Inverter	MV4-8	369256	4909001	2	0	0	100.3	100.3	1	5992.74	3.25	0	86.55	0	0.7	0	0	19.98	0	0	0	0	0	0	-6.93	-6.93
	Inverter	MV4-1	369011	4909397	2	0	0	100.3	100.3	1	5994.29	3.25	0	86.55	0	0.7	0	0	19.99	0	0	0	0	0	0	-6.93	-6.93
	Inverter	MV4-9	369289	4909001	2	0	0	100.3	100.3	1	6021.42	3.25	0	86.59	0	0.71	0	0	20.02	0	0	0	0	0	0	-7.01	-7.01
	Inverter	MV4-6	369243	4909192	2	0	0	100.3	100.3	1	6078.55	3.25	0	86.68	0	0.71	0	0	20.1	0	0	0	0	0	0	-7.17	-7.17
	Inverter	MV4-5	369289	4909199	2	0	0	100.3	100.3	1	6121.51	3.25	0	86.74	0	0.71	0	0	20.16	0	0	0	0	0	0	-7.29	-7.29
	Inverter	MV6-2	370085	4907339	2	0	0	100.3	100.3	1	6174.14	3.25	0	86.81	0	0.71	0	0	20.23	0	0	0	0	0	0	-7.44	-7.44
	Inverter	MV4-3	369229	4909397	2	0	0	100.3	100.3	1	6175.89	3.25	0	86.81	0	0.71	0	0	20.23	0	0	0	0	0	0	-7.44	-7.44
	Inverter	MV4-2	369272	4909397	2	0	0	100.3	100.3	1	6211.99	3.25	0	86.86	0	0.71	0	0	20.28	0	0	0	0	0	0	-7.54	-7.54
	Inverter	MV6-3	370207	4907140	2	0	0	100.3	100.3	1	6255.1	3.25	0	86.92	0	0.71	0	0	20.34	0	0	0	0	0	0	-7.66	-7.66
	Inverter	MV5-5	370015	4908690	2	0	0	100.3	100.3	1	6529.9	3.25	0	87.3	0	0.71	0	0	20.7	0	0	0	0	0	0	-8.4	-8.4
	Inverter	MV5-2	370006	4908853	2	0	0	100.3	100.3	1	6589.82	3.25	0	87.38	0	0.72	0	0	20.78	0	0	0	0	0	0	-8.56	-8.56
	Inverter	MV5-1	370020	4909142	2	0	0	100.3	100.3	1	6731.07	3.25	0	87.56	0	0.71	0	0	20.96	0	0	0	0	0	0	-8.92	-8.92
	Inverter	MV5-3	370231	4908851	2	0	0	100.3	100.3	1	6793	3.25	0	87.64	0	0.71	0	0	21.04	0	0	0	0	0	0	-9.08	-9.08
	Inverter	MV5-4	370324	4908707	2	0	0	100.3	100.3	1	6819.93	3.25	0	87.68	0	0.71	0	0	21.07	0	0	0	0	0	0	-9.15	-9.15
	Inverter	MV2-2	365977	4906654	2	0	0	89.1	89.1	1	2024.26	3.25	0	77.13	0	0.91	0	0	8.08	0	0	0	0	0	0	2.94	2.94
	Inverter	MV6-1	370235	4907364	2	0	0	97.3	97.3	1	6326.04	3.25	0	87.02	0	0.71	0	0	20.43	0	0	0	0	0	0	-10.85	-10.85
	DSTATCOM - 10 MVAR #2	DSAT2	369403	4908757	2.5	0	0	96.6	96.6	1	6006.25	3.5	0	86.57	0	3.77	0	0	3.84	0	0	0	0	0	0	2.44	2.44
	DSTATCOM - 10 MVAR #1	DSAT1	369437	4908757	2.5	0	0	96.6	96.6	1	6036.56	3.5	0	86.62	0	3.78	0	0	3.86	0	0	0	0	0	0	2.38	2.38
	Gardiner Substation	G_Sub	366586.3	4903349.9	2.5	0	0	90.8	90.8	1	3689.99	4.25	0	82.34	0	1.27	2.7	0.27	6.95	0	0	0	0	0	0	-2.48	-2.48
	SubstationTransformer	W_ST	369711.17	4906112.3	2.5	0	0	92	92	1	5660.75	4.25	0	86.06	0	1.8	2.18	0.29	9.38	0	0	0	0	0	0	-7.43	-7.43
	Inverters	G_Inv1	366526.4	4903225.8	2	0	0	87.7	87.7	1	3741.22	3.25	0	82.46	0	2.77	0	0	4.59	0	0	0	0	0	0	-2.16	-2.16
	Inverters	G_Inv2	366676.9	4903239.1	2	0	0	87.7	87.7	1	3832.76	3.25	0	82.67	0	2.78	0	0	4.69	0	0	0	0	0	0	-2.48	-2.48
	Inverter	MV3-1	368156	4907976	2	0	0	89.1	89.1	1	4542.47	3.25	0	84.15	0	1.53	0	0	11.84	0	0	0	0	0	0	-8.46	-8.46
	Inverters	G_Inv3	366583.7	4903091.4	2	0	0	87.7	87.7	1	3880.18	3.25	0	82.78	0	2.78	0	0	4.74	0	0	0	0	0	0	-2.64	-2.64

Inverter	MV3-5	368340	4907843	2	0	0	89.1	89.1	1	4656.06	3.25	0	84.36	0	1.55	0	0	12	0	0	0	0	0	0	-8.86	-8.86
Inverters	G_Inv4	366732.8	4903105	2	0	0	87.7	87.7	1	3969.07	3.25	0	82.97	0	2.79	0	0	4.84	0	0	0	0	0	0	-2.94	-2.94
Inverters	G_Inv5	366638.5	4902958.1	2	0	0	87.7	87.7	1	4017.2	3.25	0	83.08	0	2.79	0	0	4.89	0	0	0	0	0	0	-3.1	-3.1
Inverter	MV3-22	368656	4907142	2	0	0	89.1	89.1	1	4737.12	3.25	0	84.51	0	1.57	0	0	12.11	0	0	0	0	0	0	-9.14	-9.14
Inverters	G_Inv6	366788.5	4902972	2	0	0	87.7	87.7	1	4105.04	3.25	0	83.27	0	2.8	0	0	4.99	0	0	0	0	0	0	-3.39	-3.39
Inverter	MV3-4	368502	4907925	2	0	0	89.1	89.1	1	4837.21	3.25	0	84.69	0	1.6	0	0	12.24	0	0	0	0	0	0	-9.48	-9.48
Inverters	G_Inv7	366694.6	4902824.7	2	0	0	87.7	87.7	1	4155.6	3.25	0	83.37	0	2.8	0	0	5.04	0	0	0	0	0	0	-3.56	-3.56
Inverters	G_Inv8	366844.5	4902838.5	2	0	0	87.7	87.7	1	4242.13	3.25	0	83.55	0	2.81	0	0	5.13	0	0	0	0	0	0	-3.84	-3.84
Inverter	MV3-2	368671	4907928	2	0	0	89.1	89.1	1	4994.3	3.25	0	84.97	0	1.64	0	0	12.46	0	0	0	0	0	0	-10.01	-10.01
Inverters	G_Inv9	366750.9	4902691.8	2	0	0	87.7	87.7	1	4294.15	3.25	0	83.66	0	2.82	0	0	5.19	0	0	0	0	0	0	-4	-4
Inverters	G_Inv10	366900.7	4902704.8	2	0	0	87.7	87.7	1	4380	3.25	0	83.83	0	2.82	0	0	5.28	0	0	0	0	0	0	-4.27	-4.27
Westbrook Inverter Enclosur	W_INV2	369374	4906388	2	0	0	89.1	89.1	1	5334.96	3.25	0	85.54	0	1.72	0	0	12.91	0	0	0	0	0	0	-11.11	-11.11
Westbrook Inverter Enclosur	W_INV3	369508	4906164	2	0	0	89.1	89.1	1	5458.62	3.25	0	85.74	0	1.75	0	0	13.07	0	0	0	0	0	0	-11.51	-11.51
Fixed Reactor Bank 1	FRB1	369378	4908755	6	0	0	89.8	89.8	1	5983.07	5.25	0	86.54	0	-0.42	0	0	9.72	0	0	0	0	0	0	-6.07	-6.07
Fixed Reactor Bank 2	FRB2	369464	4908755	6	0	0	89.8	89.8	1	6059.76	5.25	0	86.65	0	-0.41	0	0	9.81	0	0	0	0	0	0	-6.27	-6.27
Westbrook Inverter Enclosur	W_INV4	369673	4906164	2	0	0	89.1	89.1	1	5623.57	3.25	0	86	0	1.79	0	0	13.28	0	0	0	0	0	0	-12.02	-12.02
Inverter	MV4-13	369051	4908605	2	0	0	89.1	89.1	1	5623.65	3.25	0	86	0	1.79	0	0	13.28	0	0	0	0	0	0	-12.02	-12.02
Inverter	MV4-15	369176	4908481	2	0	0	89.1	89.1	1	5680.5	3.25	0	86.09	0	1.81	0	0	13.36	0	0	0	0	0	0	-12.19	-12.19
Inverter	MV4-14	369176	4908507	2	0	0	89.1	89.1	1	5691.77	3.25	0	86.1	0	1.81	0	0	13.37	0	0	0	0	0	0	-12.23	-12.23
Westbrook Inverter Enclosur	W_INV5	369719	4906574	2	0	0	89.1	89.1	1	5693.95	3.25	0	86.11	0	1.81	0	0	13.37	0	0	0	0	0	0	-12.23	-12.23
Inverter	MV4-12	369043	4908803	2	0	0	89.1	89.1	1	5710	3.25	0	86.13	0	1.81	0	0	13.39	0	0	0	0	0	0	-12.28	-12.28
Westbrook Inverter Enclosur	W_INV7	369780	4906417	2	0	0	89.1	89.1	1	5741.99	3.25	0	86.18	0	1.82	0	0	13.43	0	0	0	0	0	0	-12.38	-12.38
Westbrook Inverter Enclosur	W_INV6	369875	4906578	2	0	0	89.1	89.1	1	5849.63	3.25	0	86.34	0	1.85	0	0	13.57	0	0	0	0	0	0	-12.71	-12.71
Inverter	MV5-6	369982	4908507	2	0	0	89.1	89.1	1	6427.08	3.25	0	87.16	0	1.99	0	0	14.29	0	0	0	0	0	0	-14.39	-14.39
Westbrook Inverter Enclosur	W_INV1	369409	4906578	2	0	0	86.1	86.1	1	5385.85	3.25	0	85.63	0	1.74	0	0	12.97	0	0	0	0	0	0	-14.28	-14.28
Inverter Transformer	MV1-7 T	364919	4905782	2	0	0	69.4	69.4	1	903.01	3.25	0	70.11	0	1.6	0	0	3.67	0	0	0	0	0	0	-6.03	-6.03
Inverter	MV6-4	370250	4906966	2	0	0	86.1	86.1	1	6269.12	3.25	0	86.94	0	1.95	0	0	14.1	0	0	0	0	0	0	-16.94	-16.94
Inverter Transformer	MV1-13 T	364725	4905241	2	0	0	69.4	69.4	1	1038.45	3.25	0	71.33	0	1.71	0	0	3.86	0	0	0	0	0	0	-7.56	-7.56
Inverter Transformer	MV1-10 T	365010	4905564	2	0	0	69.4	69.4	1	1066.67	3.25	0	71.56	0	1.74	0	0	3.9	0	0	0	0	0	0	-7.85	-7.85
Inverter Transformer	MV1-14 T	365157	4905049	2	0	0	69.4	69.4	1	1479.04	3.25	0	74.4	0	1.96	0	0	4.41	0	0	0	0	0	0	-11.42	-11.42
Inverter Transformer	MV1-3 T	364435	4906039	2	0	0	56.1	56.1	1	384.09	3.25	0	62.69	0	-0.11	0	0	3.14	0	0	0	0	0	0	-9.66	-9.66
Westbrook Inverter Transfor	W_INVTR1	369403	4906578	2	0	0	78.2	78.2	1	5379.88	3.25	0	85.62	0	-3.25	0	0	2.54	0	0	0	0	0	0	-6.66	-6.66
Inverter Transformer	MV2-1 T	365836	4906816	2	0	0	69.4	69.4	1	1949.99	3.25	0	76.8	0	2.15	0	0	4.92	0	0	0	0	0	0	-14.52	-14.52
Westbrook Inverter Transfor	W_INVTR2	369368	4906388	2	0	0	77.3	77.3	1	5328.97	3.25	0	85.53	0	-3.24	0	0	2.52	0	0	0	0	0	0	-7.47	-7.47
Westbrook Inverter Transfor	W_INVTR3	369514	4906164	2	0	0	77.3	77.3	1	5464.62	3.25	0	85.75	0	-3.27	0	0	2.57	0	0	0	0	0	0	-7.71	-7.71
Inverter Transformer	MV1-6 T	364482	4905835	2	0	0	56.1	56.1	1	473.48	3.25	0	64.51	0	-0.12	0	0	3.47	0	0	0	0	0	0	-11.79	-11.79
Westbrook Inverter Transfor	W_INVTR4	369679	4906164	2	0	0	77.3	77.3	1	5629.57	3.25	0	86.01	0	-3.3	0	0	2.62	0	0	0	0	0	0	-7.99	-7.99
Westbrook Inverter Transfor	W_INVTR5	369725	4906574	2	0	0	77.3	77.3	1	5699.92	3.25	0	86.12	0	-3.31	0	0	2.65	0	0	0	0	0	0	-8.11	-8.11
Westbrook Inverter Transfor	W_INVTR7	369786	4906417	2	0	0	77.3	77.3	1	5747.98	3.25	0	86.19	0	-3.32	0	0	2.66	0	0	0	0	0	0	-8.19	-8.19
Westbrook Inverter Transfor	W_INVTR6	369881	4906578	2	0	0	77.3	77.3	1	5855.61	3.25	0	86.35	0	-3.34	0	0	2.7	0	0	0	0	0	0	-8.36	-8.36
Inverter Transformer	MV1-9 T	364555	4905646	2	0	0	56.1	56.1	1	634.23	3.25	0	67.04	0	-0.1	0	0	3.95	0	0	0	0	0	0	-14.84	-14.84
Inverter Transformer	MV1-5 T	364676	4905892	2	0	0	56.1	56.1	1	640.28	3.25	0	67.13	0	-0.1	0	0	3.97	0	0	0	0	0	0	-14.94	-14.94
Inverter Transformer	MV1-1 T	364721	4906166	2	0	0	56.1	56.1	1	683.47	3.25	0	67.69	0	-0.09	0	0	4.09	0	0	0	0	0	0	-15.64	-15.64
Inverter Transformer	MV1-2 T	364759	4906063	2	0	0	56.1	56.1	1	708.73	3.25	0	68.01	0	-0.08	0	0	4.16	0	0	0	0	0	0	-16.03	-16.03
Inverter Transformer	MV1-4 T	364821	4905918	2	0	0	56.1	56.1	1	778.25	3.25	0	68.82	0	-0.06	0	0	4.34	0	0	0	0	0	0	-17.04	-17.04
Inverter Transformer	MV1-8 T	364782	4905647	2	0	0	56.1	56.1	1	825.73	3.25	0	69.34	0	-0.04	0	0	4.46	0	0	0	0	0	0	-17.69	-17.69
Inverter Transformer	MV1-11 T	364649	4905414	2	0	0	56.1	56.1	1	859.24	3.25	0	69.68	0	-0.03	0	0	4.55	0	0	0	0	0	0	-18.13	-18.13
Inverter Transformer	MV1-12 T	365044	4905386	2	0	0	56.1	56.1	1	1184.09	3.25	0	72.47	0	0.08	0	0	5.32	0	0	0	0	0	0	-21.81	-21.81
Inverter Transformer	MV6-4 T	370244	4906966	2	0	0	69.4	69.4	1	6263.18	3.25	0	86.94	0	3.23	0	0	8.18	0	0	0	0	0	0	-28.99	-28.99
Inverter Transformer	MV6-1 T	370230	4907364	2	0	0	69.4	69.4	1	6321.15	3.25	0	87.02	0	3.23	0	0	8.21	0	0	0	0	0	0	-29.11	-29.11
Inverter Transformer	MV1-15 T	365309	4904994	2	0	0	56.1	56.1	1	1630.32	3.25	0	75.25	0	0.25	0	0	6.29	0	0	0	0	0	0	-25.73	-25.73
Inverter Transformer	MV2-4 T	365590	4906628	2	0	0	56.1	56.1	1	1650.74	3.25	0	75.35	0	0.26	0	0	6.34	0	0	0	0	0	0	-25.89	-25.89
Inverter Transformer	MV2-3 T	365814	4906641	2	0	0	56.1	56.1	1	1865.55	3.25	0	76.42	0	0.35	0	0	6.78	0	0	0	0	0	0	-27.48	-27.48
Inverter Transformer	MV2-2 T	365982	4906654	2	0	0	56.1	56.1	1	2029.01	3.25	0	77.15	0	0.42	0	0	7.1	0	0	0	0	0	0	-28.6	-28.6
Inverter Transformer	MV3-12 T	367674	4907594	2	0	0	56.1	56.1	1	3945.77	3.25	0	82.92	0	1.22	0	0	10.37	0	0	0	0	0	0	-38.46	-38.46
Inverter Transformer	MV3-18 T	367757	4907412	2	0	0	56.1	56.1	1	3954.95	3.25	0	82.94	0	1.23	0	0	10.39	0	0	0	0	0	0	-38.5	-38.5
Inverter Transformer	MV3-13 T	367958	4907577	2	0	0	56.1	56.1	1	4201.76	3.25	0	83.47	0	1.32	0	0	10.75	0	0	0	0	0	0	-39.49	-39.49
Inverter Transformer	MV3-7 T	367951	4907754	2	0	0	56.1	56.1	1	4263.65	3.25	0	83.6	0	1.35	0	0	10.84	0	0	0	0	0	0	-39.73	-39.73
Inverter Transformer	MV3-3 T	367944	4907927	2	0	0	56.1	56.1	1	4330.16	3.25	0	83.73	0	1.37	0	0	10.94	0	0	0	0	0	0	-39.98	-39.98
Inverter Transformer	MV3-17 T	368183	4907472	2	0	0	56.1	56.1	1	4376.06	3.25	0	83.82	0	1.39	0	0	11	0	0	0	0	0	0	-40.16	-40.16
Inverter Transformer	MV3-10 T	368162	4907669	2	0	0	56.1	56.1	1	4425.31	3.25	0	83.92	0	1.41	0	0	11.07	0	0	0	0	0	0	-40.34	-40.34
Inverter Transformer	MV3-6 T	368156	4907834	2	0	0	56.1	56.1	1	4483.51	3.25	0	84.03	0	1.43	0	0	11.15	0	0	0	0	0	0	-40.56	-40.56
Inverter Transformer	MV3-19 T	368352	4907347	2	0	0	56.1	56.1	1	4497.83	3.25	0	84.06	0	1.44	0	0	11.17	0	0	0	0	0	0	-40.61	-40.61
Inverter Transformer	MV3-15 T	368351	4907477	2	0	0	56.1	56.1	1	4536.62	3.25	0	84.13	0	1.45	0	0	11.23	0	0	0	0	0	0	-40.76	-40.76
Inverter Transformer	MV3-1 T	368150	4907976	2	0	0	56.1	56.1	1	4537.05	3.25	0	84.14	0	1.45	0	0	11.23	0	0	0	0	0	0	-40.76	-40.76
Inverter Transformer	MV3-21 T	368484	4907206	2	0	0	56.1	56.1	1	4586.08	3.25	0	84.23	0	1.47	0	0	11.3	0	0	0	0	0	0	-40.94	-40.94
Inverter Transformer	MV3-11 T	368340	4907662	2	0	0	56.1	56.1	1	4588.65	3.25	0	84.23	0	1.47	0	0	11.3	0	0	0	0	0	0	-40.95	-40.95
Inverter Transformer	MV3-5 T	368335	4907843	2	0	0	56.1	56.1	1	4651.45	3.25	0	84.35	0	1.5	0	0	11.39	0	0	0	0	0	0	-41.18	-41.18
Inverter Transformer	MV3-16 T	368509	4907475	2	0	0	56.1	56.1	1	4686.03	3.25	0	84.42	0	1.51	0	0	11.43	0	0	0	0	0	0	-41.3	-41.3
Inverter Transformer	MV3-22 T	368661	4907142	2	0	0	56.1	56.1	1	4741.99	3.25	0	84.52	0	1.53	0	0	11.51	0	0	0	0	0	0	-41.5	-41.5
Inverter Transformer	MV3-9 T	368517	4907703	2	0	0	56.1	56.1	1	4768.73	3.25	0	84.57	0	1.54	0	0	11.55	0	0	0	0	0	0	-41.6	-41.6
Inverter Transformer	MV3-20 T	368683	4907317	2	0	0	56.1	56.1	1	4807.21	3.25	0	84.64	0	1.55	0	0	11.6	0	0	0	0	0	0	-41.73	-41.73
Inverter Transformer	MV3-4 T	368507	4907925	2	0	0	56.1	56.1	1	4841.82	3.25	0	84.7	0	1.57	0	0	11.64	0	0	0	0	0	0	-41.85	-41.85
Inverter Transformer	MV3-14 T	368678	4907498	2	0	0	56.1	56.1	1	4853.99	3.25	0	84.72	0	1.57	0	0	11.66	0	0	0	0	0	0	-41.9	-41.9

	Inverter Transformer	MV3-8 T	368685	4907712	2	0	0	56.1	56.1	1	4929.47	3.25	0	84.86	0	1.6	0	0	11.76	0	0	0	0	0	0	-42.16	-42.16
	Inverter Transformer	MV3-2 T	368677	4907928	2	0	0	56.1	56.1	1	4999.85	3.25	0	84.98	0	1.63	0	0	11.85	0	0	0	0	0	0	-42.4	-42.4
	Inverter Transformer	MV4-13 T	369057	4908605	2	0	0	56.1	56.1	1	5628.99	3.25	0	86.01	0	1.84	0	0	12.66	0	0	0	0	0	0	-44.45	-44.45
	Inverter Transformer	MV4-15 T	369170	4908481	2	0	0	56.1	56.1	1	5675.09	3.25	0	86.08	0	1.86	0	0	12.71	0	0	0	0	0	0	-44.59	-44.59
	Inverter Transformer	MV4-14 T	369182	4908507	2	0	0	56.1	56.1	1	5697.17	3.25	0	86.11	0	1.87	0	0	12.74	0	0	0	0	0	0	-44.66	-44.66
	Inverter Transformer	MV4-12 T	369049	4908803	2	0	0	56.1	56.1	1	5715.24	3.25	0	86.14	0	1.87	0	0	12.76	0	0	0	0	0	0	-44.72	-44.72
	Inverter Transformer	MV4-7 T	369040	4909001	2	0	0	56.1	56.1	1	5806.12	3.25	0	86.28	0	1.9	0	0	12.87	0	0	0	0	0	0	-44.99	-44.99
	Inverter Transformer	MV4-4 T	369033	4909199	2	0	0	56.1	56.1	1	5903.94	3.25	0	86.42	0	1.93	0	0	12.99	0	0	0	0	0	0	-45.29	-45.29
	Inverter Transformer	MV4-11 T	369269	4908855	2	0	0	56.1	56.1	1	5933.17	3.25	0	86.47	0	1.94	0	0	13.02	0	0	0	0	0	0	-45.37	-45.37
	Inverter Transformer	MV4-10 T	369307	4908858	2	0	0	56.1	56.1	1	5968.04	3.25	0	86.52	0	1.95	0	0	13.06	0	0	0	0	0	0	-45.48	-45.48
	Inverter Transformer	MV4-8 T	369262	4909001	2	0	0	56.1	56.1	1	5997.95	3.25	0	86.56	0	1.96	0	0	13.1	0	0	0	0	0	0	-45.57	-45.57
	Inverter Transformer	MV4-1 T	369017	4909397	2	0	0	56.1	56.1	1	5999.26	3.25	0	86.56	0	1.96	0	0	13.1	0	0	0	0	0	0	-45.57	-45.57
	Inverter Transformer	MV4-9 T	369284	4909001	2	0	0	56.1	56.1	1	6017.08	3.25	0	86.59	0	1.97	0	0	13.12	0	0	0	0	0	0	-45.62	-45.62
	Inverter Transformer	MV4-6 T	369249	4909192	2	0	0	56.1	56.1	1	6083.68	3.25	0	86.68	0	1.99	0	0	13.2	0	0	0	0	0	0	-45.82	-45.82
	Inverter Transformer	MV4-5 T	369283	4909199	2	0	0	56.1	56.1	1	6116.38	3.25	0	86.73	0	2	0	0	13.24	0	0	0	0	0	0	-45.91	-45.91
	Inverter Transformer	MV6-2 T	370091	4907339	2	0	0	56.1	56.1	1	6180.01	3.25	0	86.82	0	2.02	0	0	13.31	0	0	0	0	0	0	-46.1	-46.1
	Inverter Transformer	MV4-3 T	369234	4909397	2	0	0	56.1	56.1	1	6180.09	3.25	0	86.82	0	2.02	0	0	13.31	0	0	0	0	0	0	-46.1	-46.1
	Inverter Transformer	MV4-2 T	369267	4909397	2	0	0	56.1	56.1	1	6207.79	3.25	0	86.86	0	2.03	0	0	13.35	0	0	0	0	0	0	-46.18	-46.18
	Inverter Transformer	MV6-3 T	370202	4907140	2	0	0	56.1	56.1	1	6250.18	3.25	0	86.92	0	2.04	0	0	13.4	0	0	0	0	0	0	-46.3	-46.3
	Inverter Transformer	MV5-6 T	369987	4908507	2	0	0	56.1	56.1	1	6431.69	3.25	0	87.17	0	2.1	0	0	13.6	0	0	0	0	0	0	-46.81	-46.81
	Inverter Transformer	MV5-5 T	370021	4908690	2	0	0	56.1	56.1	1	6535.38	3.25	0	87.31	0	2.13	0	0	13.72	0	0	0	0	0	0	-47.09	-47.09
	Inverter Transformer	MV5-2 T	370011	4908853	2	0	0	56.1	56.1	1	6594.34	3.25	0	87.38	0	2.15	0	0	13.79	0	0	0	0	0	0	-47.26	-47.26
	Inverter Transformer	MV5-1 T	370015	4909142	2	0	0	56.1	56.1	1	6726.64	3.25	0	87.56	0	2.18	0	0	13.93	0	0	0	0	0	0	-47.61	-47.61
	Inverter Transformer	MV5-3 T	370237	4908851	2	0	0	56.1	56.1	1	6798.46	3.25	0	87.65	0	2.2	0	0	14.01	0	0	0	0	0	0	-47.8	-47.8
	Inverter Transformer	MV5-4 T	370330	4908707	2	0	0	56.1	56.1	1	6825.45	3.25	0	87.68	0	2.21	0	0	14.04	0	0	0	0	0	0	-47.88	-47.88
	Line Reactor	NGR	369421	4908787.5	5	0	0	45.4	45.4	1	6036.16	5.25	0	86.62	0	3.24	1.36	0.1	2.47	0	0	0	0	0	0	-48.33	-48.33
Limit. Valu	0	0																								
Level D/N:	33.8038	33.8038																								

Receiver: Existing Noise Receptor
ID: S-R87
X: 364023
Y: 4905970
Z: 4.5
Ground: 0

ISO	Description	ID	X	Y	Z	Ground	ReflOrd	LxT	LxN	L/A	Dist.	hm	Freq	Adiv	K0b	Agr	Abar	z	Aatm	Afol	Ahous	Cmet	CmetN	Dc	RL	LtotT	LtotN
	Inverter	MV1-6	364477	4905835	2	0	0	100.3	100.3	1	473.65	3.25	0	64.51	0	-0.57	0	0	8.31	0	0	0	0	0	0	28.06	28.06
	Inverter	MV1-9	364561	4905646	2	0	0	100.3	100.3	1	628.03	3.25	0	66.96	0	-0.46	0	0	9.37	0	0	0	0	0	0	24.45	24.45
	Inverter	MV1-5	364671	4905892	2	0	0	100.3	100.3	1	652.68	3.25	0	67.29	0	-0.44	0	0	9.5	0	0	0	0	0	0	23.96	23.96
	Inverter	MV1-1	364715	4906166	2	0	0	100.3	100.3	1	719.23	3.25	0	68.14	0	-0.4	0	0	9.83	0	0	0	0	0	0	22.75	22.75
	Inverter	MV1-2	364753	4906063	2	0	0	100.3	100.3	1	735.9	3.25	0	68.34	0	-0.39	0	0	9.9	0	0	0	0	0	0	22.46	22.46
	Inverter	MV1-4	364815	4905918	2	0	0	100.3	100.3	1	793.71	3.25	0	68.99	0	-0.36	0	0	10.15	0	0	0	0	0	0	21.52	21.52
	Inverter	MV1-8	364788	4905647	2	0	0	100.3	100.3	1	830.4	3.25	0	69.39	0	-0.33	0	0	10.3	0	0	0	0	0	0	20.96	20.96
	Inverter	MV1-11	364655	4905414	2	0	0	100.3	100.3	1	841.76	3.25	0	69.5	0	-0.33	0	0	10.35	0	0	0	0	0	0	20.79	20.79
	Inverter	MV1-12	365038	4905386	2	0	0	100.3	100.3	1	1171.02	3.25	0	72.37	0	-0.17	0	0	11.44	0	0	0	0	0	0	16.67	16.67
	Inverter	MV1-7	364925	4905782	2	0	0	97.3	97.3	1	921.39	3.25	0	70.29	0	-0.29	0	0	10.64	0	0	0	0	0	0	16.67	16.67
	Inverter	MV1-13	364731	4905241	2	0	0	97.3	97.3	1	1016.22	3.25	0	71.14	0	-0.24	0	0	10.96	0	0	0	0	0	0	15.45	15.45
	Inverter	MV1-10	365004	4905564	2	0	0	97.3	97.3	1	1061.7	3.25	0	71.52	0	-0.22	0	0	11.11	0	0	0	0	0	0	14.9	14.9
	Inverter	MV1-3	364440	4906039	2	0	0	89.1	89.1	1	422.68	3.25	0	63.52	0	0.47	0	0	4.84	0	0	0	0	0	0	20.23	20.23
	Sol_Luce Substation	S_Substation	369426	4908792	3.5	0	0	112.1	112.1	1	6095.58	5.25	0	86.7	0	1.18	2.62	0.29	9.84	0	0	0	0	0	0	11.73	11.73
	Inverter	MV1-15	365315	4904994	2	0	0	100.3	100.3	1	1619.21	3.25	0	75.19	0	0.01	0	0	12.61	0	0	0	0	0	0	12.5	12.5
	Inverter	MV2-4	365586	4906624	2	0	0	100.3	100.3	1	1694.31	3.25	0	75.58	0	0.03	0	0	12.79	0	0	0	0	0	0	11.91	11.91
	Inverter	MV2-3	365820	4906641	2	0	0	100.3	100.3	1	1918.19	3.25	0	76.66	0	0.11	0	0	13.29	0	0	0	0	0	0	10.26	10.26
	Inverter	MV1-14	365163	4905049	2	0	0	97.3	97.3	1	1465.55	3.25	0	74.32	0	-0.05	0	0	12.24	0	0	0	0	0	0	10.8	10.8
	Inverter	MV2-1	365842	4906816	2	0	0	97.3	97.3	1	2006.11	3.25	0	77.05	0	0.13	0	0	13.47	0	0	0	0	0	0	6.66	6.66
	Inverter	MV3-12	367668	4907594	2	0	0	100.3	100.3	1	3990.41	3.25	0	83.02	0	0.53	0	0	17.03	0	0	0	0	0	0	-0.27	-0.27
	Inverter	MV3-18	367752	4907412	2	0	0	100.3	100.3	1	3998.1	3.25	0	83.04	0	0.53	0	0	17.05	0	0	0	0	0	0	-0.3	-0.3
	Inverter	MV3-13	367963	4907577	2	0	0	100.3	100.3	1	4255.12	3.25	0	83.58	0	0.56	0	0	17.45	0	0	0	0	0	0	-1.28	-1.28
	Inverter	MV3-7	367945	4907754	2	0	0	100.3	100.3	1	4308.68	3.25	0	83.69	0	0.57	0	0	17.54	0	0	0	0	0	0	-1.48	-1.48
	Inverter	MV3-3	367939	4907927	2	0	0	100.3	100.3	1	4377.77	3.25	0	83.83	0	0.58	0	0	17.64	0	0	0	0	0	0	-1.73	-1.73
	Inverter	MV3-17	368178	4907472	2	0	0	100.3	100.3	1	4418.15	3.25	0	83.9	0	0.58	0	0	17.7	0	0	0	0	0	0	-1.88	-1.88
	Inverter	MV3-10	368167	4907669	2	0	0	100.3	100.3	1	4478.77	3.25	0	84.02	0	0.59	0	0	17.8	0	0	0	0	0	0	-2.1	-2.1
	Inverter	MV3-6	368162	4907834	2	0	0	100.3	100.3	1	4539.36	3.25	0	84.14	0	0.6	0	0	17.89	0	0	0	0	0	0	-2.31	-2.31
	Inverter	MV3-19	368357	4907347	2	0	0	100.3	100.3	1	4547.49	3.25	0	84.16	0	0.6	0	0	17.9	0	0	0	0	0	0	-2.34	-2.34
	Inverter	MV3-15	368357	4907477	2	0	0	100.3	100.3	1	4588.53	3.25	0	84.23	0	0.6	0	0	17.97	0	0	0	0	0	0	-2.49	-2.49
	Inverter	MV3-21	368478	4907206	2	0	0	100.3	100.3	1	4623.28	3.25	0	84.3	0	0.6	0	0	18.02	0	0	0	0	0	0	-2.61	-2.61
	Inverter	MV3-11	368346	4907662	2	0	0	100.3	100.3	1	4642.33	3.25	0	84.33	0	0.61	0	0	18.05	0	0	0	0	0	0	-2.68	-2.68
	Inverter	MV3-16	368514	4907475	2	0	0	100.3	100.3	1	4736.47	3.25	0	84.51	0	0.62	0	0	18.19	0	0	0	0	0	0	-3	-3
	Inverter	MV3-9	368512	4907703	2	0	0	100.3	100.3	1	4811.9	3.25	0	84.65	0	0.62	0	0	18.3	0	0	0	0	0	0	-3.26	-3.26
	Inverter	MV3-20	368689	4907317	2	0	0	100.3	100.3	1	4856.54	3.25	0	84.73	0	0.63	0	0	18.37	0	0	0	0	0	0	-3.41	-3.41
	Inverter	MV3-14	368684	4907498	2	0	0	100.3	100.3	1	4905.07	3.25	0	84.81	0	0.63	0	0	18.44	0	0	0	0	0	0	-3.57	-3.57
	Inverter	MV3-8	368680	4907712	2	0	0	100.3	100.3	1	4972.14	3.25	0	84.93	0	0.64	0	0	18.54	0	0	0	0	0	0	-3.8	-3.8
	Inverter	MV4-7	369035	4909001	2	0	0	100.3	100.3	1	5857.23	3.25	0	86.35	0	0.7	0	0	19.8	0	0	0	0	0	0	-6.54	-6.54

Inverter	MV4-4	369027	4909199	2	0	0	100.3	100.3	1	5955.37	3.25	0	86.5	0	0.7	0	0	19.93	0	0	0	0	0	0	-6.82	-6.82
Inverter	MV4-11	369264	4908855	2	0	0	100.3	100.3	1	5982.58	3.25	0	86.54	0	0.7	0	0	19.97	0	0	0	0	0	0	-6.9	-6.9
Inverter	MV4-10	369312	4908858	2	0	0	100.3	100.3	1	6026.12	3.25	0	86.6	0	0.71	0	0	20.03	0	0	0	0	0	0	-7.02	-7.02
Inverter	MV4-8	369256	4909001	2	0	0	100.3	100.3	1	6047.42	3.25	0	86.63	0	0.71	0	0	20.06	0	0	0	0	0	0	-7.08	-7.08
Inverter	MV4-1	369011	4909397	2	0	0	100.3	100.3	1	6051.82	3.25	0	86.64	0	0.71	0	0	20.06	0	0	0	0	0	0	-7.1	-7.1
Inverter	MV4-9	369289	4909001	2	0	0	100.3	100.3	1	6076	3.25	0	86.67	0	0.71	0	0	20.1	0	0	0	0	0	0	-7.16	-7.16
Inverter	MV4-6	369243	4909192	2	0	0	100.3	100.3	1	6134.3	3.25	0	86.76	0	0.71	0	0	20.17	0	0	0	0	0	0	-7.33	-7.33
Inverter	MV4-5	369289	4909199	2	0	0	100.3	100.3	1	6177.15	3.25	0	86.82	0	0.71	0	0	20.23	0	0	0	0	0	0	-7.45	-7.45
Inverter	MV6-2	370085	4907339	2	0	0	100.3	100.3	1	6214.66	3.25	0	86.87	0	0.71	0	0	20.28	0	0	0	0	0	0	-7.55	-7.55
Inverter	MV4-3	369229	4909397	2	0	0	100.3	100.3	1	6232.72	3.25	0	86.89	0	0.71	0	0	20.31	0	0	0	0	0	0	-7.6	-7.6
Inverter	MV4-2	369272	4909397	2	0	0	100.3	100.3	1	6268.68	3.25	0	86.94	0	0.71	0	0	20.35	0	0	0	0	0	0	-7.7	-7.7
Inverter	MV6-3	370207	4907140	2	0	0	100.3	100.3	1	6293.71	3.25	0	86.98	0	0.71	0	0	20.39	0	0	0	0	0	0	-7.77	-7.77
Inverter	MV5-5	370015	4908690	2	0	0	100.3	100.3	1	6580.46	3.25	0	87.37	0	0.72	0	0	20.76	0	0	0	0	0	0	-8.53	-8.53
Inverter	MV5-2	370006	4908853	2	0	0	100.3	100.3	1	6641.38	3.25	0	87.45	0	0.71	0	0	20.84	0	0	0	0	0	0	-8.69	-8.69
Inverter	MV5-1	370020	4909142	2	0	0	100.3	100.3	1	6784.22	3.25	0	87.63	0	0.71	0	0	21.03	0	0	0	0	0	0	-9.06	-9.06
Inverter	MV5-3	370231	4908851	2	0	0	100.3	100.3	1	6843.93	3.25	0	87.71	0	0.71	0	0	21.1	0	0	0	0	0	0	-9.21	-9.21
Inverter	MV5-4	370324	4908707	2	0	0	100.3	100.3	1	6869.77	3.25	0	87.74	0	0.71	0	0	21.13	0	0	0	0	0	0	-9.27	-9.27
Inverter	MV2-2	365977	4906654	2	0	0	89.1	89.1	1	2070.26	3.25	0	77.32	0	0.92	0	0	8.16	0	0	0	0	0	0	2.65	2.65
Inverter	MV6-1	370235	4907364	2	0	0	97.3	97.3	1	6366.49	3.25	0	87.08	0	0.71	0	0	20.48	0	0	0	0	0	0	-10.96	-10.96
DSTATCOM - 10 MVAR #2	DSAT2	369403	4908757	2.5	0	0	96.6	96.6	1	6059.02	3.5	0	86.65	0	3.78	0	0	3.87	0	0	0	0	0	0	2.34	2.34
DSTATCOM - 10 MVAR #1	DSAT1	369437	4908757	2.5	0	0	96.6	96.6	1	6089.23	3.5	0	86.69	0	3.78	0	0	3.88	0	0	0	0	0	0	2.28	2.28
Gardiner Substation	G_Sub	366586.3	4903349.9	2.5	0	0	90.8	90.8	1	3665.44	4.25	0	82.28	0	1.26	2.71	0.27	6.91	0	0	0	0	0	0	-2.39	-2.39
SubstationTransformer	W_ST	369711.17	4906112.3	2.5	0	0	92	92	1	5689.95	4.25	0	86.1	0	1.81	2.17	0.29	9.41	0	0	0	0	0	0	-7.51	-7.51
Inverters	G_Inv1	366526.4	4903225.8	2	0	0	87.7	87.7	1	3714.52	3.25	0	82.4	0	2.77	0	0	4.56	0	0	0	0	0	0	-2.07	-2.07
Inverters	G_Inv2	366676.9	4903239.1	2	0	0	87.7	87.7	1	3808.02	3.25	0	82.61	0	2.78	0	0	4.67	0	0	0	0	0	0	-2.39	-2.39
Inverters	G_Inv3	366583.7	4903091.4	2	0	0	87.7	87.7	1	3852.73	3.25	0	82.72	0	2.78	0	0	4.71	0	0	0	0	0	0	-2.55	-2.55
Inverter	MV3-1	368156	4907976	2	0	0	89.1	89.1	1	4594.1	3.25	0	84.24	0	1.54	0	0	11.91	0	0	0	0	0	0	-8.64	-8.64
Inverters	G_Inv4	366732.8	4903105	2	0	0	87.7	87.7	1	3943.51	3.25	0	82.92	0	2.79	0	0	4.81	0	0	0	0	0	0	-2.86	-2.86
Inverters	G_Inv5	366638.5	4902958.1	2	0	0	87.7	87.7	1	3989.03	3.25	0	83.02	0	2.79	0	0	4.86	0	0	0	0	0	0	-3.01	-3.01
Inverter	MV3-5	368340	4907843	2	0	0	89.1	89.1	1	4705.81	3.25	0	84.45	0	1.57	0	0	12.07	0	0	0	0	0	0	-9.03	-9.03
Inverter	MV3-22	368656	4907142	2	0	0	89.1	89.1	1	4778.94	3.25	0	84.59	0	1.59	0	0	12.17	0	0	0	0	0	0	-9.28	-9.28
Inverters	G_Inv6	366788.5	4902972	2	0	0	87.7	87.7	1	4078.73	3.25	0	83.21	0	2.8	0	0	4.96	0	0	0	0	0	0	-3.31	-3.31
Inverters	G_Inv7	366694.6	4902824.7	2	0	0	87.7	87.7	1	4126.79	3.25	0	83.31	0	2.8	0	0	5.01	0	0	0	0	0	0	-3.46	-3.46
Inverter	MV3-4	368502	4907925	2	0	0	89.1	89.1	1	4887.07	3.25	0	84.78	0	1.61	0	0	12.31	0	0	0	0	0	0	-9.65	-9.65
Inverters	G_Inv8	366844.5	4902838.5	2	0	0	87.7	87.7	1	4215.11	3.25	0	83.5	0	2.81	0	0	5.11	0	0	0	0	0	0	-3.75	-3.75
Inverters	G_Inv9	366750.9	4902691.8	2	0	0	87.7	87.7	1	4264.74	3.25	0	83.6	0	2.81	0	0	5.16	0	0	0	0	0	0	-3.91	-3.91
Inverter	MV3-2	368671	4907928	2	0	0	89.1	89.1	1	5043.58	3.25	0	85.05	0	1.65	0	0	12.52	0	0	0	0	0	0	-10.17	-10.17
Inverters	G_Inv10	366900.7	4902704.8	2	0	0	87.7	87.7	1	4352.32	3.25	0	83.77	0	2.82	0	0	5.25	0	0	0	0	0	0	-4.19	-4.19
Westbrook Inverter Enclosur	W_INV2	369374	4906388	2	0	0	89.1	89.1	1	5367.3	3.25	0	85.6	0	1.73	0	0	12.95	0	0	0	0	0	0	-11.22	-11.22
Westbrook Inverter Enclosur	W_INV3	369508	4906164	2	0	0	89.1	89.1	1	5488.43	3.25	0	85.79	0	1.76	0	0	13.11	0	0	0	0	0	0	-11.6	-11.6
Fixed Reactor Bank 1	FRB1	369378	4908755	6	0	0	89.8	89.8	1	6035.91	5.25	0	86.61	0	-0.41	0	0	9.78	0	0	0	0	0	0	-6.21	-6.21
Fixed Reactor Bank 2	FRB2	369464	4908755	6	0	0	89.8	89.8	1	6112.34	5.25	0	86.72	0	-0.4	0	0	9.86	0	0	0	0	0	0	-6.41	-6.41
Westbrook Inverter Enclosur	W_INV4	369673	4906164	2	0	0	89.1	89.1	1	5653.33	3.25	0	86.05	0	1.8	0	0	13.32	0	0	0	0	0	0	-12.11	-12.11
Inverter	MV4-13	369051	4908605	2	0	0	89.1	89.1	1	5676.62	3.25	0	86.08	0	1.81	0	0	13.35	0	0	0	0	0	0	-12.18	-12.18
Westbrook Inverter Enclosur	W_INV5	369719	4906574	2	0	0	89.1	89.1	1	5727.93	3.25	0	86.16	0	1.82	0	0	13.42	0	0	0	0	0	0	-12.34	-12.34
Inverter	MV4-15	369176	4908481	2	0	0	89.1	89.1	1	5732.24	3.25	0	86.17	0	1.82	0	0	13.42	0	0	0	0	0	0	-12.35	-12.35
Inverter	MV4-14	369176	4908507	2	0	0	89.1	89.1	1	5743.67	3.25	0	86.18	0	1.82	0	0	13.44	0	0	0	0	0	0	-12.39	-12.39
Inverter	MV4-12	369043	4908803	2	0	0	89.1	89.1	1	5764.23	3.25	0	86.21	0	1.83	0	0	13.46	0	0	0	0	0	0	-12.45	-12.45
Westbrook Inverter Enclosur	W_INV7	369780	4906417	2	0	0	89.1	89.1	1	5774.33	3.25	0	86.23	0	1.83	0	0	13.48	0	0	0	0	0	0	-12.48	-12.48
Westbrook Inverter Enclosur	W_INV6	369875	4906578	2	0	0	89.1	89.1	1	5883.5	3.25	0	86.39	0	1.86	0	0	13.61	0	0	0	0	0	0	-12.81	-12.81
Inverter	MV5-6	369982	4908507	2	0	0	89.1	89.1	1	6476.58	3.25	0	87.23	0	2	0	0	14.35	0	0	0	0	0	0	-14.53	-14.53
Westbrook Inverter Enclosur	W_INV1	369409	4906578	2	0	0	86.1	86.1	1	5420.21	3.25	0	85.68	0	1.74	0	0	13.02	0	0	0	0	0	0	-14.38	-14.38
Inverter Transformer	MV1-7 T	364919	4905782	2	0	0	69.4	69.4	1	915.51	3.25	0	70.23	0	1.61	0	0	3.69	0	0	0	0	0	0	-6.18	-6.18
Inverter	MV6-4	370250	4906966	2	0	0	86.1	86.1	1	6306.15	3.25	0	87	0	1.96	0	0	14.14	0	0	0	0	0	0	-17.04	-17.04
Inverter Transformer	MV1-13 T	364725	4905241	2	0	0	69.4	69.4	1	1012.05	3.25	0	71.1	0	1.69	0	0	3.83	0	0	0	0	0	0	-7.27	-7.27
Inverter Transformer	MV1-10 T	365010	4905564	2	0	0	69.4	69.4	1	1067.24	3.25	0	71.57	0	1.74	0	0	3.9	0	0	0	0	0	0	-7.85	-7.85
Inverter Transformer	MV1-14 T	365157	4905049	2	0	0	69.4	69.4	1	1460.89	3.25	0	74.29	0	1.96	0	0	4.39	0	0	0	0	0	0	-11.29	-11.29
Inverter Transformer	MV1-3 T	364435	4906039	2	0	0	56.1	56.1	1	417.75	3.25	0	63.42	0	-0.12	0	0	3.27	0	0	0	0	0	0	-10.52	-10.52
Westbrook Inverter Transfor	W_INVTR1	369403	4906578	2	0	0	78.2	78.2	1	5414.25	3.25	0	85.67	0	-3.26	0	0	2.55	0	0	0	0	0	0	-6.72	-6.72
Inverter Transformer	MV2-1 T	365836	4906816	2	0	0	69.4	69.4	1	2000.67	3.5	0	77.02	0	2.17	0	0	4.97	0	0	0	0	0	0	-14.81	-14.81
Westbrook Inverter Transfor	W_INVTR2	369368	4906388	2	0	0	77.3	77.3	1	5361.32	3.25	0	85.59	0	-3.25	0	0	2.53	0	0	0	0	0	0	-7.53	-7.53
Westbrook Inverter Transfor	W_INVTR3	369514	4906164	2	0	0	77.3	77.3	1	5494.43	3.25	0	85.8	0	-3.27	0	0	2.58	0	0	0	0	0	0	-7.76	-7.76
Inverter Transformer	MV1-6 T	364482	4905835	2	0	0	56.1	56.1	1	478.45	3.25	0	64.6	0	-0.12	0	0	3.48	0	0	0	0	0	0	-11.9	-11.9
Westbrook Inverter Transfor	W_INVTR4	369679	4906164	2	0	0	77.3	77.3	1	5659.33	3.25	0	86.06	0	-3.31	0	0	2.63	0	0	0	0	0	0	-8.04	-8.04
Westbrook Inverter Transfor	W_INVTR5	369725	4906574	2	0	0	77.3	77.3	1	5733.9	3.25	0	86.17	0	-3.32	0	0	2.66	0	0	0	0	0	0	-8.16	-8.16
Westbrook Inverter Transfor	W_INVTR7	369786	4906417	2	0	0	77.3	77.3	1	5780.31	3.25	0	86.24	0	-3.33	0	0	2.67	0	0	0	0	0	0	-8.24	-8.24
Westbrook Inverter Transfor	W_INVTR6	369881	4906578	2	0	0	77.3	77.3	1	5889.47	3.25	0	86.4	0	-3.35	0	0	2.71	0	0	0	0	0	0	-8.42	-8.42
Inverter Transformer	MV1-9 T	364555	4905646	2	0	0	56.1	56.1	1	622.9	3.25	0	66.89	0	-0.1	0	0	3.92	0	0	0	0	0	0	-14.65	-14.65
Inverter Transformer	MV1-5 T	364676	4905892	2	0	0	56.1	56.1	1	657.65	3.25	0	67.36	0	-0.09	0	0	4.02	0	0	0	0	0	0	-15.23	-15.23
Inverter Transformer	MV1-1 T	364721	4906166	2	0	0	56.1	56.1	1	725	3.25	0	68.21	0	-0.07	0	0	4.2	0	0	0	0	0	0	-16.27	-16.27
Inverter Transformer	MV1-2 T	364759	4906063	2	0	0	56.1	56.1	1	741.86	3.25	0	68.41	0	-0.07	0	0	4.24	0	0	0	0	0	0	-16.52	-16.52
Inverter Transformer	MV1-4 T	364821	4905918	2	0	0	56.1	56.1	1	799.7	3.25	0	69.06	0	-0.05	0	0	4.39	0	0	0	0	0	0	-17.34	-17.34
Inverter Transformer	MV1-8 T	364782	4905647	2	0	0	56.1	56.1	1	824.87	3.25	0	69.33	0	-0.05	0	0	4.46	0	0	0	0	0	0	-17.68	-17.68
Inverter Transformer	MV1-11 T	364649	4905414	2	0	0	56.1	56.1	1	837.27	3.25	0	69.46	0	-0.04	0	0	4.49	0	0	0	0	0	0	-17.85	-17.85

	Inverter Transformer	MV1-12 T	365044	4905386	2	0	0	56.1	56.1	1	1176.22	3.25	0	72.41	0	0.07	0	0	5.3	0	0	0	0	0	0	-21.73	-21.73
	Inverter Transformer	MV6-4 T	370244	4906966	2	0	0	69.4	69.4	1	6300.23	3.25	0	86.99	0	3.23	0	0	8.2	0	0	0	0	0	0	-29.07	-29.07
	Inverter Transformer	MV6-1 T	370230	4907364	2	0	0	69.4	69.4	1	6361.61	3.25	0	87.07	0	3.24	0	0	8.23	0	0	0	0	0	0	-29.2	-29.2
	Inverter Transformer	MV1-15 T	365309	4904994	2	0	0	56.1	56.1	1	1614.43	3.25	0	75.16	0	0.24	0	0	6.26	0	0	0	0	0	0	-25.61	-25.61
	Inverter Transformer	MV2-4 T	365590	4906628	2	0	0	56.1	56.1	1	1699.55	3.25	0	75.61	0	0.28	0	0	6.44	0	0	0	0	0	0	-26.27	-26.27
	Inverter Transformer	MV2-3 T	365814	4906641	2	0	0	56.1	56.1	1	1912.57	3.25	0	76.63	0	0.37	0	0	6.87	0	0	0	0	0	0	-27.81	-27.81
	Inverter Transformer	MV2-2 T	365982	4906654	2	0	0	56.1	56.1	1	2074.98	3.25	0	77.34	0	0.44	0	0	7.19	0	0	0	0	0	0	-28.91	-28.91
	Inverter Transformer	MV3-12 T	367674	4907594	2	0	0	56.1	56.1	1	3995.9	3.25	0	83.03	0	1.24	0	0	10.45	0	0	0	0	0	0	-38.67	-38.67
	Inverter Transformer	MV3-18 T	367757	4907412	2	0	0	56.1	56.1	1	4002.76	3.25	0	83.05	0	1.25	0	0	10.46	0	0	0	0	0	0	-38.69	-38.69
	Inverter Transformer	MV3-13 T	367958	4907577	2	0	0	56.1	56.1	1	4250.49	3.25	0	83.57	0	1.34	0	0	10.82	0	0	0	0	0	0	-39.67	-39.67
	Inverter Transformer	MV3-7 T	367951	4907754	2	0	0	56.1	56.1	1	4314.14	3.25	0	83.7	0	1.37	0	0	10.91	0	0	0	0	0	0	-39.92	-39.92
	Inverter Transformer	MV3-3 T	367944	4907927	2	0	0	56.1	56.1	1	4382.25	3.25	0	83.83	0	1.39	0	0	11.01	0	0	0	0	0	0	-40.18	-40.18
	Inverter Transformer	MV3-17 T	368183	4907472	2	0	0	56.1	56.1	1	4422.85	3.25	0	83.91	0	1.41	0	0	11.07	0	0	0	0	0	0	-40.33	-40.33
	Inverter Transformer	MV3-10 T	368162	4907669	2	0	0	56.1	56.1	1	4474.14	3.25	0	84.01	0	1.43	0	0	11.14	0	0	0	0	0	0	-40.52	-40.52
	Inverter Transformer	MV3-6 T	368156	4907834	2	0	0	56.1	56.1	1	4533.89	3.25	0	84.13	0	1.45	0	0	11.22	0	0	0	0	0	0	-40.75	-40.75
	Inverter Transformer	MV3-19 T	368352	4907347	2	0	0	56.1	56.1	1	4542.73	3.25	0	84.15	0	1.46	0	0	11.24	0	0	0	0	0	0	-40.78	-40.78
	Inverter Transformer	MV3-15 T	368351	4907477	2	0	0	56.1	56.1	1	4582.86	3.25	0	84.22	0	1.47	0	0	11.29	0	0	0	0	0	0	-40.93	-40.93
	Inverter Transformer	MV3-1 T	368150	4907976	2	0	0	56.1	56.1	1	4588.7	3.25	0	84.23	0	1.47	0	0	11.3	0	0	0	0	0	0	-40.95	-40.95
	Inverter Transformer	MV3-21 T	368484	4907206	2	0	0	56.1	56.1	1	4629.06	3.25	0	84.31	0	1.49	0	0	11.35	0	0	0	0	0	0	-41.09	-41.09
	Inverter Transformer	MV3-11 T	368340	4907662	2	0	0	56.1	56.1	1	4636.74	3.25	0	84.32	0	1.49	0	0	11.37	0	0	0	0	0	0	-41.12	-41.12
	Inverter Transformer	MV3-5 T	368335	4907843	2	0	0	56.1	56.1	1	4701.22	3.25	0	84.44	0	1.52	0	0	11.45	0	0	0	0	0	0	-41.35	-41.35
	Inverter Transformer	MV3-16 T	368509	4907475	2	0	0	56.1	56.1	1	4731.73	3.25	0	84.5	0	1.53	0	0	11.49	0	0	0	0	0	0	-41.46	-41.46
	Inverter Transformer	MV3-22 T	368661	4907142	2	0	0	56.1	56.1	1	4783.79	3.25	0	84.6	0	1.55	0	0	11.57	0	0	0	0	0	0	-41.65	-41.65
	Inverter Transformer	MV3-9 T	368517	4907703	2	0	0	56.1	56.1	1	4816.57	3.25	0	84.65	0	1.56	0	0	11.61	0	0	0	0	0	0	-41.76	-41.76
	Inverter Transformer	MV3-20 T	368683	4907317	2	0	0	56.1	56.1	1	4850.77	3.25	0	84.72	0	1.57	0	0	11.66	0	0	0	0	0	0	-41.88	-41.88
	Inverter Transformer	MV3-4 T	368507	4907925	2	0	0	56.1	56.1	1	4891.65	3.25	0	84.79	0	1.59	0	0	11.71	0	0	0	0	0	0	-42.03	-42.03
	Inverter Transformer	MV3-14 T	368678	4907498	2	0	0	56.1	56.1	1	4899.37	3.25	0	84.8	0	1.59	0	0	11.72	0	0	0	0	0	0	-42.05	-42.05
	Inverter Transformer	MV3-8 T	368685	4907712	2	0	0	56.1	56.1	1	4976.83	3.25	0	84.94	0	1.62	0	0	11.82	0	0	0	0	0	0	-42.32	-42.32
	Inverter Transformer	MV3-2 T	368677	4907928	2	0	0	56.1	56.1	1	5049.11	3.25	0	85.06	0	1.64	0	0	11.92	0	0	0	0	0	0	-42.57	-42.57
	Inverter Transformer	MV4-13 T	369057	4908605	2	0	0	56.1	56.1	1	5681.94	3.25	0	86.09	0	1.86	0	0	12.72	0	0	0	0	0	0	-44.61	-44.61
	Inverter Transformer	MV4-15 T	369170	4908481	2	0	0	56.1	56.1	1	5726.84	3.25	0	86.16	0	1.88	0	0	12.77	0	0	0	0	0	0	-44.75	-44.75
	Inverter Transformer	MV4-14 T	369182	4908507	2	0	0	56.1	56.1	1	5749.06	3.25	0	86.19	0	1.88	0	0	12.8	0	0	0	0	0	0	-44.82	-44.82
	Inverter Transformer	MV4-12 T	369049	4908803	2	0	0	56.1	56.1	1	5769.45	3.25	0	86.22	0	1.89	0	0	12.83	0	0	0	0	0	0	-44.88	-44.88
	Inverter Transformer	MV4-7 T	369040	4909001	2	0	0	56.1	56.1	1	5861.51	3.25	0	86.36	0	1.92	0	0	12.94	0	0	0	0	0	0	-45.16	-45.16
	Inverter Transformer	MV4-4 T	369033	4909199	2	0	0	56.1	56.1	1	5960.42	3.25	0	86.51	0	1.95	0	0	13.06	0	0	0	0	0	0	-45.46	-45.46
	Inverter Transformer	MV4-11 T	369269	4908855	2	0	0	56.1	56.1	1	5986.96	3.25	0	86.54	0	1.96	0	0	13.09	0	0	0	0	0	0	-45.53	-45.53
	Inverter Transformer	MV4-10 T	369307	4908858	2	0	0	56.1	56.1	1	6021.73	3.25	0	86.59	0	1.97	0	0	13.13	0	0	0	0	0	0	-45.64	-45.64
	Inverter Transformer	MV4-8 T	369262	4909001	2	0	0	56.1	56.1	1	6052.61	3.25	0	86.64	0	1.98	0	0	13.16	0	0	0	0	0	0	-45.73	-45.73
	Inverter Transformer	MV4-1 T	369017	4909397	2	0	0	56.1	56.1	1	6056.76	3.25	0	86.64	0	1.98	0	0	13.17	0	0	0	0	0	0	-45.74	-45.74
	Inverter Transformer	MV4-9 T	369284	4909001	2	0	0	56.1	56.1	1	6071.66	3.25	0	86.67	0	1.99	0	0	13.19	0	0	0	0	0	0	-45.78	-45.78
	Inverter Transformer	MV4-6 T	369249	4909192	2	0	0	56.1	56.1	1	6139.41	3.25	0	86.76	0	2.01	0	0	13.27	0	0	0	0	0	0	-45.98	-45.98
	Inverter Transformer	MV4-5 T	369283	4909199	2	0	0	56.1	56.1	1	6172.04	3.25	0	86.81	0	2.02	0	0	13.3	0	0	0	0	0	0	-46.07	-46.07
	Inverter Transformer	MV6-2 T	370091	4907339	2	0	0	56.1	56.1	1	6220.51	3.25	0	86.88	0	2.03	0	0	13.36	0	0	0	0	0	0	-46.21	-46.21
	Inverter Transformer	MV4-3 T	369234	4909397	2	0	0	56.1	56.1	1	6236.89	3.25	0	86.9	0	2.04	0	0	13.38	0	0	0	0	0	0	-46.26	-46.26
	Inverter Transformer	MV4-2 T	369267	4909397	2	0	0	56.1	56.1	1	6264.49	3.25	0	86.94	0	2.05	0	0	13.41	0	0	0	0	0	0	-46.34	-46.34
	Inverter Transformer	MV6-3 T	370202	4907140	2	0	0	56.1	56.1	1	6288.8	3.25	0	86.97	0	2.05	0	0	13.44	0	0	0	0	0	0	-46.41	-46.41
	Inverter Transformer	MV5-6 T	369987	4908507	2	0	0	56.1	56.1	1	6481.18	3.25	0	87.23	0	2.11	0	0	13.66	0	0	0	0	0	0	-46.95	-46.95
	Inverter Transformer	MV5-5 T	370021	4908690	2	0	0	56.1	56.1	1	6585.93	3.25	0	87.37	0	2.14	0	0	13.78	0	0	0	0	0	0	-47.23	-47.23
	Inverter Transformer	MV5-2 T	370011	4908853	2	0	0	56.1	56.1	1	6645.89	3.25	0	87.45	0	2.16	0	0	13.84	0	0	0	0	0	0	-47.4	-47.4
	Inverter Transformer	MV5-1 T	370015	4909142	2	0	0	56.1	56.1	1	6779.8	3.25	0	87.62	0	2.2	0	0	13.99	0	0	0	0	0	0	-47.76	-47.76
	Inverter Transformer	MV5-3 T	370237	4908851	2	0	0	56.1	56.1	1	6849.38	3.25	0	87.71	0	2.22	0	0	14.07	0	0	0	0	0	0	-47.94	-47.94
	Inverter Transformer	MV5-4 T	370330	4908707	2	0	0	56.1	56.1	1	6875.28	3.25	0	87.75	0	2.23	0	0	14.09	0	0	0	0	0	0	-48.01	-48.01
	Line Reactor	NGR	369421	4908787.5	5	0	0	45.4	45.4	1	6089.06	5.25	0	86.69	0	3.24	1.36	0.1	2.49	0	0	0	0	0	0	-48.43	-48.43
Limit. Valu	0	0																								
Level D/N:	33.5907	33.5907																								

Receiver: Existing Noise Receptor
ID: S-R88
X: 363986
Y: 4905920
Z: 4.5
Ground: 0

ISO	Description	ID	X	Y	Z	Ground	ReflOrd	LxT	LxN	L/A	Dist.	hm	Freq	Adiv	K0b	Agr	Abar	z	Aatm	Afol	Ahous	Cmet	CmetN	Dc	RL	LtotT	LtotN
	Inverter	MV1-6	364477	4905835	2	0	0	100.3	100.3	1	498.31	3.25	0	64.95	0	-0.55	0	0	8.51	0	0	0	0	0	0	27.4	27.4
	Inverter	MV1-9	364561	4905646	2	0	0	100.3	100.3	1	636.95	3.25	0	67.08	0	-0.45	0	0	9.41	0	0	0	0	0	0	24.27	24.27
	Inverter	MV1-5	364671	4905892	2	0	0	100.3	100.3	1	685.58	3.25	0	67.72	0	-0.42	0	0	9.67	0	0	0	0	0	0	23.34	23.34
	Inverter	MV1-1	364715	4906166	2	0	0	100.3	100.3	1	769.39	3.25	0	68.72	0	-0.37	0	0	10.05	0	0	0	0	0	0	21.91	21.91
	Inverter	MV1-2	364753	4906063	2	0	0	100.3	100.3	1	780.22	3.25	0	68.84	0	-0.36	0	0	10.1	0	0	0	0	0	0	21.73	21.73
	Inverter	MV1-4	364815	4905918	2	0	0	100.3	100.3	1	829.01	3.25	0	69.37	0	-0.34	0	0	10.3	0	0	0	0	0	0	20.98	20.98
	Inverter	MV1-11	364655	4905414	2	0	0	100.3	100.3	1	838.81	3.25	0	69.47	0	-0.33	0	0	10.34	0	0	0	0	0	0	20.83	20.83
	Inverter	MV1-8	364788	4905647	2	0	0	100.3	100.3	1	847.19	3.25	0	69.56	0	-0.33	0	0	10.37	0	0	0	0	0	0	20.71	20.71
	Inverter	MV1-12	365038	4905386	2	0	0	100.3	100.3	1	1179.77	3.25	0	72.44	0	-0.16	0	0	11.47	0	0	0	0	0	0	16.57	16.57
	Inverter	MV1-7	364925	4905782	2	0	0	97.3	97.3	1	949.09	3.25	0	70.55	0	-0.27	0	0	10.74	0	0	0	0	0	0	16.3	16.3

Inverter	MV1-13	364731	4905241	2	0	0	97.3	97.3	1	1008	3.25	0	71.07	0	-0.24	0	0	10.94	0	0	0	0	0	0	15.55	15.55
Inverter	MV1-10	365004	4905564	2	0	0	97.3	97.3	1	1078.46	3.25	0	71.66	0	-0.21	0	0	11.16	0	0	0	0	0	0	14.7	14.7
Sol_Luce Substation	S_Substation	369426	4908792	3.5	0	0	112.1	112.1	1	6151.58	5.25	0	86.78	0	1.2	2.61	0.29	9.9	0	0	0	0	0	0	11.59	11.59
Inverter	MV1-15	365315	4904994	2	0	0	100.3	100.3	1	1619.79	3.25	0	75.19	0	0.01	0	0	12.62	0	0	0	0	0	0	12.5	12.5
Inverter	MV1-3	364440	4906039	2	0	0	89.1	89.1	1	469.34	3.25	0	64.43	0	0.51	0	0	5.03	0	0	0	0	0	0	19.09	19.09
Inverter	MV2-4	365586	4906624	2	0	0	100.3	100.3	1	1748.03	3.25	0	75.85	0	0.05	0	0	12.91	0	0	0	0	0	0	11.5	11.5
Inverter	MV2-3	365820	4906641	2	0	0	100.3	100.3	1	1970.64	3.25	0	76.89	0	0.12	0	0	13.4	0	0	0	0	0	0	9.9	9.9
Inverter	MV1-14	365163	4905049	2	0	0	97.3	97.3	1	1464.23	3.25	0	74.31	0	-0.05	0	0	12.24	0	0	0	0	0	0	10.81	10.81
Inverter	MV2-1	365842	4906816	2	0	0	97.3	97.3	1	2060.96	3.25	0	77.28	0	0.15	0	0	13.59	0	0	0	0	0	0	6.29	6.29
Inverter	MV3-12	367668	4907594	2	0	0	100.3	100.3	1	4044.68	3.25	0	83.14	0	0.53	0	0	17.12	0	0	0	0	0	0	-0.48	-0.48
Inverter	MV3-18	367752	4907412	2	0	0	100.3	100.3	1	4050.78	3.25	0	83.15	0	0.53	0	0	17.13	0	0	0	0	0	0	-0.5	-0.5
Inverter	MV3-13	367963	4907577	2	0	0	100.3	100.3	1	4308.39	3.25	0	83.69	0	0.57	0	0	17.53	0	0	0	0	0	0	-1.48	-1.48
Inverter	MV3-7	367945	4907754	2	0	0	100.3	100.3	1	4363.17	3.25	0	83.8	0	0.57	0	0	17.62	0	0	0	0	0	0	-1.68	-1.68
Inverter	MV3-3	367939	4907927	2	0	0	100.3	100.3	1	4433.31	3.25	0	83.93	0	0.58	0	0	17.73	0	0	0	0	0	0	-1.93	-1.93
Inverter	MV3-17	368178	4907472	2	0	0	100.3	100.3	1	4470.08	3.25	0	84.01	0	0.59	0	0	17.78	0	0	0	0	0	0	-2.07	-2.07
Inverter	MV3-10	368167	4907669	2	0	0	100.3	100.3	1	4532.08	3.25	0	84.13	0	0.59	0	0	17.88	0	0	0	0	0	0	-2.29	-2.29
Inverter	MV3-6	368162	4907834	2	0	0	100.3	100.3	1	4593.73	3.25	0	84.24	0	0.6	0	0	17.97	0	0	0	0	0	0	-2.51	-2.51
Inverter	MV3-19	368357	4907347	2	0	0	100.3	100.3	1	4598.04	3.25	0	84.25	0	0.6	0	0	17.98	0	0	0	0	0	0	-2.52	-2.52
Inverter	MV3-15	368357	4907477	2	0	0	100.3	100.3	1	4640.03	3.25	0	84.33	0	0.61	0	0	18.04	0	0	0	0	0	0	-2.67	-2.67
Inverter	MV3-21	368478	4907206	2	0	0	100.3	100.3	1	4672.46	3.25	0	84.39	0	0.61	0	0	18.09	0	0	0	0	0	0	-2.78	-2.78
Inverter	MV3-11	368346	4907662	2	0	0	100.3	100.3	1	4695.12	3.25	0	84.43	0	0.61	0	0	18.13	0	0	0	0	0	0	-2.86	-2.86
Inverter	MV3-16	368514	4907475	2	0	0	100.3	100.3	1	4787.57	3.25	0	84.6	0	0.62	0	0	18.27	0	0	0	0	0	0	-3.18	-3.18
Inverter	MV3-9	368512	4907703	2	0	0	100.3	100.3	1	4864.54	3.25	0	84.74	0	0.63	0	0	18.38	0	0	0	0	0	0	-3.44	-3.44
Inverter	MV3-20	368689	4907317	2	0	0	100.3	100.3	1	4906.1	3.25	0	84.81	0	0.63	0	0	18.44	0	0	0	0	0	0	-3.58	-3.58
Inverter	MV3-14	368684	4907498	2	0	0	100.3	100.3	1	4955.94	3.25	0	84.9	0	0.64	0	0	18.52	0	0	0	0	0	0	-3.74	-3.74
Inverter	MV3-8	368680	4907712	2	0	0	100.3	100.3	1	5024.43	3.25	0	85.02	0	0.64	0	0	18.62	0	0	0	0	0	0	-3.97	-3.97
Inverter	MV4-7	369035	4909001	2	0	0	100.3	100.3	1	5914.81	3.25	0	86.44	0	0.7	0	0	19.88	0	0	0	0	0	0	-6.71	-6.71
Inverter	MV4-4	369027	4909199	2	0	0	100.3	100.3	1	6013.61	3.25	0	86.58	0	0.71	0	0	20.01	0	0	0	0	0	0	-6.99	-6.99
Inverter	MV4-11	369264	4908855	2	0	0	100.3	100.3	1	6039.17	3.25	0	86.62	0	0.71	0	0	20.05	0	0	0	0	0	0	-7.06	-7.06
Inverter	MV4-10	369312	4908858	2	0	0	100.3	100.3	1	6082.61	3.25	0	86.68	0	0.71	0	0	20.1	0	0	0	0	0	0	-7.18	-7.18
Inverter	MV4-8	369256	4909001	2	0	0	100.3	100.3	1	6104.54	3.25	0	86.71	0	0.71	0	0	20.13	0	0	0	0	0	0	-7.24	-7.24
Inverter	MV4-1	369011	4909397	2	0	0	100.3	100.3	1	6110.66	3.25	0	86.72	0	0.71	0	0	20.14	0	0	0	0	0	0	-7.26	-7.26
Inverter	MV4-9	369289	4909001	2	0	0	100.3	100.3	1	6133.06	3.25	0	86.75	0	0.71	0	0	20.17	0	0	0	0	0	0	-7.32	-7.32
Inverter	MV4-6	369243	4909192	2	0	0	100.3	100.3	1	6192.09	3.25	0	86.84	0	0.71	0	0	20.25	0	0	0	0	0	0	-7.49	-7.49
Inverter	MV4-5	369289	4909199	2	0	0	100.3	100.3	1	6234.87	3.25	0	86.9	0	0.71	0	0	20.31	0	0	0	0	0	0	-7.61	-7.61
Inverter	MV6-2	370085	4907339	2	0	0	100.3	100.3	1	6261.9	3.25	0	86.93	0	0.71	0	0	20.35	0	0	0	0	0	0	-7.68	-7.68
Inverter	MV4-3	369229	4909397	2	0	0	100.3	100.3	1	6291.15	3.25	0	86.97	0	0.71	0	0	20.38	0	0	0	0	0	0	-7.76	-7.76
Inverter	MV4-2	369272	4909397	2	0	0	100.3	100.3	1	6327.03	3.25	0	87.02	0	0.71	0	0	20.43	0	0	0	0	0	0	-7.86	-7.86
Inverter	MV6-3	370207	4907140	2	0	0	100.3	100.3	1	6339.5	3.25	0	87.04	0	0.71	0	0	20.45	0	0	0	0	0	0	-7.89	-7.89
Inverter	MV5-5	370015	4908690	2	0	0	100.3	100.3	1	6634.89	3.25	0	87.44	0	0.71	0	0	20.83	0	0	0	0	0	0	-8.67	-8.67
Inverter	MV5-2	370006	4908853	2	0	0	100.3	100.3	1	6696.48	3.25	0	87.52	0	0.71	0	0	20.91	0	0	0	0	0	0	-8.83	-8.83
Inverter	MV5-1	370020	4909142	2	0	0	100.3	100.3	1	6840.35	3.25	0	87.7	0	0.71	0	0	21.1	0	0	0	0	0	0	-9.2	-9.2
Inverter	MV5-3	370231	4908851	2	0	0	100.3	100.3	1	6898.61	3.25	0	87.78	0	0.71	0	0	21.17	0	0	0	0	0	0	-9.35	-9.35
Inverter	MV5-4	370324	4908707	2	0	0	100.3	100.3	1	6923.7	3.25	0	87.81	0	0.71	0	0	21.2	0	0	0	0	0	0	-9.41	-9.41
Inverter	MV2-2	365977	4906654	2	0	0	89.1	89.1	1	2121.99	3.25	0	77.53	0	0.94	0	0	8.24	0	0	0	0	0	0	2.34	2.34
Inverter	MV6-1	370235	4907364	2	0	0	97.3	97.3	1	6413.67	3.25	0	87.14	0	0.71	0	0	20.55	0	0	0	0	0	0	-11.09	-11.09
DSTATCOM - 10 MVAR #2	DSAT2	369403	4908757	2.5	0	0	96.6	96.6	1	6114.94	3.5	0	86.73	0	3.78	0	0	3.89	0	0	0	0	0	0	2.23	2.23
DSTATCOM - 10 MVAR #1	DSAT1	369437	4908757	2.5	0	0	96.6	96.6	1	6145.08	3.5	0	86.77	0	3.78	0	0	3.91	0	0	0	0	0	0	2.17	2.17
Gardiner Substation	G_Sub	366586.3	4903349.9	2.5	0	0	90.8	90.8	1	3656.09	4.25	0	82.26	0	1.26	2.72	0.27	6.9	0	0	0	0	0	0	-2.36	-2.36
SubstationTransformer	W_ST	369711.17	4906112.3	2.5	0	0	92	92	1	5728.4	4.25	0	86.16	0	1.81	2.16	0.29	9.45	0	0	0	0	0	0	-7.61	-7.61
Inverters	G_Inv1	366526.4	4903225.8	2	0	0	87.7	87.7	1	3703.02	3.25	0	82.37	0	2.77	0	0	4.55	0	0	0	0	0	0	-2.03	-2.03
Inverters	G_Inv2	366676.9	4903239.1	2	0	0	87.7	87.7	1	3798.44	3.25	0	82.59	0	2.77	0	0	4.66	0	0	0	0	0	0	-2.36	-2.36
Inverters	G_Inv3	366583.7	4903091.4	2	0	0	87.7	87.7	1	3840.45	3.25	0	82.69	0	2.78	0	0	4.7	0	0	0	0	0	0	-2.51	-2.51
Inverters	G_Inv4	366732.8	4903105	2	0	0	87.7	87.7	1	3933.08	3.25	0	82.89	0	2.79	0	0	4.8	0	0	0	0	0	0	-2.82	-2.82
Inverter	MV3-1	368156	4907976	2	0	0	89.1	89.1	1	4649.31	3.25	0	84.35	0	1.55	0	0	11.99	0	0	0	0	0	0	-8.83	-8.83
Inverters	G_Inv5	366638.5	4902958.1	2	0	0	87.7	87.7	1	3976	3.25	0	82.99	0	2.79	0	0	4.85	0	0	0	0	0	0	-2.97	-2.97
Inverter	MV3-5	368340	4907843	2	0	0	89.1	89.1	1	4759.75	3.25	0	84.55	0	1.58	0	0	12.14	0	0	0	0	0	0	-9.21	-9.21
Inverters	G_Inv6	366788.5	4902972	2	0	0	87.7	87.7	1	4067.52	3.25	0	83.19	0	2.8	0	0	4.95	0	0	0	0	0	0	-3.27	-3.27
Inverter	MV3-22	368656	4907142	2	0	0	89.1	89.1	1	4827.23	3.25	0	84.67	0	1.6	0	0	12.23	0	0	0	0	0	0	-9.44	-9.44
Inverters	G_Inv7	366694.6	4902824.7	2	0	0	87.7	87.7	1	4113.08	3.25	0	83.28	0	2.8	0	0	5	0	0	0	0	0	0	-3.42	-3.42
Inverters	G_Inv8	366844.5	4902838.5	2	0	0	87.7	87.7	1	4203.17	3.25	0	83.47	0	2.81	0	0	5.09	0	0	0	0	0	0	-3.71	-3.71
Inverter	MV3-4	368502	4907925	2	0	0	89.1	89.1	1	4941.08	3.25	0	84.88	0	1.63	0	0	12.38	0	0	0	0	0	0	-9.83	-9.83
Inverters	G_Inv9	366750.9	4902691.8	2	0	0	87.7	87.7	1	4250.41	3.25	0	83.57	0	2.81	0	0	5.14	0	0	0	0	0	0	-3.86	-3.86
Inverter	MV3-2	368671	4907928	2	0	0	89.1	89.1	1	5097.19	3.25	0	85.15	0	1.66	0	0	12.59	0	0	0	0	0	0	-10.35	-10.35
Inverters	G_Inv10	366900.7	4902704.8	2	0	0	87.7	87.7	1	4339.7	3.25	0	83.75	0	2.82	0	0	5.24	0	0	0	0	0	0	-4.15	-4.15
Westbrook Inverter Enclosur	W_INV2	369374	4906388	2	0	0	89.1	89.1	1	5408.29	3.25	0	85.66	0	1.74	0	0	13	0	0	0	0	0	0	-11.35	-11.35
Westbrook Inverter Enclosur	W_INV3	369508	4906164	2	0	0	89.1	89.1	1	5527.39	3.25	0	85.85	0	1.77	0	0	13.16	0	0	0	0	0	0	-11.72	-11.72
Fixed Reactor Bank 1	FRB1	369378	4908755	6	0	0	89.8	89.8	1	6091.87	5.25	0	86.7	0	-0.4	0	0	9.84	0	0	0	0	0	0	-6.35	-6.35
Fixed Reactor Bank 2	FRB2	369464	4908755	6	0	0	89.8	89.8	1	6168.12	5.25	0	86.8	0	-0.39	0	0	9.92	0	0	0	0	0	0	-6.55	-6.55
Westbrook Inverter Enclosur	W_INV4	369673	4906164	2	0	0	89.1	89.1	1	5692.23	3.25	0	86.11	0	1.81	0	0	13.37	0	0	0	0	0	0	-12.23	-12.23
Inverter	MV4-13	369051	4908605	2	0	0	89.1	89.1	1	5732.67	3.25	0	86.17	0	1.82	0	0	13.42	0	0	0	0	0	0	-12.35	-12.35
Westbrook Inverter Enclosur	W_INV5	369719	4906574	2	0	0	89.1	89.1	1	5770.18	3.25	0	86.22	0	1.83	0	0	13.47	0	0	0	0	0	0	-12.47	-12.47
Inverter	MV4-15	369176	4908481	2	0	0	89.1	89.1	1	5787.47	3.25	0	86.25	0	1.83	0	0	13.49	0	0	0	0	0	0	-12.52	-12.52
Inverter	MV4-14	369176	4908507	2	0	0	89.1	89.1	1	5799.02	3.25	0	86.27	0	1.84	0	0	13.51	0	0	0	0	0	0	-12.55	-12.55

Westbrook Inverter Enclosur	W_INV7	369780	4906417	2	0	0	89.1	89.1	1	5815.28	3.25	0	86.29	0	1.84	0	0	13.53	0	0	0	0	0	0	-12.6	-12.6
Inverter	MV4-12	369043	4908803	2	0	0	89.1	89.1	1	5821.08	3.25	0	86.3	0	1.84	0	0	13.54	0	0	0	0	0	0	-12.62	-12.62
Westbrook Inverter Enclosur	W_INV6	369875	4906578	2	0	0	89.1	89.1	1	5925.65	3.25	0	86.45	0	1.87	0	0	13.67	0	0	0	0	0	0	-12.93	-12.93
Inverter	MV5-6	369982	4908507	2	0	0	89.1	89.1	1	6530.28	3.25	0	87.3	0	2.01	0	0	14.42	0	0	0	0	0	0	-14.68	-14.68
Westbrook Inverter Enclosur	W_INV1	369409	4906578	2	0	0	86.1	86.1	1	5462.77	3.25	0	85.75	0	1.75	0	0	13.07	0	0	0	0	0	0	-14.52	-14.52
Inverter	MV6-4	370250	4906966	2	0	0	86.1	86.1	1	6350.73	3.25	0	87.06	0	1.97	0	0	14.2	0	0	0	0	0	0	-17.17	-17.17
Inverter Transformer	MV1-7 T	364919	4905782	2	0	0	69.4	69.4	1	943.15	3.25	0	70.49	0	1.64	0	0	3.73	0	0	0	0	0	0	-6.51	-6.51
Inverter Transformer	MV1-13 T	364725	4905241	2	0	0	69.4	69.4	1	1003.58	3.25	0	71.03	0	1.69	0	0	3.82	0	0	0	0	0	0	-7.18	-7.18
Inverter Transformer	MV1-10 T	365010	4905564	2	0	0	69.4	69.4	1	1084.12	3.25	0	71.7	0	1.75	0	0	3.93	0	0	0	0	0	0	-8.02	-8.02
Inverter Transformer	MV1-14 T	365157	4905049	2	0	0	69.4	69.4	1	1459.41	3.25	0	74.28	0	1.95	0	0	4.39	0	0	0	0	0	0	-11.28	-11.28
Westbrook Inverter Transfor	W_INVTR1	369403	4906578	2	0	0	78.2	78.2	1	5456.82	3.25	0	85.74	0	-3.27	0	0	2.57	0	0	0	0	0	0	-6.8	-6.8
Inverter Transformer	MV2-1 T	365836	4906816	2	0	0	69.4	69.4	1	2055.56	3.25	0	77.26	0	2.19	0	0	5.02	0	0	0	0	0	0	-15.12	-15.12
Inverter Transformer	MV1-3 T	364435	4906039	2	0	0	56.1	56.1	1	464.51	3.25	0	64.34	0	-0.12	0	0	3.44	0	0	0	0	0	0	-11.6	-11.6
Westbrook Inverter Transfor	W_INVTR2	369368	4906388	2	0	0	77.3	77.3	1	5402.31	3.25	0	85.65	0	-3.26	0	0	2.55	0	0	0	0	0	0	-7.6	-7.6
Westbrook Inverter Transfor	W_INVTR3	369514	4906164	2	0	0	77.3	77.3	1	5533.38	3.25	0	85.86	0	-3.28	0	0	2.59	0	0	0	0	0	0	-7.83	-7.83
Westbrook Inverter Transfor	W_INVTR4	369679	4906164	2	0	0	77.3	77.3	1	5698.23	3.25	0	86.11	0	-3.31	0	0	2.64	0	0	0	0	0	0	-8.11	-8.11
Westbrook Inverter Transfor	W_INVTR5	369725	4906574	2	0	0	77.3	77.3	1	5776.14	3.25	0	86.23	0	-3.33	0	0	2.67	0	0	0	0	0	0	-8.23	-8.23
Westbrook Inverter Transfor	W_INVTR7	369786	4906417	2	0	0	77.3	77.3	1	5821.26	3.25	0	86.3	0	-3.34	0	0	2.68	0	0	0	0	0	0	-8.31	-8.31
Inverter Transformer	MV1-6 T	364482	4905835	2	0	0	56.1	56.1	1	503.24	3.25	0	65.04	0	-0.12	0	0	3.56	0	0	0	0	0	0	-12.42	-12.42
Westbrook Inverter Transfor	W_INVTR6	369881	4906578	2	0	0	77.3	77.3	1	5931.61	3.25	0	86.46	0	-3.36	0	0	2.72	0	0	0	0	0	0	-8.49	-8.49
Inverter Transformer	MV1-9 T	364555	4905646	2	0	0	56.1	56.1	1	631.54	3.25	0	67.01	0	-0.1	0	0	3.95	0	0	0	0	0	0	-14.8	-14.8
Inverter Transformer	MV1-5 T	364676	4905892	2	0	0	56.1	56.1	1	690.57	3.25	0	67.78	0	-0.08	0	0	4.11	0	0	0	0	0	0	-15.75	-15.75
Inverter Transformer	MV1-1 T	364721	4906166	2	0	0	56.1	56.1	1	775.08	3.25	0	68.79	0	-0.06	0	0	4.33	0	0	0	0	0	0	-17	-17
Inverter Transformer	MV1-2 T	364759	4906063	2	0	0	56.1	56.1	1	786.12	3.25	0	68.91	0	-0.06	0	0	4.36	0	0	0	0	0	0	-17.15	-17.15
Inverter Transformer	MV1-11 T	364649	4905414	2	0	0	56.1	56.1	1	834.03	3.25	0	69.42	0	-0.04	0	0	4.48	0	0	0	0	0	0	-17.8	-17.8
Inverter Transformer	MV1-4 T	364821	4905918	2	0	0	56.1	56.1	1	835.01	3.25	0	69.43	0	-0.04	0	0	4.48	0	0	0	0	0	0	-17.82	-17.82
Inverter Transformer	MV1-8 T	364782	4905647	2	0	0	56.1	56.1	1	841.52	3.25	0	69.5	0	-0.04	0	0	4.5	0	0	0	0	0	0	-17.9	-17.9
Inverter Transformer	MV1-12 T	365044	4905386	2	0	0	56.1	56.1	1	1185.13	3.25	0	72.48	0	0.08	0	0	5.32	0	0	0	0	0	0	-21.82	-21.82
Inverter Transformer	MV6-4 T	370244	4906966	2	0	0	69.4	69.4	1	6344.82	3.25	0	87.05	0	3.24	0	0	8.22	0	0	0	0	0	0	-29.16	-29.16
Inverter Transformer	MV6-1 T	370230	4907364	2	0	0	69.4	69.4	1	6408.8	3.25	0	87.14	0	3.25	0	0	8.26	0	0	0	0	0	0	-29.29	-29.29
Inverter Transformer	MV1-15 T	365309	4904994	2	0	0	56.1	56.1	1	1614.87	3.25	0	75.16	0	0.24	0	0	6.26	0	0	0	0	0	0	-25.61	-25.61
Inverter Transformer	MV2-4 T	365590	4906628	2	0	0	56.1	56.1	1	1753.31	3.25	0	75.88	0	0.3	0	0	6.55	0	0	0	0	0	0	-26.67	-26.67
Inverter Transformer	MV2-3 T	365814	4906641	2	0	0	56.1	56.1	1	1965.05	3.25	0	76.87	0	0.39	0	0	6.97	0	0	0	0	0	0	-28.17	-28.17
Inverter Transformer	MV2-2 T	365982	4906654	2	0	0	56.1	56.1	1	2126.68	3.25	0	77.55	0	0.46	0	0	7.29	0	0	0	0	0	0	-29.24	-29.24
Inverter Transformer	MV3-12 T	367674	4907594	2	0	0	56.1	56.1	1	4050.14	3.25	0	83.15	0	1.26	0	0	10.53	0	0	0	0	0	0	-38.88	-38.88
Inverter Transformer	MV3-18 T	367757	4907412	2	0	0	56.1	56.1	1	4055.43	3.25	0	83.16	0	1.27	0	0	10.54	0	0	0	0	0	0	-38.91	-38.91
Inverter Transformer	MV3-13 T	367958	4907577	2	0	0	56.1	56.1	1	4303.77	3.25	0	83.68	0	1.36	0	0	10.9	0	0	0	0	0	0	-39.88	-39.88
Inverter Transformer	MV3-7 T	367951	4907754	2	0	0	56.1	56.1	1	4368.61	3.25	0	83.81	0	1.39	0	0	10.99	0	0	0	0	0	0	-40.13	-40.13
Inverter Transformer	MV3-3 T	367944	4907927	2	0	0	56.1	56.1	1	4437.77	3.25	0	83.94	0	1.42	0	0	11.09	0	0	0	0	0	0	-40.39	-40.39
Inverter Transformer	MV3-17 T	368183	4907472	2	0	0	56.1	56.1	1	4474.76	3.25	0	84.02	0	1.43	0	0	11.14	0	0	0	0	0	0	-40.53	-40.53
Inverter Transformer	MV3-10 T	368162	4907669	2	0	0	56.1	56.1	1	4527.47	3.25	0	84.12	0	1.45	0	0	11.21	0	0	0	0	0	0	-40.72	-40.72
Inverter Transformer	MV3-6 T	368156	4907834	2	0	0	56.1	56.1	1	4588.28	3.25	0	84.23	0	1.47	0	0	11.3	0	0	0	0	0	0	-40.95	-40.95
Inverter Transformer	MV3-19 T	368352	4907347	2	0	0	56.1	56.1	1	4593.29	3.25	0	84.24	0	1.47	0	0	11.31	0	0	0	0	0	0	-40.96	-40.96
Inverter Transformer	MV3-15 T	368351	4907477	2	0	0	56.1	56.1	1	4634.38	3.25	0	84.32	0	1.49	0	0	11.36	0	0	0	0	0	0	-41.11	-41.11
Inverter Transformer	MV3-1 T	368150	4907976	2	0	0	56.1	56.1	1	4643.92	3.25	0	84.34	0	1.49	0	0	11.37	0	0	0	0	0	0	-41.15	-41.15
Inverter Transformer	MV3-21 T	368484	4907206	2	0	0	56.1	56.1	1	4678.23	3.25	0	84.4	0	1.51	0	0	11.42	0	0	0	0	0	0	-41.27	-41.27
Inverter Transformer	MV3-11 T	368340	4907662	2	0	0	56.1	56.1	1	4689.55	3.25	0	84.42	0	1.51	0	0	11.44	0	0	0	0	0	0	-41.31	-41.31
Inverter Transformer	MV3-5 T	368335	4907843	2	0	0	56.1	56.1	1	4755.18	3.25	0	84.54	0	1.54	0	0	11.53	0	0	0	0	0	0	-41.55	-41.55
Inverter Transformer	MV3-16 T	368509	4907475	2	0	0	56.1	56.1	1	4782.84	3.25	0	84.59	0	1.55	0	0	11.56	0	0	0	0	0	0	-41.65	-41.65
Inverter Transformer	MV3-22 T	368661	4907142	2	0	0	56.1	56.1	1	4832.07	3.25	0	84.68	0	1.56	0	0	11.63	0	0	0	0	0	0	-41.82	-41.82
Inverter Transformer	MV3-9 T	368517	4907703	2	0	0	56.1	56.1	1	4869.19	3.25	0	84.75	0	1.58	0	0	11.68	0	0	0	0	0	0	-41.95	-41.95
Inverter Transformer	MV3-20 T	368683	4907317	2	0	0	56.1	56.1	1	4900.35	3.25	0	84.8	0	1.59	0	0	11.72	0	0	0	0	0	0	-42.06	-42.06
Inverter Transformer	MV3-4 T	368507	4907925	2	0	0	56.1	56.1	1	4945.65	3.25	0	84.88	0	1.61	0	0	11.78	0	0	0	0	0	0	-42.21	-42.21
Inverter Transformer	MV3-14 T	368678	4907498	2	0	0	56.1	56.1	1	4950.25	3.25	0	84.89	0	1.61	0	0	11.79	0	0	0	0	0	0	-42.23	-42.23
Inverter Transformer	MV3-8 T	368685	4907712	2	0	0	56.1	56.1	1	5029.1	3.25	0	85.03	0	1.64	0	0	11.89	0	0	0	0	0	0	-42.5	-42.5
Inverter Transformer	MV3-2 T	368677	4907928	2	0	0	56.1	56.1	1	5102.7	3.25	0	85.16	0	1.66	0	0	11.99	0	0	0	0	0	0	-42.75	-42.75
Inverter Transformer	MV4-13 T	369057	4908605	2	0	0	56.1	56.1	1	5737.97	3.25	0	86.18	0	1.88	0	0	12.79	0	0	0	0	0	0	-44.79	-44.79
Inverter Transformer	MV4-15 T	369170	4908481	2	0	0	56.1	56.1	1	5782.09	3.25	0	86.24	0	1.89	0	0	12.84	0	0	0	0	0	0	-44.92	-44.92
Inverter Transformer	MV4-14 T	369182	4908507	2	0	0	56.1	56.1	1	5804.39	3.25	0	86.28	0	1.9	0	0	12.87	0	0	0	0	0	0	-44.99	-44.99
Inverter Transformer	MV4-12 T	369049	4908803	2	0	0	56.1	56.1	1	5826.29	3.25	0	86.31	0	1.91	0	0	12.9	0	0	0	0	0	0	-45.05	-45.05
Inverter Transformer	MV4-7 T	369040	4909001	2	0	0	56.1	56.1	1	5919.08	3.25	0	86.45	0	1.94	0	0	13.01	0	0	0	0	0	0	-45.33	-45.33
Inverter Transformer	MV4-4 T	369033	4909199	2	0	0	56.1	56.1	1	6018.64	3.25	0	86.59	0	1.97	0	0	13.12	0	0	0	0	0	0	-45.63	-45.63
Inverter Transformer	MV4-11 T	369269	4908855	2	0	0	56.1	56.1	1	6043.54	3.25	0	86.63	0	1.98	0	0	13.15	0	0	0	0	0	0	-45.7	-45.7
Inverter Transformer	MV4-10 T	369307	4908858	2	0	0	56.1	56.1	1	6078.23	3.25	0	86.68	0	1.99	0	0	13.2	0	0	0	0	0	0	-45.8	-45.8
Inverter Transformer	MV4-8 T	369262	4909001	2	0	0	56.1	56.1	1	6109.73	3.25	0	86.72	0	2	0	0	13.23	0	0	0	0	0	0	-45.89	-45.89
Inverter Transformer	MV4-1 T	369017	4909397	2	0	0	56.1	56.1	1	6115.59	3.25	0	86.73	0	2	0	0	13.24	0	0	0	0	0	0	-45.91	-45.91
Inverter Transformer	MV4-9 T	369284	4909001	2	0	0	56.1	56.1	1	6128.73	3.25	0	86.75	0	2.01	0	0	13.25	0	0	0	0	0	0	-45.95	-45.95
Inverter Transformer	MV4-6 T	369249	4909192	2	0	0	56.1	56.1	1	6197.19	3.25	0	86.84	0	2.03	0	0	13.33	0	0	0	0	0	0	-46.15	-46.15
Inverter Transformer	MV4-5 T	369283	4909199	2	0	0	56.1	56.1	1	6229.77	3.25	0	86.89	0	2.04	0	0	13.37	0	0	0	0	0	0	-46.24	-46.24
Inverter Transformer	MV6-2 T	370091	4907339	2	0	0	56.1	56.1	1	6267.74	3.25	0	86.94	0	2.05	0	0	13.42	0	0	0	0	0	0	-46.35	-46.35
Inverter Transformer	MV4-3 T	369234	4909397	2	0	0	56.1	56.1	1	6295.32	3.25	0	86.98	0	2.06	0	0	13.45	0	0	0	0	0	0	-46.43	-46.43
Inverter Transformer	MV4-2 T	369267	4909397	2	0	0	56.1	56.1	1	6322.86	3.25	0	87.02	0	2.06	0	0	13.48	0	0	0	0	0	0	-46.5	-46.5
Inverter Transformer	MV6-3 T	370202	4907140	2	0	0	56.1	56.1	1	6334.59	3.25	0	87.03	0	2.07	0	0	13.49	0	0	0	0	0	0	-46.54	-46.54
Inverter Transformer	MV5-6 T	369987	4908507	2	0	0	56.1	56.1	1	6534.87	3.25	0	87.3	0	2.13	0	0	13.72	0	0	0	0	0	0	-47.09	-47.09

	Inverter Transformer	MV5-5 T	370021	4908690	2	0	0	56.1	56.1	1	6640.34	3.25	0	87.44	0	2.16	0	0	13.84	0	0	0	0	0	0	-47.38	-47.38
	Inverter Transformer	MV5-2 T	370011	4908853	2	0	0	56.1	56.1	1	6700.98	3.25	0	87.52	0	2.18	0	0	13.9	0	0	0	0	0	0	-47.54	-47.54
	Inverter Transformer	MV5-1 T	370015	4909142	2	0	0	56.1	56.1	1	6835.94	3.25	0	87.7	0	2.21	0	0	14.05	0	0	0	0	0	0	-47.9	-47.9
	Inverter Transformer	MV5-3 T	370237	4908851	2	0	0	56.1	56.1	1	6904.04	3.25	0	87.78	0	2.23	0	0	14.13	0	0	0	0	0	0	-48.08	-48.08
	Inverter Transformer	MV5-4 T	370330	4908707	2	0	0	56.1	56.1	1	6929.19	3.25	0	87.81	0	2.24	0	0	14.15	0	0	0	0	0	0	-48.15	-48.15
	Line Reactor	NGR	369421	4908787.5	5	0	0	45.4	45.4	1	6145.06	5.25	0	86.77	0	3.24	1.36	0.1	2.51	0	0	0	0	0	0	-48.53	-48.53
Limit. Valu	0	0																								
Level D/N:	33.0874	33.0874																								

Receiver: Existing Noise Receptor
ID: S-R89
X: 363944
Y: 4905852
Z: 4.5
Ground: 0

ISO	Description	ID	X	Y	Z	Ground	ReflOrd	LxT	LxN	L/A	Dist.	hm	Freq	Adiv	K0b	Agr	Abar	z	Aatm	Afol	Ahous	Cmet	CmetN	Dc	RL	LtotT	LtotN
	Inverter	MV1-6	364477	4905835	2	0	0	100.3	100.3	1	533.28	3.25	0	65.54	0	-0.53	0	0	8.77	0	0	0	0	0	0	26.53	26.53
	Inverter	MV1-9	364561	4905646	2	0	0	100.3	100.3	1	650.49	3.25	0	67.26	0	-0.44	0	0	9.49	0	0	0	0	0	0	24	24
	Inverter	MV1-5	364671	4905892	2	0	0	100.3	100.3	1	728.1	3.25	0	68.24	0	-0.39	0	0	9.87	0	0	0	0	0	0	22.59	22.59
	Inverter	MV1-1	364715	4906166	2	0	0	100.3	100.3	1	832.49	3.25	0	69.41	0	-0.33	0	0	10.31	0	0	0	0	0	0	20.93	20.93
	Inverter	MV1-11	364655	4905414	2	0	0	100.3	100.3	1	835.09	3.25	0	69.43	0	-0.33	0	0	10.32	0	0	0	0	0	0	20.89	20.89
	Inverter	MV1-2	364753	4906063	2	0	0	100.3	100.3	1	836.07	3.25	0	69.44	0	-0.33	0	0	10.32	0	0	0	0	0	0	20.87	20.87
	Inverter	MV1-8	364788	4905647	2	0	0	100.3	100.3	1	868.54	3.25	0	69.78	0	-0.31	0	0	10.45	0	0	0	0	0	0	20.4	20.4
	Inverter	MV1-4	364815	4905918	2	0	0	100.3	100.3	1	873.5	3.25	0	69.83	0	-0.31	0	0	10.47	0	0	0	0	0	0	20.33	20.33
	Inverter	MV1-12	365038	4905386	2	0	0	100.3	100.3	1	1189.12	3.25	0	72.5	0	-0.16	0	0	11.49	0	0	0	0	0	0	16.47	16.47
	Inverter	MV1-7	364925	4905782	2	0	0	97.3	97.3	1	983.5	3.25	0	70.86	0	-0.25	0	0	10.86	0	0	0	0	0	0	15.85	15.85
	Inverter	MV1-13	364731	4905241	2	0	0	97.3	97.3	1	996.34	3.25	0	70.97	0	-0.25	0	0	10.9	0	0	0	0	0	0	15.69	15.69
	Inverter	MV1-10	365004	4905564	2	0	0	97.3	97.3	1	1098.43	3.25	0	71.82	0	-0.2	0	0	11.22	0	0	0	0	0	0	14.47	14.47
	Sol_Luce Substation	S_Substation	369426	4908792	3.5	0	0	112.1	112.1	1	6220.6	5.25	0	86.88	0	1.21	2.6	0.29	9.97	0	0	0	0	0	0	11.42	11.42
	Inverter	MV1-15	365315	4904994	2	0	0	100.3	100.3	1	1617.35	3.25	0	75.18	0	0.01	0	0	12.61	0	0	0	0	0	0	12.52	12.52
	Inverter	MV2-4	365586	4906624	2	0	0	100.3	100.3	1	1814.43	3.25	0	76.17	0	0.07	0	0	13.06	0	0	0	0	0	0	11	11
	Inverter	MV1-3	364440	4906039	2	0	0	89.1	89.1	1	530.09	3.25	0	65.49	0	0.54	0	0	5.24	0	0	0	0	0	0	17.78	17.78
	Inverter	MV2-3	365820	4906641	2	0	0	100.3	100.3	1	2035.17	3.25	0	77.17	0	0.14	0	0	13.54	0	0	0	0	0	0	9.47	9.47
	Inverter	MV1-14	365163	4905049	2	0	0	97.3	97.3	1	1459.72	3.25	0	74.29	0	-0.05	0	0	12.22	0	0	0	0	0	0	10.85	10.85
	Inverter	MV2-1	365842	4906816	2	0	0	97.3	97.3	1	2128.78	3.25	0	77.56	0	0.16	0	0	13.73	0	0	0	0	0	0	5.86	5.86
	Inverter	MV3-12	367668	4907594	2	0	0	100.3	100.3	1	4111.29	3.25	0	83.28	0	0.54	0	0	17.23	0	0	0	0	0	0	-0.74	-0.74
	Inverter	MV3-18	367752	4907412	2	0	0	100.3	100.3	1	4115.15	3.25	0	83.29	0	0.54	0	0	17.23	0	0	0	0	0	0	-0.75	-0.75
	Inverter	MV3-13	367963	4907577	2	0	0	100.3	100.3	1	4373.56	3.25	0	83.82	0	0.58	0	0	17.64	0	0	0	0	0	0	-1.72	-1.72
	Inverter	MV3-7	367945	4907754	2	0	0	100.3	100.3	1	4430.08	3.25	0	83.93	0	0.58	0	0	17.72	0	0	0	0	0	0	-1.92	-1.92
	Inverter	MV3-3	367939	4907927	2	0	0	100.3	100.3	1	4501.74	3.25	0	84.07	0	0.59	0	0	17.83	0	0	0	0	0	0	-2.18	-2.18
	Inverter	MV3-17	368178	4907472	2	0	0	100.3	100.3	1	4533.34	3.25	0	84.13	0	0.59	0	0	17.88	0	0	0	0	0	0	-2.29	-2.29
	Inverter	MV3-10	368167	4907669	2	0	0	100.3	100.3	1	4597.31	3.25	0	84.25	0	0.6	0	0	17.98	0	0	0	0	0	0	-2.52	-2.52
	Inverter	MV3-19	368357	4907347	2	0	0	100.3	100.3	1	4659.36	3.25	0	84.37	0	0.61	0	0	18.07	0	0	0	0	0	0	-2.74	-2.74
	Inverter	MV3-6	368162	4907834	2	0	0	100.3	100.3	1	4660.46	3.25	0	84.37	0	0.61	0	0	18.07	0	0	0	0	0	0	-2.74	-2.74
	Inverter	MV3-15	368357	4907477	2	0	0	100.3	100.3	1	4702.68	3.25	0	84.45	0	0.61	0	0	18.14	0	0	0	0	0	0	-2.89	-2.89
	Inverter	MV3-21	368478	4907206	2	0	0	100.3	100.3	1	4731.86	3.25	0	84.5	0	0.62	0	0	18.18	0	0	0	0	0	0	-2.99	-2.99
	Inverter	MV3-11	368346	4907662	2	0	0	100.3	100.3	1	4759.59	3.25	0	84.55	0	0.62	0	0	18.22	0	0	0	0	0	0	-3.08	-3.08
	Inverter	MV3-16	368514	4907475	2	0	0	100.3	100.3	1	4849.64	3.25	0	84.71	0	0.63	0	0	18.36	0	0	0	0	0	0	-3.39	-3.39
	Inverter	MV3-9	368512	4907703	2	0	0	100.3	100.3	1	4928.78	3.25	0	84.85	0	0.64	0	0	18.48	0	0	0	0	0	0	-3.65	-3.65
	Inverter	MV3-20	368689	4907317	2	0	0	100.3	100.3	1	4966.01	3.25	0	84.92	0	0.64	0	0	18.53	0	0	0	0	0	0	-3.78	-3.78
	Inverter	MV3-14	368684	4907498	2	0	0	100.3	100.3	1	5017.66	3.25	0	85.01	0	0.64	0	0	18.61	0	0	0	0	0	0	-3.95	-3.95
	Inverter	MV3-8	368680	4907712	2	0	0	100.3	100.3	1	5088.15	3.25	0	85.13	0	0.65	0	0	18.71	0	0	0	0	0	0	-4.18	-4.18
	Inverter	MV4-7	369035	4909001	2	0	0	100.3	100.3	1	5986.19	3.25	0	86.54	0	0.7	0	0	19.97	0	0	0	0	0	0	-6.91	-6.91
	Inverter	MV4-4	369027	4909199	2	0	0	100.3	100.3	1	6085.99	3.25	0	86.69	0	0.71	0	0	20.11	0	0	0	0	0	0	-7.19	-7.19
	Inverter	MV4-11	369264	4908855	2	0	0	100.3	100.3	1	6109.04	3.25	0	86.72	0	0.71	0	0	20.14	0	0	0	0	0	0	-7.26	-7.26
	Inverter	MV4-10	369312	4908858	2	0	0	100.3	100.3	1	6152.35	3.25	0	86.78	0	0.71	0	0	20.2	0	0	0	0	0	0	-7.38	-7.38
	Inverter	MV4-8	369256	4909001	2	0	0	100.3	100.3	1	6175.24	3.25	0	86.81	0	0.71	0	0	20.23	0	0	0	0	0	0	-7.44	-7.44
	Inverter	MV4-1	369011	4909397	2	0	0	100.3	100.3	1	6183.97	3.25	0	86.83	0	0.71	0	0	20.24	0	0	0	0	0	0	-7.46	-7.46
	Inverter	MV4-9	369289	4909001	2	0	0	100.3	100.3	1	6203.65	3.25	0	86.85	0	0.71	0	0	20.27	0	0	0	0	0	0	-7.52	-7.52
	Inverter	MV4-6	369243	4909192	2	0	0	100.3	100.3	1	6263.79	3.25	0	86.94	0	0.71	0	0	20.35	0	0	0	0	0	0	-7.68	-7.68
	Inverter	MV4-5	369289	4909199	2	0	0	100.3	100.3	1	6306.46	3.25	0	87	0	0.71	0	0	20.4	0	0	0	0	0	0	-7.8	-7.8
	Inverter	MV6-2	370085	4907339	2	0	0	100.3	100.3	1	6318.47	3.25	0	87.01	0	0.71	0	0	20.42	0	0	0	0	0	0	-7.83	-7.83
	Inverter	MV4-3	369229	4909397	2	0	0	100.3	100.3	1	6363.82	3.25	0	87.07	0	0.71	0	0	20.48	0	0	0	0	0	0	-7.96	-7.96
	Inverter	MV6-3	370207	4907140	2	0	0	100.3	100.3	1	6394.07	3.25	0	87.12	0	0.71	0	0	20.52	0	0	0	0	0	0	-8.04	-8.04
	Inverter	MV4-2	369272	4909397	2	0	0	100.3	100.3	1	6399.58	3.25	0	87.12	0	0.71	0	0	20.53	0	0	0	0	0	0	-8.05	-8.05
	Inverter	MV5-5	370015	4908690	2	0	0	100.3	100.3	1	6701.59	3.25	0	87.52	0	0.71	0	0	20.92	0	0	0	0	0	0	-8.85	-8.85
	Inverter	MV5-2	370006	4908853	2	0	0	100.3	100.3	1	6764.16	3.25	0	87.6	0	0.71	0	0	21	0	0	0	0	0	0	-9.01	-9.01
	Inverter	MV5-1	370020	4909142	2	0	0	100.3	100.3	1	6909.55	3.25	0	87.79	0	0.71	0	0	21.19	0	0	0	0	0	0	-9.37	-9.37
	Inverter	MV5-3	370231	4908851	2	0	0	100.3	100.3	1	6965.66	3.25	0	87.86	0	0.71	0	0	21.26	0	0	0	0	0	0	-9.51	-9.51
	Inverter	MV5-4	370324	4908707	2	0	0	100.3	100.3	1	6989.67	3.25	0	87.89	0	0.71	0	0	21.29	0	0	0	0	0	0	-9.57	-9.57
	Inverter	MV2-2	365977	4906654	2	0	0	89.1	89.1	1	2185.47	3.25	0	77.79	0	0.95	0	0	8.35	0	0	0	0	0	0	1.97	1.97
	Inverter	MV6-1	370235	4907364	2	0	0	97.3	97.3	1	6470.15	3.25	0	87.22	0	0.71	0	0	20.62	0	0	0	0	0	0	-11.24	-11.24
	DSTATCOM - 10 MVAR #2	DSAT2	369403	4908757	2.5	0	0	96.6	96.6	1	6183.83	3.5	0	86.83	0	3.79	0	0	3.93	0	0	0	0	0	0	2.09	2.09

DSTATCOM - 10 MVAR #1	DSAT1	369437	4908757	2.5	0	0	96.6	96.6	1	6213.86	3.5	0	86.87	0	3.79	0	0	3.94	0	0	0	0	0	0	2.03	2.03
Gardiner Substation	G_Sub	366586.3	4903349.9	2.5	0	0	90.8	90.8	1	3638.99	4.25	0	82.22	0	1.25	2.73	0.28	6.88	0	0	0	0	0	0	-2.3	-2.3
SubstationTransformer	W_ST	369711.17	4906112.3	2.5	0	0	92	92	1	5773.04	4.25	0	86.23	0	1.82	2.15	0.29	9.5	0	0	0	0	0	0	-7.72	-7.72
Inverters	G_Inv1	366526.4	4903225.8	2	0	0	87.7	87.7	1	3683.17	3.25	0	82.32	0	2.76	0	0	4.53	0	0	0	0	0	0	-1.96	-1.96
Inverters	G_Inv2	366676.9	4903239.1	2	0	0	87.7	87.7	1	3781	3.25	0	82.55	0	2.77	0	0	4.64	0	0	0	0	0	0	-2.3	-2.3
Inverters	G_Inv3	366583.7	4903091.4	2	0	0	87.7	87.7	1	3819.55	3.25	0	82.64	0	2.78	0	0	4.68	0	0	0	0	0	0	-2.43	-2.43
Inverters	G_Inv4	366732.8	4903105	2	0	0	87.7	87.7	1	3914.51	3.25	0	82.85	0	2.78	0	0	4.78	0	0	0	0	0	0	-2.76	-2.76
Inverters	G_Inv5	366638.5	4902958.1	2	0	0	87.7	87.7	1	3954.11	3.25	0	82.94	0	2.79	0	0	4.82	0	0	0	0	0	0	-2.89	-2.89
Inverter	MV3-1	368156	4907976	2	0	0	89.1	89.1	1	4717.24	3.25	0	84.47	0	1.57	0	0	12.08	0	0	0	0	0	0	-9.07	-9.07
Inverters	G_Inv6	366788.5	4902972	2	0	0	87.7	87.7	1	4047.91	3.25	0	83.14	0	2.8	0	0	4.93	0	0	0	0	0	0	-3.21	-3.21
Inverters	G_Inv7	366694.6	4902824.7	2	0	0	87.7	87.7	1	4090.28	3.25	0	83.24	0	2.8	0	0	4.97	0	0	0	0	0	0	-3.35	-3.35
Inverter	MV3-5	368340	4907843	2	0	0	89.1	89.1	1	4825.86	3.25	0	84.67	0	1.6	0	0	12.23	0	0	0	0	0	0	-9.44	-9.44
Inverter	MV3-22	368656	4907142	2	0	0	89.1	89.1	1	4885.39	3.25	0	84.78	0	1.61	0	0	12.31	0	0	0	0	0	0	-9.64	-9.64
Inverters	G_Inv8	366844.5	4902838.5	2	0	0	87.7	87.7	1	4182.59	3.25	0	83.43	0	2.81	0	0	5.07	0	0	0	0	0	0	-3.65	-3.65
Inverters	G_Inv9	366750.9	4902691.8	2	0	0	87.7	87.7	1	4226.77	3.25	0	83.52	0	2.81	0	0	5.12	0	0	0	0	0	0	-3.79	-3.79
Inverter	MV3-4	368502	4907925	2	0	0	89.1	89.1	1	5007.26	3.25	0	84.99	0	1.64	0	0	12.47	0	0	0	0	0	0	-10.05	-10.05
Inverters	G_Inv10	366900.7	4902704.8	2	0	0	87.7	87.7	1	4318.21	3.25	0	83.71	0	2.82	0	0	5.22	0	0	0	0	0	0	-4.08	-4.08
Inverter	MV3-2	368671	4907928	2	0	0	89.1	89.1	1	5162.78	3.25	0	85.26	0	1.68	0	0	12.68	0	0	0	0	0	0	-10.56	-10.56
Westbrook Inverter Enclosur	W_INV2	369374	4906388	2	0	0	89.1	89.1	1	5456.39	3.25	0	85.74	0	1.75	0	0	13.07	0	0	0	0	0	0	-11.5	-11.5
Westbrook Inverter Enclosur	W_INV3	369508	4906164	2	0	0	89.1	89.1	1	5572.74	3.25	0	85.92	0	1.78	0	0	13.22	0	0	0	0	0	0	-11.86	-11.86
Fixed Reactor Bank 1	FRB1	369378	4908755	6	0	0	89.8	89.8	1	6160.83	5.25	0	86.79	0	-0.4	0	0	9.91	0	0	0	0	0	0	-6.53	-6.53
Westbrook Inverter Enclosur	W_INV4	369673	4906164	2	0	0	89.1	89.1	1	5737.49	3.25	0	86.17	0	1.82	0	0	13.43	0	0	0	0	0	0	-12.37	-12.37
Fixed Reactor Bank 2	FRB2	369464	4908755	6	0	0	89.8	89.8	1	6236.81	5.25	0	86.9	0	-0.38	0	0	9.99	0	0	0	0	0	0	-6.73	-6.73
Inverter	MV4-13	369051	4908605	2	0	0	89.1	89.1	1	5801.76	3.25	0	86.27	0	1.84	0	0	13.51	0	0	0	0	0	0	-12.56	-12.56
Westbrook Inverter Enclosur	W_INV5	369719	4906574	2	0	0	89.1	89.1	1	5819.96	3.25	0	86.3	0	1.84	0	0	13.53	0	0	0	0	0	0	-12.62	-12.62
Inverter	MV4-15	369176	4908481	2	0	0	89.1	89.1	1	5855.38	3.25	0	86.35	0	1.85	0	0	13.58	0	0	0	0	0	0	-12.72	-12.72
Westbrook Inverter Enclosur	W_INV7	369780	4906417	2	0	0	89.1	89.1	1	5863.29	3.25	0	86.36	0	1.85	0	0	13.59	0	0	0	0	0	0	-12.75	-12.75
Inverter	MV4-14	369176	4908507	2	0	0	89.1	89.1	1	5867.1	3.25	0	86.37	0	1.85	0	0	13.59	0	0	0	0	0	0	-12.76	-12.76
Inverter	MV4-12	369043	4908803	2	0	0	89.1	89.1	1	5891.37	3.25	0	86.4	0	1.86	0	0	13.62	0	0	0	0	0	0	-12.83	-12.83
Westbrook Inverter Enclosur	W_INV6	369875	4906578	2	0	0	89.1	89.1	1	5975.27	3.25	0	86.53	0	1.88	0	0	13.73	0	0	0	0	0	0	-13.08	-13.08
Inverter	MV5-6	369982	4908507	2	0	0	89.1	89.1	1	6595.94	3.25	0	87.39	0	2.03	0	0	14.5	0	0	0	0	0	0	-14.86	-14.86
Westbrook Inverter Enclosur	W_INV1	369409	4906578	2	0	0	86.1	86.1	1	5513.01	3.25	0	85.83	0	1.77	0	0	13.14	0	0	0	0	0	0	-14.68	-14.68
Inverter	MV6-4	370250	4906966	2	0	0	86.1	86.1	1	6403.64	3.25	0	87.13	0	1.98	0	0	14.27	0	0	0	0	0	0	-17.32	-17.32
Inverter Transformer	MV1-7 T	364919	4905782	2	0	0	69.4	69.4	1	977.51	3.25	0	70.8	0	1.67	0	0	3.78	0	0	0	0	0	0	-6.9	-6.9
Inverter Transformer	MV1-13 T	364725	4905241	2	0	0	69.4	69.4	1	991.61	3.25	0	70.93	0	1.68	0	0	3.8	0	0	0	0	0	0	-7.05	-7.05
Inverter Transformer	MV1-10 T	365010	4905564	2	0	0	69.4	69.4	1	1104.22	3.25	0	71.86	0	1.76	0	0	3.95	0	0	0	0	0	0	-8.22	-8.22
Inverter Transformer	MV1-14 T	365157	4905049	2	0	0	69.4	69.4	1	1454.71	3.25	0	74.26	0	1.95	0	0	4.38	0	0	0	0	0	0	-11.24	-11.24
Westbrook Inverter Transfor	W_INVTR1	369403	4906578	2	0	0	78.2	78.2	1	5507.06	3.25	0	85.82	0	-3.28	0	0	2.58	0	0	0	0	0	0	-6.88	-6.88
Inverter Transformer	MV2-1 T	365836	4906816	2	0	0	69.4	69.4	1	2123.43	3.25	0	77.54	0	2.22	0	0	5.09	0	0	0	0	0	0	-15.5	-15.5
Westbrook Inverter Transfor	W_INVTR2	369368	4906388	2	0	0	77.3	77.3	1	5450.42	3.25	0	85.73	0	-3.27	0	0	2.56	0	0	0	0	0	0	-7.69	-7.69
Westbrook Inverter Transfor	W_INVTR3	369514	4906164	2	0	0	77.3	77.3	1	5578.73	3.25	0	85.93	0	-3.29	0	0	2.61	0	0	0	0	0	0	-7.91	-7.91
Westbrook Inverter Transfor	W_INVTR4	369679	4906164	2	0	0	77.3	77.3	1	5743.48	3.25	0	86.18	0	-3.32	0	0	2.66	0	0	0	0	0	0	-8.18	-8.18
Westbrook Inverter Transfor	W_INVTR5	369725	4906574	2	0	0	77.3	77.3	1	5825.91	3.25	0	86.31	0	-3.34	0	0	2.69	0	0	0	0	0	0	-8.32	-8.32
Westbrook Inverter Transfor	W_INVTR7	369786	4906417	2	0	0	77.3	77.3	1	5869.26	3.25	0	86.37	0	-3.34	0	0	2.7	0	0	0	0	0	0	-8.39	-8.39
Westbrook Inverter Transfor	W_INVTR6	369881	4906578	2	0	0	77.3	77.3	1	5981.22	3.25	0	86.54	0	-3.36	0	0	2.74	0	0	0	0	0	0	-8.57	-8.57
Inverter Transformer	MV1-3 T	364435	4906039	2	0	0	56.1	56.1	1	525.41	3.25	0	65.41	0	-0.12	0	0	3.63	0	0	0	0	0	0	-12.87	-12.87
Inverter Transformer	MV1-6 T	364482	4905835	2	0	0	56.1	56.1	1	538.27	3.25	0	65.62	0	-0.11	0	0	3.67	0	0	0	0	0	0	-13.12	-13.12
Inverter Transformer	MV1-9 T	364555	4905646	2	0	0	56.1	56.1	1	644.8	3.25	0	67.19	0	-0.09	0	0	3.98	0	0	0	0	0	0	-15.02	-15.02
Inverter Transformer	MV1-5 T	364676	4905892	2	0	0	56.1	56.1	1	733.1	3.25	0	68.3	0	-0.07	0	0	4.22	0	0	0	0	0	0	-16.39	-16.39
Inverter Transformer	MV1-11 T	364649	4905414	2	0	0	56.1	56.1	1	829.99	3.25	0	69.38	0	-0.04	0	0	4.47	0	0	0	0	0	0	-17.75	-17.75
Inverter Transformer	MV1-1 T	364721	4906166	2	0	0	56.1	56.1	1	838.05	3.25	0	69.47	0	-0.04	0	0	4.49	0	0	0	0	0	0	-17.86	-17.86
Inverter Transformer	MV1-2 T	364759	4906063	2	0	0	56.1	56.1	1	841.87	3.25	0	69.5	0	-0.04	0	0	4.5	0	0	0	0	0	0	-17.91	-17.91
Inverter Transformer	MV1-8 T	364782	4905647	2	0	0	56.1	56.1	1	862.71	3.25	0	69.72	0	-0.03	0	0	4.55	0	0	0	0	0	0	-18.18	-18.18
Inverter Transformer	MV1-4 T	364821	4905918	2	0	0	56.1	56.1	1	879.48	3.25	0	69.88	0	-0.03	0	0	4.6	0	0	0	0	0	0	-18.39	-18.39
Inverter Transformer	MV1-12 T	365044	4905386	2	0	0	56.1	56.1	1	1194.64	3.25	0	72.54	0	0.08	0	0	5.34	0	0	0	0	0	0	-21.91	-21.91
Inverter Transformer	MV6-4 T	370244	4906966	2	0	0	69.4	69.4	1	6397.73	3.25	0	87.12	0	3.24	0	0	8.26	0	0	0	0	0	0	-29.27	-29.27
Inverter Transformer	MV6-1 T	370230	4907364	2	0	0	69.4	69.4	1	6465.29	3.25	0	87.21	0	3.25	0	0	8.3	0	0	0	0	0	0	-29.41	-29.41
Inverter Transformer	MV1-15 T	365309	4904994	2	0	0	56.1	56.1	1	1612.26	3.25	0	75.15	0	0.24	0	0	6.26	0	0	0	0	0	0	-25.59	-25.59
Inverter Transformer	MV2-4 T	365590	4906628	2	0	0	56.1	56.1	1	1819.75	3.25	0	76.2	0	0.33	0	0	6.68	0	0	0	0	0	0	-27.15	-27.15
Inverter Transformer	MV2-3 T	365814	4906641	2	0	0	56.1	56.1	1	2029.64	3.25	0	77.15	0	0.42	0	0	7.1	0	0	0	0	0	0	-28.61	-28.61
Inverter Transformer	MV2-2 T	365982	4906654	2	0	0	56.1	56.1	1	2190.13	3.25	0	77.81	0	0.48	0	0	7.41	0	0	0	0	0	0	-29.65	-29.65
Inverter Transformer	MV3-12 T	367674	4907594	2	0	0	56.1	56.1	1	4116.73	3.25	0	83.29	0	1.29	0	0	10.63	0	0	0	0	0	0	-39.15	-39.15
Inverter Transformer	MV3-18 T	367757	4907412	2	0	0	56.1	56.1	1	4119.78	3.25	0	83.3	0	1.29	0	0	10.63	0	0	0	0	0	0	-39.16	-39.16
Inverter Transformer	MV3-13 T	367958	4907577	2	0	0	56.1	56.1	1	4368.96	3.25	0	83.81	0	1.39	0	0	10.99	0	0	0	0	0	0	-40.13	-40.13
Inverter Transformer	MV3-7 T	367951	4907754	2	0	0	56.1	56.1	1	4435.5	3.25	0	83.94	0	1.41	0	0	11.08	0	0	0	0	0	0	-40.38	-40.38
Inverter Transformer	MV3-3 T	367944	4907927	2	0	0	56.1	56.1	1	4506.18	3.25	0	84.08	0	1.44	0	0	11.18	0	0	0	0	0	0	-40.64	-40.64
Inverter Transformer	MV3-17 T	368183	4907472	2	0	0	56.1	56.1	1	4538.01	3.25	0	84.14	0	1.45	0	0	11.23	0	0	0	0	0	0	-40.76	-40.76
Inverter Transformer	MV3-10 T	368162	4907669	2	0	0	56.1	56.1	1	4592.71	3.25	0	84.24	0	1.47	0	0	11.3	0	0	0	0	0	0	-40.96	-40.96
Inverter Transformer	MV3-19 T	368352	4907347	2	0	0	56.1	56.1	1	4654.62	3.25	0	84.36	0	1.5	0	0	11.39	0	0	0	0	0	0	-41.19	-41.19
Inverter Transformer	MV3-6 T	368156	4907834	2	0	0	56.1	56.1	1	4655.03	3.25	0	84.36	0	1.5	0	0	11.39	0	0	0	0	0	0	-41.19	-41.19
Inverter Transformer	MV3-15 T	368351	4907477	2	0	0	56.1	56.1	1	4697.05	3.25	0	84.44	0	1.51	0	0	11.45	0	0	0	0	0	0	-41.34	-41.34
Inverter Transformer	MV3-1 T	368150	4907976	2	0	0	56.1	56.1	1	4711.88	3.25	0	84.46	0	1.52	0	0	11.47	0	0	0	0	0	0	-41.39	-41.39
Inverter Transformer	MV3-21 T	368484	4907206	2	0	0	56.1	56.1	1	4737.61	3.25	0	84.51	0	1.53	0	0	11.5	0	0	0	0	0	0	-41.48	-41.48
Inverter Transformer	MV3-11 T	368340	4907662	2	0	0	56.1	56.1	1	4754.04	3.25	0	84.54	0	1.54	0	0	11.53	0	0	0	0	0	0	-41.54	-41.54

	Inverter Transformer	MV3-5 T	368335	4907843	2	0	0	56.1	56.1	1	4821.3	3.25	0	84.66	0	1.56	0	0	11.62	0	0	0	0	0	0	-41.78	-41.78
	Inverter Transformer	MV3-16 T	368509	4907475	2	0	0	56.1	56.1	1	4844.93	3.25	0	84.71	0	1.57	0	0	11.65	0	0	0	0	0	0	-41.86	-41.86
	Inverter Transformer	MV3-22 T	368661	4907142	2	0	0	56.1	56.1	1	4890.21	3.25	0	84.79	0	1.59	0	0	11.71	0	0	0	0	0	0	-42.02	-42.02
	Inverter Transformer	MV3-9 T	368517	4907703	2	0	0	56.1	56.1	1	4933.41	3.25	0	84.86	0	1.6	0	0	11.77	0	0	0	0	0	0	-42.17	-42.17
	Inverter Transformer	MV3-20 T	368683	4907317	2	0	0	56.1	56.1	1	4960.28	3.25	0	84.91	0	1.61	0	0	11.8	0	0	0	0	0	0	-42.26	-42.26
	Inverter Transformer	MV3-4 T	368507	4907925	2	0	0	56.1	56.1	1	5011.82	3.25	0	85	0	1.63	0	0	11.87	0	0	0	0	0	0	-42.44	-42.44
	Inverter Transformer	MV3-14 T	368678	4907498	2	0	0	56.1	56.1	1	5011.99	3.25	0	85	0	1.63	0	0	11.87	0	0	0	0	0	0	-42.44	-42.44
	Inverter Transformer	MV3-8 T	368685	4907712	2	0	0	56.1	56.1	1	5092.81	3.25	0	85.14	0	1.66	0	0	11.98	0	0	0	0	0	0	-42.72	-42.72
	Inverter Transformer	MV3-2 T	368677	4907928	2	0	0	56.1	56.1	1	5168.28	3.25	0	85.27	0	1.69	0	0	12.07	0	0	0	0	0	0	-42.97	-42.97
	Inverter Transformer	MV4-13 T	369057	4908605	2	0	0	56.1	56.1	1	5807.05	3.25	0	86.28	0	1.9	0	0	12.87	0	0	0	0	0	0	-45	-45
	Inverter Transformer	MV4-15 T	369170	4908481	2	0	0	56.1	56.1	1	5850.02	3.25	0	86.34	0	1.92	0	0	12.92	0	0	0	0	0	0	-45.13	-45.13
	Inverter Transformer	MV4-14 T	369182	4908507	2	0	0	56.1	56.1	1	5872.45	3.25	0	86.38	0	1.92	0	0	12.95	0	0	0	0	0	0	-45.19	-45.19
	Inverter Transformer	MV4-12 T	369049	4908803	2	0	0	56.1	56.1	1	5896.56	3.25	0	86.41	0	1.93	0	0	12.98	0	0	0	0	0	0	-45.27	-45.27
	Inverter Transformer	MV4-7 T	369040	4909001	2	0	0	56.1	56.1	1	5990.44	3.25	0	86.55	0	1.96	0	0	13.09	0	0	0	0	0	0	-45.54	-45.54
	Inverter Transformer	MV4-4 T	369033	4909199	2	0	0	56.1	56.1	1	6091	3.25	0	86.69	0	1.99	0	0	13.21	0	0	0	0	0	0	-45.84	-45.84
	Inverter Transformer	MV4-11 T	369269	4908855	2	0	0	56.1	56.1	1	6113.4	3.25	0	86.73	0	2	0	0	13.24	0	0	0	0	0	0	-45.9	-45.9
	Inverter Transformer	MV4-10 T	369307	4908858	2	0	0	56.1	56.1	1	6147.99	3.25	0	86.77	0	2.01	0	0	13.28	0	0	0	0	0	0	-46	-46
	Inverter Transformer	MV4-8 T	369262	4909001	2	0	0	56.1	56.1	1	6180.4	3.25	0	86.82	0	2.02	0	0	13.31	0	0	0	0	0	0	-46.1	-46.1
	Inverter Transformer	MV4-1 T	369017	4909397	2	0	0	56.1	56.1	1	6188.89	3.25	0	86.83	0	2.02	0	0	13.32	0	0	0	0	0	0	-46.12	-46.12
	Inverter Transformer	MV4-9 T	369284	4909001	2	0	0	56.1	56.1	1	6199.34	3.25	0	86.85	0	2.03	0	0	13.34	0	0	0	0	0	0	-46.15	-46.15
	Inverter Transformer	MV4-6 T	369249	4909192	2	0	0	56.1	56.1	1	6268.86	3.25	0	86.94	0	2.05	0	0	13.42	0	0	0	0	0	0	-46.35	-46.35
	Inverter Transformer	MV4-5 T	369283	4909199	2	0	0	56.1	56.1	1	6301.38	3.25	0	86.99	0	2.06	0	0	13.45	0	0	0	0	0	0	-46.44	-46.44
	Inverter Transformer	MV6-2 T	370091	4907339	2	0	0	56.1	56.1	1	6324.3	3.25	0	87.02	0	2.07	0	0	13.48	0	0	0	0	0	0	-46.51	-46.51
	Inverter Transformer	MV4-3 T	369234	4909397	2	0	0	56.1	56.1	1	6367.98	3.25	0	87.08	0	2.08	0	0	13.53	0	0	0	0	0	0	-46.63	-46.63
	Inverter Transformer	MV6-3 T	370202	4907140	2	0	0	56.1	56.1	1	6389.17	3.25	0	87.11	0	2.08	0	0	13.55	0	0	0	0	0	0	-46.69	-46.69
	Inverter Transformer	MV4-2 T	369267	4909397	2	0	0	56.1	56.1	1	6395.42	3.25	0	87.12	0	2.09	0	0	13.56	0	0	0	0	0	0	-46.71	-46.71
	Inverter Transformer	MV5-6 T	369987	4908507	2	0	0	56.1	56.1	1	6600.52	3.25	0	87.39	0	2.15	0	0	13.79	0	0	0	0	0	0	-47.27	-47.27
	Inverter Transformer	MV5-5 T	370021	4908690	2	0	0	56.1	56.1	1	6707.02	3.25	0	87.53	0	2.18	0	0	13.91	0	0	0	0	0	0	-47.56	-47.56
	Inverter Transformer	MV5-2 T	370011	4908853	2	0	0	56.1	56.1	1	6768.64	3.25	0	87.61	0	2.2	0	0	13.98	0	0	0	0	0	0	-47.73	-47.73
	Inverter Transformer	MV5-1 T	370015	4909142	2	0	0	56.1	56.1	1	6905.15	3.25	0	87.78	0	2.23	0	0	14.13	0	0	0	0	0	0	-48.09	-48.09
	Inverter Transformer	MV5-3 T	370237	4908851	2	0	0	56.1	56.1	1	6971.07	3.25	0	87.87	0	2.25	0	0	14.2	0	0	0	0	0	0	-48.26	-48.26
	Inverter Transformer	MV5-4 T	370330	4908707	2	0	0	56.1	56.1	1	6995.14	3.25	0	87.9	0	2.26	0	0	14.22	0	0	0	0	0	0	-48.32	-48.32
	Line Reactor	NGR	369421	4908787.5	5	0	0	45.4	45.4	1	6214.07	5.25	0	86.87	0	3.23	1.36	0.1	2.54	0	0	0	0	0	0	-48.65	-48.65
Limit. Valu	0	0																								
Level D/N:	32.4865	32.4865																								

Receiver: Existing Noise Receptor
ID: S-R90
X: 364140
Y: 4905859
Z: 4.5
Ground: 0

ISO	Description	ID	X	Y	Z	Ground	ReflOrd	LxT	LxN	L/A	Dist.	hm	Freq	Adiv	K0b	Agr	Abar	z	Aatm	Afol	Ahous	Cmet	CmetN	Dc	RL	LtotT	LtotN
	Inverter	MV1-6	364477	4905835	2	0	0	100.3	100.3	1	337.86	3.25	0	61.57	0	-0.65	0	0	6.9	0	0	0	0	0	0	32.48	32.48
	Inverter	MV1-9	364561	4905646	2	0	0	100.3	100.3	1	471.82	3.25	0	64.48	0	-0.57	0	0	8.3	0	0	0	0	0	0	28.11	28.11
	Inverter	MV1-5	364671	4905892	2	0	0	100.3	100.3	1	532.03	3.25	0	65.52	0	-0.53	0	0	8.76	0	0	0	0	0	0	26.56	26.56
	Inverter	MV1-2	364753	4906063	2	0	0	100.3	100.3	1	646.06	3.25	0	67.21	0	-0.45	0	0	9.46	0	0	0	0	0	0	24.09	24.09
	Inverter	MV1-1	364715	4906166	2	0	0	100.3	100.3	1	651.83	3.25	0	67.28	0	-0.44	0	0	9.49	0	0	0	0	0	0	23.98	23.98
	Inverter	MV1-4	364815	4905918	2	0	0	100.3	100.3	1	677.58	3.25	0	67.62	0	-0.43	0	0	9.63	0	0	0	0	0	0	23.49	23.49
	Inverter	MV1-11	364655	4905414	2	0	0	100.3	100.3	1	680.63	3.25	0	67.66	0	-0.42	0	0	9.64	0	0	0	0	0	0	23.44	23.44
	Inverter	MV1-8	364788	4905647	2	0	0	100.3	100.3	1	681.8	3.25	0	67.67	0	-0.42	0	0	9.65	0	0	0	0	0	0	23.41	23.41
	Inverter	MV1-12	365038	4905386	2	0	0	100.3	100.3	1	1014.96	3.25	0	71.13	0	-0.24	0	0	10.96	0	0	0	0	0	0	18.46	18.46
	Inverter	MV1-7	364925	4905782	2	0	0	97.3	97.3	1	788.77	3.25	0	68.94	0	-0.36	0	0	10.13	0	0	0	0	0	0	18.6	18.6
	Inverter	MV1-13	364731	4905241	2	0	0	97.3	97.3	1	855.11	3.25	0	69.64	0	-0.32	0	0	10.4	0	0	0	0	0	0	17.59	17.59
	Inverter	MV1-3	364440	4906039	2	0	0	89.1	89.1	1	349.87	3.25	0	61.88	0	0.41	0	0	4.46	0	0	0	0	0	0	22.31	22.31
	Inverter	MV1-10	365004	4905564	2	0	0	97.3	97.3	1	912.98	3.25	0	70.21	0	-0.29	0	0	10.61	0	0	0	0	0	0	16.78	16.78
	Inverter	MV1-15	365315	4904994	2	0	0	100.3	100.3	1	1459.06	3.25	0	74.28	0	-0.05	0	0	12.22	0	0	0	0	0	0	13.86	13.86
	Sol_Luce Substation	S_Substation	369426	4908792	3.5	0	0	112.1	112.1	1	6045.19	5.25	0	86.63	0	1.17	2.63	0.29	9.79	0	0	0	0	0	0	11.85	11.85
	Inverter	MV2-4	365586	4906624	2	0	0	100.3	100.3	1	1635.89	3.25	0	75.28	0	0.02	0	0	12.65	0	0	0	0	0	0	12.37	12.37
	Inverter	MV1-14	365163	4905049	2	0	0	97.3	97.3	1	1304.85	3.25	0	73.31	0	-0.11	0	0	11.82	0	0	0	0	0	0	12.29	12.29
	Inverter	MV2-3	365820	4906641	2	0	0	100.3	100.3	1	1853.09	3.25	0	76.36	0	0.09	0	0	13.15	0	0	0	0	0	0	10.72	10.72
	Inverter	MV2-1	365842	4906816	2	0	0	97.3	97.3	1	1952.6	3.25	0	76.81	0	0.12	0	0	13.36	0	0	0	0	0	0	7.02	7.02
	Inverter	MV3-12	367668	4907594	2	0	0	100.3	100.3	1	3931.54	3.25	0	82.89	0	0.52	0	0	16.94	0	0	0	0	0	0	-0.04	-0.04
	Inverter	MV3-18	367752	4907412	2	0	0	100.3	100.3	1	3931.71	3.25	0	82.89	0	0.52	0	0	16.94	0	0	0	0	0	0	-0.04	-0.04
	Inverter	MV3-13	367963	4907577	2	0	0	100.3	100.3	1	4191.28	3.25	0	83.45	0	0.55	0	0	17.35	0	0	0	0	0	0	-1.04	-1.04
	Inverter	MV3-7	367945	4907754	2	0	0	100.3	100.3	1	4250.77	3.25	0	83.57	0	0.56	0	0	17.44	0	0	0	0	0	0	-1.26	-1.26
	Inverter	MV3-3	367939	4907927	2	0	0	100.3	100.3	1	4325.39	3.25	0	83.72	0	0.57	0	0	17.56	0	0	0	0	0	0	-1.54	-1.54
	Inverter	MV3-17	368178	4907472	2	0	0	100.3	100.3	1	4348.24	3.25	0	83.77	0	0.57	0	0	17.6	0	0	0	0	0	0	-1.62	-1.62
	Inverter	MV3-10	368167	4907669	2	0	0	100.3	100.3	1	4415.07	3.25	0	83.9	0	0.58	0	0	17.7	0	0	0	0	0	0	-1.87	-1.87
	Inverter	MV3-19	368357	4907347	2	0	0	100.3	100.3	1	4471.83	3.25	0	84.01	0	0.59	0	0	17.79	0	0	0	0	0	0	-2.07	-2.07
	Inverter	MV3-6	368162	4907834	2	0	0	100.3	100.3	1	4480.75	3.25	0	84.03	0	0.59	0	0	17.8	0	0	0	0	0	0	-2.1	-2.1
	Inverter	MV3-15	368357	4907477	2	0	0	100.3	100.3	1	4516.75	3.25	0	84.1	0	0.59	0	0	17.86	0	0	0	0	0	0	-2.23	-2.23
	Inverter	MV3-21	368478	4907206	2	0	0	100.3	100.3	1	4542.32	3.25	0	84.15	0	0.6	0	0	17.89	0	0	0	0	0	0	-2.32	-2.32

Inverter	MV3-11	368346	4907662	2	0	0	100.3	100.3	1	4576.16	3.25	0	84.21	0	0.6	0	0	17.95	0	0	0	0	0	0	-2.44	-2.44
Inverter	MV3-16	368514	4907475	2	0	0	100.3	100.3	1	4662.98	3.25	0	84.37	0	0.61	0	0	18.08	0	0	0	0	0	0	-2.75	-2.75
Inverter	MV3-9	368512	4907703	2	0	0	100.3	100.3	1	4744.97	3.25	0	84.52	0	0.62	0	0	18.2	0	0	0	0	0	0	-3.03	-3.03
Inverter	MV3-20	368689	4907317	2	0	0	100.3	100.3	1	4776.94	3.25	0	84.58	0	0.62	0	0	18.25	0	0	0	0	0	0	-3.14	-3.14
Inverter	MV3-14	368684	4907498	2	0	0	100.3	100.3	1	4830.56	3.25	0	84.68	0	0.63	0	0	18.33	0	0	0	0	0	0	-3.32	-3.32
Inverter	MV3-8	368680	4907712	2	0	0	100.3	100.3	1	4903.59	3.25	0	84.81	0	0.63	0	0	18.44	0	0	0	0	0	0	-3.57	-3.57
Inverter	MV4-7	369035	4909001	2	0	0	100.3	100.3	1	5816.63	3.25	0	86.29	0	0.7	0	0	19.74	0	0	0	0	0	0	-6.42	-6.42
Inverter	MV4-4	369027	4909199	2	0	0	100.3	100.3	1	5919.32	3.25	0	86.45	0	0.7	0	0	19.88	0	0	0	0	0	0	-6.72	-6.72
Inverter	MV4-11	369264	4908855	2	0	0	100.3	100.3	1	5935.6	3.25	0	86.47	0	0.7	0	0	19.91	0	0	0	0	0	0	-6.77	-6.77
Inverter	MV4-10	369312	4908858	2	0	0	100.3	100.3	1	5978.59	3.25	0	86.53	0	0.7	0	0	19.96	0	0	0	0	0	0	-6.89	-6.89
Inverter	MV4-8	369256	4909001	2	0	0	100.3	100.3	1	6003.8	3.25	0	86.57	0	0.7	0	0	20	0	0	0	0	0	0	-6.96	-6.96
Inverter	MV4-1	369011	4909397	2	0	0	100.3	100.3	1	6020.31	3.25	0	86.59	0	0.71	0	0	20.02	0	0	0	0	0	0	-7.01	-7.01
Inverter	MV4-9	369289	4909001	2	0	0	100.3	100.3	1	6031.95	3.25	0	86.61	0	0.71	0	0	20.04	0	0	0	0	0	0	-7.04	-7.04
Inverter	MV4-6	369243	4909192	2	0	0	100.3	100.3	1	6095.04	3.25	0	86.7	0	0.71	0	0	20.12	0	0	0	0	0	0	-7.22	-7.22
Inverter	MV6-2	370085	4907339	2	0	0	100.3	100.3	1	6126.45	3.25	0	86.74	0	0.71	0	0	20.16	0	0	0	0	0	0	-7.3	-7.3
Inverter	MV4-5	369289	4909199	2	0	0	100.3	100.3	1	6137.41	3.25	0	86.76	0	0.71	0	0	20.18	0	0	0	0	0	0	-7.34	-7.34
Inverter	MV4-3	369229	4909397	2	0	0	100.3	100.3	1	6198.01	3.25	0	86.85	0	0.71	0	0	20.26	0	0	0	0	0	0	-7.5	-7.5
Inverter	MV6-3	370207	4907140	2	0	0	100.3	100.3	1	6200.76	3.25	0	86.85	0	0.71	0	0	20.26	0	0	0	0	0	0	-7.51	-7.51
Inverter	MV4-2	369272	4909397	2	0	0	100.3	100.3	1	6233.37	3.25	0	86.89	0	0.71	0	0	20.31	0	0	0	0	0	0	-7.6	-7.6
Inverter	MV5-5	370015	4908690	2	0	0	100.3	100.3	1	6521.52	3.25	0	87.29	0	0.71	0	0	20.69	0	0	0	0	0	0	-8.38	-8.38
Inverter	MV5-2	370006	4908853	2	0	0	100.3	100.3	1	6585.89	3.25	0	87.37	0	0.72	0	0	20.77	0	0	0	0	0	0	-8.55	-8.55
Inverter	MV5-1	370020	4909142	2	0	0	100.3	100.3	1	6734.43	3.25	0	87.57	0	0.71	0	0	20.96	0	0	0	0	0	0	-8.93	-8.93
Inverter	MV5-3	370231	4908851	2	0	0	100.3	100.3	1	6786.19	3.25	0	87.63	0	0.71	0	0	21.03	0	0	0	0	0	0	-9.06	-9.06
Inverter	MV5-4	370324	4908707	2	0	0	100.3	100.3	1	6808.3	3.25	0	87.66	0	0.71	0	0	21.06	0	0	0	0	0	0	-9.12	-9.12
Inverter	MV2-2	365977	4906654	2	0	0	89.1	89.1	1	2001.65	3.25	0	77.03	0	0.91	0	0	8.05	0	0	0	0	0	0	3.07	3.07
Inverter	MV6-1	370235	4907364	2	0	0	97.3	97.3	1	6278.06	3.25	0	86.96	0	0.71	0	0	20.37	0	0	0	0	0	0	-10.72	-10.72
DSTATCOM - 10 MVAR #2	DSAT2	369403	4908757	2.5	0	0	96.6	96.6	1	6008.13	3.5	0	86.57	0	3.77	0	0	3.84	0	0	0	0	0	0	2.44	2.44
DSTATCOM - 10 MVAR #1	DSAT1	369437	4908757	2.5	0	0	96.6	96.6	1	6037.93	3.5	0	86.62	0	3.78	0	0	3.86	0	0	0	0	0	0	2.38	2.38
Gardiner Substation	G_Sub	366586.3	4903349.9	2.5	0	0	90.8	90.8	1	3504.28	4.25	0	81.89	0	1.21	2.77	0.27	6.69	0	0	0	0	0	0	-1.79	-1.79
SubstationTransformer	W_ST	369711.17	4906112.3	2.5	0	0	92	92	1	5576.92	4.25	0	85.93	0	1.78	2.2	0.29	9.28	0	0	0	0	0	0	-7.21	-7.21
Inverters	G_Inv1	366526.4	4903225.8	2	0	0	87.7	87.7	1	3553.68	3.25	0	82.01	0	2.75	0	0	4.39	0	0	0	0	0	0	-1.49	-1.49
Inverters	G_Inv2	366676.9	4903239.1	2	0	0	87.7	87.7	1	3646.88	3.25	0	82.24	0	2.76	0	0	4.49	0	0	0	0	0	0	-1.83	-1.83
Inverters	G_Inv3	366583.7	4903091.4	2	0	0	87.7	87.7	1	3692.06	3.25	0	82.35	0	2.77	0	0	4.54	0	0	0	0	0	0	-1.99	-1.99
Inverters	G_Inv4	366732.8	4903105	2	0	0	87.7	87.7	1	3782.48	3.25	0	82.56	0	2.77	0	0	4.64	0	0	0	0	0	0	-2.31	-2.31
Inverters	G_Inv5	366638.5	4902958.1	2	0	0	87.7	87.7	1	3828.54	3.25	0	82.66	0	2.78	0	0	4.69	0	0	0	0	0	0	-2.47	-2.47
Inverter	MV3-1	368156	4907976	2	0	0	89.1	89.1	1	4539.82	3.25	0	84.14	0	1.53	0	0	11.84	0	0	0	0	0	0	-8.45	-8.45
Inverters	G_Inv6	366788.5	4902972	2	0	0	87.7	87.7	1	3917.82	3.25	0	82.86	0	2.79	0	0	4.78	0	0	0	0	0	0	-2.77	-2.77
Inverter	MV3-5	368340	4907843	2	0	0	89.1	89.1	1	4645.03	3.25	0	84.34	0	1.55	0	0	11.98	0	0	0	0	0	0	-8.82	-8.82
Inverters	G_Inv7	366694.6	4902824.7	2	0	0	87.7	87.7	1	3966.48	3.25	0	82.97	0	2.79	0	0	4.84	0	0	0	0	0	0	-2.93	-2.93
Inverter	MV3-22	368656	4907142	2	0	0	89.1	89.1	1	4694.72	3.25	0	84.43	0	1.56	0	0	12.05	0	0	0	0	0	0	-8.99	-8.99
Inverters	G_Inv8	366844.5	4902838.5	2	0	0	87.7	87.7	1	4054.35	3.25	0	83.16	0	2.8	0	0	4.93	0	0	0	0	0	0	-3.23	-3.23
Inverters	G_Inv9	366750.9	4902691.8	2	0	0	87.7	87.7	1	4104.63	3.25	0	83.27	0	2.8	0	0	4.99	0	0	0	0	0	0	-3.39	-3.39
Inverter	MV3-4	368502	4907925	2	0	0	89.1	89.1	1	4826.53	3.25	0	84.67	0	1.6	0	0	12.23	0	0	0	0	0	0	-9.44	-9.44
Inverters	G_Inv10	366900.7	4902704.8	2	0	0	87.7	87.7	1	4191.71	3.25	0	83.45	0	2.81	0	0	5.08	0	0	0	0	0	0	-3.68	-3.68
Inverter	MV3-2	368671	4907928	2	0	0	89.1	89.1	1	4981.04	3.25	0	84.95	0	1.64	0	0	12.44	0	0	0	0	0	0	-9.96	-9.96
Westbrook Inverter Enclosur	W_INV2	369374	4906388	2	0	0	89.1	89.1	1	5260.67	3.25	0	85.42	0	1.7	0	0	12.81	0	0	0	0	0	0	-10.88	-10.88
Westbrook Inverter Enclosur	W_INV3	369508	4906164	2	0	0	89.1	89.1	1	5376.66	3.25	0	85.61	0	1.73	0	0	12.96	0	0	0	0	0	0	-11.25	-11.25
Fixed Reactor Bank 1	FRB1	369378	4908755	6	0	0	89.8	89.8	1	5985.27	5.25	0	86.54	0	-0.42	0	0	9.73	0	0	0	0	0	0	-6.07	-6.07
Westbrook Inverter Enclosur	W_INV4	369673	4906164	2	0	0	89.1	89.1	1	5541.4	3.25	0	85.87	0	1.77	0	0	13.18	0	0	0	0	0	0	-11.76	-11.76
Fixed Reactor Bank 2	FRB2	369464	4908755	6	0	0	89.8	89.8	1	6060.68	5.25	0	86.65	0	-0.41	0	0	9.81	0	0	0	0	0	0	-6.27	-6.27
Westbrook Inverter Enclosur	W_INV5	369719	4906574	2	0	0	89.1	89.1	1	5624.63	3.25	0	86	0	1.79	0	0	13.28	0	0	0	0	0	0	-12.02	-12.02
Inverter	MV4-13	369051	4908605	2	0	0	89.1	89.1	1	5626.58	3.25	0	86	0	1.79	0	0	13.29	0	0	0	0	0	0	-12.03	-12.03
Westbrook Inverter Enclosur	W_INV7	369780	4906417	2	0	0	89.1	89.1	1	5667.54	3.25	0	86.07	0	1.8	0	0	13.34	0	0	0	0	0	0	-12.15	-12.15
Inverter	MV4-15	369176	4908481	2	0	0	89.1	89.1	1	5677.69	3.25	0	86.08	0	1.81	0	0	13.35	0	0	0	0	0	0	-12.18	-12.18
Inverter	MV4-14	369176	4908507	2	0	0	89.1	89.1	1	5689.75	3.25	0	86.1	0	1.81	0	0	13.37	0	0	0	0	0	0	-12.22	-12.22
Inverter	MV4-12	369043	4908803	2	0	0	89.1	89.1	1	5718.96	3.25	0	86.15	0	1.82	0	0	13.41	0	0	0	0	0	0	-12.31	-12.31
Westbrook Inverter Enclosur	W_INV6	369875	4906578	2	0	0	89.1	89.1	1	5779.9	3.25	0	86.24	0	1.83	0	0	13.48	0	0	0	0	0	0	-12.5	-12.5
Inverter	MV5-6	369982	4908507	2	0	0	89.1	89.1	1	6414.12	3.25	0	87.14	0	1.99	0	0	14.28	0	0	0	0	0	0	-14.35	-14.35
Westbrook Inverter Enclosur	W_INV1	369409	4906578	2	0	0	86.1	86.1	1	5317.83	3.25	0	85.51	0	1.72	0	0	12.88	0	0	0	0	0	0	-14.06	-14.06
Inverter Transformer	MV1-7 T	364919	4905782	2	0	0	69.4	69.4	1	782.8	3.25	0	68.87	0	1.47	0	0	3.49	0	0	0	0	0	0	-4.48	-4.48
Inverter Transformer	MV1-13 T	364725	4905241	2	0	0	69.4	69.4	1	850.97	3.25	0	69.6	0	1.54	0	0	3.59	0	0	0	0	0	0	-5.39	-5.39
Inverter	MV6-4	370250	4906966	2	0	0	86.1	86.1	1	6209.47	3.25	0	86.86	0	1.94	0	0	14.02	0	0	0	0	0	0	-16.76	-16.76
Inverter Transformer	MV1-10 T	365010	4905564	2	0	0	69.4	69.4	1	918.66	3.25	0	70.26	0	1.61	0	0	3.7	0	0	0	0	0	0	-6.22	-6.22
Inverter Transformer	MV1-14 T	365157	4905049	2	0	0	69.4	69.4	1	1300.15	3.25	0	73.28	0	1.88	0	0	4.2	0	0	0	0	0	0	-10.01	-10.01
Inverter Transformer	MV1-6 T	364482	4905835	2	0	0	56.1	56.1	1	342.85	3.25	0	61.7	0	-0.1	0	0	2.98	0	0	0	0	0	0	-8.52	-8.52
Inverter Transformer	MV1-3 T	364435	4906039	2	0	0	56.1	56.1	1	345.59	3.25	0	61.77	0	-0.1	0	0	2.99	0	0	0	0	0	0	-8.6	-8.6
Westbrook Inverter Transfor	W_INVTR1	369403	4906578	2	0	0	78.2	78.2	1	5311.89	3.25	0	85.5	0	-3.24	0	0	2.52	0	0	0	0	0	0	-6.54	-6.54
Inverter Transformer	MV2-1 T	365836	4906816	2	0	0	69.4	69.4	1	1947.38	3.25	0	76.79	0	2.15	0	0	4.91	0	0	0	0	0	0	-14.5	-14.5
Westbrook Inverter Transfor	W_INVTR2	369368	4906388	2	0	0	77.3	77.3	1	5254.7	3.25	0	85.41	0	-3.23	0	0	2.5	0	0	0	0	0	0	-7.34	-7.34
Westbrook Inverter Transfor	W_INVTR3	369514	4906164	2	0	0	77.3	77.3	1	5382.65	3.25	0	85.62	0	-3.25	0	0	2.54	0	0	0	0	0	0	-7.57	-7.57
Inverter Transformer	MV1-9 T	364555	4905646	2	0	0	56.1	56.1	1	466.48	3.25	0	64.38	0	-0.12	0	0	3.44	0	0	0	0	0	0	-11.64	-11.64
Westbrook Inverter Transfor	W_INVTR4	369679	4906164	2	0	0	77.3	77.3	1	5547.39	3.25	0	85.88	0	-3.28	0	0	2.6	0	0	0	0	0	0	-7.85	-7.85
Westbrook Inverter Transfor	W_INVTR5	369725	4906574	2	0	0	77.3	77.3	1	5630.58	3.25	0	86.01	0	-3.3	0	0	2.62	0	0	0	0	0	0	-7.99	-7.99
Westbrook Inverter Transfor	W_INVTR7	369786	4906417	2	0	0	77.3	77.3	1	5673.51	3.25	0	86.08	0	-3.31	0	0	2.64	0	0	0	0	0	0	-8.06	-8.06

	Westbrook Inverter Transfor	W_INVTR6	369881	4906578	2	0	0	77.3	77.3	1	5785.85	3.25	0	86.25	0	-3.33	0	0	2.67	0	0	0	0	0	0	-8.25	-8.25
	Inverter Transformer	MV1-5 T	364676	4905892	2	0	0	56.1	56.1	1	537.02	3.25	0	65.6	0	-0.11	0	0	3.67	0	0	0	0	0	0	-13.1	-13.1
	Inverter Transformer	MV1-2 T	364759	4906063	2	0	0	56.1	56.1	1	651.75	3.25	0	67.28	0	-0.09	0	0	4	0	0	0	0	0	0	-15.13	-15.13
	Inverter Transformer	MV1-1 T	364721	4906166	2	0	0	56.1	56.1	1	657.13	3.25	0	67.35	0	-0.09	0	0	4.02	0	0	0	0	0	0	-15.22	-15.22
	Inverter Transformer	MV1-11 T	364649	4905414	2	0	0	56.1	56.1	1	676.1	3.25	0	67.6	0	-0.09	0	0	4.07	0	0	0	0	0	0	-15.52	-15.52
	Inverter Transformer	MV1-8 T	364782	4905647	2	0	0	56.1	56.1	1	676.1	3.25	0	67.6	0	-0.09	0	0	4.07	0	0	0	0	0	0	-15.52	-15.52
	Inverter Transformer	MV1-4 T	364821	4905918	2	0	0	56.1	56.1	1	683.56	3.25	0	67.7	0	-0.08	0	0	4.09	0	0	0	0	0	0	-15.64	-15.64
	Inverter Transformer	MV1-12 T	365044	4905386	2	0	0	56.1	56.1	1	1020.27	3.25	0	71.17	0	0.02	0	0	4.94	0	0	0	0	0	0	-20.07	-20.07
	Inverter Transformer	MV6-4 T	370244	4906966	2	0	0	69.4	69.4	1	6203.57	3.25	0	86.85	0	3.22	0	0	8.14	0	0	0	0	0	0	-28.86	-28.86
	Inverter Transformer	MV6-1 T	370230	4907364	2	0	0	69.4	69.4	1	6273.21	3.25	0	86.95	0	3.23	0	0	8.18	0	0	0	0	0	0	-29.01	-29.01
	Inverter Transformer	MV1-15 T	365309	4904994	2	0	0	56.1	56.1	1	1454.23	3.25	0	74.25	0	0.18	0	0	5.92	0	0	0	0	0	0	-24.29	-24.29
	Inverter Transformer	MV2-4 T	365590	4906628	2	0	0	56.1	56.1	1	1641.3	3.25	0	75.3	0	0.26	0	0	6.32	0	0	0	0	0	0	-25.82	-25.82
	Inverter Transformer	MV2-3 T	365814	4906641	2	0	0	56.1	56.1	1	1847.65	3.25	0	76.33	0	0.34	0	0	6.74	0	0	0	0	0	0	-27.35	-27.35
	Inverter Transformer	MV2-2 T	365982	4906654	2	0	0	56.1	56.1	1	2006.24	3.25	0	77.05	0	0.41	0	0	7.06	0	0	0	0	0	0	-28.45	-28.45
	Inverter Transformer	MV3-18 T	367757	4907412	2	0	0	56.1	56.1	1	3936.31	3.25	0	82.9	0	1.22	0	0	10.36	0	0	0	0	0	0	-38.42	-38.42
	Inverter Transformer	MV3-12 T	367674	4907594	2	0	0	56.1	56.1	1	3936.93	3.25	0	82.9	0	1.22	0	0	10.36	0	0	0	0	0	0	-38.42	-38.42
	Inverter Transformer	MV3-13 T	367958	4907577	2	0	0	56.1	56.1	1	4186.72	3.25	0	83.44	0	1.32	0	0	10.73	0	0	0	0	0	0	-39.43	-39.43
	Inverter Transformer	MV3-7 T	367951	4907754	2	0	0	56.1	56.1	1	4256.14	3.25	0	83.58	0	1.35	0	0	10.83	0	0	0	0	0	0	-39.7	-39.7
	Inverter Transformer	MV3-3 T	367944	4907927	2	0	0	56.1	56.1	1	4329.79	3.25	0	83.73	0	1.37	0	0	10.94	0	0	0	0	0	0	-39.98	-39.98
	Inverter Transformer	MV3-17 T	368183	4907472	2	0	0	56.1	56.1	1	4352.89	3.25	0	83.78	0	1.38	0	0	10.97	0	0	0	0	0	0	-40.07	-40.07
	Inverter Transformer	MV3-10 T	368162	4907669	2	0	0	56.1	56.1	1	4410.51	3.25	0	83.89	0	1.41	0	0	11.05	0	0	0	0	0	0	-40.29	-40.29
	Inverter Transformer	MV3-19 T	368352	4907347	2	0	0	56.1	56.1	1	4467.11	3.25	0	84	0	1.43	0	0	11.13	0	0	0	0	0	0	-40.5	-40.5
	Inverter Transformer	MV3-6 T	368156	4907834	2	0	0	56.1	56.1	1	4475.36	3.25	0	84.02	0	1.43	0	0	11.14	0	0	0	0	0	0	-40.53	-40.53
	Inverter Transformer	MV3-15 T	368351	4907477	2	0	0	56.1	56.1	1	4511.15	3.25	0	84.09	0	1.44	0	0	11.19	0	0	0	0	0	0	-40.66	-40.66
	Inverter Transformer	MV3-1 T	368150	4907976	2	0	0	56.1	56.1	1	4534.51	3.25	0	84.13	0	1.45	0	0	11.22	0	0	0	0	0	0	-40.75	-40.75
	Inverter Transformer	MV3-21 T	368484	4907206	2	0	0	56.1	56.1	1	4548.05	3.25	0	84.16	0	1.46	0	0	11.24	0	0	0	0	0	0	-40.8	-40.8
	Inverter Transformer	MV3-11 T	368340	4907662	2	0	0	56.1	56.1	1	4570.65	3.25	0	84.2	0	1.47	0	0	11.27	0	0	0	0	0	0	-40.88	-40.88
	Inverter Transformer	MV3-5 T	368335	4907843	2	0	0	56.1	56.1	1	4640.51	3.25	0	84.33	0	1.49	0	0	11.37	0	0	0	0	0	0	-41.14	-41.14
	Inverter Transformer	MV3-16 T	368509	4907475	2	0	0	56.1	56.1	1	4658.29	3.25	0	84.36	0	1.5	0	0	11.39	0	0	0	0	0	0	-41.2	-41.2
	Inverter Transformer	MV3-22 T	368661	4907142	2	0	0	56.1	56.1	1	4699.53	3.25	0	84.44	0	1.51	0	0	11.45	0	0	0	0	0	0	-41.35	-41.35
	Inverter Transformer	MV3-9 T	368517	4907703	2	0	0	56.1	56.1	1	4749.58	3.25	0	84.53	0	1.53	0	0	11.52	0	0	0	0	0	0	-41.53	-41.53
	Inverter Transformer	MV3-20 T	368683	4907317	2	0	0	56.1	56.1	1	4771.23	3.25	0	84.57	0	1.54	0	0	11.55	0	0	0	0	0	0	-41.6	-41.6
	Inverter Transformer	MV3-14 T	368678	4907498	2	0	0	56.1	56.1	1	4824.91	3.25	0	84.67	0	1.56	0	0	11.62	0	0	0	0	0	0	-41.79	-41.79
	Inverter Transformer	MV3-4 T	368507	4907925	2	0	0	56.1	56.1	1	4831.05	3.25	0	84.68	0	1.56	0	0	11.63	0	0	0	0	0	0	-41.82	-41.82
	Inverter Transformer	MV3-8 T	368685	4907712	2	0	0	56.1	56.1	1	4908.22	3.25	0	84.82	0	1.59	0	0	11.73	0	0	0	0	0	0	-42.08	-42.08
	Inverter Transformer	MV3-2 T	368677	4907928	2	0	0	56.1	56.1	1	4986.5	3.25	0	84.96	0	1.62	0	0	11.84	0	0	0	0	0	0	-42.35	-42.35
	Inverter Transformer	MV4-13 T	369057	4908605	2	0	0	56.1	56.1	1	5631.82	3.25	0	86.01	0	1.84	0	0	12.66	0	0	0	0	0	0	-44.46	-44.46
	Inverter Transformer	MV4-15 T	369170	4908481	2	0	0	56.1	56.1	1	5672.37	3.25	0	86.08	0	1.86	0	0	12.71	0	0	0	0	0	0	-44.58	-44.58
	Inverter Transformer	MV4-14 T	369182	4908507	2	0	0	56.1	56.1	1	5695.06	3.25	0	86.11	0	1.87	0	0	12.74	0	0	0	0	0	0	-44.65	-44.65
	Inverter Transformer	MV4-12 T	369049	4908803	2	0	0	56.1	56.1	1	5724.11	3.25	0	86.15	0	1.88	0	0	12.77	0	0	0	0	0	0	-44.74	-44.74
	Inverter Transformer	MV4-7 T	369040	4909001	2	0	0	56.1	56.1	1	5820.84	3.25	0	86.3	0	1.91	0	0	12.89	0	0	0	0	0	0	-45.04	-45.04
	Inverter Transformer	MV4-4 T	369033	4909199	2	0	0	56.1	56.1	1	5924.28	3.25	0	86.45	0	1.94	0	0	13.01	0	0	0	0	0	0	-45.35	-45.35
	Inverter Transformer	MV4-11 T	369269	4908855	2	0	0	56.1	56.1	1	5939.92	3.25	0	86.48	0	1.95	0	0	13.03	0	0	0	0	0	0	-45.39	-45.39
	Inverter Transformer	MV4-10 T	369307	4908858	2	0	0	56.1	56.1	1	5974.27	3.25	0	86.53	0	1.96	0	0	13.07	0	0	0	0	0	0	-45.5	-45.5
	Inverter Transformer	MV4-8 T	369262	4909001	2	0	0	56.1	56.1	1	6008.91	3.25	0	86.58	0	1.97	0	0	13.11	0	0	0	0	0	0	-45.6	-45.6
	Inverter Transformer	MV4-1 T	369017	4909397	2	0	0	56.1	56.1	1	6025.16	3.25	0	86.6	0	1.97	0	0	13.13	0	0	0	0	0	0	-45.65	-45.65
	Inverter Transformer	MV4-9 T	369284	4909001	2	0	0	56.1	56.1	1	6027.68	3.25	0	86.6	0	1.97	0	0	13.14	0	0	0	0	0	0	-45.65	-45.65
	Inverter Transformer	MV4-6 T	369249	4909192	2	0	0	56.1	56.1	1	6100.06	3.25	0	86.71	0	2	0	0	13.22	0	0	0	0	0	0	-45.87	-45.87
	Inverter Transformer	MV6-2 T	370091	4907339	2	0	0	56.1	56.1	1	6132.28	3.25	0	86.75	0	2.01	0	0	13.26	0	0	0	0	0	0	-45.96	-45.96
	Inverter Transformer	MV4-5 T	369283	4909199	2	0	0	56.1	56.1	1	6132.38	3.25	0	86.75	0	2.01	0	0	13.26	0	0	0	0	0	0	-45.96	-45.96
	Inverter Transformer	MV6-3 T	370202	4907140	2	0	0	56.1	56.1	1	6195.87	3.25	0	86.84	0	2.03	0	0	13.33	0	0	0	0	0	0	-46.14	-46.14
	Inverter Transformer	MV4-3 T	369234	4909397	2	0	0	56.1	56.1	1	6202.12	3.25	0	86.85	0	2.03	0	0	13.34	0	0	0	0	0	0	-46.16	-46.16
	Inverter Transformer	MV4-2 T	369267	4909397	2	0	0	56.1	56.1	1	6229.25	3.25	0	86.89	0	2.04	0	0	13.37	0	0	0	0	0	0	-46.24	-46.24
	Inverter Transformer	MV5-6 T	369987	4908507	2	0	0	56.1	56.1	1	6418.67	3.25	0	87.15	0	2.09	0	0	13.59	0	0	0	0	0	0	-46.77	-46.77
	Inverter Transformer	MV5-5 T	370021	4908690	2	0	0	56.1	56.1	1	6526.92	3.25	0	87.29	0	2.13	0	0	13.71	0	0	0	0	0	0	-47.07	-47.07
	Inverter Transformer	MV5-2 T	370011	4908853	2	0	0	56.1	56.1	1	6590.35	3.25	0	87.38	0	2.14	0	0	13.78	0	0	0	0	0	0	-47.25	-47.25
	Inverter Transformer	MV5-1 T	370015	4909142	2	0	0	56.1	56.1	1	6730.06	3.25	0	87.56	0	2.18	0	0	13.94	0	0	0	0	0	0	-47.62	-47.62
	Inverter Transformer	MV5-3 T	370237	4908851	2	0	0	56.1	56.1	1	6791.57	3.25	0	87.64	0	2.2	0	0	14	0	0	0	0	0	0	-47.79	-47.79
	Inverter Transformer	MV5-4 T	370330	4908707	2	0	0	56.1	56.1	1	6813.75	3.25	0	87.67	0	2.21	0	0	14.03	0	0	0	0	0	0	-47.85	-47.85
	Line Reactor	NGR	369421	4908787.5	5	0	0	45.4	45.4	1	6038.63	5.25	0	86.62	0	3.24	1.36	0.1	2.47	0	0	0	0	0	0	-48.33	-48.33
Limit. Valu	0	0																								
Level D/N:	36.6077	36.6077																								

Receiver: Existing Noise Receptor
ID: S-R91
X: 364039
Y: 4905781
Z: 4.5
Ground: 0

ISO	Description	ID	X	Y	Z	Ground	ReflOrd	LxT	LxN	L/A	Dist.	hm	Freq	Adiv	K0b	Agr	Abar	z	Aatm	Afol	Ahous	Cmet	CmetN	Dc	RL	LtotT	LtotN
	Inverter	MV1-6	364477	4905835	2	0	0	100.3	100.3	1	441.32	3.25	0	63.9	0	-0.59	0	0	8.03	0	0	0	0	0	0	28.98	28.98
	Inverter	MV1-9	364561	4905646	2	0	0	100.3	100.3	1	539.18	3.25	0	65.63	0	-0.52	0	0	8.81	0	0	0	0	0	0	26.39	26.39
	Inverter	MV1-5	364671	4905892	2	0	0	100.3	100.3	1	641.68	3.25	0	67.15	0	-0.45	0	0	9.44	0	0	0	0	0	0	24.18	24.18

Inverter	MV1-11	364655	4905414	2	0	0	100.3	100.3	1	717.04	3.25	0	68.11	0	-0.4	0	0	9.82	0	0	0	0	0	0	22.78	22.78
Inverter	MV1-8	364788	4905647	2	0	0	100.3	100.3	1	760.9	3.25	0	68.63	0	-0.37	0	0	10.02	0	0	0	0	0	0	22.04	22.04
Inverter	MV1-2	364753	4906063	2	0	0	100.3	100.3	1	767.68	3.25	0	68.7	0	-0.37	0	0	10.04	0	0	0	0	0	0	21.93	21.93
Inverter	MV1-1	364715	4906166	2	0	0	100.3	100.3	1	777.95	3.25	0	68.82	0	-0.36	0	0	10.09	0	0	0	0	0	0	21.77	21.77
Inverter	MV1-4	364815	4905918	2	0	0	100.3	100.3	1	788	3.25	0	68.93	0	-0.36	0	0	10.13	0	0	0	0	0	0	21.61	21.61
Inverter	MV1-12	365038	4905386	2	0	0	100.3	100.3	1	1074.26	3.25	0	71.62	0	-0.21	0	0	11.15	0	0	0	0	0	0	17.75	17.75
Inverter	MV1-13	364731	4905241	2	0	0	97.3	97.3	1	877.76	3.25	0	69.87	0	-0.31	0	0	10.48	0	0	0	0	0	0	17.27	17.27
Inverter	MV1-7	364925	4905782	2	0	0	97.3	97.3	1	886	3.25	0	69.95	0	-0.3	0	0	10.51	0	0	0	0	0	0	17.15	17.15
Inverter	MV1-10	365004	4905564	2	0	0	97.3	97.3	1	989.1	3.25	0	70.9	0	-0.25	0	0	10.87	0	0	0	0	0	0	15.78	15.78
Inverter	MV1-15	365315	4904994	2	0	0	100.3	100.3	1	1499.18	3.25	0	74.52	0	-0.03	0	0	12.32	0	0	0	0	0	0	13.51	13.51
Sol_Luce Substation	S_Substation	369426	4908792	3.5	0	0	112.1	112.1	1	6171.38	5.25	0	86.81	0	1.2	2.61	0.29	9.92	0	0	0	0	0	0	11.54	11.54
Inverter	MV1-3	364440	4906039	2	0	0	89.1	89.1	1	476.83	3.25	0	64.57	0	0.51	0	0	5.06	0	0	0	0	0	0	18.92	18.92
Inverter	MV2-4	365586	4906624	2	0	0	100.3	100.3	1	1761.78	3.25	0	75.92	0	0.06	0	0	12.94	0	0	0	0	0	0	11.39	11.39
Inverter	MV1-14	365163	4905049	2	0	0	97.3	97.3	1	1341.34	3.25	0	73.55	0	-0.09	0	0	11.92	0	0	0	0	0	0	11.94	11.94
Inverter	MV2-3	365820	4906641	2	0	0	100.3	100.3	1	1977.77	3.25	0	76.92	0	0.12	0	0	13.41	0	0	0	0	0	0	9.85	9.85
Inverter	MV2-1	365842	4906816	2	0	0	97.3	97.3	1	2078.95	3.25	0	77.36	0	0.15	0	0	13.63	0	0	0	0	0	0	6.18	6.18
Inverter	MV3-18	367752	4907412	2	0	0	100.3	100.3	1	4055.43	3.25	0	83.16	0	0.53	0	0	17.14	0	0	0	0	0	0	-0.52	-0.52
Inverter	MV3-12	367668	4907594	2	0	0	100.3	100.3	1	4056.68	3.25	0	83.16	0	0.53	0	0	17.14	0	0	0	0	0	0	-0.53	-0.53
Inverter	MV3-13	367963	4907577	2	0	0	100.3	100.3	1	4315.48	3.25	0	83.7	0	0.57	0	0	17.55	0	0	0	0	0	0	-1.5	-1.5
Inverter	MV3-7	367945	4907754	2	0	0	100.3	100.3	1	4376.02	3.25	0	83.82	0	0.58	0	0	17.64	0	0	0	0	0	0	-1.73	-1.73
Inverter	MV3-3	367939	4907927	2	0	0	100.3	100.3	1	4451.44	3.25	0	83.97	0	0.59	0	0	17.76	0	0	0	0	0	0	-2	-2
Inverter	MV3-17	368178	4907472	2	0	0	100.3	100.3	1	4471.11	3.25	0	84.01	0	0.59	0	0	17.79	0	0	0	0	0	0	-2.07	-2.07
Inverter	MV3-10	368167	4907669	2	0	0	100.3	100.3	1	4539.27	3.25	0	84.14	0	0.6	0	0	17.89	0	0	0	0	0	0	-2.31	-2.31
Inverter	MV3-19	368357	4907347	2	0	0	100.3	100.3	1	4593.2	3.25	0	84.24	0	0.6	0	0	17.97	0	0	0	0	0	0	-2.5	-2.5
Inverter	MV3-6	368162	4907834	2	0	0	100.3	100.3	1	4605.86	3.25	0	84.27	0	0.6	0	0	17.99	0	0	0	0	0	0	-2.55	-2.55
Inverter	MV3-15	368357	4907477	2	0	0	100.3	100.3	1	4639.13	3.25	0	84.33	0	0.61	0	0	18.04	0	0	0	0	0	0	-2.67	-2.67
Inverter	MV3-21	368478	4907206	2	0	0	100.3	100.3	1	4662.12	3.25	0	84.37	0	0.61	0	0	18.08	0	0	0	0	0	0	-2.75	-2.75
Inverter	MV3-11	368346	4907662	2	0	0	100.3	100.3	1	4699.83	3.25	0	84.44	0	0.61	0	0	18.13	0	0	0	0	0	0	-2.88	-2.88
Inverter	MV3-16	368514	4907475	2	0	0	100.3	100.3	1	4784.9	3.25	0	84.6	0	0.62	0	0	18.26	0	0	0	0	0	0	-3.17	-3.17
Inverter	MV3-9	368512	4907703	2	0	0	100.3	100.3	1	4868.45	3.25	0	84.75	0	0.63	0	0	18.39	0	0	0	0	0	0	-3.45	-3.45
Inverter	MV3-20	368689	4907317	2	0	0	100.3	100.3	1	4897.12	3.25	0	84.8	0	0.63	0	0	18.43	0	0	0	0	0	0	-3.55	-3.55
Inverter	MV3-14	368684	4907498	2	0	0	100.3	100.3	1	4952.18	3.25	0	84.9	0	0.64	0	0	18.51	0	0	0	0	0	0	-3.73	-3.73
Inverter	MV3-8	368680	4907712	2	0	0	100.3	100.3	1	5026.69	3.25	0	85.03	0	0.64	0	0	18.62	0	0	0	0	0	0	-3.98	-3.98
Inverter	MV4-7	369035	4909001	2	0	0	100.3	100.3	1	5943.77	3.25	0	86.48	0	0.7	0	0	19.92	0	0	0	0	0	0	-6.79	-6.79
Inverter	MV4-4	369027	4909199	2	0	0	100.3	100.3	1	6046.72	3.25	0	86.63	0	0.71	0	0	20.06	0	0	0	0	0	0	-7.08	-7.08
Inverter	MV4-11	369264	4908855	2	0	0	100.3	100.3	1	6062.19	3.25	0	86.65	0	0.71	0	0	20.08	0	0	0	0	0	0	-7.12	-7.12
Inverter	MV4-10	369312	4908858	2	0	0	100.3	100.3	1	6105.12	3.25	0	86.71	0	0.71	0	0	20.14	0	0	0	0	0	0	-7.25	-7.25
Inverter	MV4-8	369256	4909001	2	0	0	100.3	100.3	1	6130.7	3.25	0	86.75	0	0.71	0	0	20.17	0	0	0	0	0	0	-7.32	-7.32
Inverter	MV4-1	369011	4909397	2	0	0	100.3	100.3	1	6147.87	3.25	0	86.77	0	0.71	0	0	20.19	0	0	0	0	0	0	-7.36	-7.36
Inverter	MV4-9	369289	4909001	2	0	0	100.3	100.3	1	6158.81	3.25	0	86.79	0	0.71	0	0	20.21	0	0	0	0	0	0	-7.39	-7.39
Inverter	MV4-6	369243	4909192	2	0	0	100.3	100.3	1	6222.26	3.25	0	86.88	0	0.71	0	0	20.29	0	0	0	0	0	0	-7.57	-7.57
Inverter	MV6-2	370085	4907339	2	0	0	100.3	100.3	1	6243.52	3.25	0	86.91	0	0.71	0	0	20.32	0	0	0	0	0	0	-7.63	-7.63
Inverter	MV4-5	369289	4909199	2	0	0	100.3	100.3	1	6264.6	3.25	0	86.94	0	0.71	0	0	20.35	0	0	0	0	0	0	-7.69	-7.69
Inverter	MV6-3	370207	4907140	2	0	0	100.3	100.3	1	6315.94	3.25	0	87.01	0	0.71	0	0	20.42	0	0	0	0	0	0	-7.83	-7.83
Inverter	MV4-3	369229	4909397	2	0	0	100.3	100.3	1	6325.47	3.25	0	87.02	0	0.71	0	0	20.43	0	0	0	0	0	0	-7.85	-7.85
Inverter	MV4-2	369272	4909397	2	0	0	100.3	100.3	1	6360.8	3.25	0	87.07	0	0.71	0	0	20.48	0	0	0	0	0	0	-7.95	-7.95
Inverter	MV5-5	370015	4908690	2	0	0	100.3	100.3	1	6646.42	3.25	0	87.45	0	0.71	0	0	20.85	0	0	0	0	0	0	-8.7	-8.7
Inverter	MV5-2	370006	4908853	2	0	0	100.3	100.3	1	6711.35	3.25	0	87.54	0	0.71	0	0	20.93	0	0	0	0	0	0	-8.87	-8.87
Inverter	MV5-1	370020	4909142	2	0	0	100.3	100.3	1	6860.66	3.25	0	87.73	0	0.71	0	0	21.12	0	0	0	0	0	0	-9.25	-9.25
Inverter	MV5-3	370231	4908851	2	0	0	100.3	100.3	1	6911.28	3.25	0	87.79	0	0.71	0	0	21.19	0	0	0	0	0	0	-9.38	-9.38
Inverter	MV5-4	370324	4908707	2	0	0	100.3	100.3	1	6932.73	3.25	0	87.82	0	0.71	0	0	21.21	0	0	0	0	0	0	-9.43	-9.43
Inverter	MV2-2	365977	4906654	2	0	0	89.1	89.1	1	2125.55	3.25	0	77.55	0	0.94	0	0	8.25	0	0	0	0	0	0	2.32	2.32
Inverter	MV6-1	370235	4907364	2	0	0	97.3	97.3	1	6395.02	3.25	0	87.12	0	0.71	0	0	20.52	0	0	0	0	0	0	-11.04	-11.04
DSTATCOM - 10 MVAR #2	DSAT2	369403	4908757	2.5	0	0	96.6	96.6	1	6134.25	3.5	0	86.76	0	3.78	0	0	3.9	0	0	0	0	0	0	2.19	2.19
DSTATCOM - 10 MVAR #1	DSAT1	369437	4908757	2.5	0	0	96.6	96.6	1	6164.01	3.5	0	86.8	0	3.79	0	0	3.92	0	0	0	0	0	0	2.13	2.13
Gardiner Substation	G_Sub	366586.3	4903349.9	2.5	0	0	90.8	90.8	1	3521.22	4.25	0	81.93	0	1.22	2.77	0.28	6.71	0	0	0	0	0	0	-1.86	-1.86
SubstationTransformer	W_ST	369711.17	4906112.3	2.5	0	0	92	92	1	5681.84	4.25	0	86.09	0	1.8	2.17	0.29	9.4	0	0	0	0	0	0	-7.49	-7.49
Inverters	G_Inv1	366526.4	4903225.8	2	0	0	87.7	87.7	1	3565.98	3.25	0	82.04	0	2.75	0	0	4.4	0	0	0	0	0	0	-1.54	-1.54
Inverters	G_Inv2	366676.9	4903239.1	2	0	0	87.7	87.7	1	3663.3	3.25	0	82.28	0	2.76	0	0	4.51	0	0	0	0	0	0	-1.89	-1.89
Inverters	G_Inv3	366583.7	4903091.4	2	0	0	87.7	87.7	1	3702.63	3.25	0	82.37	0	2.77	0	0	4.55	0	0	0	0	0	0	-2.03	-2.03
Inverters	G_Inv4	366732.8	4903105	2	0	0	87.7	87.7	1	3797.04	3.25	0	82.59	0	2.77	0	0	4.65	0	0	0	0	0	0	-2.36	-2.36
Inverters	G_Inv5	366638.5	4902958.1	2	0	0	87.7	87.7	1	3837.47	3.25	0	82.68	0	2.78	0	0	4.7	0	0	0	0	0	0	-2.5	-2.5
Inverters	G_Inv6	366788.5	4902972	2	0	0	87.7	87.7	1	3930.68	3.25	0	82.89	0	2.79	0	0	4.8	0	0	0	0	0	0	-2.81	-2.81
Inverter	MV3-1	368156	4907976	2	0	0	89.1	89.1	1	4665.59	3.25	0	84.38	0	1.56	0	0	12.01	0	0	0	0	0	0	-8.89	-8.89
Inverters	G_Inv7	366694.6	4902824.7	2	0	0	87.7	87.7	1	3973.91	3.25	0	82.98	0	2.79	0	0	4.85	0	0	0	0	0	0	-2.96	-2.96
Inverter	MV3-5	368340	4907843	2	0	0	89.1	89.1	1	4769.74	3.25	0	84.57	0	1.58	0	0	12.15	0	0	0	0	0	0	-9.25	-9.25
Inverters	G_Inv8	366844.5	4902838.5	2	0	0	87.7	87.7	1	4065.6	3.25	0	83.18	0	2.8	0	0	4.94	0	0	0	0	0	0	-3.26	-3.26
Inverter	MV3-22	368656	4907142	2	0	0	89.1	89.1	1	4813.42	3.25	0	84.65	0	1.59	0	0	12.21	0	0	0	0	0	0	-9.4	-9.4
Inverters	G_Inv9	366750.9	4902691.8	2	0	0	87.7	87.7	1	4110.66	3.25	0	83.28	0	2.8	0	0	4.99	0	0	0	0	0	0	-3.41	-3.41
Inverters	G_Inv10	366900.7	4902704.8	2	0	0	87.7	87.7	1	4201.47	3.25	0	83.47	0	2.81	0	0	5.09	0	0	0	0	0	0	-3.71	-3.71
Inverter	MV3-4	368502	4907925	2	0	0	89.1	89.1	1	4951.27	3.25	0	84.89	0	1.63	0	0	12.4	0	0	0	0	0	0	-9.86	-9.86
Inverter	MV3-2	368671	4907928	2	0	0	89.1	89.1	1	5105.39	3.25	0	85.16	0	1.67	0	0	12.6	0	0	0	0	0	0	-10.37	-10.37
Westbrook Inverter Enclosur	W_INV2	369374	4906388	2	0	0	89.1	89.1	1	5369.42	3.25	0	85.6	0	1.73	0	0	12.95	0	0	0	0	0	0	-11.22	-11.22
Westbrook Inverter Enclosur	W_INV3	369508	4906164	2	0	0	89.1	89.1	1	5482.4	3.25	0	85.78	0	1.76	0	0	13.1	0	0	0	0	0	0	-11.58	-11.58

Fixed Reactor Bank 1	FRB1	369378	4908755	6	0	0	89.8	89.8	1	6111.43	5.25	0	86.72	0	-0.4	0	0	9.86	0	0	0	0	0	0	-6.4	-6.4
Westbrook Inverter Enclosur	W_INV4	369673	4906164	2	0	0	89.1	89.1	1	5647	3.25	0	86.04	0	1.8	0	0	13.31	0	0	0	0	0	0	-12.09	-12.09
Fixed Reactor Bank 2	FRB2	369464	4908755	6	0	0	89.8	89.8	1	6186.7	5.25	0	86.83	0	-0.39	0	0	9.94	0	0	0	0	0	0	-6.6	-6.6
Westbrook Inverter Enclosur	W_INV5	369719	4906574	2	0	0	89.1	89.1	1	5735.09	3.25	0	86.17	0	1.82	0	0	13.43	0	0	0	0	0	0	-12.36	-12.36
Inverter	MV4-13	369051	4908605	2	0	0	89.1	89.1	1	5752.84	3.25	0	86.2	0	1.83	0	0	13.45	0	0	0	0	0	0	-12.41	-12.41
Westbrook Inverter Enclosur	W_INV7	369780	4906417	2	0	0	89.1	89.1	1	5776.12	3.25	0	86.23	0	1.83	0	0	13.48	0	0	0	0	0	0	-12.48	-12.48
Inverter	MV4-15	369176	4908481	2	0	0	89.1	89.1	1	5803.34	3.25	0	86.27	0	1.84	0	0	13.51	0	0	0	0	0	0	-12.57	-12.57
Inverter	MV4-14	369176	4908507	2	0	0	89.1	89.1	1	5815.48	3.25	0	86.29	0	1.84	0	0	13.53	0	0	0	0	0	0	-12.6	-12.6
Inverter	MV4-12	369043	4908803	2	0	0	89.1	89.1	1	5845.73	3.25	0	86.34	0	1.85	0	0	13.57	0	0	0	0	0	0	-12.69	-12.69
Westbrook Inverter Enclosur	W_INV6	369875	4906578	2	0	0	89.1	89.1	1	5890.17	3.25	0	86.4	0	1.86	0	0	13.62	0	0	0	0	0	0	-12.83	-12.83
Inverter	MV5-6	369982	4908507	2	0	0	89.1	89.1	1	6538.37	3.25	0	87.31	0	2.02	0	0	14.43	0	0	0	0	0	0	-14.7	-14.7
Westbrook Inverter Enclosur	W_INV1	369409	4906578	2	0	0	86.1	86.1	1	5428.82	3.25	0	85.69	0	1.75	0	0	13.03	0	0	0	0	0	0	-14.41	-14.41
Inverter Transformer	MV1-13 T	364725	4905241	2	0	0	69.4	69.4	1	873.04	3.25	0	69.82	0	1.57	0	0	3.63	0	0	0	0	0	0	-5.67	-5.67
Inverter Transformer	MV1-7 T	364919	4905782	2	0	0	69.4	69.4	1	880	3.25	0	69.89	0	1.57	0	0	3.64	0	0	0	0	0	0	-5.75	-5.75
Inverter	MV6-4	370250	4906966	2	0	0	86.1	86.1	1	6323.03	3.25	0	87.02	0	1.96	0	0	14.17	0	0	0	0	0	0	-17.09	-17.09
Inverter Transformer	MV1-10 T	365010	4905564	2	0	0	69.4	69.4	1	994.96	3.25	0	70.96	0	1.68	0	0	3.8	0	0	0	0	0	0	-7.09	-7.09
Inverter Transformer	MV1-14 T	365157	4905049	2	0	0	69.4	69.4	1	1336.32	3.25	0	73.52	0	1.9	0	0	4.24	0	0	0	0	0	0	-10.31	-10.31
Westbrook Inverter Transfor	W_INVTR1	369403	4906578	2	0	0	78.2	78.2	1	5422.89	3.25	0	85.68	0	-3.26	0	0	2.55	0	0	0	0	0	0	-6.74	-6.74
Inverter Transformer	MV1-6 T	364482	4905835	2	0	0	56.1	56.1	1	446.29	3.25	0	63.99	0	-0.12	0	0	3.37	0	0	0	0	0	0	-11.19	-11.19
Inverter Transformer	MV2-1 T	365836	4906816	2	0	0	69.4	69.4	1	2073.75	3.25	0	77.34	0	2.2	0	0	5.04	0	0	0	0	0	0	-15.22	-15.22
Westbrook Inverter Transfor	W_INVTR2	369368	4906388	2	0	0	77.3	77.3	1	5363.46	3.25	0	85.59	0	-3.25	0	0	2.54	0	0	0	0	0	0	-7.53	-7.53
Inverter Transformer	MV1-3 T	364435	4906039	2	0	0	56.1	56.1	1	472.64	3.25	0	64.49	0	-0.12	0	0	3.46	0	0	0	0	0	0	-11.78	-11.78
Westbrook Inverter Transfor	W_INVTR3	369514	4906164	2	0	0	77.3	77.3	1	5488.38	3.25	0	85.79	0	-3.27	0	0	2.58	0	0	0	0	0	0	-7.75	-7.75
Westbrook Inverter Transfor	W_INVTR4	369679	4906164	2	0	0	77.3	77.3	1	5652.99	3.25	0	86.05	0	-3.3	0	0	2.63	0	0	0	0	0	0	-8.03	-8.03
Westbrook Inverter Transfor	W_INVTR5	369725	4906574	2	0	0	77.3	77.3	1	5741.03	3.25	0	86.18	0	-3.32	0	0	2.66	0	0	0	0	0	0	-8.18	-8.18
Westbrook Inverter Transfor	W_INVTR7	369786	4906417	2	0	0	77.3	77.3	1	5782.09	3.25	0	86.24	0	-3.33	0	0	2.67	0	0	0	0	0	0	-8.24	-8.24
Westbrook Inverter Transfor	W_INVTR6	369881	4906578	2	0	0	77.3	77.3	1	5896.12	3.25	0	86.41	0	-3.35	0	0	2.71	0	0	0	0	0	0	-8.43	-8.43
Inverter Transformer	MV1-9 T	364555	4905646	2	0	0	56.1	56.1	1	533.37	3.25	0	65.54	0	-0.11	0	0	3.66	0	0	0	0	0	0	-13.02	-13.02
Inverter Transformer	MV1-5 T	364676	4905892	2	0	0	56.1	56.1	1	646.6	3.25	0	67.21	0	-0.09	0	0	3.99	0	0	0	0	0	0	-15.05	-15.05
Inverter Transformer	MV1-11 T	364649	4905414	2	0	0	56.1	56.1	1	711.9	3.25	0	68.05	0	-0.08	0	0	4.17	0	0	0	0	0	0	-16.08	-16.08
Inverter Transformer	MV1-8 T	364782	4905647	2	0	0	56.1	56.1	1	754.99	3.25	0	68.56	0	-0.07	0	0	4.28	0	0	0	0	0	0	-16.71	-16.71
Inverter Transformer	MV1-2 T	364759	4906063	2	0	0	56.1	56.1	1	773.26	3.25	0	68.77	0	-0.06	0	0	4.33	0	0	0	0	0	0	-16.97	-16.97
Inverter Transformer	MV1-1 T	364721	4906166	2	0	0	56.1	56.1	1	783.17	3.25	0	68.88	0	-0.06	0	0	4.35	0	0	0	0	0	0	-17.11	-17.11
Inverter Transformer	MV1-4 T	364821	4905918	2	0	0	56.1	56.1	1	793.91	3.25	0	69	0	-0.05	0	0	4.38	0	0	0	0	0	0	-17.26	-17.26
Inverter Transformer	MV1-12 T	365044	4905386	2	0	0	56.1	56.1	1	1079.84	3.25	0	71.67	0	0.04	0	0	5.08	0	0	0	0	0	0	-20.73	-20.73
Inverter Transformer	MV6-4 T	370244	4906966	2	0	0	69.4	69.4	1	6317.14	3.25	0	87.01	0	3.23	0	0	8.21	0	0	0	0	0	0	-29.1	-29.1
Inverter Transformer	MV6-1 T	370230	4907364	2	0	0	69.4	69.4	1	6390.18	3.25	0	87.11	0	3.24	0	0	8.25	0	0	0	0	0	0	-29.26	-29.26
Inverter Transformer	MV1-15 T	365309	4904994	2	0	0	56.1	56.1	1	1494.08	3.25	0	74.49	0	0.2	0	0	6.01	0	0	0	0	0	0	-24.63	-24.63
Inverter Transformer	MV2-4 T	365590	4906628	2	0	0	56.1	56.1	1	1767.21	3.25	0	75.95	0	0.31	0	0	6.58	0	0	0	0	0	0	-26.77	-26.77
Inverter Transformer	MV2-3 T	365814	4906641	2	0	0	56.1	56.1	1	1972.37	3.25	0	76.9	0	0.39	0	0	6.99	0	0	0	0	0	0	-28.22	-28.22
Inverter Transformer	MV2-2 T	365982	4906654	2	0	0	56.1	56.1	1	2130.11	3.25	0	77.57	0	0.46	0	0	7.3	0	0	0	0	0	0	-29.27	-29.27
Inverter Transformer	MV3-18 T	367757	4907412	2	0	0	56.1	56.1	1	4060.01	3.25	0	83.17	0	1.27	0	0	10.54	0	0	0	0	0	0	-38.92	-38.92
Inverter Transformer	MV3-12 T	367674	4907594	2	0	0	56.1	56.1	1	4062.04	3.25	0	83.17	0	1.27	0	0	10.55	0	0	0	0	0	0	-38.93	-38.93
Inverter Transformer	MV3-13 T	367958	4907577	2	0	0	56.1	56.1	1	4310.94	3.25	0	83.69	0	1.37	0	0	10.91	0	0	0	0	0	0	-39.91	-39.91
Inverter Transformer	MV3-7 T	367951	4907754	2	0	0	56.1	56.1	1	4381.38	3.25	0	83.83	0	1.39	0	0	11.01	0	0	0	0	0	0	-40.18	-40.18
Inverter Transformer	MV3-3 T	367944	4907927	2	0	0	56.1	56.1	1	4455.82	3.25	0	83.98	0	1.42	0	0	11.11	0	0	0	0	0	0	-40.46	-40.46
Inverter Transformer	MV3-17 T	368183	4907472	2	0	0	56.1	56.1	1	4475.74	3.25	0	84.02	0	1.43	0	0	11.14	0	0	0	0	0	0	-40.53	-40.53
Inverter Transformer	MV3-10 T	368162	4907669	2	0	0	56.1	56.1	1	4534.72	3.25	0	84.13	0	1.45	0	0	11.22	0	0	0	0	0	0	-40.75	-40.75
Inverter Transformer	MV3-19 T	368352	4907347	2	0	0	56.1	56.1	1	4588.5	3.25	0	84.23	0	1.47	0	0	11.3	0	0	0	0	0	0	-40.95	-40.95
Inverter Transformer	MV3-6 T	368156	4907834	2	0	0	56.1	56.1	1	4600.49	3.25	0	84.26	0	1.48	0	0	11.32	0	0	0	0	0	0	-40.99	-40.99
Inverter Transformer	MV3-15 T	368351	4907477	2	0	0	56.1	56.1	1	4633.55	3.25	0	84.32	0	1.49	0	0	11.36	0	0	0	0	0	0	-41.11	-41.11
Inverter Transformer	MV3-1 T	368150	4907976	2	0	0	56.1	56.1	1	4660.3	3.25	0	84.37	0	1.5	0	0	11.4	0	0	0	0	0	0	-41.21	-41.21
Inverter Transformer	MV3-21 T	368484	4907206	2	0	0	56.1	56.1	1	4667.83	3.25	0	84.38	0	1.5	0	0	11.41	0	0	0	0	0	0	-41.23	-41.23
Inverter Transformer	MV3-11 T	368340	4907662	2	0	0	56.1	56.1	1	4694.33	3.25	0	84.43	0	1.51	0	0	11.44	0	0	0	0	0	0	-41.33	-41.33
Inverter Transformer	MV3-5 T	368335	4907843	2	0	0	56.1	56.1	1	4765.24	3.25	0	84.56	0	1.54	0	0	11.54	0	0	0	0	0	0	-41.58	-41.58
Inverter Transformer	MV3-16 T	368509	4907475	2	0	0	56.1	56.1	1	4780.22	3.25	0	84.59	0	1.54	0	0	11.56	0	0	0	0	0	0	-41.64	-41.64
Inverter Transformer	MV3-22 T	368661	4907142	2	0	0	56.1	56.1	1	4818.22	3.25	0	84.66	0	1.56	0	0	11.61	0	0	0	0	0	0	-41.77	-41.77
Inverter Transformer	MV3-9 T	368517	4907703	2	0	0	56.1	56.1	1	4873.05	3.25	0	84.76	0	1.58	0	0	11.69	0	0	0	0	0	0	-41.96	-41.96
Inverter Transformer	MV3-20 T	368683	4907317	2	0	0	56.1	56.1	1	4891.42	3.25	0	84.79	0	1.59	0	0	11.71	0	0	0	0	0	0	-42.03	-42.03
Inverter Transformer	MV3-14 T	368678	4907498	2	0	0	56.1	56.1	1	4946.56	3.25	0	84.89	0	1.61	0	0	11.78	0	0	0	0	0	0	-42.22	-42.22
Inverter Transformer	MV3-4 T	368507	4907925	2	0	0	56.1	56.1	1	4955.78	3.25	0	84.9	0	1.61	0	0	11.8	0	0	0	0	0	0	-42.25	-42.25
Inverter Transformer	MV3-8 T	368685	4907712	2	0	0	56.1	56.1	1	5031.31	3.25	0	85.03	0	1.64	0	0	11.9	0	0	0	0	0	0	-42.51	-42.51
Inverter Transformer	MV3-2 T	368677	4907928	2	0	0	56.1	56.1	1	5110.84	3.25	0	85.17	0	1.67	0	0	12	0	0	0	0	0	0	-42.78	-42.78
Inverter Transformer	MV4-13 T	369057	4908605	2	0	0	56.1	56.1	1	5758.06	3.25	0	86.21	0	1.89	0	0	12.81	0	0	0	0	0	0	-44.85	-44.85
Inverter Transformer	MV4-15 T	369170	4908481	2	0	0	56.1	56.1	1	5798.03	3.25	0	86.27	0	1.9	0	0	12.86	0	0	0	0	0	0	-44.97	-44.97
Inverter Transformer	MV4-14 T	369182	4908507	2	0	0	56.1	56.1	1	5820.78	3.25	0	86.3	0	1.91	0	0	12.89	0	0	0	0	0	0	-45.04	-45.04
Inverter Transformer	MV4-12 T	369049	4908803	2	0	0	56.1	56.1	1	5850.86	3.25	0	86.34	0	1.92	0	0	12.92	0	0	0	0	0	0	-45.13	-45.13
Inverter Transformer	MV4-7 T	369040	4909001	2	0	0	56.1	56.1	1	5947.98	3.25	0	86.49	0	1.95	0	0	13.04	0	0	0	0	0	0	-45.42	-45.42
Inverter Transformer	MV4-4 T	369033	4909199	2	0	0	56.1	56.1	1	6051.67	3.25	0	86.64	0	1.98	0	0	13.16	0	0	0	0	0	0	-45.72	-45.72
Inverter Transformer	MV4-11 T	369269	4908855	2	0	0	56.1	56.1	1	6066.5	3.25	0	86.66	0	1.99	0	0	13.18	0	0	0	0	0	0	-45.77	-45.77
Inverter Transformer	MV4-10 T	369307	4908858	2	0	0	56.1	56.1	1	6100.8	3.25	0	86.71	0	2	0	0	13.22	0	0	0	0	0	0	-45.87	-45.87
Inverter Transformer	MV4-8 T	369262	4909001	2	0	0	56.1	56.1	1	6135.81	3.25	0	86.76	0	2.01	0	0	13.26	0	0	0	0	0	0	-45.97	-45.97
Inverter Transformer	MV4-1 T	369017	4909397	2	0	0	56.1	56.1	1	6152.72	3.25	0	86.78	0	2.01	0	0	13.28	0	0	0	0	0	0	-46.02	-46.02
Inverter Transformer	MV4-9 T	369284	4909001	2	0	0	56.1	56.1	1	6154.55	3.25	0	86.78	0	2.01	0	0	13.28	0	0	0	0	0	0	-46.02	-46.02

	Inverter Transformer	MV4-6 T	369249	4909192	2	0	0	56.1	56.1	1	6227.28	3.25	0	86.89	0	2.04	0	0	13.37	0	0	0	0	0	0	-46.23	-46.23
	Inverter Transformer	MV6-2 T	370091	4907339	2	0	0	56.1	56.1	1	6249.33	3.25	0	86.92	0	2.04	0	0	13.39	0	0	0	0	0	0	-46.29	-46.29
	Inverter Transformer	MV4-5 T	369283	4909199	2	0	0	56.1	56.1	1	6259.57	3.25	0	86.93	0	2.05	0	0	13.41	0	0	0	0	0	0	-46.32	-46.32
	Inverter Transformer	MV6-3 T	370202	4907140	2	0	0	56.1	56.1	1	6311.06	3.25	0	87	0	2.06	0	0	13.47	0	0	0	0	0	0	-46.47	-46.47
	Inverter Transformer	MV4-3 T	369234	4909397	2	0	0	56.1	56.1	1	6329.57	3.25	0	87.03	0	2.07	0	0	13.49	0	0	0	0	0	0	-46.52	-46.52
	Inverter Transformer	MV4-2 T	369267	4909397	2	0	0	56.1	56.1	1	6356.69	3.25	0	87.06	0	2.08	0	0	13.52	0	0	0	0	0	0	-46.6	-46.6
	Inverter Transformer	MV5-6 T	369987	4908507	2	0	0	56.1	56.1	1	6542.92	3.25	0	87.32	0	2.13	0	0	13.73	0	0	0	0	0	0	-47.12	-47.12
	Inverter Transformer	MV5-5 T	370021	4908690	2	0	0	56.1	56.1	1	6651.81	3.25	0	87.46	0	2.16	0	0	13.85	0	0	0	0	0	0	-47.41	-47.41
	Inverter Transformer	MV5-2 T	370011	4908853	2	0	0	56.1	56.1	1	6715.8	3.25	0	87.54	0	2.18	0	0	13.92	0	0	0	0	0	0	-47.58	-47.58
	Inverter Transformer	MV5-1 T	370015	4909142	2	0	0	56.1	56.1	1	6856.3	3.25	0	87.72	0	2.22	0	0	14.07	0	0	0	0	0	0	-47.96	-47.96
	Inverter Transformer	MV5-3 T	370237	4908851	2	0	0	56.1	56.1	1	6916.65	3.25	0	87.8	0	2.24	0	0	14.14	0	0	0	0	0	0	-48.12	-48.12
	Inverter Transformer	MV5-4 T	370330	4908707	2	0	0	56.1	56.1	1	6938.17	3.25	0	87.82	0	2.24	0	0	14.16	0	0	0	0	0	0	-48.17	-48.17
	Line Reactor	NGR	369421	4908787.5	5	0	0	45.4	45.4	1	6164.82	5.25	0	86.8	0	3.24	1.36	0.1	2.52	0	0	0	0	0	0	-48.56	-48.56
Limit. Valu	0	0																								
Level D/N:	34.2776	34.2776																								

Receiver: Existing Noise Receptor
ID: S-R92
X: 363876
Y: 4905772
Z: 4.5
Ground: 0

ISO	Description	ID	X	Y	Z	Ground	ReflOrd	LxT	LxN	L/A	Dist.	hm	Freq	Adiv	K0b	Agr	Abar	z	Aatm	Afol	Ahous	Cmet	CmetN	Dc	RL	LtotT	LtotN
	Inverter	MV1-6	364477	4905835	2	0	0	100.3	100.3	1	604.3	3.25	0	66.63	0	-0.48	0	0	9.23	0	0	0	0	0	0	24.93	24.93
	Inverter	MV1-9	364561	4905646	2	0	0	100.3	100.3	1	696.5	3.25	0	67.86	0	-0.41	0	0	9.72	0	0	0	0	0	0	23.15	23.15
	Inverter	MV1-5	364671	4905892	2	0	0	100.3	100.3	1	804.01	3.25	0	69.11	0	-0.35	0	0	10.2	0	0	0	0	0	0	21.36	21.36
	Inverter	MV1-11	364655	4905414	2	0	0	100.3	100.3	1	857.33	3.25	0	69.66	0	-0.32	0	0	10.41	0	0	0	0	0	0	20.56	20.56
	Inverter	MV1-8	364788	4905647	2	0	0	100.3	100.3	1	920.53	3.25	0	70.28	0	-0.29	0	0	10.64	0	0	0	0	0	0	19.68	19.68
	Inverter	MV1-2	364753	4906063	2	0	0	100.3	100.3	1	924.02	3.25	0	70.31	0	-0.28	0	0	10.65	0	0	0	0	0	0	19.63	19.63
	Inverter	MV1-1	364715	4906166	2	0	0	100.3	100.3	1	926.91	3.25	0	70.34	0	-0.28	0	0	10.66	0	0	0	0	0	0	19.59	19.59
	Inverter	MV1-4	364815	4905918	2	0	0	100.3	100.3	1	950.29	3.25	0	70.56	0	-0.27	0	0	10.74	0	0	0	0	0	0	19.28	19.28
	Inverter	MV1-12	365038	4905386	2	0	0	100.3	100.3	1	1224.44	3.25	0	72.76	0	-0.14	0	0	11.6	0	0	0	0	0	0	16.1	16.1
	Inverter	MV1-13	364731	4905241	2	0	0	97.3	97.3	1	1006.48	3.25	0	71.06	0	-0.24	0	0	10.93	0	0	0	0	0	0	15.57	15.57
	Inverter	MV1-7	364925	4905782	2	0	0	97.3	97.3	1	1049.05	3.25	0	71.42	0	-0.22	0	0	11.07	0	0	0	0	0	0	15.05	15.05
	Inverter	MV1-10	365004	4905564	2	0	0	97.3	97.3	1	1147.02	3.25	0	72.19	0	-0.18	0	0	11.37	0	0	0	0	0	0	13.93	13.93
	Sol_Luce Substation	S_Substation	369426	4908792	3.5	0	0	112.1	112.1	1	6318.46	5.25	0	87.01	0	1.24	2.58	0.29	10.07	0	0	0	0	0	0	11.18	11.18
	Inverter	MV1-15	365315	4904994	2	0	0	100.3	100.3	1	1635.85	3.25	0	75.27	0	0.02	0	0	12.65	0	0	0	0	0	0	12.37	12.37
	Inverter	MV2-4	365586	4906624	2	0	0	100.3	100.3	1	1910.5	3.25	0	76.62	0	0.1	0	0	13.27	0	0	0	0	0	0	10.31	10.31
	Inverter	MV1-14	365163	4905049	2	0	0	97.3	97.3	1	1476.18	3.25	0	74.38	0	-0.04	0	0	12.27	0	0	0	0	0	0	10.71	10.71
	Inverter	MV2-3	365820	4906641	2	0	0	100.3	100.3	1	2129.39	3.25	0	77.57	0	0.17	0	0	13.73	0	0	0	0	0	0	8.85	8.85
	Inverter	MV1-3	364440	4906039	2	0	0	89.1	89.1	1	624.01	3.25	0	66.9	0	0.59	0	0	5.51	0	0	0	0	0	0	16.05	16.05
	Inverter	MV2-1	365842	4906816	2	0	0	97.3	97.3	1	2226	3.25	0	77.95	0	0.19	0	0	13.93	0	0	0	0	0	0	5.25	5.25
	Inverter	MV3-12	367668	4907594	2	0	0	100.3	100.3	1	4207.01	3.25	0	83.48	0	0.55	0	0	17.38	0	0	0	0	0	0	-1.1	-1.1
	Inverter	MV3-18	367752	4907412	2	0	0	100.3	100.3	1	4208.68	3.25	0	83.48	0	0.56	0	0	17.38	0	0	0	0	0	0	-1.1	-1.1
	Inverter	MV3-13	367963	4907577	2	0	0	100.3	100.3	1	4467.84	3.25	0	84	0	0.59	0	0	17.78	0	0	0	0	0	0	-2.06	-2.06
	Inverter	MV3-7	367945	4907754	2	0	0	100.3	100.3	1	4526.05	3.25	0	84.11	0	0.59	0	0	17.87	0	0	0	0	0	0	-2.27	-2.27
	Inverter	MV3-3	367939	4907927	2	0	0	100.3	100.3	1	4599.13	3.25	0	84.25	0	0.6	0	0	17.98	0	0	0	0	0	0	-2.52	-2.52
	Inverter	MV3-17	368178	4907472	2	0	0	100.3	100.3	1	4625.71	3.25	0	84.3	0	0.6	0	0	18.02	0	0	0	0	0	0	-2.62	-2.62
	Inverter	MV3-10	368167	4907669	2	0	0	100.3	100.3	1	4691.62	3.25	0	84.43	0	0.61	0	0	18.12	0	0	0	0	0	0	-2.85	-2.85
	Inverter	MV3-19	368357	4907347	2	0	0	100.3	100.3	1	4749.74	3.25	0	84.53	0	0.62	0	0	18.21	0	0	0	0	0	0	-3.05	-3.05
	Inverter	MV3-6	368162	4907834	2	0	0	100.3	100.3	1	4756.22	3.25	0	84.55	0	0.62	0	0	18.22	0	0	0	0	0	0	-3.07	-3.07
	Inverter	MV3-15	368357	4907477	2	0	0	100.3	100.3	1	4794.41	3.25	0	84.61	0	0.62	0	0	18.28	0	0	0	0	0	0	-3.2	-3.2
	Inverter	MV3-21	368478	4907206	2	0	0	100.3	100.3	1	4820.25	3.25	0	84.66	0	0.63	0	0	18.31	0	0	0	0	0	0	-3.29	-3.29
	Inverter	MV3-11	368346	4907662	2	0	0	100.3	100.3	1	4853.14	3.25	0	84.72	0	0.63	0	0	18.36	0	0	0	0	0	0	-3.4	-3.4
	Inverter	MV3-16	368514	4907475	2	0	0	100.3	100.3	1	4940.78	3.25	0	84.88	0	0.64	0	0	18.49	0	0	0	0	0	0	-3.69	-3.69
	Inverter	MV3-9	368512	4907703	2	0	0	100.3	100.3	1	5022.08	3.25	0	85.02	0	0.64	0	0	18.61	0	0	0	0	0	0	-3.96	-3.96
	Inverter	MV3-20	368689	4907317	2	0	0	100.3	100.3	1	5054.9	3.25	0	85.07	0	0.65	0	0	18.66	0	0	0	0	0	0	-4.07	-4.07
	Inverter	MV3-14	368684	4907498	2	0	0	100.3	100.3	1	5108.42	3.25	0	85.17	0	0.65	0	0	18.74	0	0	0	0	0	0	-4.24	-4.24
	Inverter	MV3-8	368680	4907712	2	0	0	100.3	100.3	1	5180.93	3.25	0	85.29	0	0.66	0	0	18.84	0	0	0	0	0	0	-4.48	-4.48
	Inverter	MV4-7	369035	4909001	2	0	0	100.3	100.3	1	6086.19	3.25	0	86.69	0	0.71	0	0	20.11	0	0	0	0	0	0	-7.19	-7.19
	Inverter	MV4-4	369027	4909199	2	0	0	100.3	100.3	1	6186.85	3.25	0	86.83	0	0.71	0	0	20.25	0	0	0	0	0	0	-7.47	-7.47
	Inverter	MV4-11	369264	4908855	2	0	0	100.3	100.3	1	6207.69	3.25	0	86.86	0	0.71	0	0	20.27	0	0	0	0	0	0	-7.53	-7.53
	Inverter	MV4-10	369312	4908858	2	0	0	100.3	100.3	1	6250.88	3.25	0	86.92	0	0.71	0	0	20.33	0	0	0	0	0	0	-7.65	-7.65
	Inverter	MV4-8	369256	4909001	2	0	0	100.3	100.3	1	6274.62	3.25	0	86.95	0	0.71	0	0	20.36	0	0	0	0	0	0	-7.71	-7.71
	Inverter	MV4-1	369011	4909397	2	0	0	100.3	100.3	1	6285.61	3.25	0	86.97	0	0.71	0	0	20.38	0	0	0	0	0	0	-7.74	-7.74
	Inverter	MV4-9	369289	4909001	2	0	0	100.3	100.3	1	6302.94	3.25	0	86.99	0	0.71	0	0	20.4	0	0	0	0	0	0	-7.79	-7.79
	Inverter	MV4-6	369243	4909192	2	0	0	100.3	100.3	1	6364.05	3.25	0	87.07	0	0.71	0	0	20.48	0	0	0	0	0	0	-7.96	-7.96
	Inverter	MV6-2	370085	4907339	2	0	0	100.3	100.3	1	6403.68	3.25	0	87.13	0	0.71	0	0	20.53	0	0	0	0	0	0	-8.06	-8.06
	Inverter	MV4-5	369289	4909199	2	0	0	100.3	100.3	1	6406.63	3.25	0	87.13	0	0.71	0	0	20.54	0	0	0	0	0	0	-8.07	-8.07
	Inverter	MV4-3	369229	4909397	2	0	0	100.3	100.3	1	6464.92	3.25	0	87.21	0	0.71	0	0	20.61	0	0	0	0	0	0	-8.23	-8.23
	Inverter	MV6-3	370207	4907140	2	0	0	100.3	100.3	1	6477.11	3.25	0	87.23	0	0.71	0	0	20.63	0	0	0	0	0	0	-8.26	-8.26
	Inverter	MV4-2	369272	4909397	2	0	0	100.3	100.3	1	6500.57	3.25	0	87.26	0	0.71	0	0	20.66	0	0	0	0	0	0	-8.32	-8.32
	Inverter	MV5-5	370015	4908690	2	0	0	100.3	100.3	1	6797.21	3.25	0	87.65	0	0.71	0	0	21.04	0	0	0	0	0	0	-9.09	-9.09

Inverter	MV5-2	370006	4908853	2	0	0	100.3	100.3	1	6860.72	3.25	0	87.73	0	0.71	0	0	21.12	0	0	0	0	0	0	-9.25	-9.25
Inverter	MV5-1	370020	4909142	2	0	0	100.3	100.3	1	7007.54	3.25	0	87.91	0	0.71	0	0	21.31	0	0	0	0	0	0	-9.62	-9.62
Inverter	MV5-3	370231	4908851	2	0	0	100.3	100.3	1	7061.61	3.25	0	87.98	0	0.71	0	0	21.38	0	0	0	0	0	0	-9.75	-9.75
Inverter	MV5-4	370324	4908707	2	0	0	100.3	100.3	1	7084.56	3.25	0	88.01	0	0.71	0	0	21.4	0	0	0	0	0	0	-9.81	-9.81
Inverter	MV2-2	365977	4906654	2	0	0	89.1	89.1	1	2278.62	3.25	0	78.15	0	0.97	0	0	8.5	0	0	0	0	0	0	1.44	1.44
Inverter	MV6-1	370235	4907364	2	0	0	97.3	97.3	1	6555.25	3.25	0	87.33	0	0.71	0	0	20.73	0	0	0	0	0	0	-11.47	-11.47
DSTATCOM - 10 MVAR #2	DSAT2	369403	4908757	2.5	0	0	96.6	96.6	1	6281.56	3.5	0	86.96	0	3.79	0	0	3.97	0	0	0	0	0	0	1.9	1.9
DSTATCOM - 10 MVAR #1	DSAT1	369437	4908757	2.5	0	0	96.6	96.6	1	6311.49	3.5	0	87	0	3.8	0	0	3.99	0	0	0	0	0	0	1.84	1.84
Gardiner Substation	G_Sub	366586.3	4903349.9	2.5	0	0	90.8	90.8	1	3634.87	4.25	0	82.21	0	1.25	2.73	0.28	6.87	0	0	0	0	0	0	-2.29	-2.29
SubstationTransformer	W_ST	369711.17	4906112.3	2.5	0	0	92	92	1	5845.08	4.25	0	86.34	0	1.84	2.13	0.29	9.58	0	0	0	0	0	0	-7.91	-7.91
Inverters	G_Inv1	366526.4	4903225.8	2	0	0	87.7	87.7	1	3675.29	3.25	0	82.31	0	2.76	0	0	4.52	0	0	0	0	0	0	-1.93	-1.93
Inverters	G_Inv2	366676.9	4903239.1	2	0	0	87.7	87.7	1	3776.32	3.25	0	82.54	0	2.77	0	0	4.63	0	0	0	0	0	0	-2.28	-2.28
Inverters	G_Inv3	366583.7	4903091.4	2	0	0	87.7	87.7	1	3810.15	3.25	0	82.62	0	2.78	0	0	4.67	0	0	0	0	0	0	-2.4	-2.4
Inverters	G_Inv4	366732.8	4903105	2	0	0	87.7	87.7	1	3908.22	3.25	0	82.84	0	2.78	0	0	4.77	0	0	0	0	0	0	-2.74	-2.74
Inverters	G_Inv5	366638.5	4902958.1	2	0	0	87.7	87.7	1	3943.28	3.25	0	82.92	0	2.79	0	0	4.81	0	0	0	0	0	0	-2.86	-2.86
Inverters	G_Inv6	366788.5	4902972	2	0	0	87.7	87.7	1	4040.13	3.25	0	83.13	0	2.8	0	0	4.92	0	0	0	0	0	0	-3.18	-3.18
Inverters	G_Inv7	366694.6	4902824.7	2	0	0	87.7	87.7	1	4078.12	3.25	0	83.21	0	2.8	0	0	4.96	0	0	0	0	0	0	-3.31	-3.31
Inverter	MV3-1	368156	4907976	2	0	0	89.1	89.1	1	4814.15	3.25	0	84.65	0	1.59	0	0	12.21	0	0	0	0	0	0	-9.4	-9.4
Inverters	G_Inv8	366844.5	4902838.5	2	0	0	87.7	87.7	1	4173.42	3.25	0	83.41	0	2.81	0	0	5.06	0	0	0	0	0	0	-3.62	-3.62
Inverter	MV3-5	368340	4907843	2	0	0	89.1	89.1	1	4921.01	3.25	0	84.84	0	1.62	0	0	12.36	0	0	0	0	0	0	-9.76	-9.76
Inverters	G_Inv9	366750.9	4902691.8	2	0	0	87.7	87.7	1	4213.39	3.25	0	83.49	0	2.81	0	0	5.1	0	0	0	0	0	0	-3.75	-3.75
Inverter	MV3-22	368656	4907142	2	0	0	89.1	89.1	1	4972.45	3.25	0	84.93	0	1.63	0	0	12.43	0	0	0	0	0	0	-9.93	-9.93
Inverters	G_Inv10	366900.7	4902704.8	2	0	0	87.7	87.7	1	4307.73	3.25	0	83.68	0	2.82	0	0	5.21	0	0	0	0	0	0	-4.05	-4.05
Inverter	MV3-4	368502	4907925	2	0	0	89.1	89.1	1	5102.48	3.25	0	85.16	0	1.67	0	0	12.6	0	0	0	0	0	0	-10.36	-10.36
Inverter	MV3-2	368671	4907928	2	0	0	89.1	89.1	1	5257.41	3.25	0	85.42	0	1.7	0	0	12.81	0	0	0	0	0	0	-10.87	-10.87
Westbrook Inverter Enclosur	W_INV2	369374	4906388	2	0	0	89.1	89.1	1	5532.4	3.25	0	85.86	0	1.77	0	0	13.16	0	0	0	0	0	0	-11.74	-11.74
Westbrook Inverter Enclosur	W_INV3	369508	4906164	2	0	0	89.1	89.1	1	5645.63	3.25	0	86.03	0	1.8	0	0	13.31	0	0	0	0	0	0	-12.09	-12.09
Fixed Reactor Bank 1	FRB1	369378	4908755	6	0	0	89.8	89.8	1	6258.62	5.25	0	86.93	0	-0.38	0	0	10.01	0	0	0	0	0	0	-6.78	-6.78
Westbrook Inverter Enclosur	W_INV4	369673	4906164	2	0	0	89.1	89.1	1	5810.24	3.25	0	86.28	0	1.84	0	0	13.52	0	0	0	0	0	0	-12.59	-12.59
Fixed Reactor Bank 2	FRB2	369464	4908755	6	0	0	89.8	89.8	1	6334.35	5.25	0	87.03	0	-0.37	0	0	10.09	0	0	0	0	0	0	-6.98	-6.98
Westbrook Inverter Enclosur	W_INV5	369719	4906574	2	0	0	89.1	89.1	1	5897.78	3.25	0	86.41	0	1.86	0	0	13.63	0	0	0	0	0	0	-12.85	-12.85
Inverter	MV4-13	369051	4908605	2	0	0	89.1	89.1	1	5899.71	3.25	0	86.42	0	1.86	0	0	13.64	0	0	0	0	0	0	-12.86	-12.86
Westbrook Inverter Enclosur	W_INV7	369780	4906417	2	0	0	89.1	89.1	1	5939.13	3.25	0	86.47	0	1.87	0	0	13.69	0	0	0	0	0	0	-12.97	-12.97
Inverter	MV4-15	369176	4908481	2	0	0	89.1	89.1	1	5952.2	3.25	0	86.49	0	1.87	0	0	13.7	0	0	0	0	0	0	-13.01	-13.01
Inverter	MV4-14	369176	4908507	2	0	0	89.1	89.1	1	5964.08	3.25	0	86.51	0	1.88	0	0	13.72	0	0	0	0	0	0	-13.05	-13.05
Inverter	MV4-12	369043	4908803	2	0	0	89.1	89.1	1	5990.4	3.25	0	86.55	0	1.88	0	0	13.75	0	0	0	0	0	0	-13.12	-13.12
Westbrook Inverter Enclosur	W_INV6	369875	4906578	2	0	0	89.1	89.1	1	6052.9	3.25	0	86.64	0	1.9	0	0	13.83	0	0	0	0	0	0	-13.31	-13.31
Inverter	MV5-6	369982	4908507	2	0	0	89.1	89.1	1	6690.55	3.25	0	87.51	0	2.05	0	0	14.62	0	0	0	0	0	0	-15.12	-15.12
Westbrook Inverter Enclosur	W_INV1	369409	4906578	2	0	0	86.1	86.1	1	5591.4	3.25	0	85.95	0	1.79	0	0	13.24	0	0	0	0	0	0	-14.92	-14.92
Inverter	MV6-4	370250	4906966	2	0	0	86.1	86.1	1	6484.87	3.25	0	87.24	0	2	0	0	14.36	0	0	0	0	0	0	-17.55	-17.55
Inverter Transformer	MV1-13 T	364725	4905241	2	0	0	69.4	69.4	1	1001.38	3.25	0	71.01	0	1.69	0	0	3.81	0	0	0	0	0	0	-7.16	-7.16
Inverter Transformer	MV1-7 T	364919	4905782	2	0	0	69.4	69.4	1	1043.05	3.25	0	71.37	0	1.72	0	0	3.87	0	0	0	0	0	0	-7.6	-7.6
Inverter Transformer	MV1-10 T	365010	4905564	2	0	0	69.4	69.4	1	1152.92	3.25	0	72.24	0	1.79	0	0	4.02	0	0	0	0	0	0	-8.69	-8.69
Inverter Transformer	MV1-14 T	365157	4905049	2	0	0	69.4	69.4	1	1470.95	3.25	0	74.35	0	1.96	0	0	4.4	0	0	0	0	0	0	-11.36	-11.36
Westbrook Inverter Transfor	W_INVTR1	369403	4906578	2	0	0	78.2	78.2	1	5585.46	3.25	0	85.94	0	-3.29	0	0	2.61	0	0	0	0	0	0	-7.02	-7.02
Westbrook Inverter Transfor	W_INVTR2	369368	4906388	2	0	0	77.3	77.3	1	5526.44	3.25	0	85.85	0	-3.28	0	0	2.59	0	0	0	0	0	0	-7.82	-7.82
Inverter Transformer	MV2-1 T	365836	4906816	2	0	0	69.4	69.4	1	2220.71	3.25	0	77.93	0	2.25	0	0	5.18	0	0	0	0	0	0	-16.01	-16.01
Westbrook Inverter Transfor	W_INVTR3	369514	4906164	2	0	0	77.3	77.3	1	5651.61	3.25	0	86.04	0	-3.3	0	0	2.63	0	0	0	0	0	0	-8.03	-8.03
Westbrook Inverter Transfor	W_INVTR4	369679	4906164	2	0	0	77.3	77.3	1	5816.23	3.25	0	86.29	0	-3.33	0	0	2.68	0	0	0	0	0	0	-8.3	-8.3
Westbrook Inverter Transfor	W_INVTR5	369725	4906574	2	0	0	77.3	77.3	1	5903.73	3.25	0	86.42	0	-3.35	0	0	2.71	0	0	0	0	0	0	-8.44	-8.44
Westbrook Inverter Transfor	W_INVTR7	369786	4906417	2	0	0	77.3	77.3	1	5945.09	3.25	0	86.48	0	-3.36	0	0	2.72	0	0	0	0	0	0	-8.51	-8.51
Westbrook Inverter Transfor	W_INVTR6	369881	4906578	2	0	0	77.3	77.3	1	6058.85	3.25	0	86.65	0	-3.38	0	0	2.76	0	0	0	0	0	0	-8.69	-8.69
Inverter Transformer	MV1-6 T	364482	4905835	2	0	0	56.1	56.1	1	609.27	3.25	0	66.7	0	-0.1	0	0	3.88	0	0	0	0	0	0	-14.42	-14.42
Inverter Transformer	MV1-3 T	364435	4906039	2	0	0	56.1	56.1	1	619.5	3.25	0	66.84	0	-0.1	0	0	3.91	0	0	0	0	0	0	-14.59	-14.59
Inverter Transformer	MV1-9 T	364555	4905646	2	0	0	56.1	56.1	1	690.6	3.25	0	67.78	0	-0.08	0	0	4.11	0	0	0	0	0	0	-15.75	-15.75
Inverter Transformer	MV1-5 T	364676	4905892	2	0	0	56.1	56.1	1	808.95	3.25	0	69.16	0	-0.05	0	0	4.42	0	0	0	0	0	0	-17.47	-17.47
Inverter Transformer	MV1-11 T	364649	4905414	2	0	0	56.1	56.1	1	851.88	3.25	0	69.61	0	-0.04	0	0	4.53	0	0	0	0	0	0	-18.04	-18.04
Inverter Transformer	MV1-8 T	364782	4905647	2	0	0	56.1	56.1	1	914.59	3.25	0	70.22	0	-0.02	0	0	4.68	0	0	0	0	0	0	-18.83	-18.83
Inverter Transformer	MV1-2 T	364759	4906063	2	0	0	56.1	56.1	1	929.72	3.25	0	70.37	0	-0.01	0	0	4.72	0	0	0	0	0	0	-19.02	-19.02
Inverter Transformer	MV1-1 T	364721	4906166	2	0	0	56.1	56.1	1	932.35	3.25	0	70.39	0	-0.01	0	0	4.73	0	0	0	0	0	0	-19.05	-19.05
Inverter Transformer	MV1-4 T	364821	4905918	2	0	0	56.1	56.1	1	956.22	3.25	0	70.61	0	0	0	0	4.78	0	0	0	0	0	0	-19.33	-19.33
Inverter Transformer	MV1-12 T	365044	4905386	2	0	0	56.1	56.1	1	1230.13	3.25	0	72.8	0	0.09	0	0	5.42	0	0	0	0	0	0	-22.26	-22.26
Inverter Transformer	MV6-4 T	370244	4906966	2	0	0	69.4	69.4	1	6478.97	3.25	0	87.23	0	3.26	0	0	8.3	0	0	0	0	0	0	-29.44	-29.44
Inverter Transformer	MV6-1 T	370230	4907364	2	0	0	69.4	69.4	1	6550.4	3.25	0	87.33	0	3.26	0	0	8.35	0	0	0	0	0	0	-29.58	-29.58
Inverter Transformer	MV1-15 T	365309	4904994	2	0	0	56.1	56.1	1	1630.58	3.25	0	75.25	0	0.25	0	0	6.29	0	0	0	0	0	0	-25.73	-25.73
Inverter Transformer	MV2-4 T	365590	4906628	2	0	0	56.1	56.1	1	1915.86	3.25	0	76.65	0	0.37	0	0	6.88	0	0	0	0	0	0	-27.83	-27.83
Inverter Transformer	MV2-3 T	365814	4906641	2	0	0	56.1	56.1	1	2123.91	3.25	0	77.54	0	0.46	0	0	7.28	0	0	0	0	0	0	-29.23	-29.23
Inverter Transformer	MV2-2 T	365982	4906654	2	0	0	56.1	56.1	1	2283.24	3.25	0	78.17	0	0.52	0	0	7.59	0	0	0	0	0	0	-30.22	-30.22
Inverter Transformer	MV3-12 T	367674	4907594	2	0	0	56.1	56.1	1	4212.42	3.25	0	83.49	0	1.33	0	0	10.77	0	0	0	0	0	0	-39.53	-39.53
Inverter Transformer	MV3-18 T	367757	4907412	2	0	0	56.1	56.1	1	4213.28	3.25	0	83.49	0	1.33	0	0	10.77	0	0	0	0	0	0	-39.53	-39.53
Inverter Transformer	MV3-13 T	367958	4907577	2	0	0	56.1	56.1	1	4463.27	3.25	0	83.99	0	1.43	0	0	11.12	0	0	0	0	0	0	-40.48	-40.48
Inverter Transformer	MV3-7 T	367951	4907754	2	0	0	56.1	56.1	1	4531.44	3.25	0	84.12	0	1.45	0	0	11.22	0	0	0	0	0	0	-40.74	-40.74
Inverter Transformer	MV3-3 T	367944	4907927	2	0	0	56.1	56.1	1	4603.55	3.25	0	84.26	0	1.48	0	0	11.32	0	0	0	0	0	0	-41	-41
Inverter Transformer	MV3-17 T	368183	4907472	2	0	0	56.1	56.1	1	4630.36	3.25	0	84.31	0	1.49	0	0	11.36	0	0	0	0	0	0	-41.1	-41.1

	Inverter Transformer	MV3-10 T	368162	4907669	2	0	0	56.1	56.1	1	4687.05	3.25	0	84.42	0	1.51	0	0	11.43	0	0	0	0	0	0	-41.3	-41.3
	Inverter Transformer	MV3-19 T	368352	4907347	2	0	0	56.1	56.1	1	4745.02	3.25	0	84.52	0	1.53	0	0	11.51	0	0	0	0	0	0	-41.51	-41.51
	Inverter Transformer	MV3-6 T	368156	4907834	2	0	0	56.1	56.1	1	4750.82	3.25	0	84.54	0	1.53	0	0	11.52	0	0	0	0	0	0	-41.53	-41.53
	Inverter Transformer	MV3-15 T	368351	4907477	2	0	0	56.1	56.1	1	4788.81	3.25	0	84.6	0	1.55	0	0	11.57	0	0	0	0	0	0	-41.67	-41.67
	Inverter Transformer	MV3-1 T	368150	4907976	2	0	0	56.1	56.1	1	4808.81	3.25	0	84.64	0	1.56	0	0	11.6	0	0	0	0	0	0	-41.74	-41.74
	Inverter Transformer	MV3-21 T	368484	4907206	2	0	0	56.1	56.1	1	4825.97	3.25	0	84.67	0	1.56	0	0	11.62	0	0	0	0	0	0	-41.8	-41.8
	Inverter Transformer	MV3-11 T	368340	4907662	2	0	0	56.1	56.1	1	4847.62	3.25	0	84.71	0	1.57	0	0	11.65	0	0	0	0	0	0	-41.87	-41.87
	Inverter Transformer	MV3-5 T	368335	4907843	2	0	0	56.1	56.1	1	4916.48	3.25	0	84.83	0	1.6	0	0	11.74	0	0	0	0	0	0	-42.11	-42.11
	Inverter Transformer	MV3-16 T	368509	4907475	2	0	0	56.1	56.1	1	4936.08	3.25	0	84.87	0	1.6	0	0	11.77	0	0	0	0	0	0	-42.18	-42.18
	Inverter Transformer	MV3-22 T	368661	4907142	2	0	0	56.1	56.1	1	4977.26	3.25	0	84.94	0	1.62	0	0	11.82	0	0	0	0	0	0	-42.32	-42.32
	Inverter Transformer	MV3-9 T	368517	4907703	2	0	0	56.1	56.1	1	5026.69	3.25	0	85.03	0	1.64	0	0	11.89	0	0	0	0	0	0	-42.49	-42.49
	Inverter Transformer	MV3-20 T	368683	4907317	2	0	0	56.1	56.1	1	5049.19	3.25	0	85.06	0	1.64	0	0	11.92	0	0	0	0	0	0	-42.57	-42.57
	Inverter Transformer	MV3-14 T	368678	4907498	2	0	0	56.1	56.1	1	5102.77	3.25	0	85.16	0	1.66	0	0	11.99	0	0	0	0	0	0	-42.75	-42.75
	Inverter Transformer	MV3-4 T	368507	4907925	2	0	0	56.1	56.1	1	5107.01	3.25	0	85.16	0	1.66	0	0	11.99	0	0	0	0	0	0	-42.76	-42.76
	Inverter Transformer	MV3-8 T	368685	4907712	2	0	0	56.1	56.1	1	5185.57	3.25	0	85.3	0	1.69	0	0	12.1	0	0	0	0	0	0	-43.03	-43.03
	Inverter Transformer	MV3-2 T	368677	4907928	2	0	0	56.1	56.1	1	5262.88	3.25	0	85.42	0	1.72	0	0	12.2	0	0	0	0	0	0	-43.28	-43.28
	Inverter Transformer	MV4-13 T	369057	4908605	2	0	0	56.1	56.1	1	5904.97	3.25	0	86.42	0	1.93	0	0	12.99	0	0	0	0	0	0	-45.29	-45.29
	Inverter Transformer	MV4-15 T	369170	4908481	2	0	0	56.1	56.1	1	5946.86	3.25	0	86.49	0	1.95	0	0	13.04	0	0	0	0	0	0	-45.41	-45.41
	Inverter Transformer	MV4-14 T	369182	4908507	2	0	0	56.1	56.1	1	5969.41	3.25	0	86.52	0	1.96	0	0	13.07	0	0	0	0	0	0	-45.48	-45.48
	Inverter Transformer	MV4-12 T	369049	4908803	2	0	0	56.1	56.1	1	5995.57	3.25	0	86.56	0	1.96	0	0	13.1	0	0	0	0	0	0	-45.56	-45.56
	Inverter Transformer	MV4-7 T	369040	4909001	2	0	0	56.1	56.1	1	6090.43	3.25	0	86.69	0	1.99	0	0	13.21	0	0	0	0	0	0	-45.84	-45.84
	Inverter Transformer	MV4-4 T	369033	4909199	2	0	0	56.1	56.1	1	6191.85	3.25	0	86.84	0	2.02	0	0	13.33	0	0	0	0	0	0	-46.13	-46.13
	Inverter Transformer	MV4-11 T	369269	4908855	2	0	0	56.1	56.1	1	6212.03	3.25	0	86.86	0	2.03	0	0	13.35	0	0	0	0	0	0	-46.19	-46.19
	Inverter Transformer	MV4-10 T	369307	4908858	2	0	0	56.1	56.1	1	6246.53	3.25	0	86.91	0	2.04	0	0	13.39	0	0	0	0	0	0	-46.29	-46.29
	Inverter Transformer	MV4-8 T	369262	4909001	2	0	0	56.1	56.1	1	6279.76	3.25	0	86.96	0	2.05	0	0	13.43	0	0	0	0	0	0	-46.38	-46.38
	Inverter Transformer	MV4-1 T	369017	4909397	2	0	0	56.1	56.1	1	6290.51	3.25	0	86.97	0	2.06	0	0	13.44	0	0	0	0	0	0	-46.41	-46.41
	Inverter Transformer	MV4-9 T	369284	4909001	2	0	0	56.1	56.1	1	6298.64	3.25	0	86.98	0	2.06	0	0	13.45	0	0	0	0	0	0	-46.44	-46.44
	Inverter Transformer	MV4-6 T	369249	4909192	2	0	0	56.1	56.1	1	6369.11	3.25	0	87.08	0	2.08	0	0	13.53	0	0	0	0	0	0	-46.63	-46.63
	Inverter Transformer	MV4-5 T	369283	4909199	2	0	0	56.1	56.1	1	6401.56	3.25	0	87.13	0	2.09	0	0	13.57	0	0	0	0	0	0	-46.72	-46.72
	Inverter Transformer	MV6-2 T	370091	4907339	2	0	0	56.1	56.1	1	6409.5	3.25	0	87.14	0	2.09	0	0	13.58	0	0	0	0	0	0	-46.75	-46.75
	Inverter Transformer	MV4-3 T	369234	4909397	2	0	0	56.1	56.1	1	6469.06	3.25	0	87.22	0	2.11	0	0	13.65	0	0	0	0	0	0	-46.91	-46.91
	Inverter Transformer	MV6-3 T	370202	4907140	2	0	0	56.1	56.1	1	6472.23	3.25	0	87.22	0	2.11	0	0	13.65	0	0	0	0	0	0	-46.92	-46.92
	Inverter Transformer	MV4-2 T	369267	4909397	2	0	0	56.1	56.1	1	6496.42	3.25	0	87.25	0	2.12	0	0	13.68	0	0	0	0	0	0	-46.99	-46.99
	Inverter Transformer	MV5-6 T	369987	4908507	2	0	0	56.1	56.1	1	6695.11	3.25	0	87.52	0	2.17	0	0	13.9	0	0	0	0	0	0	-47.53	-47.53
	Inverter Transformer	MV5-5 T	370021	4908690	2	0	0	56.1	56.1	1	6802.63	3.25	0	87.65	0	2.2	0	0	14.02	0	0	0	0	0	0	-47.82	-47.82
	Inverter Transformer	MV5-2 T	370011	4908853	2	0	0	56.1	56.1	1	6865.19	3.25	0	87.73	0	2.22	0	0	14.08	0	0	0	0	0	0	-47.98	-47.98
	Inverter Transformer	MV5-1 T	370015	4909142	2	0	0	56.1	56.1	1	7003.16	3.25	0	87.91	0	2.26	0	0	14.23	0	0	0	0	0	0	-48.34	-48.34
	Inverter Transformer	MV5-3 T	370237	4908851	2	0	0	56.1	56.1	1	7067.01	3.25	0	87.98	0	2.28	0	0	14.3	0	0	0	0	0	0	-48.51	-48.51
	Inverter Transformer	MV5-4 T	370330	4908707	2	0	0	56.1	56.1	1	7090.02	3.25	0	88.01	0	2.28	0	0	14.33	0	0	0	0	0	0	-48.56	-48.56
	Line Reactor	NGR	369421	4908787.5	5	0	0	45.4	45.4	1	6311.91	5.25	0	87	0	3.23	1.36	0.1	2.58	0	0	0	0	0	0	-48.83	-48.83
Limit. Valu	0	0																								
Level D/N:	31.4357	31.4357																								

Receiver: Existing Noise Receptor
ID: S-R93
X: 363825
Y: 4905672
Z: 4.5
Ground: 0

ISO	Description	ID	X	Y	Z	Ground	ReflOrd	LxT	LxN	L/A	Dist.	hm	Freq	Adiv	K0b	Agr	Abar	z	Aatm	Afol	Ahous	Cmet	CmetN	Dc	RL	LtotT	LtotN
	Inverter	MV1-6	364477	4905835	2	0	0	100.3	100.3	1	672.07	3.25	0	67.55	0	-0.43	0	0	9.6	0	0	0	0	0	0	23.59	23.59
	Inverter	MV1-9	364561	4905646	2	0	0	100.3	100.3	1	736.46	3.25	0	68.34	0	-0.39	0	0	9.91	0	0	0	0	0	0	22.45	22.45
	Inverter	MV1-11	364655	4905414	2	0	0	100.3	100.3	1	869.18	3.25	0	69.78	0	-0.31	0	0	10.45	0	0	0	0	0	0	20.39	20.39
	Inverter	MV1-5	364671	4905892	2	0	0	100.3	100.3	1	874.14	3.25	0	69.83	0	-0.31	0	0	10.47	0	0	0	0	0	0	20.32	20.32
	Inverter	MV1-8	364788	4905647	2	0	0	100.3	100.3	1	963.33	3.25	0	70.68	0	-0.26	0	0	10.79	0	0	0	0	0	0	19.11	19.11
	Inverter	MV1-2	364753	4906063	2	0	0	100.3	100.3	1	1007.01	3.25	0	71.06	0	-0.24	0	0	10.93	0	0	0	0	0	0	18.56	18.56
	Inverter	MV1-1	364715	4906166	2	0	0	100.3	100.3	1	1017.91	3.25	0	71.15	0	-0.24	0	0	10.97	0	0	0	0	0	0	18.43	18.43
	Inverter	MV1-4	364815	4905918	2	0	0	100.3	100.3	1	1020.11	3.25	0	71.17	0	-0.24	0	0	10.98	0	0	0	0	0	0	18.4	18.4
	Inverter	MV1-12	365038	4905386	2	0	0	100.3	100.3	1	1246.26	3.25	0	72.91	0	-0.13	0	0	11.66	0	0	0	0	0	0	15.88	15.88
	Inverter	MV1-13	364731	4905241	2	0	0	97.3	97.3	1	1003.3	3.25	0	71.03	0	-0.24	0	0	10.92	0	0	0	0	0	0	15.61	15.61
	Inverter	MV1-7	364925	4905782	2	0	0	97.3	97.3	1	1105.49	3.25	0	71.87	0	-0.2	0	0	11.25	0	0	0	0	0	0	14.39	14.39
	Inverter	MV1-15	365315	4904994	2	0	0	100.3	100.3	1	1637.01	3.25	0	75.28	0	0.02	0	0	12.66	0	0	0	0	0	0	12.36	12.36
	Sol_Luce Substation	S_Substation	369426	4908792	3.5	0	0	112.1	112.1	1	6411.37	5.25	0	87.14	0	1.26	2.56	0.29	10.17	0	0	0	0	0	0	10.95	10.95
	Inverter	MV1-10	365004	4905564	2	0	0	97.3	97.3	1	1183.94	3.25	0	72.47	0	-0.16	0	0	11.48	0	0	0	0	0	0	13.53	13.53
	Inverter	MV2-4	365586	4906624	2	0	0	100.3	100.3	1	2001.86	3.25	0	77.03	0	0.13	0	0	13.47	0	0	0	0	0	0	9.69	9.69
	Inverter	MV1-14	365163	4905049	2	0	0	97.3	97.3	1	1475.93	3.25	0	74.38	0	-0.04	0	0	12.26	0	0	0	0	0	0	10.71	10.71
	Inverter	MV2-3	365820	4906641	2	0	0	100.3	100.3	1	2217.88	3.25	0	77.92	0	0.19	0	0	13.91	0	0	0	0	0	0	8.3	8.3
	Inverter	MV1-3	364440	4906039	2	0	0	89.1	89.1	1	716.18	3.25	0	68.1	0	0.62	0	0	5.74	0	0	0	0	0	0	14.6	14.6
	Inverter	MV2-1	365842	4906816	2	0	0	97.3	97.3	1	2318.84	3.25	0	78.31	0	0.21	0	0	14.11	0	0	0	0	0	0	4.68	4.68
	Inverter	MV3-18	367752	4907412	2	0	0	100.3	100.3	1	4295.22	3.25	0	83.66	0	0.57	0	0	17.51	0	0	0	0	0	0	-1.43	-1.43
	Inverter	MV3-12	367668	4907594	2	0	0	100.3	100.3	1	4296.83	3.25	0	83.66	0	0.57	0	0	17.52	0	0	0	0	0	0	-1.43	-1.43
	Inverter	MV3-13	367963	4907577	2	0	0	100.3	100.3	1	4555.44	3.25	0	84.17	0	0.6	0	0	17.91	0	0	0	0	0	0	-2.37	-2.37
	Inverter	MV3-7	367945	4907754	2	0	0	100.3	100.3	1	4616.18	3.25	0	84.29	0	0.6	0	0	18.01	0	0	0	0	0	0	-2.58	-2.58

Inverter	MV3-3	367939	4907927	2	0	0	100.3	100.3	1	4691.48	3.25	0	84.43	0	0.61	0	0	18.12	0	0	0	0	0	0	-2.85	-2.85
Inverter	MV3-17	368178	4907472	2	0	0	100.3	100.3	1	4710.48	3.25	0	84.46	0	0.61	0	0	18.15	0	0	0	0	0	0	-2.91	-2.91
Inverter	MV3-10	368167	4907669	2	0	0	100.3	100.3	1	4779.22	3.25	0	84.59	0	0.62	0	0	18.25	0	0	0	0	0	0	-3.15	-3.15
Inverter	MV3-19	368357	4907347	2	0	0	100.3	100.3	1	4831.63	3.25	0	84.68	0	0.63	0	0	18.33	0	0	0	0	0	0	-3.33	-3.33
Inverter	MV3-6	368162	4907834	2	0	0	100.3	100.3	1	4846.01	3.25	0	84.71	0	0.63	0	0	18.35	0	0	0	0	0	0	-3.38	-3.38
Inverter	MV3-15	368357	4907477	2	0	0	100.3	100.3	1	4878.22	3.25	0	84.77	0	0.63	0	0	18.4	0	0	0	0	0	0	-3.48	-3.48
Inverter	MV3-21	368478	4907206	2	0	0	100.3	100.3	1	4899.34	3.25	0	84.8	0	0.63	0	0	18.43	0	0	0	0	0	0	-3.56	-3.56
Inverter	MV3-11	368346	4907662	2	0	0	100.3	100.3	1	4939.59	3.25	0	84.87	0	0.64	0	0	18.49	0	0	0	0	0	0	-3.69	-3.69
Inverter	MV3-16	368514	4907475	2	0	0	100.3	100.3	1	5023.7	3.25	0	85.02	0	0.64	0	0	18.61	0	0	0	0	0	0	-3.97	-3.97
Inverter	MV3-9	368512	4907703	2	0	0	100.3	100.3	1	5108.12	3.25	0	85.17	0	0.65	0	0	18.74	0	0	0	0	0	0	-4.24	-4.24
Inverter	MV3-20	368689	4907317	2	0	0	100.3	100.3	1	5134.64	3.25	0	85.21	0	0.65	0	0	18.78	0	0	0	0	0	0	-4.33	-4.33
Inverter	MV3-14	368684	4907498	2	0	0	100.3	100.3	1	5190.78	3.25	0	85.3	0	0.66	0	0	18.86	0	0	0	0	0	0	-4.51	-4.51
Inverter	MV3-8	368680	4907712	2	0	0	100.3	100.3	1	5266.18	3.25	0	85.43	0	0.66	0	0	18.97	0	0	0	0	0	0	-4.75	-4.75
Inverter	MV4-7	369035	4909001	2	0	0	100.3	100.3	1	6182.75	3.25	0	86.82	0	0.71	0	0	20.24	0	0	0	0	0	0	-7.46	-7.46
Inverter	MV4-4	369027	4909199	2	0	0	100.3	100.3	1	6284.95	3.25	0	86.97	0	0.71	0	0	20.38	0	0	0	0	0	0	-7.74	-7.74
Inverter	MV4-11	369264	4908855	2	0	0	100.3	100.3	1	6301.92	3.25	0	86.99	0	0.71	0	0	20.4	0	0	0	0	0	0	-7.79	-7.79
Inverter	MV4-10	369312	4908858	2	0	0	100.3	100.3	1	6344.9	3.25	0	87.05	0	0.71	0	0	20.46	0	0	0	0	0	0	-7.9	-7.9
Inverter	MV4-8	369256	4909001	2	0	0	100.3	100.3	1	6370.09	3.25	0	87.08	0	0.71	0	0	20.49	0	0	0	0	0	0	-7.97	-7.97
Inverter	MV4-1	369011	4909397	2	0	0	100.3	100.3	1	6385.16	3.25	0	87.1	0	0.71	0	0	20.51	0	0	0	0	0	0	-8.01	-8.01
Inverter	MV4-9	369289	4909001	2	0	0	100.3	100.3	1	6398.25	3.25	0	87.12	0	0.71	0	0	20.53	0	0	0	0	0	0	-8.05	-8.05
Inverter	MV4-6	369243	4909192	2	0	0	100.3	100.3	1	6461.05	3.25	0	87.21	0	0.71	0	0	20.61	0	0	0	0	0	0	-8.22	-8.22
Inverter	MV6-2	370085	4907339	2	0	0	100.3	100.3	1	6478.16	3.25	0	87.23	0	0.71	0	0	20.63	0	0	0	0	0	0	-8.26	-8.26
Inverter	MV4-5	369289	4909199	2	0	0	100.3	100.3	1	6503.46	3.25	0	87.26	0	0.71	0	0	20.66	0	0	0	0	0	0	-8.33	-8.33
Inverter	MV6-3	370207	4907140	2	0	0	100.3	100.3	1	6548.66	3.25	0	87.32	0	0.71	0	0	20.72	0	0	0	0	0	0	-8.45	-8.45
Inverter	MV4-3	369229	4909397	2	0	0	100.3	100.3	1	6563.45	3.25	0	87.34	0	0.72	0	0	20.74	0	0	0	0	0	0	-8.49	-8.49
Inverter	MV4-2	369272	4909397	2	0	0	100.3	100.3	1	6598.9	3.25	0	87.39	0	0.72	0	0	20.79	0	0	0	0	0	0	-8.58	-8.58
Inverter	MV5-5	370015	4908690	2	0	0	100.3	100.3	1	6886.54	3.25	0	87.76	0	0.71	0	0	21.16	0	0	0	0	0	0	-9.32	-9.32
Inverter	MV5-2	370006	4908853	2	0	0	100.3	100.3	1	6951.51	3.25	0	87.84	0	0.71	0	0	21.24	0	0	0	0	0	0	-9.48	-9.48
Inverter	MV5-1	370020	4909142	2	0	0	100.3	100.3	1	7100.63	3.25	0	88.03	0	0.71	0	0	21.42	0	0	0	0	0	0	-9.85	-9.85
Inverter	MV5-3	370231	4908851	2	0	0	100.3	100.3	1	7151.43	3.25	0	88.09	0	0.71	0	0	21.49	0	0	0	0	0	0	-9.97	-9.97
Inverter	MV5-4	370324	4908707	2	0	0	100.3	100.3	1	7172.74	3.25	0	88.11	0	0.7	0	0	21.51	0	0	0	0	0	0	-10.02	-10.02
Inverter	MV2-2	365977	4906654	2	0	0	89.1	89.1	1	2365.47	3.25	0	78.48	0	0.99	0	0	8.63	0	0	0	0	0	0	0.95	0.95
Inverter	MV6-1	370235	4907364	2	0	0	97.3	97.3	1	6629.55	3.25	0	87.43	0	0.71	0	0	20.83	0	0	0	0	0	0	-11.66	-11.66
DSTATCOM - 10 MVAR #2	DSAT2	369403	4908757	2.5	0	0	96.6	96.6	1	6374.27	3.5	0	87.09	0	3.8	0	0	4.02	0	0	0	0	0	0	1.72	1.72
DSTATCOM - 10 MVAR #1	DSAT1	369437	4908757	2.5	0	0	96.6	96.6	1	6404.04	3.5	0	87.13	0	3.8	0	0	4.03	0	0	0	0	0	0	1.67	1.67
Gardiner Substation	G_Sub	366586.3	4903349.9	2.5	0	0	90.8	90.8	1	3607.9	4.25	0	82.15	0	1.25	2.75	0.28	6.83	0	0	0	0	0	0	-2.2	-2.2
SubstationTransformer	W_ST	369711.17	4906112.3	2.5	0	0	92	92	1	5902.61	4.25	0	86.42	0	1.85	2.12	0.29	9.64	0	0	0	0	0	0	-8.06	-8.06
Inverters	G_Inv1	366526.4	4903225.8	2	0	0	87.7	87.7	1	3644.37	3.25	0	82.23	0	2.76	0	0	4.49	0	0	0	0	0	0	-1.82	-1.82
Inverters	G_Inv2	366676.9	4903239.1	2	0	0	87.7	87.7	1	3748.65	3.25	0	82.48	0	2.77	0	0	4.6	0	0	0	0	0	0	-2.19	-2.19
Inverters	G_Inv3	366583.7	4903091.4	2	0	0	87.7	87.7	1	3777.56	3.25	0	82.54	0	2.77	0	0	4.63	0	0	0	0	0	0	-2.29	-2.29
Inverters	G_Inv4	366732.8	4903105	2	0	0	87.7	87.7	1	3878.76	3.25	0	82.77	0	2.78	0	0	4.74	0	0	0	0	0	0	-2.64	-2.64
Inverters	G_Inv5	366638.5	4902958.1	2	0	0	87.7	87.7	1	3909.1	3.25	0	82.84	0	2.78	0	0	4.78	0	0	0	0	0	0	-2.74	-2.74
Inverters	G_Inv6	366788.5	4902972	2	0	0	87.7	87.7	1	4009.03	3.25	0	83.06	0	2.79	0	0	4.88	0	0	0	0	0	0	-3.08	-3.08
Inverters	G_Inv7	366694.6	4902824.7	2	0	0	87.7	87.7	1	4042.49	3.25	0	83.13	0	2.8	0	0	4.92	0	0	0	0	0	0	-3.19	-3.19
Inverters	G_Inv8	366844.5	4902838.5	2	0	0	87.7	87.7	1	4140.79	3.25	0	83.34	0	2.8	0	0	5.03	0	0	0	0	0	0	-3.51	-3.51
Inverters	G_Inv9	366750.9	4902691.8	2	0	0	87.7	87.7	1	4176.42	3.25	0	83.42	0	2.81	0	0	5.06	0	0	0	0	0	0	-3.63	-3.63
Inverter	MV3-1	368156	4907976	2	0	0	89.1	89.1	1	4905.71	3.25	0	84.81	0	1.62	0	0	12.34	0	0	0	0	0	0	-9.71	-9.71
Inverter	MV3-5	368340	4907843	2	0	0	89.1	89.1	1	5009.84	3.25	0	85	0	1.64	0	0	12.48	0	0	0	0	0	0	-10.06	-10.06
Inverters	G_Inv10	366900.7	4902704.8	2	0	0	87.7	87.7	1	4273.67	3.25	0	83.62	0	2.81	0	0	5.17	0	0	0	0	0	0	-3.94	-3.94
Inverter	MV3-22	368656	4907142	2	0	0	89.1	89.1	1	5049.7	3.25	0	85.07	0	1.65	0	0	12.53	0	0	0	0	0	0	-10.19	-10.19
Inverter	MV3-4	368502	4907925	2	0	0	89.1	89.1	1	5191.37	3.25	0	85.31	0	1.69	0	0	12.72	0	0	0	0	0	0	-10.65	-10.65
Inverter	MV3-2	368671	4907928	2	0	0	89.1	89.1	1	5345.4	3.25	0	85.56	0	1.73	0	0	12.92	0	0	0	0	0	0	-11.15	-11.15
Westbrook Inverter Enclosur	W_INV2	369374	4906388	2	0	0	89.1	89.1	1	5595	3.25	0	85.96	0	1.79	0	0	13.25	0	0	0	0	0	0	-11.93	-11.93
Westbrook Inverter Enclosur	W_INV3	369508	4906164	2	0	0	89.1	89.1	1	5704.26	3.25	0	86.12	0	1.81	0	0	13.39	0	0	0	0	0	0	-12.27	-12.27
Fixed Reactor Bank 1	FRB1	369378	4908755	6	0	0	89.8	89.8	1	6351.43	5.25	0	87.06	0	-0.37	0	0	10.11	0	0	0	0	0	0	-7.02	-7.02
Westbrook Inverter Enclosur	W_INV4	369673	4906164	2	0	0	89.1	89.1	1	5868.66	3.25	0	86.37	0	1.85	0	0	13.6	0	0	0	0	0	0	-12.76	-12.76
Fixed Reactor Bank 2	FRB2	369464	4908755	6	0	0	89.8	89.8	1	6426.76	5.25	0	87.16	0	-0.36	0	0	10.18	0	0	0	0	0	0	-7.21	-7.21
Westbrook Inverter Enclosur	W_INV5	369719	4906574	2	0	0	89.1	89.1	1	5962.62	3.25	0	86.51	0	1.88	0	0	13.72	0	0	0	0	0	0	-13.04	-13.04
Inverter	MV4-13	369051	4908605	2	0	0	89.1	89.1	1	5992.79	3.25	0	86.55	0	1.88	0	0	13.75	0	0	0	0	0	0	-13.13	-13.13
Westbrook Inverter Enclosur	W_INV7	369780	4906417	2	0	0	89.1	89.1	1	6001.42	3.25	0	86.57	0	1.89	0	0	13.76	0	0	0	0	0	0	-13.16	-13.16
Inverter	MV4-15	369176	4908481	2	0	0	89.1	89.1	1	6043.48	3.25	0	86.63	0	1.9	0	0	13.82	0	0	0	0	0	0	-13.28	-13.28
Inverter	MV4-14	369176	4908507	2	0	0	89.1	89.1	1	6055.61	3.25	0	86.64	0	1.9	0	0	13.83	0	0	0	0	0	0	-13.32	-13.32
Inverter	MV4-12	369043	4908803	2	0	0	89.1	89.1	1	6085.28	3.25	0	86.69	0	1.91	0	0	13.87	0	0	0	0	0	0	-13.4	-13.4
Westbrook Inverter Enclosur	W_INV6	369875	4906578	2	0	0	89.1	89.1	1	6117.46	3.25	0	86.73	0	1.91	0	0	13.91	0	0	0	0	0	0	-13.5	-13.5
Inverter	MV5-6	369982	4908507	2	0	0	89.1	89.1	1	6778.34	3.25	0	87.62	0	2.07	0	0	14.72	0	0	0	0	0	0	-15.36	-15.36
Westbrook Inverter Enclosur	W_INV1	369409	4906578	2	0	0	86.1	86.1	1	5657.02	3.25	0	86.05	0	1.8	0	0	13.33	0	0	0	0	0	0	-15.12	-15.12
Inverter	MV6-4	370250	4906966	2	0	0	86.1	86.1	1	6554.01	3.25	0	87.33	0	2.02	0	0	14.45	0	0	0	0	0	0	-17.74	-17.74
Inverter Transformer	MV1-13 T	364725	4905241	2	0	0	69.4	69.4	1	997.88	3.25	0	70.98	0	1.68	0	0	3.81	0	0	0	0	0	0	-7.12	-7.12
Inverter Transformer	MV1-7 T	364919	4905782	2	0	0	69.4	69.4	1	1099.52	3.25	0	71.82	0	1.76	0	0	3.95	0	0	0	0	0	0	-8.18	-8.18
Inverter Transformer	MV1-10 T	365010	4905564	2	0	0	69.4	69.4	1	1189.91	3.25	0	72.51	0	1.82	0	0	4.06	0	0	0	0	0	0	-9.04	-9.04
Inverter Transformer	MV1-14 T	365157	4905049	2	0	0	69.4	69.4	1	1470.5	3.25	0	74.35	0	1.96	0	0	4.4	0	0	0	0	0	0	-11.36	-11.36
Westbrook Inverter Transfor	W_INVTR1	369403	4906578	2	0	0	78.2	78.2	1	5651.1	3.25	0	86.04	0	-3.3	0	0	2.63	0	0	0	0	0	0	-7.13	-7.13
Westbrook Inverter Transfor	W_INVTR2	369368	4906388	2	0	0	77.3	77.3	1	5589.05	3.25	0	85.95	0	-3.29	0	0	2.61	0	0	0	0	0	0	-7.92	-7.92
Westbrook Inverter Transfor	W_INVTR3	369514	4906164	2	0	0	77.3	77.3	1	5710.24	3.25	0	86.13	0	-3.31	0	0	2.65	0	0	0	0	0	0	-8.13	-8.13

Inverter Transformer	MV2-1 T	365836	4906816	2	0	0	69.4	69.4	1	2313.63	3.25	0	78.29	0	2.29	0	0	5.27	0	0	0	0	0	0	-16.49	-16.49
Westbrook Inverter Transfor	W_INVTR4	369679	4906164	2	0	0	77.3	77.3	1	5874.64	3.25	0	86.38	0	-3.34	0	0	2.7	0	0	0	0	0	0	-8.39	-8.39
Westbrook Inverter Transfor	W_INVTR5	369725	4906574	2	0	0	77.3	77.3	1	5968.55	3.25	0	86.52	0	-3.36	0	0	2.73	0	0	0	0	0	0	-8.54	-8.54
Westbrook Inverter Transfor	W_INVTR7	369786	4906417	2	0	0	77.3	77.3	1	6007.37	3.25	0	86.57	0	-3.37	0	0	2.74	0	0	0	0	0	0	-8.61	-8.61
Westbrook Inverter Transfor	W_INVTR6	369881	4906578	2	0	0	77.3	77.3	1	6123.4	3.25	0	86.74	0	-3.39	0	0	2.78	0	0	0	0	0	0	-8.79	-8.79
Inverter Transformer	MV1-6 T	364482	4905835	2	0	0	56.1	56.1	1	676.92	3.25	0	67.61	0	-0.09	0	0	4.07	0	0	0	0	0	0	-15.54	-15.54
Inverter Transformer	MV1-3 T	364435	4906039	2	0	0	56.1	56.1	1	711.9	3.25	0	68.05	0	-0.08	0	0	4.17	0	0	0	0	0	0	-16.08	-16.08
Inverter Transformer	MV1-9 T	364555	4905646	2	0	0	56.1	56.1	1	730.47	3.25	0	68.27	0	-0.07	0	0	4.21	0	0	0	0	0	0	-16.36	-16.36
Inverter Transformer	MV1-11 T	364649	4905414	2	0	0	56.1	56.1	1	863.45	3.25	0	69.72	0	-0.03	0	0	4.56	0	0	0	0	0	0	-18.19	-18.19
Inverter Transformer	MV1-5 T	364676	4905892	2	0	0	56.1	56.1	1	878.98	3.25	0	69.88	0	-0.03	0	0	4.59	0	0	0	0	0	0	-18.39	-18.39
Inverter Transformer	MV1-8 T	364782	4905647	2	0	0	56.1	56.1	1	957.33	3.25	0	70.62	0	0	0	0	4.79	0	0	0	0	0	0	-19.35	-19.35
Inverter Transformer	MV1-2 T	364759	4906063	2	0	0	56.1	56.1	1	1012.54	3.25	0	71.11	0	0.02	0	0	4.92	0	0	0	0	0	0	-19.99	-19.99
Inverter Transformer	MV1-1 T	364721	4906166	2	0	0	56.1	56.1	1	1023.16	3.25	0	71.2	0	0.02	0	0	4.94	0	0	0	0	0	0	-20.1	-20.1
Inverter Transformer	MV1-4 T	364821	4905918	2	0	0	56.1	56.1	1	1025.93	3.25	0	71.22	0	0.02	0	0	4.95	0	0	0	0	0	0	-20.14	-20.14
Inverter Transformer	MV1-12 T	365044	4905386	2	0	0	56.1	56.1	1	1252.1	3.25	0	72.95	0	0.1	0	0	5.47	0	0	0	0	0	0	-22.47	-22.47
Inverter Transformer	MV6-4 T	370244	4906966	2	0	0	69.4	69.4	1	6548.13	3.25	0	87.32	0	3.26	0	0	8.34	0	0	0	0	0	0	-29.58	-29.58
Inverter Transformer	MV6-1 T	370230	4907364	2	0	0	69.4	69.4	1	6624.72	3.25	0	87.42	0	3.27	0	0	8.39	0	0	0	0	0	0	-29.74	-29.74
Inverter Transformer	MV1-15 T	365309	4904994	2	0	0	56.1	56.1	1	1631.55	3.25	0	75.25	0	0.25	0	0	6.3	0	0	0	0	0	0	-25.74	-25.74
Inverter Transformer	MV2-4 T	365590	4906628	2	0	0	56.1	56.1	1	2007.28	3.25	0	77.05	0	0.41	0	0	7.06	0	0	0	0	0	0	-28.46	-28.46
Inverter Transformer	MV2-3 T	365814	4906641	2	0	0	56.1	56.1	1	2212.48	3.25	0	77.9	0	0.49	0	0	7.45	0	0	0	0	0	0	-29.79	-29.79
Inverter Transformer	MV2-2 T	365982	4906654	2	0	0	56.1	56.1	1	2370.02	3.25	0	78.5	0	0.56	0	0	7.75	0	0	0	0	0	0	-30.75	-30.75
Inverter Transformer	MV3-18 T	367757	4907412	2	0	0	56.1	56.1	1	4299.79	3.25	0	83.67	0	1.36	0	0	10.89	0	0	0	0	0	0	-39.87	-39.87
Inverter Transformer	MV3-12 T	367674	4907594	2	0	0	56.1	56.1	1	4302.2	3.25	0	83.67	0	1.36	0	0	10.9	0	0	0	0	0	0	-39.87	-39.87
Inverter Transformer	MV3-13 T	367958	4907577	2	0	0	56.1	56.1	1	4550.9	3.25	0	84.16	0	1.46	0	0	11.25	0	0	0	0	0	0	-40.81	-40.81
Inverter Transformer	MV3-7 T	367951	4907754	2	0	0	56.1	56.1	1	4621.54	3.25	0	84.3	0	1.49	0	0	11.34	0	0	0	0	0	0	-41.07	-41.07
Inverter Transformer	MV3-3 T	367944	4907927	2	0	0	56.1	56.1	1	4695.87	3.25	0	84.43	0	1.51	0	0	11.45	0	0	0	0	0	0	-41.34	-41.34
Inverter Transformer	MV3-17 T	368183	4907472	2	0	0	56.1	56.1	1	4715.1	3.25	0	84.47	0	1.52	0	0	11.47	0	0	0	0	0	0	-41.4	-41.4
Inverter Transformer	MV3-10 T	368162	4907669	2	0	0	56.1	56.1	1	4774.68	3.25	0	84.58	0	1.54	0	0	11.55	0	0	0	0	0	0	-41.62	-41.62
Inverter Transformer	MV3-19 T	368352	4907347	2	0	0	56.1	56.1	1	4826.94	3.25	0	84.67	0	1.56	0	0	11.62	0	0	0	0	0	0	-41.8	-41.8
Inverter Transformer	MV3-6 T	368156	4907834	2	0	0	56.1	56.1	1	4840.64	3.25	0	84.7	0	1.57	0	0	11.64	0	0	0	0	0	0	-41.85	-41.85
Inverter Transformer	MV3-15 T	368351	4907477	2	0	0	56.1	56.1	1	4872.65	3.25	0	84.76	0	1.58	0	0	11.68	0	0	0	0	0	0	-41.96	-41.96
Inverter Transformer	MV3-1 T	368150	4907976	2	0	0	56.1	56.1	1	4900.41	3.25	0	84.8	0	1.59	0	0	11.72	0	0	0	0	0	0	-42.06	-42.06
Inverter Transformer	MV3-21 T	368484	4907206	2	0	0	56.1	56.1	1	4905.04	3.25	0	84.81	0	1.59	0	0	11.73	0	0	0	0	0	0	-42.07	-42.07
Inverter Transformer	MV3-11 T	368340	4907662	2	0	0	56.1	56.1	1	4934.1	3.25	0	84.86	0	1.6	0	0	11.77	0	0	0	0	0	0	-42.17	-42.17
Inverter Transformer	MV3-5 T	368335	4907843	2	0	0	56.1	56.1	1	5005.33	3.25	0	84.99	0	1.63	0	0	11.86	0	0	0	0	0	0	-42.42	-42.42
Inverter Transformer	MV3-16 T	368509	4907475	2	0	0	56.1	56.1	1	5019.03	3.25	0	85.01	0	1.63	0	0	11.88	0	0	0	0	0	0	-42.47	-42.47
Inverter Transformer	MV3-22 T	368661	4907142	2	0	0	56.1	56.1	1	5054.48	3.25	0	85.07	0	1.65	0	0	11.93	0	0	0	0	0	0	-42.59	-42.59
Inverter Transformer	MV3-9 T	368517	4907703	2	0	0	56.1	56.1	1	5112.71	3.25	0	85.17	0	1.67	0	0	12	0	0	0	0	0	0	-42.78	-42.78
Inverter Transformer	MV3-20 T	368683	4907317	2	0	0	56.1	56.1	1	5128.96	3.25	0	85.2	0	1.67	0	0	12.02	0	0	0	0	0	0	-42.84	-42.84
Inverter Transformer	MV3-14 T	368678	4907498	2	0	0	56.1	56.1	1	5185.16	3.25	0	85.3	0	1.69	0	0	12.1	0	0	0	0	0	0	-43.02	-43.02
Inverter Transformer	MV3-4 T	368507	4907925	2	0	0	56.1	56.1	1	5195.88	3.25	0	85.31	0	1.7	0	0	12.11	0	0	0	0	0	0	-43.06	-43.06
Inverter Transformer	MV3-8 T	368685	4907712	2	0	0	56.1	56.1	1	5270.79	3.25	0	85.44	0	1.72	0	0	12.21	0	0	0	0	0	0	-43.31	-43.31
Inverter Transformer	MV3-2 T	368677	4907928	2	0	0	56.1	56.1	1	5350.84	3.25	0	85.57	0	1.75	0	0	12.31	0	0	0	0	0	0	-43.57	-43.57
Inverter Transformer	MV4-13 T	369057	4908605	2	0	0	56.1	56.1	1	5998.03	3.25	0	86.56	0	1.96	0	0	13.1	0	0	0	0	0	0	-45.57	-45.57
Inverter Transformer	MV4-15 T	369170	4908481	2	0	0	56.1	56.1	1	6038.17	3.25	0	86.62	0	1.98	0	0	13.15	0	0	0	0	0	0	-45.68	-45.68
Inverter Transformer	MV4-14 T	369182	4908507	2	0	0	56.1	56.1	1	6060.91	3.25	0	86.65	0	1.98	0	0	13.17	0	0	0	0	0	0	-45.75	-45.75
Inverter Transformer	MV4-12 T	369049	4908803	2	0	0	56.1	56.1	1	6090.43	3.25	0	86.69	0	1.99	0	0	13.21	0	0	0	0	0	0	-45.84	-45.84
Inverter Transformer	MV4-7 T	369040	4909001	2	0	0	56.1	56.1	1	6186.96	3.25	0	86.83	0	2.02	0	0	13.32	0	0	0	0	0	0	-46.12	-46.12
Inverter Transformer	MV4-4 T	369033	4909199	2	0	0	56.1	56.1	1	6289.91	3.25	0	86.97	0	2.05	0	0	13.44	0	0	0	0	0	0	-46.41	-46.41
Inverter Transformer	MV4-11 T	369269	4908855	2	0	0	56.1	56.1	1	6306.24	3.25	0	87	0	2.06	0	0	13.46	0	0	0	0	0	0	-46.46	-46.46
Inverter Transformer	MV4-10 T	369307	4908858	2	0	0	56.1	56.1	1	6340.58	3.25	0	87.04	0	2.07	0	0	13.5	0	0	0	0	0	0	-46.55	-46.55
Inverter Transformer	MV4-8 T	369262	4909001	2	0	0	56.1	56.1	1	6375.2	3.25	0	87.09	0	2.08	0	0	13.54	0	0	0	0	0	0	-46.65	-46.65
Inverter Transformer	MV4-1 T	369017	4909397	2	0	0	56.1	56.1	1	6390.03	3.25	0	87.11	0	2.09	0	0	13.56	0	0	0	0	0	0	-46.69	-46.69
Inverter Transformer	MV4-9 T	369284	4909001	2	0	0	56.1	56.1	1	6393.98	3.25	0	87.12	0	2.09	0	0	13.56	0	0	0	0	0	0	-46.7	-46.7
Inverter Transformer	MV4-6 T	369249	4909192	2	0	0	56.1	56.1	1	6466.08	3.25	0	87.21	0	2.11	0	0	13.64	0	0	0	0	0	0	-46.9	-46.9
Inverter Transformer	MV6-2 T	370091	4907339	2	0	0	56.1	56.1	1	6483.95	3.25	0	87.24	0	2.11	0	0	13.66	0	0	0	0	0	0	-46.95	-46.95
Inverter Transformer	MV4-5 T	369283	4909199	2	0	0	56.1	56.1	1	6498.42	3.25	0	87.26	0	2.12	0	0	13.68	0	0	0	0	0	0	-46.99	-46.99
Inverter Transformer	MV6-3 T	370202	4907140	2	0	0	56.1	56.1	1	6543.79	3.25	0	87.32	0	2.13	0	0	13.73	0	0	0	0	0	0	-47.12	-47.12
Inverter Transformer	MV4-3 T	369234	4909397	2	0	0	56.1	56.1	1	6567.57	3.25	0	87.35	0	2.14	0	0	13.76	0	0	0	0	0	0	-47.18	-47.18
Inverter Transformer	MV4-2 T	369267	4909397	2	0	0	56.1	56.1	1	6594.77	3.25	0	87.38	0	2.15	0	0	13.79	0	0	0	0	0	0	-47.26	-47.26
Inverter Transformer	MV5-6 T	369987	4908507	2	0	0	56.1	56.1	1	6782.88	3.25	0	87.63	0	2.2	0	0	13.99	0	0	0	0	0	0	-47.76	-47.76
Inverter Transformer	MV5-5 T	370021	4908690	2	0	0	56.1	56.1	1	6891.93	3.25	0	87.77	0	2.23	0	0	14.11	0	0	0	0	0	0	-48.05	-48.05
Inverter Transformer	MV5-2 T	370011	4908853	2	0	0	56.1	56.1	1	6955.96	3.25	0	87.85	0	2.25	0	0	14.18	0	0	0	0	0	0	-48.22	-48.22
Inverter Transformer	MV5-1 T	370015	4909142	2	0	0	56.1	56.1	1	7096.27	3.25	0	88.02	0	2.29	0	0	14.33	0	0	0	0	0	0	-48.58	-48.58
Inverter Transformer	MV5-3 T	370237	4908851	2	0	0	56.1	56.1	1	7156.8	3.25	0	88.09	0	2.3	0	0	14.4	0	0	0	0	0	0	-48.73	-48.73
Inverter Transformer	MV5-4 T	370330	4908707	2	0	0	56.1	56.1	1	7178.18	3.25	0	88.12	0	2.31	0	0	14.42	0	0	0	0	0	0	-48.79	-48.79
Line Reactor	NGR	369421	4908787.5	5	0	0	45.4	45.4	1	6404.81	5.25	0	87.13	0	3.23	1.36	0.1	2.62	0	0	0	0	0	0	-48.99	-48.99
Limit. Valu 0	0																								
Level D/N: 30.6156	30.6156																								

Receiver: Existing Noise Receptor
ID: S-R94
X: 363753
Y: 4905589

Z: 4.5
Ground: 0

ISO	Description	ID	X	Y	Z	Ground	ReflOrd	LxT	LxN	L/A	Dist.	hm	Freq	Adiv	K0b	Agr	Abar	z	Aatm	Afol	Ahous	Cmet	CmetN	Dc	RL	LtotT	LtotN
	Inverter	MV1-6	364477	4905835	2	0	0	100.3	100.3	1	764.66	3.25	0	68.67	0	-0.37	0	0	10.03	0	0	0	0	0	0	21.98	21.98
	Inverter	MV1-9	364561	4905646	2	0	0	100.3	100.3	1	810.01	3.25	0	69.17	0	-0.35	0	0	10.22	0	0	0	0	0	0	21.27	21.27
	Inverter	MV1-11	364655	4905414	2	0	0	100.3	100.3	1	918.82	3.25	0	70.26	0	-0.29	0	0	10.63	0	0	0	0	0	0	19.7	19.7
	Inverter	MV1-5	364671	4905892	2	0	0	100.3	100.3	1	966.72	3.25	0	70.71	0	-0.26	0	0	10.8	0	0	0	0	0	0	19.07	19.07
	Inverter	MV1-8	364788	4905647	2	0	0	100.3	100.3	1	1036.63	3.25	0	71.31	0	-0.23	0	0	11.03	0	0	0	0	0	0	18.2	18.2
	Inverter	MV1-2	364753	4906063	2	0	0	100.3	100.3	1	1106.65	3.25	0	71.88	0	-0.2	0	0	11.25	0	0	0	0	0	0	17.38	17.38
	Inverter	MV1-4	364815	4905918	2	0	0	100.3	100.3	1	1111.8	3.25	0	71.92	0	-0.19	0	0	11.26	0	0	0	0	0	0	17.32	17.32
	Inverter	MV1-1	364715	4906166	2	0	0	100.3	100.3	1	1121.78	3.25	0	72	0	-0.19	0	0	11.3	0	0	0	0	0	0	17.21	17.21
	Inverter	MV1-12	365038	4905386	2	0	0	100.3	100.3	1	1300.94	3.25	0	73.29	0	-0.11	0	0	11.81	0	0	0	0	0	0	15.33	15.33
	Inverter	MV1-13	364731	4905241	2	0	0	97.3	97.3	1	1038.07	3.25	0	71.32	0	-0.23	0	0	11.03	0	0	0	0	0	0	15.18	15.18
	Inverter	MV1-15	365315	4904994	2	0	0	100.3	100.3	1	1671.49	3.25	0	75.46	0	0.03	0	0	12.74	0	0	0	0	0	0	12.09	12.09
	Inverter	MV1-7	364925	4905782	2	0	0	97.3	97.3	1	1187.79	3.25	0	72.49	0	-0.16	0	0	11.49	0	0	0	0	0	0	13.49	13.49
	Sol_Luce Substation	S_Substation	369426	4908792	3.5	0	0	112.1	112.1	1	6514.76	5.25	0	87.28	0	1.28	2.54	0.29	10.27	0	0	0	0	0	0	10.71	10.71
	Inverter	MV1-10	365004	4905564	2	0	0	97.3	97.3	1	1251.25	3.25	0	72.95	0	-0.13	0	0	11.67	0	0	0	0	0	0	12.83	12.83
	Inverter	MV2-4	365586	4906624	2	0	0	100.3	100.3	1	2105.02	3.25	0	77.47	0	0.16	0	0	13.68	0	0	0	0	0	0	9.01	9.01
	Inverter	MV1-14	365163	4905049	2	0	0	97.3	97.3	1	1509.87	3.25	0	74.58	0	-0.03	0	0	12.35	0	0	0	0	0	0	10.41	10.41
	Inverter	MV2-3	365820	4906641	2	0	0	100.3	100.3	1	2319.31	3.25	0	78.31	0	0.21	0	0	14.11	0	0	0	0	0	0	7.68	7.68
	Inverter	MV1-3	364440	4906039	2	0	0	89.1	89.1	1	821.26	3.25	0	69.29	0	0.64	0	0	5.96	0	0	0	0	0	0	13.16	13.16
	Inverter	MV2-1	365842	4906816	2	0	0	97.3	97.3	1	2422.7	3.25	0	78.69	0	0.24	0	0	14.31	0	0	0	0	0	0	4.08	4.08
	Inverter	MV3-18	367752	4907412	2	0	0	100.3	100.3	1	4394.92	3.25	0	83.86	0	0.58	0	0	17.67	0	0	0	0	0	0	-1.79	-1.79
	Inverter	MV3-12	367668	4907594	2	0	0	100.3	100.3	1	4398.55	3.25	0	83.87	0	0.58	0	0	17.67	0	0	0	0	0	0	-1.81	-1.81
	Inverter	MV3-13	367963	4907577	2	0	0	100.3	100.3	1	4655.78	3.25	0	84.36	0	0.61	0	0	18.07	0	0	0	0	0	0	-2.72	-2.72
	Inverter	MV3-7	367945	4907754	2	0	0	100.3	100.3	1	4718.06	3.25	0	84.48	0	0.61	0	0	18.16	0	0	0	0	0	0	-2.94	-2.94
	Inverter	MV3-3	367939	4907927	2	0	0	100.3	100.3	1	4794.67	3.25	0	84.62	0	0.62	0	0	18.28	0	0	0	0	0	0	-3.2	-3.2
	Inverter	MV3-17	368178	4907472	2	0	0	100.3	100.3	1	4808.98	3.25	0	84.64	0	0.62	0	0	18.3	0	0	0	0	0	0	-3.25	-3.25
	Inverter	MV3-10	368167	4907669	2	0	0	100.3	100.3	1	4879.53	3.25	0	84.77	0	0.63	0	0	18.4	0	0	0	0	0	0	-3.49	-3.49
	Inverter	MV3-19	368357	4907347	2	0	0	100.3	100.3	1	4928.22	3.25	0	84.85	0	0.64	0	0	18.47	0	0	0	0	0	0	-3.65	-3.65
	Inverter	MV3-6	368162	4907834	2	0	0	100.3	100.3	1	4947.66	3.25	0	84.89	0	0.64	0	0	18.5	0	0	0	0	0	0	-3.72	-3.72
	Inverter	MV3-15	368357	4907477	2	0	0	100.3	100.3	1	4976.08	3.25	0	84.94	0	0.64	0	0	18.54	0	0	0	0	0	0	-3.81	-3.81
	Inverter	MV3-21	368478	4907206	2	0	0	100.3	100.3	1	4994.03	3.25	0	84.97	0	0.64	0	0	18.57	0	0	0	0	0	0	-3.87	-3.87
	Inverter	MV3-11	368346	4907662	2	0	0	100.3	100.3	1	5039.15	3.25	0	85.05	0	0.65	0	0	18.64	0	0	0	0	0	0	-4.02	-4.02
	Inverter	MV3-16	368514	4907475	2	0	0	100.3	100.3	1	5120.95	3.25	0	85.19	0	0.65	0	0	18.76	0	0	0	0	0	0	-4.28	-4.28
	Inverter	MV3-9	368512	4907703	2	0	0	100.3	100.3	1	5207.41	3.25	0	85.33	0	0.66	0	0	18.88	0	0	0	0	0	0	-4.56	-4.56
	Inverter	MV3-20	368689	4907317	2	0	0	100.3	100.3	1	5229.73	3.25	0	85.37	0	0.66	0	0	18.91	0	0	0	0	0	0	-4.63	-4.63
	Inverter	MV3-14	368684	4907498	2	0	0	100.3	100.3	1	5287.63	3.25	0	85.47	0	0.67	0	0	19	0	0	0	0	0	0	-4.82	-4.82
	Inverter	MV3-8	368680	4907712	2	0	0	100.3	100.3	1	5364.93	3.25	0	85.59	0	0.67	0	0	19.11	0	0	0	0	0	0	-5.06	-5.06
	Inverter	MV4-7	369035	4909001	2	0	0	100.3	100.3	1	6288.19	3.25	0	86.97	0	0.71	0	0	20.38	0	0	0	0	0	0	-7.75	-7.75
	Inverter	MV4-4	369027	4909199	2	0	0	100.3	100.3	1	6391.18	3.25	0	87.11	0	0.71	0	0	20.52	0	0	0	0	0	0	-8.03	-8.03
	Inverter	MV4-11	369264	4908855	2	0	0	100.3	100.3	1	6406.08	3.25	0	87.13	0	0.71	0	0	20.54	0	0	0	0	0	0	-8.07	-8.07
	Inverter	MV4-10	369312	4908858	2	0	0	100.3	100.3	1	6448.94	3.25	0	87.19	0	0.71	0	0	20.59	0	0	0	0	0	0	-8.18	-8.18
	Inverter	MV4-8	369256	4909001	2	0	0	100.3	100.3	1	6474.93	3.25	0	87.22	0	0.71	0	0	20.63	0	0	0	0	0	0	-8.25	-8.25
	Inverter	MV4-1	369011	4909397	2	0	0	100.3	100.3	1	6492.11	3.25	0	87.25	0	0.71	0	0	20.65	0	0	0	0	0	0	-8.3	-8.3
	Inverter	MV4-9	369289	4909001	2	0	0	100.3	100.3	1	6503	3.25	0	87.26	0	0.71	0	0	20.66	0	0	0	0	0	0	-8.33	-8.33
	Inverter	MV4-6	369243	4909192	2	0	0	100.3	100.3	1	6566.71	3.25	0	87.35	0	0.72	0	0	20.75	0	0	0	0	0	0	-8.5	-8.5
	Inverter	MV6-2	370085	4907339	2	0	0	100.3	100.3	1	6569.38	3.25	0	87.35	0	0.72	0	0	20.75	0	0	0	0	0	0	-8.5	-8.5
	Inverter	MV4-5	369289	4909199	2	0	0	100.3	100.3	1	6609.04	3.25	0	87.4	0	0.72	0	0	20.8	0	0	0	0	0	0	-8.61	-8.61
	Inverter	MV6-3	370207	4907140	2	0	0	100.3	100.3	1	6637.75	3.25	0	87.44	0	0.71	0	0	20.84	0	0	0	0	0	0	-8.68	-8.68
	Inverter	MV4-3	369229	4909397	2	0	0	100.3	100.3	1	6669.89	3.25	0	87.48	0	0.71	0	0	20.88	0	0	0	0	0	0	-8.76	-8.76
	Inverter	MV4-2	369272	4909397	2	0	0	100.3	100.3	1	6705.24	3.25	0	87.53	0	0.71	0	0	20.92	0	0	0	0	0	0	-8.86	-8.86
	Inverter	MV5-5	370015	4908690	2	0	0	100.3	100.3	1	6987.76	3.25	0	87.89	0	0.71	0	0	21.28	0	0	0	0	0	0	-9.57	-9.57
	Inverter	MV5-2	370006	4908853	2	0	0	100.3	100.3	1	7053.63	3.25	0	87.97	0	0.71	0	0	21.37	0	0	0	0	0	0	-9.73	-9.73
	Inverter	MV5-1	370020	4909142	2	0	0	100.3	100.3	1	7204.1	5.13	0	88.15	0	1.78	2.27	0.01	21.55	0	0	0	0	0	0	-13.44	-13.44
	Inverter	MV5-3	370231	4908851	2	0	0	100.3	100.3	1	7252.94	3.25	0	88.21	0	0.7	0	0	21.61	0	0	0	0	0	0	-10.21	-10.21
	Inverter	MV5-4	370324	4908707	2	0	0	100.3	100.3	1	7273.24	3.25	0	88.23	0	0.7	0	0	21.64	0	0	0	0	0	0	-10.26	-10.26
	Inverter	MV2-2	365977	4906654	2	0	0	89.1	89.1	1	2465.85	3.25	0	78.84	0	1.02	0	0	8.79	0	0	0	0	0	0	0.41	0.41
	Inverter	MV6-1	370235	4907364	2	0	0	97.3	97.3	1	6720.64	3.25	0	87.55	0	0.71	0	0	20.94	0	0	0	0	0	0	-11.9	-11.9
	DSTATCOM - 10 MVAR #2	DSAT2	369403	4908757	2.5	0	0	96.6	96.6	1	6477.56	3.5	0	87.23	0	3.81	0	0	4.07	0	0	0	0	0	0	1.53	1.53
	DSTATCOM - 10 MVAR #1	DSAT1	369437	4908757	2.5	0	0	96.6	96.6	1	6507.23	3.5	0	87.27	0	3.81	0	0	4.08	0	0	0	0	0	0	1.47	1.47
	Gardiner Substation	G_Sub	366586.3	4903349.9	2.5	0	0	90.8	90.8	1	3611.25	4.25	0	82.15	0	1.25	2.75	0.29	6.84	0	0	0	0	0	0	-2.21	-2.21
	SubstationTransformer	W_ST	369711.17	4906112.3	2.5	0	0	92	92	1	5981.1	4.25	0	86.54	0	1.87	2.1	0.29	9.72	0	0	0	0	0	0	-8.26	-8.26
	Inverters	G_Inv1	366526.4	4903225.8	2	0	0	87.7	87.7	1	3643.69	3.25	0	82.23	0	2.76	0	0	4.49	0	0	0	0	0	0	-1.82	-1.82
	Inverters	G_Inv2	366676.9	4903239.1	2	0	0	87.7	87.7	1	3751.16	3.25	0	82.48	0	2.77	0	0	4.6	0	0	0	0	0	0	-2.2	-2.2
	Inverters	G_Inv3	366583.7	4903091.4	2	0	0	87.7	87.7	1	3775.03	3.25	0	82.54	0	2.77	0	0	4.63	0	0	0	0	0	0	-2.28	-2.28
	Inverters	G_Inv4	366732.8	4903105	2	0	0	87.7	87.7	1	3879.36	3.25	0	82.78	0	2.78	0	0	4.74	0	0	0	0	0	0	-2.64	-2.64
	Inverters	G_Inv5	366638.5	4902958.1	2	0	0	87.7	87.7	1	3904.84	3.25	0	82.83	0	2.78	0	0	4.77	0	0	0	0	0	0	-2.73	-2.73
	Inverters	G_Inv6	366788.5	4902972	2	0	0	87.7	87.7	1	4007.86	3.25	0	83.06	0	2.79	0	0	4.88	0	0	0	0	0	0	-3.07	-3.07
	Inverters	G_Inv7	366694.6	4902824.7	2	0	0	87.7	87.7	1	4036.63	3.25	0	83.12	0	2.79	0	0	4.91	0	0	0	0	0	0	-3.17	-3.17
	Inverters	G_Inv8	366844.5	4902838.5	2	0	0	87.7	87.7	1	4137.95	3.25	0	83.34	0	2.8	0	0	5.02	0	0	0	0	0	0	-3.5	-3.5
	Inverters	G_Inv9	366750.9	4902691.8	2	0	0	87.7	87.7	1	4169.07	3.25	0	83.4	0	2.81	0	0	5.06	0	0	0	0	0	0	-3.6	-3.6
	Inverter	MV3-1	368156	4907976	2	0	0	89.1	89.1	1	5008.41	3.25	0	84.99	0	1.64	0	0	12.47	0	0	0	0	0	0	-10.05	-10.05

Inverters	G_Inv10	366900.7	4902704.8	2	0	0	87.7	87.7	1	4269.27	3.25	0	83.61	0	2.81	0	0	5.16	0	0	0	0	0	0	-3.92	-3.92
Inverter	MV3-5	368340	4907843	2	0	0	89.1	89.1	1	5110.88	3.25	0	85.17	0	1.67	0	0	12.61	0	0	0	0	0	0	-10.39	-10.39
Inverter	MV3-22	368656	4907142	2	0	0	89.1	89.1	1	5143.08	3.25	0	85.22	0	1.68	0	0	12.65	0	0	0	0	0	0	-10.5	-10.5
Inverter	MV3-4	368502	4907925	2	0	0	89.1	89.1	1	5292.44	3.25	0	85.47	0	1.71	0	0	12.85	0	0	0	0	0	0	-10.98	-10.98
Inverter	MV3-2	368671	4907928	2	0	0	89.1	89.1	1	5445.88	3.25	0	85.72	0	1.75	0	0	13.05	0	0	0	0	0	0	-11.47	-11.47
Westbrook Inverter Enclosur	W_INV2	369374	4906388	2	0	0	89.1	89.1	1	5677.5	3.25	0	86.08	0	1.81	0	0	13.35	0	0	0	0	0	0	-12.18	-12.18
Westbrook Inverter Enclosur	W_INV3	369508	4906164	2	0	0	89.1	89.1	1	5783.65	3.25	0	86.24	0	1.83	0	0	13.49	0	0	0	0	0	0	-12.51	-12.51
Fixed Reactor Bank 1	FRB1	369378	4908755	6	0	0	89.8	89.8	1	6454.78	5.25	0	87.2	0	-0.35	0	0	10.21	0	0	0	0	0	0	-7.28	-7.28
Westbrook Inverter Enclosur	W_INV4	369673	4906164	2	0	0	89.1	89.1	1	5947.86	3.25	0	86.49	0	1.87	0	0	13.7	0	0	0	0	0	0	-13	-13
Fixed Reactor Bank 2	FRB2	369464	4908755	6	0	0	89.8	89.8	1	6529.86	5.25	0	87.3	0	-0.34	0	0	10.29	0	0	0	0	0	0	-7.47	-7.47
Westbrook Inverter Enclosur	W_INV5	369719	4906574	2	0	0	89.1	89.1	1	6046.77	3.25	0	86.63	0	1.9	0	0	13.82	0	0	0	0	0	0	-13.29	-13.29
Westbrook Inverter Enclosur	W_INV7	369780	4906417	2	0	0	89.1	89.1	1	6083.61	3.25	0	86.68	0	1.91	0	0	13.87	0	0	0	0	0	0	-13.4	-13.4
Inverter	MV4-13	369051	4908605	2	0	0	89.1	89.1	1	6096.32	3.25	0	86.7	0	1.91	0	0	13.88	0	0	0	0	0	0	-13.44	-13.44
Inverter	MV4-15	369176	4908481	2	0	0	89.1	89.1	1	6145.94	3.25	0	86.77	0	1.92	0	0	13.95	0	0	0	0	0	0	-13.58	-13.58
Inverter	MV4-14	369176	4908507	2	0	0	89.1	89.1	1	6158.22	3.25	0	86.79	0	1.92	0	0	13.96	0	0	0	0	0	0	-13.62	-13.62
Inverter	MV4-12	369043	4908803	2	0	0	89.1	89.1	1	6189.82	3.25	0	86.83	0	1.93	0	0	14	0	0	0	0	0	0	-13.71	-13.71
Westbrook Inverter Enclosur	W_INV6	369875	4906578	2	0	0	89.1	89.1	1	6201.37	3.25	0	86.85	0	1.94	0	0	14.01	0	0	0	0	0	0	-13.74	-13.74
Inverter	MV5-6	369982	4908507	2	0	0	89.1	89.1	1	6878.6	3.25	0	87.75	0	2.1	0	0	14.84	0	0	0	0	0	0	-15.63	-15.63
Westbrook Inverter Enclosur	W_INV1	369409	4906578	2	0	0	86.1	86.1	1	5741.82	3.25	0	86.18	0	1.82	0	0	13.43	0	0	0	0	0	0	-15.38	-15.38
Inverter	MV6-4	370250	4906966	2	0	0	86.1	86.1	1	6641.32	3.25	0	87.45	0	2.04	0	0	14.56	0	0	0	0	0	0	-17.98	-17.98
Inverter Transformer	MV1-13 T	364725	4905241	2	0	0	69.4	69.4	1	1032.42	3.25	0	71.28	0	1.71	0	0	3.86	0	0	0	0	0	0	-7.49	-7.49
Inverter Transformer	MV1-7 T	364919	4905782	2	0	0	69.4	69.4	1	1181.87	3.25	0	72.45	0	1.81	0	0	4.05	0	0	0	0	0	0	-8.96	-8.96
Inverter Transformer	MV1-10 T	365010	4905564	2	0	0	69.4	69.4	1	1257.25	3.25	0	72.99	0	1.85	0	0	4.15	0	0	0	0	0	0	-9.64	-9.64
Inverter Transformer	MV1-14 T	365157	4905049	2	0	0	69.4	69.4	1	1504.27	3.25	0	74.55	0	1.97	0	0	4.44	0	0	0	0	0	0	-11.61	-11.61
Westbrook Inverter Transfor	W_INVTR1	369403	4906578	2	0	0	78.2	78.2	1	5735.91	3.25	0	86.17	0	-3.32	0	0	2.66	0	0	0	0	0	0	-7.27	-7.27
Westbrook Inverter Transfor	W_INVTR2	369368	4906388	2	0	0	77.3	77.3	1	5671.56	3.25	0	86.07	0	-3.31	0	0	2.64	0	0	0	0	0	0	-8.06	-8.06
Westbrook Inverter Transfor	W_INVTR3	369514	4906164	2	0	0	77.3	77.3	1	5789.62	3.25	0	86.25	0	-3.33	0	0	2.67	0	0	0	0	0	0	-8.26	-8.26
Westbrook Inverter Transfor	W_INVTR4	369679	4906164	2	0	0	77.3	77.3	1	5953.83	3.25	0	86.5	0	-3.36	0	0	2.73	0	0	0	0	0	0	-8.52	-8.52
Westbrook Inverter Transfor	W_INVTR5	369725	4906574	2	0	0	77.3	77.3	1	6052.69	3.25	0	86.64	0	-3.38	0	0	2.76	0	0	0	0	0	0	-8.68	-8.68
Inverter Transformer	MV2-1 T	365836	4906816	2	0	0	69.4	69.4	1	2417.52	3.25	0	78.67	0	2.32	0	0	5.37	0	0	0	0	0	0	-17	-17
Westbrook Inverter Transfor	W_INVTR7	369786	4906417	2	0	0	77.3	77.3	1	6089.55	3.25	0	86.69	0	-3.38	0	0	2.77	0	0	0	0	0	0	-8.74	-8.74
Westbrook Inverter Transfor	W_INVTR6	369881	4906578	2	0	0	77.3	77.3	1	6207.3	3.25	0	86.86	0	-3.4	0	0	2.81	0	0	0	0	0	0	-8.92	-8.92
Inverter Transformer	MV1-6 T	364482	4905835	2	0	0	56.1	56.1	1	769.39	3.25	0	68.72	0	-0.06	0	0	4.32	0	0	0	0	0	0	-16.92	-16.92
Inverter Transformer	MV1-9 T	364555	4905646	2	0	0	56.1	56.1	1	804.03	3.25	0	69.11	0	-0.05	0	0	4.41	0	0	0	0	0	0	-17.4	-17.4
Inverter Transformer	MV1-3 T	364435	4906039	2	0	0	56.1	56.1	1	817.09	3.25	0	69.25	0	-0.05	0	0	4.44	0	0	0	0	0	0	-17.58	-17.58
Inverter Transformer	MV1-11 T	364649	4905414	2	0	0	56.1	56.1	1	912.93	3.25	0	70.21	0	-0.02	0	0	4.68	0	0	0	0	0	0	-18.81	-18.81
Inverter Transformer	MV1-5 T	364676	4905892	2	0	0	56.1	56.1	1	971.47	3.25	0	70.75	0	0	0	0	4.82	0	0	0	0	0	0	-19.51	-19.51
Inverter Transformer	MV1-8 T	364782	4905647	2	0	0	56.1	56.1	1	1030.64	3.25	0	71.26	0	0.02	0	0	4.96	0	0	0	0	0	0	-20.19	-20.19
Inverter Transformer	MV1-2 T	364759	4906063	2	0	0	56.1	56.1	1	1112.08	3.25	0	71.92	0	0.05	0	0	5.15	0	0	0	0	0	0	-21.07	-21.07
Inverter Transformer	MV1-4 T	364821	4905918	2	0	0	56.1	56.1	1	1117.53	3.25	0	71.97	0	0.05	0	0	5.17	0	0	0	0	0	0	-21.13	-21.13
Inverter Transformer	MV1-1 T	364721	4906166	2	0	0	56.1	56.1	1	1126.92	3.25	0	72.04	0	0.06	0	0	5.19	0	0	0	0	0	0	-21.22	-21.22
Inverter Transformer	MV1-12 T	365044	4905386	2	0	0	56.1	56.1	1	1306.87	3.25	0	73.32	0	0.12	0	0	5.6	0	0	0	0	0	0	-22.99	-22.99
Inverter Transformer	MV6-4 T	370244	4906966	2	0	0	69.4	69.4	1	6635.45	3.25	0	87.44	0	3.28	0	0	8.39	0	0	0	0	0	0	-29.76	-29.76
Inverter Transformer	MV6-1 T	370230	4907364	2	0	0	69.4	69.4	1	6715.81	3.25	0	87.54	0	3.29	0	0	8.44	0	0	0	0	0	0	-29.92	-29.92
Inverter Transformer	MV1-15 T	365309	4904994	2	0	0	56.1	56.1	1	1665.88	3.25	0	75.43	0	0.27	0	0	6.37	0	0	0	0	0	0	-26.01	-26.01
Inverter Transformer	MV2-4 T	365590	4906628	2	0	0	56.1	56.1	1	2110.47	3.25	0	77.49	0	0.45	0	0	7.26	0	0	0	0	0	0	-29.14	-29.14
Inverter Transformer	MV2-3 T	365814	4906641	2	0	0	56.1	56.1	1	2313.96	3.25	0	78.29	0	0.54	0	0	7.65	0	0	0	0	0	0	-30.41	-30.41
Inverter Transformer	MV2-2 T	365982	4906654	2	0	0	56.1	56.1	1	2470.36	3.25	0	78.86	0	0.6	0	0	7.94	0	0	0	0	0	0	-31.34	-31.34
Inverter Transformer	MV3-18 T	367757	4907412	2	0	0	56.1	56.1	1	4399.47	3.25	0	83.87	0	1.4	0	0	11.03	0	0	0	0	0	0	-40.24	-40.24
Inverter Transformer	MV3-12 T	367674	4907594	2	0	0	56.1	56.1	1	4403.89	3.25	0	83.88	0	1.4	0	0	11.04	0	0	0	0	0	0	-40.26	-40.26
Inverter Transformer	MV3-13 T	367958	4907577	2	0	0	56.1	56.1	1	4651.26	3.25	0	84.35	0	1.5	0	0	11.38	0	0	0	0	0	0	-41.17	-41.17
Inverter Transformer	MV3-7 T	367951	4907754	2	0	0	56.1	56.1	1	4723.39	3.25	0	84.49	0	1.52	0	0	11.48	0	0	0	0	0	0	-41.43	-41.43
Inverter Transformer	MV3-3 T	367944	4907927	2	0	0	56.1	56.1	1	4799.03	3.25	0	84.62	0	1.55	0	0	11.59	0	0	0	0	0	0	-41.7	-41.7
Inverter Transformer	MV3-17 T	368183	4907472	2	0	0	56.1	56.1	1	4813.58	3.25	0	84.65	0	1.56	0	0	11.61	0	0	0	0	0	0	-41.75	-41.75
Inverter Transformer	MV3-10 T	368162	4907669	2	0	0	56.1	56.1	1	4875.01	3.25	0	84.76	0	1.58	0	0	11.69	0	0	0	0	0	0	-41.97	-41.97
Inverter Transformer	MV3-19 T	368352	4907347	2	0	0	56.1	56.1	1	4923.55	3.25	0	84.85	0	1.6	0	0	11.75	0	0	0	0	0	0	-42.14	-42.14
Inverter Transformer	MV3-6 T	368156	4907834	2	0	0	56.1	56.1	1	4942.31	3.25	0	84.88	0	1.6	0	0	11.78	0	0	0	0	0	0	-42.2	-42.2
Inverter Transformer	MV3-15 T	368351	4907477	2	0	0	56.1	56.1	1	4970.53	3.25	0	84.93	0	1.61	0	0	11.82	0	0	0	0	0	0	-42.3	-42.3
Inverter Transformer	MV3-21 T	368484	4907206	2	0	0	56.1	56.1	1	4999.71	3.25	0	84.98	0	1.63	0	0	11.85	0	0	0	0	0	0	-42.4	-42.4
Inverter Transformer	MV3-1 T	368150	4907976	2	0	0	56.1	56.1	1	5003.14	3.25	0	84.98	0	1.63	0	0	11.86	0	0	0	0	0	0	-42.41	-42.41
Inverter Transformer	MV3-11 T	368340	4907662	2	0	0	56.1	56.1	1	5033.68	3.25	0	85.04	0	1.64	0	0	11.9	0	0	0	0	0	0	-42.52	-42.52
Inverter Transformer	MV3-5 T	368335	4907843	2	0	0	56.1	56.1	1	5106.39	3.25	0	85.16	0	1.66	0	0	11.99	0	0	0	0	0	0	-42.76	-42.76
Inverter Transformer	MV3-16 T	368509	4907475	2	0	0	56.1	56.1	1	5116.3	3.25	0	85.18	0	1.67	0	0	12.01	0	0	0	0	0	0	-42.79	-42.79
Inverter Transformer	MV3-22 T	368661	4907142	2	0	0	56.1	56.1	1	5147.84	3.25	0	85.23	0	1.68	0	0	12.05	0	0	0	0	0	0	-42.9	-42.9
Inverter Transformer	MV3-9 T	368517	4907703	2	0	0	56.1	56.1	1	5211.98	3.25	0	85.34	0	1.7	0	0	12.13	0	0	0	0	0	0	-43.11	-43.11
Inverter Transformer	MV3-20 T	368683	4907317	2	0	0	56.1	56.1	1	5224.07	3.25	0	85.36	0	1.71	0	0	12.15	0	0	0	0	0	0	-43.15	-43.15
Inverter Transformer	MV3-14 T	368678	4907498	2	0	0	56.1	56.1	1	5282.04	3.25	0	85.46	0	1.73	0	0	12.22	0	0	0	0	0	0	-43.34	-43.34
Inverter Transformer	MV3-4 T	368507	4907925	2	0	0	56.1	56.1	1	5296.93	3.25	0	85.48	0	1.73	0	0	12.24	0	0	0	0	0	0	-43.39	-43.39
Inverter Transformer	MV3-8 T	368685	4907712	2	0	0	56.1	56.1	1	5369.52	3.25	0	85.6	0	1.76	0	0	12.33	0	0	0	0	0	0	-43.63	-43.63
Inverter Transformer	MV3-2 T	368677	4907928	2	0	0	56.1	56.1	1	5451.3	3.25	0	85.73	0	1.78	0	0	12.43	0	0	0	0	0	0	-43.89	-43.89
Inverter Transformer	MV4-13 T	369057	4908605	2	0	0	56.1	56.1	1	6101.53	3.25	0	86.71	0	2	0	0	13.22	0	0	0	0	0	0	-45.87	-45.87
Inverter Transformer	MV4-15 T	369170	4908481	2	0	0	56.1	56.1	1	6140.65	3.25	0	86.76	0	2.01	0	0	13.27	0	0	0	0	0	0	-45.98	-45.98
Inverter Transformer	MV4-14 T	369182	4908507	2	0	0	56.1	56.1	1	6163.5	3.25	0	86.8	0	2.02	0	0	13.29	0	0	0	0	0	0	-46.05	-46.05
Inverter Transformer	MV4-12 T	369049	4908803	2	0	0	56.1	56.1	1	6194.95	3.25	0	86.84	0	2.03	0	0	13.33	0	0	0	0	0	0	-46.14	-46.14

	Inverter Transformer	MV4-7 T	369040	4909001	2	0	0	56.1	56.1	1	6292.39	3.25	0	86.98	0	2.06	0	0	13.44	0	0	0	0	0	0	-46.42	-46.42
	Inverter Transformer	MV4-4 T	369033	4909199	2	0	0	56.1	56.1	1	6396.13	3.25	0	87.12	0	2.09	0	0	13.56	0	0	0	0	0	0	-46.71	-46.71
	Inverter Transformer	MV4-11 T	369269	4908855	2	0	0	56.1	56.1	1	6410.38	3.25	0	87.14	0	2.09	0	0	13.58	0	0	0	0	0	0	-46.75	-46.75
	Inverter Transformer	MV4-10 T	369307	4908858	2	0	0	56.1	56.1	1	6444.63	3.25	0	87.18	0	2.1	0	0	13.62	0	0	0	0	0	0	-46.84	-46.84
	Inverter Transformer	MV4-8 T	369262	4909001	2	0	0	56.1	56.1	1	6480.03	3.25	0	87.23	0	2.11	0	0	13.66	0	0	0	0	0	0	-46.94	-46.94
	Inverter Transformer	MV4-1 T	369017	4909397	2	0	0	56.1	56.1	1	6496.97	3.25	0	87.25	0	2.12	0	0	13.68	0	0	0	0	0	0	-46.99	-46.99
	Inverter Transformer	MV4-9 T	369284	4909001	2	0	0	56.1	56.1	1	6498.75	3.25	0	87.26	0	2.12	0	0	13.68	0	0	0	0	0	0	-46.99	-46.99
	Inverter Transformer	MV4-6 T	369249	4909192	2	0	0	56.1	56.1	1	6571.73	3.25	0	87.35	0	2.14	0	0	13.76	0	0	0	0	0	0	-47.19	-47.19
	Inverter Transformer	MV6-2 T	370091	4907339	2	0	0	56.1	56.1	1	6575.16	3.25	0	87.36	0	2.14	0	0	13.76	0	0	0	0	0	0	-47.2	-47.2
	Inverter Transformer	MV4-5 T	369283	4909199	2	0	0	56.1	56.1	1	6604.01	3.25	0	87.4	0	2.15	0	0	13.8	0	0	0	0	0	0	-47.28	-47.28
	Inverter Transformer	MV6-3 T	370202	4907140	2	0	0	56.1	56.1	1	6632.89	3.25	0	87.43	0	2.16	0	0	13.83	0	0	0	0	0	0	-47.36	-47.36
	Inverter Transformer	MV4-3 T	369234	4909397	2	0	0	56.1	56.1	1	6674	3.25	0	87.49	0	2.17	0	0	13.87	0	0	0	0	0	0	-47.47	-47.47
	Inverter Transformer	MV4-2 T	369267	4909397	2	0	0	56.1	56.1	1	6701.12	3.25	0	87.52	0	2.18	0	0	13.9	0	0	0	0	0	0	-47.54	-47.54
	Inverter Transformer	MV5-6 T	369987	4908507	2	0	0	56.1	56.1	1	6883.13	3.25	0	87.76	0	2.23	0	0	14.1	0	0	0	0	0	0	-48.03	-48.03
	Inverter Transformer	MV5-5 T	370021	4908690	2	0	0	56.1	56.1	1	6993.14	3.25	0	87.89	0	2.26	0	0	14.22	0	0	0	0	0	0	-48.31	-48.31
	Inverter Transformer	MV5-2 T	370011	4908853	2	0	0	56.1	56.1	1	7058.06	3.25	0	87.97	0	2.28	0	0	14.29	0	0	0	0	0	0	-48.48	-48.48
	Inverter Transformer	MV5-1 T	370015	4909142	2	0	0	56.1	56.1	1	7199.75	5.13	0	88.15	0	3.08	1.55	0.01	14.44	0	0	0	0	0	0	-51.16	-51.16
	Inverter Transformer	MV5-3 T	370237	4908851	2	0	0	56.1	56.1	1	7258.3	3.25	0	88.22	0	2.33	0	0	14.5	0	0	0	0	0	0	-48.99	-48.99
	Inverter Transformer	MV5-4 T	370330	4908707	2	0	0	56.1	56.1	1	7278.66	3.25	0	88.24	0	2.33	0	0	14.53	0	0	0	0	0	0	-49.04	-49.04
	Line Reactor	NGR	369421	4908787.5	5	0	0	45.4	45.4	1	6508.2	5.25	0	87.27	0	3.23	1.37	0.1	2.66	0	0	0	0	0	0	-49.17	-49.17
Limit. Valu	0	0																								
Level D/N:	29.5447	29.5447																								

Receiver: Existing Noise Receptor
ID: S-R95
X: 363726
Y: 4905554
Z: 4.5
Ground: 0

ISO	Description	ID	X	Y	Z	Ground	ReflOrd	LxT	LxN	L/A	Dist.	hm	Freq	Adiv	K0b	Agr	Abar	z	Aatm	Afol	Ahous	Cmet	CmetN	Dc	RL	LtotT	LtotN
	Inverter	MV1-6	364477	4905835	2	0	0	100.3	100.3	1	801.85	3.25	0	69.08	0	-0.35	0	0	10.19	0	0	0	0	0	0	21.39	21.39
	Inverter	MV1-9	364561	4905646	2	0	0	100.3	100.3	1	840.06	3.25	0	69.49	0	-0.33	0	0	10.34	0	0	0	0	0	0	20.81	20.81
	Inverter	MV1-11	364655	4905414	2	0	0	100.3	100.3	1	939.49	3.25	0	70.46	0	-0.28	0	0	10.71	0	0	0	0	0	0	19.42	19.42
	Inverter	MV1-5	364671	4905892	2	0	0	100.3	100.3	1	1003.63	3.25	0	71.03	0	-0.24	0	0	10.92	0	0	0	0	0	0	18.6	18.6
	Inverter	MV1-8	364788	4905647	2	0	0	100.3	100.3	1	1066.07	3.25	0	71.56	0	-0.21	0	0	11.12	0	0	0	0	0	0	17.85	17.85
	Inverter	MV1-2	364753	4906063	2	0	0	100.3	100.3	1	1146.22	3.25	0	72.19	0	-0.18	0	0	11.37	0	0	0	0	0	0	16.94	16.94
	Inverter	MV1-4	364815	4905918	2	0	0	100.3	100.3	1	1148.23	3.25	0	72.2	0	-0.18	0	0	11.37	0	0	0	0	0	0	16.91	16.91
	Inverter	MV1-1	364715	4906166	2	0	0	100.3	100.3	1	1163.04	3.25	0	72.31	0	-0.17	0	0	11.42	0	0	0	0	0	0	16.75	16.75
	Inverter	MV1-12	365038	4905386	2	0	0	100.3	100.3	1	1322.71	3.25	0	73.43	0	-0.1	0	0	11.87	0	0	0	0	0	0	15.12	15.12
	Inverter	MV1-13	364731	4905241	2	0	0	97.3	97.3	1	1052.62	3.25	0	71.45	0	-0.22	0	0	11.08	0	0	0	0	0	0	15.01	15.01
	Inverter	MV1-15	365315	4904994	2	0	0	100.3	100.3	1	1684.79	3.25	0	75.53	0	0.03	0	0	12.77	0	0	0	0	0	0	11.98	11.98
	Sol_Luce Substation	S_Substation	369426	4908792	3.5	0	0	112.1	112.1	1	6555.5	5.25	0	87.33	0	1.29	2.53	0.29	10.31	0	0	0	0	0	0	10.61	10.61
	Inverter	MV1-7	364925	4905782	2	0	0	97.3	97.3	1	1220.49	3.25	0	72.73	0	-0.15	0	0	11.58	0	0	0	0	0	0	13.14	13.14
	Inverter	MV1-10	365004	4905564	2	0	0	97.3	97.3	1	1278.04	3.25	0	73.13	0	-0.12	0	0	11.75	0	0	0	0	0	0	12.56	12.56
	Inverter	MV2-4	365586	4906624	2	0	0	100.3	100.3	1	2145.81	3.25	0	77.63	0	0.17	0	0	13.76	0	0	0	0	0	0	8.75	8.75
	Inverter	MV1-14	365163	4905049	2	0	0	97.3	97.3	1	1523.15	3.25	0	74.65	0	-0.02	0	0	12.38	0	0	0	0	0	0	10.3	10.3
	Inverter	MV2-3	365820	4906641	2	0	0	100.3	100.3	1	2359.32	3.25	0	78.46	0	0.22	0	0	14.19	0	0	0	0	0	0	7.44	7.44
	Inverter	MV1-3	364440	4906039	2	0	0	89.1	89.1	1	863.15	3.25	0	69.72	0	0.65	0	0	6.05	0	0	0	0	0	0	12.63	12.63
	Inverter	MV2-1	365842	4906816	2	0	0	97.3	97.3	1	2463.76	3.25	0	78.83	0	0.25	0	0	14.39	0	0	0	0	0	0	3.84	3.84
	Inverter	MV3-18	367752	4907412	2	0	0	100.3	100.3	1	4434.06	3.25	0	83.94	0	0.58	0	0	17.73	0	0	0	0	0	0	-1.94	-1.94
	Inverter	MV3-12	367668	4907594	2	0	0	100.3	100.3	1	4438.58	3.25	0	83.94	0	0.58	0	0	17.74	0	0	0	0	0	0	-1.95	-1.95
	Inverter	MV3-13	367963	4907577	2	0	0	100.3	100.3	1	4695.18	3.25	0	84.43	0	0.61	0	0	18.13	0	0	0	0	0	0	-2.86	-2.86
	Inverter	MV3-7	367945	4907754	2	0	0	100.3	100.3	1	4758.15	3.25	0	84.55	0	0.62	0	0	18.22	0	0	0	0	0	0	-3.08	-3.08
	Inverter	MV3-3	367939	4907927	2	0	0	100.3	100.3	1	4835.34	3.25	0	84.69	0	0.63	0	0	18.34	0	0	0	0	0	0	-3.34	-3.34
	Inverter	MV3-17	368178	4907472	2	0	0	100.3	100.3	1	4847.58	3.25	0	84.71	0	0.63	0	0	18.35	0	0	0	0	0	0	-3.38	-3.38
	Inverter	MV3-10	368167	4907669	2	0	0	100.3	100.3	1	4918.91	3.25	0	84.84	0	0.63	0	0	18.46	0	0	0	0	0	0	-3.62	-3.62
	Inverter	MV3-19	368357	4907347	2	0	0	100.3	100.3	1	4965.99	3.25	0	84.92	0	0.64	0	0	18.53	0	0	0	0	0	0	-3.78	-3.78
	Inverter	MV3-6	368162	4907834	2	0	0	100.3	100.3	1	4987.63	3.25	0	84.96	0	0.64	0	0	18.56	0	0	0	0	0	0	-3.85	-3.85
	Inverter	MV3-15	368357	4907477	2	0	0	100.3	100.3	1	5014.39	3.25	0	85	0	0.64	0	0	18.6	0	0	0	0	0	0	-3.94	-3.94
	Inverter	MV3-21	368478	4907206	2	0	0	100.3	100.3	1	5030.97	3.25	0	85.03	0	0.64	0	0	18.63	0	0	0	0	0	0	-3.99	-3.99
	Inverter	MV3-11	368346	4907662	2	0	0	100.3	100.3	1	5078.2	3.25	0	85.11	0	0.65	0	0	18.69	0	0	0	0	0	0	-4.15	-4.15
	Inverter	MV3-16	368514	4907475	2	0	0	100.3	100.3	1	5158.99	3.25	0	85.25	0	0.66	0	0	18.81	0	0	0	0	0	0	-4.41	-4.41
	Inverter	MV3-9	368512	4907703	2	0	0	100.3	100.3	1	5246.33	3.25	0	85.4	0	0.66	0	0	18.94	0	0	0	0	0	0	-4.69	-4.69
	Inverter	MV3-20	368689	4907317	2	0	0	100.3	100.3	1	5266.83	3.25	0	85.43	0	0.66	0	0	18.97	0	0	0	0	0	0	-4.75	-4.75
	Inverter	MV3-14	368684	4907498	2	0	0	100.3	100.3	1	5325.5	3.25	0	85.53	0	0.67	0	0	19.05	0	0	0	0	0	0	-4.94	-4.94
	Inverter	MV3-8	368680	4907712	2	0	0	100.3	100.3	1	5403.62	3.25	0	85.65	0	0.67	0	0	19.16	0	0	0	0	0	0	-5.18	-5.18
	Inverter	MV4-7	369035	4909001	2	0	0	100.3	100.3	1	6329.87	3.25	0	87.03	0	0.71	0	0	20.44	0	0	0	0	0	0	-7.86	-7.86
	Inverter	MV4-4	369027	4909199	2	0	0	100.3	100.3	1	6433.24	3.25	0	87.17	0	0.71	0	0	20.57	0	0	0	0	0	0	-8.14	-8.14
	Inverter	MV4-11	369264	4908855	2	0	0	100.3	100.3	1	6447.17	3.25	0	87.19	0	0.71	0	0	20.59	0	0	0	0	0	0	-8.18	-8.18
	Inverter	MV4-10	369312	4908858	2	0	0	100.3	100.3	1	6489.98	3.25	0	87.24	0	0.71	0	0	20.65	0	0	0	0	0	0	-8.29	-8.29
	Inverter	MV4-8	369256	4909001	2	0	0	100.3	100.3	1	6516.34	3.25	0	87.28	0	0.71	0	0	20.68	0	0	0	0	0	0	-8.36	-8.36
	Inverter	MV4-1	369011	4909397	2	0	0	100.3	100.3	1	6534.51	3.25	0	87.3	0	0.71	0	0	20.7	0	0	0	0	0	0	-8.41	-8.41
	Inverter	MV4-9	369289	4909001	2	0	0	100.3	100.3	1	6544.37	3.25	0	87.32	0	0.71	0	0	20.72	0	0	0	0	0	0	-8.44	-8.44

Inverter	MV6-2	370085	4907339	2	0	0	100.3	100.3	1	6604.78	3.25	0	87.4	0	0.72	0	0	20.8	0	0	0	0	0	0	-8.6	-8.6
Inverter	MV4-6	369243	4909192	2	0	0	100.3	100.3	1	6608.51	3.25	0	87.4	0	0.72	0	0	20.8	0	0	0	0	0	0	-8.61	-8.61
Inverter	MV4-5	369289	4909199	2	0	0	100.3	100.3	1	6650.79	3.25	0	87.46	0	0.71	0	0	20.85	0	0	0	0	0	0	-8.72	-8.72
Inverter	MV6-3	370207	4907140	2	0	0	100.3	100.3	1	6672.24	3.25	0	87.49	0	0.71	0	0	20.88	0	0	0	0	0	0	-8.77	-8.77
Inverter	MV4-3	369229	4909397	2	0	0	100.3	100.3	1	6712.05	3.25	0	87.54	0	0.71	0	0	20.93	0	0	0	0	0	0	-8.87	-8.87
Inverter	MV4-2	369272	4909397	2	0	0	100.3	100.3	1	6747.35	3.25	0	87.58	0	0.71	0	0	20.98	0	0	0	0	0	0	-8.96	-8.96
Inverter	MV5-5	370015	4908690	2	0	0	100.3	100.3	1	7027.52	3.25	0	87.94	0	0.71	0	0	21.33	0	0	0	0	0	0	-9.67	-9.67
Inverter	MV5-2	370006	4908853	2	0	0	100.3	100.3	1	7093.79	3.25	0	88.02	0	0.71	0	0	21.42	0	0	0	0	0	0	-9.83	-9.83
Inverter	MV5-1	370020	4909142	2	0	0	100.3	100.3	1	7244.87	5.13	0	88.2	0	1.78	2.26	0.01	21.6	0	0	0	0	0	0	-13.53	-13.53
Inverter	MV5-3	370231	4908851	2	0	0	100.3	100.3	1	7292.82	3.25	0	88.26	0	0.7	0	0	21.66	0	0	0	0	0	0	-10.31	-10.31
Inverter	MV5-4	370324	4908707	2	0	0	100.3	100.3	1	7312.66	3.25	0	88.28	0	0.7	0	0	21.69	0	0	0	0	0	0	-10.36	-10.36
Inverter	MV2-2	365977	4906654	2	0	0	89.1	89.1	1	2505.4	3.25	0	78.98	0	1.03	0	0	8.85	0	0	0	0	0	0	0.2	0.2
Inverter	MV6-1	370235	4907364	2	0	0	97.3	97.3	1	6755.97	3.25	0	87.59	0	0.71	0	0	20.99	0	0	0	0	0	0	-11.99	-11.99
DSTATCOM - 10 MVAR #2	DSAT2	369403	4908757	2.5	0	0	96.6	96.6	1	6518.25	3.5	0	87.28	0	3.81	0	0	4.09	0	0	0	0	0	0	1.45	1.45
DSTATCOM - 10 MVAR #1	DSAT1	369437	4908757	2.5	0	0	96.6	96.6	1	6547.88	3.5	0	87.32	0	3.81	0	0	4.1	0	0	0	0	0	0	1.4	1.4
Gardiner Substation	G_Sub	366586.3	4903349.9	2.5	0	0	90.8	90.8	1	3611.01	4.25	0	82.15	0	1.25	2.75	0.29	6.84	0	0	0	0	0	0	-2.21	-2.21
Inverters	G_Inv1	366526.4	4903225.8	2	0	0	87.7	87.7	1	3641.81	3.25	0	82.23	0	2.76	0	0	4.48	0	0	0	0	0	0	-1.81	-1.81
SubstationTransformer	W_ST	369711.17	4906112.3	2.5	0	0	92	92	1	6011.15	4.25	0	86.58	0	1.88	2.1	0.29	9.75	0	0	0	0	0	0	-8.33	-8.33
Inverters	G_Inv2	366676.9	4903239.1	2	0	0	87.7	87.7	1	3750.54	3.25	0	82.48	0	2.77	0	0	4.6	0	0	0	0	0	0	-2.19	-2.19
Inverters	G_Inv3	366583.7	4903091.4	2	0	0	87.7	87.7	1	3772.38	3.25	0	82.53	0	2.77	0	0	4.63	0	0	0	0	0	0	-2.27	-2.27
Inverters	G_Inv4	366732.8	4903105	2	0	0	87.7	87.7	1	3877.94	3.25	0	82.77	0	2.78	0	0	4.74	0	0	0	0	0	0	-2.63	-2.63
Inverters	G_Inv5	366638.5	4902958.1	2	0	0	87.7	87.7	1	3901.46	3.25	0	82.82	0	2.78	0	0	4.77	0	0	0	0	0	0	-2.71	-2.71
Inverters	G_Inv6	366788.5	4902972	2	0	0	87.7	87.7	1	4005.7	3.25	0	83.05	0	2.79	0	0	4.88	0	0	0	0	0	0	-3.07	-3.07
Inverters	G_Inv7	366694.6	4902824.7	2	0	0	87.7	87.7	1	4032.58	3.25	0	83.11	0	2.79	0	0	4.91	0	0	0	0	0	0	-3.15	-3.15
Inverters	G_Inv8	366844.5	4902838.5	2	0	0	87.7	87.7	1	4135.09	3.25	0	83.33	0	2.8	0	0	5.02	0	0	0	0	0	0	-3.49	-3.49
Inverters	G_Inv9	366750.9	4902691.8	2	0	0	87.7	87.7	1	4164.4	3.25	0	83.39	0	2.81	0	0	5.05	0	0	0	0	0	0	-3.59	-3.59
Inverters	G_Inv10	366900.7	4902704.8	2	0	0	87.7	87.7	1	4265.76	3.25	0	83.6	0	2.81	0	0	5.16	0	0	0	0	0	0	-3.91	-3.91
Inverter	MV3-1	368156	4907976	2	0	0	89.1	89.1	1	5048.86	3.25	0	85.06	0	1.65	0	0	12.53	0	0	0	0	0	0	-10.19	-10.19
Inverter	MV3-5	368340	4907843	2	0	0	89.1	89.1	1	5150.58	3.25	0	85.24	0	1.68	0	0	12.66	0	0	0	0	0	0	-10.52	-10.52
Inverter	MV3-22	368656	4907142	2	0	0	89.1	89.1	1	5179.44	3.25	0	85.29	0	1.68	0	0	12.7	0	0	0	0	0	0	-10.61	-10.61
Inverter	MV3-4	368502	4907925	2	0	0	89.1	89.1	1	5332.15	3.25	0	85.54	0	1.72	0	0	12.9	0	0	0	0	0	0	-11.11	-11.11
Inverter	MV3-2	368671	4907928	2	0	0	89.1	89.1	1	5485.34	3.25	0	85.78	0	1.76	0	0	13.1	0	0	0	0	0	0	-11.59	-11.59
Westbrook Inverter Enclosur	W_INV2	369374	4906388	2	0	0	89.1	89.1	1	5709.24	3.25	0	86.13	0	1.81	0	0	13.39	0	0	0	0	0	0	-12.28	-12.28
Westbrook Inverter Enclosur	W_INV3	369508	4906164	2	0	0	89.1	89.1	1	5814.09	3.25	0	86.29	0	1.84	0	0	13.53	0	0	0	0	0	0	-12.6	-12.6
Westbrook Inverter Enclosur	W_INV4	369673	4906164	2	0	0	89.1	89.1	1	5978.2	3.25	0	86.53	0	1.88	0	0	13.73	0	0	0	0	0	0	-13.09	-13.09
Fixed Reactor Bank 1	FRB1	369378	4908755	6	0	0	89.8	89.8	1	6495.5	5.25	0	87.25	0	-0.35	0	0	10.25	0	0	0	0	0	0	-7.38	-7.38
Fixed Reactor Bank 2	FRB2	369464	4908755	6	0	0	89.8	89.8	1	6570.47	5.25	0	87.35	0	-0.34	0	0	10.33	0	0	0	0	0	0	-7.57	-7.57
Westbrook Inverter Enclosur	W_INV5	369719	4906574	2	0	0	89.1	89.1	1	6079.18	3.25	0	86.68	0	1.91	0	0	13.86	0	0	0	0	0	0	-13.39	-13.39
Westbrook Inverter Enclosur	W_INV7	369780	4906417	2	0	0	89.1	89.1	1	6115.2	3.25	0	86.73	0	1.91	0	0	13.91	0	0	0	0	0	0	-13.49	-13.49
Inverter	MV4-13	369051	4908605	2	0	0	89.1	89.1	1	6137.12	3.25	0	86.76	0	1.92	0	0	13.93	0	0	0	0	0	0	-13.56	-13.56
Inverter	MV4-15	369176	4908481	2	0	0	89.1	89.1	1	6186.26	3.25	0	86.83	0	1.93	0	0	14	0	0	0	0	0	0	-13.7	-13.7
Inverter	MV4-14	369176	4908507	2	0	0	89.1	89.1	1	6198.61	3.25	0	86.85	0	1.93	0	0	14.01	0	0	0	0	0	0	-13.73	-13.73
Inverter	MV4-12	369043	4908803	2	0	0	89.1	89.1	1	6231.09	3.25	0	86.89	0	1.94	0	0	14.05	0	0	0	0	0	0	-13.83	-13.83
Westbrook Inverter Enclosur	W_INV6	369875	4906578	2	0	0	89.1	89.1	1	6233.68	3.25	0	86.89	0	1.94	0	0	14.05	0	0	0	0	0	0	-13.83	-13.83
Inverter	MV5-6	369982	4908507	2	0	0	89.1	89.1	1	6917.93	3.25	0	87.8	0	2.11	0	0	14.89	0	0	0	0	0	0	-15.74	-15.74
Westbrook Inverter Enclosur	W_INV1	369409	4906578	2	0	0	86.1	86.1	1	5774.52	3.25	0	86.23	0	1.83	0	0	13.48	0	0	0	0	0	0	-15.48	-15.48
Inverter	MV6-4	370250	4906966	2	0	0	86.1	86.1	1	6675.05	3.25	0	87.49	0	2.05	0	0	14.6	0	0	0	0	0	0	-18.08	-18.08
Inverter Transformer	MV1-13 T	364725	4905241	2	0	0	69.4	69.4	1	1046.89	3.25	0	71.4	0	1.72	0	0	3.88	0	0	0	0	0	0	-7.64	-7.64
Inverter Transformer	MV1-7 T	364919	4905782	2	0	0	69.4	69.4	1	1214.59	3.25	0	72.69	0	1.83	0	0	4.09	0	0	0	0	0	0	-9.26	-9.26
Inverter Transformer	MV1-10 T	365010	4905564	2	0	0	69.4	69.4	1	1284.04	3.25	0	73.17	0	1.87	0	0	4.18	0	0	0	0	0	0	-9.87	-9.87
Inverter Transformer	MV1-14 T	365157	4905049	2	0	0	69.4	69.4	1	1517.5	3.25	0	74.62	0	1.98	0	0	4.45	0	0	0	0	0	0	-11.71	-11.71
Westbrook Inverter Transfor	W_INVTR1	369403	4906578	2	0	0	78.2	78.2	1	5768.61	3.25	0	86.22	0	-3.33	0	0	2.67	0	0	0	0	0	0	-7.32	-7.32
Westbrook Inverter Transfor	W_INVTR2	369368	4906388	2	0	0	77.3	77.3	1	5703.31	3.25	0	86.12	0	-3.31	0	0	2.65	0	0	0	0	0	0	-8.11	-8.11
Westbrook Inverter Transfor	W_INVTR3	369514	4906164	2	0	0	77.3	77.3	1	5820.06	3.25	0	86.3	0	-3.33	0	0	2.68	0	0	0	0	0	0	-8.31	-8.31
Westbrook Inverter Transfor	W_INVTR4	369679	4906164	2	0	0	77.3	77.3	1	5984.17	3.25	0	86.54	0	-3.36	0	0	2.74	0	0	0	0	0	0	-8.57	-8.57
Westbrook Inverter Transfor	W_INVTR5	369725	4906574	2	0	0	77.3	77.3	1	6085.1	3.25	0	86.69	0	-3.38	0	0	2.77	0	0	0	0	0	0	-8.73	-8.73
Westbrook Inverter Transfor	W_INVTR7	369786	4906417	2	0	0	77.3	77.3	1	6121.14	3.25	0	86.74	0	-3.39	0	0	2.78	0	0	0	0	0	0	-8.78	-8.78
Inverter Transformer	MV2-1 T	365836	4906816	2	0	0	69.4	69.4	1	2458.61	3.25	0	78.81	0	2.33	0	0	5.4	0	0	0	0	0	0	-17.2	-17.2
Westbrook Inverter Transfor	W_INVTR6	369881	4906578	2	0	0	77.3	77.3	1	6239.6	3.25	0	86.9	0	-3.41	0	0	2.82	0	0	0	0	0	0	-8.97	-8.97
Inverter Transformer	MV1-6 T	364482	4905835	2	0	0	56.1	56.1	1	806.54	3.25	0	69.13	0	-0.05	0	0	4.41	0	0	0	0	0	0	-17.44	-17.44
Inverter Transformer	MV1-9 T	364555	4905646	2	0	0	56.1	56.1	1	834.09	3.25	0	69.42	0	-0.04	0	0	4.48	0	0	0	0	0	0	-17.81	-17.81
Inverter Transformer	MV1-3 T	364435	4906039	2	0	0	56.1	56.1	1	859.02	3.25	0	69.68	0	-0.03	0	0	4.54	0	0	0	0	0	0	-18.13	-18.13
Inverter Transformer	MV1-11 T	364649	4905414	2	0	0	56.1	56.1	1	933.56	3.25	0	70.4	0	-0.01	0	0	4.73	0	0	0	0	0	0	-19.06	-19.06
Inverter Transformer	MV1-5 T	364676	4905892	2	0	0	56.1	56.1	1	1008.34	3.25	0	71.07	0	0.01	0	0	4.91	0	0	0	0	0	0	-19.94	-19.94
Inverter Transformer	MV1-8 T	364782	4905647	2	0	0	56.1	56.1	1	1060.09	3.25	0	71.51	0	0.03	0	0	5.03	0	0	0	0	0	0	-20.51	-20.51
Inverter Transformer	MV1-2 T	364759	4906063	2	0	0	56.1	56.1	1	1151.6	3.25	0	72.23	0	0.07	0	0	5.24	0	0	0	0	0	0	-21.48	-21.48
Inverter Transformer	MV1-4 T	364821	4905918	2	0	0	56.1	56.1	1	1153.92	3.25	0	72.24	0	0.07	0	0	5.25	0	0	0	0	0	0	-21.5	-21.5
Inverter Transformer	MV1-1 T	364721	4906166	2	0	0	56.1	56.1	1	1168.15	3.25	0	72.35	0	0.07	0	0	5.28	0	0	0	0	0	0	-21.65	-21.65
Inverter Transformer	MV1-12 T	365044	4905386	2	0	0	56.1	56.1	1	1328.67	3.25	0	73.47	0	0.13	0	0	5.64	0	0	0	0	0	0	-23.19	-23.19
Inverter Transformer	MV6-4 T	370244	4906966	2	0	0	69.4	69.4	1	6669.19	3.25	0	87.48	0	3.28	0	0	8.41	0	0	0	0	0	0	-29.82	-29.82
Inverter Transformer	MV6-1 T	370230	4907364	2	0	0	69.4	69.4	1	6751.16	3.25	0	87.59	0	3.29	0	0	8.46	0	0	0	0	0	0	-29.99	-29.99
Inverter Transformer	MV1-15 T	365309	4904994	2	0	0	56.1	56.1	1	1679.14	3.25	0	75.5	0	0.27	0	0	6.4	0	0	0	0	0	0	-26.11	-26.11
Inverter Transformer	MV2-4 T	365590	4906628	2	0	0	56.1	56.1	1	2151.27	3.25	0	77.65	0	0.47	0	0	7.34	0	0	0	0	0	0	-29.4	-29.4
Inverter Transformer	MV2-3 T	365814	4906641	2	0	0	56.1	56.1	1	2354	3.25	0	78.44	0	0.55	0	0	7.72	0	0	0	0	0	0	-30.65	-30.65

	Inverter Transformer	MV2-2 T	365982	4906654	2	0	0	56.1	56.1	1	2509.89	3.25	0	78.99	0	0.62	0	0	8.01	0	0	0	0	0	0	-31.56	-31.56
	Inverter Transformer	MV3-18 T	367757	4907412	2	0	0	56.1	56.1	1	4438.6	3.25	0	83.94	0	1.42	0	0	11.09	0	0	0	0	0	0	-40.39	-40.39
	Inverter Transformer	MV3-12 T	367674	4907594	2	0	0	56.1	56.1	1	4443.91	3.25	0	83.96	0	1.42	0	0	11.1	0	0	0	0	0	0	-40.41	-40.41
	Inverter Transformer	MV3-13 T	367958	4907577	2	0	0	56.1	56.1	1	4690.67	3.25	0	84.42	0	1.51	0	0	11.44	0	0	0	0	0	0	-41.32	-41.32
	Inverter Transformer	MV3-7 T	367951	4907754	2	0	0	56.1	56.1	1	4763.47	3.25	0	84.56	0	1.54	0	0	11.54	0	0	0	0	0	0	-41.58	-41.58
	Inverter Transformer	MV3-3 T	367944	4907927	2	0	0	56.1	56.1	1	4839.7	3.25	0	84.7	0	1.57	0	0	11.64	0	0	0	0	0	0	-41.85	-41.85
	Inverter Transformer	MV3-17 T	368183	4907472	2	0	0	56.1	56.1	1	4852.17	3.25	0	84.72	0	1.57	0	0	11.66	0	0	0	0	0	0	-41.89	-41.89
	Inverter Transformer	MV3-10 T	368162	4907669	2	0	0	56.1	56.1	1	4914.4	3.25	0	84.83	0	1.59	0	0	11.74	0	0	0	0	0	0	-42.11	-42.11
	Inverter Transformer	MV3-19 T	368352	4907347	2	0	0	56.1	56.1	1	4961.32	3.25	0	84.91	0	1.61	0	0	11.8	0	0	0	0	0	0	-42.27	-42.27
	Inverter Transformer	MV3-6 T	368156	4907834	2	0	0	56.1	56.1	1	4982.3	3.25	0	84.95	0	1.62	0	0	11.83	0	0	0	0	0	0	-42.34	-42.34
	Inverter Transformer	MV3-15 T	368351	4907477	2	0	0	56.1	56.1	1	5008.85	3.25	0	84.99	0	1.63	0	0	11.87	0	0	0	0	0	0	-42.43	-42.43
	Inverter Transformer	MV3-21 T	368484	4907206	2	0	0	56.1	56.1	1	5036.63	3.25	0	85.04	0	1.64	0	0	11.9	0	0	0	0	0	0	-42.53	-42.53
	Inverter Transformer	MV3-1 T	368150	4907976	2	0	0	56.1	56.1	1	5043.6	3.25	0	85.05	0	1.64	0	0	11.91	0	0	0	0	0	0	-42.55	-42.55
	Inverter Transformer	MV3-11 T	368340	4907662	2	0	0	56.1	56.1	1	5072.74	3.25	0	85.1	0	1.65	0	0	11.95	0	0	0	0	0	0	-42.65	-42.65
	Inverter Transformer	MV3-5 T	368335	4907843	2	0	0	56.1	56.1	1	5146.11	3.25	0	85.23	0	1.68	0	0	12.05	0	0	0	0	0	0	-42.89	-42.89
	Inverter Transformer	MV3-16 T	368509	4907475	2	0	0	56.1	56.1	1	5154.35	3.25	0	85.24	0	1.68	0	0	12.06	0	0	0	0	0	0	-42.92	-42.92
	Inverter Transformer	MV3-22 T	368661	4907142	2	0	0	56.1	56.1	1	5184.2	3.25	0	85.29	0	1.69	0	0	12.09	0	0	0	0	0	0	-43.02	-43.02
	Inverter Transformer	MV3-9 T	368517	4907703	2	0	0	56.1	56.1	1	5250.89	3.25	0	85.4	0	1.71	0	0	12.18	0	0	0	0	0	0	-43.24	-43.24
	Inverter Transformer	MV3-20 T	368683	4907317	2	0	0	56.1	56.1	1	5261.18	3.25	0	85.42	0	1.72	0	0	12.19	0	0	0	0	0	0	-43.28	-43.28
	Inverter Transformer	MV3-14 T	368678	4907498	2	0	0	56.1	56.1	1	5319.91	3.25	0	85.52	0	1.74	0	0	12.27	0	0	0	0	0	0	-43.47	-43.47
	Inverter Transformer	MV3-4 T	368507	4907925	2	0	0	56.1	56.1	1	5336.63	3.25	0	85.55	0	1.74	0	0	12.29	0	0	0	0	0	0	-43.52	-43.52
	Inverter Transformer	MV3-8 T	368685	4907712	2	0	0	56.1	56.1	1	5408.2	3.25	0	85.66	0	1.77	0	0	12.38	0	0	0	0	0	0	-43.75	-43.75
	Inverter Transformer	MV3-2 T	368677	4907928	2	0	0	56.1	56.1	1	5490.75	3.25	0	85.79	0	1.8	0	0	12.48	0	0	0	0	0	0	-44.02	-44.02
	Inverter Transformer	MV4-13 T	369057	4908605	2	0	0	56.1	56.1	1	6142.33	3.25	0	86.77	0	2.01	0	0	13.27	0	0	0	0	0	0	-45.99	-45.99
	Inverter Transformer	MV4-15 T	369170	4908481	2	0	0	56.1	56.1	1	6180.98	3.25	0	86.82	0	2.02	0	0	13.32	0	0	0	0	0	0	-46.1	-46.1
	Inverter Transformer	MV4-14 T	369182	4908507	2	0	0	56.1	56.1	1	6203.88	3.25	0	86.85	0	2.03	0	0	13.34	0	0	0	0	0	0	-46.17	-46.17
	Inverter Transformer	MV4-12 T	369049	4908803	2	0	0	56.1	56.1	1	6236.21	3.25	0	86.9	0	2.04	0	0	13.38	0	0	0	0	0	0	-46.26	-46.26
	Inverter Transformer	MV4-7 T	369040	4909001	2	0	0	56.1	56.1	1	6334.07	3.25	0	87.03	0	2.07	0	0	13.49	0	0	0	0	0	0	-46.54	-46.54
	Inverter Transformer	MV4-4 T	369033	4909199	2	0	0	56.1	56.1	1	6438.19	3.25	0	87.18	0	2.1	0	0	13.61	0	0	0	0	0	0	-46.83	-46.83
	Inverter Transformer	MV4-11 T	369269	4908855	2	0	0	56.1	56.1	1	6451.47	3.25	0	87.19	0	2.1	0	0	13.63	0	0	0	0	0	0	-46.86	-46.86
	Inverter Transformer	MV4-10 T	369307	4908858	2	0	0	56.1	56.1	1	6485.68	3.25	0	87.24	0	2.11	0	0	13.66	0	0	0	0	0	0	-46.96	-46.96
	Inverter Transformer	MV4-8 T	369262	4909001	2	0	0	56.1	56.1	1	6521.43	3.25	0	87.29	0	2.12	0	0	13.7	0	0	0	0	0	0	-47.06	-47.06
	Inverter Transformer	MV4-1 T	369017	4909397	2	0	0	56.1	56.1	1	6539.37	3.25	0	87.31	0	2.13	0	0	13.72	0	0	0	0	0	0	-47.11	-47.11
	Inverter Transformer	MV4-9 T	369284	4909001	2	0	0	56.1	56.1	1	6540.12	3.25	0	87.31	0	2.13	0	0	13.73	0	0	0	0	0	0	-47.11	-47.11
	Inverter Transformer	MV6-2 T	370091	4907339	2	0	0	56.1	56.1	1	6610.56	3.25	0	87.4	0	2.15	0	0	13.8	0	0	0	0	0	0	-47.3	-47.3
	Inverter Transformer	MV4-6 T	369249	4909192	2	0	0	56.1	56.1	1	6613.51	3.25	0	87.41	0	2.15	0	0	13.81	0	0	0	0	0	0	-47.31	-47.31
	Inverter Transformer	MV4-5 T	369283	4909199	2	0	0	56.1	56.1	1	6645.77	3.25	0	87.45	0	2.16	0	0	13.84	0	0	0	0	0	0	-47.4	-47.4
	Inverter Transformer	MV6-3 T	370202	4907140	2	0	0	56.1	56.1	1	6667.38	3.25	0	87.48	0	2.17	0	0	13.87	0	0	0	0	0	0	-47.45	-47.45
	Inverter Transformer	MV4-3 T	369234	4909397	2	0	0	56.1	56.1	1	6716.15	3.25	0	87.54	0	2.18	0	0	13.92	0	0	0	0	0	0	-47.59	-47.59
	Inverter Transformer	MV4-2 T	369267	4909397	2	0	0	56.1	56.1	1	6743.24	3.25	0	87.58	0	2.19	0	0	13.95	0	0	0	0	0	0	-47.66	-47.66
	Inverter Transformer	MV5-6 T	369987	4908507	2	0	0	56.1	56.1	1	6922.45	3.25	0	87.81	0	2.24	0	0	14.15	0	0	0	0	0	0	-48.13	-48.13
	Inverter Transformer	MV5-5 T	370021	4908690	2	0	0	56.1	56.1	1	7032.89	3.25	0	87.94	0	2.27	0	0	14.26	0	0	0	0	0	0	-48.42	-48.42
	Inverter Transformer	MV5-2 T	370011	4908853	2	0	0	56.1	56.1	1	7098.21	3.25	0	88.02	0	2.29	0	0	14.33	0	0	0	0	0	0	-48.59	-48.59
	Inverter Transformer	MV5-1 T	370015	4909142	2	0	0	56.1	56.1	1	7240.53	5.13	0	88.2	0	3.09	1.54	0.01	14.49	0	0	0	0	0	0	-51.25	-51.25
	Inverter Transformer	MV5-3 T	370237	4908851	2	0	0	56.1	56.1	1	7298.17	3.25	0	88.26	0	2.34	0	0	14.55	0	0	0	0	0	0	-49.09	-49.09
	Inverter Transformer	MV5-4 T	370330	4908707	2	0	0	56.1	56.1	1	7318.08	3.25	0	88.29	0	2.34	0	0	14.57	0	0	0	0	0	0	-49.14	-49.14
	Line Reactor	NGR	369421	4908787.5	5	0	0	45.4	45.4	1	6548.93	5.25	0	87.32	0	3.23	1.37	0.1	2.68	0	0	0	0	0	0	-49.24	-49.24
Limit. Valu	0	0																								
Level D/N:	29.1503	29.1503																								

Receiver: Existing Noise Receptor
ID: S-R96
X: 363708
Y: 4905513
Z: 4.5
Ground: 0

ISO	Description	ID	X	Y	Z	Ground	ReflOrd	LxT	LxN	L/A	Dist.	hm	Freq	Adiv	K0b	Agr	Abar	z	Aatm	Afol	Ahous	Cmet	CmetN	Dc	RL	LtotT	LtotN
	Inverter	MV1-6	364477	4905835	2	0	0	100.3	100.3	1	833.7	3.25	0	69.42	0	-0.33	0	0	10.32	0	0	0	0	0	0	20.91	20.91
	Inverter	MV1-9	364561	4905646	2	0	0	100.3	100.3	1	863.31	3.25	0	69.72	0	-0.32	0	0	10.43	0	0	0	0	0	0	20.48	20.48
	Inverter	MV1-11	364655	4905414	2	0	0	100.3	100.3	1	952.16	3.25	0	70.57	0	-0.27	0	0	10.75	0	0	0	0	0	0	19.26	19.26
	Inverter	MV1-5	364671	4905892	2	0	0	100.3	100.3	1	1034.9	3.25	0	71.3	0	-0.23	0	0	11.02	0	0	0	0	0	0	18.22	18.22
	Inverter	MV1-8	364788	4905647	2	0	0	100.3	100.3	1	1088.28	3.25	0	71.73	0	-0.2	0	0	11.19	0	0	0	0	0	0	17.59	17.59
	Inverter	MV1-4	364815	4905918	2	0	0	100.3	100.3	1	1178.76	3.25	0	72.43	0	-0.16	0	0	11.46	0	0	0	0	0	0	16.58	16.58
	Inverter	MV1-2	364753	4906063	2	0	0	100.3	100.3	1	1180.9	3.25	0	72.44	0	-0.16	0	0	11.47	0	0	0	0	0	0	16.56	16.56
	Inverter	MV1-1	364715	4906166	2	0	0	100.3	100.3	1	1200.19	3.25	0	72.59	0	-0.15	0	0	11.53	0	0	0	0	0	0	16.35	16.35
	Inverter	MV1-12	365038	4905386	2	0	0	100.3	100.3	1	1336.05	3.25	0	73.52	0	-0.1	0	0	11.9	0	0	0	0	0	0	14.99	14.99
	Inverter	MV1-13	364731	4905241	2	0	0	97.3	97.3	1	1058.55	3.25	0	71.49	0	-0.22	0	0	11.1	0	0	0	0	0	0	14.94	14.94
	Inverter	MV1-15	365315	4904994	2	0	0	100.3	100.3	1	1688.73	3.25	0	75.55	0	0.03	0	0	12.78	0	0	0	0	0	0	11.95	11.95
	Sol_Luce Substation	S_Substation	369426	4908792	3.5	0	0	112.1	112.1	1	6591.46	5.25	0	87.38	0	1.3	2.52	0.28	10.35	0	0	0	0	0	0	10.53	10.53
	Inverter	MV1-7	364925	4905782	2	0	0	97.3	97.3	1	1246.38	3.25	0	72.91	0	-0.13	0	0	11.66	0	0	0	0	0	0	12.88	12.88
	Inverter	MV1-10	365004	4905564	2	0	0	97.3	97.3	1	1297.01	3.25	0	73.26	0	-0.11	0	0	11.8	0	0	0	0	0	0	12.37	12.37
	Inverter	MV1-14	365163	4905049	2	0	0	97.3	97.3	1	1527.2	3.25	0	74.68	0	-0.02	0	0	12.39	0	0	0	0	0	0	10.27	10.27
	Inverter	MV2-4	365586	4906624	2	0	0	100.3	100.3	1	2182.02	3.25	0	77.78	0	0.18	0	0	13.84	0	0	0	0	0	0	8.52	8.52

Inverter	MV2-3	365820	4906641	2	0	0	100.3	100.3	1	2394.35	3.25	0	78.58	0	0.23	0	0	14.26	0	0	0	0	0	0	7.24	7.24
Inverter	MV1-3	364440	4906039	2	0	0	89.1	89.1	1	901.39	3.25	0	70.1	0	0.66	0	0	6.13	0	0	0	0	0	0	12.17	12.17
Inverter	MV2-1	365842	4906816	2	0	0	97.3	97.3	1	2500.35	3.25	0	78.96	0	0.26	0	0	14.46	0	0	0	0	0	0	3.64	3.64
Inverter	MV3-18	367752	4907412	2	0	0	100.3	100.3	1	4467.68	3.25	0	84	0	0.59	0	0	17.78	0	0	0	0	0	0	-2.06	-2.06
Inverter	MV3-12	367668	4907594	2	0	0	100.3	100.3	1	4473.5	3.25	0	84.01	0	0.59	0	0	17.79	0	0	0	0	0	0	-2.08	-2.08
Inverter	MV3-13	367963	4907577	2	0	0	100.3	100.3	1	4729.18	3.25	0	84.5	0	0.62	0	0	18.18	0	0	0	0	0	0	-2.98	-2.98
Inverter	MV3-7	367945	4907754	2	0	0	100.3	100.3	1	4793.15	3.25	0	84.61	0	0.62	0	0	18.27	0	0	0	0	0	0	-3.2	-3.2
Inverter	MV3-3	367939	4907927	2	0	0	100.3	100.3	1	4871.22	3.25	0	84.75	0	0.63	0	0	18.39	0	0	0	0	0	0	-3.46	-3.46
Inverter	MV3-17	368178	4907472	2	0	0	100.3	100.3	1	4880.43	3.25	0	84.77	0	0.63	0	0	18.4	0	0	0	0	0	0	-3.49	-3.49
Inverter	MV3-10	368167	4907669	2	0	0	100.3	100.3	1	4952.88	3.25	0	84.9	0	0.64	0	0	18.51	0	0	0	0	0	0	-3.73	-3.73
Inverter	MV3-19	368357	4907347	2	0	0	100.3	100.3	1	4997.68	3.25	0	84.98	0	0.64	0	0	18.58	0	0	0	0	0	0	-3.88	-3.88
Inverter	MV3-6	368162	4907834	2	0	0	100.3	100.3	1	5022.47	3.25	0	85.02	0	0.64	0	0	18.61	0	0	0	0	0	0	-3.96	-3.96
Inverter	MV3-15	368357	4907477	2	0	0	100.3	100.3	1	5046.83	3.25	0	85.06	0	0.65	0	0	18.65	0	0	0	0	0	0	-4.04	-4.04
Inverter	MV3-21	368478	4907206	2	0	0	100.3	100.3	1	5061.54	3.25	0	85.09	0	0.65	0	0	18.67	0	0	0	0	0	0	-4.09	-4.09
Inverter	MV3-11	368346	4907662	2	0	0	100.3	100.3	1	5111.68	3.25	0	85.17	0	0.65	0	0	18.74	0	0	0	0	0	0	-4.25	-4.25
Inverter	MV3-16	368514	4907475	2	0	0	100.3	100.3	1	5191.06	3.25	0	85.31	0	0.66	0	0	18.86	0	0	0	0	0	0	-4.51	-4.51
Inverter	MV3-9	368512	4907703	2	0	0	100.3	100.3	1	5279.63	3.25	0	85.45	0	0.67	0	0	18.99	0	0	0	0	0	0	-4.79	-4.79
Inverter	MV3-20	368689	4907317	2	0	0	100.3	100.3	1	5297.62	3.25	0	85.48	0	0.67	0	0	19.01	0	0	0	0	0	0	-4.85	-4.85
Inverter	MV3-14	368684	4907498	2	0	0	100.3	100.3	1	5357.31	3.25	0	85.58	0	0.67	0	0	19.1	0	0	0	0	0	0	-5.04	-5.04
Inverter	MV3-8	368680	4907712	2	0	0	100.3	100.3	1	5436.58	3.25	0	85.71	0	0.68	0	0	19.21	0	0	0	0	0	0	-5.28	-5.28
Inverter	MV4-7	369035	4909001	2	0	0	100.3	100.3	1	6367.34	3.25	0	87.08	0	0.71	0	0	20.48	0	0	0	0	0	0	-7.97	-7.97
Inverter	MV4-4	369027	4909199	2	0	0	100.3	100.3	1	6471.35	3.25	0	87.22	0	0.71	0	0	20.62	0	0	0	0	0	0	-8.24	-8.24
Inverter	MV4-11	369264	4908855	2	0	0	100.3	100.3	1	6483.68	3.25	0	87.24	0	0.71	0	0	20.64	0	0	0	0	0	0	-8.28	-8.28
Inverter	MV4-10	369312	4908858	2	0	0	100.3	100.3	1	6526.4	3.25	0	87.29	0	0.71	0	0	20.69	0	0	0	0	0	0	-8.39	-8.39
Inverter	MV4-8	369256	4909001	2	0	0	100.3	100.3	1	6553.35	3.25	0	87.33	0	0.71	0	0	20.73	0	0	0	0	0	0	-8.46	-8.46
Inverter	MV4-1	369011	4909397	2	0	0	100.3	100.3	1	6573.22	3.25	0	87.36	0	0.72	0	0	20.75	0	0	0	0	0	0	-8.51	-8.51
Inverter	MV4-9	369289	4909001	2	0	0	100.3	100.3	1	6581.32	3.25	0	87.37	0	0.72	0	0	20.76	0	0	0	0	0	0	-8.53	-8.53
Inverter	MV6-2	370085	4907339	2	0	0	100.3	100.3	1	6633.28	3.25	0	87.43	0	0.71	0	0	20.83	0	0	0	0	0	0	-8.67	-8.67
Inverter	MV4-6	369243	4909192	2	0	0	100.3	100.3	1	6646.15	3.25	0	87.45	0	0.71	0	0	20.85	0	0	0	0	0	0	-8.7	-8.7
Inverter	MV4-5	369289	4909199	2	0	0	100.3	100.3	1	6688.36	3.25	0	87.51	0	0.71	0	0	20.9	0	0	0	0	0	0	-8.81	-8.81
Inverter	MV6-3	370207	4907140	2	0	0	100.3	100.3	1	6699.56	3.25	0	87.52	0	0.71	0	0	20.92	0	0	0	0	0	0	-8.84	-8.84
Inverter	MV4-3	369229	4909397	2	0	0	100.3	100.3	1	6750.33	3.25	0	87.59	0	0.71	0	0	20.98	0	0	0	0	0	0	-8.97	-8.97
Inverter	MV4-2	369272	4909397	2	0	0	100.3	100.3	1	6785.54	3.25	0	87.63	0	0.71	0	0	21.03	0	0	0	0	0	0	-9.06	-9.06
Inverter	MV5-5	370015	4908690	2	0	0	100.3	100.3	1	7061.98	3.25	0	87.98	0	0.71	0	0	21.38	0	0	0	0	0	0	-9.75	-9.75
Inverter	MV5-2	370006	4908853	2	0	0	100.3	100.3	1	7128.84	3.25	0	88.06	0	0.71	0	0	21.46	0	0	0	0	0	0	-9.91	-9.91
Inverter	MV5-1	370020	4909142	2	0	0	100.3	100.3	1	7280.86	5.13	0	88.24	0	1.78	2.25	0.01	21.65	0	0	0	0	0	0	-13.62	-13.62
Inverter	MV5-3	370231	4908851	2	0	0	100.3	100.3	1	7327.47	3.25	0	88.3	0	0.7	0	0	21.7	0	0	0	0	0	0	-10.39	-10.39
Inverter	MV5-4	370324	4908707	2	0	0	100.3	100.3	1	7346.64	3.25	0	88.32	0	0.7	0	0	21.73	0	0	0	0	0	0	-10.44	-10.44
Inverter	MV2-2	365977	4906654	2	0	0	89.1	89.1	1	2539.73	3.25	0	79.1	0	1.04	0	0	8.91	0	0	0	0	0	0	0.02	0.02
Inverter	MV6-1	370235	4907364	2	0	0	97.3	97.3	1	6784.39	3.25	0	87.63	0	0.71	0	0	21.03	0	0	0	0	0	0	-12.06	-12.06
DSTATCOM - 10 MVAR #2	DSAT2	369403	4908757	2.5	0	0	96.6	96.6	1	6554.13	3.5	0	87.33	0	3.81	0	0	4.1	0	0	0	0	0	0	1.39	1.39
DSTATCOM - 10 MVAR #1	DSAT1	369437	4908757	2.5	0	0	96.6	96.6	1	6583.69	3.5	0	87.37	0	3.81	0	0	4.12	0	0	0	0	0	0	1.33	1.33
Gardiner Substation	G_Sub	366586.3	4903349.9	2.5	0	0	90.8	90.8	1	3600.5	4.25	0	82.13	0	1.25	2.76	0.29	6.82	0	0	0	0	0	0	-2.18	-2.18
Inverters	G_Inv1	366526.4	4903225.8	2	0	0	87.7	87.7	1	3629.69	3.25	0	82.2	0	2.76	0	0	4.47	0	0	0	0	0	0	-1.77	-1.77
SubstationTransformer	W_ST	369711.17	4906112.3	2.5	0	0	92	92	1	6033.01	4.25	0	86.61	0	1.88	2.09	0.29	9.78	0	0	0	0	0	0	-8.38	-8.38
Inverters	G_Inv2	366676.9	4903239.1	2	0	0	87.7	87.7	1	3739.65	3.25	0	82.46	0	2.77	0	0	4.59	0	0	0	0	0	0	-2.16	-2.16
Inverters	G_Inv3	366583.7	4903091.4	2	0	0	87.7	87.7	1	3759.5	3.25	0	82.5	0	2.77	0	0	4.61	0	0	0	0	0	0	-2.23	-2.23
Inverters	G_Inv4	366732.8	4903105	2	0	0	87.7	87.7	1	3866.25	3.25	0	82.75	0	2.78	0	0	4.73	0	0	0	0	0	0	-2.59	-2.59
Inverters	G_Inv5	366638.5	4902958.1	2	0	0	87.7	87.7	1	3887.85	3.25	0	82.79	0	2.78	0	0	4.75	0	0	0	0	0	0	-2.67	-2.67
Inverters	G_Inv6	366788.5	4902972	2	0	0	87.7	87.7	1	3993.27	3.25	0	83.03	0	2.79	0	0	4.87	0	0	0	0	0	0	-3.02	-3.02
Inverters	G_Inv7	366694.6	4902824.7	2	0	0	87.7	87.7	1	4018.3	3.25	0	83.08	0	2.79	0	0	4.89	0	0	0	0	0	0	-3.11	-3.11
Inverters	G_Inv8	366844.5	4902838.5	2	0	0	87.7	87.7	1	4121.96	3.25	0	83.3	0	2.8	0	0	5.01	0	0	0	0	0	0	-3.45	-3.45
Inverters	G_Inv9	366750.9	4902691.8	2	0	0	87.7	87.7	1	4149.51	3.25	0	83.36	0	2.8	0	0	5.04	0	0	0	0	0	0	-3.54	-3.54
Inverters	G_Inv10	366900.7	4902704.8	2	0	0	87.7	87.7	1	4251.98	3.25	0	83.57	0	2.81	0	0	5.15	0	0	0	0	0	0	-3.87	-3.87
Inverter	MV3-1	368156	4907976	2	0	0	89.1	89.1	1	5084.4	3.25	0	85.12	0	1.66	0	0	12.58	0	0	0	0	0	0	-10.3	-10.3
Inverter	MV3-5	368340	4907843	2	0	0	89.1	89.1	1	5185.01	3.25	0	85.29	0	1.69	0	0	12.71	0	0	0	0	0	0	-10.63	-10.63
Inverter	MV3-22	368656	4907142	2	0	0	89.1	89.1	1	5209.26	3.25	0	85.34	0	1.69	0	0	12.74	0	0	0	0	0	0	-10.71	-10.71
Inverter	MV3-4	368502	4907925	2	0	0	89.1	89.1	1	5366.58	3.25	0	85.59	0	1.73	0	0	12.95	0	0	0	0	0	0	-11.21	-11.21
Inverter	MV3-2	368671	4907928	2	0	0	89.1	89.1	1	5519.38	3.25	0	85.84	0	1.77	0	0	13.15	0	0	0	0	0	0	-11.7	-11.7
Westbrook Inverter Enclosur	W_INV2	369374	4906388	2	0	0	89.1	89.1	1	5733.17	3.25	0	86.17	0	1.82	0	0	13.42	0	0	0	0	0	0	-12.35	-12.35
Westbrook Inverter Enclosur	W_INV3	369508	4906164	2	0	0	89.1	89.1	1	5836.42	3.25	0	86.32	0	1.85	0	0	13.56	0	0	0	0	0	0	-12.67	-12.67
Westbrook Inverter Enclosur	W_INV4	369673	4906164	2	0	0	89.1	89.1	1	6000.42	3.25	0	86.56	0	1.89	0	0	13.76	0	0	0	0	0	0	-13.15	-13.15
Fixed Reactor Bank 1	FRB1	369378	4908755	6	0	0	89.8	89.8	1	6531.42	5.25	0	87.3	0	-0.34	0	0	10.29	0	0	0	0	0	0	-7.47	-7.47
Fixed Reactor Bank 2	FRB2	369464	4908755	6	0	0	89.8	89.8	1	6606.22	5.25	0	87.4	0	-0.33	0	0	10.37	0	0	0	0	0	0	-7.65	-7.65
Westbrook Inverter Enclosur	W_INV5	369719	4906574	2	0	0	89.1	89.1	1	6103.92	3.25	0	86.71	0	1.91	0	0	13.89	0	0	0	0	0	0	-13.46	-13.46
Westbrook Inverter Enclosur	W_INV7	369780	4906417	2	0	0	89.1	89.1	1	6138.93	3.25	0	86.76	0	1.92	0	0	13.94	0	0	0	0	0	0	-13.56	-13.56
Inverter	MV4-13	369051	4908605	2	0	0	89.1	89.1	1	6173.18	3.25	0	86.81	0	1.93	0	0	13.98	0	0	0	0	0	0	-13.66	-13.66
Inverter	MV4-15	369176	4908481	2	0	0	89.1	89.1	1	6221.58	3.25	0	86.88	0	1.94	0	0	14.04	0	0	0	0	0	0	-13.8	-13.8
Inverter	MV4-14	369176	4908507	2	0	0	89.1	89.1	1	6234.02	3.25	0	86.9	0	1.94	0	0	14.06	0	0	0	0	0	0	-13.84	-13.84
Westbrook Inverter Enclosur	W_INV6	369875	4906578	2	0	0	89.1	89.1	1	6258.28	3.25	0	86.93	0	1.95	0	0	14.09	0	0	0	0	0	0	-13.91	-13.91
Inverter	MV4-12	369043	4908803	2	0	0	89.1	89.1	1	6267.88	3.25	0	86.94	0	1.95	0	0	14.1	0	0	0	0	0	0	-13.93	-13.93
Inverter	MV5-6	369982	4908507	2	0	0	89.1	89.1	1	6951.77	3.25	0	87.84	0	2.12	0	0	14.93	0	0	0	0	0	0	-15.83	-15.83
Westbrook Inverter Enclosur	W_INV1	369409	4906578	2	0	0	86.1	86.1	1	5799.62	3.25	0	86.27	0	1.84	0	0	13.51	0	0	0	0	0	0	-15.56	-15.56
Inverter	MV6-4	370250	4906966	2	0	0	86.1	86.1	1	6701.42	3.25	0	87.52	0	2.06	0	0	14.63	0	0	0	0	0	0	-18.15	-18.15

Inverter Transformer	MV1-13 T	364725	4905241	2	0	0	69.4	69.4	1	1052.75	3.25	0	71.45	0	1.72	0	0	3.88	0	0	0	0	0	0	-7.7	-7.7
Inverter Transformer	MV1-7 T	364919	4905782	2	0	0	69.4	69.4	1	1240.52	3.25	0	72.87	0	1.85	0	0	4.13	0	0	0	0	0	0	-9.49	-9.49
Inverter Transformer	MV1-10 T	365010	4905564	2	0	0	69.4	69.4	1	1303	3.25	0	73.3	0	1.88	0	0	4.2	0	0	0	0	0	0	-10.03	-10.03
Inverter Transformer	MV1-14 T	365157	4905049	2	0	0	69.4	69.4	1	1521.48	3.25	0	74.65	0	1.98	0	0	4.46	0	0	0	0	0	0	-11.74	-11.74
Westbrook Inverter Transfor	W_INVTR1	369403	4906578	2	0	0	78.2	78.2	1	5793.73	3.25	0	86.26	0	-3.33	0	0	2.68	0	0	0	0	0	0	-7.36	-7.36
Westbrook Inverter Transfor	W_INVTR2	369368	4906388	2	0	0	77.3	77.3	1	5727.24	3.25	0	86.16	0	-3.32	0	0	2.65	0	0	0	0	0	0	-8.15	-8.15
Westbrook Inverter Transfor	W_INVTR3	369514	4906164	2	0	0	77.3	77.3	1	5842.38	3.25	0	86.33	0	-3.34	0	0	2.69	0	0	0	0	0	0	-8.34	-8.34
Westbrook Inverter Transfor	W_INVTR4	369679	4906164	2	0	0	77.3	77.3	1	6006.38	3.25	0	86.57	0	-3.37	0	0	2.74	0	0	0	0	0	0	-8.6	-8.6
Westbrook Inverter Transfor	W_INVTR5	369725	4906574	2	0	0	77.3	77.3	1	6109.83	3.25	0	86.72	0	-3.39	0	0	2.78	0	0	0	0	0	0	-8.77	-8.77
Westbrook Inverter Transfor	W_INVTR7	369786	4906417	2	0	0	77.3	77.3	1	6144.86	3.25	0	86.77	0	-3.39	0	0	2.79	0	0	0	0	0	0	-8.82	-8.82
Inverter Transformer	MV2-1 T	365836	4906816	2	0	0	69.4	69.4	1	2495.24	3.25	0	78.94	0	2.35	0	0	5.44	0	0	0	0	0	0	-17.38	-17.38
Westbrook Inverter Transfor	W_INVTR6	369881	4906578	2	0	0	77.3	77.3	1	6264.2	3.25	0	86.94	0	-3.41	0	0	2.82	0	0	0	0	0	0	-9	-9
Inverter Transformer	MV1-6 T	364482	4905835	2	0	0	56.1	56.1	1	838.31	3.25	0	69.47	0	-0.04	0	0	4.49	0	0	0	0	0	0	-17.86	-17.86
Inverter Transformer	MV1-9 T	364555	4905646	2	0	0	56.1	56.1	1	857.38	3.25	0	69.66	0	-0.04	0	0	4.54	0	0	0	0	0	0	-18.11	-18.11
Inverter Transformer	MV1-3 T	364435	4906039	2	0	0	56.1	56.1	1	897.34	3.25	0	70.06	0	-0.02	0	0	4.64	0	0	0	0	0	0	-18.62	-18.62
Inverter Transformer	MV1-11 T	364649	4905414	2	0	0	56.1	56.1	1	946.2	3.25	0	70.52	0	-0.01	0	0	4.76	0	0	0	0	0	0	-19.21	-19.21
Inverter Transformer	MV1-5 T	364676	4905892	2	0	0	56.1	56.1	1	1039.55	3.25	0	71.34	0	0.03	0	0	4.98	0	0	0	0	0	0	-20.29	-20.29
Inverter Transformer	MV1-8 T	364782	4905647	2	0	0	56.1	56.1	1	1082.33	3.25	0	71.69	0	0.04	0	0	5.08	0	0	0	0	0	0	-20.75	-20.75
Inverter Transformer	MV1-4 T	364821	4905918	2	0	0	56.1	56.1	1	1184.4	3.25	0	72.47	0	0.08	0	0	5.32	0	0	0	0	0	0	-21.81	-21.81
Inverter Transformer	MV1-2 T	364759	4906063	2	0	0	56.1	56.1	1	1186.22	3.25	0	72.48	0	0.08	0	0	5.32	0	0	0	0	0	0	-21.83	-21.83
Inverter Transformer	MV1-1 T	364721	4906166	2	0	0	56.1	56.1	1	1205.23	3.25	0	72.62	0	0.09	0	0	5.37	0	0	0	0	0	0	-22.02	-22.02
Inverter Transformer	MV1-12 T	365044	4905386	2	0	0	56.1	56.1	1	1342.03	3.25	0	73.56	0	0.14	0	0	5.67	0	0	0	0	0	0	-23.31	-23.31
Inverter Transformer	MV6-4 T	370244	4906966	2	0	0	69.4	69.4	1	6695.56	3.25	0	87.52	0	3.28	0	0	8.43	0	0	0	0	0	0	-29.88	-29.88
Inverter Transformer	MV6-1 T	370230	4907364	2	0	0	69.4	69.4	1	6779.58	3.25	0	87.62	0	3.29	0	0	8.48	0	0	0	0	0	0	-30.04	-30.04
Inverter Transformer	MV1-15 T	365309	4904994	2	0	0	56.1	56.1	1	1683.02	3.25	0	75.52	0	0.27	0	0	6.4	0	0	0	0	0	0	-26.14	-26.14
Inverter Transformer	MV2-4 T	365590	4906628	2	0	0	56.1	56.1	1	2187.5	3.25	0	77.8	0	0.48	0	0	7.41	0	0	0	0	0	0	-29.63	-29.63
Inverter Transformer	MV2-3 T	365814	4906641	2	0	0	56.1	56.1	1	2389.06	3.25	0	78.56	0	0.57	0	0	7.79	0	0	0	0	0	0	-30.86	-30.86
Inverter Transformer	MV2-2 T	365982	4906654	2	0	0	56.1	56.1	1	2544.2	3.25	0	79.11	0	0.64	0	0	8.07	0	0	0	0	0	0	-31.76	-31.76
Inverter Transformer	MV3-18 T	367757	4907412	2	0	0	56.1	56.1	1	4472.2	3.25	0	84.01	0	1.43	0	0	11.14	0	0	0	0	0	0	-40.52	-40.52
Inverter Transformer	MV3-12 T	367674	4907594	2	0	0	56.1	56.1	1	4478.81	3.25	0	84.02	0	1.43	0	0	11.15	0	0	0	0	0	0	-40.54	-40.54
Inverter Transformer	MV3-13 T	367958	4907577	2	0	0	56.1	56.1	1	4724.68	3.25	0	84.49	0	1.52	0	0	11.49	0	0	0	0	0	0	-41.44	-41.44
Inverter Transformer	MV3-7 T	367951	4907754	2	0	0	56.1	56.1	1	4798.45	3.25	0	84.62	0	1.55	0	0	11.59	0	0	0	0	0	0	-41.7	-41.7
Inverter Transformer	MV3-3 T	367944	4907927	2	0	0	56.1	56.1	1	4875.56	3.25	0	84.76	0	1.58	0	0	11.69	0	0	0	0	0	0	-41.97	-41.97
Inverter Transformer	MV3-17 T	368183	4907472	2	0	0	56.1	56.1	1	4885.01	3.25	0	84.78	0	1.58	0	0	11.7	0	0	0	0	0	0	-42	-42
Inverter Transformer	MV3-10 T	368162	4907669	2	0	0	56.1	56.1	1	4948.38	3.25	0	84.89	0	1.61	0	0	11.79	0	0	0	0	0	0	-42.22	-42.22
Inverter Transformer	MV3-19 T	368352	4907347	2	0	0	56.1	56.1	1	4993.02	3.25	0	84.97	0	1.62	0	0	11.84	0	0	0	0	0	0	-42.38	-42.38
Inverter Transformer	MV3-6 T	368156	4907834	2	0	0	56.1	56.1	1	5017.15	3.25	0	85.01	0	1.63	0	0	11.88	0	0	0	0	0	0	-42.46	-42.46
Inverter Transformer	MV3-15 T	368351	4907477	2	0	0	56.1	56.1	1	5041.3	3.25	0	85.05	0	1.64	0	0	11.91	0	0	0	0	0	0	-42.54	-42.54
Inverter Transformer	MV3-21 T	368484	4907206	2	0	0	56.1	56.1	1	5067.19	3.25	0	85.1	0	1.65	0	0	11.94	0	0	0	0	0	0	-42.63	-42.63
Inverter Transformer	MV3-1 T	368150	4907976	2	0	0	56.1	56.1	1	5079.15	3.25	0	85.12	0	1.65	0	0	11.96	0	0	0	0	0	0	-42.67	-42.67
Inverter Transformer	MV3-11 T	368340	4907662	2	0	0	56.1	56.1	1	5106.23	3.25	0	85.16	0	1.66	0	0	11.99	0	0	0	0	0	0	-42.76	-42.76
Inverter Transformer	MV3-5 T	368335	4907843	2	0	0	56.1	56.1	1	5180.54	3.25	0	85.29	0	1.69	0	0	12.09	0	0	0	0	0	0	-43.01	-43.01
Inverter Transformer	MV3-16 T	368509	4907475	2	0	0	56.1	56.1	1	5186.43	3.25	0	85.3	0	1.69	0	0	12.1	0	0	0	0	0	0	-43.03	-43.03
Inverter Transformer	MV3-22 T	368661	4907142	2	0	0	56.1	56.1	1	5214.01	3.25	0	85.34	0	1.7	0	0	12.13	0	0	0	0	0	0	-43.12	-43.12
Inverter Transformer	MV3-9 T	368517	4907703	2	0	0	56.1	56.1	1	5284.18	3.25	0	85.46	0	1.73	0	0	12.22	0	0	0	0	0	0	-43.35	-43.35
Inverter Transformer	MV3-20 T	368683	4907317	2	0	0	56.1	56.1	1	5291.98	3.25	0	85.47	0	1.73	0	0	12.23	0	0	0	0	0	0	-43.38	-43.38
Inverter Transformer	MV3-14 T	368678	4907498	2	0	0	56.1	56.1	1	5351.74	3.25	0	85.57	0	1.75	0	0	12.31	0	0	0	0	0	0	-43.57	-43.57
Inverter Transformer	MV3-4 T	368507	4907925	2	0	0	56.1	56.1	1	5371.05	3.25	0	85.6	0	1.76	0	0	12.33	0	0	0	0	0	0	-43.63	-43.63
Inverter Transformer	MV3-8 T	368685	4907712	2	0	0	56.1	56.1	1	5441.15	3.25	0	85.71	0	1.78	0	0	12.42	0	0	0	0	0	0	-43.86	-43.86
Inverter Transformer	MV3-2 T	368677	4907928	2	0	0	56.1	56.1	1	5524.78	3.25	0	85.85	0	1.81	0	0	12.53	0	0	0	0	0	0	-44.12	-44.12
Inverter Transformer	MV4-13 T	369057	4908605	2	0	0	56.1	56.1	1	6178.37	3.25	0	86.82	0	2.02	0	0	13.31	0	0	0	0	0	0	-46.09	-46.09
Inverter Transformer	MV4-15 T	369170	4908481	2	0	0	56.1	56.1	1	6216.31	3.25	0	86.87	0	2.03	0	0	13.36	0	0	0	0	0	0	-46.2	-46.2
Inverter Transformer	MV4-14 T	369182	4908507	2	0	0	56.1	56.1	1	6239.29	3.25	0	86.9	0	2.04	0	0	13.38	0	0	0	0	0	0	-46.27	-46.27
Inverter Transformer	MV4-12 T	369049	4908803	2	0	0	56.1	56.1	1	6272.99	3.25	0	86.95	0	2.05	0	0	13.42	0	0	0	0	0	0	-46.36	-46.36
Inverter Transformer	MV4-7 T	369040	4909001	2	0	0	56.1	56.1	1	6371.53	3.25	0	87.08	0	2.08	0	0	13.53	0	0	0	0	0	0	-46.64	-46.64
Inverter Transformer	MV4-4 T	369033	4909199	2	0	0	56.1	56.1	1	6476.28	3.25	0	87.23	0	2.11	0	0	13.65	0	0	0	0	0	0	-46.93	-46.93
Inverter Transformer	MV4-11 T	369269	4908855	2	0	0	56.1	56.1	1	6487.97	3.25	0	87.24	0	2.11	0	0	13.67	0	0	0	0	0	0	-46.96	-46.96
Inverter Transformer	MV4-10 T	369307	4908858	2	0	0	56.1	56.1	1	6522.1	3.25	0	87.29	0	2.12	0	0	13.7	0	0	0	0	0	0	-47.06	-47.06
Inverter Transformer	MV4-8 T	369262	4909001	2	0	0	56.1	56.1	1	6558.43	3.25	0	87.34	0	2.13	0	0	13.75	0	0	0	0	0	0	-47.16	-47.16
Inverter Transformer	MV4-9 T	369284	4909001	2	0	0	56.1	56.1	1	6577.08	3.25	0	87.36	0	2.14	0	0	13.77	0	0	0	0	0	0	-47.21	-47.21
Inverter Transformer	MV4-1 T	369017	4909397	2	0	0	56.1	56.1	1	6578.07	3.25	0	87.36	0	2.14	0	0	13.77	0	0	0	0	0	0	-47.21	-47.21
Inverter Transformer	MV6-2 T	370091	4907339	2	0	0	56.1	56.1	1	6639.05	3.25	0	87.44	0	2.16	0	0	13.84	0	0	0	0	0	0	-47.38	-47.38
Inverter Transformer	MV4-6 T	369249	4909192	2	0	0	56.1	56.1	1	6651.14	3.25	0	87.46	0	2.16	0	0	13.85	0	0	0	0	0	0	-47.41	-47.41
Inverter Transformer	MV4-5 T	369283	4909199	2	0	0	56.1	56.1	1	6683.35	3.25	0	87.5	0	2.17	0	0	13.88	0	0	0	0	0	0	-47.5	-47.5
Inverter Transformer	MV6-3 T	370202	4907140	2	0	0	56.1	56.1	1	6694.71	3.25	0	87.51	0	2.17	0	0	13.9	0	0	0	0	0	0	-47.53	-47.53
Inverter Transformer	MV4-3 T	369234	4909397	2	0	0	56.1	56.1	1	6754.42	3.25	0	87.59	0	2.19	0	0	13.96	0	0	0	0	0	0	-47.69	-47.69
Inverter Transformer	MV4-2 T	369267	4909397	2	0	0	56.1	56.1	1	6781.44	3.25	0	87.63	0	2.2	0	0	13.99	0	0	0	0	0	0	-47.76	-47.76
Inverter Transformer	MV5-6 T	369987	4908507	2	0	0	56.1	56.1	1	6956.28	3.25	0	87.85	0	2.25	0	0	14.18	0	0	0	0	0	0	-48.22	-48.22
Inverter Transformer	MV5-5 T	370021	4908690	2	0	0	56.1	56.1	1	7067.34	3.25	0	87.99	0	2.28	0	0	14.3	0	0	0	0	0	0	-48.51	-48.51
Inverter Transformer	MV5-2 T	370011	4908853	2	0	0	56.1	56.1	1	7133.26	3.25	0	88.07	0	2.3	0	0	14.37	0	0	0	0	0	0	-48.67	-48.67
Inverter Transformer	MV5-1 T	370015	4909142	2	0	0	56.1	56.1	1	7276.53	5.13	0	88.24	0	3.09	1.53	0.01	14.52	0	0	0	0	0	0	-51.33	-51.33
Inverter Transformer	MV5-3 T	370237	4908851	2	0	0	56.1	56.1	1	7332.81	3.25	0	88.31	0	2.35	0	0	14.58	0	0	0	0	0	0	-49.18	-49.18
Inverter Transformer	MV5-4 T	370330	4908707	2	0	0	56.1	56.1	1	7352.04	3.25	0	88.33	0	2.35	0	0	14.6	0	0	0	0	0	0	-49.22	-49.22
Line Reactor	NGR	369421	4908787.5	5	0	0	45.4	45.4	1	6584.89	5.25	0	87.37	0	3.23	1.37	0.1	2.69	0	0	0	0	0	0	-49.3	-49.3

Limit. Valu 0 0
Level D/N: 28.8487 28.8487

Receiver: Existing Noise Receptor
ID: S-R97
X: 363780
Y: 4905438
Z: 4.5
Ground: 0

ISO	Description	ID	X	Y	Z	Ground	ReflOrd	LxT	LxN	L/A	Dist.	hm	Freq	Adiv	K0b	Agr	Abar	z	Aatm	Afol	Ahous	Cmet	CmetN	Dc	RL	LtotT	LtotN
	Inverter	MV1-6	364477	4905835	2	0	0	100.3	100.3	1	802.14	3.25	0	69.08	0	-0.35	0	0	10.19	0	0	0	0	0	0	21.39	21.39
	Inverter	MV1-9	364561	4905646	2	0	0	100.3	100.3	1	808.23	3.25	0	69.15	0	-0.35	0	0	10.21	0	0	0	0	0	0	21.29	21.29
	Inverter	MV1-11	364655	4905414	2	0	0	100.3	100.3	1	875.33	3.25	0	69.84	0	-0.31	0	0	10.47	0	0	0	0	0	0	20.3	20.3
	Inverter	MV1-5	364671	4905892	2	0	0	100.3	100.3	1	1000	3.25	0	71	0	-0.25	0	0	10.91	0	0	0	0	0	0	18.65	18.65
	Inverter	MV1-8	364788	4905647	2	0	0	100.3	100.3	1	1029.44	3.25	0	71.25	0	-0.23	0	0	11.01	0	0	0	0	0	0	18.28	18.28
	Inverter	MV1-4	364815	4905918	2	0	0	100.3	100.3	1	1140.89	3.25	0	72.14	0	-0.18	0	0	11.35	0	0	0	0	0	0	16.99	16.99
	Inverter	MV1-2	364753	4906063	2	0	0	100.3	100.3	1	1156.44	3.25	0	72.26	0	-0.17	0	0	11.4	0	0	0	0	0	0	16.82	16.82
	Inverter	MV1-1	364715	4906166	2	0	0	100.3	100.3	1	1185	3.25	0	72.47	0	-0.16	0	0	11.48	0	0	0	0	0	0	16.52	16.52
	Inverter	MV1-12	365038	4905386	2	0	0	100.3	100.3	1	1259.08	3.25	0	73	0	-0.13	0	0	11.69	0	0	0	0	0	0	15.75	15.75
	Inverter	MV1-13	364731	4905241	2	0	0	97.3	97.3	1	971.19	3.25	0	70.75	0	-0.26	0	0	10.81	0	0	0	0	0	0	16.01	16.01
	Inverter	MV1-15	365315	4904994	2	0	0	100.3	100.3	1	1597.93	3.25	0	75.07	0	0	0	0	12.56	0	0	0	0	0	0	12.68	12.68
	Inverter	MV1-7	364925	4905782	2	0	0	97.3	97.3	1	1195.56	3.25	0	72.55	0	-0.16	0	0	11.51	0	0	0	0	0	0	13.4	13.4
	Sol_Luce Substation	S_Substation	369426	4908792	3.5	0	0	112.1	112.1	1	6567.09	5.25	0	87.35	0	1.29	2.53	0.28	10.33	0	0	0	0	0	0	10.59	10.59
	Inverter	MV1-10	365004	4905564	2	0	0	97.3	97.3	1	1230.47	3.25	0	72.8	0	-0.14	0	0	11.61	0	0	0	0	0	0	13.04	13.04
	Inverter	MV1-14	365163	4905049	2	0	0	97.3	97.3	1	1436.67	3.25	0	74.15	0	-0.06	0	0	12.17	0	0	0	0	0	0	11.06	11.06
	Inverter	MV2-4	365586	4906624	2	0	0	100.3	100.3	1	2160.61	3.25	0	77.69	0	0.17	0	0	13.79	0	0	0	0	0	0	8.65	8.65
	Inverter	MV2-3	365820	4906641	2	0	0	100.3	100.3	1	2368.29	3.25	0	78.49	0	0.23	0	0	14.21	0	0	0	0	0	0	7.39	7.39
	Inverter	MV1-3	364440	4906039	2	0	0	89.1	89.1	1	892.64	3.25	0	70.01	0	0.66	0	0	6.11	0	0	0	0	0	0	12.27	12.27
	Inverter	MV2-1	365842	4906816	2	0	0	97.3	97.3	1	2480.07	3.25	0	78.89	0	0.25	0	0	14.42	0	0	0	0	0	0	3.75	3.75
	Inverter	MV3-18	367752	4907412	2	0	0	100.3	100.3	1	4435.48	3.25	0	83.94	0	0.58	0	0	17.73	0	0	0	0	0	0	-1.94	-1.94
	Inverter	MV3-12	367668	4907594	2	0	0	100.3	100.3	1	4445.77	3.25	0	83.96	0	0.58	0	0	17.75	0	0	0	0	0	0	-1.98	-1.98
	Inverter	MV3-13	367963	4907577	2	0	0	100.3	100.3	1	4698.17	3.25	0	84.44	0	0.61	0	0	18.13	0	0	0	0	0	0	-2.87	-2.87
	Inverter	MV3-7	367945	4907754	2	0	0	100.3	100.3	1	4765.62	3.25	0	84.56	0	0.62	0	0	18.23	0	0	0	0	0	0	-3.1	-3.1
	Inverter	MV3-17	368178	4907472	2	0	0	100.3	100.3	1	4845.57	3.25	0	84.71	0	0.63	0	0	18.35	0	0	0	0	0	0	-3.37	-3.37
	Inverter	MV3-3	367939	4907927	2	0	0	100.3	100.3	1	4846.9	3.25	0	84.71	0	0.63	0	0	18.35	0	0	0	0	0	0	-3.38	-3.38
	Inverter	MV3-10	368167	4907669	2	0	0	100.3	100.3	1	4921.7	3.25	0	84.84	0	0.63	0	0	18.46	0	0	0	0	0	0	-3.63	-3.63
	Inverter	MV3-19	368357	4907347	2	0	0	100.3	100.3	1	4959.15	3.25	0	84.91	0	0.64	0	0	18.52	0	0	0	0	0	0	-3.75	-3.75
	Inverter	MV3-6	368162	4907834	2	0	0	100.3	100.3	1	4994.27	3.25	0	84.97	0	0.64	0	0	18.57	0	0	0	0	0	0	-3.87	-3.87
	Inverter	MV3-15	368357	4907477	2	0	0	100.3	100.3	1	5010.63	3.25	0	85	0	0.64	0	0	18.6	0	0	0	0	0	0	-3.92	-3.92
	Inverter	MV3-21	368478	4907206	2	0	0	100.3	100.3	1	5019.66	3.25	0	85.01	0	0.64	0	0	18.61	0	0	0	0	0	0	-3.95	-3.95
	Inverter	MV3-11	368346	4907662	2	0	0	100.3	100.3	1	5078.83	3.25	0	85.12	0	0.65	0	0	18.7	0	0	0	0	0	0	-4.15	-4.15
	Inverter	MV3-16	368514	4907475	2	0	0	100.3	100.3	1	5153.65	3.25	0	85.24	0	0.66	0	0	18.8	0	0	0	0	0	0	-4.39	-4.39
	Inverter	MV3-9	368512	4907703	2	0	0	100.3	100.3	1	5246.15	3.25	0	85.4	0	0.66	0	0	18.94	0	0	0	0	0	0	-4.69	-4.69
	Inverter	MV3-20	368689	4907317	2	0	0	100.3	100.3	1	5256.32	3.25	0	85.41	0	0.66	0	0	18.95	0	0	0	0	0	0	-4.72	-4.72
	Inverter	MV3-14	368684	4907498	2	0	0	100.3	100.3	1	5319.1	3.25	0	85.52	0	0.67	0	0	19.04	0	0	0	0	0	0	-4.92	-4.92
	Inverter	MV3-8	368680	4907712	2	0	0	100.3	100.3	1	5401.95	3.25	0	85.65	0	0.67	0	0	19.16	0	0	0	0	0	0	-5.17	-5.17
	Inverter	MV4-7	369035	4909001	2	0	0	100.3	100.3	1	6349.02	3.25	0	87.05	0	0.71	0	0	20.46	0	0	0	0	0	0	-7.92	-7.92
	Inverter	MV4-4	369027	4909199	2	0	0	100.3	100.3	1	6455.71	3.25	0	87.2	0	0.71	0	0	20.6	0	0	0	0	0	0	-8.2	-8.2
	Inverter	MV4-11	369264	4908855	2	0	0	100.3	100.3	1	6461.44	3.25	0	87.21	0	0.71	0	0	20.61	0	0	0	0	0	0	-8.22	-8.22
	Inverter	MV4-10	369312	4908858	2	0	0	100.3	100.3	1	6503.8	3.25	0	87.26	0	0.71	0	0	20.66	0	0	0	0	0	0	-8.33	-8.33
	Inverter	MV4-8	369256	4909001	2	0	0	100.3	100.3	1	6533.11	3.25	0	87.3	0	0.71	0	0	20.7	0	0	0	0	0	0	-8.41	-8.41
	Inverter	MV4-1	369011	4909397	2	0	0	100.3	100.3	1	6560.26	3.25	0	87.34	0	0.72	0	0	20.74	0	0	0	0	0	0	-8.48	-8.48
	Inverter	MV4-9	369289	4909001	2	0	0	100.3	100.3	1	6560.8	3.25	0	87.34	0	0.72	0	0	20.74	0	0	0	0	0	0	-8.48	-8.48
	Inverter	MV6-2	370085	4907339	2	0	0	100.3	100.3	1	6585.35	3.25	0	87.37	0	0.72	0	0	20.77	0	0	0	0	0	0	-8.54	-8.54
	Inverter	MV4-6	369243	4909192	2	0	0	100.3	100.3	1	6628.49	3.25	0	87.43	0	0.71	0	0	20.83	0	0	0	0	0	0	-8.66	-8.66
	Inverter	MV6-3	370207	4907140	2	0	0	100.3	100.3	1	6648.54	3.25	0	87.45	0	0.71	0	0	20.85	0	0	0	0	0	0	-8.71	-8.71
	Inverter	MV4-5	369289	4909199	2	0	0	100.3	100.3	1	6670.4	3.25	0	87.48	0	0.71	0	0	20.88	0	0	0	0	0	0	-8.77	-8.77
	Inverter	MV4-3	369229	4909397	2	0	0	100.3	100.3	1	6735.38	3.25	0	87.57	0	0.71	0	0	20.96	0	0	0	0	0	0	-8.93	-8.93
	Inverter	MV4-2	369272	4909397	2	0	0	100.3	100.3	1	6770.21	3.25	0	87.61	0	0.71	0	0	21.01	0	0	0	0	0	0	-9.02	-9.02
	Inverter	MV5-5	370015	4908690	2	0	0	100.3	100.3	1	7032.12	3.25	0	87.94	0	0.71	0	0	21.34	0	0	0	0	0	0	-9.68	-9.68
	Inverter	MV5-2	370006	4908853	2	0	0	100.3	100.3	1	7101.08	3.25	0	88.03	0	0.71	0	0	21.43	0	0	0	0	0	0	-9.85	-9.85
	Inverter	MV5-1	370020	4909142	2	0	0	100.3	100.3	1	7256.53	5.13	0	88.21	0	1.78	2.26	0.01	21.62	0	0	0	0	0	0	-13.56	-13.56
	Inverter	MV5-3	370231	4908851	2	0	0	100.3	100.3	1	7298.22	3.25	0	88.26	0	0.7	0	0	21.67	0	0	0	0	0	0	-10.32	-10.32
	Inverter	MV5-4	370324	4908707	2	0	0	100.3	100.3	1	7315.07	3.25	0	88.28	0	0.7	0	0	21.69	0	0	0	0	0	0	-10.36	-10.36
	Inverter	MV2-2	365977	4906654	2	0	0	89.1	89.1	1	2511.07	3.25	0	79	0	1.03	0	0	8.86	0	0	0	0	0	0	0.17	0.17
	Inverter	MV6-1	370235	4907364	2	0	0	97.3	97.3	1	6736.21	3.25	0	87.57	0	0.71	0	0	20.96	0	0	0	0	0	0	-11.94	-11.94
	DSTATCOM - 10 MVAR #2	DSAT2	369403	4908757	2.5	0	0	96.6	96.6	1	6529.46	3.5	0	87.3	0	3.81	0	0	4.09	0	0	0	0	0	0	1.43	1.43
	DSTATCOM - 10 MVAR #1	DSAT1	369437	4908757	2.5	0	0	96.6	96.6	1	6558.77	3.5	0	87.34	0	3.81	0	0	4.1	0	0	0	0	0	0	1.38	1.38
	Gardiner Substation	G_Sub	366586.3	4903349.9	2.5	0	0	90.8	90.8	1	3497.93	4.25	0	81.88	0	1.22	2.79	0.29	6.68	0	0	0	0	0	0	-1.79	-1.79
	Inverters	G_Inv1	366526.4	4903225.8	2	0	0	87.7	87.7	1	3526.55	3.25	0	81.95	0	2.75	0	0	4.36	0	0	0	0	0	0	-1.39	-1.39
	SubstationTransformer	W_ST	369711.17	4906112.3	2.5	0	0	92	92	1	5969.37	4.25	0	86.52	0	1.87	2.11	0.29	9.71	0	0	0	0	0	0	-8.23	-8.23
	Inverters	G_Inv2	366676.9	4903239.1	2	0	0	87.7	87.7	1	3636.92	3.25	0	82.21	0	2.76	0	0	4.48	0	0	0	0	0	0	-1.79	-1.79
	Inverters	G_Inv3	366583.7	4903091.4	2	0	0	87.7	87.7	1	3656.13	3.25	0	82.26	0	2.76	0	0	4.5	0	0	0	0	0	0	-1.86	-1.86

Inverters	G_Inv4	366732.8	4903105	2	0	0	87.7	87.7	1	3763.23	3.25	0	82.51	0	2.77	0	0	4.62	0	0	0	0	0	0	-2.24	-2.24
Inverters	G_Inv5	366638.5	4902958.1	2	0	0	87.7	87.7	1	3784.3	3.25	0	82.56	0	2.77	0	0	4.64	0	0	0	0	0	0	-2.31	-2.31
Inverters	G_Inv6	366788.5	4902972	2	0	0	87.7	87.7	1	3890.02	3.25	0	82.8	0	2.78	0	0	4.75	0	0	0	0	0	0	-2.68	-2.68
Inverters	G_Inv7	366694.6	4902824.7	2	0	0	87.7	87.7	1	3914.62	3.25	0	82.85	0	2.78	0	0	4.78	0	0	0	0	0	0	-2.76	-2.76
Inverters	G_Inv8	366844.5	4902838.5	2	0	0	87.7	87.7	1	4018.53	3.25	0	83.08	0	2.79	0	0	4.89	0	0	0	0	0	0	-3.11	-3.11
Inverters	G_Inv9	366750.9	4902691.8	2	0	0	87.7	87.7	1	4045.72	3.25	0	83.14	0	2.8	0	0	4.92	0	0	0	0	0	0	-3.2	-3.2
Inverters	G_Inv10	366900.7	4902704.8	2	0	0	87.7	87.7	1	4148.39	3.25	0	83.36	0	2.8	0	0	5.03	0	0	0	0	0	0	-3.54	-3.54
Inverter	MV3-1	368156	4907976	2	0	0	89.1	89.1	1	5058.74	3.25	0	85.08	0	1.65	0	0	12.54	0	0	0	0	0	0	-10.22	-10.22
Inverter	MV3-5	368340	4907843	2	0	0	89.1	89.1	1	5155.35	3.25	0	85.25	0	1.68	0	0	12.67	0	0	0	0	0	0	-10.54	-10.54
Inverter	MV3-22	368656	4907142	2	0	0	89.1	89.1	1	5165.17	3.25	0	85.26	0	1.68	0	0	12.68	0	0	0	0	0	0	-10.57	-10.57
Inverter	MV3-4	368502	4907925	2	0	0	89.1	89.1	1	5336.9	3.25	0	85.55	0	1.72	0	0	12.91	0	0	0	0	0	0	-11.12	-11.12
Inverter	MV3-2	368671	4907928	2	0	0	89.1	89.1	1	5488.35	3.25	0	85.79	0	1.76	0	0	13.11	0	0	0	0	0	0	-11.6	-11.6
Westbrook Inverter Enclosur	W_INV2	369374	4906388	2	0	0	89.1	89.1	1	5674.09	3.25	0	86.08	0	1.81	0	0	13.35	0	0	0	0	0	0	-12.17	-12.17
Westbrook Inverter Enclosur	W_INV3	369508	4906164	2	0	0	89.1	89.1	1	5773.83	3.25	0	86.23	0	1.83	0	0	13.48	0	0	0	0	0	0	-12.48	-12.48
Westbrook Inverter Enclosur	W_INV4	369673	4906164	2	0	0	89.1	89.1	1	5937.55	3.25	0	86.47	0	1.87	0	0	13.68	0	0	0	0	0	0	-12.97	-12.97
Fixed Reactor Bank 1	FRB1	369378	4908755	6	0	0	89.8	89.8	1	6506.93	5.25	0	87.27	0	-0.35	0	0	10.27	0	0	0	0	0	0	-7.41	-7.41
Westbrook Inverter Enclosur	W_INV5	369719	4906574	2	0	0	89.1	89.1	1	6046.67	3.25	0	86.63	0	1.9	0	0	13.82	0	0	0	0	0	0	-13.29	-13.29
Fixed Reactor Bank 2	FRB2	369464	4908755	6	0	0	89.8	89.8	1	6581.06	5.25	0	87.37	0	-0.34	0	0	10.34	0	0	0	0	0	0	-7.59	-7.59
Westbrook Inverter Enclosur	W_INV7	369780	4906417	2	0	0	89.1	89.1	1	6079.35	3.25	0	86.68	0	1.91	0	0	13.86	0	0	0	0	0	0	-13.39	-13.39
Inverter	MV4-13	369051	4908605	2	0	0	89.1	89.1	1	6149.25	3.25	0	86.78	0	1.92	0	0	13.95	0	0	0	0	0	0	-13.59	-13.59
Inverter	MV4-15	369176	4908481	2	0	0	89.1	89.1	1	6194.89	3.25	0	86.84	0	1.93	0	0	14.01	0	0	0	0	0	0	-13.72	-13.72
Westbrook Inverter Enclosur	W_INV6	369875	4906578	2	0	0	89.1	89.1	1	6200.7	3.25	0	86.85	0	1.93	0	0	14.01	0	0	0	0	0	0	-13.74	-13.74
Inverter	MV4-14	369176	4908507	2	0	0	89.1	89.1	1	6207.7	3.25	0	86.86	0	1.94	0	0	14.02	0	0	0	0	0	0	-13.76	-13.76
Inverter	MV4-12	369043	4908803	2	0	0	89.1	89.1	1	6246.79	3.25	0	86.91	0	1.95	0	0	14.07	0	0	0	0	0	0	-13.87	-13.87
Inverter	MV5-6	369982	4908507	2	0	0	89.1	89.1	1	6919.8	3.25	0	87.8	0	2.11	0	0	14.89	0	0	0	0	0	0	-15.74	-15.74
Westbrook Inverter Enclosur	W_INV1	369409	4906578	2	0	0	86.1	86.1	1	5743.28	3.25	0	86.18	0	1.82	0	0	13.44	0	0	0	0	0	0	-15.38	-15.38
Inverter Transformer	MV1-13 T	364725	4905241	2	0	0	69.4	69.4	1	965.32	3.25	0	70.69	0	1.65	0	0	3.76	0	0	0	0	0	0	-6.76	-6.76
Inverter	MV6-4	370250	4906966	2	0	0	86.1	86.1	1	6647.98	3.25	0	87.45	0	2.04	0	0	14.56	0	0	0	0	0	0	-18	-18
Inverter Transformer	MV1-7 T	364919	4905782	2	0	0	69.4	69.4	1	1189.82	3.25	0	72.51	0	1.82	0	0	4.06	0	0	0	0	0	0	-9.04	-9.04
Inverter Transformer	MV1-10 T	365010	4905564	2	0	0	69.4	69.4	1	1236.44	3.25	0	72.84	0	1.84	0	0	4.12	0	0	0	0	0	0	-9.46	-9.46
Inverter Transformer	MV1-14 T	365157	4905049	2	0	0	69.4	69.4	1	1430.89	3.25	0	74.11	0	1.94	0	0	4.35	0	0	0	0	0	0	-11.06	-11.06
Westbrook Inverter Transfor	W_INVTR1	369403	4906578	2	0	0	78.2	78.2	1	5737.4	3.25	0	86.17	0	-3.32	0	0	2.66	0	0	0	0	0	0	-7.27	-7.27
Westbrook Inverter Transfor	W_INVTR2	369368	4906388	2	0	0	77.3	77.3	1	5668.18	3.25	0	86.07	0	-3.31	0	0	2.64	0	0	0	0	0	0	-8.06	-8.06
Westbrook Inverter Transfor	W_INVTR3	369514	4906164	2	0	0	77.3	77.3	1	5779.78	3.25	0	86.24	0	-3.33	0	0	2.67	0	0	0	0	0	0	-8.24	-8.24
Westbrook Inverter Transfor	W_INVTR4	369679	4906164	2	0	0	77.3	77.3	1	5943.51	3.25	0	86.48	0	-3.36	0	0	2.72	0	0	0	0	0	0	-8.51	-8.51
Westbrook Inverter Transfor	W_INVTR5	369725	4906574	2	0	0	77.3	77.3	1	6052.56	3.25	0	86.64	0	-3.38	0	0	2.76	0	0	0	0	0	0	-8.68	-8.68
Westbrook Inverter Transfor	W_INVTR7	369786	4906417	2	0	0	77.3	77.3	1	6085.27	3.25	0	86.69	0	-3.38	0	0	2.77	0	0	0	0	0	0	-8.73	-8.73
Westbrook Inverter Transfor	W_INVTR6	369881	4906578	2	0	0	77.3	77.3	1	6206.59	3.25	0	86.86	0	-3.4	0	0	2.81	0	0	0	0	0	0	-8.92	-8.92
Inverter Transformer	MV2-1 T	365836	4906816	2	0	0	69.4	69.4	1	2475.08	3.25	0	78.87	0	2.34	0	0	5.42	0	0	0	0	0	0	-17.28	-17.28
Inverter Transformer	MV1-9 T	364555	4905646	2	0	0	56.1	56.1	1	802.43	3.25	0	69.09	0	-0.05	0	0	4.4	0	0	0	0	0	0	-17.38	-17.38
Inverter Transformer	MV1-6 T	364482	4905835	2	0	0	56.1	56.1	1	806.49	3.25	0	69.13	0	-0.05	0	0	4.41	0	0	0	0	0	0	-17.43	-17.43
Inverter Transformer	MV1-11 T	364649	4905414	2	0	0	56.1	56.1	1	869.33	3.25	0	69.78	0	-0.03	0	0	4.57	0	0	0	0	0	0	-18.26	-18.26
Inverter Transformer	MV1-3 T	364435	4906039	2	0	0	56.1	56.1	1	888.95	3.25	0	69.98	0	-0.03	0	0	4.62	0	0	0	0	0	0	-18.51	-18.51
Inverter Transformer	MV1-5 T	364676	4905892	2	0	0	56.1	56.1	1	1004.46	3.25	0	71.04	0	0.01	0	0	4.9	0	0	0	0	0	0	-19.89	-19.89
Inverter Transformer	MV1-8 T	364782	4905647	2	0	0	56.1	56.1	1	1023.57	3.25	0	71.2	0	0.02	0	0	4.95	0	0	0	0	0	0	-20.11	-20.11
Inverter Transformer	MV1-4 T	364821	4905918	2	0	0	56.1	56.1	1	1146.34	3.25	0	72.19	0	0.06	0	0	5.23	0	0	0	0	0	0	-21.42	-21.42
Inverter Transformer	MV1-2 T	364759	4906063	2	0	0	56.1	56.1	1	1161.5	3.25	0	72.3	0	0.07	0	0	5.27	0	0	0	0	0	0	-21.58	-21.58
Inverter Transformer	MV1-1 T	364721	4906166	2	0	0	56.1	56.1	1	1189.74	3.25	0	72.51	0	0.08	0	0	5.33	0	0	0	0	0	0	-21.86	-21.86
Inverter Transformer	MV1-12 T	365044	4905386	2	0	0	56.1	56.1	1	1265.07	3.25	0	73.04	0	0.11	0	0	5.5	0	0	0	0	0	0	-22.59	-22.59
Inverter Transformer	MV6-4 T	370244	4906966	2	0	0	69.4	69.4	1	6642.14	3.25	0	87.45	0	3.28	0	0	8.4	0	0	0	0	0	0	-29.77	-29.77
Inverter Transformer	MV6-1 T	370230	4907364	2	0	0	69.4	69.4	1	6731.42	3.25	0	87.56	0	3.29	0	0	8.45	0	0	0	0	0	0	-29.95	-29.95
Inverter Transformer	MV1-15 T	365309	4904994	2	0	0	56.1	56.1	1	1592.16	3.25	0	75.04	0	0.24	0	0	6.21	0	0	0	0	0	0	-25.43	-25.43
Inverter Transformer	MV2-4 T	365590	4906628	2	0	0	56.1	56.1	1	2166.15	3.25	0	77.71	0	0.47	0	0	7.37	0	0	0	0	0	0	-29.5	-29.5
Inverter Transformer	MV2-3 T	365814	4906641	2	0	0	56.1	56.1	1	2363.13	3.25	0	78.47	0	0.56	0	0	7.74	0	0	0	0	0	0	-30.71	-30.71
Inverter Transformer	MV2-2 T	365982	4906654	2	0	0	56.1	56.1	1	2515.45	3.25	0	79.01	0	0.62	0	0	8.02	0	0	0	0	0	0	-31.59	-31.59
Inverter Transformer	MV3-18 T	367757	4907412	2	0	0	56.1	56.1	1	4439.96	3.25	0	83.95	0	1.42	0	0	11.09	0	0	0	0	0	0	-40.4	-40.4
Inverter Transformer	MV3-12 T	367674	4907594	2	0	0	56.1	56.1	1	4451.02	3.25	0	83.97	0	1.42	0	0	11.11	0	0	0	0	0	0	-40.44	-40.44
Inverter Transformer	MV3-13 T	367958	4907577	2	0	0	56.1	56.1	1	4693.72	3.25	0	84.43	0	1.51	0	0	11.44	0	0	0	0	0	0	-41.33	-41.33
Inverter Transformer	MV3-7 T	367951	4907754	2	0	0	56.1	56.1	1	4770.86	3.25	0	84.57	0	1.54	0	0	11.55	0	0	0	0	0	0	-41.6	-41.6
Inverter Transformer	MV3-17 T	368183	4907472	2	0	0	56.1	56.1	1	4850.11	3.25	0	84.72	0	1.57	0	0	11.65	0	0	0	0	0	0	-41.88	-41.88
Inverter Transformer	MV3-3 T	367944	4907927	2	0	0	56.1	56.1	1	4851.19	3.25	0	84.72	0	1.57	0	0	11.66	0	0	0	0	0	0	-41.89	-41.89
Inverter Transformer	MV3-10 T	368162	4907669	2	0	0	56.1	56.1	1	4917.24	3.25	0	84.83	0	1.6	0	0	11.74	0	0	0	0	0	0	-42.12	-42.12
Inverter Transformer	MV3-19 T	368352	4907347	2	0	0	56.1	56.1	1	4954.54	3.25	0	84.9	0	1.61	0	0	11.79	0	0	0	0	0	0	-42.24	-42.24
Inverter Transformer	MV3-6 T	368156	4907834	2	0	0	56.1	56.1	1	4989.01	3.25	0	84.96	0	1.62	0	0	11.84	0	0	0	0	0	0	-42.36	-42.36
Inverter Transformer	MV3-15 T	368351	4907477	2	0	0	56.1	56.1	1	5005.15	3.25	0	84.99	0	1.63	0	0	11.86	0	0	0	0	0	0	-42.42	-42.42
Inverter Transformer	MV3-21 T	368484	4907206	2	0	0	56.1	56.1	1	5025.28	3.25	0	85.02	0	1.63	0	0	11.89	0	0	0	0	0	0	-42.49	-42.49
Inverter Transformer	MV3-1 T	368150	4907976	2	0	0	56.1	56.1	1	5053.55	3.25	0	85.07	0	1.64	0	0	11.92	0	0	0	0	0	0	-42.58	-42.58
Inverter Transformer	MV3-11 T	368340	4907662	2	0	0	56.1	56.1	1	5073.44	3.25	0	85.11	0	1.65	0	0	11.95	0	0	0	0	0	0	-42.65	-42.65
Inverter Transformer	MV3-16 T	368509	4907475	2	0	0	56.1	56.1	1	5149.06	3.25	0	85.23	0	1.68	0	0	12.05	0	0	0	0	0	0	-42.9	-42.9
Inverter Transformer	MV3-5 T	368335	4907843	2	0	0	56.1	56.1	1	5150.93	3.25	0	85.24	0	1.68	0	0	12.05	0	0	0	0	0	0	-42.91	-42.91
Inverter Transformer	MV3-22 T	368661	4907142	2	0	0	56.1	56.1	1	5169.89	3.25	0	85.27	0	1.69	0	0	12.08	0	0	0	0	0	0	-42.97	-42.97
Inverter Transformer	MV3-9 T	368517	4907703	2	0	0	56.1	56.1	1	5250.66	3.25	0	85.4	0	1.71	0	0	12.18	0	0	0	0	0	0	-43.24	-43.24
Inverter Transformer	MV3-20 T	368683	4907317	2	0	0	56.1	56.1	1	5250.72	3.25	0	85.4	0	1.71	0	0	12.18	0	0	0	0	0	0	-43.24	-43.24
Inverter Transformer	MV3-14 T	368678	4907498	2	0	0	56.1	56.1	1	5313.57	3.25	0	85.51	0	1.74	0	0	12.26	0	0	0	0	0	0	-43.45	-43.45

	Inverter Transformer	MV3-4 T	368507	4907925	2	0	0	56.1	56.1	1	5341.32	3.25	0	85.55	0	1.75	0	0	12.3	0	0	0	0	0	0	-43.54	-43.54
	Inverter Transformer	MV3-8 T	368685	4907712	2	0	0	56.1	56.1	1	5406.49	3.25	0	85.66	0	1.77	0	0	12.38	0	0	0	0	0	0	-43.75	-43.75
	Inverter Transformer	MV3-2 T	368677	4907928	2	0	0	56.1	56.1	1	5493.7	3.25	0	85.8	0	1.8	0	0	12.49	0	0	0	0	0	0	-44.02	-44.02
	Inverter Transformer	MV4-13 T	369057	4908605	2	0	0	56.1	56.1	1	6154.4	3.25	0	86.78	0	2.01	0	0	13.28	0	0	0	0	0	0	-46.02	-46.02
	Inverter Transformer	MV4-15 T	369170	4908481	2	0	0	56.1	56.1	1	6189.67	3.25	0	86.83	0	2.02	0	0	13.33	0	0	0	0	0	0	-46.12	-46.12
	Inverter Transformer	MV4-14 T	369182	4908507	2	0	0	56.1	56.1	1	6212.92	3.25	0	86.87	0	2.03	0	0	13.35	0	0	0	0	0	0	-46.19	-46.19
	Inverter Transformer	MV4-12 T	369049	4908803	2	0	0	56.1	56.1	1	6251.85	3.25	0	86.92	0	2.04	0	0	13.4	0	0	0	0	0	0	-46.3	-46.3
	Inverter Transformer	MV4-7 T	369040	4909001	2	0	0	56.1	56.1	1	6353.15	3.25	0	87.06	0	2.07	0	0	13.51	0	0	0	0	0	0	-46.59	-46.59
	Inverter Transformer	MV4-4 T	369033	4909199	2	0	0	56.1	56.1	1	6460.58	3.25	0	87.21	0	2.11	0	0	13.64	0	0	0	0	0	0	-46.89	-46.89
	Inverter Transformer	MV4-11 T	369269	4908855	2	0	0	56.1	56.1	1	6465.68	3.25	0	87.21	0	2.11	0	0	13.64	0	0	0	0	0	0	-46.9	-46.9
	Inverter Transformer	MV4-10 T	369307	4908858	2	0	0	56.1	56.1	1	6499.55	3.25	0	87.26	0	2.12	0	0	13.68	0	0	0	0	0	0	-47	-47
	Inverter Transformer	MV4-8 T	369262	4909001	2	0	0	56.1	56.1	1	6538.14	3.25	0	87.31	0	2.13	0	0	13.72	0	0	0	0	0	0	-47.1	-47.1
	Inverter Transformer	MV4-9 T	369284	4909001	2	0	0	56.1	56.1	1	6556.6	3.25	0	87.33	0	2.13	0	0	13.74	0	0	0	0	0	0	-47.15	-47.15
	Inverter Transformer	MV4-1 T	369017	4909397	2	0	0	56.1	56.1	1	6565.05	3.25	0	87.34	0	2.14	0	0	13.75	0	0	0	0	0	0	-47.18	-47.18
	Inverter Transformer	MV6-2 T	370091	4907339	2	0	0	56.1	56.1	1	6591.09	3.25	0	87.38	0	2.14	0	0	13.78	0	0	0	0	0	0	-47.25	-47.25
	Inverter Transformer	MV4-6 T	369249	4909192	2	0	0	56.1	56.1	1	6633.44	3.25	0	87.43	0	2.16	0	0	13.83	0	0	0	0	0	0	-47.36	-47.36
	Inverter Transformer	MV6-3 T	370202	4907140	2	0	0	56.1	56.1	1	6643.71	3.25	0	87.45	0	2.16	0	0	13.84	0	0	0	0	0	0	-47.39	-47.39
	Inverter Transformer	MV4-5 T	369283	4909199	2	0	0	56.1	56.1	1	6665.44	3.25	0	87.48	0	2.17	0	0	13.86	0	0	0	0	0	0	-47.45	-47.45
	Inverter Transformer	MV4-3 T	369234	4909397	2	0	0	56.1	56.1	1	6739.42	3.25	0	87.57	0	2.19	0	0	13.95	0	0	0	0	0	0	-47.65	-47.65
	Inverter Transformer	MV4-2 T	369267	4909397	2	0	0	56.1	56.1	1	6766.16	3.25	0	87.61	0	2.19	0	0	13.98	0	0	0	0	0	0	-47.72	-47.72
	Inverter Transformer	MV5-6 T	369987	4908507	2	0	0	56.1	56.1	1	6924.28	3.25	0	87.81	0	2.24	0	0	14.15	0	0	0	0	0	0	-48.14	-48.14
	Inverter Transformer	MV5-5 T	370021	4908690	2	0	0	56.1	56.1	1	7037.44	3.25	0	87.95	0	2.27	0	0	14.27	0	0	0	0	0	0	-48.43	-48.43
	Inverter Transformer	MV5-2 T	370011	4908853	2	0	0	56.1	56.1	1	7105.46	3.25	0	88.03	0	2.29	0	0	14.34	0	0	0	0	0	0	-48.6	-48.6
	Inverter Transformer	MV5-1 T	370015	4909142	2	0	0	56.1	56.1	1	7252.23	5.14	0	88.21	0	3.09	1.54	0.01	14.5	0	0	0	0	0	0	-51.27	-51.27
	Inverter Transformer	MV5-3 T	370237	4908851	2	0	0	56.1	56.1	1	7303.52	3.25	0	88.27	0	2.34	0	0	14.55	0	0	0	0	0	0	-49.1	-49.1
	Inverter Transformer	MV5-4 T	370330	4908707	2	0	0	56.1	56.1	1	7320.44	3.25	0	88.29	0	2.34	0	0	14.57	0	0	0	0	0	0	-49.15	-49.15
	Line Reactor	NGR	369421	4908787.5	5	0	0	45.4	45.4	1	6560.49	5.25	0	87.34	0	3.23	1.37	0.1	2.68	0	0	0	0	0	0	-49.26	-49.26
Limit. Valu	0	0																								
Level D/N:	29.4476	29.4476																								

Receiver: Existing Noise Receptor
ID: S-R98
X: 363552
Y: 4905373
Z: 4.5
Ground: 0

ISO	Description	ID	X	Y	Z	Ground	ReflOrd	LxT	LxN	L/A	Dist.	hm	Freq	Adiv	K0b	Agr	Abar	z	Aatm	Afol	Ahous	Cmet	CmetN	Dc	RL	LtotT	LtotN
	Inverter	MV1-6	364477	4905835	2	0	0	100.3	100.3	1	1033.96	3.25	0	71.29	0	-0.23	0	0	11.02	0	0	0	0	0	0	18.23	18.23
	Inverter	MV1-9	364561	4905646	2	0	0	100.3	100.3	1	1045.28	3.25	0	71.38	0	-0.22	0	0	11.06	0	0	0	0	0	0	18.09	18.09
	Inverter	MV1-11	364655	4905414	2	0	0	100.3	100.3	1	1103.76	3.25	0	71.86	0	-0.2	0	0	11.24	0	0	0	0	0	0	17.41	17.41
	Inverter	MV1-5	364671	4905892	2	0	0	100.3	100.3	1	1233.5	3.25	0	72.82	0	-0.14	0	0	11.62	0	0	0	0	0	0	16.01	16.01
	Inverter	MV1-8	364788	4905647	2	0	0	100.3	100.3	1	1266.01	3.25	0	73.05	0	-0.13	0	0	11.71	0	0	0	0	0	0	15.68	15.68
	Inverter	MV1-4	364815	4905918	2	0	0	100.3	100.3	1	1375.57	3.25	0	73.77	0	-0.08	0	0	12.01	0	0	0	0	0	0	14.62	14.62
	Inverter	MV1-2	364753	4906063	2	0	0	100.3	100.3	1	1385.1	3.25	0	73.83	0	-0.08	0	0	12.03	0	0	0	0	0	0	14.53	14.53
	Inverter	MV1-1	364715	4906166	2	0	0	100.3	100.3	1	1407.63	3.25	0	73.97	0	-0.07	0	0	12.09	0	0	0	0	0	0	14.32	14.32
	Inverter	MV1-12	365038	4905386	2	0	0	100.3	100.3	1	1486.06	3.25	0	74.44	0	-0.04	0	0	12.29	0	0	0	0	0	0	13.62	13.62
	Inverter	MV1-13	364731	4905241	2	0	0	97.3	97.3	1	1186.37	3.25	0	72.48	0	-0.16	0	0	11.49	0	0	0	0	0	0	13.5	13.5
	Sol_Luce Substation	S_Substation	369426	4908792	3.5	0	0	112.1	112.1	1	6796.58	5.25	0	87.65	0	1.34	2.48	0.28	10.55	0	0	0	0	0	0	10.06	10.06
	Inverter	MV1-15	365315	4904994	2	0	0	100.3	100.3	1	1803.28	3.25	0	76.12	0	0.07	0	0	13.04	0	0	0	0	0	0	11.08	11.08
	Inverter	MV1-7	364925	4905782	2	0	0	97.3	97.3	1	1432.63	3.25	0	74.12	0	-0.06	0	0	12.15	0	0	0	0	0	0	11.09	11.09
	Inverter	MV1-10	365004	4905564	2	0	0	97.3	97.3	1	1464.51	3.25	0	74.31	0	-0.05	0	0	12.24	0	0	0	0	0	0	10.81	10.81
	Inverter	MV1-14	365163	4905049	2	0	0	97.3	97.3	1	1643.26	3.25	0	75.31	0	0.02	0	0	12.67	0	0	0	0	0	0	9.31	9.31
	Inverter	MV2-4	365586	4906624	2	0	0	100.3	100.3	1	2387.92	3.25	0	78.56	0	0.23	0	0	14.24	0	0	0	0	0	0	7.28	7.28
	Inverter	MV2-3	365820	4906641	2	0	0	100.3	100.3	1	2598.39	3.25	0	79.29	0	0.28	0	0	14.64	0	0	0	0	0	0	6.1	6.1
	Inverter	MV2-1	365842	4906816	2	0	0	97.3	97.3	1	2706.72	3.25	0	79.65	0	0.3	0	0	14.84	0	0	0	0	0	0	2.52	2.52
	Inverter	MV1-3	364440	4906039	2	0	0	89.1	89.1	1	1110	3.25	0	71.91	0	0.71	0	0	6.52	0	0	0	0	0	0	9.92	9.92
	Inverter	MV3-18	367752	4907412	2	0	0	100.3	100.3	1	4668.78	3.25	0	84.38	0	0.61	0	0	18.09	0	0	0	0	0	0	-2.77	-2.77
	Inverter	MV3-12	367668	4907594	2	0	0	100.3	100.3	1	4677	3.25	0	84.4	0	0.61	0	0	18.1	0	0	0	0	0	0	-2.8	-2.8
	Inverter	MV3-13	367963	4907577	2	0	0	100.3	100.3	1	4930.98	3.25	0	84.86	0	0.64	0	0	18.48	0	0	0	0	0	0	-3.66	-3.66
	Inverter	MV3-7	367945	4907754	2	0	0	100.3	100.3	1	4996.76	3.25	0	84.97	0	0.64	0	0	18.58	0	0	0	0	0	0	-3.88	-3.88
	Inverter	MV3-3	367939	4907927	2	0	0	100.3	100.3	1	5076.29	3.25	0	85.11	0	0.65	0	0	18.69	0	0	0	0	0	0	-4.14	-4.14
	Inverter	MV3-17	368178	4907472	2	0	0	100.3	100.3	1	5079.93	3.25	0	85.12	0	0.65	0	0	18.7	0	0	0	0	0	0	-4.15	-4.15
	Inverter	MV3-10	368167	4907669	2	0	0	100.3	100.3	1	5154.59	3.25	0	85.24	0	0.66	0	0	18.81	0	0	0	0	0	0	-4.39	-4.39
	Inverter	MV3-19	368357	4907347	2	0	0	100.3	100.3	1	5194.68	3.25	0	85.31	0	0.66	0	0	18.86	0	0	0	0	0	0	-4.52	-4.52
	Inverter	MV3-6	368162	4907834	2	0	0	100.3	100.3	1	5225.77	3.25	0	85.36	0	0.66	0	0	18.91	0	0	0	0	0	0	-4.62	-4.62
	Inverter	MV3-15	368357	4907477	2	0	0	100.3	100.3	1	5245.46	3.25	0	85.4	0	0.66	0	0	18.94	0	0	0	0	0	0	-4.68	-4.68
	Inverter	MV3-21	368478	4907206	2	0	0	100.3	100.3	1	5255.98	3.25	0	85.41	0	0.66	0	0	18.95	0	0	0	0	0	0	-4.72	-4.72
	Inverter	MV3-11	368346	4907662	2	0	0	100.3	100.3	1	5312.43	3.25	0	85.51	0	0.67	0	0	19.03	0	0	0	0	0	0	-4.9	-4.9
	Inverter	MV3-16	368514	4907475	2	0	0	100.3	100.3	1	5388.86	3.25	0	85.63	0	0.67	0	0	19.14	0	0	0	0	0	0	-5.13	-5.13
	Inverter	MV3-9	368512	4907703	2	0	0	100.3	100.3	1	5480.01	3.25	0	85.78	0	0.68	0	0	19.27	0	0	0	0	0	0	-5.42	-5.42
	Inverter	MV3-20	368689	4907317	2	0	0	100.3	100.3	1	5492.53	3.25	0	85.8	0	0.68	0	0	19.29	0	0	0	0	0	0	-5.45	-5.45
	Inverter	MV3-14	368684	4907498	2	0	0	100.3	100.3	1	5554.55	3.25	0	85.89	0	0.68	0	0	19.38	0	0	0	0	0	0	-5.64	-5.64
	Inverter	MV3-8	368680	4907712	2	0	0	100.3	100.3	1	5636.25	3.25	0	86.02	0	0.69	0	0	19.49	0	0	0	0	0	0	-5.89	-5.89

Inverter	MV4-7	369035	4909001	2	0	0	100.3	100.3	1	6574.62	3.25	0	87.36	0	0.72	0	0	20.76	0	0	0	0	0	0	-8.52	-8.52
Inverter	MV4-4	369027	4909199	2	0	0	100.3	100.3	1	6679.36	3.25	0	87.49	0	0.71	0	0	20.89	0	0	0	0	0	0	-8.79	-8.79
Inverter	MV4-11	369264	4908855	2	0	0	100.3	100.3	1	6689.64	3.25	0	87.51	0	0.71	0	0	20.9	0	0	0	0	0	0	-8.82	-8.82
Inverter	MV4-10	369312	4908858	2	0	0	100.3	100.3	1	6732.22	3.25	0	87.56	0	0.71	0	0	20.96	0	0	0	0	0	0	-8.92	-8.92
Inverter	MV4-8	369256	4909001	2	0	0	100.3	100.3	1	6760.03	3.25	0	87.6	0	0.71	0	0	21	0	0	0	0	0	0	-9	-9
Inverter	MV4-1	369011	4909397	2	0	0	100.3	100.3	1	6781.83	3.25	0	87.63	0	0.71	0	0	21.02	0	0	0	0	0	0	-9.05	-9.05
Inverter	MV4-9	369289	4909001	2	0	0	100.3	100.3	1	6787.9	3.25	0	87.63	0	0.71	0	0	21.03	0	0	0	0	0	0	-9.07	-9.07
Inverter	MV6-2	370085	4907339	2	0	0	100.3	100.3	1	6822.41	3.25	0	87.68	0	0.71	0	0	21.07	0	0	0	0	0	0	-9.15	-9.15
Inverter	MV4-6	369243	4909192	2	0	0	100.3	100.3	1	6853.63	3.25	0	87.72	0	0.71	0	0	21.11	0	0	0	0	0	0	-9.23	-9.23
Inverter	MV6-3	370207	4907140	2	0	0	100.3	100.3	1	6885.59	3.25	0	87.76	0	0.71	0	0	21.15	0	0	0	0	0	0	-9.31	-9.31
Inverter	MV4-5	369289	4909199	2	0	0	100.3	100.3	1	6895.76	3.25	0	87.77	0	0.71	0	0	21.17	0	0	0	0	0	0	-9.34	-9.34
Inverter	MV4-3	369229	4909397	2	0	0	100.3	100.3	1	6958.51	3.25	0	87.85	0	0.71	0	0	21.25	0	0	0	0	0	0	-9.5	-9.5
Inverter	MV4-2	369272	4909397	2	0	0	100.3	100.3	1	6993.64	3.25	0	87.89	0	0.71	0	0	21.29	0	0	0	0	0	0	-9.58	-9.58
Inverter	MV5-5	370015	4908690	2	0	0	100.3	100.3	1	7264.49	3.25	0	88.22	0	0.7	0	0	21.63	0	0	0	0	0	0	-10.24	-10.24
Inverter	MV5-2	370006	4908853	2	0	0	100.3	100.3	1	7332.43	3.25	0	88.3	0	0.7	0	0	21.71	0	0	0	0	0	0	-10.4	-10.4
Inverter	MV5-1	370020	4909142	2	0	0	100.3	100.3	1	7486.01	5.14	0	88.49	0	1.79	2.22	0.01	21.9	0	0	0	0	0	0	-14.08	-14.08
Inverter	MV5-3	370231	4908851	2	0	0	100.3	100.3	1	7530.31	3.25	0	88.54	0	0.69	0	0	21.95	0	0	0	0	0	0	-10.86	-10.86
Inverter	MV5-4	370324	4908707	2	0	0	100.3	100.3	1	7548.21	3.25	0	88.56	0	0.69	0	0	21.97	0	0	0	0	0	0	-10.9	-10.9
Inverter	MV6-1	370235	4907364	2	0	0	97.3	97.3	1	6973.28	3.25	0	87.87	0	0.71	0	0	21.27	0	0	0	0	0	0	-12.53	-12.53
Inverter	MV2-2	365977	4906654	2	0	0	89.1	89.1	1	2742.55	3.25	0	79.76	0	1.08	0	0	9.22	0	0	0	0	0	0	-1.01	-1.01
DSTATCOM - 10 MVAR #2	DSAT2	369403	4908757	2.5	0	0	96.6	96.6	1	6759.12	3.5	0	87.6	0	3.82	0	0	4.2	0	0	0	0	0	0	1.01	1.01
DSTATCOM - 10 MVAR #1	DSAT1	369437	4908757	2.5	0	0	96.6	96.6	1	6788.57	3.5	0	87.64	0	3.83	0	0	4.21	0	0	0	0	0	0	0.96	0.96
Gardiner Substation	G_Sub	366586.3	4903349.9	2.5	0	0	90.8	90.8	1	3646.9	4.25	0	82.24	0	1.26	2.75	0.3	6.89	0	0	0	0	0	0	-2.36	-2.36
Inverters	G_Inv1	366526.4	4903225.8	2	0	0	87.7	87.7	1	3668.45	3.25	0	82.29	0	2.76	0	0	4.51	0	0	0	0	0	0	-1.91	-1.91
SubstationTransformer	W_ST	369711.17	4906112.3	2.5	0	0	92	92	1	6203.38	4.25	0	86.85	0	1.92	2.06	0.29	9.96	0	0	0	0	0	0	-8.8	-8.8
Inverters	G_Inv2	366676.9	4903239.1	2	0	0	87.7	87.7	1	3783.98	3.25	0	82.56	0	2.77	0	0	4.64	0	0	0	0	0	0	-2.31	-2.31
Inverters	G_Inv3	366583.7	4903091.4	2	0	0	87.7	87.7	1	3794.33	3.25	0	82.58	0	2.77	0	0	4.65	0	0	0	0	0	0	-2.35	-2.35
Inverters	G_Inv4	366732.8	4903105	2	0	0	87.7	87.7	1	3906.57	3.25	0	82.84	0	2.78	0	0	4.77	0	0	0	0	0	0	-2.73	-2.73
Inverters	G_Inv5	366638.5	4902958.1	2	0	0	87.7	87.7	1	3918.96	3.25	0	82.86	0	2.79	0	0	4.79	0	0	0	0	0	0	-2.77	-2.77
Inverters	G_Inv6	366788.5	4902972	2	0	0	87.7	87.7	1	4029.86	3.25	0	83.11	0	2.79	0	0	4.91	0	0	0	0	0	0	-3.15	-3.15
Inverters	G_Inv7	366694.6	4902824.7	2	0	0	87.7	87.7	1	4045.96	3.25	0	83.14	0	2.8	0	0	4.92	0	0	0	0	0	0	-3.2	-3.2
Inverters	G_Inv8	366844.5	4902838.5	2	0	0	87.7	87.7	1	4155.03	3.25	0	83.37	0	2.8	0	0	5.04	0	0	0	0	0	0	-3.56	-3.56
Inverters	G_Inv9	366750.9	4902691.8	2	0	0	87.7	87.7	1	4173.94	3.25	0	83.41	0	2.81	0	0	5.06	0	0	0	0	0	0	-3.62	-3.62
Inverters	G_Inv10	366900.7	4902704.8	2	0	0	87.7	87.7	1	4281.72	3.25	0	83.63	0	2.81	0	0	5.18	0	0	0	0	0	0	-3.96	-3.96
Inverter	MV3-1	368156	4907976	2	0	0	89.1	89.1	1	5288.9	3.25	0	85.47	0	1.71	0	0	12.85	0	0	0	0	0	0	-10.97	-10.97
Inverter	MV3-5	368340	4907843	2	0	0	89.1	89.1	1	5387.56	3.25	0	85.63	0	1.74	0	0	12.98	0	0	0	0	0	0	-11.28	-11.28
Inverter	MV3-22	368656	4907142	2	0	0	89.1	89.1	1	5401.87	3.25	0	85.65	0	1.74	0	0	12.99	0	0	0	0	0	0	-11.33	-11.33
Inverter	MV3-4	368502	4907925	2	0	0	89.1	89.1	1	5569.13	3.25	0	85.92	0	1.78	0	0	13.21	0	0	0	0	0	0	-11.85	-11.85
Inverter	MV3-2	368671	4907928	2	0	0	89.1	89.1	1	5721.21	3.25	0	86.15	0	1.82	0	0	13.41	0	0	0	0	0	0	-12.32	-12.32
Westbrook Inverter Enclosur	W_INV2	369374	4906388	2	0	0	89.1	89.1	1	5909.82	3.25	0	86.43	0	1.86	0	0	13.65	0	0	0	0	0	0	-12.89	-12.89
Westbrook Inverter Enclosur	W_INV3	369508	4906164	2	0	0	89.1	89.1	1	6008.3	3.25	0	86.58	0	1.89	0	0	13.77	0	0	0	0	0	0	-13.18	-13.18
Westbrook Inverter Enclosur	W_INV4	369673	4906164	2	0	0	89.1	89.1	1	6171.9	3.25	0	86.81	0	1.93	0	0	13.98	0	0	0	0	0	0	-13.66	-13.66
Fixed Reactor Bank 1	FRB1	369378	4908755	6	0	0	89.8	89.8	1	6736.48	5.25	0	87.57	0	-0.32	0	0	10.49	0	0	0	0	0	0	-7.97	-7.97
Fixed Reactor Bank 2	FRB2	369464	4908755	6	0	0	89.8	89.8	1	6811	5.25	0	87.66	0	-0.31	0	0	10.57	0	0	0	0	0	0	-8.15	-8.15
Westbrook Inverter Enclosur	W_INV5	369719	4906574	2	0	0	89.1	89.1	1	6282.86	3.25	0	86.96	0	1.95	0	0	14.12	0	0	0	0	0	0	-13.98	-13.98
Westbrook Inverter Enclosur	W_INV7	369780	4906417	2	0	0	89.1	89.1	1	6314.9	3.25	0	87.01	0	1.96	0	0	14.16	0	0	0	0	0	0	-14.07	-14.07
Inverter	MV4-13	369051	4908605	2	0	0	89.1	89.1	1	6378.47	3.25	0	87.09	0	1.98	0	0	14.23	0	0	0	0	0	0	-14.25	-14.25
Inverter	MV4-15	369176	4908481	2	0	0	89.1	89.1	1	6425.66	3.25	0	87.16	0	1.99	0	0	14.29	0	0	0	0	0	0	-14.38	-14.38
Westbrook Inverter Enclosur	W_INV6	369875	4906578	2	0	0	89.1	89.1	1	6436.8	3.25	0	87.17	0	1.99	0	0	14.31	0	0	0	0	0	0	-14.41	-14.41
Inverter	MV4-14	369176	4908507	2	0	0	89.1	89.1	1	6438.27	3.25	0	87.18	0	1.99	0	0	14.31	0	0	0	0	0	0	-14.42	-14.42
Inverter	MV4-12	369043	4908803	2	0	0	89.1	89.1	1	6474.26	3.25	0	87.22	0	2	0	0	14.35	0	0	0	0	0	0	-14.52	-14.52
Inverter	MV5-6	369982	4908507	2	0	0	89.1	89.1	1	7153.1	3.25	0	88.09	0	2.16	0	0	15.17	0	0	0	0	0	0	-16.36	-16.36
Westbrook Inverter Enclosur	W_INV1	369409	4906578	2	0	0	86.1	86.1	1	5979.67	3.25	0	86.53	0	1.88	0	0	13.74	0	0	0	0	0	0	-16.09	-16.09
Inverter	MV6-4	370250	4906966	2	0	0	86.1	86.1	1	6884.83	3.25	0	87.76	0	2.1	0	0	14.85	0	0	0	0	0	0	-18.65	-18.65
Inverter Transformer	MV1-13 T	364725	4905241	2	0	0	69.4	69.4	1	1180.41	3.25	0	72.44	0	1.81	0	0	4.05	0	0	0	0	0	0	-8.95	-8.95
Inverter Transformer	MV1-7 T	364919	4905782	2	0	0	69.4	69.4	1	1426.88	3.25	0	74.09	0	1.94	0	0	4.35	0	0	0	0	0	0	-11.03	-11.03
Inverter Transformer	MV1-10 T	365010	4905564	2	0	0	69.4	69.4	1	1470.46	3.25	0	74.35	0	1.96	0	0	4.4	0	0	0	0	0	0	-11.36	-11.36
Inverter Transformer	MV1-14 T	365157	4905049	2	0	0	69.4	69.4	1	1637.38	3.25	0	75.28	0	2.03	0	0	4.59	0	0	0	0	0	0	-12.55	-12.55
Westbrook Inverter Transfor	W_INVTR1	369403	4906578	2	0	0	78.2	78.2	1	5973.8	3.25	0	86.53	0	-3.36	0	0	2.73	0	0	0	0	0	0	-7.65	-7.65
Westbrook Inverter Transfor	W_INVTR2	369368	4906388	2	0	0	77.3	77.3	1	5903.9	3.25	0	86.42	0	-3.35	0	0	2.71	0	0	0	0	0	0	-8.44	-8.44
Westbrook Inverter Transfor	W_INVTR3	369514	4906164	2	0	0	77.3	77.3	1	6014.24	3.25	0	86.58	0	-3.37	0	0	2.75	0	0	0	0	0	0	-8.62	-8.62
Westbrook Inverter Transfor	W_INVTR4	369679	4906164	2	0	0	77.3	77.3	1	6177.85	3.25	0	86.82	0	-3.4	0	0	2.8	0	0	0	0	0	0	-8.87	-8.87
Westbrook Inverter Transfor	W_INVTR5	369725	4906574	2	0	0	77.3	77.3	1	6288.75	3.25	0	86.97	0	-3.42	0	0	2.83	0	0	0	0	0	0	-9.04	-9.04
Westbrook Inverter Transfor	W_INVTR7	369786	4906417	2	0	0	77.3	77.3	1	6320.81	3.25	0	87.02	0	-3.42	0	0	2.84	0	0	0	0	0	0	-9.09	-9.09
Westbrook Inverter Transfor	W_INVTR6	369881	4906578	2	0	0	77.3	77.3	1	6442.69	3.25	0	87.18	0	-3.45	0	0	2.88	0	0	0	0	0	0	-9.27	-9.27
Inverter Transformer	MV2-1 T	365836	4906816	2	0	0	69.4	69.4	1	2701.65	3.25	0	79.63	0	2.41	0	0	5.62	0	0	0	0	0	0	-18.32	-18.32
Inverter Transformer	MV1-6 T	364482	4905835	2	0	0	56.1	56.1	1	1038.44	3.25	0	71.33	0	0.03	0	0	4.98	0	0	0	0	0	0	-20.27	-20.27
Inverter Transformer	MV1-9 T	364555	4905646	2	0	0	56.1	56.1	1	1039.49	3.25	0	71.34	0	0.03	0	0	4.98	0	0	0	0	0	0	-20.29	-20.29
Inverter Transformer	MV1-11 T	364649	4905414	2	0	0	56.1	56.1	1	1097.77	3.25	0	71.81	0	0.05	0	0	5.12	0	0	0	0	0	0	-20.92	-20.92
Inverter Transformer	MV1-3 T	364435	4906039	2	0	0	56.1	56.1	1	1106.01	3.25	0	71.88	0	0.05	0	0	5.14	0	0	0	0	0	0	-21.01	-21.01
Inverter Transformer	MV1-5 T	364676	4905892	2	0	0	56.1	56.1	1	1238.04	3.25	0	72.85	0	0.1	0	0	5.44	0	0	0	0	0	0	-22.34	-22.34
Inverter Transformer	MV1-8 T	364782	4905647	2	0	0	56.1	56.1	1	1260.15	3.25	0	73.01	0	0.11	0	0	5.49	0	0	0	0	0	0	-22.55	-22.55
Inverter Transformer	MV1-4 T	364821	4905918	2	0	0	56.1	56.1	1	1381.08	3.25	0	73.8	0	0.15	0	0	5.76	0	0	0	0	0	0	-23.66	-23.66
Inverter Transformer	MV1-2 T	364759	4906063	2	0	0	56.1	56.1	1	1390.31	3.25	0	73.86	0	0.16	0	0	5.78	0	0	0	0	0	0	-23.74	-23.74

	Inverter Transformer	MV1-1 T	364721	4906166	2	0	0	56.1	56.1	1	1412.59	3.25	0	74	0	0.16	0	0	5.83	0	0	0	0	0	0	-23.94	-23.94
	Inverter Transformer	MV6-4 T	370244	4906966	2	0	0	69.4	69.4	1	6878.99	3.25	0	87.75	0	3.3	0	0	8.53	0	0	0	0	0	0	-30.24	-30.24
	Inverter Transformer	MV1-12 T	365044	4905386	2	0	0	56.1	56.1	1	1492.06	3.25	0	74.48	0	0.2	0	0	6	0	0	0	0	0	0	-24.61	-24.61
	Inverter Transformer	MV6-1 T	370230	4907364	2	0	0	69.4	69.4	1	6968.48	3.25	0	87.86	0	3.31	0	0	8.58	0	0	0	0	0	0	-30.41	-30.41
	Inverter Transformer	MV1-15 T	365309	4904994	2	0	0	56.1	56.1	1	1797.41	3.25	0	76.09	0	0.32	0	0	6.64	0	0	0	0	0	0	-26.99	-26.99
	Inverter Transformer	MV2-4 T	365590	4906628	2	0	0	56.1	56.1	1	2393.42	3.25	0	78.58	0	0.57	0	0	7.79	0	0	0	0	0	0	-30.89	-30.89
	Inverter Transformer	MV2-3 T	365814	4906641	2	0	0	56.1	56.1	1	2593.16	3.25	0	79.28	0	0.66	0	0	8.16	0	0	0	0	0	0	-32.03	-32.03
	Inverter Transformer	MV2-2 T	365982	4906654	2	0	0	56.1	56.1	1	2746.97	3.25	0	79.78	0	0.72	0	0	8.43	0	0	0	0	0	0	-32.87	-32.87
	Inverter Transformer	MV3-18 T	367757	4907412	2	0	0	56.1	56.1	1	4673.28	3.25	0	84.39	0	1.51	0	0	11.42	0	0	0	0	0	0	-41.25	-41.25
	Inverter Transformer	MV3-12 T	367674	4907594	2	0	0	56.1	56.1	1	4682.28	3.25	0	84.41	0	1.51	0	0	11.43	0	0	0	0	0	0	-41.29	-41.29
	Inverter Transformer	MV3-13 T	367958	4907577	2	0	0	56.1	56.1	1	4926.51	3.25	0	84.85	0	1.6	0	0	11.76	0	0	0	0	0	0	-42.15	-42.15
	Inverter Transformer	MV3-7 T	367951	4907754	2	0	0	56.1	56.1	1	5002.04	3.25	0	84.98	0	1.63	0	0	11.86	0	0	0	0	0	0	-42.41	-42.41
	Inverter Transformer	MV3-3 T	367944	4907927	2	0	0	56.1	56.1	1	5080.61	3.25	0	85.12	0	1.65	0	0	11.96	0	0	0	0	0	0	-42.67	-42.67
	Inverter Transformer	MV3-17 T	368183	4907472	2	0	0	56.1	56.1	1	5084.48	3.25	0	85.12	0	1.66	0	0	11.96	0	0	0	0	0	0	-42.69	-42.69
	Inverter Transformer	MV3-10 T	368162	4907669	2	0	0	56.1	56.1	1	5150.12	3.25	0	85.24	0	1.68	0	0	12.05	0	0	0	0	0	0	-42.91	-42.91
	Inverter Transformer	MV3-19 T	368352	4907347	2	0	0	56.1	56.1	1	5190.06	3.25	0	85.3	0	1.69	0	0	12.1	0	0	0	0	0	0	-43.04	-43.04
	Inverter Transformer	MV3-6 T	368156	4907834	2	0	0	56.1	56.1	1	5220.47	3.25	0	85.35	0	1.7	0	0	12.14	0	0	0	0	0	0	-43.14	-43.14
	Inverter Transformer	MV3-15 T	368351	4907477	2	0	0	56.1	56.1	1	5239.96	3.25	0	85.39	0	1.71	0	0	12.17	0	0	0	0	0	0	-43.21	-43.21
	Inverter Transformer	MV3-21 T	368484	4907206	2	0	0	56.1	56.1	1	5261.61	3.25	0	85.42	0	1.72	0	0	12.19	0	0	0	0	0	0	-43.28	-43.28
	Inverter Transformer	MV3-1 T	368150	4907976	2	0	0	56.1	56.1	1	5283.67	3.25	0	85.46	0	1.73	0	0	12.22	0	0	0	0	0	0	-43.35	-43.35
	Inverter Transformer	MV3-11 T	368340	4907662	2	0	0	56.1	56.1	1	5307.02	3.25	0	85.5	0	1.73	0	0	12.25	0	0	0	0	0	0	-43.42	-43.42
	Inverter Transformer	MV3-5 T	368335	4907843	2	0	0	56.1	56.1	1	5383.12	3.25	0	85.62	0	1.76	0	0	12.35	0	0	0	0	0	0	-43.67	-43.67
	Inverter Transformer	MV3-16 T	368509	4907475	2	0	0	56.1	56.1	1	5384.26	3.25	0	85.62	0	1.76	0	0	12.35	0	0	0	0	0	0	-43.68	-43.68
	Inverter Transformer	MV3-22 T	368661	4907142	2	0	0	56.1	56.1	1	5406.59	3.25	0	85.66	0	1.77	0	0	12.38	0	0	0	0	0	0	-43.75	-43.75
	Inverter Transformer	MV3-9 T	368517	4907703	2	0	0	56.1	56.1	1	5484.54	3.25	0	85.78	0	1.8	0	0	12.48	0	0	0	0	0	0	-44	-44
	Inverter Transformer	MV3-20 T	368683	4907317	2	0	0	56.1	56.1	1	5486.92	3.25	0	85.79	0	1.8	0	0	12.48	0	0	0	0	0	0	-44	-44
	Inverter Transformer	MV3-14 T	368678	4907498	2	0	0	56.1	56.1	1	5549.01	3.25	0	85.88	0	1.82	0	0	12.56	0	0	0	0	0	0	-44.2	-44.2
	Inverter Transformer	MV3-4 T	368507	4907925	2	0	0	56.1	56.1	1	5573.57	3.25	0	85.92	0	1.83	0	0	12.59	0	0	0	0	0	0	-44.28	-44.28
	Inverter Transformer	MV3-8 T	368685	4907712	2	0	0	56.1	56.1	1	5640.8	3.25	0	86.03	0	1.85	0	0	12.67	0	0	0	0	0	0	-44.49	-44.49
	Inverter Transformer	MV3-2 T	368677	4907928	2	0	0	56.1	56.1	1	5726.57	3.25	0	86.16	0	1.88	0	0	12.77	0	0	0	0	0	0	-44.75	-44.75
	Inverter Transformer	MV4-13 T	369057	4908605	2	0	0	56.1	56.1	1	6383.64	3.25	0	87.1	0	2.08	0	0	13.55	0	0	0	0	0	0	-46.67	-46.67
	Inverter Transformer	MV4-15 T	369170	4908481	2	0	0	56.1	56.1	1	6420.4	3.25	0	87.15	0	2.09	0	0	13.59	0	0	0	0	0	0	-46.78	-46.78
	Inverter Transformer	MV4-14 T	369182	4908507	2	0	0	56.1	56.1	1	6443.51	3.25	0	87.18	0	2.1	0	0	13.62	0	0	0	0	0	0	-46.84	-46.84
	Inverter Transformer	MV4-12 T	369049	4908803	2	0	0	56.1	56.1	1	6479.35	3.25	0	87.23	0	2.11	0	0	13.66	0	0	0	0	0	0	-46.94	-46.94
	Inverter Transformer	MV4-7 T	369040	4909001	2	0	0	56.1	56.1	1	6578.79	3.25	0	87.36	0	2.14	0	0	13.77	0	0	0	0	0	0	-47.21	-47.21
	Inverter Transformer	MV4-4 T	369033	4909199	2	0	0	56.1	56.1	1	6684.28	3.25	0	87.5	0	2.17	0	0	13.89	0	0	0	0	0	0	-47.5	-47.5
	Inverter Transformer	MV4-11 T	369269	4908855	2	0	0	56.1	56.1	1	6693.91	3.25	0	87.51	0	2.17	0	0	13.9	0	0	0	0	0	0	-47.53	-47.53
	Inverter Transformer	MV4-10 T	369307	4908858	2	0	0	56.1	56.1	1	6727.95	3.25	0	87.56	0	2.18	0	0	13.93	0	0	0	0	0	0	-47.62	-47.62
	Inverter Transformer	MV4-8 T	369262	4909001	2	0	0	56.1	56.1	1	6765.09	3.25	0	87.61	0	2.19	0	0	13.97	0	0	0	0	0	0	-47.72	-47.72
	Inverter Transformer	MV4-9 T	369284	4909001	2	0	0	56.1	56.1	1	6783.67	3.25	0	87.63	0	2.2	0	0	14	0	0	0	0	0	0	-47.77	-47.77
	Inverter Transformer	MV4-1 T	369017	4909397	2	0	0	56.1	56.1	1	6786.66	3.25	0	87.63	0	2.2	0	0	14	0	0	0	0	0	0	-47.77	-47.77
	Inverter Transformer	MV6-2 T	370091	4907339	2	0	0	56.1	56.1	1	6828.15	3.25	0	87.69	0	2.21	0	0	14.04	0	0	0	0	0	0	-47.88	-47.88
	Inverter Transformer	MV4-6 T	369249	4909192	2	0	0	56.1	56.1	1	6858.61	3.25	0	87.72	0	2.22	0	0	14.08	0	0	0	0	0	0	-47.96	-47.96
	Inverter Transformer	MV6-3 T	370202	4907140	2	0	0	56.1	56.1	1	6880.76	3.25	0	87.75	0	2.23	0	0	14.1	0	0	0	0	0	0	-48.02	-48.02
	Inverter Transformer	MV4-5 T	369283	4909199	2	0	0	56.1	56.1	1	6890.77	3.25	0	87.77	0	2.23	0	0	14.11	0	0	0	0	0	0	-48.05	-48.05
	Inverter Transformer	MV4-3 T	369234	4909397	2	0	0	56.1	56.1	1	6962.59	3.25	0	87.86	0	2.25	0	0	14.19	0	0	0	0	0	0	-48.24	-48.24
	Inverter Transformer	MV4-2 T	369267	4909397	2	0	0	56.1	56.1	1	6989.55	3.25	0	87.89	0	2.26	0	0	14.22	0	0	0	0	0	0	-48.31	-48.31
	Inverter Transformer	MV5-6 T	369987	4908507	2	0	0	56.1	56.1	1	7157.6	3.25	0	88.1	0	2.3	0	0	14.4	0	0	0	0	0	0	-48.74	-48.74
	Inverter Transformer	MV5-5 T	370021	4908690	2	0	0	56.1	56.1	1	7269.83	3.25	0	88.23	0	2.33	0	0	14.52	0	0	0	0	0	0	-49.02	-49.02
	Inverter Transformer	MV5-2 T	370011	4908853	2	0	0	56.1	56.1	1	7336.83	3.25	0	88.31	0	2.35	0	0	14.59	0	0	0	0	0	0	-49.19	-49.19
	Inverter Transformer	MV5-1 T	370015	4909142	2	0	0	56.1	56.1	1	7481.69	5.14	0	88.48	0	3.13	1.5	0.01	14.74	0	0	0	0	0	0	-51.79	-51.79
	Inverter Transformer	MV5-3 T	370237	4908851	2	0	0	56.1	56.1	1	7535.63	3.25	0	88.54	0	2.4	0	0	14.79	0	0	0	0	0	0	-49.67	-49.67
	Inverter Transformer	MV5-4 T	370330	4908707	2	0	0	56.1	56.1	1	7553.6	3.25	0	88.56	0	2.4	0	0	14.81	0	0	0	0	0	0	-49.72	-49.72
	Line Reactor	NGR	369421	4908787.5	5	0	0	45.4	45.4	1	6789.99	5.25	0	87.64	0	3.22	1.37	0.1	2.77	0	0	0	0	0	0	-49.65	-49.65
Limit. Valu	0	0																								
Level D/N:	26.9015	26.9015																								

Receiver: Existing Noise Receptor
ID: S-R99
X: 363558
Y: 4905325
Z: 4.5
Ground: 0

ISO	Description	ID	X	Y	Z	Ground	ReflOrd	LxT	LxN	L/A	Dist.	hm	Freq	Adiv	K0b	Agr	Abar	z	Aatm	Afol	Ahous	Cmet	CmetN	Dc	RL	LtotT	LtotN
	Inverter	MV1-6	364477	4905835	2	0	0	100.3	100.3	1	1051.03	3.25	0	71.43	0	-0.22	0	0	11.08	0	0	0	0	0	0	18.03	18.03
	Inverter	MV1-9	364561	4905646	2	0	0	100.3	100.3	1	1053.12	3.25	0	71.45	0	-0.22	0	0	11.08	0	0	0	0	0	0	18	18
	Inverter	MV1-11	364655	4905414	2	0	0	100.3	100.3	1	1100.61	3.25	0	71.83	0	-0.2	0	0	11.23	0	0	0	0	0	0	17.45	17.45
	Inverter	MV1-5	364671	4905892	2	0	0	100.3	100.3	1	1249.11	3.25	0	72.93	0	-0.13	0	0	11.66	0	0	0	0	0	0	15.85	15.85
	Inverter	MV1-8	364788	4905647	2	0	0	100.3	100.3	1	1271.45	3.25	0	73.09	0	-0.12	0	0	11.73	0	0	0	0	0	0	15.62	15.62
	Inverter	MV1-4	364815	4905918	2	0	0	100.3	100.3	1	1389.86	3.25	0	73.86	0	-0.08	0	0	12.04	0	0	0	0	0	0	14.48	14.48
	Inverter	MV1-2	364753	4906063	2	0	0	100.3	100.3	1	1404.52	3.25	0	73.95	0	-0.07	0	0	12.08	0	0	0	0	0	0	14.35	14.35
	Inverter	MV1-1	364715	4906166	2	0	0	100.3	100.3	1	1430.36	3.25	0	74.11	0	-0.06	0	0	12.15	0	0	0	0	0	0	14.11	14.11
	Inverter	MV1-12	365038	4905386	2	0	0	100.3	100.3	1	1481.26	3.25	0	74.41	0	-0.04	0	0	12.28	0	0	0	0	0	0	13.66	13.66

Inverter	MV1-13	364731	4905241	2	0	0	97.3	97.3	1	1176.01	3.25	0	72.41	0	-0.16	0	0	11.46	0	0	0	0	0	0	13.61	13.61
Sol_Luce Substation	S_Substation	369426	4908792	3.5	0	0	112.1	112.1	1	6815.68	5.25	0	87.67	0	1.34	2.48	0.28	10.57	0	0	0	0	0	0	10.01	10.01
Inverter	MV1-15	365315	4904994	2	0	0	100.3	100.3	1	1787.91	3.25	0	76.05	0	0.07	0	0	13	0	0	0	0	0	0	11.2	11.2
Inverter	MV1-7	364925	4905782	2	0	0	97.3	97.3	1	1441.37	3.25	0	74.18	0	-0.06	0	0	12.18	0	0	0	0	0	0	11.01	11.01
Inverter	MV1-10	365004	4905564	2	0	0	97.3	97.3	1	1465.62	3.25	0	74.32	0	-0.05	0	0	12.24	0	0	0	0	0	0	10.8	10.8
Inverter	MV1-14	365163	4905049	2	0	0	97.3	97.3	1	1628.56	3.25	0	75.24	0	0.01	0	0	12.64	0	0	0	0	0	0	9.43	9.43
Inverter	MV2-4	365586	4906624	2	0	0	100.3	100.3	1	2408.36	3.25	0	78.63	0	0.24	0	0	14.28	0	0	0	0	0	0	7.16	7.16
Inverter	MV2-3	365820	4906641	2	0	0	100.3	100.3	1	2616.97	3.25	0	79.36	0	0.28	0	0	14.68	0	0	0	0	0	0	5.99	5.99
Inverter	MV2-1	365842	4906816	2	0	0	97.3	97.3	1	2727.59	3.25	0	79.72	0	0.31	0	0	14.88	0	0	0	0	0	0	2.41	2.41
Inverter	MV1-3	364440	4906039	2	0	0	89.1	89.1	1	1134.78	3.25	0	72.1	0	0.71	0	0	6.56	0	0	0	0	0	0	9.68	9.68
Inverter	MV3-18	367752	4907412	2	0	0	100.3	100.3	1	4684.57	3.25	0	84.41	0	0.61	0	0	18.11	0	0	0	0	0	0	-2.82	-2.82
Inverter	MV3-12	367668	4907594	2	0	0	100.3	100.3	1	4694.73	3.25	0	84.43	0	0.61	0	0	18.13	0	0	0	0	0	0	-2.86	-2.86
Inverter	MV3-13	367963	4907577	2	0	0	100.3	100.3	1	4947.28	3.25	0	84.89	0	0.64	0	0	18.5	0	0	0	0	0	0	-3.72	-3.72
Inverter	MV3-7	367945	4907754	2	0	0	100.3	100.3	1	5014.56	3.25	0	85	0	0.64	0	0	18.6	0	0	0	0	0	0	-3.94	-3.94
Inverter	MV3-17	368178	4907472	2	0	0	100.3	100.3	1	5094.51	3.25	0	85.14	0	0.65	0	0	18.72	0	0	0	0	0	0	-4.2	-4.2
Inverter	MV3-3	367939	4907927	2	0	0	100.3	100.3	1	5095.45	3.25	0	85.14	0	0.65	0	0	18.72	0	0	0	0	0	0	-4.2	-4.2
Inverter	MV3-10	368167	4907669	2	0	0	100.3	100.3	1	5170.8	3.25	0	85.27	0	0.66	0	0	18.83	0	0	0	0	0	0	-4.45	-4.45
Inverter	MV3-19	368357	4907347	2	0	0	100.3	100.3	1	5207.58	3.25	0	85.33	0	0.66	0	0	18.88	0	0	0	0	0	0	-4.56	-4.56
Inverter	MV3-6	368162	4907834	2	0	0	100.3	100.3	1	5243.27	3.25	0	85.39	0	0.66	0	0	18.93	0	0	0	0	0	0	-4.68	-4.68
Inverter	MV3-15	368357	4907477	2	0	0	100.3	100.3	1	5259.42	3.25	0	85.42	0	0.66	0	0	18.96	0	0	0	0	0	0	-4.73	-4.73
Inverter	MV3-21	368478	4907206	2	0	0	100.3	100.3	1	5267.31	3.25	0	85.43	0	0.66	0	0	18.97	0	0	0	0	0	0	-4.75	-4.75
Inverter	MV3-11	368346	4907662	2	0	0	100.3	100.3	1	5327.9	3.25	0	85.53	0	0.67	0	0	19.06	0	0	0	0	0	0	-4.94	-4.94
Inverter	MV3-16	368514	4907475	2	0	0	100.3	100.3	1	5402.26	3.25	0	85.65	0	0.67	0	0	19.16	0	0	0	0	0	0	-5.18	-5.18
Inverter	MV3-9	368512	4907703	2	0	0	100.3	100.3	1	5495.18	3.25	0	85.8	0	0.68	0	0	19.29	0	0	0	0	0	0	-5.46	-5.46
Inverter	MV3-20	368689	4907317	2	0	0	100.3	100.3	1	5504.11	3.25	0	85.81	0	0.68	0	0	19.31	0	0	0	0	0	0	-5.49	-5.49
Inverter	MV3-14	368684	4907498	2	0	0	100.3	100.3	1	5567.57	3.25	0	85.91	0	0.68	0	0	19.4	0	0	0	0	0	0	-5.68	-5.68
Inverter	MV3-8	368680	4907712	2	0	0	100.3	100.3	1	5650.9	3.25	0	86.04	0	0.69	0	0	19.51	0	0	0	0	0	0	-5.93	-5.93
Inverter	MV4-7	369035	4909001	2	0	0	100.3	100.3	1	6596.25	3.25	0	87.39	0	0.72	0	0	20.78	0	0	0	0	0	0	-8.57	-8.57
Inverter	MV4-4	369027	4909199	2	0	0	100.3	100.3	1	6702.08	3.25	0	87.52	0	0.71	0	0	20.92	0	0	0	0	0	0	-8.85	-8.85
Inverter	MV4-11	369264	4908855	2	0	0	100.3	100.3	1	6709.65	3.25	0	87.53	0	0.71	0	0	20.93	0	0	0	0	0	0	-8.87	-8.87
Inverter	MV4-10	369312	4908858	2	0	0	100.3	100.3	1	6752.08	3.25	0	87.59	0	0.71	0	0	20.98	0	0	0	0	0	0	-8.98	-8.98
Inverter	MV4-8	369256	4909001	2	0	0	100.3	100.3	1	6780.87	3.25	0	87.63	0	0.71	0	0	21.02	0	0	0	0	0	0	-9.05	-9.05
Inverter	MV4-1	369011	4909397	2	0	0	100.3	100.3	1	6805.62	3.25	0	87.66	0	0.71	0	0	21.05	0	0	0	0	0	0	-9.11	-9.11
Inverter	MV4-9	369289	4909001	2	0	0	100.3	100.3	1	6808.62	3.25	0	87.66	0	0.71	0	0	21.06	0	0	0	0	0	0	-9.12	-9.12
Inverter	MV6-2	370085	4907339	2	0	0	100.3	100.3	1	6830.66	3.25	0	87.69	0	0.71	0	0	21.09	0	0	0	0	0	0	-9.18	-9.18
Inverter	MV4-6	369243	4909192	2	0	0	100.3	100.3	1	6875.53	3.25	0	87.75	0	0.71	0	0	21.14	0	0	0	0	0	0	-9.29	-9.29
Inverter	MV6-3	370207	4907140	2	0	0	100.3	100.3	1	6892.27	3.25	0	87.77	0	0.71	0	0	21.16	0	0	0	0	0	0	-9.33	-9.33
Inverter	MV4-5	369289	4909199	2	0	0	100.3	100.3	1	6917.53	3.25	0	87.8	0	0.71	0	0	21.2	0	0	0	0	0	0	-9.39	-9.39
Inverter	MV4-3	369229	4909397	2	0	0	100.3	100.3	1	6981.51	3.25	0	87.88	0	0.71	0	0	21.28	0	0	0	0	0	0	-9.55	-9.55
Inverter	MV4-2	369272	4909397	2	0	0	100.3	100.3	1	7016.48	3.25	0	87.92	0	0.71	0	0	21.32	0	0	0	0	0	0	-9.64	-9.64
Inverter	MV5-5	370015	4908690	2	0	0	100.3	100.3	1	7281.21	3.25	0	88.24	0	0.7	0	0	21.65	0	0	0	0	0	0	-10.28	-10.28
Inverter	MV5-2	370006	4908853	2	0	0	100.3	100.3	1	7350.07	3.25	0	88.33	0	0.7	0	0	21.73	0	0	0	0	0	0	-10.44	-10.44
Inverter	MV5-1	370020	4909142	2	0	0	100.3	100.3	1	7505.13	5.14	0	88.51	0	1.79	2.21	0.01	21.92	0	0	0	0	0	0	-14.12	-14.12
Inverter	MV5-3	370231	4908851	2	0	0	100.3	100.3	1	7547.29	3.25	0	88.56	0	0.69	0	0	21.97	0	0	0	0	0	0	-10.9	-10.9
Inverter	MV5-4	370324	4908707	2	0	0	100.3	100.3	1	7564.17	3.25	0	88.58	0	0.69	0	0	21.99	0	0	0	0	0	0	-10.94	-10.94
Inverter	MV6-1	370235	4907364	2	0	0	97.3	97.3	1	6981.39	3.25	0	87.88	0	0.71	0	0	21.28	0	0	0	0	0	0	-12.55	-12.55
Inverter	MV2-2	365977	4906654	2	0	0	89.1	89.1	1	2760.04	3.25	0	79.82	0	1.09	0	0	9.25	0	0	0	0	0	0	-1.1	-1.1
DSTATCOM - 10 MVAR #2	DSAT2	369403	4908757	2.5	0	0	96.6	96.6	1	6778.1	3.5	0	87.62	0	3.82	0	0	4.21	0	0	0	0	0	0	0.98	0.98
DSTATCOM - 10 MVAR #1	DSAT1	369437	4908757	2.5	0	0	96.6	96.6	1	6807.44	3.5	0	87.66	0	3.83	0	0	4.22	0	0	0	0	0	0	0.92	0.92
Gardiner Substation	G_Sub	366586.3	4903349.9	2.5	0	0	90.8	90.8	1	3615.47	4.25	0	82.16	0	1.25	2.76	0.3	6.84	0	0	0	0	0	0	-2.24	-2.24
Inverters	G_Inv1	366526.4	4903225.8	2	0	0	87.7	87.7	1	3635.66	3.25	0	82.21	0	2.76	0	0	4.48	0	0	0	0	0	0	-1.79	-1.79
Inverters	G_Inv2	366676.9	4903239.1	2	0	0	87.7	87.7	1	3752.14	3.25	0	82.49	0	2.77	0	0	4.6	0	0	0	0	0	0	-2.2	-2.2
Inverters	G_Inv3	366583.7	4903091.4	2	0	0	87.7	87.7	1	3760.83	3.25	0	82.51	0	2.77	0	0	4.61	0	0	0	0	0	0	-2.23	-2.23
SubstationTransformer	W_ST	369711.17	4906112.3	2.5	0	0	92	92	1	6203.33	4.25	0	86.85	0	1.92	2.06	0.29	9.96	0	0	0	0	0	0	-8.8	-8.8
Inverters	G_Inv4	366732.8	4903105	2	0	0	87.7	87.7	1	3873.99	3.25	0	82.76	0	2.78	0	0	4.74	0	0	0	0	0	0	-2.62	-2.62
Inverters	G_Inv5	366638.5	4902958.1	2	0	0	87.7	87.7	1	3884.8	3.25	0	82.79	0	2.78	0	0	4.75	0	0	0	0	0	0	-2.66	-2.66
Inverters	G_Inv6	366788.5	4902972	2	0	0	87.7	87.7	1	3996.59	3.25	0	83.03	0	2.79	0	0	4.87	0	0	0	0	0	0	-3.04	-3.04
Inverters	G_Inv7	366694.6	4902824.7	2	0	0	87.7	87.7	1	4011.21	3.25	0	83.07	0	2.79	0	0	4.89	0	0	0	0	0	0	-3.08	-3.08
Inverters	G_Inv8	366844.5	4902838.5	2	0	0	87.7	87.7	1	4121.14	3.25	0	83.3	0	2.8	0	0	5	0	0	0	0	0	0	-3.45	-3.45
Inverters	G_Inv9	366750.9	4902691.8	2	0	0	87.7	87.7	1	4138.64	3.25	0	83.34	0	2.8	0	0	5.02	0	0	0	0	0	0	-3.5	-3.5
Inverters	G_Inv10	366900.7	4902704.8	2	0	0	87.7	87.7	1	4247.25	3.25	0	83.56	0	2.81	0	0	5.14	0	0	0	0	0	0	-3.85	-3.85
Inverter	MV3-1	368156	4907976	2	0	0	89.1	89.1	1	5307.49	3.25	0	85.5	0	1.72	0	0	12.87	0	0	0	0	0	0	-11.03	-11.03
Inverter	MV3-5	368340	4907843	2	0	0	89.1	89.1	1	5404.43	3.25	0	85.65	0	1.74	0	0	13	0	0	0	0	0	0	-11.33	-11.33
Inverter	MV3-22	368656	4907142	2	0	0	89.1	89.1	1	5412.13	3.25	0	85.67	0	1.74	0	0	13.01	0	0	0	0	0	0	-11.36	-11.36
Inverter	MV3-4	368502	4907925	2	0	0	89.1	89.1	1	5585.98	3.25	0	85.94	0	1.78	0	0	13.23	0	0	0	0	0	0	-11.9	-11.9
Inverter	MV3-2	368671	4907928	2	0	0	89.1	89.1	1	5737.45	3.25	0	86.17	0	1.82	0	0	13.43	0	0	0	0	0	0	-12.37	-12.37
Westbrook Inverter Enclosur	W_INV2	369374	4906388	2	0	0	89.1	89.1	1	5912.35	3.25	0	86.44	0	1.86	0	0	13.65	0	0	0	0	0	0	-12.89	-12.89
Westbrook Inverter Enclosur	W_INV3	369508	4906164	2	0	0	89.1	89.1	1	6008.86	3.25	0	86.58	0	1.89	0	0	13.77	0	0	0	0	0	0	-13.18	-13.18
Westbrook Inverter Enclosur	W_INV4	369673	4906164	2	0	0	89.1	89.1	1	6172.29	3.25	0	86.81	0	1.93	0	0	13.98	0	0	0	0	0	0	-13.66	-13.66
Fixed Reactor Bank 1	FRB1	369378	4908755	6	0	0	89.8	89.8	1	6755.54	5.25	0	87.59	0	-0.32	0	0	10.51	0	0	0	0	0	0	-8.01	-8.01
Westbrook Inverter Enclosur	W_INV5	369719	4906574	2	0	0	89.1	89.1	1	6286.33	3.25	0	86.97	0	1.96	0	0	14.12	0	0	0	0	0	0	-13.99	-13.99
Fixed Reactor Bank 2	FRB2	369464	4908755	6	0	0	89.8	89.8	1	6829.77	5.25	0	87.69	0	-0.31	0	0	10.58	0	0	0	0	0	0	-8.19	-8.19
Westbrook Inverter Enclosur	W_INV7	369780	4906417	2	0	0	89.1	89.1	1	6317.1	3.25	0	87.01	0	1.96	0	0	14.16	0	0	0	0	0	0	-14.07	-14.07
Inverter	MV4-13	369051	4908605	2	0	0	89.1	89.1	1	6397.77	3.25	0	87.12	0	1.98	0	0	14.26	0	0	0	0	0	0	-14.3	-14.3

Westbrook Inverter Enclosur	W_INV6	369875	4906578	2	0	0	89.1	89.1	1	6440.07	3.25	0	87.18	0	1.99	0	0	14.31	0	0	0	0	0	0	-14.42	-14.42
Inverter	MV4-15	369176	4908481	2	0	0	89.1	89.1	1	6443.78	3.25	0	87.18	0	1.99	0	0	14.31	0	0	0	0	0	0	-14.43	-14.43
Inverter	MV4-14	369176	4908507	2	0	0	89.1	89.1	1	6456.55	3.25	0	87.2	0	2	0	0	14.33	0	0	0	0	0	0	-14.47	-14.47
Inverter	MV4-12	369043	4908803	2	0	0	89.1	89.1	1	6494.75	3.25	0	87.25	0	2.01	0	0	14.38	0	0	0	0	0	0	-14.58	-14.58
Inverter	MV5-6	369982	4908507	2	0	0	89.1	89.1	1	7168.88	3.25	0	88.11	0	2.17	0	0	15.19	0	0	0	0	0	0	-16.41	-16.41
Westbrook Inverter Enclosur	W_INV1	369409	4906578	2	0	0	86.1	86.1	1	5983.66	3.25	0	86.54	0	1.88	0	0	13.74	0	0	0	0	0	0	-16.11	-16.11
Inverter	MV6-4	370250	4906966	2	0	0	86.1	86.1	1	6890.26	3.25	0	87.76	0	2.1	0	0	14.86	0	0	0	0	0	0	-18.66	-18.66
Inverter Transformer	MV1-13 T	364725	4905241	2	0	0	69.4	69.4	1	1170.02	3.25	0	72.36	0	1.8	0	0	4.04	0	0	0	0	0	0	-8.85	-8.85
Inverter Transformer	MV1-7 T	364919	4905782	2	0	0	69.4	69.4	1	1435.68	3.25	0	74.14	0	1.94	0	0	4.36	0	0	0	0	0	0	-11.09	-11.09
Inverter Transformer	MV1-10 T	365010	4905564	2	0	0	69.4	69.4	1	1471.54	3.25	0	74.36	0	1.96	0	0	4.4	0	0	0	0	0	0	-11.37	-11.37
Inverter Transformer	MV1-14 T	365157	4905049	2	0	0	69.4	69.4	1	1622.65	3.25	0	75.2	0	2.03	0	0	4.57	0	0	0	0	0	0	-12.45	-12.45
Westbrook Inverter Transfor	W_INVTR1	369403	4906578	2	0	0	78.2	78.2	1	5977.8	3.25	0	86.53	0	-3.36	0	0	2.73	0	0	0	0	0	0	-7.66	-7.66
Westbrook Inverter Transfor	W_INVTR2	369368	4906388	2	0	0	77.3	77.3	1	5906.44	3.25	0	86.43	0	-3.35	0	0	2.71	0	0	0	0	0	0	-8.45	-8.45
Westbrook Inverter Transfor	W_INVTR3	369514	4906164	2	0	0	77.3	77.3	1	6014.8	3.25	0	86.58	0	-3.37	0	0	2.75	0	0	0	0	0	0	-8.62	-8.62
Westbrook Inverter Transfor	W_INVTR4	369679	4906164	2	0	0	77.3	77.3	1	6178.23	3.25	0	86.82	0	-3.4	0	0	2.8	0	0	0	0	0	0	-8.87	-8.87
Westbrook Inverter Transfor	W_INVTR5	369725	4906574	2	0	0	77.3	77.3	1	6292.21	3.25	0	86.98	0	-3.42	0	0	2.83	0	0	0	0	0	0	-9.05	-9.05
Westbrook Inverter Transfor	W_INVTR7	369786	4906417	2	0	0	77.3	77.3	1	6323.01	3.25	0	87.02	0	-3.43	0	0	2.84	0	0	0	0	0	0	-9.09	-9.09
Westbrook Inverter Transfor	W_INVTR6	369881	4906578	2	0	0	77.3	77.3	1	6445.96	3.25	0	87.19	0	-3.45	0	0	2.88	0	0	0	0	0	0	-9.28	-9.28
Inverter Transformer	MV2-1 T	365836	4906816	2	0	0	69.4	69.4	1	2722.57	3.25	0	79.7	0	2.42	0	0	5.64	0	0	0	0	0	0	-18.41	-18.41
Inverter Transformer	MV1-9 T	364555	4905646	2	0	0	56.1	56.1	1	1047.4	3.25	0	71.4	0	0.03	0	0	5	0	0	0	0	0	0	-20.37	-20.37
Inverter Transformer	MV1-6 T	364482	4905835	2	0	0	56.1	56.1	1	1055.41	3.25	0	71.47	0	0.03	0	0	5.02	0	0	0	0	0	0	-20.46	-20.46
Inverter Transformer	MV1-11 T	364649	4905414	2	0	0	56.1	56.1	1	1094.63	3.25	0	71.79	0	0.05	0	0	5.11	0	0	0	0	0	0	-20.88	-20.88
Inverter Transformer	MV1-3 T	364435	4906039	2	0	0	56.1	56.1	1	1130.9	3.25	0	72.07	0	0.06	0	0	5.2	0	0	0	0	0	0	-21.27	-21.27
Inverter Transformer	MV1-5 T	364676	4905892	2	0	0	56.1	56.1	1	1253.56	3.25	0	72.96	0	0.1	0	0	5.48	0	0	0	0	0	0	-22.48	-22.48
Inverter Transformer	MV1-8 T	364782	4905647	2	0	0	56.1	56.1	1	1265.65	3.25	0	73.05	0	0.11	0	0	5.5	0	0	0	0	0	0	-22.6	-22.6
Inverter Transformer	MV1-4 T	364821	4905918	2	0	0	56.1	56.1	1	1395.29	3.25	0	73.89	0	0.16	0	0	5.79	0	0	0	0	0	0	-23.78	-23.78
Inverter Transformer	MV1-2 T	364759	4906063	2	0	0	56.1	56.1	1	1409.63	3.25	0	73.98	0	0.16	0	0	5.82	0	0	0	0	0	0	-23.91	-23.91
Inverter Transformer	MV1-1 T	364721	4906166	2	0	0	56.1	56.1	1	1435.22	3.25	0	74.14	0	0.17	0	0	5.88	0	0	0	0	0	0	-24.13	-24.13
Inverter Transformer	MV1-12 T	365044	4905386	2	0	0	56.1	56.1	1	1487.25	3.25	0	74.45	0	0.19	0	0	5.99	0	0	0	0	0	0	-24.57	-24.57
Inverter Transformer	MV6-4 T	370244	4906966	2	0	0	69.4	69.4	1	6884.44	3.25	0	87.76	0	3.3	0	0	8.54	0	0	0	0	0	0	-30.25	-30.25
Inverter Transformer	MV6-1 T	370230	4907364	2	0	0	69.4	69.4	1	6976.61	3.25	0	87.87	0	3.31	0	0	8.59	0	0	0	0	0	0	-30.43	-30.43
Inverter Transformer	MV1-15 T	365309	4904994	2	0	0	56.1	56.1	1	1782.01	3.25	0	76.02	0	0.31	0	0	6.61	0	0	0	0	0	0	-26.88	-26.88
Inverter Transformer	MV2-4 T	365590	4906628	2	0	0	56.1	56.1	1	2413.88	3.25	0	78.65	0	0.58	0	0	7.83	0	0	0	0	0	0	-31.01	-31.01
Inverter Transformer	MV2-3 T	365814	4906641	2	0	0	56.1	56.1	1	2611.78	3.25	0	79.34	0	0.66	0	0	8.19	0	0	0	0	0	0	-32.14	-32.14
Inverter Transformer	MV2-2 T	365982	4906654	2	0	0	56.1	56.1	1	2764.42	3.25	0	79.83	0	0.73	0	0	8.46	0	0	0	0	0	0	-32.97	-32.97
Inverter Transformer	MV3-18 T	367757	4907412	2	0	0	56.1	56.1	1	4689.05	3.25	0	84.42	0	1.51	0	0	11.44	0	0	0	0	0	0	-41.31	-41.31
Inverter Transformer	MV3-12 T	367674	4907594	2	0	0	56.1	56.1	1	4699.98	3.25	0	84.44	0	1.52	0	0	11.45	0	0	0	0	0	0	-41.35	-41.35
Inverter Transformer	MV3-13 T	367958	4907577	2	0	0	56.1	56.1	1	4942.82	3.25	0	84.88	0	1.6	0	0	11.78	0	0	0	0	0	0	-42.2	-42.2
Inverter Transformer	MV3-7 T	367951	4907754	2	0	0	56.1	56.1	1	5019.81	3.25	0	85.01	0	1.63	0	0	11.88	0	0	0	0	0	0	-42.47	-42.47
Inverter Transformer	MV3-17 T	368183	4907472	2	0	0	56.1	56.1	1	5099.04	3.25	0	85.15	0	1.66	0	0	11.98	0	0	0	0	0	0	-42.74	-42.74
Inverter Transformer	MV3-3 T	367944	4907927	2	0	0	56.1	56.1	1	5099.75	3.25	0	85.15	0	1.66	0	0	11.98	0	0	0	0	0	0	-42.74	-42.74
Inverter Transformer	MV3-10 T	368162	4907669	2	0	0	56.1	56.1	1	5166.35	3.25	0	85.26	0	1.68	0	0	12.07	0	0	0	0	0	0	-42.96	-42.96
Inverter Transformer	MV3-19 T	368352	4907347	2	0	0	56.1	56.1	1	5202.97	3.25	0	85.33	0	1.7	0	0	12.12	0	0	0	0	0	0	-43.08	-43.08
Inverter Transformer	MV3-6 T	368156	4907834	2	0	0	56.1	56.1	1	5238	3.25	0	85.38	0	1.71	0	0	12.16	0	0	0	0	0	0	-43.2	-43.2
Inverter Transformer	MV3-15 T	368351	4907477	2	0	0	56.1	56.1	1	5253.95	3.25	0	85.41	0	1.72	0	0	12.18	0	0	0	0	0	0	-43.25	-43.25
Inverter Transformer	MV3-21 T	368484	4907206	2	0	0	56.1	56.1	1	5272.92	3.25	0	85.44	0	1.72	0	0	12.21	0	0	0	0	0	0	-43.31	-43.31
Inverter Transformer	MV3-1 T	368150	4907976	2	0	0	56.1	56.1	1	5302.29	3.25	0	85.49	0	1.73	0	0	12.25	0	0	0	0	0	0	-43.41	-43.41
Inverter Transformer	MV3-11 T	368340	4907662	2	0	0	56.1	56.1	1	5322.51	3.25	0	85.52	0	1.74	0	0	12.27	0	0	0	0	0	0	-43.48	-43.48
Inverter Transformer	MV3-16 T	368509	4907475	2	0	0	56.1	56.1	1	5397.68	3.25	0	85.64	0	1.77	0	0	12.37	0	0	0	0	0	0	-43.72	-43.72
Inverter Transformer	MV3-5 T	368335	4907843	2	0	0	56.1	56.1	1	5400.01	3.25	0	85.65	0	1.77	0	0	12.37	0	0	0	0	0	0	-43.73	-43.73
Inverter Transformer	MV3-22 T	368661	4907142	2	0	0	56.1	56.1	1	5416.84	3.25	0	85.67	0	1.77	0	0	12.39	0	0	0	0	0	0	-43.78	-43.78
Inverter Transformer	MV3-20 T	368683	4907317	2	0	0	56.1	56.1	1	5498.52	3.25	0	85.8	0	1.8	0	0	12.49	0	0	0	0	0	0	-44.04	-44.04
Inverter Transformer	MV3-9 T	368517	4907703	2	0	0	56.1	56.1	1	5499.69	3.25	0	85.81	0	1.8	0	0	12.49	0	0	0	0	0	0	-44.04	-44.04
Inverter Transformer	MV3-14 T	368678	4907498	2	0	0	56.1	56.1	1	5562.04	3.25	0	85.9	0	1.82	0	0	12.57	0	0	0	0	0	0	-44.24	-44.24
Inverter Transformer	MV3-4 T	368507	4907925	2	0	0	56.1	56.1	1	5590.4	3.25	0	85.95	0	1.83	0	0	12.61	0	0	0	0	0	0	-44.33	-44.33
Inverter Transformer	MV3-8 T	368685	4907712	2	0	0	56.1	56.1	1	5655.43	3.25	0	86.05	0	1.85	0	0	12.69	0	0	0	0	0	0	-44.53	-44.53
Inverter Transformer	MV3-2 T	368677	4907928	2	0	0	56.1	56.1	1	5742.8	3.25	0	86.18	0	1.88	0	0	12.79	0	0	0	0	0	0	-44.8	-44.8
Inverter Transformer	MV4-13 T	369057	4908605	2	0	0	56.1	56.1	1	6402.92	3.25	0	87.13	0	2.09	0	0	13.57	0	0	0	0	0	0	-46.73	-46.73
Inverter Transformer	MV4-15 T	369170	4908481	2	0	0	56.1	56.1	1	6438.55	3.25	0	87.18	0	2.1	0	0	13.61	0	0	0	0	0	0	-46.83	-46.83
Inverter Transformer	MV4-14 T	369182	4908507	2	0	0	56.1	56.1	1	6461.77	3.25	0	87.21	0	2.11	0	0	13.64	0	0	0	0	0	0	-46.89	-46.89
Inverter Transformer	MV4-12 T	369049	4908803	2	0	0	56.1	56.1	1	6499.81	3.25	0	87.26	0	2.12	0	0	13.68	0	0	0	0	0	0	-47	-47
Inverter Transformer	MV4-7 T	369040	4909001	2	0	0	56.1	56.1	1	6600.4	3.25	0	87.39	0	2.15	0	0	13.79	0	0	0	0	0	0	-47.27	-47.27
Inverter Transformer	MV4-4 T	369033	4909199	2	0	0	56.1	56.1	1	6706.97	3.25	0	87.53	0	2.18	0	0	13.91	0	0	0	0	0	0	-47.56	-47.56
Inverter Transformer	MV4-11 T	369269	4908855	2	0	0	56.1	56.1	1	6713.9	3.25	0	87.54	0	2.18	0	0	13.92	0	0	0	0	0	0	-47.58	-47.58
Inverter Transformer	MV4-10 T	369307	4908858	2	0	0	56.1	56.1	1	6747.82	3.25	0	87.58	0	2.19	0	0	13.96	0	0	0	0	0	0	-47.67	-47.67
Inverter Transformer	MV4-8 T	369262	4909001	2	0	0	56.1	56.1	1	6785.91	3.25	0	87.63	0	2.2	0	0	14	0	0	0	0	0	0	-47.77	-47.77
Inverter Transformer	MV4-9 T	369284	4909001	2	0	0	56.1	56.1	1	6804.41	3.25	0	87.66	0	2.21	0	0	14.02	0	0	0	0	0	0	-47.82	-47.82
Inverter Transformer	MV4-1 T	369017	4909397	2	0	0	56.1	56.1	1	6810.42	3.25	0	87.66	0	2.21	0	0	14.02	0	0	0	0	0	0	-47.84	-47.84
Inverter Transformer	MV6-2 T	370091	4907339	2	0	0	56.1	56.1	1	6836.39	3.25	0	87.7	0	2.21	0	0	14.05	0	0	0	0	0	0	-47.91	-47.91
Inverter Transformer	MV4-6 T	369249	4909192	2	0	0	56.1	56.1	1	6880.49	3.25	0	87.75	0	2.23	0	0	14.1	0	0	0	0	0	0	-48.02	-48.02
Inverter Transformer	MV6-3 T	370202	4907140	2	0	0	56.1	56.1	1	6887.45	3.25	0	87.76	0	2.23	0	0	14.11	0	0	0	0	0	0	-48.04	-48.04
Inverter Transformer	MV4-5 T	369283	4909199	2	0	0	56.1	56.1	1	6912.56	3.25	0	87.79	0	2.24	0	0	14.14	0	0	0	0	0	0	-48.11	-48.11
Inverter Transformer	MV4-3 T	369234	4909397	2	0	0	56.1	56.1	1	6985.57	3.25	0	87.88	0	2.26	0	0	14.21	0	0	0	0	0	0	-48.3	-48.3
Inverter Transformer	MV4-2 T	369267	4909397	2	0	0	56.1	56.1	1	7012.41	3.25	0	87.92	0	2.26	0	0	14.24	0	0	0	0	0	0	-48.36	-48.36

	Inverter Transformer	MV5-6 T	369987	4908507	2	0	0	56.1	56.1	1	7173.37	3.25	0	88.11	0	2.31	0	0	14.41	0	0	0	0	0	0	-48.78	-48.78
	Inverter Transformer	MV5-5 T	370021	4908690	2	0	0	56.1	56.1	1	7286.54	3.25	0	88.25	0	2.34	0	0	14.53	0	0	0	0	0	0	-49.06	-49.06
	Inverter Transformer	MV5-2 T	370011	4908853	2	0	0	56.1	56.1	1	7354.45	3.25	0	88.33	0	2.35	0	0	14.6	0	0	0	0	0	0	-49.23	-49.23
	Inverter Transformer	MV5-1 T	370015	4909142	2	0	0	56.1	56.1	1	7500.82	5.14	0	88.5	0	3.14	1.49	0.01	14.76	0	0	0	0	0	0	-51.83	-51.83
	Inverter Transformer	MV5-3 T	370237	4908851	2	0	0	56.1	56.1	1	7552.6	3.25	0	88.56	0	2.4	0	0	14.81	0	0	0	0	0	0	-49.71	-49.71
	Inverter Transformer	MV5-4 T	370330	4908707	2	0	0	56.1	56.1	1	7569.54	3.25	0	88.58	0	2.41	0	0	14.83	0	0	0	0	0	0	-49.76	-49.76
	Line Reactor	NGR	369421	4908787.5	5	0	0	45.4	45.4	1	6809.09	5.25	0	87.66	0	3.22	1.37	0.1	2.78	0	0	0	0	0	0	-49.68	-49.68
Limit. Valu	0	0																								
Level D/N:	26.8216	26.8216																								

Receiver: Existing Noise Receptor
ID: S-R100
X: 363689
Y: 4905350
Z: 4.5
Ground: 0

ISO	Description	ID	X	Y	Z	Ground	ReflOrd	LxT	LxN	L/A	Dist.	hm	Freq	Adiv	K0b	Agr	Abar	z	Aatm	Afol	Ahous	Cmet	CmetN	Dc	RL	LtotT	LtotN
	Inverter	MV1-9	364561	4905646	2	0	0	100.3	100.3	1	920.87	3.25	0	70.28	0	-0.29	0	0	10.64	0	0	0	0	0	0	19.67	19.67
	Inverter	MV1-6	364477	4905835	2	0	0	100.3	100.3	1	925.3	3.25	0	70.33	0	-0.28	0	0	10.66	0	0	0	0	0	0	19.61	19.61
	Inverter	MV1-11	364655	4905414	2	0	0	100.3	100.3	1	968.12	3.25	0	70.72	0	-0.26	0	0	10.8	0	0	0	0	0	0	19.05	19.05
	Inverter	MV1-5	364671	4905892	2	0	0	100.3	100.3	1	1121.65	3.25	0	72	0	-0.19	0	0	11.29	0	0	0	0	0	0	17.21	17.21
	Inverter	MV1-8	364788	4905647	2	0	0	100.3	100.3	1	1138.43	3.25	0	72.13	0	-0.18	0	0	11.35	0	0	0	0	0	0	17.02	17.02
	Inverter	MV1-4	364815	4905918	2	0	0	100.3	100.3	1	1261.15	3.25	0	73.02	0	-0.13	0	0	11.7	0	0	0	0	0	0	15.73	15.73
	Inverter	MV1-2	364753	4906063	2	0	0	100.3	100.3	1	1280.81	3.25	0	73.15	0	-0.12	0	0	11.75	0	0	0	0	0	0	15.53	15.53
	Inverter	MV1-1	364715	4906166	2	0	0	100.3	100.3	1	1310.93	3.25	0	73.35	0	-0.11	0	0	11.83	0	0	0	0	0	0	15.23	15.23
	Inverter	MV1-12	365038	4905386	2	0	0	100.3	100.3	1	1349.48	3.25	0	73.6	0	-0.09	0	0	11.94	0	0	0	0	0	0	14.86	14.86
	Inverter	MV1-13	364731	4905241	2	0	0	97.3	97.3	1	1047.69	3.25	0	71.4	0	-0.22	0	0	11.07	0	0	0	0	0	0	15.07	15.07
	Inverter	MV1-15	365315	4904994	2	0	0	100.3	100.3	1	1664.52	3.25	0	75.43	0	0.02	0	0	12.72	0	0	0	0	0	0	12.14	12.14
	Sol_Luce Substation	S_Substation	369426	4908792	3.5	0	0	112.1	112.1	1	6690.33	5.25	0	87.51	0	1.32	2.5	0.28	10.45	0	0	0	0	0	0	10.3	10.3
	Inverter	MV1-7	364925	4905782	2	0	0	97.3	97.3	1	1309.32	3.25	0	73.34	0	-0.11	0	0	11.83	0	0	0	0	0	0	12.25	12.25
	Inverter	MV1-10	365004	4905564	2	0	0	97.3	97.3	1	1332.3	3.25	0	73.49	0	-0.1	0	0	11.89	0	0	0	0	0	0	12.03	12.03
	Inverter	MV1-14	365163	4905049	2	0	0	97.3	97.3	1	1504.42	3.25	0	74.55	0	-0.03	0	0	12.34	0	0	0	0	0	0	10.46	10.46
	Inverter	MV2-4	365586	4906624	2	0	0	100.3	100.3	1	2285.1	3.25	0	78.18	0	0.21	0	0	14.04	0	0	0	0	0	0	7.89	7.89
	Inverter	MV2-3	365820	4906641	2	0	0	100.3	100.3	1	2491.56	3.25	0	78.93	0	0.26	0	0	14.44	0	0	0	0	0	0	6.69	6.69
	Inverter	MV2-1	365842	4906816	2	0	0	97.3	97.3	1	2604.72	3.25	0	79.32	0	0.28	0	0	14.66	0	0	0	0	0	0	3.06	3.06
	Inverter	MV1-3	364440	4906039	2	0	0	89.1	89.1	1	1019.18	3.25	0	71.17	0	0.69	0	0	6.35	0	0	0	0	0	0	10.85	10.85
	Inverter	MV3-18	367752	4907412	2	0	0	100.3	100.3	1	4556.29	3.25	0	84.17	0	0.6	0	0	17.92	0	0	0	0	0	0	-2.37	-2.37
	Inverter	MV3-12	367668	4907594	2	0	0	100.3	100.3	1	4568.15	3.25	0	84.19	0	0.6	0	0	17.93	0	0	0	0	0	0	-2.42	-2.42
	Inverter	MV3-13	367963	4907577	2	0	0	100.3	100.3	1	4819.4	3.25	0	84.66	0	0.63	0	0	18.31	0	0	0	0	0	0	-3.29	-3.29
	Inverter	MV3-7	367945	4907754	2	0	0	100.3	100.3	1	4888.02	3.25	0	84.78	0	0.63	0	0	18.41	0	0	0	0	0	0	-3.52	-3.52
	Inverter	MV3-17	368178	4907472	2	0	0	100.3	100.3	1	4965.28	3.25	0	84.92	0	0.64	0	0	18.53	0	0	0	0	0	0	-3.77	-3.77
	Inverter	MV3-3	367939	4907927	2	0	0	100.3	100.3	1	4970.26	3.25	0	84.93	0	0.64	0	0	18.54	0	0	0	0	0	0	-3.79	-3.79
	Inverter	MV3-10	368167	4907669	2	0	0	100.3	100.3	1	5042.84	3.25	0	85.05	0	0.65	0	0	18.64	0	0	0	0	0	0	-4.03	-4.03
	Inverter	MV3-19	368357	4907347	2	0	0	100.3	100.3	1	5077.23	3.25	0	85.11	0	0.65	0	0	18.69	0	0	0	0	0	0	-4.14	-4.14
	Inverter	MV3-6	368162	4907834	2	0	0	100.3	100.3	1	5116.44	3.25	0	85.18	0	0.65	0	0	18.75	0	0	0	0	0	0	-4.27	-4.27
	Inverter	MV3-15	368357	4907477	2	0	0	100.3	100.3	1	5129.75	3.25	0	85.2	0	0.65	0	0	18.77	0	0	0	0	0	0	-4.31	-4.31
	Inverter	MV3-21	368478	4907206	2	0	0	100.3	100.3	1	5136.07	3.25	0	85.21	0	0.65	0	0	18.78	0	0	0	0	0	0	-4.33	-4.33
	Inverter	MV3-11	368346	4907662	2	0	0	100.3	100.3	1	5199.33	3.25	0	85.32	0	0.66	0	0	18.87	0	0	0	0	0	0	-4.54	-4.54
	Inverter	MV3-16	368514	4907475	2	0	0	100.3	100.3	1	5272.22	3.25	0	85.44	0	0.66	0	0	18.98	0	0	0	0	0	0	-4.77	-4.77
	Inverter	MV3-9	368512	4907703	2	0	0	100.3	100.3	1	5366.37	3.25	0	85.59	0	0.67	0	0	19.11	0	0	0	0	0	0	-5.06	-5.06
	Inverter	MV3-20	368689	4907317	2	0	0	100.3	100.3	1	5373	3.25	0	85.6	0	0.67	0	0	19.12	0	0	0	0	0	0	-5.08	-5.08
	Inverter	MV3-14	368684	4907498	2	0	0	100.3	100.3	1	5437.27	3.25	0	85.71	0	0.68	0	0	19.21	0	0	0	0	0	0	-5.28	-5.28
	Inverter	MV3-8	368680	4907712	2	0	0	100.3	100.3	1	5521.7	3.25	0	85.84	0	0.68	0	0	19.33	0	0	0	0	0	0	-5.54	-5.54
	Inverter	MV4-7	369035	4909001	2	0	0	100.3	100.3	1	6473.76	3.25	0	87.22	0	0.71	0	0	20.62	0	0	0	0	0	0	-8.25	-8.25
	Inverter	MV4-4	369027	4909199	2	0	0	100.3	100.3	1	6580.96	3.25	0	87.37	0	0.72	0	0	20.76	0	0	0	0	0	0	-8.53	-8.53
	Inverter	MV4-11	369264	4908855	2	0	0	100.3	100.3	1	6585.26	3.25	0	87.37	0	0.72	0	0	20.77	0	0	0	0	0	0	-8.54	-8.54
	Inverter	MV4-10	369312	4908858	2	0	0	100.3	100.3	1	6627.53	3.25	0	87.43	0	0.71	0	0	20.82	0	0	0	0	0	0	-8.65	-8.65
	Inverter	MV4-8	369256	4909001	2	0	0	100.3	100.3	1	6657.42	3.25	0	87.47	0	0.71	0	0	20.86	0	0	0	0	0	0	-8.73	-8.73
	Inverter	MV4-9	369289	4909001	2	0	0	100.3	100.3	1	6685.04	3.25	0	87.5	0	0.71	0	0	20.9	0	0	0	0	0	0	-8.8	-8.8
	Inverter	MV4-1	369011	4909397	2	0	0	100.3	100.3	1	6685.95	3.25	0	87.5	0	0.71	0	0	20.9	0	0	0	0	0	0	-8.81	-8.81
	Inverter	MV6-2	370085	4907339	2	0	0	100.3	100.3	1	6698.13	3.25	0	87.52	0	0.71	0	0	20.92	0	0	0	0	0	0	-8.84	-8.84
	Inverter	MV4-6	369243	4909192	2	0	0	100.3	100.3	1	6753.36	3.25	0	87.59	0	0.71	0	0	20.99	0	0	0	0	0	0	-8.98	-8.98
	Inverter	MV6-3	370207	4907140	2	0	0	100.3	100.3	1	6759.32	3.25	0	87.6	0	0.71	0	0	20.99	0	0	0	0	0	0	-8.99	-8.99
	Inverter	MV4-5	369289	4909199	2	0	0	100.3	100.3	1	6795.2	3.25	0	87.64	0	0.71	0	0	21.04	0	0	0	0	0	0	-9.09	-9.09
	Inverter	MV4-3	369229	4909397	2	0	0	100.3	100.3	1	6860.74	3.25	0	87.73	0	0.71	0	0	21.12	0	0	0	0	0	0	-9.25	-9.25
	Inverter	MV4-2	369272	4909397	2	0	0	100.3	100.3	1	6895.51	3.25	0	87.77	0	0.71	0	0	21.17	0	0	0	0	0	0	-9.34	-9.34
	Inverter	MV5-5	370015	4908690	2	0	0	100.3	100.3	1	7153.59	3.25	0	88.09	0	0.71	0	0	21.49	0	0	0	0	0	0	-9.97	-9.97
	Inverter	MV5-2	370006	4908853	2	0	0	100.3	100.3	1	7223.26	3.25	0	88.17	0	0.7	0	0	21.58	0	0	0	0	0	0	-10.14	-10.14
	Inverter	MV5-1	370020	4909142	2	0	0	100.3	100.3	1	7379.76	5.14	0	88.36	0	1.79	2.24	0.01	21.77	0	0	0	0	0	0	-13.84	-13.84
	Inverter	MV5-3	370231	4908851	2	0	0	100.3	100.3	1	7419.89	3.25	0	88.41	0	0.69	0	0	21.82	0	0	0	0	0	0	-10.61	-10.61
	Inverter	MV5-4	370324	4908707	2	0	0	100.3	100.3	1	7435.9	3.25	0	88.43	0	0.69	0	0	21.84	0	0	0	0	0	0	-10.64	-10.64
	Inverter	MV2-2	365977	4906654	2	0	0	89.1	89.1	1	2633.51	3.25	0	79.41	0	1.06	0	0	9.05	0	0	0	0	0	0	-0.47	-0.47
	Inverter	MV6-1	370235	4907364	2	0	0	97.3	97.3	1	6848.82	3.25	0	87.71	0	0.71	0	0	21.11	0	0	0	0	0	0	-12.22	-12.22

DSTATCOM - 10 MVAR #2	DSAT2	369403	4908757	2.5	0	0	96.6	96.6	1	6652.63	3.5	0	87.46	0	3.82	0	0	4.15	0	0	0	0	0	0	1.2	1.2
DSTATCOM - 10 MVAR #1	DSAT1	369437	4908757	2.5	0	0	96.6	96.6	1	6681.85	3.5	0	87.5	0	3.82	0	0	4.16	0	0	0	0	0	0	1.15	1.15
Gardiner Substation	G_Sub	366586.3	4903349.9	2.5	0	0	90.8	90.8	1	3520.62	4.25	0	81.93	0	1.23	2.79	0.29	6.71	0	0	0	0	0	0	-1.88	-1.88
Inverters	G_Inv1	366526.4	4903225.8	2	0	0	87.7	87.7	1	3544.44	3.25	0	81.99	0	2.75	0	0	4.38	0	0	0	0	0	0	-1.46	-1.46
Inverters	G_Inv2	366676.9	4903239.1	2	0	0	87.7	87.7	1	3658.34	3.25	0	82.27	0	2.76	0	0	4.5	0	0	0	0	0	0	-1.87	-1.87
Inverters	G_Inv3	366583.7	4903091.4	2	0	0	87.7	87.7	1	3671.59	3.25	0	82.3	0	2.76	0	0	4.52	0	0	0	0	0	0	-1.92	-1.92
SubstationTransformer	W_ST	369711.17	4906112.3	2.5	0	0	92	92	1	6070.22	4.25	0	86.66	0	1.89	2.08	0.29	9.82	0	0	0	0	0	0	-8.48	-8.48
Inverters	G_Inv4	366732.8	4903105	2	0	0	87.7	87.7	1	3782.16	3.25	0	82.55	0	2.77	0	0	4.64	0	0	0	0	0	0	-2.31	-2.31
Inverters	G_Inv5	366638.5	4902958.1	2	0	0	87.7	87.7	1	3797.47	3.25	0	82.59	0	2.77	0	0	4.65	0	0	0	0	0	0	-2.36	-2.36
Inverters	G_Inv6	366788.5	4902972	2	0	0	87.7	87.7	1	3906.63	3.25	0	82.84	0	2.78	0	0	4.77	0	0	0	0	0	0	-2.73	-2.73
Inverters	G_Inv7	366694.6	4902824.7	2	0	0	87.7	87.7	1	3925.66	3.25	0	82.88	0	2.79	0	0	4.79	0	0	0	0	0	0	-2.8	-2.8
Inverters	G_Inv8	366844.5	4902838.5	2	0	0	87.7	87.7	1	4032.97	3.25	0	83.11	0	2.79	0	0	4.91	0	0	0	0	0	0	-3.16	-3.16
Inverters	G_Inv9	366750.9	4902691.8	2	0	0	87.7	87.7	1	4054.78	3.25	0	83.16	0	2.8	0	0	4.93	0	0	0	0	0	0	-3.23	-3.23
Inverters	G_Inv10	366900.7	4902704.8	2	0	0	87.7	87.7	1	4160.78	3.25	0	83.38	0	2.81	0	0	5.05	0	0	0	0	0	0	-3.58	-3.58
Inverter	MV3-1	368156	4907976	2	0	0	89.1	89.1	1	5181.7	3.25	0	85.29	0	1.68	0	0	12.71	0	0	0	0	0	0	-10.62	-10.62
Inverter	MV3-5	368340	4907843	2	0	0	89.1	89.1	1	5277.01	3.25	0	85.45	0	1.71	0	0	12.83	0	0	0	0	0	0	-10.93	-10.93
Inverter	MV3-22	368656	4907142	2	0	0	89.1	89.1	1	5280.37	3.25	0	85.45	0	1.71	0	0	12.84	0	0	0	0	0	0	-10.94	-10.94
Inverter	MV3-4	368502	4907925	2	0	0	89.1	89.1	1	5458.53	3.25	0	85.74	0	1.75	0	0	13.07	0	0	0	0	0	0	-11.51	-11.51
Inverter	MV3-2	368671	4907928	2	0	0	89.1	89.1	1	5609.49	3.25	0	85.98	0	1.79	0	0	13.26	0	0	0	0	0	0	-11.97	-11.97
Westbrook Inverter Enclosur	W_INV2	369374	4906388	2	0	0	89.1	89.1	1	5778.99	3.25	0	86.24	0	1.83	0	0	13.48	0	0	0	0	0	0	-12.49	-12.49
Westbrook Inverter Enclosur	W_INV3	369508	4906164	2	0	0	89.1	89.1	1	5875.66	3.25	0	86.38	0	1.86	0	0	13.6	0	0	0	0	0	0	-12.78	-12.78
Westbrook Inverter Enclosur	W_INV4	369673	4906164	2	0	0	89.1	89.1	1	6039.11	3.25	0	86.62	0	1.9	0	0	13.81	0	0	0	0	0	0	-13.27	-13.27
Fixed Reactor Bank 1	FRB1	369378	4908755	6	0	0	89.8	89.8	1	6630.14	5.25	0	87.43	0	-0.33	0	0	10.39	0	0	0	0	0	0	-7.71	-7.71
Westbrook Inverter Enclosur	W_INV5	369719	4906574	2	0	0	89.1	89.1	1	6152.97	3.25	0	86.78	0	1.92	0	0	13.95	0	0	0	0	0	0	-13.6	-13.6
Fixed Reactor Bank 2	FRB2	369464	4908755	6	0	0	89.8	89.8	1	6704.08	5.25	0	87.53	0	-0.32	0	0	10.46	0	0	0	0	0	0	-7.89	-7.89
Westbrook Inverter Enclosur	W_INV7	369780	4906417	2	0	0	89.1	89.1	1	6183.75	3.25	0	86.83	0	1.93	0	0	13.99	0	0	0	0	0	0	-13.69	-13.69
Inverter	MV4-13	369051	4908605	2	0	0	89.1	89.1	1	6272.64	3.25	0	86.95	0	1.95	0	0	14.1	0	0	0	0	0	0	-13.95	-13.95
Westbrook Inverter Enclosur	W_INV6	369875	4906578	2	0	0	89.1	89.1	1	6306.71	3.25	0	87	0	1.96	0	0	14.15	0	0	0	0	0	0	-14.04	-14.04
Inverter	MV4-15	369176	4908481	2	0	0	89.1	89.1	1	6317.46	3.25	0	87.01	0	1.96	0	0	14.16	0	0	0	0	0	0	-14.07	-14.07
Inverter	MV4-14	369176	4908507	2	0	0	89.1	89.1	1	6330.39	3.25	0	87.03	0	1.97	0	0	14.17	0	0	0	0	0	0	-14.11	-14.11
Inverter	MV4-12	369043	4908803	2	0	0	89.1	89.1	1	6370.91	3.25	0	87.08	0	1.98	0	0	14.22	0	0	0	0	0	0	-14.23	-14.23
Inverter	MV5-6	369982	4908507	2	0	0	89.1	89.1	1	7040.49	3.25	0	87.95	0	2.14	0	0	15.03	0	0	0	0	0	0	-16.07	-16.07
Westbrook Inverter Enclosur	W_INV1	369409	4906578	2	0	0	86.1	86.1	1	5850.33	3.25	0	86.34	0	1.85	0	0	13.57	0	0	0	0	0	0	-15.71	-15.71
Inverter	MV6-4	370250	4906966	2	0	0	86.1	86.1	1	6757.08	3.25	0	87.6	0	2.07	0	0	14.7	0	0	0	0	0	0	-18.3	-18.3
Inverter Transformer	MV1-13 T	364725	4905241	2	0	0	69.4	69.4	1	1041.72	3.25	0	71.36	0	1.72	0	0	3.87	0	0	0	0	0	0	-7.59	-7.59
Inverter Transformer	MV1-7 T	364919	4905782	2	0	0	69.4	69.4	1	1303.66	3.25	0	73.3	0	1.88	0	0	4.2	0	0	0	0	0	0	-10.04	-10.04
Inverter Transformer	MV1-10 T	365010	4905564	2	0	0	69.4	69.4	1	1338.22	3.25	0	73.53	0	1.9	0	0	4.25	0	0	0	0	0	0	-10.32	-10.32
Inverter Transformer	MV1-14 T	365157	4905049	2	0	0	69.4	69.4	1	1498.54	3.25	0	74.51	0	1.97	0	0	4.43	0	0	0	0	0	0	-11.57	-11.57
Westbrook Inverter Transfor	W_INVTR1	369403	4906578	2	0	0	78.2	78.2	1	5844.47	3.25	0	86.33	0	-3.34	0	0	2.69	0	0	0	0	0	0	-7.45	-7.45
Westbrook Inverter Transfor	W_INVTR2	369368	4906388	2	0	0	77.3	77.3	1	5773.08	3.25	0	86.23	0	-3.33	0	0	2.67	0	0	0	0	0	0	-8.23	-8.23
Westbrook Inverter Transfor	W_INVTR3	369514	4906164	2	0	0	77.3	77.3	1	5881.6	3.25	0	86.39	0	-3.35	0	0	2.7	0	0	0	0	0	0	-8.41	-8.41
Westbrook Inverter Transfor	W_INVTR4	369679	4906164	2	0	0	77.3	77.3	1	6045.06	3.25	0	86.63	0	-3.38	0	0	2.76	0	0	0	0	0	0	-8.67	-8.67
Westbrook Inverter Transfor	W_INVTR5	369725	4906574	2	0	0	77.3	77.3	1	6158.85	3.25	0	86.79	0	-3.4	0	0	2.79	0	0	0	0	0	0	-8.84	-8.84
Westbrook Inverter Transfor	W_INVTR7	369786	4906417	2	0	0	77.3	77.3	1	6189.66	3.25	0	86.83	0	-3.4	0	0	2.8	0	0	0	0	0	0	-8.89	-8.89
Westbrook Inverter Transfor	W_INVTR6	369881	4906578	2	0	0	77.3	77.3	1	6312.59	3.25	0	87	0	-3.42	0	0	2.84	0	0	0	0	0	0	-9.08	-9.08
Inverter Transformer	MV2-1 T	365836	4906816	2	0	0	69.4	69.4	1	2599.76	3.25	0	79.3	0	2.38	0	0	5.53	0	0	0	0	0	0	-17.86	-17.86
Inverter Transformer	MV1-9 T	364555	4905646	2	0	0	56.1	56.1	1	915.19	3.25	0	70.23	0	-0.02	0	0	4.68	0	0	0	0	0	0	-18.84	-18.84
Inverter Transformer	MV1-6 T	364482	4905835	2	0	0	56.1	56.1	1	929.56	3.25	0	70.37	0	-0.01	0	0	4.72	0	0	0	0	0	0	-19.01	-19.01
Inverter Transformer	MV1-11 T	364649	4905414	2	0	0	56.1	56.1	1	962.13	3.25	0	70.66	0	0	0	0	4.8	0	0	0	0	0	0	-19.4	-19.4
Inverter Transformer	MV1-3 T	364435	4906039	2	0	0	56.1	56.1	1	1015.5	3.25	0	71.13	0	0.02	0	0	4.93	0	0	0	0	0	0	-20.02	-20.02
Inverter Transformer	MV1-5 T	364676	4905892	2	0	0	56.1	56.1	1	1126.03	3.25	0	72.03	0	0.06	0	0	5.19	0	0	0	0	0	0	-21.21	-21.21
Inverter Transformer	MV1-8 T	364782	4905647	2	0	0	56.1	56.1	1	1132.64	3.25	0	72.08	0	0.06	0	0	5.2	0	0	0	0	0	0	-21.28	-21.28
Inverter Transformer	MV1-4 T	364821	4905918	2	0	0	56.1	56.1	1	1266.51	3.25	0	73.05	0	0.11	0	0	5.51	0	0	0	0	0	0	-22.61	-22.61
Inverter Transformer	MV1-2 T	364759	4906063	2	0	0	56.1	56.1	1	1285.8	3.25	0	73.18	0	0.12	0	0	5.55	0	0	0	0	0	0	-22.79	-22.79
Inverter Transformer	MV1-1 T	364721	4906166	2	0	0	56.1	56.1	1	1315.63	3.25	0	73.38	0	0.13	0	0	5.62	0	0	0	0	0	0	-23.07	-23.07
Inverter Transformer	MV1-12 T	365044	4905386	2	0	0	56.1	56.1	1	1355.48	3.25	0	73.64	0	0.14	0	0	5.7	0	0	0	0	0	0	-23.43	-23.43
Inverter Transformer	MV6-4 T	370244	4906966	2	0	0	69.4	69.4	1	6751.26	3.25	0	87.59	0	3.29	0	0	8.46	0	0	0	0	0	0	-29.99	-29.99
Inverter Transformer	MV6-1 T	370230	4907364	2	0	0	69.4	69.4	1	6844.04	3.25	0	87.71	0	3.3	0	0	8.51	0	0	0	0	0	0	-30.17	-30.17
Inverter Transformer	MV1-15 T	365309	4904994	2	0	0	56.1	56.1	1	1658.66	3.25	0	75.4	0	0.26	0	0	6.35	0	0	0	0	0	0	-25.95	-25.95
Inverter Transformer	MV2-4 T	365590	4906628	2	0	0	56.1	56.1	1	2290.65	3.25	0	78.2	0	0.53	0	0	7.6	0	0	0	0	0	0	-30.27	-30.27
Inverter Transformer	MV2-3 T	365814	4906641	2	0	0	56.1	56.1	1	2486.43	3.25	0	78.91	0	0.61	0	0	7.96	0	0	0	0	0	0	-31.43	-31.43
Inverter Transformer	MV2-2 T	365982	4906654	2	0	0	56.1	56.1	1	2637.85	3.25	0	79.43	0	0.68	0	0	8.24	0	0	0	0	0	0	-32.28	-32.28
Inverter Transformer	MV3-18 T	367757	4907412	2	0	0	56.1	56.1	1	4560.75	3.25	0	84.18	0	1.46	0	0	11.26	0	0	0	0	0	0	-40.85	-40.85
Inverter Transformer	MV3-12 T	367674	4907594	2	0	0	56.1	56.1	1	4573.38	3.25	0	84.2	0	1.47	0	0	11.28	0	0	0	0	0	0	-40.89	-40.89
Inverter Transformer	MV3-13 T	367958	4907577	2	0	0	56.1	56.1	1	4814.97	3.25	0	84.65	0	1.56	0	0	11.61	0	0	0	0	0	0	-41.76	-41.76
Inverter Transformer	MV3-7 T	367951	4907754	2	0	0	56.1	56.1	1	4893.25	3.25	0	84.79	0	1.59	0	0	11.71	0	0	0	0	0	0	-42.03	-42.03
Inverter Transformer	MV3-17 T	368183	4907472	2	0	0	56.1	56.1	1	4969.8	3.25	0	84.93	0	1.61	0	0	11.81	0	0	0	0	0	0	-42.3	-42.3
Inverter Transformer	MV3-3 T	367944	4907927	2	0	0	56.1	56.1	1	4974.53	3.25	0	84.94	0	1.62	0	0	11.82	0	0	0	0	0	0	-42.31	-42.31
Inverter Transformer	MV3-10 T	368162	4907669	2	0	0	56.1	56.1	1	5038.4	3.25	0	85.05	0	1.64	0	0	11.9	0	0	0	0	0	0	-42.53	-42.53
Inverter Transformer	MV3-19 T	368352	4907347	2	0	0	56.1	56.1	1	5072.63	3.25	0	85.1	0	1.65	0	0	11.95	0	0	0	0	0	0	-42.65	-42.65
Inverter Transformer	MV3-6 T	368156	4907834	2	0	0	56.1	56.1	1	5111.2	3.25	0	85.17	0	1.67	0	0	12	0	0	0	0	0	0	-42.78	-42.78
Inverter Transformer	MV3-15 T	368351	4907477	2	0	0	56.1	56.1	1	5124.29	3.25	0	85.19	0	1.67	0	0	12.02	0	0	0	0	0	0	-42.82	-42.82
Inverter Transformer	MV3-21 T	368484	4907206	2	0	0	56.1	56.1	1	5141.67	3.25	0	85.22	0	1.68	0	0	12.04	0	0	0	0	0	0	-42.88	-42.88
Inverter Transformer	MV3-1 T	368150	4907976	2	0	0	56.1	56.1	1	5176.52	3.25	0	85.28	0	1.69	0	0	12.08	0	0	0	0	0	0	-43	-43

	Inverter Transformer	MV3-11 T	368340	4907662	2	0	0	56.1	56.1	1	5193.95	3.25	0	85.31	0	1.69	0	0	12.11	0	0	0	0	0	0	-43.05	-43.05
	Inverter Transformer	MV3-16 T	368509	4907475	2	0	0	56.1	56.1	1	5267.64	3.25	0	85.43	0	1.72	0	0	12.2	0	0	0	0	0	0	-43.3	-43.3
	Inverter Transformer	MV3-5 T	368335	4907843	2	0	0	56.1	56.1	1	5272.61	3.25	0	85.44	0	1.72	0	0	12.21	0	0	0	0	0	0	-43.31	-43.31
	Inverter Transformer	MV3-22 T	368661	4907142	2	0	0	56.1	56.1	1	5285.08	3.25	0	85.46	0	1.73	0	0	12.22	0	0	0	0	0	0	-43.35	-43.35
	Inverter Transformer	MV3-20 T	368683	4907317	2	0	0	56.1	56.1	1	5367.41	3.25	0	85.6	0	1.76	0	0	12.33	0	0	0	0	0	0	-43.62	-43.62
	Inverter Transformer	MV3-9 T	368517	4907703	2	0	0	56.1	56.1	1	5370.87	3.25	0	85.6	0	1.76	0	0	12.33	0	0	0	0	0	0	-43.63	-43.63
	Inverter Transformer	MV3-14 T	368678	4907498	2	0	0	56.1	56.1	1	5431.76	3.25	0	85.7	0	1.78	0	0	12.41	0	0	0	0	0	0	-43.83	-43.83
	Inverter Transformer	MV3-4 T	368507	4907925	2	0	0	56.1	56.1	1	5462.94	3.25	0	85.75	0	1.79	0	0	12.45	0	0	0	0	0	0	-43.93	-43.93
	Inverter Transformer	MV3-8 T	368685	4907712	2	0	0	56.1	56.1	1	5526.22	3.25	0	85.85	0	1.81	0	0	12.53	0	0	0	0	0	0	-44.13	-44.13
	Inverter Transformer	MV3-2 T	368677	4907928	2	0	0	56.1	56.1	1	5614.82	3.25	0	85.99	0	1.84	0	0	12.64	0	0	0	0	0	0	-44.41	-44.41
	Inverter Transformer	MV4-13 T	369057	4908605	2	0	0	56.1	56.1	1	6277.77	3.25	0	86.96	0	2.05	0	0	13.43	0	0	0	0	0	0	-46.38	-46.38
	Inverter Transformer	MV4-15 T	369170	4908481	2	0	0	56.1	56.1	1	6312.25	3.25	0	87	0	2.06	0	0	13.47	0	0	0	0	0	0	-46.47	-46.47
	Inverter Transformer	MV4-14 T	369182	4908507	2	0	0	56.1	56.1	1	6335.59	3.25	0	87.04	0	2.07	0	0	13.49	0	0	0	0	0	0	-46.54	-46.54
	Inverter Transformer	MV4-12 T	369049	4908803	2	0	0	56.1	56.1	1	6375.96	3.25	0	87.09	0	2.08	0	0	13.54	0	0	0	0	0	0	-46.65	-46.65
	Inverter Transformer	MV4-7 T	369040	4909001	2	0	0	56.1	56.1	1	6477.89	3.25	0	87.23	0	2.11	0	0	13.66	0	0	0	0	0	0	-46.94	-46.94
	Inverter Transformer	MV4-4 T	369033	4909199	2	0	0	56.1	56.1	1	6585.83	3.25	0	87.37	0	2.14	0	0	13.78	0	0	0	0	0	0	-47.23	-47.23
	Inverter Transformer	MV4-11 T	369269	4908855	2	0	0	56.1	56.1	1	6589.49	3.25	0	87.38	0	2.14	0	0	13.78	0	0	0	0	0	0	-47.24	-47.24
	Inverter Transformer	MV4-10 T	369307	4908858	2	0	0	56.1	56.1	1	6623.29	3.25	0	87.42	0	2.15	0	0	13.82	0	0	0	0	0	0	-47.33	-47.33
	Inverter Transformer	MV4-8 T	369262	4909001	2	0	0	56.1	56.1	1	6662.44	3.25	0	87.47	0	2.16	0	0	13.86	0	0	0	0	0	0	-47.44	-47.44
	Inverter Transformer	MV4-9 T	369284	4909001	2	0	0	56.1	56.1	1	6680.86	3.25	0	87.5	0	2.17	0	0	13.88	0	0	0	0	0	0	-47.49	-47.49
	Inverter Transformer	MV4-1 T	369017	4909397	2	0	0	56.1	56.1	1	6690.72	3.25	0	87.51	0	2.17	0	0	13.89	0	0	0	0	0	0	-47.52	-47.52
	Inverter Transformer	MV6-2 T	370091	4907339	2	0	0	56.1	56.1	1	6703.86	3.25	0	87.53	0	2.18	0	0	13.91	0	0	0	0	0	0	-47.55	-47.55
	Inverter Transformer	MV6-3 T	370202	4907140	2	0	0	56.1	56.1	1	6754.5	3.25	0	87.59	0	2.19	0	0	13.96	0	0	0	0	0	0	-47.69	-47.69
	Inverter Transformer	MV4-6 T	369249	4909192	2	0	0	56.1	56.1	1	6758.3	3.25	0	87.6	0	2.19	0	0	13.97	0	0	0	0	0	0	-47.7	-47.7
	Inverter Transformer	MV4-5 T	369283	4909199	2	0	0	56.1	56.1	1	6790.26	3.25	0	87.64	0	2.2	0	0	14	0	0	0	0	0	0	-47.78	-47.78
	Inverter Transformer	MV4-3 T	369234	4909397	2	0	0	56.1	56.1	1	6864.78	3.25	0	87.73	0	2.22	0	0	14.08	0	0	0	0	0	0	-47.98	-47.98
	Inverter Transformer	MV4-2 T	369267	4909397	2	0	0	56.1	56.1	1	6891.47	3.25	0	87.77	0	2.23	0	0	14.11	0	0	0	0	0	0	-48.05	-48.05
	Inverter Transformer	MV5-6 T	369987	4908507	2	0	0	56.1	56.1	1	7044.96	3.25	0	87.96	0	2.27	0	0	14.28	0	0	0	0	0	0	-48.45	-48.45
	Inverter Transformer	MV5-5 T	370021	4908690	2	0	0	56.1	56.1	1	7158.9	3.25	0	88.1	0	2.3	0	0	14.4	0	0	0	0	0	0	-48.74	-48.74
	Inverter Transformer	MV5-2 T	370011	4908853	2	0	0	56.1	56.1	1	7227.63	3.25	0	88.18	0	2.32	0	0	14.47	0	0	0	0	0	0	-48.91	-48.91
	Inverter Transformer	MV5-1 T	370015	4909142	2	0	0	56.1	56.1	1	7375.47	5.14	0	88.36	0	3.11	1.51	0.01	14.63	0	0	0	0	0	0	-51.55	-51.55
	Inverter Transformer	MV5-3 T	370237	4908851	2	0	0	56.1	56.1	1	7425.18	3.25	0	88.41	0	2.37	0	0	14.68	0	0	0	0	0	0	-49.4	-49.4
	Inverter Transformer	MV5-4 T	370330	4908707	2	0	0	56.1	56.1	1	7441.26	3.25	0	88.43	0	2.38	0	0	14.69	0	0	0	0	0	0	-49.44	-49.44
	Line Reactor	NGR	369421	4908787.5	5	0	0	45.4	45.4	1	6683.73	5.25	0	87.5	0	3.23	1.37	0.1	2.73	0	0	0	0	0	0	-49.47	-49.47
Limit. Valu	0	0																								
Level D/N:	28.1577	28.1577																								

Receiver: Existing Noise Receptor
ID: S-R101
X: 363656
Y: 4905303
Z: 4.5
Ground: 0

ISO	Description	ID	X	Y	Z	Ground	ReflOrd	LxT	LxN	L/A	Dist.	hm	Freq	Adiv	K0b	Agr	Abar	z	Aatm	Afol	Ahous	Cmet	CmetN	Dc	RL	LtotT	LtotN
	Inverter	MV1-9	364561	4905646	2	0	0	100.3	100.3	1	967.82	3.25	0	70.72	0	-0.26	0	0	10.8	0	0	0	0	0	0	19.06	19.06
	Inverter	MV1-6	364477	4905835	2	0	0	100.3	100.3	1	978.3	3.25	0	70.81	0	-0.26	0	0	10.84	0	0	0	0	0	0	18.92	18.92
	Inverter	MV1-11	364655	4905414	2	0	0	100.3	100.3	1	1005.15	3.25	0	71.04	0	-0.24	0	0	10.93	0	0	0	0	0	0	18.58	18.58
	Inverter	MV1-5	364671	4905892	2	0	0	100.3	100.3	1	1173.52	3.25	0	72.39	0	-0.17	0	0	11.45	0	0	0	0	0	0	16.64	16.64
	Inverter	MV1-8	364788	4905647	2	0	0	100.3	100.3	1	1183.12	3.25	0	72.46	0	-0.16	0	0	11.48	0	0	0	0	0	0	16.54	16.54
	Inverter	MV1-4	364815	4905918	2	0	0	100.3	100.3	1	1312.06	3.25	0	73.36	0	-0.11	0	0	11.84	0	0	0	0	0	0	15.22	15.22
	Inverter	MV1-2	364753	4906063	2	0	0	100.3	100.3	1	1334.55	3.25	0	73.51	0	-0.1	0	0	11.9	0	0	0	0	0	0	15	15
	Inverter	MV1-1	364715	4906166	2	0	0	100.3	100.3	1	1366.11	3.25	0	73.71	0	-0.08	0	0	11.98	0	0	0	0	0	0	14.7	14.7
	Inverter	MV1-12	365038	4905386	2	0	0	100.3	100.3	1	1384.49	3.25	0	73.83	0	-0.08	0	0	12.03	0	0	0	0	0	0	14.53	14.53
	Inverter	MV1-13	364731	4905241	2	0	0	97.3	97.3	1	1076.79	3.25	0	71.64	0	-0.21	0	0	11.16	0	0	0	0	0	0	14.72	14.72
	Inverter	MV1-15	365315	4904994	2	0	0	100.3	100.3	1	1687.53	3.25	0	75.55	0	0.03	0	0	12.77	0	0	0	0	0	0	11.96	11.96
	Sol_Luce Substation	S_Substation	369426	4908792	3.5	0	0	112.1	112.1	1	6742.85	5.25	0	87.58	0	1.33	2.49	0.28	10.5	0	0	0	0	0	0	10.18	10.18
	Inverter	MV1-7	364925	4905782	2	0	0	97.3	97.3	1	1356.4	3.25	0	73.65	0	-0.09	0	0	11.96	0	0	0	0	0	0	11.8	11.8
	Inverter	MV1-10	365004	4905564	2	0	0	97.3	97.3	1	1373.04	3.25	0	73.75	0	-0.08	0	0	12	0	0	0	0	0	0	11.64	11.64
	Inverter	MV1-14	365163	4905049	2	0	0	97.3	97.3	1	1528.26	3.25	0	74.68	0	-0.02	0	0	12.39	0	0	0	0	0	0	10.26	10.26
	Inverter	MV2-4	365586	4906624	2	0	0	100.3	100.3	1	2338.79	3.25	0	78.38	0	0.22	0	0	14.15	0	0	0	0	0	0	7.57	7.57
	Inverter	MV2-3	365820	4906641	2	0	0	100.3	100.3	1	2544.24	3.25	0	79.11	0	0.27	0	0	14.54	0	0	0	0	0	0	6.39	6.39
	Inverter	MV2-1	365842	4906816	2	0	0	97.3	97.3	1	2658.53	3.25	0	79.49	0	0.29	0	0	14.76	0	0	0	0	0	0	2.77	2.77
	Inverter	MV1-3	364440	4906039	2	0	0	89.1	89.1	1	1075.34	3.25	0	71.63	0	0.7	0	0	6.46	0	0	0	0	0	0	10.27	10.27
	Inverter	MV3-18	367752	4907412	2	0	0	100.3	100.3	1	4607.07	3.25	0	84.27	0	0.6	0	0	17.99	0	0	0	0	0	0	-2.55	-2.55
	Inverter	MV3-12	367668	4907594	2	0	0	100.3	100.3	1	4620.05	3.25	0	84.29	0	0.6	0	0	18.01	0	0	0	0	0	0	-2.6	-2.6
	Inverter	MV3-13	367963	4907577	2	0	0	100.3	100.3	1	4870.45	3.25	0	84.75	0	0.63	0	0	18.39	0	0	0	0	0	0	-3.46	-3.46
	Inverter	MV3-7	367945	4907754	2	0	0	100.3	100.3	1	4939.93	3.25	0	84.87	0	0.64	0	0	18.49	0	0	0	0	0	0	-3.69	-3.69
	Inverter	MV3-17	368178	4907472	2	0	0	100.3	100.3	1	5015.28	3.25	0	85.01	0	0.64	0	0	18.6	0	0	0	0	0	0	-3.94	-3.94
	Inverter	MV3-3	367939	4907927	2	0	0	100.3	100.3	1	5022.89	3.25	0	85.02	0	0.64	0	0	18.61	0	0	0	0	0	0	-3.96	-3.96
	Inverter	MV3-10	368167	4907669	2	0	0	100.3	100.3	1	5093.83	3.25	0	85.14	0	0.65	0	0	18.72	0	0	0	0	0	0	-4.2	-4.2
	Inverter	MV3-19	368357	4907347	2	0	0	100.3	100.3	1	5126.14	3.25	0	85.2	0	0.65	0	0	18.76	0	0	0	0	0	0	-4.3	-4.3
	Inverter	MV3-6	368162	4907834	2	0	0	100.3	100.3	1	5168.17	3.25	0	85.27	0	0.66	0	0	18.83	0	0	0	0	0	0	-4.44	-4.44
	Inverter	MV3-15	368357	4907477	2	0	0	100.3	100.3	1	5179.35	3.25	0	85.29	0	0.66	0	0	18.84	0	0	0	0	0	0	-4.47	-4.47

Inverter	MV3-21	368478	4907206	2	0	0	100.3	100.3	1	5183.93	3.25	0	85.29	0	0.66	0	0	18.85	0	0	0	0	0	0	-4.49	-4.49
Inverter	MV3-11	368346	4907662	2	0	0	100.3	100.3	1	5249.86	3.25	0	85.4	0	0.66	0	0	18.94	0	0	0	0	0	0	-4.7	-4.7
Inverter	MV3-16	368514	4907475	2	0	0	100.3	100.3	1	5321.44	3.25	0	85.52	0	0.67	0	0	19.05	0	0	0	0	0	0	-4.92	-4.92
Inverter	MV3-9	368512	4907703	2	0	0	100.3	100.3	1	5416.71	3.25	0	85.67	0	0.67	0	0	19.18	0	0	0	0	0	0	-5.22	-5.22
Inverter	MV3-20	368689	4907317	2	0	0	100.3	100.3	1	5421	3.25	0	85.68	0	0.68	0	0	19.19	0	0	0	0	0	0	-5.23	-5.23
Inverter	MV3-14	368684	4907498	2	0	0	100.3	100.3	1	5486.24	3.25	0	85.79	0	0.68	0	0	19.28	0	0	0	0	0	0	-5.43	-5.43
Inverter	MV3-8	368680	4907712	2	0	0	100.3	100.3	1	5571.7	3.25	0	85.92	0	0.68	0	0	19.4	0	0	0	0	0	0	-5.69	-5.69
Inverter	MV4-7	369035	4909001	2	0	0	100.3	100.3	1	6527.55	3.25	0	87.29	0	0.71	0	0	20.69	0	0	0	0	0	0	-8.39	-8.39
Inverter	MV4-4	369027	4909199	2	0	0	100.3	100.3	1	6635.24	3.25	0	87.44	0	0.71	0	0	20.83	0	0	0	0	0	0	-8.67	-8.67
Inverter	MV4-11	369264	4908855	2	0	0	100.3	100.3	1	6638.25	3.25	0	87.44	0	0.71	0	0	20.84	0	0	0	0	0	0	-8.68	-8.68
Inverter	MV4-10	369312	4908858	2	0	0	100.3	100.3	1	6680.45	3.25	0	87.5	0	0.71	0	0	20.89	0	0	0	0	0	0	-8.79	-8.79
Inverter	MV4-8	369256	4909001	2	0	0	100.3	100.3	1	6710.83	3.25	0	87.54	0	0.71	0	0	20.93	0	0	0	0	0	0	-8.87	-8.87
Inverter	MV4-9	369289	4909001	2	0	0	100.3	100.3	1	6738.39	3.25	0	87.57	0	0.71	0	0	20.97	0	0	0	0	0	0	-8.94	-8.94
Inverter	MV4-1	369011	4909397	2	0	0	100.3	100.3	1	6740.69	3.25	0	87.57	0	0.71	0	0	20.97	0	0	0	0	0	0	-8.95	-8.95
Inverter	MV6-2	370085	4907339	2	0	0	100.3	100.3	1	6743.69	3.25	0	87.58	0	0.71	0	0	20.97	0	0	0	0	0	0	-8.95	-8.95
Inverter	MV6-3	370207	4907140	2	0	0	100.3	100.3	1	6803.69	3.25	0	87.65	0	0.71	0	0	21.05	0	0	0	0	0	0	-9.11	-9.11
Inverter	MV4-6	369243	4909192	2	0	0	100.3	100.3	1	6807.27	3.25	0	87.66	0	0.71	0	0	21.06	0	0	0	0	0	0	-9.12	-9.12
Inverter	MV4-5	369289	4909199	2	0	0	100.3	100.3	1	6849.05	3.25	0	87.71	0	0.71	0	0	21.11	0	0	0	0	0	0	-9.22	-9.22
Inverter	MV4-3	369229	4909397	2	0	0	100.3	100.3	1	6915.14	3.25	0	87.8	0	0.71	0	0	21.19	0	0	0	0	0	0	-9.39	-9.39
Inverter	MV4-2	369272	4909397	2	0	0	100.3	100.3	1	6949.84	3.25	0	87.84	0	0.71	0	0	21.24	0	0	0	0	0	0	-9.47	-9.47
Inverter	MV5-5	370015	4908690	2	0	0	100.3	100.3	1	7204.77	3.25	0	88.15	0	0.7	0	0	21.55	0	0	0	0	0	0	-10.1	-10.1
Inverter	MV5-2	370006	4908853	2	0	0	100.3	100.3	1	7274.96	3.25	0	88.24	0	0.7	0	0	21.64	0	0	0	0	0	0	-10.27	-10.27
Inverter	MV5-1	370020	4909142	2	0	0	100.3	100.3	1	7432.26	5.14	0	88.42	0	1.79	2.23	0.01	21.83	0	0	0	0	0	0	-13.96	-13.96
Inverter	MV5-3	370231	4908851	2	0	0	100.3	100.3	1	7471.21	3.25	0	88.47	0	0.69	0	0	21.88	0	0	0	0	0	0	-10.73	-10.73
Inverter	MV5-4	370324	4908707	2	0	0	100.3	100.3	1	7486.62	3.25	0	88.49	0	0.69	0	0	21.9	0	0	0	0	0	0	-10.76	-10.76
Inverter	MV6-1	370235	4907364	2	0	0	97.3	97.3	1	6894.27	3.25	0	87.77	0	0.71	0	0	21.17	0	0	0	0	0	0	-12.34	-12.34
Inverter	MV2-2	365977	4906654	2	0	0	89.1	89.1	1	2685.56	3.25	0	79.58	0	1.07	0	0	9.14	0	0	0	0	0	0	-0.73	-0.73
DSTATCOM - 10 MVAR #2	DSAT2	369403	4908757	2.5	0	0	96.6	96.6	1	6705.08	3.5	0	87.53	0	3.82	0	0	4.17	0	0	0	0	0	0	1.11	1.11
DSTATCOM - 10 MVAR #1	DSAT1	369437	4908757	2.5	0	0	96.6	96.6	1	6734.25	3.5	0	87.57	0	3.82	0	0	4.19	0	0	0	0	0	0	1.06	1.06
Gardiner Substation	G_Sub	366586.3	4903349.9	2.5	0	0	90.8	90.8	1	3521.54	4.25	0	81.93	0	1.23	2.79	0.3	6.71	0	0	0	0	0	0	-1.89	-1.89
Inverters	G_Inv1	366526.4	4903225.8	2	0	0	87.7	87.7	1	3543.16	3.25	0	81.99	0	2.75	0	0	4.38	0	0	0	0	0	0	-1.46	-1.46
Inverters	G_Inv2	366676.9	4903239.1	2	0	0	87.7	87.7	1	3658.62	3.25	0	82.27	0	2.76	0	0	4.5	0	0	0	0	0	0	-1.87	-1.87
Inverters	G_Inv3	366583.7	4903091.4	2	0	0	87.7	87.7	1	3669.14	3.25	0	82.29	0	2.76	0	0	4.51	0	0	0	0	0	0	-1.91	-1.91
SubstationTransformer	W_ST	369711.17	4906112.3	2.5	0	0	92	92	1	6109.01	4.25	0	86.72	0	1.9	2.08	0.29	9.86	0	0	0	0	0	0	-8.57	-8.57
Inverters	G_Inv4	366732.8	4903105	2	0	0	87.7	87.7	1	3781.26	3.25	0	82.55	0	2.77	0	0	4.64	0	0	0	0	0	0	-2.3	-2.3
Inverters	G_Inv5	366638.5	4902958.1	2	0	0	87.7	87.7	1	3793.93	3.25	0	82.58	0	2.77	0	0	4.65	0	0	0	0	0	0	-2.35	-2.35
Inverters	G_Inv6	366788.5	4902972	2	0	0	87.7	87.7	1	3904.63	3.25	0	82.83	0	2.78	0	0	4.77	0	0	0	0	0	0	-2.73	-2.73
Inverters	G_Inv7	366694.6	4902824.7	2	0	0	87.7	87.7	1	3921.11	3.25	0	82.87	0	2.79	0	0	4.79	0	0	0	0	0	0	-2.78	-2.78
Inverters	G_Inv8	366844.5	4902838.5	2	0	0	87.7	87.7	1	4029.93	3.25	0	83.11	0	2.79	0	0	4.91	0	0	0	0	0	0	-3.15	-3.15
Inverters	G_Inv9	366750.9	4902691.8	2	0	0	87.7	87.7	1	4049.29	3.25	0	83.15	0	2.8	0	0	4.93	0	0	0	0	0	0	-3.21	-3.21
Inverters	G_Inv10	366900.7	4902704.8	2	0	0	87.7	87.7	1	4156.77	3.25	0	83.38	0	2.8	0	0	5.04	0	0	0	0	0	0	-3.56	-3.56
Inverter	MV3-1	368156	4907976	2	0	0	89.1	89.1	1	5234.02	3.25	0	85.38	0	1.7	0	0	12.77	0	0	0	0	0	0	-10.79	-10.79
Inverter	MV3-22	368656	4907142	2	0	0	89.1	89.1	1	5327.47	3.25	0	85.53	0	1.72	0	0	12.9	0	0	0	0	0	0	-11.09	-11.09
Inverter	MV3-5	368340	4907843	2	0	0	89.1	89.1	1	5328.36	3.25	0	85.53	0	1.72	0	0	12.9	0	0	0	0	0	0	-11.09	-11.09
Inverter	MV3-4	368502	4907925	2	0	0	89.1	89.1	1	5509.86	3.25	0	85.82	0	1.77	0	0	13.14	0	0	0	0	0	0	-11.67	-11.67
Inverter	MV3-2	368671	4907928	2	0	0	89.1	89.1	1	5660.46	3.25	0	86.06	0	1.8	0	0	13.33	0	0	0	0	0	0	-12.13	-12.13
Westbrook Inverter Enclosur	W_INV2	369374	4906388	2	0	0	89.1	89.1	1	5820.03	3.25	0	86.3	0	1.84	0	0	13.53	0	0	0	0	0	0	-12.62	-12.62
Westbrook Inverter Enclosur	W_INV3	369508	4906164	2	0	0	89.1	89.1	1	5915	3.25	0	86.44	0	1.87	0	0	13.65	0	0	0	0	0	0	-12.9	-12.9
Westbrook Inverter Enclosur	W_INV4	369673	4906164	2	0	0	89.1	89.1	1	6078.29	3.25	0	86.68	0	1.91	0	0	13.86	0	0	0	0	0	0	-13.38	-13.38
Fixed Reactor Bank 1	FRB1	369378	4908755	6	0	0	89.8	89.8	1	6682.63	5.25	0	87.5	0	-0.32	0	0	10.44	0	0	0	0	0	0	-7.84	-7.84
Westbrook Inverter Enclosur	W_INV5	369719	4906574	2	0	0	89.1	89.1	1	6194.79	3.25	0	86.84	0	1.93	0	0	14.01	0	0	0	0	0	0	-13.72	-13.72
Fixed Reactor Bank 2	FRB2	369464	4908755	6	0	0	89.8	89.8	1	6756.42	5.25	0	87.59	0	-0.31	0	0	10.51	0	0	0	0	0	0	-8.02	-8.02
Westbrook Inverter Enclosur	W_INV7	369780	4906417	2	0	0	89.1	89.1	1	6224.5	3.25	0	86.88	0	1.94	0	0	14.04	0	0	0	0	0	0	-13.81	-13.81
Inverter	MV4-13	369051	4908605	2	0	0	89.1	89.1	1	6325.29	3.25	0	87.02	0	1.97	0	0	14.17	0	0	0	0	0	0	-14.1	-14.1
Westbrook Inverter Enclosur	W_INV6	369875	4906578	2	0	0	89.1	89.1	1	6348.35	3.25	0	87.05	0	1.97	0	0	14.2	0	0	0	0	0	0	-14.16	-14.16
Inverter	MV4-15	369176	4908481	2	0	0	89.1	89.1	1	6369.47	3.25	0	87.08	0	1.98	0	0	14.22	0	0	0	0	0	0	-14.22	-14.22
Inverter	MV4-14	369176	4908507	2	0	0	89.1	89.1	1	6382.48	3.25	0	87.1	0	1.98	0	0	14.24	0	0	0	0	0	0	-14.26	-14.26
Inverter	MV4-12	369043	4908803	2	0	0	89.1	89.1	1	6424.16	3.25	0	87.16	0	1.99	0	0	14.29	0	0	0	0	0	0	-14.38	-14.38
Inverter	MV5-6	369982	4908507	2	0	0	89.1	89.1	1	7091.11	3.25	0	88.01	0	2.15	0	0	15.09	0	0	0	0	0	0	-16.2	-16.2
Westbrook Inverter Enclosur	W_INV1	369409	4906578	2	0	0	86.1	86.1	1	5892.59	3.25	0	86.41	0	1.86	0	0	13.63	0	0	0	0	0	0	-15.83	-15.83
Inverter	MV6-4	370250	4906966	2	0	0	86.1	86.1	1	6800.47	3.25	0	87.65	0	2.08	0	0	14.75	0	0	0	0	0	0	-18.42	-18.42
Inverter Transformer	MV1-13 T	364725	4905241	2	0	0	69.4	69.4	1	1070.8	3.25	0	71.59	0	1.74	0	0	3.91	0	0	0	0	0	0	-7.89	-7.89
Inverter Transformer	MV1-7 T	364919	4905782	2	0	0	69.4	69.4	1	1350.78	3.25	0	73.61	0	1.9	0	0	4.26	0	0	0	0	0	0	-10.42	-10.42
Inverter Transformer	MV1-10 T	365010	4905564	2	0	0	69.4	69.4	1	1378.93	3.25	0	73.79	0	1.92	0	0	4.29	0	0	0	0	0	0	-10.65	-10.65
Inverter Transformer	MV1-14 T	365157	4905049	2	0	0	69.4	69.4	1	1522.34	3.25	0	74.65	0	1.98	0	0	4.46	0	0	0	0	0	0	-11.74	-11.74
Westbrook Inverter Transfor	W_INVTR1	369403	4906578	2	0	0	78.2	78.2	1	5886.73	3.25	0	86.4	0	-3.35	0	0	2.71	0	0	0	0	0	0	-7.51	-7.51
Westbrook Inverter Transfor	W_INVTR2	369368	4906388	2	0	0	77.3	77.3	1	5814.14	3.25	0	86.29	0	-3.33	0	0	2.68	0	0	0	0	0	0	-8.3	-8.3
Westbrook Inverter Transfor	W_INVTR3	369514	4906164	2	0	0	77.3	77.3	1	5920.94	3.25	0	86.45	0	-3.35	0	0	2.72	0	0	0	0	0	0	-8.47	-8.47
Westbrook Inverter Transfor	W_INVTR4	369679	4906164	2	0	0	77.3	77.3	1	6084.23	3.25	0	86.68	0	-3.38	0	0	2.77	0	0	0	0	0	0	-8.73	-8.73
Westbrook Inverter Transfor	W_INVTR5	369725	4906574	2	0	0	77.3	77.3	1	6200.66	3.25	0	86.85	0	-3.4	0	0	2.8	0	0	0	0	0	0	-8.91	-8.91
Westbrook Inverter Transfor	W_INVTR7	369786	4906417	2	0	0	77.3	77.3	1	6230.4	3.25	0	86.89	0	-3.41	0	0	2.81	0	0	0	0	0	0	-8.95	-8.95
Westbrook Inverter Transfor	W_INVTR6	369881	4906578	2	0	0	77.3	77.3	1	6354.23	3.25	0	87.06	0	-3.43	0	0	2.85	0	0	0	0	0	0	-9.14	-9.14
Inverter Transformer	MV2-1 T	365836	4906816	2	0	0	69.4	69.4	1	2653.6	3.25	0	79.48	0	2.4	0	0	5.58	0	0	0	0	0	0	-18.11	-18.11
Inverter Transformer	MV1-9 T	364555	4905646	2	0	0	56.1	56.1	1	962.21	3.25	0	70.67	0	0	0	0	4.8	0	0	0	0	0	0	-19.4	-19.4

	Inverter Transformer	MV1-6 T	364482	4905835	2	0	0	56.1	56.1	1	982.5	3.25	0	70.85	0	0.01	0	0	4.85	0	0	0	0	0	0	-19.64	-19.64
	Inverter Transformer	MV1-11 T	364649	4905414	2	0	0	56.1	56.1	1	999.19	3.25	0	70.99	0	0.01	0	0	4.89	0	0	0	0	0	0	-19.83	-19.83
	Inverter Transformer	MV1-3 T	364435	4906039	2	0	0	56.1	56.1	1	1071.7	3.25	0	71.6	0	0.04	0	0	5.06	0	0	0	0	0	0	-20.64	-20.64
	Inverter Transformer	MV1-8 T	364782	4905647	2	0	0	56.1	56.1	1	1177.38	3.25	0	72.42	0	0.08	0	0	5.3	0	0	0	0	0	0	-21.74	-21.74
	Inverter Transformer	MV1-5 T	364676	4905892	2	0	0	56.1	56.1	1	1177.85	3.25	0	72.42	0	0.08	0	0	5.3	0	0	0	0	0	0	-21.74	-21.74
	Inverter Transformer	MV1-4 T	364821	4905918	2	0	0	56.1	56.1	1	1317.37	3.25	0	73.39	0	0.13	0	0	5.62	0	0	0	0	0	0	-23.08	-23.08
	Inverter Transformer	MV1-2 T	364759	4906063	2	0	0	56.1	56.1	1	1339.48	3.25	0	73.54	0	0.14	0	0	5.67	0	0	0	0	0	0	-23.28	-23.28
	Inverter Transformer	MV1-1 T	364721	4906166	2	0	0	56.1	56.1	1	1370.77	3.25	0	73.74	0	0.15	0	0	5.74	0	0	0	0	0	0	-23.57	-23.57
	Inverter Transformer	MV1-12 T	365044	4905386	2	0	0	56.1	56.1	1	1390.48	3.25	0	73.86	0	0.16	0	0	5.78	0	0	0	0	0	0	-23.74	-23.74
	Inverter Transformer	MV6-4 T	370244	4906966	2	0	0	69.4	69.4	1	6794.65	3.25	0	87.64	0	3.29	0	0	8.49	0	0	0	0	0	0	-30.07	-30.07
	Inverter Transformer	MV6-1 T	370230	4907364	2	0	0	69.4	69.4	1	6889.5	3.25	0	87.76	0	3.31	0	0	8.54	0	0	0	0	0	0	-30.26	-30.26
	Inverter Transformer	MV1-15 T	365309	4904994	2	0	0	56.1	56.1	1	1681.63	3.25	0	75.51	0	0.27	0	0	6.4	0	0	0	0	0	0	-26.13	-26.13
	Inverter Transformer	MV2-4 T	365590	4906628	2	0	0	56.1	56.1	1	2344.35	3.25	0	78.4	0	0.55	0	0	7.7	0	0	0	0	0	0	-30.59	-30.59
	Inverter Transformer	MV2-3 T	365814	4906641	2	0	0	56.1	56.1	1	2539.14	3.25	0	79.09	0	0.63	0	0	8.06	0	0	0	0	0	0	-31.73	-31.73
	Inverter Transformer	MV2-2 T	365982	4906654	2	0	0	56.1	56.1	1	2689.89	3.25	0	79.59	0	0.7	0	0	8.33	0	0	0	0	0	0	-32.56	-32.56
	Inverter Transformer	MV3-18 T	367757	4907412	2	0	0	56.1	56.1	1	4611.52	3.25	0	84.28	0	1.48	0	0	11.33	0	0	0	0	0	0	-41.03	-41.03
	Inverter Transformer	MV3-12 T	367674	4907594	2	0	0	56.1	56.1	1	4625.26	3.25	0	84.3	0	1.49	0	0	11.35	0	0	0	0	0	0	-41.08	-41.08
	Inverter Transformer	MV3-13 T	367958	4907577	2	0	0	56.1	56.1	1	4866.03	3.25	0	84.74	0	1.58	0	0	11.68	0	0	0	0	0	0	-41.94	-41.94
	Inverter Transformer	MV3-7 T	367951	4907754	2	0	0	56.1	56.1	1	4945.14	3.25	0	84.88	0	1.61	0	0	11.78	0	0	0	0	0	0	-42.21	-42.21
	Inverter Transformer	MV3-17 T	368183	4907472	2	0	0	56.1	56.1	1	5019.79	3.25	0	85.01	0	1.63	0	0	11.88	0	0	0	0	0	0	-42.47	-42.47
	Inverter Transformer	MV3-3 T	367944	4907927	2	0	0	56.1	56.1	1	5027.16	3.25	0	85.03	0	1.64	0	0	11.89	0	0	0	0	0	0	-42.49	-42.49
	Inverter Transformer	MV3-10 T	368162	4907669	2	0	0	56.1	56.1	1	5089.4	3.25	0	85.13	0	1.66	0	0	11.97	0	0	0	0	0	0	-42.7	-42.7
	Inverter Transformer	MV3-19 T	368352	4907347	2	0	0	56.1	56.1	1	5121.56	3.25	0	85.19	0	1.67	0	0	12.01	0	0	0	0	0	0	-42.81	-42.81
	Inverter Transformer	MV3-6 T	368156	4907834	2	0	0	56.1	56.1	1	5162.94	3.25	0	85.26	0	1.68	0	0	12.07	0	0	0	0	0	0	-42.95	-42.95
	Inverter Transformer	MV3-15 T	368351	4907477	2	0	0	56.1	56.1	1	5173.91	3.25	0	85.28	0	1.69	0	0	12.08	0	0	0	0	0	0	-42.99	-42.99
	Inverter Transformer	MV3-21 T	368484	4907206	2	0	0	56.1	56.1	1	5189.51	3.25	0	85.3	0	1.69	0	0	12.1	0	0	0	0	0	0	-43.04	-43.04
	Inverter Transformer	MV3-1 T	368150	4907976	2	0	0	56.1	56.1	1	5228.86	3.25	0	85.37	0	1.71	0	0	12.15	0	0	0	0	0	0	-43.17	-43.17
	Inverter Transformer	MV3-11 T	368340	4907662	2	0	0	56.1	56.1	1	5244.5	3.25	0	85.39	0	1.71	0	0	12.17	0	0	0	0	0	0	-43.22	-43.22
	Inverter Transformer	MV3-16 T	368509	4907475	2	0	0	56.1	56.1	1	5316.88	3.25	0	85.51	0	1.74	0	0	12.26	0	0	0	0	0	0	-43.46	-43.46
	Inverter Transformer	MV3-5 T	368335	4907843	2	0	0	56.1	56.1	1	5323.97	3.25	0	85.52	0	1.74	0	0	12.27	0	0	0	0	0	0	-43.48	-43.48
	Inverter Transformer	MV3-22 T	368661	4907142	2	0	0	56.1	56.1	1	5332.16	3.25	0	85.54	0	1.74	0	0	12.28	0	0	0	0	0	0	-43.51	-43.51
	Inverter Transformer	MV3-20 T	368683	4907317	2	0	0	56.1	56.1	1	5415.43	3.25	0	85.67	0	1.77	0	0	12.39	0	0	0	0	0	0	-43.78	-43.78
	Inverter Transformer	MV3-9 T	368517	4907703	2	0	0	56.1	56.1	1	5421.19	3.25	0	85.68	0	1.77	0	0	12.4	0	0	0	0	0	0	-43.79	-43.79
	Inverter Transformer	MV3-14 T	368678	4907498	2	0	0	56.1	56.1	1	5480.74	3.25	0	85.78	0	1.79	0	0	12.47	0	0	0	0	0	0	-43.98	-43.98
	Inverter Transformer	MV3-4 T	368507	4907925	2	0	0	56.1	56.1	1	5514.26	3.25	0	85.83	0	1.81	0	0	12.51	0	0	0	0	0	0	-44.09	-44.09
	Inverter Transformer	MV3-8 T	368685	4907712	2	0	0	56.1	56.1	1	5576.21	3.25	0	85.93	0	1.83	0	0	12.59	0	0	0	0	0	0	-44.28	-44.28
	Inverter Transformer	MV3-2 T	368677	4907928	2	0	0	56.1	56.1	1	5665.78	3.25	0	86.07	0	1.86	0	0	12.7	0	0	0	0	0	0	-44.56	-44.56
	Inverter Transformer	MV4-13 T	369057	4908605	2	0	0	56.1	56.1	1	6330.4	3.25	0	87.03	0	2.07	0	0	13.49	0	0	0	0	0	0	-46.52	-46.52
	Inverter Transformer	MV4-15 T	369170	4908481	2	0	0	56.1	56.1	1	6364.27	3.25	0	87.07	0	2.08	0	0	13.53	0	0	0	0	0	0	-46.62	-46.62
	Inverter Transformer	MV4-14 T	369182	4908507	2	0	0	56.1	56.1	1	6387.67	3.25	0	87.11	0	2.08	0	0	13.55	0	0	0	0	0	0	-46.69	-46.69
	Inverter Transformer	MV4-12 T	369049	4908803	2	0	0	56.1	56.1	1	6429.19	3.25	0	87.16	0	2.1	0	0	13.6	0	0	0	0	0	0	-46.8	-46.8
	Inverter Transformer	MV4-7 T	369040	4909001	2	0	0	56.1	56.1	1	6531.67	3.25	0	87.3	0	2.13	0	0	13.72	0	0	0	0	0	0	-47.08	-47.08
	Inverter Transformer	MV4-4 T	369033	4909199	2	0	0	56.1	56.1	1	6640.1	3.25	0	87.44	0	2.16	0	0	13.84	0	0	0	0	0	0	-47.38	-47.38
	Inverter Transformer	MV4-11 T	369269	4908855	2	0	0	56.1	56.1	1	6642.48	3.25	0	87.45	0	2.16	0	0	13.84	0	0	0	0	0	0	-47.39	-47.39
	Inverter Transformer	MV4-10 T	369307	4908858	2	0	0	56.1	56.1	1	6676.21	3.25	0	87.49	0	2.17	0	0	13.88	0	0	0	0	0	0	-47.48	-47.48
	Inverter Transformer	MV4-8 T	369262	4909001	2	0	0	56.1	56.1	1	6715.84	3.25	0	87.54	0	2.18	0	0	13.92	0	0	0	0	0	0	-47.58	-47.58
	Inverter Transformer	MV4-9 T	369284	4909001	2	0	0	56.1	56.1	1	6734.21	3.25	0	87.57	0	2.19	0	0	13.94	0	0	0	0	0	0	-47.63	-47.63
	Inverter Transformer	MV4-1 T	369017	4909397	2	0	0	56.1	56.1	1	6745.46	3.25	0	87.58	0	2.19	0	0	13.95	0	0	0	0	0	0	-47.66	-47.66
	Inverter Transformer	MV6-2 T	370091	4907339	2	0	0	56.1	56.1	1	6749.41	3.25	0	87.59	0	2.19	0	0	13.96	0	0	0	0	0	0	-47.67	-47.67
	Inverter Transformer	MV6-3 T	370202	4907140	2	0	0	56.1	56.1	1	6798.87	3.25	0	87.65	0	2.2	0	0	14.01	0	0	0	0	0	0	-47.81	-47.81
	Inverter Transformer	MV4-6 T	369249	4909192	2	0	0	56.1	56.1	1	6812.19	3.25	0	87.67	0	2.21	0	0	14.03	0	0	0	0	0	0	-47.84	-47.84
	Inverter Transformer	MV4-5 T	369283	4909199	2	0	0	56.1	56.1	1	6844.12	3.25	0	87.71	0	2.22	0	0	14.06	0	0	0	0	0	0	-47.93	-47.93
	Inverter Transformer	MV4-3 T	369234	4909397	2	0	0	56.1	56.1	1	6919.17	3.25	0	87.8	0	2.24	0	0	14.14	0	0	0	0	0	0	-48.12	-48.12
	Inverter Transformer	MV4-2 T	369267	4909397	2	0	0	56.1	56.1	1	6945.8	3.25	0	87.83	0	2.24	0	0	14.17	0	0	0	0	0	0	-48.19	-48.19
	Inverter Transformer	MV5-6 T	369987	4908507	2	0	0	56.1	56.1	1	7095.57	3.25	0	88.02	0	2.29	0	0	14.33	0	0	0	0	0	0	-48.58	-48.58
	Inverter Transformer	MV5-5 T	370021	4908690	2	0	0	56.1	56.1	1	7210.06	3.25	0	88.16	0	2.32	0	0	14.45	0	0	0	0	0	0	-48.87	-48.87
	Inverter Transformer	MV5-2 T	370011	4908853	2	0	0	56.1	56.1	1	7279.32	3.25	0	88.24	0	2.33	0	0	14.53	0	0	0	0	0	0	-49.04	-49.04
	Inverter Transformer	MV5-1 T	370015	4909142	2	0	0	56.1	56.1	1	7427.97	5.14	0	88.42	0	3.12	1.5	0.01	14.68	0	0	0	0	0	0	-51.67	-51.67
	Inverter Transformer	MV5-3 T	370237	4908851	2	0	0	56.1	56.1	1	7476.49	3.25	0	88.47	0	2.38	0	0	14.73	0	0	0	0	0	0	-49.53	-49.53
	Inverter Transformer	MV5-4 T	370330	4908707	2	0	0	56.1	56.1	1	7491.96	3.25	0	88.49	0	2.39	0	0	14.75	0	0	0	0	0	0	-49.57	-49.57
	Line Reactor	NGR	369421	4908787.5	5	0	0	45.4	45.4	1	6736.24	5.25	0	87.57	0	3.22	1.37	0.1	2.75	0	0	0	0	0	0	-49.56	-49.56
Limit. Valu	0	0																								
Level D/N:	27.6672	27.6672																								

Receiver: Existing Noise Receptor
ID: S-R102
X: 363606
Y: 4905237
Z: 4.5
Ground: 0

ISO	Description	ID	X	Y	Z	Ground	ReflOrd	LxT	LxN	L/A	Dist.	hm	Freq	Adiv	K0b	Agr	Abar	z	Aatm	Afol	Ahous	Cmet	CmetN	Dc	RL	LtotT	LtotN
	Inverter	MV1-9	364561	4905646	2	0	0	100.3	100.3	1	1038.9	3.25	0	71.33	0	-0.23	0	0	11.04	0	0	0	0	0	0	18.17	18.17
	Inverter	MV1-6	364477	4905835	2	0	0	100.3	100.3	1	1056.53	3.25	0	71.48	0	-0.22	0	0	11.09	0	0	0	0	0	0	17.96	17.96

Inverter	MV1-11	364655	4905414	2	0	0	100.3	100.3	1	1063.83	3.25	0	71.54	0	-0.22	0	0	11.12	0	0	0	0	0	0	17.87	17.87
Inverter	MV1-5	364671	4905892	2	0	0	100.3	100.3	1	1250.3	3.25	0	72.94	0	-0.13	0	0	11.67	0	0	0	0	0	0	15.84	15.84
Inverter	MV1-8	364788	4905647	2	0	0	100.3	100.3	1	1251.09	3.25	0	72.95	0	-0.13	0	0	11.67	0	0	0	0	0	0	15.83	15.83
Inverter	MV1-4	364815	4905918	2	0	0	100.3	100.3	1	1387.61	3.25	0	73.85	0	-0.08	0	0	12.04	0	0	0	0	0	0	14.5	14.5
Inverter	MV1-2	364753	4906063	2	0	0	100.3	100.3	1	1413.47	3.25	0	74.01	0	-0.07	0	0	12.11	0	0	0	0	0	0	14.27	14.27
Inverter	MV1-12	365038	4905386	2	0	0	100.3	100.3	1	1439.73	3.25	0	74.17	0	-0.06	0	0	12.17	0	0	0	0	0	0	14.03	14.03
Inverter	MV1-1	364715	4906166	2	0	0	100.3	100.3	1	1446.7	3.25	0	74.21	0	-0.05	0	0	12.19	0	0	0	0	0	0	13.97	13.97
Inverter	MV1-13	364731	4905241	2	0	0	97.3	97.3	1	1125.01	3.25	0	72.02	0	-0.19	0	0	11.3	0	0	0	0	0	0	14.17	14.17
Inverter	MV1-15	365315	4904994	2	0	0	100.3	100.3	1	1726.19	3.25	0	75.74	0	0.05	0	0	12.86	0	0	0	0	0	0	11.66	11.66
Sol_Luce Substation	S_Substation	369426	4908792	3.5	0	0	112.1	112.1	1	6819.86	5.25	0	87.68	0	1.34	2.48	0.28	10.58	0	0	0	0	0	0	10	10
Inverter	MV1-7	364925	4905782	2	0	0	97.3	97.3	1	1427.16	3.25	0	74.09	0	-0.06	0	0	12.14	0	0	0	0	0	0	11.14	11.14
Inverter	MV1-10	365004	4905564	2	0	0	97.3	97.3	1	1435.74	3.25	0	74.14	0	-0.06	0	0	12.16	0	0	0	0	0	0	11.07	11.07
Inverter	MV1-14	365163	4905049	2	0	0	97.3	97.3	1	1568.31	3.25	0	74.91	0	-0.01	0	0	12.49	0	0	0	0	0	0	9.92	9.92
Inverter	MV2-4	365586	4906624	2	0	0	100.3	100.3	1	2417.47	3.25	0	78.67	0	0.24	0	0	14.3	0	0	0	0	0	0	7.11	7.11
Inverter	MV2-3	365820	4906641	2	0	0	100.3	100.3	1	2621.64	3.25	0	79.37	0	0.28	0	0	14.69	0	0	0	0	0	0	5.97	5.97
Inverter	MV2-1	365842	4906816	2	0	0	97.3	97.3	1	2737.32	3.25	0	79.75	0	0.31	0	0	14.9	0	0	0	0	0	0	2.36	2.36
Inverter	MV1-3	364440	4906039	2	0	0	89.1	89.1	1	1157.05	3.25	0	72.27	0	0.72	0	0	6.6	0	0	0	0	0	0	9.47	9.47
Inverter	MV3-18	367752	4907412	2	0	0	100.3	100.3	1	4681.87	3.25	0	84.41	0	0.61	0	0	18.11	0	0	0	0	0	0	-2.81	-2.81
Inverter	MV3-12	367668	4907594	2	0	0	100.3	100.3	1	4696.31	3.25	0	84.44	0	0.61	0	0	18.13	0	0	0	0	0	0	-2.86	-2.86
Inverter	MV3-13	367963	4907577	2	0	0	100.3	100.3	1	4945.61	3.25	0	84.88	0	0.64	0	0	18.5	0	0	0	0	0	0	-3.71	-3.71
Inverter	MV3-7	367945	4907754	2	0	0	100.3	100.3	1	5016.2	3.25	0	85.01	0	0.64	0	0	18.6	0	0	0	0	0	0	-3.94	-3.94
Inverter	MV3-17	368178	4907472	2	0	0	100.3	100.3	1	5089.05	3.25	0	85.13	0	0.65	0	0	18.71	0	0	0	0	0	0	-4.18	-4.18
Inverter	MV3-3	367939	4907927	2	0	0	100.3	100.3	1	5100.1	3.25	0	85.15	0	0.65	0	0	18.73	0	0	0	0	0	0	-4.22	-4.22
Inverter	MV3-10	368167	4907669	2	0	0	100.3	100.3	1	5168.88	3.25	0	85.27	0	0.66	0	0	18.83	0	0	0	0	0	0	-4.44	-4.44
Inverter	MV3-19	368357	4907347	2	0	0	100.3	100.3	1	5198.47	3.25	0	85.32	0	0.66	0	0	18.87	0	0	0	0	0	0	-4.53	-4.53
Inverter	MV3-6	368162	4907834	2	0	0	100.3	100.3	1	5244.19	3.25	0	85.39	0	0.66	0	0	18.94	0	0	0	0	0	0	-4.68	-4.68
Inverter	MV3-15	368357	4907477	2	0	0	100.3	100.3	1	5252.58	3.25	0	85.41	0	0.66	0	0	18.95	0	0	0	0	0	0	-4.71	-4.71
Inverter	MV3-21	368478	4907206	2	0	0	100.3	100.3	1	5254.84	3.25	0	85.41	0	0.66	0	0	18.95	0	0	0	0	0	0	-4.71	-4.71
Inverter	MV3-11	368346	4907662	2	0	0	100.3	100.3	1	5324.31	3.25	0	85.53	0	0.67	0	0	19.05	0	0	0	0	0	0	-4.93	-4.93
Inverter	MV3-16	368514	4907475	2	0	0	100.3	100.3	1	5394.17	3.25	0	85.64	0	0.67	0	0	19.15	0	0	0	0	0	0	-5.15	-5.15
Inverter	MV3-9	368512	4907703	2	0	0	100.3	100.3	1	5490.9	3.25	0	85.79	0	0.68	0	0	19.29	0	0	0	0	0	0	-5.45	-5.45
Inverter	MV3-20	368689	4907317	2	0	0	100.3	100.3	1	5492.11	3.25	0	85.79	0	0.68	0	0	19.29	0	0	0	0	0	0	-5.45	-5.45
Inverter	MV3-14	368684	4907498	2	0	0	100.3	100.3	1	5558.62	3.25	0	85.9	0	0.68	0	0	19.38	0	0	0	0	0	0	-5.65	-5.65
Inverter	MV3-8	368680	4907712	2	0	0	100.3	100.3	1	5645.45	3.25	0	86.03	0	0.69	0	0	19.5	0	0	0	0	0	0	-5.92	-5.92
Inverter	MV4-7	369035	4909001	2	0	0	100.3	100.3	1	6606.19	3.25	0	87.4	0	0.72	0	0	20.8	0	0	0	0	0	0	-8.6	-8.6
Inverter	MV4-4	369027	4909199	2	0	0	100.3	100.3	1	6714.51	3.25	0	87.54	0	0.71	0	0	20.94	0	0	0	0	0	0	-8.88	-8.88
Inverter	MV4-11	369264	4908855	2	0	0	100.3	100.3	1	6715.87	3.25	0	87.54	0	0.71	0	0	20.94	0	0	0	0	0	0	-8.88	-8.88
Inverter	MV4-10	369312	4908858	2	0	0	100.3	100.3	1	6757.96	3.25	0	87.6	0	0.71	0	0	20.99	0	0	0	0	0	0	-8.99	-8.99
Inverter	MV4-8	369256	4909001	2	0	0	100.3	100.3	1	6788.98	3.25	0	87.64	0	0.71	0	0	21.03	0	0	0	0	0	0	-9.07	-9.07
Inverter	MV6-2	370085	4907339	2	0	0	100.3	100.3	1	6811.45	3.25	0	87.66	0	0.71	0	0	21.06	0	0	0	0	0	0	-9.13	-9.13
Inverter	MV4-9	369289	4909001	2	0	0	100.3	100.3	1	6816.46	3.25	0	87.67	0	0.71	0	0	21.07	0	0	0	0	0	0	-9.14	-9.14
Inverter	MV4-1	369011	4909397	2	0	0	100.3	100.3	1	6820.53	3.25	0	87.68	0	0.71	0	0	21.07	0	0	0	0	0	0	-9.15	-9.15
Inverter	MV6-3	370207	4907140	2	0	0	100.3	100.3	1	6869.83	3.25	0	87.74	0	0.71	0	0	21.13	0	0	0	0	0	0	-9.27	-9.27
Inverter	MV4-6	369243	4909192	2	0	0	100.3	100.3	1	6886.06	3.25	0	87.76	0	0.71	0	0	21.16	0	0	0	0	0	0	-9.32	-9.32
Inverter	MV4-5	369289	4909199	2	0	0	100.3	100.3	1	6927.77	3.25	0	87.81	0	0.71	0	0	21.21	0	0	0	0	0	0	-9.42	-9.42
Inverter	MV4-3	369229	4909397	2	0	0	100.3	100.3	1	6994.55	3.25	0	87.9	0	0.71	0	0	21.29	0	0	0	0	0	0	-9.59	-9.59
Inverter	MV4-2	369272	4909397	2	0	0	100.3	100.3	1	7029.17	3.25	0	87.94	0	0.71	0	0	21.34	0	0	0	0	0	0	-9.67	-9.67
Inverter	MV5-5	370015	4908690	2	0	0	100.3	100.3	1	7280.01	3.25	0	88.24	0	0.7	0	0	21.65	0	0	0	0	0	0	-10.28	-10.28
Inverter	MV5-2	370006	4908853	2	0	0	100.3	100.3	1	7350.88	3.25	0	88.33	0	0.7	0	0	21.73	0	0	0	0	0	0	-10.45	-10.45
Inverter	MV5-1	370020	4909142	2	0	0	100.3	100.3	1	7509.22	5.14	0	88.51	0	1.79	2.21	0.01	21.93	0	0	0	0	0	0	-14.13	-14.13
Inverter	MV5-3	370231	4908851	2	0	0	100.3	100.3	1	7546.63	3.25	0	88.56	0	0.69	0	0	21.97	0	0	0	0	0	0	-10.9	-10.9
Inverter	MV5-4	370324	4908707	2	0	0	100.3	100.3	1	7561.25	3.25	0	88.57	0	0.69	0	0	21.99	0	0	0	0	0	0	-10.93	-10.93
Inverter	MV6-1	370235	4907364	2	0	0	97.3	97.3	1	6961.88	3.25	0	87.85	0	0.71	0	0	21.25	0	0	0	0	0	0	-12.5	-12.5
Inverter	MV2-2	365977	4906654	2	0	0	89.1	89.1	1	2762.16	3.25	0	79.82	0	1.09	0	0	9.25	0	0	0	0	0	0	-1.11	-1.11
DSTATCOM - 10 MVAR #2	DSAT2	369403	4908757	2.5	0	0	96.6	96.6	1	6782.01	3.5	0	87.63	0	3.82	0	0	4.21	0	0	0	0	0	0	0.97	0.97
DSTATCOM - 10 MVAR #1	DSAT1	369437	4908757	2.5	0	0	96.6	96.6	1	6811.09	3.5	0	87.66	0	3.83	0	0	4.22	0	0	0	0	0	0	0.92	0.92
Gardiner Substation	G_Sub	366586.3	4903349.9	2.5	0	0	90.8	90.8	1	3527.51	4.25	0	81.95	0	1.23	2.79	0.3	6.72	0	0	0	0	0	0	-1.91	-1.91
Inverters	G_Inv1	366526.4	4903225.8	2	0	0	87.7	87.7	1	3545.94	3.25	0	81.99	0	2.75	0	0	4.38	0	0	0	0	0	0	-1.47	-1.47
Inverters	G_Inv2	366676.9	4903239.1	2	0	0	87.7	87.7	1	3663.61	3.25	0	82.28	0	2.76	0	0	4.51	0	0	0	0	0	0	-1.89	-1.89
Inverters	G_Inv3	366583.7	4903091.4	2	0	0	87.7	87.7	1	3670.19	3.25	0	82.29	0	2.76	0	0	4.52	0	0	0	0	0	0	-1.91	-1.91
SubstationTransformer	W_ST	369711.17	4906112.3	2.5	0	0	92	92	1	6167.59	4.25	0	86.8	0	1.91	2.06	0.29	9.92	0	0	0	0	0	0	-8.72	-8.72
Inverters	G_Inv4	366732.8	4903105	2	0	0	87.7	87.7	1	3784.48	3.25	0	82.56	0	2.77	0	0	4.64	0	0	0	0	0	0	-2.31	-2.31
Inverters	G_Inv5	366638.5	4902958.1	2	0	0	87.7	87.7	1	3793.34	3.25	0	82.58	0	2.77	0	0	4.65	0	0	0	0	0	0	-2.34	-2.34
Inverters	G_Inv6	366788.5	4902972	2	0	0	87.7	87.7	1	3906.22	3.25	0	82.84	0	2.78	0	0	4.77	0	0	0	0	0	0	-2.73	-2.73
Inverters	G_Inv7	366694.6	4902824.7	2	0	0	87.7	87.7	1	3919.01	3.25	0	82.86	0	2.79	0	0	4.79	0	0	0	0	0	0	-2.77	-2.77
Inverters	G_Inv8	366844.5	4902838.5	2	0	0	87.7	87.7	1	4029.97	3.25	0	83.11	0	2.79	0	0	4.91	0	0	0	0	0	0	-3.15	-3.15
Inverters	G_Inv9	366750.9	4902691.8	2	0	0	87.7	87.7	1	4045.79	3.25	0	83.14	0	2.8	0	0	4.92	0	0	0	0	0	0	-3.2	-3.2
Inverters	G_Inv10	366900.7	4902704.8	2	0	0	87.7	87.7	1	4155.37	3.25	0	83.37	0	2.8	0	0	5.04	0	0	0	0	0	0	-3.56	-3.56
Inverter	MV3-1	368156	4907976	2	0	0	89.1	89.1	1	5310.8	3.25	0	85.5	0	1.72	0	0	12.88	0	0	0	0	0	0	-11.04	-11.04
Inverter	MV3-22	368656	4907142	2	0	0	89.1	89.1	1	5397.36	3.25	0	85.64	0	1.74	0	0	12.99	0	0	0	0	0	0	-11.31	-11.31
Inverter	MV3-5	368340	4907843	2	0	0	89.1	89.1	1	5403.89	3.25	0	85.65	0	1.74	0	0	13	0	0	0	0	0	0	-11.33	-11.33
Inverter	MV3-4	368502	4907925	2	0	0	89.1	89.1	1	5585.35	3.25	0	85.94	0	1.78	0	0	13.23	0	0	0	0	0	0	-11.9	-11.9
Inverter	MV3-2	368671	4907928	2	0	0	89.1	89.1	1	5735.48	3.25	0	86.17	0	1.82	0	0	13.43	0	0	0	0	0	0	-12.36	-12.36
Westbrook Inverter Enclosur	W_INV2	369374	4906388	2	0	0	89.1	89.1	1	5881.72	3.25	0	86.39	0	1.86	0	0	13.61	0	0	0	0	0	0	-12.8	-12.8

Westbrook Inverter Enclosur	W_INV3	369508	4906164	2	0	0	89.1	89.1	1	5974.36	3.25	0	86.53	0	1.88	0	0	13.73	0	0	0	0	0	0	-13.08	-13.08
Westbrook Inverter Enclosur	W_INV4	369673	4906164	2	0	0	89.1	89.1	1	6137.41	3.25	0	86.76	0	1.92	0	0	13.93	0	0	0	0	0	0	-13.56	-13.56
Fixed Reactor Bank 1	FRB1	369378	4908755	6	0	0	89.8	89.8	1	6759.61	5.25	0	87.6	0	-0.31	0	0	10.52	0	0	0	0	0	0	-8.02	-8.02
Westbrook Inverter Enclosur	W_INV5	369719	4906574	2	0	0	89.1	89.1	1	6257.5	3.25	0	86.93	0	1.95	0	0	14.08	0	0	0	0	0	0	-13.9	-13.9
Westbrook Inverter Enclosur	W_INV7	369780	4906417	2	0	0	89.1	89.1	1	6285.75	3.25	0	86.97	0	1.96	0	0	14.12	0	0	0	0	0	0	-13.98	-13.98
Fixed Reactor Bank 2	FRB2	369464	4908755	6	0	0	89.8	89.8	1	6833.19	5.25	0	87.69	0	-0.31	0	0	10.59	0	0	0	0	0	0	-8.2	-8.2
Inverter	MV4-13	369051	4908605	2	0	0	89.1	89.1	1	6402.46	3.25	0	87.13	0	1.98	0	0	14.26	0	0	0	0	0	0	-14.32	-14.32
Westbrook Inverter Enclosur	W_INV6	369875	4906578	2	0	0	89.1	89.1	1	6410.82	3.25	0	87.14	0	1.99	0	0	14.27	0	0	0	0	0	0	-14.34	-14.34
Inverter	MV4-15	369176	4908481	2	0	0	89.1	89.1	1	6445.81	3.25	0	87.19	0	1.99	0	0	14.32	0	0	0	0	0	0	-14.44	-14.44
Inverter	MV4-14	369176	4908507	2	0	0	89.1	89.1	1	6458.93	3.25	0	87.2	0	2	0	0	14.33	0	0	0	0	0	0	-14.48	-14.48
Inverter	MV4-12	369043	4908803	2	0	0	89.1	89.1	1	6502.1	3.25	0	87.26	0	2.01	0	0	14.39	0	0	0	0	0	0	-14.6	-14.6
Inverter	MV5-6	369982	4908507	2	0	0	89.1	89.1	1	7165.63	3.25	0	88.11	0	2.17	0	0	15.18	0	0	0	0	0	0	-16.4	-16.4
Westbrook Inverter Enclosur	W_INV1	369409	4906578	2	0	0	86.1	86.1	1	5955.93	3.25	0	86.5	0	1.88	0	0	13.71	0	0	0	0	0	0	-16.02	-16.02
Inverter	MV6-4	370250	4906966	2	0	0	86.1	86.1	1	6865.29	3.25	0	87.73	0	2.1	0	0	14.83	0	0	0	0	0	0	-18.6	-18.6
Inverter Transformer	MV1-13 T	364725	4905241	2	0	0	69.4	69.4	1	1119.01	3.25	0	71.98	0	1.77	0	0	3.97	0	0	0	0	0	0	-8.37	-8.37
Inverter Transformer	MV1-7 T	364919	4905782	2	0	0	69.4	69.4	1	1421.62	3.25	0	74.06	0	1.94	0	0	4.34	0	0	0	0	0	0	-10.99	-10.99
Inverter Transformer	MV1-10 T	365010	4905564	2	0	0	69.4	69.4	1	1441.58	3.25	0	74.18	0	1.95	0	0	4.37	0	0	0	0	0	0	-11.14	-11.14
Inverter Transformer	MV1-14 T	365157	4905049	2	0	0	69.4	69.4	1	1562.35	3.25	0	74.88	0	2	0	0	4.5	0	0	0	0	0	0	-12.03	-12.03
Westbrook Inverter Transfor	W_INVTR1	369403	4906578	2	0	0	78.2	78.2	1	5950.08	3.25	0	86.49	0	-3.36	0	0	2.73	0	0	0	0	0	0	-7.62	-7.62
Westbrook Inverter Transfor	W_INVTR2	369368	4906388	2	0	0	77.3	77.3	1	5875.84	3.25	0	86.38	0	-3.35	0	0	2.7	0	0	0	0	0	0	-8.4	-8.4
Westbrook Inverter Transfor	W_INVTR3	369514	4906164	2	0	0	77.3	77.3	1	5980.28	3.25	0	86.53	0	-3.36	0	0	2.73	0	0	0	0	0	0	-8.56	-8.56
Westbrook Inverter Transfor	W_INVTR4	369679	4906164	2	0	0	77.3	77.3	1	6143.34	3.25	0	86.77	0	-3.39	0	0	2.79	0	0	0	0	0	0	-8.82	-8.82
Westbrook Inverter Transfor	W_INVTR5	369725	4906574	2	0	0	77.3	77.3	1	6263.36	3.25	0	86.94	0	-3.41	0	0	2.82	0	0	0	0	0	0	-9	-9
Westbrook Inverter Transfor	W_INVTR7	369786	4906417	2	0	0	77.3	77.3	1	6291.65	3.25	0	86.98	0	-3.42	0	0	2.83	0	0	0	0	0	0	-9.05	-9.05
Westbrook Inverter Transfor	W_INVTR6	369881	4906578	2	0	0	77.3	77.3	1	6416.69	3.25	0	87.15	0	-3.44	0	0	2.87	0	0	0	0	0	0	-9.23	-9.23
Inverter Transformer	MV2-1 T	365836	4906816	2	0	0	69.4	69.4	1	2732.43	3.25	0	79.73	0	2.42	0	0	5.65	0	0	0	0	0	0	-18.46	-18.46
Inverter Transformer	MV1-9 T	364555	4905646	2	0	0	56.1	56.1	1	1033.39	3.25	0	71.29	0	0.02	0	0	4.97	0	0	0	0	0	0	-20.22	-20.22
Inverter Transformer	MV1-11 T	364649	4905414	2	0	0	56.1	56.1	1	1057.92	3.25	0	71.49	0	0.03	0	0	5.03	0	0	0	0	0	0	-20.49	-20.49
Inverter Transformer	MV1-6 T	364482	4905835	2	0	0	56.1	56.1	1	1060.65	3.25	0	71.51	0	0.03	0	0	5.03	0	0	0	0	0	0	-20.52	-20.52
Inverter Transformer	MV1-3 T	364435	4906039	2	0	0	56.1	56.1	1	1153.45	3.25	0	72.24	0	0.07	0	0	5.25	0	0	0	0	0	0	-21.5	-21.5
Inverter Transformer	MV1-8 T	364782	4905647	2	0	0	56.1	56.1	1	1245.42	3.25	0	72.91	0	0.1	0	0	5.46	0	0	0	0	0	0	-22.41	-22.41
Inverter Transformer	MV1-5 T	364676	4905892	2	0	0	56.1	56.1	1	1254.56	3.25	0	72.97	0	0.1	0	0	5.48	0	0	0	0	0	0	-22.49	-22.49
Inverter Transformer	MV1-4 T	364821	4905918	2	0	0	56.1	56.1	1	1392.84	3.25	0	73.88	0	0.16	0	0	5.79	0	0	0	0	0	0	-23.76	-23.76
Inverter Transformer	MV1-2 T	364759	4906063	2	0	0	56.1	56.1	1	1418.34	3.25	0	74.04	0	0.17	0	0	5.84	0	0	0	0	0	0	-23.99	-23.99
Inverter Transformer	MV1-12 T	365044	4905386	2	0	0	56.1	56.1	1	1445.7	3.25	0	74.2	0	0.18	0	0	5.9	0	0	0	0	0	0	-24.22	-24.22
Inverter Transformer	MV1-1 T	364721	4906166	2	0	0	56.1	56.1	1	1451.3	3.25	0	74.24	0	0.18	0	0	5.91	0	0	0	0	0	0	-24.27	-24.27
Inverter Transformer	MV6-4 T	370244	4906966	2	0	0	69.4	69.4	1	6859.48	3.25	0	87.73	0	3.3	0	0	8.52	0	0	0	0	0	0	-30.2	-30.2
Inverter Transformer	MV6-1 T	370230	4907364	2	0	0	69.4	69.4	1	6957.12	3.25	0	87.85	0	3.31	0	0	8.58	0	0	0	0	0	0	-30.39	-30.39
Inverter Transformer	MV1-15 T	365309	4904994	2	0	0	56.1	56.1	1	1720.25	3.25	0	75.71	0	0.29	0	0	6.48	0	0	0	0	0	0	-26.42	-26.42
Inverter Transformer	MV2-4 T	365590	4906628	2	0	0	56.1	56.1	1	2423.04	3.25	0	78.69	0	0.58	0	0	7.85	0	0	0	0	0	0	-31.06	-31.06
Inverter Transformer	MV2-3 T	365814	4906641	2	0	0	56.1	56.1	1	2616.58	3.25	0	79.35	0	0.67	0	0	8.2	0	0	0	0	0	0	-32.16	-32.16
Inverter Transformer	MV2-2 T	365982	4906654	2	0	0	56.1	56.1	1	2766.45	3.25	0	79.84	0	0.73	0	0	8.47	0	0	0	0	0	0	-32.98	-32.98
Inverter Transformer	MV3-18 T	367757	4907412	2	0	0	56.1	56.1	1	4686.3	3.25	0	84.42	0	1.51	0	0	11.43	0	0	0	0	0	0	-41.3	-41.3
Inverter Transformer	MV3-12 T	367674	4907594	2	0	0	56.1	56.1	1	4701.5	3.25	0	84.44	0	1.52	0	0	11.45	0	0	0	0	0	0	-41.36	-41.36
Inverter Transformer	MV3-13 T	367958	4907577	2	0	0	56.1	56.1	1	4941.21	3.25	0	84.88	0	1.6	0	0	11.78	0	0	0	0	0	0	-42.2	-42.2
Inverter Transformer	MV3-7 T	367951	4907754	2	0	0	56.1	56.1	1	5021.39	3.25	0	85.02	0	1.63	0	0	11.88	0	0	0	0	0	0	-42.47	-42.47
Inverter Transformer	MV3-17 T	368183	4907472	2	0	0	56.1	56.1	1	5093.54	3.25	0	85.14	0	1.66	0	0	11.98	0	0	0	0	0	0	-42.72	-42.72
Inverter Transformer	MV3-3 T	367944	4907927	2	0	0	56.1	56.1	1	5104.35	3.25	0	85.16	0	1.66	0	0	11.99	0	0	0	0	0	0	-42.75	-42.75
Inverter Transformer	MV3-10 T	368162	4907669	2	0	0	56.1	56.1	1	5164.47	3.25	0	85.26	0	1.68	0	0	12.07	0	0	0	0	0	0	-42.96	-42.96
Inverter Transformer	MV3-19 T	368352	4907347	2	0	0	56.1	56.1	1	5193.9	3.25	0	85.31	0	1.69	0	0	12.11	0	0	0	0	0	0	-43.05	-43.05
Inverter Transformer	MV3-6 T	368156	4907834	2	0	0	56.1	56.1	1	5238.98	3.25	0	85.38	0	1.71	0	0	12.17	0	0	0	0	0	0	-43.2	-43.2
Inverter Transformer	MV3-15 T	368351	4907477	2	0	0	56.1	56.1	1	5247.15	3.25	0	85.4	0	1.71	0	0	12.18	0	0	0	0	0	0	-43.23	-43.23
Inverter Transformer	MV3-21 T	368484	4907206	2	0	0	56.1	56.1	1	5260.4	3.25	0	85.42	0	1.72	0	0	12.19	0	0	0	0	0	0	-43.27	-43.27
Inverter Transformer	MV3-1 T	368150	4907976	2	0	0	56.1	56.1	1	5305.66	3.25	0	85.49	0	1.73	0	0	12.25	0	0	0	0	0	0	-43.42	-43.42
Inverter Transformer	MV3-11 T	368340	4907662	2	0	0	56.1	56.1	1	5318.96	3.25	0	85.52	0	1.74	0	0	12.27	0	0	0	0	0	0	-43.46	-43.46
Inverter Transformer	MV3-16 T	368509	4907475	2	0	0	56.1	56.1	1	5389.63	3.25	0	85.63	0	1.76	0	0	12.36	0	0	0	0	0	0	-43.69	-43.69
Inverter Transformer	MV3-5 T	368335	4907843	2	0	0	56.1	56.1	1	5399.51	3.25	0	85.65	0	1.77	0	0	12.37	0	0	0	0	0	0	-43.72	-43.72
Inverter Transformer	MV3-22 T	368661	4907142	2	0	0	56.1	56.1	1	5402.04	3.25	0	85.65	0	1.77	0	0	12.37	0	0	0	0	0	0	-43.73	-43.73
Inverter Transformer	MV3-20 T	368683	4907317	2	0	0	56.1	56.1	1	5486.56	3.25	0	85.79	0	1.8	0	0	12.48	0	0	0	0	0	0	-44	-44
Inverter Transformer	MV3-9 T	368517	4907703	2	0	0	56.1	56.1	1	5495.37	3.25	0	85.8	0	1.8	0	0	12.49	0	0	0	0	0	0	-44.03	-44.03
Inverter Transformer	MV3-14 T	368678	4907498	2	0	0	56.1	56.1	1	5553.14	3.25	0	85.89	0	1.82	0	0	12.56	0	0	0	0	0	0	-44.21	-44.21
Inverter Transformer	MV3-4 T	368507	4907925	2	0	0	56.1	56.1	1	5589.74	3.25	0	85.95	0	1.83	0	0	12.61	0	0	0	0	0	0	-44.33	-44.33
Inverter Transformer	MV3-8 T	368685	4907712	2	0	0	56.1	56.1	1	5649.94	3.25	0	86.04	0	1.85	0	0	12.68	0	0	0	0	0	0	-44.51	-44.51
Inverter Transformer	MV3-2 T	368677	4907928	2	0	0	56.1	56.1	1	5740.78	3.25	0	86.18	0	1.88	0	0	12.79	0	0	0	0	0	0	-44.79	-44.79
Inverter Transformer	MV4-13 T	369057	4908605	2	0	0	56.1	56.1	1	6407.56	3.25	0	87.13	0	2.09	0	0	13.58	0	0	0	0	0	0	-46.74	-46.74
Inverter Transformer	MV4-15 T	369170	4908481	2	0	0	56.1	56.1	1	6440.62	3.25	0	87.18	0	2.1	0	0	13.61	0	0	0	0	0	0	-46.83	-46.83
Inverter Transformer	MV4-14 T	369182	4908507	2	0	0	56.1	56.1	1	6464.11	3.25	0	87.21	0	2.11	0	0	13.64	0	0	0	0	0	0	-46.9	-46.9
Inverter Transformer	MV4-12 T	369049	4908803	2	0	0	56.1	56.1	1	6507.12	3.25	0	87.27	0	2.12	0	0	13.69	0	0	0	0	0	0	-47.02	-47.02
Inverter Transformer	MV4-7 T	369040	4909001	2	0	0	56.1	56.1	1	6610.3	3.25	0	87.4	0	2.15	0	0	13.8	0	0	0	0	0	0	-47.3	-47.3
Inverter Transformer	MV4-4 T	369033	4909199	2	0	0	56.1	56.1	1	6719.36	3.25	0	87.55	0	2.18	0	0	13.92	0	0	0	0	0	0	-47.59	-47.59
Inverter Transformer	MV4-11 T	369269	4908855	2	0	0	56.1	56.1	1	6720.08	3.25	0	87.55	0	2.18	0	0	13.93	0	0	0	0	0	0	-47.6	-47.6
Inverter Transformer	MV4-10 T	369307	4908858	2	0	0	56.1	56.1	1	6753.74	3.25	0	87.59	0	2.19	0	0	13.96	0	0	0	0	0	0	-47.69	-47.69
Inverter Transformer	MV4-8 T	369262	4909001	2	0	0	56.1	56.1	1	6793.97	3.25	0	87.64	0	2.2	0	0	14.01	0	0	0	0	0	0	-47.79	-47.79
Inverter Transformer	MV4-9 T	369284	4909001	2	0	0	56.1	56.1	1	6812.3	3.25	0	87.67	0	2.21	0	0	14.03	0	0	0	0	0	0	-47.84	-47.84

	Inverter Transformer	MV6-2 T	370091	4907339	2	0	0	56.1	56.1	1	6817.16	3.25	0	87.67	0	2.21	0	0	14.03	0	0	0	0	0	0	-47.85	-47.85
	Inverter Transformer	MV4-1 T	369017	4909397	2	0	0	56.1	56.1	1	6825.29	3.25	0	87.68	0	2.21	0	0	14.04	0	0	0	0	0	0	-47.88	-47.88
	Inverter Transformer	MV6-3 T	370202	4907140	2	0	0	56.1	56.1	1	6865.03	3.25	0	87.73	0	2.22	0	0	14.08	0	0	0	0	0	0	-47.98	-47.98
	Inverter Transformer	MV4-6 T	369249	4909192	2	0	0	56.1	56.1	1	6890.97	3.25	0	87.77	0	2.23	0	0	14.11	0	0	0	0	0	0	-48.05	-48.05
	Inverter Transformer	MV4-5 T	369283	4909199	2	0	0	56.1	56.1	1	6922.84	3.25	0	87.81	0	2.24	0	0	14.15	0	0	0	0	0	0	-48.13	-48.13
	Inverter Transformer	MV4-3 T	369234	4909397	2	0	0	56.1	56.1	1	6998.57	3.25	0	87.9	0	2.26	0	0	14.23	0	0	0	0	0	0	-48.33	-48.33
	Inverter Transformer	MV4-2 T	369267	4909397	2	0	0	56.1	56.1	1	7025.14	3.25	0	87.93	0	2.27	0	0	14.26	0	0	0	0	0	0	-48.4	-48.4
	Inverter Transformer	MV5-6 T	369987	4908507	2	0	0	56.1	56.1	1	7170.08	3.25	0	88.11	0	2.31	0	0	14.41	0	0	0	0	0	0	-48.77	-48.77
	Inverter Transformer	MV5-5 T	370021	4908690	2	0	0	56.1	56.1	1	7285.29	3.25	0	88.25	0	2.34	0	0	14.53	0	0	0	0	0	0	-49.06	-49.06
	Inverter Transformer	MV5-2 T	370011	4908853	2	0	0	56.1	56.1	1	7355.24	3.25	0	88.33	0	2.35	0	0	14.6	0	0	0	0	0	0	-49.23	-49.23
	Inverter Transformer	MV5-1 T	370015	4909142	2	0	0	56.1	56.1	1	7504.95	5.14	0	88.51	0	3.14	1.49	0.01	14.76	0	0	0	0	0	0	-51.84	-51.84
	Inverter Transformer	MV5-3 T	370237	4908851	2	0	0	56.1	56.1	1	7551.9	3.25	0	88.56	0	2.4	0	0	14.81	0	0	0	0	0	0	-49.71	-49.71
	Inverter Transformer	MV5-4 T	370330	4908707	2	0	0	56.1	56.1	1	7566.58	3.25	0	88.58	0	2.41	0	0	14.82	0	0	0	0	0	0	-49.75	-49.75
	Line Reactor	NGR	369421	4908787.5	5	0	0	45.4	45.4	1	6813.24	5.25	0	87.67	0	3.22	1.37	0.1	2.78	0	0	0	0	0	0	-49.69	-49.69
Limit. Valu	0	0																								
Level D/N:	26.9684	26.9684																								

Receiver: Existing Noise Receptor
ID: S-R103
X: 366535
Y: 4907679
Z: 4.5
Ground: 0

ISO	Description	ID	X	Y	Z	Ground	ReflOrd	LxT	LxN	L/A	Dist.	hm	Freq	Adiv	K0b	Agr	Abar	z	Aatm	Afol	Ahous	Cmet	CmetN	Dc	RL	LtotT	LtotN
	Sol_Luce Substation	S_Substation	369426	4908792	3.5	0	0	112.1	112.1	1	3097.85	5.25	0	80.82	0	0.32	3.34	0.31	6.1	0	0	0	0	0	0	21.49	21.49
	Inverter	MV3-12	367668	4907594	2	0	0	100.3	100.3	1	1136.19	3.25	0	72.11	0	-0.18	0	0	11.34	0	0	0	0	0	0	17.05	17.05
	Inverter	MV3-18	367752	4907412	2	0	0	100.3	100.3	1	1245.95	3.25	0	72.91	0	-0.13	0	0	11.66	0	0	0	0	0	0	15.88	15.88
	Inverter	MV2-3	365820	4906641	2	0	0	100.3	100.3	1	1260.43	3.25	0	73.01	0	-0.13	0	0	11.7	0	0	0	0	0	0	15.73	15.73
	Inverter	MV3-7	367945	4907754	2	0	0	100.3	100.3	1	1412	3.25	0	74	0	-0.07	0	0	12.1	0	0	0	0	0	0	14.28	14.28
	Inverter	MV2-4	365586	4906624	2	0	0	100.3	100.3	1	1419.03	3.25	0	74.04	0	-0.06	0	0	12.12	0	0	0	0	0	0	14.22	14.22
	Inverter	MV3-3	367939	4907927	2	0	0	100.3	100.3	1	1425.74	3.25	0	74.08	0	-0.06	0	0	12.14	0	0	0	0	0	0	14.16	14.16
	Inverter	MV3-13	367963	4907577	2	0	0	100.3	100.3	1	1431.64	3.25	0	74.12	0	-0.06	0	0	12.15	0	0	0	0	0	0	14.1	14.1
	Inverter	MV2-1	365842	4906816	2	0	0	97.3	97.3	1	1106.81	3.25	0	71.88	0	-0.2	0	0	11.25	0	0	0	0	0	0	14.38	14.38
	Inverter	MV3-10	368167	4907669	2	0	0	100.3	100.3	1	1632.03	3.25	0	75.25	0	0.01	0	0	12.64	0	0	0	0	0	0	12.4	12.4
	Inverter	MV3-6	368162	4907834	2	0	0	100.3	100.3	1	1634.37	3.25	0	75.27	0	0.01	0	0	12.65	0	0	0	0	0	0	12.38	12.38
	Inverter	MV3-17	368178	4907472	2	0	0	100.3	100.3	1	1655.99	3.25	0	75.38	0	0.02	0	0	12.7	0	0	0	0	0	0	12.21	12.21
	Inverter	MV3-11	368346	4907662	2	0	0	100.3	100.3	1	1811.08	3.25	0	76.16	0	0.07	0	0	13.05	0	0	0	0	0	0	11.03	11.03
	Inverter	MV3-15	368357	4907477	2	0	0	100.3	100.3	1	1833.17	3.25	0	76.26	0	0.08	0	0	13.1	0	0	0	0	0	0	10.87	10.87
	Inverter	MV3-19	368357	4907347	2	0	0	100.3	100.3	1	1852	3.25	0	76.35	0	0.09	0	0	13.14	0	0	0	0	0	0	10.73	10.73
	Inverter	MV3-9	368512	4907703	2	0	0	100.3	100.3	1	1977.15	3.25	0	76.92	0	0.12	0	0	13.41	0	0	0	0	0	0	9.85	9.85
	Inverter	MV3-16	368514	4907475	2	0	0	100.3	100.3	1	1989.49	3.25	0	76.97	0	0.13	0	0	13.44	0	0	0	0	0	0	9.77	9.77
	Inverter	MV3-21	368478	4907206	2	0	0	100.3	100.3	1	1999.75	3.25	0	77.02	0	0.13	0	0	13.46	0	0	0	0	0	0	9.7	9.7
	Inverter	MV3-8	368680	4907712	2	0	0	100.3	100.3	1	2145.26	3.25	0	77.63	0	0.17	0	0	13.76	0	0	0	0	0	0	8.75	8.75
	Inverter	MV3-14	368684	4907498	2	0	0	100.3	100.3	1	2156.61	3.25	0	77.68	0	0.17	0	0	13.79	0	0	0	0	0	0	8.68	8.68
	Inverter	MV3-20	368689	4907317	2	0	0	100.3	100.3	1	2184.21	3.25	0	77.79	0	0.18	0	0	13.84	0	0	0	0	0	0	8.51	8.51
	Inverter	MV1-1	364715	4906166	2	0	0	100.3	100.3	1	2366.76	3.25	0	78.48	0	0.23	0	0	14.2	0	0	0	0	0	0	7.4	7.4
	Inverter	MV1-2	364753	4906063	2	0	0	100.3	100.3	1	2405.62	3.25	0	78.62	0	0.24	0	0	14.28	0	0	0	0	0	0	7.17	7.17
	Inverter	MV1-4	364815	4905918	2	0	0	100.3	100.3	1	2461.61	3.25	0	78.82	0	0.25	0	0	14.39	0	0	0	0	0	0	6.85	6.85
	Inverter	MV1-5	364671	4905892	2	0	0	100.3	100.3	1	2582.22	3.25	0	79.24	0	0.28	0	0	14.61	0	0	0	0	0	0	6.18	6.18
	Inverter	MV1-8	364788	4905647	2	0	0	100.3	100.3	1	2679.75	3.25	0	79.56	0	0.3	0	0	14.79	0	0	0	0	0	0	5.66	5.66
	Inverter	MV1-12	365038	4905386	2	0	0	100.3	100.3	1	2738.41	3.25	0	79.75	0	0.31	0	0	14.9	0	0	0	0	0	0	5.35	5.35
	Inverter	MV1-6	364477	4905835	2	0	0	100.3	100.3	1	2763.28	3.25	0	79.83	0	0.31	0	0	14.95	0	0	0	0	0	0	5.22	5.22
	Inverter	MV4-7	369035	4909001	2	0	0	100.3	100.3	1	2828.02	3.25	0	80.03	0	0.33	0	0	15.06	0	0	0	0	0	0	4.89	4.89
	Inverter	MV1-9	364561	4905646	2	0	0	100.3	100.3	1	2833.69	3.25	0	80.05	0	0.33	0	0	15.08	0	0	0	0	0	0	4.86	4.86
	Inverter	MV4-4	369027	4909199	2	0	0	100.3	100.3	1	2918.98	3.25	0	80.3	0	0.35	0	0	15.23	0	0	0	0	0	0	4.43	4.43
	Inverter	MV1-11	364655	4905414	2	0	0	100.3	100.3	1	2943.57	3.25	0	80.38	0	0.35	0	0	15.27	0	0	0	0	0	0	4.31	4.31
	Inverter	MV1-15	365315	4904994	2	0	0	100.3	100.3	1	2949.17	3.25	0	80.39	0	0.35	0	0	15.28	0	0	0	0	0	0	4.28	4.28
	Inverter	MV4-11	369264	4908855	2	0	0	100.3	100.3	1	2971.6	3.25	0	80.46	0	0.36	0	0	15.32	0	0	0	0	0	0	4.17	4.17
	Inverter	MV4-1	369011	4909397	2	0	0	100.3	100.3	1	3013.65	3.25	0	80.58	0	0.36	0	0	15.4	0	0	0	0	0	0	3.97	3.97
	Inverter	MV4-10	369312	4908858	2	0	0	100.3	100.3	1	3016.92	3.25	0	80.59	0	0.37	0	0	15.4	0	0	0	0	0	0	3.95	3.95
	Inverter	MV4-8	369256	4909001	2	0	0	100.3	100.3	1	3025.15	3.25	0	80.61	0	0.37	0	0	15.42	0	0	0	0	0	0	3.91	3.91
	Inverter	MV4-9	369289	4909001	2	0	0	100.3	100.3	1	3054.87	3.25	0	80.7	0	0.37	0	0	15.47	0	0	0	0	0	0	3.77	3.77
	Inverter	MV4-6	369243	4909192	2	0	0	100.3	100.3	1	3102.01	3.25	0	80.83	0	0.38	0	0	15.55	0	0	0	0	0	0	3.55	3.55
	Inverter	MV4-5	369289	4909199	2	0	0	100.3	100.3	1	3145.62	3.25	0	80.95	0	0.39	0	0	15.63	0	0	0	0	0	0	3.34	3.34
	Inverter	MV4-3	369229	4909397	2	0	0	100.3	100.3	1	3195.18	3.25	0	81.09	0	0.4	0	0	15.71	0	0	0	0	0	0	3.11	3.11
	Inverter	MV4-2	369272	4909397	2	0	0	100.3	100.3	1	3231.52	3.25	0	81.19	0	0.4	0	0	15.78	0	0	0	0	0	0	2.94	2.94
	Inverter	MV1-7	364925	4905782	2	0	0	97.3	97.3	1	2488.11	3.25	0	78.92	0	0.25	0	0	14.44	0	0	0	0	0	0	3.7	3.7
	Inverter	MV6-2	370085	4907339	2	0	0	100.3	100.3	1	3566.25	3.25	0	82.04	0	0.46	0	0	16.34	0	0	0	0	0	0	1.46	1.46
	Inverter	MV5-5	370015	4908690	2	0	0	100.3	100.3	1	3623.88	3.25	0	82.18	0	0.47	0	0	16.44	0	0	0	0	0	0	1.22	1.22
	Inverter	MV5-2	370006	4908853	2	0	0	100.3	100.3	1	3664.17	3.25	0	82.28	0	0.48	0	0	16.5	0	0	0	0	0	0	1.05	1.05
	Inverter	MV1-10	365004	4905564	2	0	0	97.3	97.3	1	2610.98	3.25	0	79.34	0	0.28	0	0	14.67	0	0	0	0	0	0	3.03	3.03
	Inverter	MV6-3	370207	4907140	2	0	0	100.3	100.3	1	3711.35	3.25	0	82.39	0	0.48	0	0	16.58	0	0	0	0	0	0	0.86	0.86
	Inverter	MV5-1	370020	4909142	2	0	0	100.3	100.3	1	3779.63	3.25	0	82.55	0	0.5	0	0	16.69	0	0	0	0	0	0	0.57	0.57

Inverter	MV5-3	370231	4908851	2	0	0	100.3	100.3	1	3877.37	3.25	0	82.77	0	0.51	0	0	16.85	0	0	0	0	0	0	0.18	0.18
Inverter	MV5-4	370324	4908707	2	0	0	100.3	100.3	1	3925.98	3.25	0	82.88	0	0.52	0	0	16.93	0	0	0	0	0	0	-0.01	-0.01
Inverter	MV1-14	365163	4905049	2	0	0	97.3	97.3	1	2966.36	3.25	0	80.44	0	0.36	0	0	15.31	0	0	0	0	0	0	1.2	1.2
Inverter	MV2-2	365977	4906654	2	0	0	89.1	89.1	1	1167.05	3.25	0	72.34	0	0.72	0	0	6.62	0	0	0	0	0	0	9.37	9.37
Inverter	MV1-13	364731	4905241	2	0	0	97.3	97.3	1	3032.86	3.25	0	80.64	0	0.37	0	0	15.43	0	0	0	0	0	0	0.88	0.88
DSTATCOM - 10 MVAR #2	DSAT2	369403	4908757	2.5	0	0	96.6	96.6	1	3063.9	3.5	0	80.73	0	3.43	0	0	2.34	0	0	0	0	0	0	10.14	10.14
DSTATCOM - 10 MVAR #1	DSAT1	369437	4908757	2.5	0	0	96.6	96.6	1	3095.75	3.5	0	80.82	0	3.43	0	0	2.35	0	0	0	0	0	0	10.03	10.03
Inverter	MV6-1	370235	4907364	2	0	0	97.3	97.3	1	3713.39	3.25	0	82.4	0	0.48	0	0	16.58	0	0	0	0	0	0	-2.15	-2.15
Inverter	MV3-1	368156	4907976	2	0	0	89.1	89.1	1	1647.99	3.25	0	75.34	0	0.83	0	0	7.46	0	0	0	0	0	0	5.43	5.43
Inverter	MV3-5	368340	4907843	2	0	0	89.1	89.1	1	1812.44	3.25	0	76.17	0	0.86	0	0	7.74	0	0	0	0	0	0	4.29	4.29
Inverter	MV3-4	368502	4907925	2	0	0	89.1	89.1	1	1982.32	3.25	0	76.94	0	0.9	0	0	8.02	0	0	0	0	0	0	3.2	3.2
Inverter	MV3-2	368671	4907928	2	0	0	89.1	89.1	1	2150.47	3.25	0	77.65	0	0.94	0	0	8.29	0	0	0	0	0	0	2.18	2.18
Inverter	MV3-22	368656	4907142	2	0	0	89.1	89.1	1	2187.93	3.25	0	77.8	0	0.95	0	0	8.35	0	0	0	0	0	0	1.96	1.96
SubstationTransformer	W_ST	369711.17	4906112.3	2.5	0	0	92	92	1	3541.57	4.25	0	81.98	0	1.22	2.75	0.26	6.74	0	0	0	0	0	0	-0.71	-0.71
Inverter	MV1-3	364440	4906039	2	0	0	89.1	89.1	1	2660.57	3.25	0	79.5	0	1.06	0	0	9.1	0	0	0	0	0	0	-0.6	-0.6
Inverter	MV4-13	369051	4908605	2	0	0	89.1	89.1	1	2681	3.25	0	79.57	0	1.07	0	0	9.13	0	0	0	0	0	0	-0.71	-0.71
Inverter	MV4-12	369043	4908803	2	0	0	89.1	89.1	1	2748.35	3.25	0	79.78	0	1.09	0	0	9.23	0	0	0	0	0	0	-1.04	-1.04
Inverter	MV4-15	369176	4908481	2	0	0	89.1	89.1	1	2760.09	3.25	0	79.82	0	1.09	0	0	9.25	0	0	0	0	0	0	-1.1	-1.1
Inverter	MV4-14	369176	4908507	2	0	0	89.1	89.1	1	2767.76	3.25	0	79.84	0	1.09	0	0	9.26	0	0	0	0	0	0	-1.14	-1.14
Fixed Reactor Bank 1	FRB1	369378	4908755	6	0	0	89.8	89.8	1	3039.81	5.25	0	80.66	0	-0.87	0	0	6.02	0	0	0	0	0	0	3.97	3.97
Fixed Reactor Bank 2	FRB2	369464	4908755	6	0	0	89.8	89.8	1	3120.39	5.25	0	80.88	0	-0.86	0	0	6.14	0	0	0	0	0	0	3.61	3.61
Westbrook Inverter Enclosur	W_INV2	369374	4906388	2	0	0	89.1	89.1	1	3118.75	3.25	0	80.88	0	1.18	0	0	9.8	0	0	0	0	0	0	-2.79	-2.79
Westbrook Inverter Enclosur	W_INV3	369508	4906164	2	0	0	89.1	89.1	1	3336.76	3.25	0	81.47	0	1.23	0	0	10.12	0	0	0	0	0	0	-3.76	-3.76
Westbrook Inverter Enclosur	W_INV5	369719	4906574	2	0	0	89.1	89.1	1	3370.29	3.25	0	81.55	0	1.24	0	0	10.17	0	0	0	0	0	0	-3.9	-3.9
Westbrook Inverter Enclosur	W_INV7	369780	4906417	2	0	0	89.1	89.1	1	3481.76	3.25	0	81.84	0	1.26	0	0	10.34	0	0	0	0	0	0	-4.38	-4.38
Westbrook Inverter Enclosur	W_INV4	369673	4906164	2	0	0	89.1	89.1	1	3484.58	3.25	0	81.84	0	1.27	0	0	10.34	0	0	0	0	0	0	-4.39	-4.39
Westbrook Inverter Enclosur	W_INV6	369875	4906578	2	0	0	89.1	89.1	1	3516.79	3.25	0	81.92	0	1.27	0	0	10.39	0	0	0	0	0	0	-4.53	-4.53
Inverter	MV5-6	369982	4908507	2	0	0	89.1	89.1	1	3545.05	3.25	0	81.99	0	1.28	0	0	10.43	0	0	0	0	0	0	-4.64	-4.64
Gardiner Substation	G_Sub	366586.3	4903349.9	2.5	0	0	90.8	90.8	1	4329.4	4.25	0	83.73	0	1.48	2.59	0.37	7.79	0	0	0	0	0	0	-4.82	-4.82
Westbrook Inverter Enclosur	W_INV1	369409	4906578	2	0	0	86.1	86.1	1	3077.67	3.25	0	80.76	0	1.17	0	0	9.73	0	0	0	0	0	0	-5.61	-5.61
Inverters	G_Inv2	366676.9	4903239.1	2	0	0	87.7	87.7	1	4442.17	3.25	0	83.95	0	2.83	0	0	5.35	0	0	0	0	0	0	-4.47	-4.47
Inverters	G_Inv1	366526.4	4903225.8	2	0	0	87.7	87.7	1	4453.21	3.25	0	83.97	0	2.83	0	0	5.36	0	0	0	0	0	0	-4.5	-4.5
Inverter	MV6-4	370250	4906966	2	0	0	86.1	86.1	1	3782.8	3.25	0	82.56	0	1.34	0	0	10.77	0	0	0	0	0	0	-8.61	-8.61
Inverters	G_Inv4	366732.8	4903105	2	0	0	87.7	87.7	1	4578.28	3.25	0	84.21	0	2.84	0	0	5.49	0	0	0	0	0	0	-4.88	-4.88
Inverters	G_Inv3	366583.7	4903091.4	2	0	0	87.7	87.7	1	4587.86	3.25	0	84.23	0	2.84	0	0	5.5	0	0	0	0	0	0	-4.91	-4.91
Inverters	G_Inv6	366788.5	4902972	2	0	0	87.7	87.7	1	4713.82	3.25	0	84.47	0	2.85	0	0	5.64	0	0	0	0	0	0	-5.29	-5.29
Inverters	G_Inv5	366638.5	4902958.1	2	0	0	87.7	87.7	1	4722.04	3.25	0	84.48	0	2.85	0	0	5.65	0	0	0	0	0	0	-5.32	-5.32
Inverters	G_Inv8	366844.5	4902838.5	2	0	0	87.7	87.7	1	4850.39	3.25	0	84.72	0	2.86	0	0	5.78	0	0	0	0	0	0	-5.69	-5.69
Inverters	G_Inv7	366694.6	4902824.7	2	0	0	87.7	87.7	1	4856.92	3.25	0	84.73	0	2.86	0	0	5.79	0	0	0	0	0	0	-5.71	-5.71
Inverters	G_Inv10	366900.7	4902704.8	2	0	0	87.7	87.7	1	4987.63	3.25	0	84.96	0	2.86	0	0	5.93	0	0	0	0	0	0	-6.09	-6.09
Inverters	G_Inv9	366750.9	4902691.8	2	0	0	87.7	87.7	1	4991.87	3.25	0	84.97	0	2.86	0	0	5.93	0	0	0	0	0	0	-6.1	-6.1
Westbrook Inverter Transfor	W_INVTR1	369403	4906578	2	0	0	78.2	78.2	1	3072.07	3.25	0	80.75	0	-2.73	0	0	1.69	0	0	0	0	0	0	-1.46	-1.46
Inverter Transformer	MV2-1 T	365836	4906816	2	0	0	69.4	69.4	1	1110.57	3.25	0	71.91	0	1.77	0	0	3.96	0	0	0	0	0	0	-8.29	-8.29
Westbrook Inverter Transfor	W_INVTR2	369368	4906388	2	0	0	77.3	77.3	1	3113.29	3.25	0	80.86	0	-2.74	0	0	1.7	0	0	0	0	0	0	-2.48	-2.48
Westbrook Inverter Transfor	W_INVTR3	369514	4906164	2	0	0	77.3	77.3	1	3342.11	3.25	0	81.48	0	-2.8	0	0	1.8	0	0	0	0	0	0	-3.13	-3.13
Westbrook Inverter Transfor	W_INVTR5	369725	4906574	2	0	0	77.3	77.3	1	3375.96	3.25	0	81.57	0	-2.81	0	0	1.81	0	0	0	0	0	0	-3.23	-3.23
Westbrook Inverter Transfor	W_INVTR7	369786	4906417	2	0	0	77.3	77.3	1	3487.36	3.25	0	81.85	0	-2.84	0	0	1.86	0	0	0	0	0	0	-3.52	-3.52
Westbrook Inverter Transfor	W_INVTR4	369679	4906164	2	0	0	77.3	77.3	1	3489.98	3.25	0	81.86	0	-2.84	0	0	1.86	0	0	0	0	0	0	-3.53	-3.53
Westbrook Inverter Transfor	W_INVTR6	369881	4906578	2	0	0	77.3	77.3	1	3522.49	3.25	0	81.94	0	-2.85	0	0	1.87	0	0	0	0	0	0	-3.62	-3.62
Inverter Transformer	MV1-7 T	364919	4905782	2	0	0	69.4	69.4	1	2492	3.25	0	78.93	0	2.35	0	0	5.44	0	0	0	0	0	0	-17.36	-17.36
Inverter Transformer	MV1-10 T	365010	4905564	2	0	0	69.4	69.4	1	2607.46	3.25	0	79.32	0	2.38	0	0	5.54	0	0	0	0	0	0	-17.9	-17.9
Inverter Transformer	MV1-14 T	365157	4905049	2	0	0	69.4	69.4	1	2969.14	3.25	0	80.45	0	2.5	0	0	5.86	0	0	0	0	0	0	-19.46	-19.46
Inverter Transformer	MV1-13 T	364725	4905241	2	0	0	69.4	69.4	1	3036.44	3.25	0	80.65	0	2.52	0	0	5.91	0	0	0	0	0	0	-19.73	-19.73
Inverter Transformer	MV6-1 T	370230	4907364	2	0	0	69.4	69.4	1	3708.4	3.25	0	82.38	0	2.71	0	0	6.46	0	0	0	0	0	0	-22.2	-22.2
Inverter Transformer	MV6-4 T	370244	4906966	2	0	0	69.4	69.4	1	3776.91	3.25	0	82.54	0	2.73	0	0	6.51	0	0	0	0	0	0	-22.43	-22.43
Inverter Transformer	MV3-12 T	367674	4907594	2	0	0	56.1	56.1	1	1142.17	3.25	0	72.15	0	0.06	0	0	5.22	0	0	0	0	0	0	-21.38	-21.38
Inverter Transformer	MV2-2 T	365982	4906654	2	0	0	56.1	56.1	1	1164.66	3.25	0	72.32	0	0.07	0	0	5.27	0	0	0	0	0	0	-21.61	-21.61
Inverter Transformer	MV3-18 T	367757	4907412	2	0	0	56.1	56.1	1	1250.83	3.25	0	72.94	0	0.1	0	0	5.47	0	0	0	0	0	0	-22.46	-22.46
Inverter Transformer	MV2-3 T	365814	4906641	2	0	0	56.1	56.1	1	1263.84	3.25	0	73.03	0	0.11	0	0	5.5	0	0	0	0	0	0	-22.58	-22.58
Inverter Transformer	MV2-4 T	365590	4906628	2	0	0	56.1	56.1	1	1413.38	3.25	0	74.01	0	0.16	0	0	5.83	0	0	0	0	0	0	-23.94	-23.94
Inverter Transformer	MV3-7 T	367951	4907754	2	0	0	56.1	56.1	1	1417.99	3.25	0	74.03	0	0.17	0	0	5.84	0	0	0	0	0	0	-23.98	-23.98
Inverter Transformer	MV3-13 T	367958	4907577	2	0	0	56.1	56.1	1	1426.65	3.25	0	74.09	0	0.17	0	0	5.86	0	0	0	0	0	0	-24.06	-24.06
Inverter Transformer	MV3-3 T	367944	4907927	2	0	0	56.1	56.1	1	1430.66	3.25	0	74.11	0	0.17	0	0	5.87	0	0	0	0	0	0	-24.09	-24.09
Inverter Transformer	MV3-10 T	368162	4907669	2	0	0	56.1	56.1	1	1627.03	3.25	0	75.23	0	0.25	0	0	6.29	0	0	0	0	0	0	-25.71	-25.71
Inverter Transformer	MV3-6 T	368156	4907834	2	0	0	56.1	56.1	1	1628.4	3.25	0	75.24	0	0.25	0	0	6.29	0	0	0	0	0	0	-25.72	-25.72
Inverter Transformer	MV3-1 T	368150	4907976	2	0	0	56.1	56.1	1	1642.08	3.25	0	75.31	0	0.26	0	0	6.32	0	0	0	0	0	0	-25.82	-25.82
Inverter Transformer	MV3-17 T	368183	4907472	2	0	0	56.1	56.1	1	1660.95	3.25	0	75.41	0	0.26	0	0	6.36	0	0	0	0	0	0	-25.97	-25.97
Inverter Transformer	MV3-11 T	368340	4907662	2	0	0	56.1	56.1	1	1805.08	3.25	0	76.13	0	0.32	0	0	6.65	0	0	0	0	0	0	-27.05	-27.05
Inverter Transformer	MV3-5 T	368335	4907843	2	0	0	56.1	56.1	1	1807.46	3.25	0	76.14	0	0.32	0	0	6.66	0	0	0	0	0	0	-27.07	-27.07
Inverter Transformer	MV3-15 T	368351	4907477	2	0	0	56.1	56.1	1	1827.2	3.25	0	76.24	0	0.33	0	0	6.7	0	0	0	0	0	0	-27.21	-27.21
Inverter Transformer	MV3-19 T	368352	4907347	2	0	0	56.1	56.1	1	1847.08	3.25	0	76.33	0	0.34	0	0	6.74	0	0	0	0	0	0	-27.35	-27.35
Inverter Transformer	MV3-9 T	368517	4907703	2	0	0	56.1	56.1	1	1982.15	3.25	0	76.94	0	0.4	0	0	7.01	0	0	0	0	0	0	-28.29	-28.29
Inverter Transformer	MV3-16 T	368509	4907475	2	0	0	56.1	56.1	1	1984.51	3.25	0	76.95	0	0.4	0	0	7.01	0	0	0	0	0	0	-28.31	-28.31
Inverter Transformer	MV3-4 T	368507	4907925	2	0	0	56.1	56.1	1	1987.29	3.25	0	76.97	0	0.4	0	0	7.02	0	0	0	0	0	0	-28.32	-28.32

	Inverter Transformer	MV3-21 T	368484	4907206	2	0	0	56.1	56.1	1	2005.58	3.25	0	77.04	0	0.41	0	0	7.05	0	0	0	0	0	0	-28.45	-28.45
	Inverter Transformer	MV3-8 T	368685	4907712	2	0	0	56.1	56.1	1	2150.25	3.25	0	77.65	0	0.47	0	0	7.34	0	0	0	0	0	0	-29.39	-29.39
	Inverter Transformer	MV3-14 T	368678	4907498	2	0	0	56.1	56.1	1	2150.63	3.25	0	77.65	0	0.47	0	0	7.34	0	0	0	0	0	0	-29.4	-29.4
	Inverter Transformer	MV3-2 T	368677	4907928	2	0	0	56.1	56.1	1	2156.43	3.25	0	77.67	0	0.47	0	0	7.35	0	0	0	0	0	0	-29.43	-29.43
	Inverter Transformer	MV3-20 T	368683	4907317	2	0	0	56.1	56.1	1	2178.29	3.25	0	77.76	0	0.48	0	0	7.39	0	0	0	0	0	0	-29.57	-29.57
	Inverter Transformer	MV3-22 T	368661	4907142	2	0	0	56.1	56.1	1	2192.77	3.25	0	77.82	0	0.49	0	0	7.42	0	0	0	0	0	0	-29.66	-29.66
	Inverter Transformer	MV1-1 T	364721	4906166	2	0	0	56.1	56.1	1	2362.15	3.25	0	78.47	0	0.56	0	0	7.74	0	0	0	0	0	0	-30.7	-30.7
	Inverter Transformer	MV1-2 T	364759	4906063	2	0	0	56.1	56.1	1	2401.17	3.25	0	78.61	0	0.57	0	0	7.81	0	0	0	0	0	0	-30.93	-30.93
	Inverter Transformer	MV1-4 T	364821	4905918	2	0	0	56.1	56.1	1	2457.42	3.25	0	78.81	0	0.6	0	0	7.91	0	0	0	0	0	0	-31.26	-31.26
	Inverter Transformer	MV1-5 T	364676	4905892	2	0	0	56.1	56.1	1	2578.62	3.25	0	79.23	0	0.65	0	0	8.13	0	0	0	0	0	0	-31.95	-31.95
	Inverter Transformer	MV1-3 T	364435	4906039	2	0	0	56.1	56.1	1	2664.51	3.25	0	79.51	0	0.69	0	0	8.29	0	0	0	0	0	0	-32.43	-32.43
	Inverter Transformer	MV1-8 T	364782	4905647	2	0	0	56.1	56.1	1	2683.66	3.25	0	79.57	0	0.69	0	0	8.32	0	0	0	0	0	0	-32.53	-32.53
	Inverter Transformer	MV4-13 T	369057	4908605	2	0	0	56.1	56.1	1	2686.63	3.25	0	79.58	0	0.7	0	0	8.32	0	0	0	0	0	0	-32.55	-32.55
	Inverter Transformer	MV1-12 T	365044	4905386	2	0	0	56.1	56.1	1	2735.13	3.25	0	79.74	0	0.72	0	0	8.41	0	0	0	0	0	0	-32.81	-32.81
	Inverter Transformer	MV4-12 T	369049	4908803	2	0	0	56.1	56.1	1	2753.83	3.25	0	79.8	0	0.72	0	0	8.44	0	0	0	0	0	0	-32.91	-32.91
	Inverter Transformer	MV4-15 T	369170	4908481	2	0	0	56.1	56.1	1	2754.35	3.25	0	79.8	0	0.73	0	0	8.44	0	0	0	0	0	0	-32.91	-32.91
	Inverter Transformer	MV1-6 T	364482	4905835	2	0	0	56.1	56.1	1	2759.56	3.25	0	79.82	0	0.73	0	0	8.45	0	0	0	0	0	0	-32.94	-32.94
	Inverter Transformer	MV4-14 T	369182	4908507	2	0	0	56.1	56.1	1	2773.48	3.25	0	79.86	0	0.73	0	0	8.48	0	0	0	0	0	0	-33.01	-33.01
	Inverter Transformer	MV4-7 T	369040	4909001	2	0	0	56.1	56.1	1	2832.44	3.25	0	80.04	0	0.76	0	0	8.58	0	0	0	0	0	0	-33.32	-33.32
	Inverter Transformer	MV1-9 T	364555	4905646	2	0	0	56.1	56.1	1	2837.87	3.25	0	80.06	0	0.76	0	0	8.59	0	0	0	0	0	0	-33.35	-33.35
	Inverter Transformer	MV4-4 T	369033	4909199	2	0	0	56.1	56.1	1	2924.11	3.25	0	80.32	0	0.8	0	0	8.74	0	0	0	0	0	0	-33.8	-33.8
	Inverter Transformer	MV1-11 T	364649	4905414	2	0	0	56.1	56.1	1	2947.41	3.25	0	80.39	0	0.81	0	0	8.78	0	0	0	0	0	0	-33.92	-33.92
	Inverter Transformer	MV1-15 T	365309	4904994	2	0	0	56.1	56.1	1	2951.66	3.25	0	80.4	0	0.81	0	0	8.79	0	0	0	0	0	0	-33.94	-33.94
	Inverter Transformer	MV4-11 T	369269	4908855	2	0	0	56.1	56.1	1	2976.2	3.25	0	80.47	0	0.82	0	0	8.83	0	0	0	0	0	0	-34.06	-34.06
	Inverter Transformer	MV4-10 T	369307	4908858	2	0	0	56.1	56.1	1	3012.31	3.25	0	80.58	0	0.84	0	0	8.89	0	0	0	0	0	0	-34.24	-34.24
	Inverter Transformer	MV4-1 T	369017	4909397	2	0	0	56.1	56.1	1	3018.58	3.25	0	80.6	0	0.84	0	0	8.9	0	0	0	0	0	0	-34.27	-34.27
	Inverter Transformer	MV4-8 T	369262	4909001	2	0	0	56.1	56.1	1	3030.55	3.25	0	80.63	0	0.84	0	0	8.92	0	0	0	0	0	0	-34.33	-34.33
	Inverter Transformer	MV4-9 T	369284	4909001	2	0	0	56.1	56.1	1	3050.36	3.25	0	80.69	0	0.85	0	0	8.95	0	0	0	0	0	0	-34.43	-34.43
	Inverter Transformer	MV4-6 T	369249	4909192	2	0	0	56.1	56.1	1	3107.24	3.25	0	80.85	0	0.88	0	0	9.05	0	0	0	0	0	0	-34.71	-34.71
	Inverter Transformer	MV4-5 T	369283	4909199	2	0	0	56.1	56.1	1	3140.37	3.25	0	80.94	0	0.89	0	0	9.1	0	0	0	0	0	0	-34.87	-34.87
	Inverter Transformer	MV4-3 T	369234	4909397	2	0	0	56.1	56.1	1	3199.4	3.25	0	81.1	0	0.91	0	0	9.2	0	0	0	0	0	0	-35.16	-35.16
	Inverter Transformer	MV4-2 T	369267	4909397	2	0	0	56.1	56.1	1	3227.28	3.25	0	81.18	0	0.93	0	0	9.25	0	0	0	0	0	0	-35.29	-35.29
	Inverter Transformer	MV5-6 T	369987	4908507	2	0	0	56.1	56.1	1	3549.91	3.25	0	82	0	1.06	0	0	9.77	0	0	0	0	0	0	-36.77	-36.77
	Inverter Transformer	MV6-2 T	370091	4907339	2	0	0	56.1	56.1	1	3572.22	3.25	0	82.06	0	1.07	0	0	9.8	0	0	0	0	0	0	-36.87	-36.87
	Inverter Transformer	MV5-5 T	370021	4908690	2	0	0	56.1	56.1	1	3629.65	3.25	0	82.2	0	1.09	0	0	9.89	0	0	0	0	0	0	-37.12	-37.12
	Inverter Transformer	MV5-2 T	370011	4908853	2	0	0	56.1	56.1	1	3668.9	3.25	0	82.29	0	1.11	0	0	9.95	0	0	0	0	0	0	-37.29	-37.29
	Inverter Transformer	MV6-3 T	370202	4907140	2	0	0	56.1	56.1	1	3706.4	3.25	0	82.38	0	1.13	0	0	10.01	0	0	0	0	0	0	-37.46	-37.46
	Inverter Transformer	MV5-1 T	370015	4909142	2	0	0	56.1	56.1	1	3775.02	3.25	0	82.54	0	1.15	0	0	10.12	0	0	0	0	0	0	-37.75	-37.75
	Inverter Transformer	MV5-3 T	370237	4908851	2	0	0	56.1	56.1	1	3883.09	3.25	0	82.78	0	1.2	0	0	10.28	0	0	0	0	0	0	-38.2	-38.2
	Inverter Transformer	MV5-4 T	370330	4908707	2	0	0	56.1	56.1	1	3931.77	3.25	0	82.89	0	1.22	0	0	10.35	0	0	0	0	0	0	-38.4	-38.4
	Line Reactor	NGR	369421	4908787.5	5	0	0	45.4	45.4	1	3091.56	5.25	0	80.8	0	3.32	1.32	0.11	1.27	0	0	0	0	0	0	-41.35	-41.35
Limit. Valu	0	0																								
Level D/N:	28.3275	28.3275																								

Receiver: Existing Noise Receptor
ID: S-R104
X: 366573
Y: 4907703
Z: 4.5
Ground: 0

ISO	Description	ID	X	Y	Z	Ground	ReflOrd	LxT	LxN	L/A	Dist.	hm	Freq	Adiv	K0b	Agr	Abar	z	Aatm	Afol	Ahous	Cmet	CmetN	Dc	RL	LtotT	LtotN
	Sol_Luce Substation	S_Substation	369426	4908792	3.5	0	0	112.1	112.1	1	3053.77	5.25	0	80.7	0	0.31	3.36	0.31	6.04	0	0	0	0	0	0	21.68	21.68
	Inverter	MV3-12	367668	4907594	2	0	0	100.3	100.3	1	1100.41	3.25	0	71.83	0	-0.2	0	0	11.23	0	0	0	0	0	0	17.45	17.45
	Inverter	MV3-18	367752	4907412	2	0	0	100.3	100.3	1	1214.38	3.25	0	72.69	0	-0.15	0	0	11.57	0	0	0	0	0	0	16.21	16.21
	Inverter	MV2-3	365820	4906641	2	0	0	100.3	100.3	1	1301.87	3.25	0	73.29	0	-0.11	0	0	11.81	0	0	0	0	0	0	15.32	15.32
	Inverter	MV3-7	367945	4907754	2	0	0	100.3	100.3	1	1372.95	3.25	0	73.75	0	-0.08	0	0	12	0	0	0	0	0	0	14.64	14.64
	Inverter	MV3-3	367939	4907927	2	0	0	100.3	100.3	1	1384.25	3.25	0	73.82	0	-0.08	0	0	12.03	0	0	0	0	0	0	14.54	14.54
	Inverter	MV3-13	367963	4907577	2	0	0	100.3	100.3	1	1395.7	3.25	0	73.9	0	-0.07	0	0	12.06	0	0	0	0	0	0	14.43	14.43
	Inverter	MV2-4	365586	4906624	2	0	0	100.3	100.3	1	1462.33	3.25	0	74.3	0	-0.05	0	0	12.23	0	0	0	0	0	0	13.83	13.83
	Inverter	MV3-10	368167	4907669	2	0	0	100.3	100.3	1	1594.36	3.25	0	75.05	0	0	0	0	12.55	0	0	0	0	0	0	12.71	12.71
	Inverter	MV3-6	368162	4907834	2	0	0	100.3	100.3	1	1594.39	3.25	0	75.05	0	0	0	0	12.55	0	0	0	0	0	0	12.7	12.7
	Inverter	MV3-17	368178	4907472	2	0	0	100.3	100.3	1	1621.54	3.25	0	75.2	0	0.01	0	0	12.62	0	0	0	0	0	0	12.48	12.48
	Inverter	MV2-1	365842	4906816	2	0	0	97.3	97.3	1	1149.41	3.25	0	72.21	0	-0.18	0	0	11.38	0	0	0	0	0	0	13.9	13.9
	Inverter	MV3-11	368346	4907662	2	0	0	100.3	100.3	1	1773.48	3.25	0	75.98	0	0.06	0	0	12.97	0	0	0	0	0	0	11.31	11.31
	Inverter	MV3-15	368357	4907477	2	0	0	100.3	100.3	1	1798.26	3.25	0	76.1	0	0.07	0	0	13.03	0	0	0	0	0	0	11.12	11.12
	Inverter	MV3-19	368357	4907347	2	0	0	100.3	100.3	1	1819.18	3.25	0	76.2	0	0.08	0	0	13.07	0	0	0	0	0	0	10.97	10.97
	Inverter	MV3-9	368512	4907703	2	0	0	100.3	100.3	1	1939	3.25	0	76.75	0	0.11	0	0	13.33	0	0	0	0	0	0	10.12	10.12
	Inverter	MV3-16	368514	4907475	2	0	0	100.3	100.3	1	1954.35	3.25	0	76.82	0	0.12	0	0	13.37	0	0	0	0	0	0	10.01	10.01
	Inverter	MV3-21	368478	4907206	2	0	0	100.3	100.3	1	1968.77	3.25	0	76.88	0	0.12	0	0	13.4	0	0	0	0	0	0	9.91	9.91
	Inverter	MV3-8	368680	4907712	2	0	0	100.3	100.3	1	2107.02	3.25	0	77.47	0	0.16	0	0	13.68	0	0	0	0	0	0	9	9
	Inverter	MV3-14	368684	4907498	2	0	0	100.3	100.3	1	2120.93	3.25	0	77.53	0	0.16	0	0	13.71	0	0	0	0	0	0	8.91	8.91
	Inverter	MV3-20	368689	4907317	2	0	0	100.3	100.3	1	2150.92	3.25	0	77.65	0	0.17	0	0	13.77	0	0	0	0	0	0	8.71	8.71
	Inverter	MV1-1	364715	4906166	2	0	0	100.3	100.3	1	2411.34	3.25	0	78.65	0	0.24	0	0	14.29	0	0	0	0	0	0	7.14	7.14

Inverter	MV1-2	364753	4906063	2	0	0	100.3	100.3	1	2449.9	3.25	0	78.78	0	0.25	0	0	14.36	0	0	0	0	0	0	6.92	6.92
Inverter	MV1-4	364815	4905918	2	0	0	100.3	100.3	1	2505.35	3.25	0	78.98	0	0.26	0	0	14.47	0	0	0	0	0	0	6.61	6.61
Inverter	MV1-5	364671	4905892	2	0	0	100.3	100.3	1	2626.28	3.25	0	79.39	0	0.29	0	0	14.7	0	0	0	0	0	0	5.94	5.94
Inverter	MV1-8	364788	4905647	2	0	0	100.3	100.3	1	2722.75	3.25	0	79.7	0	0.31	0	0	14.87	0	0	0	0	0	0	5.43	5.43
Inverter	MV1-12	365038	4905386	2	0	0	100.3	100.3	1	2779.34	3.25	0	79.88	0	0.32	0	0	14.98	0	0	0	0	0	0	5.14	5.14
Inverter	MV4-7	369035	4909001	2	0	0	100.3	100.3	1	2783.21	3.25	0	79.89	0	0.32	0	0	14.98	0	0	0	0	0	0	5.12	5.12
Inverter	MV1-6	364477	4905835	2	0	0	100.3	100.3	1	2807.61	3.25	0	79.97	0	0.32	0	0	15.03	0	0	0	0	0	0	4.99	4.99
Inverter	MV4-4	369027	4909199	2	0	0	100.3	100.3	1	2874.05	3.25	0	80.17	0	0.34	0	0	15.15	0	0	0	0	0	0	4.66	4.66
Inverter	MV1-9	364561	4905646	2	0	0	100.3	100.3	1	2877.39	3.25	0	80.18	0	0.34	0	0	15.15	0	0	0	0	0	0	4.64	4.64
Inverter	MV4-11	369264	4908855	2	0	0	100.3	100.3	1	2927.22	3.25	0	80.33	0	0.35	0	0	15.24	0	0	0	0	0	0	4.39	4.39
Inverter	MV4-1	369011	4909397	2	0	0	100.3	100.3	1	2968.75	3.25	0	80.45	0	0.36	0	0	15.32	0	0	0	0	0	0	4.19	4.19
Inverter	MV4-10	369312	4908858	2	0	0	100.3	100.3	1	2972.57	3.25	0	80.46	0	0.36	0	0	15.32	0	0	0	0	0	0	4.17	4.17
Inverter	MV4-8	369256	4909001	2	0	0	100.3	100.3	1	2980.49	3.25	0	80.49	0	0.36	0	0	15.34	0	0	0	0	0	0	4.13	4.13
Inverter	MV1-11	364655	4905414	2	0	0	100.3	100.3	1	2986.34	3.25	0	80.5	0	0.36	0	0	15.35	0	0	0	0	0	0	4.1	4.1
Inverter	MV1-15	365315	4904994	2	0	0	100.3	100.3	1	2986.85	3.25	0	80.5	0	0.36	0	0	15.35	0	0	0	0	0	0	4.1	4.1
Inverter	MV4-9	369289	4909001	2	0	0	100.3	100.3	1	3010.23	3.25	0	80.57	0	0.36	0	0	15.39	0	0	0	0	0	0	3.99	3.99
Inverter	MV4-6	369243	4909192	2	0	0	100.3	100.3	1	3057.13	3.25	0	80.71	0	0.37	0	0	15.47	0	0	0	0	0	0	3.76	3.76
Inverter	MV4-5	369289	4909199	2	0	0	100.3	100.3	1	3100.75	3.25	0	80.83	0	0.38	0	0	15.55	0	0	0	0	0	0	3.55	3.55
Inverter	MV4-3	369229	4909397	2	0	0	100.3	100.3	1	3150.23	3.25	0	80.97	0	0.39	0	0	15.64	0	0	0	0	0	0	3.32	3.32
Inverter	MV4-2	369272	4909397	2	0	0	100.3	100.3	1	3186.57	3.25	0	81.07	0	0.4	0	0	15.7	0	0	0	0	0	0	3.15	3.15
Inverter	MV6-2	370085	4907339	2	0	0	100.3	100.3	1	3530.81	3.25	0	81.96	0	0.46	0	0	16.28	0	0	0	0	0	0	1.62	1.62
Inverter	MV1-7	364925	4905782	2	0	0	97.3	97.3	1	2531.04	3.25	0	79.07	0	0.26	0	0	14.52	0	0	0	0	0	0	3.47	3.47
Inverter	MV5-5	370015	4908690	2	0	0	100.3	100.3	1	3580.72	3.25	0	82.08	0	0.46	0	0	16.37	0	0	0	0	0	0	1.4	1.4
Inverter	MV5-2	370006	4908853	2	0	0	100.3	100.3	1	3620.5	3.25	0	82.18	0	0.47	0	0	16.43	0	0	0	0	0	0	1.23	1.23
Inverter	MV6-3	370207	4907140	2	0	0	100.3	100.3	1	3677.35	3.25	0	82.31	0	0.48	0	0	16.53	0	0	0	0	0	0	1	1
Inverter	MV5-1	370020	4909142	2	0	0	100.3	100.3	1	3735.31	3.25	0	82.45	0	0.49	0	0	16.62	0	0	0	0	0	0	0.76	0.76
Inverter	MV1-10	365004	4905564	2	0	0	97.3	97.3	1	2652.75	3.25	0	79.47	0	0.29	0	0	14.74	0	0	0	0	0	0	2.8	2.8
Inverter	MV5-3	370231	4908851	2	0	0	100.3	100.3	1	3833.91	3.25	0	82.67	0	0.5	0	0	16.78	0	0	0	0	0	0	0.35	0.35
Inverter	MV5-4	370324	4908707	2	0	0	100.3	100.3	1	3883.04	3.25	0	82.78	0	0.51	0	0	16.86	0	0	0	0	0	0	0.16	0.16
Inverter	MV1-14	365163	4905049	2	0	0	97.3	97.3	1	3005.3	3.25	0	80.56	0	0.36	0	0	15.38	0	0	0	0	0	0	1.01	1.01
Inverter	MV1-13	364731	4905241	2	0	0	97.3	97.3	1	3074.8	3.25	0	80.76	0	0.38	0	0	15.5	0	0	0	0	0	0	0.68	0.68
Inverter	MV2-2	365977	4906654	2	0	0	89.1	89.1	1	1206.49	3.25	0	72.63	0	0.73	0	0	6.69	0	0	0	0	0	0	9	9
DSTATCOM - 10 MVAR #2	DSAT2	369403	4908757	2.5	0	0	96.6	96.6	1	3019.9	3.5	0	80.6	0	3.42	0	0	2.31	0	0	0	0	0	0	10.3	10.3
DSTATCOM - 10 MVAR #1	DSAT1	369437	4908757	2.5	0	0	96.6	96.6	1	3051.79	3.5	0	80.69	0	3.42	0	0	2.33	0	0	0	0	0	0	10.19	10.19
Inverter	MV6-1	370235	4907364	2	0	0	97.3	97.3	1	3677.66	3.25	0	82.31	0	0.48	0	0	16.53	0	0	0	0	0	0	-2	-2
Inverter	MV3-1	368156	4907976	2	0	0	89.1	89.1	1	1606.37	3.25	0	75.12	0	0.82	0	0	7.39	0	0	0	0	0	0	5.73	5.73
Inverter	MV3-5	368340	4907843	2	0	0	89.1	89.1	1	1772.54	3.25	0	75.97	0	0.85	0	0	7.67	0	0	0	0	0	0	4.56	4.56
Inverter	MV3-4	368502	4907925	2	0	0	89.1	89.1	1	1941.73	3.25	0	76.76	0	0.89	0	0	7.95	0	0	0	0	0	0	3.45	3.45
Inverter	MV3-2	368671	4907928	2	0	0	89.1	89.1	1	2110.03	3.25	0	77.49	0	0.93	0	0	8.22	0	0	0	0	0	0	2.42	2.42
Inverter	MV3-22	368656	4907142	2	0	0	89.1	89.1	1	2157.22	3.25	0	77.68	0	0.94	0	0	8.3	0	0	0	0	0	0	2.14	2.14
SubstationTransformer	W_ST	369711.17	4906112.3	2.5	0	0	92	92	1	3518.31	4.25	0	81.93	0	1.21	2.75	0.26	6.71	0	0	0	0	0	0	-0.62	-0.62
Inverter	MV4-13	369051	4908605	2	0	0	89.1	89.1	1	2637.06	3.25	0	79.42	0	1.06	0	0	9.06	0	0	0	0	0	0	-0.48	-0.48
Inverter	MV4-12	369043	4908803	2	0	0	89.1	89.1	1	2703.87	3.25	0	79.64	0	1.07	0	0	9.16	0	0	0	0	0	0	-0.82	-0.82
Inverter	MV1-3	364440	4906039	2	0	0	89.1	89.1	1	2705.29	3.25	0	79.64	0	1.08	0	0	9.17	0	0	0	0	0	0	-0.83	-0.83
Inverter	MV4-15	369176	4908481	2	0	0	89.1	89.1	1	2716.78	3.25	0	79.68	0	1.08	0	0	9.18	0	0	0	0	0	0	-0.88	-0.88
Inverter	MV4-14	369176	4908507	2	0	0	89.1	89.1	1	2724.34	3.25	0	79.71	0	1.08	0	0	9.2	0	0	0	0	0	0	-0.92	-0.92
Fixed Reactor Bank 1	FRB1	369378	4908755	6	0	0	89.8	89.8	1	2995.79	5.25	0	80.53	0	-0.87	0	0	5.95	0	0	0	0	0	0	4.17	4.17
Fixed Reactor Bank 2	FRB2	369464	4908755	6	0	0	89.8	89.8	1	3076.46	5.25	0	80.76	0	-0.86	0	0	6.07	0	0	0	0	0	0	3.81	3.81
Westbrook Inverter Enclosur	W_INV2	369374	4906388	2	0	0	89.1	89.1	1	3094.32	3.25	0	80.81	0	1.17	0	0	9.76	0	0	0	0	0	0	-2.68	-2.68
Westbrook Inverter Enclosur	W_INV3	369508	4906164	2	0	0	89.1	89.1	1	3314.02	3.25	0	81.41	0	1.22	0	0	10.09	0	0	0	0	0	0	-3.66	-3.66
Westbrook Inverter Enclosur	W_INV5	369719	4906574	2	0	0	89.1	89.1	1	3342.45	3.25	0	81.48	0	1.23	0	0	10.13	0	0	0	0	0	0	-3.78	-3.78
Westbrook Inverter Enclosur	W_INV7	369780	4906417	2	0	0	89.1	89.1	1	3455.24	3.25	0	81.77	0	1.26	0	0	10.3	0	0	0	0	0	0	-4.27	-4.27
Westbrook Inverter Enclosur	W_INV4	369673	4906164	2	0	0	89.1	89.1	1	3461	3.25	0	81.78	0	1.26	0	0	10.31	0	0	0	0	0	0	-4.29	-4.29
Westbrook Inverter Enclosur	W_INV6	369875	4906578	2	0	0	89.1	89.1	1	3488.39	3.25	0	81.85	0	1.27	0	0	10.35	0	0	0	0	0	0	-4.41	-4.41
Inverter	MV5-6	369982	4908507	2	0	0	89.1	89.1	1	3502.53	3.25	0	81.89	0	1.27	0	0	10.37	0	0	0	0	0	0	-4.47	-4.47
Gardiner Substation	G_Sub	366586.3	4903349.9	2.5	0	0	90.8	90.8	1	4353.12	4.25	0	83.78	0	1.49	2.59	0.38	7.82	0	0	0	0	0	0	-4.9	-4.9
Westbrook Inverter Enclosur	W_INV1	369409	4906578	2	0	0	86.1	86.1	1	3050.99	3.25	0	80.69	0	1.16	0	0	9.69	0	0	0	0	0	0	-5.48	-5.48
Inverters	G_Inv2	366676.9	4903239.1	2	0	0	87.7	87.7	1	4465.11	3.25	0	84	0	2.83	0	0	5.37	0	0	0	0	0	0	-4.54	-4.54
Inverters	G_Inv1	366526.4	4903225.8	2	0	0	87.7	87.7	1	4477.44	3.25	0	84.02	0	2.83	0	0	5.39	0	0	0	0	0	0	-4.58	-4.58
Inverter	MV6-4	370250	4906966	2	0	0	86.1	86.1	1	3750.13	3.25	0	82.48	0	1.33	0	0	10.73	0	0	0	0	0	0	-8.48	-8.48
Inverters	G_Inv4	366732.8	4903105	2	0	0	87.7	87.7	1	4600.78	3.25	0	84.26	0	2.84	0	0	5.52	0	0	0	0	0	0	-4.95	-4.95
Inverters	G_Inv3	366583.7	4903091.4	2	0	0	87.7	87.7	1	4611.61	4.18	0	84.28	0	3.2	1.48	0.01	5.53	0	0	0	0	0	0	-6.83	-6.83
Inverters	G_Inv6	366788.5	4902972	2	0	0	87.7	87.7	1	4735.91	3.25	0	84.51	0	2.85	0	0	5.66	0	0	0	0	0	0	-5.36	-5.36
Inverters	G_Inv5	366638.5	4902958.1	2	0	0	87.7	87.7	1	4745.35	3.25	0	84.53	0	2.85	0	0	5.67	0	0	0	0	0	0	-5.38	-5.38
Inverters	G_Inv8	366844.5	4902838.5	2	0	0	87.7	87.7	1	4872.07	3.25	0	84.75	0	2.86	0	0	5.81	0	0	0	0	0	0	-5.76	-5.76
Inverters	G_Inv7	366694.6	4902824.7	2	0	0	87.7	87.7	1	4879.82	3.25	0	84.77	0	2.86	0	0	5.81	0	0	0	0	0	0	-5.78	-5.78
Inverters	G_Inv10	366900.7	4902704.8	2	0	0	87.7	87.7	1	5008.93	3.25	0	84.99	0	2.87	0	0	5.95	0	0	0	0	0	0	-6.15	-6.15
Inverters	G_Inv9	366750.9	4902691.8	2	0	0	87.7	87.7	1	5014.36	3.25	0	85	0	2.87	0	0	5.96	0	0	0	0	0	0	-6.16	-6.16
Westbrook Inverter Transfor	W_INVTR1	369403	4906578	2	0	0	78.2	78.2	1	3045.41	3.25	0	80.67	0	-2.73	0	0	1.68	0	0	0	0	0	0	-1.38	-1.38
Inverter Transformer	MV2-1 T	365836	4906816	2	0	0	69.4	69.4	1	1153.23	3.25	0	72.24	0	1.79	0	0	4.02	0	0	0	0	0	0	-8.7	-8.7
Westbrook Inverter Transfor	W_INVTR2	369368	4906388	2	0	0	77.3	77.3	1	3088.89	3.25	0	80.8	0	-2.74	0	0	1.69	0	0	0	0	0	0	-2.41	-2.41
Westbrook Inverter Transfor	W_INVTR3	369514	4906164	2	0	0	77.3	77.3	1	3319.34	3.25	0	81.42	0	-2.8	0	0	1.79	0	0	0	0	0	0	-3.07	-3.07
Westbrook Inverter Transfor	W_INVTR5	369725	4906574	2	0	0	77.3	77.3	1	3348.1	3.25	0	81.5	0	-2.81	0	0	1.8	0	0	0	0	0	0	-3.15	-3.15
Westbrook Inverter Transfor	W_INVTR7	369786	4906417	2	0	0	77.3	77.3	1	3460.81	3.25	0	81.78	0	-2.83	0	0	1.85	0	0	0	0	0	0	-3.45	-3.45

Westbrook Inverter Transfor	W_INVTR4	369679	4906164	2	0	0	77.3	77.3	1	3466.38	3.25	0	81.8	0	-2.84	0	0	1.85	0	0	0	0	0	0	-3.47	-3.47
Westbrook Inverter Transfor	W_INVTR6	369881	4906578	2	0	0	77.3	77.3	1	3494.07	3.25	0	81.87	0	-2.84	0	0	1.86	0	0	0	0	0	0	-3.54	-3.54
Inverter Transformer	MV1-7 T	364919	4905782	2	0	0	69.4	69.4	1	2534.95	3.25	0	79.08	0	2.36	0	0	5.47	0	0	0	0	0	0	-17.56	-17.56
Inverter Transformer	MV1-10 T	365010	4905564	2	0	0	69.4	69.4	1	2649.21	3.25	0	79.46	0	2.4	0	0	5.58	0	0	0	0	0	0	-18.09	-18.09
Inverter Transformer	MV1-14 T	365157	4905049	2	0	0	69.4	69.4	1	3008.12	3.25	0	80.57	0	2.51	0	0	5.89	0	0	0	0	0	0	-19.61	-19.61
Inverter Transformer	MV1-13 T	364725	4905241	2	0	0	69.4	69.4	1	3078.4	3.25	0	80.77	0	2.53	0	0	5.95	0	0	0	0	0	0	-19.9	-19.9
Inverter Transformer	MV6-1 T	370230	4907364	2	0	0	69.4	69.4	1	3672.68	3.25	0	82.3	0	2.7	0	0	6.43	0	0	0	0	0	0	-22.08	-22.08
Inverter Transformer	MV6-4 T	370244	4906966	2	0	0	69.4	69.4	1	3744.25	3.25	0	82.47	0	2.72	0	0	6.48	0	0	0	0	0	0	-22.32	-22.32
Inverter Transformer	MV3-12 T	367674	4907594	2	0	0	56.1	56.1	1	1106.39	3.25	0	71.88	0	0.05	0	0	5.14	0	0	0	0	0	0	-21.01	-21.01
Inverter Transformer	MV2-2 T	365982	4906654	2	0	0	56.1	56.1	1	1204.03	3.25	0	72.61	0	0.09	0	0	5.36	0	0	0	0	0	0	-22	-22
Inverter Transformer	MV3-18 T	367757	4907412	2	0	0	56.1	56.1	1	1219.24	3.25	0	72.72	0	0.09	0	0	5.4	0	0	0	0	0	0	-22.15	-22.15
Inverter Transformer	MV2-3 T	365814	4906641	2	0	0	56.1	56.1	1	1305.35	3.25	0	73.31	0	0.12	0	0	5.59	0	0	0	0	0	0	-22.97	-22.97
Inverter Transformer	MV3-7 T	367951	4907754	2	0	0	56.1	56.1	1	1378.95	3.25	0	73.79	0	0.15	0	0	5.76	0	0	0	0	0	0	-23.64	-23.64
Inverter Transformer	MV3-3 T	367944	4907927	2	0	0	56.1	56.1	1	1389.18	3.25	0	73.86	0	0.16	0	0	5.78	0	0	0	0	0	0	-23.73	-23.73
Inverter Transformer	MV3-13 T	367958	4907577	2	0	0	56.1	56.1	1	1390.72	3.25	0	73.86	0	0.16	0	0	5.78	0	0	0	0	0	0	-23.74	-23.74
Inverter Transformer	MV2-4 T	365590	4906628	2	0	0	56.1	56.1	1	1456.68	3.25	0	74.27	0	0.18	0	0	5.92	0	0	0	0	0	0	-24.32	-24.32
Inverter Transformer	MV3-6 T	368156	4907834	2	0	0	56.1	56.1	1	1588.41	3.25	0	75.02	0	0.23	0	0	6.21	0	0	0	0	0	0	-25.4	-25.4
Inverter Transformer	MV3-10 T	368162	4907669	2	0	0	56.1	56.1	1	1589.37	3.25	0	75.02	0	0.23	0	0	6.21	0	0	0	0	0	0	-25.41	-25.41
Inverter Transformer	MV3-1 T	368150	4907976	2	0	0	56.1	56.1	1	1600.46	3.25	0	75.08	0	0.24	0	0	6.23	0	0	0	0	0	0	-25.5	-25.5
Inverter Transformer	MV3-17 T	368183	4907472	2	0	0	56.1	56.1	1	1626.49	3.25	0	75.23	0	0.25	0	0	6.29	0	0	0	0	0	0	-25.7	-25.7
Inverter Transformer	MV3-11 T	368340	4907662	2	0	0	56.1	56.1	1	1767.48	3.25	0	75.95	0	0.31	0	0	6.58	0	0	0	0	0	0	-26.77	-26.77
Inverter Transformer	MV3-5 T	368335	4907843	2	0	0	56.1	56.1	1	1767.55	3.25	0	75.95	0	0.31	0	0	6.58	0	0	0	0	0	0	-26.77	-26.77
Inverter Transformer	MV3-15 T	368351	4907477	2	0	0	56.1	56.1	1	1792.31	3.25	0	76.07	0	0.32	0	0	6.63	0	0	0	0	0	0	-26.96	-26.96
Inverter Transformer	MV3-19 T	368352	4907347	2	0	0	56.1	56.1	1	1814.27	3.25	0	76.17	0	0.33	0	0	6.67	0	0	0	0	0	0	-27.11	-27.11
Inverter Transformer	MV3-9 T	368517	4907703	2	0	0	56.1	56.1	1	1944	3.25	0	76.77	0	0.38	0	0	6.93	0	0	0	0	0	0	-28.03	-28.03
Inverter Transformer	MV3-4 T	368507	4907925	2	0	0	56.1	56.1	1	1946.7	3.25	0	76.79	0	0.38	0	0	6.94	0	0	0	0	0	0	-28.05	-28.05
Inverter Transformer	MV3-16 T	368509	4907475	2	0	0	56.1	56.1	1	1949.38	3.25	0	76.8	0	0.38	0	0	6.94	0	0	0	0	0	0	-28.07	-28.07
Inverter Transformer	MV3-21 T	368484	4907206	2	0	0	56.1	56.1	1	1974.57	3.25	0	76.91	0	0.39	0	0	6.99	0	0	0	0	0	0	-28.24	-28.24
Inverter Transformer	MV3-8 T	368685	4907712	2	0	0	56.1	56.1	1	2112.02	3.25	0	77.49	0	0.45	0	0	7.26	0	0	0	0	0	0	-29.15	-29.15
Inverter Transformer	MV3-14 T	368678	4907498	2	0	0	56.1	56.1	1	2114.96	3.25	0	77.51	0	0.45	0	0	7.27	0	0	0	0	0	0	-29.17	-29.17
Inverter Transformer	MV3-2 T	368677	4907928	2	0	0	56.1	56.1	1	2116	3.25	0	77.51	0	0.45	0	0	7.27	0	0	0	0	0	0	-29.17	-29.17
Inverter Transformer	MV3-20 T	368683	4907317	2	0	0	56.1	56.1	1	2145.02	3.25	0	77.63	0	0.47	0	0	7.33	0	0	0	0	0	0	-29.36	-29.36
Inverter Transformer	MV3-22 T	368661	4907142	2	0	0	56.1	56.1	1	2162.05	3.25	0	77.7	0	0.47	0	0	7.36	0	0	0	0	0	0	-29.47	-29.47
Inverter Transformer	MV1-1 T	364721	4906166	2	0	0	56.1	56.1	1	2406.72	3.25	0	78.63	0	0.58	0	0	7.82	0	0	0	0	0	0	-30.97	-30.97
Inverter Transformer	MV1-2 T	364759	4906063	2	0	0	56.1	56.1	1	2445.45	3.25	0	78.77	0	0.59	0	0	7.89	0	0	0	0	0	0	-31.19	-31.19
Inverter Transformer	MV1-4 T	364821	4905918	2	0	0	56.1	56.1	1	2501.15	3.25	0	78.96	0	0.62	0	0	7.99	0	0	0	0	0	0	-31.51	-31.51
Inverter Transformer	MV1-5 T	364676	4905892	2	0	0	56.1	56.1	1	2622.66	3.25	0	79.37	0	0.67	0	0	8.21	0	0	0	0	0	0	-32.2	-32.2
Inverter Transformer	MV4-13 T	369057	4908605	2	0	0	56.1	56.1	1	2642.7	3.25	0	79.44	0	0.68	0	0	8.25	0	0	0	0	0	0	-32.31	-32.31
Inverter Transformer	MV1-3 T	364435	4906039	2	0	0	56.1	56.1	1	2709.23	3.25	0	79.66	0	0.71	0	0	8.36	0	0	0	0	0	0	-32.67	-32.67
Inverter Transformer	MV4-12 T	369049	4908803	2	0	0	56.1	56.1	1	2709.35	3.25	0	79.66	0	0.71	0	0	8.37	0	0	0	0	0	0	-32.67	-32.67
Inverter Transformer	MV4-15 T	369170	4908481	2	0	0	56.1	56.1	1	2711.03	3.25	0	79.66	0	0.71	0	0	8.37	0	0	0	0	0	0	-32.68	-32.68
Inverter Transformer	MV1-8 T	364782	4905647	2	0	0	56.1	56.1	1	2726.69	3.25	0	79.71	0	0.71	0	0	8.4	0	0	0	0	0	0	-32.76	-32.76
Inverter Transformer	MV4-14 T	369182	4908507	2	0	0	56.1	56.1	1	2730.07	3.25	0	79.72	0	0.71	0	0	8.4	0	0	0	0	0	0	-32.78	-32.78
Inverter Transformer	MV1-12 T	365044	4905386	2	0	0	56.1	56.1	1	2776.03	3.25	0	79.87	0	0.73	0	0	8.48	0	0	0	0	0	0	-33.03	-33.03
Inverter Transformer	MV4-7 T	369040	4909001	2	0	0	56.1	56.1	1	2787.63	3.25	0	79.9	0	0.74	0	0	8.5	0	0	0	0	0	0	-33.09	-33.09
Inverter Transformer	MV1-6 T	364482	4905835	2	0	0	56.1	56.1	1	2803.87	3.25	0	79.96	0	0.75	0	0	8.53	0	0	0	0	0	0	-33.17	-33.17
Inverter Transformer	MV4-4 T	369033	4909199	2	0	0	56.1	56.1	1	2879.17	3.25	0	80.19	0	0.78	0	0	8.66	0	0	0	0	0	0	-33.57	-33.57
Inverter Transformer	MV1-9 T	364555	4905646	2	0	0	56.1	56.1	1	2881.59	3.25	0	80.19	0	0.78	0	0	8.67	0	0	0	0	0	0	-33.58	-33.58
Inverter Transformer	MV4-11 T	369269	4908855	2	0	0	56.1	56.1	1	2931.81	3.25	0	80.34	0	0.8	0	0	8.75	0	0	0	0	0	0	-33.84	-33.84
Inverter Transformer	MV4-10 T	369307	4908858	2	0	0	56.1	56.1	1	2967.96	3.25	0	80.45	0	0.82	0	0	8.81	0	0	0	0	0	0	-34.02	-34.02
Inverter Transformer	MV4-1 T	369017	4909397	2	0	0	56.1	56.1	1	2973.68	3.25	0	80.47	0	0.82	0	0	8.82	0	0	0	0	0	0	-34.05	-34.05
Inverter Transformer	MV4-8 T	369262	4909001	2	0	0	56.1	56.1	1	2985.89	3.25	0	80.5	0	0.82	0	0	8.84	0	0	0	0	0	0	-34.11	-34.11
Inverter Transformer	MV1-15 T	365309	4904994	2	0	0	56.1	56.1	1	2989.38	3.25	0	80.51	0	0.83	0	0	8.85	0	0	0	0	0	0	-34.13	-34.13
Inverter Transformer	MV1-11 T	364649	4905414	2	0	0	56.1	56.1	1	2990.2	3.25	0	80.51	0	0.83	0	0	8.85	0	0	0	0	0	0	-34.13	-34.13
Inverter Transformer	MV4-9 T	369284	4909001	2	0	0	56.1	56.1	1	3005.72	3.25	0	80.56	0	0.83	0	0	8.88	0	0	0	0	0	0	-34.21	-34.21
Inverter Transformer	MV4-6 T	369249	4909192	2	0	0	56.1	56.1	1	3062.37	3.25	0	80.72	0	0.86	0	0	8.97	0	0	0	0	0	0	-34.49	-34.49
Inverter Transformer	MV4-5 T	369283	4909199	2	0	0	56.1	56.1	1	3095.5	3.25	0	80.81	0	0.87	0	0	9.03	0	0	0	0	0	0	-34.66	-34.66
Inverter Transformer	MV4-3 T	369234	4909397	2	0	0	56.1	56.1	1	3154.45	3.25	0	80.98	0	0.9	0	0	9.13	0	0	0	0	0	0	-34.94	-34.94
Inverter Transformer	MV4-2 T	369267	4909397	2	0	0	56.1	56.1	1	3182.34	3.25	0	81.05	0	0.91	0	0	9.17	0	0	0	0	0	0	-35.08	-35.08
Inverter Transformer	MV5-6 T	369987	4908507	2	0	0	56.1	56.1	1	3507.39	3.25	0	81.9	0	1.04	0	0	9.7	0	0	0	0	0	0	-36.58	-36.58
Inverter Transformer	MV6-2 T	370091	4907339	2	0	0	56.1	56.1	1	3536.78	3.25	0	81.97	0	1.06	0	0	9.75	0	0	0	0	0	0	-36.71	-36.71
Inverter Transformer	MV5-5 T	370021	4908690	2	0	0	56.1	56.1	1	3586.49	3.25	0	82.09	0	1.08	0	0	9.82	0	0	0	0	0	0	-36.93	-36.93
Inverter Transformer	MV5-2 T	370011	4908853	2	0	0	56.1	56.1	1	3625.24	3.25	0	82.19	0	1.09	0	0	9.88	0	0	0	0	0	0	-37.1	-37.1
Inverter Transformer	MV6-3 T	370202	4907140	2	0	0	56.1	56.1	1	3672.41	3.25	0	82.3	0	1.11	0	0	9.96	0	0	0	0	0	0	-37.31	-37.31
Inverter Transformer	MV5-1 T	370015	4909142	2	0	0	56.1	56.1	1	3730.7	3.25	0	82.44	0	1.14	0	0	10.05	0	0	0	0	0	0	-37.56	-37.56
Inverter Transformer	MV5-3 T	370237	4908851	2	0	0	56.1	56.1	1	3839.64	3.25	0	82.69	0	1.18	0	0	10.21	0	0	0	0	0	0	-38.02	-38.02
Inverter Transformer	MV5-4 T	370330	4908707	2	0	0	56.1	56.1	1	3888.84	3.25	0	82.8	0	1.2	0	0	10.29	0	0	0	0	0	0	-38.23	-38.23
Line Reactor	NGR	369421	4908787.5	5	0	0	45.4	45.4	1	3047.5	5.25	0	80.68	0	3.32	1.32	0.11	1.25	0	0	0	0	0	0	-41.21	-41.21
Limit. Valu 0	0																									
Level D/N: 28.4637	28.4637																									

Receiver: Existing Noise Receptor
ID: S-R105
X: 366780

Y: 4908073
Z: 4.5
Ground: 0

ISO	Description	ID	X	Y	Z	Ground	ReflOrd	LxT	LxN	L/A	Dist.	hm	Freq	Adiv	K0b	Agr	Abar	z	Aatm	Afol	Ahous	Cmet	CmetN	Dc	RL	LtotT	LtotN
	Sol_Luce Substation	S_Substation	369426	4908792	3.5	0	0	112.1	112.1	1	2741.95	5.25	0	79.76	0	0.21	3.46	0.32	5.57	0	0	0	0	0	0	23.08	23.08
	Inverter	MV3-12	367668	4907594	2	0	0	100.3	100.3	1	1008.96	3.25	0	71.08	0	-0.24	0	0	10.94	0	0	0	0	0	0	18.54	18.54
	Inverter	MV3-3	367939	4907927	2	0	0	100.3	100.3	1	1168.16	3.25	0	72.35	0	-0.17	0	0	11.43	0	0	0	0	0	0	16.7	16.7
	Inverter	MV3-18	367752	4907412	2	0	0	100.3	100.3	1	1175.46	3.25	0	72.4	0	-0.16	0	0	11.45	0	0	0	0	0	0	16.62	16.62
	Inverter	MV3-7	367945	4907754	2	0	0	100.3	100.3	1	1207.89	3.25	0	72.64	0	-0.15	0	0	11.55	0	0	0	0	0	0	16.27	16.27
	Inverter	MV3-13	367963	4907577	2	0	0	100.3	100.3	1	1282.77	3.25	0	73.16	0	-0.12	0	0	11.76	0	0	0	0	0	0	15.51	15.51
	Inverter	MV3-6	368162	4907834	2	0	0	100.3	100.3	1	1402.52	3.25	0	73.94	0	-0.07	0	0	12.08	0	0	0	0	0	0	14.37	14.37
	Inverter	MV3-10	368167	4907669	2	0	0	100.3	100.3	1	1444.64	3.25	0	74.2	0	-0.05	0	0	12.19	0	0	0	0	0	0	13.99	13.99
	Inverter	MV3-17	368178	4907472	2	0	0	100.3	100.3	1	1521.71	3.25	0	74.65	0	-0.03	0	0	12.38	0	0	0	0	0	0	13.31	13.31
	Inverter	MV3-11	368346	4907662	2	0	0	100.3	100.3	1	1619.04	3.25	0	75.19	0	0.01	0	0	12.61	0	0	0	0	0	0	12.5	12.5
	Inverter	MV3-15	368357	4907477	2	0	0	100.3	100.3	1	1685.87	3.25	0	75.54	0	0.03	0	0	12.77	0	0	0	0	0	0	11.97	11.97
	Inverter	MV2-3	365820	4906641	2	0	0	100.3	100.3	1	1724.02	3.25	0	75.73	0	0.04	0	0	12.86	0	0	0	0	0	0	11.68	11.68
	Inverter	MV3-19	368357	4907347	2	0	0	100.3	100.3	1	1736.09	3.25	0	75.79	0	0.05	0	0	12.88	0	0	0	0	0	0	11.59	11.59
	Inverter	MV3-9	368512	4907703	2	0	0	100.3	100.3	1	1771.08	3.25	0	75.96	0	0.06	0	0	12.96	0	0	0	0	0	0	11.32	11.32
	Inverter	MV3-16	368514	4907475	2	0	0	100.3	100.3	1	1834.22	3.25	0	76.27	0	0.08	0	0	13.1	0	0	0	0	0	0	10.86	10.86
	Inverter	MV2-4	365586	4906624	2	0	0	100.3	100.3	1	1877.56	3.25	0	76.47	0	0.09	0	0	13.2	0	0	0	0	0	0	10.55	10.55
	Inverter	MV3-21	368478	4907206	2	0	0	100.3	100.3	1	1906.54	3.25	0	76.6	0	0.1	0	0	13.26	0	0	0	0	0	0	10.34	10.34
	Inverter	MV3-8	368680	4907712	2	0	0	100.3	100.3	1	1933.99	3.25	0	76.73	0	0.11	0	0	13.32	0	0	0	0	0	0	10.15	10.15
	Inverter	MV3-14	368684	4907498	2	0	0	100.3	100.3	1	1988.93	3.25	0	76.97	0	0.13	0	0	13.44	0	0	0	0	0	0	9.77	9.77
	Inverter	MV3-20	368689	4907317	2	0	0	100.3	100.3	1	2053.25	3.25	0	77.25	0	0.14	0	0	13.57	0	0	0	0	0	0	9.35	9.35
	Inverter	MV2-1	365842	4906816	2	0	0	97.3	97.3	1	1568.41	3.25	0	74.91	0	-0.01	0	0	12.49	0	0	0	0	0	0	9.92	9.92
	Inverter	MV4-7	369035	4909001	2	0	0	100.3	100.3	1	2438.49	3.25	0	78.74	0	0.24	0	0	14.34	0	0	0	0	0	0	6.99	6.99
	Inverter	MV4-4	369027	4909199	2	0	0	100.3	100.3	1	2513.34	3.25	0	79.01	0	0.26	0	0	14.48	0	0	0	0	0	0	6.56	6.56
	Inverter	MV4-1	369011	4909397	2	0	0	100.3	100.3	1	2594.29	3.25	0	79.28	0	0.28	0	0	14.64	0	0	0	0	0	0	6.12	6.12
	Inverter	MV4-11	369264	4908855	2	0	0	100.3	100.3	1	2604.19	3.25	0	79.31	0	0.28	0	0	14.65	0	0	0	0	0	0	6.06	6.06
	Inverter	MV4-8	369256	4909001	2	0	0	100.3	100.3	1	2644.19	3.25	0	79.45	0	0.29	0	0	14.73	0	0	0	0	0	0	5.85	5.85
	Inverter	MV4-10	369312	4908858	2	0	0	100.3	100.3	1	2650.9	3.25	0	79.47	0	0.29	0	0	14.74	0	0	0	0	0	0	5.81	5.81
	Inverter	MV4-9	369289	4909001	2	0	0	100.3	100.3	1	2675.12	3.25	0	79.55	0	0.3	0	0	14.79	0	0	0	0	0	0	5.68	5.68
	Inverter	MV4-6	369243	4909192	2	0	0	100.3	100.3	1	2705.28	3.25	0	79.64	0	0.3	0	0	14.84	0	0	0	0	0	0	5.52	5.52
	Inverter	MV4-5	369289	4909199	2	0	0	100.3	100.3	1	2750.08	3.25	0	79.79	0	0.31	0	0	14.92	0	0	0	0	0	0	5.29	5.29
	Inverter	MV4-3	369229	4909397	2	0	0	100.3	100.3	1	2783.99	3.25	0	79.89	0	0.32	0	0	14.99	0	0	0	0	0	0	5.11	5.11
	Inverter	MV1-1	364715	4906166	2	0	0	100.3	100.3	1	2810.85	3.25	0	79.98	0	0.32	0	0	15.03	0	0	0	0	0	0	4.98	4.98
	Inverter	MV4-2	369272	4909397	2	0	0	100.3	100.3	1	2821.89	3.25	0	80.01	0	0.33	0	0	15.05	0	0	0	0	0	0	4.92	4.92
	Inverter	MV1-2	364753	4906063	2	0	0	100.3	100.3	1	2854.62	3.25	0	80.11	0	0.33	0	0	15.11	0	0	0	0	0	0	4.75	4.75
	Inverter	MV1-4	364815	4905918	2	0	0	100.3	100.3	1	2916.38	3.25	0	80.3	0	0.35	0	0	15.22	0	0	0	0	0	0	4.45	4.45
	Inverter	MV1-5	364671	4905892	2	0	0	100.3	100.3	1	3033.92	3.25	0	80.64	0	0.37	0	0	15.43	0	0	0	0	0	0	3.87	3.87
	Inverter	MV1-8	364788	4905647	2	0	0	100.3	100.3	1	3139.04	3.25	0	80.94	0	0.39	0	0	15.62	0	0	0	0	0	0	3.37	3.37
	Inverter	MV1-12	365038	4905386	2	0	0	100.3	100.3	1	3202.27	3.25	0	81.11	0	0.4	0	0	15.73	0	0	0	0	0	0	3.08	3.08
	Inverter	MV1-6	364477	4905835	2	0	0	100.3	100.3	1	3211.3	3.25	0	81.13	0	0.4	0	0	15.74	0	0	0	0	0	0	3.04	3.04
	Inverter	MV1-9	364561	4905646	2	0	0	100.3	100.3	1	3288.51	3.25	0	81.34	0	0.42	0	0	15.87	0	0	0	0	0	0	2.68	2.68
	Inverter	MV5-5	370015	4908690	2	0	0	100.3	100.3	1	3293.31	3.25	0	81.35	0	0.42	0	0	15.88	0	0	0	0	0	0	2.66	2.66
	Inverter	MV5-2	370006	4908853	2	0	0	100.3	100.3	1	3318.96	3.25	0	81.42	0	0.42	0	0	15.93	0	0	0	0	0	0	2.55	2.55
	Inverter	MV6-2	370085	4907339	2	0	0	100.3	100.3	1	3385.53	3.25	0	81.59	0	0.43	0	0	16.04	0	0	0	0	0	0	2.25	2.25
	Inverter	MV1-11	364655	4905414	2	0	0	100.3	100.3	1	3403.81	3.25	0	81.64	0	0.43	0	0	16.07	0	0	0	0	0	0	2.17	2.17
	Inverter	MV1-15	365315	4904994	2	0	0	100.3	100.3	1	3409.76	3.25	0	81.65	0	0.44	0	0	16.08	0	0	0	0	0	0	2.14	2.14
	Inverter	MV5-1	370020	4909142	2	0	0	100.3	100.3	1	3411.8	3.25	0	81.66	0	0.44	0	0	16.08	0	0	0	0	0	0	2.13	2.13
	Inverter	MV5-3	370231	4908851	2	0	0	100.3	100.3	1	3537.61	3.25	0	81.97	0	0.46	0	0	16.29	0	0	0	0	0	0	1.59	1.59
	Inverter	MV6-3	370207	4907140	2	0	0	100.3	100.3	1	3551.74	3.25	0	82.01	0	0.46	0	0	16.32	0	0	0	0	0	0	1.53	1.53
	Inverter	MV5-4	370324	4908707	2	0	0	100.3	100.3	1	3600.26	3.25	0	82.13	0	0.47	0	0	16.4	0	0	0	0	0	0	1.32	1.32
	DSTATCOM - 10 MVAR #2	DSAT2	369403	4908757	2.5	0	0	96.6	96.6	1	2710.72	3.5	0	79.66	0	3.36	0	0	2.14	0	0	0	0	0	0	11.47	11.47
	Inverter	MV1-7	364925	4905782	2	0	0	97.3	97.3	1	2947.83	3.25	0	80.39	0	0.35	0	0	15.28	0	0	0	0	0	0	1.29	1.29
	DSTATCOM - 10 MVAR #1	DSAT1	369437	4908757	2.5	0	0	96.6	96.6	1	2743.63	3.5	0	79.77	0	3.37	0	0	2.16	0	0	0	0	0	0	11.34	11.34
	Inverter	MV1-10	365004	4905564	2	0	0	97.3	97.3	1	3073.97	3.25	0	80.75	0	0.38	0	0	15.5	0	0	0	0	0	0	0.68	0.68
	Inverter	MV1-14	365163	4905049	2	0	0	97.3	97.3	1	3429.18	3.25	0	81.7	0	0.44	0	0	16.11	0	0	0	0	0	0	-0.94	-0.94
	Inverter	MV1-13	364731	4905241	2	0	0	97.3	97.3	1	3495.52	3.25	0	81.87	0	0.45	0	0	16.22	0	0	0	0	0	0	-1.23	-1.23
	Inverter	MV6-1	370235	4907364	2	0	0	97.3	97.3	1	3527	3.25	0	81.95	0	0.46	0	0	16.28	0	0	0	0	0	0	-1.37	-1.37
	Inverter	MV3-1	368156	4907976	2	0	0	89.1	89.1	1	1379.42	3.25	0	73.79	0	0.77	0	0	7	0	0	0	0	0	0	7.5	7.5
	Inverter	MV3-5	368340	4907843	2	0	0	89.1	89.1	1	1576.87	3.25	0	74.96	0	0.81	0	0	7.34	0	0	0	0	0	0	5.95	5.95
	Inverter	MV2-2	365977	4906654	2	0	0	89.1	89.1	1	1630.45	3.25	0	75.25	0	0.82	0	0	7.43	0	0	0	0	0	0	5.56	5.56
	Inverter	MV3-4	368502	4907925	2	0	0	89.1	89.1	1	1728.35	3.25	0	75.75	0	0.84	0	0	7.6	0	0	0	0	0	0	4.87	4.87
	Inverter	MV3-2	368671	4907928	2	0	0	89.1	89.1	1	1896.55	3.25	0	76.56	0	0.88	0	0	7.88	0	0	0	0	0	0	3.74	3.74
	Inverter	MV3-22	368656	4907142	2	0	0	89.1	89.1	1	2094.31	3.25	0	77.42	0	0.93	0	0	8.2	0	0	0	0	0	0	2.51	2.51
	Inverter	MV4-13	369051	4908605	2	0	0	89.1	89.1	1	2332.48	3.25	0	78.36	0	0.99	0	0	8.58	0	0	0	0	0	0	1.13	1.13
	Inverter	MV4-12	369043	4908803	2	0	0	89.1	89.1	1	2377.83	3.25	0	78.52	0	1	0	0	8.65	0	0	0	0	0	0	0.88	0.88
	Inverter	MV4-15	369176	4908481	2	0	0	89.1	89.1	1	2430.49	3.25	0	78.71	0	1.01	0	0	8.74	0	0	0	0	0	0	0.6	0.6
	Inverter	MV4-14	369176	4908507	2	0	0	89.1	89.1	1	2434.99	3.25	0	78.73	0	1.01	0	0	8.74	0	0	0	0	0	0	0.57	0.57
	Fixed Reactor Bank 1	FRB1	369378	4908755	6	0	0	89.8	89.8	1	2686.02	5.25	0	79.58	0	-0.91	0	0	5.48	0	0	0	0	0	0	5.63	5.63
	SubstationTransformer	W_ST	369711.17	4906112.3	2.5	0	0	92	92	1	3526.5	4.25	0	81.95	0	1.21	2.74	0.24	6.72	0	0	0	0	0	0	-0.64	-0.64
	Fixed Reactor Bank 2	FRB2	369464	4908755	6	0	0	89.8	89.8	1	2769.29	5.25	0	79.85	0	-0.9	0	0	5.61	0	0	0	0	0	0	5.22	5.22

Westbrook Inverter Enclosur	W_INV2	369374	4906388	2	0	0	89.1	89.1	1	3093.23	3.25	0	80.81	0	1.17	0	0	9.76	0	0	0	0	0	0	-2.68	-2.68
Inverter	MV1-3	364440	4906039	2	0	0	89.1	89.1	1	3100.45	3.25	0	80.83	0	1.17	0	0	9.77	0	0	0	0	0	0	-2.71	-2.71
Inverter	MV5-6	369982	4908507	2	0	0	89.1	89.1	1	3231.28	3.25	0	81.19	0	1.2	0	0	9.96	0	0	0	0	0	0	-3.3	-3.3
Westbrook Inverter Enclosur	W_INV5	369719	4906574	2	0	0	89.1	89.1	1	3299.2	3.25	0	81.37	0	1.22	0	0	10.07	0	0	0	0	0	0	-3.6	-3.6
Westbrook Inverter Enclosur	W_INV3	369508	4906164	2	0	0	89.1	89.1	1	3329.61	3.25	0	81.45	0	1.23	0	0	10.11	0	0	0	0	0	0	-3.73	-3.73
Westbrook Inverter Enclosur	W_INV7	369780	4906417	2	0	0	89.1	89.1	1	3426.71	3.25	0	81.7	0	1.25	0	0	10.25	0	0	0	0	0	0	-4.15	-4.15
Westbrook Inverter Enclosur	W_INV6	369875	4906578	2	0	0	89.1	89.1	1	3437.16	3.25	0	81.72	0	1.25	0	0	10.27	0	0	0	0	0	0	-4.19	-4.19
Westbrook Inverter Enclosur	W_INV4	369673	4906164	2	0	0	89.1	89.1	1	3466.08	3.25	0	81.8	0	1.26	0	0	10.31	0	0	0	0	0	0	-4.31	-4.31
Gardiner Substation	G_Sub	366586.3	4903349.9	2.5	0	0	90.8	90.8	1	4727.07	4.25	0	84.49	0	1.58	2.46	0.38	8.29	0	0	0	0	0	0	-6.05	-6.05
Westbrook Inverter Enclosur	W_INV1	369409	4906578	2	0	0	86.1	86.1	1	3024.35	3.25	0	80.61	0	1.15	0	0	9.65	0	0	0	0	0	0	-5.36	-5.36
Inverter	MV6-4	370250	4906966	2	0	0	86.1	86.1	1	3642.3	3.25	0	82.23	0	1.3	0	0	10.57	0	0	0	0	0	0	-8.04	-8.04
Inverters	G_Inv2	366676.9	4903239.1	2	0	0	87.7	87.7	1	4835	3.25	0	84.69	0	2.85	0	0	5.77	0	0	0	0	0	0	-5.65	-5.65
Inverters	G_Inv1	366526.4	4903225.8	2	0	0	87.7	87.7	1	4853.83	3.25	0	84.72	0	2.86	0	0	5.79	0	0	0	0	0	0	-5.7	-5.7
Inverters	G_Inv4	366732.8	4903105	2	0	0	87.7	87.7	1	4968.22	3.25	0	84.92	0	2.86	0	0	5.91	0	0	0	0	0	0	-6.03	-6.03
Inverters	G_Inv3	366583.7	4903091.4	2	0	0	87.7	87.7	1	4985.47	3.25	0	84.95	0	2.86	0	0	5.92	0	0	0	0	0	0	-6.08	-6.08
Inverters	G_Inv6	366788.5	4902972	2	0	0	87.7	87.7	1	5101.01	3.25	0	85.15	0	2.87	0	0	6.05	0	0	0	0	0	0	-6.41	-6.41
Inverters	G_Inv5	366638.5	4902958.1	2	0	0	87.7	87.7	1	5116.86	3.25	0	85.18	0	2.87	0	0	6.06	0	0	0	0	0	0	-6.45	-6.45
Inverters	G_Inv8	366844.5	4902838.5	2	0	0	87.7	87.7	1	5234.9	3.25	0	85.38	0	2.88	0	0	6.19	0	0	0	0	0	0	-6.78	-6.78
Inverters	G_Inv7	366694.6	4902824.7	2	0	0	87.7	87.7	1	5249	3.25	0	85.4	0	2.88	0	0	6.2	0	0	0	0	0	0	-6.82	-6.82
Inverters	G_Inv10	366900.7	4902704.8	2	0	0	87.7	87.7	1	5369.56	3.25	0	85.6	0	2.89	0	0	6.33	0	0	0	0	0	0	-7.15	-7.15
Inverters	G_Inv9	366750.9	4902691.8	2	0	0	87.7	87.7	1	5381.28	3.25	0	85.62	0	2.89	0	0	6.34	0	0	0	0	0	0	-7.18	-7.18
Westbrook Inverter Transfor	W_INVTR1	369403	4906578	2	0	0	78.2	78.2	1	3019.13	3.25	0	80.6	0	-2.72	0	0	1.66	0	0	0	0	0	0	-1.3	-1.3
Westbrook Inverter Transfor	W_INVTR2	369368	4906388	2	0	0	77.3	77.3	1	3088.2	3.25	0	80.79	0	-2.74	0	0	1.69	0	0	0	0	0	0	-2.41	-2.41
Westbrook Inverter Transfor	W_INVTR5	369725	4906574	2	0	0	77.3	77.3	1	3304.55	3.25	0	81.38	0	-2.79	0	0	1.78	0	0	0	0	0	0	-3.03	-3.03
Westbrook Inverter Transfor	W_INVTR3	369514	4906164	2	0	0	77.3	77.3	1	3334.52	3.25	0	81.46	0	-2.8	0	0	1.8	0	0	0	0	0	0	-3.11	-3.11
Westbrook Inverter Transfor	W_INVTR7	369786	4906417	2	0	0	77.3	77.3	1	3431.96	3.25	0	81.71	0	-2.83	0	0	1.83	0	0	0	0	0	0	-3.38	-3.38
Westbrook Inverter Transfor	W_INVTR6	369881	4906578	2	0	0	77.3	77.3	1	3442.56	3.25	0	81.74	0	-2.83	0	0	1.84	0	0	0	0	0	0	-3.4	-3.4
Westbrook Inverter Transfor	W_INVTR4	369679	4906164	2	0	0	77.3	77.3	1	3471.09	3.25	0	81.81	0	-2.84	0	0	1.85	0	0	0	0	0	0	-3.48	-3.48
Inverter Transformer	MV2-1 T	365836	4906816	2	0	0	69.4	69.4	1	1572	3.25	0	74.93	0	2	0	0	4.52	0	0	0	0	0	0	-12.1	-12.1
Inverter Transformer	MV1-7 T	364919	4905782	2	0	0	69.4	69.4	1	2951.61	3.25	0	80.4	0	2.49	0	0	5.84	0	0	0	0	0	0	-19.38	-19.38
Inverter Transformer	MV1-10 T	365010	4905564	2	0	0	69.4	69.4	1	3070.5	3.25	0	80.74	0	2.53	0	0	5.94	0	0	0	0	0	0	-19.86	-19.86
Inverter Transformer	MV1-14 T	365157	4905049	2	0	0	69.4	69.4	1	3432.01	3.25	0	81.71	0	2.63	0	0	6.24	0	0	0	0	0	0	-21.23	-21.23
Inverter Transformer	MV1-13 T	364725	4905241	2	0	0	69.4	69.4	1	3499.04	3.25	0	81.88	0	2.65	0	0	6.29	0	0	0	0	0	0	-21.47	-21.47
Inverter Transformer	MV6-1 T	370230	4907364	2	0	0	69.4	69.4	1	3522.1	3.25	0	81.94	0	2.66	0	0	6.31	0	0	0	0	0	0	-21.55	-21.55
Inverter Transformer	MV6-4 T	370244	4906966	2	0	0	69.4	69.4	1	3636.59	3.25	0	82.21	0	2.69	0	0	6.4	0	0	0	0	0	0	-21.95	-21.95
Inverter Transformer	MV3-12 T	367674	4907594	2	0	0	56.1	56.1	1	1014.24	3.25	0	71.12	0	0.02	0	0	4.92	0	0	0	0	0	0	-20	-20
Inverter Transformer	MV3-3 T	367944	4907927	2	0	0	56.1	56.1	1	1173.12	3.25	0	72.39	0	0.07	0	0	5.29	0	0	0	0	0	0	-21.7	-21.7
Inverter Transformer	MV3-18 T	367757	4907412	2	0	0	56.1	56.1	1	1179.6	3.25	0	72.43	0	0.08	0	0	5.31	0	0	0	0	0	0	-21.76	-21.76
Inverter Transformer	MV3-7 T	367951	4907754	2	0	0	56.1	56.1	1	1213.68	3.25	0	72.68	0	0.09	0	0	5.39	0	0	0	0	0	0	-22.1	-22.1
Inverter Transformer	MV3-13 T	367958	4907577	2	0	0	56.1	56.1	1	1278.17	3.25	0	73.13	0	0.11	0	0	5.53	0	0	0	0	0	0	-22.72	-22.72
Inverter Transformer	MV3-1 T	368150	4907976	2	0	0	56.1	56.1	1	1373.43	3.25	0	73.76	0	0.15	0	0	5.74	0	0	0	0	0	0	-23.59	-23.59
Inverter Transformer	MV3-6 T	368156	4907834	2	0	0	56.1	56.1	1	1396.6	3.25	0	73.9	0	0.16	0	0	5.79	0	0	0	0	0	0	-23.8	-23.8
Inverter Transformer	MV3-10 T	368162	4907669	2	0	0	56.1	56.1	1	1439.84	3.25	0	74.17	0	0.18	0	0	5.89	0	0	0	0	0	0	-24.17	-24.17
Inverter Transformer	MV3-17 T	368183	4907472	2	0	0	56.1	56.1	1	1526.31	3.25	0	74.67	0	0.21	0	0	6.07	0	0	0	0	0	0	-24.9	-24.9
Inverter Transformer	MV3-5 T	368335	4907843	2	0	0	56.1	56.1	1	1571.92	3.25	0	74.93	0	0.23	0	0	6.17	0	0	0	0	0	0	-25.27	-25.27
Inverter Transformer	MV3-11 T	368340	4907662	2	0	0	56.1	56.1	1	1613.24	3.25	0	75.15	0	0.24	0	0	6.26	0	0	0	0	0	0	-25.6	-25.6
Inverter Transformer	MV2-2 T	365982	4906654	2	0	0	56.1	56.1	1	1628	3.25	0	75.23	0	0.25	0	0	6.29	0	0	0	0	0	0	-25.71	-25.71
Inverter Transformer	MV3-15 T	368351	4907477	2	0	0	56.1	56.1	1	1680.26	3.25	0	75.51	0	0.27	0	0	6.4	0	0	0	0	0	0	-26.12	-26.12
Inverter Transformer	MV2-3 T	365814	4906641	2	0	0	56.1	56.1	1	1727.36	3.25	0	75.75	0	0.29	0	0	6.5	0	0	0	0	0	0	-26.48	-26.48
Inverter Transformer	MV3-19 T	368352	4907347	2	0	0	56.1	56.1	1	1731.55	3.25	0	75.77	0	0.29	0	0	6.5	0	0	0	0	0	0	-26.51	-26.51
Inverter Transformer	MV3-4 T	368507	4907925	2	0	0	56.1	56.1	1	1733.33	3.25	0	75.78	0	0.29	0	0	6.51	0	0	0	0	0	0	-26.52	-26.52
Inverter Transformer	MV3-9 T	368517	4907703	2	0	0	56.1	56.1	1	1775.97	3.25	0	75.99	0	0.31	0	0	6.59	0	0	0	0	0	0	-26.84	-26.84
Inverter Transformer	MV3-16 T	368509	4907475	2	0	0	56.1	56.1	1	1829.49	3.25	0	76.25	0	0.33	0	0	6.7	0	0	0	0	0	0	-27.22	-27.22
Inverter Transformer	MV2-4 T	365590	4906628	2	0	0	56.1	56.1	1	1871.93	3.25	0	76.45	0	0.35	0	0	6.79	0	0	0	0	0	0	-27.53	-27.53
Inverter Transformer	MV3-2 T	368677	4907928	2	0	0	56.1	56.1	1	1902.54	3.25	0	76.59	0	0.36	0	0	6.85	0	0	0	0	0	0	-27.74	-27.74
Inverter Transformer	MV3-21 T	368484	4907206	2	0	0	56.1	56.1	1	1911.89	3.25	0	76.63	0	0.37	0	0	6.87	0	0	0	0	0	0	-27.81	-27.81
Inverter Transformer	MV3-8 T	368685	4907712	2	0	0	56.1	56.1	1	1938.9	3.25	0	76.75	0	0.38	0	0	6.92	0	0	0	0	0	0	-27.99	-27.99
Inverter Transformer	MV3-14 T	368678	4907498	2	0	0	56.1	56.1	1	1983.19	3.25	0	76.95	0	0.4	0	0	7.01	0	0	0	0	0	0	-28.3	-28.3
Inverter Transformer	MV3-20 T	368683	4907317	2	0	0	56.1	56.1	1	2047.67	3.25	0	77.23	0	0.42	0	0	7.14	0	0	0	0	0	0	-28.73	-28.73
Inverter Transformer	MV3-22 T	368661	4907142	2	0	0	56.1	56.1	1	2098.79	3.25	0	77.44	0	0.45	0	0	7.24	0	0	0	0	0	0	-29.06	-29.06
Inverter Transformer	MV4-13 T	369057	4908605	2	0	0	56.1	56.1	1	2338.32	3.25	0	78.38	0	0.55	0	0	7.69	0	0	0	0	0	0	-30.56	-30.56
Inverter Transformer	MV4-12 T	369049	4908803	2	0	0	56.1	56.1	1	2383.54	3.25	0	78.54	0	0.57	0	0	7.78	0	0	0	0	0	0	-30.83	-30.83
Inverter Transformer	MV4-15 T	369170	4908481	2	0	0	56.1	56.1	1	2424.58	3.25	0	78.69	0	0.58	0	0	7.85	0	0	0	0	0	0	-31.07	-31.07
Inverter Transformer	MV4-14 T	369182	4908507	2	0	0	56.1	56.1	1	2440.89	3.25	0	78.75	0	0.59	0	0	7.88	0	0	0	0	0	0	-31.17	-31.17
Inverter Transformer	MV4-7 T	369040	4909001	2	0	0	56.1	56.1	1	2443.11	3.25	0	78.76	0	0.59	0	0	7.89	0	0	0	0	0	0	-31.18	-31.18
Inverter Transformer	MV4-4 T	369033	4909199	2	0	0	56.1	56.1	1	2518.71	3.25	0	79.02	0	0.62	0	0	8.02	0	0	0	0	0	0	-31.61	-31.61
Inverter Transformer	MV4-1 T	369017	4909397	2	0	0	56.1	56.1	1	2599.45	3.25	0	79.3	0	0.66	0	0	8.17	0	0	0	0	0	0	-32.07	-32.07
Inverter Transformer	MV4-11 T	369269	4908855	2	0	0	56.1	56.1	1	2608.96	3.25	0	79.33	0	0.66	0	0	8.19	0	0	0	0	0	0	-32.12	-32.12
Inverter Transformer	MV4-10 T	369307	4908858	2	0	0	56.1	56.1	1	2646.12	3.25	0	79.45	0	0.68	0	0	8.25	0	0	0	0	0	0	-32.33	-32.33
Inverter Transformer	MV4-8 T	369262	4909001	2	0	0	56.1	56.1	1	2649.81	3.25	0	79.46	0	0.68	0	0	8.26	0	0	0	0	0	0	-32.35	-32.35
Inverter Transformer	MV4-9 T	369284	4909001	2	0	0	56.1	56.1	1	2670.43	3.25	0	79.53	0	0.69	0	0	8.3	0	0	0	0	0	0	-32.46	-32.46
Inverter Transformer	MV4-6 T	369249	4909192	2	0	0	56.1	56.1	1	2710.74	3.25	0	79.66	0	0.71	0	0	8.37	0	0	0	0	0	0	-32.68	-32.68
Inverter Transformer	MV4-5 T	369283	4909199	2	0	0	56.1	56.1	1	2744.61	3.25	0	79.77	0	0.72	0	0	8.43	0	0	0	0	0	0	-32.86	-32.86
Inverter Transformer	MV4-3 T	369234	4909397	2	0	0	56.1	56.1	1	2788.39	3.25	0	79.91	0	0.74	0	0	8.5	0	0	0	0	0	0	-33.09	-33.09

	Inverter Transformer	MV1-1 T	364721	4906166	2	0	0	56.1	56.1	1	2806.45	3.25	0	79.96	0	0.75	0	0	8.54	0	0	0	0	0	0	-33.19	-33.19
	Inverter Transformer	MV4-2 T	369267	4909397	2	0	0	56.1	56.1	1	2817.47	3.25	0	80	0	0.75	0	0	8.55	0	0	0	0	0	0	-33.25	-33.25
	Inverter Transformer	MV1-2 T	364759	4906063	2	0	0	56.1	56.1	1	2850.36	3.25	0	80.1	0	0.77	0	0	8.61	0	0	0	0	0	0	-33.42	-33.42
	Inverter Transformer	MV1-4 T	364821	4905918	2	0	0	56.1	56.1	1	2912.34	3.25	0	80.28	0	0.79	0	0	8.72	0	0	0	0	0	0	-33.74	-33.74
	Inverter Transformer	MV1-5 T	364676	4905892	2	0	0	56.1	56.1	1	3030.44	3.25	0	80.63	0	0.84	0	0	8.92	0	0	0	0	0	0	-34.33	-34.33
	Inverter Transformer	MV1-3 T	364435	4906039	2	0	0	56.1	56.1	1	3104.22	3.25	0	80.84	0	0.87	0	0	9.04	0	0	0	0	0	0	-34.7	-34.7
	Inverter Transformer	MV1-8 T	364782	4905647	2	0	0	56.1	56.1	1	3142.85	3.25	0	80.95	0	0.89	0	0	9.11	0	0	0	0	0	0	-34.89	-34.89
	Inverter Transformer	MV1-12 T	365044	4905386	2	0	0	56.1	56.1	1	3199.01	3.25	0	81.1	0	0.91	0	0	9.2	0	0	0	0	0	0	-35.16	-35.16
	Inverter Transformer	MV1-6 T	364482	4905835	2	0	0	56.1	56.1	1	3207.72	3.25	0	81.12	0	0.92	0	0	9.22	0	0	0	0	0	0	-35.2	-35.2
	Inverter Transformer	MV5-6 T	369987	4908507	2	0	0	56.1	56.1	1	3236.23	3.25	0	81.2	0	0.93	0	0	9.26	0	0	0	0	0	0	-35.33	-35.33
	Inverter Transformer	MV1-9 T	364555	4905646	2	0	0	56.1	56.1	1	3292.56	3.25	0	81.35	0	0.95	0	0	9.35	0	0	0	0	0	0	-35.6	-35.6
	Inverter Transformer	MV5-5 T	370021	4908690	2	0	0	56.1	56.1	1	3299.21	3.25	0	81.37	0	0.96	0	0	9.37	0	0	0	0	0	0	-35.63	-35.63
	Inverter Transformer	MV5-2 T	370011	4908853	2	0	0	56.1	56.1	1	3323.82	3.25	0	81.43	0	0.97	0	0	9.41	0	0	0	0	0	0	-35.75	-35.75
	Inverter Transformer	MV6-2 T	370091	4907339	2	0	0	56.1	56.1	1	3391.38	3.25	0	81.61	0	0.99	0	0	9.51	0	0	0	0	0	0	-36.06	-36.06
	Inverter Transformer	MV5-1 T	370015	4909142	2	0	0	56.1	56.1	1	3407.05	3.25	0	81.65	0	1	0	0	9.54	0	0	0	0	0	0	-36.13	-36.13
	Inverter Transformer	MV1-11 T	364649	4905414	2	0	0	56.1	56.1	1	3407.56	3.25	0	81.65	0	1	0	0	9.54	0	0	0	0	0	0	-36.13	-36.13
	Inverter Transformer	MV1-15 T	365309	4904994	2	0	0	56.1	56.1	1	3412.34	3.25	0	81.66	0	1	0	0	9.55	0	0	0	0	0	0	-36.15	-36.15
	Inverter Transformer	MV5-3 T	370237	4908851	2	0	0	56.1	56.1	1	3543.46	3.25	0	81.99	0	1.06	0	0	9.76	0	0	0	0	0	0	-36.74	-36.74
	Inverter Transformer	MV6-3 T	370202	4907140	2	0	0	56.1	56.1	1	3546.91	3.25	0	82	0	1.06	0	0	9.76	0	0	0	0	0	0	-36.76	-36.76
	Inverter Transformer	MV5-4 T	370330	4908707	2	0	0	56.1	56.1	1	3606.17	3.25	0	82.14	0	1.08	0	0	9.85	0	0	0	0	0	0	-37.02	-37.02
	Line Reactor	NGR	369421	4908787.5	5	0	0	45.4	45.4	1	2735.94	5.25	0	79.74	0	3.33	1.31	0.11	1.12	0	0	0	0	0	0	-40.15	-40.15
Limit. Valu	0	0																								
Level D/N:	29.1379	29.1379																								

Receiver: Existing Noise Receptor
ID: S-R106
X: 366885
Y: 4907947
Z: 4.5
Ground: 0

ISO	Description	ID	X	Y	Z	Ground	ReflOrd	LxT	LxN	L/A	Dist.	hm	Freq	Adiv	K0b	Agr	Abar	z	Aatm	Afol	Ahous	Cmet	CmetN	Dc	RL	LtotT	LtotN
	Sol_Luce Substation	S_Substation	369426	4908792	3.5	0	0	112.1	112.1	1	2677.82	5.25	0	79.56	0	0.19	3.47	0.31	5.47	0	0	0	0	0	0	23.39	23.39
	Inverter	MV3-12	367668	4907594	2	0	0	100.3	100.3	1	858.9	3.25	0	69.68	0	-0.32	0	0	10.41	0	0	0	0	0	0	20.54	20.54
	Inverter	MV3-18	367752	4907412	2	0	0	100.3	100.3	1	1018.78	3.25	0	71.16	0	-0.24	0	0	10.97	0	0	0	0	0	0	18.41	18.41
	Inverter	MV3-3	367939	4907927	2	0	0	100.3	100.3	1	1054.19	3.25	0	71.46	0	-0.22	0	0	11.09	0	0	0	0	0	0	17.99	17.99
	Inverter	MV3-7	367945	4907754	2	0	0	100.3	100.3	1	1077.43	3.25	0	71.65	0	-0.21	0	0	11.16	0	0	0	0	0	0	17.71	17.71
	Inverter	MV3-13	367963	4907577	2	0	0	100.3	100.3	1	1139.73	3.25	0	72.14	0	-0.18	0	0	11.35	0	0	0	0	0	0	17.01	17.01
	Inverter	MV3-6	368162	4907834	2	0	0	100.3	100.3	1	1281.99	3.25	0	73.16	0	-0.12	0	0	11.76	0	0	0	0	0	0	15.52	15.52
	Inverter	MV3-10	368167	4907669	2	0	0	100.3	100.3	1	1311.8	3.25	0	73.36	0	-0.11	0	0	11.84	0	0	0	0	0	0	15.22	15.22
	Inverter	MV3-17	368178	4907472	2	0	0	100.3	100.3	1	1377.49	3.25	0	73.78	0	-0.08	0	0	12.01	0	0	0	0	0	0	14.6	14.6
	Inverter	MV3-11	368346	4907662	2	0	0	100.3	100.3	1	1488.54	3.25	0	74.46	0	-0.04	0	0	12.3	0	0	0	0	0	0	13.6	13.6
	Inverter	MV3-15	368357	4907477	2	0	0	100.3	100.3	1	1545.22	3.25	0	74.78	0	-0.02	0	0	12.44	0	0	0	0	0	0	13.11	13.11
	Inverter	MV3-19	368357	4907347	2	0	0	100.3	100.3	1	1589.59	3.25	0	75.03	0	0	0	0	12.54	0	0	0	0	0	0	12.74	12.74
	Inverter	MV3-9	368512	4907703	2	0	0	100.3	100.3	1	1645.2	3.25	0	75.32	0	0.02	0	0	12.67	0	0	0	0	0	0	12.29	12.29
	Inverter	MV2-3	365820	4906641	2	0	0	100.3	100.3	1	1685.19	3.25	0	75.53	0	0.03	0	0	12.77	0	0	0	0	0	0	11.98	11.98
	Inverter	MV3-16	368514	4907475	2	0	0	100.3	100.3	1	1696	3.25	0	75.59	0	0.04	0	0	12.79	0	0	0	0	0	0	11.89	11.89
	Inverter	MV3-21	368478	4907206	2	0	0	100.3	100.3	1	1756.91	3.25	0	75.89	0	0.06	0	0	12.93	0	0	0	0	0	0	11.43	11.43
	Inverter	MV3-8	368680	4907712	2	0	0	100.3	100.3	1	1810.32	3.25	0	76.16	0	0.07	0	0	13.05	0	0	0	0	0	0	11.03	11.03
	Inverter	MV2-4	365586	4906624	2	0	0	100.3	100.3	1	1854.11	3.25	0	76.36	0	0.09	0	0	13.15	0	0	0	0	0	0	10.71	10.71
	Inverter	MV3-14	368684	4907498	2	0	0	100.3	100.3	1	1854.19	3.25	0	76.36	0	0.09	0	0	13.15	0	0	0	0	0	0	10.71	10.71
	Inverter	MV3-20	368689	4907317	2	0	0	100.3	100.3	1	1910.84	3.25	0	76.62	0	0.1	0	0	13.27	0	0	0	0	0	0	10.31	10.31
	Inverter	MV2-1	365842	4906816	2	0	0	97.3	97.3	1	1538.51	3.25	0	74.74	0	-0.02	0	0	12.42	0	0	0	0	0	0	10.17	10.17
	Inverter	MV4-7	369035	4909001	2	0	0	100.3	100.3	1	2394.46	3.25	0	78.58	0	0.23	0	0	14.26	0	0	0	0	0	0	7.24	7.24
	Inverter	MV4-4	369027	4909199	2	0	0	100.3	100.3	1	2481.06	3.25	0	78.89	0	0.25	0	0	14.42	0	0	0	0	0	0	6.74	6.74
	Inverter	MV4-11	369264	4908855	2	0	0	100.3	100.3	1	2546.39	3.25	0	79.12	0	0.27	0	0	14.55	0	0	0	0	0	0	6.38	6.38
	Inverter	MV4-1	369011	4909397	2	0	0	100.3	100.3	1	2573.4	3.25	0	79.21	0	0.27	0	0	14.6	0	0	0	0	0	0	6.23	6.23
	Inverter	MV4-10	369312	4908858	2	0	0	100.3	100.3	1	2592.35	3.25	0	79.27	0	0.28	0	0	14.63	0	0	0	0	0	0	6.13	6.13
	Inverter	MV4-8	369256	4909001	2	0	0	100.3	100.3	1	2594.72	3.25	0	79.28	0	0.28	0	0	14.64	0	0	0	0	0	0	6.12	6.12
	Inverter	MV4-9	369289	4909001	2	0	0	100.3	100.3	1	2624.91	3.25	0	79.38	0	0.29	0	0	14.69	0	0	0	0	0	0	5.95	5.95
	Inverter	MV4-6	369243	4909192	2	0	0	100.3	100.3	1	2666.49	3.25	0	79.52	0	0.29	0	0	14.77	0	0	0	0	0	0	5.73	5.73
	Inverter	MV4-5	369289	4909199	2	0	0	100.3	100.3	1	2710.48	3.25	0	79.66	0	0.3	0	0	14.85	0	0	0	0	0	0	5.5	5.5
	Inverter	MV4-3	369229	4909397	2	0	0	100.3	100.3	1	2756.24	3.25	0	79.81	0	0.31	0	0	14.93	0	0	0	0	0	0	5.26	5.26
	Inverter	MV4-2	369272	4909397	2	0	0	100.3	100.3	1	2792.9	3.25	0	79.92	0	0.32	0	0	15	0	0	0	0	0	0	5.07	5.07
	Inverter	MV1-1	364715	4906166	2	0	0	100.3	100.3	1	2807.29	3.25	0	79.97	0	0.32	0	0	15.03	0	0	0	0	0	0	5	5
	Inverter	MV1-2	364753	4906063	2	0	0	100.3	100.3	1	2845.15	3.25	0	80.08	0	0.33	0	0	15.1	0	0	0	0	0	0	4.8	4.8
	Inverter	MV1-4	364815	4905918	2	0	0	100.3	100.3	1	2898.58	3.25	0	80.24	0	0.34	0	0	15.19	0	0	0	0	0	0	4.53	4.53
	Inverter	MV1-5	364671	4905892	2	0	0	100.3	100.3	1	3020.73	3.25	0	80.6	0	0.37	0	0	15.41	0	0	0	0	0	0	3.94	3.94
	Inverter	MV1-8	364788	4905647	2	0	0	100.3	100.3	1	3112.46	3.25	0	80.86	0	0.38	0	0	15.57	0	0	0	0	0	0	3.5	3.5
	Inverter	MV1-12	365038	4905386	2	0	0	100.3	100.3	1	3157.55	3.25	0	80.99	0	0.39	0	0	15.65	0	0	0	0	0	0	3.29	3.29
	Inverter	MV1-6	364477	4905835	2	0	0	100.3	100.3	1	3202.97	3.25	0	81.11	0	0.4	0	0	15.73	0	0	0	0	0	0	3.07	3.07
	Inverter	MV5-5	370015	4908690	2	0	0	100.3	100.3	1	3216.98	3.25	0	81.15	0	0.4	0	0	15.75	0	0	0	0	0	0	3.01	3.01
	Inverter	MV5-2	370006	4908853	2	0	0	100.3	100.3	1	3249.84	3.25	0	81.24	0	0.41	0	0	15.81	0	0	0	0	0	0	2.86	2.86
	Inverter	MV6-2	370085	4907339	2	0	0	100.3	100.3	1	3257.25	3.25	0	81.26	0	0.41	0	0	15.82	0	0	0	0	0	0	2.83	2.83

Inverter	MV1-9	364561	4905646	2	0	0	100.3	100.3	1	3270.41	3.25	0	81.29	0	0.41	0	0	15.84	0	0	0	0	0	0	2.77	2.77
Inverter	MV1-15	365315	4904994	2	0	0	100.3	100.3	1	3344.42	3.25	0	81.49	0	0.42	0	0	15.97	0	0	0	0	0	0	2.43	2.43
Inverter	MV5-1	370020	4909142	2	0	0	100.3	100.3	1	3355.03	3.25	0	81.51	0	0.43	0	0	15.99	0	0	0	0	0	0	2.38	2.38
Inverter	MV1-11	364655	4905414	2	0	0	100.3	100.3	1	3374.76	3.25	0	81.56	0	0.43	0	0	16.02	0	0	0	0	0	0	2.3	2.3
Inverter	MV6-3	370207	4907140	2	0	0	100.3	100.3	1	3418.62	3.25	0	81.68	0	0.44	0	0	16.09	0	0	0	0	0	0	2.1	2.1
Inverter	MV5-3	370231	4908851	2	0	0	100.3	100.3	1	3465.97	3.25	0	81.8	0	0.45	0	0	16.17	0	0	0	0	0	0	1.9	1.9
Inverter	MV5-4	370324	4908707	2	0	0	100.3	100.3	1	3521.98	3.25	0	81.94	0	0.45	0	0	16.27	0	0	0	0	0	0	1.65	1.65
DSTATCOM - 10 MVAR #2	DSAT2	369403	4908757	2.5	0	0	96.6	96.6	1	2645.08	3.5	0	79.45	0	3.35	0	0	2.1	0	0	0	0	0	0	11.73	11.73
DSTATCOM - 10 MVAR #1	DSAT1	369437	4908757	2.5	0	0	96.6	96.6	1	2677.46	3.5	0	79.55	0	3.36	0	0	2.12	0	0	0	0	0	0	11.6	11.6
Inverter	MV1-7	364925	4905782	2	0	0	97.3	97.3	1	2920.42	3.25	0	80.31	0	0.35	0	0	15.23	0	0	0	0	0	0	1.43	1.43
Inverter	MV1-10	365004	4905564	2	0	0	97.3	97.3	1	3035.93	3.25	0	80.65	0	0.37	0	0	15.44	0	0	0	0	0	0	0.86	0.86
Inverter	MV3-1	368156	4907976	2	0	0	89.1	89.1	1	1271.33	3.25	0	73.09	0	0.74	0	0	6.81	0	0	0	0	0	0	8.42	8.42
Inverter	MV1-14	365163	4905049	2	0	0	97.3	97.3	1	3371.01	3.25	0	81.56	0	0.43	0	0	16.01	0	0	0	0	0	0	-0.69	-0.69
Inverter	MV6-1	370235	4907364	2	0	0	97.3	97.3	1	3400.35	3.25	0	81.63	0	0.43	0	0	16.06	0	0	0	0	0	0	-0.82	-0.82
Inverter	MV1-13	364731	4905241	2	0	0	97.3	97.3	1	3458.64	3.25	0	81.78	0	0.44	0	0	16.16	0	0	0	0	0	0	-1.07	-1.07
Inverter	MV3-5	368340	4907843	2	0	0	89.1	89.1	1	1458.71	3.25	0	74.28	0	0.78	0	0	7.14	0	0	0	0	0	0	6.86	6.86
Inverter	MV2-2	365977	4906654	2	0	0	89.1	89.1	1	1579.97	3.25	0	74.97	0	0.81	0	0	7.35	0	0	0	0	0	0	5.93	5.93
Inverter	MV3-4	368502	4907925	2	0	0	89.1	89.1	1	1617.15	3.25	0	75.18	0	0.82	0	0	7.41	0	0	0	0	0	0	5.66	5.66
Inverter	MV3-2	368671	4907928	2	0	0	89.1	89.1	1	1786.1	3.25	0	76.04	0	0.86	0	0	7.69	0	0	0	0	0	0	4.47	4.47
Inverter	MV3-22	368656	4907142	2	0	0	89.1	89.1	1	1945.37	3.25	0	76.78	0	0.89	0	0	7.96	0	0	0	0	0	0	3.43	3.43
Inverter	MV4-13	369051	4908605	2	0	0	89.1	89.1	1	2263.74	3.25	0	78.1	0	0.97	0	0	8.47	0	0	0	0	0	0	1.52	1.52
Inverter	MV4-12	369043	4908803	2	0	0	89.1	89.1	1	2321.57	3.25	0	78.32	0	0.98	0	0	8.56	0	0	0	0	0	0	1.2	1.2
Inverter	MV4-15	369176	4908481	2	0	0	89.1	89.1	1	2352.41	3.25	0	78.43	0	0.99	0	0	8.61	0	0	0	0	0	0	1.02	1.02
Inverter	MV4-14	369176	4908507	2	0	0	89.1	89.1	1	2358.45	3.25	0	78.45	0	0.99	0	0	8.62	0	0	0	0	0	0	0.99	0.99
SubstationTransformer	W_ST	369711.17	4906112.3	2.5	0	0	92	92	1	3369.49	4.25	0	81.55	0	1.16	2.79	0.24	6.5	0	0	0	0	0	0	-0.03	-0.03
Fixed Reactor Bank 1	FRB1	369378	4908755	6	0	0	89.8	89.8	1	2620.67	5.25	0	79.37	0	-0.92	0	0	5.38	0	0	0	0	0	0	5.95	5.95
Fixed Reactor Bank 2	FRB2	369464	4908755	6	0	0	89.8	89.8	1	2702.61	5.25	0	79.64	0	-0.91	0	0	5.51	0	0	0	0	0	0	5.55	5.55
Westbrook Inverter Enclosur	W_INV2	369374	4906388	2	0	0	89.1	89.1	1	2936.94	3.25	0	80.36	0	1.13	0	0	9.52	0	0	0	0	0	0	-1.95	-1.95
Inverter	MV1-3	364440	4906039	2	0	0	89.1	89.1	1	3101.37	3.25	0	80.83	0	1.17	0	0	9.77	0	0	0	0	0	0	-2.71	-2.71
Inverter	MV5-6	369982	4908507	2	0	0	89.1	89.1	1	3147.22	3.25	0	80.96	0	1.18	0	0	9.84	0	0	0	0	0	0	-2.92	-2.92
Westbrook Inverter Enclosur	W_INV5	369719	4906574	2	0	0	89.1	89.1	1	3149.08	3.25	0	80.96	0	1.18	0	0	9.84	0	0	0	0	0	0	-2.93	-2.93
Westbrook Inverter Enclosur	W_INV3	369508	4906164	2	0	0	89.1	89.1	1	3171.63	3.25	0	81.03	0	1.19	0	0	9.88	0	0	0	0	0	0	-3.03	-3.03
Westbrook Inverter Enclosur	W_INV7	369780	4906417	2	0	0	89.1	89.1	1	3274.44	3.25	0	81.3	0	1.21	0	0	10.03	0	0	0	0	0	0	-3.49	-3.49
Westbrook Inverter Enclosur	W_INV6	369875	4906578	2	0	0	89.1	89.1	1	3288.51	3.25	0	81.34	0	1.22	0	0	10.05	0	0	0	0	0	0	-3.55	-3.55
Westbrook Inverter Enclosur	W_INV4	369673	4906164	2	0	0	89.1	89.1	1	3309.39	3.25	0	81.39	0	1.22	0	0	10.08	0	0	0	0	0	0	-3.64	-3.64
Gardiner Substation	G_Sub	366586.3	4903349.9	2.5	0	0	90.8	90.8	1	4606.79	4.25	0	84.27	0	1.55	2.5	0.38	8.14	0	0	0	0	0	0	-5.69	-5.69
Westbrook Inverter Enclosur	W_INV1	369409	4906578	2	0	0	86.1	86.1	1	2871.37	3.25	0	80.16	0	1.12	0	0	9.42	0	0	0	0	0	0	-4.64	-4.64
Inverter	MV6-4	370250	4906966	2	0	0	86.1	86.1	1	3505.08	3.25	0	81.89	0	1.27	0	0	10.37	0	0	0	0	0	0	-7.48	-7.48
Inverters	G_Inv2	366676.9	4903239.1	2	0	0	87.7	87.7	1	4712.5	3.25	0	84.47	0	2.85	0	0	5.64	0	0	0	0	0	0	-5.29	-5.29
Inverters	G_Inv1	366526.4	4903225.8	2	0	0	87.7	87.7	1	4734.8	3.25	0	84.51	0	2.85	0	0	5.66	0	0	0	0	0	0	-5.35	-5.35
Inverters	G_Inv4	366732.8	4903105	2	0	0	87.7	87.7	1	4844.39	3.25	0	84.7	0	2.85	0	0	5.78	0	0	0	0	0	0	-5.68	-5.68
Inverters	G_Inv3	366583.7	4903091.4	2	0	0	87.7	87.7	1	4864.94	3.25	0	84.74	0	2.86	0	0	5.8	0	0	0	0	0	0	-5.74	-5.74
Inverters	G_Inv6	366788.5	4902972	2	0	0	87.7	87.7	1	4975.94	3.25	0	84.94	0	2.86	0	0	5.91	0	0	0	0	0	0	-6.06	-6.06
Inverters	G_Inv5	366638.5	4902958.1	2	0	0	87.7	87.7	1	4994.99	3.25	0	84.97	0	2.86	0	0	5.93	0	0	0	0	0	0	-6.11	-6.11
Inverters	G_Inv8	366844.5	4902838.5	2	0	0	87.7	87.7	1	5108.66	3.25	0	85.17	0	2.87	0	0	6.05	0	0	0	0	0	0	-6.43	-6.43
Inverters	G_Inv7	366694.6	4902824.7	2	0	0	87.7	87.7	1	5125.84	3.25	0	85.2	0	2.87	0	0	6.07	0	0	0	0	0	0	-6.48	-6.48
Inverters	G_Inv10	366900.7	4902704.8	2	0	0	87.7	87.7	1	5242.22	3.25	0	85.39	0	2.88	0	0	6.19	0	0	0	0	0	0	-6.8	-6.8
Inverters	G_Inv9	366750.9	4902691.8	2	0	0	87.7	87.7	1	5256.91	3.25	0	85.41	0	2.88	0	0	6.21	0	0	0	0	0	0	-6.84	-6.84
Westbrook Inverter Transfor	W_INVTR1	369403	4906578	2	0	0	78.2	78.2	1	2866.09	3.25	0	80.15	0	-2.68	0	0	1.6	0	0	0	0	0	0	-0.83	-0.83
Westbrook Inverter Transfor	W_INVTR2	369368	4906388	2	0	0	77.3	77.3	1	2931.86	3.25	0	80.34	0	-2.7	0	0	1.63	0	0	0	0	0	0	-1.93	-1.93
Westbrook Inverter Transfor	W_INVTR5	369725	4906574	2	0	0	77.3	77.3	1	3154.48	3.25	0	80.98	0	-2.76	0	0	1.72	0	0	0	0	0	0	-2.6	-2.6
Westbrook Inverter Transfor	W_INVTR3	369514	4906164	2	0	0	77.3	77.3	1	3176.59	3.25	0	81.04	0	-2.76	0	0	1.73	0	0	0	0	0	0	-2.67	-2.67
Westbrook Inverter Transfor	W_INVTR7	369786	4906417	2	0	0	77.3	77.3	1	3279.74	3.25	0	81.32	0	-2.79	0	0	1.77	0	0	0	0	0	0	-2.96	-2.96
Westbrook Inverter Transfor	W_INVTR6	369881	4906578	2	0	0	77.3	77.3	1	3293.96	3.25	0	81.35	0	-2.79	0	0	1.78	0	0	0	0	0	0	-3	-3
Westbrook Inverter Transfor	W_INVTR4	369679	4906164	2	0	0	77.3	77.3	1	3314.44	3.25	0	81.41	0	-2.8	0	0	1.79	0	0	0	0	0	0	-3.06	-3.06
Inverter Transformer	MV2-1 T	365836	4906816	2	0	0	69.4	69.4	1	1542.58	3.25	0	74.76	0	1.99	0	0	4.48	0	0	0	0	0	0	-11.89	-11.89
Inverter Transformer	MV1-7 T	364919	4905782	2	0	0	69.4	69.4	1	2924.45	3.25	0	80.32	0	2.48	0	0	5.82	0	0	0	0	0	0	-19.27	-19.27
Inverter Transformer	MV1-10 T	365010	4905564	2	0	0	69.4	69.4	1	3032.21	3.25	0	80.64	0	2.52	0	0	5.91	0	0	0	0	0	0	-19.71	-19.71
Inverter Transformer	MV1-14 T	365157	4905049	2	0	0	69.4	69.4	1	3374.08	3.25	0	81.56	0	2.62	0	0	6.19	0	0	0	0	0	0	-21.02	-21.02
Inverter Transformer	MV6-1 T	370230	4907364	2	0	0	69.4	69.4	1	3395.43	3.25	0	81.62	0	2.62	0	0	6.21	0	0	0	0	0	0	-21.1	-21.1
Inverter Transformer	MV1-13 T	364725	4905241	2	0	0	69.4	69.4	1	3462.38	3.25	0	81.79	0	2.64	0	0	6.26	0	0	0	0	0	0	-21.34	-21.34
Inverter Transformer	MV6-4 T	370244	4906966	2	0	0	69.4	69.4	1	3499.32	3.25	0	81.88	0	2.65	0	0	6.29	0	0	0	0	0	0	-21.47	-21.47
Inverter Transformer	MV3-12 T	367674	4907594	2	0	0	56.1	56.1	1	864.37	3.25	0	69.73	0	-0.03	0	0	4.56	0	0	0	0	0	0	-18.2	-18.2
Inverter Transformer	MV3-18 T	367757	4907412	2	0	0	56.1	56.1	1	1023.04	3.25	0	71.2	0	0.02	0	0	4.94	0	0	0	0	0	0	-20.1	-20.1
Inverter Transformer	MV3-3 T	367944	4907927	2	0	0	56.1	56.1	1	1059.19	3.25	0	71.5	0	0.03	0	0	5.03	0	0	0	0	0	0	-20.5	-20.5
Inverter Transformer	MV3-7 T	367951	4907754	2	0	0	56.1	56.1	1	1083.33	3.25	0	71.7	0	0.04	0	0	5.09	0	0	0	0	0	0	-20.76	-20.76
Inverter Transformer	MV3-13 T	367958	4907577	2	0	0	56.1	56.1	1	1135	3.25	0	72.1	0	0.06	0	0	5.21	0	0	0	0	0	0	-21.31	-21.31
Inverter Transformer	MV3-1 T	368150	4907976	2	0	0	56.1	56.1	1	1265.33	3.25	0	73.04	0	0.11	0	0	5.5	0	0	0	0	0	0	-22.6	-22.6
Inverter Transformer	MV3-6 T	368156	4907834	2	0	0	56.1	56.1	1	1276.02	3.25	0	73.12	0	0.11	0	0	5.53	0	0	0	0	0	0	-22.7	-22.7
Inverter Transformer	MV3-10 T	368162	4907669	2	0	0	56.1	56.1	1	1306.91	3.25	0	73.32	0	0.12	0	0	5.6	0	0	0	0	0	0	-22.99	-22.99
Inverter Transformer	MV3-17 T	368183	4907472	2	0	0	56.1	56.1	1	1382.18	3.25	0	73.81	0	0.15	0	0	5.76	0	0	0	0	0	0	-23.67	-23.67
Inverter Transformer	MV3-5 T	368335	4907843	2	0	0	56.1	56.1	1	1453.73	3.25	0	74.25	0	0.18	0	0	5.92	0	0	0	0	0	0	-24.29	-24.29
Inverter Transformer	MV3-11 T	368340	4907662	2	0	0	56.1	56.1	1	1482.65	3.25	0	74.42	0	0.19	0	0	5.98	0	0	0	0	0	0	-24.53	-24.53
Inverter Transformer	MV3-15 T	368351	4907477	2	0	0	56.1	56.1	1	1539.5	3.25	0	74.75	0	0.21	0	0	6.1	0	0	0	0	0	0	-25.01	-25.01

	Inverter Transformer	MV2-2 T	365982	4906654	2	0	0	56.1	56.1	1	1577.11	3.25	0	74.96	0	0.23	0	0	6.18	0	0	0	0	0	0	-25.31	-25.31
	Inverter Transformer	MV3-19 T	368352	4907347	2	0	0	56.1	56.1	1	1584.96	3.25	0	75	0	0.23	0	0	6.2	0	0	0	0	0	0	-25.37	-25.37
	Inverter Transformer	MV3-4 T	368507	4907925	2	0	0	56.1	56.1	1	1622.15	3.25	0	75.2	0	0.25	0	0	6.28	0	0	0	0	0	0	-25.67	-25.67
	Inverter Transformer	MV3-9 T	368517	4907703	2	0	0	56.1	56.1	1	1650.14	3.25	0	75.35	0	0.26	0	0	6.34	0	0	0	0	0	0	-25.89	-25.89
	Inverter Transformer	MV2-3 T	365814	4906641	2	0	0	56.1	56.1	1	1688.99	3.25	0	75.55	0	0.27	0	0	6.42	0	0	0	0	0	0	-26.19	-26.19
	Inverter Transformer	MV3-16 T	368509	4907475	2	0	0	56.1	56.1	1	1691.2	3.25	0	75.56	0	0.28	0	0	6.42	0	0	0	0	0	0	-26.2	-26.2
	Inverter Transformer	MV3-21 T	368484	4907206	2	0	0	56.1	56.1	1	1762.35	3.25	0	75.92	0	0.3	0	0	6.57	0	0	0	0	0	0	-26.74	-26.74
	Inverter Transformer	MV3-2 T	368677	4907928	2	0	0	56.1	56.1	1	1792.1	3.25	0	76.07	0	0.32	0	0	6.63	0	0	0	0	0	0	-26.95	-26.95
	Inverter Transformer	MV3-8 T	368685	4907712	2	0	0	56.1	56.1	1	1815.28	3.25	0	76.18	0	0.33	0	0	6.67	0	0	0	0	0	0	-27.12	-27.12
	Inverter Transformer	MV3-14 T	368678	4907498	2	0	0	56.1	56.1	1	1848.37	3.25	0	76.34	0	0.34	0	0	6.74	0	0	0	0	0	0	-27.36	-27.36
	Inverter Transformer	MV2-4 T	365590	4906628	2	0	0	56.1	56.1	1	1848.46	3.25	0	76.34	0	0.34	0	0	6.74	0	0	0	0	0	0	-27.36	-27.36
	Inverter Transformer	MV3-20 T	368683	4907317	2	0	0	56.1	56.1	1	1905.18	3.25	0	76.6	0	0.36	0	0	6.86	0	0	0	0	0	0	-27.76	-27.76
	Inverter Transformer	MV3-22 T	368661	4907142	2	0	0	56.1	56.1	1	1949.92	3.25	0	76.8	0	0.38	0	0	6.94	0	0	0	0	0	0	-28.07	-28.07
	Inverter Transformer	MV4-13 T	369057	4908605	2	0	0	56.1	56.1	1	2269.48	3.25	0	78.12	0	0.52	0	0	7.56	0	0	0	0	0	0	-30.14	-30.14
	Inverter Transformer	MV4-12 T	369049	4908803	2	0	0	56.1	56.1	1	2327.15	3.25	0	78.34	0	0.54	0	0	7.67	0	0	0	0	0	0	-30.49	-30.49
	Inverter Transformer	MV4-15 T	369170	4908481	2	0	0	56.1	56.1	1	2346.57	3.25	0	78.41	0	0.55	0	0	7.71	0	0	0	0	0	0	-30.61	-30.61
	Inverter Transformer	MV4-14 T	369182	4908507	2	0	0	56.1	56.1	1	2364.28	3.25	0	78.47	0	0.56	0	0	7.74	0	0	0	0	0	0	-30.71	-30.71
	Inverter Transformer	MV4-7 T	369040	4909001	2	0	0	56.1	56.1	1	2398.95	3.25	0	78.6	0	0.57	0	0	7.8	0	0	0	0	0	0	-30.92	-30.92
	Inverter Transformer	MV4-4 T	369033	4909199	2	0	0	56.1	56.1	1	2486.25	3.25	0	78.91	0	0.61	0	0	7.96	0	0	0	0	0	0	-31.43	-31.43
	Inverter Transformer	MV4-11 T	369269	4908855	2	0	0	56.1	56.1	1	2551.06	3.25	0	79.13	0	0.64	0	0	8.08	0	0	0	0	0	0	-31.8	-31.8
	Inverter Transformer	MV4-1 T	369017	4909397	2	0	0	56.1	56.1	1	2578.36	3.25	0	79.23	0	0.65	0	0	8.13	0	0	0	0	0	0	-31.95	-31.95
	Inverter Transformer	MV4-10 T	369307	4908858	2	0	0	56.1	56.1	1	2587.67	3.25	0	79.26	0	0.65	0	0	8.15	0	0	0	0	0	0	-32	-32
	Inverter Transformer	MV4-8 T	369262	4909001	2	0	0	56.1	56.1	1	2600.2	3.25	0	79.3	0	0.66	0	0	8.17	0	0	0	0	0	0	-32.07	-32.07
	Inverter Transformer	MV4-9 T	369284	4909001	2	0	0	56.1	56.1	1	2620.33	3.25	0	79.37	0	0.67	0	0	8.21	0	0	0	0	0	0	-32.18	-32.18
	Inverter Transformer	MV4-6 T	369249	4909192	2	0	0	56.1	56.1	1	2671.8	3.25	0	79.54	0	0.69	0	0	8.3	0	0	0	0	0	0	-32.47	-32.47
	Inverter Transformer	MV4-5 T	369283	4909199	2	0	0	56.1	56.1	1	2705.16	3.25	0	79.64	0	0.7	0	0	8.36	0	0	0	0	0	0	-32.65	-32.65
	Inverter Transformer	MV4-3 T	369234	4909397	2	0	0	56.1	56.1	1	2760.49	3.25	0	79.82	0	0.73	0	0	8.46	0	0	0	0	0	0	-32.94	-32.94
	Inverter Transformer	MV4-2 T	369267	4909397	2	0	0	56.1	56.1	1	2788.63	3.25	0	79.91	0	0.74	0	0	8.5	0	0	0	0	0	0	-33.09	-33.09
	Inverter Transformer	MV1-1 T	364721	4906166	2	0	0	56.1	56.1	1	2802.65	3.25	0	79.95	0	0.75	0	0	8.53	0	0	0	0	0	0	-33.17	-33.17
	Inverter Transformer	MV1-2 T	364759	4906063	2	0	0	56.1	56.1	1	2840.66	3.25	0	80.07	0	0.76	0	0	8.59	0	0	0	0	0	0	-33.37	-33.37
	Inverter Transformer	MV1-4 T	364821	4905918	2	0	0	56.1	56.1	1	2894.29	3.25	0	80.23	0	0.78	0	0	8.69	0	0	0	0	0	0	-33.64	-33.64
	Inverter Transformer	MV1-5 T	364676	4905892	2	0	0	56.1	56.1	1	3017.07	3.25	0	80.59	0	0.84	0	0	8.9	0	0	0	0	0	0	-34.27	-34.27
	Inverter Transformer	MV1-3 T	364435	4906039	2	0	0	56.1	56.1	1	3105.31	3.25	0	80.84	0	0.87	0	0	9.05	0	0	0	0	0	0	-34.7	-34.7
	Inverter Transformer	MV1-8 T	364782	4905647	2	0	0	56.1	56.1	1	3116.51	3.25	0	80.87	0	0.88	0	0	9.06	0	0	0	0	0	0	-34.76	-34.76
	Inverter Transformer	MV5-6 T	369987	4908507	2	0	0	56.1	56.1	1	3152.14	3.25	0	80.97	0	0.89	0	0	9.12	0	0	0	0	0	0	-34.93	-34.93
	Inverter Transformer	MV1-12 T	365044	4905386	2	0	0	56.1	56.1	1	3154.05	3.25	0	80.98	0	0.9	0	0	9.13	0	0	0	0	0	0	-34.94	-34.94
	Inverter Transformer	MV1-6 T	364482	4905835	2	0	0	56.1	56.1	1	3199.21	3.25	0	81.1	0	0.91	0	0	9.2	0	0	0	0	0	0	-35.16	-35.16
	Inverter Transformer	MV5-5 T	370021	4908690	2	0	0	56.1	56.1	1	3222.82	3.25	0	81.16	0	0.92	0	0	9.24	0	0	0	0	0	0	-35.27	-35.27
	Inverter Transformer	MV5-2 T	370011	4908853	2	0	0	56.1	56.1	1	3254.65	3.25	0	81.25	0	0.94	0	0	9.29	0	0	0	0	0	0	-35.42	-35.42
	Inverter Transformer	MV6-2 T	370091	4907339	2	0	0	56.1	56.1	1	3263.14	3.25	0	81.27	0	0.94	0	0	9.31	0	0	0	0	0	0	-35.46	-35.46
	Inverter Transformer	MV1-9 T	364555	4905646	2	0	0	56.1	56.1	1	3274.68	3.25	0	81.3	0	0.95	0	0	9.33	0	0	0	0	0	0	-35.52	-35.52
	Inverter Transformer	MV1-15 T	365309	4904994	2	0	0	56.1	56.1	1	3347.24	3.25	0	81.49	0	0.98	0	0	9.44	0	0	0	0	0	0	-35.85	-35.85
	Inverter Transformer	MV5-1 T	370015	4909142	2	0	0	56.1	56.1	1	3350.36	3.25	0	81.5	0	0.98	0	0	9.45	0	0	0	0	0	0	-35.87	-35.87
	Inverter Transformer	MV1-11 T	364649	4905414	2	0	0	56.1	56.1	1	3378.73	3.25	0	81.58	0	0.99	0	0	9.49	0	0	0	0	0	0	-36	-36
	Inverter Transformer	MV6-3 T	370202	4907140	2	0	0	56.1	56.1	1	3413.76	3.25	0	81.66	0	1	0	0	9.55	0	0	0	0	0	0	-36.16	-36.16
	Inverter Transformer	MV5-3 T	370237	4908851	2	0	0	56.1	56.1	1	3471.76	3.25	0	81.81	0	1.03	0	0	9.64	0	0	0	0	0	0	-36.42	-36.42
	Inverter Transformer	MV5-4 T	370330	4908707	2	0	0	56.1	56.1	1	3527.84	3.25	0	81.95	0	1.05	0	0	9.73	0	0	0	0	0	0	-36.68	-36.68
	Line Reactor	NGR	369421	4908787.5	5	0	0	45.4	45.4	1	2671.65	5.25	0	79.54	0	3.34	1.31	0.11	1.09	0	0	0	0	0	0	-39.92	-39.92
Limit. Valu	0	0																								
Level D/N:	30.0715	30.0715																								

Receiver: Existing Noise Receptor
ID: S-R107
X: 367094
Y: 4908148
Z: 4.5
Ground: 0

ISO	Description	ID	X	Y	Z	Ground	ReflOrd	LxT	LxN	L/A	Dist.	hm	Freq	Adiv	K0b	Agr	Abar	z	Aatm	Afol	Ahous	Cmet	CmetN	Dc	RL	LtotT	LtotN
	Sol_Luce Substation	S_Substation	369426	4908792	3.5	0	0	112.1	112.1	1	2419.29	5.25	0	78.67	0	0.12	3.57	0.32	5.06	0	0	0	0	0	0	24.65	24.65
	Inverter	MV3-12	367668	4907594	2	0	0	100.3	100.3	1	797.75	3.25	0	69.04	0	-0.35	0	0	10.17	0	0	0	0	0	0	21.46	21.46
	Inverter	MV3-3	367939	4907927	2	0	0	100.3	100.3	1	873.43	3.25	0	69.82	0	-0.31	0	0	10.47	0	0	0	0	0	0	20.33	20.33
	Inverter	MV3-7	367945	4907754	2	0	0	100.3	100.3	1	937.79	3.25	0	70.44	0	-0.28	0	0	10.7	0	0	0	0	0	0	19.45	19.45
	Inverter	MV3-18	367752	4907412	2	0	0	100.3	100.3	1	987.25	3.25	0	70.89	0	-0.25	0	0	10.87	0	0	0	0	0	0	18.81	18.81
	Inverter	MV3-13	367963	4907577	2	0	0	100.3	100.3	1	1039.81	3.25	0	71.34	0	-0.23	0	0	11.04	0	0	0	0	0	0	18.16	18.16
	Inverter	MV3-6	368162	4907834	2	0	0	100.3	100.3	1	1113.21	3.25	0	71.93	0	-0.19	0	0	11.27	0	0	0	0	0	0	17.3	17.3
	Inverter	MV3-10	368167	4907669	2	0	0	100.3	100.3	1	1175.06	3.25	0	72.4	0	-0.17	0	0	11.45	0	0	0	0	0	0	16.62	16.62
	Inverter	MV3-17	368178	4907472	2	0	0	100.3	100.3	1	1277.51	3.25	0	73.13	0	-0.12	0	0	11.74	0	0	0	0	0	0	15.56	15.56
	Inverter	MV3-11	368346	4907662	2	0	0	100.3	100.3	1	1343.02	3.25	0	73.56	0	-0.09	0	0	11.92	0	0	0	0	0	0	14.92	14.92
	Inverter	MV3-15	368357	4907477	2	0	0	100.3	100.3	1	1430.18	3.25	0	74.11	0	-0.06	0	0	12.15	0	0	0	0	0	0	14.12	14.12
	Inverter	MV3-9	368512	4907703	2	0	0	100.3	100.3	1	1486.19	3.25	0	74.44	0	-0.04	0	0	12.29	0	0	0	0	0	0	13.62	13.62
	Inverter	MV3-19	368357	4907347	2	0	0	100.3	100.3	1	1495.59	3.25	0	74.5	0	-0.04	0	0	12.31	0	0	0	0	0	0	13.54	13.54
	Inverter	MV3-16	368514	4907475	2	0	0	100.3	100.3	1	1571.41	3.25	0	74.93	0	-0.01	0	0	12.5	0	0	0	0	0	0	12.89	12.89
	Inverter	MV3-8	368680	4907712	2	0	0	100.3	100.3	1	1644.84	3.25	0	75.32	0	0.02	0	0	12.67	0	0	0	0	0	0	12.3	12.3

Inverter	MV3-21	368478	4907206	2	0	0	100.3	100.3	1	1674.16	3.25	0	75.48	0	0.03	0	0	12.74	0	0	0	0	0	0	12.07	12.07
Inverter	MV3-14	368684	4907498	2	0	0	100.3	100.3	1	1717.73	3.25	0	75.7	0	0.04	0	0	12.84	0	0	0	0	0	0	11.73	11.73
Inverter	MV3-20	368689	4907317	2	0	0	100.3	100.3	1	1798.5	3.25	0	76.1	0	0.07	0	0	13.03	0	0	0	0	0	0	11.12	11.12
Inverter	MV2-3	365820	4906641	2	0	0	100.3	100.3	1	1973.36	3.25	0	76.9	0	0.12	0	0	13.41	0	0	0	0	0	0	9.88	9.88
Inverter	MV4-7	369035	4909001	2	0	0	100.3	100.3	1	2120.16	3.25	0	77.53	0	0.16	0	0	13.71	0	0	0	0	0	0	8.91	8.91
Inverter	MV2-4	365586	4906624	2	0	0	100.3	100.3	1	2143.98	3.25	0	77.62	0	0.17	0	0	13.76	0	0	0	0	0	0	8.76	8.76
Inverter	MV4-4	369027	4909199	2	0	0	100.3	100.3	1	2200.25	3.25	0	77.85	0	0.18	0	0	13.87	0	0	0	0	0	0	8.41	8.41
Inverter	MV4-11	369264	4908855	2	0	0	100.3	100.3	1	2282.27	3.25	0	78.17	0	0.2	0	0	14.04	0	0	0	0	0	0	7.9	7.9
Inverter	MV4-1	369011	4909397	2	0	0	100.3	100.3	1	2287.99	3.25	0	78.19	0	0.21	0	0	14.05	0	0	0	0	0	0	7.87	7.87
Inverter	MV4-8	369256	4909001	2	0	0	100.3	100.3	1	2324.19	3.25	0	78.33	0	0.22	0	0	14.12	0	0	0	0	0	0	7.65	7.65
Inverter	MV4-10	369312	4908858	2	0	0	100.3	100.3	1	2328.87	3.25	0	78.34	0	0.22	0	0	14.13	0	0	0	0	0	0	7.62	7.62
Inverter	MV4-9	369289	4909001	2	0	0	100.3	100.3	1	2354.92	3.25	0	78.44	0	0.22	0	0	14.18	0	0	0	0	0	0	7.47	7.47
Inverter	MV4-6	369243	4909192	2	0	0	100.3	100.3	1	2389.17	3.25	0	78.56	0	0.23	0	0	14.25	0	0	0	0	0	0	7.27	7.27
Inverter	MV4-5	369289	4909199	2	0	0	100.3	100.3	1	2433.65	3.25	0	78.73	0	0.24	0	0	14.33	0	0	0	0	0	0	7.01	7.01
Inverter	MV4-3	369229	4909397	2	0	0	100.3	100.3	1	2473.51	3.25	0	78.87	0	0.25	0	0	14.41	0	0	0	0	0	0	6.79	6.79
Inverter	MV4-2	369272	4909397	2	0	0	100.3	100.3	1	2510.72	3.25	0	79	0	0.26	0	0	14.48	0	0	0	0	0	0	6.58	6.58
Inverter	MV2-1	365842	4906816	2	0	0	97.3	97.3	1	1828.04	3.25	0	76.24	0	0.08	0	0	13.09	0	0	0	0	0	0	7.9	7.9
Inverter	MV5-5	370015	4908690	2	0	0	100.3	100.3	1	2970.86	3.25	0	80.46	0	0.36	0	0	15.32	0	0	0	0	0	0	4.18	4.18
Inverter	MV5-2	370006	4908853	2	0	0	100.3	100.3	1	2996.13	3.25	0	80.53	0	0.36	0	0	15.37	0	0	0	0	0	0	4.05	4.05
Inverter	MV5-1	370020	4909142	2	0	0	100.3	100.3	1	3090.23	3.25	0	80.8	0	0.38	0	0	15.53	0	0	0	0	0	0	3.6	3.6
Inverter	MV1-1	364715	4906166	2	0	0	100.3	100.3	1	3096.44	3.25	0	80.82	0	0.38	0	0	15.54	0	0	0	0	0	0	3.57	3.57
Inverter	MV6-2	370085	4907339	2	0	0	100.3	100.3	1	3098.48	3.25	0	80.82	0	0.38	0	0	15.55	0	0	0	0	0	0	3.56	3.56
Inverter	MV1-2	364753	4906063	2	0	0	100.3	100.3	1	3134.89	3.25	0	80.92	0	0.39	0	0	15.61	0	0	0	0	0	0	3.39	3.39
Inverter	MV1-4	364815	4905918	2	0	0	100.3	100.3	1	3188.53	3.25	0	81.07	0	0.4	0	0	15.7	0	0	0	0	0	0	3.14	3.14
Inverter	MV5-3	370231	4908851	2	0	0	100.3	100.3	1	3214.81	3.25	0	81.14	0	0.4	0	0	15.75	0	0	0	0	0	0	3.02	3.02
Inverter	MV6-3	370207	4907140	2	0	0	100.3	100.3	1	3272.13	3.25	0	81.3	0	0.41	0	0	15.85	0	0	0	0	0	0	2.76	2.76
Inverter	MV5-4	370324	4908707	2	0	0	100.3	100.3	1	3278.02	3.25	0	81.31	0	0.41	0	0	15.86	0	0	0	0	0	0	2.73	2.73
Inverter	MV1-5	364671	4905892	2	0	0	100.3	100.3	1	3310.66	3.25	0	81.4	0	0.42	0	0	15.91	0	0	0	0	0	0	2.58	2.58
Inverter	MV1-8	364788	4905647	2	0	0	100.3	100.3	1	3401.86	3.25	0	81.63	0	0.43	0	0	16.07	0	0	0	0	0	0	2.18	2.18
Inverter	MV1-12	365038	4905386	2	0	0	100.3	100.3	1	3443.22	3.25	0	81.74	0	0.44	0	0	16.14	0	0	0	0	0	0	2	2
Inverter	MV1-6	364477	4905835	2	0	0	100.3	100.3	1	3492.66	3.25	0	81.86	0	0.45	0	0	16.22	0	0	0	0	0	0	1.78	1.78
Inverter	MV1-9	364561	4905646	2	0	0	100.3	100.3	1	3560.35	3.25	0	82.03	0	0.46	0	0	16.33	0	0	0	0	0	0	1.49	1.49
Inverter	MV1-15	365315	4904994	2	0	0	100.3	100.3	1	3621.13	3.25	0	82.18	0	0.47	0	0	16.43	0	0	0	0	0	0	1.23	1.23
DSTATCOM - 10 MVAR #2	DSAT2	369403	4908757	2.5	0	0	96.6	96.6	1	2387.96	3.5	0	78.56	0	3.3	0	0	1.95	0	0	0	0	0	0	12.82	12.82
Inverter	MV1-11	364655	4905414	2	0	0	100.3	100.3	1	3663.81	3.25	0	82.28	0	0.48	0	0	16.5	0	0	0	0	0	0	1.05	1.05
DSTATCOM - 10 MVAR #1	DSAT1	369437	4908757	2.5	0	0	96.6	96.6	1	2420.85	3.5	0	78.68	0	3.31	0	0	1.97	0	0	0	0	0	0	12.67	12.67
Inverter	MV3-1	368156	4907976	2	0	0	89.1	89.1	1	1075.84	3.25	0	71.63	0	0.7	0	0	6.46	0	0	0	0	0	0	10.27	10.27
Inverter	MV1-7	364925	4905782	2	0	0	97.3	97.3	1	3209.75	3.25	0	81.13	0	0.4	0	0	15.74	0	0	0	0	0	0	0.04	0.04
Inverter	MV6-1	370235	4907364	2	0	0	97.3	97.3	1	3237.37	3.25	0	81.2	0	0.41	0	0	15.79	0	0	0	0	0	0	-0.08	-0.08
Inverter	MV3-5	368340	4907843	2	0	0	89.1	89.1	1	1282.79	3.25	0	73.16	0	0.74	0	0	6.83	0	0	0	0	0	0	8.32	8.32
Inverter	MV1-10	365004	4905564	2	0	0	97.3	97.3	1	3323.43	3.25	0	81.43	0	0.42	0	0	15.93	0	0	0	0	0	0	-0.47	-0.47
Inverter	MV1-14	365163	4905049	2	0	0	97.3	97.3	1	3651.38	3.25	0	82.25	0	0.48	0	0	16.48	0	0	0	0	0	0	-1.9	-1.9
Inverter	MV3-4	368502	4907925	2	0	0	89.1	89.1	1	1425.55	3.25	0	74.08	0	0.78	0	0	7.08	0	0	0	0	0	0	7.12	7.12
Inverter	MV1-13	364731	4905241	2	0	0	97.3	97.3	1	3746.25	3.25	0	82.47	0	0.49	0	0	16.64	0	0	0	0	0	0	-2.29	-2.29
Inverter	MV3-2	368671	4907928	2	0	0	89.1	89.1	1	1592.27	3.25	0	75.04	0	0.81	0	0	7.37	0	0	0	0	0	0	5.84	5.84
Inverter	MV3-22	368656	4907142	2	0	0	89.1	89.1	1	1857.93	3.25	0	76.38	0	0.87	0	0	7.81	0	0	0	0	0	0	3.99	3.99
Inverter	MV2-2	365977	4906654	2	0	0	89.1	89.1	1	1865.4	3.25	0	76.42	0	0.88	0	0	7.82	0	0	0	0	0	0	3.94	3.94
Inverter	MV4-13	369051	4908605	2	0	0	89.1	89.1	1	2009.65	3.25	0	77.06	0	0.91	0	0	8.06	0	0	0	0	0	0	3.03	3.03
Inverter	MV4-12	369043	4908803	2	0	0	89.1	89.1	1	2056.12	3.25	0	77.26	0	0.92	0	0	8.14	0	0	0	0	0	0	2.74	2.74
Inverter	MV4-15	369176	4908481	2	0	0	89.1	89.1	1	2108.46	3.25	0	77.48	0	0.93	0	0	8.22	0	0	0	0	0	0	2.42	2.42
Inverter	MV4-14	369176	4908507	2	0	0	89.1	89.1	1	2112.73	3.25	0	77.5	0	0.93	0	0	8.23	0	0	0	0	0	0	2.4	2.4
Fixed Reactor Bank 1	FRB1	369378	4908755	6	0	0	89.8	89.8	1	2363.28	5.25	0	78.47	0	-0.95	0	0	4.97	0	0	0	0	0	0	7.29	7.29
Fixed Reactor Bank 2	FRB2	369464	4908755	6	0	0	89.8	89.8	1	2446.5	5.25	0	78.77	0	-0.94	0	0	5.1	0	0	0	0	0	0	6.85	6.85
SubstationTransformer	W_ST	369711.17	4906112.3	2.5	0	0	92	92	1	3315.69	4.25	0	81.41	0	1.14	2.8	0.23	6.42	0	0	0	0	0	0	0.2	0.2
Westbrook Inverter Enclosur	W_INV2	369374	4906388	2	0	0	89.1	89.1	1	2880.28	3.25	0	80.19	0	1.12	0	0	9.43	0	0	0	0	0	0	-1.68	-1.68
Inverter	MV5-6	369982	4908507	2	0	0	89.1	89.1	1	2910.23	3.25	0	80.28	0	1.12	0	0	9.48	0	0	0	0	0	0	-1.83	-1.83
Westbrook Inverter Enclosur	W_INV5	369719	4906574	2	0	0	89.1	89.1	1	3060.74	3.25	0	80.72	0	1.16	0	0	9.71	0	0	0	0	0	0	-2.53	-2.53
Westbrook Inverter Enclosur	W_INV3	369508	4906164	2	0	0	89.1	89.1	1	3124.69	3.25	0	80.9	0	1.18	0	0	9.81	0	0	0	0	0	0	-2.82	-2.82
Westbrook Inverter Enclosur	W_INV6	369875	4906578	2	0	0	89.1	89.1	1	3193.57	3.25	0	81.09	0	1.19	0	0	9.91	0	0	0	0	0	0	-3.13	-3.13
Westbrook Inverter Enclosur	W_INV7	369780	4906417	2	0	0	89.1	89.1	1	3195.46	3.25	0	81.09	0	1.19	0	0	9.91	0	0	0	0	0	0	-3.14	-3.14
Westbrook Inverter Enclosur	W_INV4	369673	4906164	2	0	0	89.1	89.1	1	3253.84	3.25	0	81.25	0	1.21	0	0	10	0	0	0	0	0	0	-3.4	-3.4
Inverter	MV1-3	364440	4906039	2	0	0	89.1	89.1	1	3389.93	3.25	0	81.6	0	1.24	0	0	10.2	0	0	0	0	0	0	-3.99	-3.99
Westbrook Inverter Enclosur	W_INV1	369409	4906578	2	0	0	86.1	86.1	1	2797.16	3.25	0	79.93	0	1.1	0	0	9.31	0	0	0	0	0	0	-4.28	-4.28
Gardiner Substation	G_Sub	366586.3	4903349.9	2.5	0	0	90.8	90.8	1	4824.89	4.25	0	84.67	0	1.61	2.43	0.38	8.41	0	0	0	0	0	0	-6.35	-6.35
Inverter	MV6-4	370250	4906966	2	0	0	86.1	86.1	1	3370.08	3.25	0	81.55	0	1.24	0	0	10.17	0	0	0	0	0	0	-6.9	-6.9
Inverters	G_Inv2	366676.9	4903239.1	2	0	0	87.7	87.7	1	4926.59	3.25	0	84.85	0	2.86	0	0	5.86	0	0	0	0	0	0	-5.91	-5.91
Inverters	G_Inv1	366526.4	4903225.8	2	0	0	87.7	87.7	1	4954.82	3.25	0	84.9	0	2.86	0	0	5.89	0	0	0	0	0	0	-5.99	-5.99
Inverters	G_Inv4	366732.8	4903105	2	0	0	87.7	87.7	1	5055.92	3.25	0	85.08	0	2.87	0	0	6	0	0	0	0	0	0	-6.28	-6.28
Inverters	G_Inv3	366583.7	4903091.4	2	0	0	87.7	87.7	1	5082.28	3.25	0	85.12	0	2.87	0	0	6.03	0	0	0	0	0	0	-6.36	-6.36
Inverters	G_Inv6	366788.5	4902972	2	0	0	87.7	87.7	1	5185.01	3.25	0	85.29	0	2.88	0	0	6.13	0	0	0	0	0	0	-6.64	-6.64
Inverters	G_Inv5	366638.5	4902958.1	2	0	0	87.7	87.7	1	5209.85	3.25	0	85.34	0	2.88	0	0	6.16	0	0	0	0	0	0	-6.71	-6.71
Inverters	G_Inv8	366844.5	4902838.5	2	0	0	87.7	87.7	1	5315.36	3.25	0	85.51	0	2.88	0	0	6.27	0	0	0	0	0	0	-7	-7
Inverters	G_Inv7	366694.6	4902824.7	2	0	0	87.7	87.7	1	5338.26	3.25	0	85.55	0	2.88	0	0	6.29	0	0	0	0	0	0	-7.07	-7.07
Inverters	G_Inv10	366900.7	4902704.8	2	0	0	87.7	87.7	1	5446.63	3.25	0	85.72	0	2.89	0	0	6.41	0	0	0	0	0	0	-7.36	-7.36

Inverters	G_Inv9	366750.9	4902691.8	2	0	0	87.7	87.7	1	5466.98	3.25	0	85.75	0	2.89	0	0	6.43	0	0	0	0	0	0	-7.41	-7.41
Westbrook Inverter Transfor	W_INVTR1	369403	4906578	2	0	0	78.2	78.2	1	2792.2	3.25	0	79.92	0	-2.66	0	0	1.57	0	0	0	0	0	0	-0.59	-0.59
Westbrook Inverter Transfor	W_INVTR2	369368	4906388	2	0	0	77.3	77.3	1	2875.53	3.25	0	80.17	0	-2.68	0	0	1.6	0	0	0	0	0	0	-1.76	-1.76
Westbrook Inverter Transfor	W_INVTR5	369725	4906574	2	0	0	77.3	77.3	1	3065.88	3.25	0	80.73	0	-2.73	0	0	1.68	0	0	0	0	0	0	-2.34	-2.34
Westbrook Inverter Transfor	W_INVTR3	369514	4906164	2	0	0	77.3	77.3	1	3129.32	3.25	0	80.91	0	-2.75	0	0	1.71	0	0	0	0	0	0	-2.53	-2.53
Westbrook Inverter Transfor	W_INVTR6	369881	4906578	2	0	0	77.3	77.3	1	3198.79	3.25	0	81.1	0	-2.77	0	0	1.74	0	0	0	0	0	0	-2.73	-2.73
Westbrook Inverter Transfor	W_INVTR7	369786	4906417	2	0	0	77.3	77.3	1	3200.5	3.25	0	81.1	0	-2.77	0	0	1.74	0	0	0	0	0	0	-2.74	-2.74
Westbrook Inverter Transfor	W_INVTR4	369679	4906164	2	0	0	77.3	77.3	1	3258.6	3.25	0	81.26	0	-2.78	0	0	1.76	0	0	0	0	0	0	-2.9	-2.9
Inverter Transformer	MV2-1 T	365836	4906816	2	0	0	69.4	69.4	1	1832.16	3.25	0	76.26	0	2.11	0	0	4.79	0	0	0	0	0	0	-13.81	-13.81
Inverter Transformer	MV1-7 T	364919	4905782	2	0	0	69.4	69.4	1	3213.81	3.25	0	81.14	0	2.57	0	0	6.06	0	0	0	0	0	0	-20.42	-20.42
Inverter Transformer	MV6-1 T	370230	4907364	2	0	0	69.4	69.4	1	3232.52	3.25	0	81.19	0	2.58	0	0	6.08	0	0	0	0	0	0	-20.49	-20.49
Inverter Transformer	MV1-10 T	365010	4905564	2	0	0	69.4	69.4	1	3319.66	3.25	0	81.42	0	2.6	0	0	6.15	0	0	0	0	0	0	-20.82	-20.82
Inverter Transformer	MV6-4 T	370244	4906966	2	0	0	69.4	69.4	1	3364.47	3.25	0	81.54	0	2.61	0	0	6.18	0	0	0	0	0	0	-20.99	-20.99
Inverter Transformer	MV1-14 T	365157	4905049	2	0	0	69.4	69.4	1	3654.56	3.25	0	82.26	0	2.7	0	0	6.41	0	0	0	0	0	0	-22.02	-22.02
Inverter Transformer	MV3-12 T	367674	4907594	2	0	0	56.1	56.1	1	802.07	3.25	0	69.08	0	-0.05	0	0	4.4	0	0	0	0	0	0	-17.37	-17.37
Inverter Transformer	MV1-13 T	364725	4905241	2	0	0	69.4	69.4	1	3750.04	3.25	0	82.48	0	2.72	0	0	6.49	0	0	0	0	0	0	-22.34	-22.34
Inverter Transformer	MV3-3 T	367944	4907927	2	0	0	56.1	56.1	1	878.26	3.25	0	69.87	0	-0.03	0	0	4.59	0	0	0	0	0	0	-18.38	-18.38
Inverter Transformer	MV3-7 T	367951	4907754	2	0	0	56.1	56.1	1	943.23	3.25	0	70.49	0	-0.01	0	0	4.75	0	0	0	0	0	0	-19.18	-19.18
Inverter Transformer	MV3-18 T	367757	4907412	2	0	0	56.1	56.1	1	990.59	3.25	0	70.92	0	0.01	0	0	4.87	0	0	0	0	0	0	-19.73	-19.73
Inverter Transformer	MV3-13 T	367958	4907577	2	0	0	56.1	56.1	1	1035.64	3.25	0	71.3	0	0.02	0	0	4.97	0	0	0	0	0	0	-20.24	-20.24
Inverter Transformer	MV3-1 T	368150	4907976	2	0	0	56.1	56.1	1	1069.92	3.25	0	71.59	0	0.04	0	0	5.05	0	0	0	0	0	0	-20.62	-20.62
Inverter Transformer	MV3-6 T	368156	4907834	2	0	0	56.1	56.1	1	1107.45	3.25	0	71.89	0	0.05	0	0	5.14	0	0	0	0	0	0	-21.02	-21.02
Inverter Transformer	MV3-10 T	368162	4907669	2	0	0	56.1	56.1	1	1170.5	3.25	0	72.37	0	0.07	0	0	5.29	0	0	0	0	0	0	-21.67	-21.67
Inverter Transformer	MV3-5 T	368335	4907843	2	0	0	56.1	56.1	1	1277.93	3.25	0	73.13	0	0.11	0	0	5.53	0	0	0	0	0	0	-22.72	-22.72
Inverter Transformer	MV3-17 T	368183	4907472	2	0	0	56.1	56.1	1	1281.76	3.25	0	73.16	0	0.11	0	0	5.54	0	0	0	0	0	0	-22.75	-22.75
Inverter Transformer	MV3-11 T	368340	4907662	2	0	0	56.1	56.1	1	1337.43	3.25	0	73.53	0	0.14	0	0	5.66	0	0	0	0	0	0	-23.27	-23.27
Inverter Transformer	MV3-15 T	368351	4907477	2	0	0	56.1	56.1	1	1424.88	3.25	0	74.08	0	0.17	0	0	5.86	0	0	0	0	0	0	-24.04	-24.04
Inverter Transformer	MV3-4 T	368507	4907925	2	0	0	56.1	56.1	1	1430.49	3.25	0	74.11	0	0.17	0	0	5.87	0	0	0	0	0	0	-24.09	-24.09
Inverter Transformer	MV3-9 T	368517	4907703	2	0	0	56.1	56.1	1	1490.96	3.25	0	74.47	0	0.2	0	0	6	0	0	0	0	0	0	-24.6	-24.6
Inverter Transformer	MV3-19 T	368352	4907347	2	0	0	56.1	56.1	1	1491.37	3.25	0	74.47	0	0.2	0	0	6	0	0	0	0	0	0	-24.61	-24.61
Inverter Transformer	MV3-16 T	368509	4907475	2	0	0	56.1	56.1	1	1566.9	3.25	0	74.9	0	0.23	0	0	6.16	0	0	0	0	0	0	-25.23	-25.23
Inverter Transformer	MV3-2 T	368677	4907928	2	0	0	56.1	56.1	1	1598.22	3.25	0	75.07	0	0.24	0	0	6.23	0	0	0	0	0	0	-25.48	-25.48
Inverter Transformer	MV3-8 T	368685	4907712	2	0	0	56.1	56.1	1	1649.66	3.25	0	75.35	0	0.26	0	0	6.33	0	0	0	0	0	0	-25.88	-25.88
Inverter Transformer	MV3-21 T	368484	4907206	2	0	0	56.1	56.1	1	1679.13	3.25	0	75.5	0	0.27	0	0	6.4	0	0	0	0	0	0	-26.11	-26.11
Inverter Transformer	MV3-14 T	368678	4907498	2	0	0	56.1	56.1	1	1712.18	3.25	0	75.67	0	0.28	0	0	6.46	0	0	0	0	0	0	-26.36	-26.36
Inverter Transformer	MV3-20 T	368683	4907317	2	0	0	56.1	56.1	1	1793.18	3.25	0	76.07	0	0.32	0	0	6.63	0	0	0	0	0	0	-26.96	-26.96
Inverter Transformer	MV3-22 T	368661	4907142	2	0	0	56.1	56.1	1	1862.13	3.25	0	76.4	0	0.35	0	0	6.77	0	0	0	0	0	0	-27.46	-27.46
Inverter Transformer	MV2-2 T	365982	4906654	2	0	0	56.1	56.1	1	1862.41	3.25	0	76.4	0	0.35	0	0	6.77	0	0	0	0	0	0	-27.46	-27.46
Inverter Transformer	MV2-3 T	365814	4906641	2	0	0	56.1	56.1	1	1977.23	3.25	0	76.92	0	0.39	0	0	7	0	0	0	0	0	0	-28.26	-28.26
Inverter Transformer	MV4-13 T	369057	4908605	2	0	0	56.1	56.1	1	2015.5	3.25	0	77.09	0	0.41	0	0	7.07	0	0	0	0	0	0	-28.51	-28.51
Inverter Transformer	MV4-12 T	369049	4908803	2	0	0	56.1	56.1	1	2061.81	3.25	0	77.28	0	0.43	0	0	7.16	0	0	0	0	0	0	-28.82	-28.82
Inverter Transformer	MV4-15 T	369170	4908481	2	0	0	56.1	56.1	1	2102.54	3.25	0	77.45	0	0.45	0	0	7.24	0	0	0	0	0	0	-29.09	-29.09
Inverter Transformer	MV4-14 T	369182	4908507	2	0	0	56.1	56.1	1	2118.64	3.25	0	77.52	0	0.45	0	0	7.27	0	0	0	0	0	0	-29.19	-29.19
Inverter Transformer	MV4-7 T	369040	4909001	2	0	0	56.1	56.1	1	2124.74	3.25	0	77.55	0	0.46	0	0	7.29	0	0	0	0	0	0	-29.23	-29.23
Inverter Transformer	MV2-4 T	365590	4906628	2	0	0	56.1	56.1	1	2138.32	3.25	0	77.6	0	0.46	0	0	7.31	0	0	0	0	0	0	-29.32	-29.32
Inverter Transformer	MV4-4 T	369033	4909199	2	0	0	56.1	56.1	1	2205.52	3.25	0	77.87	0	0.49	0	0	7.44	0	0	0	0	0	0	-29.74	-29.74
Inverter Transformer	MV4-11 T	369269	4908855	2	0	0	56.1	56.1	1	2287.02	3.25	0	78.19	0	0.53	0	0	7.6	0	0	0	0	0	0	-30.25	-30.25
Inverter Transformer	MV4-1 T	369017	4909397	2	0	0	56.1	56.1	1	2293.02	3.25	0	78.21	0	0.53	0	0	7.61	0	0	0	0	0	0	-30.28	-30.28
Inverter Transformer	MV4-10 T	369307	4908858	2	0	0	56.1	56.1	1	2324.11	3.25	0	78.33	0	0.54	0	0	7.66	0	0	0	0	0	0	-30.47	-30.47
Inverter Transformer	MV4-8 T	369262	4909001	2	0	0	56.1	56.1	1	2329.77	3.25	0	78.35	0	0.54	0	0	7.68	0	0	0	0	0	0	-30.51	-30.51
Inverter Transformer	MV4-9 T	369284	4909001	2	0	0	56.1	56.1	1	2350.26	3.25	0	78.42	0	0.55	0	0	7.71	0	0	0	0	0	0	-30.63	-30.63
Inverter Transformer	MV4-6 T	369249	4909192	2	0	0	56.1	56.1	1	2394.57	3.25	0	78.58	0	0.57	0	0	7.8	0	0	0	0	0	0	-30.89	-30.89
Inverter Transformer	MV4-5 T	369283	4909199	2	0	0	56.1	56.1	1	2428.24	3.25	0	78.71	0	0.59	0	0	7.86	0	0	0	0	0	0	-31.09	-31.09
Inverter Transformer	MV4-3 T	369234	4909397	2	0	0	56.1	56.1	1	2477.82	3.25	0	78.88	0	0.61	0	0	7.95	0	0	0	0	0	0	-31.38	-31.38
Inverter Transformer	MV4-2 T	369267	4909397	2	0	0	56.1	56.1	1	2506.38	3.25	0	78.98	0	0.62	0	0	8	0	0	0	0	0	0	-31.54	-31.54
Inverter Transformer	MV5-6 T	369987	4908507	2	0	0	56.1	56.1	1	2915.19	3.25	0	80.29	0	0.79	0	0	8.72	0	0	0	0	0	0	-33.75	-33.75
Inverter Transformer	MV5-5 T	370021	4908690	2	0	0	56.1	56.1	1	2976.76	3.25	0	80.47	0	0.82	0	0	8.83	0	0	0	0	0	0	-34.07	-34.07
Inverter Transformer	MV5-2 T	370011	4908853	2	0	0	56.1	56.1	1	3000.99	3.25	0	80.55	0	0.83	0	0	8.87	0	0	0	0	0	0	-34.19	-34.19
Inverter Transformer	MV5-1 T	370015	4909142	2	0	0	56.1	56.1	1	3085.5	3.25	0	80.79	0	0.87	0	0	9.01	0	0	0	0	0	0	-34.61	-34.61
Inverter Transformer	MV1-1 T	364721	4906166	2	0	0	56.1	56.1	1	3091.84	3.25	0	80.8	0	0.87	0	0	9.02	0	0	0	0	0	0	-34.64	-34.64
Inverter Transformer	MV6-2 T	370091	4907339	2	0	0	56.1	56.1	1	3104.27	3.25	0	80.84	0	0.87	0	0	9.04	0	0	0	0	0	0	-34.7	-34.7
Inverter Transformer	MV1-2 T	364759	4906063	2	0	0	56.1	56.1	1	3130.41	3.25	0	80.91	0	0.89	0	0	9.09	0	0	0	0	0	0	-34.83	-34.83
Inverter Transformer	MV1-4 T	364821	4905918	2	0	0	56.1	56.1	1	3184.25	3.25	0	81.06	0	0.91	0	0	9.18	0	0	0	0	0	0	-35.09	-35.09
Inverter Transformer	MV5-3 T	370237	4908851	2	0	0	56.1	56.1	1	3220.66	3.25	0	81.16	0	0.92	0	0	9.24	0	0	0	0	0	0	-35.26	-35.26
Inverter Transformer	MV6-3 T	370202	4907140	2	0	0	56.1	56.1	1	3267.37	3.25	0	81.28	0	0.94	0	0	9.31	0	0	0	0	0	0	-35.48	-35.48
Inverter Transformer	MV5-4 T	370330	4908707	2	0	0	56.1	56.1	1	3283.93	3.25	0	81.33	0	0.95	0	0	9.34	0	0	0	0	0	0	-35.56	-35.56
Inverter Transformer	MV1-5 T	364676	4905892	2	0	0	56.1	56.1	1	3307	3.25	0	81.39	0	0.96	0	0	9.38	0	0	0	0	0	0	-35.67	-35.67
Inverter Transformer	MV1-3 T	364435	4906039	2	0	0	56.1	56.1	1	3393.84	3.25	0	81.61	0	1	0	0	9.52	0	0	0	0	0	0	-36.07	-36.07
Inverter Transformer	MV1-8 T	364782	4905647	2	0	0	56.1	56.1	1	3405.93	3.25	0	81.64	0	1	0	0	9.54	0	0	0	0	0	0	-36.12	-36.12
Inverter Transformer	MV1-12 T	365044	4905386	2	0	0	56.1	56.1	1	3439.64	3.25	0	81.73	0	1.01	0	0	9.59	0	0	0	0	0	0	-36.28	-36.28
Inverter Transformer	MV1-6 T	364482	4905835	2	0	0	56.1	56.1	1	3488.91	3.25	0	81.85	0	1.04	0	0	9.67	0	0	0	0	0	0	-36.5	-36.5
Inverter Transformer	MV1-9 T	364555	4905646	2	0	0	56.1	56.1	1	3564.62	3.25	0	82.04	0	1.07	0	0	9.79	0	0	0	0	0	0	-36.84	-36.84
Inverter Transformer	MV1-15 T	365309	4904994	2	0	0	56.1	56.1	1	3624.08	3.25	0	82.18	0	1.09	0	0	9.88	0	0	0	0	0	0	-37.1	-37.1
Inverter Transformer	MV1-11 T	364649	4905414	2	0	0	56.1	56.1	1	3667.8	3.25	0	82.29	0	1.11	0	0	9.95	0	0	0	0	0	0	-37.29	-37.29

	Line Reactor	NGR	369421	4908787.5	5	0	0	45.4	45.4	1	2413.27	5.25	0	78.65	0	3.35	1.3	0.11	0.99	0	0	0	0	0	0	-38.94	-38.94
Limit. Valu	0	0																									
Level D/N:	31.1755	31.1755																									

Receiver: Existing Noise Receptor
ID: S-R108
X: 367168
Y: 4908242
Z: 4.5
Ground: 0

ISO	Description	ID	X	Y	Z	Ground	ReflOrd	LxT	LxN	L/A	Dist.	hm	Freq	Adiv	K0b	Agr	Abar	z	Aatm	Afol	Ahous	Cmet	CmetN	Dc	RL	LtotT	LtotN
	Sol_Luce Substation	S_Substation	369426	4908792	3.5	0	0	112.1	112.1	1	2324.02	5.25	0	78.32	0	0.1	3.62	0.32	4.91	0	0	0	0	0	0	25.13	25.13
	Inverter	MV3-12	367668	4907594	2	0	0	100.3	100.3	1	818.48	3.25	0	69.26	0	-0.34	0	0	10.26	0	0	0	0	0	0	21.14	21.14
	Inverter	MV3-3	367939	4907927	2	0	0	100.3	100.3	1	832.87	3.25	0	69.41	0	-0.33	0	0	10.31	0	0	0	0	0	0	20.92	20.92
	Inverter	MV3-7	367945	4907754	2	0	0	100.3	100.3	1	917.54	3.25	0	70.25	0	-0.29	0	0	10.63	0	0	0	0	0	0	19.72	19.72
	Inverter	MV3-18	367752	4907412	2	0	0	100.3	100.3	1	1014.87	3.25	0	71.13	0	-0.24	0	0	10.96	0	0	0	0	0	0	18.46	18.46
	Inverter	MV3-13	367963	4907577	2	0	0	100.3	100.3	1	1036.46	3.25	0	71.31	0	-0.23	0	0	11.03	0	0	0	0	0	0	18.2	18.2
	Inverter	MV3-6	368162	4907834	2	0	0	100.3	100.3	1	1074.48	3.25	0	71.62	0	-0.21	0	0	11.15	0	0	0	0	0	0	17.75	17.75
	Inverter	MV3-10	368167	4907669	2	0	0	100.3	100.3	1	1151.67	3.25	0	72.23	0	-0.18	0	0	11.38	0	0	0	0	0	0	16.88	16.88
	Inverter	MV3-17	368178	4907472	2	0	0	100.3	100.3	1	1270.04	3.25	0	73.08	0	-0.12	0	0	11.72	0	0	0	0	0	0	15.64	15.64
	Inverter	MV3-11	368346	4907662	2	0	0	100.3	100.3	1	1313.05	3.25	0	73.37	0	-0.11	0	0	11.84	0	0	0	0	0	0	15.21	15.21
	Inverter	MV3-15	368357	4907477	2	0	0	100.3	100.3	1	1413.84	3.25	0	74.01	0	-0.07	0	0	12.11	0	0	0	0	0	0	14.26	14.26
	Inverter	MV3-9	368512	4907703	2	0	0	100.3	100.3	1	1448.05	3.25	0	74.22	0	-0.05	0	0	12.19	0	0	0	0	0	0	13.96	13.96
	Inverter	MV3-19	368357	4907347	2	0	0	100.3	100.3	1	1488.2	3.25	0	74.45	0	-0.04	0	0	12.3	0	0	0	0	0	0	13.6	13.6
	Inverter	MV3-16	368514	4907475	2	0	0	100.3	100.3	1	1549.2	3.25	0	74.8	0	-0.02	0	0	12.45	0	0	0	0	0	0	13.08	13.08
	Inverter	MV3-8	368680	4907712	2	0	0	100.3	100.3	1	1602.2	3.25	0	75.09	0	0	0	0	12.57	0	0	0	0	0	0	12.64	12.64
	Inverter	MV3-21	368478	4907206	2	0	0	100.3	100.3	1	1670.15	3.25	0	75.46	0	0.03	0	0	12.73	0	0	0	0	0	0	12.1	12.1
	Inverter	MV3-14	368684	4907498	2	0	0	100.3	100.3	1	1688.73	3.25	0	75.55	0	0.03	0	0	12.78	0	0	0	0	0	0	11.95	11.95
	Inverter	MV3-20	368689	4907317	2	0	0	100.3	100.3	1	1780.19	3.25	0	76.01	0	0.06	0	0	12.98	0	0	0	0	0	0	11.26	11.26
	Inverter	MV4-7	369035	4909001	2	0	0	100.3	100.3	1	2015.38	3.25	0	77.09	0	0.13	0	0	13.49	0	0	0	0	0	0	9.6	9.6
	Inverter	MV4-4	369027	4909199	2	0	0	100.3	100.3	1	2090.87	3.25	0	77.41	0	0.15	0	0	13.65	0	0	0	0	0	0	9.1	9.1
	Inverter	MV2-3	365820	4906641	2	0	0	100.3	100.3	1	2092.92	3.25	0	77.42	0	0.16	0	0	13.66	0	0	0	0	0	0	9.09	9.09
	Inverter	MV4-1	369011	4909397	2	0	0	100.3	100.3	1	2175.01	3.25	0	77.75	0	0.18	0	0	13.82	0	0	0	0	0	0	8.56	8.56
	Inverter	MV4-11	369264	4908855	2	0	0	100.3	100.3	1	2183.8	3.25	0	77.78	0	0.18	0	0	13.84	0	0	0	0	0	0	8.51	8.51
	Inverter	MV4-8	369256	4909001	2	0	0	100.3	100.3	1	2221.67	3.25	0	77.93	0	0.19	0	0	13.92	0	0	0	0	0	0	8.27	8.27
	Inverter	MV4-10	369312	4908858	2	0	0	100.3	100.3	1	2230.74	3.25	0	77.97	0	0.19	0	0	13.93	0	0	0	0	0	0	8.22	8.22
	Inverter	MV4-9	369289	4909001	2	0	0	100.3	100.3	1	2252.72	3.25	0	78.05	0	0.2	0	0	13.98	0	0	0	0	0	0	8.08	8.08
	Inverter	MV2-4	365586	4906624	2	0	0	100.3	100.3	1	2262.89	3.25	0	78.09	0	0.2	0	0	14	0	0	0	0	0	0	8.02	8.02
	Inverter	MV4-6	369243	4909192	2	0	0	100.3	100.3	1	2282.13	3.25	0	78.17	0	0.2	0	0	14.04	0	0	0	0	0	0	7.9	7.9
	Inverter	MV4-5	369289	4909199	2	0	0	100.3	100.3	1	2326.91	3.25	0	78.34	0	0.22	0	0	14.12	0	0	0	0	0	0	7.64	7.64
	Inverter	MV4-3	369229	4909397	2	0	0	100.3	100.3	1	2362.57	3.25	0	78.47	0	0.22	0	0	14.19	0	0	0	0	0	0	7.43	7.43
	Inverter	MV4-2	369272	4909397	2	0	0	100.3	100.3	1	2400.18	3.25	0	78.6	0	0.23	0	0	14.27	0	0	0	0	0	0	7.21	7.21
	Inverter	MV2-1	365842	4906816	2	0	0	97.3	97.3	1	1947.24	3.25	0	76.79	0	0.11	0	0	13.35	0	0	0	0	0	0	7.06	7.06
	Inverter	MV5-5	370015	4908690	2	0	0	100.3	100.3	1	2882.03	3.25	0	80.19	0	0.34	0	0	15.16	0	0	0	0	0	0	4.62	4.62
	Inverter	MV5-2	370006	4908853	2	0	0	100.3	100.3	1	2903.03	3.25	0	80.26	0	0.34	0	0	15.2	0	0	0	0	0	0	4.51	4.51
	Inverter	MV5-1	370020	4909142	2	0	0	100.3	100.3	1	2990.64	3.25	0	80.52	0	0.36	0	0	15.36	0	0	0	0	0	0	4.08	4.08
	Inverter	MV6-2	370085	4907339	2	0	0	100.3	100.3	1	3053.57	3.25	0	80.7	0	0.37	0	0	15.47	0	0	0	0	0	0	3.78	3.78
	Inverter	MV5-3	370231	4908851	2	0	0	100.3	100.3	1	3122.96	3.25	0	80.89	0	0.39	0	0	15.59	0	0	0	0	0	0	3.45	3.45
	Inverter	MV5-4	370324	4908707	2	0	0	100.3	100.3	1	3190.07	3.25	0	81.08	0	0.4	0	0	15.7	0	0	0	0	0	0	3.13	3.13
	Inverter	MV1-1	364715	4906166	2	0	0	100.3	100.3	1	3213.56	3.25	0	81.14	0	0.4	0	0	15.74	0	0	0	0	0	0	3.03	3.03
	Inverter	MV6-3	370207	4907140	2	0	0	100.3	100.3	1	3232.64	3.25	0	81.19	0	0.41	0	0	15.78	0	0	0	0	0	0	2.94	2.94
	Inverter	MV1-2	364753	4906063	2	0	0	100.3	100.3	1	3252.73	3.25	0	81.24	0	0.41	0	0	15.81	0	0	0	0	0	0	2.85	2.85
	Inverter	MV1-4	364815	4905918	2	0	0	100.3	100.3	1	3307.2	3.25	0	81.39	0	0.42	0	0	15.91	0	0	0	0	0	0	2.6	2.6
	Inverter	MV1-5	364671	4905892	2	0	0	100.3	100.3	1	3428.92	3.25	0	81.7	0	0.44	0	0	16.11	0	0	0	0	0	0	2.06	2.06
	DSTATCOM - 10 MVAR #2	DSAT2	369403	4908757	2.5	0	0	96.6	96.6	1	2293.57	3.5	0	78.21	0	3.28	0	0	1.89	0	0	0	0	0	0	13.24	13.24
	Inverter	MV1-8	364788	4905647	2	0	0	100.3	100.3	1	3521.14	3.25	0	81.93	0	0.45	0	0	16.27	0	0	0	0	0	0	1.66	1.66
	DSTATCOM - 10 MVAR #1	DSAT1	369437	4908757	2.5	0	0	96.6	96.6	1	2326.71	3.5	0	78.33	0	3.29	0	0	1.91	0	0	0	0	0	0	13.09	13.09
	Inverter	MV1-12	365038	4905386	2	0	0	100.3	100.3	1	3562.81	3.25	0	82.04	0	0.46	0	0	16.34	0	0	0	0	0	0	1.48	1.48
	Inverter	MV1-6	364477	4905835	2	0	0	100.3	100.3	1	3610.42	3.25	0	82.15	0	0.47	0	0	16.42	0	0	0	0	0	0	1.28	1.28
	Inverter	MV1-9	364561	4905646	2	0	0	100.3	100.3	1	3679.09	3.25	0	82.31	0	0.48	0	0	16.53	0	0	0	0	0	0	0.99	0.99
	Inverter	MV3-1	368156	4907976	2	0	0	89.1	89.1	1	1023.18	3.25	0	71.2	0	0.69	0	0	6.36	0	0	0	0	0	0	10.81	10.81
	Inverter	MV1-15	365315	4904994	2	0	0	100.3	100.3	1	3739.4	3.25	0	82.46	0	0.49	0	0	16.63	0	0	0	0	0	0	0.74	0.74
	Inverter	MV1-11	364655	4905414	2	0	0	100.3	100.3	1	3783.22	3.25	0	82.56	0	0.5	0	0	16.7	0	0	0	0	0	0	0.56	0.56
	Inverter	MV6-1	370235	4907364	2	0	0	97.3	97.3	1	3190.2	3.25	0	81.08	0	0.4	0	0	15.7	0	0	0	0	0	0	0.13	0.13
	Inverter	MV3-5	368340	4907843	2	0	0	89.1	89.1	1	1238.06	3.25	0	72.85	0	0.74	0	0	6.75	0	0	0	0	0	0	8.72	8.72
	Inverter	MV1-7	364925	4905782	2	0	0	97.3	97.3	1	3329.06	3.25	0	81.45	0	0.42	0	0	15.94	0	0	0	0	0	0	-0.5	-0.5
	Inverter	MV1-10	365004	4905564	2	0	0	97.3	97.3	1	3443.05	3.25	0	81.74	0	0.44	0	0	16.14	0	0	0	0	0	0	-1	-1
	Inverter	MV3-4	368502	4907925	2	0	0	89.1	89.1	1	1371.15	3.25	0	73.74	0	0.76	0	0	6.99	0	0	0	0	0	0	7.57	7.57
	Inverter	MV1-14	365163	4905049	2	0	0	97.3	97.3	1	3770.32	3.25	0	82.53	0	0.49	0	0	16.68	0	0	0	0	0	0	-2.39	-2.39
	Inverter	MV1-13	364731	4905241	2	0	0	97.3	97.3	1	3865.87	3.25	0	82.74	0	0.51	0	0	16.83	0	0	0	0	0	0	-2.77	-2.77
	Inverter	MV3-2	368671	4907928	2	0	0	89.1	89.1	1	1535.45	3.25	0	74.72	0	0.8	0	0	7.27	0	0	0	0	0	0	6.26	6.26
	Inverter	MV3-22	368656	4907142	2	0	0	89.1	89.1	1	1850.45	3.25	0	76.35	0	0.87	0	0	7.8	0	0	0	0	0	0	4.04	4.04
	Inverter	MV4-13	369051	4908605	2	0	0	89.1	89.1	1	1917.67	3.25	0	76.66	0	0.89	0	0	7.91	0	0	0	0	0	0	3.6	3.6

Inverter	MV4-12	369043	4908803	2	0	0	89.1	89.1	1	1957.13	3.25	0	76.83	0	0.9	0	0	7.98	0	0	0	0	0	0	3.35	3.35
Inverter	MV2-2	365977	4906654	2	0	0	89.1	89.1	1	1985	3.25	0	76.96	0	0.9	0	0	8.02	0	0	0	0	0	0	3.18	3.18
Inverter	MV4-15	369176	4908481	2	0	0	89.1	89.1	1	2022.17	3.25	0	77.12	0	0.91	0	0	8.08	0	0	0	0	0	0	2.95	2.95
Inverter	MV4-14	369176	4908507	2	0	0	89.1	89.1	1	2025.41	3.25	0	77.13	0	0.91	0	0	8.09	0	0	0	0	0	0	2.93	2.93
Fixed Reactor Bank 1	FRB1	369378	4908755	6	0	0	89.8	89.8	1	2268.76	5.25	0	78.12	0	-0.97	0	0	4.81	0	0	0	0	0	0	7.81	7.81
Fixed Reactor Bank 2	FRB2	369464	4908755	6	0	0	89.8	89.8	1	2352.61	5.25	0	78.43	0	-0.96	0	0	4.95	0	0	0	0	0	0	7.35	7.35
SubstationTransformer	W_ST	369711.17	4906112.3	2.5	0	0	92	92	1	3317.15	4.25	0	81.42	0	1.14	2.79	0.22	6.42	0	0	0	0	0	0	0.2	0.2
Inverter	MV5-6	369982	4908507	2	0	0	89.1	89.1	1	2826.45	3.25	0	80.02	0	1.1	0	0	9.35	0	0	0	0	0	0	-1.42	-1.42
Westbrook Inverter Enclosur	W_INV2	369374	4906388	2	0	0	89.1	89.1	1	2881.62	3.25	0	80.19	0	1.12	0	0	9.44	0	0	0	0	0	0	-1.69	-1.69
Westbrook Inverter Enclosur	W_INV5	369719	4906574	2	0	0	89.1	89.1	1	3047.92	3.25	0	80.68	0	1.16	0	0	9.69	0	0	0	0	0	0	-2.47	-2.47
Westbrook Inverter Enclosur	W_INV3	369508	4906164	2	0	0	89.1	89.1	1	3129.49	3.25	0	80.91	0	1.18	0	0	9.81	0	0	0	0	0	0	-2.84	-2.84
Westbrook Inverter Enclosur	W_INV6	369875	4906578	2	0	0	89.1	89.1	1	3177.54	3.25	0	81.04	0	1.19	0	0	9.88	0	0	0	0	0	0	-3.06	-3.06
Westbrook Inverter Enclosur	W_INV7	369780	4906417	2	0	0	89.1	89.1	1	3186.4	3.25	0	81.07	0	1.19	0	0	9.9	0	0	0	0	0	0	-3.1	-3.1
Westbrook Inverter Enclosur	W_INV4	369673	4906164	2	0	0	89.1	89.1	1	3254.71	3.25	0	81.25	0	1.21	0	0	10	0	0	0	0	0	0	-3.4	-3.4
Inverter	MV1-3	364440	4906039	2	0	0	89.1	89.1	1	3506.45	3.25	0	81.9	0	1.27	0	0	10.37	0	0	0	0	0	0	-4.48	-4.48
Westbrook Inverter Enclosur	W_INV1	369409	4906578	2	0	0	86.1	86.1	1	2791.23	3.25	0	79.92	0	1.1	0	0	9.3	0	0	0	0	0	0	-4.25	-4.25
Gardiner Substation	G_Sub	366586.3	4903349.9	2.5	0	0	90.8	90.8	1	4926.56	4.25	0	84.85	0	1.63	2.4	0.39	8.53	0	0	0	0	0	0	-6.64	-6.64
Inverter	MV6-4	370250	4906966	2	0	0	86.1	86.1	1	3335.7	3.25	0	81.46	0	1.23	0	0	10.12	0	0	0	0	0	0	-6.75	-6.75
Inverters	G_Inv2	366676.9	4903239.1	2	0	0	87.7	87.7	1	5026.95	3.25	0	85.03	0	2.87	0	0	5.97	0	0	0	0	0	0	-6.2	-6.2
Inverters	G_Inv1	366526.4	4903225.8	2	0	0	87.7	87.7	1	5057.07	3.25	0	85.08	0	2.87	0	0	6	0	0	0	0	0	0	-6.29	-6.29
Inverters	G_Inv4	366732.8	4903105	2	0	0	87.7	87.7	1	5155.4	3.25	0	85.25	0	2.87	0	0	6.1	0	0	0	0	0	0	-6.56	-6.56
Inverters	G_Inv3	366583.7	4903091.4	2	0	0	87.7	87.7	1	5183.64	3.25	0	85.29	0	2.88	0	0	6.13	0	0	0	0	0	0	-6.64	-6.64
Inverters	G_Inv6	366788.5	4902972	2	0	0	87.7	87.7	1	5283.65	3.25	0	85.46	0	2.88	0	0	6.24	0	0	0	0	0	0	-6.92	-6.92
Inverters	G_Inv5	366638.5	4902958.1	2	0	0	87.7	87.7	1	5310.36	3.25	0	85.5	0	2.88	0	0	6.27	0	0	0	0	0	0	-6.99	-6.99
Inverters	G_Inv8	366844.5	4902838.5	2	0	0	87.7	87.7	1	5413.18	3.25	0	85.67	0	2.89	0	0	6.37	0	0	0	0	0	0	-7.27	-7.27
Inverters	G_Inv7	366694.6	4902824.7	2	0	0	87.7	87.7	1	5437.95	3.25	0	85.71	0	2.89	0	0	6.4	0	0	0	0	0	0	-7.34	-7.34
Inverters	G_Inv10	366900.7	4902704.8	2	0	0	87.7	87.7	1	5543.65	3.25	0	85.88	0	2.9	0	0	6.51	0	0	0	0	0	0	-7.62	-7.62
Inverters	G_Inv9	366750.9	4902691.8	2	0	0	87.7	87.7	1	5565.85	3.25	0	85.91	0	2.9	0	0	6.53	0	0	0	0	0	0	-7.68	-7.68
Westbrook Inverter Transfor	W_INVTR1	369403	4906578	2	0	0	78.2	78.2	1	2786.42	3.25	0	79.9	0	-2.65	0	0	1.57	0	0	0	0	0	0	-0.57	-0.57
Westbrook Inverter Transfor	W_INVTR2	369368	4906388	2	0	0	77.3	77.3	1	2877.03	3.25	0	80.18	0	-2.68	0	0	1.6	0	0	0	0	0	0	-1.76	-1.76
Westbrook Inverter Transfor	W_INVTR5	369725	4906574	2	0	0	77.3	77.3	1	3052.95	3.25	0	80.69	0	-2.73	0	0	1.68	0	0	0	0	0	0	-2.3	-2.3
Westbrook Inverter Transfor	W_INVTR3	369514	4906164	2	0	0	77.3	77.3	1	3133.98	3.25	0	80.92	0	-2.75	0	0	1.71	0	0	0	0	0	0	-2.54	-2.54
Westbrook Inverter Transfor	W_INVTR6	369881	4906578	2	0	0	77.3	77.3	1	3182.65	3.25	0	81.06	0	-2.76	0	0	1.73	0	0	0	0	0	0	-2.68	-2.68
Westbrook Inverter Transfor	W_INVTR7	369786	4906417	2	0	0	77.3	77.3	1	3191.32	3.25	0	81.08	0	-2.77	0	0	1.74	0	0	0	0	0	0	-2.71	-2.71
Westbrook Inverter Transfor	W_INVTR4	369679	4906164	2	0	0	77.3	77.3	1	3259.33	3.25	0	81.26	0	-2.78	0	0	1.76	0	0	0	0	0	0	-2.9	-2.9
Inverter Transformer	MV2-1 T	365836	4906816	2	0	0	69.4	69.4	1	1951.33	3.25	0	76.81	0	2.16	0	0	4.92	0	0	0	0	0	0	-14.53	-14.53
Inverter Transformer	MV6-1 T	370230	4907364	2	0	0	69.4	69.4	1	3185.39	3.25	0	81.06	0	2.56	0	0	6.04	0	0	0	0	0	0	-20.31	-20.31
Inverter Transformer	MV6-4 T	370244	4906966	2	0	0	69.4	69.4	1	3330.16	3.25	0	81.45	0	2.61	0	0	6.16	0	0	0	0	0	0	-20.86	-20.86
Inverter Transformer	MV1-7 T	364919	4905782	2	0	0	69.4	69.4	1	3333.11	3.25	0	81.46	0	2.61	0	0	6.16	0	0	0	0	0	0	-20.87	-20.87
Inverter Transformer	MV1-10 T	365010	4905564	2	0	0	69.4	69.4	1	3439.28	3.25	0	81.73	0	2.64	0	0	6.24	0	0	0	0	0	0	-21.26	-21.26
Inverter Transformer	MV1-14 T	365157	4905049	2	0	0	69.4	69.4	1	3773.51	3.25	0	82.53	0	2.73	0	0	6.51	0	0	0	0	0	0	-22.42	-22.42
Inverter Transformer	MV3-12 T	367674	4907594	2	0	0	56.1	56.1	1	822.16	3.25	0	69.3	0	-0.05	0	0	4.45	0	0	0	0	0	0	-17.65	-17.65
Inverter Transformer	MV3-3 T	367944	4907927	2	0	0	56.1	56.1	1	837.5	3.25	0	69.46	0	-0.04	0	0	4.49	0	0	0	0	0	0	-17.85	-17.85
Inverter Transformer	MV1-13 T	364725	4905241	2	0	0	69.4	69.4	1	3869.66	3.25	0	82.75	0	2.75	0	0	6.58	0	0	0	0	0	0	-22.73	-22.73
Inverter Transformer	MV3-7 T	367951	4907754	2	0	0	56.1	56.1	1	922.63	3.25	0	70.3	0	-0.01	0	0	4.7	0	0	0	0	0	0	-18.93	-18.93
Inverter Transformer	MV3-1 T	368150	4907976	2	0	0	56.1	56.1	1	1017.39	3.25	0	71.15	0	0.02	0	0	4.93	0	0	0	0	0	0	-20.04	-20.04
Inverter Transformer	MV3-18 T	367757	4907412	2	0	0	56.1	56.1	1	1017.76	3.25	0	71.15	0	0.02	0	0	4.93	0	0	0	0	0	0	-20.04	-20.04
Inverter Transformer	MV3-13 T	367958	4907577	2	0	0	56.1	56.1	1	1032.63	3.25	0	71.28	0	0.02	0	0	4.97	0	0	0	0	0	0	-20.21	-20.21
Inverter Transformer	MV3-6 T	368156	4907834	2	0	0	56.1	56.1	1	1068.93	3.25	0	71.58	0	0.04	0	0	5.05	0	0	0	0	0	0	-20.61	-20.61
Inverter Transformer	MV3-10 T	368162	4907669	2	0	0	56.1	56.1	1	1147.33	3.25	0	72.19	0	0.06	0	0	5.23	0	0	0	0	0	0	-21.43	-21.43
Inverter Transformer	MV3-5 T	368335	4907843	2	0	0	56.1	56.1	1	1233.33	3.25	0	72.82	0	0.1	0	0	5.43	0	0	0	0	0	0	-22.29	-22.29
Inverter Transformer	MV3-17 T	368183	4907472	2	0	0	56.1	56.1	1	1274.02	3.25	0	73.1	0	0.11	0	0	5.52	0	0	0	0	0	0	-22.68	-22.68
Inverter Transformer	MV3-11 T	368340	4907662	2	0	0	56.1	56.1	1	1307.67	3.25	0	73.33	0	0.12	0	0	5.6	0	0	0	0	0	0	-22.99	-22.99
Inverter Transformer	MV3-4 T	368507	4907925	2	0	0	56.1	56.1	1	1376.01	3.25	0	73.77	0	0.15	0	0	5.75	0	0	0	0	0	0	-23.61	-23.61
Inverter Transformer	MV3-15 T	368351	4907477	2	0	0	56.1	56.1	1	1408.8	3.25	0	73.98	0	0.16	0	0	5.82	0	0	0	0	0	0	-23.9	-23.9
Inverter Transformer	MV3-9 T	368517	4907703	2	0	0	56.1	56.1	1	1452.7	3.25	0	74.24	0	0.18	0	0	5.92	0	0	0	0	0	0	-24.28	-24.28
Inverter Transformer	MV3-19 T	368352	4907347	2	0	0	56.1	56.1	1	1484.21	3.25	0	74.43	0	0.19	0	0	5.98	0	0	0	0	0	0	-24.55	-24.55
Inverter Transformer	MV3-2 T	368677	4907928	2	0	0	56.1	56.1	1	1541.33	3.25	0	74.76	0	0.22	0	0	6.11	0	0	0	0	0	0	-25.02	-25.02
Inverter Transformer	MV3-16 T	368509	4907475	2	0	0	56.1	56.1	1	1544.85	3.25	0	74.78	0	0.22	0	0	6.11	0	0	0	0	0	0	-25.05	-25.05
Inverter Transformer	MV3-8 T	368685	4907712	2	0	0	56.1	56.1	1	1606.92	3.25	0	75.12	0	0.24	0	0	6.24	0	0	0	0	0	0	-25.55	-25.55
Inverter Transformer	MV3-21 T	368484	4907206	2	0	0	56.1	56.1	1	1674.86	3.25	0	75.48	0	0.27	0	0	6.39	0	0	0	0	0	0	-26.08	-26.08
Inverter Transformer	MV3-14 T	368678	4907498	2	0	0	56.1	56.1	1	1683.34	3.25	0	75.52	0	0.27	0	0	6.4	0	0	0	0	0	0	-26.14	-26.14
Inverter Transformer	MV3-20 T	368683	4907317	2	0	0	56.1	56.1	1	1775.07	3.25	0	75.98	0	0.31	0	0	6.59	0	0	0	0	0	0	-26.83	-26.83
Inverter Transformer	MV3-22 T	368661	4907142	2	0	0	56.1	56.1	1	1854.47	3.25	0	76.36	0	0.34	0	0	6.75	0	0	0	0	0	0	-27.4	-27.4
Inverter Transformer	MV4-13 T	369057	4908605	2	0	0	56.1	56.1	1	1923.56	3.25	0	76.68	0	0.37	0	0	6.89	0	0	0	0	0	0	-27.89	-27.89
Inverter Transformer	MV4-12 T	369049	4908803	2	0	0	56.1	56.1	1	1962.88	3.25	0	76.86	0	0.39	0	0	6.97	0	0	0	0	0	0	-28.16	-28.16
Inverter Transformer	MV2-2 T	365982	4906654	2	0	0	56.1	56.1	1	1982.01	3.25	0	76.94	0	0.4	0	0	7.01	0	0	0	0	0	0	-28.29	-28.29
Inverter Transformer	MV4-15 T	369170	4908481	2	0	0	56.1	56.1	1	2016.22	3.25	0	77.09	0	0.41	0	0	7.08	0	0	0	0	0	0	-28.52	-28.52
Inverter Transformer	MV4-7 T	369040	4909001	2	0	0	56.1	56.1	1	2020.02	3.25	0	77.11	0	0.41	0	0	7.08	0	0	0	0	0	0	-28.54	-28.54
Inverter Transformer	MV4-14 T	369182	4908507	2	0	0	56.1	56.1	1	2031.36	3.25	0	77.16	0	0.42	0	0	7.11	0	0	0	0	0	0	-28.62	-28.62
Inverter Transformer	MV4-4 T	369033	4909199	2	0	0	56.1	56.1	1	2096.21	3.25	0	77.43	0	0.44	0	0	7.23	0	0	0	0	0	0	-29.05	-29.05
Inverter Transformer	MV2-3 T	365814	4906641	2	0	0	56.1	56.1	1	2096.79	3.25	0	77.43	0	0.44	0	0	7.23	0	0	0	0	0	0	-29.05	-29.05
Inverter Transformer	MV4-1 T	369017	4909397	2	0	0	56.1	56.1	1	2180.1	3.25	0	77.77	0	0.48	0	0	7.39	0	0	0	0	0	0	-29.58	-29.58
Inverter Transformer	MV4-11 T	369269	4908855	2	0	0	56.1	56.1	1	2188.6	3.25	0	77.8	0	0.48	0	0	7.41	0	0	0	0	0	0	-29.64	-29.64

	Inverter Transformer	MV4-10 T	369307	4908858	2	0	0	56.1	56.1	1	2225.93	3.25	0	77.95	0	0.5	0	0	7.48	0	0	0	0	0	0	-29.87	-29.87
	Inverter Transformer	MV4-8 T	369262	4909001	2	0	0	56.1	56.1	1	2227.31	3.25	0	77.96	0	0.5	0	0	7.48	0	0	0	0	0	0	-29.88	-29.88
	Inverter Transformer	MV4-9 T	369284	4909001	2	0	0	56.1	56.1	1	2248.01	3.25	0	78.04	0	0.51	0	0	7.52	0	0	0	0	0	0	-30.01	-30.01
	Inverter Transformer	MV2-4 T	365590	4906628	2	0	0	56.1	56.1	1	2257.23	3.25	0	78.07	0	0.51	0	0	7.54	0	0	0	0	0	0	-30.07	-30.07
	Inverter Transformer	MV4-6 T	369249	4909192	2	0	0	56.1	56.1	1	2287.59	3.25	0	78.19	0	0.53	0	0	7.6	0	0	0	0	0	0	-30.25	-30.25
	Inverter Transformer	MV4-5 T	369283	4909199	2	0	0	56.1	56.1	1	2321.44	3.25	0	78.32	0	0.54	0	0	7.66	0	0	0	0	0	0	-30.46	-30.46
	Inverter Transformer	MV4-3 T	369234	4909397	2	0	0	56.1	56.1	1	2366.94	3.25	0	78.48	0	0.56	0	0	7.74	0	0	0	0	0	0	-30.73	-30.73
	Inverter Transformer	MV4-2 T	369267	4909397	2	0	0	56.1	56.1	1	2395.79	3.25	0	78.59	0	0.57	0	0	7.8	0	0	0	0	0	0	-30.9	-30.9
	Inverter Transformer	MV5-6 T	369987	4908507	2	0	0	56.1	56.1	1	2831.43	3.25	0	80.04	0	0.76	0	0	8.58	0	0	0	0	0	0	-33.32	-33.32
	Inverter Transformer	MV5-5 T	370021	4908690	2	0	0	56.1	56.1	1	2887.96	3.25	0	80.21	0	0.78	0	0	8.68	0	0	0	0	0	0	-33.61	-33.61
	Inverter Transformer	MV5-2 T	370011	4908853	2	0	0	56.1	56.1	1	2907.92	3.25	0	80.27	0	0.79	0	0	8.71	0	0	0	0	0	0	-33.71	-33.71
	Inverter Transformer	MV5-1 T	370015	4909142	2	0	0	56.1	56.1	1	2985.87	3.25	0	80.5	0	0.82	0	0	8.84	0	0	0	0	0	0	-34.11	-34.11
	Inverter Transformer	MV6-2 T	370091	4907339	2	0	0	56.1	56.1	1	3059.3	3.25	0	80.71	0	0.86	0	0	8.97	0	0	0	0	0	0	-34.48	-34.48
	Inverter Transformer	MV5-3 T	370237	4908851	2	0	0	56.1	56.1	1	3128.84	3.25	0	80.91	0	0.88	0	0	9.08	0	0	0	0	0	0	-34.82	-34.82
	Inverter Transformer	MV5-4 T	370330	4908707	2	0	0	56.1	56.1	1	3196.01	3.25	0	81.09	0	0.91	0	0	9.2	0	0	0	0	0	0	-35.14	-35.14
	Inverter Transformer	MV1-1 T	364721	4906166	2	0	0	56.1	56.1	1	3208.99	3.25	0	81.13	0	0.92	0	0	9.22	0	0	0	0	0	0	-35.2	-35.2
	Inverter Transformer	MV6-3 T	370202	4907140	2	0	0	56.1	56.1	1	3227.94	3.25	0	81.18	0	0.93	0	0	9.25	0	0	0	0	0	0	-35.29	-35.29
	Inverter Transformer	MV1-2 T	364759	4906063	2	0	0	56.1	56.1	1	3248.28	3.25	0	81.23	0	0.93	0	0	9.28	0	0	0	0	0	0	-35.39	-35.39
	Inverter Transformer	MV1-4 T	364821	4905918	2	0	0	56.1	56.1	1	3302.94	3.25	0	81.38	0	0.96	0	0	9.37	0	0	0	0	0	0	-35.65	-35.65
	Inverter Transformer	MV1-5 T	364676	4905892	2	0	0	56.1	56.1	1	3425.28	3.25	0	81.69	0	1.01	0	0	9.57	0	0	0	0	0	0	-36.21	-36.21
	Inverter Transformer	MV1-3 T	364435	4906039	2	0	0	56.1	56.1	1	3510.34	3.25	0	81.91	0	1.04	0	0	9.7	0	0	0	0	0	0	-36.6	-36.6
	Inverter Transformer	MV1-8 T	364782	4905647	2	0	0	56.1	56.1	1	3525.2	3.25	0	81.94	0	1.05	0	0	9.73	0	0	0	0	0	0	-36.66	-36.66
	Inverter Transformer	MV1-12 T	365044	4905386	2	0	0	56.1	56.1	1	3559.23	3.25	0	82.03	0	1.06	0	0	9.78	0	0	0	0	0	0	-36.81	-36.81
	Inverter Transformer	MV1-6 T	364482	4905835	2	0	0	56.1	56.1	1	3606.7	3.25	0	82.14	0	1.08	0	0	9.86	0	0	0	0	0	0	-37.02	-37.02
	Inverter Transformer	MV1-9 T	364555	4905646	2	0	0	56.1	56.1	1	3683.34	3.25	0	82.32	0	1.12	0	0	9.97	0	0	0	0	0	0	-37.36	-37.36
	Inverter Transformer	MV1-15 T	365309	4904994	2	0	0	56.1	56.1	1	3742.38	3.25	0	82.46	0	1.14	0	0	10.07	0	0	0	0	0	0	-37.61	-37.61
	Inverter Transformer	MV1-11 T	364649	4905414	2	0	0	56.1	56.1	1	3787.21	3.25	0	82.57	0	1.16	0	0	10.13	0	0	0	0	0	0	-37.8	-37.8
	Line Reactor	NGR	369421	4908787.5	5	0	0	45.4	45.4	1	2318.1	5.25	0	78.3	0	3.36	1.29	0.11	0.95	0	0	0	0	0	0	-38.55	-38.55
Limit. Valu	0	0																								
Level D/N:	31.4102	31.4102																								

Receiver: Existing Noise Receptor
ID: S-R109
X: 368761
Y: 4908590
Z: 4.5
Ground: 0

ISO	Description	ID	X	Y	Z	Ground	ReflOrd	LxT	LxN	L/A	Dist.	hm	Freq	Adiv	K0b	Agr	Abar	z	Aatm	Afol	Ahous	Cmet	CmetN	Dc	RL	LtotT	LtotN
	Sol_Luce Substation	S_Substation	369426	4908792	3.5	0	0	112.1	112.1	1	695	5.24	0	67.84	0	0	5.97	0.31	1.88	0	0	0	0	0	0	36.39	36.39
	Inverter	MV4-7	369035	4909001	2	0	0	100.3	100.3	1	493.97	3.25	0	64.87	0	-0.56	0	0	8.48	0	0	0	0	0	0	27.52	27.52
	Inverter	MV4-11	369264	4908855	2	0	0	100.3	100.3	1	568.54	3.25	0	66.1	0	-0.5	0	0	9.01	0	0	0	0	0	0	25.71	25.71
	Inverter	MV4-10	369312	4908858	2	0	0	100.3	100.3	1	612.72	3.25	0	66.75	0	-0.47	0	0	9.28	0	0	0	0	0	0	24.76	24.76
	Inverter	MV4-8	369256	4909001	2	0	0	100.3	100.3	1	643.39	3.25	0	67.17	0	-0.45	0	0	9.45	0	0	0	0	0	0	24.14	24.14
	Inverter	MV4-4	369027	4909199	2	0	0	100.3	100.3	1	664.56	3.25	0	67.45	0	-0.43	0	0	9.56	0	0	0	0	0	0	23.73	23.73
	Inverter	MV4-9	369289	4909001	2	0	0	100.3	100.3	1	669.11	3.25	0	67.51	0	-0.43	0	0	9.58	0	0	0	0	0	0	23.65	23.65
	Inverter	MV4-6	369243	4909192	2	0	0	100.3	100.3	1	771.19	3.25	0	68.74	0	-0.37	0	0	10.06	0	0	0	0	0	0	21.88	21.88
	Inverter	MV4-5	369289	4909199	2	0	0	100.3	100.3	1	806.02	3.25	0	69.13	0	-0.35	0	0	10.2	0	0	0	0	0	0	21.33	21.33
	Inverter	MV4-1	369011	4909397	2	0	0	100.3	100.3	1	844.84	3.25	0	69.54	0	-0.33	0	0	10.36	0	0	0	0	0	0	20.74	20.74
	Inverter	MV3-8	368680	4907712	2	0	0	100.3	100.3	1	881.73	3.25	0	69.91	0	-0.31	0	0	10.5	0	0	0	0	0	0	20.21	20.21
	Inverter	MV3-9	368512	4907703	2	0	0	100.3	100.3	1	921.29	3.25	0	70.29	0	-0.29	0	0	10.64	0	0	0	0	0	0	19.67	19.67
	Inverter	MV4-3	369229	4909397	2	0	0	100.3	100.3	1	932.89	3.25	0	70.4	0	-0.28	0	0	10.68	0	0	0	0	0	0	19.51	19.51
	Inverter	MV4-2	369272	4909397	2	0	0	100.3	100.3	1	955.18	3.25	0	70.6	0	-0.27	0	0	10.76	0	0	0	0	0	0	19.22	19.22
	Inverter	MV3-6	368162	4907834	2	0	0	100.3	100.3	1	964.54	3.25	0	70.69	0	-0.26	0	0	10.79	0	0	0	0	0	0	19.1	19.1
	DSTATCOM - 10 MVAR #2	DSAT2	369403	4908757	2.5	0	0	96.6	96.6	1	663.37	3.5	0	67.44	0	2.5	0	0	0.84	0	0	0	0	0	0	25.86	25.86
	Inverter	MV3-11	368346	4907662	2	0	0	100.3	100.3	1	1016.57	3.25	0	71.14	0	-0.24	0	0	10.97	0	0	0	0	0	0	18.44	18.44
	Inverter	MV3-3	367939	4907927	2	0	0	100.3	100.3	1	1056.06	3.25	0	71.47	0	-0.22	0	0	11.09	0	0	0	0	0	0	17.97	17.97
	Inverter	MV4-13	369051	4908605	2	0	0	89.1	89.1	1	290.4	3.25	0	60.26	0	0.36	0	0	4.06	0	0	0	0	0	0	24.38	24.38
	DSTATCOM - 10 MVAR #1	DSAT1	369437	4908757	2.5	0	0	96.6	96.6	1	696.33	3.5	0	67.86	0	2.56	0	0	0.86	0	0	0	0	0	0	25.35	25.35
	Inverter	MV3-14	368684	4907498	2	0	0	100.3	100.3	1	1094.71	3.25	0	71.79	0	-0.2	0	0	11.21	0	0	0	0	0	0	17.51	17.51
	Inverter	MV3-10	368167	4907669	2	0	0	100.3	100.3	1	1095.94	3.25	0	71.8	0	-0.2	0	0	11.22	0	0	0	0	0	0	17.5	17.5
	Inverter	MV3-16	368514	4907475	2	0	0	100.3	100.3	1	1142.03	3.25	0	72.15	0	-0.18	0	0	11.36	0	0	0	0	0	0	16.98	16.98
	Inverter	MV3-7	367945	4907754	2	0	0	100.3	100.3	1	1168.23	3.25	0	72.35	0	-0.17	0	0	11.43	0	0	0	0	0	0	16.7	16.7
	Inverter	MV3-15	368357	4907477	2	0	0	100.3	100.3	1	1184.06	3.25	0	72.47	0	-0.16	0	0	11.48	0	0	0	0	0	0	16.53	16.53
	Inverter	MV5-5	370015	4908690	2	0	0	100.3	100.3	1	1257.98	3.25	0	72.99	0	-0.13	0	0	11.69	0	0	0	0	0	0	15.76	15.76
	Inverter	MV3-17	368178	4907472	2	0	0	100.3	100.3	1	1260.88	3.25	0	73.01	0	-0.13	0	0	11.7	0	0	0	0	0	0	15.73	15.73
	Inverter	MV5-2	370006	4908853	2	0	0	100.3	100.3	1	1272.48	3.25	0	73.09	0	-0.12	0	0	11.73	0	0	0	0	0	0	15.61	15.61
	Inverter	MV3-20	368689	4907317	2	0	0	100.3	100.3	1	1275.04	3.25	0	73.11	0	-0.12	0	0	11.74	0	0	0	0	0	0	15.59	15.59
	Inverter	MV3-13	367963	4907577	2	0	0	100.3	100.3	1	1289.57	3.25	0	73.21	0	-0.12	0	0	11.78	0	0	0	0	0	0	15.44	15.44
	Inverter	MV4-12	369043	4908803	2	0	0	89.1	89.1	1	353.41	3.25	0	61.97	0	0.42	0	0	4.48	0	0	0	0	0	0	22.2	22.2
	Inverter	MV3-19	368357	4907347	2	0	0	100.3	100.3	1	1307.01	3.25	0	73.33	0	-0.11	0	0	11.82	0	0	0	0	0	0	15.27	15.27
	Inverter	MV5-1	370020	4909142	2	0	0	100.3	100.3	1	1374.7	3.25	0	73.76	0	-0.08	0	0	12	0	0	0	0	0	0	14.62	14.62
	Inverter	MV3-21	368478	4907206	2	0	0	100.3	100.3	1	1412.64	3.25	0	74	0	-0.07	0	0	12.1	0	0	0	0	0	0	14.27	14.27
	Inverter	MV3-12	367668	4907594	2	0	0	100.3	100.3	1	1478.74	3.25	0	74.4	0	-0.04	0	0	12.27	0	0	0	0	0	0	13.68	13.68

Inverter	MV5-3	370231	4908851	2	0	0	100.3	100.3	1	1492.99	3.25	0	74.48	0	-0.04	0	0	12.31	0	0	0	0	0	0	13.56	13.56
Inverter	MV4-14	369176	4908507	2	0	0	89.1	89.1	1	423.23	3.25	0	63.53	0	0.47	0	0	4.84	0	0	0	0	0	0	20.21	20.21
Inverter	MV3-18	367752	4907412	2	0	0	100.3	100.3	1	1551.05	3.25	0	74.81	0	-0.01	0	0	12.45	0	0	0	0	0	0	13.06	13.06
Inverter	MV5-4	370324	4908707	2	0	0	100.3	100.3	1	1567.37	3.25	0	74.9	0	-0.01	0	0	12.49	0	0	0	0	0	0	12.93	12.93
Inverter	MV4-15	369176	4908481	2	0	0	89.1	89.1	1	429.08	3.25	0	63.65	0	0.48	0	0	4.87	0	0	0	0	0	0	20.06	20.06
Inverter	MV6-2	370085	4907339	2	0	0	100.3	100.3	1	1821.53	3.25	0	76.21	0	0.08	0	0	13.08	0	0	0	0	0	0	10.95	10.95
Inverter	MV6-3	370207	4907140	2	0	0	100.3	100.3	1	2047.78	3.25	0	77.23	0	0.14	0	0	13.56	0	0	0	0	0	0	9.38	9.38
Fixed Reactor Bank 1	FRB1	369378	4908755	6	0	0	89.8	89.8	1	638.68	5.25	0	67.11	0	-0.91	0	0	1.75	0	0	0	0	0	0	21.84	21.84
Fixed Reactor Bank 2	FRB2	369464	4908755	6	0	0	89.8	89.8	1	722.11	5.25	0	68.17	0	-0.95	0	0	1.93	0	0	0	0	0	0	20.62	20.62
Inverter	MV3-2	368671	4907928	2	0	0	89.1	89.1	1	668.09	3.25	0	67.5	0	0.6	0	0	5.63	0	0	0	0	0	0	15.33	15.33
Inverter	MV3-4	368502	4907925	2	0	0	89.1	89.1	1	713.66	3.25	0	68.07	0	0.62	0	0	5.73	0	0	0	0	0	0	14.64	14.64
Inverter	MV6-1	370235	4907364	2	0	0	97.3	97.3	1	1917.23	3.25	0	76.65	0	0.11	0	0	13.29	0	0	0	0	0	0	7.27	7.27
Inverter	MV3-5	368340	4907843	2	0	0	89.1	89.1	1	857.47	3.25	0	69.66	0	0.65	0	0	6.04	0	0	0	0	0	0	12.7	12.7
Inverter	MV3-1	368156	4907976	2	0	0	89.1	89.1	1	861.99	3.25	0	69.71	0	0.65	0	0	6.05	0	0	0	0	0	0	12.65	12.65
Inverter	MV2-3	365820	4906641	2	0	0	100.3	100.3	1	3528.18	3.25	0	81.95	0	0.46	0	0	16.28	0	0	0	0	0	0	1.63	1.63
Inverter	MV2-4	365586	4906624	2	0	0	100.3	100.3	1	3734.41	3.25	0	82.44	0	0.49	0	0	16.62	0	0	0	0	0	0	0.76	0.76
Inverter	MV5-6	369982	4908507	2	0	0	89.1	89.1	1	1223.82	3.25	0	72.75	0	0.73	0	0	6.72	0	0	0	0	0	0	8.85	8.85
Inverter	MV1-1	364715	4906166	2	0	0	100.3	100.3	1	4716.56	3.25	0	84.47	0	0.61	0	0	18.16	0	0	0	0	0	0	-2.93	-2.93
Inverter	MV1-2	364753	4906063	2	0	0	100.3	100.3	1	4738.12	3.25	0	84.51	0	0.62	0	0	18.19	0	0	0	0	0	0	-3.01	-3.01
Inverter	MV1-4	364815	4905918	2	0	0	100.3	100.3	1	4765.55	3.25	0	84.56	0	0.62	0	0	18.23	0	0	0	0	0	0	-3.1	-3.1
Inverter	MV2-1	365842	4906816	2	0	0	97.3	97.3	1	3415.79	3.25	0	81.67	0	0.44	0	0	16.09	0	0	0	0	0	0	-0.88	-0.88
Inverter	MV1-5	364671	4905892	2	0	0	100.3	100.3	1	4899.73	3.25	0	84.8	0	0.63	0	0	18.43	0	0	0	0	0	0	-3.56	-3.56
Inverter	MV1-12	365038	4905386	2	0	0	100.3	100.3	1	4911.86	3.25	0	84.82	0	0.63	0	0	18.45	0	0	0	0	0	0	-3.6	-3.6
Inverter	MV1-8	364788	4905647	2	0	0	100.3	100.3	1	4944.29	3.25	0	84.88	0	0.64	0	0	18.5	0	0	0	0	0	0	-3.71	-3.71
Inverter	MV1-15	365315	4904994	2	0	0	100.3	100.3	1	4980.58	3.25	0	84.95	0	0.64	0	0	18.55	0	0	0	0	0	0	-3.83	-3.83
Inverter	MV1-6	364477	4905835	2	0	0	100.3	100.3	1	5093.4	3.25	0	85.14	0	0.65	0	0	18.72	0	0	0	0	0	0	-4.2	-4.2
Inverter	MV1-9	364561	4905646	2	0	0	100.3	100.3	1	5129.05	3.25	0	85.2	0	0.65	0	0	18.77	0	0	0	0	0	0	-4.31	-4.31
Inverter	MV1-11	364655	4905414	2	0	0	100.3	100.3	1	5190.97	3.25	0	85.3	0	0.66	0	0	18.86	0	0	0	0	0	0	-4.51	-4.51
Inverter	MV3-22	368656	4907142	2	0	0	89.1	89.1	1	1451.8	3.25	0	74.24	0	0.78	0	0	7.13	0	0	0	0	0	0	6.91	6.91
Inverter	MV1-7	364925	4905782	2	0	0	97.3	97.3	1	4753.92	3.25	0	84.54	0	0.62	0	0	18.21	0	0	0	0	0	0	-6.06	-6.06
Inverter	MV1-10	365004	4905564	2	0	0	97.3	97.3	1	4824.08	3.25	0	84.67	0	0.63	0	0	18.32	0	0	0	0	0	0	-6.3	-6.3
SubstationTransformer	W_ST	369711.17	4906112.3	2.5	0	0	92	92	1	2653.67	3.5	0	79.48	0	0	0	0	5.43	0	0	0	0	0	0	7.07	7.07
Inverter	MV1-14	365163	4905049	2	0	0	97.3	97.3	1	5048.2	3.25	0	85.06	0	0.65	0	0	18.65	0	0	0	0	0	0	-7.05	-7.05
Inverter	MV1-13	364731	4905241	2	0	0	97.3	97.3	1	5239.91	3.25	0	85.39	0	0.66	0	0	18.93	0	0	0	0	0	0	-7.67	-7.67
Westbrook Inverter Enclosur	W_INV5	369719	4906574	2	0	0	89.1	89.1	1	2232.05	3.25	0	77.97	0	0.96	0	0	8.42	0	0	0	0	0	0	1.7	1.7
Westbrook Inverter Enclosur	W_INV2	369374	4906388	2	0	0	89.1	89.1	1	2285.73	3.25	0	78.18	0	0.97	0	0	8.51	0	0	0	0	0	0	1.4	1.4
Westbrook Inverter Enclosur	W_INV6	369875	4906578	2	0	0	89.1	89.1	1	2299.81	3.25	0	78.23	0	0.98	0	0	8.53	0	0	0	0	0	0	1.32	1.32
Westbrook Inverter Enclosur	W_INV7	369780	4906417	2	0	0	89.1	89.1	1	2400.06	3.25	0	78.6	0	1	0	0	8.69	0	0	0	0	0	0	0.76	0.76
Westbrook Inverter Enclosur	W_INV3	369508	4906164	2	0	0	89.1	89.1	1	2538.4	3.25	0	79.09	0	1.04	0	0	8.91	0	0	0	0	0	0	0.03	0.03
Westbrook Inverter Enclosur	W_INV4	369673	4906164	2	0	0	89.1	89.1	1	2591.76	3.25	0	79.27	0	1.05	0	0	8.99	0	0	0	0	0	0	-0.25	-0.25
Westbrook Inverter Enclosur	W_INV1	369409	4906578	2	0	0	86.1	86.1	1	2113.78	3.25	0	77.5	0	0.93	0	0	8.23	0	0	0	0	0	0	-0.61	-0.61
Inverter	MV6-4	370250	4906966	2	0	0	86.1	86.1	1	2203.29	3.25	0	77.86	0	0.95	0	0	8.37	0	0	0	0	0	0	-1.13	-1.13
Inverter	MV2-2	365977	4906654	2	0	0	89.1	89.1	1	3390.98	3.25	0	81.61	0	1.24	0	0	10.2	0	0	0	0	0	0	-3.99	-3.99
Gardiner Substation	G_Sub	366586.3	4903349.9	2.5	0	0	90.8	90.8	1	5673.44	4.25	0	86.08	0	1.81	2.2	0.39	9.39	0	0	0	0	0	0	-8.69	-8.69
Inverter	MV1-3	364440	4906039	2	0	0	89.1	89.1	1	5017.83	3.25	0	85.01	0	1.64	0	0	12.49	0	0	0	0	0	0	-10.08	-10.08
Inverters	G_Inv2	366676.9	4903239.1	2	0	0	87.7	87.7	1	5742.44	3.25	0	86.18	0	2.91	0	0	6.71	0	0	0	0	0	0	-8.14	-8.14
Inverters	G_Inv1	366526.4	4903225.8	2	0	0	87.7	87.7	1	5811.03	3.25	0	86.29	0	2.91	0	0	6.78	0	0	0	0	0	0	-8.32	-8.32
Inverters	G_Inv4	366732.8	4903105	2	0	0	87.7	87.7	1	5847.98	3.25	0	86.34	0	2.91	0	0	6.82	0	0	0	0	0	0	-8.41	-8.41
Inverters	G_Inv3	366583.7	4903091.4	2	0	0	87.7	87.7	1	5913.99	3.25	0	86.44	0	2.91	0	0	6.89	0	0	0	0	0	0	-8.58	-8.58
Inverters	G_Inv6	366788.5	4902972	2	0	0	87.7	87.7	1	5954.22	3.25	0	86.5	0	2.92	0	0	6.93	0	0	0	0	0	0	-8.68	-8.68
Inverters	G_Inv5	366638.5	4902958.1	2	0	0	87.7	87.7	1	6018.58	3.25	0	86.59	0	2.92	0	0	7	0	0	0	0	0	0	-8.84	-8.84
Inverters	G_Inv8	366844.5	4902838.5	2	0	0	87.7	87.7	1	6062.4	3.25	0	86.65	0	2.92	0	0	7.04	0	0	0	0	0	0	-8.95	-8.95
Inverters	G_Inv7	366694.6	4902824.7	2	0	0	87.7	87.7	1	6124.43	3.25	0	86.74	0	2.92	0	0	7.11	0	0	0	0	0	0	-9.11	-9.11
Inverters	G_Inv10	366900.7	4902704.8	2	0	0	87.7	87.7	1	6172.22	3.25	0	86.81	0	2.92	0	0	7.15	0	0	0	0	0	0	-9.23	-9.23
Inverters	G_Inv9	366750.9	4902691.8	2	0	0	87.7	87.7	1	6231.31	3.25	0	86.89	0	2.93	0	0	7.21	0	0	0	0	0	0	-9.37	-9.37
Westbrook Inverter Transfor	W_INVTR1	369403	4906578	2	0	0	78.2	78.2	1	2111.95	3.25	0	77.49	0	-2.44	0	0	1.26	0	0	0	0	0	0	1.93	1.93
Westbrook Inverter Transfor	W_INVTR5	369725	4906574	2	0	0	77.3	77.3	1	2234.63	3.25	0	77.98	0	-2.49	0	0	1.32	0	0	0	0	0	0	0.53	0.53
Westbrook Inverter Transfor	W_INVTR2	369368	4906388	2	0	0	77.3	77.3	1	2284.13	3.25	0	78.17	0	-2.5	0	0	1.34	0	0	0	0	0	0	0.33	0.33
Westbrook Inverter Transfor	W_INVTR6	369881	4906578	2	0	0	77.3	77.3	1	2302.73	3.25	0	78.24	0	-2.51	0	0	1.35	0	0	0	0	0	0	0.26	0.26
Westbrook Inverter Transfor	W_INVTR7	369786	4906417	2	0	0	77.3	77.3	1	2402.62	3.25	0	78.61	0	-2.54	0	0	1.4	0	0	0	0	0	0	-0.13	-0.13
Westbrook Inverter Transfor	W_INVTR3	369514	4906164	2	0	0	77.3	77.3	1	2540.18	3.25	0	79.1	0	-2.58	0	0	1.46	0	0	0	0	0	0	-0.63	-0.63
Westbrook Inverter Transfor	W_INVTR4	369679	4906164	2	0	0	77.3	77.3	1	2593.88	3.25	0	79.28	0	-2.6	0	0	1.48	0	0	0	0	0	0	-0.82	-0.82
Inverter Transformer	MV4-13 T	369057	4908605	2	0	0	56.1	56.1	1	296.39	3.25	0	60.44	0	-0.07	0	0	2.77	0	0	0	0	0	0	-7.08	-7.08
Inverter Transformer	MV4-12 T	369049	4908803	2	0	0	56.1	56.1	1	358.22	3.25	0	62.08	0	-0.1	0	0	3.04	0	0	0	0	0	0	-8.96	-8.96
Inverter Transformer	MV6-1 T	370230	4907364	2	0	0	69.4	69.4	1	1913.39	3.25	0	76.64	0	2.14	0	0	4.88	0	0	0	0	0	0	-14.3	-14.3
Inverter Transformer	MV4-15 T	369170	4908481	2	0	0	56.1	56.1	1	423.28	3.25	0	63.53	0	-0.12	0	0	3.29	0	0	0	0	0	0	-10.65	-10.65
Inverter Transformer	MV4-14 T	369182	4908507	2	0	0	56.1	56.1	1	429.11	3.25	0	63.65	0	-0.12	0	0	3.31	0	0	0	0	0	0	-10.79	-10.79
Inverter Transformer	MV6-4 T	370244	4906966	2	0	0	69.4	69.4	1	2199.24	3.25	0	77.85	0	2.25	0	0	5.16	0	0	0	0	0	0	-15.9	-15.9
Inverter Transformer	MV4-7 T	369040	4909001	2	0	0	56.1	56.1	1	496.76	3.25	0	64.92	0	-0.12	0	0	3.54	0	0	0	0	0	0	-12.29	-12.29
Inverter Transformer	MV4-11 T	369269	4908855	2	0	0	56.1	56.1	1	572.97	3.25	0	66.16	0	-0.11	0	0	3.78	0	0	0	0	0	0	-13.77	-13.77
Inverter Transformer	MV4-10 T	369307	4908858	2	0	0	56.1	56.1	1	608.23	3.25	0	66.68	0	-0.1	0	0	3.88	0	0	0	0	0	0	-14.4	-14.4
Inverter Transformer	MV4-8 T	369262	4909001	2	0	0	56.1	56.1	1	648.02	3.25	0	67.23	0	-0.09	0	0	3.99	0	0	0	0	0	0	-15.07	-15.07
Inverter Transformer	MV4-9 T	369284	4909001	2	0	0	56.1	56.1	1	665.17	3.25	0	67.46	0	-0.09	0	0	4.04	0	0	0	0	0	0	-15.35	-15.35
Inverter Transformer	MV4-4 T	369033	4909199	2	0	0	56.1	56.1	1	666.99	3.25	0	67.48	0	-0.09	0	0	4.04	0	0	0	0	0	0	-15.38	-15.38

	Inverter Transformer	MV3-2 T	368677	4907928	2	0	0	56.1	56.1	1	667.31	3.25	0	67.49	0	-0.09	0	0	4.04	0	0	0	0	0	0	-15.38	-15.38
	Inverter Transformer	MV3-4 T	368507	4907925	2	0	0	56.1	56.1	1	711.86	3.25	0	68.05	0	-0.08	0	0	4.17	0	0	0	0	0	0	-16.08	-16.08
	Inverter Transformer	MV2-1 T	365836	4906816	2	0	0	69.4	69.4	1	3420.92	3.25	0	81.68	0	2.63	0	0	6.23	0	0	0	0	0	0	-21.19	-21.19
	Inverter Transformer	MV4-6 T	369249	4909192	2	0	0	56.1	56.1	1	774.95	3.25	0	68.79	0	-0.06	0	0	4.33	0	0	0	0	0	0	-17	-17
	Inverter Transformer	MV4-5 T	369283	4909199	2	0	0	56.1	56.1	1	802.1	3.25	0	69.08	0	-0.05	0	0	4.4	0	0	0	0	0	0	-17.37	-17.37
	Inverter Transformer	MV4-1 T	369017	4909397	2	0	0	56.1	56.1	1	846.64	3.25	0	69.55	0	-0.04	0	0	4.51	0	0	0	0	0	0	-17.97	-17.97
	Inverter Transformer	MV3-5 T	368335	4907843	2	0	0	56.1	56.1	1	859.94	3.25	0	69.69	0	-0.03	0	0	4.55	0	0	0	0	0	0	-18.14	-18.14
	Inverter Transformer	MV3-1 T	368150	4907976	2	0	0	56.1	56.1	1	866.21	3.25	0	69.75	0	-0.03	0	0	4.56	0	0	0	0	0	0	-18.22	-18.22
	Inverter Transformer	MV3-8 T	368685	4907712	2	0	0	56.1	56.1	1	881.29	3.25	0	69.9	0	-0.03	0	0	4.6	0	0	0	0	0	0	-18.42	-18.42
	Inverter Transformer	MV3-9 T	368517	4907703	2	0	0	56.1	56.1	1	919.95	3.25	0	70.28	0	-0.01	0	0	4.7	0	0	0	0	0	0	-18.9	-18.9
	Inverter Transformer	MV4-3 T	369234	4909397	2	0	0	56.1	56.1	1	935.41	3.25	0	70.42	0	-0.01	0	0	4.73	0	0	0	0	0	0	-19.08	-19.08
	Inverter Transformer	MV4-2 T	369267	4909397	2	0	0	56.1	56.1	1	952.52	3.25	0	70.58	0	0	0	0	4.77	0	0	0	0	0	0	-19.29	-19.29
	Inverter Transformer	MV3-6 T	368156	4907834	2	0	0	56.1	56.1	1	968.28	3.25	0	70.72	0	0	0	0	4.81	0	0	0	0	0	0	-19.48	-19.48
	Inverter Transformer	MV3-11 T	368340	4907662	2	0	0	56.1	56.1	1	1019.03	3.25	0	71.16	0	0.02	0	0	4.93	0	0	0	0	0	0	-20.06	-20.06
	Inverter Transformer	MV1-7 T	364919	4905782	2	0	0	69.4	69.4	1	4758.76	3.25	0	84.55	0	2.96	0	0	7.22	0	0	0	0	0	0	-25.38	-25.38
	Inverter Transformer	MV1-10 T	365010	4905564	2	0	0	69.4	69.4	1	4819.41	3.25	0	84.66	0	2.98	0	0	7.26	0	0	0	0	0	0	-25.54	-25.54
	Inverter Transformer	MV3-3 T	367944	4907927	2	0	0	56.1	56.1	1	1052.17	3.25	0	71.44	0	0.03	0	0	5.01	0	0	0	0	0	0	-20.43	-20.43
	Inverter Transformer	MV1-14 T	365157	4905049	2	0	0	69.4	69.4	1	5052.47	3.25	0	85.07	0	3.02	0	0	7.42	0	0	0	0	0	0	-26.16	-26.16
	Inverter Transformer	MV3-14 T	368678	4907498	2	0	0	56.1	56.1	1	1095.15	3.25	0	71.79	0	0.05	0	0	5.11	0	0	0	0	0	0	-20.89	-20.89
	Inverter Transformer	MV3-10 T	368162	4907669	2	0	0	56.1	56.1	1	1098.66	3.25	0	71.82	0	0.05	0	0	5.12	0	0	0	0	0	0	-20.93	-20.93
	Inverter Transformer	MV1-13 T	364725	4905241	2	0	0	69.4	69.4	1	5244.53	3.25	0	85.39	0	3.06	0	0	7.54	0	0	0	0	0	0	-26.65	-26.65
	Inverter Transformer	MV3-16 T	368509	4907475	2	0	0	56.1	56.1	1	1143.13	3.25	0	72.16	0	0.06	0	0	5.23	0	0	0	0	0	0	-21.39	-21.39
	Inverter Transformer	MV3-7 T	367951	4907754	2	0	0	56.1	56.1	1	1164.05	3.25	0	72.32	0	0.07	0	0	5.27	0	0	0	0	0	0	-21.6	-21.6
	Inverter Transformer	MV3-15 T	368351	4907477	2	0	0	56.1	56.1	1	1186.12	3.25	0	72.48	0	0.08	0	0	5.32	0	0	0	0	0	0	-21.83	-21.83
	Inverter Transformer	MV5-6 T	369987	4908507	2	0	0	56.1	56.1	1	1228.81	3.25	0	72.79	0	0.09	0	0	5.42	0	0	0	0	0	0	-22.25	-22.25
	Inverter Transformer	MV3-17 T	368183	4907472	2	0	0	56.1	56.1	1	1258.58	3.25	0	73	0	0.11	0	0	5.49	0	0	0	0	0	0	-22.53	-22.53
	Inverter Transformer	MV5-5 T	370021	4908690	2	0	0	56.1	56.1	1	1263.96	3.25	0	73.03	0	0.11	0	0	5.5	0	0	0	0	0	0	-22.58	-22.58
	Inverter Transformer	MV3-20 T	368683	4907317	2	0	0	56.1	56.1	1	1275.39	3.25	0	73.11	0	0.11	0	0	5.53	0	0	0	0	0	0	-22.69	-22.69
	Inverter Transformer	MV5-2 T	370011	4908853	2	0	0	56.1	56.1	1	1277.37	3.25	0	73.13	0	0.11	0	0	5.53	0	0	0	0	0	0	-22.71	-22.71
	Inverter Transformer	MV3-13 T	367958	4907577	2	0	0	56.1	56.1	1	1292.67	3.25	0	73.23	0	0.12	0	0	5.56	0	0	0	0	0	0	-22.85	-22.85
	Inverter Transformer	MV3-19 T	368352	4907347	2	0	0	56.1	56.1	1	1308.56	3.25	0	73.34	0	0.12	0	0	5.6	0	0	0	0	0	0	-23	-23
	Inverter Transformer	MV5-1 T	370015	4909142	2	0	0	56.1	56.1	1	1370.12	3.25	0	73.74	0	0.15	0	0	5.74	0	0	0	0	0	0	-23.56	-23.56
	Inverter Transformer	MV3-21 T	368484	4907206	2	0	0	56.1	56.1	1	1411.45	3.25	0	73.99	0	0.16	0	0	5.83	0	0	0	0	0	0	-23.93	-23.93
	Inverter Transformer	MV3-22 T	368661	4907142	2	0	0	56.1	56.1	1	1451.45	3.25	0	74.24	0	0.18	0	0	5.91	0	0	0	0	0	0	-24.27	-24.27
	Inverter Transformer	MV3-12 T	367674	4907594	2	0	0	56.1	56.1	1	1474.31	3.25	0	74.37	0	0.19	0	0	5.96	0	0	0	0	0	0	-24.46	-24.46
	Inverter Transformer	MV5-3 T	370237	4908851	2	0	0	56.1	56.1	1	1498.9	3.25	0	74.52	0	0.2	0	0	6.02	0	0	0	0	0	0	-24.67	-24.67
	Inverter Transformer	MV3-18 T	367757	4907412	2	0	0	56.1	56.1	1	1547.81	3.25	0	74.79	0	0.22	0	0	6.12	0	0	0	0	0	0	-25.07	-25.07
	Inverter Transformer	MV5-4 T	370330	4908707	2	0	0	56.1	56.1	1	1573.36	3.25	0	74.94	0	0.23	0	0	6.17	0	0	0	0	0	0	-25.28	-25.28
	Inverter Transformer	MV6-2 T	370091	4907339	2	0	0	56.1	56.1	1	1825.9	3.25	0	76.23	0	0.33	0	0	6.7	0	0	0	0	0	0	-27.2	-27.2
	Inverter Transformer	MV6-3 T	370202	4907140	2	0	0	56.1	56.1	1	2044.26	3.25	0	77.21	0	0.42	0	0	7.13	0	0	0	0	0	0	-28.71	-28.71
	Line Reactor	NGR	369421	4908787.5	5	0	0	45.4	45.4	1	688.92	5.25	0	67.76	0	3.38	1.52	0.11	0.28	0	0	0	0	0	0	-27.59	-27.59
	Inverter Transformer	MV2-2 T	365982	4906654	2	0	0	56.1	56.1	1	3386.88	3.25	0	81.6	0	0.99	0	0	9.51	0	0	0	0	0	0	-36.04	-36.04
	Inverter Transformer	MV2-3 T	365814	4906641	2	0	0	56.1	56.1	1	3533.19	3.25	0	81.96	0	1.05	0	0	9.74	0	0	0	0	0	0	-36.7	-36.7
	Inverter Transformer	MV2-4 T	365590	4906628	2	0	0	56.1	56.1	1	3728.9	3.25	0	82.43	0	1.13	0	0	10.05	0	0	0	0	0	0	-37.55	-37.55
	Inverter Transformer	MV1-1 T	364721	4906166	2	0	0	56.1	56.1	1	4711.41	3.25	0	84.46	0	1.52	0	0	11.47	0	0	0	0	0	0	-41.39	-41.39
	Inverter Transformer	MV1-2 T	364759	4906063	2	0	0	56.1	56.1	1	4733.05	3.25	0	84.5	0	1.53	0	0	11.5	0	0	0	0	0	0	-41.47	-41.47
	Inverter Transformer	MV1-4 T	364821	4905918	2	0	0	56.1	56.1	1	4760.59	3.25	0	84.55	0	1.54	0	0	11.53	0	0	0	0	0	0	-41.57	-41.57
	Inverter Transformer	MV1-5 T	364676	4905892	2	0	0	56.1	56.1	1	4895.55	3.25	0	84.8	0	1.59	0	0	11.72	0	0	0	0	0	0	-42.04	-42.04
	Inverter Transformer	MV1-12 T	365044	4905386	2	0	0	56.1	56.1	1	4907.31	3.25	0	84.82	0	1.59	0	0	11.73	0	0	0	0	0	0	-42.08	-42.08
	Inverter Transformer	MV1-8 T	364782	4905647	2	0	0	56.1	56.1	1	4949.11	3.25	0	84.89	0	1.61	0	0	11.79	0	0	0	0	0	0	-42.23	-42.23
	Inverter Transformer	MV1-15 T	365309	4904994	2	0	0	56.1	56.1	1	4984.73	3.25	0	84.95	0	1.62	0	0	11.83	0	0	0	0	0	0	-42.35	-42.35
	Inverter Transformer	MV1-3 T	364435	4906039	2	0	0	56.1	56.1	1	5022.14	3.25	0	85.02	0	1.63	0	0	11.88	0	0	0	0	0	0	-42.48	-42.48
	Inverter Transformer	MV1-6 T	364482	4905835	2	0	0	56.1	56.1	1	5089.19	3.25	0	85.13	0	1.66	0	0	11.97	0	0	0	0	0	0	-42.7	-42.7
	Inverter Transformer	MV1-9 T	364555	4905646	2	0	0	56.1	56.1	1	5133.96	3.25	0	85.21	0	1.67	0	0	12.03	0	0	0	0	0	0	-42.85	-42.85
	Inverter Transformer	MV1-11 T	364649	4905414	2	0	0	56.1	56.1	1	5195.72	3.25	0	85.31	0	1.7	0	0	12.11	0	0	0	0	0	0	-43.06	-43.06
Limit. Valu	0	0																								
Level D/N:	39.8844	39.8844																								

Receiver: Existing Noise Receptor
ID: S-R110
X: 368816
Y: 4908424
Z: 4.5
Ground: 0

ISO	Description	ID	X	Y	Z	Ground	ReflOrd	LxT	LxN	L/A	Dist.	hm	Freq	Adiv	K0b	Agr	Abar	z	Aatm	Afol	Ahous	Cmet	CmetN	Dc	RL	LtotT	LtotN
	Sol_Luce Substation	S_Substation	369426	4908792	3.5	0	0	112.1	112.1	1	712.41	5.24	0	68.05	0	-0.06	5.58	0.28	1.91	0	0	0	0	0	0	36.59	36.59
	Inverter	MV4-7	369035	4909001	2	0	0	100.3	100.3	1	617.17	3.25	0	66.81	0	-0.47	0	0	9.3	0	0	0	0	0	0	24.67	24.67
	Inverter	MV4-11	369264	4908855	2	0	0	100.3	100.3	1	621.67	3.25	0	66.87	0	-0.46	0	0	9.33	0	0	0	0	0	0	24.57	24.57
	Inverter	MV4-10	369312	4908858	2	0	0	100.3	100.3	1	659.07	3.25	0	67.38	0	-0.44	0	0	9.53	0	0	0	0	0	0	23.84	23.84
	Inverter	MV3-8	368680	4907712	2	0	0	100.3	100.3	1	724.88	3.25	0	68.21	0	-0.4	0	0	9.85	0	0	0	0	0	0	22.65	22.65
	Inverter	MV4-8	369256	4909001	2	0	0	100.3	100.3	1	725.63	3.25	0	68.21	0	-0.4	0	0	9.86	0	0	0	0	0	0	22.64	22.64
	Inverter	MV4-9	369289	4909001	2	0	0	100.3	100.3	1	746.1	3.25	0	68.46	0	-0.38	0	0	9.95	0	0	0	0	0	0	22.29	22.29
	Inverter	MV3-9	368512	4907703	2	0	0	100.3	100.3	1	782.47	3.25	0	68.87	0	-0.36	0	0	10.11	0	0	0	0	0	0	21.7	21.7

Inverter	MV4-4	369027	4909199	2	0	0	100.3	100.3	1	803.21	3.25	0	69.1	0	-0.35	0	0	10.19	0	0	0	0	0	0	21.37	21.37
Inverter	MV4-6	369243	4909192	2	0	0	100.3	100.3	1	878.73	3.25	0	69.88	0	-0.31	0	0	10.49	0	0	0	0	0	0	20.26	20.26
Inverter	MV3-6	368162	4907834	2	0	0	100.3	100.3	1	880.81	3.25	0	69.9	0	-0.31	0	0	10.49	0	0	0	0	0	0	20.23	20.23
Inverter	MV3-11	368346	4907662	2	0	0	100.3	100.3	1	895.29	3.25	0	70.04	0	-0.3	0	0	10.55	0	0	0	0	0	0	20.02	20.02
Inverter	MV4-5	369289	4909199	2	0	0	100.3	100.3	1	907.94	3.25	0	70.16	0	-0.29	0	0	10.59	0	0	0	0	0	0	19.85	19.85
Inverter	MV3-14	368684	4907498	2	0	0	100.3	100.3	1	935.36	3.25	0	70.42	0	-0.28	0	0	10.69	0	0	0	0	0	0	19.48	19.48
Inverter	MV4-1	369011	4909397	2	0	0	100.3	100.3	1	992.35	3.25	0	70.93	0	-0.25	0	0	10.89	0	0	0	0	0	0	18.74	18.74
Inverter	MV3-10	368167	4907669	2	0	0	100.3	100.3	1	995.61	3.25	0	70.96	0	-0.25	0	0	10.9	0	0	0	0	0	0	18.7	18.7
Inverter	MV3-16	368514	4907475	2	0	0	100.3	100.3	1	995.9	3.25	0	70.96	0	-0.25	0	0	10.9	0	0	0	0	0	0	18.7	18.7
Inverter	MV3-3	367939	4907927	2	0	0	100.3	100.3	1	1008.04	3.25	0	71.07	0	-0.24	0	0	10.94	0	0	0	0	0	0	18.55	18.55
DSTATCOM - 10 MVAR #2	DSAT2	369403	4908757	2.5	0	0	96.6	96.6	1	674.88	3.5	0	67.58	0	2.52	0	0	0.85	0	0	0	0	0	0	25.68	25.68
Inverter	MV3-15	368357	4907477	2	0	0	100.3	100.3	1	1052.38	3.25	0	71.44	0	-0.22	0	0	11.08	0	0	0	0	0	0	18.01	18.01
Inverter	MV4-3	369229	4909397	2	0	0	100.3	100.3	1	1057.03	3.25	0	71.48	0	-0.22	0	0	11.1	0	0	0	0	0	0	17.95	17.95
Inverter	MV4-2	369272	4909397	2	0	0	100.3	100.3	1	1074.56	3.25	0	71.62	0	-0.21	0	0	11.15	0	0	0	0	0	0	17.75	17.75
DSTATCOM - 10 MVAR #1	DSAT1	369437	4908757	2.5	0	0	96.6	96.6	1	704.65	3.5	0	67.96	0	2.57	0	0	0.87	0	0	0	0	0	0	25.23	25.23
Inverter	MV4-13	369051	4908605	2	0	0	89.1	89.1	1	296.63	3.25	0	60.44	0	0.37	0	0	4.11	0	0	0	0	0	0	24.14	24.14
Inverter	MV3-7	367945	4907754	2	0	0	100.3	100.3	1	1098.88	3.25	0	71.82	0	-0.2	0	0	11.23	0	0	0	0	0	0	17.47	17.47
Inverter	MV3-20	368689	4907317	2	0	0	100.3	100.3	1	1114.26	3.25	0	71.94	0	-0.19	0	0	11.27	0	0	0	0	0	0	17.29	17.29
Inverter	MV3-17	368178	4907472	2	0	0	100.3	100.3	1	1146.02	3.25	0	72.18	0	-0.18	0	0	11.37	0	0	0	0	0	0	16.94	16.94
Inverter	MV3-19	368357	4907347	2	0	0	100.3	100.3	1	1170.73	3.25	0	72.37	0	-0.17	0	0	11.44	0	0	0	0	0	0	16.67	16.67
Inverter	MV3-13	367963	4907577	2	0	0	100.3	100.3	1	1202.09	3.25	0	72.6	0	-0.15	0	0	11.53	0	0	0	0	0	0	16.33	16.33
Inverter	MV5-5	370015	4908690	2	0	0	100.3	100.3	1	1228.15	3.25	0	72.79	0	-0.14	0	0	11.61	0	0	0	0	0	0	16.06	16.06
Inverter	MV3-21	368478	4907206	2	0	0	100.3	100.3	1	1264.03	3.25	0	73.04	0	-0.13	0	0	11.71	0	0	0	0	0	0	15.7	15.7
Inverter	MV5-2	370006	4908853	2	0	0	100.3	100.3	1	1264.97	3.25	0	73.04	0	-0.13	0	0	11.71	0	0	0	0	0	0	15.69	15.69
Inverter	MV4-15	369176	4908481	2	0	0	89.1	89.1	1	364.49	3.25	0	62.23	0	0.43	0	0	4.55	0	0	0	0	0	0	21.85	21.85
Inverter	MV4-14	369176	4908507	2	0	0	89.1	89.1	1	369.45	3.25	0	62.35	0	0.43	0	0	4.57	0	0	0	0	0	0	21.7	21.7
Inverter	MV5-1	370020	4909142	2	0	0	100.3	100.3	1	1401.84	4.65	0	73.93	0	0.54	3.65	0.01	12.08	0	0	0	0	0	0	10.11	10.11
Inverter	MV3-12	367668	4907594	2	0	0	100.3	100.3	1	1416.62	3.25	0	74.03	0	-0.07	0	0	12.11	0	0	0	0	0	0	14.24	14.24
Inverter	MV3-18	367752	4907412	2	0	0	100.3	100.3	1	1468.42	3.25	0	74.34	0	-0.05	0	0	12.25	0	0	0	0	0	0	13.77	13.77
Inverter	MV5-3	370231	4908851	2	0	0	100.3	100.3	1	1478.03	3.25	0	74.39	0	-0.04	0	0	12.27	0	0	0	0	0	0	13.69	13.69
Inverter	MV5-4	370324	4908707	2	0	0	100.3	100.3	1	1534.33	3.25	0	74.72	0	-0.02	0	0	12.41	0	0	0	0	0	0	13.21	13.21
Inverter	MV4-12	369043	4908803	2	0	0	89.1	89.1	1	441.79	3.25	0	63.9	0	0.49	0	0	4.92	0	0	0	0	0	0	19.75	19.75
Inverter	MV6-2	370085	4907339	2	0	0	100.3	100.3	1	1669.61	3.25	0	75.45	0	0.03	0	0	12.73	0	0	0	0	0	0	12.1	12.1
Inverter	MV3-2	368671	4907928	2	0	0	89.1	89.1	1	516.77	3.25	0	65.27	0	0.54	0	0	5.2	0	0	0	0	0	0	18.06	18.06
Inverter	MV6-3	370207	4907140	2	0	0	100.3	100.3	1	1893.02	3.25	0	76.54	0	0.1	0	0	13.23	0	0	0	0	0	0	10.44	10.44
Inverter	MV3-4	368502	4907925	2	0	0	89.1	89.1	1	589.58	3.25	0	66.41	0	0.57	0	0	5.42	0	0	0	0	0	0	16.65	16.65
Fixed Reactor Bank 1	FRB1	369378	4908755	6	0	0	89.8	89.8	1	652.23	5.25	0	67.29	0	-0.92	0	0	1.78	0	0	0	0	0	0	21.63	21.63
Fixed Reactor Bank 2	FRB2	369464	4908755	6	0	0	89.8	89.8	1	727.65	5.25	0	68.24	0	-0.95	0	0	1.95	0	0	0	0	0	0	20.54	20.54
Inverter	MV6-1	370235	4907364	2	0	0	97.3	97.3	1	1771.21	3.25	0	75.97	0	0.06	0	0	12.96	0	0	0	0	0	0	8.32	8.32
Inverter	MV3-5	368340	4907843	2	0	0	89.1	89.1	1	751.09	3.25	0	68.51	0	0.63	0	0	5.82	0	0	0	0	0	0	14.1	14.1
Inverter	MV3-1	368156	4907976	2	0	0	89.1	89.1	1	797.69	3.25	0	69.04	0	0.64	0	0	5.92	0	0	0	0	0	0	13.47	13.47
Inverter	MV2-3	365820	4906641	2	0	0	100.3	100.3	1	3486.42	3.25	0	81.85	0	0.45	0	0	16.21	0	0	0	0	0	0	1.81	1.81
Inverter	MV2-4	365586	4906624	2	0	0	100.3	100.3	1	3697.69	3.25	0	82.36	0	0.48	0	0	16.56	0	0	0	0	0	0	0.91	0.91
Inverter	MV5-6	369982	4908507	2	0	0	89.1	89.1	1	1168.95	3.25	0	72.36	0	0.72	0	0	6.63	0	0	0	0	0	0	9.36	9.36
Inverter	MV1-1	364715	4906166	2	0	0	100.3	100.3	1	4681.54	3.25	0	84.41	0	0.61	0	0	18.11	0	0	0	0	0	0	-2.81	-2.81
Inverter	MV1-2	364753	4906063	2	0	0	100.3	100.3	1	4699.18	3.25	0	84.44	0	0.61	0	0	18.13	0	0	0	0	0	0	-2.87	-2.87
Inverter	MV3-22	368656	4907142	2	0	0	89.1	89.1	1	1291.95	3.25	0	73.22	0	0.75	0	0	6.85	0	0	0	0	0	0	8.24	8.24
Inverter	MV1-4	364815	4905918	2	0	0	100.3	100.3	1	4721.02	3.25	0	84.48	0	0.62	0	0	18.17	0	0	0	0	0	0	-2.95	-2.95
Inverter	MV2-1	365842	4906816	2	0	0	97.3	97.3	1	3380.88	3.25	0	81.58	0	0.43	0	0	16.03	0	0	0	0	0	0	-0.73	-0.73
Inverter	MV1-12	365038	4905386	2	0	0	100.3	100.3	1	4847.96	3.25	0	84.71	0	0.63	0	0	18.36	0	0	0	0	0	0	-3.38	-3.38
Inverter	MV1-5	364671	4905892	2	0	0	100.3	100.3	1	4857.17	3.25	0	84.73	0	0.63	0	0	18.37	0	0	0	0	0	0	-3.41	-3.41
Inverter	MV1-8	364788	4905647	2	0	0	100.3	100.3	1	4892.5	3.25	0	84.79	0	0.63	0	0	18.42	0	0	0	0	0	0	-3.53	-3.53
Inverter	MV1-15	365315	4904994	2	0	0	100.3	100.3	1	4901.21	3.25	0	84.81	0	0.63	0	0	18.43	0	0	0	0	0	0	-3.56	-3.56
Inverter	MV1-6	364477	4905835	2	0	0	100.3	100.3	1	5052.71	3.25	0	85.07	0	0.65	0	0	18.66	0	0	0	0	0	0	-4.06	-4.06
Inverter	MV1-9	364561	4905646	2	0	0	100.3	100.3	1	5081.57	3.25	0	85.12	0	0.65	0	0	18.7	0	0	0	0	0	0	-4.16	-4.16
Inverter	MV1-11	364655	4905414	2	0	0	100.3	100.3	1	5135.56	3.25	0	85.21	0	0.65	0	0	18.78	0	0	0	0	0	0	-4.33	-4.33
SubstationTransformer	W_ST	369711.17	4906112.3	2.5	0	0	92	92	1	2479	3.5	0	78.89	0	-0.05	0	0	5.15	0	0	0	0	0	0	7.98	7.98
Inverter	MV1-7	364925	4905782	2	0	0	97.3	97.3	1	4703.2	3.25	0	84.45	0	0.61	0	0	18.14	0	0	0	0	0	0	-5.89	-5.89
Inverter	MV1-10	365004	4905564	2	0	0	97.3	97.3	1	4765.6	3.25	0	84.56	0	0.62	0	0	18.23	0	0	0	0	0	0	-6.1	-6.1
Inverter	MV1-14	365163	4905049	2	0	0	97.3	97.3	1	4973.43	3.25	0	84.93	0	0.64	0	0	18.54	0	0	0	0	0	0	-6.8	-6.8
Inverter	MV1-13	364731	4905241	2	0	0	97.3	97.3	1	5178.68	3.25	0	85.28	0	0.66	0	0	18.84	0	0	0	0	0	0	-7.47	-7.47
Westbrook Inverter Enclosur	W_INV5	369719	4906574	2	0	0	89.1	89.1	1	2058.62	3.25	0	77.27	0	0.92	0	0	8.14	0	0	0	0	0	0	2.72	2.72
Westbrook Inverter Enclosur	W_INV2	369374	4906388	2	0	0	89.1	89.1	1	2111.08	3.25	0	77.49	0	0.93	0	0	8.23	0	0	0	0	0	0	2.41	2.41
Westbrook Inverter Enclosur	W_INV6	369875	4906578	2	0	0	89.1	89.1	1	2128.19	3.25	0	77.56	0	0.94	0	0	8.25	0	0	0	0	0	0	2.31	2.31
Westbrook Inverter Enclosur	W_INV7	369780	4906417	2	0	0	89.1	89.1	1	2226.51	3.25	0	77.95	0	0.96	0	0	8.41	0	0	0	0	0	0	1.73	1.73
Westbrook Inverter Enclosur	W_INV3	369508	4906164	2	0	0	89.1	89.1	1	2363.57	3.25	0	78.47	0	0.99	0	0	8.63	0	0	0	0	0	0	0.96	0.96
Westbrook Inverter Enclosur	W_INV4	369673	4906164	2	0	0	89.1	89.1	1	2417.03	3.25	0	78.67	0	1.01	0	0	8.72	0	0	0	0	0	0	0.67	0.67
Westbrook Inverter Enclosur	W_INV1	369409	4906578	2	0	0	86.1	86.1	1	1938.91	3.25	0	76.75	0	0.89	0	0	7.95	0	0	0	0	0	0	0.47	0.47
Inverter	MV6-4	370250	4906966	2	0	0	86.1	86.1	1	2045.02	3.25	0	77.21	0	0.92	0	0	8.12	0	0	0	0	0	0	-0.19	-0.19
Inverter	MV2-2	365977	4906654	2	0	0	89.1	89.1	1	3345.57	3.25	0	81.49	0	1.23	0	0	10.13	0	0	0	0	0	0	-3.8	-3.8
Gardiner Substation	G_Sub	366586.3	4903349.9	2.5	0	0	90.8	90.8	1	5542.39	4.25	0	85.87	0	1.78	2.23	0.39	9.24	0	0	0	0	0	0	-8.35	-8.35
Inverter	MV1-3	364440	4906039	2	0	0	89.1	89.1	1	4983.73	3.25	0	84.95	0	1.64	0	0	12.44	0	0	0	0	0	0	-9.97	-9.97
Inverters	G_Inv2	366676.9	4903239.1	2	0	0	87.7	87.7	1	5608.83	3.25	0	85.98	0	2.9	0	0	6.58	0	0	0	0	0	0	-7.79	-7.79
Inverters	G_Inv1	366526.4	4903225.8	2	0	0	87.7	87.7	1	5680.1	3.25	0	86.09	0	2.9	0	0	6.65	0	0	0	0	0	0	-7.98	-7.98

Inverters	G_Inv4	366732.8	4903105	2	0	0	87.7	87.7	1	5712.4	3.25	0	86.14	0	2.9	0	0	6.68	0	0	0	0	0	0	-8.06	-8.06
Westbrook Inverter Transfor	W_INVTR1	369403	4906578	2	0	0	78.2	78.2	1	1937.08	3.25	0	76.74	0	-2.38	0	0	1.18	0	0	0	0	0	0	2.7	2.7
Inverters	G_Inv3	366583.7	4903091.4	2	0	0	87.7	87.7	1	5780.99	3.25	0	86.24	0	2.91	0	0	6.75	0	0	0	0	0	0	-8.24	-8.24
Inverters	G_Inv6	366788.5	4902972	2	0	0	87.7	87.7	1	5816.79	3.25	0	86.29	0	2.91	0	0	6.79	0	0	0	0	0	0	-8.33	-8.33
Inverters	G_Inv5	366638.5	4902958.1	2	0	0	87.7	87.7	1	5883.67	3.25	0	86.39	0	2.91	0	0	6.86	0	0	0	0	0	0	-8.5	-8.5
Inverters	G_Inv8	366844.5	4902838.5	2	0	0	87.7	87.7	1	5923.23	3.25	0	86.45	0	2.91	0	0	6.9	0	0	0	0	0	0	-8.6	-8.6
Inverters	G_Inv7	366694.6	4902824.7	2	0	0	87.7	87.7	1	5987.7	3.25	0	86.55	0	2.92	0	0	6.97	0	0	0	0	0	0	-8.77	-8.77
Inverters	G_Inv10	366900.7	4902704.8	2	0	0	87.7	87.7	1	6031.39	3.25	0	86.61	0	2.92	0	0	7.01	0	0	0	0	0	0	-8.88	-8.88
Inverters	G_Inv9	366750.9	4902691.8	2	0	0	87.7	87.7	1	6092.85	3.25	0	86.7	0	2.92	0	0	7.07	0	0	0	0	0	0	-9.03	-9.03
Westbrook Inverter Transfor	W_INVTR5	369725	4906574	2	0	0	77.3	77.3	1	2061.26	3.25	0	77.28	0	-2.43	0	0	1.24	0	0	0	0	0	0	1.25	1.25
Westbrook Inverter Transfor	W_INVTR2	369368	4906388	2	0	0	77.3	77.3	1	2109.5	3.25	0	77.48	0	-2.44	0	0	1.26	0	0	0	0	0	0	1.04	1.04
Westbrook Inverter Transfor	W_INVTR6	369881	4906578	2	0	0	77.3	77.3	1	2131.18	3.25	0	77.57	0	-2.45	0	0	1.27	0	0	0	0	0	0	0.95	0.95
Westbrook Inverter Transfor	W_INVTR7	369786	4906417	2	0	0	77.3	77.3	1	2229.12	3.25	0	77.96	0	-2.48	0	0	1.31	0	0	0	0	0	0	0.55	0.55
Westbrook Inverter Transfor	W_INVTR3	369514	4906164	2	0	0	77.3	77.3	1	2365.34	3.25	0	78.48	0	-2.53	0	0	1.38	0	0	0	0	0	0	0.01	0.01
Westbrook Inverter Transfor	W_INVTR4	369679	4906164	2	0	0	77.3	77.3	1	2419.17	3.25	0	78.67	0	-2.55	0	0	1.4	0	0	0	0	0	0	-0.19	-0.19
Inverter Transformer	MV4-13 T	369057	4908605	2	0	0	56.1	56.1	1	301.41	3.25	0	60.58	0	-0.07	0	0	2.79	0	0	0	0	0	0	-7.25	-7.25
Inverter Transformer	MV4-15 T	369170	4908481	2	0	0	56.1	56.1	1	358.57	3.25	0	62.09	0	-0.1	0	0	3.04	0	0	0	0	0	0	-8.97	-8.97
Inverter Transformer	MV4-14 T	369182	4908507	2	0	0	56.1	56.1	1	375.3	3.25	0	62.49	0	-0.11	0	0	3.11	0	0	0	0	0	0	-9.43	-9.43
Inverter Transformer	MV6-1 T	370230	4907364	2	0	0	69.4	69.4	1	1767.2	3.25	0	75.95	0	2.08	0	0	4.73	0	0	0	0	0	0	-13.41	-13.41
Inverter Transformer	MV6-4 T	370244	4906966	2	0	0	69.4	69.4	1	2040.82	3.25	0	77.2	0	2.19	0	0	5.01	0	0	0	0	0	0	-15.04	-15.04
Inverter Transformer	MV4-12 T	369049	4908803	2	0	0	56.1	56.1	1	444.9	3.25	0	63.97	0	-0.12	0	0	3.37	0	0	0	0	0	0	-11.16	-11.16
Inverter Transformer	MV3-2 T	368677	4907928	2	0	0	56.1	56.1	1	515.11	3.25	0	65.24	0	-0.12	0	0	3.6	0	0	0	0	0	0	-12.66	-12.66
Inverter Transformer	MV3-4 T	368507	4907925	2	0	0	56.1	56.1	1	586.93	3.25	0	66.37	0	-0.11	0	0	3.82	0	0	0	0	0	0	-14.02	-14.02
Inverter Transformer	MV4-7 T	369040	4909001	2	0	0	56.1	56.1	1	618.96	3.25	0	66.83	0	-0.1	0	0	3.91	0	0	0	0	0	0	-14.58	-14.58
Inverter Transformer	MV4-11 T	369269	4908855	2	0	0	56.1	56.1	1	625.28	3.25	0	66.92	0	-0.1	0	0	3.93	0	0	0	0	0	0	-14.69	-14.69
Inverter Transformer	MV4-10 T	369307	4908858	2	0	0	56.1	56.1	1	655.32	3.25	0	67.33	0	-0.09	0	0	4.01	0	0	0	0	0	0	-15.19	-15.19
Inverter Transformer	MV3-8 T	368685	4907712	2	0	0	56.1	56.1	1	723.96	3.25	0	68.19	0	-0.07	0	0	4.2	0	0	0	0	0	0	-16.26	-16.26
Inverter Transformer	MV4-8 T	369262	4909001	2	0	0	56.1	56.1	1	729.28	3.25	0	68.26	0	-0.07	0	0	4.21	0	0	0	0	0	0	-16.34	-16.34
Inverter Transformer	MV2-1 T	365836	4906816	2	0	0	69.4	69.4	1	3386.16	3.25	0	81.59	0	2.62	0	0	6.2	0	0	0	0	0	0	-21.07	-21.07
Inverter Transformer	MV4-9 T	369284	4909001	2	0	0	56.1	56.1	1	742.94	3.25	0	68.42	0	-0.07	0	0	4.25	0	0	0	0	0	0	-16.54	-16.54
Inverter Transformer	MV3-5 T	368335	4907843	2	0	0	56.1	56.1	1	754.27	3.25	0	68.55	0	-0.07	0	0	4.28	0	0	0	0	0	0	-16.7	-16.7
Inverter Transformer	MV3-9 T	368517	4907703	2	0	0	56.1	56.1	1	780.54	3.25	0	68.85	0	-0.06	0	0	4.35	0	0	0	0	0	0	-17.08	-17.08
Inverter Transformer	MV3-1 T	368150	4907976	2	0	0	56.1	56.1	1	802.66	3.25	0	69.09	0	-0.05	0	0	4.4	0	0	0	0	0	0	-17.38	-17.38
Inverter Transformer	MV4-4 T	369033	4909199	2	0	0	56.1	56.1	1	804.81	3.25	0	69.11	0	-0.05	0	0	4.41	0	0	0	0	0	0	-17.41	-17.41
Inverter Transformer	MV4-6 T	369249	4909192	2	0	0	56.1	56.1	1	881.66	3.25	0	69.91	0	-0.03	0	0	4.6	0	0	0	0	0	0	-18.42	-18.42
Inverter Transformer	MV3-6 T	368156	4907834	2	0	0	56.1	56.1	1	885.27	3.25	0	69.94	0	-0.03	0	0	4.61	0	0	0	0	0	0	-18.47	-18.47
Inverter Transformer	MV3-11 T	368340	4907662	2	0	0	56.1	56.1	1	898.46	3.25	0	70.07	0	-0.02	0	0	4.64	0	0	0	0	0	0	-18.63	-18.63
Inverter Transformer	MV4-5 T	369283	4909199	2	0	0	56.1	56.1	1	904.83	3.25	0	70.13	0	-0.02	0	0	4.66	0	0	0	0	0	0	-18.71	-18.71
Inverter Transformer	MV3-14 T	368678	4907498	2	0	0	56.1	56.1	1	936.23	3.25	0	70.43	0	-0.01	0	0	4.74	0	0	0	0	0	0	-19.09	-19.09
Inverter Transformer	MV4-1 T	369017	4909397	2	0	0	56.1	56.1	1	993.55	3.25	0	70.94	0	0.01	0	0	4.87	0	0	0	0	0	0	-19.77	-19.77
Inverter Transformer	MV3-16 T	368509	4907475	2	0	0	56.1	56.1	1	997.42	3.25	0	70.98	0	0.01	0	0	4.88	0	0	0	0	0	0	-19.81	-19.81
Inverter Transformer	MV3-10 T	368162	4907669	2	0	0	56.1	56.1	1	998.87	3.25	0	70.99	0	0.01	0	0	4.89	0	0	0	0	0	0	-19.83	-19.83
Inverter Transformer	MV3-3 T	367944	4907927	2	0	0	56.1	56.1	1	1003.69	3.25	0	71.03	0	0.01	0	0	4.9	0	0	0	0	0	0	-19.88	-19.88
Inverter Transformer	MV1-7 T	364919	4905782	2	0	0	69.4	69.4	1	4708.16	3.25	0	84.46	0	2.95	0	0	7.18	0	0	0	0	0	0	-25.24	-25.24
Inverter Transformer	MV1-10 T	365010	4905564	2	0	0	69.4	69.4	1	4760.8	3.25	0	84.55	0	2.96	0	0	7.22	0	0	0	0	0	0	-25.39	-25.39
Inverter Transformer	MV3-15 T	368351	4907477	2	0	0	56.1	56.1	1	1055.01	3.25	0	71.47	0	0.03	0	0	5.02	0	0	0	0	0	0	-20.46	-20.46
Inverter Transformer	MV4-3 T	369234	4909397	2	0	0	56.1	56.1	1	1058.99	3.25	0	71.5	0	0.03	0	0	5.03	0	0	0	0	0	0	-20.5	-20.5
Inverter Transformer	MV4-2 T	369267	4909397	2	0	0	56.1	56.1	1	1072.44	3.25	0	71.61	0	0.04	0	0	5.06	0	0	0	0	0	0	-20.65	-20.65
Inverter Transformer	MV1-14 T	365157	4905049	2	0	0	69.4	69.4	1	4977.84	3.25	0	84.94	0	3.01	0	0	7.37	0	0	0	0	0	0	-25.97	-25.97
Inverter Transformer	MV3-7 T	367951	4907754	2	0	0	56.1	56.1	1	1094.13	3.25	0	71.78	0	0.05	0	0	5.11	0	0	0	0	0	0	-20.88	-20.88
Inverter Transformer	MV3-20 T	368683	4907317	2	0	0	56.1	56.1	1	1114.96	3.25	0	71.95	0	0.05	0	0	5.16	0	0	0	0	0	0	-21.1	-21.1
Inverter Transformer	MV1-13 T	364725	4905241	2	0	0	69.4	69.4	1	5183.41	3.25	0	85.29	0	3.05	0	0	7.5	0	0	0	0	0	0	-26.49	-26.49
Inverter Transformer	MV3-17 T	368183	4907472	2	0	0	56.1	56.1	1	1143.24	3.25	0	72.16	0	0.06	0	0	5.23	0	0	0	0	0	0	-21.39	-21.39
Inverter Transformer	MV3-19 T	368352	4907347	2	0	0	56.1	56.1	1	1172.7	3.25	0	72.38	0	0.07	0	0	5.29	0	0	0	0	0	0	-21.69	-21.69
Inverter Transformer	MV5-6 T	369987	4908507	2	0	0	56.1	56.1	1	1173.94	3.25	0	72.39	0	0.07	0	0	5.3	0	0	0	0	0	0	-21.7	-21.7
Inverter Transformer	MV3-13 T	367958	4907577	2	0	0	56.1	56.1	1	1205.64	3.25	0	72.62	0	0.09	0	0	5.37	0	0	0	0	0	0	-22.02	-22.02
Inverter Transformer	MV5-5 T	370021	4908690	2	0	0	56.1	56.1	1	1234.01	3.25	0	72.83	0	0.1	0	0	5.43	0	0	0	0	0	0	-22.3	-22.3
Inverter Transformer	MV3-21 T	368484	4907206	2	0	0	56.1	56.1	1	1262.44	3.25	0	73.02	0	0.11	0	0	5.5	0	0	0	0	0	0	-22.57	-22.57
Inverter Transformer	MV5-2 T	370011	4908853	2	0	0	56.1	56.1	1	1269.67	3.25	0	73.07	0	0.11	0	0	5.51	0	0	0	0	0	0	-22.64	-22.64
Inverter Transformer	MV3-22 T	368661	4907142	2	0	0	56.1	56.1	1	1291.34	3.25	0	73.22	0	0.12	0	0	5.56	0	0	0	0	0	0	-22.84	-22.84
Inverter Transformer	MV5-1 T	370015	4909142	2	0	0	56.1	56.1	1	1397.54	4.65	0	73.91	0	0.98	3.2	0.01	5.8	0	0	0	0	0	0	-27.83	-27.83
Inverter Transformer	MV3-12 T	367674	4907594	2	0	0	56.1	56.1	1	1411.76	3.25	0	74	0	0.16	0	0	5.83	0	0	0	0	0	0	-23.93	-23.93
Inverter Transformer	MV3-18 T	367757	4907412	2	0	0	56.1	56.1	1	1464.8	3.25	0	74.32	0	0.18	0	0	5.94	0	0	0	0	0	0	-24.38	-24.38
Inverter Transformer	MV5-3 T	370237	4908851	2	0	0	56.1	56.1	1	1483.77	3.25	0	74.43	0	0.19	0	0	5.98	0	0	0	0	0	0	-24.54	-24.54
Inverter Transformer	MV5-4 T	370330	4908707	2	0	0	56.1	56.1	1	1540.22	3.25	0	74.75	0	0.21	0	0	6.1	0	0	0	0	0	0	-25.01	-25.01
Inverter Transformer	MV6-2 T	370091	4907339	2	0	0	56.1	56.1	1	1674.17	3.25	0	75.48	0	0.27	0	0	6.39	0	0	0	0	0	0	-26.07	-26.07
Inverter Transformer	MV6-3 T	370202	4907140	2	0	0	56.1	56.1	1	1889.35	3.25	0	76.53	0	0.36	0	0	6.82	0	0	0	0	0	0	-27.65	-27.65
Line Reactor	NGR	369421	4908787.5	5	0	0	45.4	45.4	1	705.8	5.25	0	67.97	0	3.39	1.46	0.1	0.29	0	0	0	0	0	0	-27.76	-27.76
Inverter Transformer	MV2-2 T	365982	4906654	2	0	0	56.1	56.1	1	3341.33	3.25	0	81.48	0	0.97	0	0	9.43	0	0	0	0	0	0	-35.83	-35.83
Inverter Transformer	MV2-3 T	365814	4906641	2	0	0	56.1	56.1	1	3491.58	3.25	0	81.86	0	1.04	0	0	9.67	0	0	0	0	0	0	-36.51	-36.51
Inverter Transformer	MV2-4 T	365590	4906628	2	0	0	56.1	56.1	1	3692.25	3.25	0	82.35	0	1.12	0	0	9.99	0	0	0	0	0	0	-37.4	-37.4
Inverter Transformer	MV1-1 T	364721	4906166	2	0	0	56.1	56.1	1	4676.28	3.25	0	84.4	0	1.51	0	0	11.42	0	0	0	0	0	0	-41.27	-41.27
Inverter Transformer	MV1-2 T	364759	4906063	2	0	0	56.1	56.1	1	4693.99	3.25	0	84.43	0	1.51	0	0	11.44	0	0	0	0	0	0	-41.33	-41.33
Inverter Transformer	MV1-4 T	364821	4905918	2	0	0	56.1	56.1	1	4715.94	3.25	0	84.47	0	1.52	0	0	11.47	0	0	0	0	0	0	-41.41	-41.41

	Inverter Transformer	MV1-12 T	365044	4905386	2	0	0	56.1	56.1	1	4843.29	3.25	0	84.7	0	1.57	0	0	11.65	0	0	0	0	0	0	-41.86	-41.86
	Inverter Transformer	MV1-5 T	364676	4905892	2	0	0	56.1	56.1	1	4852.9	3.25	0	84.72	0	1.57	0	0	11.66	0	0	0	0	0	0	-41.89	-41.89
	Inverter Transformer	MV1-8 T	364782	4905647	2	0	0	56.1	56.1	1	4897.44	3.25	0	84.8	0	1.59	0	0	11.72	0	0	0	0	0	0	-42.05	-42.05
	Inverter Transformer	MV1-15 T	365309	4904994	2	0	0	56.1	56.1	1	4905.5	3.25	0	84.81	0	1.59	0	0	11.73	0	0	0	0	0	0	-42.08	-42.08
	Inverter Transformer	MV1-3 T	364435	4906039	2	0	0	56.1	56.1	1	4988.13	3.25	0	84.96	0	1.62	0	0	11.84	0	0	0	0	0	0	-42.36	-42.36
	Inverter Transformer	MV1-6 T	364482	4905835	2	0	0	56.1	56.1	1	5048.41	3.25	0	85.06	0	1.64	0	0	11.92	0	0	0	0	0	0	-42.57	-42.57
	Inverter Transformer	MV1-9 T	364555	4905646	2	0	0	56.1	56.1	1	5086.59	3.25	0	85.13	0	1.66	0	0	11.97	0	0	0	0	0	0	-42.69	-42.69
	Inverter Transformer	MV1-11 T	364649	4905414	2	0	0	56.1	56.1	1	5140.43	3.25	0	85.22	0	1.68	0	0	12.04	0	0	0	0	0	0	-42.88	-42.88
Limit. Valu	0	0																								
Level D/N:	39.7833	39.7833																								

Receiver: Existing Noise Receptor
ID: S-R111
X: 370796
Y: 4907054
Z: 4.5
Ground: 0

ISO	Description	ID	X	Y	Z	Ground	ReflOrd	LxT	LxN	L/A	Dist.	hm	Freq	Adiv	K0b	Agr	Abar	z	Aatm	Afol	Ahous	Cmet	CmetN	Dc	RL	LtotT	LtotN
	Sol_Luce Substation	S_Substation	369426	4908792	3.5	0	0	112.1	112.1	1	2213.04	5.25	0	77.9	0	0.06	3.63	0.3	4.72	0	0	0	0	0	0	25.76	25.76
	Inverter	MV6-3	370207	4907140	2	0	0	100.3	100.3	1	595.25	3.25	0	66.49	0	-0.48	0	0	9.18	0	0	0	0	0	0	25.12	25.12
	Inverter	MV6-2	370085	4907339	2	0	0	100.3	100.3	1	766	3.25	0	68.68	0	-0.37	0	0	10.04	0	0	0	0	0	0	21.96	21.96
	Inverter	MV6-1	370235	4907364	2	0	0	97.3	97.3	1	640.96	3.25	0	67.14	0	-0.45	0	0	9.44	0	0	0	0	0	0	21.19	21.19
	Inverter	MV5-4	370324	4908707	2	0	0	100.3	100.3	1	1719.07	3.25	0	75.71	0	0.04	0	0	12.85	0	0	0	0	0	0	11.72	11.72
	Inverter	MV5-5	370015	4908690	2	0	0	100.3	100.3	1	1812.86	3.25	0	76.17	0	0.07	0	0	13.06	0	0	0	0	0	0	11.01	11.01
	Inverter	MV5-3	370231	4908851	2	0	0	100.3	100.3	1	1883.73	3.25	0	76.5	0	0.1	0	0	13.21	0	0	0	0	0	0	10.5	10.5
	Inverter	MV5-2	370006	4908853	2	0	0	100.3	100.3	1	1964.82	3.25	0	76.87	0	0.12	0	0	13.39	0	0	0	0	0	0	9.94	9.94
	Inverter	MV3-20	368689	4907317	2	0	0	100.3	100.3	1	2123.35	3.25	0	77.54	0	0.16	0	0	13.72	0	0	0	0	0	0	8.89	8.89
	Inverter	MV3-14	368684	4907498	2	0	0	100.3	100.3	1	2158.17	3.25	0	77.68	0	0.17	0	0	13.79	0	0	0	0	0	0	8.67	8.67
	Inverter	MV3-8	368680	4907712	2	0	0	100.3	100.3	1	2215.95	3.25	0	77.91	0	0.19	0	0	13.91	0	0	0	0	0	0	8.31	8.31
	Inverter	MV5-1	370020	4909142	2	0	0	100.3	100.3	1	2227.54	3.25	0	77.96	0	0.19	0	0	13.93	0	0	0	0	0	0	8.24	8.24
	Inverter	MV3-16	368514	4907475	2	0	0	100.3	100.3	1	2320.51	3.25	0	78.31	0	0.21	0	0	14.11	0	0	0	0	0	0	7.67	7.67
	Inverter	MV3-21	368478	4907206	2	0	0	100.3	100.3	1	2322.98	3.25	0	78.32	0	0.21	0	0	14.12	0	0	0	0	0	0	7.66	7.66
	Inverter	MV4-10	369312	4908858	2	0	0	100.3	100.3	1	2335.95	3.25	0	78.37	0	0.22	0	0	14.14	0	0	0	0	0	0	7.58	7.58
	Inverter	MV4-11	369264	4908855	2	0	0	100.3	100.3	1	2364.45	3.25	0	78.47	0	0.23	0	0	14.2	0	0	0	0	0	0	7.41	7.41
	Inverter	MV3-9	368512	4907703	2	0	0	100.3	100.3	1	2374.42	3.25	0	78.51	0	0.23	0	0	14.22	0	0	0	0	0	0	7.36	7.36
	Inverter	MV3-19	368357	4907347	2	0	0	100.3	100.3	1	2456.54	3.25	0	78.81	0	0.25	0	0	14.38	0	0	0	0	0	0	6.88	6.88
	Inverter	MV4-9	369289	4909001	2	0	0	100.3	100.3	1	2462.09	3.25	0	78.83	0	0.25	0	0	14.39	0	0	0	0	0	0	6.85	6.85
	Inverter	MV3-15	368357	4907477	2	0	0	100.3	100.3	1	2475.41	3.25	0	78.87	0	0.25	0	0	14.41	0	0	0	0	0	0	6.78	6.78
	Inverter	MV4-8	369256	4909001	2	0	0	100.3	100.3	1	2482.42	5.13	0	78.9	0	0.98	3.32	0.03	14.42	0	0	0	0	0	0	2.69	2.69
	Inverter	MV3-11	368346	4907662	2	0	0	100.3	100.3	1	2524.32	3.25	0	79.04	0	0.26	0	0	14.5	0	0	0	0	0	0	6.5	6.5
	Inverter	MV4-5	369289	4909199	2	0	0	100.3	100.3	1	2621.47	3.25	0	79.37	0	0.28	0	0	14.69	0	0	0	0	0	0	5.97	5.97
	Inverter	MV4-7	369035	4909001	2	0	0	100.3	100.3	1	2625.25	3.25	0	79.38	0	0.29	0	0	14.69	0	0	0	0	0	0	5.95	5.95
	Inverter	MV4-6	369243	4909192	2	0	0	100.3	100.3	1	2642.51	3.25	0	79.44	0	0.29	0	0	14.73	0	0	0	0	0	0	5.86	5.86
	Inverter	MV3-17	368178	4907472	2	0	0	100.3	100.3	1	2651.16	3.25	0	79.47	0	0.29	0	0	14.74	0	0	0	0	0	0	5.81	5.81
	Inverter	MV3-10	368167	4907669	2	0	0	100.3	100.3	1	2699.98	3.25	0	79.63	0	0.3	0	0	14.83	0	0	0	0	0	0	5.55	5.55
	Inverter	MV3-6	368162	4907834	2	0	0	100.3	100.3	1	2747.06	3.25	0	79.78	0	0.31	0	0	14.92	0	0	0	0	0	0	5.31	5.31
	Inverter	MV4-4	369027	4909199	2	0	0	100.3	100.3	1	2780.36	3.25	0	79.88	0	0.32	0	0	14.98	0	0	0	0	0	0	5.13	5.13
	Inverter	MV4-2	369272	4909397	2	0	0	100.3	100.3	1	2795.04	3.25	0	79.93	0	0.32	0	0	15.01	0	0	0	0	0	0	5.06	5.06
	Inverter	MV4-3	369229	4909397	2	0	0	100.3	100.3	1	2818.71	3.25	0	80	0	0.33	0	0	15.05	0	0	0	0	0	0	4.94	4.94
	Inverter	MV6-4	370250	4906966	2	0	0	86.1	86.1	1	553.05	3.25	0	65.86	0	0.55	0	0	5.32	0	0	0	0	0	0	14.33	14.33
	Inverter	MV3-13	367963	4907577	2	0	0	100.3	100.3	1	2880.87	3.25	0	80.19	0	0.34	0	0	15.16	0	0	0	0	0	0	4.62	4.62
	Inverter	MV3-7	367945	4907754	2	0	0	100.3	100.3	1	2935.68	3.25	0	80.35	0	0.35	0	0	15.26	0	0	0	0	0	0	4.35	4.35
	Inverter	MV4-1	369011	4909397	2	0	0	100.3	100.3	1	2945.48	3.25	0	80.38	0	0.35	0	0	15.28	0	0	0	0	0	0	4.3	4.3
	Inverter	MV3-3	367939	4907927	2	0	0	100.3	100.3	1	2987.4	3.25	0	80.51	0	0.36	0	0	15.35	0	0	0	0	0	0	4.1	4.1
	Inverter	MV3-18	367752	4907412	2	0	0	100.3	100.3	1	3064.98	3.25	0	80.73	0	0.37	0	0	15.49	0	0	0	0	0	0	3.72	3.72
	Inverter	MV3-12	367668	4907594	2	0	0	100.3	100.3	1	3174.27	3.25	0	81.03	0	0.39	0	0	15.68	0	0	0	0	0	0	3.21	3.21
	DSTATCOM - 10 MVAR #1	DSAT1	369437	4908757	2.5	0	0	96.6	96.6	1	2178.78	3.5	0	77.76	0	3.26	0	0	1.83	0	0	0	0	0	0	13.78	13.78
	DSTATCOM - 10 MVAR #2	DSAT2	369403	4908757	2.5	0	0	96.6	96.6	1	2200.15	3.5	0	77.85	0	3.26	0	0	1.84	0	0	0	0	0	0	13.68	13.68
	SubstationTransformer	W_ST	369711.17	4906112.3	2.5	0	0	92	92	1	1436.56	4.25	0	74.15	0	0.63	3.78	0.21	3.37	0	0	0	0	0	0	10.06	10.06
	Westbrook Inverter Enclosur	W_INV6	369875	4906578	2	0	0	89.1	89.1	1	1036.74	3.25	0	71.31	0	0.69	0	0	6.38	0	0	0	0	0	0	10.67	10.67
	Westbrook Inverter Enclosur	W_INV5	369719	4906574	2	0	0	89.1	89.1	1	1179.12	3.25	0	72.43	0	0.72	0	0	6.64	0	0	0	0	0	0	9.26	9.26
	Westbrook Inverter Enclosur	W_INV7	369780	4906417	2	0	0	89.1	89.1	1	1199.18	3.25	0	72.58	0	0.73	0	0	6.68	0	0	0	0	0	0	9.07	9.07
	Inverter	MV2-3	365820	4906641	2	0	0	100.3	100.3	1	4993.11	3.25	0	84.97	0	0.64	0	0	18.57	0	0	0	0	0	0	-3.87	-3.87
	Inverter	MV2-4	365586	4906624	2	0	0	100.3	100.3	1	5227.72	3.25	0	85.37	0	0.66	0	0	18.91	0	0	0	0	0	0	-4.63	-4.63
	Westbrook Inverter Enclosur	W_INV4	369673	4906164	2	0	0	89.1	89.1	1	1432.91	3.25	0	74.12	0	0.78	0	0	7.09	0	0	0	0	0	0	7.06	7.06
	Westbrook Inverter Enclosur	W_INV3	369508	4906164	2	0	0	89.1	89.1	1	1565.58	3.25	0	74.89	0	0.81	0	0	7.32	0	0	0	0	0	0	6.04	6.04
	Westbrook Inverter Enclosur	W_INV2	369374	4906388	2	0	0	89.1	89.1	1	1570.24	3.25	0	74.92	0	0.81	0	0	7.33	0	0	0	0	0	0	6	6
	Inverter	MV1-15	365315	4904994	2	0	0	100.3	100.3	1	5855.34	3.25	0	86.35	0	0.7	0	0	19.8	0	0	0	0	0	0	-6.53	-6.53
	Inverter	MV1-12	365038	4905386	2	0	0	100.3	100.3	1	5994.73	3.25	0	86.56	0	0.7	0	0	19.99	0	0	0	0	0	0	-6.93	-6.93
	Inverter	MV5-6	369982	4908507	2	0	0	89.1	89.1	1	1665.48	3.25	0	75.43	0	0.83	0	0	7.49	0	0	0	0	0	0	5.31	5.31
	Inverter	MV1-4	364815	4905918	2	0	0	100.3	100.3	1	6087.93	3.25	0	86.69	0	0.71	0	0	20.11	0	0	0	0	0	0	-7.2	-7.2
	Inverter	MV1-2	364753	4906063	2	0	0	100.3	100.3	1	6123.72	3.25	0	86.74	0	0.71	0	0	20.16	0	0	0	0	0	0	-7.3	-7.3
	Inverter	MV1-1	364715	4906166	2	0	0	100.3	100.3	1	6145.5	3.25	0	86.77	0	0.71	0	0	20.19	0	0	0	0	0	0	-7.36	-7.36

Inverter	MV1-8	364788	4905647	2	0	0	100.3	100.3	1	6170.55	3.25	0	86.81	0	0.71	0	0	20.22	0	0	0	0	0	0	-7.43	-7.43
Inverter	MV1-5	364671	4905892	2	0	0	100.3	100.3	1	6234.25	3.25	0	86.9	0	0.71	0	0	20.31	0	0	0	0	0	0	-7.6	-7.6
Inverter	MV1-11	364655	4905414	2	0	0	100.3	100.3	1	6356.22	3.25	0	87.06	0	0.71	0	0	20.47	0	0	0	0	0	0	-7.94	-7.94
Inverter	MV1-9	364561	4905646	2	0	0	100.3	100.3	1	6392	3.25	0	87.11	0	0.71	0	0	20.52	0	0	0	0	0	0	-8.03	-8.03
Inverter	MV1-6	364477	4905835	2	0	0	100.3	100.3	1	6435.51	3.25	0	87.17	0	0.71	0	0	20.57	0	0	0	0	0	0	-8.15	-8.15
Inverter	MV2-1	365842	4906816	2	0	0	97.3	97.3	1	4959.71	3.25	0	84.91	0	0.64	0	0	18.52	0	0	0	0	0	0	-6.76	-6.76
Fixed Reactor Bank 2	FRB2	369464	4908755	6	0	0	89.8	89.8	1	2160.47	5.25	0	77.69	0	-0.98	0	0	4.64	0	0	0	0	0	0	8.43	8.43
Fixed Reactor Bank 1	FRB1	369378	4908755	6	0	0	89.8	89.8	1	2214.53	5.25	0	77.91	0	-0.97	0	0	4.73	0	0	0	0	0	0	8.12	8.12
Westbrook Inverter Enclosur	W_INV1	369409	4906578	2	0	0	86.1	86.1	1	1466.41	3.25	0	74.33	0	0.78	0	0	7.15	0	0	0	0	0	0	3.8	3.8
Inverter	MV3-22	368656	4907142	2	0	0	89.1	89.1	1	2141.81	3.25	0	77.62	0	0.94	0	0	8.28	0	0	0	0	0	0	2.23	2.23
Inverter	MV4-15	369176	4908481	2	0	0	89.1	89.1	1	2158.87	3.25	0	77.68	0	0.94	0	0	8.3	0	0	0	0	0	0	2.13	2.13
Inverter	MV4-14	369176	4908507	2	0	0	89.1	89.1	1	2176.15	3.25	0	77.75	0	0.95	0	0	8.33	0	0	0	0	0	0	2.02	2.02
Inverter	MV3-2	368671	4907928	2	0	0	89.1	89.1	1	2297.72	3.25	0	78.23	0	0.98	0	0	8.53	0	0	0	0	0	0	1.33	1.33
Inverter	MV1-14	365163	4905049	2	0	0	97.3	97.3	1	5979.19	3.25	0	86.53	0	0.7	0	0	19.96	0	0	0	0	0	0	-9.89	-9.89
Inverter	MV1-10	365004	4905564	2	0	0	97.3	97.3	1	5980.58	3.25	0	86.53	0	0.7	0	0	19.97	0	0	0	0	0	0	-9.89	-9.89
Inverter	MV1-7	364925	4905782	2	0	0	97.3	97.3	1	6007.21	3.25	0	86.57	0	0.71	0	0	20	0	0	0	0	0	0	-9.97	-9.97
Inverter	MV4-13	369051	4908605	2	0	0	89.1	89.1	1	2334.66	3.25	0	78.36	0	0.99	0	0	8.58	0	0	0	0	0	0	1.12	1.12
Inverter	MV1-13	364731	4905241	2	0	0	97.3	97.3	1	6330.18	3.25	0	87.03	0	0.71	0	0	20.44	0	0	0	0	0	0	-10.87	-10.87
Inverter	MV3-4	368502	4907925	2	0	0	89.1	89.1	1	2453.79	3.25	0	78.8	0	1.01	0	0	8.77	0	0	0	0	0	0	0.47	0.47
Inverter	MV4-12	369043	4908803	2	0	0	89.1	89.1	1	2476.29	3.25	0	78.88	0	1.02	0	0	8.81	0	0	0	0	0	0	0.35	0.35
Inverter	MV3-5	368340	4907843	2	0	0	89.1	89.1	1	2579.62	3.25	0	79.23	0	1.04	0	0	8.97	0	0	0	0	0	0	-0.19	-0.19
Inverter	MV3-1	368156	4907976	2	0	0	89.1	89.1	1	2796.37	3.25	0	79.93	0	1.1	0	0	9.31	0	0	0	0	0	0	-1.28	-1.28
Westbrook Inverter Transfor	W_INVTR6	369881	4906578	2	0	0	77.3	77.3	1	1031.41	3.25	0	71.27	0	-1.95	0	0	0.7	0	0	0	0	0	0	7.33	7.33
Westbrook Inverter Transfor	W_INVTR5	369725	4906574	2	0	0	77.3	77.3	1	1173.65	3.25	0	72.39	0	-2.04	0	0	0.78	0	0	0	0	0	0	6.21	6.21
Gardiner Substation	G_Sub	366586.3	4903349.9	2.5	0	0	90.8	90.8	1	5607.31	4.25	0	85.98	0	1.79	2.2	0.34	9.32	0	0	0	0	0	0	-8.5	-8.5
Westbrook Inverter Transfor	W_INVTR7	369786	4906417	2	0	0	77.3	77.3	1	1194.1	3.25	0	72.54	0	-2.05	0	0	0.79	0	0	0	0	0	0	6.06	6.06
Inverter	MV2-2	365977	4906654	2	0	0	89.1	89.1	1	4835.57	3.25	0	84.69	0	1.6	0	0	12.24	0	0	0	0	0	0	-9.47	-9.47
Westbrook Inverter Transfor	W_INVTR1	369403	4906578	2	0	0	78.2	78.2	1	1472.08	3.25	0	74.36	0	-2.19	0	0	0.94	0	0	0	0	0	0	5.13	5.13
Inverter Transformer	MV6-4 T	370244	4906966	2	0	0	69.4	69.4	1	558.98	3.25	0	65.95	0	1.15	0	0	3.08	0	0	0	0	0	0	-0.83	-0.83
Westbrook Inverter Transfor	W_INVTR4	369679	4906164	2	0	0	77.3	77.3	1	1428.21	3.25	0	74.1	0	-2.17	0	0	0.92	0	0	0	0	0	0	4.5	4.5
Westbrook Inverter Transfor	W_INVTR3	369514	4906164	2	0	0	77.3	77.3	1	1560.65	3.25	0	74.87	0	-2.23	0	0	0.99	0	0	0	0	0	0	3.72	3.72
Westbrook Inverter Transfor	W_INVTR2	369368	4906388	2	0	0	77.3	77.3	1	1575.67	3.25	0	74.95	0	-2.24	0	0	0.99	0	0	0	0	0	0	3.63	3.63
Inverter Transformer	MV6-1 T	370230	4907364	2	0	0	69.4	69.4	1	645.34	3.25	0	67.2	0	1.28	0	0	3.25	0	0	0	0	0	0	-2.38	-2.38
Inverter	MV1-3	364440	4906039	2	0	0	89.1	89.1	1	6436.53	3.25	0	87.17	0	1.99	0	0	14.31	0	0	0	0	0	0	-14.41	-14.41
Inverters	G_Inv2	366676.9	4903239.1	2	0	0	87.7	87.7	1	5614.31	3.25	0	85.99	0	2.9	0	0	6.58	0	0	0	0	0	0	-7.81	-7.81
Inverters	G_Inv4	366732.8	4903105	2	0	0	87.7	87.7	1	5666.06	3.25	0	86.07	0	2.9	0	0	6.63	0	0	0	0	0	0	-7.94	-7.94
Inverters	G_Inv6	366788.5	4902972	2	0	0	87.7	87.7	1	5720.38	3.25	0	86.15	0	2.9	0	0	6.69	0	0	0	0	0	0	-8.08	-8.08
Inverters	G_Inv1	366526.4	4903225.8	2	0	0	87.7	87.7	1	5734.51	3.25	0	86.17	0	2.91	0	0	6.71	0	0	0	0	0	0	-8.12	-8.12
Inverters	G_Inv8	366844.5	4902838.5	2	0	0	87.7	87.7	1	5777.96	3.25	0	86.24	0	2.91	0	0	6.75	0	0	0	0	0	0	-8.23	-8.23
Inverters	G_Inv3	366583.7	4903091.4	2	0	0	87.7	87.7	1	5783.22	3.25	0	86.24	0	2.91	0	0	6.76	0	0	0	0	0	0	-8.25	-8.25
Inverters	G_Inv5	366638.5	4902958.1	2	0	0	87.7	87.7	1	5836.2	3.25	0	86.32	0	2.91	0	0	6.81	0	0	0	0	0	0	-8.38	-8.38
Inverters	G_Inv10	366900.7	4902704.8	2	0	0	87.7	87.7	1	5838.57	3.25	0	86.33	0	2.91	0	0	6.81	0	0	0	0	0	0	-8.39	-8.39
Inverters	G_Inv7	366694.6	4902824.7	2	0	0	87.7	87.7	1	5891.39	3.25	0	86.4	0	2.91	0	0	6.87	0	0	0	0	0	0	-8.52	-8.52
Inverters	G_Inv9	366750.9	4902691.8	2	0	0	87.7	87.7	1	5949.09	3.25	0	86.49	0	2.92	0	0	6.93	0	0	0	0	0	0	-8.67	-8.67
Inverter Transformer	MV6-3 T	370202	4907140	2	0	0	56.1	56.1	1	600.2	3.25	0	66.57	0	-0.1	0	0	3.86	0	0	0	0	0	0	-14.26	-14.26
Inverter Transformer	MV6-2 T	370091	4907339	2	0	0	56.1	56.1	1	760.43	3.25	0	68.62	0	-0.06	0	0	4.29	0	0	0	0	0	0	-16.79	-16.79
Inverter Transformer	MV2-1 T	365836	4906816	2	0	0	69.4	69.4	1	4965.71	3.25	0	84.92	0	3.01	0	0	7.36	0	0	0	0	0	0	-25.93	-25.93
Inverter Transformer	MV1-10 T	365010	4905564	2	0	0	69.4	69.4	1	5974.77	3.25	0	86.53	0	3.18	0	0	8	0	0	0	0	0	0	-28.36	-28.36
Inverter Transformer	MV1-14 T	365157	4905049	2	0	0	69.4	69.4	1	5984.84	3.25	0	86.54	0	3.19	0	0	8.01	0	0	0	0	0	0	-28.39	-28.39
Inverter Transformer	MV1-7 T	364919	4905782	2	0	0	69.4	69.4	1	6013.08	3.25	0	86.58	0	3.19	0	0	8.03	0	0	0	0	0	0	-28.45	-28.45
Inverter Transformer	MV1-13 T	364725	4905241	2	0	0	69.4	69.4	1	6335.93	3.25	0	87.04	0	3.24	0	0	8.22	0	0	0	0	0	0	-29.14	-29.14
Inverter Transformer	MV5-6 T	369987	4908507	2	0	0	56.1	56.1	1	1663.04	3.25	0	75.42	0	0.26	0	0	6.36	0	0	0	0	0	0	-25.99	-25.99
Inverter Transformer	MV5-4 T	370330	4908707	2	0	0	56.1	56.1	1	1717.43	3.25	0	75.7	0	0.29	0	0	6.47	0	0	0	0	0	0	-26.4	-26.4
Inverter Transformer	MV5-5 T	370021	4908690	2	0	0	56.1	56.1	1	1810.28	3.25	0	76.15	0	0.32	0	0	6.66	0	0	0	0	0	0	-27.09	-27.09
Inverter Transformer	MV5-3 T	370237	4908851	2	0	0	56.1	56.1	1	1881.94	3.25	0	76.49	0	0.35	0	0	6.81	0	0	0	0	0	0	-27.6	-27.6
Inverter Transformer	MV5-2 T	370011	4908853	2	0	0	56.1	56.1	1	1962.81	3.25	0	76.86	0	0.39	0	0	6.97	0	0	0	0	0	0	-28.16	-28.16
Inverter Transformer	MV3-20 T	368683	4907317	2	0	0	56.1	56.1	1	2129.31	3.25	0	77.56	0	0.46	0	0	7.3	0	0	0	0	0	0	-29.26	-29.26
Inverter Transformer	MV3-22 T	368661	4907142	2	0	0	56.1	56.1	1	2136.81	3.25	0	77.6	0	0.46	0	0	7.31	0	0	0	0	0	0	-29.31	-29.31
Inverter Transformer	MV4-15 T	369170	4908481	2	0	0	56.1	56.1	1	2163.38	3.25	0	77.7	0	0.47	0	0	7.36	0	0	0	0	0	0	-29.48	-29.48
Inverter Transformer	MV3-14 T	368678	4907498	2	0	0	56.1	56.1	1	2164.04	3.25	0	77.71	0	0.47	0	0	7.36	0	0	0	0	0	0	-29.48	-29.48
Inverter Transformer	MV4-14 T	369182	4908507	2	0	0	56.1	56.1	1	2171.68	3.25	0	77.74	0	0.48	0	0	7.38	0	0	0	0	0	0	-29.53	-29.53
Inverter Transformer	MV3-8 T	368685	4907712	2	0	0	56.1	56.1	1	2211.17	3.25	0	77.89	0	0.49	0	0	7.45	0	0	0	0	0	0	-29.78	-29.78
Inverter Transformer	MV5-1 T	370015	4909142	2	0	0	56.1	56.1	1	2229.28	3.25	0	77.96	0	0.5	0	0	7.49	0	0	0	0	0	0	-29.89	-29.89
Inverter Transformer	MV3-2 T	368677	4907928	2	0	0	56.1	56.1	1	2292.17	3.25	0	78.2	0	0.53	0	0	7.61	0	0	0	0	0	0	-30.28	-30.28
Inverter Transformer	MV3-21 T	368484	4907206	2	0	0	56.1	56.1	1	2316.99	3.25	0	78.3	0	0.54	0	0	7.65	0	0	0	0	0	0	-30.43	-30.43
Inverter Transformer	MV3-16 T	368509	4907475	2	0	0	56.1	56.1	1	2325.43	3.25	0	78.33	0	0.54	0	0	7.67	0	0	0	0	0	0	-30.48	-30.48
Inverter Transformer	MV4-13 T	369057	4908605	2	0	0	56.1	56.1	1	2330.18	3.25	0	78.35	0	0.54	0	0	7.68	0	0	0	0	0	0	-30.51	-30.51
Inverter Transformer	MV4-10 T	369307	4908858	2	0	0	56.1	56.1	1	2339.13	3.25	0	78.38	0	0.55	0	0	7.69	0	0	0	0	0	0	-30.56	-30.56
Inverter Transformer	MV4-11 T	369269	4908855	2	0	0	56.1	56.1	1	2361.21	3.25	0	78.46	0	0.56	0	0	7.73	0	0	0	0	0	0	-30.7	-30.7
Inverter Transformer	MV3-9 T	368517	4907703	2	0	0	56.1	56.1	1	2369.61	3.25	0	78.49	0	0.56	0	0	7.75	0	0	0	0	0	0	-30.75	-30.75
Inverter Transformer	MV3-4 T	368507	4907925	2	0	0	56.1	56.1	1	2449.12	3.25	0	78.78	0	0.59	0	0	7.9	0	0	0	0	0	0	-31.21	-31.21
Inverter Transformer	MV3-19 T	368352	4907347	2	0	0	56.1	56.1	1	2461.5	3.25	0	78.82	0	0.6	0	0	7.92	0	0	0	0	0	0	-31.28	-31.28
Inverter Transformer	MV4-9 T	369284	4909001	2	0	0	56.1	56.1	1	2465.15	3.25	0	78.84	0	0.6	0	0	7.93	0	0	0	0	0	0	-31.31	-31.31
Inverter Transformer	MV4-12 T	369049	4908803	2	0	0	56.1	56.1	1	2472.05	3.25	0	78.86	0	0.6	0	0	7.94	0	0	0	0	0	0	-31.35	-31.35

	Inverter Transformer	MV4-8 T	369262	4909001	2	0	0	56.1	56.1	1	2478.7	5.11	0	78.88	0	1.52	2.81	0.03	7.95	0	0	0	0	0	0	-35.1	-35.1
	Inverter Transformer	MV3-15 T	368351	4907477	2	0	0	56.1	56.1	1	2481.32	3.25	0	78.89	0	0.61	0	0	7.96	0	0	0	0	0	0	-31.4	-31.4
	Inverter Transformer	MV3-11 T	368340	4907662	2	0	0	56.1	56.1	1	2530.14	3.25	0	79.06	0	0.63	0	0	8.04	0	0	0	0	0	0	-31.68	-31.68
	Inverter Transformer	MV3-5 T	368335	4907843	2	0	0	56.1	56.1	1	2584.39	3.25	0	79.25	0	0.65	0	0	8.14	0	0	0	0	0	0	-31.98	-31.98
	Inverter Transformer	MV4-7 T	369040	4909001	2	0	0	56.1	56.1	1	2621.9	3.25	0	79.37	0	0.67	0	0	8.21	0	0	0	0	0	0	-32.19	-32.19
	Inverter Transformer	MV4-5 T	369283	4909199	2	0	0	56.1	56.1	1	2624.92	3.25	0	79.38	0	0.67	0	0	8.21	0	0	0	0	0	0	-32.21	-32.21
	Inverter Transformer	MV4-6 T	369249	4909192	2	0	0	56.1	56.1	1	2638.99	3.25	0	79.43	0	0.68	0	0	8.24	0	0	0	0	0	0	-32.29	-32.29
	Inverter Transformer	MV3-17 T	368183	4907472	2	0	0	56.1	56.1	1	2646.22	3.25	0	79.45	0	0.68	0	0	8.25	0	0	0	0	0	0	-32.33	-32.33
	Inverter Transformer	MV3-10 T	368162	4907669	2	0	0	56.1	56.1	1	2704.85	3.25	0	79.64	0	0.7	0	0	8.36	0	0	0	0	0	0	-32.65	-32.65
	Inverter Transformer	MV3-6 T	368156	4907834	2	0	0	56.1	56.1	1	2752.82	3.25	0	79.8	0	0.72	0	0	8.44	0	0	0	0	0	0	-32.9	-32.9
	Inverter Transformer	MV4-4 T	369033	4909199	2	0	0	56.1	56.1	1	2776.54	3.25	0	79.87	0	0.73	0	0	8.48	0	0	0	0	0	0	-33.03	-33.03
	Inverter Transformer	MV4-2 T	369267	4909397	2	0	0	56.1	56.1	1	2797.77	3.25	0	79.94	0	0.74	0	0	8.52	0	0	0	0	0	0	-33.14	-33.14
	Inverter Transformer	MV3-1 T	368150	4907976	2	0	0	56.1	56.1	1	2802.04	3.25	0	79.95	0	0.75	0	0	8.53	0	0	0	0	0	0	-33.16	-33.16
	Inverter Transformer	MV4-3 T	369234	4909397	2	0	0	56.1	56.1	1	2815.94	3.25	0	79.99	0	0.75	0	0	8.55	0	0	0	0	0	0	-33.24	-33.24
	Inverter Transformer	MV3-13 T	367958	4907577	2	0	0	56.1	56.1	1	2885.79	3.25	0	80.21	0	0.78	0	0	8.67	0	0	0	0	0	0	-33.6	-33.6
	Inverter Transformer	MV3-7 T	367951	4907754	2	0	0	56.1	56.1	1	2929.85	3.25	0	80.34	0	0.8	0	0	8.75	0	0	0	0	0	0	-33.83	-33.83
	Inverter Transformer	MV4-1 T	369017	4909397	2	0	0	56.1	56.1	1	2941.85	3.25	0	80.37	0	0.81	0	0	8.77	0	0	0	0	0	0	-33.89	-33.89
	Inverter Transformer	MV3-3 T	367944	4907927	2	0	0	56.1	56.1	1	2982.62	3.25	0	80.49	0	0.82	0	0	8.84	0	0	0	0	0	0	-34.09	-34.09
	Inverter Transformer	MV3-18 T	367757	4907412	2	0	0	56.1	56.1	1	3060.01	3.25	0	80.71	0	0.86	0	0	8.97	0	0	0	0	0	0	-34.48	-34.48
	Inverter Transformer	MV3-12 T	367674	4907594	2	0	0	56.1	56.1	1	3168.36	3.25	0	81.02	0	0.9	0	0	9.15	0	0	0	0	0	0	-35.01	-35.01
	Inverter Transformer	MV2-2 T	365982	4906654	2	0	0	56.1	56.1	1	4830.59	3.25	0	84.68	0	1.56	0	0	11.63	0	0	0	0	0	0	-41.81	-41.81
	Inverter Transformer	MV2-3 T	365814	4906641	2	0	0	56.1	56.1	1	4999.09	3.25	0	84.98	0	1.63	0	0	11.85	0	0	0	0	0	0	-42.4	-42.4
	Inverter Transformer	MV2-4 T	365590	4906628	2	0	0	56.1	56.1	1	5223.4	3.25	0	85.36	0	1.71	0	0	12.15	0	0	0	0	0	0	-43.15	-43.15
	Inverter Transformer	MV1-15 T	365309	4904994	2	0	0	56.1	56.1	1	5860.95	3.25	0	86.36	0	1.92	0	0	12.94	0	0	0	0	0	0	-45.16	-45.16
	Inverter Transformer	MV1-12 T	365044	4905386	2	0	0	56.1	56.1	1	5988.97	3.25	0	86.55	0	1.96	0	0	13.09	0	0	0	0	0	0	-45.54	-45.54
	Inverter Transformer	MV1-4 T	364821	4905918	2	0	0	56.1	56.1	1	6082.03	3.25	0	86.68	0	1.99	0	0	13.2	0	0	0	0	0	0	-45.81	-45.81
	Inverter Transformer	MV1-2 T	364759	4906063	2	0	0	56.1	56.1	1	6117.8	3.25	0	86.73	0	2	0	0	13.24	0	0	0	0	0	0	-45.92	-45.92
	Inverter Transformer	MV1-1 T	364721	4906166	2	0	0	56.1	56.1	1	6139.56	3.25	0	86.76	0	2.01	0	0	13.27	0	0	0	0	0	0	-45.98	-45.98
	Inverter Transformer	MV1-8 T	364782	4905647	2	0	0	56.1	56.1	1	6176.39	3.25	0	86.81	0	2.02	0	0	13.31	0	0	0	0	0	0	-46.09	-46.09
	Inverter Transformer	MV1-5 T	364676	4905892	2	0	0	56.1	56.1	1	6229.34	3.25	0	86.89	0	2.04	0	0	13.37	0	0	0	0	0	0	-46.24	-46.24
	Inverter Transformer	MV1-11 T	364649	4905414	2	0	0	56.1	56.1	1	6362.01	3.25	0	87.07	0	2.08	0	0	13.52	0	0	0	0	0	0	-46.61	-46.61
	Inverter Transformer	MV1-9 T	364555	4905646	2	0	0	56.1	56.1	1	6397.86	3.25	0	87.12	0	2.09	0	0	13.56	0	0	0	0	0	0	-46.71	-46.71
	Inverter Transformer	MV1-6 T	364482	4905835	2	0	0	56.1	56.1	1	6430.6	3.25	0	87.17	0	2.1	0	0	13.6	0	0	0	0	0	0	-46.81	-46.81
	Inverter Transformer	MV1-3 T	364435	4906039	2	0	0	56.1	56.1	1	6441.47	3.25	0	87.18	0	2.1	0	0	13.61	0	0	0	0	0	0	-46.84	-46.84
	Line Reactor	NGR	369421	4908787.5	5	0	0	45.4	45.4	1	2212.61	5.25	0	77.9	0	3.36	1.29	0.09	0.91	0	0	0	0	0	0	-38.1	-38.1
Limit. Valu	0	0																								
Level D/N:	31.3083	31.3083																								

Receiver: Existing Noise Receptor
ID: S-R112
X: 370931
Y: 4907215
Z: 4.5
Ground: 0

ISO	Description	ID	X	Y	Z	Ground	ReflOrd	LxT	LxN	L/A	Dist.	hm	Freq	Adiv	K0b	Agr	Abar	z	Aatm	Afol	Ahous	Cmet	CmetN	Dc	RL	LtotT	LtotN
	Sol_Luce Substation	S_Substation	369426	4908792	3.5	0	0	112.1	112.1	1	2179.9	5.25	0	77.77	0	0.07	3.72	0.33	4.67	0	0	0	0	0	0	25.85	25.85
	Inverter	MV6-3	370207	4907140	2	0	0	100.3	100.3	1	727.88	3.25	0	68.24	0	-0.39	0	0	9.87	0	0	0	0	0	0	22.6	22.6
	Inverter	MV6-2	370085	4907339	2	0	0	100.3	100.3	1	855.04	3.25	0	69.64	0	-0.32	0	0	10.4	0	0	0	0	0	0	20.6	20.6
	Inverter	MV6-1	370235	4907364	2	0	0	97.3	97.3	1	711.77	3.25	0	68.05	0	-0.4	0	0	9.79	0	0	0	0	0	0	19.88	19.88
	Inverter	MV5-4	370324	4908707	2	0	0	100.3	100.3	1	1610.75	3.25	0	75.14	0	0.01	0	0	12.59	0	0	0	0	0	0	12.57	12.57
	Inverter	MV5-5	370015	4908690	2	0	0	100.3	100.3	1	1736.29	3.25	0	75.79	0	0.05	0	0	12.89	0	0	0	0	0	0	11.59	11.59
	Inverter	MV5-3	370231	4908851	2	0	0	100.3	100.3	1	1779.47	3.25	0	76.01	0	0.06	0	0	12.98	0	0	0	0	0	0	11.26	11.26
	Inverter	MV5-2	370006	4908853	2	0	0	100.3	100.3	1	1881.14	3.25	0	76.49	0	0.09	0	0	13.21	0	0	0	0	0	0	10.52	10.52
	Inverter	MV5-1	370020	4909142	2	0	0	100.3	100.3	1	2131.49	3.25	0	77.57	0	0.17	0	0	13.73	0	0	0	0	0	0	8.84	8.84
	Inverter	MV3-20	368689	4907317	2	0	0	100.3	100.3	1	2244.32	3.25	0	78.02	0	0.2	0	0	13.96	0	0	0	0	0	0	8.13	8.13
	Inverter	MV3-14	368684	4907498	2	0	0	100.3	100.3	1	2264.75	3.25	0	78.1	0	0.2	0	0	14	0	0	0	0	0	0	8.01	8.01
	Inverter	MV3-8	368680	4907712	2	0	0	100.3	100.3	1	2305.22	3.25	0	78.25	0	0.21	0	0	14.08	0	0	0	0	0	0	7.77	7.77
	Inverter	MV4-10	369312	4908858	2	0	0	100.3	100.3	1	2306.65	3.25	0	78.26	0	0.21	0	0	14.08	0	0	0	0	0	0	7.76	7.76
	Inverter	MV4-11	369264	4908855	2	0	0	100.3	100.3	1	2338.48	3.25	0	78.38	0	0.22	0	0	14.15	0	0	0	0	0	0	7.57	7.57
	Inverter	MV4-9	369289	4909001	2	0	0	100.3	100.3	1	2426.1	3.25	0	78.7	0	0.24	0	0	14.32	0	0	0	0	0	0	7.06	7.06
	Inverter	MV3-16	368514	4907475	2	0	0	100.3	100.3	1	2430.95	3.25	0	78.72	0	0.24	0	0	14.33	0	0	0	0	0	0	7.03	7.03
	Inverter	MV4-8	369256	4909001	2	0	0	100.3	100.3	1	2448.56	3.25	0	78.78	0	0.25	0	0	14.36	0	0	0	0	0	0	6.93	6.93
	Inverter	MV3-21	368478	4907206	2	0	0	100.3	100.3	1	2453.02	3.25	0	78.79	0	0.25	0	0	14.37	0	0	0	0	0	0	6.9	6.9
	Inverter	MV3-9	368512	4907703	2	0	0	100.3	100.3	1	2467.73	3.25	0	78.85	0	0.25	0	0	14.4	0	0	0	0	0	0	6.82	6.82
	Inverter	MV4-5	369289	4909199	2	0	0	100.3	100.3	1	2575.35	3.25	0	79.22	0	0.27	0	0	14.6	0	0	0	0	0	0	6.22	6.22
	Inverter	MV3-19	368357	4907347	2	0	0	100.3	100.3	1	2577.38	3.25	0	79.22	0	0.27	0	0	14.6	0	0	0	0	0	0	6.21	6.21
	Inverter	MV3-15	368357	4907477	2	0	0	100.3	100.3	1	2587.3	3.25	0	79.26	0	0.28	0	0	14.62	0	0	0	0	0	0	6.16	6.16
	Inverter	MV4-6	369243	4909192	2	0	0	100.3	100.3	1	2599.59	3.25	0	79.3	0	0.28	0	0	14.65	0	0	0	0	0	0	6.09	6.09
	Inverter	MV4-7	369035	4909001	2	0	0	100.3	100.3	1	2604.73	3.25	0	79.32	0	0.28	0	0	14.66	0	0	0	0	0	0	6.06	6.06
	Inverter	MV3-11	368346	4907662	2	0	0	100.3	100.3	1	2623.36	3.25	0	79.38	0	0.28	0	0	14.69	0	0	0	0	0	0	5.96	5.96
	Inverter	MV4-2	369272	4909397	2	0	0	100.3	100.3	1	2741.06	3.25	0	79.76	0	0.31	0	0	14.91	0	0	0	0	0	0	5.34	5.34
	Inverter	MV4-4	369027	4909199	2	0	0	100.3	100.3	1	2749.81	5	0	79.79	0	1.06	3.25	0.01	14.92	0	0	0	0	0	0	1.29	1.29
	Inverter	MV3-17	368178	4907472	2	0	0	100.3	100.3	1	2764.97	3.25	0	79.83	0	0.31	0	0	14.95	0	0	0	0	0	0	5.21	5.21

Inverter	MV4-3	369229	4909397	2	0	0	100.3	100.3	1	2767.3	3.25	0	79.84	0	0.32	0	0	14.95	0	0	0	0	0	0	5.2	5.2
Inverter	MV3-10	368167	4907669	2	0	0	100.3	100.3	1	2801.04	3.25	0	79.95	0	0.32	0	0	15.02	0	0	0	0	0	0	5.03	5.03
Inverter	MV3-6	368162	4907834	2	0	0	100.3	100.3	1	2837.35	3.25	0	80.06	0	0.33	0	0	15.08	0	0	0	0	0	0	4.84	4.84
Inverter	MV4-1	369011	4909397	2	0	0	100.3	100.3	1	2906.46	3.25	0	80.27	0	0.34	0	0	15.21	0	0	0	0	0	0	4.5	4.5
Inverter	MV3-13	367963	4907577	2	0	0	100.3	100.3	1	2990	3.25	0	80.51	0	0.36	0	0	15.35	0	0	0	0	0	0	4.08	4.08
Inverter	MV3-7	367945	4907754	2	0	0	100.3	100.3	1	3034.26	3.25	0	80.64	0	0.37	0	0	15.43	0	0	0	0	0	0	3.87	3.87
Inverter	MV3-3	367939	4907927	2	0	0	100.3	100.3	1	3075.55	3.25	0	80.76	0	0.38	0	0	15.51	0	0	0	0	0	0	3.67	3.67
Inverter	MV3-18	367752	4907412	2	0	0	100.3	100.3	1	3185.1	3.25	0	81.06	0	0.4	0	0	15.7	0	0	0	0	0	0	3.16	3.16
DSTATCOM - 10 MVAR #1	DSAT1	369437	4908757	2.5	0	0	96.6	96.6	1	2147.05	3.5	0	77.64	0	3.25	0	0	1.81	0	0	0	0	0	0	13.93	13.93
Inverter	MV3-12	367668	4907594	2	0	0	100.3	100.3	1	3284.94	3.25	0	81.33	0	0.41	0	0	15.87	0	0	0	0	0	0	2.7	2.7
DSTATCOM - 10 MVAR #2	DSAT2	369403	4908757	2.5	0	0	96.6	96.6	1	2170.84	3.5	0	77.73	0	3.26	0	0	1.82	0	0	0	0	0	0	13.82	13.82
Inverter	MV6-4	370250	4906966	2	0	0	86.1	86.1	1	725.1	3.25	0	68.21	0	0.62	0	0	5.76	0	0	0	0	0	0	11.47	11.47
SubstationTransformer	W_ST	369711.17	4906112.3	2.5	0	0	92	92	1	1644.39	4.25	0	75.32	0	0.65	3.55	0.2	3.75	0	0	0	0	0	0	8.71	8.71
Westbrook Inverter Enclosur	W_INV6	369875	4906578	2	0	0	89.1	89.1	1	1233.25	3.25	0	72.82	0	0.73	0	0	6.74	0	0	0	0	0	0	8.76	8.76
Westbrook Inverter Enclosur	W_INV5	369719	4906574	2	0	0	89.1	89.1	1	1371.07	3.25	0	73.74	0	0.76	0	0	6.98	0	0	0	0	0	0	7.57	7.57
Westbrook Inverter Enclosur	W_INV7	369780	4906417	2	0	0	89.1	89.1	1	1400.58	3.25	0	73.93	0	0.77	0	0	7.04	0	0	0	0	0	0	7.32	7.32
Inverter	MV2-3	365820	4906641	2	0	0	100.3	100.3	1	5143.13	3.25	0	85.22	0	0.65	0	0	18.79	0	0	0	0	0	0	-4.36	-4.36
Inverter	MV2-4	365586	4906624	2	0	0	100.3	100.3	1	5377.57	3.25	0	85.61	0	0.67	0	0	19.13	0	0	0	0	0	0	-5.1	-5.1
Inverter	MV5-6	369982	4908507	2	0	0	89.1	89.1	1	1603.08	3.25	0	75.1	0	0.82	0	0	7.38	0	0	0	0	0	0	5.76	5.76
Westbrook Inverter Enclosur	W_INV4	369673	4906164	2	0	0	89.1	89.1	1	1639.26	3.25	0	75.29	0	0.82	0	0	7.45	0	0	0	0	0	0	5.5	5.5
Inverter	MV1-15	365315	4904994	2	0	0	100.3	100.3	1	6039.23	3.25	0	86.62	0	0.71	0	0	20.05	0	0	0	0	0	0	-7.06	-7.06
Inverter	MV1-12	365038	4905386	2	0	0	100.3	100.3	1	6170.31	3.25	0	86.81	0	0.71	0	0	20.22	0	0	0	0	0	0	-7.43	-7.43
Inverter	MV1-4	364815	4905918	2	0	0	100.3	100.3	1	6252.01	3.25	0	86.92	0	0.71	0	0	20.33	0	0	0	0	0	0	-7.65	-7.65
Inverter	MV1-2	364753	4906063	2	0	0	100.3	100.3	1	6284.49	3.25	0	86.97	0	0.71	0	0	20.38	0	0	0	0	0	0	-7.74	-7.74
Inverter	MV1-1	364715	4906166	2	0	0	100.3	100.3	1	6303.89	3.25	0	86.99	0	0.71	0	0	20.4	0	0	0	0	0	0	-7.79	-7.79
Inverter	MV1-8	364788	4905647	2	0	0	100.3	100.3	1	6339.96	3.25	0	87.04	0	0.71	0	0	20.45	0	0	0	0	0	0	-7.89	-7.89
Inverter	MV1-5	364671	4905892	2	0	0	100.3	100.3	1	6398.28	3.25	0	87.12	0	0.71	0	0	20.53	0	0	0	0	0	0	-8.05	-8.05
Westbrook Inverter Enclosur	W_INV2	369374	4906388	2	0	0	89.1	89.1	1	1763	3.25	0	75.93	0	0.85	0	0	7.65	0	0	0	0	0	0	4.63	4.63
Westbrook Inverter Enclosur	W_INV3	369508	4906164	2	0	0	89.1	89.1	1	1769.05	3.25	0	75.95	0	0.85	0	0	7.66	0	0	0	0	0	0	4.59	4.59
Inverter	MV1-11	364655	4905414	2	0	0	100.3	100.3	1	6529.3	3.25	0	87.3	0	0.71	0	0	20.7	0	0	0	0	0	0	-8.4	-8.4
Inverter	MV1-9	364561	4905646	2	0	0	100.3	100.3	1	6560.39	3.25	0	87.34	0	0.72	0	0	20.74	0	0	0	0	0	0	-8.48	-8.48
Inverter	MV1-6	364477	4905835	2	0	0	100.3	100.3	1	6599.89	3.25	0	87.39	0	0.72	0	0	20.79	0	0	0	0	0	0	-8.58	-8.58
Fixed Reactor Bank 2	FRB2	369464	4908755	6	0	0	89.8	89.8	1	2126.9	5.25	0	77.55	0	-0.98	0	0	4.58	0	0	0	0	0	0	8.62	8.62
Inverter	MV2-1	365842	4906816	2	0	0	97.3	97.3	1	5104.62	3.25	0	85.16	0	0.65	0	0	18.73	0	0	0	0	0	0	-7.23	-7.23
Fixed Reactor Bank 1	FRB1	369378	4908755	6	0	0	89.8	89.8	1	2187.1	5.25	0	77.8	0	-0.97	0	0	4.68	0	0	0	0	0	0	8.27	8.27
Inverter	MV4-15	369176	4908481	2	0	0	89.1	89.1	1	2163.97	3.25	0	77.71	0	0.95	0	0	8.31	0	0	0	0	0	0	2.1	2.1
Inverter	MV4-14	369176	4908507	2	0	0	89.1	89.1	1	2179.29	3.25	0	77.77	0	0.95	0	0	8.34	0	0	0	0	0	0	2.01	2.01
Inverter	MV3-22	368656	4907142	2	0	0	89.1	89.1	1	2276.17	3.25	0	78.14	0	0.97	0	0	8.49	0	0	0	0	0	0	1.45	1.45
Westbrook Inverter Enclosur	W_INV1	369409	4906578	2	0	0	86.1	86.1	1	1649.93	3.25	0	75.35	0	0.83	0	0	7.46	0	0	0	0	0	0	2.42	2.42
Inverter	MV4-13	369051	4908605	2	0	0	89.1	89.1	1	2338.06	3.25	0	78.38	0	0.99	0	0	8.59	0	0	0	0	0	0	1.1	1.1
Inverter	MV3-2	368671	4907928	2	0	0	89.1	89.1	1	2369.8	3.25	0	78.49	0	0.99	0	0	8.64	0	0	0	0	0	0	0.93	0.93
Inverter	MV1-10	365004	4905564	2	0	0	97.3	97.3	1	6152.65	3.25	0	86.78	0	0.71	0	0	20.2	0	0	0	0	0	0	-10.38	-10.38
Inverter	MV1-14	365163	4905049	2	0	0	97.3	97.3	1	6161.28	3.25	0	86.79	0	0.71	0	0	20.21	0	0	0	0	0	0	-10.4	-10.4
Inverter	MV1-7	364925	4905782	2	0	0	97.3	97.3	1	6174.59	3.25	0	86.81	0	0.71	0	0	20.23	0	0	0	0	0	0	-10.44	-10.44
Inverter	MV4-12	369043	4908803	2	0	0	89.1	89.1	1	2467.04	3.25	0	78.84	0	1.02	0	0	8.79	0	0	0	0	0	0	0.4	0.4
Inverter	MV1-13	364731	4905241	2	0	0	97.3	97.3	1	6506.66	3.25	0	87.27	0	0.71	0	0	20.67	0	0	0	0	0	0	-11.34	-11.34
Inverter	MV3-4	368502	4907925	2	0	0	89.1	89.1	1	2530.64	3.25	0	79.06	0	1.03	0	0	8.89	0	0	0	0	0	0	0.07	0.07
Inverter	MV3-5	368340	4907843	2	0	0	89.1	89.1	1	2666.02	3.25	0	79.52	0	1.07	0	0	9.1	0	0	0	0	0	0	-0.63	-0.63
Inverter	MV3-1	368156	4907976	2	0	0	89.1	89.1	1	2877.46	3.25	0	80.18	0	1.12	0	0	9.43	0	0	0	0	0	0	-1.67	-1.67
Westbrook Inverter Transfor	W_INVTR6	369881	4906578	2	0	0	77.3	77.3	1	1228.12	3.25	0	72.78	0	-2.07	0	0	0.81	0	0	0	0	0	0	5.81	5.81
Gardiner Substation	G_Sub	366586.3	4903349.9	2.5	0	0	90.8	90.8	1	5815.1	4.25	0	86.29	0	1.84	2.15	0.34	9.54	0	0	0	0	0	0	-9.04	-9.04
Inverter	MV2-2	365977	4906654	2	0	0	89.1	89.1	1	4985.66	3.25	0	84.95	0	1.64	0	0	12.44	0	0	0	0	0	0	-9.98	-9.98
Westbrook Inverter Transfor	W_INVTR5	369725	4906574	2	0	0	77.3	77.3	1	1365.77	3.25	0	73.71	0	-2.14	0	0	0.88	0	0	0	0	0	0	4.89	4.89
Westbrook Inverter Transfor	W_INVTR7	369786	4906417	2	0	0	77.3	77.3	1	1395.65	3.25	0	73.9	0	-2.15	0	0	0.9	0	0	0	0	0	0	4.7	4.7
Westbrook Inverter Transfor	W_INVTR1	369403	4906578	2	0	0	78.2	78.2	1	1655.46	3.25	0	75.38	0	-2.27	0	0	1.03	0	0	0	0	0	0	4.1	4.1
Westbrook Inverter Transfor	W_INVTR4	369679	4906164	2	0	0	77.3	77.3	1	1634.66	3.25	0	75.27	0	-2.26	0	0	1.02	0	0	0	0	0	0	3.31	3.31
Inverter	MV1-3	364440	4906039	2	0	0	89.1	89.1	1	6596.67	3.25	0	87.39	0	2.03	0	0	14.5	0	0	0	0	0	0	-14.86	-14.86
Westbrook Inverter Transfor	W_INVTR3	369514	4906164	2	0	0	77.3	77.3	1	1764.23	3.25	0	75.93	0	-2.32	0	0	1.09	0	0	0	0	0	0	2.64	2.64
Westbrook Inverter Transfor	W_INVTR2	369368	4906388	2	0	0	77.3	77.3	1	1768.31	3.25	0	75.95	0	-2.32	0	0	1.09	0	0	0	0	0	0	2.62	2.62
Inverters	G_Inv2	366676.9	4903239.1	2	0	0	87.7	87.7	1	5822.81	3.25	0	86.3	0	2.91	0	0	6.8	0	0	0	0	0	0	-8.35	-8.35
Inverters	G_Inv4	366732.8	4903105	2	0	0	87.7	87.7	1	5875.12	3.25	0	86.38	0	2.91	0	0	6.85	0	0	0	0	0	0	-8.48	-8.48
Inverter Transformer	MV6-1 T	370230	4907364	2	0	0	69.4	69.4	1	716.66	3.25	0	68.11	0	1.38	0	0	3.38	0	0	0	0	0	0	-3.52	-3.52
Inverters	G_Inv6	366788.5	4902972	2	0	0	87.7	87.7	1	5929.87	3.25	0	86.46	0	2.91	0	0	6.91	0	0	0	0	0	0	-8.62	-8.62
Inverters	G_Inv1	366526.4	4903225.8	2	0	0	87.7	87.7	1	5942.58	3.35	0	86.48	0	3.25	1.42	0	6.92	0	0	0	0	0	0	-10.41	-10.41
Inverters	G_Inv8	366844.5	4902838.5	2	0	0	87.7	87.7	1	5987.76	3.25	0	86.55	0	2.92	0	0	6.97	0	0	0	0	0	0	-8.77	-8.77
Inverters	G_Inv3	366583.7	4903091.4	2	0	0	87.7	87.7	1	5991.92	3.25	0	86.55	0	2.92	0	0	6.97	0	0	0	0	0	0	-8.78	-8.78
Inverter Transformer	MV6-4 T	370244	4906966	2	0	0	69.4	69.4	1	730.74	3.25	0	68.28	0	1.4	0	0	3.4	0	0	0	0	0	0	-3.73	-3.73
Inverters	G_Inv5	366638.5	4902958.1	2	0	0	87.7	87.7	1	6045.39	3.25	0	86.63	0	2.92	0	0	7.02	0	0	0	0	0	0	-8.91	-8.91
Inverters	G_Inv10	366900.7	4902704.8	2	0	0	87.7	87.7	1	6048.57	3.25	0	86.63	0	2.92	0	0	7.03	0	0	0	0	0	0	-8.92	-8.92
Inverters	G_Inv7	366694.6	4902824.7	2	0	0	87.7	87.7	1	6100.97	3.25	0	86.71	0	2.92	0	0	7.08	0	0	0	0	0	0	-9.05	-9.05
Inverters	G_Inv9	366750.9	4902691.8	2	0	0	87.7	87.7	1	6158.94	3.25	0	86.79	0	2.92	0	0	7.14	0	0	0	0	0	0	-9.19	-9.19
Inverter Transformer	MV6-3 T	370202	4907140	2	0	0	56.1	56.1	1	732.85	3.25	0	68.3	0	-0.07	0	0	4.22	0	0	0	0	0	0	-16.39	-16.39
Inverter Transformer	MV6-2 T	370091	4907339	2	0	0	56.1	56.1	1	849.11	3.25	0	69.58	0	-0.04	0	0	4.52	0	0	0	0	0	0	-18	-18
Inverter Transformer	MV2-1 T	365836	4906816	2	0	0	69.4	69.4	1	5110.6	3.25	0	85.17	0	3.03	0	0	7.46	0	0	0	0	0	0	-26.31	-26.31

	Inverter Transformer	MV1-10 T	365010	4905564	2	0	0	69.4	69.4	1	6146.87	3.25	0	86.77	0	3.21	0	0	8.11	0	0	0	0	0	0	-28.74	-28.74
	Inverter Transformer	MV1-14 T	365157	4905049	2	0	0	69.4	69.4	1	6166.9	3.25	0	86.8	0	3.21	0	0	8.12	0	0	0	0	0	0	-28.78	-28.78
	Inverter Transformer	MV1-7 T	364919	4905782	2	0	0	69.4	69.4	1	6180.42	3.25	0	86.82	0	3.21	0	0	8.13	0	0	0	0	0	0	-28.81	-28.81
	Inverter Transformer	MV1-13 T	364725	4905241	2	0	0	69.4	69.4	1	6512.38	3.25	0	87.27	0	3.26	0	0	8.32	0	0	0	0	0	0	-29.51	-29.51
	Inverter Transformer	MV5-6 T	369987	4908507	2	0	0	56.1	56.1	1	1600.13	3.25	0	75.08	0	0.24	0	0	6.23	0	0	0	0	0	0	-25.49	-25.49
	Inverter Transformer	MV5-4 T	370330	4908707	2	0	0	56.1	56.1	1	1608.5	3.25	0	75.13	0	0.24	0	0	6.25	0	0	0	0	0	0	-25.56	-25.56
	Inverter Transformer	MV5-5 T	370021	4908690	2	0	0	56.1	56.1	1	1733.13	3.25	0	75.78	0	0.29	0	0	6.51	0	0	0	0	0	0	-26.52	-26.52
	Inverter Transformer	MV5-3 T	370237	4908851	2	0	0	56.1	56.1	1	1777.12	3.25	0	75.99	0	0.31	0	0	6.6	0	0	0	0	0	0	-26.84	-26.84
	Inverter Transformer	MV5-2 T	370011	4908853	2	0	0	56.1	56.1	1	1878.68	3.25	0	76.48	0	0.35	0	0	6.8	0	0	0	0	0	0	-27.57	-27.57
	Inverter Transformer	MV5-1 T	370015	4909142	2	0	0	56.1	56.1	1	2133.63	3.25	0	77.58	0	0.46	0	0	7.3	0	0	0	0	0	0	-29.29	-29.29
	Inverter Transformer	MV4-15 T	369170	4908481	2	0	0	56.1	56.1	1	2168.84	3.25	0	77.72	0	0.48	0	0	7.37	0	0	0	0	0	0	-29.51	-29.51
	Inverter Transformer	MV4-14 T	369182	4908507	2	0	0	56.1	56.1	1	2174.46	3.25	0	77.75	0	0.48	0	0	7.38	0	0	0	0	0	0	-29.55	-29.55
	Inverter Transformer	MV3-20 T	368683	4907317	2	0	0	56.1	56.1	1	2250.31	3.25	0	78.04	0	0.51	0	0	7.53	0	0	0	0	0	0	-30.02	-30.02
	Inverter Transformer	MV3-14 T	368678	4907498	2	0	0	56.1	56.1	1	2270.71	3.25	0	78.12	0	0.52	0	0	7.56	0	0	0	0	0	0	-30.15	-30.15
	Inverter Transformer	MV3-22 T	368661	4907142	2	0	0	56.1	56.1	1	2271.17	3.25	0	78.13	0	0.52	0	0	7.57	0	0	0	0	0	0	-30.15	-30.15
	Inverter Transformer	MV3-8 T	368685	4907712	2	0	0	56.1	56.1	1	2300.33	3.25	0	78.24	0	0.53	0	0	7.62	0	0	0	0	0	0	-30.33	-30.33
	Inverter Transformer	MV4-10 T	369307	4908858	2	0	0	56.1	56.1	1	2310.16	3.25	0	78.27	0	0.54	0	0	7.64	0	0	0	0	0	0	-30.39	-30.39
	Inverter Transformer	MV4-13 T	369057	4908605	2	0	0	56.1	56.1	1	2333.23	3.25	0	78.36	0	0.55	0	0	7.68	0	0	0	0	0	0	-30.53	-30.53
	Inverter Transformer	MV4-11 T	369269	4908855	2	0	0	56.1	56.1	1	2334.92	3.25	0	78.37	0	0.55	0	0	7.69	0	0	0	0	0	0	-30.54	-30.54
	Inverter Transformer	MV3-2 T	368677	4907928	2	0	0	56.1	56.1	1	2364.08	3.25	0	78.47	0	0.56	0	0	7.74	0	0	0	0	0	0	-30.71	-30.71
	Inverter Transformer	MV4-9 T	369284	4909001	2	0	0	56.1	56.1	1	2429.49	3.25	0	78.71	0	0.59	0	0	7.86	0	0	0	0	0	0	-31.1	-31.1
	Inverter Transformer	MV3-16 T	368509	4907475	2	0	0	56.1	56.1	1	2435.92	3.25	0	78.73	0	0.59	0	0	7.87	0	0	0	0	0	0	-31.14	-31.14
	Inverter Transformer	MV4-8 T	369262	4909001	2	0	0	56.1	56.1	1	2444.46	3.25	0	78.76	0	0.59	0	0	7.89	0	0	0	0	0	0	-31.19	-31.19
	Inverter Transformer	MV3-21 T	368484	4907206	2	0	0	56.1	56.1	1	2447.02	3.25	0	78.77	0	0.59	0	0	7.89	0	0	0	0	0	0	-31.2	-31.2
	Inverter Transformer	MV4-12 T	369049	4908803	2	0	0	56.1	56.1	1	2462.45	3.25	0	78.83	0	0.6	0	0	7.92	0	0	0	0	0	0	-31.29	-31.29
	Inverter Transformer	MV3-9 T	368517	4907703	2	0	0	56.1	56.1	1	2462.83	3.25	0	78.83	0	0.6	0	0	7.92	0	0	0	0	0	0	-31.29	-31.29
	Inverter Transformer	MV3-4 T	368507	4907925	2	0	0	56.1	56.1	1	2525.84	3.25	0	79.05	0	0.63	0	0	8.04	0	0	0	0	0	0	-31.65	-31.65
	Inverter Transformer	MV4-5 T	369283	4909199	2	0	0	56.1	56.1	1	2579.18	3.25	0	79.23	0	0.65	0	0	8.13	0	0	0	0	0	0	-31.95	-31.95
	Inverter Transformer	MV3-19 T	368352	4907347	2	0	0	56.1	56.1	1	2582.38	3.25	0	79.24	0	0.65	0	0	8.14	0	0	0	0	0	0	-31.97	-31.97
	Inverter Transformer	MV3-15 T	368351	4907477	2	0	0	56.1	56.1	1	2593.27	3.25	0	79.28	0	0.66	0	0	8.16	0	0	0	0	0	0	-32.03	-32.03
	Inverter Transformer	MV4-6 T	369249	4909192	2	0	0	56.1	56.1	1	2595.7	3.25	0	79.29	0	0.66	0	0	8.16	0	0	0	0	0	0	-32.05	-32.05
	Inverter Transformer	MV4-7 T	369040	4909001	2	0	0	56.1	56.1	1	2601.09	3.25	0	79.3	0	0.66	0	0	8.17	0	0	0	0	0	0	-32.08	-32.08
	Inverter Transformer	MV3-11 T	368340	4907662	2	0	0	56.1	56.1	1	2629.28	3.25	0	79.4	0	0.67	0	0	8.22	0	0	0	0	0	0	-32.23	-32.23
	Inverter Transformer	MV3-5 T	368335	4907843	2	0	0	56.1	56.1	1	2670.88	3.25	0	79.53	0	0.69	0	0	8.3	0	0	0	0	0	0	-32.46	-32.46
	Inverter Transformer	MV4-2 T	369267	4909397	2	0	0	56.1	56.1	1	2744.09	3.25	0	79.77	0	0.72	0	0	8.43	0	0	0	0	0	0	-32.86	-32.86
	Inverter Transformer	MV4-4 T	369033	4909199	2	0	0	56.1	56.1	1	2745.66	5	0	79.77	0	1.64	2.72	0.01	8.43	0	0	0	0	0	0	-36.5	-36.5
	Inverter Transformer	MV3-17 T	368183	4907472	2	0	0	56.1	56.1	1	2759.99	3.25	0	79.82	0	0.73	0	0	8.45	0	0	0	0	0	0	-32.94	-32.94
	Inverter Transformer	MV4-3 T	369234	4909397	2	0	0	56.1	56.1	1	2764.22	3.25	0	79.83	0	0.73	0	0	8.46	0	0	0	0	0	0	-32.96	-32.96
	Inverter Transformer	MV3-10 T	368162	4907669	2	0	0	56.1	56.1	1	2805.97	3.25	0	79.96	0	0.75	0	0	8.53	0	0	0	0	0	0	-33.19	-33.19
	Inverter Transformer	MV3-6 T	368156	4907834	2	0	0	56.1	56.1	1	2843.2	3.25	0	80.08	0	0.76	0	0	8.6	0	0	0	0	0	0	-33.38	-33.38
	Inverter Transformer	MV3-1 T	368150	4907976	2	0	0	56.1	56.1	1	2883.24	3.25	0	80.2	0	0.78	0	0	8.67	0	0	0	0	0	0	-33.59	-33.59
	Inverter Transformer	MV4-1 T	369017	4909397	2	0	0	56.1	56.1	1	2902.5	3.25	0	80.26	0	0.79	0	0	8.7	0	0	0	0	0	0	-33.69	-33.69
	Inverter Transformer	MV3-13 T	367958	4907577	2	0	0	56.1	56.1	1	2994.96	3.25	0	80.53	0	0.83	0	0	8.86	0	0	0	0	0	0	-34.16	-34.16
	Inverter Transformer	MV3-7 T	367951	4907754	2	0	0	56.1	56.1	1	3028.35	3.25	0	80.62	0	0.84	0	0	8.92	0	0	0	0	0	0	-34.32	-34.32
	Inverter Transformer	MV3-3 T	367944	4907927	2	0	0	56.1	56.1	1	3070.69	3.25	0	80.74	0	0.86	0	0	8.99	0	0	0	0	0	0	-34.53	-34.53
	Inverter Transformer	MV3-18 T	367757	4907412	2	0	0	56.1	56.1	1	3180.11	3.25	0	81.05	0	0.91	0	0	9.17	0	0	0	0	0	0	-35.07	-35.07
	Inverter Transformer	MV3-12 T	367674	4907594	2	0	0	56.1	56.1	1	3278.98	3.25	0	81.31	0	0.95	0	0	9.33	0	0	0	0	0	0	-35.54	-35.54
	Inverter Transformer	MV2-2 T	365982	4906654	2	0	0	56.1	56.1	1	4980.7	3.25	0	84.95	0	1.62	0	0	11.83	0	0	0	0	0	0	-42.33	-42.33
	Inverter Transformer	MV2-3 T	365814	4906641	2	0	0	56.1	56.1	1	5149.09	3.25	0	85.23	0	1.68	0	0	12.05	0	0	0	0	0	0	-42.9	-42.9
	Inverter Transformer	MV2-4 T	365590	4906628	2	0	0	56.1	56.1	1	5373.16	3.25	0	85.6	0	1.76	0	0	12.34	0	0	0	0	0	0	-43.64	-43.64
	Inverter Transformer	MV1-15 T	365309	4904994	2	0	0	56.1	56.1	1	6044.81	3.25	0	86.63	0	1.98	0	0	13.16	0	0	0	0	0	0	-45.7	-45.7
	Inverter Transformer	MV1-12 T	365044	4905386	2	0	0	56.1	56.1	1	6164.58	3.25	0	86.8	0	2.02	0	0	13.3	0	0	0	0	0	0	-46.05	-46.05
	Inverter Transformer	MV1-4 T	364821	4905918	2	0	0	56.1	56.1	1	6246.14	3.25	0	86.91	0	2.04	0	0	13.39	0	0	0	0	0	0	-46.29	-46.29
	Inverter Transformer	MV1-2 T	364759	4906063	2	0	0	56.1	56.1	1	6278.59	3.25	0	86.96	0	2.05	0	0	13.43	0	0	0	0	0	0	-46.38	-46.38
	Inverter Transformer	MV1-1 T	364721	4906166	2	0	0	56.1	56.1	1	6297.98	3.25	0	86.98	0	2.06	0	0	13.45	0	0	0	0	0	0	-46.43	-46.43
	Inverter Transformer	MV1-8 T	364782	4905647	2	0	0	56.1	56.1	1	6345.77	3.25	0	87.05	0	2.07	0	0	13.51	0	0	0	0	0	0	-46.57	-46.57
	Inverter Transformer	MV1-5 T	364676	4905892	2	0	0	56.1	56.1	1	6393.38	3.25	0	87.11	0	2.09	0	0	13.56	0	0	0	0	0	0	-46.7	-46.7
	Inverter Transformer	MV1-11 T	364649	4905414	2	0	0	56.1	56.1	1	6535.07	3.25	0	87.31	0	2.13	0	0	13.72	0	0	0	0	0	0	-47.09	-47.09
	Inverter Transformer	MV1-9 T	364555	4905646	2	0	0	56.1	56.1	1	6566.21	3.25	0	87.35	0	2.14	0	0	13.75	0	0	0	0	0	0	-47.18	-47.18
	Inverter Transformer	MV1-6 T	364482	4905835	2	0	0	56.1	56.1	1	6595	3.25	0	87.38	0	2.15	0	0	13.79	0	0	0	0	0	0	-47.26	-47.26
	Inverter Transformer	MV1-3 T	364435	4906039	2	0	0	56.1	56.1	1	6601.59	3.25	0	87.39	0	2.15	0	0	13.79	0	0	0	0	0	0	-47.28	-47.28
	Line Reactor	NGR	369421	4908787.5	5	0	0	45.4	45.4	1	2180.1	5.25	0	77.77	0	3.37	1.28	0.09	0.89	0	0	0	0	0	0	-37.96	-37.96
Limit. Valu	0	0																								
Level D/N:	30.4418	30.4418																								

Receiver: Existing Noise Receptor
ID: S-R113
X: 370970
Y: 4907230
Z: 4.5
Ground: 0

ISO	Description	ID	X	Y	Z	Ground	ReflOrd	LxT	LxN	L/A	Dist.	hm	Freq	Adiv	K0b	Agr	Abar	z	Aatm	Afol	Ahous	Cmet	CmetN	Dc	RL	LtotT	LtotN
	Sol_Luce Substation	S_Substation	369426	4908792	3.5	0	0	112.1	112.1	1	2196.31	5.25	0	77.83	0	0.08	3.72	0.34	4.7	0	0	0	0	0	0	25.75	25.75

Inverter	MV6-3	370207	4907140	2	0	0	100.3	100.3	1	768.29	3.25	0	68.71	0	-0.37	0	0	10.05	0	0	0	0	0	0	21.92	21.92
Inverter	MV6-2	370085	4907339	2	0	0	100.3	100.3	1	891.69	3.25	0	70	0	-0.3	0	0	10.53	0	0	0	0	0	0	20.07	20.07
Inverter	MV6-1	370235	4907364	2	0	0	97.3	97.3	1	747.12	3.25	0	68.47	0	-0.38	0	0	9.96	0	0	0	0	0	0	19.27	19.27
Inverter	MV5-4	370324	4908707	2	0	0	100.3	100.3	1	1612.1	3.25	0	75.15	0	0.01	0	0	12.6	0	0	0	0	0	0	12.56	12.56
Inverter	MV5-5	370015	4908690	2	0	0	100.3	100.3	1	1744.6	3.25	0	75.83	0	0.05	0	0	12.9	0	0	0	0	0	0	11.52	11.52
Inverter	MV5-3	370231	4908851	2	0	0	100.3	100.3	1	1781.51	3.25	0	76.02	0	0.06	0	0	12.99	0	0	0	0	0	0	11.25	11.25
Inverter	MV5-2	370006	4908853	2	0	0	100.3	100.3	1	1887.71	3.25	0	76.52	0	0.1	0	0	13.22	0	0	0	0	0	0	10.48	10.48
Inverter	MV5-1	370020	4909142	2	0	0	100.3	100.3	1	2135.01	3.25	0	77.59	0	0.17	0	0	13.74	0	0	0	0	0	0	8.82	8.82
Inverter	MV3-20	368689	4907317	2	0	0	100.3	100.3	1	2282.66	3.25	0	78.17	0	0.2	0	0	14.04	0	0	0	0	0	0	7.9	7.9
Inverter	MV3-14	368684	4907498	2	0	0	100.3	100.3	1	2301.66	3.25	0	78.24	0	0.21	0	0	14.08	0	0	0	0	0	0	7.79	7.79
Inverter	MV4-10	369312	4908858	2	0	0	100.3	100.3	1	2323.65	3.25	0	78.32	0	0.22	0	0	14.12	0	0	0	0	0	0	7.66	7.66
Inverter	MV3-8	368680	4907712	2	0	0	100.3	100.3	1	2340.18	3.25	0	78.38	0	0.22	0	0	14.15	0	0	0	0	0	0	7.56	7.56
Inverter	MV4-11	369264	4908855	2	0	0	100.3	100.3	1	2356.07	3.25	0	78.44	0	0.22	0	0	14.18	0	0	0	0	0	0	7.46	7.46
Inverter	MV4-9	369289	4909001	2	0	0	100.3	100.3	1	2441.76	3.25	0	78.75	0	0.24	0	0	14.35	0	0	0	0	0	0	6.97	6.97
Inverter	MV4-8	369256	4909001	2	0	0	100.3	100.3	1	2464.6	3.25	0	78.83	0	0.25	0	0	14.39	0	0	0	0	0	0	6.84	6.84
Inverter	MV3-16	368514	4907475	2	0	0	100.3	100.3	1	2468.19	3.25	0	78.85	0	0.25	0	0	14.4	0	0	0	0	0	0	6.82	6.82
Inverter	MV3-21	368478	4907206	2	0	0	100.3	100.3	1	2492.12	3.25	0	78.93	0	0.26	0	0	14.44	0	0	0	0	0	0	6.68	6.68
Inverter	MV3-9	368512	4907703	2	0	0	100.3	100.3	1	2503.1	3.25	0	78.97	0	0.26	0	0	14.46	0	0	0	0	0	0	6.62	6.62
Inverter	MV4-5	369289	4909199	2	0	0	100.3	100.3	1	2588.96	3.25	0	79.26	0	0.28	0	0	14.63	0	0	0	0	0	0	6.15	6.15
Inverter	MV4-6	369243	4909192	2	0	0	100.3	100.3	1	2613.81	3.25	0	79.35	0	0.28	0	0	14.67	0	0	0	0	0	0	6.01	6.01
Inverter	MV3-19	368357	4907347	2	0	0	100.3	100.3	1	2615.62	3.25	0	79.35	0	0.28	0	0	14.68	0	0	0	0	0	0	6	6
Inverter	MV4-7	369035	4909001	2	0	0	100.3	100.3	1	2623.1	3.25	0	79.38	0	0.28	0	0	14.69	0	0	0	0	0	0	5.96	5.96
Inverter	MV3-15	368357	4907477	2	0	0	100.3	100.3	1	2624.65	3.25	0	79.38	0	0.29	0	0	14.69	0	0	0	0	0	0	5.95	5.95
Inverter	MV3-11	368346	4907662	2	0	0	100.3	100.3	1	2659.32	3.25	0	79.5	0	0.29	0	0	14.76	0	0	0	0	0	0	5.77	5.77
Inverter	MV4-2	369272	4909397	2	0	0	100.3	100.3	1	2753.02	3.25	0	79.8	0	0.31	0	0	14.93	0	0	0	0	0	0	5.27	5.27
Inverter	MV4-4	369027	4909199	2	0	0	100.3	100.3	1	2766.26	4.99	0	79.84	0	1.06	3.25	0.01	14.95	0	0	0	0	0	0	1.21	1.21
Inverter	MV4-3	369229	4909397	2	0	0	100.3	100.3	1	2779.74	3.25	0	79.88	0	0.32	0	0	14.98	0	0	0	0	0	0	5.14	5.14
Inverter	MV3-17	368178	4907472	2	0	0	100.3	100.3	1	2802.47	3.25	0	79.95	0	0.32	0	0	15.02	0	0	0	0	0	0	5.02	5.02
Inverter	MV3-10	368167	4907669	2	0	0	100.3	100.3	1	2837.17	3.25	0	80.06	0	0.33	0	0	15.08	0	0	0	0	0	0	4.84	4.84
Inverter	MV3-6	368162	4907834	2	0	0	100.3	100.3	1	2872.23	3.25	0	80.16	0	0.34	0	0	15.14	0	0	0	0	0	0	4.67	4.67
Inverter	MV4-1	369011	4909397	2	0	0	100.3	100.3	1	2921.23	3.25	0	80.31	0	0.35	0	0	15.23	0	0	0	0	0	0	4.42	4.42
Inverter	MV3-13	367963	4907577	2	0	0	100.3	100.3	1	3026.96	3.25	0	80.62	0	0.37	0	0	15.42	0	0	0	0	0	0	3.9	3.9
Inverter	MV3-7	367945	4907754	2	0	0	100.3	100.3	1	3070.05	3.25	0	80.74	0	0.38	0	0	15.5	0	0	0	0	0	0	3.7	3.7
Inverter	MV3-3	367939	4907927	2	0	0	100.3	100.3	1	3110.11	3.25	0	80.86	0	0.38	0	0	15.57	0	0	0	0	0	0	3.51	3.51
Inverter	MV3-18	367752	4907412	2	0	0	100.3	100.3	1	3223.14	3.25	0	81.17	0	0.4	0	0	15.76	0	0	0	0	0	0	2.98	2.98
DSTATCOM - 10 MVAR #1	DSAT1	369437	4908757	2.5	0	0	96.6	96.6	1	2163.75	3.5	0	77.7	0	3.26	0	0	1.82	0	0	0	0	0	0	13.85	13.85
Inverter	MV3-12	367668	4907594	2	0	0	100.3	100.3	1	3322	3.25	0	81.43	0	0.42	0	0	15.93	0	0	0	0	0	0	2.53	2.53
DSTATCOM - 10 MVAR #2	DSAT2	369403	4908757	2.5	0	0	96.6	96.6	1	2187.97	3.5	0	77.8	0	3.26	0	0	1.83	0	0	0	0	0	0	13.74	13.74
Inverter	MV6-4	370250	4906966	2	0	0	86.1	86.1	1	766.88	3.25	0	68.69	0	0.63	0	0	5.85	0	0	0	0	0	0	10.88	10.88
SubstationTransformer	W_ST	369711.17	4906112.3	2.5	0	0	92	92	1	1683.44	4.25	0	75.52	0	0.66	3.53	0.2	3.82	0	0	0	0	0	0	8.45	8.45
Westbrook Inverter Enclosur	W_INV6	369875	4906578	2	0	0	89.1	89.1	1	1274.42	3.25	0	73.11	0	0.74	0	0	6.81	0	0	0	0	0	0	8.39	8.39
Westbrook Inverter Enclosur	W_INV5	369719	4906574	2	0	0	89.1	89.1	1	1412.57	3.25	0	74	0	0.77	0	0	7.06	0	0	0	0	0	0	7.23	7.23
Inverter	MV2-3	365820	4906641	2	0	0	100.3	100.3	1	5183.57	3.25	0	85.29	0	0.66	0	0	18.85	0	0	0	0	0	0	-4.49	-4.49
Westbrook Inverter Enclosur	W_INV7	369780	4906417	2	0	0	89.1	89.1	1	1441.21	3.25	0	74.17	0	0.78	0	0	7.11	0	0	0	0	0	0	7	7
Inverter	MV2-4	365586	4906624	2	0	0	100.3	100.3	1	5418	3.25	0	85.68	0	0.68	0	0	19.18	0	0	0	0	0	0	-5.22	-5.22
Inverter	MV5-6	369982	4908507	2	0	0	89.1	89.1	1	1614.58	3.25	0	75.16	0	0.82	0	0	7.4	0	0	0	0	0	0	5.67	5.67
Inverter	MV1-15	365315	4904994	2	0	0	100.3	100.3	1	6081.01	3.25	0	86.68	0	0.71	0	0	20.1	0	0	0	0	0	0	-7.18	-7.18
Westbrook Inverter Enclosur	W_INV4	369673	4906164	2	0	0	89.1	89.1	1	1678.86	3.25	0	75.5	0	0.83	0	0	7.51	0	0	0	0	0	0	5.21	5.21
Inverter	MV1-12	365038	4905386	2	0	0	100.3	100.3	1	6212	3.25	0	86.86	0	0.71	0	0	20.28	0	0	0	0	0	0	-7.54	-7.54
Inverter	MV1-4	364815	4905918	2	0	0	100.3	100.3	1	6293.28	3.25	0	86.98	0	0.71	0	0	20.39	0	0	0	0	0	0	-7.76	-7.76
Inverter	MV1-2	364753	4906063	2	0	0	100.3	100.3	1	6325.58	3.25	0	87.02	0	0.71	0	0	20.43	0	0	0	0	0	0	-7.85	-7.85
Inverter	MV1-1	364715	4906166	2	0	0	100.3	100.3	1	6344.85	3.25	0	87.05	0	0.71	0	0	20.46	0	0	0	0	0	0	-7.9	-7.9
Inverter	MV1-8	364788	4905647	2	0	0	100.3	100.3	1	6381.46	3.25	0	87.1	0	0.71	0	0	20.5	0	0	0	0	0	0	-8	-8
Inverter	MV1-5	364671	4905892	2	0	0	100.3	100.3	1	6439.54	3.25	0	87.18	0	0.71	0	0	20.58	0	0	0	0	0	0	-8.16	-8.16
Inverter	MV1-11	364655	4905414	2	0	0	100.3	100.3	1	6570.93	3.25	0	87.35	0	0.72	0	0	20.75	0	0	0	0	0	0	-8.51	-8.51
Westbrook Inverter Enclosur	W_INV2	369374	4906388	2	0	0	89.1	89.1	1	1804.49	3.25	0	76.13	0	0.86	0	0	7.72	0	0	0	0	0	0	4.35	4.35
Inverter	MV1-9	364561	4905646	2	0	0	100.3	100.3	1	6601.84	3.25	0	87.39	0	0.72	0	0	20.79	0	0	0	0	0	0	-8.59	-8.59
Westbrook Inverter Enclosur	W_INV3	369508	4906164	2	0	0	89.1	89.1	1	1809.37	3.25	0	76.15	0	0.86	0	0	7.73	0	0	0	0	0	0	4.31	4.31
Inverter	MV1-6	364477	4905835	2	0	0	100.3	100.3	1	6641.17	3.25	0	87.44	0	0.71	0	0	20.84	0	0	0	0	0	0	-8.69	-8.69
Fixed Reactor Bank 2	FRB2	369464	4908755	6	0	0	89.8	89.8	1	2143.28	5.25	0	77.62	0	-0.98	0	0	4.61	0	0	0	0	0	0	8.53	8.53
Inverter	MV2-1	365842	4906816	2	0	0	97.3	97.3	1	5144.69	3.25	0	85.23	0	0.65	0	0	18.79	0	0	0	0	0	0	-7.36	-7.36
Fixed Reactor Bank 1	FRB1	369378	4908755	6	0	0	89.8	89.8	1	2204.56	5.25	0	77.87	0	-0.97	0	0	4.71	0	0	0	0	0	0	8.17	8.17
Inverter	MV4-15	369176	4908481	2	0	0	89.1	89.1	1	2187.11	3.25	0	77.8	0	0.95	0	0	8.35	0	0	0	0	0	0	1.96	1.96
Inverter	MV4-14	369176	4908507	2	0	0	89.1	89.1	1	2202.08	3.25	0	77.86	0	0.95	0	0	8.37	0	0	0	0	0	0	1.87	1.87
Inverter	MV3-22	368656	4907142	2	0	0	89.1	89.1	1	2315.67	3.25	0	78.29	0	0.98	0	0	8.55	0	0	0	0	0	0	1.23	1.23
Inverter	MV4-13	369051	4908605	2	0	0	89.1	89.1	1	2360.76	3.25	0	78.46	0	0.99	0	0	8.63	0	0	0	0	0	0	0.98	0.98
Westbrook Inverter Enclosur	W_INV1	369409	4906578	2	0	0	86.1	86.1	1	1691.69	3.25	0	75.57	0	0.84	0	0	7.53	0	0	0	0	0	0	2.12	2.12
Inverter	MV1-10	365004	4905564	2	0	0	97.3	97.3	1	6194.25	3.25	0	86.84	0	0.71	0	0	20.25	0	0	0	0	0	0	-10.49	-10.49
Inverter	MV1-14	365163	4905049	2	0	0	97.3	97.3	1	6203.07	3.25	0	86.85	0	0.71	0	0	20.27	0	0	0	0	0	0	-10.52	-10.52
Inverter	MV3-2	368671	4907928	2	0	0	89.1	89.1	1	2402.63	3.25	0	78.61	0	1	0	0	8.69	0	0	0	0	0	0	0.75	0.75
Inverter	MV1-7	364925	4905782	2	0	0	97.3	97.3	1	6216.01	3.25	0	86.87	0	0.71	0	0	20.28	0	0	0	0	0	0	-10.55	-10.55
Inverter	MV4-12	369043	4908803	2	0	0	89.1	89.1	1	2487.5	3.25	0	78.92	0	1.02	0	0	8.83	0	0	0	0	0	0	0.29	0.29
Inverter	MV1-13	364731	4905241	2	0	0	97.3	97.3	1	6548.38	3.25	0	87.32	0	0.71	0	0	20.72	0	0	0	0	0	0	-11.45	-11.45
Inverter	MV3-4	368502	4907925	2	0	0	89.1	89.1	1	2563.99	3.25	0	79.18	0	1.04	0	0	8.95	0	0	0	0	0	0	-0.11	-0.11

Inverter	MV3-5	368340	4907843	2	0	0	89.1	89.1	1	2700.5	3.25	0	79.63	0	1.07	0	0	9.16	0	0	0	0	0	0	-0.8	-0.8
Inverter	MV3-1	368156	4907976	2	0	0	89.1	89.1	1	2911.21	3.25	0	80.28	0	1.13	0	0	9.48	0	0	0	0	0	0	-1.83	-1.83
Gardiner Substation	G_Sub	366586.3	4903349.9	2.5	0	0	90.8	90.8	1	5854.23	4.25	0	86.35	0	1.84	2.14	0.34	9.59	0	0	0	0	0	0	-9.14	-9.14
Westbrook Inverter Transfor	W_INVTR6	369881	4906578	2	0	0	77.3	77.3	1	1269.26	3.25	0	73.07	0	-2.09	0	0	0.83	0	0	0	0	0	0	5.53	5.53
Inverter	MV2-2	365977	4906654	2	0	0	89.1	89.1	1	5026.11	3.25	0	85.02	0	1.65	0	0	12.5	0	0	0	0	0	0	-10.11	-10.11
Westbrook Inverter Transfor	W_INVTR5	369725	4906574	2	0	0	77.3	77.3	1	1407.26	3.25	0	73.97	0	-2.16	0	0	0.91	0	0	0	0	0	0	4.63	4.63
Westbrook Inverter Transfor	W_INVTR7	369786	4906417	2	0	0	77.3	77.3	1	1436.26	3.25	0	74.14	0	-2.17	0	0	0.92	0	0	0	0	0	0	4.45	4.45
Westbrook Inverter Transfor	W_INVTR1	369403	4906578	2	0	0	78.2	78.2	1	1697.23	3.25	0	75.59	0	-2.29	0	0	1.06	0	0	0	0	0	0	3.88	3.88
Westbrook Inverter Transfor	W_INVTR4	369679	4906164	2	0	0	77.3	77.3	1	1674.23	3.25	0	75.48	0	-2.28	0	0	1.04	0	0	0	0	0	0	3.1	3.1
Inverter	MV1-3	364440	4906039	2	0	0	89.1	89.1	1	6637.72	3.25	0	87.44	0	2.04	0	0	14.55	0	0	0	0	0	0	-14.97	-14.97
Inverters	G_Inv2	366676.9	4903239.1	2	0	0	87.7	87.7	1	5861.57	3.25	0	86.36	0	2.91	0	0	6.84	0	0	0	0	0	0	-8.45	-8.45
Inverters	G_Inv4	366732.8	4903105	2	0	0	87.7	87.7	1	5913.5	3.25	0	86.44	0	2.91	0	0	6.89	0	0	0	0	0	0	-8.58	-8.58
Westbrook Inverter Transfor	W_INVTR3	369514	4906164	2	0	0	77.3	77.3	1	1804.52	3.25	0	76.13	0	-2.33	0	0	1.11	0	0	0	0	0	0	2.44	2.44
Westbrook Inverter Transfor	W_INVTR2	369368	4906388	2	0	0	77.3	77.3	1	1809.8	3.25	0	76.15	0	-2.33	0	0	1.11	0	0	0	0	0	0	2.41	2.41
Inverters	G_Inv6	366788.5	4902972	2	0	0	87.7	87.7	1	5967.87	3.25	0	86.52	0	2.92	0	0	6.95	0	0	0	0	0	0	-8.72	-8.72
Inverters	G_Inv1	366526.4	4903225.8	2	0	0	87.7	87.7	1	5981.57	3.25	0	86.54	0	2.92	0	0	6.96	0	0	0	0	0	0	-8.75	-8.75
Inverters	G_Inv8	366844.5	4902838.5	2	0	0	87.7	87.7	1	6025.37	3.25	0	86.6	0	2.92	0	0	7	0	0	0	0	0	0	-8.86	-8.86
Inverters	G_Inv3	366583.7	4903091.4	2	0	0	87.7	87.7	1	6030.56	3.25	0	86.61	0	2.92	0	0	7.01	0	0	0	0	0	0	-8.87	-8.87
Inverters	G_Inv5	366638.5	4902958.1	2	0	0	87.7	87.7	1	6083.67	3.25	0	86.68	0	2.92	0	0	7.06	0	0	0	0	0	0	-9.01	-9.01
Inverters	G_Inv10	366900.7	4902704.8	2	0	0	87.7	87.7	1	6085.77	3.25	0	86.69	0	2.92	0	0	7.07	0	0	0	0	0	0	-9.01	-9.01
Inverters	G_Inv7	366694.6	4902824.7	2	0	0	87.7	87.7	1	6138.87	3.25	0	86.76	0	2.92	0	0	7.12	0	0	0	0	0	0	-9.14	-9.14
Inverter Transformer	MV6-1 T	370230	4907364	2	0	0	69.4	69.4	1	752.04	3.25	0	68.52	0	1.43	0	0	3.44	0	0	0	0	0	0	-4.04	-4.04
Inverters	G_Inv9	366750.9	4902691.8	2	0	0	87.7	87.7	1	6196.46	3.25	0	86.84	0	2.93	0	0	7.18	0	0	0	0	0	0	-9.29	-9.29
Inverter Transformer	MV6-4 T	370244	4906966	2	0	0	69.4	69.4	1	772.51	3.25	0	68.76	0	1.45	0	0	3.47	0	0	0	0	0	0	-4.33	-4.33
Inverter Transformer	MV6-3 T	370202	4907140	2	0	0	56.1	56.1	1	773.26	3.25	0	68.77	0	-0.06	0	0	4.33	0	0	0	0	0	0	-16.97	-16.97
Inverter Transformer	MV6-2 T	370091	4907339	2	0	0	56.1	56.1	1	885.74	3.25	0	69.95	0	-0.03	0	0	4.61	0	0	0	0	0	0	-18.47	-18.47
Inverter Transformer	MV2-1 T	365836	4906816	2	0	0	69.4	69.4	1	5150.67	3.25	0	85.24	0	3.04	0	0	7.48	0	0	0	0	0	0	-26.41	-26.41
Inverter Transformer	MV1-10 T	365010	4905564	2	0	0	69.4	69.4	1	6188.47	3.25	0	86.83	0	3.22	0	0	8.13	0	0	0	0	0	0	-28.83	-28.83
Inverter Transformer	MV1-14 T	365157	4905049	2	0	0	69.4	69.4	1	6208.68	3.25	0	86.86	0	3.22	0	0	8.14	0	0	0	0	0	0	-28.87	-28.87
Inverter Transformer	MV1-7 T	364919	4905782	2	0	0	69.4	69.4	1	6221.84	3.25	0	86.88	0	3.22	0	0	8.15	0	0	0	0	0	0	-28.9	-28.9
Inverter Transformer	MV1-13 T	364725	4905241	2	0	0	69.4	69.4	1	6554.09	3.25	0	87.33	0	3.27	0	0	8.35	0	0	0	0	0	0	-29.59	-29.59
Inverter Transformer	MV5-4 T	370330	4908707	2	0	0	56.1	56.1	1	1609.7	3.25	0	75.13	0	0.24	0	0	6.25	0	0	0	0	0	0	-25.57	-25.57
Inverter Transformer	MV5-6 T	369987	4908507	2	0	0	56.1	56.1	1	1611.53	3.25	0	75.14	0	0.24	0	0	6.25	0	0	0	0	0	0	-25.58	-25.58
Inverter Transformer	MV5-5 T	370021	4908690	2	0	0	56.1	56.1	1	1741.32	3.25	0	75.82	0	0.3	0	0	6.52	0	0	0	0	0	0	-26.58	-26.58
Inverter Transformer	MV5-3 T	370237	4908851	2	0	0	56.1	56.1	1	1779.03	3.25	0	76	0	0.31	0	0	6.6	0	0	0	0	0	0	-26.86	-26.86
Inverter Transformer	MV5-2 T	370011	4908853	2	0	0	56.1	56.1	1	1885.16	3.25	0	76.51	0	0.36	0	0	6.82	0	0	0	0	0	0	-27.62	-27.62
Inverter Transformer	MV5-1 T	370015	4909142	2	0	0	56.1	56.1	1	2137.24	3.25	0	77.6	0	0.46	0	0	7.31	0	0	0	0	0	0	-29.31	-29.31
Inverter Transformer	MV4-15 T	369170	4908481	2	0	0	56.1	56.1	1	2192.03	3.25	0	77.82	0	0.49	0	0	7.42	0	0	0	0	0	0	-29.66	-29.66
Inverter Transformer	MV4-14 T	369182	4908507	2	0	0	56.1	56.1	1	2197.2	3.25	0	77.84	0	0.49	0	0	7.43	0	0	0	0	0	0	-29.69	-29.69
Inverter Transformer	MV3-20 T	368683	4907317	2	0	0	56.1	56.1	1	2288.66	3.25	0	78.19	0	0.53	0	0	7.6	0	0	0	0	0	0	-30.26	-30.26
Inverter Transformer	MV3-14 T	368678	4907498	2	0	0	56.1	56.1	1	2307.62	3.25	0	78.26	0	0.53	0	0	7.63	0	0	0	0	0	0	-30.37	-30.37
Inverter Transformer	MV3-22 T	368661	4907142	2	0	0	56.1	56.1	1	2310.68	3.25	0	78.27	0	0.54	0	0	7.64	0	0	0	0	0	0	-30.39	-30.39
Inverter Transformer	MV4-10 T	369307	4908858	2	0	0	56.1	56.1	1	2327.22	3.25	0	78.34	0	0.54	0	0	7.67	0	0	0	0	0	0	-30.49	-30.49
Inverter Transformer	MV3-8 T	368685	4907712	2	0	0	56.1	56.1	1	2335.28	3.25	0	78.37	0	0.55	0	0	7.69	0	0	0	0	0	0	-30.54	-30.54
Inverter Transformer	MV4-11 T	369269	4908855	2	0	0	56.1	56.1	1	2352.45	3.25	0	78.43	0	0.55	0	0	7.72	0	0	0	0	0	0	-30.64	-30.64
Inverter Transformer	MV4-13 T	369057	4908605	2	0	0	56.1	56.1	1	2355.89	3.25	0	78.44	0	0.55	0	0	7.72	0	0	0	0	0	0	-30.66	-30.66
Inverter Transformer	MV3-2 T	368677	4907928	2	0	0	56.1	56.1	1	2396.89	3.25	0	78.59	0	0.57	0	0	7.8	0	0	0	0	0	0	-30.91	-30.91
Inverter Transformer	MV4-9 T	369284	4909001	2	0	0	56.1	56.1	1	2445.21	3.25	0	78.77	0	0.59	0	0	7.89	0	0	0	0	0	0	-31.19	-31.19
Inverter Transformer	MV4-8 T	369262	4909001	2	0	0	56.1	56.1	1	2460.43	3.25	0	78.82	0	0.6	0	0	7.92	0	0	0	0	0	0	-31.28	-31.28
Inverter Transformer	MV3-16 T	368509	4907475	2	0	0	56.1	56.1	1	2473.17	3.25	0	78.87	0	0.6	0	0	7.94	0	0	0	0	0	0	-31.35	-31.35
Inverter Transformer	MV4-12 T	369049	4908803	2	0	0	56.1	56.1	1	2482.86	3.25	0	78.9	0	0.61	0	0	7.96	0	0	0	0	0	0	-31.41	-31.41
Inverter Transformer	MV3-21 T	368484	4907206	2	0	0	56.1	56.1	1	2486.12	3.25	0	78.91	0	0.61	0	0	7.96	0	0	0	0	0	0	-31.43	-31.43
Inverter Transformer	MV3-9 T	368517	4907703	2	0	0	56.1	56.1	1	2498.19	3.25	0	78.95	0	0.62	0	0	7.99	0	0	0	0	0	0	-31.5	-31.5
Inverter Transformer	MV3-4 T	368507	4907925	2	0	0	56.1	56.1	1	2559.18	3.25	0	79.16	0	0.64	0	0	8.1	0	0	0	0	0	0	-31.84	-31.84
Inverter Transformer	MV4-5 T	369283	4909199	2	0	0	56.1	56.1	1	2592.86	3.25	0	79.28	0	0.66	0	0	8.16	0	0	0	0	0	0	-32.03	-32.03
Inverter Transformer	MV4-6 T	369249	4909192	2	0	0	56.1	56.1	1	2609.85	3.25	0	79.33	0	0.66	0	0	8.19	0	0	0	0	0	0	-32.13	-32.13
Inverter Transformer	MV4-7 T	369040	4909001	2	0	0	56.1	56.1	1	2619.42	3.25	0	79.36	0	0.67	0	0	8.21	0	0	0	0	0	0	-32.18	-32.18
Inverter Transformer	MV3-19 T	368352	4907347	2	0	0	56.1	56.1	1	2620.61	3.25	0	79.37	0	0.67	0	0	8.21	0	0	0	0	0	0	-32.18	-32.18
Inverter Transformer	MV3-15 T	368351	4907477	2	0	0	56.1	56.1	1	2630.62	3.25	0	79.4	0	0.67	0	0	8.23	0	0	0	0	0	0	-32.24	-32.24
Inverter Transformer	MV3-11 T	368340	4907662	2	0	0	56.1	56.1	1	2665.24	3.25	0	79.51	0	0.69	0	0	8.29	0	0	0	0	0	0	-32.43	-32.43
Inverter Transformer	MV3-5 T	368335	4907843	2	0	0	56.1	56.1	1	2705.37	3.25	0	79.64	0	0.7	0	0	8.36	0	0	0	0	0	0	-32.65	-32.65
Inverter Transformer	MV4-2 T	369267	4909397	2	0	0	56.1	56.1	1	2756.1	3.25	0	79.81	0	0.73	0	0	8.45	0	0	0	0	0	0	-32.92	-32.92
Inverter Transformer	MV4-4 T	369033	4909199	2	0	0	56.1	56.1	1	2762.05	4.99	0	79.82	0	1.65	2.71	0.01	8.46	0	0	0	0	0	0	-36.59	-36.59
Inverter Transformer	MV4-3 T	369234	4909397	2	0	0	56.1	56.1	1	2776.62	3.25	0	79.87	0	0.73	0	0	8.48	0	0	0	0	0	0	-33.03	-33.03
Inverter Transformer	MV3-17 T	368183	4907472	2	0	0	56.1	56.1	1	2797.49	3.25	0	79.94	0	0.74	0	0	8.52	0	0	0	0	0	0	-33.14	-33.14
Inverter Transformer	MV3-10 T	368162	4907669	2	0	0	56.1	56.1	1	2842.11	3.25	0	80.07	0	0.76	0	0	8.6	0	0	0	0	0	0	-33.37	-33.37
Inverter Transformer	MV3-6 T	368156	4907834	2	0	0	56.1	56.1	1	2878.09	3.25	0	80.18	0	0.78	0	0	8.66	0	0	0	0	0	0	-33.56	-33.56
Inverter Transformer	MV3-1 T	368150	4907976	2	0	0	56.1	56.1	1	2917.01	3.25	0	80.3	0	0.79	0	0	8.73	0	0	0	0	0	0	-33.76	-33.76
Inverter Transformer	MV4-1 T	369017	4909397	2	0	0	56.1	56.1	1	2917.21	3.25	0	80.3	0	0.79	0	0	8.73	0	0	0	0	0	0	-33.76	-33.76
Inverter Transformer	MV3-13 T	367958	4907577	2	0	0	56.1	56.1	1	3031.92	3.25	0	80.63	0	0.84	0	0	8.92	0	0	0	0	0	0	-34.34	-34.34
Inverter Transformer	MV3-7 T	367951	4907754	2	0	0	56.1	56.1	1	3064.14	3.25	0	80.73	0	0.86	0	0	8.98	0	0	0	0	0	0	-34.5	-34.5
Inverter Transformer	MV3-3 T	367944	4907927	2	0	0	56.1	56.1	1	3105.24	3.25	0	80.84	0	0.87	0	0	9.05	0	0	0	0	0	0	-34.7	-34.7
Inverter Transformer	MV3-18 T	367757	4907412	2	0	0	56.1	56.1	1	3218.15	3.25	0	81.15	0	0.92	0	0	9.23	0	0	0	0	0	0	-35.25	-35.25
Inverter Transformer	MV3-12 T	367674	4907594	2	0	0	56.1	56.1	1	3316.04	3.25	0	81.41	0	0.96	0	0	9.39	0	0	0	0	0	0	-35.71	-35.71

	Inverter Transformer	MV2-2 T	365982	4906654	2	0	0	56.1	56.1	1	5021.15	3.25	0	85.02	0	1.63	0	0	11.88	0	0	0	0	0	0	-42.47	-42.47
	Inverter Transformer	MV2-3 T	365814	4906641	2	0	0	56.1	56.1	1	5189.53	3.25	0	85.3	0	1.69	0	0	12.1	0	0	0	0	0	0	-43.04	-43.04
	Inverter Transformer	MV2-4 T	365590	4906628	2	0	0	56.1	56.1	1	5413.58	3.25	0	85.67	0	1.77	0	0	12.39	0	0	0	0	0	0	-43.77	-43.77
	Inverter Transformer	MV1-15 T	365309	4904994	2	0	0	56.1	56.1	1	6086.59	3.25	0	86.69	0	1.99	0	0	13.2	0	0	0	0	0	0	-45.83	-45.83
	Inverter Transformer	MV1-12 T	365044	4905386	2	0	0	56.1	56.1	1	6206.27	3.25	0	86.86	0	2.03	0	0	13.34	0	0	0	0	0	0	-46.17	-46.17
	Inverter Transformer	MV1-4 T	364821	4905918	2	0	0	56.1	56.1	1	6287.41	3.25	0	86.97	0	2.05	0	0	13.44	0	0	0	0	0	0	-46.4	-46.4
	Inverter Transformer	MV1-2 T	364759	4906063	2	0	0	56.1	56.1	1	6319.68	3.25	0	87.01	0	2.06	0	0	13.48	0	0	0	0	0	0	-46.49	-46.49
	Inverter Transformer	MV1-1 T	364721	4906166	2	0	0	56.1	56.1	1	6338.94	3.25	0	87.04	0	2.07	0	0	13.5	0	0	0	0	0	0	-46.55	-46.55
	Inverter Transformer	MV1-8 T	364782	4905647	2	0	0	56.1	56.1	1	6387.27	3.25	0	87.11	0	2.08	0	0	13.55	0	0	0	0	0	0	-46.68	-46.68
	Inverter Transformer	MV1-5 T	364676	4905892	2	0	0	56.1	56.1	1	6434.65	3.25	0	87.17	0	2.1	0	0	13.61	0	0	0	0	0	0	-46.82	-46.82
	Inverter Transformer	MV1-11 T	364649	4905414	2	0	0	56.1	56.1	1	6576.69	3.25	0	87.36	0	2.14	0	0	13.77	0	0	0	0	0	0	-47.21	-47.21
	Inverter Transformer	MV1-9 T	364555	4905646	2	0	0	56.1	56.1	1	6607.67	3.25	0	87.4	0	2.15	0	0	13.8	0	0	0	0	0	0	-47.29	-47.29
	Inverter Transformer	MV1-6 T	364482	4905835	2	0	0	56.1	56.1	1	6636.28	3.25	0	87.44	0	2.16	0	0	13.83	0	0	0	0	0	0	-47.37	-47.37
	Inverter Transformer	MV1-3 T	364435	4906039	2	0	0	56.1	56.1	1	6642.64	3.25	0	87.45	0	2.16	0	0	13.84	0	0	0	0	0	0	-47.39	-47.39
	Line Reactor	NGR	369421	4908787.5	5	0	0	45.4	45.4	1	2196.64	5.25	0	77.84	0	3.37	1.28	0.08	0.9	0	0	0	0	0	0	-38.03	-38.03
Limit. Valu	0	0																								
Level D/N:	30.1484	30.1484																								

Receiver: Existing Noise Receptor
ID: S-R114
X: 371009
Y: 4907243
Z: 4.5
Ground: 0

ISO	Description	ID	X	Y	Z	Ground	ReflOrd	LxT	LxN	L/A	Dist.	hm	Freq	Adiv	K0b	Agr	Abar	z	Aatm	Afol	Ahous	Cmet	CmetN	Dc	RL	LtotT	LtotN
	Sol_Luce Substation	S_Substation	369426	4908792	3.5	0	0	112.1	112.1	1	2214.79	5.25	0	77.91	0	0.08	3.72	0.34	4.73	0	0	0	0	0	0	25.64	25.64
	Inverter	MV6-3	370207	4907140	2	0	0	100.3	100.3	1	808.59	3.25	0	69.15	0	-0.35	0	0	10.22	0	0	0	0	0	0	21.29	21.29
	Inverter	MV6-2	370085	4907339	2	0	0	100.3	100.3	1	928.98	3.25	0	70.36	0	-0.28	0	0	10.67	0	0	0	0	0	0	19.56	19.56
	Inverter	MV6-1	370235	4907364	2	0	0	97.3	97.3	1	783.4	3.25	0	68.88	0	-0.36	0	0	10.11	0	0	0	0	0	0	18.68	18.68
	Inverter	MV5-4	370324	4908707	2	0	0	100.3	100.3	1	1616.33	3.25	0	75.17	0	0.01	0	0	12.61	0	0	0	0	0	0	12.53	12.53
	Inverter	MV5-5	370015	4908690	2	0	0	100.3	100.3	1	1755.52	3.25	0	75.89	0	0.05	0	0	12.93	0	0	0	0	0	0	11.44	11.44
	Inverter	MV5-3	370231	4908851	2	0	0	100.3	100.3	1	1786.32	3.25	0	76.04	0	0.06	0	0	13	0	0	0	0	0	0	11.21	11.21
	Inverter	MV5-2	370006	4908853	2	0	0	100.3	100.3	1	1896.87	3.25	0	76.56	0	0.1	0	0	13.24	0	0	0	0	0	0	10.41	10.41
	Inverter	MV5-1	370020	4909142	2	0	0	100.3	100.3	1	2141.1	3.25	0	77.61	0	0.17	0	0	13.75	0	0	0	0	0	0	8.78	8.78
	Inverter	MV3-20	368689	4907317	2	0	0	100.3	100.3	1	2321.18	3.25	0	78.31	0	0.21	0	0	14.11	0	0	0	0	0	0	7.67	7.67
	Inverter	MV3-14	368684	4907498	2	0	0	100.3	100.3	1	2338.94	3.25	0	78.38	0	0.22	0	0	14.15	0	0	0	0	0	0	7.56	7.56
	Inverter	MV4-10	369312	4908858	2	0	0	100.3	100.3	1	2342.66	3.25	0	78.39	0	0.22	0	0	14.16	0	0	0	0	0	0	7.54	7.54
	Inverter	MV4-11	369264	4908855	2	0	0	100.3	100.3	1	2375.62	3.25	0	78.52	0	0.23	0	0	14.22	0	0	0	0	0	0	7.35	7.35
	Inverter	MV3-8	368680	4907712	2	0	0	100.3	100.3	1	2375.75	3.25	0	78.52	0	0.23	0	0	14.22	0	0	0	0	0	0	7.35	7.35
	Inverter	MV4-9	369289	4909001	2	0	0	100.3	100.3	1	2459.47	3.25	0	78.82	0	0.25	0	0	14.38	0	0	0	0	0	0	6.87	6.87
	Inverter	MV4-8	369256	4909001	2	0	0	100.3	100.3	1	2482.66	3.25	0	78.9	0	0.25	0	0	14.43	0	0	0	0	0	0	6.74	6.74
	Inverter	MV3-16	368514	4907475	2	0	0	100.3	100.3	1	2505.76	3.25	0	78.98	0	0.26	0	0	14.47	0	0	0	0	0	0	6.61	6.61
	Inverter	MV3-21	368478	4907206	2	0	0	100.3	100.3	1	2531.27	3.25	0	79.07	0	0.26	0	0	14.52	0	0	0	0	0	0	6.46	6.46
	Inverter	MV3-9	368512	4907703	2	0	0	100.3	100.3	1	2539.02	3.25	0	79.09	0	0.27	0	0	14.53	0	0	0	0	0	0	6.42	6.42
	Inverter	MV4-5	369289	4909199	2	0	0	100.3	100.3	1	2604.68	3.25	0	79.32	0	0.28	0	0	14.66	0	0	0	0	0	0	6.06	6.06
	Inverter	MV4-6	369243	4909192	2	0	0	100.3	100.3	1	2630.09	3.25	0	79.4	0	0.29	0	0	14.7	0	0	0	0	0	0	5.92	5.92
	Inverter	MV4-7	369035	4909001	2	0	0	100.3	100.3	1	2643.34	3.25	0	79.44	0	0.29	0	0	14.73	0	0	0	0	0	0	5.85	5.85
	Inverter	MV3-19	368357	4907347	2	0	0	100.3	100.3	1	2654.04	3.25	0	79.48	0	0.29	0	0	14.75	0	0	0	0	0	0	5.8	5.8
	Inverter	MV3-15	368357	4907477	2	0	0	100.3	100.3	1	2662.3	3.25	0	79.51	0	0.29	0	0	14.76	0	0	0	0	0	0	5.75	5.75
	Inverter	MV3-11	368346	4907662	2	0	0	100.3	100.3	1	2695.76	3.25	0	79.61	0	0.3	0	0	14.82	0	0	0	0	0	0	5.57	5.57
	Inverter	MV4-2	369272	4909397	2	0	0	100.3	100.3	1	2767.11	3.25	0	79.84	0	0.32	0	0	14.95	0	0	0	0	0	0	5.2	5.2
	Inverter	MV4-4	369027	4909199	2	0	0	100.3	100.3	1	2784.65	4.99	0	79.9	0	1.07	3.24	0.01	14.99	0	0	0	0	0	0	1.12	1.12
	Inverter	MV4-3	369229	4909397	2	0	0	100.3	100.3	1	2794.3	3.25	0	79.93	0	0.32	0	0	15	0	0	0	0	0	0	5.06	5.06
	Inverter	MV3-17	368178	4907472	2	0	0	100.3	100.3	1	2840.25	3.25	0	80.07	0	0.33	0	0	15.09	0	0	0	0	0	0	4.83	4.83
	Inverter	MV3-10	368167	4907669	2	0	0	100.3	100.3	1	2873.75	3.25	0	80.17	0	0.34	0	0	15.15	0	0	0	0	0	0	4.66	4.66
	Inverter	MV3-6	368162	4907834	2	0	0	100.3	100.3	1	2907.7	3.25	0	80.27	0	0.34	0	0	15.21	0	0	0	0	0	0	4.49	4.49
	Inverter	MV4-1	369011	4909397	2	0	0	100.3	100.3	1	2937.98	3.25	0	80.36	0	0.35	0	0	15.26	0	0	0	0	0	0	4.34	4.34
	Inverter	MV3-13	367963	4907577	2	0	0	100.3	100.3	1	3064.26	3.25	0	80.73	0	0.37	0	0	15.49	0	0	0	0	0	0	3.73	3.73
	Inverter	MV3-7	367945	4907754	2	0	0	100.3	100.3	1	3106.32	3.25	0	80.84	0	0.38	0	0	15.56	0	0	0	0	0	0	3.53	3.53
	Inverter	MV3-3	367939	4907927	2	0	0	100.3	100.3	1	3145.28	3.25	0	80.95	0	0.39	0	0	15.63	0	0	0	0	0	0	3.34	3.34
	Inverter	MV3-18	367752	4907412	2	0	0	100.3	100.3	1	3261.38	3.25	0	81.27	0	0.41	0	0	15.83	0	0	0	0	0	0	2.81	2.81
	DSTATCOM - 10 MVAR #1	DSAT1	369437	4908757	2.5	0	0	96.6	96.6	1	2182.52	3.5	0	77.78	0	3.26	0	0	1.83	0	0	0	0	0	0	13.76	13.76
	Inverter	MV3-12	367668	4907594	2	0	0	100.3	100.3	1	3359.39	3.25	0	81.53	0	0.43	0	0	15.99	0	0	0	0	0	0	2.37	2.37
	DSTATCOM - 10 MVAR #2	DSAT2	369403	4908757	2.5	0	0	96.6	96.6	1	2207.13	3.5	0	77.88	0	3.26	0	0	1.84	0	0	0	0	0	0	13.65	13.65
	Inverter	MV6-4	370250	4906966	2	0	0	86.1	86.1	1	807.97	3.25	0	69.15	0	0.64	0	0	5.94	0	0	0	0	0	0	10.33	10.33
	SubstationTransformer	W_ST	369711.17	4906112.3	2.5	0	0	92	92	1	1721.31	4.25	0	75.72	0	0.67	3.51	0.21	3.88	0	0	0	0	0	0	8.2	8.2
	Westbrook Inverter Enclosur	W_INV6	369875	4906578	2	0	0	89.1	89.1	1	1314.61	3.25	0	73.38	0	0.75	0	0	6.89	0	0	0	0	0	0	8.04	8.04
	Inverter	MV2-3	365820	4906641	2	0	0	100.3	100.3	1	5223.8	3.25	0	85.36	0	0.66	0	0	18.91	0	0	0	0	0	0	-4.61	-4.61
	Westbrook Inverter Enclosur	W_INV5	369719	4906574	2	0	0	89.1	89.1	1	1453.16	3.25	0	74.25	0	0.78	0	0	7.13	0	0	0	0	0	0	6.9	6.9
	Westbrook Inverter Enclosur	W_INV7	369780	4906417	2	0	0	89.1	89.1	1	1480.78	3.25	0	74.41	0	0.79	0	0	7.18	0	0	0	0	0	0	6.68	6.68
	Inverter	MV2-4	365586	4906624	2	0	0	100.3	100.3	1	5458.21	3.25	0	85.74	0	0.68	0	0	19.24	0	0	0	0	0	0	-5.35	-5.35
	Inverter	MV5-6	369982	4908507	2	0	0	89.1	89.1	1	1628.63	3.25	0	75.24	0	0.82	0	0	7.43	0	0	0	0	0	0	5.57	5.57
	Inverter	MV1-15	365315	4904994	2	0	0	100.3	100.3	1	6122.06	3.25	0	86.74	0	0.71	0	0	20.16	0	0	0	0	0	0	-7.29	-7.29

Inverter	MV1-12	365038	4905386	2	0	0	100.3	100.3	1	6253.1	3.25	0	86.92	0	0.71	0	0	20.33	0	0	0	0	0	0	-7.66	-7.66
Westbrook Inverter Enclosur	W_INV4	369673	4906164	2	0	0	89.1	89.1	1	1717.31	3.25	0	75.7	0	0.84	0	0	7.58	0	0	0	0	0	0	4.94	4.94
Inverter	MV1-4	364815	4905918	2	0	0	100.3	100.3	1	6334.14	3.25	0	87.03	0	0.71	0	0	20.44	0	0	0	0	0	0	-7.88	-7.88
Inverter	MV1-2	364753	4906063	2	0	0	100.3	100.3	1	6366.31	3.25	0	87.08	0	0.71	0	0	20.48	0	0	0	0	0	0	-7.96	-7.96
Inverter	MV1-1	364715	4906166	2	0	0	100.3	100.3	1	6385.48	3.25	0	87.1	0	0.71	0	0	20.51	0	0	0	0	0	0	-8.01	-8.01
Inverter	MV1-8	364788	4905647	2	0	0	100.3	100.3	1	6422.47	3.25	0	87.15	0	0.71	0	0	20.56	0	0	0	0	0	0	-8.11	-8.11
Inverter	MV1-5	364671	4905892	2	0	0	100.3	100.3	1	6480.39	3.25	0	87.23	0	0.71	0	0	20.63	0	0	0	0	0	0	-8.27	-8.27
Inverter	MV1-11	364655	4905414	2	0	0	100.3	100.3	1	6612	3.25	0	87.41	0	0.71	0	0	20.8	0	0	0	0	0	0	-8.61	-8.61
Inverter	MV1-9	364561	4905646	2	0	0	100.3	100.3	1	6642.82	3.25	0	87.45	0	0.71	0	0	20.84	0	0	0	0	0	0	-8.69	-8.69
Inverter	MV1-6	364477	4905835	2	0	0	100.3	100.3	1	6682.03	3.25	0	87.5	0	0.71	0	0	20.89	0	0	0	0	0	0	-8.8	-8.8
Westbrook Inverter Enclosur	W_INV2	369374	4906388	2	0	0	89.1	89.1	1	1845.06	3.25	0	76.32	0	0.87	0	0	7.79	0	0	0	0	0	0	4.08	4.08
Westbrook Inverter Enclosur	W_INV3	369508	4906164	2	0	0	89.1	89.1	1	1848.58	3.25	0	76.34	0	0.87	0	0	7.8	0	0	0	0	0	0	4.05	4.05
Fixed Reactor Bank 2	FRB2	369464	4908755	6	0	0	89.8	89.8	1	2161.75	5.25	0	77.7	0	-0.98	0	0	4.64	0	0	0	0	0	0	8.42	8.42
Inverter	MV2-1	365842	4906816	2	0	0	97.3	97.3	1	5184.61	3.25	0	85.29	0	0.66	0	0	18.85	0	0	0	0	0	0	-7.49	-7.49
Fixed Reactor Bank 1	FRB1	369378	4908755	6	0	0	89.8	89.8	1	2224.03	5.25	0	77.94	0	-0.97	0	0	4.74	0	0	0	0	0	0	8.06	8.06
Inverter	MV4-15	369176	4908481	2	0	0	89.1	89.1	1	2211.91	3.25	0	77.9	0	0.96	0	0	8.39	0	0	0	0	0	0	1.82	1.82
Inverter	MV4-14	369176	4908507	2	0	0	89.1	89.1	1	2226.56	3.25	0	77.95	0	0.96	0	0	8.41	0	0	0	0	0	0	1.73	1.73
Inverter	MV3-22	368656	4907142	2	0	0	89.1	89.1	1	2355.17	3.25	0	78.44	0	0.99	0	0	8.62	0	0	0	0	0	0	1.01	1.01
Inverter	MV4-13	369051	4908605	2	0	0	89.1	89.1	1	2385.12	3.25	0	78.55	0	1	0	0	8.66	0	0	0	0	0	0	0.84	0.84
Inverter	MV1-10	365004	4905564	2	0	0	97.3	97.3	1	6235.31	3.25	0	86.9	0	0.71	0	0	20.31	0	0	0	0	0	0	-10.61	-10.61
Inverter	MV1-14	365163	4905049	2	0	0	97.3	97.3	1	6244.15	3.25	0	86.91	0	0.71	0	0	20.32	0	0	0	0	0	0	-10.63	-10.63
Inverter	MV1-7	364925	4905782	2	0	0	97.3	97.3	1	6256.96	3.25	0	86.93	0	0.71	0	0	20.34	0	0	0	0	0	0	-10.67	-10.67
Inverter	MV3-2	368671	4907928	2	0	0	89.1	89.1	1	2436.28	3.25	0	78.73	0	1.01	0	0	8.75	0	0	0	0	0	0	0.57	0.57
Westbrook Inverter Enclosur	W_INV1	369409	4906578	2	0	0	86.1	86.1	1	1732.69	3.25	0	75.77	0	0.84	0	0	7.6	0	0	0	0	0	0	1.84	1.84
Inverter	MV4-12	369043	4908803	2	0	0	89.1	89.1	1	2509.73	3.25	0	78.99	0	1.03	0	0	8.86	0	0	0	0	0	0	0.18	0.18
Inverter	MV1-13	364731	4905241	2	0	0	97.3	97.3	1	6589.48	3.25	0	87.38	0	0.72	0	0	20.78	0	0	0	0	0	0	-11.56	-11.56
Inverter	MV3-4	368502	4907925	2	0	0	89.1	89.1	1	2598.11	3.25	0	79.29	0	1.05	0	0	9	0	0	0	0	0	0	-0.28	-0.28
Inverter	MV3-5	368340	4907843	2	0	0	89.1	89.1	1	2735.61	3.25	0	79.74	0	1.08	0	0	9.21	0	0	0	0	0	0	-0.98	-0.98
Inverter	MV3-1	368156	4907976	2	0	0	89.1	89.1	1	2945.66	3.25	0	80.38	0	1.13	0	0	9.53	0	0	0	0	0	0	-1.99	-1.99
Gardiner Substation	G_Sub	366586.3	4903349.9	2.5	0	0	90.8	90.8	1	5892.07	4.25	0	86.41	0	1.85	2.13	0.34	9.63	0	0	0	0	0	0	-9.24	-9.24
Westbrook Inverter Transfor	W_INVTR6	369881	4906578	2	0	0	77.3	77.3	1	1309.43	3.25	0	73.34	0	-2.11	0	0	0.85	0	0	0	0	0	0	5.26	5.26
Inverter	MV2-2	365977	4906654	2	0	0	89.1	89.1	1	5066.35	3.25	0	85.09	0	1.66	0	0	12.55	0	0	0	0	0	0	-10.24	-10.24
Westbrook Inverter Transfor	W_INVTR5	369725	4906574	2	0	0	77.3	77.3	1	1447.83	3.25	0	74.21	0	-2.18	0	0	0.93	0	0	0	0	0	0	4.38	4.38
Westbrook Inverter Transfor	W_INVTR7	369786	4906417	2	0	0	77.3	77.3	1	1475.81	3.25	0	74.38	0	-2.19	0	0	0.94	0	0	0	0	0	0	4.21	4.21
Westbrook Inverter Transfor	W_INVTR1	369403	4906578	2	0	0	78.2	78.2	1	1738.24	3.25	0	75.8	0	-2.31	0	0	1.08	0	0	0	0	0	0	3.67	3.67
Westbrook Inverter Transfor	W_INVTR4	369679	4906164	2	0	0	77.3	77.3	1	1712.64	3.25	0	75.67	0	-2.29	0	0	1.06	0	0	0	0	0	0	2.9	2.9
Inverter	MV1-3	364440	4906039	2	0	0	89.1	89.1	1	6678.43	3.25	0	87.49	0	2.05	0	0	14.6	0	0	0	0	0	0	-15.09	-15.09
Inverters	G_Inv2	366676.9	4903239.1	2	0	0	87.7	87.7	1	5899.01	3.25	0	86.42	0	2.91	0	0	6.87	0	0	0	0	0	0	-8.54	-8.54
Inverters	G_Inv4	366732.8	4903105	2	0	0	87.7	87.7	1	5950.54	3.25	0	86.49	0	2.92	0	0	6.93	0	0	0	0	0	0	-8.67	-8.67
Inverters	G_Inv6	366788.5	4902972	2	0	0	87.7	87.7	1	6004.5	3.25	0	86.57	0	2.92	0	0	6.98	0	0	0	0	0	0	-8.81	-8.81
Inverters	G_Inv1	366526.4	4903225.8	2	0	0	87.7	87.7	1	6019.27	3.25	0	86.59	0	2.92	0	0	7	0	0	0	0	0	0	-8.85	-8.85
Westbrook Inverter Transfor	W_INVTR3	369514	4906164	2	0	0	77.3	77.3	1	1843.71	3.25	0	76.31	0	-2.35	0	0	1.13	0	0	0	0	0	0	2.24	2.24
Inverters	G_Inv8	366844.5	4902838.5	2	0	0	87.7	87.7	1	6061.57	3.25	0	86.65	0	2.92	0	0	7.04	0	0	0	0	0	0	-8.95	-8.95
Inverters	G_Inv3	366583.7	4903091.4	2	0	0	87.7	87.7	1	6067.87	3.25	0	86.66	0	2.92	0	0	7.05	0	0	0	0	0	0	-8.97	-8.97
Westbrook Inverter Transfor	W_INVTR2	369368	4906388	2	0	0	77.3	77.3	1	1850.38	3.25	0	76.35	0	-2.35	0	0	1.13	0	0	0	0	0	0	2.21	2.21
Inverters	G_Inv5	366638.5	4902958.1	2	0	0	87.7	87.7	1	6120.59	3.25	0	86.74	0	2.92	0	0	7.1	0	0	0	0	0	0	-9.1	-9.1
Inverters	G_Inv10	366900.7	4902704.8	2	0	0	87.7	87.7	1	6121.55	3.25	0	86.74	0	2.92	0	0	7.1	0	0	0	0	0	0	-9.1	-9.1
Inverters	G_Inv7	366694.6	4902824.7	2	0	0	87.7	87.7	1	6175.39	3.25	0	86.81	0	2.92	0	0	7.16	0	0	0	0	0	0	-9.23	-9.23
Inverters	G_Inv9	366750.9	4902691.8	2	0	0	87.7	87.7	1	6232.56	3.25	0	86.89	0	2.93	0	0	7.22	0	0	0	0	0	0	-9.38	-9.38
Inverter Transformer	MV6-1 T	370230	4907364	2	0	0	69.4	69.4	1	788.35	3.25	0	68.93	0	1.47	0	0	3.5	0	0	0	0	0	0	-4.55	-4.55
Inverter Transformer	MV6-4 T	370244	4906966	2	0	0	69.4	69.4	1	813.61	3.25	0	69.21	0	1.5	0	0	3.54	0	0	0	0	0	0	-4.9	-4.9
Inverter Transformer	MV6-3 T	370202	4907140	2	0	0	56.1	56.1	1	813.55	3.25	0	69.21	0	-0.05	0	0	4.43	0	0	0	0	0	0	-17.53	-17.53
Inverter Transformer	MV6-2 T	370091	4907339	2	0	0	56.1	56.1	1	923.01	3.25	0	70.3	0	-0.01	0	0	4.7	0	0	0	0	0	0	-18.93	-18.93
Inverter Transformer	MV2-1 T	365836	4906816	2	0	0	69.4	69.4	1	5190.59	3.25	0	85.3	0	3.05	0	0	7.51	0	0	0	0	0	0	-26.51	-26.51
Inverter Transformer	MV1-10 T	365010	4905564	2	0	0	69.4	69.4	1	6229.53	3.25	0	86.89	0	3.22	0	0	8.16	0	0	0	0	0	0	-28.92	-28.92
Inverter Transformer	MV1-14 T	365157	4905049	2	0	0	69.4	69.4	1	6249.76	3.25	0	86.92	0	3.22	0	0	8.17	0	0	0	0	0	0	-28.96	-28.96
Inverter Transformer	MV1-7 T	364919	4905782	2	0	0	69.4	69.4	1	6262.8	3.25	0	86.94	0	3.23	0	0	8.18	0	0	0	0	0	0	-28.99	-28.99
Inverter Transformer	MV1-13 T	364725	4905241	2	0	0	69.4	69.4	1	6595.2	3.25	0	87.38	0	3.27	0	0	8.37	0	0	0	0	0	0	-29.68	-29.68
Inverter Transformer	MV5-4 T	370330	4908707	2	0	0	56.1	56.1	1	1613.8	3.25	0	75.16	0	0.24	0	0	6.26	0	0	0	0	0	0	-25.6	-25.6
Inverter Transformer	MV5-6 T	369987	4908507	2	0	0	56.1	56.1	1	1625.48	3.25	0	75.22	0	0.25	0	0	6.28	0	0	0	0	0	0	-25.69	-25.69
Inverter Transformer	MV5-5 T	370021	4908690	2	0	0	56.1	56.1	1	1752.13	3.25	0	75.87	0	0.3	0	0	6.55	0	0	0	0	0	0	-26.66	-26.66
Inverter Transformer	MV5-3 T	370237	4908851	2	0	0	56.1	56.1	1	1783.72	3.25	0	76.03	0	0.31	0	0	6.61	0	0	0	0	0	0	-26.89	-26.89
Inverter Transformer	MV5-2 T	370011	4908853	2	0	0	56.1	56.1	1	1894.23	3.25	0	76.55	0	0.36	0	0	6.83	0	0	0	0	0	0	-27.68	-27.68
Inverter Transformer	MV5-1 T	370015	4909142	2	0	0	56.1	56.1	1	2143.42	3.25	0	77.62	0	0.46	0	0	7.32	0	0	0	0	0	0	-29.35	-29.35
Inverter Transformer	MV4-15 T	369170	4908481	2	0	0	56.1	56.1	1	2216.88	3.25	0	77.91	0	0.5	0	0	7.46	0	0	0	0	0	0	-29.81	-29.81
Inverter Transformer	MV4-14 T	369182	4908507	2	0	0	56.1	56.1	1	2221.63	3.25	0	77.93	0	0.5	0	0	7.47	0	0	0	0	0	0	-29.84	-29.84
Inverter Transformer	MV3-20 T	368683	4907317	2	0	0	56.1	56.1	1	2327.18	3.25	0	78.34	0	0.54	0	0	7.67	0	0	0	0	0	0	-30.49	-30.49
Inverter Transformer	MV3-14 T	368678	4907498	2	0	0	56.1	56.1	1	2344.91	3.25	0	78.4	0	0.55	0	0	7.7	0	0	0	0	0	0	-30.6	-30.6
Inverter Transformer	MV4-10 T	369307	4908858	2	0	0	56.1	56.1	1	2346.28	3.25	0	78.41	0	0.55	0	0	7.71	0	0	0	0	0	0	-30.61	-30.61
Inverter Transformer	MV3-22 T	368661	4907142	2	0	0	56.1	56.1	1	2350.17	3.25	0	78.42	0	0.55	0	0	7.71	0	0	0	0	0	0	-30.63	-30.63
Inverter Transformer	MV3-8 T	368685	4907712	2	0	0	56.1	56.1	1	2370.85	3.25	0	78.5	0	0.56	0	0	7.75	0	0	0	0	0	0	-30.75	-30.75
Inverter Transformer	MV4-11 T	369269	4908855	2	0	0	56.1	56.1	1	2371.95	3.25	0	78.5	0	0.56	0	0	7.75	0	0	0	0	0	0	-30.76	-30.76
Inverter Transformer	MV4-13 T	369057	4908605	2	0	0	56.1	56.1	1	2380.2	3.25	0	78.53	0	0.57	0	0	7.77	0	0	0	0	0	0	-30.81	-30.81
Inverter Transformer	MV3-2 T	368677	4907928	2	0	0	56.1	56.1	1	2430.53	3.25	0	78.71	0	0.59	0	0	7.86	0	0	0	0	0	0	-31.1	-31.1

	Inverter Transformer	MV4-9 T	369284	4909001	2	0	0	56.1	56.1	1	2462.96	3.25	0	78.83	0	0.6	0	0	7.92	0	0	0	0	0	0	-31.29	-31.29
	Inverter Transformer	MV4-8 T	369262	4909001	2	0	0	56.1	56.1	1	2478.42	3.25	0	78.88	0	0.61	0	0	7.95	0	0	0	0	0	0	-31.38	-31.38
	Inverter Transformer	MV4-12 T	369049	4908803	2	0	0	56.1	56.1	1	2505.04	3.25	0	78.98	0	0.62	0	0	8	0	0	0	0	0	0	-31.54	-31.54
	Inverter Transformer	MV3-16 T	368509	4907475	2	0	0	56.1	56.1	1	2510.74	3.25	0	79	0	0.62	0	0	8.01	0	0	0	0	0	0	-31.57	-31.57
	Inverter Transformer	MV3-21 T	368484	4907206	2	0	0	56.1	56.1	1	2525.27	3.25	0	79.05	0	0.63	0	0	8.04	0	0	0	0	0	0	-31.65	-31.65
	Inverter Transformer	MV3-9 T	368517	4907703	2	0	0	56.1	56.1	1	2534.1	3.25	0	79.08	0	0.63	0	0	8.05	0	0	0	0	0	0	-31.7	-31.7
	Inverter Transformer	MV3-4 T	368507	4907925	2	0	0	56.1	56.1	1	2593.29	3.25	0	79.28	0	0.66	0	0	8.16	0	0	0	0	0	0	-32.03	-32.03
	Inverter Transformer	MV4-5 T	369283	4909199	2	0	0	56.1	56.1	1	2608.64	3.25	0	79.33	0	0.66	0	0	8.19	0	0	0	0	0	0	-32.12	-32.12
	Inverter Transformer	MV4-6 T	369249	4909192	2	0	0	56.1	56.1	1	2626.06	3.25	0	79.39	0	0.67	0	0	8.22	0	0	0	0	0	0	-32.22	-32.22
	Inverter Transformer	MV4-7 T	369040	4909001	2	0	0	56.1	56.1	1	2639.61	3.25	0	79.43	0	0.68	0	0	8.24	0	0	0	0	0	0	-32.29	-32.29
	Inverter Transformer	MV3-19 T	368352	4907347	2	0	0	56.1	56.1	1	2659.04	3.25	0	79.49	0	0.68	0	0	8.28	0	0	0	0	0	0	-32.4	-32.4
	Inverter Transformer	MV3-15 T	368351	4907477	2	0	0	56.1	56.1	1	2668.28	3.25	0	79.52	0	0.69	0	0	8.29	0	0	0	0	0	0	-32.45	-32.45
	Inverter Transformer	MV3-11 T	368340	4907662	2	0	0	56.1	56.1	1	2701.69	3.25	0	79.63	0	0.7	0	0	8.35	0	0	0	0	0	0	-32.63	-32.63
	Inverter Transformer	MV3-5 T	368335	4907843	2	0	0	56.1	56.1	1	2740.49	3.25	0	79.76	0	0.72	0	0	8.42	0	0	0	0	0	0	-32.84	-32.84
	Inverter Transformer	MV4-2 T	369267	4909397	2	0	0	56.1	56.1	1	2770.25	3.25	0	79.85	0	0.73	0	0	8.47	0	0	0	0	0	0	-33	-33
	Inverter Transformer	MV4-4 T	369033	4909199	2	0	0	56.1	56.1	1	2780.38	3.25	0	79.88	0	0.74	0	0	8.49	0	0	0	0	0	0	-33.05	-33.05
	Inverter Transformer	MV4-3 T	369234	4909397	2	0	0	56.1	56.1	1	2791.12	3.25	0	79.92	0	0.74	0	0	8.51	0	0	0	0	0	0	-33.11	-33.11
	Inverter Transformer	MV3-17 T	368183	4907472	2	0	0	56.1	56.1	1	2835.26	3.25	0	80.05	0	0.76	0	0	8.59	0	0	0	0	0	0	-33.34	-33.34
	Inverter Transformer	MV3-10 T	368162	4907669	2	0	0	56.1	56.1	1	2878.7	3.25	0	80.18	0	0.78	0	0	8.66	0	0	0	0	0	0	-33.56	-33.56
	Inverter Transformer	MV3-6 T	368156	4907834	2	0	0	56.1	56.1	1	2913.57	3.25	0	80.29	0	0.79	0	0	8.72	0	0	0	0	0	0	-33.74	-33.74
	Inverter Transformer	MV4-1 T	369017	4909397	2	0	0	56.1	56.1	1	2933.9	3.25	0	80.35	0	0.8	0	0	8.76	0	0	0	0	0	0	-33.85	-33.85
	Inverter Transformer	MV3-1 T	368150	4907976	2	0	0	56.1	56.1	1	2951.47	3.25	0	80.4	0	0.81	0	0	8.79	0	0	0	0	0	0	-33.94	-33.94
	Inverter Transformer	MV3-13 T	367958	4907577	2	0	0	56.1	56.1	1	3069.23	3.25	0	80.74	0	0.86	0	0	8.98	0	0	0	0	0	0	-34.53	-34.53
	Inverter Transformer	MV3-7 T	367951	4907754	2	0	0	56.1	56.1	1	3100.4	3.25	0	80.83	0	0.87	0	0	9.04	0	0	0	0	0	0	-34.68	-34.68
	Inverter Transformer	MV3-3 T	367944	4907927	2	0	0	56.1	56.1	1	3140.4	3.25	0	80.94	0	0.89	0	0	9.1	0	0	0	0	0	0	-34.87	-34.87
	Inverter Transformer	MV3-18 T	367757	4907412	2	0	0	56.1	56.1	1	3256.39	3.25	0	81.25	0	0.94	0	0	9.3	0	0	0	0	0	0	-35.43	-35.43
	Inverter Transformer	MV3-12 T	367674	4907594	2	0	0	56.1	56.1	1	3353.42	3.25	0	81.51	0	0.98	0	0	9.45	0	0	0	0	0	0	-35.88	-35.88
	Inverter Transformer	MV2-2 T	365982	4906654	2	0	0	56.1	56.1	1	5061.39	3.25	0	85.09	0	1.65	0	0	11.93	0	0	0	0	0	0	-42.61	-42.61
	Inverter Transformer	MV2-3 T	365814	4906641	2	0	0	56.1	56.1	1	5229.76	3.25	0	85.37	0	1.71	0	0	12.15	0	0	0	0	0	0	-43.17	-43.17
	Inverter Transformer	MV2-4 T	365590	4906628	2	0	0	56.1	56.1	1	5453.79	3.25	0	85.73	0	1.78	0	0	12.44	0	0	0	0	0	0	-43.9	-43.9
	Inverter Transformer	MV1-15 T	365309	4904994	2	0	0	56.1	56.1	1	6127.64	3.25	0	86.75	0	2	0	0	13.25	0	0	0	0	0	0	-45.95	-45.95
	Inverter Transformer	MV1-12 T	365044	4905386	2	0	0	56.1	56.1	1	6247.37	3.25	0	86.91	0	2.04	0	0	13.39	0	0	0	0	0	0	-46.29	-46.29
	Inverter Transformer	MV1-4 T	364821	4905918	2	0	0	56.1	56.1	1	6328.27	3.25	0	87.03	0	2.07	0	0	13.48	0	0	0	0	0	0	-46.52	-46.52
	Inverter Transformer	MV1-2 T	364759	4906063	2	0	0	56.1	56.1	1	6360.42	3.25	0	87.07	0	2.08	0	0	13.52	0	0	0	0	0	0	-46.61	-46.61
	Inverter Transformer	MV1-1 T	364721	4906166	2	0	0	56.1	56.1	1	6379.57	3.25	0	87.1	0	2.08	0	0	13.54	0	0	0	0	0	0	-46.66	-46.66
	Inverter Transformer	MV1-8 T	364782	4905647	2	0	0	56.1	56.1	1	6428.28	3.25	0	87.16	0	2.1	0	0	13.6	0	0	0	0	0	0	-46.8	-46.8
	Inverter Transformer	MV1-5 T	364676	4905892	2	0	0	56.1	56.1	1	6475.5	3.25	0	87.23	0	2.11	0	0	13.65	0	0	0	0	0	0	-46.93	-46.93
	Inverter Transformer	MV1-11 T	364649	4905414	2	0	0	56.1	56.1	1	6617.77	3.25	0	87.41	0	2.15	0	0	13.81	0	0	0	0	0	0	-47.32	-47.32
	Inverter Transformer	MV1-9 T	364555	4905646	2	0	0	56.1	56.1	1	6648.65	3.25	0	87.45	0	2.16	0	0	13.85	0	0	0	0	0	0	-47.4	-47.4
	Inverter Transformer	MV1-6 T	364482	4905835	2	0	0	56.1	56.1	1	6677.14	3.25	0	87.49	0	2.17	0	0	13.88	0	0	0	0	0	0	-47.48	-47.48
	Inverter Transformer	MV1-3 T	364435	4906039	2	0	0	56.1	56.1	1	6683.34	3.25	0	87.5	0	2.17	0	0	13.88	0	0	0	0	0	0	-47.5	-47.5
	Line Reactor	NGR	369421	4908787.5	5	0	0	45.4	45.4	1	2215.23	5.25	0	77.91	0	3.36	1.28	0.08	0.91	0	0	0	0	0	0	-38.11	-38.11
Limit. Valu	0	0																								
Level D/N:	29.8708	29.8708																								

Receiver: Existing Noise Receptor
ID: S-R115
X: 371067
Y: 4907274
Z: 4.5
Ground: 0

ISO	Description	ID	X	Y	Z	Ground	ReflOrd	LxT	LxN	L/A	Dist.	hm	Freq	Adiv	K0b	Agr	Abar	z	Aatm	Afol	Ahous	Cmet	CmetN	Dc	RL	LtotT	LtotN
	Sol_Luce Substation	S_Substation	369426	4908792	3.5	0	0	112.1	112.1	1	2235.44	5.25	0	77.99	0	0.09	3.73	0.35	4.76	0	0	0	0	0	0	25.5	25.5
	Inverter	MV6-3	370207	4907140	2	0	0	100.3	100.3	1	870.38	3.25	0	69.79	0	-0.31	0	0	10.46	0	0	0	0	0	0	20.37	20.37
	Inverter	MV6-2	370085	4907339	2	0	0	100.3	100.3	1	984.15	3.25	0	70.86	0	-0.25	0	0	10.86	0	0	0	0	0	0	18.85	18.85
	Inverter	MV6-1	370235	4907364	2	0	0	97.3	97.3	1	836.86	3.25	0	69.45	0	-0.33	0	0	10.33	0	0	0	0	0	0	17.86	17.86
	Inverter	MV5-4	370324	4908707	2	0	0	100.3	100.3	1	1614.17	3.25	0	75.16	0	0.01	0	0	12.6	0	0	0	0	0	0	12.54	12.54
	Inverter	MV5-5	370015	4908690	2	0	0	100.3	100.3	1	1764.02	3.25	0	75.93	0	0.06	0	0	12.95	0	0	0	0	0	0	11.38	11.38
	Inverter	MV5-3	370231	4908851	2	0	0	100.3	100.3	1	1784.89	3.25	0	76.03	0	0.06	0	0	13	0	0	0	0	0	0	11.22	11.22
	Inverter	MV5-2	370006	4908853	2	0	0	100.3	100.3	1	1902.36	3.25	0	76.59	0	0.1	0	0	13.25	0	0	0	0	0	0	10.37	10.37
	Inverter	MV5-1	370020	4909142	2	0	0	100.3	100.3	1	2141.41	3.25	0	77.61	0	0.17	0	0	13.75	0	0	0	0	0	0	8.78	8.78
	Inverter	MV4-10	369312	4908858	2	0	0	100.3	100.3	1	2364.13	3.25	0	78.47	0	0.23	0	0	14.2	0	0	0	0	0	0	7.42	7.42
	Inverter	MV3-20	368689	4907317	2	0	0	100.3	100.3	1	2378.39	3.25	0	78.53	0	0.23	0	0	14.22	0	0	0	0	0	0	7.33	7.33
	Inverter	MV3-14	368684	4907498	2	0	0	100.3	100.3	1	2393.51	3.25	0	78.58	0	0.23	0	0	14.25	0	0	0	0	0	0	7.25	7.25
	Inverter	MV4-11	369264	4908855	2	0	0	100.3	100.3	1	2397.99	3.25	0	78.6	0	0.23	0	0	14.26	0	0	0	0	0	0	7.22	7.22
	Inverter	MV3-8	368680	4907712	2	0	0	100.3	100.3	1	2426.85	3.25	0	78.7	0	0.24	0	0	14.32	0	0	0	0	0	0	7.05	7.05
	Inverter	MV4-9	369289	4909001	2	0	0	100.3	100.3	1	2478.67	3.25	0	78.88	0	0.25	0	0	14.42	0	0	0	0	0	0	6.76	6.76
	Inverter	MV4-8	369256	4909001	2	0	0	100.3	100.3	1	2502.45	3.25	0	78.97	0	0.26	0	0	14.46	0	0	0	0	0	0	6.62	6.62
	Inverter	MV3-16	368514	4907475	2	0	0	100.3	100.3	1	2560.9	3.25	0	79.17	0	0.27	0	0	14.57	0	0	0	0	0	0	6.3	6.3
	Inverter	MV3-21	368478	4907206	2	0	0	100.3	100.3	1	2589.89	3.25	0	79.27	0	0.28	0	0	14.63	0	0	0	0	0	0	6.14	6.14
	Inverter	MV3-9	368512	4907703	2	0	0	100.3	100.3	1	2590.77	3.25	0	79.27	0	0.28	0	0	14.63	0	0	0	0	0	0	6.14	6.14
	Inverter	MV4-5	369289	4909199	2	0	0	100.3	100.3	1	2620.48	3.25	0	79.37	0	0.28	0	0	14.68	0	0	0	0	0	0	5.98	5.98
	Inverter	MV4-6	369243	4909192	2	0	0	100.3	100.3	1	2646.83	3.25	0	79.45	0	0.29	0	0	14.73	0	0	0	0	0	0	5.83	5.83

Inverter	MV4-7	369035	4909001	2	0	0	100.3	100.3	1	2666.75	3.25	0	79.52	0	0.29	0	0	14.77	0	0	0	0	0	0	5.73	5.73
Inverter	MV3-19	368357	4907347	2	0	0	100.3	100.3	1	2710.98	3.25	0	79.66	0	0.3	0	0	14.85	0	0	0	0	0	0	5.49	5.49
Inverter	MV3-15	368357	4907477	2	0	0	100.3	100.3	1	2717.59	3.25	0	79.68	0	0.31	0	0	14.86	0	0	0	0	0	0	5.46	5.46
Inverter	MV3-11	368346	4907662	2	0	0	100.3	100.3	1	2748.53	3.25	0	79.78	0	0.31	0	0	14.92	0	0	0	0	0	0	5.3	5.3
Inverter	MV4-2	369272	4909397	2	0	0	100.3	100.3	1	2780.14	3.25	0	79.88	0	0.32	0	0	14.98	0	0	0	0	0	0	5.13	5.13
Inverter	MV4-4	369027	4909199	2	0	0	100.3	100.3	1	2804.86	3.25	0	79.96	0	0.32	0	0	15.02	0	0	0	0	0	0	5.01	5.01
Inverter	MV4-3	369229	4909397	2	0	0	100.3	100.3	1	2808.09	3.25	0	79.97	0	0.32	0	0	15.03	0	0	0	0	0	0	4.99	4.99
Inverter	MV3-17	368178	4907472	2	0	0	100.3	100.3	1	2895.78	3.25	0	80.24	0	0.34	0	0	15.19	0	0	0	0	0	0	4.55	4.55
Inverter	MV3-10	368167	4907669	2	0	0	100.3	100.3	1	2926.78	3.25	0	80.33	0	0.35	0	0	15.24	0	0	0	0	0	0	4.39	4.39
Inverter	MV4-1	369011	4909397	2	0	0	100.3	100.3	1	2955.38	3.25	0	80.41	0	0.35	0	0	15.29	0	0	0	0	0	0	4.25	4.25
Inverter	MV3-6	368162	4907834	2	0	0	100.3	100.3	1	2958.48	3.25	0	80.42	0	0.35	0	0	15.3	0	0	0	0	0	0	4.24	4.24
Inverter	MV3-13	367963	4907577	2	0	0	100.3	100.3	1	3118.75	3.25	0	80.88	0	0.38	0	0	15.58	0	0	0	0	0	0	3.47	3.47
Inverter	MV3-7	367945	4907754	2	0	0	100.3	100.3	1	3158.68	3.25	0	80.99	0	0.39	0	0	15.65	0	0	0	0	0	0	3.28	3.28
Inverter	MV3-3	367939	4907927	2	0	0	100.3	100.3	1	3195.43	3.25	0	81.09	0	0.4	0	0	15.71	0	0	0	0	0	0	3.11	3.11
Inverter	MV3-18	367752	4907412	2	0	0	100.3	100.3	1	3317.87	3.25	0	81.42	0	0.42	0	0	15.92	0	0	0	0	0	0	2.55	2.55
DSTATCOM - 10 MVAR #1	DSAT1	369437	4908757	2.5	0	0	96.6	96.6	1	2203.68	3.5	0	77.86	0	3.26	0	0	1.84	0	0	0	0	0	0	13.66	13.66
DSTATCOM - 10 MVAR #2	DSAT2	369403	4908757	2.5	0	0	96.6	96.6	1	2228.94	3.5	0	77.96	0	3.27	0	0	1.86	0	0	0	0	0	0	13.54	13.54
Inverter	MV3-12	367668	4907594	2	0	0	100.3	100.3	1	3414.03	3.25	0	81.67	0	0.44	0	0	16.09	0	0	0	0	0	0	2.12	2.12
Inverter	MV6-4	370250	4906966	2	0	0	86.1	86.1	1	873.13	3.25	0	69.82	0	0.66	0	0	6.07	0	0	0	0	0	0	9.51	9.51
SubstationTransformer	W_ST	369711.17	4906112.3	2.5	0	0	92	92	1	1785.47	4.25	0	76.04	0	0.69	3.46	0.21	4	0	0	0	0	0	0	7.8	7.8
Westbrook Inverter Enclosur	W_INV6	369875	4906578	2	0	0	89.1	89.1	1	1380.32	3.25	0	73.8	0	0.77	0	0	7	0	0	0	0	0	0	7.49	7.49
Inverter	MV2-3	365820	4906641	2	0	0	100.3	100.3	1	5285.05	3.25	0	85.46	0	0.67	0	0	18.99	0	0	0	0	0	0	-4.81	-4.81
Inverter	MV2-4	365586	4906624	2	0	0	100.3	100.3	1	5519.41	3.25	0	85.84	0	0.68	0	0	19.33	0	0	0	0	0	0	-5.54	-5.54
Westbrook Inverter Enclosur	W_INV5	369719	4906574	2	0	0	89.1	89.1	1	1518.92	3.25	0	74.63	0	0.8	0	0	7.24	0	0	0	0	0	0	6.39	6.39
Westbrook Inverter Enclosur	W_INV7	369780	4906417	2	0	0	89.1	89.1	1	1546.23	3.25	0	74.79	0	0.8	0	0	7.29	0	0	0	0	0	0	6.18	6.18
Inverter	MV5-6	369982	4908507	2	0	0	89.1	89.1	1	1642.41	3.25	0	75.31	0	0.82	0	0	7.45	0	0	0	0	0	0	5.47	5.47
Inverter	MV1-15	365315	4904994	2	0	0	100.3	100.3	1	6187.4	3.25	0	86.83	0	0.71	0	0	20.25	0	0	0	0	0	0	-7.47	-7.47
Inverter	MV1-12	365038	4905386	2	0	0	100.3	100.3	1	6317.7	3.25	0	87.01	0	0.71	0	0	20.42	0	0	0	0	0	0	-7.83	-7.83
Inverter	MV1-4	364815	4905918	2	0	0	100.3	100.3	1	6397.36	3.25	0	87.12	0	0.71	0	0	20.52	0	0	0	0	0	0	-8.05	-8.05
Inverter	MV1-2	364753	4906063	2	0	0	100.3	100.3	1	6429.08	3.25	0	87.16	0	0.71	0	0	20.57	0	0	0	0	0	0	-8.13	-8.13
Inverter	MV1-1	364715	4906166	2	0	0	100.3	100.3	1	6447.91	3.25	0	87.19	0	0.71	0	0	20.59	0	0	0	0	0	0	-8.18	-8.18
Inverter	MV1-8	364788	4905647	2	0	0	100.3	100.3	1	6486.37	3.25	0	87.24	0	0.71	0	0	20.64	0	0	0	0	0	0	-8.28	-8.28
Westbrook Inverter Enclosur	W_INV4	369673	4906164	2	0	0	89.1	89.1	1	1781.95	3.25	0	76.02	0	0.86	0	0	7.69	0	0	0	0	0	0	4.5	4.5
Inverter	MV1-5	364671	4905892	2	0	0	100.3	100.3	1	6543.6	3.25	0	87.32	0	0.71	0	0	20.72	0	0	0	0	0	0	-8.44	-8.44
Inverter	MV1-11	364655	4905414	2	0	0	100.3	100.3	1	6676.33	3.25	0	87.49	0	0.71	0	0	20.89	0	0	0	0	0	0	-8.78	-8.78
Inverter	MV1-9	364561	4905646	2	0	0	100.3	100.3	1	6706.6	3.25	0	87.53	0	0.71	0	0	20.93	0	0	0	0	0	0	-8.86	-8.86
Inverter	MV1-6	364477	4905835	2	0	0	100.3	100.3	1	6745.28	3.25	0	87.58	0	0.71	0	0	20.98	0	0	0	0	0	0	-8.96	-8.96
Westbrook Inverter Enclosur	W_INV2	369374	4906388	2	0	0	89.1	89.1	1	1910.82	3.25	0	76.62	0	0.89	0	0	7.9	0	0	0	0	0	0	3.65	3.65
Westbrook Inverter Enclosur	W_INV3	369508	4906164	2	0	0	89.1	89.1	1	1913.79	3.25	0	76.64	0	0.89	0	0	7.9	0	0	0	0	0	0	3.63	3.63
Fixed Reactor Bank 2	FRB2	369464	4908755	6	0	0	89.8	89.8	1	2182.42	5.25	0	77.78	0	-0.97	0	0	4.67	0	0	0	0	0	0	8.3	8.3
Inverter	MV2-1	365842	4906816	2	0	0	97.3	97.3	1	5245.04	3.25	0	85.39	0	0.66	0	0	18.94	0	0	0	0	0	0	-7.68	-7.68
Fixed Reactor Bank 1	FRB1	369378	4908755	6	0	0	89.8	89.8	1	2246.35	5.25	0	78.03	0	-0.97	0	0	4.78	0	0	0	0	0	0	7.94	7.94
Inverter	MV4-15	369176	4908481	2	0	0	89.1	89.1	1	2243.38	3.25	0	78.02	0	0.96	0	0	8.44	0	0	0	0	0	0	1.64	1.64
Inverter	MV4-14	369176	4908507	2	0	0	89.1	89.1	1	2257.47	3.25	0	78.07	0	0.97	0	0	8.46	0	0	0	0	0	0	1.56	1.56
Inverter	MV3-22	368656	4907142	2	0	0	89.1	89.1	1	2414.61	3.25	0	78.66	0	1.01	0	0	8.71	0	0	0	0	0	0	0.68	0.68
Inverter	MV4-13	369051	4908605	2	0	0	89.1	89.1	1	2415.74	3.25	0	78.66	0	1.01	0	0	8.71	0	0	0	0	0	0	0.68	0.68
Inverter	MV1-10	365004	4905564	2	0	0	97.3	97.3	1	6299.53	3.25	0	86.99	0	0.71	0	0	20.4	0	0	0	0	0	0	-10.78	-10.78
Inverter	MV1-14	365163	4905049	2	0	0	97.3	97.3	1	6309.35	3.25	0	87	0	0.71	0	0	20.41	0	0	0	0	0	0	-10.81	-10.81
Inverter	MV1-7	364925	4905782	2	0	0	97.3	97.3	1	6320.62	3.25	0	87.02	0	0.71	0	0	20.42	0	0	0	0	0	0	-10.84	-10.84
Inverter	MV3-2	368671	4907928	2	0	0	89.1	89.1	1	2483.65	3.25	0	78.9	0	1.02	0	0	8.82	0	0	0	0	0	0	0.31	0.31
Inverter	MV4-12	369043	4908803	2	0	0	89.1	89.1	1	2536.62	3.25	0	79.09	0	1.03	0	0	8.9	0	0	0	0	0	0	0.04	0.04
Westbrook Inverter Enclosur	W_INV1	369409	4906578	2	0	0	86.1	86.1	1	1798.16	3.25	0	76.1	0	0.86	0	0	7.71	0	0	0	0	0	0	1.39	1.39
Inverter	MV1-13	364731	4905241	2	0	0	97.3	97.3	1	6654.17	3.25	0	87.46	0	0.71	0	0	20.86	0	0	0	0	0	0	-11.72	-11.72
Inverter	MV3-4	368502	4907925	2	0	0	89.1	89.1	1	2646.32	3.25	0	79.45	0	1.06	0	0	9.07	0	0	0	0	0	0	-0.53	-0.53
Inverter	MV3-5	368340	4907843	2	0	0	89.1	89.1	1	2785.73	3.25	0	79.9	0	1.09	0	0	9.29	0	0	0	0	0	0	-1.23	-1.23
Inverter	MV3-1	368156	4907976	2	0	0	89.1	89.1	1	2994.45	3.25	0	80.53	0	1.15	0	0	9.61	0	0	0	0	0	0	-2.22	-2.22
Gardiner Substation	G_Sub	366586.3	4903349.9	2.5	0	0	90.8	90.8	1	5956.11	4.25	0	86.5	0	1.87	2.11	0.34	9.7	0	0	0	0	0	0	-9.4	-9.4
Inverter	MV2-2	365977	4906654	2	0	0	89.1	89.1	1	5127.62	3.25	0	85.2	0	1.67	0	0	12.63	0	0	0	0	0	0	-10.45	-10.45
Westbrook Inverter Transfor	W_INVTR6	369881	4906578	2	0	0	77.3	77.3	1	1375.14	3.25	0	73.77	0	-2.14	0	0	0.89	0	0	0	0	0	0	4.83	4.83
Westbrook Inverter Transfor	W_INVTR5	369725	4906574	2	0	0	77.3	77.3	1	1513.6	3.25	0	74.6	0	-2.21	0	0	0.96	0	0	0	0	0	0	3.99	3.99
Westbrook Inverter Transfor	W_INVTR7	369786	4906417	2	0	0	77.3	77.3	1	1541.24	3.25	0	74.76	0	-2.22	0	0	0.98	0	0	0	0	0	0	3.83	3.83
Westbrook Inverter Transfor	W_INVTR1	369403	4906578	2	0	0	78.2	78.2	1	1803.7	3.25	0	76.12	0	-2.33	0	0	1.11	0	0	0	0	0	0	3.34	3.34
Inverter	MV1-3	364440	4906039	2	0	0	89.1	89.1	1	6741.09	3.25	0	87.57	0	2.07	0	0	14.68	0	0	0	0	0	0	-15.26	-15.26
Westbrook Inverter Transfor	W_INVTR4	369679	4906164	2	0	0	77.3	77.3	1	1777.26	3.25	0	76	0	-2.32	0	0	1.1	0	0	0	0	0	0	2.57	2.57
Inverters	G_Inv2	366676.9	4903239.1	2	0	0	87.7	87.7	1	5962.67	3.25	0	86.51	0	2.92	0	0	6.94	0	0	0	0	0	0	-8.7	-8.7
Inverters	G_Inv4	366732.8	4903105	2	0	0	87.7	87.7	1	6013.81	3.25	0	86.58	0	2.92	0	0	6.99	0	0	0	0	0	0	-8.83	-8.83
Inverters	G_Inv6	366788.5	4902972	2	0	0	87.7	87.7	1	6067.35	3.25	0	86.66	0	2.92	0	0	7.05	0	0	0	0	0	0	-8.97	-8.97
Inverters	G_Inv1	366526.4	4903225.8	2	0	0	87.7	87.7	1	6083.17	3.25	0	86.68	0	2.92	0	0	7.06	0	0	0	0	0	0	-9.01	-9.01
Inverters	G_Inv8	366844.5	4902838.5	2	0	0	87.7	87.7	1	6123.98	3.25	0	86.74	0	2.92	0	0	7.1	0	0	0	0	0	0	-9.11	-9.11
Inverters	G_Inv3	366583.7	4903091.4	2	0	0	87.7	87.7	1	6131.41	3.25	0	86.75	0	2.92	0	0	7.11	0	0	0	0	0	0	-9.13	-9.13
Inverters	G_Inv10	366900.7	4902704.8	2	0	0	87.7	87.7	1	6183.5	3.25	0	86.82	0	2.92	0	0	7.17	0	0	0	0	0	0	-9.25	-9.25
Inverters	G_Inv5	366638.5	4902958.1	2	0	0	87.7	87.7	1	6183.74	3.25	0	86.83	0	2.92	0	0	7.17	0	0	0	0	0	0	-9.26	-9.26
Inverters	G_Inv7	366694.6	4902824.7	2	0	0	87.7	87.7	1	6238.12	3.25	0	86.9	0	2.93	0	0	7.22	0	0	0	0	0	0	-9.39	-9.39
Westbrook Inverter Transfor	W_INVTR3	369514	4906164	2	0	0	77.3	77.3	1	1908.9	3.25	0	76.62	0	-2.37	0	0	1.16	0	0	0	0	0	0	1.94	1.94

Westbrook Inverter Transfor	W_INVTR2	369368	4906388	2	0	0	77.3	77.3	1	1916.14	3.25	0	76.65	0	-2.37	0	0	1.17	0	0	0	0	0	0	1.9	1.9
Inverters	G_Inv9	366750.9	4902691.8	2	0	0	87.7	87.7	1	6294.86	3.25	0	86.98	0	2.93	0	0	7.28	0	0	0	0	0	0	-9.53	-9.53
Inverter Transformer	MV6-1 T	370230	4907364	2	0	0	69.4	69.4	1	841.83	3.25	0	69.5	0	1.53	0	0	3.58	0	0	0	0	0	0	-5.27	-5.27
Inverter Transformer	MV6-4 T	370244	4906966	2	0	0	69.4	69.4	1	878.75	3.25	0	69.88	0	1.57	0	0	3.64	0	0	0	0	0	0	-5.74	-5.74
Inverter Transformer	MV6-3 T	370202	4907140	2	0	0	56.1	56.1	1	875.32	3.25	0	69.84	0	-0.03	0	0	4.59	0	0	0	0	0	0	-18.34	-18.34
Inverter Transformer	MV6-2 T	370091	4907339	2	0	0	56.1	56.1	1	978.17	3.25	0	70.81	0	0	0	0	4.84	0	0	0	0	0	0	-19.59	-19.59
Inverter Transformer	MV2-1 T	365836	4906816	2	0	0	69.4	69.4	1	5251.01	3.25	0	85.4	0	3.06	0	0	7.55	0	0	0	0	0	0	-26.66	-26.66
Inverter Transformer	MV1-10 T	365010	4905564	2	0	0	69.4	69.4	1	6293.76	3.25	0	86.98	0	3.23	0	0	8.19	0	0	0	0	0	0	-29.05	-29.05
Inverter Transformer	MV1-14 T	365157	4905049	2	0	0	69.4	69.4	1	6314.96	3.25	0	87.01	0	3.23	0	0	8.21	0	0	0	0	0	0	-29.1	-29.1
Inverter Transformer	MV1-7 T	364919	4905782	2	0	0	69.4	69.4	1	6326.45	3.25	0	87.02	0	3.24	0	0	8.21	0	0	0	0	0	0	-29.12	-29.12
Inverter Transformer	MV1-13 T	364725	4905241	2	0	0	69.4	69.4	1	6659.88	3.25	0	87.47	0	3.28	0	0	8.41	0	0	0	0	0	0	-29.81	-29.81
Inverter Transformer	MV5-4 T	370330	4908707	2	0	0	56.1	56.1	1	1611.42	3.25	0	75.14	0	0.24	0	0	6.25	0	0	0	0	0	0	-25.58	-25.58
Inverter Transformer	MV5-6 T	369987	4908507	2	0	0	56.1	56.1	1	1639.11	3.25	0	75.29	0	0.25	0	0	6.31	0	0	0	0	0	0	-25.8	-25.8
Inverter Transformer	MV5-5 T	370021	4908690	2	0	0	56.1	56.1	1	1760.45	3.25	0	75.91	0	0.3	0	0	6.56	0	0	0	0	0	0	-26.72	-26.72
Inverter Transformer	MV5-3 T	370237	4908851	2	0	0	56.1	56.1	1	1782.09	3.25	0	76.02	0	0.31	0	0	6.61	0	0	0	0	0	0	-26.88	-26.88
Inverter Transformer	MV5-2 T	370011	4908853	2	0	0	56.1	56.1	1	1899.57	3.25	0	76.57	0	0.36	0	0	6.84	0	0	0	0	0	0	-27.72	-27.72
Inverter Transformer	MV5-1 T	370015	4909142	2	0	0	56.1	56.1	1	2143.86	3.25	0	77.62	0	0.46	0	0	7.32	0	0	0	0	0	0	-29.35	-29.35
Inverter Transformer	MV4-15 T	369170	4908481	2	0	0	56.1	56.1	1	2248.44	3.25	0	78.04	0	0.51	0	0	7.52	0	0	0	0	0	0	-30.01	-30.01
Inverter Transformer	MV4-14 T	369182	4908507	2	0	0	56.1	56.1	1	2252.45	3.25	0	78.05	0	0.51	0	0	7.53	0	0	0	0	0	0	-30.04	-30.04
Inverter Transformer	MV4-10 T	369307	4908858	2	0	0	56.1	56.1	1	2367.84	3.25	0	78.49	0	0.56	0	0	7.75	0	0	0	0	0	0	-30.74	-30.74
Inverter Transformer	MV3-20 T	368683	4907317	2	0	0	56.1	56.1	1	2384.39	3.25	0	78.55	0	0.57	0	0	7.78	0	0	0	0	0	0	-30.83	-30.83
Inverter Transformer	MV4-11 T	369269	4908855	2	0	0	56.1	56.1	1	2394.24	3.25	0	78.58	0	0.57	0	0	7.8	0	0	0	0	0	0	-30.89	-30.89
Inverter Transformer	MV3-14 T	368678	4907498	2	0	0	56.1	56.1	1	2399.48	3.25	0	78.6	0	0.57	0	0	7.81	0	0	0	0	0	0	-30.92	-30.92
Inverter Transformer	MV3-22 T	368661	4907142	2	0	0	56.1	56.1	1	2409.62	3.25	0	78.64	0	0.58	0	0	7.82	0	0	0	0	0	0	-30.98	-30.98
Inverter Transformer	MV4-13 T	369057	4908605	2	0	0	56.1	56.1	1	2410.74	3.25	0	78.64	0	0.58	0	0	7.83	0	0	0	0	0	0	-30.99	-30.99
Inverter Transformer	MV3-8 T	368685	4907712	2	0	0	56.1	56.1	1	2421.94	3.25	0	78.68	0	0.58	0	0	7.85	0	0	0	0	0	0	-31.05	-31.05
Inverter Transformer	MV3-2 T	368677	4907928	2	0	0	56.1	56.1	1	2477.87	3.25	0	78.88	0	0.61	0	0	7.95	0	0	0	0	0	0	-31.38	-31.38
Inverter Transformer	MV4-9 T	369284	4909001	2	0	0	56.1	56.1	1	2482.26	3.25	0	78.9	0	0.61	0	0	7.96	0	0	0	0	0	0	-31.4	-31.4
Inverter Transformer	MV4-8 T	369262	4909001	2	0	0	56.1	56.1	1	2498.11	3.25	0	78.95	0	0.62	0	0	7.99	0	0	0	0	0	0	-31.5	-31.5
Inverter Transformer	MV4-12 T	369049	4908803	2	0	0	56.1	56.1	1	2531.83	3.25	0	79.07	0	0.63	0	0	8.05	0	0	0	0	0	0	-31.69	-31.69
Inverter Transformer	MV3-16 T	368509	4907475	2	0	0	56.1	56.1	1	2565.89	3.25	0	79.18	0	0.64	0	0	8.11	0	0	0	0	0	0	-31.88	-31.88
Inverter Transformer	MV3-21 T	368484	4907206	2	0	0	56.1	56.1	1	2583.9	3.25	0	79.25	0	0.65	0	0	8.14	0	0	0	0	0	0	-31.98	-31.98
Inverter Transformer	MV3-9 T	368517	4907703	2	0	0	56.1	56.1	1	2585.84	3.25	0	79.25	0	0.65	0	0	8.14	0	0	0	0	0	0	-31.99	-31.99
Inverter Transformer	MV4-5 T	369283	4909199	2	0	0	56.1	56.1	1	2624.55	3.25	0	79.38	0	0.67	0	0	8.21	0	0	0	0	0	0	-32.21	-32.21
Inverter Transformer	MV3-4 T	368507	4907925	2	0	0	56.1	56.1	1	2641.48	3.25	0	79.44	0	0.68	0	0	8.24	0	0	0	0	0	0	-32.3	-32.3
Inverter Transformer	MV4-6 T	369249	4909192	2	0	0	56.1	56.1	1	2642.7	3.25	0	79.44	0	0.68	0	0	8.25	0	0	0	0	0	0	-32.31	-32.31
Inverter Transformer	MV4-7 T	369040	4909001	2	0	0	56.1	56.1	1	2662.94	3.25	0	79.51	0	0.69	0	0	8.28	0	0	0	0	0	0	-32.42	-32.42
Inverter Transformer	MV3-19 T	368352	4907347	2	0	0	56.1	56.1	1	2715.98	3.25	0	79.68	0	0.71	0	0	8.38	0	0	0	0	0	0	-32.71	-32.71
Inverter Transformer	MV3-15 T	368351	4907477	2	0	0	56.1	56.1	1	2723.58	3.25	0	79.7	0	0.71	0	0	8.39	0	0	0	0	0	0	-32.75	-32.75
Inverter Transformer	MV3-11 T	368340	4907662	2	0	0	56.1	56.1	1	2754.47	3.25	0	79.8	0	0.73	0	0	8.44	0	0	0	0	0	0	-32.91	-32.91
Inverter Transformer	MV4-2 T	369267	4909397	2	0	0	56.1	56.1	1	2783.37	3.25	0	79.89	0	0.74	0	0	8.5	0	0	0	0	0	0	-33.07	-33.07
Inverter Transformer	MV3-5 T	368335	4907843	2	0	0	56.1	56.1	1	2790.63	3.25	0	79.91	0	0.74	0	0	8.51	0	0	0	0	0	0	-33.1	-33.1
Inverter Transformer	MV4-4 T	369033	4909199	2	0	0	56.1	56.1	1	2800.5	3.25	0	79.94	0	0.74	0	0	8.53	0	0	0	0	0	0	-33.16	-33.16
Inverter Transformer	MV4-3 T	369234	4909397	2	0	0	56.1	56.1	1	2804.82	3.25	0	79.96	0	0.75	0	0	8.53	0	0	0	0	0	0	-33.18	-33.18
Inverter Transformer	MV3-17 T	368183	4907472	2	0	0	56.1	56.1	1	2890.79	3.25	0	80.22	0	0.78	0	0	8.68	0	0	0	0	0	0	-33.63	-33.63
Inverter Transformer	MV3-10 T	368162	4907669	2	0	0	56.1	56.1	1	2931.73	3.25	0	80.34	0	0.8	0	0	8.75	0	0	0	0	0	0	-33.84	-33.84
Inverter Transformer	MV4-1 T	369017	4909397	2	0	0	56.1	56.1	1	2951.21	3.25	0	80.4	0	0.81	0	0	8.79	0	0	0	0	0	0	-33.94	-33.94
Inverter Transformer	MV3-6 T	368156	4907834	2	0	0	56.1	56.1	1	2964.38	3.25	0	80.44	0	0.81	0	0	8.81	0	0	0	0	0	0	-34	-34
Inverter Transformer	MV3-1 T	368150	4907976	2	0	0	56.1	56.1	1	3000.28	3.25	0	80.54	0	0.83	0	0	8.87	0	0	0	0	0	0	-34.18	-34.18
Inverter Transformer	MV3-13 T	367958	4907577	2	0	0	56.1	56.1	1	3123.73	3.25	0	80.89	0	0.88	0	0	9.08	0	0	0	0	0	0	-34.79	-34.79
Inverter Transformer	MV3-7 T	367951	4907754	2	0	0	56.1	56.1	1	3152.75	3.25	0	80.97	0	0.89	0	0	9.12	0	0	0	0	0	0	-34.93	-34.93
Inverter Transformer	MV3-3 T	367944	4907927	2	0	0	56.1	56.1	1	3190.54	3.25	0	81.08	0	0.91	0	0	9.19	0	0	0	0	0	0	-35.12	-35.12
Inverter Transformer	MV3-18 T	367757	4907412	2	0	0	56.1	56.1	1	3312.88	3.25	0	81.4	0	0.96	0	0	9.39	0	0	0	0	0	0	-35.7	-35.7
Inverter Transformer	MV3-12 T	367674	4907594	2	0	0	56.1	56.1	1	3408.06	3.25	0	81.65	0	1	0	0	9.54	0	0	0	0	0	0	-36.13	-36.13
Inverter Transformer	MV2-2 T	365982	4906654	2	0	0	56.1	56.1	1	5122.66	3.25	0	85.19	0	1.67	0	0	12.01	0	0	0	0	0	0	-42.82	-42.82
Inverter Transformer	MV2-3 T	365814	4906641	2	0	0	56.1	56.1	1	5291	3.25	0	85.47	0	1.73	0	0	12.23	0	0	0	0	0	0	-43.37	-43.37
Inverter Transformer	MV2-4 T	365590	4906628	2	0	0	56.1	56.1	1	5514.97	3.25	0	85.83	0	1.81	0	0	12.51	0	0	0	0	0	0	-44.09	-44.09
Inverter Transformer	MV1-15 T	365309	4904994	2	0	0	56.1	56.1	1	6192.98	3.25	0	86.84	0	2.03	0	0	13.33	0	0	0	0	0	0	-46.13	-46.13
Inverter Transformer	MV1-12 T	365044	4905386	2	0	0	56.1	56.1	1	6311.98	3.25	0	87	0	2.06	0	0	13.47	0	0	0	0	0	0	-46.47	-46.47
Inverter Transformer	MV1-4 T	364821	4905918	2	0	0	56.1	56.1	1	6391.5	3.25	0	87.11	0	2.09	0	0	13.56	0	0	0	0	0	0	-46.7	-46.7
Inverter Transformer	MV1-2 T	364759	4906063	2	0	0	56.1	56.1	1	6423.19	3.25	0	87.16	0	2.09	0	0	13.59	0	0	0	0	0	0	-46.78	-46.78
Inverter Transformer	MV1-1 T	364721	4906166	2	0	0	56.1	56.1	1	6442	3.25	0	87.18	0	2.1	0	0	13.61	0	0	0	0	0	0	-46.84	-46.84
Inverter Transformer	MV1-8 T	364782	4905647	2	0	0	56.1	56.1	1	6492.18	3.25	0	87.25	0	2.12	0	0	13.67	0	0	0	0	0	0	-46.98	-46.98
Inverter Transformer	MV1-5 T	364676	4905892	2	0	0	56.1	56.1	1	6538.72	3.25	0	87.31	0	2.13	0	0	13.72	0	0	0	0	0	0	-47.1	-47.1
Inverter Transformer	MV1-11 T	364649	4905414	2	0	0	56.1	56.1	1	6682.09	3.25	0	87.5	0	2.17	0	0	13.88	0	0	0	0	0	0	-47.49	-47.49
Inverter Transformer	MV1-9 T	364555	4905646	2	0	0	56.1	56.1	1	6712.42	3.25	0	87.54	0	2.18	0	0	13.92	0	0	0	0	0	0	-47.58	-47.58
Inverter Transformer	MV1-6 T	364482	4905835	2	0	0	56.1	56.1	1	6740.4	3.25	0	87.57	0	2.19	0	0	13.95	0	0	0	0	0	0	-47.65	-47.65
Inverter Transformer	MV1-3 T	364435	4906039	2	0	0	56.1	56.1	1	6746.01	3.25	0	87.58	0	2.19	0	0	13.95	0	0	0	0	0	0	-47.67	-47.67
Line Reactor	NGR	369421	4908787.5	5	0	0	45.4	45.4	1	2236.07	5.25	0	77.99	0	3.36	1.29	0.08	0.92	0	0	0	0	0	0	-38.2	-38.2
Limit. Valu 0	0																								
Level D/N: 29.5202	29.5202																								

Receiver: Existing Noise Receptor
ID: S-R116

X: 371041
Y: 4907342
Z: 4.5
Ground: 0

ISO	Description	ID	X	Y	Z	Ground	ReflOrd	LxT	LxN	L/A	Dist.	hm	Freq	Adiv	K0b	Agr	Abar	z	Aatm	Afol	Ahous	Cmet	CmetN	Dc	RL	LtotT	LtotN
	Sol_Luce Substation	S_Substation	369426	4908792	3.5	0	0	112.1	112.1	1	2170.42	5.25	0	77.73	0	0.08	3.79	0.36	4.65	0	0	0	0	0	0	25.82	25.82
	Inverter	MV6-3	370207	4907140	2	0	0	100.3	100.3	1	858.12	3.25	0	69.67	0	-0.32	0	0	10.41	0	0	0	0	0	0	20.55	20.55
	Inverter	MV6-2	370085	4907339	2	0	0	100.3	100.3	1	956.01	3.25	0	70.61	0	-0.27	0	0	10.76	0	0	0	0	0	0	19.21	19.21
	Inverter	MV6-1	370235	4907364	2	0	0	97.3	97.3	1	806.3	3.25	0	69.13	0	-0.35	0	0	10.21	0	0	0	0	0	0	18.32	18.32
	Inverter	MV5-4	370324	4908707	2	0	0	100.3	100.3	1	1541.86	3.25	0	74.76	0	-0.02	0	0	12.43	0	0	0	0	0	0	13.14	13.14
	Inverter	MV5-5	370015	4908690	2	0	0	100.3	100.3	1	1694.04	3.25	0	75.58	0	0.03	0	0	12.79	0	0	0	0	0	0	11.91	11.91
	Inverter	MV5-3	370231	4908851	2	0	0	100.3	100.3	1	1712.66	3.25	0	75.67	0	0.04	0	0	12.83	0	0	0	0	0	0	11.77	11.77
	Inverter	MV5-2	370006	4908853	2	0	0	100.3	100.3	1	1831.49	3.25	0	76.26	0	0.08	0	0	13.1	0	0	0	0	0	0	10.88	10.88
	Inverter	MV5-1	370020	4909142	2	0	0	100.3	100.3	1	2069.41	3.25	0	77.32	0	0.15	0	0	13.61	0	0	0	0	0	0	9.24	9.24
	Inverter	MV4-10	369312	4908858	2	0	0	100.3	100.3	1	2299.5	3.25	0	78.23	0	0.21	0	0	14.07	0	0	0	0	0	0	7.8	7.8
	Inverter	MV4-11	369264	4908855	2	0	0	100.3	100.3	1	2333.86	3.25	0	78.36	0	0.22	0	0	14.14	0	0	0	0	0	0	7.59	7.59
	Inverter	MV3-20	368689	4907317	2	0	0	100.3	100.3	1	2352.13	3.25	0	78.43	0	0.22	0	0	14.17	0	0	0	0	0	0	7.49	7.49
	Inverter	MV3-14	368684	4907498	2	0	0	100.3	100.3	1	2362.16	3.25	0	78.47	0	0.22	0	0	14.19	0	0	0	0	0	0	7.43	7.43
	Inverter	MV3-8	368680	4907712	2	0	0	100.3	100.3	1	2389.82	3.25	0	78.57	0	0.23	0	0	14.25	0	0	0	0	0	0	7.27	7.27
	Inverter	MV4-9	369289	4909001	2	0	0	100.3	100.3	1	2412.84	3.25	0	78.65	0	0.24	0	0	14.29	0	0	0	0	0	0	7.13	7.13
	Inverter	MV4-8	369256	4909001	2	0	0	100.3	100.3	1	2436.91	3.25	0	78.74	0	0.24	0	0	14.34	0	0	0	0	0	0	7	7
	Inverter	MV3-16	368514	4907475	2	0	0	100.3	100.3	1	2530.5	3.25	0	79.06	0	0.26	0	0	14.52	0	0	0	0	0	0	6.47	6.47
	Inverter	MV4-5	369289	4909199	2	0	0	100.3	100.3	1	2553.03	3.25	0	79.14	0	0.27	0	0	14.56	0	0	0	0	0	0	6.34	6.34
	Inverter	MV3-9	368512	4907703	2	0	0	100.3	100.3	1	2554.64	3.25	0	79.15	0	0.27	0	0	14.56	0	0	0	0	0	0	6.33	6.33
	Inverter	MV3-21	368478	4907206	2	0	0	100.3	100.3	1	2566.61	3.25	0	79.19	0	0.27	0	0	14.58	0	0	0	0	0	0	6.27	6.27
	Inverter	MV4-6	369243	4909192	2	0	0	100.3	100.3	1	2579.79	3.25	0	79.23	0	0.28	0	0	14.61	0	0	0	0	0	0	6.2	6.2
	Inverter	MV4-7	369035	4909001	2	0	0	100.3	100.3	1	2603.14	3.25	0	79.31	0	0.28	0	0	14.65	0	0	0	0	0	0	6.07	6.07
	Inverter	MV3-19	368357	4907347	2	0	0	100.3	100.3	1	2684.01	3.25	0	79.58	0	0.3	0	0	14.8	0	0	0	0	0	0	5.64	5.64
	Inverter	MV3-15	368357	4907477	2	0	0	100.3	100.3	1	2687.39	3.25	0	79.59	0	0.3	0	0	14.81	0	0	0	0	0	0	5.62	5.62
	Inverter	MV4-2	369272	4909397	2	0	0	100.3	100.3	1	2711.53	3.25	0	79.66	0	0.3	0	0	14.85	0	0	0	0	0	0	5.49	5.49
	Inverter	MV3-11	368346	4907662	2	0	0	100.3	100.3	1	2713.93	3.25	0	79.67	0	0.3	0	0	14.86	0	0	0	0	0	0	5.48	5.48
	Inverter	MV4-4	369027	4909199	2	0	0	100.3	100.3	1	2739.46	3.25	0	79.75	0	0.31	0	0	14.9	0	0	0	0	0	0	5.35	5.35
	Inverter	MV4-3	369229	4909397	2	0	0	100.3	100.3	1	2739.78	3.25	0	79.75	0	0.31	0	0	14.9	0	0	0	0	0	0	5.34	5.34
	Inverter	MV3-17	368178	4907472	2	0	0	100.3	100.3	1	2865.95	3.25	0	80.15	0	0.34	0	0	15.13	0	0	0	0	0	0	4.7	4.7
	Inverter	MV4-1	369011	4909397	2	0	0	100.3	100.3	1	2888.59	3.25	0	80.21	0	0.34	0	0	15.17	0	0	0	0	0	0	4.58	4.58
	Inverter	MV3-10	368167	4907669	2	0	0	100.3	100.3	1	2892.54	3.25	0	80.23	0	0.34	0	0	15.18	0	0	0	0	0	0	4.56	4.56
	Inverter	MV3-6	368162	4907834	2	0	0	100.3	100.3	1	2920.74	3.25	0	80.31	0	0.35	0	0	15.23	0	0	0	0	0	0	4.42	4.42
	Inverter	MV3-13	367963	4907577	2	0	0	100.3	100.3	1	3086.96	3.25	0	80.79	0	0.38	0	0	15.53	0	0	0	0	0	0	3.62	3.62
	Inverter	MV3-7	367945	4907754	2	0	0	100.3	100.3	1	3123.29	3.25	0	80.89	0	0.39	0	0	15.59	0	0	0	0	0	0	3.45	3.45
	Inverter	MV3-3	367939	4907927	2	0	0	100.3	100.3	1	3156.68	3.25	0	80.98	0	0.39	0	0	15.65	0	0	0	0	0	0	3.29	3.29
	DSTATCOM - 10 MVAR #1	DSAT1	369437	4908757	2.5	0	0	96.6	96.6	1	2138.94	3.5	0	77.6	0	3.25	0	0	1.8	0	0	0	0	0	0	13.97	13.97
	Inverter	MV3-18	367752	4907412	2	0	0	100.3	100.3	1	3289.75	3.25	0	81.34	0	0.42	0	0	15.88	0	0	0	0	0	0	2.68	2.68
	DSTATCOM - 10 MVAR #2	DSAT2	369403	4908757	2.5	0	0	96.6	96.6	1	2164.55	3.5	0	77.71	0	3.26	0	0	1.82	0	0	0	0	0	0	13.85	13.85
	Inverter	MV3-12	367668	4907594	2	0	0	100.3	100.3	1	3382.4	3.25	0	81.58	0	0.43	0	0	16.03	0	0	0	0	0	0	2.26	2.26
	Inverter	MV6-4	370250	4906966	2	0	0	86.1	86.1	1	875.82	3.25	0	69.85	0	0.66	0	0	6.08	0	0	0	0	0	0	9.48	9.48
	SubstationTransformer	W_ST	369711.17	4906112.3	2.5	0	0	92	92	1	1811.27	4.25	0	76.16	0	0.68	3.41	0.2	4.04	0	0	0	0	0	0	7.68	7.68
	Westbrook Inverter Enclosur	W_INV6	369875	4906578	2	0	0	89.1	89.1	1	1394.01	3.25	0	73.89	0	0.77	0	0	7.02	0	0	0	0	0	0	7.38	7.38
	Inverter	MV2-3	365820	4906641	2	0	0	100.3	100.3	1	5267.85	3.25	0	85.43	0	0.66	0	0	18.97	0	0	0	0	0	0	-4.75	-4.75
	Inverter	MV2-4	365586	4906624	2	0	0	100.3	100.3	1	5502.05	3.25	0	85.81	0	0.68	0	0	19.3	0	0	0	0	0	0	-5.48	-5.48
	Westbrook Inverter Enclosur	W_INV5	369719	4906574	2	0	0	89.1	89.1	1	1528.89	3.25	0	74.69	0	0.8	0	0	7.26	0	0	0	0	0	0	6.31	6.31
	Westbrook Inverter Enclosur	W_INV7	369780	4906417	2	0	0	89.1	89.1	1	1563.89	3.25	0	74.88	0	0.81	0	0	7.32	0	0	0	0	0	0	6.05	6.05
	Inverter	MV5-6	369982	4908507	2	0	0	89.1	89.1	1	1574.39	3.25	0	74.94	0	0.81	0	0	7.34	0	0	0	0	0	0	5.97	5.97
	Inverter	MV1-15	365315	4904994	2	0	0	100.3	100.3	1	6188.71	3.25	0	86.83	0	0.71	0	0	20.25	0	0	0	0	0	0	-7.48	-7.48
	Inverter	MV1-12	365038	4905386	2	0	0	100.3	100.3	1	6313.63	3.25	0	87.01	0	0.71	0	0	20.41	0	0	0	0	0	0	-7.82	-7.82
	Inverter	MV1-4	364815	4905918	2	0	0	100.3	100.3	1	6386.77	3.25	0	87.11	0	0.71	0	0	20.51	0	0	0	0	0	0	-8.02	-8.02
	Inverter	MV1-2	364753	4906063	2	0	0	100.3	100.3	1	6416.76	3.25	0	87.15	0	0.71	0	0	20.55	0	0	0	0	0	0	-8.1	-8.1
	Inverter	MV1-1	364715	4906166	2	0	0	100.3	100.3	1	6434.38	3.25	0	87.17	0	0.71	0	0	20.57	0	0	0	0	0	0	-8.15	-8.15
	Inverter	MV1-8	364788	4905647	2	0	0	100.3	100.3	1	6478.66	3.25	0	87.23	0	0.71	0	0	20.63	0	0	0	0	0	0	-8.26	-8.26
	Inverter	MV1-5	364671	4905892	2	0	0	100.3	100.3	1	6532.95	3.25	0	87.3	0	0.71	0	0	20.7	0	0	0	0	0	0	-8.41	-8.41
	Westbrook Inverter Enclosur	W_INV4	369673	4906164	2	0	0	89.1	89.1	1	1805.3	3.25	0	76.13	0	0.86	0	0	7.72	0	0	0	0	0	0	4.34	4.34
	Inverter	MV1-11	364655	4905414	2	0	0	100.3	100.3	1	6670.7	3.25	0	87.48	0	0.71	0	0	20.88	0	0	0	0	0	0	-8.77	-8.77
	Inverter	MV1-9	364561	4905646	2	0	0	100.3	100.3	1	6698.27	3.25	0	87.52	0	0.71	0	0	20.92	0	0	0	0	0	0	-8.84	-8.84
	Inverter	MV1-6	364477	4905835	2	0	0	100.3	100.3	1	6734.77	3.25	0	87.57	0	0.71	0	0	20.96	0	0	0	0	0	0	-8.93	-8.93
	Westbrook Inverter Enclosur	W_INV2	369374	4906388	2	0	0	89.1	89.1	1	1920.68	3.25	0	76.67	0	0.89	0	0	7.92	0	0	0	0	0	0	3.59	3.59
	Westbrook Inverter Enclosur	W_INV3	369508	4906164	2	0	0	89.1	89.1	1	1933.33	3.25	0	76.73	0	0.89	0	0	7.94	0	0	0	0	0	0	3.5	3.5
	Fixed Reactor Bank 2	FRB2	369464	4908755	6	0	0	89.8	89.8	1	2117.43	5.25	0	77.52	0	-0.98	0	0	4.56	0	0	0	0	0	0	8.68	8.68
	Fixed Reactor Bank 1	FRB1	369378	4908755	6	0	0	89.8	89.8	1	2182.23	5.25	0	77.78	0	-0.97	0	0	4.67	0	0	0	0	0	0	8.3	8.3
	Inverter	MV2-1	365842	4906816	2	0	0	97.3	97.3	1	5225.54	3.25	0	85.36	0	0.66	0	0	18.91	0	0	0	0	0	0	-7.62	-7.62
	Inverter	MV4-15	369176	4908481	2	0	0	89.1	89.1	1	2185.3	3.25	0	77.79	0	0.95	0	0	8.35	0	0	0	0	0	0	1.97	1.97
	Inverter	MV4-14	369176	4908507	2	0	0	89.1	89.1	1	2198.97	3.25	0	77.84	0	0.95	0	0	8.37	0	0	0	0	0	0	1.89	1.89
	Inverter	MV4-13	369051	4908605	2	0	0	89.1	89.1	1	2356.96	3.25	0	78.45	0	0.99	0	0	8.62	0	0	0	0	0	0	1	1
	Inverter	MV3-22	368656	4907142	2	0	0	89.1	89.1	1	2393.37	3.25	0	78.58	0	1	0	0	8.68	0	0	0	0	0	0	0.8	0.8
	Inverter	MV1-10	365004	4905564	2	0	0	97.3	97.3	1	6293.38	3.25	0	86.98	0	0.71	0	0	20.39	0	0	0	0	0	0	-10.77	-10.77

Inverter	MV1-14	365163	4905049	2	0	0	97.3	97.3	1	6309.42	3.25	0	87	0	0.71	0	0	20.41	0	0	0	0	0	0	-10.81	-10.81
Inverter	MV1-7	364925	4905782	2	0	0	97.3	97.3	1	6311.82	3.25	0	87	0	0.71	0	0	20.41	0	0	0	0	0	0	-10.82	-10.82
Inverter	MV3-2	368671	4907928	2	0	0	89.1	89.1	1	2441.37	3.25	0	78.75	0	1.01	0	0	8.75	0	0	0	0	0	0	0.54	0.54
Inverter	MV4-12	369043	4908803	2	0	0	89.1	89.1	1	2475.18	3.25	0	78.87	0	1.02	0	0	8.81	0	0	0	0	0	0	0.36	0.36
Westbrook Inverter Enclosur	W_INV1	369409	4906578	2	0	0	86.1	86.1	1	1801.98	3.25	0	76.11	0	0.86	0	0	7.72	0	0	0	0	0	0	1.36	1.36
Inverter	MV1-13	364731	4905241	2	0	0	97.3	97.3	1	6650.59	3.25	0	87.46	0	0.71	0	0	20.85	0	0	0	0	0	0	-11.71	-11.71
Inverter	MV3-4	368502	4907925	2	0	0	89.1	89.1	1	2605.08	3.25	0	79.32	0	1.05	0	0	9.01	0	0	0	0	0	0	-0.32	-0.32
Inverter	MV3-5	368340	4907843	2	0	0	89.1	89.1	1	2747.07	3.25	0	79.78	0	1.09	0	0	9.23	0	0	0	0	0	0	-1.04	-1.04
Inverter	MV3-1	368156	4907976	2	0	0	89.1	89.1	1	2953.84	3.25	0	80.41	0	1.14	0	0	9.55	0	0	0	0	0	0	-2.03	-2.03
Gardiner Substation	G_Sub	366586.3	4903349.9	2.5	0	0	90.8	90.8	1	5981.74	4.25	0	86.54	0	1.87	2.11	0.34	9.72	0	0	0	0	0	0	-9.46	-9.46
Inverter	MV2-2	365977	4906654	2	0	0	89.1	89.1	1	5110.52	3.25	0	85.17	0	1.67	0	0	12.61	0	0	0	0	0	0	-10.39	-10.39
Westbrook Inverter Transfor	W_INVTR6	369881	4906578	2	0	0	77.3	77.3	1	1388.99	3.25	0	73.85	0	-2.15	0	0	0.9	0	0	0	0	0	0	4.74	4.74
Westbrook Inverter Transfor	W_INVTR5	369725	4906574	2	0	0	77.3	77.3	1	1523.71	3.25	0	74.66	0	-2.21	0	0	0.97	0	0	0	0	0	0	3.93	3.93
Westbrook Inverter Transfor	W_INVTR7	369786	4906417	2	0	0	77.3	77.3	1	1559.06	3.25	0	74.86	0	-2.23	0	0	0.98	0	0	0	0	0	0	3.73	3.73
Westbrook Inverter Transfor	W_INVTR1	369403	4906578	2	0	0	78.2	78.2	1	1807.41	3.25	0	76.14	0	-2.33	0	0	1.11	0	0	0	0	0	0	3.32	3.32
Inverter	MV1-3	364440	4906039	2	0	0	89.1	89.1	1	6728.37	3.25	0	87.56	0	2.06	0	0	14.66	0	0	0	0	0	0	-15.22	-15.22
Westbrook Inverter Transfor	W_INVTR4	369679	4906164	2	0	0	77.3	77.3	1	1800.76	3.25	0	76.11	0	-2.33	0	0	1.11	0	0	0	0	0	0	2.45	2.45
Inverters	G_Inv2	366676.9	4903239.1	2	0	0	87.7	87.7	1	5989.92	3.25	0	86.55	0	2.92	0	0	6.97	0	0	0	0	0	0	-8.77	-8.77
Inverters	G_Inv4	366732.8	4903105	2	0	0	87.7	87.7	1	6042.58	3.25	0	86.62	0	2.92	0	0	7.02	0	0	0	0	0	0	-8.9	-8.9
Inverters	G_Inv6	366788.5	4902972	2	0	0	87.7	87.7	1	6097.59	3.25	0	86.7	0	2.92	0	0	7.08	0	0	0	0	0	0	-9.04	-9.04
Inverters	G_Inv1	366526.4	4903225.8	2	0	0	87.7	87.7	1	6109.4	3.25	0	86.72	0	2.92	0	0	7.09	0	0	0	0	0	0	-9.07	-9.07
Inverters	G_Inv8	366844.5	4902838.5	2	0	0	87.7	87.7	1	6155.66	3.25	0	86.79	0	2.92	0	0	7.14	0	0	0	0	0	0	-9.19	-9.19
Inverters	G_Inv3	366583.7	4903091.4	2	0	0	87.7	87.7	1	6159.15	3.25	0	86.79	0	2.92	0	0	7.14	0	0	0	0	0	0	-9.19	-9.19
Inverters	G_Inv5	366638.5	4902958.1	2	0	0	87.7	87.7	1	6212.94	3.25	0	86.87	0	2.93	0	0	7.2	0	0	0	0	0	0	-9.33	-9.33
Inverters	G_Inv10	366900.7	4902704.8	2	0	0	87.7	87.7	1	6216.57	3.25	0	86.87	0	2.93	0	0	7.2	0	0	0	0	0	0	-9.34	-9.34
Inverters	G_Inv7	366694.6	4902824.7	2	0	0	87.7	87.7	1	6268.75	3.25	0	86.94	0	2.93	0	0	7.25	0	0	0	0	0	0	-9.46	-9.46
Westbrook Inverter Transfor	W_INVTR2	369368	4906388	2	0	0	77.3	77.3	1	1925.89	3.25	0	76.69	0	-2.38	0	0	1.17	0	0	0	0	0	0	1.86	1.86
Westbrook Inverter Transfor	W_INVTR3	369514	4906164	2	0	0	77.3	77.3	1	1928.58	3.25	0	76.7	0	-2.38	0	0	1.17	0	0	0	0	0	0	1.84	1.84
Inverters	G_Inv9	366750.9	4902691.8	2	0	0	87.7	87.7	1	6326.87	3.25	0	87.02	0	2.93	0	0	7.31	0	0	0	0	0	0	-9.61	-9.61
Inverter Transformer	MV6-1 T	370230	4907364	2	0	0	69.4	69.4	1	811.3	3.25	0	69.18	0	1.5	0	0	3.53	0	0	0	0	0	0	-4.87	-4.87
Inverter Transformer	MV6-4 T	370244	4906966	2	0	0	69.4	69.4	1	881.24	3.25	0	69.9	0	1.58	0	0	3.64	0	0	0	0	0	0	-5.77	-5.77
Inverter Transformer	MV6-3 T	370202	4907140	2	0	0	56.1	56.1	1	862.98	3.25	0	69.72	0	-0.03	0	0	4.55	0	0	0	0	0	0	-18.18	-18.18
Inverter Transformer	MV6-2 T	370091	4907339	2	0	0	56.1	56.1	1	950.01	3.25	0	70.55	0	0	0	0	4.77	0	0	0	0	0	0	-19.26	-19.26
Inverter Transformer	MV2-1 T	365836	4906816	2	0	0	69.4	69.4	1	5231.51	3.25	0	85.37	0	3.06	0	0	7.53	0	0	0	0	0	0	-26.61	-26.61
Inverter Transformer	MV1-10 T	365010	4905564	2	0	0	69.4	69.4	1	6287.63	3.25	0	86.97	0	3.23	0	0	8.19	0	0	0	0	0	0	-29.04	-29.04
Inverter Transformer	MV1-14 T	365157	4905049	2	0	0	69.4	69.4	1	6315.01	3.25	0	87.01	0	3.23	0	0	8.21	0	0	0	0	0	0	-29.1	-29.1
Inverter Transformer	MV1-7 T	364919	4905782	2	0	0	69.4	69.4	1	6317.63	3.25	0	87.01	0	3.23	0	0	8.21	0	0	0	0	0	0	-29.1	-29.1
Inverter Transformer	MV1-13 T	364725	4905241	2	0	0	69.4	69.4	1	6656.28	3.25	0	87.46	0	3.28	0	0	8.41	0	0	0	0	0	0	-29.8	-29.8
Inverter Transformer	MV5-4 T	370330	4908707	2	0	0	56.1	56.1	1	1539.08	3.25	0	74.75	0	0.21	0	0	6.1	0	0	0	0	0	0	-25	-25
Inverter Transformer	MV5-6 T	369987	4908507	2	0	0	56.1	56.1	1	1571.03	3.25	0	74.92	0	0.23	0	0	6.17	0	0	0	0	0	0	-25.26	-25.26
Inverter Transformer	MV5-5 T	370021	4908690	2	0	0	56.1	56.1	1	1690.42	3.25	0	75.56	0	0.28	0	0	6.42	0	0	0	0	0	0	-26.2	-26.2
Inverter Transformer	MV5-3 T	370237	4908851	2	0	0	56.1	56.1	1	1709.83	3.25	0	75.66	0	0.28	0	0	6.46	0	0	0	0	0	0	-26.34	-26.34
Inverter Transformer	MV5-2 T	370011	4908853	2	0	0	56.1	56.1	1	1828.67	3.25	0	76.24	0	0.33	0	0	6.7	0	0	0	0	0	0	-27.22	-27.22
Inverter Transformer	MV5-1 T	370015	4909142	2	0	0	56.1	56.1	1	2071.88	3.25	0	77.33	0	0.43	0	0	7.18	0	0	0	0	0	0	-28.89	-28.89
Inverter Transformer	MV4-15 T	369170	4908481	2	0	0	56.1	56.1	1	2190.43	3.25	0	77.81	0	0.48	0	0	7.41	0	0	0	0	0	0	-29.65	-29.65
Inverter Transformer	MV4-14 T	369182	4908507	2	0	0	56.1	56.1	1	2193.88	3.25	0	77.82	0	0.49	0	0	7.42	0	0	0	0	0	0	-29.67	-29.67
Inverter Transformer	MV4-10 T	369307	4908858	2	0	0	56.1	56.1	1	2303.26	3.25	0	78.25	0	0.53	0	0	7.63	0	0	0	0	0	0	-30.35	-30.35
Inverter Transformer	MV4-11 T	369269	4908855	2	0	0	56.1	56.1	1	2330.06	3.25	0	78.35	0	0.54	0	0	7.68	0	0	0	0	0	0	-30.51	-30.51
Inverter Transformer	MV4-13 T	369057	4908605	2	0	0	56.1	56.1	1	2351.9	3.25	0	78.43	0	0.55	0	0	7.72	0	0	0	0	0	0	-30.64	-30.64
Inverter Transformer	MV3-20 T	368683	4907317	2	0	0	56.1	56.1	1	2358.13	3.25	0	78.45	0	0.56	0	0	7.73	0	0	0	0	0	0	-30.68	-30.68
Inverter Transformer	MV3-14 T	368678	4907498	2	0	0	56.1	56.1	1	2368.15	3.25	0	78.49	0	0.56	0	0	7.75	0	0	0	0	0	0	-30.74	-30.74
Inverter Transformer	MV3-8 T	368685	4907712	2	0	0	56.1	56.1	1	2384.88	3.25	0	78.55	0	0.57	0	0	7.78	0	0	0	0	0	0	-30.84	-30.84
Inverter Transformer	MV3-22 T	368661	4907142	2	0	0	56.1	56.1	1	2388.39	3.25	0	78.56	0	0.57	0	0	7.78	0	0	0	0	0	0	-30.86	-30.86
Inverter Transformer	MV4-9 T	369284	4909001	2	0	0	56.1	56.1	1	2416.47	3.25	0	78.66	0	0.58	0	0	7.84	0	0	0	0	0	0	-31.02	-31.02
Inverter Transformer	MV4-8 T	369262	4909001	2	0	0	56.1	56.1	1	2432.51	3.25	0	78.72	0	0.59	0	0	7.87	0	0	0	0	0	0	-31.12	-31.12
Inverter Transformer	MV3-2 T	368677	4907928	2	0	0	56.1	56.1	1	2435.55	3.25	0	78.73	0	0.59	0	0	7.87	0	0	0	0	0	0	-31.13	-31.13
Inverter Transformer	MV4-12 T	369049	4908803	2	0	0	56.1	56.1	1	2470.34	3.25	0	78.86	0	0.6	0	0	7.94	0	0	0	0	0	0	-31.34	-31.34
Inverter Transformer	MV3-16 T	368509	4907475	2	0	0	56.1	56.1	1	2535.49	3.25	0	79.08	0	0.63	0	0	8.05	0	0	0	0	0	0	-31.71	-31.71
Inverter Transformer	MV3-9 T	368517	4907703	2	0	0	56.1	56.1	1	2549.69	3.25	0	79.13	0	0.64	0	0	8.08	0	0	0	0	0	0	-31.79	-31.79
Inverter Transformer	MV4-5 T	369283	4909199	2	0	0	56.1	56.1	1	2557.15	3.25	0	79.16	0	0.64	0	0	8.09	0	0	0	0	0	0	-31.83	-31.83
Inverter Transformer	MV3-21 T	368484	4907206	2	0	0	56.1	56.1	1	2560.62	3.25	0	79.17	0	0.64	0	0	8.1	0	0	0	0	0	0	-31.85	-31.85
Inverter Transformer	MV4-6 T	369249	4909192	2	0	0	56.1	56.1	1	2575.61	3.25	0	79.22	0	0.65	0	0	8.13	0	0	0	0	0	0	-31.93	-31.93
Inverter Transformer	MV4-7 T	369040	4909001	2	0	0	56.1	56.1	1	2599.29	3.25	0	79.3	0	0.66	0	0	8.17	0	0	0	0	0	0	-32.07	-32.07
Inverter Transformer	MV3-4 T	368507	4907925	2	0	0	56.1	56.1	1	2600.2	3.25	0	79.3	0	0.66	0	0	8.17	0	0	0	0	0	0	-32.07	-32.07
Inverter Transformer	MV3-19 T	368352	4907347	2	0	0	56.1	56.1	1	2689.01	3.25	0	79.59	0	0.7	0	0	8.33	0	0	0	0	0	0	-32.56	-32.56
Inverter Transformer	MV3-15 T	368351	4907477	2	0	0	56.1	56.1	1	2693.39	3.25	0	79.61	0	0.7	0	0	8.34	0	0	0	0	0	0	-32.58	-32.58
Inverter Transformer	MV4-2 T	369267	4909397	2	0	0	56.1	56.1	1	2714.79	3.25	0	79.67	0	0.71	0	0	8.37	0	0	0	0	0	0	-32.7	-32.7
Inverter Transformer	MV3-11 T	368340	4907662	2	0	0	56.1	56.1	1	2719.89	3.25	0	79.69	0	0.71	0	0	8.38	0	0	0	0	0	0	-32.73	-32.73
Inverter Transformer	MV4-4 T	369033	4909199	2	0	0	56.1	56.1	1	2735.05	3.25	0	79.74	0	0.72	0	0	8.41	0	0	0	0	0	0	-32.81	-32.81
Inverter Transformer	MV4-3 T	369234	4909397	2	0	0	56.1	56.1	1	2736.47	3.25	0	79.74	0	0.72	0	0	8.41	0	0	0	0	0	0	-32.82	-32.82
Inverter Transformer	MV3-5 T	368335	4907843	2	0	0	56.1	56.1	1	2751.99	3.25	0	79.79	0	0.72	0	0	8.44	0	0	0	0	0	0	-32.9	-32.9
Inverter Transformer	MV3-17 T	368183	4907472	2	0	0	56.1	56.1	1	2860.96	3.25	0	80.13	0	0.77	0	0	8.63	0	0	0	0	0	0	-33.47	-33.47
Inverter Transformer	MV4-1 T	369017	4909397	2	0	0	56.1	56.1	1	2884.37	3.25	0	80.2	0	0.78	0	0	8.67	0	0	0	0	0	0	-33.59	-33.59
Inverter Transformer	MV3-10 T	368162	4907669	2	0	0	56.1	56.1	1	2897.51	3.25	0	80.24	0	0.79	0	0	8.69	0	0	0	0	0	0	-33.66	-33.66

	Inverter Transformer	MV3-6 T	368156	4907834	2	0	0	56.1	56.1	1	2926.65	3.25	0	80.33	0	0.8	0	0	8.74	0	0	0	0	0	0	-33.81	-33.81
	Inverter Transformer	MV3-1 T	368150	4907976	2	0	0	56.1	56.1	1	2959.7	3.25	0	80.42	0	0.81	0	0	8.8	0	0	0	0	0	0	-33.98	-33.98
	Inverter Transformer	MV3-13 T	367958	4907577	2	0	0	56.1	56.1	1	3091.94	3.25	0	80.8	0	0.87	0	0	9.02	0	0	0	0	0	0	-34.64	-34.64
	Inverter Transformer	MV3-7 T	367951	4907754	2	0	0	56.1	56.1	1	3117.35	3.25	0	80.88	0	0.88	0	0	9.07	0	0	0	0	0	0	-34.76	-34.76
	Inverter Transformer	MV3-3 T	367944	4907927	2	0	0	56.1	56.1	1	3151.77	3.25	0	80.97	0	0.89	0	0	9.12	0	0	0	0	0	0	-34.93	-34.93
	Inverter Transformer	MV3-18 T	367757	4907412	2	0	0	56.1	56.1	1	3284.75	3.25	0	81.33	0	0.95	0	0	9.34	0	0	0	0	0	0	-35.56	-35.56
	Inverter Transformer	MV3-12 T	367674	4907594	2	0	0	56.1	56.1	1	3376.42	3.25	0	81.57	0	0.99	0	0	9.49	0	0	0	0	0	0	-35.99	-35.99
	Inverter Transformer	MV2-2 T	365982	4906654	2	0	0	56.1	56.1	1	5105.57	3.25	0	85.16	0	1.66	0	0	11.99	0	0	0	0	0	0	-42.76	-42.76
	Inverter Transformer	MV2-3 T	365814	4906641	2	0	0	56.1	56.1	1	5273.8	3.25	0	85.44	0	1.72	0	0	12.21	0	0	0	0	0	0	-43.32	-43.32
	Inverter Transformer	MV2-4 T	365590	4906628	2	0	0	56.1	56.1	1	5497.56	3.25	0	85.8	0	1.8	0	0	12.49	0	0	0	0	0	0	-44.04	-44.04
	Inverter Transformer	MV1-15 T	365309	4904994	2	0	0	56.1	56.1	1	6194.27	3.25	0	86.84	0	2.03	0	0	13.33	0	0	0	0	0	0	-46.14	-46.14
	Inverter Transformer	MV1-12 T	365044	4905386	2	0	0	56.1	56.1	1	6307.93	3.25	0	87	0	2.06	0	0	13.46	0	0	0	0	0	0	-46.46	-46.46
	Inverter Transformer	MV1-4 T	364821	4905918	2	0	0	56.1	56.1	1	6380.92	3.25	0	87.1	0	2.08	0	0	13.55	0	0	0	0	0	0	-46.67	-46.67
	Inverter Transformer	MV1-2 T	364759	4906063	2	0	0	56.1	56.1	1	6410.88	3.25	0	87.14	0	2.09	0	0	13.58	0	0	0	0	0	0	-46.75	-46.75
	Inverter Transformer	MV1-1 T	364721	4906166	2	0	0	56.1	56.1	1	6428.48	3.25	0	87.16	0	2.1	0	0	13.6	0	0	0	0	0	0	-46.8	-46.8
	Inverter Transformer	MV1-8 T	364782	4905647	2	0	0	56.1	56.1	1	6484.45	3.25	0	87.24	0	2.11	0	0	13.66	0	0	0	0	0	0	-46.95	-46.95
	Inverter Transformer	MV1-5 T	364676	4905892	2	0	0	56.1	56.1	1	6528.07	3.25	0	87.3	0	2.13	0	0	13.71	0	0	0	0	0	0	-47.07	-47.07
	Inverter Transformer	MV1-11 T	364649	4905414	2	0	0	56.1	56.1	1	6676.44	3.25	0	87.49	0	2.17	0	0	13.88	0	0	0	0	0	0	-47.48	-47.48
	Inverter Transformer	MV1-9 T	364555	4905646	2	0	0	56.1	56.1	1	6704.07	3.25	0	87.53	0	2.18	0	0	13.91	0	0	0	0	0	0	-47.55	-47.55
	Inverter Transformer	MV1-6 T	364482	4905835	2	0	0	56.1	56.1	1	6729.9	3.25	0	87.56	0	2.18	0	0	13.94	0	0	0	0	0	0	-47.62	-47.62
	Inverter Transformer	MV1-3 T	364435	4906039	2	0	0	56.1	56.1	1	6733.28	3.25	0	87.56	0	2.19	0	0	13.94	0	0	0	0	0	0	-47.63	-47.63
	Line Reactor	NGR	369421	4908787.5	5	0	0	45.4	45.4	1	2171.14	5.25	0	77.73	0	3.37	1.28	0.08	0.89	0	0	0	0	0	0	-37.92	-37.92
Limit. Valu	0	0																								
Level D/N:	29.8214	29.8214																								

Receiver: Existing Noise Receptor
ID: S-R117
X: 371006
Y: 4908401
Z: 4.5
Ground: 0

ISO	Description	ID	X	Y	Z	Ground	ReflOrd	LxT	LxN	L/A	Dist.	hm	Freq	Adiv	K0b	Agr	Abar	z	Aatm	Afol	Ahous	Cmet	CmetN	Dc	RL	LtotT	LtotN
	Sol_Luce Substation	S_Substation	369426	4908792	3.5	0	0	112.1	112.1	1	1627.66	5.25	0	75.23	0	0.15	4.94	0.46	3.72	0	0	0	0	0	0	28.03	28.03
	Inverter	MV5-4	370324	4908707	2	0	0	100.3	100.3	1	747.51	3.25	0	68.47	0	-0.38	0	0	9.96	0	0	0	0	0	0	22.27	22.27
	Inverter	MV5-3	370231	4908851	2	0	0	100.3	100.3	1	896.18	3.25	0	70.05	0	-0.3	0	0	10.55	0	0	0	0	0	0	20.01	20.01
	Inverter	MV5-5	370015	4908690	2	0	0	100.3	100.3	1	1032.28	3.25	0	71.28	0	-0.23	0	0	11.02	0	0	0	0	0	0	18.25	18.25
	Inverter	MV5-2	370006	4908853	2	0	0	100.3	100.3	1	1097.41	3.25	0	71.81	0	-0.2	0	0	11.22	0	0	0	0	0	0	17.48	17.48
	Inverter	MV5-1	370020	4909142	2	0	0	100.3	100.3	1	1233.4	3.25	0	72.82	0	-0.14	0	0	11.62	0	0	0	0	0	0	16.01	16.01
	Inverter	MV6-2	370085	4907339	2	0	0	100.3	100.3	1	1405.74	3.25	0	73.96	0	-0.07	0	0	12.09	0	0	0	0	0	0	14.34	14.34
	Inverter	MV6-3	370207	4907140	2	0	0	100.3	100.3	1	1492.83	3.25	0	74.48	0	-0.04	0	0	12.31	0	0	0	0	0	0	13.56	13.56
	Inverter	MV4-10	369312	4908858	2	0	0	100.3	100.3	1	1754.56	3.25	0	75.88	0	0.05	0	0	12.93	0	0	0	0	0	0	11.45	11.45
	Inverter	MV4-11	369264	4908855	2	0	0	100.3	100.3	1	1800.19	3.25	0	76.11	0	0.07	0	0	13.03	0	0	0	0	0	0	11.11	11.11
	Inverter	MV4-9	369289	4909001	2	0	0	100.3	100.3	1	1818.82	3.25	0	76.2	0	0.08	0	0	13.07	0	0	0	0	0	0	10.97	10.97
	Inverter	MV6-1	370235	4907364	2	0	0	97.3	97.3	1	1292.21	3.25	0	73.23	0	-0.11	0	0	11.78	0	0	0	0	0	0	12.42	12.42
	Inverter	MV4-8	369256	4909001	2	0	0	100.3	100.3	1	1850	3.25	0	76.34	0	0.08	0	0	13.14	0	0	0	0	0	0	10.74	10.74
	Inverter	MV4-5	369289	4909199	2	0	0	100.3	100.3	1	1893.38	3.25	0	76.54	0	0.1	0	0	13.23	0	0	0	0	0	0	10.44	10.44
	Inverter	MV4-6	369243	4909192	2	0	0	100.3	100.3	1	1932.32	3.25	0	76.72	0	0.11	0	0	13.32	0	0	0	0	0	0	10.16	10.16
	Inverter	MV4-2	369272	4909397	2	0	0	100.3	100.3	1	1999.69	3.25	0	77.02	0	0.13	0	0	13.46	0	0	0	0	0	0	9.7	9.7
	Inverter	MV4-3	369229	4909397	2	0	0	100.3	100.3	1	2037.09	3.25	0	77.18	0	0.14	0	0	13.54	0	0	0	0	0	0	9.45	9.45
	Inverter	MV4-7	369035	4909001	2	0	0	100.3	100.3	1	2060.3	3.25	0	77.28	0	0.15	0	0	13.59	0	0	0	0	0	0	9.3	9.3
	Inverter	MV4-4	369027	4909199	2	0	0	100.3	100.3	1	2133.83	3.25	0	77.58	0	0.17	0	0	13.74	0	0	0	0	0	0	8.82	8.82
	Inverter	MV4-1	369011	4909397	2	0	0	100.3	100.3	1	2229.81	3.25	0	77.97	0	0.19	0	0	13.93	0	0	0	0	0	0	8.22	8.22
	Inverter	MV3-8	368680	4907712	2	0	0	100.3	100.3	1	2425.9	3.25	0	78.7	0	0.24	0	0	14.32	0	0	0	0	0	0	7.06	7.06
	DSTATCOM - 10 MVAR #1	DSAT1	369437	4908757	2.5	0	0	96.6	96.6	1	1608.88	3.5	0	75.13	0	3.14	0	0	1.48	0	0	0	0	0	0	16.89	16.89
	Inverter	MV3-14	368684	4907498	2	0	0	100.3	100.3	1	2491.41	3.25	0	78.93	0	0.26	0	0	14.44	0	0	0	0	0	0	6.69	6.69
	DSTATCOM - 10 MVAR #2	DSAT2	369403	4908757	2.5	0	0	96.6	96.6	1	1642.06	3.5	0	75.31	0	3.14	0	0	1.5	0	0	0	0	0	0	16.68	16.68
	Inverter	MV3-20	368689	4907317	2	0	0	100.3	100.3	1	2558.04	3.25	0	79.16	0	0.27	0	0	14.57	0	0	0	0	0	0	6.32	6.32
	Inverter	MV3-9	368512	4907703	2	0	0	100.3	100.3	1	2589.84	3.25	0	79.27	0	0.28	0	0	14.63	0	0	0	0	0	0	6.14	6.14
	Inverter	MV3-16	368514	4907475	2	0	0	100.3	100.3	1	2658.49	3.25	0	79.49	0	0.29	0	0	14.76	0	0	0	0	0	0	5.77	5.77
	Inverter	MV3-11	368346	4907662	2	0	0	100.3	100.3	1	2760.75	3.25	0	79.82	0	0.31	0	0	14.94	0	0	0	0	0	0	5.23	5.23
	Inverter	MV3-21	368478	4907206	2	0	0	100.3	100.3	1	2796.21	3.25	0	79.93	0	0.32	0	0	15.01	0	0	0	0	0	0	5.05	5.05
	Inverter	MV3-15	368357	4907477	2	0	0	100.3	100.3	1	2805.53	3.25	0	79.96	0	0.32	0	0	15.02	0	0	0	0	0	0	5	5
	Inverter	MV3-19	368357	4907347	2	0	0	100.3	100.3	1	2850.99	3.25	0	80.1	0	0.33	0	0	15.11	0	0	0	0	0	0	4.77	4.77
	Inverter	MV3-6	368162	4907834	2	0	0	100.3	100.3	1	2899.97	3.25	0	80.25	0	0.34	0	0	15.19	0	0	0	0	0	0	4.53	4.53
	Inverter	MV3-10	368167	4907669	2	0	0	100.3	100.3	1	2931.85	3.25	0	80.34	0	0.35	0	0	15.25	0	0	0	0	0	0	4.37	4.37
	Inverter	MV3-17	368178	4907472	2	0	0	100.3	100.3	1	2976.68	3.25	0	80.47	0	0.36	0	0	15.33	0	0	0	0	0	0	4.15	4.15
	Inverter	MV3-3	367939	4907927	2	0	0	100.3	100.3	1	3103.41	3.25	0	80.84	0	0.38	0	0	15.55	0	0	0	0	0	0	3.54	3.54
	Inverter	MV3-7	367945	4907754	2	0	0	100.3	100.3	1	3128.63	3.25	0	80.91	0	0.39	0	0	15.6	0	0	0	0	0	0	3.42	3.42
	Inverter	MV3-13	367963	4907577	2	0	0	100.3	100.3	1	3152.59	3.25	0	80.97	0	0.39	0	0	15.64	0	0	0	0	0	0	3.31	3.31
	Inverter	MV3-18	367752	4907412	2	0	0	100.3	100.3	1	3400.98	3.25	0	81.63	0	0.43	0	0	16.06	0	0	0	0	0	0	2.18	2.18
	Inverter	MV3-12	367668	4907594	2	0	0	100.3	100.3	1	3434.17	3.25	0	81.72	0	0.44	0	0	16.12	0	0	0	0	0	0	2.03	2.03
	Inverter	MV5-6	369982	4908507	2	0	0	89.1	89.1	1	1029.47	3.25	0	71.25	0	0.69	0	0	6.37	0	0	0	0	0	0	10.74	10.74
	Fixed Reactor Bank 2	FRB2	369464	4908755	6	0	0	89.8	89.8	1	1582.11	5.25	0	74.98	0	-1.02	0	0	3.63	0	0	0	0	0	0	12.18	12.18

Inverter	MV2-3	365820	4906641	2	0	0	100.3	100.3	1	5476.51	3.25	0	85.77	0	0.68	0	0	19.27	0	0	0	0	0	0	-5.4	-5.4
Fixed Reactor Bank 1	FRB1	369378	4908755	6	0	0	89.8	89.8	1	1666.04	5.25	0	75.43	0	-1.02	0	0	3.78	0	0	0	0	0	0	11.58	11.58
Inverter	MV2-4	365586	4906624	2	0	0	100.3	100.3	1	5703.87	3.25	0	86.12	0	0.69	0	0	19.59	0	0	0	0	0	0	-6.09	-6.09
Inverter	MV1-15	365315	4904994	2	0	0	100.3	100.3	1	6632.88	3.25	0	87.43	0	0.71	0	0	20.83	0	0	0	0	0	0	-8.67	-8.67
Inverter	MV1-4	364815	4905918	2	0	0	100.3	100.3	1	6670.37	3.25	0	87.48	0	0.71	0	0	20.88	0	0	0	0	0	0	-8.77	-8.77
Inverter	MV1-2	364753	4906063	2	0	0	100.3	100.3	1	6675.8	3.25	0	87.49	0	0.71	0	0	20.89	0	0	0	0	0	0	-8.78	-8.78
Inverter	MV1-1	364715	4906166	2	0	0	100.3	100.3	1	6676.22	3.25	0	87.49	0	0.71	0	0	20.89	0	0	0	0	0	0	-8.78	-8.78
Inverter	MV1-12	365038	4905386	2	0	0	100.3	100.3	1	6686.35	3.25	0	87.5	0	0.71	0	0	20.9	0	0	0	0	0	0	-8.81	-8.81
Inverter	MV4-15	369176	4908481	2	0	0	89.1	89.1	1	1831.75	3.25	0	76.26	0	0.87	0	0	7.77	0	0	0	0	0	0	4.16	4.16
Inverter	MV4-14	369176	4908507	2	0	0	89.1	89.1	1	1833.07	3.25	0	76.26	0	0.87	0	0	7.77	0	0	0	0	0	0	4.16	4.16
Inverter	MV1-8	364788	4905647	2	0	0	100.3	100.3	1	6800.59	3.25	0	87.65	0	0.71	0	0	21.05	0	0	0	0	0	0	-9.1	-9.1
Inverter	MV1-5	364671	4905892	2	0	0	100.3	100.3	1	6813.76	3.25	0	87.67	0	0.71	0	0	21.06	0	0	0	0	0	0	-9.13	-9.13
SubstationTransformer	W_ST	369711.17	4906112.3	2.5	0	0	92	92	1	2629.61	3.5	0	79.4	0	-0.01	0	0	5.39	0	0	0	0	0	0	7.2	7.2
Inverter	MV1-9	364561	4905646	2	0	0	100.3	100.3	1	7009.14	3.25	0	87.91	0	0.71	0	0	21.31	0	0	0	0	0	0	-9.62	-9.62
Inverter	MV1-6	364477	4905835	2	0	0	100.3	100.3	1	7015.14	3.25	0	87.92	0	0.71	0	0	21.32	0	0	0	0	0	0	-9.64	-9.64
Inverter	MV1-11	364655	4905414	2	0	0	100.3	100.3	1	7018.36	3.25	0	87.92	0	0.71	0	0	21.32	0	0	0	0	0	0	-9.64	-9.64
Inverter	MV4-13	369051	4908605	2	0	0	89.1	89.1	1	1965.62	3.25	0	76.87	0	0.9	0	0	7.99	0	0	0	0	0	0	3.3	3.3
Inverter	MV4-12	369043	4908803	2	0	0	89.1	89.1	1	2003.74	3.25	0	77.04	0	0.91	0	0	8.05	0	0	0	0	0	0	3.06	3.06
Inverter	MV2-1	365842	4906816	2	0	0	97.3	97.3	1	5401.77	3.25	0	85.65	0	0.67	0	0	19.16	0	0	0	0	0	0	-8.17	-8.17
Westbrook Inverter Enclosur	W_INV6	369875	4906578	2	0	0	89.1	89.1	1	2145.34	3.25	0	77.63	0	0.94	0	0	8.28	0	0	0	0	0	0	2.21	2.21
Westbrook Inverter Enclosur	W_INV5	369719	4906574	2	0	0	89.1	89.1	1	2234.79	3.25	0	77.98	0	0.96	0	0	8.43	0	0	0	0	0	0	1.69	1.69
Inverter	MV6-4	370250	4906966	2	0	0	86.1	86.1	1	1621.96	3.25	0	75.2	0	0.82	0	0	7.42	0	0	0	0	0	0	2.62	2.62
Westbrook Inverter Enclosur	W_INV7	369780	4906417	2	0	0	89.1	89.1	1	2332.24	3.25	0	78.36	0	0.99	0	0	8.58	0	0	0	0	0	0	1.14	1.14
Inverter	MV3-2	368671	4907928	2	0	0	89.1	89.1	1	2382.43	3.25	0	78.54	0	1	0	0	8.66	0	0	0	0	0	0	0.86	0.86
Inverter	MV3-4	368502	4907925	2	0	0	89.1	89.1	1	2548.84	3.25	0	79.13	0	1.04	0	0	8.92	0	0	0	0	0	0	-0.03	-0.03
Inverter	MV1-7	364925	4905782	2	0	0	97.3	97.3	1	6621.01	3.25	0	87.42	0	0.71	0	0	20.82	0	0	0	0	0	0	-11.64	-11.64
Inverter	MV1-10	365004	4905564	2	0	0	97.3	97.3	1	6638.72	3.25	0	87.44	0	0.71	0	0	20.84	0	0	0	0	0	0	-11.68	-11.68
Westbrook Inverter Enclosur	W_INV2	369374	4906388	2	0	0	89.1	89.1	1	2591.45	3.25	0	79.27	0	1.05	0	0	8.99	0	0	0	0	0	0	-0.25	-0.25
Westbrook Inverter Enclosur	W_INV4	369673	4906164	2	0	0	89.1	89.1	1	2604.05	3.25	0	79.31	0	1.05	0	0	9.01	0	0	0	0	0	0	-0.31	-0.31
Inverter	MV1-14	365163	4905049	2	0	0	97.3	97.3	1	6736.21	3.25	0	87.57	0	0.71	0	0	20.96	0	0	0	0	0	0	-11.94	-11.94
Inverter	MV3-22	368656	4907142	2	0	0	89.1	89.1	1	2666.01	3.25	0	79.52	0	1.07	0	0	9.1	0	0	0	0	0	0	-0.63	-0.63
Westbrook Inverter Enclosur	W_INV3	369508	4906164	2	0	0	89.1	89.1	1	2692.24	3.25	0	79.6	0	1.07	0	0	9.15	0	0	0	0	0	0	-0.76	-0.76
Inverter	MV1-13	364731	4905241	2	0	0	97.3	97.3	1	7025.75	3.25	0	87.93	0	0.71	0	0	21.33	0	0	0	0	0	0	-12.66	-12.66
Inverter	MV3-5	368340	4907843	2	0	0	89.1	89.1	1	2723.77	3.25	0	79.7	0	1.08	0	0	9.19	0	0	0	0	0	0	-0.92	-0.92
Inverter	MV3-1	368156	4907976	2	0	0	89.1	89.1	1	2881.52	3.25	0	80.19	0	1.12	0	0	9.44	0	0	0	0	0	0	-1.69	-1.69
Westbrook Inverter Enclosur	W_INV1	369409	4906578	2	0	0	86.1	86.1	1	2423.58	3.25	0	78.69	0	1.01	0	0	8.73	0	0	0	0	0	0	-2.36	-2.36
Inverter	MV2-2	365977	4906654	2	0	0	89.1	89.1	1	5323.8	3.25	0	85.52	0	1.72	0	0	12.89	0	0	0	0	0	0	-11.08	-11.08
Gardiner Substation	G_Sub	366586.3	4903349.9	2.5	0	0	90.8	90.8	1	6711.73	4.25	0	87.54	0	2.01	1.96	0.36	10.47	0	0	0	0	0	0	-11.2	-11.2
Inverter	MV1-3	364440	4906039	2	0	0	89.1	89.1	1	6977.92	3.25	0	87.87	0	2.12	0	0	14.96	0	0	0	0	0	0	-15.9	-15.9
Inverters	G_Inv2	366676.9	4903239.1	2	0	0	87.7	87.7	1	6736.94	3.25	0	87.57	0	2.94	0	0	7.73	0	0	0	0	0	0	-10.58	-10.58
Inverters	G_Inv4	366732.8	4903105	2	0	0	87.7	87.7	1	6804.99	3.25	0	87.66	0	2.95	0	0	7.79	0	0	0	0	0	0	-10.74	-10.74
Inverters	G_Inv1	366526.4	4903225.8	2	0	0	87.7	87.7	1	6844.67	3.25	0	87.71	0	2.95	0	0	7.83	0	0	0	0	0	0	-10.83	-10.83
Inverters	G_Inv6	366788.5	4902972	2	0	0	87.7	87.7	1	6874.69	3.25	0	87.75	0	2.95	0	0	7.86	0	0	0	0	0	0	-10.9	-10.9
Inverters	G_Inv3	366583.7	4903091.4	2	0	0	87.7	87.7	1	6910.04	3.25	0	87.79	0	2.95	0	0	7.9	0	0	0	0	0	0	-10.98	-10.98
Inverters	G_Inv8	366844.5	4902838.5	2	0	0	87.7	87.7	1	6946.91	3.25	0	87.84	0	2.95	0	0	7.94	0	0	0	0	0	0	-11.06	-11.06
Inverters	G_Inv5	366638.5	4902958.1	2	0	0	87.7	87.7	1	6978.55	3.25	0	87.88	0	2.95	0	0	7.97	0	0	0	0	0	0	-11.13	-11.13
Inverters	G_Inv10	366900.7	4902704.8	2	0	0	87.7	87.7	1	7021.41	3.25	0	87.93	0	2.95	0	0	8.01	0	0	0	0	0	0	-11.23	-11.23
Westbrook Inverter Transfor	W_INVTR6	369881	4906578	2	0	0	77.3	77.3	1	2142.19	3.25	0	77.62	0	-2.45	0	0	1.27	0	0	0	0	0	0	0.91	0.91
Inverters	G_Inv7	366694.6	4902824.7	2	0	0	87.7	87.7	1	7048.64	3.25	0	87.96	0	2.95	0	0	8.04	0	0	0	0	0	0	-11.29	-11.29
Inverters	G_Inv9	366750.9	4902691.8	2	0	0	87.7	87.7	1	7120.45	3.25	0	88.05	0	2.95	0	0	8.11	0	0	0	0	0	0	-11.45	-11.45
Westbrook Inverter Transfor	W_INVTR1	369403	4906578	2	0	0	78.2	78.2	1	2427.54	3.25	0	78.7	0	-2.55	0	0	1.41	0	0	0	0	0	0	0.68	0.68
Westbrook Inverter Transfor	W_INVTR5	369725	4906574	2	0	0	77.3	77.3	1	2231.34	3.25	0	77.97	0	-2.48	0	0	1.32	0	0	0	0	0	0	0.54	0.54
Westbrook Inverter Transfor	W_INVTR7	369786	4906417	2	0	0	77.3	77.3	1	2329.09	3.25	0	78.34	0	-2.52	0	0	1.36	0	0	0	0	0	0	0.15	0.15
Westbrook Inverter Transfor	W_INVTR2	369368	4906388	2	0	0	77.3	77.3	1	2595.23	3.25	0	79.28	0	-2.6	0	0	1.48	0	0	0	0	0	0	-0.82	-0.82
Westbrook Inverter Transfor	W_INVTR4	369679	4906164	2	0	0	77.3	77.3	1	2600.98	3.25	0	79.3	0	-2.6	0	0	1.48	0	0	0	0	0	0	-0.84	-0.84
Westbrook Inverter Transfor	W_INVTR3	369514	4906164	2	0	0	77.3	77.3	1	2688.91	3.25	0	79.59	0	-2.63	0	0	1.52	0	0	0	0	0	0	-1.15	-1.15
Inverter Transformer	MV6-1 T	370230	4907364	2	0	0	69.4	69.4	1	1295.2	3.25	0	73.25	0	1.87	0	0	4.19	0	0	0	0	0	0	-9.96	-9.96
Inverter Transformer	MV6-4 T	370244	4906966	2	0	0	69.4	69.4	1	1624.77	3.25	0	75.22	0	2.03	0	0	4.57	0	0	0	0	0	0	-12.47	-12.47
Inverter Transformer	MV5-4 T	370330	4908707	2	0	0	56.1	56.1	1	742.04	3.25	0	68.41	0	-0.07	0	0	4.24	0	0	0	0	0	0	-16.53	-16.53
Inverter Transformer	MV5-3 T	370237	4908851	2	0	0	56.1	56.1	1	890.99	3.25	0	70	0	-0.02	0	0	4.62	0	0	0	0	0	0	-18.54	-18.54
Inverter Transformer	MV5-6 T	369987	4908507	2	0	0	56.1	56.1	1	1024.5	3.25	0	71.21	0	0.02	0	0	4.95	0	0	0	0	0	0	-20.12	-20.12
Inverter Transformer	MV5-5 T	370021	4908690	2	0	0	56.1	56.1	1	1026.52	3.25	0	71.23	0	0.02	0	0	4.95	0	0	0	0	0	0	-20.14	-20.14
Inverter Transformer	MV5-2 T	370011	4908853	2	0	0	56.1	56.1	1	1092.86	3.25	0	71.77	0	0.04	0	0	5.11	0	0	0	0	0	0	-20.87	-20.87
Inverter Transformer	MV2-1 T	365836	4906816	2	0	0	69.4	69.4	1	5407.51	3.25	0	85.66	0	3.09	0	0	7.65	0	0	0	0	0	0	-27.05	-27.05
Inverter Transformer	MV5-1 T	370015	4909142	2	0	0	56.1	56.1	1	1237.4	3.25	0	72.85	0	0.1	0	0	5.44	0	0	0	0	0	0	-22.33	-22.33
Inverter Transformer	MV6-2 T	370091	4907339	2	0	0	56.1	56.1	1	1401.81	3.25	0	73.93	0	0.16	0	0	5.81	0	0	0	0	0	0	-23.84	-23.84
Inverter Transformer	MV1-7 T	364919	4905782	2	0	0	69.4	69.4	1	6626.52	3.25	0	87.43	0	3.27	0	0	8.39	0	0	0	0	0	0	-29.74	-29.74
Inverter Transformer	MV1-10 T	365010	4905564	2	0	0	69.4	69.4	1	6633.29	3.25	0	87.43	0	3.28	0	0	8.39	0	0	0	0	0	0	-29.75	-29.75
Inverter Transformer	MV1-14 T	365157	4905049	2	0	0	69.4	69.4	1	6741.42	3.25	0	87.58	0	3.29	0	0	8.46	0	0	0	0	0	0	-29.97	-29.97
Inverter Transformer	MV6-3 T	370202	4907140	2	0	0	56.1	56.1	1	1495.51	3.25	0	74.5	0	0.2	0	0	6.01	0	0	0	0	0	0	-24.64	-24.64
Inverter Transformer	MV1-13 T	364725	4905241	2	0	0	69.4	69.4	1	7031.11	3.25	0	87.94	0	3.32	0	0	8.62	0	0	0	0	0	0	-30.53	-30.53
Inverter Transformer	MV4-10 T	369307	4908858	2	0	0	56.1	56.1	1	1759.39	3.25	0	75.91	0	0.3	0	0	6.56	0	0	0	0	0	0	-26.71	-26.71
Inverter Transformer	MV4-11 T	369269	4908855	2	0	0	56.1	56.1	1	1795.35	3.25	0	76.08	0	0.32	0	0	6.63	0	0	0	0	0	0	-26.98	-26.98
Inverter Transformer	MV4-9 T	369284	4909001	2	0	0	56.1	56.1	1	1823.54	3.25	0	76.22	0	0.33	0	0	6.69	0	0	0	0	0	0	-27.18	-27.18

	Inverter Transformer	MV4-14 T	369182	4908507	2	0	0	56.1	56.1	1	1827.08	3.25	0	76.24	0	0.33	0	0	6.7	0	0	0	0	0	0	-27.21	-27.21
	Inverter Transformer	MV4-15 T	369170	4908481	2	0	0	56.1	56.1	1	1837.74	3.25	0	76.29	0	0.34	0	0	6.72	0	0	0	0	0	0	-27.28	-27.28
	Inverter Transformer	MV4-8 T	369262	4909001	2	0	0	56.1	56.1	1	1844.33	3.25	0	76.32	0	0.34	0	0	6.73	0	0	0	0	0	0	-27.33	-27.33
	Inverter Transformer	MV4-5 T	369283	4909199	2	0	0	56.1	56.1	1	1898.83	3.25	0	76.57	0	0.36	0	0	6.84	0	0	0	0	0	0	-27.72	-27.72
	Inverter Transformer	MV4-6 T	369249	4909192	2	0	0	56.1	56.1	1	1926.85	3.25	0	76.7	0	0.37	0	0	6.9	0	0	0	0	0	0	-27.91	-27.91
	Inverter Transformer	MV4-13 T	369057	4908605	2	0	0	56.1	56.1	1	1959.65	3.25	0	76.84	0	0.39	0	0	6.96	0	0	0	0	0	0	-28.14	-28.14
	Inverter Transformer	MV4-12 T	369049	4908803	2	0	0	56.1	56.1	1	1997.86	3.25	0	77.01	0	0.4	0	0	7.04	0	0	0	0	0	0	-28.4	-28.4
	Inverter Transformer	MV4-2 T	369267	4909397	2	0	0	56.1	56.1	1	2004.03	3.25	0	77.04	0	0.41	0	0	7.05	0	0	0	0	0	0	-28.44	-28.44
	Inverter Transformer	MV4-3 T	369234	4909397	2	0	0	56.1	56.1	1	2032.73	3.25	0	77.16	0	0.42	0	0	7.11	0	0	0	0	0	0	-28.63	-28.63
	Inverter Transformer	MV4-7 T	369040	4909001	2	0	0	56.1	56.1	1	2055.52	3.25	0	77.26	0	0.43	0	0	7.15	0	0	0	0	0	0	-28.78	-28.78
	Inverter Transformer	MV4-4 T	369033	4909199	2	0	0	56.1	56.1	1	2128.27	3.25	0	77.56	0	0.46	0	0	7.29	0	0	0	0	0	0	-29.25	-29.25
	Inverter Transformer	MV4-1 T	369017	4909397	2	0	0	56.1	56.1	1	2224.44	3.25	0	77.94	0	0.5	0	0	7.48	0	0	0	0	0	0	-29.86	-29.86
	Inverter Transformer	MV3-2 T	368677	4907928	2	0	0	56.1	56.1	1	2376.55	3.25	0	78.52	0	0.56	0	0	7.76	0	0	0	0	0	0	-30.79	-30.79
	Inverter Transformer	MV3-8 T	368685	4907712	2	0	0	56.1	56.1	1	2421.11	3.25	0	78.68	0	0.58	0	0	7.84	0	0	0	0	0	0	-31.05	-31.05
	Inverter Transformer	MV3-14 T	368678	4907498	2	0	0	56.1	56.1	1	2497	3.25	0	78.95	0	0.62	0	0	7.98	0	0	0	0	0	0	-31.49	-31.49
	Inverter Transformer	MV3-4 T	368507	4907925	2	0	0	56.1	56.1	1	2543.93	3.25	0	79.11	0	0.64	0	0	8.07	0	0	0	0	0	0	-31.76	-31.76
	Inverter Transformer	MV3-20 T	368683	4907317	2	0	0	56.1	56.1	1	2563.47	3.25	0	79.18	0	0.64	0	0	8.1	0	0	0	0	0	0	-31.87	-31.87
	Inverter Transformer	MV3-9 T	368517	4907703	2	0	0	56.1	56.1	1	2585.02	3.25	0	79.25	0	0.65	0	0	8.14	0	0	0	0	0	0	-31.99	-31.99
	Inverter Transformer	MV3-22 T	368661	4907142	2	0	0	56.1	56.1	1	2661.6	3.25	0	79.5	0	0.69	0	0	8.28	0	0	0	0	0	0	-32.41	-32.41
	Inverter Transformer	MV3-16 T	368509	4907475	2	0	0	56.1	56.1	1	2663.17	3.25	0	79.51	0	0.69	0	0	8.28	0	0	0	0	0	0	-32.42	-32.42
	Inverter Transformer	MV3-5 T	368335	4907843	2	0	0	56.1	56.1	1	2728.66	3.25	0	79.72	0	0.71	0	0	8.4	0	0	0	0	0	0	-32.77	-32.77
	Inverter Transformer	MV3-11 T	368340	4907662	2	0	0	56.1	56.1	1	2766.53	3.25	0	79.84	0	0.73	0	0	8.47	0	0	0	0	0	0	-32.98	-32.98
	Inverter Transformer	MV3-21 T	368484	4907206	2	0	0	56.1	56.1	1	2790.79	3.25	0	79.91	0	0.74	0	0	8.51	0	0	0	0	0	0	-33.1	-33.1
	Inverter Transformer	MV3-15 T	368351	4907477	2	0	0	56.1	56.1	1	2811.19	3.25	0	79.98	0	0.75	0	0	8.54	0	0	0	0	0	0	-33.21	-33.21
	Inverter Transformer	MV3-19 T	368352	4907347	2	0	0	56.1	56.1	1	2855.63	3.25	0	80.11	0	0.77	0	0	8.62	0	0	0	0	0	0	-33.44	-33.44
	Inverter Transformer	MV3-1 T	368150	4907976	2	0	0	56.1	56.1	1	2887.45	3.25	0	80.21	0	0.78	0	0	8.68	0	0	0	0	0	0	-33.61	-33.61
	Inverter Transformer	MV3-6 T	368156	4907834	2	0	0	56.1	56.1	1	2905.86	3.25	0	80.27	0	0.79	0	0	8.71	0	0	0	0	0	0	-33.7	-33.7
	Inverter Transformer	MV3-10 T	368162	4907669	2	0	0	56.1	56.1	1	2936.69	3.25	0	80.36	0	0.8	0	0	8.76	0	0	0	0	0	0	-33.86	-33.86
	Inverter Transformer	MV3-17 T	368183	4907472	2	0	0	56.1	56.1	1	2971.93	3.25	0	80.46	0	0.82	0	0	8.82	0	0	0	0	0	0	-34.04	-34.04
	Inverter Transformer	MV3-3 T	367944	4907927	2	0	0	56.1	56.1	1	3098.47	3.25	0	80.82	0	0.87	0	0	9.03	0	0	0	0	0	0	-34.67	-34.67
	Inverter Transformer	MV3-7 T	367951	4907754	2	0	0	56.1	56.1	1	3122.76	3.25	0	80.89	0	0.88	0	0	9.07	0	0	0	0	0	0	-34.79	-34.79
	Inverter Transformer	MV3-13 T	367958	4907577	2	0	0	56.1	56.1	1	3157.42	3.25	0	80.99	0	0.9	0	0	9.13	0	0	0	0	0	0	-34.96	-34.96
	Inverter Transformer	MV3-18 T	367757	4907412	2	0	0	56.1	56.1	1	3396.19	3.25	0	81.62	0	1	0	0	9.52	0	0	0	0	0	0	-36.08	-36.08
	Inverter Transformer	MV3-12 T	367674	4907594	2	0	0	56.1	56.1	1	3428.33	3.25	0	81.7	0	1.01	0	0	9.57	0	0	0	0	0	0	-36.23	-36.23
	Inverter Transformer	MV2-2 T	365982	4906654	2	0	0	56.1	56.1	1	5319.08	3.25	0	85.52	0	1.74	0	0	12.27	0	0	0	0	0	0	-43.46	-43.46
	Inverter Transformer	MV2-3 T	365814	4906641	2	0	0	56.1	56.1	1	5482.2	3.25	0	85.78	0	1.79	0	0	12.47	0	0	0	0	0	0	-43.99	-43.99
	Line Reactor	NGR	369421	4908787.5	5	0	0	45.4	45.4	1	1631.44	5.25	0	75.25	0	3.41	1.24	0.04	0.67	0	0	0	0	0	0	-35.22	-35.22
	Inverter Transformer	MV2-4 T	365590	4906628	2	0	0	56.1	56.1	1	5698.82	3.25	0	86.12	0	1.87	0	0	12.74	0	0	0	0	0	0	-44.67	-44.67
	Inverter Transformer	MV1-15 T	365309	4904994	2	0	0	56.1	56.1	1	6638.03	3.25	0	87.44	0	2.16	0	0	13.83	0	0	0	0	0	0	-47.37	-47.37
	Inverter Transformer	MV1-4 T	364821	4905918	2	0	0	56.1	56.1	1	6664.8	3.25	0	87.48	0	2.17	0	0	13.86	0	0	0	0	0	0	-47.45	-47.45
	Inverter Transformer	MV1-2 T	364759	4906063	2	0	0	56.1	56.1	1	6670.18	3.25	0	87.48	0	2.17	0	0	13.87	0	0	0	0	0	0	-47.46	-47.46
	Inverter Transformer	MV1-1 T	364721	4906166	2	0	0	56.1	56.1	1	6670.57	3.25	0	87.48	0	2.17	0	0	13.87	0	0	0	0	0	0	-47.46	-47.46
	Inverter Transformer	MV1-12 T	365044	4905386	2	0	0	56.1	56.1	1	6680.99	3.25	0	87.5	0	2.17	0	0	13.88	0	0	0	0	0	0	-47.49	-47.49
	Inverter Transformer	MV1-8 T	364782	4905647	2	0	0	56.1	56.1	1	6806.08	3.25	0	87.66	0	2.21	0	0	14.02	0	0	0	0	0	0	-47.82	-47.82
	Inverter Transformer	MV1-5 T	364676	4905892	2	0	0	56.1	56.1	1	6809.11	3.25	0	87.66	0	2.21	0	0	14.02	0	0	0	0	0	0	-47.83	-47.83
	Inverter Transformer	MV1-3 T	364435	4906039	2	0	0	56.1	56.1	1	6982.63	3.25	0	87.88	0	2.25	0	0	14.21	0	0	0	0	0	0	-48.29	-48.29
	Inverter Transformer	MV1-6 T	364482	4905835	2	0	0	56.1	56.1	1	7010.49	3.25	0	87.91	0	2.26	0	0	14.24	0	0	0	0	0	0	-48.36	-48.36
	Inverter Transformer	MV1-9 T	364555	4905646	2	0	0	56.1	56.1	1	7014.66	3.25	0	87.92	0	2.26	0	0	14.25	0	0	0	0	0	0	-48.37	-48.37
	Inverter Transformer	MV1-11 T	364649	4905414	2	0	0	56.1	56.1	1	7023.79	3.25	0	87.93	0	2.27	0	0	14.26	0	0	0	0	0	0	-48.39	-48.39
Limit. Valu	0	0																								
Level D/N:	31.6969	31.6969																								

Receiver: Existing Noise Receptor
ID: S-R118
X: 371127
Y: 4908400
Z: 4.5
Ground: 0

ISO	Description	ID	X	Y	Z	Ground	ReflOrd	LxT	LxN	L/A	Dist.	hm	Freq	Adiv	K0b	Agr	Abar	z	Aatm	Afol	Ahous	Cmet	CmetN	Dc	RL	LtotT	LtotN
	Sol_Luce Substation	S_Substation	369426	4908792	3.5	0	0	112.1	112.1	1	1745.58	5.25	0	75.84	0	0.15	4.75	0.46	3.93	0	0	0	0	0	0	27.4	27.4
	Inverter	MV5-4	370324	4908707	2	0	0	100.3	100.3	1	859.69	3.25	0	69.69	0	-0.32	0	0	10.42	0	0	0	0	0	0	20.53	20.53
	Inverter	MV5-3	370231	4908851	2	0	0	100.3	100.3	1	1003.11	3.25	0	71.03	0	-0.24	0	0	10.92	0	0	0	0	0	0	18.61	18.61
	Inverter	MV5-5	370015	4908690	2	0	0	100.3	100.3	1	1149.2	3.25	0	72.21	0	-0.18	0	0	11.38	0	0	0	0	0	0	16.9	16.9
	Inverter	MV5-2	370006	4908853	2	0	0	100.3	100.3	1	1209.07	3.25	0	72.65	0	-0.15	0	0	11.55	0	0	0	0	0	0	16.26	16.26
	Inverter	MV5-1	370020	4909142	2	0	0	100.3	100.3	1	1332.67	3.25	0	73.49	0	-0.1	0	0	11.89	0	0	0	0	0	0	15.02	15.02
	Inverter	MV6-2	370085	4907339	2	0	0	100.3	100.3	1	1487.11	3.25	0	74.45	0	-0.04	0	0	12.29	0	0	0	0	0	0	13.61	13.61
	Inverter	MV6-3	370207	4907140	2	0	0	100.3	100.3	1	1560.13	3.25	0	74.86	0	-0.01	0	0	12.47	0	0	0	0	0	0	12.99	12.99
	Inverter	MV4-10	369312	4908858	2	0	0	100.3	100.3	1	1871.9	3.25	0	76.45	0	0.09	0	0	13.19	0	0	0	0	0	0	10.59	10.59
	Inverter	MV4-11	369264	4908855	2	0	0	100.3	100.3	1	1917.76	3.25	0	76.66	0	0.11	0	0	13.29	0	0	0	0	0	0	10.26	10.26
	Inverter	MV6-1	370235	4907364	2	0	0	97.3	97.3	1	1367.1	3.25	0	73.72	0	-0.08	0	0	11.98	0	0	0	0	0	0	11.7	11.7
	Inverter	MV4-9	369289	4909001	2	0	0	100.3	100.3	1	1933.77	3.25	0	76.73	0	0.11	0	0	13.32	0	0	0	0	0	0	10.15	10.15
	Inverter	MV4-8	369256	4909001	2	0	0	100.3	100.3	1	1965.16	3.25	0	76.87	0	0.12	0	0	13.39	0	0	0	0	0	0	9.94	9.94
	Inverter	MV4-5	369289	4909199	2	0	0	100.3	100.3	1	2004.16	3.25	0	77.04	0	0.13	0	0	13.47	0	0	0	0	0	0	9.67	9.67

Inverter	MV4-6	369243	4909192	2	0	0	100.3	100.3	1	2043.7	3.25	0	77.21	0	0.14	0	0	13.55	0	0	0	0	0	0	9.41	9.41
Inverter	MV4-2	369272	4909397	2	0	0	100.3	100.3	1	2105.95	3.25	0	77.47	0	0.16	0	0	13.68	0	0	0	0	0	0	9	9
Inverter	MV4-3	369229	4909397	2	0	0	100.3	100.3	1	2143.93	3.25	0	77.62	0	0.17	0	0	13.76	0	0	0	0	0	0	8.76	8.76
Inverter	MV4-7	369035	4909001	2	0	0	100.3	100.3	1	2176.62	3.25	0	77.76	0	0.18	0	0	13.83	0	0	0	0	0	0	8.55	8.55
Inverter	MV4-4	369027	4909199	2	0	0	100.3	100.3	1	2246.87	3.25	0	78.03	0	0.2	0	0	13.97	0	0	0	0	0	0	8.12	8.12
Inverter	MV4-1	369011	4909397	2	0	0	100.3	100.3	1	2339.12	3.25	0	78.38	0	0.22	0	0	14.15	0	0	0	0	0	0	7.56	7.56
Inverter	MV3-8	368680	4907712	2	0	0	100.3	100.3	1	2541.88	3.25	0	79.1	0	0.27	0	0	14.54	0	0	0	0	0	0	6.4	6.4
Inverter	MV3-14	368684	4907498	2	0	0	100.3	100.3	1	2604.2	3.25	0	79.31	0	0.28	0	0	14.65	0	0	0	0	0	0	6.06	6.06
DSTATCOM - 10 MVAR #1	DSAT1	369437	4908757	2.5	0	0	96.6	96.6	1	1727.3	3.5	0	75.75	0	3.16	0	0	1.55	0	0	0	0	0	0	16.17	16.17
Inverter	MV3-20	368689	4907317	2	0	0	100.3	100.3	1	2667.72	3.25	0	79.52	0	0.29	0	0	14.77	0	0	0	0	0	0	5.72	5.72
DSTATCOM - 10 MVAR #2	DSAT2	369403	4908757	2.5	0	0	96.6	96.6	1	1760.58	3.5	0	75.91	0	3.17	0	0	1.57	0	0	0	0	0	0	15.98	15.98
Inverter	MV3-9	368512	4907703	2	0	0	100.3	100.3	1	2706.3	3.25	0	79.65	0	0.3	0	0	14.84	0	0	0	0	0	0	5.52	5.52
Inverter	MV3-16	368514	4907475	2	0	0	100.3	100.3	1	2771.89	3.25	0	79.86	0	0.32	0	0	14.96	0	0	0	0	0	0	5.18	5.18
Inverter	MV3-11	368346	4907662	2	0	0	100.3	100.3	1	2877.26	3.25	0	80.18	0	0.34	0	0	15.15	0	0	0	0	0	0	4.64	4.64
Inverter	MV3-21	368478	4907206	2	0	0	100.3	100.3	1	2905.66	3.25	0	80.26	0	0.34	0	0	15.2	0	0	0	0	0	0	4.5	4.5
Inverter	MV3-15	368357	4907477	2	0	0	100.3	100.3	1	2919.73	3.25	0	80.31	0	0.35	0	0	15.23	0	0	0	0	0	0	4.43	4.43
Inverter	MV3-19	368357	4907347	2	0	0	100.3	100.3	1	2963.4	3.25	0	80.44	0	0.35	0	0	15.31	0	0	0	0	0	0	4.21	4.21
Inverter	MV3-6	368162	4907834	2	0	0	100.3	100.3	1	3018.54	3.25	0	80.6	0	0.37	0	0	15.4	0	0	0	0	0	0	3.95	3.95
Inverter	MV3-10	368167	4907669	2	0	0	100.3	100.3	1	3048.93	3.25	0	80.68	0	0.37	0	0	15.46	0	0	0	0	0	0	3.8	3.8
Inverter	MV3-17	368178	4907472	2	0	0	100.3	100.3	1	3091.57	3.25	0	80.8	0	0.38	0	0	15.53	0	0	0	0	0	0	3.6	3.6
Inverter	MV3-3	367939	4907927	2	0	0	100.3	100.3	1	3222.9	3.25	0	81.16	0	0.4	0	0	15.76	0	0	0	0	0	0	2.98	2.98
Inverter	MV3-7	367945	4907754	2	0	0	100.3	100.3	1	3246.91	3.25	0	81.23	0	0.41	0	0	15.8	0	0	0	0	0	0	2.87	2.87
Inverter	MV3-13	367963	4907577	2	0	0	100.3	100.3	1	3269.29	3.25	0	81.29	0	0.41	0	0	15.84	0	0	0	0	0	0	2.77	2.77
Inverter	MV3-18	367752	4907412	2	0	0	100.3	100.3	1	3516.64	3.25	0	81.92	0	0.45	0	0	16.26	0	0	0	0	0	0	1.68	1.68
Inverter	MV3-12	367668	4907594	2	0	0	100.3	100.3	1	3551.66	3.25	0	82.01	0	0.46	0	0	16.32	0	0	0	0	0	0	1.53	1.53
Inverter	MV5-6	369982	4908507	2	0	0	89.1	89.1	1	1149.99	3.25	0	72.21	0	0.72	0	0	6.59	0	0	0	0	0	0	9.54	9.54
Inverter	MV2-3	365820	4906641	2	0	0	100.3	100.3	1	5590.92	3.25	0	85.95	0	0.69	0	0	19.43	0	0	0	0	0	0	-5.75	-5.75
Fixed Reactor Bank 2	FRB2	369464	4908755	6	0	0	89.8	89.8	1	1700.47	5.25	0	75.61	0	-1.02	0	0	3.85	0	0	0	0	0	0	11.34	11.34
Inverter	MV2-4	365586	4906624	2	0	0	100.3	100.3	1	5818.67	3.25	0	86.3	0	0.7	0	0	19.75	0	0	0	0	0	0	-6.43	-6.43
Fixed Reactor Bank 1	FRB1	369378	4908755	6	0	0	89.8	89.8	1	1784.66	5.25	0	76.03	0	-1.01	0	0	3.99	0	0	0	0	0	0	10.76	10.76
Inverter	MV1-15	365315	4904994	2	0	0	100.3	100.3	1	6736.48	3.25	0	87.57	0	0.71	0	0	20.96	0	0	0	0	0	0	-8.94	-8.94
Inverter	MV1-4	364815	4905918	2	0	0	100.3	100.3	1	6782.45	3.25	0	87.63	0	0.71	0	0	21.02	0	0	0	0	0	0	-9.05	-9.05
Inverter	MV1-2	364753	4906063	2	0	0	100.3	100.3	1	6788.92	3.25	0	87.64	0	0.71	0	0	21.03	0	0	0	0	0	0	-9.07	-9.07
Inverter	MV1-1	364715	4906166	2	0	0	100.3	100.3	1	6790.03	3.25	0	87.64	0	0.71	0	0	21.03	0	0	0	0	0	0	-9.07	-9.07
Inverter	MV1-12	365038	4905386	2	0	0	100.3	100.3	1	6794.12	3.25	0	87.64	0	0.71	0	0	21.04	0	0	0	0	0	0	-9.08	-9.08
Inverter	MV1-8	364788	4905647	2	0	0	100.3	100.3	1	6911	3.25	0	87.79	0	0.71	0	0	21.19	0	0	0	0	0	0	-9.38	-9.38
Inverter	MV1-5	364671	4905892	2	0	0	100.3	100.3	1	6926.04	3.25	0	87.81	0	0.71	0	0	21.21	0	0	0	0	0	0	-9.42	-9.42
SubstationTransformer	W_ST	369711.17	4906112.3	2.5	0	0	92	92	1	2690.41	3.5	0	79.6	0	0	0	0	5.49	0	0	0	0	0	0	6.89	6.89
Inverter	MV1-9	364561	4905646	2	0	0	100.3	100.3	1	7120.17	3.25	0	88.05	0	0.71	0	0	21.45	0	0	0	0	0	0	-9.89	-9.89
Inverter	MV1-6	364477	4905835	2	0	0	100.3	100.3	1	7127.53	3.25	0	88.06	0	0.71	0	0	21.46	0	0	0	0	0	0	-9.91	-9.91
Inverter	MV1-11	364655	4905414	2	0	0	100.3	100.3	1	7127.62	3.25	0	88.06	0	0.71	0	0	21.46	0	0	0	0	0	0	-9.91	-9.91
Inverter	MV4-15	369176	4908481	2	0	0	89.1	89.1	1	1952.68	3.25	0	76.81	0	0.9	0	0	7.97	0	0	0	0	0	0	3.38	3.38
Inverter	MV4-14	369176	4908507	2	0	0	89.1	89.1	1	1953.93	3.25	0	76.82	0	0.9	0	0	7.97	0	0	0	0	0	0	3.37	3.37
Inverter	MV4-13	369051	4908605	2	0	0	89.1	89.1	1	2086.1	3.25	0	77.39	0	0.93	0	0	8.19	0	0	0	0	0	0	2.56	2.56
Inverter	MV4-12	369043	4908803	2	0	0	89.1	89.1	1	2122.61	3.25	0	77.54	0	0.94	0	0	8.24	0	0	0	0	0	0	2.34	2.34
Inverter	MV2-1	365842	4906816	2	0	0	97.3	97.3	1	5517.27	3.25	0	85.83	0	0.68	0	0	19.32	0	0	0	0	0	0	-8.53	-8.53
Westbrook Inverter Enclosur	W_INV6	369875	4906578	2	0	0	89.1	89.1	1	2210.7	3.25	0	77.89	0	0.96	0	0	8.39	0	0	0	0	0	0	1.82	1.82
Westbrook Inverter Enclosur	W_INV5	369719	4906574	2	0	0	89.1	89.1	1	2305.81	3.25	0	78.26	0	0.98	0	0	8.54	0	0	0	0	0	0	1.28	1.28
Inverter	MV6-4	370250	4906966	2	0	0	86.1	86.1	1	1680.92	3.25	0	75.51	0	0.83	0	0	7.52	0	0	0	0	0	0	2.2	2.2
Westbrook Inverter Enclosur	W_INV7	369780	4906417	2	0	0	89.1	89.1	1	2397.23	3.25	0	78.59	0	1	0	0	8.68	0	0	0	0	0	0	0.78	0.78
Inverter	MV3-2	368671	4907928	2	0	0	89.1	89.1	1	2500.95	3.25	0	78.96	0	1.03	0	0	8.85	0	0	0	0	0	0	0.22	0.22
Inverter	MV1-7	364925	4905782	2	0	0	97.3	97.3	1	6731.92	3.25	0	87.56	0	0.71	0	0	20.96	0	0	0	0	0	0	-11.92	-11.92
Inverter	MV1-10	365004	4905564	2	0	0	97.3	97.3	1	6747.89	3.25	0	87.58	0	0.71	0	0	20.98	0	0	0	0	0	0	-11.97	-11.97
Inverter	MV1-14	365163	4905049	2	0	0	97.3	97.3	1	6840.94	3.25	0	87.7	0	0.71	0	0	21.1	0	0	0	0	0	0	-12.2	-12.2
Westbrook Inverter Enclosur	W_INV4	369673	4906164	2	0	0	89.1	89.1	1	2667.17	3.25	0	79.52	0	1.07	0	0	9.11	0	0	0	0	0	0	-0.64	-0.64
Inverter	MV3-4	368502	4907925	2	0	0	89.1	89.1	1	2667.63	3.25	0	79.52	0	1.07	0	0	9.11	0	0	0	0	0	0	-0.64	-0.64
Westbrook Inverter Enclosur	W_INV2	369374	4906388	2	0	0	89.1	89.1	1	2668.55	3.25	0	79.53	0	1.07	0	0	9.11	0	0	0	0	0	0	-0.64	-0.64
Inverter	MV1-13	364731	4905241	2	0	0	97.3	97.3	1	7133.59	3.25	0	88.07	0	0.71	0	0	21.47	0	0	0	0	0	0	-12.93	-12.93
Westbrook Inverter Enclosur	W_INV3	369508	4906164	2	0	0	89.1	89.1	1	2760.59	3.25	0	79.82	0	1.09	0	0	9.25	0	0	0	0	0	0	-1.1	-1.1
Inverter	MV3-22	368656	4907142	2	0	0	89.1	89.1	1	2772.8	3.25	0	79.86	0	1.09	0	0	9.27	0	0	0	0	0	0	-1.16	-1.16
Inverter	MV3-5	368340	4907843	2	0	0	89.1	89.1	1	2842.12	3.25	0	80.07	0	1.11	0	0	9.38	0	0	0	0	0	0	-1.5	-1.5
Inverter	MV3-1	368156	4907976	2	0	0	89.1	89.1	1	3001.1	3.25	0	80.55	0	1.15	0	0	9.62	0	0	0	0	0	0	-2.25	-2.25
Westbrook Inverter Enclosur	W_INV1	369409	4906578	2	0	0	86.1	86.1	1	2504.24	3.25	0	78.97	0	1.03	0	0	8.85	0	0	0	0	0	0	-2.79	-2.79
Inverter	MV2-2	365977	4906654	2	0	0	89.1	89.1	1	5437.92	3.25	0	85.71	0	1.75	0	0	13.04	0	0	0	0	0	0	-11.44	-11.44
Gardiner Substation	G_Sub	366586.3	4903349.9	2.5	0	0	90.8	90.8	1	6791.28	4.25	0	87.64	0	2.03	1.94	0.36	10.55	0	0	0	0	0	0	-11.38	-11.38
Inverter	MV1-3	364440	4906039	2	0	0	89.1	89.1	1	7091.57	3.25	0	88.01	0	2.15	0	0	15.09	0	0	0	0	0	0	-16.2	-16.2
Inverters	G_Inv2	366676.9	4903239.1	2	0	0	87.7	87.7	1	6814.56	3.25	0	87.67	0	2.95	0	0	7.8	0	0	0	0	0	0	-10.76	-10.76
Inverters	G_Inv4	366732.8	4903105	2	0	0	87.7	87.7	1	6880.84	3.25	0	87.75	0	2.95	0	0	7.87	0	0	0	0	0	0	-10.91	-10.91
Inverters	G_Inv1	366526.4	4903225.8	2	0	0	87.7	87.7	1	6923.72	3.25	0	87.81	0	2.95	0	0	7.91	0	0	0	0	0	0	-11.01	-11.01
Inverters	G_Inv6	366788.5	4902972	2	0	0	87.7	87.7	1	6948.8	3.25	0	87.84	0	2.95	0	0	7.94	0	0	0	0	0	0	-11.07	-11.07
Inverters	G_Inv3	366583.7	4903091.4	2	0	0	87.7	87.7	1	6987.33	3.25	0	87.89	0	2.95	0	0	7.98	0	0	0	0	0	0	-11.15	-11.15
Inverters	G_Inv8	366844.5	4902838.5	2	0	0	87.7	87.7	1	7019.27	3.25	0	87.93	0	2.95	0	0	8.01	0	0	0	0	0	0	-11.23	-11.23
Inverters	G_Inv5	366638.5	4902958.1	2	0	0	87.7	87.7	1	7054.14	3.25	0	87.97	0	2.95	0	0	8.04	0	0	0	0	0	0	-11.3	-11.3
Inverters	G_Inv10	366900.7	4902704.8	2	0	0	87.7	87.7	1	7092.03	3.25	0	88.02	0	2.95	0	0	8.08	0	0	0	0	0	0	-11.39	-11.39

Inverters	G_Inv7	366694.6	4902824.7	2	0	0	87.7	87.7	1	7122.51	3.25	0	88.05	0	2.95	0	0	8.11	0	0	0	0	0	0	-11.46	-11.46
Inverters	G_Inv9	366750.9	4902691.8	2	0	0	87.7	87.7	1	7192.62	3.25	0	88.14	0	2.95	0	0	8.18	0	0	0	0	0	0	-11.61	-11.61
Westbrook Inverter Transfor	W_INVTR6	369881	4906578	2	0	0	77.3	77.3	1	2207.31	3.25	0	77.88	0	-2.48	0	0	1.3	0	0	0	0	0	0	0.64	0.64
Westbrook Inverter Transfor	W_INVTR1	369403	4906578	2	0	0	78.2	78.2	1	2508.36	3.25	0	78.99	0	-2.57	0	0	1.44	0	0	0	0	0	0	0.38	0.38
Westbrook Inverter Transfor	W_INVTR5	369725	4906574	2	0	0	77.3	77.3	1	2302.15	3.25	0	78.24	0	-2.51	0	0	1.35	0	0	0	0	0	0	0.26	0.26
Westbrook Inverter Transfor	W_INVTR7	369786	4906417	2	0	0	77.3	77.3	1	2393.86	3.25	0	78.58	0	-2.54	0	0	1.39	0	0	0	0	0	0	-0.09	-0.09
Westbrook Inverter Transfor	W_INVTR4	369679	4906164	2	0	0	77.3	77.3	1	2663.91	3.25	0	79.51	0	-2.62	0	0	1.51	0	0	0	0	0	0	-1.06	-1.06
Westbrook Inverter Transfor	W_INVTR2	369368	4906388	2	0	0	77.3	77.3	1	2672.5	3.25	0	79.54	0	-2.62	0	0	1.52	0	0	0	0	0	0	-1.09	-1.09
Westbrook Inverter Transfor	W_INVTR3	369514	4906164	2	0	0	77.3	77.3	1	2757.08	3.25	0	79.81	0	-2.65	0	0	1.55	0	0	0	0	0	0	-1.37	-1.37
Inverter Transformer	MV6-1 T	370230	4907364	2	0	0	69.4	69.4	1	1370.37	3.25	0	73.74	0	1.91	0	0	4.28	0	0	0	0	0	0	-10.58	-10.58
Inverter Transformer	MV6-4 T	370244	4906966	2	0	0	69.4	69.4	1	1684.06	3.25	0	75.53	0	2.05	0	0	4.64	0	0	0	0	0	0	-12.87	-12.87
Inverter Transformer	MV5-4 T	370330	4908707	2	0	0	56.1	56.1	1	854.09	3.25	0	69.63	0	-0.04	0	0	4.53	0	0	0	0	0	0	-18.07	-18.07
Inverter Transformer	MV5-3 T	370237	4908851	2	0	0	56.1	56.1	1	997.75	3.25	0	70.98	0	0.01	0	0	4.88	0	0	0	0	0	0	-19.82	-19.82
Inverter Transformer	MV5-5 T	370021	4908690	2	0	0	56.1	56.1	1	1143.39	3.25	0	72.16	0	0.06	0	0	5.23	0	0	0	0	0	0	-21.39	-21.39
Inverter Transformer	MV5-6 T	369987	4908507	2	0	0	56.1	56.1	1	1145.01	3.25	0	72.18	0	0.06	0	0	5.23	0	0	0	0	0	0	-21.41	-21.41
Inverter Transformer	MV2-1 T	365836	4906816	2	0	0	69.4	69.4	1	5523.02	3.25	0	85.84	0	3.11	0	0	7.72	0	0	0	0	0	0	-27.33	-27.33
Inverter Transformer	MV5-2 T	370011	4908853	2	0	0	56.1	56.1	1	1204.44	3.25	0	72.62	0	0.09	0	0	5.37	0	0	0	0	0	0	-22.01	-22.01
Inverter Transformer	MV5-1 T	370015	4909142	2	0	0	56.1	56.1	1	1336.83	3.25	0	73.52	0	0.14	0	0	5.66	0	0	0	0	0	0	-23.26	-23.26
Inverter Transformer	MV1-7 T	364919	4905782	2	0	0	69.4	69.4	1	6737.45	3.25	0	87.57	0	3.29	0	0	8.45	0	0	0	0	0	0	-29.96	-29.96
Inverter Transformer	MV1-10 T	365010	4905564	2	0	0	69.4	69.4	1	6742.45	3.25	0	87.58	0	3.29	0	0	8.46	0	0	0	0	0	0	-29.97	-29.97
Inverter Transformer	MV1-14 T	365157	4905049	2	0	0	69.4	69.4	1	6846.17	3.25	0	87.71	0	3.3	0	0	8.51	0	0	0	0	0	0	-30.17	-30.17
Inverter Transformer	MV6-2 T	370091	4907339	2	0	0	56.1	56.1	1	1482.91	3.25	0	74.42	0	0.19	0	0	5.98	0	0	0	0	0	0	-24.54	-24.54
Inverter Transformer	MV1-13 T	364725	4905241	2	0	0	69.4	69.4	1	7138.97	3.25	0	88.07	0	3.33	0	0	8.68	0	0	0	0	0	0	-30.73	-30.73
Inverter Transformer	MV6-3 T	370202	4907140	2	0	0	56.1	56.1	1	1563.08	3.25	0	74.88	0	0.22	0	0	6.15	0	0	0	0	0	0	-25.2	-25.2
Inverter Transformer	MV4-10 T	369307	4908858	2	0	0	56.1	56.1	1	1876.74	3.25	0	76.47	0	0.35	0	0	6.8	0	0	0	0	0	0	-27.56	-27.56
Inverter Transformer	MV4-11 T	369269	4908855	2	0	0	56.1	56.1	1	1912.9	3.25	0	76.63	0	0.37	0	0	6.87	0	0	0	0	0	0	-27.81	-27.81
Inverter Transformer	MV4-9 T	369284	4909001	2	0	0	56.1	56.1	1	1938.52	3.25	0	76.75	0	0.38	0	0	6.92	0	0	0	0	0	0	-27.99	-27.99
Inverter Transformer	MV4-14 T	369182	4908507	2	0	0	56.1	56.1	1	1947.94	3.25	0	76.79	0	0.38	0	0	6.94	0	0	0	0	0	0	-28.06	-28.06
Inverter Transformer	MV4-15 T	369170	4908481	2	0	0	56.1	56.1	1	1958.68	3.25	0	76.84	0	0.39	0	0	6.96	0	0	0	0	0	0	-28.13	-28.13
Inverter Transformer	MV4-8 T	369262	4909001	2	0	0	56.1	56.1	1	1959.45	3.25	0	76.84	0	0.39	0	0	6.96	0	0	0	0	0	0	-28.13	-28.13
Inverter Transformer	MV4-5 T	369283	4909199	2	0	0	56.1	56.1	1	2009.66	3.25	0	77.06	0	0.41	0	0	7.06	0	0	0	0	0	0	-28.47	-28.47
Inverter Transformer	MV4-6 T	369249	4909192	2	0	0	56.1	56.1	1	2038.17	3.25	0	77.18	0	0.42	0	0	7.12	0	0	0	0	0	0	-28.66	-28.66
Inverter Transformer	MV4-13 T	369057	4908605	2	0	0	56.1	56.1	1	2080.13	3.25	0	77.36	0	0.44	0	0	7.2	0	0	0	0	0	0	-28.94	-28.94
Inverter Transformer	MV4-2 T	369267	4909397	2	0	0	56.1	56.1	1	2110.36	3.25	0	77.49	0	0.45	0	0	7.26	0	0	0	0	0	0	-29.14	-29.14
Inverter Transformer	MV4-12 T	369049	4908803	2	0	0	56.1	56.1	1	2116.72	3.25	0	77.51	0	0.45	0	0	7.27	0	0	0	0	0	0	-29.18	-29.18
Inverter Transformer	MV4-3 T	369234	4909397	2	0	0	56.1	56.1	1	2139.5	3.25	0	77.61	0	0.46	0	0	7.31	0	0	0	0	0	0	-29.33	-29.33
Inverter Transformer	MV4-7 T	369040	4909001	2	0	0	56.1	56.1	1	2171.81	3.25	0	77.74	0	0.48	0	0	7.38	0	0	0	0	0	0	-29.53	-29.53
Inverter Transformer	MV4-4 T	369033	4909199	2	0	0	56.1	56.1	1	2241.26	3.25	0	78.01	0	0.51	0	0	7.51	0	0	0	0	0	0	-29.97	-29.97
Inverter Transformer	MV4-1 T	369017	4909397	2	0	0	56.1	56.1	1	2333.69	3.25	0	78.36	0	0.55	0	0	7.68	0	0	0	0	0	0	-30.53	-30.53
Inverter Transformer	MV3-2 T	368677	4907928	2	0	0	56.1	56.1	1	2495.05	3.25	0	78.94	0	0.61	0	0	7.98	0	0	0	0	0	0	-31.48	-31.48
Inverter Transformer	MV3-8 T	368685	4907712	2	0	0	56.1	56.1	1	2537.07	3.25	0	79.09	0	0.63	0	0	8.06	0	0	0	0	0	0	-31.72	-31.72
Inverter Transformer	MV3-14 T	368678	4907498	2	0	0	56.1	56.1	1	2609.83	3.25	0	79.33	0	0.66	0	0	8.19	0	0	0	0	0	0	-32.13	-32.13
Inverter Transformer	MV3-4 T	368507	4907925	2	0	0	56.1	56.1	1	2662.71	3.25	0	79.51	0	0.69	0	0	8.28	0	0	0	0	0	0	-32.42	-32.42
Inverter Transformer	MV3-20 T	368683	4907317	2	0	0	56.1	56.1	1	2673.21	3.25	0	79.54	0	0.69	0	0	8.3	0	0	0	0	0	0	-32.47	-32.47
Inverter Transformer	MV3-9 T	368517	4907703	2	0	0	56.1	56.1	1	2701.47	3.25	0	79.63	0	0.7	0	0	8.35	0	0	0	0	0	0	-32.63	-32.63
Inverter Transformer	MV3-22 T	368661	4907142	2	0	0	56.1	56.1	1	2768.34	3.25	0	79.84	0	0.73	0	0	8.47	0	0	0	0	0	0	-32.99	-32.99
Inverter Transformer	MV3-16 T	368509	4907475	2	0	0	56.1	56.1	1	2776.61	3.25	0	79.87	0	0.73	0	0	8.48	0	0	0	0	0	0	-33.03	-33.03
Inverter Transformer	MV3-5 T	368335	4907843	2	0	0	56.1	56.1	1	2847.02	3.25	0	80.09	0	0.76	0	0	8.61	0	0	0	0	0	0	-33.4	-33.4
Inverter Transformer	MV3-11 T	368340	4907662	2	0	0	56.1	56.1	1	2883.06	3.25	0	80.2	0	0.78	0	0	8.67	0	0	0	0	0	0	-33.59	-33.59
Inverter Transformer	MV3-21 T	368484	4907206	2	0	0	56.1	56.1	1	2900.19	3.25	0	80.25	0	0.79	0	0	8.7	0	0	0	0	0	0	-33.68	-33.68
Inverter Transformer	MV3-15 T	368351	4907477	2	0	0	56.1	56.1	1	2925.42	3.25	0	80.32	0	0.8	0	0	8.74	0	0	0	0	0	0	-33.8	-33.8
Inverter Transformer	MV3-19 T	368352	4907347	2	0	0	56.1	56.1	1	2968.07	3.25	0	80.45	0	0.82	0	0	8.81	0	0	0	0	0	0	-34.02	-34.02
Inverter Transformer	MV3-1 T	368150	4907976	2	0	0	56.1	56.1	1	3007.04	3.25	0	80.56	0	0.83	0	0	8.88	0	0	0	0	0	0	-34.22	-34.22
Inverter Transformer	MV3-6 T	368156	4907834	2	0	0	56.1	56.1	1	3024.43	3.25	0	80.61	0	0.84	0	0	8.91	0	0	0	0	0	0	-34.3	-34.3
Inverter Transformer	MV3-10 T	368162	4907669	2	0	0	56.1	56.1	1	3053.78	3.25	0	80.7	0	0.85	0	0	8.96	0	0	0	0	0	0	-34.45	-34.45
Inverter Transformer	MV3-17 T	368183	4907472	2	0	0	56.1	56.1	1	3086.8	3.25	0	80.79	0	0.87	0	0	9.01	0	0	0	0	0	0	-34.61	-34.61
Inverter Transformer	MV3-3 T	367944	4907927	2	0	0	56.1	56.1	1	3217.95	3.25	0	81.15	0	0.92	0	0	9.23	0	0	0	0	0	0	-35.25	-35.25
Inverter Transformer	MV3-7 T	367951	4907754	2	0	0	56.1	56.1	1	3241.03	3.25	0	81.21	0	0.93	0	0	9.27	0	0	0	0	0	0	-35.36	-35.36
Inverter Transformer	MV3-13 T	367958	4907577	2	0	0	56.1	56.1	1	3274.13	3.25	0	81.3	0	0.95	0	0	9.32	0	0	0	0	0	0	-35.51	-35.51
Inverter Transformer	MV3-18 T	367757	4907412	2	0	0	56.1	56.1	1	3511.84	3.25	0	81.91	0	1.04	0	0	9.71	0	0	0	0	0	0	-36.6	-36.6
Inverter Transformer	MV3-12 T	367674	4907594	2	0	0	56.1	56.1	1	3545.82	3.25	0	81.99	0	1.06	0	0	9.76	0	0	0	0	0	0	-36.76	-36.76
Inverter Transformer	MV2-2 T	365982	4906654	2	0	0	56.1	56.1	1	5433.19	3.25	0	85.7	0	1.78	0	0	12.41	0	0	0	0	0	0	-43.83	-43.83
Inverter Transformer	MV2-3 T	365814	4906641	2	0	0	56.1	56.1	1	5596.61	3.25	0	85.96	0	1.83	0	0	12.62	0	0	0	0	0	0	-44.35	-44.35
Inverter Transformer	MV2-4 T	365590	4906628	2	0	0	56.1	56.1	1	5813.64	3.25	0	86.29	0	1.9	0	0	12.88	0	0	0	0	0	0	-45.02	-45.02
Line Reactor	NGR	369421	4908787.5	5	0	0	45.4	45.4	1	1749.45	5.25	0	75.86	0	3.4	1.25	0.04	0.72	0	0	0	0	0	0	-35.88	-35.88
Inverter Transformer	MV1-15 T	365309	4904994	2	0	0	56.1	56.1	1	6741.66	3.25	0	87.58	0	2.19	0	0	13.95	0	0	0	0	0	0	-47.65	-47.65
Inverter Transformer	MV1-4 T	364821	4905918	2	0	0	56.1	56.1	1	6776.87	3.25	0	87.62	0	2.2	0	0	13.99	0	0	0	0	0	0	-47.75	-47.75
Inverter Transformer	MV1-2 T	364759	4906063	2	0	0	56.1	56.1	1	6783.29	3.25	0	87.63	0	2.2	0	0	13.99	0	0	0	0	0	0	-47.76	-47.76
Inverter Transformer	MV1-1 T	364721	4906166	2	0	0	56.1	56.1	1	6784.36	3.25	0	87.63	0	2.2	0	0	14	0	0	0	0	0	0	-47.77	-47.77
Inverter Transformer	MV1-12 T	365044	4905386	2	0	0	56.1	56.1	1	6788.75	3.25	0	87.64	0	2.2	0	0	14	0	0	0	0	0	0	-47.78	-47.78
Inverter Transformer	MV1-8 T	364782	4905647	2	0	0	56.1	56.1	1	6916.5	3.25	0	87.8	0	2.24	0	0	14.14	0	0	0	0	0	0	-48.12	-48.12
Inverter Transformer	MV1-5 T	364676	4905892	2	0	0	56.1	56.1	1	6921.38	3.25	0	87.8	0	2.24	0	0	14.14	0	0	0	0	0	0	-48.13	-48.13
Inverter Transformer	MV1-3 T	364435	4906039	2	0	0	56.1	56.1	1	7096.28	3.25	0	88.02	0	2.29	0	0	14.33	0	0	0	0	0	0	-48.58	-48.58
Inverter Transformer	MV1-6 T	364482	4905835	2	0	0	56.1	56.1	1	7122.87	3.25	0	88.05	0	2.29	0	0	14.36	0	0	0	0	0	0	-48.65	-48.65

	Inverter Transformer	MV1-9 T	364555	4905646	2	0	0	56.1	56.1	1	7125.71	3.25	0	88.06	0	2.29	0	0	14.36	0	0	0	0	0	0	-48.66	-48.66
	Inverter Transformer	MV1-11 T	364649	4905414	2	0	0	56.1	56.1	1	7133.07	3.25	0	88.07	0	2.3	0	0	14.37	0	0	0	0	0	0	-48.67	-48.67
Limit. Valu	0	0																								
Level D/N:	30.8213	30.8213																								

Receiver: Existing Noise Receptor
ID: S-R119
X: 371139
Y: 4908470
Z: 4.5
Ground: 0

ISO	Description	ID	X	Y	Z	Ground	ReflOrd	LxT	LxN	L/A	Dist.	hm	Freq	Adiv	K0b	Agr	Abar	z	Aatm	Afol	Ahous	Cmet	CmetN	Dc	RL	LtotT	LtotN
	Sol_Luce Substation	S_Substation	369426	4908792	3.5	0	0	112.1	112.1	1	1743	5.25	0	75.83	0	0.16	4.78	0.46	3.92	0	0	0	0	0	0	27.39	27.39
	Inverter	MV5-4	370324	4908707	2	0	0	100.3	100.3	1	848.76	3.25	0	69.58	0	-0.32	0	0	10.37	0	0	0	0	0	0	20.69	20.69
	Inverter	MV5-3	370231	4908851	2	0	0	100.3	100.3	1	984.7	3.25	0	70.87	0	-0.25	0	0	10.86	0	0	0	0	0	0	18.84	18.84
	Inverter	MV5-5	370015	4908690	2	0	0	100.3	100.3	1	1145.33	3.25	0	72.18	0	-0.18	0	0	11.37	0	0	0	0	0	0	16.95	16.95
	Inverter	MV5-2	370006	4908853	2	0	0	100.3	100.3	1	1195.99	3.25	0	72.55	0	-0.16	0	0	11.51	0	0	0	0	0	0	16.4	16.4
	Inverter	MV5-1	370020	4909142	2	0	0	100.3	100.3	1	1305.28	3.25	0	73.31	0	-0.11	0	0	11.82	0	0	0	0	0	0	15.29	15.29
	Inverter	MV6-2	370085	4907339	2	0	0	100.3	100.3	1	1545.99	3.25	0	74.78	0	-0.02	0	0	12.44	0	0	0	0	0	0	13.11	13.11
	Inverter	MV6-3	370207	4907140	2	0	0	100.3	100.3	1	1624.05	3.25	0	75.21	0	0.01	0	0	12.63	0	0	0	0	0	0	12.46	12.46
	Inverter	MV4-10	369312	4908858	2	0	0	100.3	100.3	1	1867.75	3.25	0	76.43	0	0.09	0	0	13.18	0	0	0	0	0	0	10.62	10.62
	Inverter	MV4-11	369264	4908855	2	0	0	100.3	100.3	1	1914.12	3.25	0	76.64	0	0.1	0	0	13.28	0	0	0	0	0	0	10.29	10.29
	Inverter	MV4-9	369289	4909001	2	0	0	100.3	100.3	1	1924.7	3.25	0	76.69	0	0.11	0	0	13.3	0	0	0	0	0	0	10.22	10.22
	Inverter	MV4-8	369256	4909001	2	0	0	100.3	100.3	1	1956.44	3.25	0	76.83	0	0.12	0	0	13.37	0	0	0	0	0	0	10	10
	Inverter	MV4-5	369289	4909199	2	0	0	100.3	100.3	1	1988.45	3.25	0	76.97	0	0.13	0	0	13.44	0	0	0	0	0	0	9.78	9.78
	Inverter	MV6-1	370235	4907364	2	0	0	97.3	97.3	1	1428.45	3.25	0	74.1	0	-0.06	0	0	12.14	0	0	0	0	0	0	11.13	11.13
	Inverter	MV4-6	369243	4909192	2	0	0	100.3	100.3	1	2028.82	3.25	0	77.14	0	0.14	0	0	13.52	0	0	0	0	0	0	9.51	9.51
	Inverter	MV4-2	369272	4909397	2	0	0	100.3	100.3	1	2084.47	3.25	0	77.38	0	0.15	0	0	13.64	0	0	0	0	0	0	9.14	9.14
	Inverter	MV4-3	369229	4909397	2	0	0	100.3	100.3	1	2123.07	3.25	0	77.54	0	0.16	0	0	13.72	0	0	0	0	0	0	8.89	8.89
	Inverter	MV4-7	369035	4909001	2	0	0	100.3	100.3	1	2169.97	3.25	0	77.73	0	0.18	0	0	13.81	0	0	0	0	0	0	8.59	8.59
	Inverter	MV4-4	369027	4909199	2	0	0	100.3	100.3	1	2234.28	3.25	0	77.98	0	0.19	0	0	13.94	0	0	0	0	0	0	8.19	8.19
	Inverter	MV4-1	369011	4909397	2	0	0	100.3	100.3	1	2321.15	3.25	0	78.31	0	0.21	0	0	14.11	0	0	0	0	0	0	7.67	7.67
	Inverter	MV3-8	368680	4907712	2	0	0	100.3	100.3	1	2573.18	3.25	0	79.21	0	0.27	0	0	14.6	0	0	0	0	0	0	6.23	6.23
	DSTATCOM - 10 MVAR #1	DSAT1	369437	4908757	2.5	0	0	96.6	96.6	1	1726.03	3.5	0	75.74	0	3.16	0	0	1.55	0	0	0	0	0	0	16.18	16.18
	Inverter	MV3-14	368684	4907498	2	0	0	100.3	100.3	1	2640.42	3.25	0	79.43	0	0.29	0	0	14.72	0	0	0	0	0	0	5.87	5.87
	DSTATCOM - 10 MVAR #2	DSAT2	369403	4908757	2.5	0	0	96.6	96.6	1	1759.57	3.5	0	75.91	0	3.17	0	0	1.57	0	0	0	0	0	0	15.98	15.98
	Inverter	MV3-20	368689	4907317	2	0	0	100.3	100.3	1	2707.75	3.25	0	79.65	0	0.3	0	0	14.85	0	0	0	0	0	0	5.51	5.51
	Inverter	MV3-9	368512	4907703	2	0	0	100.3	100.3	1	2736.68	3.25	0	79.74	0	0.31	0	0	14.9	0	0	0	0	0	0	5.36	5.36
	Inverter	MV3-16	368514	4907475	2	0	0	100.3	100.3	1	2807.25	3.25	0	79.97	0	0.32	0	0	15.03	0	0	0	0	0	0	5	5
	Inverter	MV3-11	368346	4907662	2	0	0	100.3	100.3	1	2907.53	3.25	0	80.27	0	0.34	0	0	15.21	0	0	0	0	0	0	4.49	4.49
	Inverter	MV3-21	368478	4907206	2	0	0	100.3	100.3	1	2945.95	3.25	0	80.38	0	0.35	0	0	15.28	0	0	0	0	0	0	4.3	4.3
	Inverter	MV3-15	368357	4907477	2	0	0	100.3	100.3	1	2953.91	3.25	0	80.41	0	0.35	0	0	15.29	0	0	0	0	0	0	4.26	4.26
	Inverter	MV3-19	368357	4907347	2	0	0	100.3	100.3	1	3000.11	3.25	0	80.54	0	0.36	0	0	15.37	0	0	0	0	0	0	4.03	4.03
	Inverter	MV3-6	368162	4907834	2	0	0	100.3	100.3	1	3044.18	3.25	0	80.67	0	0.37	0	0	15.45	0	0	0	0	0	0	3.82	3.82
	Inverter	MV3-10	368167	4907669	2	0	0	100.3	100.3	1	3078.05	3.25	0	80.77	0	0.38	0	0	15.51	0	0	0	0	0	0	3.66	3.66
	Inverter	MV3-17	368178	4907472	2	0	0	100.3	100.3	1	3124.66	3.25	0	80.9	0	0.39	0	0	15.59	0	0	0	0	0	0	3.44	3.44
	Inverter	MV3-3	367939	4907927	2	0	0	100.3	100.3	1	3245.74	3.25	0	81.23	0	0.41	0	0	15.8	0	0	0	0	0	0	2.88	2.88
	Inverter	MV3-7	367945	4907754	2	0	0	100.3	100.3	1	3273.27	3.25	0	81.3	0	0.41	0	0	15.85	0	0	0	0	0	0	2.75	2.75
	Inverter	MV3-13	367963	4907577	2	0	0	100.3	100.3	1	3299.16	3.25	0	81.37	0	0.42	0	0	15.89	0	0	0	0	0	0	2.64	2.64
	Inverter	MV3-18	367752	4907412	2	0	0	100.3	100.3	1	3548.4	3.25	0	82	0	0.46	0	0	16.31	0	0	0	0	0	0	1.54	1.54
	Inverter	MV3-12	367668	4907594	2	0	0	100.3	100.3	1	3579.84	3.25	0	82.08	0	0.46	0	0	16.36	0	0	0	0	0	0	1.41	1.41
	Inverter	MV5-6	369982	4908507	2	0	0	89.1	89.1	1	1157.59	3.25	0	72.27	0	0.72	0	0	6.61	0	0	0	0	0	0	9.46	9.46
	Inverter	MV2-3	365820	4906641	2	0	0	100.3	100.3	1	5624.68	3.25	0	86	0	0.69	0	0	19.48	0	0	0	0	0	0	-5.85	-5.85
	Fixed Reactor Bank 2	FRB2	369464	4908755	6	0	0	89.8	89.8	1	1699.07	5.25	0	75.6	0	-1.02	0	0	3.84	0	0	0	0	0	0	11.35	11.35
	Inverter	MV2-4	365586	4906624	2	0	0	100.3	100.3	1	5851.8	3.25	0	86.35	0	0.7	0	0	19.79	0	0	0	0	0	0	-6.52	-6.52
	Fixed Reactor Bank 1	FRB1	369378	4908755	6	0	0	89.8	89.8	1	1783.91	5.25	0	76.03	0	-1.01	0	0	3.99	0	0	0	0	0	0	10.77	10.77
	Inverter	MV1-15	365315	4904994	2	0	0	100.3	100.3	1	6782.44	3.25	0	87.63	0	0.71	0	0	21.02	0	0	0	0	0	0	-9.05	-9.05
	Inverter	MV1-4	364815	4905918	2	0	0	100.3	100.3	1	6819.51	3.25	0	87.68	0	0.71	0	0	21.07	0	0	0	0	0	0	-9.15	-9.15
	Inverter	MV1-2	364753	4906063	2	0	0	100.3	100.3	1	6824.56	3.25	0	87.68	0	0.71	0	0	21.08	0	0	0	0	0	0	-9.16	-9.16
	Inverter	MV1-1	364715	4906166	2	0	0	100.3	100.3	1	6824.68	3.25	0	87.68	0	0.71	0	0	21.08	0	0	0	0	0	0	-9.16	-9.16
	Inverter	MV1-12	365038	4905386	2	0	0	100.3	100.3	1	6836.17	3.25	0	87.7	0	0.71	0	0	21.09	0	0	0	0	0	0	-9.19	-9.19
	Inverter	MV1-8	364788	4905647	2	0	0	100.3	100.3	1	6950.15	3.25	0	87.84	0	0.71	0	0	21.24	0	0	0	0	0	0	-9.48	-9.48
	Inverter	MV1-5	364671	4905892	2	0	0	100.3	100.3	1	6962.84	3.25	0	87.86	0	0.71	0	0	21.25	0	0	0	0	0	0	-9.51	-9.51
	Inverter	MV1-9	364561	4905646	2	0	0	100.3	100.3	1	7158.57	3.25	0	88.1	0	0.7	0	0	21.5	0	0	0	0	0	0	-9.99	-9.99
	Inverter	MV1-6	364477	4905835	2	0	0	100.3	100.3	1	7164.18	3.25	0	88.1	0	0.7	0	0	21.5	0	0	0	0	0	0	-10	-10
	Inverter	MV1-11	364655	4905414	2	0	0	100.3	100.3	1	7168.08	3.25	0	88.11	0	0.7	0	0	21.51	0	0	0	0	0	0	-10.01	-10.01
	Inverter	MV4-15	369176	4908481	2	0	0	89.1	89.1	1	1963.03	3.25	0	76.86	0	0.9	0	0	7.98	0	0	0	0	0	0	3.32	3.32
	Inverter	MV4-14	369176	4908507	2	0	0	89.1	89.1	1	1963.35	3.25	0	76.86	0	0.9	0	0	7.99	0	0	0	0	0	0	3.31	3.31
	SubstationTransformer	W_ST	369711.17	4906112.3	2.5	0	0	92	92	1	2756.37	3.5	0	79.81	0	0.02	0	0	5.59	0	0	0	0	0	0	6.56	6.56
	Inverter	MV4-13	369051	4908605	2	0	0	89.1	89.1	1	2092.36	3.25	0	77.41	0	0.93	0	0	8.2	0	0	0	0	0	0	2.52	2.52
	Inverter	MV4-12	369043	4908803	2	0	0	89.1	89.1	1	2122.29	3.25	0	77.54	0	0.94	0	0	8.24	0	0	0	0	0	0	2.34	2.34
	Inverter	MV2-1	365842	4906816	2	0	0	97.3	97.3	1	5549.23	3.25	0	85.88	0	0.68	0	0	19.37	0	0	0	0	0	0	-8.63	-8.63
	Westbrook Inverter Enclosur	W_INV6	369875	4906578	2	0	0	89.1	89.1	1	2275.38	3.25	0	78.14	0	0.97	0	0	8.49	0	0	0	0	0	0	1.45	1.45

Westbrook Inverter Enclosur	W_INV5	369719	4906574	2	0	0	89.1	89.1	1	2368.8	3.25	0	78.49	0	0.99	0	0	8.64	0	0	0	0	0	0	0.93	0.93
Westbrook Inverter Enclosur	W_INV7	369780	4906417	2	0	0	89.1	89.1	1	2462.05	3.25	0	78.83	0	1.02	0	0	8.79	0	0	0	0	0	0	0.43	0.43
Inverter	MV6-4	370250	4906966	2	0	0	86.1	86.1	1	1747.1	3.25	0	75.85	0	0.85	0	0	7.63	0	0	0	0	0	0	1.74	1.74
Inverter	MV3-2	368671	4907928	2	0	0	89.1	89.1	1	2526.82	3.25	0	79.05	0	1.03	0	0	8.89	0	0	0	0	0	0	0.09	0.09
Inverter	MV1-7	364925	4905782	2	0	0	97.3	97.3	1	6770.46	3.25	0	87.61	0	0.71	0	0	21.01	0	0	0	0	0	0	-12.02	-12.02
Inverter	MV1-10	365004	4905564	2	0	0	97.3	97.3	1	6788.45	3.25	0	87.64	0	0.71	0	0	21.03	0	0	0	0	0	0	-12.07	-12.07
Inverter	MV1-14	365163	4905049	2	0	0	97.3	97.3	1	6885.91	3.25	0	87.76	0	0.71	0	0	21.16	0	0	0	0	0	0	-12.31	-12.31
Inverter	MV3-4	368502	4907925	2	0	0	89.1	89.1	1	2692.73	3.25	0	79.6	0	1.07	0	0	9.15	0	0	0	0	0	0	-0.76	-0.76
Westbrook Inverter Enclosur	W_INV2	369374	4906388	2	0	0	89.1	89.1	1	2729.46	3.25	0	79.72	0	1.08	0	0	9.2	0	0	0	0	0	0	-0.95	-0.95
Westbrook Inverter Enclosur	W_INV4	369673	4906164	2	0	0	89.1	89.1	1	2732.54	3.25	0	79.73	0	1.08	0	0	9.21	0	0	0	0	0	0	-0.96	-0.96
Inverter	MV1-13	364731	4905241	2	0	0	97.3	97.3	1	7175.58	3.25	0	88.12	0	0.7	0	0	21.52	0	0	0	0	0	0	-13.03	-13.03
Inverter	MV3-22	368656	4907142	2	0	0	89.1	89.1	1	2815.83	3.25	0	79.99	0	1.1	0	0	9.34	0	0	0	0	0	0	-1.37	-1.37
Westbrook Inverter Enclosur	W_INV3	369508	4906164	2	0	0	89.1	89.1	1	2824.5	3.25	0	80.02	0	1.1	0	0	9.35	0	0	0	0	0	0	-1.41	-1.41
Inverter	MV3-5	368340	4907843	2	0	0	89.1	89.1	1	2868.37	3.25	0	80.15	0	1.11	0	0	9.42	0	0	0	0	0	0	-1.63	-1.63
Inverter	MV3-1	368156	4907976	2	0	0	89.1	89.1	1	3023.63	3.25	0	80.61	0	1.15	0	0	9.65	0	0	0	0	0	0	-2.36	-2.36
Westbrook Inverter Enclosur	W_INV1	369409	4906578	2	0	0	86.1	86.1	1	2563.7	3.25	0	79.18	0	1.04	0	0	8.95	0	0	0	0	0	0	-3.11	-3.11
Inverter	MV2-2	365977	4906654	2	0	0	89.1	89.1	1	5472.12	3.25	0	85.76	0	1.76	0	0	13.09	0	0	0	0	0	0	-11.55	-11.55
Gardiner Substation	G_Sub	366586.3	4903349.9	2.5	0	0	90.8	90.8	1	6851.46	4.25	0	87.72	0	2.04	1.93	0.36	10.61	0	0	0	0	0	0	-11.51	-11.51
Inverter	MV1-3	364440	4906039	2	0	0	89.1	89.1	1	7126.46	3.25	0	88.06	0	2.16	0	0	15.14	0	0	0	0	0	0	-16.29	-16.29
Inverters	G_Inv2	366676.9	4903239.1	2	0	0	87.7	87.7	1	6875.51	3.25	0	87.75	0	2.95	0	0	7.87	0	0	0	0	0	0	-10.9	-10.9
Inverters	G_Inv4	366732.8	4903105	2	0	0	87.7	87.7	1	6942.47	3.25	0	87.83	0	2.95	0	0	7.93	0	0	0	0	0	0	-11.05	-11.05
Inverters	G_Inv1	366526.4	4903225.8	2	0	0	87.7	87.7	1	6984.1	3.25	0	87.88	0	2.95	0	0	7.97	0	0	0	0	0	0	-11.15	-11.15
Inverters	G_Inv6	366788.5	4902972	2	0	0	87.7	87.7	1	7011.05	3.25	0	87.92	0	2.95	0	0	8	0	0	0	0	0	0	-11.21	-11.21
Inverters	G_Inv3	366583.7	4903091.4	2	0	0	87.7	87.7	1	7048.41	3.25	0	87.96	0	2.95	0	0	8.04	0	0	0	0	0	0	-11.29	-11.29
Inverters	G_Inv8	366844.5	4902838.5	2	0	0	87.7	87.7	1	7082.13	3.25	0	88	0	2.95	0	0	8.07	0	0	0	0	0	0	-11.37	-11.37
Inverters	G_Inv5	366638.5	4902958.1	2	0	0	87.7	87.7	1	7115.87	3.25	0	88.04	0	2.95	0	0	8.11	0	0	0	0	0	0	-11.44	-11.44
Inverters	G_Inv10	366900.7	4902704.8	2	0	0	87.7	87.7	1	7155.47	3.25	0	88.09	0	2.95	0	0	8.15	0	0	0	0	0	0	-11.53	-11.53
Inverters	G_Inv7	366694.6	4902824.7	2	0	0	87.7	87.7	1	7184.85	3.25	0	88.13	0	2.95	0	0	8.17	0	0	0	0	0	0	-11.6	-11.6
Inverters	G_Inv9	366750.9	4902691.8	2	0	0	87.7	87.7	1	7255.55	3.25	0	88.21	0	2.96	0	0	8.24	0	0	0	0	0	0	-11.75	-11.75
Westbrook Inverter Transfor	W_INVTR6	369881	4906578	2	0	0	77.3	77.3	1	2272.06	3.25	0	78.13	0	-2.5	0	0	1.33	0	0	0	0	0	0	0.38	0.38
Westbrook Inverter Transfor	W_INVTR1	369403	4906578	2	0	0	78.2	78.2	1	2567.76	3.25	0	79.19	0	-2.59	0	0	1.47	0	0	0	0	0	0	0.17	0.17
Westbrook Inverter Transfor	W_INVTR5	369725	4906574	2	0	0	77.3	77.3	1	2365.21	3.25	0	78.48	0	-2.53	0	0	1.38	0	0	0	0	0	0	0.01	0.01
Westbrook Inverter Transfor	W_INVTR7	369786	4906417	2	0	0	77.3	77.3	1	2458.74	3.25	0	78.81	0	-2.56	0	0	1.42	0	0	0	0	0	0	-0.34	-0.34
Westbrook Inverter Transfor	W_INVTR4	369679	4906164	2	0	0	77.3	77.3	1	2729.33	3.25	0	79.72	0	-2.64	0	0	1.54	0	0	0	0	0	0	-1.28	-1.28
Westbrook Inverter Transfor	W_INVTR2	369368	4906388	2	0	0	77.3	77.3	1	2733.34	3.25	0	79.73	0	-2.64	0	0	1.54	0	0	0	0	0	0	-1.3	-1.3
Westbrook Inverter Transfor	W_INVTR3	369514	4906164	2	0	0	77.3	77.3	1	2821.04	3.25	0	80.01	0	-2.66	0	0	1.58	0	0	0	0	0	0	-1.58	-1.58
Inverter Transformer	MV6-1 T	370230	4907364	2	0	0	69.4	69.4	1	1431.62	3.25	0	74.12	0	1.94	0	0	4.36	0	0	0	0	0	0	-11.06	-11.06
Inverter Transformer	MV6-4 T	370244	4906966	2	0	0	69.4	69.4	1	1750.16	3.25	0	75.86	0	2.08	0	0	4.71	0	0	0	0	0	0	-13.3	-13.3
Inverter Transformer	MV5-4 T	370330	4908707	2	0	0	56.1	56.1	1	843	3.25	0	69.52	0	-0.04	0	0	4.5	0	0	0	0	0	0	-17.92	-17.92
Inverter Transformer	MV5-3 T	370237	4908851	2	0	0	56.1	56.1	1	979.17	3.25	0	70.82	0	0	0	0	4.84	0	0	0	0	0	0	-19.6	-19.6
Inverter Transformer	MV5-5 T	370021	4908690	2	0	0	56.1	56.1	1	1139.44	3.25	0	72.13	0	0.06	0	0	5.22	0	0	0	0	0	0	-21.35	-21.35
Inverter Transformer	MV5-6 T	369987	4908507	2	0	0	56.1	56.1	1	1152.6	3.25	0	72.23	0	0.07	0	0	5.25	0	0	0	0	0	0	-21.49	-21.49
Inverter Transformer	MV5-2 T	370011	4908853	2	0	0	56.1	56.1	1	1191.25	3.25	0	72.52	0	0.08	0	0	5.34	0	0	0	0	0	0	-21.88	-21.88
Inverter Transformer	MV2-1 T	365836	4906816	2	0	0	69.4	69.4	1	5554.96	3.25	0	85.89	0	3.12	0	0	7.74	0	0	0	0	0	0	-27.4	-27.4
Inverter Transformer	MV5-1 T	370015	4909142	2	0	0	56.1	56.1	1	1309.57	3.25	0	73.34	0	0.12	0	0	5.6	0	0	0	0	0	0	-23.01	-23.01
Inverter Transformer	MV1-7 T	364919	4905782	2	0	0	69.4	69.4	1	6775.97	3.25	0	87.62	0	3.29	0	0	8.47	0	0	0	0	0	0	-30.04	-30.04
Inverter Transformer	MV1-10 T	365010	4905564	2	0	0	69.4	69.4	1	6783.03	3.25	0	87.63	0	3.29	0	0	8.48	0	0	0	0	0	0	-30.05	-30.05
Inverter Transformer	MV1-14 T	365157	4905049	2	0	0	69.4	69.4	1	6891.12	3.25	0	87.77	0	3.31	0	0	8.54	0	0	0	0	0	0	-30.26	-30.26
Inverter Transformer	MV6-2 T	370091	4907339	2	0	0	56.1	56.1	1	1541.91	3.25	0	74.76	0	0.22	0	0	6.11	0	0	0	0	0	0	-25.03	-25.03
Inverter Transformer	MV1-13 T	364725	4905241	2	0	0	69.4	69.4	1	7180.94	3.25	0	88.12	0	3.34	0	0	8.7	0	0	0	0	0	0	-30.81	-30.81
Inverter Transformer	MV6-3 T	370202	4907140	2	0	0	56.1	56.1	1	1626.92	3.25	0	75.23	0	0.25	0	0	6.29	0	0	0	0	0	0	-25.71	-25.71
Inverter Transformer	MV4-10 T	369307	4908858	2	0	0	56.1	56.1	1	1872.64	3.25	0	76.45	0	0.35	0	0	6.79	0	0	0	0	0	0	-27.53	-27.53
Inverter Transformer	MV4-11 T	369269	4908855	2	0	0	56.1	56.1	1	1909.22	3.25	0	76.62	0	0.37	0	0	6.86	0	0	0	0	0	0	-27.79	-27.79
Inverter Transformer	MV4-9 T	369284	4909001	2	0	0	56.1	56.1	1	1929.51	3.25	0	76.71	0	0.37	0	0	6.9	0	0	0	0	0	0	-27.93	-27.93
Inverter Transformer	MV4-8 T	369262	4909001	2	0	0	56.1	56.1	1	1950.67	3.25	0	76.8	0	0.38	0	0	6.95	0	0	0	0	0	0	-28.07	-28.07
Inverter Transformer	MV4-14 T	369182	4908507	2	0	0	56.1	56.1	1	1957.35	3.25	0	76.83	0	0.39	0	0	6.96	0	0	0	0	0	0	-28.12	-28.12
Inverter Transformer	MV4-15 T	369170	4908481	2	0	0	56.1	56.1	1	1969.03	3.25	0	76.89	0	0.39	0	0	6.98	0	0	0	0	0	0	-28.2	-28.2
Inverter Transformer	MV4-5 T	369283	4909199	2	0	0	56.1	56.1	1	1994.04	3.25	0	76.99	0	0.4	0	0	7.03	0	0	0	0	0	0	-28.37	-28.37
Inverter Transformer	MV4-6 T	369249	4909192	2	0	0	56.1	56.1	1	2023.21	3.25	0	77.12	0	0.41	0	0	7.09	0	0	0	0	0	0	-28.57	-28.57
Inverter Transformer	MV4-13 T	369057	4908605	2	0	0	56.1	56.1	1	2086.37	3.25	0	77.39	0	0.44	0	0	7.21	0	0	0	0	0	0	-28.98	-28.98
Inverter Transformer	MV4-2 T	369267	4909397	2	0	0	56.1	56.1	1	2088.95	3.25	0	77.4	0	0.44	0	0	7.22	0	0	0	0	0	0	-29	-29
Inverter Transformer	MV4-12 T	369049	4908803	2	0	0	56.1	56.1	1	2116.36	3.25	0	77.51	0	0.45	0	0	7.27	0	0	0	0	0	0	-29.18	-29.18
Inverter Transformer	MV4-3 T	369234	4909397	2	0	0	56.1	56.1	1	2118.58	3.25	0	77.52	0	0.45	0	0	7.27	0	0	0	0	0	0	-29.19	-29.19
Inverter Transformer	MV4-7 T	369040	4909001	2	0	0	56.1	56.1	1	2165.13	3.25	0	77.71	0	0.47	0	0	7.36	0	0	0	0	0	0	-29.49	-29.49
Inverter Transformer	MV4-4 T	369033	4909199	2	0	0	56.1	56.1	1	2228.61	3.25	0	77.96	0	0.5	0	0	7.49	0	0	0	0	0	0	-29.89	-29.89
Inverter Transformer	MV4-1 T	369017	4909397	2	0	0	56.1	56.1	1	2315.65	3.25	0	78.29	0	0.54	0	0	7.65	0	0	0	0	0	0	-30.42	-30.42
Inverter Transformer	MV3-2 T	368677	4907928	2	0	0	56.1	56.1	1	2520.96	3.25	0	79.03	0	0.63	0	0	8.03	0	0	0	0	0	0	-31.63	-31.63
Inverter Transformer	MV3-8 T	368685	4907712	2	0	0	56.1	56.1	1	2568.4	3.25	0	79.19	0	0.65	0	0	8.11	0	0	0	0	0	0	-31.89	-31.89
Inverter Transformer	MV3-14 T	368678	4907498	2	0	0	56.1	56.1	1	2646	3.25	0	79.45	0	0.68	0	0	8.25	0	0	0	0	0	0	-32.32	-32.32
Inverter Transformer	MV3-4 T	368507	4907925	2	0	0	56.1	56.1	1	2687.83	3.25	0	79.59	0	0.7	0	0	8.33	0	0	0	0	0	0	-32.55	-32.55
Inverter Transformer	MV3-20 T	368683	4907317	2	0	0	56.1	56.1	1	2713.18	3.25	0	79.67	0	0.71	0	0	8.37	0	0	0	0	0	0	-32.69	-32.69
Inverter Transformer	MV3-9 T	368517	4907703	2	0	0	56.1	56.1	1	2731.88	3.25	0	79.73	0	0.72	0	0	8.4	0	0	0	0	0	0	-32.79	-32.79
Inverter Transformer	MV3-22 T	368661	4907142	2	0	0	56.1	56.1	1	2811.42	3.25	0	79.98	0	0.75	0	0	8.54	0	0	0	0	0	0	-33.21	-33.21
Inverter Transformer	MV3-16 T	368509	4907475	2	0	0	56.1	56.1	1	2811.93	3.25	0	79.98	0	0.75	0	0	8.54	0	0	0	0	0	0	-33.22	-33.22

	Inverter Transformer	MV3-5 T	368335	4907843	2	0	0	56.1	56.1	1	2873.25	3.25	0	80.17	0	0.78	0	0	8.65	0	0	0	0	0	0	-33.54	-33.54
	Inverter Transformer	MV3-11 T	368340	4907662	2	0	0	56.1	56.1	1	2913.29	3.25	0	80.29	0	0.79	0	0	8.72	0	0	0	0	0	0	-33.74	-33.74
	Inverter Transformer	MV3-21 T	368484	4907206	2	0	0	56.1	56.1	1	2940.53	3.25	0	80.37	0	0.8	0	0	8.77	0	0	0	0	0	0	-33.88	-33.88
	Inverter Transformer	MV3-15 T	368351	4907477	2	0	0	56.1	56.1	1	2959.56	3.25	0	80.42	0	0.81	0	0	8.8	0	0	0	0	0	0	-33.98	-33.98
	Inverter Transformer	MV3-19 T	368352	4907347	2	0	0	56.1	56.1	1	3004.75	3.25	0	80.56	0	0.83	0	0	8.88	0	0	0	0	0	0	-34.21	-34.21
	Inverter Transformer	MV3-1 T	368150	4907976	2	0	0	56.1	56.1	1	3029.55	3.25	0	80.63	0	0.84	0	0	8.92	0	0	0	0	0	0	-34.33	-34.33
	Inverter Transformer	MV3-6 T	368156	4907834	2	0	0	56.1	56.1	1	3050.05	3.25	0	80.69	0	0.85	0	0	8.95	0	0	0	0	0	0	-34.43	-34.43
	Inverter Transformer	MV3-10 T	368162	4907669	2	0	0	56.1	56.1	1	3082.88	3.25	0	80.78	0	0.86	0	0	9.01	0	0	0	0	0	0	-34.59	-34.59
	Inverter Transformer	MV3-17 T	368183	4907472	2	0	0	56.1	56.1	1	3119.93	3.25	0	80.88	0	0.88	0	0	9.07	0	0	0	0	0	0	-34.77	-34.77
	Inverter Transformer	MV3-3 T	367944	4907927	2	0	0	56.1	56.1	1	3240.81	3.25	0	81.21	0	0.93	0	0	9.27	0	0	0	0	0	0	-35.36	-35.36
	Inverter Transformer	MV3-7 T	367951	4907754	2	0	0	56.1	56.1	1	3267.42	3.25	0	81.28	0	0.94	0	0	9.31	0	0	0	0	0	0	-35.48	-35.48
	Inverter Transformer	MV3-13 T	367958	4907577	2	0	0	56.1	56.1	1	3303.97	3.25	0	81.38	0	0.96	0	0	9.37	0	0	0	0	0	0	-35.65	-35.65
	Inverter Transformer	MV3-18 T	367757	4907412	2	0	0	56.1	56.1	1	3543.63	3.25	0	81.99	0	1.06	0	0	9.76	0	0	0	0	0	0	-36.75	-36.75
	Inverter Transformer	MV3-12 T	367674	4907594	2	0	0	56.1	56.1	1	3574.02	3.25	0	82.06	0	1.07	0	0	9.8	0	0	0	0	0	0	-36.88	-36.88
	Inverter Transformer	MV2-2 T	365982	4906654	2	0	0	56.1	56.1	1	5467.4	3.25	0	85.76	0	1.79	0	0	12.45	0	0	0	0	0	0	-43.94	-43.94
	Inverter Transformer	MV2-3 T	365814	4906641	2	0	0	56.1	56.1	1	5630.35	3.25	0	86.01	0	1.84	0	0	12.66	0	0	0	0	0	0	-44.45	-44.45
	Inverter Transformer	MV2-4 T	365590	4906628	2	0	0	56.1	56.1	1	5846.74	3.25	0	86.34	0	1.92	0	0	12.92	0	0	0	0	0	0	-45.12	-45.12
	Line Reactor	NGR	369421	4908787.5	5	0	0	45.4	45.4	1	1747.09	5.25	0	75.85	0	3.4	1.25	0.04	0.72	0	0	0	0	0	0	-35.86	-35.86
	Inverter Transformer	MV1-15 T	365309	4904994	2	0	0	56.1	56.1	1	6787.6	3.25	0	87.63	0	2.2	0	0	14	0	0	0	0	0	0	-47.78	-47.78
	Inverter Transformer	MV1-4 T	364821	4905918	2	0	0	56.1	56.1	1	6813.94	3.25	0	87.67	0	2.21	0	0	14.03	0	0	0	0	0	0	-47.85	-47.85
	Inverter Transformer	MV1-2 T	364759	4906063	2	0	0	56.1	56.1	1	6818.95	3.25	0	87.67	0	2.21	0	0	14.03	0	0	0	0	0	0	-47.86	-47.86
	Inverter Transformer	MV1-1 T	364721	4906166	2	0	0	56.1	56.1	1	6819.03	3.25	0	87.67	0	2.21	0	0	14.03	0	0	0	0	0	0	-47.86	-47.86
	Inverter Transformer	MV1-12 T	365044	4905386	2	0	0	56.1	56.1	1	6830.82	3.25	0	87.69	0	2.21	0	0	14.05	0	0	0	0	0	0	-47.89	-47.89
	Inverter Transformer	MV1-8 T	364782	4905647	2	0	0	56.1	56.1	1	6955.63	3.25	0	87.85	0	2.25	0	0	14.18	0	0	0	0	0	0	-48.22	-48.22
	Inverter Transformer	MV1-5 T	364676	4905892	2	0	0	56.1	56.1	1	6958.19	3.25	0	87.85	0	2.25	0	0	14.18	0	0	0	0	0	0	-48.22	-48.22
	Inverter Transformer	MV1-3 T	364435	4906039	2	0	0	56.1	56.1	1	7131.16	3.25	0	88.06	0	2.29	0	0	14.37	0	0	0	0	0	0	-48.67	-48.67
	Inverter Transformer	MV1-6 T	364482	4905835	2	0	0	56.1	56.1	1	7159.53	3.25	0	88.1	0	2.3	0	0	14.4	0	0	0	0	0	0	-48.74	-48.74
	Inverter Transformer	MV1-9 T	364555	4905646	2	0	0	56.1	56.1	1	7164.08	3.25	0	88.1	0	2.3	0	0	14.4	0	0	0	0	0	0	-48.75	-48.75
	Inverter Transformer	MV1-11 T	364649	4905414	2	0	0	56.1	56.1	1	7173.51	3.25	0	88.11	0	2.31	0	0	14.41	0	0	0	0	0	0	-48.78	-48.78
Limit. Valu	0	0																								
Level D/N:	30.8277	30.8277																								

Receiver: Existing Noise Receptor
ID: S-R120
X: 371182
Y: 4908338
Z: 4.5
Ground: 0

ISO	Description	ID	X	Y	Z	Ground	ReflOrd	LxT	LxN	L/A	Dist.	hm	Freq	Adiv	K0b	Agr	Abar	z	Aatm	Afol	Ahous	Cmet	CmetN	Dc	RL	LtotT	LtotN
	Sol_Luce Substation	S_Substation	369426	4908792	3.5	0	0	112.1	112.1	1	1813.74	5.25	0	76.17	0	0.15	4.63	0.46	4.05	0	0	0	0	0	0	27.08	27.08
	Inverter	MV5-4	370324	4908707	2	0	0	100.3	100.3	1	933.99	3.25	0	70.41	0	-0.28	0	0	10.69	0	0	0	0	0	0	19.5	19.5
	Inverter	MV5-3	370231	4908851	2	0	0	100.3	100.3	1	1080.54	3.25	0	71.67	0	-0.21	0	0	11.17	0	0	0	0	0	0	17.68	17.68
	Inverter	MV5-5	370015	4908690	2	0	0	100.3	100.3	1	1218.93	3.25	0	72.72	0	-0.15	0	0	11.58	0	0	0	0	0	0	16.16	16.16
	Inverter	MV5-2	370006	4908853	2	0	0	100.3	100.3	1	1283.83	3.25	0	73.17	0	-0.12	0	0	11.76	0	0	0	0	0	0	15.5	15.5
	Inverter	MV5-1	370020	4909142	2	0	0	100.3	100.3	1	1413.03	3.25	0	74	0	-0.07	0	0	12.1	0	0	0	0	0	0	14.27	14.27
	Inverter	MV6-2	370085	4907339	2	0	0	100.3	100.3	1	1483.72	3.25	0	74.43	0	-0.04	0	0	12.28	0	0	0	0	0	0	13.64	13.64
	Inverter	MV6-3	370207	4907140	2	0	0	100.3	100.3	1	1544.61	3.25	0	74.78	0	-0.02	0	0	12.43	0	0	0	0	0	0	13.12	13.12
	Inverter	MV6-1	370235	4907364	2	0	0	97.3	97.3	1	1358.49	3.25	0	73.66	0	-0.09	0	0	11.96	0	0	0	0	0	0	11.78	11.78
	Inverter	MV4-10	369312	4908858	2	0	0	100.3	100.3	1	1940.95	3.25	0	76.76	0	0.11	0	0	13.34	0	0	0	0	0	0	10.1	10.1
	Inverter	MV4-11	369264	4908855	2	0	0	100.3	100.3	1	1986.46	3.25	0	76.96	0	0.13	0	0	13.43	0	0	0	0	0	0	9.79	9.79
	Inverter	MV4-9	369289	4909001	2	0	0	100.3	100.3	1	2005.75	3.25	0	77.05	0	0.13	0	0	13.47	0	0	0	0	0	0	9.66	9.66
	Inverter	MV4-8	369256	4909001	2	0	0	100.3	100.3	1	2036.92	3.25	0	77.18	0	0.14	0	0	13.54	0	0	0	0	0	0	9.45	9.45
	Inverter	MV4-5	369289	4909199	2	0	0	100.3	100.3	1	2079.61	3.25	0	77.36	0	0.15	0	0	13.63	0	0	0	0	0	0	9.17	9.17
	Inverter	MV4-6	369243	4909192	2	0	0	100.3	100.3	1	2118.74	3.25	0	77.52	0	0.16	0	0	13.71	0	0	0	0	0	0	8.92	8.92
	Inverter	MV4-2	369272	4909397	2	0	0	100.3	100.3	1	2183.94	3.25	0	77.78	0	0.18	0	0	13.84	0	0	0	0	0	0	8.51	8.51
	Inverter	MV4-3	369229	4909397	2	0	0	100.3	100.3	1	2221.64	3.25	0	77.93	0	0.19	0	0	13.92	0	0	0	0	0	0	8.27	8.27
	Inverter	MV4-7	369035	4909001	2	0	0	100.3	100.3	1	2247.04	3.25	0	78.03	0	0.2	0	0	13.97	0	0	0	0	0	0	8.12	8.12
	Inverter	MV4-4	369027	4909199	2	0	0	100.3	100.3	1	2320.64	3.25	0	78.31	0	0.21	0	0	14.11	0	0	0	0	0	0	7.67	7.67
	Inverter	MV4-1	369011	4909397	2	0	0	100.3	100.3	1	2415.52	3.25	0	78.66	0	0.24	0	0	14.3	0	0	0	0	0	0	7.12	7.12
	Inverter	MV3-8	368680	4907712	2	0	0	100.3	100.3	1	2579.13	3.25	0	79.23	0	0.27	0	0	14.61	0	0	0	0	0	0	6.2	6.2
	Inverter	MV3-14	368684	4907498	2	0	0	100.3	100.3	1	2635.45	3.25	0	79.42	0	0.29	0	0	14.71	0	0	0	0	0	0	5.9	5.9
	Inverter	MV3-20	368689	4907317	2	0	0	100.3	100.3	1	2693.97	3.25	0	79.61	0	0.3	0	0	14.82	0	0	0	0	0	0	5.58	5.58
	DSTATCOM - 10 MVAR #1	DSAT1	369437	4908757	2.5	0	0	96.6	96.6	1	1794.6	3.5	0	76.08	0	3.18	0	0	1.59	0	0	0	0	0	0	15.78	15.78
	Inverter	MV3-9	368512	4907703	2	0	0	100.3	100.3	1	2744.47	3.25	0	79.77	0	0.31	0	0	14.91	0	0	0	0	0	0	5.32	5.32
	DSTATCOM - 10 MVAR #2	DSAT2	369403	4908757	2.5	0	0	96.6	96.6	1	1827.68	3.5	0	76.24	0	3.18	0	0	1.61	0	0	0	0	0	0	15.59	15.59
	Inverter	MV3-16	368514	4907475	2	0	0	100.3	100.3	1	2804.1	3.25	0	79.96	0	0.32	0	0	15.02	0	0	0	0	0	0	5.01	5.01
	Inverter	MV3-11	368346	4907662	2	0	0	100.3	100.3	1	2915.46	3.25	0	80.29	0	0.35	0	0	15.22	0	0	0	0	0	0	4.45	4.45
	Inverter	MV3-21	368478	4907206	2	0	0	100.3	100.3	1	2931.39	3.25	0	80.34	0	0.35	0	0	15.25	0	0	0	0	0	0	4.37	4.37
	Inverter	MV3-15	368357	4907477	2	0	0	100.3	100.3	1	2953.3	3.25	0	80.41	0	0.35	0	0	15.29	0	0	0	0	0	0	4.26	4.26
	Inverter	MV3-19	368357	4907347	2	0	0	100.3	100.3	1	2993.78	3.25	0	80.52	0	0.36	0	0	15.36	0	0	0	0	0	0	4.07	4.07
	Inverter	MV3-6	368162	4907834	2	0	0	100.3	100.3	1	3061.77	3.25	0	80.72	0	0.37	0	0	15.48	0	0	0	0	0	0	3.74	3.74
	Inverter	MV3-10	368167	4907669	2	0	0	100.3	100.3	1	3088.33	3.25	0	80.79	0	0.38	0	0	15.53	0	0	0	0	0	0	3.61	3.61
	Inverter	MV3-17	368178	4907472	2	0	0	100.3	100.3	1	3126.34	3.25	0	80.9	0	0.39	0	0	15.59	0	0	0	0	0	0	3.43	3.43

Inverter	MV3-3	367939	4907927	2	0	0	100.3	100.3	1	3268.94	3.25	0	81.29	0	0.41	0	0	15.84	0	0	0	0	0	0	2.77	2.77
Inverter	MV3-7	367945	4907754	2	0	0	100.3	100.3	1	3289.26	3.25	0	81.34	0	0.42	0	0	15.87	0	0	0	0	0	0	2.68	2.68
Inverter	MV3-13	367963	4907577	2	0	0	100.3	100.3	1	3307.73	3.25	0	81.39	0	0.42	0	0	15.91	0	0	0	0	0	0	2.6	2.6
Inverter	MV3-18	367752	4907412	2	0	0	100.3	100.3	1	3552.8	3.25	0	82.01	0	0.46	0	0	16.32	0	0	0	0	0	0	1.52	1.52
Inverter	MV3-12	367668	4907594	2	0	0	100.3	100.3	1	3591.9	3.25	0	82.11	0	0.47	0	0	16.38	0	0	0	0	0	0	1.36	1.36
Inverter	MV5-6	369982	4908507	2	0	0	89.1	89.1	1	1211.84	3.25	0	72.67	0	0.73	0	0	6.7	0	0	0	0	0	0	8.96	8.96
Inverter	MV2-3	365820	4906641	2	0	0	100.3	100.3	1	5624.13	3.25	0	86	0	0.69	0	0	19.48	0	0	0	0	0	0	-5.85	-5.85
Inverter	MV2-4	365586	4906624	2	0	0	100.3	100.3	1	5852.61	3.25	0	86.35	0	0.7	0	0	19.79	0	0	0	0	0	0	-6.53	-6.53
Fixed Reactor Bank 2	FRB2	369464	4908755	6	0	0	89.8	89.8	1	1767.88	5.25	0	75.95	0	-1.01	0	0	3.97	0	0	0	0	0	0	10.87	10.87
Fixed Reactor Bank 1	FRB1	369378	4908755	6	0	0	89.8	89.8	1	1851.57	5.25	0	76.35	0	-1.01	0	0	4.11	0	0	0	0	0	0	10.32	10.32
Inverter	MV1-15	365315	4904994	2	0	0	100.3	100.3	1	6753.08	3.25	0	87.59	0	0.71	0	0	20.99	0	0	0	0	0	0	-8.98	-8.98
Inverter	MV1-4	364815	4905918	2	0	0	100.3	100.3	1	6811.39	3.25	0	87.66	0	0.71	0	0	21.06	0	0	0	0	0	0	-9.13	-9.13
Inverter	MV1-12	365038	4905386	2	0	0	100.3	100.3	1	6816.38	3.25	0	87.67	0	0.71	0	0	21.07	0	0	0	0	0	0	-9.14	-9.14
Inverter	MV1-2	364753	4906063	2	0	0	100.3	100.3	1	6819.65	3.25	0	87.68	0	0.71	0	0	21.07	0	0	0	0	0	0	-9.15	-9.15
Inverter	MV1-1	364715	4906166	2	0	0	100.3	100.3	1	6822	3.25	0	87.68	0	0.71	0	0	21.07	0	0	0	0	0	0	-9.15	-9.15
Inverter	MV1-8	364788	4905647	2	0	0	100.3	100.3	1	6937.2	3.25	0	87.82	0	0.71	0	0	21.22	0	0	0	0	0	0	-9.44	-9.44
Inverter	MV1-5	364671	4905892	2	0	0	100.3	100.3	1	6955.29	3.25	0	87.85	0	0.71	0	0	21.24	0	0	0	0	0	0	-9.49	-9.49
SubstationTransformer	W_ST	369711.17	4906112.3	2.5	0	0	92	92	1	2667.81	3.5	0	79.52	0	0	0	0	5.45	0	0	0	0	0	0	7	7
Inverter	MV1-9	364561	4905646	2	0	0	100.3	100.3	1	7147.34	3.25	0	88.08	0	0.71	0	0	21.48	0	0	0	0	0	0	-9.96	-9.96
Inverter	MV1-11	364655	4905414	2	0	0	100.3	100.3	1	7152.03	3.25	0	88.09	0	0.71	0	0	21.49	0	0	0	0	0	0	-9.97	-9.97
Inverter	MV1-6	364477	4905835	2	0	0	100.3	100.3	1	7156.96	3.25	0	88.09	0	0.7	0	0	21.49	0	0	0	0	0	0	-9.98	-9.98
Inverter	MV4-15	369176	4908481	2	0	0	89.1	89.1	1	2011.09	3.25	0	77.07	0	0.91	0	0	8.06	0	0	0	0	0	0	3.02	3.02
Inverter	MV4-14	369176	4908507	2	0	0	89.1	89.1	1	2013.11	3.25	0	77.08	0	0.91	0	0	8.07	0	0	0	0	0	0	3	3
Inverter	MV2-1	365842	4906816	2	0	0	97.3	97.3	1	5552.67	3.25	0	85.89	0	0.68	0	0	19.37	0	0	0	0	0	0	-8.64	-8.64
Inverter	MV4-13	369051	4908605	2	0	0	89.1	89.1	1	2147.66	3.25	0	77.64	0	0.94	0	0	8.29	0	0	0	0	0	0	2.19	2.19
Inverter	MV4-12	369043	4908803	2	0	0	89.1	89.1	1	2188.96	3.25	0	77.8	0	0.95	0	0	8.35	0	0	0	0	0	0	1.95	1.95
Westbrook Inverter Enclosur	W_INV6	369875	4906578	2	0	0	89.1	89.1	1	2192.23	3.25	0	77.82	0	0.95	0	0	8.36	0	0	0	0	0	0	1.93	1.93
Westbrook Inverter Enclosur	W_INV5	369719	4906574	2	0	0	89.1	89.1	1	2291.74	3.25	0	78.2	0	0.98	0	0	8.52	0	0	0	0	0	0	1.36	1.36
Inverter	MV6-4	370250	4906966	2	0	0	86.1	86.1	1	1658.62	3.25	0	75.39	0	0.83	0	0	7.48	0	0	0	0	0	0	2.36	2.36
Westbrook Inverter Enclosur	W_INV7	369780	4906417	2	0	0	89.1	89.1	1	2378.2	3.25	0	78.52	0	1	0	0	8.65	0	0	0	0	0	0	0.88	0.88
Inverter	MV3-2	368671	4907928	2	0	0	89.1	89.1	1	2544.25	3.25	0	79.11	0	1.04	0	0	8.92	0	0	0	0	0	0	0	0
Inverter	MV1-7	364925	4905782	2	0	0	97.3	97.3	1	6758.93	3.25	0	87.6	0	0.71	0	0	20.99	0	0	0	0	0	0	-11.99	-11.99
Inverter	MV1-10	365004	4905564	2	0	0	97.3	97.3	1	6772.21	3.25	0	87.61	0	0.71	0	0	21.01	0	0	0	0	0	0	-12.03	-12.03
Westbrook Inverter Enclosur	W_INV4	369673	4906164	2	0	0	89.1	89.1	1	2646.39	3.25	0	79.45	0	1.06	0	0	9.07	0	0	0	0	0	0	-0.53	-0.53
Inverter	MV1-14	365163	4905049	2	0	0	97.3	97.3	1	6859	3.25	0	87.73	0	0.71	0	0	21.12	0	0	0	0	0	0	-12.25	-12.25
Westbrook Inverter Enclosur	W_INV2	369374	4906388	2	0	0	89.1	89.1	1	2659.2	3.25	0	79.5	0	1.06	0	0	9.09	0	0	0	0	0	0	-0.6	-0.6
Inverter	MV3-4	368502	4907925	2	0	0	89.1	89.1	1	2711.64	3.25	0	79.66	0	1.08	0	0	9.18	0	0	0	0	0	0	-0.86	-0.86
Westbrook Inverter Enclosur	W_INV3	369508	4906164	2	0	0	89.1	89.1	1	2743.82	3.25	0	79.77	0	1.08	0	0	9.23	0	0	0	0	0	0	-1.02	-1.02
Inverter	MV1-13	364731	4905241	2	0	0	97.3	97.3	1	7155.89	3.25	0	88.09	0	0.71	0	0	21.49	0	0	0	0	0	0	-12.98	-12.98
Inverter	MV3-22	368656	4907142	2	0	0	89.1	89.1	1	2794.83	3.25	0	79.93	0	1.1	0	0	9.3	0	0	0	0	0	0	-1.27	-1.27
Inverter	MV3-5	368340	4907843	2	0	0	89.1	89.1	1	2884.79	3.25	0	80.2	0	1.12	0	0	9.44	0	0	0	0	0	0	-1.7	-1.7
Inverter	MV3-1	368156	4907976	2	0	0	89.1	89.1	1	3047.58	3.25	0	80.68	0	1.16	0	0	9.69	0	0	0	0	0	0	-2.47	-2.47
Westbrook Inverter Enclosur	W_INV1	369409	4906578	2	0	0	86.1	86.1	1	2498.23	3.25	0	78.95	0	1.03	0	0	8.84	0	0	0	0	0	0	-2.76	-2.76
Inverter	MV2-2	365977	4906654	2	0	0	89.1	89.1	1	5470.64	3.25	0	85.76	0	1.76	0	0	13.08	0	0	0	0	0	0	-11.54	-11.54
Gardiner Substation	G_Sub	366586.3	4903349.9	2.5	0	0	90.8	90.8	1	6782.45	4.25	0	87.63	0	2.03	1.94	0.35	10.54	0	0	0	0	0	0	-11.36	-11.36
Inverter	MV1-3	364440	4906039	2	0	0	89.1	89.1	1	7123.2	3.25	0	88.05	0	2.16	0	0	15.13	0	0	0	0	0	0	-16.28	-16.28
Inverters	G_Inv2	366676.9	4903239.1	2	0	0	87.7	87.7	1	6804.02	3.25	0	87.66	0	2.95	0	0	7.79	0	0	0	0	0	0	-10.73	-10.73
Inverters	G_Inv4	366732.8	4903105	2	0	0	87.7	87.7	1	6868.75	3.25	0	87.74	0	2.95	0	0	7.86	0	0	0	0	0	0	-10.88	-10.88
Inverters	G_Inv1	366526.4	4903225.8	2	0	0	87.7	87.7	1	6914.42	3.25	0	87.8	0	2.95	0	0	7.9	0	0	0	0	0	0	-10.99	-10.99
Inverters	G_Inv6	366788.5	4902972	2	0	0	87.7	87.7	1	6935.19	3.25	0	87.82	0	2.95	0	0	7.93	0	0	0	0	0	0	-11.03	-11.03
Inverters	G_Inv3	366583.7	4903091.4	2	0	0	87.7	87.7	1	6976.47	3.25	0	87.87	0	2.95	0	0	7.97	0	0	0	0	0	0	-11.13	-11.13
Inverters	G_Inv8	366844.5	4902838.5	2	0	0	87.7	87.7	1	7004.17	3.25	0	87.91	0	2.95	0	0	7.99	0	0	0	0	0	0	-11.19	-11.19
Inverters	G_Inv5	366638.5	4902958.1	2	0	0	87.7	87.7	1	7041.78	3.25	0	87.95	0	2.95	0	0	8.03	0	0	0	0	0	0	-11.28	-11.28
Inverters	G_Inv10	366900.7	4902704.8	2	0	0	87.7	87.7	1	7075.48	3.25	0	88	0	2.95	0	0	8.07	0	0	0	0	0	0	-11.35	-11.35
Inverters	G_Inv7	366694.6	4902824.7	2	0	0	87.7	87.7	1	7108.67	3.25	0	88.04	0	2.95	0	0	8.1	0	0	0	0	0	0	-11.43	-11.43
Inverters	G_Inv9	366750.9	4902691.8	2	0	0	87.7	87.7	1	7177.34	3.25	0	88.12	0	2.95	0	0	8.17	0	0	0	0	0	0	-11.58	-11.58
Westbrook Inverter Transfor	W_INVTR6	369881	4906578	2	0	0	77.3	77.3	1	2188.65	3.25	0	77.8	0	-2.47	0	0	1.3	0	0	0	0	0	0	0.71	0.71
Westbrook Inverter Transfor	W_INVTR1	369403	4906578	2	0	0	78.2	78.2	1	2502.49	3.25	0	78.97	0	-2.57	0	0	1.44	0	0	0	0	0	0	0.4	0.4
Westbrook Inverter Transfor	W_INVTR5	369725	4906574	2	0	0	77.3	77.3	1	2287.91	3.25	0	78.19	0	-2.5	0	0	1.34	0	0	0	0	0	0	0.31	0.31
Westbrook Inverter Transfor	W_INVTR7	369786	4906417	2	0	0	77.3	77.3	1	2374.67	3.25	0	78.51	0	-2.53	0	0	1.38	0	0	0	0	0	0	-0.02	-0.02
Westbrook Inverter Transfor	W_INVTR4	369679	4906164	2	0	0	77.3	77.3	1	2642.97	3.25	0	79.44	0	-2.61	0	0	1.5	0	0	0	0	0	0	-0.99	-0.99
Westbrook Inverter Transfor	W_INVTR2	369368	4906388	2	0	0	77.3	77.3	1	2663.29	3.25	0	79.51	0	-2.62	0	0	1.51	0	0	0	0	0	0	-1.06	-1.06
Westbrook Inverter Transfor	W_INVTR3	369514	4906164	2	0	0	77.3	77.3	1	2740.17	3.25	0	79.76	0	-2.64	0	0	1.55	0	0	0	0	0	0	-1.32	-1.32
Inverter Transformer	MV6-1 T	370230	4907364	2	0	0	69.4	69.4	1	1361.98	3.25	0	73.68	0	1.91	0	0	4.27	0	0	0	0	0	0	-10.52	-10.52
Inverter Transformer	MV6-4 T	370244	4906966	2	0	0	69.4	69.4	1	1662	3.25	0	75.41	0	2.04	0	0	4.61	0	0	0	0	0	0	-12.72	-12.72
Inverter Transformer	MV5-4 T	370330	4908707	2	0	0	56.1	56.1	1	928.48	3.25	0	70.36	0	-0.01	0	0	4.72	0	0	0	0	0	0	-19	-19
Inverter Transformer	MV5-3 T	370237	4908851	2	0	0	56.1	56.1	1	1075.27	3.25	0	71.63	0	0.04	0	0	5.07	0	0	0	0	0	0	-20.68	-20.68
Inverter Transformer	MV2-1 T	365836	4906816	2	0	0	69.4	69.4	1	5558.44	3.25	0	85.9	0	3.12	0	0	7.74	0	0	0	0	0	0	-27.41	-27.41
Inverter Transformer	MV5-6 T	369987	4908507	2	0	0	56.1	56.1	1	1206.89	3.25	0	72.63	0	0.09	0	0	5.37	0	0	0	0	0	0	-22.03	-22.03
Inverter Transformer	MV5-5 T	370021	4908690	2	0	0	56.1	56.1	1	1213.19	3.25	0	72.68	0	0.09	0	0	5.39	0	0	0	0	0	0	-22.09	-22.09
Inverter Transformer	MV5-2 T	370011	4908853	2	0	0	56.1	56.1	1	1279.25	3.25	0	73.14	0	0.11	0	0	5.53	0	0	0	0	0	0	-22.73	-22.73
Inverter Transformer	MV5-1 T	370015	4909142	2	0	0	56.1	56.1	1	1417.15	3.25	0	74.03	0	0.17	0	0	5.84	0	0	0	0	0	0	-23.97	-23.97
Inverter Transformer	MV1-7 T	364919	4905782	2	0	0	69.4	69.4	1	6764.49	3.25	0	87.6	0	3.29	0	0	8.47	0	0	0	0	0	0	-30.01	-30.01
Inverter Transformer	MV1-10 T	365010	4905564	2	0	0	69.4	69.4	1	6766.73	3.25	0	87.61	0	3.29	0	0	8.47	0	0	0	0	0	0	-30.02	-30.02

	Inverter Transformer	MV6-2 T	370091	4907339	2	0	0	56.1	56.1	1	1479.29	3.25	0	74.4	0	0.19	0	0	5.97	0	0	0	0	0	0	-24.51	-24.51
	Inverter Transformer	MV1-14 T	365157	4905049	2	0	0	69.4	69.4	1	6864.27	3.25	0	87.73	0	3.3	0	0	8.53	0	0	0	0	0	0	-30.21	-30.21
	Inverter Transformer	MV6-3 T	370202	4907140	2	0	0	56.1	56.1	1	1547.78	3.25	0	74.79	0	0.22	0	0	6.12	0	0	0	0	0	0	-25.07	-25.07
	Inverter Transformer	MV1-13 T	364725	4905241	2	0	0	69.4	69.4	1	7161.3	3.25	0	88.1	0	3.33	0	0	8.69	0	0	0	0	0	0	-30.78	-30.78
	Inverter Transformer	MV4-10 T	369307	4908858	2	0	0	56.1	56.1	1	1945.77	3.25	0	76.78	0	0.38	0	0	6.94	0	0	0	0	0	0	-28.04	-28.04
	Inverter Transformer	MV4-11 T	369269	4908855	2	0	0	56.1	56.1	1	1981.63	3.25	0	76.94	0	0.4	0	0	7.01	0	0	0	0	0	0	-28.29	-28.29
	Inverter Transformer	MV4-14 T	369182	4908507	2	0	0	56.1	56.1	1	2007.13	3.25	0	77.05	0	0.41	0	0	7.06	0	0	0	0	0	0	-28.46	-28.46
	Inverter Transformer	MV4-9 T	369284	4909001	2	0	0	56.1	56.1	1	2010.47	3.25	0	77.07	0	0.41	0	0	7.06	0	0	0	0	0	0	-28.48	-28.48
	Inverter Transformer	MV4-15 T	369170	4908481	2	0	0	56.1	56.1	1	2017.08	3.25	0	77.09	0	0.41	0	0	7.08	0	0	0	0	0	0	-28.52	-28.52
	Inverter Transformer	MV4-8 T	369262	4909001	2	0	0	56.1	56.1	1	2031.25	3.25	0	77.16	0	0.42	0	0	7.1	0	0	0	0	0	0	-28.62	-28.62
	Inverter Transformer	MV4-5 T	369283	4909199	2	0	0	56.1	56.1	1	2085.07	3.25	0	77.38	0	0.44	0	0	7.21	0	0	0	0	0	0	-28.97	-28.97
	Inverter Transformer	MV4-6 T	369249	4909192	2	0	0	56.1	56.1	1	2113.25	3.25	0	77.5	0	0.45	0	0	7.26	0	0	0	0	0	0	-29.16	-29.16
	Inverter Transformer	MV4-13 T	369057	4908605	2	0	0	56.1	56.1	1	2141.71	3.25	0	77.62	0	0.46	0	0	7.32	0	0	0	0	0	0	-29.34	-29.34
	Inverter Transformer	MV4-12 T	369049	4908803	2	0	0	56.1	56.1	1	2183.1	3.25	0	77.78	0	0.48	0	0	7.4	0	0	0	0	0	0	-29.6	-29.6
	Inverter Transformer	MV4-2 T	369267	4909397	2	0	0	56.1	56.1	1	2188.31	3.25	0	77.8	0	0.48	0	0	7.41	0	0	0	0	0	0	-29.64	-29.64
	Inverter Transformer	MV4-3 T	369234	4909397	2	0	0	56.1	56.1	1	2217.25	3.25	0	77.92	0	0.5	0	0	7.46	0	0	0	0	0	0	-29.82	-29.82
	Inverter Transformer	MV4-7 T	369040	4909001	2	0	0	56.1	56.1	1	2242.26	3.25	0	78.01	0	0.51	0	0	7.51	0	0	0	0	0	0	-29.97	-29.97
	Inverter Transformer	MV4-4 T	369033	4909199	2	0	0	56.1	56.1	1	2315.07	3.25	0	78.29	0	0.54	0	0	7.65	0	0	0	0	0	0	-30.42	-30.42
	Inverter Transformer	MV4-1 T	369017	4909397	2	0	0	56.1	56.1	1	2410.13	3.25	0	78.64	0	0.58	0	0	7.82	0	0	0	0	0	0	-30.99	-30.99
	Inverter Transformer	MV3-2 T	368677	4907928	2	0	0	56.1	56.1	1	2538.33	3.25	0	79.09	0	0.63	0	0	8.06	0	0	0	0	0	0	-31.72	-31.72
	Inverter Transformer	MV3-8 T	368685	4907712	2	0	0	56.1	56.1	1	2574.27	3.25	0	79.21	0	0.65	0	0	8.12	0	0	0	0	0	0	-31.93	-31.93
	Inverter Transformer	MV3-14 T	368678	4907498	2	0	0	56.1	56.1	1	2641.14	3.25	0	79.44	0	0.68	0	0	8.24	0	0	0	0	0	0	-32.3	-32.3
	Inverter Transformer	MV3-20 T	368683	4907317	2	0	0	56.1	56.1	1	2699.53	3.25	0	79.63	0	0.7	0	0	8.35	0	0	0	0	0	0	-32.62	-32.62
	Inverter Transformer	MV3-4 T	368507	4907925	2	0	0	56.1	56.1	1	2706.7	3.25	0	79.65	0	0.7	0	0	8.36	0	0	0	0	0	0	-32.66	-32.66
	Inverter Transformer	MV3-9 T	368517	4907703	2	0	0	56.1	56.1	1	2739.61	3.25	0	79.75	0	0.72	0	0	8.42	0	0	0	0	0	0	-32.83	-32.83
	Inverter Transformer	MV3-22 T	368661	4907142	2	0	0	56.1	56.1	1	2790.32	3.25	0	79.91	0	0.74	0	0	8.51	0	0	0	0	0	0	-33.1	-33.1
	Inverter Transformer	MV3-16 T	368509	4907475	2	0	0	56.1	56.1	1	2808.86	3.25	0	79.97	0	0.75	0	0	8.54	0	0	0	0	0	0	-33.2	-33.2
	Inverter Transformer	MV3-5 T	368335	4907843	2	0	0	56.1	56.1	1	2889.71	3.25	0	80.22	0	0.78	0	0	8.68	0	0	0	0	0	0	-33.62	-33.62
	Inverter Transformer	MV3-11 T	368340	4907662	2	0	0	56.1	56.1	1	2921.29	3.25	0	80.31	0	0.8	0	0	8.73	0	0	0	0	0	0	-33.78	-33.78
	Inverter Transformer	MV3-21 T	368484	4907206	2	0	0	56.1	56.1	1	2925.86	3.25	0	80.33	0	0.8	0	0	8.74	0	0	0	0	0	0	-33.81	-33.81
	Inverter Transformer	MV3-15 T	368351	4907477	2	0	0	56.1	56.1	1	2959.04	3.25	0	80.42	0	0.81	0	0	8.8	0	0	0	0	0	0	-33.98	-33.98
	Inverter Transformer	MV3-19 T	368352	4907347	2	0	0	56.1	56.1	1	2998.5	3.25	0	80.54	0	0.83	0	0	8.87	0	0	0	0	0	0	-34.17	-34.17
	Inverter Transformer	MV3-1 T	368150	4907976	2	0	0	56.1	56.1	1	3053.53	3.25	0	80.7	0	0.85	0	0	8.96	0	0	0	0	0	0	-34.45	-34.45
	Inverter Transformer	MV3-6 T	368156	4907834	2	0	0	56.1	56.1	1	3067.69	3.25	0	80.74	0	0.86	0	0	8.98	0	0	0	0	0	0	-34.52	-34.52
	Inverter Transformer	MV3-10 T	368162	4907669	2	0	0	56.1	56.1	1	3093.21	3.25	0	80.81	0	0.87	0	0	9.03	0	0	0	0	0	0	-34.64	-34.64
	Inverter Transformer	MV3-17 T	368183	4907472	2	0	0	56.1	56.1	1	3121.53	3.25	0	80.89	0	0.88	0	0	9.07	0	0	0	0	0	0	-34.78	-34.78
	Inverter Transformer	MV3-3 T	367944	4907927	2	0	0	56.1	56.1	1	3263.98	3.25	0	81.27	0	0.94	0	0	9.31	0	0	0	0	0	0	-35.47	-35.47
	Inverter Transformer	MV3-7 T	367951	4907754	2	0	0	56.1	56.1	1	3283.36	3.25	0	81.33	0	0.95	0	0	9.34	0	0	0	0	0	0	-35.56	-35.56
	Inverter Transformer	MV3-13 T	367958	4907577	2	0	0	56.1	56.1	1	3312.6	3.25	0	81.4	0	0.96	0	0	9.39	0	0	0	0	0	0	-35.69	-35.69
	Inverter Transformer	MV3-18 T	367757	4907412	2	0	0	56.1	56.1	1	3547.97	3.25	0	82	0	1.06	0	0	9.76	0	0	0	0	0	0	-36.76	-36.76
	Inverter Transformer	MV3-12 T	367674	4907594	2	0	0	56.1	56.1	1	3586.03	3.25	0	82.09	0	1.08	0	0	9.82	0	0	0	0	0	0	-36.93	-36.93
	Inverter Transformer	MV2-2 T	365982	4906654	2	0	0	56.1	56.1	1	5465.88	3.25	0	85.75	0	1.79	0	0	12.45	0	0	0	0	0	0	-43.94	-43.94
	Inverter Transformer	MV2-3 T	365814	4906641	2	0	0	56.1	56.1	1	5629.85	3.25	0	86.01	0	1.84	0	0	12.66	0	0	0	0	0	0	-44.45	-44.45
	Inverter Transformer	MV2-4 T	365590	4906628	2	0	0	56.1	56.1	1	5847.61	3.25	0	86.34	0	1.92	0	0	12.92	0	0	0	0	0	0	-45.12	-45.12
	Line Reactor	NGR	369421	4908787.5	5	0	0	45.4	45.4	1	1817.46	5.25	0	76.19	0	3.4	1.26	0.04	0.74	0	0	0	0	0	0	-36.23	-36.23
	Inverter Transformer	MV1-15 T	365309	4904994	2	0	0	56.1	56.1	1	6758.29	3.25	0	87.6	0	2.19	0	0	13.97	0	0	0	0	0	0	-47.7	-47.7
	Inverter Transformer	MV1-4 T	364821	4905918	2	0	0	56.1	56.1	1	6805.79	3.25	0	87.66	0	2.21	0	0	14.02	0	0	0	0	0	0	-47.82	-47.82
	Inverter Transformer	MV1-12 T	365044	4905386	2	0	0	56.1	56.1	1	6810.97	3.25	0	87.66	0	2.21	0	0	14.02	0	0	0	0	0	0	-47.84	-47.84
	Inverter Transformer	MV1-2 T	364759	4906063	2	0	0	56.1	56.1	1	6814	3.25	0	87.67	0	2.21	0	0	14.03	0	0	0	0	0	0	-47.85	-47.85
	Inverter Transformer	MV1-1 T	364721	4906166	2	0	0	56.1	56.1	1	6816.31	3.25	0	87.67	0	2.21	0	0	14.03	0	0	0	0	0	0	-47.85	-47.85
	Inverter Transformer	MV1-8 T	364782	4905647	2	0	0	56.1	56.1	1	6942.73	3.25	0	87.83	0	2.24	0	0	14.17	0	0	0	0	0	0	-48.18	-48.18
	Inverter Transformer	MV1-5 T	364676	4905892	2	0	0	56.1	56.1	1	6950.61	3.25	0	87.84	0	2.25	0	0	14.18	0	0	0	0	0	0	-48.2	-48.2
	Inverter Transformer	MV1-3 T	364435	4906039	2	0	0	56.1	56.1	1	7127.93	3.25	0	88.06	0	2.29	0	0	14.37	0	0	0	0	0	0	-48.66	-48.66
	Inverter Transformer	MV1-6 T	364482	4905835	2	0	0	56.1	56.1	1	7152.27	3.25	0	88.09	0	2.3	0	0	14.39	0	0	0	0	0	0	-48.72	-48.72
	Inverter Transformer	MV1-9 T	364555	4905646	2	0	0	56.1	56.1	1	7152.9	3.25	0	88.09	0	2.3	0	0	14.39	0	0	0	0	0	0	-48.72	-48.72
	Inverter Transformer	MV1-11 T	364649	4905414	2	0	0	56.1	56.1	1	7157.5	3.25	0	88.1	0	2.3	0	0	14.4	0	0	0	0	0	0	-48.74	-48.74
Limit. Valu	0	0																								
Level D/N:	30.3718	30.3718																								

Receiver: Existing Noise Receptor
ID: S-R121
X: 371238
Y: 4908351
Z: 4.5
Ground: 0

ISO	Description	ID	X	Y	Z	Ground	ReflOrd	LxT	LxN	L/A	Dist.	hm	Freq	Adiv	K0b	Agr	Abar	z	Aatm	Afol	Ahous	Cmet	CmetN	Dc	RL	LtotT	LtotN
	Sol_Luce Substation	S_Substation	369426	4908792	3.5	0	0	112.1	112.1	1	1864.89	5.25	0	76.41	0	0.15	4.56	0.46	4.13	0	0	0	0	0	0	26.81	26.81
	Inverter	MV5-4	370324	4908707	2	0	0	100.3	100.3	1	980.89	3.25	0	70.83	0	-0.26	0	0	10.85	0	0	0	0	0	0	18.89	18.89
	Inverter	MV5-3	370231	4908851	2	0	0	100.3	100.3	1	1124.3	3.25	0	72.02	0	-0.19	0	0	11.3	0	0	0	0	0	0	17.18	17.18
	Inverter	MV5-5	370015	4908690	2	0	0	100.3	100.3	1	1269.12	3.25	0	73.07	0	-0.12	0	0	11.72	0	0	0	0	0	0	15.65	15.65
	Inverter	MV5-2	370006	4908853	2	0	0	100.3	100.3	1	1330.35	3.25	0	73.48	0	-0.1	0	0	11.89	0	0	0	0	0	0	15.04	15.04
	Inverter	MV5-1	370020	4909142	2	0	0	100.3	100.3	1	1452.31	3.25	0	74.24	0	-0.05	0	0	12.21	0	0	0	0	0	0	13.92	13.92
	Inverter	MV6-2	370085	4907339	2	0	0	100.3	100.3	1	1534.13	3.25	0	74.72	0	-0.02	0	0	12.41	0	0	0	0	0	0	13.21	13.21

Inverter	MV6-3	370207	4907140	2	0	0	100.3	100.3	1	1590.44	3.25	0	75.03	0	0	0	0	12.55	0	0	0	0	0	0	12.74	12.74
Inverter	MV6-1	370235	4907364	2	0	0	97.3	97.3	1	1407.19	3.25	0	73.97	0	-0.07	0	0	12.09	0	0	0	0	0	0	11.32	11.32
Inverter	MV4-10	369312	4908858	2	0	0	100.3	100.3	1	1991.62	3.25	0	76.98	0	0.13	0	0	13.44	0	0	0	0	0	0	9.76	9.76
Inverter	MV4-11	369264	4908855	2	0	0	100.3	100.3	1	2037.33	3.25	0	77.18	0	0.14	0	0	13.54	0	0	0	0	0	0	9.45	9.45
Inverter	MV4-9	369289	4909001	2	0	0	100.3	100.3	1	2054.53	3.25	0	77.25	0	0.14	0	0	13.58	0	0	0	0	0	0	9.34	9.34
Inverter	MV4-8	369256	4909001	2	0	0	100.3	100.3	1	2085.86	3.25	0	77.39	0	0.15	0	0	13.64	0	0	0	0	0	0	9.13	9.13
Inverter	MV4-5	369289	4909199	2	0	0	100.3	100.3	1	2125.49	3.25	0	77.55	0	0.16	0	0	13.72	0	0	0	0	0	0	8.88	8.88
Inverter	MV4-6	369243	4909192	2	0	0	100.3	100.3	1	2165.02	3.25	0	77.71	0	0.17	0	0	13.8	0	0	0	0	0	0	8.63	8.63
Inverter	MV4-2	369272	4909397	2	0	0	100.3	100.3	1	2226.94	3.25	0	77.95	0	0.19	0	0	13.93	0	0	0	0	0	0	8.24	8.24
Inverter	MV4-3	369229	4909397	2	0	0	100.3	100.3	1	2265	3.25	0	78.1	0	0.2	0	0	14	0	0	0	0	0	0	8.01	8.01
Inverter	MV4-7	369035	4909001	2	0	0	100.3	100.3	1	2296.89	3.25	0	78.22	0	0.21	0	0	14.07	0	0	0	0	0	0	7.81	7.81
Inverter	MV4-4	369027	4909199	2	0	0	100.3	100.3	1	2368.04	3.25	0	78.49	0	0.23	0	0	14.2	0	0	0	0	0	0	7.39	7.39
Inverter	MV4-1	369011	4909397	2	0	0	100.3	100.3	1	2460.42	3.25	0	78.82	0	0.25	0	0	14.38	0	0	0	0	0	0	6.86	6.86
Inverter	MV3-8	368680	4907712	2	0	0	100.3	100.3	1	2636.61	3.25	0	79.42	0	0.29	0	0	14.71	0	0	0	0	0	0	5.89	5.89
Inverter	MV3-14	368684	4907498	2	0	0	100.3	100.3	1	2692.68	3.25	0	79.6	0	0.3	0	0	14.82	0	0	0	0	0	0	5.59	5.59
Inverter	MV3-20	368689	4907317	2	0	0	100.3	100.3	1	2750.74	3.25	0	79.79	0	0.31	0	0	14.92	0	0	0	0	0	0	5.29	5.29
Inverter	MV3-9	368512	4907703	2	0	0	100.3	100.3	1	2801.96	3.25	0	79.95	0	0.32	0	0	15.02	0	0	0	0	0	0	5.02	5.02
DSTATCOM - 10 MVAR #1	DSAT1	369437	4908757	2.5	0	0	96.6	96.6	1	1846.2	3.5	0	76.33	0	3.19	0	0	1.62	0	0	0	0	0	0	15.49	15.49
Inverter	MV3-16	368514	4907475	2	0	0	100.3	100.3	1	2861.39	3.25	0	80.13	0	0.33	0	0	15.13	0	0	0	0	0	0	4.72	4.72
DSTATCOM - 10 MVAR #2	DSAT2	369403	4908757	2.5	0	0	96.6	96.6	1	1879.38	3.5	0	76.48	0	3.2	0	0	1.64	0	0	0	0	0	0	15.31	15.31
Inverter	MV3-11	368346	4907662	2	0	0	100.3	100.3	1	2972.94	3.25	0	80.46	0	0.36	0	0	15.32	0	0	0	0	0	0	4.17	4.17
Inverter	MV3-21	368478	4907206	2	0	0	100.3	100.3	1	2988.08	3.25	0	80.51	0	0.36	0	0	15.35	0	0	0	0	0	0	4.09	4.09
Inverter	MV3-15	368357	4907477	2	0	0	100.3	100.3	1	3010.65	3.25	0	80.57	0	0.36	0	0	15.39	0	0	0	0	0	0	3.98	3.98
Inverter	MV3-19	368357	4907347	2	0	0	100.3	100.3	1	3050.93	3.25	0	80.69	0	0.37	0	0	15.46	0	0	0	0	0	0	3.79	3.79
Inverter	MV3-6	368162	4907834	2	0	0	100.3	100.3	1	3119.15	3.25	0	80.88	0	0.38	0	0	15.58	0	0	0	0	0	0	3.47	3.47
Inverter	MV3-10	368167	4907669	2	0	0	100.3	100.3	1	3145.82	3.25	0	80.95	0	0.39	0	0	15.63	0	0	0	0	0	0	3.34	3.34
Inverter	MV3-17	368178	4907472	2	0	0	100.3	100.3	1	3183.75	3.25	0	81.06	0	0.4	0	0	15.69	0	0	0	0	0	0	3.16	3.16
Inverter	MV3-3	367939	4907927	2	0	0	100.3	100.3	1	3326.14	3.25	0	81.44	0	0.42	0	0	15.94	0	0	0	0	0	0	2.51	2.51
Inverter	MV3-7	367945	4907754	2	0	0	100.3	100.3	1	3346.68	3.25	0	81.49	0	0.43	0	0	15.97	0	0	0	0	0	0	2.42	2.42
Inverter	MV3-13	367963	4907577	2	0	0	100.3	100.3	1	3365.22	3.25	0	81.54	0	0.43	0	0	16	0	0	0	0	0	0	2.34	2.34
Inverter	MV3-18	367752	4907412	2	0	0	100.3	100.3	1	3610.25	3.25	0	82.15	0	0.47	0	0	16.41	0	0	0	0	0	0	1.28	1.28
Inverter	MV3-12	367668	4907594	2	0	0	100.3	100.3	1	3649.38	3.25	0	82.24	0	0.48	0	0	16.48	0	0	0	0	0	0	1.11	1.11
Inverter	MV5-6	369982	4908507	2	0	0	89.1	89.1	1	1265.65	3.25	0	73.05	0	0.74	0	0	6.8	0	0	0	0	0	0	8.47	8.47
Inverter	MV2-3	365820	4906641	2	0	0	100.3	100.3	1	5681.45	3.25	0	86.09	0	0.69	0	0	19.56	0	0	0	0	0	0	-6.02	-6.02
Inverter	MV2-4	365586	4906624	2	0	0	100.3	100.3	1	5909.96	3.25	0	86.43	0	0.7	0	0	19.87	0	0	0	0	0	0	-6.69	-6.69
Fixed Reactor Bank 2	FRB2	369464	4908755	6	0	0	89.8	89.8	1	1819.42	5.25	0	76.2	0	-1.01	0	0	4.06	0	0	0	0	0	0	10.53	10.53
Fixed Reactor Bank 1	FRB1	369378	4908755	6	0	0	89.8	89.8	1	1903.37	5.25	0	76.59	0	-1	0	0	4.2	0	0	0	0	0	0	9.99	9.99
Inverter	MV1-15	365315	4904994	2	0	0	100.3	100.3	1	6808.19	3.25	0	87.66	0	0.71	0	0	21.06	0	0	0	0	0	0	-9.12	-9.12
Inverter	MV1-4	364815	4905918	2	0	0	100.3	100.3	1	6868.36	3.25	0	87.74	0	0.71	0	0	21.13	0	0	0	0	0	0	-9.27	-9.27
Inverter	MV1-12	365038	4905386	2	0	0	100.3	100.3	1	6872.5	3.25	0	87.74	0	0.71	0	0	21.14	0	0	0	0	0	0	-9.28	-9.28
Inverter	MV1-2	364753	4906063	2	0	0	100.3	100.3	1	6876.79	3.25	0	87.75	0	0.71	0	0	21.14	0	0	0	0	0	0	-9.29	-9.29
Inverter	MV1-1	364715	4906166	2	0	0	100.3	100.3	1	6879.23	3.25	0	87.75	0	0.71	0	0	21.15	0	0	0	0	0	0	-9.3	-9.3
Inverter	MV1-8	364788	4905647	2	0	0	100.3	100.3	1	6993.86	3.25	0	87.89	0	0.71	0	0	21.29	0	0	0	0	0	0	-9.58	-9.58
Inverter	MV1-5	364671	4905892	2	0	0	100.3	100.3	1	7012.29	3.25	0	87.92	0	0.71	0	0	21.31	0	0	0	0	0	0	-9.63	-9.63
SubstationTransformer	W_ST	369711.17	4906112.3	2.5	0	0	92	92	1	2709.82	3.5	0	79.66	0	0.01	0	0	5.52	0	0	0	0	0	0	6.79	6.79
Inverter	MV1-9	364561	4905646	2	0	0	100.3	100.3	1	7204.12	3.25	0	88.15	0	0.7	0	0	21.55	0	0	0	0	0	0	-10.1	-10.1
Inverter	MV1-11	364655	4905414	2	0	0	100.3	100.3	1	7208.46	3.25	0	88.16	0	0.7	0	0	21.56	0	0	0	0	0	0	-10.11	-10.11
Inverter	MV1-6	364477	4905835	2	0	0	100.3	100.3	1	7213.97	3.25	0	88.16	0	0.7	0	0	21.57	0	0	0	0	0	0	-10.12	-10.12
Inverter	MV4-15	369176	4908481	2	0	0	89.1	89.1	1	2066.1	3.25	0	77.3	0	0.92	0	0	8.15	0	0	0	0	0	0	2.68	2.68
Inverter	MV4-14	369176	4908507	2	0	0	89.1	89.1	1	2067.89	3.25	0	77.31	0	0.92	0	0	8.16	0	0	0	0	0	0	2.67	2.67
Inverter	MV2-1	365842	4906816	2	0	0	97.3	97.3	1	5610.08	3.25	0	85.98	0	0.69	0	0	19.46	0	0	0	0	0	0	-8.81	-8.81
Inverter	MV4-13	369051	4908605	2	0	0	89.1	89.1	1	2201.7	3.25	0	77.86	0	0.95	0	0	8.37	0	0	0	0	0	0	1.88	1.88
Westbrook Inverter Enclosur	W_INV6	369875	4906578	2	0	0	89.1	89.1	1	2236.36	3.25	0	77.99	0	0.96	0	0	8.43	0	0	0	0	0	0	1.68	1.68
Inverter	MV4-12	369043	4908803	2	0	0	89.1	89.1	1	2241.06	3.25	0	78.01	0	0.96	0	0	8.44	0	0	0	0	0	0	1.65	1.65
Westbrook Inverter Enclosur	W_INV5	369719	4906574	2	0	0	89.1	89.1	1	2337.75	3.25	0	78.38	0	0.99	0	0	8.59	0	0	0	0	0	0	1.11	1.11
Inverter	MV6-4	370250	4906966	2	0	0	86.1	86.1	1	1701.29	3.25	0	75.62	0	0.84	0	0	7.55	0	0	0	0	0	0	2.05	2.05
Westbrook Inverter Enclosur	W_INV7	369780	4906417	2	0	0	89.1	89.1	1	2422.01	3.25	0	78.68	0	1.01	0	0	8.72	0	0	0	0	0	0	0.64	0.64
Inverter	MV3-2	368671	4907928	2	0	0	89.1	89.1	1	2601.62	3.25	0	79.3	0	1.05	0	0	9	0	0	0	0	0	0	-0.3	-0.3
Inverter	MV1-7	364925	4905782	2	0	0	97.3	97.3	1	6815.7	3.25	0	87.67	0	0.71	0	0	21.07	0	0	0	0	0	0	-12.14	-12.14
Inverter	MV1-10	365004	4905564	2	0	0	97.3	97.3	1	6828.63	3.25	0	87.69	0	0.71	0	0	21.08	0	0	0	0	0	0	-12.17	-12.17
Inverter	MV1-14	365163	4905049	2	0	0	97.3	97.3	1	6914.39	3.25	0	87.8	0	0.71	0	0	21.19	0	0	0	0	0	0	-12.39	-12.39
Westbrook Inverter Enclosur	W_INV4	369673	4906164	2	0	0	89.1	89.1	1	2689.28	3.25	0	79.59	0	1.07	0	0	9.14	0	0	0	0	0	0	-0.75	-0.75
Westbrook Inverter Enclosur	W_INV2	369374	4906388	2	0	0	89.1	89.1	1	2707	3.25	0	79.65	0	1.08	0	0	9.17	0	0	0	0	0	0	-0.84	-0.84
Inverter	MV3-4	368502	4907925	2	0	0	89.1	89.1	1	2768.97	3.25	0	79.85	0	1.09	0	0	9.26	0	0	0	0	0	0	-1.14	-1.14
Inverter	MV1-13	364731	4905241	2	0	0	97.3	97.3	1	7212.01	3.25	0	88.16	0	0.7	0	0	21.56	0	0	0	0	0	0	-13.12	-13.12
Westbrook Inverter Enclosur	W_INV3	369508	4906164	2	0	0	89.1	89.1	1	2788.53	3.25	0	79.91	0	1.1	0	0	9.29	0	0	0	0	0	0	-1.24	-1.24
Inverter	MV3-22	368656	4907142	2	0	0	89.1	89.1	1	2851.04	3.25	0	80.1	0	1.11	0	0	9.39	0	0	0	0	0	0	-1.54	-1.54
Inverter	MV3-5	368340	4907843	2	0	0	89.1	89.1	1	2942.19	3.25	0	80.37	0	1.13	0	0	9.53	0	0	0	0	0	0	-1.98	-1.98
Inverter	MV3-1	368156	4907976	2	0	0	89.1	89.1	1	3104.73	3.25	0	80.84	0	1.17	0	0	9.78	0	0	0	0	0	0	-2.73	-2.73
Westbrook Inverter Enclosur	W_INV1	369409	4906578	2	0	0	86.1	86.1	1	2547.31	3.25	0	79.12	0	1.04	0	0	8.92	0	0	0	0	0	0	-3.02	-3.02
Inverter	MV2-2	365977	4906654	2	0	0	89.1	89.1	1	5527.92	3.25	0	85.85	0	1.77	0	0	13.16	0	0	0	0	0	0	-11.72	-11.72
Gardiner Substation	G_Sub	366586.3	4903349.9	2.5	0	0	90.8	90.8	1	6830.03	4.25	0	87.69	0	2.03	1.93	0.35	10.58	0	0	0	0	0	0	-11.46	-11.46
Inverter	MV1-3	364440	4906039	2	0	0	89.1	89.1	1	7180.4	3.25	0	88.12	0	2.17	0	0	15.2	0	0	0	0	0	0	-16.44	-16.44
Inverters	G_Inv2	366676.9	4903239.1	2	0	0	87.7	87.7	1	6850.92	3.25	0	87.71	0	2.95	0	0	7.84	0	0	0	0	0	0	-10.84	-10.84

Inverters	G_Inv4	366732.8	4903105	2	0	0	87.7	87.7	1	6915.01	3.25	0	87.8	0	2.95	0	0	7.9	0	0	0	0	0	0	-10.99	-10.99
Inverters	G_Inv1	366526.4	4903225.8	2	0	0	87.7	87.7	1	6961.81	3.25	0	87.85	0	2.95	0	0	7.95	0	0	0	0	0	0	-11.1	-11.1
Inverters	G_Inv6	366788.5	4902972	2	0	0	87.7	87.7	1	6980.81	3.25	0	87.88	0	2.95	0	0	7.97	0	0	0	0	0	0	-11.14	-11.14
Inverters	G_Inv3	366583.7	4903091.4	2	0	0	87.7	87.7	1	7023.24	3.25	0	87.93	0	2.95	0	0	8.01	0	0	0	0	0	0	-11.23	-11.23
Inverters	G_Inv8	366844.5	4902838.5	2	0	0	87.7	87.7	1	7049.15	3.25	0	87.96	0	2.95	0	0	8.04	0	0	0	0	0	0	-11.29	-11.29
Inverters	G_Inv5	366638.5	4902958.1	2	0	0	87.7	87.7	1	7087.93	3.25	0	88.01	0	2.95	0	0	8.08	0	0	0	0	0	0	-11.38	-11.38
Inverters	G_Inv10	366900.7	4902704.8	2	0	0	87.7	87.7	1	7119.81	3.25	0	88.05	0	2.95	0	0	8.11	0	0	0	0	0	0	-11.45	-11.45
Inverters	G_Inv7	366694.6	4902824.7	2	0	0	87.7	87.7	1	7154.19	3.25	0	88.09	0	2.95	0	0	8.14	0	0	0	0	0	0	-11.53	-11.53
Inverters	G_Inv9	366750.9	4902691.8	2	0	0	87.7	87.7	1	7222.23	3.25	0	88.17	0	2.95	0	0	8.21	0	0	0	0	0	0	-11.68	-11.68
Westbrook Inverter Transfor	W_INVTR6	369881	4906578	2	0	0	77.3	77.3	1	2232.71	3.25	0	77.98	0	-2.49	0	0	1.32	0	0	0	0	0	0	0.53	0.53
Westbrook Inverter Transfor	W_INVTR1	369403	4906578	2	0	0	78.2	78.2	1	2551.62	3.25	0	79.14	0	-2.59	0	0	1.46	0	0	0	0	0	0	0.23	0.23
Westbrook Inverter Transfor	W_INVTR5	369725	4906574	2	0	0	77.3	77.3	1	2333.86	3.25	0	78.36	0	-2.52	0	0	1.36	0	0	0	0	0	0	0.13	0.13
Westbrook Inverter Transfor	W_INVTR7	369786	4906417	2	0	0	77.3	77.3	1	2418.4	3.25	0	78.67	0	-2.55	0	0	1.4	0	0	0	0	0	0	-0.19	-0.19
Westbrook Inverter Transfor	W_INVTR4	369679	4906164	2	0	0	77.3	77.3	1	2685.79	3.25	0	79.58	0	-2.63	0	0	1.52	0	0	0	0	0	0	-1.14	-1.14
Westbrook Inverter Transfor	W_INVTR2	369368	4906388	2	0	0	77.3	77.3	1	2711.14	3.25	0	79.66	0	-2.63	0	0	1.53	0	0	0	0	0	0	-1.22	-1.22
Westbrook Inverter Transfor	W_INVTR3	369514	4906164	2	0	0	77.3	77.3	1	2784.81	3.25	0	79.9	0	-2.65	0	0	1.56	0	0	0	0	0	0	-1.46	-1.46
Inverter Transformer	MV6-1 T	370230	4907364	2	0	0	69.4	69.4	1	1410.76	3.25	0	73.99	0	1.93	0	0	4.33	0	0	0	0	0	0	-10.9	-10.9
Inverter Transformer	MV6-4 T	370244	4906966	2	0	0	69.4	69.4	1	1704.78	3.25	0	75.63	0	2.06	0	0	4.66	0	0	0	0	0	0	-13	-13
Inverter Transformer	MV5-4 T	370330	4908707	2	0	0	56.1	56.1	1	975.3	3.25	0	70.78	0	0	0	0	4.83	0	0	0	0	0	0	-19.56	-19.56
Inverter Transformer	MV5-3 T	370237	4908851	2	0	0	56.1	56.1	1	1118.93	3.25	0	71.98	0	0.05	0	0	5.17	0	0	0	0	0	0	-21.14	-21.14
Inverter Transformer	MV2-1 T	365836	4906816	2	0	0	69.4	69.4	1	5615.86	3.25	0	85.99	0	3.13	0	0	7.78	0	0	0	0	0	0	-27.55	-27.55
Inverter Transformer	MV5-6 T	369987	4908507	2	0	0	56.1	56.1	1	1260.69	3.25	0	73.01	0	0.11	0	0	5.49	0	0	0	0	0	0	-22.55	-22.55
Inverter Transformer	MV5-5 T	370021	4908690	2	0	0	56.1	56.1	1	1263.34	3.25	0	73.03	0	0.11	0	0	5.5	0	0	0	0	0	0	-22.58	-22.58
Inverter Transformer	MV5-2 T	370011	4908853	2	0	0	56.1	56.1	1	1325.72	3.25	0	73.45	0	0.13	0	0	5.64	0	0	0	0	0	0	-23.16	-23.16
Inverter Transformer	MV5-1 T	370015	4909142	2	0	0	56.1	56.1	1	1456.51	3.25	0	74.27	0	0.18	0	0	5.92	0	0	0	0	0	0	-24.31	-24.31
Inverter Transformer	MV1-7 T	364919	4905782	2	0	0	69.4	69.4	1	6821.26	3.25	0	87.68	0	3.3	0	0	8.5	0	0	0	0	0	0	-30.12	-30.12
Inverter Transformer	MV1-10 T	365010	4905564	2	0	0	69.4	69.4	1	6823.15	3.25	0	87.68	0	3.3	0	0	8.5	0	0	0	0	0	0	-30.13	-30.13
Inverter Transformer	MV1-14 T	365157	4905049	2	0	0	69.4	69.4	1	6919.67	3.25	0	87.8	0	3.31	0	0	8.56	0	0	0	0	0	0	-30.32	-30.32
Inverter Transformer	MV6-2 T	370091	4907339	2	0	0	56.1	56.1	1	1529.63	3.25	0	74.69	0	0.21	0	0	6.08	0	0	0	0	0	0	-24.93	-24.93
Inverter Transformer	MV1-13 T	364725	4905241	2	0	0	69.4	69.4	1	7217.43	3.25	0	88.17	0	3.34	0	0	8.72	0	0	0	0	0	0	-30.88	-30.88
Inverter Transformer	MV6-3 T	370202	4907140	2	0	0	56.1	56.1	1	1593.68	3.25	0	75.05	0	0.24	0	0	6.22	0	0	0	0	0	0	-25.44	-25.44
Inverter Transformer	MV4-10 T	369307	4908858	2	0	0	56.1	56.1	1	1996.45	3.25	0	77.01	0	0.4	0	0	7.04	0	0	0	0	0	0	-28.39	-28.39
Inverter Transformer	MV4-11 T	369269	4908855	2	0	0	56.1	56.1	1	2032.48	3.25	0	77.16	0	0.42	0	0	7.11	0	0	0	0	0	0	-28.63	-28.63
Inverter Transformer	MV4-9 T	369284	4909001	2	0	0	56.1	56.1	1	2059.28	3.25	0	77.27	0	0.43	0	0	7.16	0	0	0	0	0	0	-28.8	-28.8
Inverter Transformer	MV4-14 T	369182	4908507	2	0	0	56.1	56.1	1	2061.91	3.25	0	77.29	0	0.43	0	0	7.16	0	0	0	0	0	0	-28.82	-28.82
Inverter Transformer	MV4-15 T	369170	4908481	2	0	0	56.1	56.1	1	2072.08	3.25	0	77.33	0	0.43	0	0	7.18	0	0	0	0	0	0	-28.89	-28.89
Inverter Transformer	MV4-8 T	369262	4909001	2	0	0	56.1	56.1	1	2080.16	3.25	0	77.36	0	0.44	0	0	7.2	0	0	0	0	0	0	-28.94	-28.94
Inverter Transformer	MV4-5 T	369283	4909199	2	0	0	56.1	56.1	1	2130.99	3.25	0	77.57	0	0.46	0	0	7.3	0	0	0	0	0	0	-29.27	-29.27
Inverter Transformer	MV4-6 T	369249	4909192	2	0	0	56.1	56.1	1	2159.49	3.25	0	77.69	0	0.47	0	0	7.35	0	0	0	0	0	0	-29.45	-29.45
Inverter Transformer	MV4-13 T	369057	4908605	2	0	0	56.1	56.1	1	2195.74	3.25	0	77.83	0	0.49	0	0	7.42	0	0	0	0	0	0	-29.68	-29.68
Inverter Transformer	MV4-2 T	369267	4909397	2	0	0	56.1	56.1	1	2231.36	3.25	0	77.97	0	0.5	0	0	7.49	0	0	0	0	0	0	-29.91	-29.91
Inverter Transformer	MV4-12 T	369049	4908803	2	0	0	56.1	56.1	1	2235.18	3.25	0	77.99	0	0.5	0	0	7.5	0	0	0	0	0	0	-29.93	-29.93
Inverter Transformer	MV4-3 T	369234	4909397	2	0	0	56.1	56.1	1	2260.56	3.25	0	78.08	0	0.51	0	0	7.55	0	0	0	0	0	0	-30.09	-30.09
Inverter Transformer	MV4-7 T	369040	4909001	2	0	0	56.1	56.1	1	2292.1	3.25	0	78.2	0	0.53	0	0	7.6	0	0	0	0	0	0	-30.28	-30.28
Inverter Transformer	MV4-4 T	369033	4909199	2	0	0	56.1	56.1	1	2362.44	3.25	0	78.47	0	0.56	0	0	7.74	0	0	0	0	0	0	-30.7	-30.7
Inverter Transformer	MV4-1 T	369017	4909397	2	0	0	56.1	56.1	1	2454.99	3.25	0	78.8	0	0.6	0	0	7.91	0	0	0	0	0	0	-31.25	-31.25
Inverter Transformer	MV3-2 T	368677	4907928	2	0	0	56.1	56.1	1	2595.7	3.25	0	79.29	0	0.66	0	0	8.16	0	0	0	0	0	0	-32.05	-32.05
Inverter Transformer	MV3-8 T	368685	4907712	2	0	0	56.1	56.1	1	2631.76	3.25	0	79.4	0	0.67	0	0	8.23	0	0	0	0	0	0	-32.25	-32.25
Inverter Transformer	MV3-14 T	368678	4907498	2	0	0	56.1	56.1	1	2698.37	3.25	0	79.62	0	0.7	0	0	8.35	0	0	0	0	0	0	-32.61	-32.61
Inverter Transformer	MV3-20 T	368683	4907317	2	0	0	56.1	56.1	1	2756.3	3.25	0	79.81	0	0.73	0	0	8.45	0	0	0	0	0	0	-32.92	-32.92
Inverter Transformer	MV3-4 T	368507	4907925	2	0	0	56.1	56.1	1	2764.03	3.25	0	79.83	0	0.73	0	0	8.46	0	0	0	0	0	0	-32.96	-32.96
Inverter Transformer	MV3-9 T	368517	4907703	2	0	0	56.1	56.1	1	2797.1	3.25	0	79.93	0	0.74	0	0	8.52	0	0	0	0	0	0	-33.14	-33.14
Inverter Transformer	MV3-22 T	368661	4907142	2	0	0	56.1	56.1	1	2846.51	3.25	0	80.09	0	0.76	0	0	8.6	0	0	0	0	0	0	-33.4	-33.4
Inverter Transformer	MV3-16 T	368509	4907475	2	0	0	56.1	56.1	1	2866.15	3.25	0	80.15	0	0.77	0	0	8.64	0	0	0	0	0	0	-33.5	-33.5
Inverter Transformer	MV3-5 T	368335	4907843	2	0	0	56.1	56.1	1	2947.11	3.25	0	80.39	0	0.81	0	0	8.78	0	0	0	0	0	0	-33.91	-33.91
Inverter Transformer	MV3-11 T	368340	4907662	2	0	0	56.1	56.1	1	2978.78	3.25	0	80.48	0	0.82	0	0	8.83	0	0	0	0	0	0	-34.08	-34.08
Inverter Transformer	MV3-21 T	368484	4907206	2	0	0	56.1	56.1	1	2982.54	3.25	0	80.49	0	0.82	0	0	8.84	0	0	0	0	0	0	-34.09	-34.09
Inverter Transformer	MV3-15 T	368351	4907477	2	0	0	56.1	56.1	1	3016.4	3.25	0	80.59	0	0.84	0	0	8.9	0	0	0	0	0	0	-34.26	-34.26
Inverter Transformer	MV3-19 T	368352	4907347	2	0	0	56.1	56.1	1	3055.65	3.25	0	80.7	0	0.85	0	0	8.96	0	0	0	0	0	0	-34.46	-34.46
Inverter Transformer	MV3-1 T	368150	4907976	2	0	0	56.1	56.1	1	3110.69	3.25	0	80.86	0	0.88	0	0	9.05	0	0	0	0	0	0	-34.73	-34.73
Inverter Transformer	MV3-6 T	368156	4907834	2	0	0	56.1	56.1	1	3125.06	3.25	0	80.9	0	0.88	0	0	9.08	0	0	0	0	0	0	-34.8	-34.8
Inverter Transformer	MV3-10 T	368162	4907669	2	0	0	56.1	56.1	1	3150.7	3.25	0	80.97	0	0.89	0	0	9.12	0	0	0	0	0	0	-34.92	-34.92
Inverter Transformer	MV3-17 T	368183	4907472	2	0	0	56.1	56.1	1	3178.94	3.25	0	81.05	0	0.91	0	0	9.17	0	0	0	0	0	0	-35.06	-35.06
Inverter Transformer	MV3-3 T	367944	4907927	2	0	0	56.1	56.1	1	3321.18	3.25	0	81.43	0	0.97	0	0	9.4	0	0	0	0	0	0	-35.73	-35.73
Inverter Transformer	MV3-7 T	367951	4907754	2	0	0	56.1	56.1	1	3340.78	3.25	0	81.48	0	0.97	0	0	9.43	0	0	0	0	0	0	-35.82	-35.82
Inverter Transformer	MV3-13 T	367958	4907577	2	0	0	56.1	56.1	1	3370.09	3.25	0	81.55	0	0.99	0	0	9.48	0	0	0	0	0	0	-35.96	-35.96
Inverter Transformer	MV3-18 T	367757	4907412	2	0	0	56.1	56.1	1	3605.42	3.25	0	82.14	0	1.08	0	0	9.85	0	0	0	0	0	0	-37.02	-37.02
Inverter Transformer	MV3-12 T	367674	4907594	2	0	0	56.1	56.1	1	3643.51	3.25	0	82.23	0	1.1	0	0	9.91	0	0	0	0	0	0	-37.18	-37.18
Inverter Transformer	MV2-2 T	365982	4906654	2	0	0	56.1	56.1	1	5523.16	3.25	0	85.84	0	1.81	0	0	12.52	0	0	0	0	0	0	-44.12	-44.12
Inverter Transformer	MV2-3 T	365814	4906641	2	0	0	56.1	56.1	1	5687.17	3.25	0	86.1	0	1.86	0	0	12.73	0	0	0	0	0	0	-44.63	-44.63
Inverter Transformer	MV2-4 T	365590	4906628	2	0	0	56.1	56.1	1	5904.97	3.25	0	86.42	0	1.93	0	0	12.99	0	0	0	0	0	0	-45.29	-45.29
Line Reactor	NGR	369421	4908787.5	5	0	0	45.4	45.4	1	1868.7	5.25	0	76.43	0	3.39	1.26	0.04	0.77	0	0	0	0	0	0	-36.5	-36.5
Inverter Transformer	MV1-15 T	365309	4904994	2	0	0	56.1	56.1	1	6813.41	3.25	0	87.67	0	2.21	0	0	14.03	0	0	0	0	0	0	-47.84	-47.84
Inverter Transformer	MV1-4 T	364821	4905918	2	0	0	56.1	56.1	1	6862.75	3.25	0	87.73	0	2.22	0	0	14.08	0	0	0	0	0	0	-47.97	-47.97

	Inverter Transformer	MV1-12 T	365044	4905386	2	0	0	56.1	56.1	1	6867.09	3.25	0	87.74	0	2.22	0	0	14.09	0	0	0	0	0	0	-47.99	-47.99
	Inverter Transformer	MV1-2 T	364759	4906063	2	0	0	56.1	56.1	1	6871.13	3.25	0	87.74	0	2.22	0	0	14.09	0	0	0	0	0	0	-48	-48
	Inverter Transformer	MV1-1 T	364721	4906166	2	0	0	56.1	56.1	1	6873.54	3.25	0	87.74	0	2.22	0	0	14.09	0	0	0	0	0	0	-48	-48
	Inverter Transformer	MV1-8 T	364782	4905647	2	0	0	56.1	56.1	1	6999.4	3.25	0	87.9	0	2.26	0	0	14.23	0	0	0	0	0	0	-48.33	-48.33
	Inverter Transformer	MV1-5 T	364676	4905892	2	0	0	56.1	56.1	1	7007.61	3.25	0	87.91	0	2.26	0	0	14.24	0	0	0	0	0	0	-48.35	-48.35
	Inverter Transformer	MV1-3 T	364435	4906039	2	0	0	56.1	56.1	1	7185.13	3.25	0	88.13	0	2.31	0	0	14.43	0	0	0	0	0	0	-48.81	-48.81
	Inverter Transformer	MV1-6 T	364482	4905835	2	0	0	56.1	56.1	1	7209.29	3.25	0	88.16	0	2.32	0	0	14.45	0	0	0	0	0	0	-48.87	-48.87
	Inverter Transformer	MV1-9 T	364555	4905646	2	0	0	56.1	56.1	1	7209.68	3.25	0	88.16	0	2.32	0	0	14.45	0	0	0	0	0	0	-48.87	-48.87
	Inverter Transformer	MV1-11 T	364649	4905414	2	0	0	56.1	56.1	1	7213.94	3.25	0	88.16	0	2.32	0	0	14.46	0	0	0	0	0	0	-48.88	-48.88
Limit. Valu	0	0																								
Level D/N:	30.0324	30.0324																								

Receiver: Existing Noise Receptor
ID: S-R122
X: 371356
Y: 4908619
Z: 4.5
Ground: 0

ISO	Description	ID	X	Y	Z	Ground	ReflOrd	LxT	LxN	L/A	Dist.	hm	Freq	Adiv	K0b	Agr	Abar	z	Aatm	Afol	Ahous	Cmet	CmetN	Dc	RL	LtotT	LtotN
	Sol_Luce Substation	S_Substation	369426	4908792	3.5	0	0	112.1	112.1	1	1937.74	5.25	0	76.75	0	0.17	4.52	0.47	4.26	0	0	0	0	0	0	26.38	26.38
	Inverter	MV5-4	370324	4908707	2	0	0	100.3	100.3	1	1035.75	3.25	0	71.31	0	-0.23	0	0	11.03	0	0	0	0	0	0	18.21	18.21
	Inverter	MV5-3	370231	4908851	2	0	0	100.3	100.3	1	1148.68	3.25	0	72.2	0	-0.18	0	0	11.38	0	0	0	0	0	0	16.91	16.91
	Inverter	MV5-5	370015	4908690	2	0	0	100.3	100.3	1	1342.88	3.25	0	73.56	0	-0.09	0	0	11.92	0	0	0	0	0	0	14.92	14.92
	Inverter	MV5-2	370006	4908853	2	0	0	100.3	100.3	1	1370.13	3.25	0	73.74	0	-0.08	0	0	11.99	0	0	0	0	0	0	14.67	14.67
	Inverter	MV5-1	370020	4909142	2	0	0	100.3	100.3	1	1434.72	3.25	0	74.14	0	-0.06	0	0	12.16	0	0	0	0	0	0	14.07	14.07
	Inverter	MV6-2	370085	4907339	2	0	0	100.3	100.3	1	1803.84	3.25	0	76.12	0	0.07	0	0	13.04	0	0	0	0	0	0	11.08	11.08
	Inverter	MV6-3	370207	4907140	2	0	0	100.3	100.3	1	1872.87	3.25	0	76.45	0	0.09	0	0	13.19	0	0	0	0	0	0	10.58	10.58
	Inverter	MV4-10	369312	4908858	2	0	0	100.3	100.3	1	2057.93	3.25	0	77.27	0	0.15	0	0	13.58	0	0	0	0	0	0	9.31	9.31
	Inverter	MV4-9	369289	4909001	2	0	0	100.3	100.3	1	2102	3.25	0	77.45	0	0.16	0	0	13.67	0	0	0	0	0	0	9.03	9.03
	Inverter	MV4-11	369264	4908855	2	0	0	100.3	100.3	1	2105.27	3.25	0	77.47	0	0.16	0	0	13.68	0	0	0	0	0	0	9.01	9.01
	Inverter	MV4-8	369256	4909001	2	0	0	100.3	100.3	1	2134.46	3.25	0	77.59	0	0.17	0	0	13.74	0	0	0	0	0	0	8.82	8.82
	Inverter	MV4-5	369289	4909199	2	0	0	100.3	100.3	1	2146.83	3.25	0	77.64	0	0.17	0	0	13.77	0	0	0	0	0	0	8.74	8.74
	Inverter	MV4-6	369243	4909192	2	0	0	100.3	100.3	1	2189.32	3.25	0	77.81	0	0.18	0	0	13.85	0	0	0	0	0	0	8.47	8.47
	Inverter	MV4-2	369272	4909397	2	0	0	100.3	100.3	1	2224.49	3.25	0	77.94	0	0.19	0	0	13.92	0	0	0	0	0	0	8.26	8.26
	Inverter	MV4-3	369229	4909397	2	0	0	100.3	100.3	1	2264.82	3.25	0	78.1	0	0.2	0	0	14	0	0	0	0	0	0	8.01	8.01
	Inverter	MV4-7	369035	4909001	2	0	0	100.3	100.3	1	2352.23	3.25	0	78.43	0	0.22	0	0	14.17	0	0	0	0	0	0	7.49	7.49
	Inverter	MV6-1	370235	4907364	2	0	0	97.3	97.3	1	1682.76	3.25	0	75.52	0	0.03	0	0	12.76	0	0	0	0	0	0	9	9
	Inverter	MV4-4	369027	4909199	2	0	0	100.3	100.3	1	2400.13	3.25	0	78.6	0	0.23	0	0	14.27	0	0	0	0	0	0	7.21	7.21
	Inverter	MV4-1	369011	4909397	2	0	0	100.3	100.3	1	2470.69	3.25	0	78.86	0	0.25	0	0	14.4	0	0	0	0	0	0	6.8	6.8
	Inverter	MV3-8	368680	4907712	2	0	0	100.3	100.3	1	2825.53	3.25	0	80.02	0	0.33	0	0	15.06	0	0	0	0	0	0	4.9	4.9
	Inverter	MV3-14	368684	4907498	2	0	0	100.3	100.3	1	2897.63	3.25	0	80.24	0	0.34	0	0	15.19	0	0	0	0	0	0	4.54	4.54
	DSTATCOM - 10 MVAR #1	DSAT1	369437	4908757	2.5	0	0	96.6	96.6	1	1923.96	3.5	0	76.68	0	3.21	0	0	1.67	0	0	0	0	0	0	15.07	15.07
	Inverter	MV3-20	368689	4907317	2	0	0	100.3	100.3	1	2967.84	3.25	0	80.45	0	0.36	0	0	15.32	0	0	0	0	0	0	4.19	4.19
	Inverter	MV3-9	368512	4907703	2	0	0	100.3	100.3	1	2987.88	3.25	0	80.51	0	0.36	0	0	15.35	0	0	0	0	0	0	4.09	4.09
	DSTATCOM - 10 MVAR #2	DSAT2	369403	4908757	2.5	0	0	96.6	96.6	1	1957.87	3.5	0	76.84	0	3.21	0	0	1.69	0	0	0	0	0	0	14.89	14.89
	Inverter	MV3-16	368514	4907475	2	0	0	100.3	100.3	1	3063.61	3.25	0	80.72	0	0.37	0	0	15.48	0	0	0	0	0	0	3.73	3.73
	Inverter	MV3-11	368346	4907662	2	0	0	100.3	100.3	1	3158.47	3.25	0	80.99	0	0.39	0	0	15.65	0	0	0	0	0	0	3.28	3.28
	Inverter	MV3-21	368478	4907206	2	0	0	100.3	100.3	1	3206.16	3.25	0	81.12	0	0.4	0	0	15.73	0	0	0	0	0	0	3.06	3.06
	Inverter	MV3-15	368357	4907477	2	0	0	100.3	100.3	1	3209.08	3.25	0	81.13	0	0.4	0	0	15.74	0	0	0	0	0	0	3.05	3.05
	Inverter	MV3-19	368357	4907347	2	0	0	100.3	100.3	1	3257.61	3.25	0	81.26	0	0.41	0	0	15.82	0	0	0	0	0	0	2.82	2.82
	Inverter	MV3-6	368162	4907834	2	0	0	100.3	100.3	1	3289.05	3.25	0	81.34	0	0.42	0	0	15.87	0	0	0	0	0	0	2.68	2.68
	Inverter	MV3-10	368167	4907669	2	0	0	100.3	100.3	1	3327.5	3.25	0	81.44	0	0.42	0	0	15.94	0	0	0	0	0	0	2.51	2.51
	Inverter	MV3-17	368178	4907472	2	0	0	100.3	100.3	1	3378.65	3.25	0	81.57	0	0.43	0	0	16.03	0	0	0	0	0	0	2.28	2.28
	Inverter	MV3-3	367939	4907927	2	0	0	100.3	100.3	1	3486.37	3.25	0	81.85	0	0.45	0	0	16.21	0	0	0	0	0	0	1.81	1.81
	Inverter	MV3-7	367945	4907754	2	0	0	100.3	100.3	1	3518.97	3.25	0	81.93	0	0.45	0	0	16.26	0	0	0	0	0	0	1.67	1.67
	Inverter	MV3-13	367963	4907577	2	0	0	100.3	100.3	1	3549.4	3.25	0	82	0	0.46	0	0	16.31	0	0	0	0	0	0	1.54	1.54
	Inverter	MV3-18	367752	4907412	2	0	0	100.3	100.3	1	3800.75	3.25	0	82.6	0	0.5	0	0	16.73	0	0	0	0	0	0	0.49	0.49
	Inverter	MV3-12	367668	4907594	2	0	0	100.3	100.3	1	3827.79	3.25	0	82.66	0	0.5	0	0	16.77	0	0	0	0	0	0	0.38	0.38
	Inverter	MV5-6	369982	4908507	2	0	0	89.1	89.1	1	1378.56	3.25	0	73.79	0	0.77	0	0	7	0	0	0	0	0	0	7.51	7.51
	Inverter	MV2-3	365820	4906641	2	0	0	100.3	100.3	1	5878.76	3.25	0	86.39	0	0.7	0	0	19.83	0	0	0	0	0	0	-6.6	-6.6
	Inverter	MV2-4	365586	4906624	2	0	0	100.3	100.3	1	6105.16	3.25	0	86.71	0	0.71	0	0	20.14	0	0	0	0	0	0	-7.25	-7.25
	Fixed Reactor Bank 2	FRB2	369464	4908755	6	0	0	89.8	89.8	1	1896.88	5.25	0	76.56	0	-1	0	0	4.19	0	0	0	0	0	0	10.03	10.03
	Fixed Reactor Bank 1	FRB1	369378	4908755	6	0	0	89.8	89.8	1	1982.67	5.25	0	76.95	0	-0.99	0	0	4.34	0	0	0	0	0	0	9.49	9.49
	Inverter	MV1-15	365315	4904994	2	0	0	100.3	100.3	1	7045.16	3.25	0	87.96	0	0.71	0	0	21.36	0	0	0	0	0	0	-9.71	-9.71
	Inverter	MV1-4	364815	4905918	2	0	0	100.3	100.3	1	7076.73	3.25	0	88	0	0.71	0	0	21.4	0	0	0	0	0	0	-9.79	-9.79
	Inverter	MV1-1	364715	4906166	2	0	0	100.3	100.3	1	7079.55	3.25	0	88	0	0.71	0	0	21.4	0	0	0	0	0	0	-9.79	-9.79
	Inverter	MV1-2	364753	4906063	2	0	0	100.3	100.3	1	7080.45	3.25	0	88	0	0.71	0	0	21.4	0	0	0	0	0	0	-9.8	-9.8
	Inverter	MV1-12	365038	4905386	2	0	0	100.3	100.3	1	7097.14	3.25	0	88.02	0	0.71	0	0	21.42	0	0	0	0	0	0	-9.84	-9.84
	Inverter	MV1-8	364788	4905647	2	0	0	100.3	100.3	1	7209.12	3.25	0	88.16	0	0.7	0	0	21.56	0	0	0	0	0	0	-10.11	-10.11
	Inverter	MV1-5	364671	4905892	2	0	0	100.3	100.3	1	7219.82	3.25	0	88.17	0	0.7	0	0	21.57	0	0	0	0	0	0	-10.13	-10.13
	Inverter	MV1-9	364561	4905646	2	0	0	100.3	100.3	1	7416.92	3.25	0	88.4	0	0.69	0	0	21.81	0	0	0	0	0	0	-10.6	-10.6
	Inverter	MV1-6	364477	4905835	2	0	0	100.3	100.3	1	7421	3.25	0	88.41	0	0.69	0	0	21.82	0	0	0	0	0	0	-10.61	-10.61
	Inverter	MV1-11	364655	4905414	2	0	0	100.3	100.3	1	7428.02	3.25	0	88.42	0	0.69	0	0	21.83	0	0	0	0	0	0	-10.63	-10.63

SubstationTransformer	W_ST	369711.17	4906112.3	2.5	0	0	92	92	1	2998.19	3.5	0	80.54	0	0.08	0	0	5.95	0	0	0	0	0	0	5.4	5.4
Inverter	MV4-14	369176	4908507	2	0	0	89.1	89.1	1	2182.88	3.25	0	77.78	0	0.95	0	0	8.34	0	0	0	0	0	0	1.99	1.99
Inverter	MV4-15	369176	4908481	2	0	0	89.1	89.1	1	2184.36	3.25	0	77.79	0	0.95	0	0	8.34	0	0	0	0	0	0	1.98	1.98
Inverter	MV2-1	365842	4906816	2	0	0	97.3	97.3	1	5801.29	3.25	0	86.27	0	0.7	0	0	19.72	0	0	0	0	0	0	-9.38	-9.38
Inverter	MV4-13	369051	4908605	2	0	0	89.1	89.1	1	2305.04	3.25	0	78.25	0	0.98	0	0	8.54	0	0	0	0	0	0	1.29	1.29
Inverter	MV4-12	369043	4908803	2	0	0	89.1	89.1	1	2320.31	3.25	0	78.31	0	0.98	0	0	8.56	0	0	0	0	0	0	1.2	1.2
Westbrook Inverter Enclosur	W_INV6	369875	4906578	2	0	0	89.1	89.1	1	2521.72	3.25	0	79.03	0	1.03	0	0	8.88	0	0	0	0	0	0	0.11	0.11
Westbrook Inverter Enclosur	W_INV5	369719	4906574	2	0	0	89.1	89.1	1	2619.5	3.25	0	79.36	0	1.05	0	0	9.03	0	0	0	0	0	0	-0.39	-0.39
Westbrook Inverter Enclosur	W_INV7	369780	4906417	2	0	0	89.1	89.1	1	2707.87	3.25	0	79.65	0	1.08	0	0	9.17	0	0	0	0	0	0	-0.84	-0.84
Inverter	MV1-7	364925	4905782	2	0	0	97.3	97.3	1	7028.96	3.25	0	87.94	0	0.71	0	0	21.34	0	0	0	0	0	0	-12.67	-12.67
Inverter	MV1-10	365004	4905564	2	0	0	97.3	97.3	1	7048.47	3.25	0	87.96	0	0.71	0	0	21.36	0	0	0	0	0	0	-12.72	-12.72
Inverter	MV1-14	365163	4905049	2	0	0	97.3	97.3	1	7148.3	3.25	0	88.08	0	0.71	0	0	21.48	0	0	0	0	0	0	-12.96	-12.96
Inverter	MV3-2	368671	4907928	2	0	0	89.1	89.1	1	2772.49	3.25	0	79.86	0	1.09	0	0	9.27	0	0	0	0	0	0	-1.16	-1.16
Inverter	MV6-4	370250	4906966	2	0	0	86.1	86.1	1	1988.88	3.25	0	76.97	0	0.9	0	0	8.03	0	0	0	0	0	0	0.15	0.15
Inverter	MV1-13	364731	4905241	2	0	0	97.3	97.3	1	7436.5	3.25	0	88.43	0	0.69	0	0	21.84	0	0	0	0	0	0	-13.65	-13.65
Inverter	MV3-4	368502	4907925	2	0	0	89.1	89.1	1	2937.17	3.25	0	80.36	0	1.13	0	0	9.52	0	0	0	0	0	0	-1.95	-1.95
Westbrook Inverter Enclosur	W_INV4	369673	4906164	2	0	0	89.1	89.1	1	2976.49	3.25	0	80.47	0	1.14	0	0	9.58	0	0	0	0	0	0	-2.14	-2.14
Westbrook Inverter Enclosur	W_INV2	369374	4906388	2	0	0	89.1	89.1	1	2984.24	3.25	0	80.5	0	1.14	0	0	9.59	0	0	0	0	0	0	-2.17	-2.17
Westbrook Inverter Enclosur	W_INV3	369508	4906164	2	0	0	89.1	89.1	1	3072.81	3.25	0	80.75	0	1.16	0	0	9.73	0	0	0	0	0	0	-2.58	-2.58
Inverter	MV3-22	368656	4907142	2	0	0	89.1	89.1	1	3077.59	3.25	0	80.76	0	1.17	0	0	9.73	0	0	0	0	0	0	-2.61	-2.61
Inverter	MV3-5	368340	4907843	2	0	0	89.1	89.1	1	3114.23	3.25	0	80.87	0	1.17	0	0	9.79	0	0	0	0	0	0	-2.77	-2.77
Inverter	MV3-1	368156	4907976	2	0	0	89.1	89.1	1	3263.96	3.25	0	81.27	0	1.21	0	0	10.01	0	0	0	0	0	0	-3.44	-3.44
Westbrook Inverter Enclosur	W_INV1	369409	4906578	2	0	0	86.1	86.1	1	2820.73	3.25	0	80.01	0	1.1	0	0	9.34	0	0	0	0	0	0	-4.4	-4.4
Inverter	MV2-2	365977	4906654	2	0	0	89.1	89.1	1	5726.68	3.25	0	86.16	0	1.82	0	0	13.41	0	0	0	0	0	0	-12.33	-12.33
Gardiner Substation	G_Sub	366586.3	4903349.9	2.5	0	0	90.8	90.8	1	7107.28	4.25	0	88.03	0	2.08	1.88	0.36	10.85	0	0	0	0	0	0	-12.07	-12.07
Inverter	MV1-3	364440	4906039	2	0	0	89.1	89.1	1	7381.56	3.25	0	88.36	0	2.22	0	0	15.43	0	0	0	0	0	0	-16.96	-16.96
Inverters	G_Inv2	366676.9	4903239.1	2	0	0	87.7	87.7	1	7130.03	3.25	0	88.06	0	2.95	0	0	8.12	0	0	0	0	0	0	-11.47	-11.47
Inverters	G_Inv4	366732.8	4903105	2	0	0	87.7	87.7	1	7195.71	3.25	0	88.14	0	2.95	0	0	8.19	0	0	0	0	0	0	-11.62	-11.62
Inverters	G_Inv1	366526.4	4903225.8	2	0	0	87.7	87.7	1	7239.59	3.25	0	88.19	0	2.96	0	0	8.23	0	0	0	0	0	0	-11.72	-11.72
Inverters	G_Inv6	366788.5	4902972	2	0	0	87.7	87.7	1	7262.97	3.25	0	88.22	0	2.96	0	0	8.25	0	0	0	0	0	0	-11.77	-11.77
Inverters	G_Inv3	366583.7	4903091.4	2	0	0	87.7	87.7	1	7302.69	3.25	0	88.27	0	2.96	0	0	8.29	0	0	0	0	0	0	-11.86	-11.86
Inverters	G_Inv8	366844.5	4902838.5	2	0	0	87.7	87.7	1	7332.65	3.25	0	88.31	0	2.96	0	0	8.32	0	0	0	0	0	0	-11.92	-11.92
Inverters	G_Inv5	366638.5	4902958.1	2	0	0	87.7	87.7	1	7368.89	3.25	0	88.35	0	2.96	0	0	8.36	0	0	0	0	0	0	-12	-12
Inverters	G_Inv10	366900.7	4902704.8	2	0	0	87.7	87.7	1	7404.56	3.25	0	88.39	0	2.96	0	0	8.39	0	0	0	0	0	0	-12.08	-12.08
Inverters	G_Inv7	366694.6	4902824.7	2	0	0	87.7	87.7	1	7436.57	3.25	0	88.43	0	2.96	0	0	8.42	0	0	0	0	0	0	-12.15	-12.15
Inverters	G_Inv9	366750.9	4902691.8	2	0	0	87.7	87.7	1	7505.91	3.25	0	88.51	0	2.96	0	0	8.49	0	0	0	0	0	0	-12.3	-12.3
Westbrook Inverter Transfor	W_INVTR6	369881	4906578	2	0	0	77.3	77.3	1	2518.2	3.25	0	79.02	0	-2.58	0	0	1.45	0	0	0	0	0	0	-0.55	-0.55
Westbrook Inverter Transfor	W_INVTR1	369403	4906578	2	0	0	78.2	78.2	1	2824.87	3.25	0	80.02	0	-2.67	0	0	1.58	0	0	0	0	0	0	-0.69	-0.69
Westbrook Inverter Transfor	W_INVTR5	369725	4906574	2	0	0	77.3	77.3	1	2615.76	3.25	0	79.35	0	-2.61	0	0	1.49	0	0	0	0	0	0	-0.9	-0.9
Westbrook Inverter Transfor	W_INVTR7	369786	4906417	2	0	0	77.3	77.3	1	2704.39	3.25	0	79.64	0	-2.63	0	0	1.53	0	0	0	0	0	0	-1.2	-1.2
Westbrook Inverter Transfor	W_INVTR4	369679	4906164	2	0	0	77.3	77.3	1	2973.11	3.25	0	80.46	0	-2.71	0	0	1.65	0	0	0	0	0	0	-2.06	-2.06
Westbrook Inverter Transfor	W_INVTR2	369368	4906388	2	0	0	77.3	77.3	1	2988.23	3.25	0	80.51	0	-2.71	0	0	1.65	0	0	0	0	0	0	-2.11	-2.11
Westbrook Inverter Transfor	W_INVTR3	369514	4906164	2	0	0	77.3	77.3	1	3069.2	3.25	0	80.74	0	-2.73	0	0	1.69	0	0	0	0	0	0	-2.35	-2.35
Inverter Transformer	MV6-1 T	370230	4907364	2	0	0	69.4	69.4	1	1686.09	3.25	0	75.54	0	2.05	0	0	4.64	0	0	0	0	0	0	-12.88	-12.88
Inverter Transformer	MV6-4 T	370244	4906966	2	0	0	69.4	69.4	1	1992.22	3.25	0	76.99	0	2.17	0	0	4.96	0	0	0	0	0	0	-14.76	-14.76
Inverter Transformer	MV5-4 T	370330	4908707	2	0	0	56.1	56.1	1	1029.77	3.25	0	71.25	0	0.02	0	0	4.96	0	0	0	0	0	0	-20.18	-20.18
Inverter Transformer	MV5-3 T	370237	4908851	2	0	0	56.1	56.1	1	1142.8	3.25	0	72.16	0	0.06	0	0	5.22	0	0	0	0	0	0	-21.39	-21.39
Inverter Transformer	MV2-1 T	365836	4906816	2	0	0	69.4	69.4	1	5807	3.25	0	86.28	0	3.16	0	0	7.9	0	0	0	0	0	0	-27.99	-27.99
Inverter Transformer	MV5-5 T	370021	4908690	2	0	0	56.1	56.1	1	1336.89	3.25	0	73.52	0	0.14	0	0	5.66	0	0	0	0	0	0	-23.26	-23.26
Inverter Transformer	MV5-2 T	370011	4908853	2	0	0	56.1	56.1	1	1365.21	3.25	0	73.7	0	0.15	0	0	5.73	0	0	0	0	0	0	-23.52	-23.52
Inverter Transformer	MV5-6 T	369987	4908507	2	0	0	56.1	56.1	1	1373.58	3.25	0	73.76	0	0.15	0	0	5.74	0	0	0	0	0	0	-23.59	-23.59
Inverter Transformer	MV5-1 T	370015	4909142	2	0	0	56.1	56.1	1	1439.38	3.25	0	74.16	0	0.17	0	0	5.89	0	0	0	0	0	0	-24.17	-24.17
Inverter Transformer	MV1-7 T	364919	4905782	2	0	0	69.4	69.4	1	7034.45	3.25	0	87.94	0	3.32	0	0	8.62	0	0	0	0	0	0	-30.54	-30.54
Inverter Transformer	MV1-10 T	365010	4905564	2	0	0	69.4	69.4	1	7043.06	3.25	0	87.96	0	3.32	0	0	8.63	0	0	0	0	0	0	-30.55	-30.55
Inverter Transformer	MV1-14 T	365157	4905049	2	0	0	69.4	69.4	1	7153.5	3.25	0	88.09	0	3.33	0	0	8.69	0	0	0	0	0	0	-30.76	-30.76
Inverter Transformer	MV1-13 T	364725	4905241	2	0	0	69.4	69.4	1	7441.84	3.25	0	88.43	0	3.36	0	0	8.85	0	0	0	0	0	0	-31.29	-31.29
Inverter Transformer	MV6-2 T	370091	4907339	2	0	0	56.1	56.1	1	1799.62	3.25	0	76.1	0	0.32	0	0	6.64	0	0	0	0	0	0	-27.01	-27.01
Inverter Transformer	MV6-3 T	370202	4907140	2	0	0	56.1	56.1	1	1875.94	3.25	0	76.46	0	0.35	0	0	6.8	0	0	0	0	0	0	-27.56	-27.56
Inverter Transformer	MV4-10 T	369307	4908858	2	0	0	56.1	56.1	1	2062.89	3.25	0	77.29	0	0.43	0	0	7.17	0	0	0	0	0	0	-28.83	-28.83
Inverter Transformer	MV4-11 T	369269	4908855	2	0	0	56.1	56.1	1	2100.3	3.25	0	77.45	0	0.45	0	0	7.24	0	0	0	0	0	0	-29.07	-29.07
Inverter Transformer	MV4-9 T	369284	4909001	2	0	0	56.1	56.1	1	2106.92	3.25	0	77.47	0	0.45	0	0	7.25	0	0	0	0	0	0	-29.12	-29.12
Inverter Transformer	MV4-8 T	369262	4909001	2	0	0	56.1	56.1	1	2128.56	3.25	0	77.56	0	0.46	0	0	7.29	0	0	0	0	0	0	-29.26	-29.26
Inverter Transformer	MV4-5 T	369283	4909199	2	0	0	56.1	56.1	1	2152.61	3.25	0	77.66	0	0.47	0	0	7.34	0	0	0	0	0	0	-29.41	-29.41
Inverter Transformer	MV4-14 T	369182	4908507	2	0	0	56.1	56.1	1	2176.88	3.25	0	77.76	0	0.48	0	0	7.39	0	0	0	0	0	0	-29.56	-29.56
Inverter Transformer	MV4-6 T	369249	4909192	2	0	0	56.1	56.1	1	2183.53	3.25	0	77.78	0	0.48	0	0	7.4	0	0	0	0	0	0	-29.61	-29.61
Inverter Transformer	MV4-15 T	369170	4908481	2	0	0	56.1	56.1	1	2190.35	3.25	0	77.81	0	0.48	0	0	7.41	0	0	0	0	0	0	-29.65	-29.65
Inverter Transformer	MV4-2 T	369267	4909397	2	0	0	56.1	56.1	1	2229.17	3.25	0	77.96	0	0.5	0	0	7.49	0	0	0	0	0	0	-29.89	-29.89
Inverter Transformer	MV4-3 T	369234	4909397	2	0	0	56.1	56.1	1	2260.13	3.25	0	78.08	0	0.51	0	0	7.54	0	0	0	0	0	0	-30.08	-30.08
Inverter Transformer	MV4-13 T	369057	4908605	2	0	0	56.1	56.1	1	2299.04	3.25	0	78.23	0	0.53	0	0	7.62	0	0	0	0	0	0	-30.32	-30.32
Inverter Transformer	MV4-12 T	369049	4908803	2	0	0	56.1	56.1	1	2314.33	3.25	0	78.29	0	0.54	0	0	7.65	0	0	0	0	0	0	-30.41	-30.41
Inverter Transformer	MV4-7 T	369040	4909001	2	0	0	56.1	56.1	1	2347.29	3.25	0	78.41	0	0.55	0	0	7.71	0	0	0	0	0	0	-30.61	-30.61
Inverter Transformer	MV4-4 T	369033	4909199	2	0	0	56.1	56.1	1	2394.31	3.25	0	78.58	0	0.57	0	0	7.8	0	0	0	0	0	0	-30.89	-30.89
Inverter Transformer	MV4-1 T	369017	4909397	2	0	0	56.1	56.1	1	2465	3.25	0	78.84	0	0.6	0	0	7.93	0	0	0	0	0	0	-31.3	-31.3
Inverter Transformer	MV3-2 T	368677	4907928	2	0	0	56.1	56.1	1	2766.68	3.25	0	79.84	0	0.73	0	0	8.47	0	0	0	0	0	0	-32.98	-32.98

	Inverter Transformer	MV3-8 T	368685	4907712	2	0	0	56.1	56.1	1	2820.8	3.25	0	80.01	0	0.75	0	0	8.56	0	0	0	0	0	0	-33.26	-33.26
	Inverter Transformer	MV3-14 T	368678	4907498	2	0	0	56.1	56.1	1	2903.16	3.25	0	80.26	0	0.79	0	0	8.7	0	0	0	0	0	0	-33.69	-33.69
	Inverter Transformer	MV3-4 T	368507	4907925	2	0	0	56.1	56.1	1	2932.31	3.25	0	80.34	0	0.8	0	0	8.75	0	0	0	0	0	0	-33.84	-33.84
	Inverter Transformer	MV3-20 T	368683	4907317	2	0	0	56.1	56.1	1	2973.24	3.25	0	80.46	0	0.82	0	0	8.82	0	0	0	0	0	0	-34.05	-34.05
	Inverter Transformer	MV3-9 T	368517	4907703	2	0	0	56.1	56.1	1	2983.12	3.25	0	80.49	0	0.82	0	0	8.84	0	0	0	0	0	0	-34.1	-34.1
	Inverter Transformer	MV3-16 T	368509	4907475	2	0	0	56.1	56.1	1	3068.25	3.25	0	80.74	0	0.86	0	0	8.98	0	0	0	0	0	0	-34.52	-34.52
	Inverter Transformer	MV3-22 T	368661	4907142	2	0	0	56.1	56.1	1	3073.2	3.25	0	80.75	0	0.86	0	0	8.99	0	0	0	0	0	0	-34.55	-34.55
	Inverter Transformer	MV3-5 T	368335	4907843	2	0	0	56.1	56.1	1	3119.07	3.25	0	80.88	0	0.88	0	0	9.07	0	0	0	0	0	0	-34.77	-34.77
	Inverter Transformer	MV3-11 T	368340	4907662	2	0	0	56.1	56.1	1	3164.19	3.25	0	81.01	0	0.9	0	0	9.14	0	0	0	0	0	0	-34.99	-34.99
	Inverter Transformer	MV3-21 T	368484	4907206	2	0	0	56.1	56.1	1	3200.77	3.25	0	81.11	0	0.91	0	0	9.2	0	0	0	0	0	0	-35.17	-35.17
	Inverter Transformer	MV3-15 T	368351	4907477	2	0	0	56.1	56.1	1	3214.68	3.25	0	81.14	0	0.92	0	0	9.23	0	0	0	0	0	0	-35.23	-35.23
	Inverter Transformer	MV3-19 T	368352	4907347	2	0	0	56.1	56.1	1	3262.21	3.25	0	81.27	0	0.94	0	0	9.3	0	0	0	0	0	0	-35.46	-35.46
	Inverter Transformer	MV3-1 T	368150	4907976	2	0	0	56.1	56.1	1	3269.85	3.25	0	81.29	0	0.94	0	0	9.32	0	0	0	0	0	0	-35.49	-35.49
	Inverter Transformer	MV3-6 T	368156	4907834	2	0	0	56.1	56.1	1	3294.88	3.25	0	81.36	0	0.95	0	0	9.36	0	0	0	0	0	0	-35.61	-35.61
	Inverter Transformer	MV3-10 T	368162	4907669	2	0	0	56.1	56.1	1	3332.29	3.25	0	81.45	0	0.97	0	0	9.42	0	0	0	0	0	0	-35.79	-35.79
	Inverter Transformer	MV3-17 T	368183	4907472	2	0	0	56.1	56.1	1	3373.95	3.25	0	81.56	0	0.99	0	0	9.49	0	0	0	0	0	0	-35.98	-35.98
	Inverter Transformer	MV3-3 T	367944	4907927	2	0	0	56.1	56.1	1	3481.47	3.25	0	81.84	0	1.03	0	0	9.66	0	0	0	0	0	0	-36.47	-36.47
	Inverter Transformer	MV3-7 T	367951	4907754	2	0	0	56.1	56.1	1	3513.15	3.25	0	81.91	0	1.05	0	0	9.71	0	0	0	0	0	0	-36.61	-36.61
	Inverter Transformer	MV3-13 T	367958	4907577	2	0	0	56.1	56.1	1	3554.18	3.25	0	82.01	0	1.06	0	0	9.77	0	0	0	0	0	0	-36.79	-36.79
	Inverter Transformer	MV3-18 T	367757	4907412	2	0	0	56.1	56.1	1	3796.01	3.25	0	82.59	0	1.16	0	0	10.15	0	0	0	0	0	0	-37.84	-37.84
	Inverter Transformer	MV3-12 T	367674	4907594	2	0	0	56.1	56.1	1	3822.01	3.25	0	82.65	0	1.17	0	0	10.19	0	0	0	0	0	0	-37.95	-37.95
	Inverter Transformer	MV2-2 T	365982	4906654	2	0	0	56.1	56.1	1	5721.98	3.25	0	86.15	0	1.87	0	0	12.77	0	0	0	0	0	0	-44.74	-44.74
	Inverter Transformer	MV2-3 T	365814	4906641	2	0	0	56.1	56.1	1	5884.41	3.25	0	86.39	0	1.93	0	0	12.97	0	0	0	0	0	0	-45.23	-45.23
	Inverter Transformer	MV2-4 T	365590	4906628	2	0	0	56.1	56.1	1	6100.07	3.25	0	86.71	0	2	0	0	13.22	0	0	0	0	0	0	-45.87	-45.87
	Line Reactor	NGR	369421	4908787.5	5	0	0	45.4	45.4	1	1942.32	5.25	0	76.77	0	3.38	1.27	0.04	0.8	0	0	0	0	0	0	-36.86	-36.86
	Inverter Transformer	MV1-15 T	365309	4904994	2	0	0	56.1	56.1	1	7050.31	3.25	0	87.96	0	2.27	0	0	14.28	0	0	0	0	0	0	-48.46	-48.46
	Inverter Transformer	MV1-4 T	364821	4905918	2	0	0	56.1	56.1	1	7071.18	3.25	0	87.99	0	2.28	0	0	14.31	0	0	0	0	0	0	-48.52	-48.52
	Inverter Transformer	MV1-1 T	364721	4906166	2	0	0	56.1	56.1	1	7073.93	3.25	0	87.99	0	2.28	0	0	14.31	0	0	0	0	0	0	-48.52	-48.52
	Inverter Transformer	MV1-2 T	364759	4906063	2	0	0	56.1	56.1	1	7074.85	3.25	0	87.99	0	2.28	0	0	14.31	0	0	0	0	0	0	-48.53	-48.53
	Inverter Transformer	MV1-12 T	365044	4905386	2	0	0	56.1	56.1	1	7091.8	3.25	0	88.02	0	2.28	0	0	14.33	0	0	0	0	0	0	-48.57	-48.57
	Inverter Transformer	MV1-8 T	364782	4905647	2	0	0	56.1	56.1	1	7214.59	3.25	0	88.16	0	2.32	0	0	14.46	0	0	0	0	0	0	-48.88	-48.88
	Inverter Transformer	MV1-5 T	364676	4905892	2	0	0	56.1	56.1	1	7215.19	3.25	0	88.16	0	2.32	0	0	14.46	0	0	0	0	0	0	-48.88	-48.88
	Inverter Transformer	MV1-3 T	364435	4906039	2	0	0	56.1	56.1	1	7386.25	3.25	0	88.37	0	2.36	0	0	14.64	0	0	0	0	0	0	-49.31	-49.31
	Inverter Transformer	MV1-6 T	364482	4905835	2	0	0	56.1	56.1	1	7416.37	3.25	0	88.4	0	2.37	0	0	14.67	0	0	0	0	0	0	-49.38	-49.38
	Inverter Transformer	MV1-9 T	364555	4905646	2	0	0	56.1	56.1	1	7422.42	3.25	0	88.41	0	2.37	0	0	14.67	0	0	0	0	0	0	-49.4	-49.4
	Inverter Transformer	MV1-11 T	364649	4905414	2	0	0	56.1	56.1	1	7433.43	3.25	0	88.42	0	2.37	0	0	14.69	0	0	0	0	0	0	-49.42	-49.42
Limit. Valu	0	0																								
Level D/N:	29.4928	29.4928																								

Receiver: Existing Noise Receptor
ID: S-R123
X: 371197
Y: 4908286
Z: 4.5
Ground: 0

ISO	Description	ID	X	Y	Z	Ground	ReflOrd	LxT	LxN	L/A	Dist.	hm	Freq	Adiv	K0b	Agr	Abar	z	Aatm	Afol	Ahous	Cmet	CmetN	Dc	RL	LtotT	LtotN
	Sol_Luce Substation	S_Substation	369426	4908792	3.5	0	0	112.1	112.1	1	1841.87	5.25	0	76.31	0	0.15	4.57	0.45	4.09	0	0	0	0	0	0	26.96	26.96
	Inverter	MV5-4	370324	4908707	2	0	0	100.3	100.3	1	969.21	3.25	0	70.73	0	-0.26	0	0	10.81	0	0	0	0	0	0	19.04	19.04
	Inverter	MV5-3	370231	4908851	2	0	0	100.3	100.3	1	1119.1	3.25	0	71.98	0	-0.19	0	0	11.29	0	0	0	0	0	0	17.24	17.24
	Inverter	MV5-5	370015	4908690	2	0	0	100.3	100.3	1	1249.14	3.25	0	72.93	0	-0.13	0	0	11.66	0	0	0	0	0	0	15.85	15.85
	Inverter	MV5-2	370006	4908853	2	0	0	100.3	100.3	1	1319.08	3.25	0	73.41	0	-0.1	0	0	11.86	0	0	0	0	0	0	15.15	15.15
	Inverter	MV5-1	370020	4909142	2	0	0	100.3	100.3	1	1455.36	3.25	0	74.26	0	-0.05	0	0	12.21	0	0	0	0	0	0	13.89	13.89
	Inverter	MV6-2	370085	4907339	2	0	0	100.3	100.3	1	1460.6	3.25	0	74.29	0	-0.05	0	0	12.23	0	0	0	0	0	0	13.84	13.84
	Inverter	MV6-3	370207	4907140	2	0	0	100.3	100.3	1	1514.4	3.25	0	74.6	0	-0.03	0	0	12.36	0	0	0	0	0	0	13.38	13.38
	Inverter	MV6-1	370235	4907364	2	0	0	97.3	97.3	1	1332.49	3.25	0	73.49	0	-0.1	0	0	11.89	0	0	0	0	0	0	12.02	12.02
	Inverter	MV4-10	369312	4908858	2	0	0	100.3	100.3	1	1969.88	3.25	0	76.89	0	0.12	0	0	13.4	0	0	0	0	0	0	9.9	9.9
	Inverter	MV4-11	369264	4908855	2	0	0	100.3	100.3	1	2015.01	3.25	0	77.09	0	0.13	0	0	13.49	0	0	0	0	0	0	9.6	9.6
	Inverter	MV4-9	369289	4909001	2	0	0	100.3	100.3	1	2037.57	3.25	0	77.18	0	0.14	0	0	13.54	0	0	0	0	0	0	9.45	9.45
	Inverter	MV4-8	369256	4909001	2	0	0	100.3	100.3	1	2068.5	3.25	0	77.31	0	0.15	0	0	13.6	0	0	0	0	0	0	9.25	9.25
	Inverter	MV4-5	369289	4909199	2	0	0	100.3	100.3	1	2115.19	3.25	0	77.51	0	0.16	0	0	13.7	0	0	0	0	0	0	8.94	8.94
	Inverter	MV4-6	369243	4909192	2	0	0	100.3	100.3	1	2153.82	3.25	0	77.66	0	0.17	0	0	13.78	0	0	0	0	0	0	8.7	8.7
	Inverter	MV4-2	369272	4909397	2	0	0	100.3	100.3	1	2222.6	3.25	0	77.94	0	0.19	0	0	13.92	0	0	0	0	0	0	8.27	8.27
	Inverter	MV4-3	369229	4909397	2	0	0	100.3	100.3	1	2259.94	3.25	0	78.08	0	0.2	0	0	13.99	0	0	0	0	0	0	8.04	8.04
	Inverter	MV4-7	369035	4909001	2	0	0	100.3	100.3	1	2277.16	3.25	0	78.15	0	0.2	0	0	14.03	0	0	0	0	0	0	7.93	7.93
	Inverter	MV4-4	369027	4909199	2	0	0	100.3	100.3	1	2354.25	3.25	0	78.44	0	0.22	0	0	14.18	0	0	0	0	0	0	7.47	7.47
	Inverter	MV4-1	369011	4909397	2	0	0	100.3	100.3	1	2452.13	3.25	0	78.79	0	0.25	0	0	14.37	0	0	0	0	0	0	6.91	6.91
	Inverter	MV3-8	368680	4907712	2	0	0	100.3	100.3	1	2581.62	3.25	0	79.24	0	0.28	0	0	14.61	0	0	0	0	0	0	6.19	6.19
	Inverter	MV3-14	368684	4907498	2	0	0	100.3	100.3	1	2633.65	3.25	0	79.41	0	0.29	0	0	14.71	0	0	0	0	0	0	5.9	5.9
	Inverter	MV3-20	368689	4907317	2	0	0	100.3	100.3	1	2688.69	3.25	0	79.59	0	0.3	0	0	14.81	0	0	0	0	0	0	5.61	5.61
	Inverter	MV3-9	368512	4907703	2	0	0	100.3	100.3	1	2747.57	3.25	0	79.78	0	0.31	0	0	14.92	0	0	0	0	0	0	5.3	5.3
	DSTATCOM - 10 MVAR #1	DSAT1	369437	4908757	2.5	0	0	96.6	96.6	1	1821.93	3.5	0	76.21	0	3.18	0	0	1.61	0	0	0	0	0	0	15.63	15.63
	Inverter	MV3-16	368514	4907475	2	0	0	100.3	100.3	1	2802.89	3.25	0	79.95	0	0.32	0	0	15.02	0	0	0	0	0	0	5.02	5.02
	DSTATCOM - 10 MVAR #2	DSAT2	369403	4908757	2.5	0	0	96.6	96.6	1	1854.8	3.5	0	76.37	0	3.19	0	0	1.63	0	0	0	0	0	0	15.44	15.44

Inverter	MV3-11	368346	4907662	2	0	0	100.3	100.3	1	2918.49	3.25	0	80.3	0	0.35	0	0	15.23	0	0	0	0	0	0	4.44	4.44
Inverter	MV3-21	368478	4907206	2	0	0	100.3	100.3	1	2925.64	3.25	0	80.32	0	0.35	0	0	15.24	0	0	0	0	0	0	4.4	4.4
Inverter	MV3-15	368357	4907477	2	0	0	100.3	100.3	1	2952.98	3.25	0	80.41	0	0.35	0	0	15.29	0	0	0	0	0	0	4.27	4.27
Inverter	MV3-19	368357	4907347	2	0	0	100.3	100.3	1	2991.21	3.25	0	80.52	0	0.36	0	0	15.36	0	0	0	0	0	0	4.08	4.08
Inverter	MV3-6	368162	4907834	2	0	0	100.3	100.3	1	3068.47	3.25	0	80.74	0	0.38	0	0	15.49	0	0	0	0	0	0	3.71	3.71
Inverter	MV3-10	368167	4907669	2	0	0	100.3	100.3	1	3092.18	3.25	0	80.81	0	0.38	0	0	15.53	0	0	0	0	0	0	3.59	3.59
Inverter	MV3-17	368178	4907472	2	0	0	100.3	100.3	1	3126.81	3.25	0	80.9	0	0.39	0	0	15.59	0	0	0	0	0	0	3.43	3.43
Inverter	MV3-3	367939	4907927	2	0	0	100.3	100.3	1	3277.72	3.25	0	81.31	0	0.41	0	0	15.86	0	0	0	0	0	0	2.73	2.73
Inverter	MV3-7	367945	4907754	2	0	0	100.3	100.3	1	3295.23	3.25	0	81.36	0	0.42	0	0	15.89	0	0	0	0	0	0	2.65	2.65
Inverter	MV3-13	367963	4907577	2	0	0	100.3	100.3	1	3310.81	3.25	0	81.4	0	0.42	0	0	15.91	0	0	0	0	0	0	2.58	2.58
Inverter	MV3-18	367752	4907412	2	0	0	100.3	100.3	1	3554.14	3.25	0	82.01	0	0.46	0	0	16.32	0	0	0	0	0	0	1.52	1.52
Inverter	MV3-12	367668	4907594	2	0	0	100.3	100.3	1	3596.21	3.25	0	82.12	0	0.47	0	0	16.39	0	0	0	0	0	0	1.34	1.34
Inverter	MV5-6	369982	4908507	2	0	0	89.1	89.1	1	1234.94	3.25	0	72.83	0	0.73	0	0	6.74	0	0	0	0	0	0	8.75	8.75
Inverter	MV2-3	365820	4906641	2	0	0	100.3	100.3	1	5623	3.25	0	86	0	0.69	0	0	19.47	0	0	0	0	0	0	-5.85	-5.85
Inverter	MV2-4	365586	4906624	2	0	0	100.3	100.3	1	5851.97	3.25	0	86.35	0	0.7	0	0	19.79	0	0	0	0	0	0	-6.52	-6.52
Fixed Reactor Bank 2	FRB2	369464	4908755	6	0	0	89.8	89.8	1	1795.34	5.25	0	76.08	0	-1.01	0	0	4.01	0	0	0	0	0	0	10.69	10.69
Fixed Reactor Bank 1	FRB1	369378	4908755	6	0	0	89.8	89.8	1	1878.49	5.25	0	76.48	0	-1	0	0	4.16	0	0	0	0	0	0	10.15	10.15
Inverter	MV1-15	365315	4904994	2	0	0	100.3	100.3	1	6740.56	3.25	0	87.57	0	0.71	0	0	20.97	0	0	0	0	0	0	-8.95	-8.95
Inverter	MV1-4	364815	4905918	2	0	0	100.3	100.3	1	6807.15	3.25	0	87.66	0	0.71	0	0	21.06	0	0	0	0	0	0	-9.12	-9.12
Inverter	MV1-12	365038	4905386	2	0	0	100.3	100.3	1	6807.59	3.25	0	87.66	0	0.71	0	0	21.06	0	0	0	0	0	0	-9.12	-9.12
Inverter	MV1-2	364753	4906063	2	0	0	100.3	100.3	1	6816.66	3.25	0	87.67	0	0.71	0	0	21.07	0	0	0	0	0	0	-9.14	-9.14
Inverter	MV1-1	364715	4906166	2	0	0	100.3	100.3	1	6819.88	3.25	0	87.68	0	0.71	0	0	21.07	0	0	0	0	0	0	-9.15	-9.15
SubstationTransformer	W_ST	369711.17	4906112.3	2.5	0	0	92	92	1	2633.02	3.5	0	79.41	0	-0.01	0	0	5.4	0	0	0	0	0	0	7.18	7.18
Inverter	MV1-8	364788	4905647	2	0	0	100.3	100.3	1	6931.06	3.25	0	87.82	0	0.71	0	0	21.21	0	0	0	0	0	0	-9.43	-9.43
Inverter	MV1-5	364671	4905892	2	0	0	100.3	100.3	1	6951.25	3.25	0	87.84	0	0.71	0	0	21.24	0	0	0	0	0	0	-9.48	-9.48
Inverter	MV1-9	364561	4905646	2	0	0	100.3	100.3	1	7141.86	3.25	0	88.08	0	0.71	0	0	21.48	0	0	0	0	0	0	-9.95	-9.95
Inverter	MV1-11	364655	4905414	2	0	0	100.3	100.3	1	7144.66	3.25	0	88.08	0	0.71	0	0	21.48	0	0	0	0	0	0	-9.95	-9.95
Inverter	MV1-6	364477	4905835	2	0	0	100.3	100.3	1	7153.03	3.25	0	88.09	0	0.71	0	0	21.49	0	0	0	0	0	0	-9.97	-9.97
Inverter	MV4-15	369176	4908481	2	0	0	89.1	89.1	1	2030.39	3.25	0	77.15	0	0.91	0	0	8.09	0	0	0	0	0	0	2.9	2.9
Inverter	MV4-14	369176	4908507	2	0	0	89.1	89.1	1	2033.05	3.25	0	77.16	0	0.91	0	0	8.1	0	0	0	0	0	0	2.88	2.88
Inverter	MV2-1	365842	4906816	2	0	0	97.3	97.3	1	5553.1	3.25	0	85.89	0	0.68	0	0	19.38	0	0	0	0	0	0	-8.64	-8.64
Westbrook Inverter Enclosur	W_INV6	369875	4906578	2	0	0	89.1	89.1	1	2159.85	3.25	0	77.69	0	0.94	0	0	8.3	0	0	0	0	0	0	2.12	2.12
Inverter	MV4-13	369051	4908605	2	0	0	89.1	89.1	1	2169.58	3.25	0	77.73	0	0.95	0	0	8.32	0	0	0	0	0	0	2.06	2.06
Inverter	MV4-12	369043	4908803	2	0	0	89.1	89.1	1	2215.18	3.25	0	77.91	0	0.96	0	0	8.39	0	0	0	0	0	0	1.8	1.8
Westbrook Inverter Enclosur	W_INV5	369719	4906574	2	0	0	89.1	89.1	1	2261.73	3.25	0	78.09	0	0.97	0	0	8.47	0	0	0	0	0	0	1.53	1.53
Inverter	MV6-4	370250	4906966	2	0	0	86.1	86.1	1	1624.57	3.25	0	75.21	0	0.82	0	0	7.42	0	0	0	0	0	0	2.6	2.6
Westbrook Inverter Enclosur	W_INV7	369780	4906417	2	0	0	89.1	89.1	1	2345.43	3.25	0	78.4	0	0.99	0	0	8.6	0	0	0	0	0	0	1.06	1.06
Inverter	MV3-2	368671	4907928	2	0	0	89.1	89.1	1	2551.24	3.25	0	79.14	0	1.04	0	0	8.93	0	0	0	0	0	0	-0.04	-0.04
Inverter	MV1-7	364925	4905782	2	0	0	97.3	97.3	1	6753.37	3.25	0	87.59	0	0.71	0	0	20.99	0	0	0	0	0	0	-11.98	-11.98
Westbrook Inverter Enclosur	W_INV4	369673	4906164	2	0	0	89.1	89.1	1	2612.56	3.25	0	79.34	0	1.05	0	0	9.02	0	0	0	0	0	0	-0.36	-0.36
Inverter	MV1-10	365004	4905564	2	0	0	97.3	97.3	1	6764.8	3.25	0	87.61	0	0.71	0	0	21	0	0	0	0	0	0	-12.01	-12.01
Westbrook Inverter Enclosur	W_INV2	369374	4906388	2	0	0	89.1	89.1	1	2631.68	3.25	0	79.4	0	1.06	0	0	9.05	0	0	0	0	0	0	-0.46	-0.46
Inverter	MV1-14	365163	4905049	2	0	0	97.3	97.3	1	6847.43	3.25	0	87.71	0	0.71	0	0	21.11	0	0	0	0	0	0	-12.22	-12.22
Westbrook Inverter Enclosur	W_INV3	369508	4906164	2	0	0	89.1	89.1	1	2712.12	3.25	0	79.67	0	1.08	0	0	9.18	0	0	0	0	0	0	-0.86	-0.86
Inverter	MV3-4	368502	4907925	2	0	0	89.1	89.1	1	2719.07	3.25	0	79.69	0	1.08	0	0	9.19	0	0	0	0	0	0	-0.9	-0.9
Inverter	MV1-13	364731	4905241	2	0	0	97.3	97.3	1	7147.11	3.25	0	88.08	0	0.71	0	0	21.48	0	0	0	0	0	0	-12.96	-12.96
Inverter	MV3-22	368656	4907142	2	0	0	89.1	89.1	1	2786.65	3.25	0	79.9	0	1.09	0	0	9.29	0	0	0	0	0	0	-1.23	-1.23
Inverter	MV3-5	368340	4907843	2	0	0	89.1	89.1	1	2891.14	3.25	0	80.22	0	1.12	0	0	9.45	0	0	0	0	0	0	-1.74	-1.74
Inverter	MV3-1	368156	4907976	2	0	0	89.1	89.1	1	3056.76	3.25	0	80.71	0	1.16	0	0	9.7	0	0	0	0	0	0	-2.51	-2.51
Westbrook Inverter Enclosur	W_INV1	369409	4906578	2	0	0	86.1	86.1	1	2472.69	3.25	0	78.86	0	1.02	0	0	8.8	0	0	0	0	0	0	-2.63	-2.63
Inverter	MV2-2	365977	4906654	2	0	0	89.1	89.1	1	5469.17	3.25	0	85.76	0	1.76	0	0	13.08	0	0	0	0	0	0	-11.54	-11.54
Gardiner Substation	G_Sub	366586.3	4903349.9	2.5	0	0	90.8	90.8	1	6754.53	4.25	0	87.59	0	2.02	1.95	0.35	10.51	0	0	0	0	0	0	-11.3	-11.3
Inverter	MV1-3	364440	4906039	2	0	0	89.1	89.1	1	7120.82	3.25	0	88.05	0	2.16	0	0	15.13	0	0	0	0	0	0	-16.28	-16.28
Inverters	G_Inv2	366676.9	4903239.1	2	0	0	87.7	87.7	1	6775.14	3.25	0	87.62	0	2.94	0	0	7.76	0	0	0	0	0	0	-10.67	-10.67
Inverters	G_Inv4	366732.8	4903105	2	0	0	87.7	87.7	1	6838.99	3.25	0	87.7	0	2.95	0	0	7.83	0	0	0	0	0	0	-10.81	-10.81
Inverters	G_Inv1	366526.4	4903225.8	2	0	0	87.7	87.7	1	6886.23	3.25	0	87.76	0	2.95	0	0	7.88	0	0	0	0	0	0	-10.92	-10.92
Inverters	G_Inv6	366788.5	4902972	2	0	0	87.7	87.7	1	6904.6	3.25	0	87.78	0	2.95	0	0	7.89	0	0	0	0	0	0	-10.96	-10.96
Inverters	G_Inv3	366583.7	4903091.4	2	0	0	87.7	87.7	1	6947.4	3.25	0	87.84	0	2.95	0	0	7.94	0	0	0	0	0	0	-11.06	-11.06
Inverters	G_Inv8	366844.5	4902838.5	2	0	0	87.7	87.7	1	6972.77	3.25	0	87.87	0	2.95	0	0	7.96	0	0	0	0	0	0	-11.12	-11.12
Inverters	G_Inv5	366638.5	4902958.1	2	0	0	87.7	87.7	1	7011.88	3.25	0	87.92	0	2.95	0	0	8	0	0	0	0	0	0	-11.21	-11.21
Inverters	G_Inv10	366900.7	4902704.8	2	0	0	87.7	87.7	1	7043.29	3.25	0	87.96	0	2.95	0	0	8.03	0	0	0	0	0	0	-11.28	-11.28
Westbrook Inverter Transfor	W_INVTR6	369881	4906578	2	0	0	77.3	77.3	1	2156.18	3.25	0	77.67	0	-2.46	0	0	1.28	0	0	0	0	0	0	0.85	0.85
Inverters	G_Inv7	366694.6	4902824.7	2	0	0	87.7	87.7	1	7077.95	3.25	0	88	0	2.95	0	0	8.07	0	0	0	0	0	0	-11.36	-11.36
Inverters	G_Inv9	366750.9	4902691.8	2	0	0	87.7	87.7	1	7145.83	3.25	0	88.08	0	2.95	0	0	8.14	0	0	0	0	0	0	-11.51	-11.51
Westbrook Inverter Transfor	W_INVTR1	369403	4906578	2	0	0	78.2	78.2	1	2477.04	3.25	0	78.88	0	-2.56	0	0	1.43	0	0	0	0	0	0	0.5	0.5
Westbrook Inverter Transfor	W_INVTR5	369725	4906574	2	0	0	77.3	77.3	1	2257.82	3.25	0	78.07	0	-2.49	0	0	1.33	0	0	0	0	0	0	0.43	0.43
Westbrook Inverter Transfor	W_INVTR7	369786	4906417	2	0	0	77.3	77.3	1	2341.81	3.25	0	78.39	0	-2.52	0	0	1.37	0	0	0	0	0	0	0.1	0.1
Westbrook Inverter Transfor	W_INVTR4	369679	4906164	2	0	0	77.3	77.3	1	2609.06	3.25	0	79.33	0	-2.6	0	0	1.49	0	0	0	0	0	0	-0.87	-0.87
Westbrook Inverter Transfor	W_INVTR2	369368	4906388	2	0	0	77.3	77.3	1	2635.84	3.25	0	79.42	0	-2.61	0	0	1.5	0	0	0	0	0	0	-0.97	-0.97
Westbrook Inverter Transfor	W_INVTR3	369514	4906164	2	0	0	77.3	77.3	1	2708.39	3.25	0	79.65	0	-2.63	0	0	1.53	0	0	0	0	0	0	-1.21	-1.21
Inverter Transformer	MV6-1 T	370230	4907364	2	0	0	69.4	69.4	1	1336.11	3.25	0	73.52	0	1.9	0	0	4.24	0	0	0	0	0	0	-10.31	-10.31
Inverter Transformer	MV6-4 T	370244	4906966	2	0	0	69.4	69.4	1	1628.07	3.25	0	75.23	0	2.03	0	0	4.58	0	0	0	0	0	0	-12.49	-12.49
Inverter Transformer	MV5-4 T	370330	4908707	2	0	0	56.1	56.1	1	963.81	3.25	0	70.68	0	0	0	0	4.8	0	0	0	0	0	0	-19.42	-19.42
Inverter Transformer	MV5-3 T	370237	4908851	2	0	0	56.1	56.1	1	1113.93	3.25	0	71.94	0	0.05	0	0	5.16	0	0	0	0	0	0	-21.09	-21.09

	Inverter Transformer	MV2-1 T	365836	4906816	2	0	0	69.4	69.4	1	5558.89	3.25	0	85.9	0	3.12	0	0	7.74	0	0	0	0	0	0	-27.41	-27.41
	Inverter Transformer	MV5-6 T	369987	4908507	2	0	0	56.1	56.1	1	1230.02	3.25	0	72.8	0	0.09	0	0	5.42	0	0	0	0	0	0	-22.26	-22.26
	Inverter Transformer	MV5-5 T	370021	4908690	2	0	0	56.1	56.1	1	1243.46	3.25	0	72.89	0	0.1	0	0	5.45	0	0	0	0	0	0	-22.39	-22.39
	Inverter Transformer	MV5-2 T	370011	4908853	2	0	0	56.1	56.1	1	1314.57	3.25	0	73.38	0	0.13	0	0	5.61	0	0	0	0	0	0	-23.06	-23.06
	Inverter Transformer	MV6-2 T	370091	4907339	2	0	0	56.1	56.1	1	1456.04	3.25	0	74.26	0	0.18	0	0	5.92	0	0	0	0	0	0	-24.31	-24.31
	Inverter Transformer	MV5-1 T	370015	4909142	2	0	0	56.1	56.1	1	1459.41	3.25	0	74.28	0	0.18	0	0	5.93	0	0	0	0	0	0	-24.34	-24.34
	Inverter Transformer	MV1-7 T	364919	4905782	2	0	0	69.4	69.4	1	6758.94	3.25	0	87.6	0	3.29	0	0	8.47	0	0	0	0	0	0	-30	-30
	Inverter Transformer	MV1-10 T	365010	4905564	2	0	0	69.4	69.4	1	6759.31	3.25	0	87.6	0	3.29	0	0	8.47	0	0	0	0	0	0	-30	-30
	Inverter Transformer	MV1-14 T	365157	4905049	2	0	0	69.4	69.4	1	6852.72	3.25	0	87.72	0	3.3	0	0	8.52	0	0	0	0	0	0	-30.19	-30.19
	Inverter Transformer	MV6-3 T	370202	4907140	2	0	0	56.1	56.1	1	1517.68	3.25	0	74.62	0	0.21	0	0	6.06	0	0	0	0	0	0	-24.83	-24.83
	Inverter Transformer	MV1-13 T	364725	4905241	2	0	0	69.4	69.4	1	7152.54	3.25	0	88.09	0	3.33	0	0	8.69	0	0	0	0	0	0	-30.76	-30.76
	Inverter Transformer	MV4-10 T	369307	4908858	2	0	0	56.1	56.1	1	1974.66	3.25	0	76.91	0	0.39	0	0	6.99	0	0	0	0	0	0	-28.24	-28.24
	Inverter Transformer	MV4-11 T	369269	4908855	2	0	0	56.1	56.1	1	2010.21	3.25	0	77.06	0	0.41	0	0	7.06	0	0	0	0	0	0	-28.48	-28.48
	Inverter Transformer	MV4-14 T	369182	4908507	2	0	0	56.1	56.1	1	2027.08	3.25	0	77.14	0	0.42	0	0	7.1	0	0	0	0	0	0	-28.59	-28.59
	Inverter Transformer	MV4-15 T	369170	4908481	2	0	0	56.1	56.1	1	2036.36	3.25	0	77.18	0	0.42	0	0	7.11	0	0	0	0	0	0	-28.65	-28.65
	Inverter Transformer	MV4-9 T	369284	4909001	2	0	0	56.1	56.1	1	2042.25	3.25	0	77.2	0	0.42	0	0	7.13	0	0	0	0	0	0	-28.69	-28.69
	Inverter Transformer	MV4-8 T	369262	4909001	2	0	0	56.1	56.1	1	2062.88	3.25	0	77.29	0	0.43	0	0	7.17	0	0	0	0	0	0	-28.83	-28.83
	Inverter Transformer	MV4-5 T	369283	4909199	2	0	0	56.1	56.1	1	2120.61	3.25	0	77.53	0	0.45	0	0	7.28	0	0	0	0	0	0	-29.2	-29.2
	Inverter Transformer	MV4-6 T	369249	4909192	2	0	0	56.1	56.1	1	2148.38	3.25	0	77.64	0	0.47	0	0	7.33	0	0	0	0	0	0	-29.38	-29.38
	Inverter Transformer	MV4-13 T	369057	4908605	2	0	0	56.1	56.1	1	2163.65	3.25	0	77.7	0	0.47	0	0	7.36	0	0	0	0	0	0	-29.48	-29.48
	Inverter Transformer	MV4-12 T	369049	4908803	2	0	0	56.1	56.1	1	2209.34	3.25	0	77.89	0	0.49	0	0	7.45	0	0	0	0	0	0	-29.77	-29.77
	Inverter Transformer	MV4-2 T	369267	4909397	2	0	0	56.1	56.1	1	2226.93	3.25	0	77.95	0	0.5	0	0	7.48	0	0	0	0	0	0	-29.88	-29.88
	Inverter Transformer	MV4-3 T	369234	4909397	2	0	0	56.1	56.1	1	2255.59	3.25	0	78.07	0	0.51	0	0	7.54	0	0	0	0	0	0	-30.06	-30.06
	Inverter Transformer	MV4-7 T	369040	4909001	2	0	0	56.1	56.1	1	2272.42	3.25	0	78.13	0	0.52	0	0	7.57	0	0	0	0	0	0	-30.16	-30.16
	Inverter Transformer	MV4-4 T	369033	4909199	2	0	0	56.1	56.1	1	2348.72	3.25	0	78.42	0	0.55	0	0	7.71	0	0	0	0	0	0	-30.62	-30.62
	Inverter Transformer	MV4-1 T	369017	4909397	2	0	0	56.1	56.1	1	2446.78	3.25	0	78.77	0	0.59	0	0	7.89	0	0	0	0	0	0	-31.2	-31.2
	Inverter Transformer	MV3-2 T	368677	4907928	2	0	0	56.1	56.1	1	2545.3	3.25	0	79.11	0	0.64	0	0	8.07	0	0	0	0	0	0	-31.76	-31.76
	Inverter Transformer	MV3-8 T	368685	4907712	2	0	0	56.1	56.1	1	2576.75	3.25	0	79.22	0	0.65	0	0	8.13	0	0	0	0	0	0	-31.94	-31.94
	Inverter Transformer	MV3-14 T	368678	4907498	2	0	0	56.1	56.1	1	2639.38	3.25	0	79.43	0	0.68	0	0	8.24	0	0	0	0	0	0	-32.29	-32.29
	Inverter Transformer	MV3-20 T	368683	4907317	2	0	0	56.1	56.1	1	2694.28	3.25	0	79.61	0	0.7	0	0	8.34	0	0	0	0	0	0	-32.59	-32.59
	Inverter Transformer	MV3-4 T	368507	4907925	2	0	0	56.1	56.1	1	2714.12	3.25	0	79.67	0	0.71	0	0	8.37	0	0	0	0	0	0	-32.7	-32.7
	Inverter Transformer	MV3-9 T	368517	4907703	2	0	0	56.1	56.1	1	2742.68	3.25	0	79.76	0	0.72	0	0	8.42	0	0	0	0	0	0	-32.85	-32.85
	Inverter Transformer	MV3-22 T	368661	4907142	2	0	0	56.1	56.1	1	2782.09	3.25	0	79.89	0	0.74	0	0	8.49	0	0	0	0	0	0	-33.06	-33.06
	Inverter Transformer	MV3-16 T	368509	4907475	2	0	0	56.1	56.1	1	2807.68	3.25	0	79.97	0	0.75	0	0	8.54	0	0	0	0	0	0	-33.19	-33.19
	Inverter Transformer	MV3-5 T	368335	4907843	2	0	0	56.1	56.1	1	2896.08	3.25	0	80.24	0	0.79	0	0	8.69	0	0	0	0	0	0	-33.65	-33.65
	Inverter Transformer	MV3-21 T	368484	4907206	2	0	0	56.1	56.1	1	2920.06	3.25	0	80.31	0	0.8	0	0	8.73	0	0	0	0	0	0	-33.78	-33.78
	Inverter Transformer	MV3-11 T	368340	4907662	2	0	0	56.1	56.1	1	2924.35	3.25	0	80.32	0	0.8	0	0	8.74	0	0	0	0	0	0	-33.8	-33.8
	Inverter Transformer	MV3-15 T	368351	4907477	2	0	0	56.1	56.1	1	2958.75	3.25	0	80.42	0	0.81	0	0	8.8	0	0	0	0	0	0	-33.97	-33.97
	Inverter Transformer	MV3-19 T	368352	4907347	2	0	0	56.1	56.1	1	2995.96	3.25	0	80.53	0	0.83	0	0	8.86	0	0	0	0	0	0	-34.16	-34.16
	Inverter Transformer	MV3-1 T	368150	4907976	2	0	0	56.1	56.1	1	3062.73	3.25	0	80.72	0	0.86	0	0	8.97	0	0	0	0	0	0	-34.49	-34.49
	Inverter Transformer	MV3-6 T	368156	4907834	2	0	0	56.1	56.1	1	3074.41	3.25	0	80.76	0	0.86	0	0	8.99	0	0	0	0	0	0	-34.55	-34.55
	Inverter Transformer	MV3-10 T	368162	4907669	2	0	0	56.1	56.1	1	3097.08	3.25	0	80.82	0	0.87	0	0	9.03	0	0	0	0	0	0	-34.66	-34.66
	Inverter Transformer	MV3-17 T	368183	4907472	2	0	0	56.1	56.1	1	3121.99	3.25	0	80.89	0	0.88	0	0	9.07	0	0	0	0	0	0	-34.78	-34.78
	Inverter Transformer	MV3-3 T	367944	4907927	2	0	0	56.1	56.1	1	3272.75	3.25	0	81.3	0	0.95	0	0	9.32	0	0	0	0	0	0	-35.51	-35.51
	Inverter Transformer	MV3-7 T	367951	4907754	2	0	0	56.1	56.1	1	3289.31	3.25	0	81.34	0	0.95	0	0	9.35	0	0	0	0	0	0	-35.58	-35.58
	Inverter Transformer	MV3-13 T	367958	4907577	2	0	0	56.1	56.1	1	3315.69	3.25	0	81.41	0	0.96	0	0	9.39	0	0	0	0	0	0	-35.71	-35.71
	Inverter Transformer	MV3-18 T	367757	4907412	2	0	0	56.1	56.1	1	3549.29	3.25	0	82	0	1.06	0	0	9.77	0	0	0	0	0	0	-36.77	-36.77
	Inverter Transformer	MV3-12 T	367674	4907594	2	0	0	56.1	56.1	1	3590.32	3.25	0	82.1	0	1.08	0	0	9.83	0	0	0	0	0	0	-36.95	-36.95
	Inverter Transformer	MV2-2 T	365982	4906654	2	0	0	56.1	56.1	1	5464.4	3.25	0	85.75	0	1.79	0	0	12.45	0	0	0	0	0	0	-43.93	-43.93
	Inverter Transformer	MV2-3 T	365814	4906641	2	0	0	56.1	56.1	1	5628.74	3.25	0	86.01	0	1.84	0	0	12.65	0	0	0	0	0	0	-44.45	-44.45
	Inverter Transformer	MV2-4 T	365590	4906628	2	0	0	56.1	56.1	1	5847	3.25	0	86.34	0	1.92	0	0	12.92	0	0	0	0	0	0	-45.12	-45.12
	Line Reactor	NGR	369421	4908787.5	5	0	0	45.4	45.4	1	1845.45	5.25	0	76.32	0	3.39	1.26	0.04	0.76	0	0	0	0	0	0	-36.38	-36.38
	Inverter Transformer	MV1-15 T	365309	4904994	2	0	0	56.1	56.1	1	6745.8	3.25	0	87.58	0	2.19	0	0	13.95	0	0	0	0	0	0	-47.66	-47.66
	Inverter Transformer	MV1-4 T	364821	4905918	2	0	0	56.1	56.1	1	6801.53	3.25	0	87.65	0	2.2	0	0	14.01	0	0	0	0	0	0	-47.81	-47.81
	Inverter Transformer	MV1-12 T	365044	4905386	2	0	0	56.1	56.1	1	6802.16	3.25	0	87.65	0	2.2	0	0	14.02	0	0	0	0	0	0	-47.81	-47.81
	Inverter Transformer	MV1-2 T	364759	4906063	2	0	0	56.1	56.1	1	6810.99	3.25	0	87.66	0	2.21	0	0	14.02	0	0	0	0	0	0	-47.84	-47.84
	Inverter Transformer	MV1-1 T	364721	4906166	2	0	0	56.1	56.1	1	6814.18	3.25	0	87.67	0	2.21	0	0	14.03	0	0	0	0	0	0	-47.85	-47.85
	Inverter Transformer	MV1-8 T	364782	4905647	2	0	0	56.1	56.1	1	6936.61	3.25	0	87.82	0	2.24	0	0	14.16	0	0	0	0	0	0	-48.17	-48.17
	Inverter Transformer	MV1-5 T	364676	4905892	2	0	0	56.1	56.1	1	6946.56	3.25	0	87.84	0	2.24	0	0	14.17	0	0	0	0	0	0	-48.19	-48.19
	Inverter Transformer	MV1-3 T	364435	4906039	2	0	0	56.1	56.1	1	7125.56	3.25	0	88.06	0	2.29	0	0	14.36	0	0	0	0	0	0	-48.65	-48.65
	Inverter Transformer	MV1-9 T	364555	4905646	2	0	0	56.1	56.1	1	7147.43	3.25	0	88.08	0	2.3	0	0	14.39	0	0	0	0	0	0	-48.71	-48.71
	Inverter Transformer	MV1-6 T	364482	4905835	2	0	0	56.1	56.1	1	7148.33	3.25	0	88.08	0	2.3	0	0	14.39	0	0	0	0	0	0	-48.71	-48.71
	Inverter Transformer	MV1-11 T	364649	4905414	2	0	0	56.1	56.1	1	7150.15	3.25	0	88.09	0	2.3	0	0	14.39	0	0	0	0	0	0	-48.72	-48.72
Limit. Valu	0	0																								
Level D/N:	30.2073	30.2073																								

Receiver: Existing Noise Receptor
ID: S-R124
X: 371243
Y: 4908295
Z: 4.5
Ground: 0

ISO	Description	ID	X	Y	Z	Ground	ReflOrd	LxT	LxN	L/A	Dist.	hm	Freq	Adiv	K0b	Agr	Abar	z	Aatm	Afol	Ahous	Cmet	CmetN	Dc	RL	LtotT	LtotN

Sol_Luce Substation	S_Substation	369426	4908792	3.5	0	0	112.1	112.1	1	1883.75	5.25	0	76.5	0	0.15	4.52	0.46	4.17	0	0	0	0	0	0	26.74	26.74
Inverter	MV5-4	370324	4908707	2	0	0	100.3	100.3	1	1007.13	3.25	0	71.06	0	-0.24	0	0	10.93	0	0	0	0	0	0	18.56	18.56
Inverter	MV5-3	370231	4908851	2	0	0	100.3	100.3	1	1154.68	3.25	0	72.25	0	-0.17	0	0	11.39	0	0	0	0	0	0	16.84	16.84
Inverter	MV5-5	370015	4908690	2	0	0	100.3	100.3	1	1289.97	3.25	0	73.21	0	-0.12	0	0	11.78	0	0	0	0	0	0	15.44	15.44
Inverter	MV5-2	370006	4908853	2	0	0	100.3	100.3	1	1357.03	3.25	0	73.65	0	-0.09	0	0	11.96	0	0	0	0	0	0	14.79	14.79
Inverter	MV5-1	370020	4909142	2	0	0	100.3	100.3	1	1487.66	3.25	0	74.45	0	-0.04	0	0	12.29	0	0	0	0	0	0	13.61	13.61
Inverter	MV6-2	370085	4907339	2	0	0	100.3	100.3	1	1501.63	3.25	0	74.53	0	-0.03	0	0	12.33	0	0	0	0	0	0	13.48	13.48
Inverter	MV6-3	370207	4907140	2	0	0	100.3	100.3	1	1551.56	3.25	0	74.82	0	-0.01	0	0	12.45	0	0	0	0	0	0	13.06	13.06
Inverter	MV6-1	370235	4907364	2	0	0	97.3	97.3	1	1372.16	3.25	0	73.75	0	-0.08	0	0	12	0	0	0	0	0	0	11.65	11.65
Inverter	MV4-10	369312	4908858	2	0	0	100.3	100.3	1	2011.4	3.25	0	77.07	0	0.13	0	0	13.49	0	0	0	0	0	0	9.62	9.62
Inverter	MV4-11	369264	4908855	2	0	0	100.3	100.3	1	2056.71	3.25	0	77.26	0	0.15	0	0	13.58	0	0	0	0	0	0	9.32	9.32
Inverter	MV4-9	369289	4909001	2	0	0	100.3	100.3	1	2077.63	3.25	0	77.35	0	0.15	0	0	13.62	0	0	0	0	0	0	9.19	9.19
Inverter	MV4-8	369256	4909001	2	0	0	100.3	100.3	1	2108.7	3.25	0	77.48	0	0.16	0	0	13.69	0	0	0	0	0	0	8.98	8.98
Inverter	MV4-5	369289	4909199	2	0	0	100.3	100.3	1	2152.98	3.25	0	77.66	0	0.17	0	0	13.78	0	0	0	0	0	0	8.7	8.7
Inverter	MV4-6	369243	4909192	2	0	0	100.3	100.3	1	2191.94	3.25	0	77.82	0	0.18	0	0	13.86	0	0	0	0	0	0	8.46	8.46
Inverter	MV4-2	369272	4909397	2	0	0	100.3	100.3	1	2258.15	3.25	0	78.08	0	0.2	0	0	13.99	0	0	0	0	0	0	8.05	8.05
Inverter	MV4-3	369229	4909397	2	0	0	100.3	100.3	1	2295.78	3.25	0	78.22	0	0.21	0	0	14.06	0	0	0	0	0	0	7.82	7.82
Inverter	MV4-7	369035	4909001	2	0	0	100.3	100.3	1	2318.13	3.25	0	78.3	0	0.21	0	0	14.11	0	0	0	0	0	0	7.69	7.69
Inverter	MV4-4	369027	4909199	2	0	0	100.3	100.3	1	2393.3	3.25	0	78.58	0	0.23	0	0	14.25	0	0	0	0	0	0	7.25	7.25
Inverter	MV4-1	369011	4909397	2	0	0	100.3	100.3	1	2489.22	3.25	0	78.92	0	0.25	0	0	14.44	0	0	0	0	0	0	6.7	6.7
Inverter	MV3-8	368680	4907712	2	0	0	100.3	100.3	1	2628.47	3.25	0	79.39	0	0.29	0	0	14.7	0	0	0	0	0	0	5.93	5.93
Inverter	MV3-14	368684	4907498	2	0	0	100.3	100.3	1	2680.24	3.25	0	79.56	0	0.3	0	0	14.8	0	0	0	0	0	0	5.66	5.66
Inverter	MV3-20	368689	4907317	2	0	0	100.3	100.3	1	2734.85	3.25	0	79.74	0	0.31	0	0	14.9	0	0	0	0	0	0	5.37	5.37
Inverter	MV3-9	368512	4907703	2	0	0	100.3	100.3	1	2794.43	3.25	0	79.93	0	0.32	0	0	15	0	0	0	0	0	0	5.06	5.06
DSTATCOM - 10 MVAR #1	DSAT1	369437	4908757	2.5	0	0	96.6	96.6	1	1864.16	3.5	0	76.41	0	3.19	0	0	1.64	0	0	0	0	0	0	15.39	15.39
Inverter	MV3-16	368514	4907475	2	0	0	100.3	100.3	1	2849.53	3.25	0	80.1	0	0.33	0	0	15.1	0	0	0	0	0	0	4.78	4.78
DSTATCOM - 10 MVAR #2	DSAT2	369403	4908757	2.5	0	0	96.6	96.6	1	1897.12	3.5	0	76.56	0	3.2	0	0	1.66	0	0	0	0	0	0	15.21	15.21
Inverter	MV3-11	368346	4907662	2	0	0	100.3	100.3	1	2965.35	3.25	0	80.44	0	0.36	0	0	15.31	0	0	0	0	0	0	4.2	4.2
Inverter	MV3-21	368478	4907206	2	0	0	100.3	100.3	1	2971.73	3.25	0	80.46	0	0.36	0	0	15.32	0	0	0	0	0	0	4.17	4.17
Inverter	MV3-15	368357	4907477	2	0	0	100.3	100.3	1	2999.69	3.25	0	80.54	0	0.36	0	0	15.37	0	0	0	0	0	0	4.04	4.04
Inverter	MV3-19	368357	4907347	2	0	0	100.3	100.3	1	3037.71	3.25	0	80.65	0	0.37	0	0	15.44	0	0	0	0	0	0	3.85	3.85
Inverter	MV3-6	368162	4907834	2	0	0	100.3	100.3	1	3115.3	3.25	0	80.87	0	0.38	0	0	15.57	0	0	0	0	0	0	3.48	3.48
Inverter	MV3-10	368167	4907669	2	0	0	100.3	100.3	1	3139.05	3.25	0	80.94	0	0.39	0	0	15.62	0	0	0	0	0	0	3.37	3.37
Inverter	MV3-17	368178	4907472	2	0	0	100.3	100.3	1	3173.57	3.25	0	81.03	0	0.39	0	0	15.68	0	0	0	0	0	0	3.21	3.21
Inverter	MV3-3	367939	4907927	2	0	0	100.3	100.3	1	3324.43	3.25	0	81.43	0	0.42	0	0	15.93	0	0	0	0	0	0	2.52	2.52
Inverter	MV3-7	367945	4907754	2	0	0	100.3	100.3	1	3342.08	3.25	0	81.48	0	0.42	0	0	15.96	0	0	0	0	0	0	2.44	2.44
Inverter	MV3-13	367963	4907577	2	0	0	100.3	100.3	1	3357.67	3.25	0	81.52	0	0.43	0	0	15.99	0	0	0	0	0	0	2.37	2.37
Inverter	MV3-18	367752	4907412	2	0	0	100.3	100.3	1	3600.94	3.25	0	82.13	0	0.47	0	0	16.4	0	0	0	0	0	0	1.32	1.32
Inverter	MV3-12	367668	4907594	2	0	0	100.3	100.3	1	3643.08	3.25	0	82.23	0	0.47	0	0	16.47	0	0	0	0	0	0	1.14	1.14
Inverter	MV5-6	369982	4908507	2	0	0	89.1	89.1	1	1278.7	3.25	0	73.14	0	0.74	0	0	6.82	0	0	0	0	0	0	8.36	8.36
Inverter	MV2-3	365820	4906641	2	0	0	100.3	100.3	1	5669.63	3.25	0	86.07	0	0.69	0	0	19.54	0	0	0	0	0	0	-5.99	-5.99
Inverter	MV2-4	365586	4906624	2	0	0	100.3	100.3	1	5898.64	3.25	0	86.42	0	0.7	0	0	19.85	0	0	0	0	0	0	-6.66	-6.66
Fixed Reactor Bank 2	FRB2	369464	4908755	6	0	0	89.8	89.8	1	1837.51	5.25	0	76.28	0	-1.01	0	0	4.09	0	0	0	0	0	0	10.41	10.41
Fixed Reactor Bank 1	FRB1	369378	4908755	6	0	0	89.8	89.8	1	1920.89	5.25	0	76.67	0	-1	0	0	4.23	0	0	0	0	0	0	9.87	9.87
Inverter	MV1-15	365315	4904994	2	0	0	100.3	100.3	1	6785.12	3.25	0	87.63	0	0.71	0	0	21.03	0	0	0	0	0	0	-9.06	-9.06
Inverter	MV1-12	365038	4905386	2	0	0	100.3	100.3	1	6853.05	3.25	0	87.72	0	0.71	0	0	21.11	0	0	0	0	0	0	-9.23	-9.23
Inverter	MV1-4	364815	4905918	2	0	0	100.3	100.3	1	6853.42	3.25	0	87.72	0	0.71	0	0	21.11	0	0	0	0	0	0	-9.23	-9.23
Inverter	MV1-2	364753	4906063	2	0	0	100.3	100.3	1	6863.08	3.25	0	87.73	0	0.71	0	0	21.13	0	0	0	0	0	0	-9.26	-9.26
Inverter	MV1-1	364715	4906166	2	0	0	100.3	100.3	1	6866.4	3.25	0	87.73	0	0.71	0	0	21.13	0	0	0	0	0	0	-9.27	-9.27
SubstationTransformer	W_ST	369711.17	4906112.3	2.5	0	0	92	92	1	2666.61	3.5	0	79.52	0	0	0	0	5.45	0	0	0	0	0	0	7.01	7.01
Inverter	MV1-8	364788	4905647	2	0	0	100.3	100.3	1	6977.03	3.25	0	87.87	0	0.71	0	0	21.27	0	0	0	0	0	0	-9.54	-9.54
Inverter	MV1-5	364671	4905892	2	0	0	100.3	100.3	1	6997.54	3.25	0	87.9	0	0.71	0	0	21.3	0	0	0	0	0	0	-9.59	-9.59
Inverter	MV1-9	364561	4905646	2	0	0	100.3	100.3	1	7187.93	3.25	0	88.13	0	0.7	0	0	21.53	0	0	0	0	0	0	-10.06	-10.06
Inverter	MV1-11	364655	4905414	2	0	0	100.3	100.3	1	7190.4	3.25	0	88.14	0	0.7	0	0	21.54	0	0	0	0	0	0	-10.06	-10.06
Inverter	MV1-6	364477	4905835	2	0	0	100.3	100.3	1	7199.33	3.25	0	88.15	0	0.7	0	0	21.55	0	0	0	0	0	0	-10.08	-10.08
Inverter	MV4-15	369176	4908481	2	0	0	89.1	89.1	1	2075.35	3.25	0	77.34	0	0.92	0	0	8.17	0	0	0	0	0	0	2.62	2.62
Inverter	MV4-14	369176	4908507	2	0	0	89.1	89.1	1	2077.84	3.25	0	77.35	0	0.93	0	0	8.17	0	0	0	0	0	0	2.61	2.61
Inverter	MV2-1	365842	4906816	2	0	0	97.3	97.3	1	5599.84	3.25	0	85.96	0	0.69	0	0	19.44	0	0	0	0	0	0	-8.78	-8.78
Westbrook Inverter Enclosur	W_INV6	369875	4906578	2	0	0	89.1	89.1	1	2195.34	3.25	0	77.83	0	0.95	0	0	8.36	0	0	0	0	0	0	1.91	1.91
Inverter	MV4-13	369051	4908605	2	0	0	89.1	89.1	1	2213.81	3.25	0	77.9	0	0.96	0	0	8.39	0	0	0	0	0	0	1.81	1.81
Inverter	MV4-12	369043	4908803	2	0	0	89.1	89.1	1	2257.89	3.25	0	78.07	0	0.97	0	0	8.46	0	0	0	0	0	0	1.55	1.55
Westbrook Inverter Enclosur	W_INV5	369719	4906574	2	0	0	89.1	89.1	1	2298.79	3.25	0	78.23	0	0.98	0	0	8.53	0	0	0	0	0	0	1.32	1.32
Inverter	MV6-4	370250	4906966	2	0	0	86.1	86.1	1	1659	3.25	0	75.4	0	0.83	0	0	7.48	0	0	0	0	0	0	2.35	2.35
Westbrook Inverter Enclosur	W_INV7	369780	4906417	2	0	0	89.1	89.1	1	2380.6	3.25	0	78.53	0	1	0	0	8.66	0	0	0	0	0	0	0.87	0.87
Inverter	MV3-2	368671	4907928	2	0	0	89.1	89.1	1	2598.05	3.25	0	79.29	0	1.05	0	0	9	0	0	0	0	0	0	-0.28	-0.28
Inverter	MV1-7	364925	4905782	2	0	0	97.3	97.3	1	6799.43	3.25	0	87.65	0	0.71	0	0	21.05	0	0	0	0	0	0	-12.1	-12.1
Inverter	MV1-10	365004	4905564	2	0	0	97.3	97.3	1	6810.54	3.25	0	87.66	0	0.71	0	0	21.06	0	0	0	0	0	0	-12.12	-12.12
Westbrook Inverter Enclosur	W_INV4	369673	4906164	2	0	0	89.1	89.1	1	2646.9	3.25	0	79.45	0	1.06	0	0	9.08	0	0	0	0	0	0	-0.53	-0.53
Inverter	MV1-14	365163	4905049	2	0	0	97.3	97.3	1	6892.24	3.25	0	87.77	0	0.71	0	0	21.16	0	0	0	0	0	0	-12.33	-12.33
Westbrook Inverter Enclosur	W_INV2	369374	4906388	2	0	0	89.1	89.1	1	2670.17	3.25	0	79.53	0	1.07	0	0	9.11	0	0	0	0	0	0	-0.65	-0.65
Westbrook Inverter Enclosur	W_INV3	369508	4906164	2	0	0	89.1	89.1	1	2747.98	3.25	0	79.78	0	1.09	0	0	9.23	0	0	0	0	0	0	-1.04	-1.04
Inverter	MV3-4	368502	4907925	2	0	0	89.1	89.1	1	2765.86	3.25	0	79.84	0	1.09	0	0	9.26	0	0	0	0	0	0	-1.13	-1.13
Inverter	MV1-13	364731	4905241	2	0	0	97.3	97.3	1	7192.57	3.25	0	88.14	0	0.7	0	0	21.54	0	0	0	0	0	0	-13.07	-13.07
Inverter	MV3-22	368656	4907142	2	0	0	89.1	89.1	1	2832.31	3.25	0	80.04	0	1.11	0	0	9.36	0	0	0	0	0	0	-1.45	-1.45

Inverter	MV3-5	368340	4907843	2	0	0	89.1	89.1	1	2937.98	3.25	0	80.36	0	1.13	0	0	9.52	0	0	0	0	0	0	-1.96	-1.96
Inverter	MV3-1	368156	4907976	2	0	0	89.1	89.1	1	3103.44	3.25	0	80.84	0	1.17	0	0	9.77	0	0	0	0	0	0	-2.72	-2.72
Westbrook Inverter Enclosur	W_INV1	369409	4906578	2	0	0	86.1	86.1	1	2512.3	3.25	0	79	0	1.03	0	0	8.87	0	0	0	0	0	0	-2.84	-2.84
Inverter	MV2-2	365977	4906654	2	0	0	89.1	89.1	1	5515.76	3.25	0	85.83	0	1.77	0	0	13.14	0	0	0	0	0	0	-11.68	-11.68
Gardiner Substation	G_Sub	366586.3	4903349.9	2.5	0	0	90.8	90.8	1	6792.56	4.25	0	87.64	0	2.03	1.94	0.35	10.55	0	0	0	0	0	0	-11.38	-11.38
Inverter	MV1-3	364440	4906039	2	0	0	89.1	89.1	1	7167.31	3.25	0	88.11	0	2.17	0	0	15.18	0	0	0	0	0	0	-16.4	-16.4
Inverters	G_Inv2	366676.9	4903239.1	2	0	0	87.7	87.7	1	6812.59	3.25	0	87.67	0	2.95	0	0	7.8	0	0	0	0	0	0	-10.75	-10.75
Inverters	G_Inv4	366732.8	4903105	2	0	0	87.7	87.7	1	6875.9	3.25	0	87.75	0	2.95	0	0	7.87	0	0	0	0	0	0	-10.9	-10.9
Inverters	G_Inv1	366526.4	4903225.8	2	0	0	87.7	87.7	1	6924.1	3.25	0	87.81	0	2.95	0	0	7.91	0	0	0	0	0	0	-11.01	-11.01
Inverters	G_Inv6	366788.5	4902972	2	0	0	87.7	87.7	1	6940.96	3.25	0	87.83	0	2.95	0	0	7.93	0	0	0	0	0	0	-11.05	-11.05
Inverters	G_Inv3	366583.7	4903091.4	2	0	0	87.7	87.7	1	6984.74	3.25	0	87.88	0	2.95	0	0	7.97	0	0	0	0	0	0	-11.15	-11.15
Inverters	G_Inv8	366844.5	4902838.5	2	0	0	87.7	87.7	1	7008.58	3.25	0	87.91	0	2.95	0	0	8	0	0	0	0	0	0	-11.2	-11.2
Inverters	G_Inv5	366638.5	4902958.1	2	0	0	87.7	87.7	1	7048.68	3.25	0	87.96	0	2.95	0	0	8.04	0	0	0	0	0	0	-11.29	-11.29
Inverters	G_Inv10	366900.7	4902704.8	2	0	0	87.7	87.7	1	7078.55	3.25	0	88	0	2.95	0	0	8.07	0	0	0	0	0	0	-11.36	-11.36
Inverters	G_Inv7	366694.6	4902824.7	2	0	0	87.7	87.7	1	7114.22	3.25	0	88.04	0	2.95	0	0	8.1	0	0	0	0	0	0	-11.44	-11.44
Inverters	G_Inv9	366750.9	4902691.8	2	0	0	87.7	87.7	1	7181.56	3.25	0	88.12	0	2.95	0	0	8.17	0	0	0	0	0	0	-11.59	-11.59
Westbrook Inverter Transfor	W_INVTR6	369881	4906578	2	0	0	77.3	77.3	1	2191.61	3.25	0	77.82	0	-2.47	0	0	1.3	0	0	0	0	0	0	0.7	0.7
Westbrook Inverter Transfor	W_INVTR1	369403	4906578	2	0	0	78.2	78.2	1	2516.68	3.25	0	79.02	0	-2.58	0	0	1.45	0	0	0	0	0	0	0.35	0.35
Westbrook Inverter Transfor	W_INVTR5	369725	4906574	2	0	0	77.3	77.3	1	2294.81	3.25	0	78.21	0	-2.51	0	0	1.35	0	0	0	0	0	0	0.29	0.29
Westbrook Inverter Transfor	W_INVTR7	369786	4906417	2	0	0	77.3	77.3	1	2376.92	3.25	0	78.52	0	-2.53	0	0	1.38	0	0	0	0	0	0	-0.03	-0.03
Westbrook Inverter Transfor	W_INVTR4	369679	4906164	2	0	0	77.3	77.3	1	2643.34	3.25	0	79.44	0	-2.61	0	0	1.5	0	0	0	0	0	0	-0.99	-0.99
Westbrook Inverter Transfor	W_INVTR2	369368	4906388	2	0	0	77.3	77.3	1	2674.37	3.25	0	79.54	0	-2.62	0	0	1.52	0	0	0	0	0	0	-1.1	-1.1
Westbrook Inverter Transfor	W_INVTR3	369514	4906164	2	0	0	77.3	77.3	1	2744.2	3.25	0	79.77	0	-2.64	0	0	1.55	0	0	0	0	0	0	-1.33	-1.33
Inverter Transformer	MV6-1 T	370230	4907364	2	0	0	69.4	69.4	1	1375.84	3.25	0	73.77	0	1.92	0	0	4.29	0	0	0	0	0	0	-10.63	-10.63
Inverter Transformer	MV6-4 T	370244	4906966	2	0	0	69.4	69.4	1	1662.6	3.25	0	75.42	0	2.04	0	0	4.61	0	0	0	0	0	0	-12.72	-12.72
Inverter Transformer	MV5-4 T	370330	4908707	2	0	0	56.1	56.1	1	1001.66	3.25	0	71.01	0	0.01	0	0	4.89	0	0	0	0	0	0	-19.86	-19.86
Inverter Transformer	MV5-3 T	370237	4908851	2	0	0	56.1	56.1	1	1149.43	3.25	0	72.21	0	0.06	0	0	5.24	0	0	0	0	0	0	-21.46	-21.46
Inverter Transformer	MV2-1 T	365836	4906816	2	0	0	69.4	69.4	1	5605.63	3.25	0	85.97	0	3.12	0	0	7.77	0	0	0	0	0	0	-27.52	-27.52
Inverter Transformer	MV5-6 T	369987	4908507	2	0	0	56.1	56.1	1	1273.77	3.25	0	73.1	0	0.11	0	0	5.52	0	0	0	0	0	0	-22.68	-22.68
Inverter Transformer	MV5-5 T	370021	4908690	2	0	0	56.1	56.1	1	1284.26	3.25	0	73.17	0	0.12	0	0	5.55	0	0	0	0	0	0	-22.78	-22.78
Inverter Transformer	MV5-2 T	370011	4908853	2	0	0	56.1	56.1	1	1352.48	3.25	0	73.62	0	0.14	0	0	5.7	0	0	0	0	0	0	-23.4	-23.4
Inverter Transformer	MV1-7 T	364919	4905782	2	0	0	69.4	69.4	1	6805.01	3.25	0	87.66	0	3.3	0	0	8.49	0	0	0	0	0	0	-30.09	-30.09
Inverter Transformer	MV1-10 T	365010	4905564	2	0	0	69.4	69.4	1	6805.05	3.25	0	87.66	0	3.3	0	0	8.49	0	0	0	0	0	0	-30.09	-30.09
Inverter Transformer	MV5-1 T	370015	4909142	2	0	0	56.1	56.1	1	1491.78	3.25	0	74.47	0	0.2	0	0	6	0	0	0	0	0	0	-24.61	-24.61
Inverter Transformer	MV1-14 T	365157	4905049	2	0	0	69.4	69.4	1	6897.53	3.25	0	87.77	0	3.31	0	0	8.54	0	0	0	0	0	0	-30.27	-30.27
Inverter Transformer	MV6-2 T	370091	4907339	2	0	0	56.1	56.1	1	1497.01	3.25	0	74.5	0	0.2	0	0	6.01	0	0	0	0	0	0	-24.66	-24.66
Inverter Transformer	MV6-3 T	370202	4907140	2	0	0	56.1	56.1	1	1554.9	3.25	0	74.83	0	0.22	0	0	6.13	0	0	0	0	0	0	-25.13	-25.13
Inverter Transformer	MV1-13 T	364725	4905241	2	0	0	69.4	69.4	1	7198	3.25	0	88.14	0	3.34	0	0	8.71	0	0	0	0	0	0	-30.84	-30.84
Inverter Transformer	MV4-10 T	369307	4908858	2	0	0	56.1	56.1	1	2016.2	3.25	0	77.09	0	0.41	0	0	7.08	0	0	0	0	0	0	-28.52	-28.52
Inverter Transformer	MV4-11 T	369269	4908855	2	0	0	56.1	56.1	1	2051.9	3.25	0	77.24	0	0.43	0	0	7.15	0	0	0	0	0	0	-28.76	-28.76
Inverter Transformer	MV4-14 T	369182	4908507	2	0	0	56.1	56.1	1	2071.88	3.25	0	77.33	0	0.43	0	0	7.18	0	0	0	0	0	0	-28.89	-28.89
Inverter Transformer	MV4-15 T	369170	4908481	2	0	0	56.1	56.1	1	2081.33	3.25	0	77.37	0	0.44	0	0	7.2	0	0	0	0	0	0	-28.95	-28.95
Inverter Transformer	MV4-9 T	369284	4909001	2	0	0	56.1	56.1	1	2082.34	3.25	0	77.37	0	0.44	0	0	7.2	0	0	0	0	0	0	-28.96	-28.96
Inverter Transformer	MV4-8 T	369262	4909001	2	0	0	56.1	56.1	1	2103.05	3.25	0	77.46	0	0.45	0	0	7.24	0	0	0	0	0	0	-29.09	-29.09
Inverter Transformer	MV4-5 T	369283	4909199	2	0	0	56.1	56.1	1	2158.43	3.25	0	77.68	0	0.47	0	0	7.35	0	0	0	0	0	0	-29.45	-29.45
Inverter Transformer	MV4-6 T	369249	4909192	2	0	0	56.1	56.1	1	2186.47	3.25	0	77.79	0	0.48	0	0	7.4	0	0	0	0	0	0	-29.62	-29.62
Inverter Transformer	MV4-13 T	369057	4908605	2	0	0	56.1	56.1	1	2207.87	3.25	0	77.88	0	0.49	0	0	7.45	0	0	0	0	0	0	-29.76	-29.76
Inverter Transformer	MV4-12 T	369049	4908803	2	0	0	56.1	56.1	1	2252.04	3.25	0	78.05	0	0.51	0	0	7.53	0	0	0	0	0	0	-30.03	-30.03
Inverter Transformer	MV4-2 T	369267	4909397	2	0	0	56.1	56.1	1	2262.52	3.25	0	78.09	0	0.52	0	0	7.55	0	0	0	0	0	0	-30.1	-30.1
Inverter Transformer	MV4-3 T	369234	4909397	2	0	0	56.1	56.1	1	2291.4	3.25	0	78.2	0	0.53	0	0	7.6	0	0	0	0	0	0	-30.27	-30.27
Inverter Transformer	MV4-7 T	369040	4909001	2	0	0	56.1	56.1	1	2313.36	3.25	0	78.28	0	0.54	0	0	7.64	0	0	0	0	0	0	-30.41	-30.41
Inverter Transformer	MV4-4 T	369033	4909199	2	0	0	56.1	56.1	1	2387.74	3.25	0	78.56	0	0.57	0	0	7.78	0	0	0	0	0	0	-30.85	-30.85
Inverter Transformer	MV4-1 T	369017	4909397	2	0	0	56.1	56.1	1	2483.85	3.25	0	78.9	0	0.61	0	0	7.96	0	0	0	0	0	0	-31.41	-31.41
Inverter Transformer	MV3-2 T	368677	4907928	2	0	0	56.1	56.1	1	2592.11	3.25	0	79.27	0	0.66	0	0	8.16	0	0	0	0	0	0	-32.03	-32.03
Inverter Transformer	MV3-8 T	368685	4907712	2	0	0	56.1	56.1	1	2623.6	3.25	0	79.38	0	0.67	0	0	8.21	0	0	0	0	0	0	-32.2	-32.2
Inverter Transformer	MV3-14 T	368678	4907498	2	0	0	56.1	56.1	1	2685.97	3.25	0	79.58	0	0.7	0	0	8.32	0	0	0	0	0	0	-32.54	-32.54
Inverter Transformer	MV3-20 T	368683	4907317	2	0	0	56.1	56.1	1	2740.45	3.25	0	79.76	0	0.72	0	0	8.42	0	0	0	0	0	0	-32.84	-32.84
Inverter Transformer	MV3-4 T	368507	4907925	2	0	0	56.1	56.1	1	2760.91	3.25	0	79.82	0	0.73	0	0	8.46	0	0	0	0	0	0	-32.95	-32.95
Inverter Transformer	MV3-9 T	368517	4907703	2	0	0	56.1	56.1	1	2789.54	3.25	0	79.91	0	0.74	0	0	8.51	0	0	0	0	0	0	-33.1	-33.1
Inverter Transformer	MV3-22 T	368661	4907142	2	0	0	56.1	56.1	1	2827.74	3.25	0	80.03	0	0.76	0	0	8.57	0	0	0	0	0	0	-33.3	-33.3
Inverter Transformer	MV3-16 T	368509	4907475	2	0	0	56.1	56.1	1	2854.32	3.25	0	80.11	0	0.77	0	0	8.62	0	0	0	0	0	0	-33.44	-33.44
Inverter Transformer	MV3-5 T	368335	4907843	2	0	0	56.1	56.1	1	2942.92	3.25	0	80.38	0	0.81	0	0	8.77	0	0	0	0	0	0	-33.89	-33.89
Inverter Transformer	MV3-21 T	368484	4907206	2	0	0	56.1	56.1	1	2966.14	3.25	0	80.44	0	0.82	0	0	8.81	0	0	0	0	0	0	-34.01	-34.01
Inverter Transformer	MV3-11 T	368340	4907662	2	0	0	56.1	56.1	1	2971.21	3.25	0	80.46	0	0.82	0	0	8.82	0	0	0	0	0	0	-34.04	-34.04
Inverter Transformer	MV3-15 T	368351	4907477	2	0	0	56.1	56.1	1	3005.46	3.25	0	80.56	0	0.83	0	0	8.88	0	0	0	0	0	0	-34.21	-34.21
Inverter Transformer	MV3-19 T	368352	4907347	2	0	0	56.1	56.1	1	3042.46	3.25	0	80.66	0	0.85	0	0	8.94	0	0	0	0	0	0	-34.39	-34.39
Inverter Transformer	MV3-1 T	368150	4907976	2	0	0	56.1	56.1	1	3109.41	3.25	0	80.85	0	0.88	0	0	9.05	0	0	0	0	0	0	-34.72	-34.72
Inverter Transformer	MV3-6 T	368156	4907834	2	0	0	56.1	56.1	1	3121.23	3.25	0	80.89	0	0.88	0	0	9.07	0	0	0	0	0	0	-34.78	-34.78
Inverter Transformer	MV3-10 T	368162	4907669	2	0	0	56.1	56.1	1	3143.95	3.25	0	80.95	0	0.89	0	0	9.11	0	0	0	0	0	0	-34.89	-34.89
Inverter Transformer	MV3-17 T	368183	4907472	2	0	0	56.1	56.1	1	3168.74	3.25	0	81.02	0	0.9	0	0	9.15	0	0	0	0	0	0	-35.01	-35.01
Inverter Transformer	MV3-3 T	367944	4907927	2	0	0	56.1	56.1	1	3319.46	3.25	0	81.42	0	0.96	0	0	9.4	0	0	0	0	0	0	-35.73	-35.73
Inverter Transformer	MV3-7 T	367951	4907754	2	0	0	56.1	56.1	1	3336.16	3.25	0	81.46	0	0.97	0	0	9.43	0	0	0	0	0	0	-35.8	-35.8
Inverter Transformer	MV3-13 T	367958	4907577	2	0	0	56.1	56.1	1	3362.55	3.25	0	81.53	0	0.98	0	0	9.47	0	0	0	0	0	0	-35.93	-35.93
Inverter Transformer	MV3-18 T	367757	4907412	2	0	0	56.1	56.1	1	3596.09	3.25	0	82.12	0	1.08	0	0	9.84	0	0	0	0	0	0	-36.98	-36.98

	Inverter Transformer	MV3-12 T	367674	4907594	2	0	0	56.1	56.1	1	3637.19	3.25	0	82.22	0	1.1	0	0	9.9	0	0	0	0	0	0	-37.16	-37.16
	Inverter Transformer	MV2-2 T	365982	4906654	2	0	0	56.1	56.1	1	5510.99	3.25	0	85.82	0	1.8	0	0	12.51	0	0	0	0	0	0	-44.08	-44.08
	Inverter Transformer	MV2-3 T	365814	4906641	2	0	0	56.1	56.1	1	5675.36	3.25	0	86.08	0	1.86	0	0	12.71	0	0	0	0	0	0	-44.59	-44.59
	Inverter Transformer	MV2-4 T	365590	4906628	2	0	0	56.1	56.1	1	5893.67	3.25	0	86.41	0	1.93	0	0	12.98	0	0	0	0	0	0	-45.26	-45.26
	Line Reactor	NGR	369421	4908787.5	5	0	0	45.4	45.4	1	1887.39	5.25	0	76.52	0	3.39	1.26	0.04	0.77	0	0	0	0	0	0	-36.59	-36.59
	Inverter Transformer	MV1-15 T	365309	4904994	2	0	0	56.1	56.1	1	6790.36	3.25	0	87.64	0	2.2	0	0	14	0	0	0	0	0	0	-47.78	-47.78
	Inverter Transformer	MV1-12 T	365044	4905386	2	0	0	56.1	56.1	1	6847.62	3.25	0	87.71	0	2.22	0	0	14.06	0	0	0	0	0	0	-47.93	-47.93
	Inverter Transformer	MV1-4 T	364821	4905918	2	0	0	56.1	56.1	1	6847.79	3.25	0	87.71	0	2.22	0	0	14.07	0	0	0	0	0	0	-47.94	-47.94
	Inverter Transformer	MV1-2 T	364759	4906063	2	0	0	56.1	56.1	1	6857.41	3.25	0	87.72	0	2.22	0	0	14.08	0	0	0	0	0	0	-47.96	-47.96
	Inverter Transformer	MV1-1 T	364721	4906166	2	0	0	56.1	56.1	1	6860.69	3.25	0	87.73	0	2.22	0	0	14.08	0	0	0	0	0	0	-47.97	-47.97
	Inverter Transformer	MV1-8 T	364782	4905647	2	0	0	56.1	56.1	1	6982.58	3.25	0	87.88	0	2.25	0	0	14.21	0	0	0	0	0	0	-48.29	-48.29
	Inverter Transformer	MV1-5 T	364676	4905892	2	0	0	56.1	56.1	1	6992.85	3.25	0	87.89	0	2.26	0	0	14.22	0	0	0	0	0	0	-48.31	-48.31
	Inverter Transformer	MV1-3 T	364435	4906039	2	0	0	56.1	56.1	1	7172.06	3.25	0	88.11	0	2.31	0	0	14.41	0	0	0	0	0	0	-48.77	-48.77
	Inverter Transformer	MV1-9 T	364555	4905646	2	0	0	56.1	56.1	1	7193.51	3.25	0	88.14	0	2.31	0	0	14.44	0	0	0	0	0	0	-48.83	-48.83
	Inverter Transformer	MV1-6 T	364482	4905835	2	0	0	56.1	56.1	1	7194.63	3.25	0	88.14	0	2.31	0	0	14.44	0	0	0	0	0	0	-48.83	-48.83
	Inverter Transformer	MV1-11 T	364649	4905414	2	0	0	56.1	56.1	1	7195.9	3.25	0	88.14	0	2.31	0	0	14.44	0	0	0	0	0	0	-48.83	-48.83
Limit. Valu	0	0																								
Level D/N:	29.9346	29.9346																								

Receiver: Existing Noise Receptor
ID: S-R125
X: 371002
Y: 4908242
Z: 4.5
Ground: 0

ISO	Description	ID	X	Y	Z	Ground	ReflOrd	LxT	LxN	L/A	Dist.	hm	Freq	Adiv	K0b	Agr	Abar	z	Aatm	Afol	Ahous	Cmet	CmetN	Dc	RL	LtotT	LtotN
	Sol_Luce Substation	S_Substation	369426	4908792	3.5	0	0	112.1	112.1	1	1669.21	5.25	0	75.45	0	0.13	4.79	0.45	3.79	0	0	0	0	0	0	27.91	27.91
	Inverter	MV5-4	370324	4908707	2	0	0	100.3	100.3	1	822.14	3.25	0	69.3	0	-0.34	0	0	10.27	0	0	0	0	0	0	21.08	21.08
	Inverter	MV5-3	370231	4908851	2	0	0	100.3	100.3	1	982.51	3.25	0	70.85	0	-0.25	0	0	10.85	0	0	0	0	0	0	18.87	18.87
	Inverter	MV5-5	370015	4908690	2	0	0	100.3	100.3	1	1083.92	3.25	0	71.7	0	-0.21	0	0	11.18	0	0	0	0	0	0	17.64	17.64
	Inverter	MV5-2	370006	4908853	2	0	0	100.3	100.3	1	1168.48	3.25	0	72.35	0	-0.17	0	0	11.43	0	0	0	0	0	0	16.69	16.69
	Inverter	MV6-2	370085	4907339	2	0	0	100.3	100.3	1	1286.97	3.25	0	73.19	0	-0.12	0	0	11.77	0	0	0	0	0	0	15.47	15.47
	Inverter	MV5-1	370020	4909142	2	0	0	100.3	100.3	1	1332.04	3.25	0	73.49	0	-0.1	0	0	11.89	0	0	0	0	0	0	15.03	15.03
	Inverter	MV6-3	370207	4907140	2	0	0	100.3	100.3	1	1358.84	3.25	0	73.66	0	-0.09	0	0	11.96	0	0	0	0	0	0	14.77	14.77
	Inverter	MV6-1	370235	4907364	2	0	0	97.3	97.3	1	1165.84	3.25	0	72.33	0	-0.17	0	0	11.43	0	0	0	0	0	0	13.72	13.72
	Inverter	MV4-10	369312	4908858	2	0	0	100.3	100.3	1	1798.77	3.25	0	76.1	0	0.07	0	0	13.03	0	0	0	0	0	0	11.12	11.12
	Inverter	MV4-11	369264	4908855	2	0	0	100.3	100.3	1	1842.94	5.15	0	76.31	0	0.75	3.5	0.05	13.12	0	0	0	0	0	0	6.63	6.63
	Inverter	MV4-9	369289	4909001	2	0	0	100.3	100.3	1	1873.62	3.25	0	76.45	0	0.09	0	0	13.19	0	0	0	0	0	0	10.58	10.58
	Inverter	MV4-8	369256	4909001	2	0	0	100.3	100.3	1	1903.84	3.25	0	76.59	0	0.1	0	0	13.26	0	0	0	0	0	0	10.36	10.36
	Inverter	MV4-5	369289	4909199	2	0	0	100.3	100.3	1	1962.2	3.25	0	76.85	0	0.12	0	0	13.38	0	0	0	0	0	0	9.96	9.96
	Inverter	MV4-6	369243	4909192	2	0	0	100.3	100.3	1	1999.15	3.25	0	77.02	0	0.13	0	0	13.46	0	0	0	0	0	0	9.71	9.71
	Inverter	MV4-2	369272	4909397	2	0	0	100.3	100.3	1	2080.13	3.25	0	77.36	0	0.15	0	0	13.63	0	0	0	0	0	0	9.17	9.17
	Inverter	MV4-7	369035	4909001	2	0	0	100.3	100.3	1	2108.36	3.25	0	77.48	0	0.16	0	0	13.69	0	0	0	0	0	0	8.99	8.99
	Inverter	MV4-3	369229	4909397	2	0	0	100.3	100.3	1	2116.02	3.25	0	77.51	0	0.16	0	0	13.7	0	0	0	0	0	0	8.94	8.94
	Inverter	MV4-4	369027	4909199	2	0	0	100.3	100.3	1	2194.65	3.25	0	77.83	0	0.18	0	0	13.86	0	0	0	0	0	0	8.44	8.44
	Inverter	MV4-1	369011	4909397	2	0	0	100.3	100.3	1	2301.76	3.25	0	78.24	0	0.21	0	0	14.08	0	0	0	0	0	0	7.79	7.79
	Inverter	MV3-8	368680	4907712	2	0	0	100.3	100.3	1	2381.72	3.25	0	78.54	0	0.23	0	0	14.23	0	0	0	0	0	0	7.31	7.31
	Inverter	MV3-14	368684	4907498	2	0	0	100.3	100.3	1	2434.47	3.25	0	78.73	0	0.24	0	0	14.33	0	0	0	0	0	0	7.01	7.01
	Inverter	MV3-20	368689	4907317	2	0	0	100.3	100.3	1	2491.1	3.25	0	78.93	0	0.26	0	0	14.44	0	0	0	0	0	0	6.69	6.69
	DSTATCOM - 10 MVAR #1	DSAT1	369437	4908757	2.5	0	0	96.6	96.6	1	1647.56	3.5	0	75.34	0	3.15	0	0	1.5	0	0	0	0	0	0	16.65	16.65
	Inverter	MV3-9	368512	4907703	2	0	0	100.3	100.3	1	2547.67	3.25	0	79.12	0	0.27	0	0	14.55	0	0	0	0	0	0	6.37	6.37
	DSTATCOM - 10 MVAR #2	DSAT2	369403	4908757	2.5	0	0	96.6	96.6	1	1679.89	3.5	0	75.51	0	3.15	0	0	1.52	0	0	0	0	0	0	16.45	16.45
	Inverter	MV3-16	368514	4907475	2	0	0	100.3	100.3	1	2603.54	3.25	0	79.31	0	0.28	0	0	14.65	0	0	0	0	0	0	6.07	6.07
	Inverter	MV3-11	368346	4907662	2	0	0	100.3	100.3	1	2718.59	3.25	0	79.69	0	0.31	0	0	14.87	0	0	0	0	0	0	5.45	5.45
	Inverter	MV3-21	368478	4907206	2	0	0	100.3	100.3	1	2728.35	3.25	0	79.72	0	0.31	0	0	14.88	0	0	0	0	0	0	5.4	5.4
	Inverter	MV3-15	368357	4907477	2	0	0	100.3	100.3	1	2753.41	3.25	0	79.8	0	0.31	0	0	14.93	0	0	0	0	0	0	5.27	5.27
	Inverter	MV3-19	368357	4907347	2	0	0	100.3	100.3	1	2792.32	3.25	0	79.92	0	0.32	0	0	15	0	0	0	0	0	0	5.07	5.07
	Inverter	MV3-6	368162	4907834	2	0	0	100.3	100.3	1	2869.16	3.25	0	80.16	0	0.34	0	0	15.14	0	0	0	0	0	0	4.68	4.68
	Inverter	MV3-10	368167	4907669	2	0	0	100.3	100.3	1	2892.33	3.25	0	80.22	0	0.34	0	0	15.18	0	0	0	0	0	0	4.57	4.57
	Inverter	MV3-17	368178	4907472	2	0	0	100.3	100.3	1	2927.09	3.25	0	80.33	0	0.35	0	0	15.24	0	0	0	0	0	0	4.39	4.39
	Inverter	MV3-3	367939	4907927	2	0	0	100.3	100.3	1	3079.16	3.25	0	80.77	0	0.38	0	0	15.51	0	0	0	0	0	0	3.65	3.65
	Inverter	MV3-7	367945	4907754	2	0	0	100.3	100.3	1	3095.71	3.25	0	80.82	0	0.38	0	0	15.54	0	0	0	0	0	0	3.58	3.58
	Inverter	MV3-13	367963	4907577	2	0	0	100.3	100.3	1	3110.91	3.25	0	80.86	0	0.38	0	0	15.57	0	0	0	0	0	0	3.5	3.5
	Inverter	MV3-18	367752	4907412	2	0	0	100.3	100.3	1	3354.31	3.25	0	81.51	0	0.43	0	0	15.99	0	0	0	0	0	0	2.39	2.39
	Inverter	MV3-12	367668	4907594	2	0	0	100.3	100.3	1	3396.39	3.25	0	81.62	0	0.43	0	0	16.06	0	0	0	0	0	0	2.2	2.2
	Inverter	MV5-6	369982	4908507	2	0	0	89.1	89.1	1	1053.86	3.25	0	71.46	0	0.7	0	0	6.42	0	0	0	0	0	0	10.49	10.49
	Inverter	MV2-3	365820	4906641	2	0	0	100.3	100.3	1	5423.68	3.25	0	85.69	0	0.68	0	0	19.19	0	0	0	0	0	0	-5.24	-5.24
	Fixed Reactor Bank 2	FRB2	369464	4908755	6	0	0	89.8	89.8	1	1621.3	5.25	0	75.2	0	-1.02	0	0	3.7	0	0	0	0	0	0	11.9	11.9
	Inverter	MV2-4	365586	4906624	2	0	0	100.3	100.3	1	5652.52	3.25	0	86.04	0	0.69	0	0	19.51	0	0	0	0	0	0	-5.94	-5.94
	Fixed Reactor Bank 1	FRB1	369378	4908755	6	0	0	89.8	89.8	1	1703.1	5.25	0	75.62	0	-1.02	0	0	3.85	0	0	0	0	0	0	11.32	11.32
	SubstationTransformer	W_ST	369711.17	4906112.3	2.5	0	0	92	92	1	2490.38	3.5	0	78.93	0	-0.05	0	0	5.17	0	0	0	0	0	0	7.92	7.92
	Inverter	MV1-15	365315	4904994	2	0	0	100.3	100.3	1	6549.16	3.25	0	87.32	0	0.71	0	0	20.72	0	0	0	0	0	0	-8.45	-8.45
	Inverter	MV1-4	364815	4905918	2	0	0	100.3	100.3	1	6609.08	3.25	0	87.4	0	0.72	0	0	20.8	0	0	0	0	0	0	-8.61	-8.61

Inverter	MV1-12	365038	4905386	2	0	0	100.3	100.3	1	6612.57	3.25	0	87.41	0	0.71	0	0	20.81	0	0	0	0	0	0	-8.62	-8.62
Inverter	MV1-2	364753	4906063	2	0	0	100.3	100.3	1	6618.01	3.25	0	87.41	0	0.71	0	0	20.81	0	0	0	0	0	0	-8.63	-8.63
Inverter	MV1-1	364715	4906166	2	0	0	100.3	100.3	1	6620.89	3.25	0	87.42	0	0.71	0	0	20.82	0	0	0	0	0	0	-8.64	-8.64
Inverter	MV4-15	369176	4908481	2	0	0	89.1	89.1	1	1841.58	3.25	0	76.3	0	0.87	0	0	7.78	0	0	0	0	0	0	4.1	4.1
Inverter	MV1-8	364788	4905647	2	0	0	100.3	100.3	1	6734.08	3.25	0	87.57	0	0.71	0	0	20.96	0	0	0	0	0	0	-8.93	-8.93
Inverter	MV4-14	369176	4908507	2	0	0	89.1	89.1	1	1845.13	3.25	0	76.32	0	0.87	0	0	7.79	0	0	0	0	0	0	4.08	4.08
Inverter	MV1-5	364671	4905892	2	0	0	100.3	100.3	1	6753.08	3.25	0	87.59	0	0.71	0	0	20.99	0	0	0	0	0	0	-8.98	-8.98
Inverter	MV1-9	364561	4905646	2	0	0	100.3	100.3	1	6944.47	3.25	0	87.83	0	0.71	0	0	21.23	0	0	0	0	0	0	-9.46	-9.46
Inverter	MV1-11	364655	4905414	2	0	0	100.3	100.3	1	6948.52	3.25	0	87.84	0	0.71	0	0	21.23	0	0	0	0	0	0	-9.47	-9.47
Inverter	MV1-6	364477	4905835	2	0	0	100.3	100.3	1	6954.8	3.25	0	87.85	0	0.71	0	0	21.24	0	0	0	0	0	0	-9.49	-9.49
Inverter	MV4-13	369051	4908605	2	0	0	89.1	89.1	1	1984.48	3.25	0	76.95	0	0.9	0	0	8.02	0	0	0	0	0	0	3.18	3.18
Westbrook Inverter Enclosur	W_INV6	369875	4906578	2	0	0	89.1	89.1	1	2009.73	3.25	0	77.06	0	0.91	0	0	8.06	0	0	0	0	0	0	3.02	3.02
Inverter	MV4-12	369043	4908803	2	0	0	89.1	89.1	1	2037.75	3.25	0	77.18	0	0.92	0	0	8.11	0	0	0	0	0	0	2.85	2.85
Inverter	MV2-1	365842	4906816	2	0	0	97.3	97.3	1	5353.42	3.25	0	85.57	0	0.67	0	0	19.09	0	0	0	0	0	0	-8.02	-8.02
Inverter	MV6-4	370250	4906966	2	0	0	86.1	86.1	1	1481.11	3.25	0	74.41	0	0.79	0	0	7.18	0	0	0	0	0	0	3.68	3.68
Westbrook Inverter Enclosur	W_INV5	369719	4906574	2	0	0	89.1	89.1	1	2104.36	3.25	0	77.46	0	0.93	0	0	8.22	0	0	0	0	0	0	2.45	2.45
Westbrook Inverter Enclosur	W_INV7	369780	4906417	2	0	0	89.1	89.1	1	2196.34	3.25	0	77.83	0	0.95	0	0	8.36	0	0	0	0	0	0	1.91	1.91
Inverter	MV3-2	368671	4907928	2	0	0	89.1	89.1	1	2352.06	3.25	0	78.43	0	0.99	0	0	8.61	0	0	0	0	0	0	1.03	1.03
Westbrook Inverter Enclosur	W_INV4	369673	4906164	2	0	0	89.1	89.1	1	2466.64	3.25	0	78.84	0	1.02	0	0	8.79	0	0	0	0	0	0	0.4	0.4
Westbrook Inverter Enclosur	W_INV2	369374	4906388	2	0	0	89.1	89.1	1	2467.33	3.25	0	78.84	0	1.02	0	0	8.79	0	0	0	0	0	0	0.4	0.4
Inverter	MV3-4	368502	4907925	2	0	0	89.1	89.1	1	2520.02	3.25	0	79.03	0	1.03	0	0	8.88	0	0	0	0	0	0	0.12	0.12
Inverter	MV1-7	364925	4905782	2	0	0	97.3	97.3	1	6556.03	3.25	0	87.33	0	0.71	0	0	20.73	0	0	0	0	0	0	-11.47	-11.47
Inverter	MV1-10	365004	4905564	2	0	0	97.3	97.3	1	6568.69	3.25	0	87.35	0	0.72	0	0	20.75	0	0	0	0	0	0	-11.5	-11.5
Westbrook Inverter Enclosur	W_INV3	369508	4906164	2	0	0	89.1	89.1	1	2559.32	3.25	0	79.16	0	1.04	0	0	8.94	0	0	0	0	0	0	-0.08	-0.08
Inverter	MV1-14	365163	4905049	2	0	0	97.3	97.3	1	6655.01	3.25	0	87.46	0	0.71	0	0	20.86	0	0	0	0	0	0	-11.73	-11.73
Inverter	MV3-22	368656	4907142	2	0	0	89.1	89.1	1	2591.09	3.25	0	79.27	0	1.05	0	0	8.99	0	0	0	0	0	0	-0.25	-0.25
Inverter	MV1-13	364731	4905241	2	0	0	97.3	97.3	1	6952.08	3.25	0	87.84	0	0.71	0	0	21.24	0	0	0	0	0	0	-12.48	-12.48
Inverter	MV3-5	368340	4907843	2	0	0	89.1	89.1	1	2691.74	3.25	0	79.6	0	1.07	0	0	9.14	0	0	0	0	0	0	-0.76	-0.76
Inverter	MV3-1	368156	4907976	2	0	0	89.1	89.1	1	2858.4	3.25	0	80.12	0	1.11	0	0	9.4	0	0	0	0	0	0	-1.58	-1.58
Westbrook Inverter Enclosur	W_INV1	369409	4906578	2	0	0	86.1	86.1	1	2303.6	3.25	0	78.25	0	0.98	0	0	8.54	0	0	0	0	0	0	-1.7	-1.7
Inverter	MV2-2	365977	4906654	2	0	0	89.1	89.1	1	5269.95	3.25	0	85.44	0	1.71	0	0	12.82	0	0	0	0	0	0	-10.91	-10.91
Gardiner Substation	G_Sub	366586.3	4903349.9	2.5	0	0	90.8	90.8	1	6590.22	4.25	0	87.38	0	1.99	1.98	0.36	10.35	0	0	0	0	0	0	-10.92	-10.92
Inverter	MV1-3	364440	4906039	2	0	0	89.1	89.1	1	6921.93	3.25	0	87.8	0	2.11	0	0	14.89	0	0	0	0	0	0	-15.75	-15.75
Westbrook Inverter Transfor	W_INVTR6	369881	4906578	2	0	0	77.3	77.3	1	2006.38	3.25	0	77.05	0	-2.41	0	0	1.21	0	0	0	0	0	0	1.49	1.49
Inverters	G_Inv2	366676.9	4903239.1	2	0	0	87.7	87.7	1	6613.28	3.25	0	87.41	0	2.94	0	0	7.6	0	0	0	0	0	0	-10.29	-10.29
Inverters	G_Inv4	366732.8	4903105	2	0	0	87.7	87.7	1	6679.43	3.25	0	87.49	0	2.94	0	0	7.67	0	0	0	0	0	0	-10.44	-10.44
Inverters	G_Inv1	366526.4	4903225.8	2	0	0	87.7	87.7	1	6722.59	3.25	0	87.55	0	2.94	0	0	7.71	0	0	0	0	0	0	-10.55	-10.55
Inverters	G_Inv6	366788.5	4902972	2	0	0	87.7	87.7	1	6747.33	3.25	0	87.58	0	2.94	0	0	7.74	0	0	0	0	0	0	-10.6	-10.6
Inverters	G_Inv3	366583.7	4903091.4	2	0	0	87.7	87.7	1	6786.02	3.25	0	87.63	0	2.94	0	0	7.78	0	0	0	0	0	0	-10.69	-10.69
Inverters	G_Inv8	366844.5	4902838.5	2	0	0	87.7	87.7	1	6817.82	3.25	0	87.67	0	2.95	0	0	7.81	0	0	0	0	0	0	-10.77	-10.77
Westbrook Inverter Transfor	W_INVTR1	369403	4906578	2	0	0	78.2	78.2	1	2307.75	3.25	0	78.26	0	-2.51	0	0	1.35	0	0	0	0	0	0	1.14	1.14
Inverters	G_Inv5	366638.5	4902958.1	2	0	0	87.7	87.7	1	6852.72	3.25	0	87.72	0	2.95	0	0	7.84	0	0	0	0	0	0	-10.85	-10.85
Inverters	G_Inv10	366900.7	4902704.8	2	0	0	87.7	87.7	1	6890.66	3.25	0	87.77	0	2.95	0	0	7.88	0	0	0	0	0	0	-10.93	-10.93
Westbrook Inverter Transfor	W_INVTR5	369725	4906574	2	0	0	77.3	77.3	1	2100.7	3.25	0	77.45	0	-2.44	0	0	1.25	0	0	0	0	0	0	1.08	1.08
Inverters	G_Inv7	366694.6	4902824.7	2	0	0	87.7	87.7	1	6921.04	3.25	0	87.8	0	2.95	0	0	7.91	0	0	0	0	0	0	-11	-11
Inverters	G_Inv9	366750.9	4902691.8	2	0	0	87.7	87.7	1	6991.18	3.25	0	87.89	0	2.95	0	0	7.98	0	0	0	0	0	0	-11.16	-11.16
Westbrook Inverter Transfor	W_INVTR7	369786	4906417	2	0	0	77.3	77.3	1	2193.01	3.25	0	77.82	0	-2.47	0	0	1.3	0	0	0	0	0	0	0.69	0.69
Westbrook Inverter Transfor	W_INVTR4	369679	4906164	2	0	0	77.3	77.3	1	2463.42	3.25	0	78.83	0	-2.56	0	0	1.42	0	0	0	0	0	0	-0.35	-0.35
Westbrook Inverter Transfor	W_INVTR2	369368	4906388	2	0	0	77.3	77.3	1	2471.29	3.25	0	78.86	0	-2.56	0	0	1.43	0	0	0	0	0	0	-0.38	-0.38
Westbrook Inverter Transfor	W_INVTR3	369514	4906164	2	0	0	77.3	77.3	1	2555.82	3.25	0	79.15	0	-2.59	0	0	1.46	0	0	0	0	0	0	-0.69	-0.69
Inverter Transformer	MV6-1 T	370230	4907364	2	0	0	69.4	69.4	1	1169.13	3.25	0	72.36	0	1.8	0	0	4.04	0	0	0	0	0	0	-8.85	-8.85
Inverter Transformer	MV6-4 T	370244	4906966	2	0	0	69.4	69.4	1	1484.17	3.25	0	74.43	0	1.97	0	0	4.42	0	0	0	0	0	0	-11.46	-11.46
Inverter Transformer	MV5-4 T	370330	4908707	2	0	0	56.1	56.1	1	817.2	3.25	0	69.25	0	-0.05	0	0	4.44	0	0	0	0	0	0	-17.58	-17.58
Inverter Transformer	MV5-3 T	370237	4908851	2	0	0	56.1	56.1	1	977.81	3.25	0	70.81	0	0	0	0	4.84	0	0	0	0	0	0	-19.59	-19.59
Inverter Transformer	MV5-6 T	369987	4908507	2	0	0	56.1	56.1	1	1049.03	3.25	0	71.42	0	0.03	0	0	5.01	0	0	0	0	0	0	-20.39	-20.39
Inverter Transformer	MV5-5 T	370021	4908690	2	0	0	56.1	56.1	1	1078.46	3.25	0	71.66	0	0.04	0	0	5.07	0	0	0	0	0	0	-20.71	-20.71
Inverter Transformer	MV2-1 T	365836	4906816	2	0	0	69.4	69.4	1	5359.2	3.25	0	85.58	0	3.08	0	0	7.62	0	0	0	0	0	0	-26.93	-26.93
Inverter Transformer	MV5-2 T	370011	4908853	2	0	0	56.1	56.1	1	1164.22	3.25	0	72.32	0	0.07	0	0	5.27	0	0	0	0	0	0	-21.61	-21.61
Inverter Transformer	MV6-2 T	370091	4907339	2	0	0	56.1	56.1	1	1282.71	3.25	0	73.16	0	0.11	0	0	5.54	0	0	0	0	0	0	-22.76	-22.76
Inverter Transformer	MV5-1 T	370015	4909142	2	0	0	56.1	56.1	1	1335.73	3.25	0	73.51	0	0.13	0	0	5.66	0	0	0	0	0	0	-23.25	-23.25
Inverter Transformer	MV6-3 T	370202	4907140	2	0	0	56.1	56.1	1	1361.77	3.25	0	73.68	0	0.14	0	0	5.72	0	0	0	0	0	0	-23.49	-23.49
Inverter Transformer	MV1-7 T	364919	4905782	2	0	0	69.4	69.4	1	6561.59	3.25	0	87.34	0	3.27	0	0	8.35	0	0	0	0	0	0	-29.61	-29.61
Inverter Transformer	MV1-10 T	365010	4905564	2	0	0	69.4	69.4	1	6563.21	3.25	0	87.34	0	3.27	0	0	8.35	0	0	0	0	0	0	-29.61	-29.61
Inverter Transformer	MV1-14 T	365157	4905049	2	0	0	69.4	69.4	1	6660.28	3.25	0	87.47	0	3.28	0	0	8.41	0	0	0	0	0	0	-29.81	-29.81
Inverter Transformer	MV1-13 T	364725	4905241	2	0	0	69.4	69.4	1	6957.49	3.25	0	87.85	0	3.31	0	0	8.58	0	0	0	0	0	0	-30.39	-30.39
Inverter Transformer	MV4-10 T	369307	4908858	2	0	0	56.1	56.1	1	1803.47	3.25	0	76.12	0	0.32	0	0	6.65	0	0	0	0	0	0	-27.04	-27.04
Inverter Transformer	MV4-11 T	369269	4908855	2	0	0	56.1	56.1	1	1838.22	5.13	0	76.29	0	1.2	3.04	0.05	6.72	0	0	0	0	0	0	-31.19	-31.19
Inverter Transformer	MV4-14 T	369182	4908507	2	0	0	56.1	56.1	1	1839.19	3.25	0	76.29	0	0.34	0	0	6.72	0	0	0	0	0	0	-27.29	-27.29
Inverter Transformer	MV4-15 T	369170	4908481	2	0	0	56.1	56.1	1	1847.53	3.25	0	76.33	0	0.34	0	0	6.74	0	0	0	0	0	0	-27.35	-27.35
Inverter Transformer	MV4-9 T	369284	4909001	2	0	0	56.1	56.1	1	1878.19	3.25	0	76.47	0	0.35	0	0	6.8	0	0	0	0	0	0	-27.57	-27.57
Inverter Transformer	MV4-8 T	369262	4909001	2	0	0	56.1	56.1	1	1898.34	3.25	0	76.57	0	0.36	0	0	6.84	0	0	0	0	0	0	-27.71	-27.71
Inverter Transformer	MV4-5 T	369283	4909199	2	0	0	56.1	56.1	1	1967.44	3.25	0	76.88	0	0.39	0	0	6.98	0	0	0	0	0	0	-28.19	-28.19
Inverter Transformer	MV4-13 T	369057	4908605	2	0	0	56.1	56.1	1	1978.59	3.25	0	76.93	0	0.39	0	0	7	0	0	0	0	0	0	-28.27	-28.27
Inverter Transformer	MV4-6 T	369249	4909192	2	0	0	56.1	56.1	1	1993.87	3.25	0	76.99	0	0.4	0	0	7.03	0	0	0	0	0	0	-28.37	-28.37

	Inverter Transformer	MV4-12 T	369049	4908803	2	0	0	56.1	56.1	1	2031.98	3.25	0	77.16	0	0.42	0	0	7.11	0	0	0	0	0	0	-28.62	-28.62
	Inverter Transformer	MV4-2 T	369267	4909397	2	0	0	56.1	56.1	1	2084.29	3.25	0	77.38	0	0.44	0	0	7.21	0	0	0	0	0	0	-28.97	-28.97
	Inverter Transformer	MV4-7 T	369040	4909001	2	0	0	56.1	56.1	1	2103.69	3.25	0	77.46	0	0.45	0	0	7.25	0	0	0	0	0	0	-29.09	-29.09
	Inverter Transformer	MV4-3 T	369234	4909397	2	0	0	56.1	56.1	1	2111.84	3.25	0	77.49	0	0.45	0	0	7.26	0	0	0	0	0	0	-29.15	-29.15
	Inverter Transformer	MV4-4 T	369033	4909199	2	0	0	56.1	56.1	1	2189.25	3.25	0	77.81	0	0.48	0	0	7.41	0	0	0	0	0	0	-29.64	-29.64
	Inverter Transformer	MV4-1 T	369017	4909397	2	0	0	56.1	56.1	1	2296.57	3.25	0	78.22	0	0.53	0	0	7.61	0	0	0	0	0	0	-30.31	-30.31
	Inverter Transformer	MV3-2 T	368677	4907928	2	0	0	56.1	56.1	1	2346.11	3.25	0	78.41	0	0.55	0	0	7.71	0	0	0	0	0	0	-30.61	-30.61
	Inverter Transformer	MV3-8 T	368685	4907712	2	0	0	56.1	56.1	1	2376.85	3.25	0	78.52	0	0.56	0	0	7.76	0	0	0	0	0	0	-30.79	-30.79
	Inverter Transformer	MV3-14 T	368678	4907498	2	0	0	56.1	56.1	1	2440.19	3.25	0	78.75	0	0.59	0	0	7.88	0	0	0	0	0	0	-31.16	-31.16
	Inverter Transformer	MV3-20 T	368683	4907317	2	0	0	56.1	56.1	1	2496.68	3.25	0	78.95	0	0.62	0	0	7.98	0	0	0	0	0	0	-31.49	-31.49
	Inverter Transformer	MV3-4 T	368507	4907925	2	0	0	56.1	56.1	1	2515.06	3.25	0	79.01	0	0.62	0	0	8.02	0	0	0	0	0	0	-31.59	-31.59
	Inverter Transformer	MV3-9 T	368517	4907703	2	0	0	56.1	56.1	1	2542.78	3.25	0	79.11	0	0.63	0	0	8.07	0	0	0	0	0	0	-31.75	-31.75
	Inverter Transformer	MV3-22 T	368661	4907142	2	0	0	56.1	56.1	1	2586.56	3.25	0	79.25	0	0.65	0	0	8.15	0	0	0	0	0	0	-32	-32
	Inverter Transformer	MV3-16 T	368509	4907475	2	0	0	56.1	56.1	1	2608.32	3.25	0	79.33	0	0.66	0	0	8.19	0	0	0	0	0	0	-32.12	-32.12
	Inverter Transformer	MV3-5 T	368335	4907843	2	0	0	56.1	56.1	1	2696.68	3.25	0	79.62	0	0.7	0	0	8.34	0	0	0	0	0	0	-32.6	-32.6
	Inverter Transformer	MV3-21 T	368484	4907206	2	0	0	56.1	56.1	1	2722.8	3.25	0	79.7	0	0.71	0	0	8.39	0	0	0	0	0	0	-32.74	-32.74
	Inverter Transformer	MV3-11 T	368340	4907662	2	0	0	56.1	56.1	1	2724.45	3.25	0	79.71	0	0.71	0	0	8.39	0	0	0	0	0	0	-32.75	-32.75
	Inverter Transformer	MV3-15 T	368351	4907477	2	0	0	56.1	56.1	1	2759.17	3.25	0	79.82	0	0.73	0	0	8.45	0	0	0	0	0	0	-32.94	-32.94
	Inverter Transformer	MV3-19 T	368352	4907347	2	0	0	56.1	56.1	1	2797.06	3.25	0	79.93	0	0.74	0	0	8.52	0	0	0	0	0	0	-33.14	-33.14
	Inverter Transformer	MV3-1 T	368150	4907976	2	0	0	56.1	56.1	1	2864.38	3.25	0	80.14	0	0.77	0	0	8.64	0	0	0	0	0	0	-33.49	-33.49
	Inverter Transformer	MV3-6 T	368156	4907834	2	0	0	56.1	56.1	1	2875.1	3.25	0	80.17	0	0.78	0	0	8.65	0	0	0	0	0	0	-33.55	-33.55
	Inverter Transformer	MV3-10 T	368162	4907669	2	0	0	56.1	56.1	1	2897.23	3.25	0	80.24	0	0.79	0	0	8.69	0	0	0	0	0	0	-33.66	-33.66
	Inverter Transformer	MV3-17 T	368183	4907472	2	0	0	56.1	56.1	1	2922.27	3.25	0	80.31	0	0.8	0	0	8.74	0	0	0	0	0	0	-33.79	-33.79
	Inverter Transformer	MV3-3 T	367944	4907927	2	0	0	56.1	56.1	1	3074.18	3.25	0	80.75	0	0.86	0	0	8.99	0	0	0	0	0	0	-34.55	-34.55
	Inverter Transformer	MV3-7 T	367951	4907754	2	0	0	56.1	56.1	1	3089.78	3.25	0	80.8	0	0.87	0	0	9.02	0	0	0	0	0	0	-34.63	-34.63
	Inverter Transformer	MV3-13 T	367958	4907577	2	0	0	56.1	56.1	1	3115.79	3.25	0	80.87	0	0.88	0	0	9.06	0	0	0	0	0	0	-34.75	-34.75
	Inverter Transformer	MV3-18 T	367757	4907412	2	0	0	56.1	56.1	1	3349.47	3.25	0	81.5	0	0.98	0	0	9.45	0	0	0	0	0	0	-35.87	-35.87
	Inverter Transformer	MV3-12 T	367674	4907594	2	0	0	56.1	56.1	1	3390.5	3.25	0	81.61	0	0.99	0	0	9.51	0	0	0	0	0	0	-36.05	-36.05
	Inverter Transformer	MV2-2 T	365982	4906654	2	0	0	56.1	56.1	1	5265.18	3.25	0	85.43	0	1.72	0	0	12.2	0	0	0	0	0	0	-43.29	-43.29
	Inverter Transformer	MV2-3 T	365814	4906641	2	0	0	56.1	56.1	1	5429.42	3.25	0	85.7	0	1.78	0	0	12.41	0	0	0	0	0	0	-43.82	-43.82
	Inverter Transformer	MV2-4 T	365590	4906628	2	0	0	56.1	56.1	1	5647.54	3.25	0	86.04	0	1.85	0	0	12.68	0	0	0	0	0	0	-44.51	-44.51
	Line Reactor	NGR	369421	4908787.5	5	0	0	45.4	45.4	1	1672.46	5.25	0	75.47	0	3.41	1.25	0.04	0.69	0	0	0	0	0	0	-35.45	-35.45
	Inverter Transformer	MV1-15 T	365309	4904994	2	0	0	56.1	56.1	1	6554.37	3.25	0	87.33	0	2.13	0	0	13.74	0	0	0	0	0	0	-47.15	-47.15
	Inverter Transformer	MV1-4 T	364821	4905918	2	0	0	56.1	56.1	1	6603.46	3.25	0	87.4	0	2.15	0	0	13.8	0	0	0	0	0	0	-47.28	-47.28
	Inverter Transformer	MV1-12 T	365044	4905386	2	0	0	56.1	56.1	1	6607.16	3.25	0	87.4	0	2.15	0	0	13.8	0	0	0	0	0	0	-47.29	-47.29
	Inverter Transformer	MV1-2 T	364759	4906063	2	0	0	56.1	56.1	1	6612.34	3.25	0	87.41	0	2.15	0	0	13.81	0	0	0	0	0	0	-47.31	-47.31
	Inverter Transformer	MV1-1 T	364721	4906166	2	0	0	56.1	56.1	1	6615.19	3.25	0	87.41	0	2.15	0	0	13.81	0	0	0	0	0	0	-47.31	-47.31
	Inverter Transformer	MV1-8 T	364782	4905647	2	0	0	56.1	56.1	1	6739.62	3.25	0	87.57	0	2.19	0	0	13.95	0	0	0	0	0	0	-47.65	-47.65
	Inverter Transformer	MV1-5 T	364676	4905892	2	0	0	56.1	56.1	1	6748.39	3.25	0	87.58	0	2.19	0	0	13.96	0	0	0	0	0	0	-47.67	-47.67
	Inverter Transformer	MV1-3 T	364435	4906039	2	0	0	56.1	56.1	1	6926.67	3.25	0	87.81	0	2.24	0	0	14.15	0	0	0	0	0	0	-48.14	-48.14
	Inverter Transformer	MV1-9 T	364555	4905646	2	0	0	56.1	56.1	1	6950.04	3.25	0	87.84	0	2.25	0	0	14.18	0	0	0	0	0	0	-48.2	-48.2
	Inverter Transformer	MV1-6 T	364482	4905835	2	0	0	56.1	56.1	1	6950.11	3.25	0	87.84	0	2.25	0	0	14.18	0	0	0	0	0	0	-48.2	-48.2
	Inverter Transformer	MV1-11 T	364649	4905414	2	0	0	56.1	56.1	1	6954.01	3.25	0	87.84	0	2.25	0	0	14.18	0	0	0	0	0	0	-48.21	-48.21
Limit. Valu	0	0																								
Level D/N:	31.3803	31.3803																								

Receiver: Existing Noise Receptor
ID: S-R126
X: 370856
Y: 4908178
Z: 4.5
Ground: 0

ISO	Description	ID	X	Y	Z	Ground	ReflOrd	LxT	LxN	L/A	Dist.	hm	Freq	Adiv	K0b	Agr	Abar	z	Aatm	Afol	Ahous	Cmet	CmetN	Dc	RL	LtotT	LtotN
	Sol_Luce Substation	S_Substation	369426	4908792	3.5	0	0	112.1	112.1	1	1556.24	5.25	0	74.84	0	0.12	4.91	0.44	3.59	0	0	0	0	0	0	28.61	28.61
	Inverter	MV5-4	370324	4908707	2	0	0	100.3	100.3	1	750.25	3.25	0	68.5	0	-0.38	0	0	9.97	0	0	0	0	0	0	22.22	22.22
	Inverter	MV5-3	370231	4908851	2	0	0	100.3	100.3	1	918.46	3.25	0	70.26	0	-0.29	0	0	10.63	0	0	0	0	0	0	19.71	19.71
	Inverter	MV5-5	370015	4908690	2	0	0	100.3	100.3	1	984.6	3.25	0	70.87	0	-0.25	0	0	10.86	0	0	0	0	0	0	18.84	18.84
	Inverter	MV5-2	370006	4908853	2	0	0	100.3	100.3	1	1085.42	3.25	0	71.71	0	-0.21	0	0	11.18	0	0	0	0	0	0	17.62	17.62
	Inverter	MV6-2	370085	4907339	2	0	0	100.3	100.3	1	1139.46	3.25	0	72.13	0	-0.18	0	0	11.35	0	0	0	0	0	0	17.01	17.01
	Inverter	MV6-3	370207	4907140	2	0	0	100.3	100.3	1	1224.19	3.25	0	72.76	0	-0.14	0	0	11.59	0	0	0	0	0	0	16.1	16.1
	Inverter	MV5-1	370020	4909142	2	0	0	100.3	100.3	1	1276.01	3.25	0	73.12	0	-0.12	0	0	11.74	0	0	0	0	0	0	15.58	15.58
	Inverter	MV6-1	370235	4907364	2	0	0	97.3	97.3	1	1023.84	3.25	0	71.2	0	-0.23	0	0	10.99	0	0	0	0	0	0	15.35	15.35
	Inverter	MV4-10	369312	4908858	2	0	0	100.3	100.3	1	1687.11	3.25	0	75.54	0	0.03	0	0	12.77	0	0	0	0	0	0	11.96	11.96
	Inverter	MV4-11	369264	4908855	2	0	0	100.3	100.3	1	1729.97	5.14	0	75.76	0	0.7	3.54	0.05	12.87	0	0	0	0	0	0	7.44	7.44
	Inverter	MV4-9	369289	4909001	2	0	0	100.3	100.3	1	1769.98	3.25	0	75.96	0	0.06	0	0	12.96	0	0	0	0	0	0	11.33	11.33
	Inverter	MV4-8	369256	4909001	2	0	0	100.3	100.3	1	1799.26	3.25	0	76.1	0	0.07	0	0	13.03	0	0	0	0	0	0	11.11	11.11
	Inverter	MV4-5	369289	4909199	2	0	0	100.3	100.3	1	1870.28	3.25	0	76.44	0	0.09	0	0	13.18	0	0	0	0	0	0	10.6	10.6
	Inverter	MV4-6	369243	4909192	2	0	0	100.3	100.3	1	1905.25	3.25	0	76.6	0	0.1	0	0	13.26	0	0	0	0	0	0	10.35	10.35
	Inverter	MV4-7	369035	4909001	2	0	0	100.3	100.3	1	1998.34	3.25	0	77.01	0	0.13	0	0	13.46	0	0	0	0	0	0	9.71	9.71
	Inverter	MV4-2	369272	4909397	2	0	0	100.3	100.3	1	1998.76	3.25	0	77.02	0	0.13	0	0	13.46	0	0	0	0	0	0	9.71	9.71
	Inverter	MV4-3	369229	4909397	2	0	0	100.3	100.3	1	2033	3.25	0	77.16	0	0.14	0	0	13.53	0	0	0	0	0	0	9.48	9.48
	Inverter	MV4-4	369027	4909199	2	0	0	100.3	100.3	1	2094.68	3.25	0	77.42	0	0.16	0	0	13.66	0	0	0	0	0	0	9.07	9.07
	Inverter	MV4-1	369011	4909397	2	0	0	100.3	100.3	1	2211.33	3.25	0	77.89	0	0.19	0	0	13.9	0	0	0	0	0	0	8.34	8.34

Inverter	MV3-8	368680	4907712	2	0	0	100.3	100.3	1	2225.34	3.25	0	77.95	0	0.19	0	0	13.92	0	0	0	0	0	0	8.25	8.25
Inverter	MV3-14	368684	4907498	2	0	0	100.3	100.3	1	2275.96	3.25	0	78.14	0	0.2	0	0	14.02	0	0	0	0	0	0	7.94	7.94
Inverter	MV3-20	368689	4907317	2	0	0	100.3	100.3	1	2331.78	3.25	0	78.35	0	0.22	0	0	14.13	0	0	0	0	0	0	7.61	7.61
DSTATCOM - 10 MVAR #1	DSAT1	369437	4908757	2.5	0	0	96.6	96.6	1	1532.58	3.5	0	74.71	0	3.12	0	0	1.43	0	0	0	0	0	0	17.37	17.37
DSTATCOM - 10 MVAR #2	DSAT2	369403	4908757	2.5	0	0	96.6	96.6	1	1564.11	3.5	0	74.89	0	3.13	0	0	1.45	0	0	0	0	0	0	17.17	17.17
Inverter	MV3-9	368512	4907703	2	0	0	100.3	100.3	1	2391.65	3.25	0	78.57	0	0.23	0	0	14.25	0	0	0	0	0	0	7.26	7.26
Inverter	MV3-16	368514	4907475	2	0	0	100.3	100.3	1	2445.24	3.25	0	78.77	0	0.24	0	0	14.35	0	0	0	0	0	0	6.95	6.95
Inverter	MV3-11	368346	4907662	2	0	0	100.3	100.3	1	2562.49	3.25	0	79.17	0	0.27	0	0	14.58	0	0	0	0	0	0	6.29	6.29
Inverter	MV3-21	368478	4907206	2	0	0	100.3	100.3	1	2568.98	3.25	0	79.2	0	0.27	0	0	14.59	0	0	0	0	0	0	6.26	6.26
Inverter	MV3-15	368357	4907477	2	0	0	100.3	100.3	1	2595.46	3.25	0	79.28	0	0.28	0	0	14.64	0	0	0	0	0	0	6.11	6.11
Inverter	MV3-19	368357	4907347	2	0	0	100.3	100.3	1	2633.55	3.25	0	79.41	0	0.29	0	0	14.71	0	0	0	0	0	0	5.91	5.91
Inverter	MV3-6	368162	4907834	2	0	0	100.3	100.3	1	2715.88	3.25	0	79.68	0	0.3	0	0	14.86	0	0	0	0	0	0	5.47	5.47
Inverter	MV3-10	368167	4907669	2	0	0	100.3	100.3	1	2736.75	3.25	0	79.74	0	0.31	0	0	14.9	0	0	0	0	0	0	5.36	5.36
Inverter	MV3-17	368178	4907472	2	0	0	100.3	100.3	1	2769.5	3.25	0	79.85	0	0.32	0	0	14.96	0	0	0	0	0	0	5.19	5.19
Inverter	MV3-3	367939	4907927	2	0	0	100.3	100.3	1	2927.78	3.25	0	80.33	0	0.35	0	0	15.24	0	0	0	0	0	0	4.39	4.39
Inverter	MV3-7	367945	4907754	2	0	0	100.3	100.3	1	2941.72	3.25	0	80.37	0	0.35	0	0	15.27	0	0	0	0	0	0	4.32	4.32
Inverter	MV3-13	367963	4907577	2	0	0	100.3	100.3	1	2954.77	3.25	0	80.41	0	0.35	0	0	15.29	0	0	0	0	0	0	4.26	4.26
Inverter	MV3-18	367752	4907412	2	0	0	100.3	100.3	1	3197.12	3.25	0	81.1	0	0.4	0	0	15.72	0	0	0	0	0	0	3.1	3.1
Inverter	MV3-12	367668	4907594	2	0	0	100.3	100.3	1	3241.05	3.25	0	81.21	0	0.41	0	0	15.79	0	0	0	0	0	0	2.9	2.9
Inverter	MV5-6	369982	4908507	2	0	0	89.1	89.1	1	933.88	3.25	0	70.41	0	0.67	0	0	6.19	0	0	0	0	0	0	11.79	11.79
Fixed Reactor Bank 2	FRB2	369464	4908755	6	0	0	89.8	89.8	1	1506.85	5.25	0	74.56	0	-1.03	0	0	3.5	0	0	0	0	0	0	12.74	12.74
Inverter	MV2-3	365820	4906641	2	0	0	100.3	100.3	1	5265.33	3.25	0	85.43	0	0.66	0	0	18.97	0	0	0	0	0	0	-4.75	-4.75
Fixed Reactor Bank 1	FRB1	369378	4908755	6	0	0	89.8	89.8	1	1586.64	5.25	0	75.01	0	-1.02	0	0	3.64	0	0	0	0	0	0	12.15	12.15
Inverter	MV2-4	365586	4906624	2	0	0	100.3	100.3	1	5494.34	3.25	0	85.8	0	0.68	0	0	19.29	0	0	0	0	0	0	-5.46	-5.46
SubstationTransformer	W_ST	369711.17	4906112.3	2.5	0	0	92	92	1	2361.75	3.5	0	78.46	0	-0.08	0	0	4.97	0	0	0	0	0	0	8.62	8.62
Inverter	MV4-15	369176	4908481	2	0	0	89.1	89.1	1	1707.11	3.25	0	75.65	0	0.84	0	0	7.56	0	0	0	0	0	0	5.01	5.01
Inverter	MV4-14	369176	4908507	2	0	0	89.1	89.1	1	1711.91	3.25	0	75.67	0	0.84	0	0	7.57	0	0	0	0	0	0	4.98	4.98
Inverter	MV1-15	365315	4904994	2	0	0	100.3	100.3	1	6390.66	3.25	0	87.11	0	0.71	0	0	20.52	0	0	0	0	0	0	-8.03	-8.03
Inverter	MV1-4	364815	4905918	2	0	0	100.3	100.3	1	6449.91	3.25	0	87.19	0	0.71	0	0	20.59	0	0	0	0	0	0	-8.19	-8.19
Inverter	MV1-12	365038	4905386	2	0	0	100.3	100.3	1	6453.25	3.25	0	87.2	0	0.71	0	0	20.6	0	0	0	0	0	0	-8.2	-8.2
Inverter	MV1-2	364753	4906063	2	0	0	100.3	100.3	1	6459.09	3.25	0	87.2	0	0.71	0	0	20.61	0	0	0	0	0	0	-8.21	-8.21
Inverter	MV1-1	364715	4906166	2	0	0	100.3	100.3	1	6462.2	3.25	0	87.21	0	0.71	0	0	20.61	0	0	0	0	0	0	-8.22	-8.22
Inverter	MV1-8	364788	4905647	2	0	0	100.3	100.3	1	6574.69	3.25	0	87.36	0	0.72	0	0	20.76	0	0	0	0	0	0	-8.52	-8.52
Inverter	MV1-5	364671	4905892	2	0	0	100.3	100.3	1	6593.94	3.25	0	87.38	0	0.72	0	0	20.78	0	0	0	0	0	0	-8.57	-8.57
Inverter	MV4-13	369051	4908605	2	0	0	89.1	89.1	1	1854.82	3.25	0	76.37	0	0.87	0	0	7.81	0	0	0	0	0	0	4.01	4.01
Inverter	MV1-9	364561	4905646	2	0	0	100.3	100.3	1	6785.13	3.25	0	87.63	0	0.71	0	0	21.03	0	0	0	0	0	0	-9.06	-9.06
Inverter	MV1-11	364655	4905414	2	0	0	100.3	100.3	1	6789.12	3.25	0	87.64	0	0.71	0	0	21.03	0	0	0	0	0	0	-9.07	-9.07
Inverter	MV1-6	364477	4905835	2	0	0	100.3	100.3	1	6795.68	3.25	0	87.64	0	0.71	0	0	21.04	0	0	0	0	0	0	-9.09	-9.09
Westbrook Inverter Enclosur	W_INV6	369875	4906578	2	0	0	89.1	89.1	1	1876.8	3.25	0	76.47	0	0.88	0	0	7.84	0	0	0	0	0	0	3.87	3.87
Inverter	MV6-4	370250	4906966	2	0	0	86.1	86.1	1	1355.06	3.25	0	73.64	0	0.76	0	0	6.96	0	0	0	0	0	0	4.7	4.7
Inverter	MV4-12	369043	4908803	2	0	0	89.1	89.1	1	1917.71	3.25	0	76.66	0	0.89	0	0	7.91	0	0	0	0	0	0	3.6	3.6
Westbrook Inverter Enclosur	W_INV5	369719	4906574	2	0	0	89.1	89.1	1	1966.11	3.25	0	76.87	0	0.9	0	0	7.99	0	0	0	0	0	0	3.3	3.3
Inverter	MV2-1	365842	4906816	2	0	0	97.3	97.3	1	5195.69	3.25	0	85.31	0	0.66	0	0	18.87	0	0	0	0	0	0	-7.53	-7.53
Westbrook Inverter Enclosur	W_INV7	369780	4906417	2	0	0	89.1	89.1	1	2063.71	3.25	0	77.29	0	0.92	0	0	8.15	0	0	0	0	0	0	2.69	2.69
Inverter	MV3-2	368671	4907928	2	0	0	89.1	89.1	1	2199.26	3.25	0	77.85	0	0.95	0	0	8.37	0	0	0	0	0	0	1.89	1.89
Westbrook Inverter Enclosur	W_INV2	369374	4906388	2	0	0	89.1	89.1	1	2323.88	3.25	0	78.32	0	0.98	0	0	8.57	0	0	0	0	0	0	1.18	1.18
Westbrook Inverter Enclosur	W_INV4	369673	4906164	2	0	0	89.1	89.1	1	2335.74	3.25	0	78.37	0	0.99	0	0	8.59	0	0	0	0	0	0	1.12	1.12
Inverter	MV3-4	368502	4907925	2	0	0	89.1	89.1	1	2367.56	3.25	0	78.49	0	0.99	0	0	8.64	0	0	0	0	0	0	0.94	0.94
Westbrook Inverter Enclosur	W_INV3	369508	4906164	2	0	0	89.1	89.1	1	2423.49	3.25	0	78.69	0	1.01	0	0	8.73	0	0	0	0	0	0	0.64	0.64
Inverter	MV3-22	368656	4907142	2	0	0	89.1	89.1	1	2431.73	3.25	0	78.72	0	1.01	0	0	8.74	0	0	0	0	0	0	0.59	0.59
Inverter	MV1-7	364925	4905782	2	0	0	97.3	97.3	1	6396.69	3.25	0	87.12	0	0.71	0	0	20.52	0	0	0	0	0	0	-11.04	-11.04
Inverter	MV1-10	365004	4905564	2	0	0	97.3	97.3	1	6409.28	3.25	0	87.14	0	0.71	0	0	20.54	0	0	0	0	0	0	-11.08	-11.08
Inverter	MV1-14	365163	4905049	2	0	0	97.3	97.3	1	6496.22	3.25	0	87.25	0	0.71	0	0	20.65	0	0	0	0	0	0	-11.31	-11.31
Inverter	MV3-5	368340	4907843	2	0	0	89.1	89.1	1	2538.21	3.25	0	79.09	0	1.03	0	0	8.91	0	0	0	0	0	0	0.03	0.03
Inverter	MV1-13	364731	4905241	2	0	0	97.3	97.3	1	6792.76	3.25	0	87.64	0	0.71	0	0	21.04	0	0	0	0	0	0	-12.08	-12.08
Inverter	MV3-1	368156	4907976	2	0	0	89.1	89.1	1	2707.55	3.25	0	79.65	0	1.08	0	0	9.17	0	0	0	0	0	0	-0.84	-0.84
Westbrook Inverter Enclosur	W_INV1	369409	4906578	2	0	0	86.1	86.1	1	2157.27	3.25	0	77.68	0	0.94	0	0	8.3	0	0	0	0	0	0	-0.86	-0.86
Inverter	MV2-2	365977	4906654	2	0	0	89.1	89.1	1	5111.48	3.25	0	85.17	0	1.67	0	0	12.61	0	0	0	0	0	0	-10.39	-10.39
Gardiner Substation	G_Sub	366586.3	4903349.9	2.5	0	0	90.8	90.8	1	6445.22	4.25	0	87.18	0	1.96	2.01	0.36	10.2	0	0	0	0	0	0	-10.59	-10.59
Inverter	MV1-3	364440	4906039	2	0	0	89.1	89.1	1	6763.16	3.25	0	87.6	0	2.07	0	0	14.7	0	0	0	0	0	0	-15.32	-15.32
Westbrook Inverter Transfor	W_INVTR6	369881	4906578	2	0	0	77.3	77.3	1	1873.67	3.25	0	76.45	0	-2.36	0	0	1.14	0	0	0	0	0	0	2.1	2.1
Westbrook Inverter Transfor	W_INVTR1	369403	4906578	2	0	0	78.2	78.2	1	2161.3	3.25	0	77.69	0	-2.46	0	0	1.28	0	0	0	0	0	0	1.73	1.73
Westbrook Inverter Transfor	W_INVTR5	369725	4906574	2	0	0	77.3	77.3	1	1962.65	3.25	0	76.86	0	-2.39	0	0	1.19	0	0	0	0	0	0	1.69	1.69
Inverters	G_Inv2	366676.9	4903239.1	2	0	0	87.7	87.7	1	6469.75	3.25	0	87.22	0	2.94	0	0	7.46	0	0	0	0	0	0	-9.95	-9.95
Inverters	G_Inv4	366732.8	4903105	2	0	0	87.7	87.7	1	6537.29	3.25	0	87.31	0	2.94	0	0	7.52	0	0	0	0	0	0	-10.11	-10.11
Inverters	G_Inv1	366526.4	4903225.8	2	0	0	87.7	87.7	1	6577.97	3.25	0	87.36	0	2.94	0	0	7.57	0	0	0	0	0	0	-10.21	-10.21
Inverters	G_Inv6	366788.5	4902972	2	0	0	87.7	87.7	1	6606.59	3.25	0	87.4	0	2.94	0	0	7.59	0	0	0	0	0	0	-10.27	-10.27
Inverters	G_Inv3	366583.7	4903091.4	2	0	0	87.7	87.7	1	6642.74	3.25	0	87.45	0	2.94	0	0	7.63	0	0	0	0	0	0	-10.36	-10.36
Inverters	G_Inv8	366844.5	4902838.5	2	0	0	87.7	87.7	1	6678.5	3.25	0	87.49	0	2.94	0	0	7.67	0	0	0	0	0	0	-10.44	-10.44
Inverters	G_Inv5	366638.5	4902958.1	2	0	0	87.7	87.7	1	6710.79	3.25	0	87.54	0	2.94	0	0	7.7	0	0	0	0	0	0	-10.52	-10.52
Inverters	G_Inv10	366900.7	4902704.8	2	0	0	87.7	87.7	1	6752.8	3.25	0	87.59	0	2.94	0	0	7.74	0	0	0	0	0	0	-10.62	-10.62
Westbrook Inverter Transfor	W_INVTR7	369786	4906417	2	0	0	77.3	77.3	1	2060.59	3.25	0	77.28	0	-2.43	0	0	1.24	0	0	0	0	0	0	1.25	1.25
Inverters	G_Inv7	366694.6	4902824.7	2	0	0	87.7	87.7	1	6780.49	3.25	0	87.63	0	2.94	0	0	7.77	0	0	0	0	0	0	-10.68	-10.68
Inverters	G_Inv9	366750.9	4902691.8	2	0	0	87.7	87.7	1	6852.02	3.25	0	87.72	0	2.95	0	0	7.84	0	0	0	0	0	0	-10.84	-10.84

Westbrook Inverter Transfor	W_INVTR2	369368	4906388	2	0	0	77.3	77.3	1	2327.71	3.25	0	78.34	0	-2.52	0	0	1.36	0	0	0	0	0	0	0.16	0.16
Westbrook Inverter Transfor	W_INVTR4	369679	4906164	2	0	0	77.3	77.3	1	2332.71	3.25	0	78.36	0	-2.52	0	0	1.36	0	0	0	0	0	0	0.14	0.14
Westbrook Inverter Transfor	W_INVTR3	369514	4906164	2	0	0	77.3	77.3	1	2420.16	3.25	0	78.68	0	-2.55	0	0	1.4	0	0	0	0	0	0	-0.19	-0.19
Inverter Transformer	MV6-1 T	370230	4907364	2	0	0	69.4	69.4	1	1026.88	3.25	0	71.23	0	1.71	0	0	3.85	0	0	0	0	0	0	-7.43	-7.43
Inverter Transformer	MV6-4 T	370244	4906966	2	0	0	69.4	69.4	1	1357.75	3.25	0	73.66	0	1.91	0	0	4.27	0	0	0	0	0	0	-10.48	-10.48
Inverter Transformer	MV5-4 T	370330	4908707	2	0	0	56.1	56.1	1	746	3.25	0	68.45	0	-0.07	0	0	4.26	0	0	0	0	0	0	-16.58	-16.58
Inverter Transformer	MV5-3 T	370237	4908851	2	0	0	56.1	56.1	1	914.38	3.25	0	70.22	0	-0.02	0	0	4.68	0	0	0	0	0	0	-18.83	-18.83
Inverter Transformer	MV5-6 T	369987	4908507	2	0	0	56.1	56.1	1	929.2	3.25	0	70.36	0	-0.01	0	0	4.72	0	0	0	0	0	0	-19.01	-19.01
Inverter Transformer	MV5-5 T	370021	4908690	2	0	0	56.1	56.1	1	979.48	3.25	0	70.82	0	0	0	0	4.84	0	0	0	0	0	0	-19.61	-19.61
Inverter Transformer	MV5-2 T	370011	4908853	2	0	0	56.1	56.1	1	1081.51	3.25	0	71.68	0	0.04	0	0	5.08	0	0	0	0	0	0	-20.74	-20.74
Inverter Transformer	MV2-1 T	365836	4906816	2	0	0	69.4	69.4	1	5201.49	3.25	0	85.32	0	3.05	0	0	7.51	0	0	0	0	0	0	-26.54	-26.54
Inverter Transformer	MV6-2 T	370091	4907339	2	0	0	56.1	56.1	1	1135.41	3.25	0	72.1	0	0.06	0	0	5.21	0	0	0	0	0	0	-21.31	-21.31
Inverter Transformer	MV6-3 T	370202	4907140	2	0	0	56.1	56.1	1	1226.85	3.25	0	72.78	0	0.09	0	0	5.42	0	0	0	0	0	0	-22.23	-22.23
Inverter Transformer	MV5-1 T	370015	4909142	2	0	0	56.1	56.1	1	1279.29	3.25	0	73.14	0	0.11	0	0	5.53	0	0	0	0	0	0	-22.73	-22.73
Inverter Transformer	MV1-7 T	364919	4905782	2	0	0	69.4	69.4	1	6402.25	3.25	0	87.13	0	3.25	0	0	8.26	0	0	0	0	0	0	-29.28	-29.28
Inverter Transformer	MV1-10 T	365010	4905564	2	0	0	69.4	69.4	1	6403.8	3.25	0	87.13	0	3.25	0	0	8.26	0	0	0	0	0	0	-29.28	-29.28
Inverter Transformer	MV1-14 T	365157	4905049	2	0	0	69.4	69.4	1	6501.48	3.25	0	87.26	0	3.26	0	0	8.32	0	0	0	0	0	0	-29.48	-29.48
Inverter Transformer	MV1-13 T	364725	4905241	2	0	0	69.4	69.4	1	6798.17	3.25	0	87.65	0	3.29	0	0	8.49	0	0	0	0	0	0	-30.08	-30.08
Inverter Transformer	MV4-10 T	369307	4908858	2	0	0	56.1	56.1	1	1691.69	3.25	0	75.57	0	0.28	0	0	6.42	0	0	0	0	0	0	-26.21	-26.21
Inverter Transformer	MV4-14 T	369182	4908507	2	0	0	56.1	56.1	1	1706.03	3.25	0	75.64	0	0.28	0	0	6.45	0	0	0	0	0	0	-26.31	-26.31
Inverter Transformer	MV4-15 T	369170	4908481	2	0	0	56.1	56.1	1	1713.01	3.25	0	75.68	0	0.28	0	0	6.47	0	0	0	0	0	0	-26.37	-26.37
Inverter Transformer	MV4-11 T	369269	4908855	2	0	0	56.1	56.1	1	1725.37	5.14	0	75.74	0	1.14	3.08	0.05	6.49	0	0	0	0	0	0	-30.4	-30.4
Inverter Transformer	MV4-9 T	369284	4909001	2	0	0	56.1	56.1	1	1774.41	3.25	0	75.98	0	0.31	0	0	6.59	0	0	0	0	0	0	-26.82	-26.82
Inverter Transformer	MV4-8 T	369262	4909001	2	0	0	56.1	56.1	1	1793.93	3.25	0	76.08	0	0.32	0	0	6.63	0	0	0	0	0	0	-26.97	-26.97
Inverter Transformer	MV4-13 T	369057	4908605	2	0	0	56.1	56.1	1	1848.98	3.25	0	76.34	0	0.34	0	0	6.74	0	0	0	0	0	0	-27.36	-27.36
Inverter Transformer	MV4-5 T	369283	4909199	2	0	0	56.1	56.1	1	1875.31	3.25	0	76.46	0	0.35	0	0	6.8	0	0	0	0	0	0	-27.55	-27.55
Inverter Transformer	MV4-6 T	369249	4909192	2	0	0	56.1	56.1	1	1900.17	3.25	0	76.58	0	0.36	0	0	6.85	0	0	0	0	0	0	-27.73	-27.73
Inverter Transformer	MV4-12 T	369049	4908803	2	0	0	56.1	56.1	1	1912.04	3.25	0	76.63	0	0.37	0	0	6.87	0	0	0	0	0	0	-27.81	-27.81
Inverter Transformer	MV4-7 T	369040	4909001	2	0	0	56.1	56.1	1	1993.79	3.25	0	76.99	0	0.4	0	0	7.03	0	0	0	0	0	0	-28.37	-28.37
Inverter Transformer	MV4-2 T	369267	4909397	2	0	0	56.1	56.1	1	2002.72	3.25	0	77.03	0	0.41	0	0	7.05	0	0	0	0	0	0	-28.43	-28.43
Inverter Transformer	MV4-3 T	369234	4909397	2	0	0	56.1	56.1	1	2029	3.25	0	77.15	0	0.42	0	0	7.1	0	0	0	0	0	0	-28.6	-28.6
Inverter Transformer	MV4-4 T	369033	4909199	2	0	0	56.1	56.1	1	2089.44	3.25	0	77.4	0	0.44	0	0	7.22	0	0	0	0	0	0	-29	-29
Inverter Transformer	MV3-2 T	368677	4907928	2	0	0	56.1	56.1	1	2193.3	3.25	0	77.82	0	0.49	0	0	7.42	0	0	0	0	0	0	-29.67	-29.67
Inverter Transformer	MV4-1 T	369017	4909397	2	0	0	56.1	56.1	1	2206.33	3.25	0	77.87	0	0.49	0	0	7.44	0	0	0	0	0	0	-29.75	-29.75
Inverter Transformer	MV3-8 T	368685	4907712	2	0	0	56.1	56.1	1	2220.45	3.25	0	77.93	0	0.5	0	0	7.47	0	0	0	0	0	0	-29.84	-29.84
Inverter Transformer	MV3-14 T	368678	4907498	2	0	0	56.1	56.1	1	2281.69	3.25	0	78.17	0	0.52	0	0	7.59	0	0	0	0	0	0	-30.22	-30.22
Inverter Transformer	MV3-20 T	368683	4907317	2	0	0	56.1	56.1	1	2337.36	3.25	0	78.37	0	0.55	0	0	7.69	0	0	0	0	0	0	-30.55	-30.55
Inverter Transformer	MV3-4 T	368507	4907925	2	0	0	56.1	56.1	1	2362.59	3.25	0	78.47	0	0.56	0	0	7.74	0	0	0	0	0	0	-30.7	-30.7
Inverter Transformer	MV3-9 T	368517	4907703	2	0	0	56.1	56.1	1	2386.75	3.25	0	78.56	0	0.57	0	0	7.78	0	0	0	0	0	0	-30.85	-30.85
Inverter Transformer	MV3-22 T	368661	4907142	2	0	0	56.1	56.1	1	2427.21	3.25	0	78.7	0	0.59	0	0	7.86	0	0	0	0	0	0	-31.09	-31.09
Inverter Transformer	MV3-16 T	368509	4907475	2	0	0	56.1	56.1	1	2450.03	3.25	0	78.78	0	0.6	0	0	7.9	0	0	0	0	0	0	-31.22	-31.22
Inverter Transformer	MV3-5 T	368335	4907843	2	0	0	56.1	56.1	1	2543.16	3.25	0	79.11	0	0.63	0	0	8.07	0	0	0	0	0	0	-31.75	-31.75
Inverter Transformer	MV3-21 T	368484	4907206	2	0	0	56.1	56.1	1	2563.43	3.25	0	79.18	0	0.64	0	0	8.1	0	0	0	0	0	0	-31.87	-31.87
Inverter Transformer	MV3-11 T	368340	4907662	2	0	0	56.1	56.1	1	2568.37	3.25	0	79.19	0	0.65	0	0	8.11	0	0	0	0	0	0	-31.89	-31.89
Inverter Transformer	MV3-15 T	368351	4907477	2	0	0	56.1	56.1	1	2601.24	3.25	0	79.3	0	0.66	0	0	8.17	0	0	0	0	0	0	-32.08	-32.08
Inverter Transformer	MV3-19 T	368352	4907347	2	0	0	56.1	56.1	1	2638.29	3.25	0	79.43	0	0.68	0	0	8.24	0	0	0	0	0	0	-32.28	-32.28
Inverter Transformer	MV3-1 T	368150	4907976	2	0	0	56.1	56.1	1	2713.53	3.25	0	79.67	0	0.71	0	0	8.37	0	0	0	0	0	0	-32.69	-32.69
Inverter Transformer	MV3-6 T	368156	4907834	2	0	0	56.1	56.1	1	2721.83	3.25	0	79.7	0	0.71	0	0	8.39	0	0	0	0	0	0	-32.74	-32.74
Inverter Transformer	MV3-10 T	368162	4907669	2	0	0	56.1	56.1	1	2741.66	3.25	0	79.76	0	0.72	0	0	8.42	0	0	0	0	0	0	-32.84	-32.84
Inverter Transformer	MV3-17 T	368183	4907472	2	0	0	56.1	56.1	1	2764.66	3.25	0	79.83	0	0.73	0	0	8.46	0	0	0	0	0	0	-32.97	-32.97
Inverter Transformer	MV3-3 T	367944	4907927	2	0	0	56.1	56.1	1	2922.8	3.25	0	80.32	0	0.8	0	0	8.74	0	0	0	0	0	0	-33.79	-33.79
Inverter Transformer	MV3-7 T	367951	4907754	2	0	0	56.1	56.1	1	2935.78	3.25	0	80.35	0	0.8	0	0	8.76	0	0	0	0	0	0	-33.86	-33.86
Inverter Transformer	MV3-13 T	367958	4907577	2	0	0	56.1	56.1	1	2959.66	3.25	0	80.42	0	0.81	0	0	8.8	0	0	0	0	0	0	-33.98	-33.98
Inverter Transformer	MV3-18 T	367757	4907412	2	0	0	56.1	56.1	1	3192.27	3.25	0	81.08	0	0.91	0	0	9.19	0	0	0	0	0	0	-35.12	-35.12
Inverter Transformer	MV3-12 T	367674	4907594	2	0	0	56.1	56.1	1	3235.15	3.25	0	81.2	0	0.93	0	0	9.26	0	0	0	0	0	0	-35.33	-35.33
Inverter Transformer	MV2-2 T	365982	4906654	2	0	0	56.1	56.1	1	5106.71	3.25	0	85.16	0	1.66	0	0	11.99	0	0	0	0	0	0	-42.76	-42.76
Inverter Transformer	MV2-3 T	365814	4906641	2	0	0	56.1	56.1	1	5271.07	3.25	0	85.44	0	1.72	0	0	12.21	0	0	0	0	0	0	-43.31	-43.31
Line Reactor	NGR	369421	4908787.5	5	0	0	45.4	45.4	1	1559.08	5.25	0	74.86	0	3.42	1.24	0.05	0.64	0	0	0	0	0	0	-34.8	-34.8
Inverter Transformer	MV2-4 T	365590	4906628	2	0	0	56.1	56.1	1	5489.38	3.25	0	85.79	0	1.8	0	0	12.48	0	0	0	0	0	0	-44.01	-44.01
Inverter Transformer	MV1-15 T	365309	4904994	2	0	0	56.1	56.1	1	6395.86	3.25	0	87.12	0	2.09	0	0	13.56	0	0	0	0	0	0	-46.71	-46.71
Inverter Transformer	MV1-4 T	364821	4905918	2	0	0	56.1	56.1	1	6444.29	3.25	0	87.18	0	2.1	0	0	13.62	0	0	0	0	0	0	-46.84	-46.84
Inverter Transformer	MV1-12 T	365044	4905386	2	0	0	56.1	56.1	1	6447.84	3.25	0	87.19	0	2.1	0	0	13.62	0	0	0	0	0	0	-46.85	-46.85
Inverter Transformer	MV1-2 T	364759	4906063	2	0	0	56.1	56.1	1	6453.42	3.25	0	87.2	0	2.1	0	0	13.63	0	0	0	0	0	0	-46.87	-46.87
Inverter Transformer	MV1-1 T	364721	4906166	2	0	0	56.1	56.1	1	6456.5	3.25	0	87.2	0	2.1	0	0	13.63	0	0	0	0	0	0	-46.88	-46.88
Inverter Transformer	MV1-8 T	364782	4905647	2	0	0	56.1	56.1	1	6580.23	3.25	0	87.36	0	2.14	0	0	13.77	0	0	0	0	0	0	-47.22	-47.22
Inverter Transformer	MV1-5 T	364676	4905892	2	0	0	56.1	56.1	1	6589.25	3.25	0	87.38	0	2.14	0	0	13.78	0	0	0	0	0	0	-47.24	-47.24
Inverter Transformer	MV1-3 T	364435	4906039	2	0	0	56.1	56.1	1	6767.91	3.25	0	87.61	0	2.2	0	0	13.98	0	0	0	0	0	0	-47.72	-47.72
Inverter Transformer	MV1-9 T	364555	4905646	2	0	0	56.1	56.1	1	6790.7	3.25	0	87.64	0	2.2	0	0	14	0	0	0	0	0	0	-47.78	-47.78
Inverter Transformer	MV1-6 T	364482	4905835	2	0	0	56.1	56.1	1	6790.99	3.25	0	87.64	0	2.2	0	0	14	0	0	0	0	0	0	-47.78	-47.78
Inverter Transformer	MV1-11 T	364649	4905414	2	0	0	56.1	56.1	1	6794.6	3.25	0	87.64	0	2.2	0	0	14.01	0	0	0	0	0	0	-47.79	-47.79
Limit. Valu 0	0																								
Level D/N: 32.2311	32.2311																								

Receiver: Existing Noise Receptor

ID: S-R127
X: 371030
Y: 4907965
Z: 4.5
Ground: 0

ISO	Description	ID	X	Y	Z	Ground	ReflOrd	LxT	LxN	L/A	Dist.	hm	Freq	Adiv	K0b	Agr	Abar	z	Aatm	Afol	Ahous	Cmet	CmetN	Dc	RL	LtotT	LtotN
	Sol_Luce Substation	S_Substation	369426	4908792	3.5	0	0	112.1	112.1	1	1804.65	5.25	0	76.13	0	0.1	4.43	0.42	4.03	0	0	0	0	0	0	27.38	27.38
	Inverter	MV5-4	370324	4908707	2	0	0	100.3	100.3	1	1024.21	3.25	0	71.21	0	-0.23	0	0	10.99	0	0	0	0	0	0	18.35	18.35
	Inverter	MV6-2	370085	4907339	2	0	0	100.3	100.3	1	1133.54	3.25	0	72.09	0	-0.18	0	0	11.33	0	0	0	0	0	0	17.08	17.08
	Inverter	MV6-3	370207	4907140	2	0	0	100.3	100.3	1	1165.32	3.25	0	72.33	0	-0.17	0	0	11.42	0	0	0	0	0	0	16.73	16.73
	Inverter	MV5-3	370231	4908851	2	0	0	100.3	100.3	1	1193.06	3.25	0	72.53	0	-0.16	0	0	11.51	0	0	0	0	0	0	16.43	16.43
	Inverter	MV5-5	370015	4908690	2	0	0	100.3	100.3	1	1247.34	3.25	0	72.92	0	-0.13	0	0	11.66	0	0	0	0	0	0	15.87	15.87
	Inverter	MV5-2	370006	4908853	2	0	0	100.3	100.3	1	1355.41	3.25	0	73.64	0	-0.09	0	0	11.95	0	0	0	0	0	0	14.81	14.81
	Inverter	MV6-1	370235	4907364	2	0	0	97.3	97.3	1	996.61	3.25	0	70.97	0	-0.25	0	0	10.9	0	0	0	0	0	0	15.69	15.69
	Inverter	MV5-1	370020	4909142	2	0	0	100.3	100.3	1	1550.95	3.25	0	74.81	0	-0.01	0	0	12.45	0	0	0	0	0	0	13.07	13.07
	Inverter	MV4-10	369312	4908858	2	0	0	100.3	100.3	1	1936.23	5.16	0	76.74	0	0.78	3.47	0.06	13.33	0	0	0	0	0	0	5.99	5.99
	Inverter	MV4-11	369264	4908855	2	0	0	100.3	100.3	1	1977.59	3.25	0	76.92	0	0.12	0	0	13.41	0	0	0	0	0	0	9.85	9.85
	Inverter	MV4-9	369289	4909001	2	0	0	100.3	100.3	1	2025.93	3.25	0	77.13	0	0.14	0	0	13.52	0	0	0	0	0	0	9.53	9.53
	Inverter	MV4-8	369256	4909001	2	0	0	100.3	100.3	1	2054.36	3.25	0	77.25	0	0.14	0	0	13.58	0	0	0	0	0	0	9.34	9.34
	Inverter	MV4-5	369289	4909199	2	0	0	100.3	100.3	1	2133.97	3.25	0	77.58	0	0.17	0	0	13.74	0	0	0	0	0	0	8.82	8.82
	Inverter	MV4-6	369243	4909192	2	0	0	100.3	100.3	1	2167.7	3.25	0	77.72	0	0.18	0	0	13.81	0	0	0	0	0	0	8.61	8.61
	Inverter	MV4-7	369035	4909001	2	0	0	100.3	100.3	1	2247.96	5	0	78.04	0	0.9	3.39	0.02	13.97	0	0	0	0	0	0	4.02	4.02
	Inverter	MV4-2	369272	4909397	2	0	0	100.3	100.3	1	2267.42	3.25	0	78.11	0	0.2	0	0	14.01	0	0	0	0	0	0	7.99	7.99
	Inverter	MV4-3	369229	4909397	2	0	0	100.3	100.3	1	2300.92	3.25	0	78.24	0	0.21	0	0	14.07	0	0	0	0	0	0	7.79	7.79
	Inverter	MV4-4	369027	4909199	2	0	0	100.3	100.3	1	2352.61	3.25	0	78.43	0	0.22	0	0	14.17	0	0	0	0	0	0	7.48	7.48
	Inverter	MV3-8	368680	4907712	2	0	0	100.3	100.3	1	2363.58	3.25	0	78.47	0	0.22	0	0	14.2	0	0	0	0	0	0	7.42	7.42
	Inverter	MV3-14	368684	4907498	2	0	0	100.3	100.3	1	2392.03	3.25	0	78.58	0	0.23	0	0	14.25	0	0	0	0	0	0	7.25	7.25
	Inverter	MV3-20	368689	4907317	2	0	0	100.3	100.3	1	2429.03	3.25	0	78.71	0	0.24	0	0	14.32	0	0	0	0	0	0	7.04	7.04
	Inverter	MV4-1	369011	4909397	2	0	0	100.3	100.3	1	2475.28	3.25	0	78.87	0	0.25	0	0	14.41	0	0	0	0	0	0	6.78	6.78
	Inverter	MV3-9	368512	4907703	2	0	0	100.3	100.3	1	2531.6	3.25	0	79.07	0	0.26	0	0	14.52	0	0	0	0	0	0	6.46	6.46
	Inverter	MV3-16	368514	4907475	2	0	0	100.3	100.3	1	2563.27	3.25	0	79.18	0	0.27	0	0	14.58	0	0	0	0	0	0	6.29	6.29
	Inverter	MV3-21	368478	4907206	2	0	0	100.3	100.3	1	2662.48	3.25	0	79.51	0	0.29	0	0	14.76	0	0	0	0	0	0	5.75	5.75
	Inverter	MV3-11	368346	4907662	2	0	0	100.3	100.3	1	2701.05	3.25	0	79.63	0	0.3	0	0	14.83	0	0	0	0	0	0	5.55	5.55
	Inverter	MV3-15	368357	4907477	2	0	0	100.3	100.3	1	2717.18	3.25	0	79.68	0	0.3	0	0	14.86	0	0	0	0	0	0	5.46	5.46
	DSTATCOM - 10 MVAR #1	DSAT1	369437	4908757	2.5	0	0	96.6	96.6	1	1779.02	3.5	0	76	0	3.17	0	0	1.58	0	0	0	0	0	0	15.87	15.87
	Inverter	MV3-19	368357	4907347	2	0	0	100.3	100.3	1	2743.51	3.25	0	79.77	0	0.31	0	0	14.91	0	0	0	0	0	0	5.32	5.32
	DSTATCOM - 10 MVAR #2	DSAT2	369403	4908757	2.5	0	0	96.6	96.6	1	1809.53	3.5	0	76.15	0	3.18	0	0	1.6	0	0	0	0	0	0	15.7	15.7
	Inverter	MV3-6	368162	4907834	2	0	0	100.3	100.3	1	2870.99	3.25	0	80.16	0	0.34	0	0	15.14	0	0	0	0	0	0	4.67	4.67
	Inverter	MV3-10	368167	4907669	2	0	0	100.3	100.3	1	2878.26	3.25	0	80.18	0	0.34	0	0	15.16	0	0	0	0	0	0	4.64	4.64
	Inverter	MV3-17	368178	4907472	2	0	0	100.3	100.3	1	2894.3	3.25	0	80.23	0	0.34	0	0	15.18	0	0	0	0	0	0	4.56	4.56
	Inverter	MV3-3	367939	4907927	2	0	0	100.3	100.3	1	3091.23	3.25	0	80.8	0	0.38	0	0	15.53	0	0	0	0	0	0	3.6	3.6
	Inverter	MV3-13	367963	4907577	2	0	0	100.3	100.3	1	3091.45	3.25	0	80.8	0	0.38	0	0	15.53	0	0	0	0	0	0	3.6	3.6
	Inverter	MV3-7	367945	4907754	2	0	0	100.3	100.3	1	3092.21	3.25	0	80.81	0	0.38	0	0	15.53	0	0	0	0	0	0	3.59	3.59
	Inverter	MV3-18	367752	4907412	2	0	0	100.3	100.3	1	3324.32	3.25	0	81.43	0	0.42	0	0	15.93	0	0	0	0	0	0	2.52	2.52
	Inverter	MV3-12	367668	4907594	2	0	0	100.3	100.3	1	3382.41	3.25	0	81.58	0	0.43	0	0	16.03	0	0	0	0	0	0	2.26	2.26
	Inverter	MV5-6	369982	4908507	2	0	0	89.1	89.1	1	1179.86	3.25	0	72.44	0	0.72	0	0	6.65	0	0	0	0	0	0	9.25	9.25
	Inverter	MV2-3	365820	4906641	2	0	0	100.3	100.3	1	5375.6	3.25	0	85.61	0	0.67	0	0	19.12	0	0	0	0	0	0	-5.09	-5.09
	Inverter	MV2-4	365586	4906624	2	0	0	100.3	100.3	1	5606.73	3.25	0	85.97	0	0.69	0	0	19.45	0	0	0	0	0	0	-5.8	-5.8
	Fixed Reactor Bank 2	FRB2	369464	4908755	6	0	0	89.8	89.8	1	1753.98	5.25	0	75.88	0	-1.01	0	0	3.94	0	0	0	0	0	0	10.97	10.97
	SubstationTransformer	W_ST	369711.17	4906112.3	2.5	0	0	92	92	1	2274.19	3.5	0	78.14	0	-0.1	0	0	4.82	0	0	0	0	0	0	9.11	9.11
	Fixed Reactor Bank 1	FRB1	369378	4908755	6	0	0	89.8	89.8	1	1831.18	5.25	0	76.25	0	-1.01	0	0	4.08	0	0	0	0	0	0	10.45	10.45
	Inverter	MV1-15	365315	4904994	2	0	0	100.3	100.3	1	6441.12	3.25	0	87.18	0	0.71	0	0	20.58	0	0	0	0	0	0	-8.16	-8.16
	Inverter	MV1-12	365038	4905386	2	0	0	100.3	100.3	1	6523.44	3.25	0	87.29	0	0.71	0	0	20.69	0	0	0	0	0	0	-8.38	-8.38
	Inverter	MV6-4	370250	4906966	2	0	0	86.1	86.1	1	1267.44	3.25	0	73.06	0	0.74	0	0	6.8	0	0	0	0	0	0	5.46	5.46
	Inverter	MV1-4	364815	4905918	2	0	0	100.3	100.3	1	6543.43	3.25	0	87.32	0	0.71	0	0	20.72	0	0	0	0	0	0	-8.43	-8.43
	Inverter	MV1-2	364753	4906063	2	0	0	100.3	100.3	1	6558.84	3.25	0	87.34	0	0.72	0	0	20.74	0	0	0	0	0	0	-8.48	-8.48
	Inverter	MV1-1	364715	4906166	2	0	0	100.3	100.3	1	6566.25	3.25	0	87.35	0	0.72	0	0	20.75	0	0	0	0	0	0	-8.49	-8.49
	Westbrook Inverter Enclosur	W_INV6	369875	4906578	2	0	0	89.1	89.1	1	1804.94	3.25	0	76.13	0	0.86	0	0	7.72	0	0	0	0	0	0	4.34	4.34
	Inverter	MV1-8	364788	4905647	2	0	0	100.3	100.3	1	6658.51	3.25	0	87.47	0	0.71	0	0	20.86	0	0	0	0	0	0	-8.74	-8.74
	Inverter	MV1-5	364671	4905892	2	0	0	100.3	100.3	1	6688.36	3.25	0	87.51	0	0.71	0	0	20.9	0	0	0	0	0	0	-8.81	-8.81
	Inverter	MV1-11	364655	4905414	2	0	0	100.3	100.3	1	6866.46	3.25	0	87.73	0	0.71	0	0	21.13	0	0	0	0	0	0	-9.27	-9.27
	Inverter	MV1-9	364561	4905646	2	0	0	100.3	100.3	1	6872.1	3.25	0	87.74	0	0.71	0	0	21.14	0	0	0	0	0	0	-9.28	-9.28
	Inverter	MV1-6	364477	4905835	2	0	0	100.3	100.3	1	6890.48	3.25	0	87.76	0	0.71	0	0	21.16	0	0	0	0	0	0	-9.33	-9.33
	Westbrook Inverter Enclosur	W_INV5	369719	4906574	2	0	0	89.1	89.1	1	1911.44	3.25	0	76.63	0	0.89	0	0	7.9	0	0	0	0	0	0	3.64	3.64
	Inverter	MV4-15	369176	4908481	2	0	0	89.1	89.1	1	1924.47	3.25	0	76.69	0	0.89	0	0	7.92	0	0	0	0	0	0	3.56	3.56
	Inverter	MV4-14	369176	4908507	2	0	0	89.1	89.1	1	1931.6	3.25	0	76.72	0	0.89	0	0	7.93	0	0	0	0	0	0	3.52	3.52
	Westbrook Inverter Enclosur	W_INV7	369780	4906417	2	0	0	89.1	89.1	1	1989.68	3.25	0	76.98	0	0.9	0	0	8.03	0	0	0	0	0	0	3.15	3.15
	Inverter	MV2-1	365842	4906816	2	0	0	97.3	97.3	1	5313.71	3.25	0	85.51	0	0.67	0	0	19.04	0	0	0	0	0	0	-7.9	-7.9
	Inverter	MV4-13	369051	4908605	2	0	0	89.1	89.1	1	2079.92	3.25	0	77.36	0	0.93	0	0	8.18	0	0	0	0	0	0	2.6	2.6
	Inverter	MV4-12	369043	4908803	2	0	0	89.1	89.1	1	2156.48	3.25	0	77.67	0	0.94	0	0	8.3	0	0	0	0	0	0	2.14	2.14
	Westbrook Inverter Enclosur	W_INV4	369673	4906164	2	0	0	89.1	89.1	1	2255.01	3.25	0	78.06	0	0.97	0	0	8.46	0	0	0	0	0	0	1.57	1.57
	Westbrook Inverter Enclosur	W_INV2	369374	4906388	2	0	0	89.1	89.1	1	2286.76	3.25	0	78.18	0	0.97	0	0	8.51	0	0	0	0	0	0	1.39	1.39
	Westbrook Inverter Enclosur	W_INV3	369508	4906164	2	0	0	89.1	89.1	1	2357.98	3.25	0	78.45	0	0.99	0	0	8.62	0	0	0	0	0	0	0.99	0.99

Inverter	MV3-2	368671	4907928	2	0	0	89.1	89.1	1	2359.29	3.25	0	78.46	0	0.99	0	0	8.62	0	0	0	0	0	0	0.99	0.99
Inverter	MV1-7	364925	4905782	2	0	0	97.3	97.3	1	6483.56	3.25	0	87.24	0	0.71	0	0	20.64	0	0	0	0	0	0	-11.28	-11.28
Inverter	MV1-10	365004	4905564	2	0	0	97.3	97.3	1	6486.72	3.25	0	87.24	0	0.71	0	0	20.64	0	0	0	0	0	0	-11.28	-11.28
Inverter	MV3-22	368656	4907142	2	0	0	89.1	89.1	1	2512.61	3.25	0	79	0	1.03	0	0	8.87	0	0	0	0	0	0	0.16	0.16
Inverter	MV3-4	368502	4907925	2	0	0	89.1	89.1	1	2528.32	3.25	0	79.06	0	1.03	0	0	8.89	0	0	0	0	0	0	0.08	0.08
Inverter	MV1-14	365163	4905049	2	0	0	97.3	97.3	1	6551.7	3.25	0	87.33	0	0.71	0	0	20.73	0	0	0	0	0	0	-11.46	-11.46
Inverter	MV1-13	364731	4905241	2	0	0	97.3	97.3	1	6862.77	3.25	0	87.73	0	0.71	0	0	21.13	0	0	0	0	0	0	-12.26	-12.26
Inverter	MV3-5	368340	4907843	2	0	0	89.1	89.1	1	2692.77	3.25	0	79.6	0	1.07	0	0	9.15	0	0	0	0	0	0	-0.76	-0.76
Inverter	MV3-1	368156	4907976	2	0	0	89.1	89.1	1	2874.02	3.25	0	80.17	0	1.12	0	0	9.43	0	0	0	0	0	0	-1.65	-1.65
Westbrook Inverter Enclosur	W_INV1	369409	4906578	2	0	0	86.1	86.1	1	2133.4	3.25	0	77.58	0	0.94	0	0	8.26	0	0	0	0	0	0	-0.72	-0.72
Inverter	MV2-2	365977	4906654	2	0	0	89.1	89.1	1	5220.3	3.25	0	85.35	0	1.69	0	0	12.76	0	0	0	0	0	0	-10.75	-10.75
Gardiner Substation	G_Sub	366586.3	4903349.9	2.5	0	0	90.8	90.8	1	6406.69	4.25	0	87.13	0	1.96	2.02	0.35	10.16	0	0	0	0	0	0	-10.5	-10.5
Inverter	MV1-3	364440	4906039	2	0	0	89.1	89.1	1	6865.68	3.25	0	87.73	0	2.1	0	0	14.83	0	0	0	0	0	0	-15.6	-15.6
Westbrook Inverter Transfor	W_INVTR6	369881	4906578	2	0	0	77.3	77.3	1	1801.1	3.25	0	76.11	0	-2.33	0	0	1.11	0	0	0	0	0	0	2.45	2.45
Westbrook Inverter Transfor	W_INVTR5	369725	4906574	2	0	0	77.3	77.3	1	1907.33	3.25	0	76.61	0	-2.37	0	0	1.16	0	0	0	0	0	0	1.94	1.94
Westbrook Inverter Transfor	W_INVTR1	369403	4906578	2	0	0	78.2	78.2	1	2137.97	3.25	0	77.6	0	-2.45	0	0	1.27	0	0	0	0	0	0	1.82	1.82
Inverters	G_Inv2	366676.9	4903239.1	2	0	0	87.7	87.7	1	6425.23	3.25	0	87.16	0	2.93	0	0	7.41	0	0	0	0	0	0	-9.84	-9.84
Inverters	G_Inv4	366732.8	4903105	2	0	0	87.7	87.7	1	6487.34	3.25	0	87.24	0	2.94	0	0	7.47	0	0	0	0	0	0	-9.99	-9.99
Westbrook Inverter Transfor	W_INVTR7	369786	4906417	2	0	0	77.3	77.3	1	1985.91	3.25	0	76.96	0	-2.4	0	0	1.2	0	0	0	0	0	0	1.58	1.58
Inverters	G_Inv1	366526.4	4903225.8	2	0	0	87.7	87.7	1	6537.77	3.25	0	87.31	0	2.94	0	0	7.53	0	0	0	0	0	0	-10.11	-10.11
Inverters	G_Inv6	366788.5	4902972	2	0	0	87.7	87.7	1	6551.36	3.25	0	87.33	0	2.94	0	0	7.54	0	0	0	0	0	0	-10.14	-10.14
Inverters	G_Inv3	366583.7	4903091.4	2	0	0	87.7	87.7	1	6597.09	3.25	0	87.39	0	2.94	0	0	7.59	0	0	0	0	0	0	-10.25	-10.25
Inverters	G_Inv8	366844.5	4902838.5	2	0	0	87.7	87.7	1	6618.11	3.25	0	87.41	0	2.94	0	0	7.61	0	0	0	0	0	0	-10.3	-10.3
Inverters	G_Inv5	366638.5	4902958.1	2	0	0	87.7	87.7	1	6659.9	3.25	0	87.47	0	2.94	0	0	7.65	0	0	0	0	0	0	-10.4	-10.4
Inverters	G_Inv10	366900.7	4902704.8	2	0	0	87.7	87.7	1	6687.36	3.25	0	87.51	0	2.94	0	0	7.68	0	0	0	0	0	0	-10.46	-10.46
Inverters	G_Inv7	366694.6	4902824.7	2	0	0	87.7	87.7	1	6724.46	3.25	0	87.55	0	2.94	0	0	7.71	0	0	0	0	0	0	-10.55	-10.55
Inverters	G_Inv9	366750.9	4902691.8	2	0	0	87.7	87.7	1	6790.97	3.25	0	87.64	0	2.94	0	0	7.78	0	0	0	0	0	0	-10.7	-10.7
Westbrook Inverter Transfor	W_INVTR4	369679	4906164	2	0	0	77.3	77.3	1	2251.4	3.25	0	78.05	0	-2.49	0	0	1.33	0	0	0	0	0	0	0.46	0.46
Westbrook Inverter Transfor	W_INVTR2	369368	4906388	2	0	0	77.3	77.3	1	2291.11	3.25	0	78.2	0	-2.5	0	0	1.34	0	0	0	0	0	0	0.3	0.3
Westbrook Inverter Transfor	W_INVTR3	369514	4906164	2	0	0	77.3	77.3	1	2354.12	3.25	0	78.44	0	-2.52	0	0	1.37	0	0	0	0	0	0	0.06	0.06
Inverter Transformer	MV6-1 T	370230	4907364	2	0	0	69.4	69.4	1	1000.6	3.25	0	71.01	0	1.68	0	0	3.81	0	0	0	0	0	0	-7.15	-7.15
Inverter Transformer	MV6-4 T	370244	4906966	2	0	0	69.4	69.4	1	1271.14	3.25	0	73.08	0	1.86	0	0	4.16	0	0	0	0	0	0	-9.76	-9.76
Inverter Transformer	MV5-4 T	370330	4908707	2	0	0	56.1	56.1	1	1020.08	3.25	0	71.17	0	0.02	0	0	4.94	0	0	0	0	0	0	-20.07	-20.07
Inverter Transformer	MV6-2 T	370091	4907339	2	0	0	56.1	56.1	1	1128.54	3.25	0	72.05	0	0.06	0	0	5.19	0	0	0	0	0	0	-21.24	-21.24
Inverter Transformer	MV2-1 T	365836	4906816	2	0	0	69.4	69.4	1	5319.57	3.25	0	85.52	0	3.07	0	0	7.59	0	0	0	0	0	0	-26.83	-26.83
Inverter Transformer	MV6-3 T	370202	4907140	2	0	0	56.1	56.1	1	1168.85	3.25	0	72.36	0	0.07	0	0	5.28	0	0	0	0	0	0	-21.65	-21.65
Inverter Transformer	MV5-6 T	369987	4908507	2	0	0	56.1	56.1	1	1175.42	3.25	0	72.4	0	0.07	0	0	5.3	0	0	0	0	0	0	-21.72	-21.72
Inverter Transformer	MV5-3 T	370237	4908851	2	0	0	56.1	56.1	1	1189.05	3.25	0	72.5	0	0.08	0	0	5.33	0	0	0	0	0	0	-21.86	-21.86
Inverter Transformer	MV5-5 T	370021	4908690	2	0	0	56.1	56.1	1	1242.46	3.25	0	72.89	0	0.1	0	0	5.45	0	0	0	0	0	0	-22.38	-22.38
Inverter Transformer	MV5-2 T	370011	4908853	2	0	0	56.1	56.1	1	1351.63	3.25	0	73.62	0	0.14	0	0	5.7	0	0	0	0	0	0	-23.39	-23.39
Inverter Transformer	MV1-10 T	365010	4905564	2	0	0	69.4	69.4	1	6481.14	3.25	0	87.23	0	3.26	0	0	8.3	0	0	0	0	0	0	-29.44	-29.44
Inverter Transformer	MV1-7 T	364919	4905782	2	0	0	69.4	69.4	1	6489.21	3.25	0	87.24	0	3.26	0	0	8.31	0	0	0	0	0	0	-29.46	-29.46
Inverter Transformer	MV1-14 T	365157	4905049	2	0	0	69.4	69.4	1	6557.07	3.25	0	87.33	0	3.27	0	0	8.35	0	0	0	0	0	0	-29.6	-29.6
Inverter Transformer	MV1-13 T	364725	4905241	2	0	0	69.4	69.4	1	6868.28	3.25	0	87.74	0	3.3	0	0	8.53	0	0	0	0	0	0	-30.22	-30.22
Inverter Transformer	MV5-1 T	370015	4909142	2	0	0	56.1	56.1	1	1554.21	3.25	0	74.83	0	0.22	0	0	6.13	0	0	0	0	0	0	-25.13	-25.13
Inverter Transformer	MV4-14 T	369182	4908507	2	0	0	56.1	56.1	1	1925.84	3.25	0	76.69	0	0.37	0	0	6.9	0	0	0	0	0	0	-27.9	-27.9
Inverter Transformer	MV4-15 T	369170	4908481	2	0	0	56.1	56.1	1	1930.25	3.25	0	76.71	0	0.37	0	0	6.91	0	0	0	0	0	0	-27.93	-27.93
Inverter Transformer	MV4-10 T	369307	4908858	2	0	0	56.1	56.1	1	1940.67	5.18	0	76.76	0	1.25	3	0.06	6.93	0	0	0	0	0	0	-31.88	-31.88
Inverter Transformer	MV4-11 T	369269	4908855	2	0	0	56.1	56.1	1	1973.13	3.25	0	76.9	0	0.39	0	0	6.99	0	0	0	0	0	0	-28.23	-28.23
Inverter Transformer	MV4-9 T	369284	4909001	2	0	0	56.1	56.1	1	2030.23	3.25	0	77.15	0	0.42	0	0	7.1	0	0	0	0	0	0	-28.61	-28.61
Inverter Transformer	MV4-8 T	369262	4909001	2	0	0	56.1	56.1	1	2049.18	3.25	0	77.23	0	0.42	0	0	7.14	0	0	0	0	0	0	-28.74	-28.74
Inverter Transformer	MV4-13 T	369057	4908605	2	0	0	56.1	56.1	1	2074.21	3.25	0	77.34	0	0.44	0	0	7.19	0	0	0	0	0	0	-28.9	-28.9
Inverter Transformer	MV4-5 T	369283	4909199	2	0	0	56.1	56.1	1	2138.87	3.25	0	77.6	0	0.46	0	0	7.31	0	0	0	0	0	0	-29.32	-29.32
Inverter Transformer	MV4-12 T	369049	4908803	2	0	0	56.1	56.1	1	2150.96	3.25	0	77.65	0	0.47	0	0	7.34	0	0	0	0	0	0	-29.4	-29.4
Inverter Transformer	MV4-6 T	369249	4909192	2	0	0	56.1	56.1	1	2162.75	3.25	0	77.7	0	0.47	0	0	7.36	0	0	0	0	0	0	-29.47	-29.47
Inverter Transformer	MV4-7 T	369040	4909001	2	0	0	56.1	56.1	1	2243.52	5	0	78.02	0	1.4	2.89	0.02	7.51	0	0	0	0	0	0	-33.77	-33.77
Inverter Transformer	MV4-2 T	369267	4909397	2	0	0	56.1	56.1	1	2271.3	3.25	0	78.13	0	0.52	0	0	7.57	0	0	0	0	0	0	-30.15	-30.15
Inverter Transformer	MV4-3 T	369234	4909397	2	0	0	56.1	56.1	1	2297.01	3.25	0	78.22	0	0.53	0	0	7.61	0	0	0	0	0	0	-30.31	-30.31
Inverter Transformer	MV4-4 T	369033	4909199	2	0	0	56.1	56.1	1	2347.5	3.25	0	78.41	0	0.55	0	0	7.71	0	0	0	0	0	0	-30.61	-30.61
Inverter Transformer	MV3-2 T	368677	4907928	2	0	0	56.1	56.1	1	2353.29	3.25	0	78.43	0	0.55	0	0	7.72	0	0	0	0	0	0	-30.65	-30.65
Inverter Transformer	MV3-8 T	368685	4907712	2	0	0	56.1	56.1	1	2358.61	3.25	0	78.45	0	0.56	0	0	7.73	0	0	0	0	0	0	-30.68	-30.68
Inverter Transformer	MV3-14 T	368678	4907498	2	0	0	56.1	56.1	1	2397.92	3.25	0	78.6	0	0.57	0	0	7.8	0	0	0	0	0	0	-30.91	-30.91
Inverter Transformer	MV3-20 T	368683	4907317	2	0	0	56.1	56.1	1	2434.81	3.25	0	78.73	0	0.59	0	0	7.87	0	0	0	0	0	0	-31.13	-31.13
Inverter Transformer	MV4-1 T	369017	4909397	2	0	0	56.1	56.1	1	2470.38	3.25	0	78.86	0	0.6	0	0	7.94	0	0	0	0	0	0	-31.34	-31.34
Inverter Transformer	MV3-22 T	368661	4907142	2	0	0	56.1	56.1	1	2507.89	3.25	0	78.99	0	0.62	0	0	8	0	0	0	0	0	0	-31.55	-31.55
Inverter Transformer	MV3-4 T	368507	4907925	2	0	0	56.1	56.1	1	2523.32	3.25	0	79.04	0	0.63	0	0	8.03	0	0	0	0	0	0	-31.64	-31.64
Inverter Transformer	MV3-9 T	368517	4907703	2	0	0	56.1	56.1	1	2526.62	3.25	0	79.05	0	0.63	0	0	8.04	0	0	0	0	0	0	-31.66	-31.66
Inverter Transformer	MV3-16 T	368509	4907475	2	0	0	56.1	56.1	1	2568.18	3.25	0	79.19	0	0.65	0	0	8.11	0	0	0	0	0	0	-31.89	-31.89
Inverter Transformer	MV3-21 T	368484	4907206	2	0	0	56.1	56.1	1	2656.73	3.25	0	79.49	0	0.68	0	0	8.27	0	0	0	0	0	0	-32.38	-32.38
Inverter Transformer	MV3-5 T	368335	4907843	2	0	0	56.1	56.1	1	2697.76	3.25	0	79.62	0	0.7	0	0	8.34	0	0	0	0	0	0	-32.61	-32.61
Inverter Transformer	MV3-11 T	368340	4907662	2	0	0	56.1	56.1	1	2707.01	3.25	0	79.65	0	0.7	0	0	8.36	0	0	0	0	0	0	-32.66	-32.66
Inverter Transformer	MV3-15 T	368351	4907477	2	0	0	56.1	56.1	1	2723.08	3.25	0	79.7	0	0.71	0	0	8.39	0	0	0	0	0	0	-32.74	-32.74
Inverter Transformer	MV3-19 T	368352	4907347	2	0	0	56.1	56.1	1	2748.38	3.25	0	79.78	0	0.72	0	0	8.43	0	0	0	0	0	0	-32.88	-32.88
Inverter Transformer	MV3-6 T	368156	4907834	2	0	0	56.1	56.1	1	2876.99	3.25	0	80.18	0	0.78	0	0	8.66	0	0	0	0	0	0	-33.56	-33.56

	Inverter Transformer	MV3-1 T	368150	4907976	2	0	0	56.1	56.1	1	2880.02	3.25	0	80.19	0	0.78	0	0	8.66	0	0	0	0	0	0	-33.57	-33.57
	Inverter Transformer	MV3-10 T	368162	4907669	2	0	0	56.1	56.1	1	2883.24	3.25	0	80.2	0	0.78	0	0	8.67	0	0	0	0	0	0	-33.59	-33.59
	Inverter Transformer	MV3-17 T	368183	4907472	2	0	0	56.1	56.1	1	2889.37	3.25	0	80.22	0	0.78	0	0	8.68	0	0	0	0	0	0	-33.62	-33.62
	Inverter Transformer	MV3-7 T	367951	4907754	2	0	0	56.1	56.1	1	3086.22	3.25	0	80.79	0	0.87	0	0	9.01	0	0	0	0	0	0	-34.61	-34.61
	Inverter Transformer	MV3-3 T	367944	4907927	2	0	0	56.1	56.1	1	3086.23	3.25	0	80.79	0	0.87	0	0	9.01	0	0	0	0	0	0	-34.61	-34.61
	Inverter Transformer	MV3-13 T	367958	4907577	2	0	0	56.1	56.1	1	3096.41	3.25	0	80.82	0	0.87	0	0	9.03	0	0	0	0	0	0	-34.66	-34.66
	Inverter Transformer	MV3-18 T	367757	4907412	2	0	0	56.1	56.1	1	3319.39	3.25	0	81.42	0	0.96	0	0	9.4	0	0	0	0	0	0	-35.73	-35.73
	Inverter Transformer	MV3-12 T	367674	4907594	2	0	0	56.1	56.1	1	3376.45	3.25	0	81.57	0	0.99	0	0	9.49	0	0	0	0	0	0	-35.99	-35.99
	Inverter Transformer	MV2-2 T	365982	4906654	2	0	0	56.1	56.1	1	5215.46	3.25	0	85.35	0	1.7	0	0	12.13	0	0	0	0	0	0	-43.12	-43.12
	Inverter Transformer	MV2-3 T	365814	4906641	2	0	0	56.1	56.1	1	5381.42	3.25	0	85.62	0	1.76	0	0	12.35	0	0	0	0	0	0	-43.67	-43.67
	Inverter Transformer	MV2-4 T	365590	4906628	2	0	0	56.1	56.1	1	5601.89	3.25	0	85.97	0	1.83	0	0	12.62	0	0	0	0	0	0	-44.37	-44.37
	Line Reactor	NGR	369421	4908787.5	5	0	0	45.4	45.4	1	1807.04	5.25	0	76.14	0	3.4	1.26	0.05	0.74	0	0	0	0	0	0	-36.18	-36.18
	Inverter Transformer	MV1-15 T	365309	4904994	2	0	0	56.1	56.1	1	6446.45	3.25	0	87.19	0	2.1	0	0	13.62	0	0	0	0	0	0	-46.85	-46.85
	Inverter Transformer	MV1-12 T	365044	4905386	2	0	0	56.1	56.1	1	6517.93	3.25	0	87.28	0	2.12	0	0	13.7	0	0	0	0	0	0	-47.05	-47.05
	Inverter Transformer	MV1-4 T	364821	4905918	2	0	0	56.1	56.1	1	6537.73	3.25	0	87.31	0	2.13	0	0	13.72	0	0	0	0	0	0	-47.1	-47.1
	Inverter Transformer	MV1-2 T	364759	4906063	2	0	0	56.1	56.1	1	6553.09	3.25	0	87.33	0	2.13	0	0	13.74	0	0	0	0	0	0	-47.14	-47.14
	Inverter Transformer	MV1-1 T	364721	4906166	2	0	0	56.1	56.1	1	6560.48	3.25	0	87.34	0	2.14	0	0	13.75	0	0	0	0	0	0	-47.16	-47.16
	Inverter Transformer	MV1-8 T	364782	4905647	2	0	0	56.1	56.1	1	6664.13	3.25	0	87.47	0	2.17	0	0	13.86	0	0	0	0	0	0	-47.45	-47.45
	Inverter Transformer	MV1-5 T	364676	4905892	2	0	0	56.1	56.1	1	6683.61	3.25	0	87.5	0	2.17	0	0	13.88	0	0	0	0	0	0	-47.5	-47.5
	Inverter Transformer	MV1-3 T	364435	4906039	2	0	0	56.1	56.1	1	6870.48	3.25	0	87.74	0	2.22	0	0	14.09	0	0	0	0	0	0	-47.99	-47.99
	Inverter Transformer	MV1-11 T	364649	4905414	2	0	0	56.1	56.1	1	6872.03	3.25	0	87.74	0	2.22	0	0	14.09	0	0	0	0	0	0	-48	-48
	Inverter Transformer	MV1-9 T	364555	4905646	2	0	0	56.1	56.1	1	6877.75	3.25	0	87.75	0	2.23	0	0	14.1	0	0	0	0	0	0	-48.01	-48.01
	Inverter Transformer	MV1-6 T	364482	4905835	2	0	0	56.1	56.1	1	6885.73	3.25	0	87.76	0	2.23	0	0	14.11	0	0	0	0	0	0	-48.03	-48.03
Limit. Valu	0	0																								
Level D/N:	30.6847	30.6847																								

Receiver: Existing Noise Receptor
ID: S-R128
X: 371035
Y: 4907887
Z: 4.5
Ground: 0

ISO	Description	ID	X	Y	Z	Ground	ReflOrd	LxT	LxN	L/A	Dist.	hm	Freq	Adiv	K0b	Agr	Abar	z	Aatm	Afol	Ahous	Cmet	CmetN	Dc	RL	LtotT	LtotN
	Sol_Luce Substation	S_Substation	369426	4908792	3.5	0	0	112.1	112.1	1	1846.05	5.25	0	76.32	0	0.1	4.33	0.41	4.1	0	0	0	0	0	0	27.22	27.22
	Inverter	MV5-4	370324	4908707	2	0	0	100.3	100.3	1	1085.32	3.25	0	71.71	0	-0.21	0	0	11.18	0	0	0	0	0	0	17.62	17.62
	Inverter	MV6-2	370085	4907339	2	0	0	100.3	100.3	1	1096.73	3.25	0	71.8	0	-0.2	0	0	11.22	0	0	0	0	0	0	17.49	17.49
	Inverter	MV6-3	370207	4907140	2	0	0	100.3	100.3	1	1115.17	3.25	0	71.95	0	-0.19	0	0	11.28	0	0	0	0	0	0	17.28	17.28
	Inverter	MV5-3	370231	4908851	2	0	0	100.3	100.3	1	1255.28	3.25	0	72.97	0	-0.13	0	0	11.68	0	0	0	0	0	0	15.79	15.79
	Inverter	MV5-5	370015	4908690	2	0	0	100.3	100.3	1	1298.16	3.25	0	73.27	0	-0.11	0	0	11.8	0	0	0	0	0	0	15.36	15.36
	Inverter	MV6-1	370235	4907364	2	0	0	97.3	97.3	1	955.79	3.25	0	70.61	0	-0.27	0	0	10.76	0	0	0	0	0	0	16.21	16.21
	Inverter	MV5-2	370006	4908853	2	0	0	100.3	100.3	1	1411.38	3.25	0	73.99	0	-0.07	0	0	12.1	0	0	0	0	0	0	14.29	14.29
	Inverter	MV5-1	370020	4909142	2	0	0	100.3	100.3	1	1614.08	3.25	0	75.16	0	0.01	0	0	12.6	0	0	0	0	0	0	12.54	12.54
	Inverter	MV4-10	369312	4908858	2	0	0	100.3	100.3	1	1977.77	5.18	0	76.92	0	0.8	3.46	0.07	13.41	0	0	0	0	0	0	5.71	5.71
	Inverter	MV4-11	369264	4908855	2	0	0	100.3	100.3	1	2018.28	3.25	0	77.1	0	0.13	0	0	13.5	0	0	0	0	0	0	9.58	9.58
	Inverter	MV4-9	369289	4909001	2	0	0	100.3	100.3	1	2071.12	3.25	0	77.32	0	0.15	0	0	13.61	0	0	0	0	0	0	9.23	9.23
	Inverter	MV4-8	369256	4909001	2	0	0	100.3	100.3	1	2099.01	3.25	0	77.44	0	0.16	0	0	13.67	0	0	0	0	0	0	9.05	9.05
	Inverter	MV4-5	369289	4909199	2	0	0	100.3	100.3	1	2184	3.25	0	77.79	0	0.18	0	0	13.84	0	0	0	0	0	0	8.51	8.51
	Inverter	MV4-6	369243	4909192	2	0	0	100.3	100.3	1	2216.82	3.25	0	77.91	0	0.19	0	0	13.91	0	0	0	0	0	0	8.3	8.3
	Inverter	MV4-7	369035	4909001	2	0	0	100.3	100.3	1	2289.32	5.01	0	78.19	0	0.91	3.37	0.02	14.05	0	0	0	0	0	0	3.78	3.78
	Inverter	MV4-2	369272	4909397	2	0	0	100.3	100.3	1	2321.27	3.25	0	78.31	0	0.21	0	0	14.11	0	0	0	0	0	0	7.67	7.67
	Inverter	MV4-3	369229	4909397	2	0	0	100.3	100.3	1	2354.09	3.25	0	78.44	0	0.22	0	0	14.18	0	0	0	0	0	0	7.48	7.48
	Inverter	MV3-8	368680	4907712	2	0	0	100.3	100.3	1	2361.49	3.25	0	78.46	0	0.22	0	0	14.19	0	0	0	0	0	0	7.43	7.43
	Inverter	MV3-14	368684	4907498	2	0	0	100.3	100.3	1	2382.97	3.25	0	78.54	0	0.23	0	0	14.23	0	0	0	0	0	0	7.31	7.31
	Inverter	MV4-4	369027	4909199	2	0	0	100.3	100.3	1	2398.63	3.25	0	78.6	0	0.23	0	0	14.26	0	0	0	0	0	0	7.22	7.22
	Inverter	MV3-20	368689	4907317	2	0	0	100.3	100.3	1	2414.25	3.25	0	78.66	0	0.24	0	0	14.29	0	0	0	0	0	0	7.13	7.13
	Inverter	MV4-1	369011	4909397	2	0	0	100.3	100.3	1	2525.21	3.25	0	79.05	0	0.26	0	0	14.51	0	0	0	0	0	0	6.5	6.5
	Inverter	MV3-9	368512	4907703	2	0	0	100.3	100.3	1	2529.7	3.25	0	79.06	0	0.26	0	0	14.51	0	0	0	0	0	0	6.47	6.47
	Inverter	MV3-16	368514	4907475	2	0	0	100.3	100.3	1	2554.45	3.25	0	79.15	0	0.27	0	0	14.56	0	0	0	0	0	0	6.34	6.34
	Inverter	MV3-21	368478	4907206	2	0	0	100.3	100.3	1	2646.13	3.25	0	79.45	0	0.29	0	0	14.73	0	0	0	0	0	0	5.84	5.84
	Inverter	MV3-11	368346	4907662	2	0	0	100.3	100.3	1	2698.4	3.25	0	79.62	0	0.3	0	0	14.83	0	0	0	0	0	0	5.56	5.56
	Inverter	MV3-15	368357	4907477	2	0	0	100.3	100.3	1	2709.2	3.25	0	79.66	0	0.3	0	0	14.85	0	0	0	0	0	0	5.5	5.5
	Inverter	MV3-19	368357	4907347	2	0	0	100.3	100.3	1	2731.9	3.25	0	79.73	0	0.31	0	0	14.89	0	0	0	0	0	0	5.38	5.38
	DSTATCOM - 10 MVAR #1	DSAT1	369437	4908757	2.5	0	0	96.6	96.6	1	1819.48	3.5	0	76.2	0	3.18	0	0	1.61	0	0	0	0	0	0	15.64	15.64
	DSTATCOM - 10 MVAR #2	DSAT2	369403	4908757	2.5	0	0	96.6	96.6	1	1849.41	3.5	0	76.34	0	3.19	0	0	1.63	0	0	0	0	0	0	15.47	15.47
	Inverter	MV3-6	368162	4907834	2	0	0	100.3	100.3	1	2873.49	3.25	0	80.17	0	0.34	0	0	15.15	0	0	0	0	0	0	4.66	4.66
	Inverter	MV3-10	368167	4907669	2	0	0	100.3	100.3	1	2876.27	3.25	0	80.18	0	0.34	0	0	15.15	0	0	0	0	0	0	4.65	4.65
	Inverter	MV3-17	368178	4907472	2	0	0	100.3	100.3	1	2886.98	3.25	0	80.21	0	0.34	0	0	15.17	0	0	0	0	0	0	4.59	4.59
	Inverter	MV3-13	367963	4907577	2	0	0	100.3	100.3	1	3087.6	3.25	0	80.79	0	0.38	0	0	15.53	0	0	0	0	0	0	3.61	3.61
	Inverter	MV3-7	367945	4907754	2	0	0	100.3	100.3	1	3092.86	3.25	0	80.81	0	0.38	0	0	15.54	0	0	0	0	0	0	3.59	3.59
	Inverter	MV3-3	367939	4907927	2	0	0	100.3	100.3	1	3096.26	3.25	0	80.82	0	0.38	0	0	15.54	0	0	0	0	0	0	3.57	3.57
	Inverter	MV3-18	367752	4907412	2	0	0	100.3	100.3	1	3317.19	3.25	0	81.42	0	0.42	0	0	15.92	0	0	0	0	0	0	2.55	2.55
	Inverter	MV3-12	367668	4907594	2	0	0	100.3	100.3	1	3379.73	3.25	0	81.58	0	0.43	0	0	16.03	0	0	0	0	0	0	2.27	2.27
	Inverter	MV5-6	369982	4908507	2	0	0	89.1	89.1	1	1221.97	3.25	0	72.74	0	0.73	0	0	6.72	0	0	0	0	0	0	8.86	8.86

Inverter	MV2-3	365820	4906641	2	0	0	100.3	100.3	1	5361.79	3.25	0	85.59	0	0.67	0	0	19.1	0	0	0	0	0	0	-5.05	-5.05
Inverter	MV2-4	365586	4906624	2	0	0	100.3	100.3	1	5593.46	3.25	0	85.95	0	0.69	0	0	19.43	0	0	0	0	0	0	-5.76	-5.76
SubstationTransformer	W_ST	369711.17	4906112.3	2.5	0	0	92	92	1	2214.09	3.5	0	77.9	0	-0.11	0	0	4.73	0	0	0	0	0	0	9.46	9.46
Fixed Reactor Bank 2	FRB2	369464	4908755	6	0	0	89.8	89.8	1	1794.84	5.25	0	76.08	0	-1.01	0	0	4.01	0	0	0	0	0	0	10.69	10.69
Inverter	MV6-4	370250	4906966	2	0	0	86.1	86.1	1	1210.15	3.25	0	72.66	0	0.73	0	0	6.7	0	0	0	0	0	0	5.97	5.97
Fixed Reactor Bank 1	FRB1	369378	4908755	6	0	0	89.8	89.8	1	1870.58	5.25	0	76.44	0	-1	0	0	4.14	0	0	0	0	0	0	10.2	10.2
Westbrook Inverter Enclosur	W_INV6	369875	4906578	2	0	0	89.1	89.1	1	1749.02	3.25	0	75.86	0	0.85	0	0	7.63	0	0	0	0	0	0	4.72	4.72
Inverter	MV1-15	365315	4904994	2	0	0	100.3	100.3	1	6409.98	3.25	0	87.14	0	0.71	0	0	20.54	0	0	0	0	0	0	-8.08	-8.08
Inverter	MV1-12	365038	4905386	2	0	0	100.3	100.3	1	6497.62	3.25	0	87.26	0	0.71	0	0	20.66	0	0	0	0	0	0	-8.31	-8.31
Inverter	MV1-4	364815	4905918	2	0	0	100.3	100.3	1	6524.21	3.25	0	87.29	0	0.71	0	0	20.69	0	0	0	0	0	0	-8.38	-8.38
Inverter	MV1-2	364753	4906063	2	0	0	100.3	100.3	1	6541.45	3.25	0	87.31	0	0.71	0	0	20.71	0	0	0	0	0	0	-8.43	-8.43
Inverter	MV1-1	364715	4906166	2	0	0	100.3	100.3	1	6550.13	3.25	0	87.33	0	0.71	0	0	20.72	0	0	0	0	0	0	-8.45	-8.45
Inverter	MV1-8	364788	4905647	2	0	0	100.3	100.3	1	6636.46	3.25	0	87.44	0	0.71	0	0	20.84	0	0	0	0	0	0	-8.68	-8.68
Inverter	MV1-5	364671	4905892	2	0	0	100.3	100.3	1	6669.37	3.25	0	87.48	0	0.71	0	0	20.88	0	0	0	0	0	0	-8.76	-8.76
Westbrook Inverter Enclosur	W_INV5	369719	4906574	2	0	0	89.1	89.1	1	1858.99	3.25	0	76.39	0	0.87	0	0	7.81	0	0	0	0	0	0	3.98	3.98
Inverter	MV1-11	364655	4905414	2	0	0	100.3	100.3	1	6842.52	3.25	0	87.7	0	0.71	0	0	21.1	0	0	0	0	0	0	-9.21	-9.21
Inverter	MV1-9	364561	4905646	2	0	0	100.3	100.3	1	6850.9	3.25	0	87.71	0	0.71	0	0	21.11	0	0	0	0	0	0	-9.23	-9.23
Inverter	MV1-6	364477	4905835	2	0	0	100.3	100.3	1	6871.54	3.25	0	87.74	0	0.71	0	0	21.14	0	0	0	0	0	0	-9.28	-9.28
Westbrook Inverter Enclosur	W_INV7	369780	4906417	2	0	0	89.1	89.1	1	1932.86	3.25	0	76.72	0	0.89	0	0	7.94	0	0	0	0	0	0	3.51	3.51
Inverter	MV4-15	369176	4908481	2	0	0	89.1	89.1	1	1951.6	3.25	0	76.81	0	0.9	0	0	7.97	0	0	0	0	0	0	3.39	3.39
Inverter	MV4-14	369176	4908507	2	0	0	89.1	89.1	1	1959.67	3.25	0	76.84	0	0.9	0	0	7.98	0	0	0	0	0	0	3.34	3.34
Inverter	MV2-1	365842	4906816	2	0	0	97.3	97.3	1	5302.29	3.25	0	85.49	0	0.67	0	0	19.02	0	0	0	0	0	0	-7.86	-7.86
Inverter	MV4-13	369051	4908605	2	0	0	89.1	89.1	1	2109.93	3.25	0	77.49	0	0.93	0	0	8.22	0	0	0	0	0	0	2.42	2.42
Inverter	MV4-12	369043	4908803	2	0	0	89.1	89.1	1	2192.52	3.25	0	77.82	0	0.95	0	0	8.36	0	0	0	0	0	0	1.93	1.93
Westbrook Inverter Enclosur	W_INV4	369673	4906164	2	0	0	89.1	89.1	1	2196.31	3.25	0	77.83	0	0.95	0	0	8.36	0	0	0	0	0	0	1.91	1.91
Westbrook Inverter Enclosur	W_INV2	369374	4906388	2	0	0	89.1	89.1	1	2237.39	3.25	0	77.99	0	0.96	0	0	8.43	0	0	0	0	0	0	1.67	1.67
Westbrook Inverter Enclosur	W_INV3	369508	4906164	2	0	0	89.1	89.1	1	2302.27	3.25	0	78.24	0	0.98	0	0	8.53	0	0	0	0	0	0	1.3	1.3
Inverter	MV3-2	368671	4907928	2	0	0	89.1	89.1	1	2364.36	3.25	0	78.47	0	0.99	0	0	8.63	0	0	0	0	0	0	0.96	0.96
Inverter	MV3-22	368656	4907142	2	0	0	89.1	89.1	1	2492.92	3.25	0	78.93	0	1.02	0	0	8.83	0	0	0	0	0	0	0.26	0.26
Inverter	MV1-7	364925	4905782	2	0	0	97.3	97.3	1	6462.44	3.25	0	87.21	0	0.71	0	0	20.61	0	0	0	0	0	0	-11.22	-11.22
Inverter	MV1-10	365004	4905564	2	0	0	97.3	97.3	1	6462.92	3.25	0	87.21	0	0.71	0	0	20.61	0	0	0	0	0	0	-11.22	-11.22
Inverter	MV1-14	365163	4905049	2	0	0	97.3	97.3	1	6521.86	3.25	0	87.29	0	0.71	0	0	20.69	0	0	0	0	0	0	-11.38	-11.38
Inverter	MV3-4	368502	4907925	2	0	0	89.1	89.1	1	2533.29	3.25	0	79.07	0	1.03	0	0	8.9	0	0	0	0	0	0	0.05	0.05
Inverter	MV1-13	364731	4905241	2	0	0	97.3	97.3	1	6836.79	3.25	0	87.7	0	0.71	0	0	21.09	0	0	0	0	0	0	-12.19	-12.19
Inverter	MV3-5	368340	4907843	2	0	0	89.1	89.1	1	2695.36	3.25	0	79.61	0	1.07	0	0	9.15	0	0	0	0	0	0	-0.78	-0.78
Inverter	MV3-1	368156	4907976	2	0	0	89.1	89.1	1	2880.38	3.25	0	80.19	0	1.12	0	0	9.43	0	0	0	0	0	0	-1.68	-1.68
Westbrook Inverter Enclosur	W_INV1	369409	4906578	2	0	0	86.1	86.1	1	2087.43	3.25	0	77.39	0	0.93	0	0	8.19	0	0	0	0	0	0	-0.45	-0.45
Inverter	MV2-2	365977	4906654	2	0	0	89.1	89.1	1	5206.12	3.25	0	85.33	0	1.69	0	0	12.74	0	0	0	0	0	0	-10.7	-10.7
Gardiner Substation	G_Sub	366586.3	4903349.9	2.5	0	0	90.8	90.8	1	6354.23	4.25	0	87.06	0	1.95	2.03	0.35	10.11	0	0	0	0	0	0	-10.37	-10.37
Westbrook Inverter Transfor	W_INVTR6	369881	4906578	2	0	0	77.3	77.3	1	1745.05	3.25	0	75.84	0	-2.31	0	0	1.08	0	0	0	0	0	0	2.73	2.73
Inverter	MV1-3	364440	4906039	2	0	0	89.1	89.1	1	6849.02	3.25	0	87.71	0	2.09	0	0	14.81	0	0	0	0	0	0	-15.55	-15.55
Westbrook Inverter Transfor	W_INVTR5	369725	4906574	2	0	0	77.3	77.3	1	1854.74	3.25	0	76.37	0	-2.35	0	0	1.13	0	0	0	0	0	0	2.19	2.19
Westbrook Inverter Transfor	W_INVTR1	369403	4906578	2	0	0	78.2	78.2	1	2092.11	3.25	0	77.41	0	-2.44	0	0	1.25	0	0	0	0	0	0	2.02	2.02
Westbrook Inverter Transfor	W_INVTR7	369786	4906417	2	0	0	77.3	77.3	1	1928.97	3.25	0	76.71	0	-2.38	0	0	1.17	0	0	0	0	0	0	1.84	1.84
Inverters	G_Inv2	366676.9	4903239.1	2	0	0	87.7	87.7	1	6371.5	3.25	0	87.08	0	2.93	0	0	7.36	0	0	0	0	0	0	-9.71	-9.71
Inverters	G_Inv4	366732.8	4903105	2	0	0	87.7	87.7	1	6432.45	3.25	0	87.17	0	2.93	0	0	7.42	0	0	0	0	0	0	-9.86	-9.86
Inverters	G_Inv1	366526.4	4903225.8	2	0	0	87.7	87.7	1	6484.93	3.25	0	87.24	0	2.94	0	0	7.47	0	0	0	0	0	0	-9.99	-9.99
Inverters	G_Inv6	366788.5	4902972	2	0	0	87.7	87.7	1	6495.38	3.25	0	87.25	0	2.94	0	0	7.48	0	0	0	0	0	0	-10.01	-10.01
Inverters	G_Inv3	366583.7	4903091.4	2	0	0	87.7	87.7	1	6543.08	3.25	0	87.32	0	2.94	0	0	7.53	0	0	0	0	0	0	-10.12	-10.12
Inverters	G_Inv8	366844.5	4902838.5	2	0	0	87.7	87.7	1	6561.07	3.25	0	87.34	0	2.94	0	0	7.55	0	0	0	0	0	0	-10.17	-10.17
Inverters	G_Inv5	366638.5	4902958.1	2	0	0	87.7	87.7	1	6604.79	3.25	0	87.4	0	2.94	0	0	7.59	0	0	0	0	0	0	-10.27	-10.27
Inverters	G_Inv10	366900.7	4902704.8	2	0	0	87.7	87.7	1	6629.3	3.25	0	87.43	0	2.94	0	0	7.62	0	0	0	0	0	0	-10.33	-10.33
Inverters	G_Inv7	366694.6	4902824.7	2	0	0	87.7	87.7	1	6668.28	3.25	0	87.48	0	2.94	0	0	7.66	0	0	0	0	0	0	-10.42	-10.42
Inverters	G_Inv9	366750.9	4902691.8	2	0	0	87.7	87.7	1	6733.77	3.25	0	87.57	0	2.94	0	0	7.72	0	0	0	0	0	0	-10.57	-10.57
Westbrook Inverter Transfor	W_INVTR4	369679	4906164	2	0	0	77.3	77.3	1	2192.59	3.25	0	77.82	0	-2.47	0	0	1.3	0	0	0	0	0	0	0.7	0.7
Westbrook Inverter Transfor	W_INVTR2	369368	4906388	2	0	0	77.3	77.3	1	2241.85	3.25	0	78.01	0	-2.49	0	0	1.32	0	0	0	0	0	0	0.5	0.5
Westbrook Inverter Transfor	W_INVTR3	369514	4906164	2	0	0	77.3	77.3	1	2298.3	3.25	0	78.23	0	-2.51	0	0	1.35	0	0	0	0	0	0	0.27	0.27
Inverter Transformer	MV6-1 T	370230	4907364	2	0	0	69.4	69.4	1	959.98	3.25	0	70.65	0	1.65	0	0	3.75	0	0	0	0	0	0	-6.7	-6.7
Inverter Transformer	MV6-4 T	370244	4906966	2	0	0	69.4	69.4	1	1214.05	3.25	0	72.68	0	1.83	0	0	4.09	0	0	0	0	0	0	-9.26	-9.26
Inverter Transformer	MV5-4 T	370330	4908707	2	0	0	56.1	56.1	1	1081.4	3.25	0	71.68	0	0.04	0	0	5.08	0	0	0	0	0	0	-20.74	-20.74
Inverter Transformer	MV6-2 T	370091	4907339	2	0	0	56.1	56.1	1	1091.53	3.25	0	71.76	0	0.04	0	0	5.11	0	0	0	0	0	0	-20.85	-20.85
Inverter Transformer	MV6-3 T	370202	4907140	2	0	0	56.1	56.1	1	1118.89	3.25	0	71.98	0	0.05	0	0	5.17	0	0	0	0	0	0	-21.14	-21.14
Inverter Transformer	MV2-1 T	365836	4906816	2	0	0	69.4	69.4	1	5308.17	3.25	0	85.5	0	3.07	0	0	7.58	0	0	0	0	0	0	-26.8	-26.8
Inverter Transformer	MV5-6 T	369987	4908507	2	0	0	56.1	56.1	1	1217.67	3.25	0	72.71	0	0.09	0	0	5.4	0	0	0	0	0	0	-22.14	-22.14
Inverter Transformer	MV5-3 T	370237	4908851	2	0	0	56.1	56.1	1	1251.44	3.25	0	72.95	0	0.1	0	0	5.47	0	0	0	0	0	0	-22.46	-22.46
Inverter Transformer	MV5-5 T	370021	4908690	2	0	0	56.1	56.1	1	1293.45	3.25	0	73.23	0	0.12	0	0	5.57	0	0	0	0	0	0	-22.86	-22.86
Inverter Transformer	MV1-10 T	365010	4905564	2	0	0	69.4	69.4	1	6457.32	3.25	0	87.2	0	3.25	0	0	8.29	0	0	0	0	0	0	-29.39	-29.39
Inverter Transformer	MV1-7 T	364919	4905782	2	0	0	69.4	69.4	1	6468.11	3.25	0	87.22	0	3.25	0	0	8.3	0	0	0	0	0	0	-29.42	-29.42
Inverter Transformer	MV5-2 T	370011	4908853	2	0	0	56.1	56.1	1	1407.74	3.25	0	73.97	0	0.16	0	0	5.82	0	0	0	0	0	0	-23.89	-23.89
Inverter Transformer	MV1-14 T	365157	4905049	2	0	0	69.4	69.4	1	6527.26	3.25	0	87.29	0	3.26	0	0	8.33	0	0	0	0	0	0	-29.54	-29.54
Inverter Transformer	MV1-13 T	364725	4905241	2	0	0	69.4	69.4	1	6842.33	3.25	0	87.7	0	3.3	0	0	8.51	0	0	0	0	0	0	-30.17	-30.17
Inverter Transformer	MV5-1 T	370015	4909142	2	0	0	56.1	56.1	1	1617.23	3.25	0	75.18	0	0.25	0	0	6.27	0	0	0	0	0	0	-25.63	-25.63
Inverter Transformer	MV4-14 T	369182	4908507	2	0	0	56.1	56.1	1	1953.97	3.25	0	76.82	0	0.38	0	0	6.95	0	0	0	0	0	0	-28.1	-28.1
Inverter Transformer	MV4-15 T	369170	4908481	2	0	0	56.1	56.1	1	1957.31	3.25	0	76.83	0	0.39	0	0	6.96	0	0	0	0	0	0	-28.12	-28.12

	Inverter Transformer	MV4-10 T	369307	4908858	2	0	0	56.1	56.1	1	1982.13	5.18	0	76.94	0	1.27	2.99	0.06	7.01	0	0	0	0	0	0	-32.15	-32.15
	Inverter Transformer	MV4-11 T	369269	4908855	2	0	0	56.1	56.1	1	2013.9	3.25	0	77.08	0	0.41	0	0	7.07	0	0	0	0	0	0	-28.5	-28.5
	Inverter Transformer	MV4-9 T	369284	4909001	2	0	0	56.1	56.1	1	2075.33	3.25	0	77.34	0	0.44	0	0	7.19	0	0	0	0	0	0	-28.91	-28.91
	Inverter Transformer	MV4-8 T	369262	4909001	2	0	0	56.1	56.1	1	2093.93	3.25	0	77.42	0	0.44	0	0	7.23	0	0	0	0	0	0	-29.03	-29.03
	Inverter Transformer	MV4-13 T	369057	4908605	2	0	0	56.1	56.1	1	2104.28	3.25	0	77.46	0	0.45	0	0	7.25	0	0	0	0	0	0	-29.1	-29.1
	Inverter Transformer	MV4-12 T	369049	4908803	2	0	0	56.1	56.1	1	2187.07	3.25	0	77.8	0	0.48	0	0	7.41	0	0	0	0	0	0	-29.63	-29.63
	Inverter Transformer	MV4-5 T	369283	4909199	2	0	0	56.1	56.1	1	2188.8	3.25	0	77.8	0	0.48	0	0	7.41	0	0	0	0	0	0	-29.64	-29.64
	Inverter Transformer	MV4-6 T	369249	4909192	2	0	0	56.1	56.1	1	2211.97	3.25	0	77.9	0	0.49	0	0	7.45	0	0	0	0	0	0	-29.78	-29.78
	Inverter Transformer	MV4-7 T	369040	4909001	2	0	0	56.1	56.1	1	2284.96	5.02	0	78.18	0	1.42	2.88	0.02	7.59	0	0	0	0	0	0	-34.01	-34.01
	Inverter Transformer	MV4-2 T	369267	4909397	2	0	0	56.1	56.1	1	2325.07	3.25	0	78.33	0	0.54	0	0	7.67	0	0	0	0	0	0	-30.48	-30.48
	Inverter Transformer	MV4-3 T	369234	4909397	2	0	0	56.1	56.1	1	2350.26	3.25	0	78.42	0	0.55	0	0	7.71	0	0	0	0	0	0	-30.63	-30.63
	Inverter Transformer	MV3-8 T	368685	4907712	2	0	0	56.1	56.1	1	2356.51	3.25	0	78.45	0	0.56	0	0	7.73	0	0	0	0	0	0	-30.67	-30.67
	Inverter Transformer	MV3-2 T	368677	4907928	2	0	0	56.1	56.1	1	2358.36	3.25	0	78.45	0	0.56	0	0	7.73	0	0	0	0	0	0	-30.68	-30.68
	Inverter Transformer	MV3-14 T	368678	4907498	2	0	0	56.1	56.1	1	2388.89	3.25	0	78.56	0	0.57	0	0	7.79	0	0	0	0	0	0	-30.86	-30.86
	Inverter Transformer	MV4-4 T	369033	4909199	2	0	0	56.1	56.1	1	2393.61	3.25	0	78.58	0	0.57	0	0	7.79	0	0	0	0	0	0	-30.89	-30.89
	Inverter Transformer	MV3-20 T	368683	4907317	2	0	0	56.1	56.1	1	2420.08	3.25	0	78.68	0	0.58	0	0	7.84	0	0	0	0	0	0	-31.04	-31.04
	Inverter Transformer	MV3-22 T	368661	4907142	2	0	0	56.1	56.1	1	2488.15	3.25	0	78.92	0	0.61	0	0	7.97	0	0	0	0	0	0	-31.44	-31.44
	Inverter Transformer	MV4-1 T	369017	4909397	2	0	0	56.1	56.1	1	2520.4	3.25	0	79.03	0	0.63	0	0	8.03	0	0	0	0	0	0	-31.62	-31.62
	Inverter Transformer	MV3-9 T	368517	4907703	2	0	0	56.1	56.1	1	2524.72	3.25	0	79.04	0	0.63	0	0	8.03	0	0	0	0	0	0	-31.65	-31.65
	Inverter Transformer	MV3-4 T	368507	4907925	2	0	0	56.1	56.1	1	2528.29	3.25	0	79.06	0	0.63	0	0	8.04	0	0	0	0	0	0	-31.67	-31.67
	Inverter Transformer	MV3-16 T	368509	4907475	2	0	0	56.1	56.1	1	2559.38	3.25	0	79.16	0	0.64	0	0	8.1	0	0	0	0	0	0	-31.84	-31.84
	Inverter Transformer	MV3-21 T	368484	4907206	2	0	0	56.1	56.1	1	2640.33	3.25	0	79.43	0	0.68	0	0	8.24	0	0	0	0	0	0	-32.29	-32.29
	Inverter Transformer	MV3-5 T	368335	4907843	2	0	0	56.1	56.1	1	2700.36	3.25	0	79.63	0	0.7	0	0	8.35	0	0	0	0	0	0	-32.62	-32.62
	Inverter Transformer	MV3-11 T	368340	4907662	2	0	0	56.1	56.1	1	2704.38	3.25	0	79.64	0	0.7	0	0	8.36	0	0	0	0	0	0	-32.64	-32.64
	Inverter Transformer	MV3-15 T	368351	4907477	2	0	0	56.1	56.1	1	2715.14	3.25	0	79.68	0	0.71	0	0	8.38	0	0	0	0	0	0	-32.7	-32.7
	Inverter Transformer	MV3-19 T	368352	4907347	2	0	0	56.1	56.1	1	2736.8	3.25	0	79.74	0	0.72	0	0	8.41	0	0	0	0	0	0	-32.82	-32.82
	Inverter Transformer	MV3-6 T	368156	4907834	2	0	0	56.1	56.1	1	2879.49	3.25	0	80.19	0	0.78	0	0	8.66	0	0	0	0	0	0	-33.57	-33.57
	Inverter Transformer	MV3-10 T	368162	4907669	2	0	0	56.1	56.1	1	2881.26	3.25	0	80.19	0	0.78	0	0	8.67	0	0	0	0	0	0	-33.58	-33.58
	Inverter Transformer	MV3-17 T	368183	4907472	2	0	0	56.1	56.1	1	2882.04	3.25	0	80.19	0	0.78	0	0	8.67	0	0	0	0	0	0	-33.58	-33.58
	Inverter Transformer	MV3-1 T	368150	4907976	2	0	0	56.1	56.1	1	2886.37	3.25	0	80.21	0	0.78	0	0	8.67	0	0	0	0	0	0	-33.6	-33.6
	Inverter Transformer	MV3-7 T	367951	4907754	2	0	0	56.1	56.1	1	3086.87	3.25	0	80.79	0	0.87	0	0	9.01	0	0	0	0	0	0	-34.61	-34.61
	Inverter Transformer	MV3-3 T	367944	4907927	2	0	0	56.1	56.1	1	3091.26	3.25	0	80.8	0	0.87	0	0	9.02	0	0	0	0	0	0	-34.63	-34.63
	Inverter Transformer	MV3-13 T	367958	4907577	2	0	0	56.1	56.1	1	3092.58	3.25	0	80.81	0	0.87	0	0	9.02	0	0	0	0	0	0	-34.64	-34.64
	Inverter Transformer	MV3-18 T	367757	4907412	2	0	0	56.1	56.1	1	3312.24	3.25	0	81.4	0	0.96	0	0	9.39	0	0	0	0	0	0	-35.69	-35.69
	Inverter Transformer	MV3-12 T	367674	4907594	2	0	0	56.1	56.1	1	3373.75	3.25	0	81.56	0	0.99	0	0	9.49	0	0	0	0	0	0	-35.98	-35.98
	Inverter Transformer	MV2-2 T	365982	4906654	2	0	0	56.1	56.1	1	5201.26	3.25	0	85.32	0	1.7	0	0	12.12	0	0	0	0	0	0	-43.08	-43.08
	Inverter Transformer	MV2-3 T	365814	4906641	2	0	0	56.1	56.1	1	5367.62	3.25	0	85.6	0	1.76	0	0	12.33	0	0	0	0	0	0	-43.62	-43.62
	Inverter Transformer	MV2-4 T	365590	4906628	2	0	0	56.1	56.1	1	5588.66	3.25	0	85.95	0	1.83	0	0	12.61	0	0	0	0	0	0	-44.32	-44.32
	Line Reactor	NGR	369421	4908787.5	5	0	0	45.4	45.4	1	1848.21	5.25	0	76.34	0	3.39	1.26	0.06	0.76	0	0	0	0	0	0	-36.39	-36.39
	Inverter Transformer	MV1-15 T	365309	4904994	2	0	0	56.1	56.1	1	6415.34	3.25	0	87.14	0	2.09	0	0	13.58	0	0	0	0	0	0	-46.76	-46.76
	Inverter Transformer	MV1-12 T	365044	4905386	2	0	0	56.1	56.1	1	6492.08	3.25	0	87.25	0	2.12	0	0	13.67	0	0	0	0	0	0	-46.98	-46.98
	Inverter Transformer	MV1-4 T	364821	4905918	2	0	0	56.1	56.1	1	6518.49	3.25	0	87.28	0	2.12	0	0	13.7	0	0	0	0	0	0	-47.05	-47.05
	Inverter Transformer	MV1-2 T	364759	4906063	2	0	0	56.1	56.1	1	6535.68	3.25	0	87.31	0	2.13	0	0	13.72	0	0	0	0	0	0	-47.1	-47.1
	Inverter Transformer	MV1-1 T	364721	4906166	2	0	0	56.1	56.1	1	6544.34	3.25	0	87.32	0	2.13	0	0	13.73	0	0	0	0	0	0	-47.12	-47.12
	Inverter Transformer	MV1-8 T	364782	4905647	2	0	0	56.1	56.1	1	6642.11	3.25	0	87.45	0	2.16	0	0	13.84	0	0	0	0	0	0	-47.39	-47.39
	Inverter Transformer	MV1-5 T	364676	4905892	2	0	0	56.1	56.1	1	6664.6	3.25	0	87.48	0	2.17	0	0	13.86	0	0	0	0	0	0	-47.45	-47.45
	Inverter Transformer	MV1-11 T	364649	4905414	2	0	0	56.1	56.1	1	6848.12	3.25	0	87.71	0	2.22	0	0	14.07	0	0	0	0	0	0	-47.94	-47.94
	Inverter Transformer	MV1-3 T	364435	4906039	2	0	0	56.1	56.1	1	6853.84	3.25	0	87.72	0	2.22	0	0	14.07	0	0	0	0	0	0	-47.95	-47.95
	Inverter Transformer	MV1-9 T	364555	4905646	2	0	0	56.1	56.1	1	6856.57	3.25	0	87.72	0	2.22	0	0	14.07	0	0	0	0	0	0	-47.96	-47.96
	Inverter Transformer	MV1-6 T	364482	4905835	2	0	0	56.1	56.1	1	6866.77	3.25	0	87.74	0	2.22	0	0	14.09	0	0	0	0	0	0	-47.99	-47.99
Limit. Valu	0	0																								
Level D/N:	30.54	30.54																								

Receiver: Existing Noise Receptor
ID: S-R129
X: 371044
Y: 4907815
Z: 4.5
Ground: 0

ISO	Description	ID	X	Y	Z	Ground	ReflOrd	LxT	LxN	L/A	Dist.	hm	Freq	Adiv	K0b	Agr	Abar	z	Aatm	Afol	Ahous	Cmet	CmetN	Dc	RL	LtotT	LtotN
	Sol_Luce Substation	S_Substation	369426	4908792	3.5	0	0	112.1	112.1	1	1890.09	5.25	0	76.53	0	0.09	4.24	0.41	4.18	0	0	0	0	0	0	27.03	27.03
	Inverter	MV6-2	370085	4907339	2	0	0	100.3	100.3	1	1070.64	3.25	0	71.59	0	-0.21	0	0	11.14	0	0	0	0	0	0	17.79	17.79
	Inverter	MV6-3	370207	4907140	2	0	0	100.3	100.3	1	1075.27	3.25	0	71.63	0	-0.21	0	0	11.15	0	0	0	0	0	0	17.74	17.74
	Inverter	MV5-4	370324	4908707	2	0	0	100.3	100.3	1	1146.33	3.25	0	72.19	0	-0.18	0	0	11.37	0	0	0	0	0	0	16.93	16.93
	Inverter	MV6-1	370235	4907364	2	0	0	97.3	97.3	1	926.22	3.25	0	70.33	0	-0.28	0	0	10.66	0	0	0	0	0	0	16.6	16.6
	Inverter	MV5-3	370231	4908851	2	0	0	100.3	100.3	1	1316.92	3.25	0	73.39	0	-0.1	0	0	11.85	0	0	0	0	0	0	15.17	15.17
	Inverter	MV5-5	370015	4908690	2	0	0	100.3	100.3	1	1350.73	3.25	0	73.61	0	-0.09	0	0	11.94	0	0	0	0	0	0	14.85	14.85
	Inverter	MV5-2	370006	4908853	2	0	0	100.3	100.3	1	1467.96	3.25	0	74.33	0	-0.05	0	0	12.24	0	0	0	0	0	0	13.78	13.78
	Inverter	MV5-1	370020	4909142	2	0	0	100.3	100.3	1	1676.16	3.25	0	75.49	0	0.03	0	0	12.75	0	0	0	0	0	0	12.05	12.05
	Inverter	MV4-10	369312	4908858	2	0	0	100.3	100.3	1	2021.8	5.18	0	77.11	0	0.82	3.45	0.06	13.51	0	0	0	0	0	0	5.42	5.42
	Inverter	MV4-11	369264	4908855	2	0	0	100.3	100.3	1	2061.55	3.25	0	77.28	0	0.15	0	0	13.59	0	0	0	0	0	0	9.29	9.29
	Inverter	MV4-9	369289	4909001	2	0	0	100.3	100.3	1	2118.17	3.25	0	77.52	0	0.16	0	0	13.71	0	0	0	0	0	0	8.92	8.92
	Inverter	MV4-8	369256	4909001	2	0	0	100.3	100.3	1	2145.59	3.25	0	77.63	0	0.17	0	0	13.76	0	0	0	0	0	0	8.75	8.75

Inverter	MV4-5	369289	4909199	2	0	0	100.3	100.3	1	2235.06	3.25	0	77.99	0	0.19	0	0	13.94	0	0	0	0	0	0	8.19	8.19
Inverter	MV4-6	369243	4909192	2	0	0	100.3	100.3	1	2267.1	3.25	0	78.11	0	0.2	0	0	14.01	0	0	0	0	0	0	7.99	7.99
Inverter	MV4-7	369035	4909001	2	0	0	100.3	100.3	1	2332.96	3.25	0	78.36	0	0.22	0	0	14.14	0	0	0	0	0	0	7.6	7.6
Inverter	MV3-8	368680	4907712	2	0	0	100.3	100.3	1	2366.24	3.25	0	78.48	0	0.23	0	0	14.2	0	0	0	0	0	0	7.4	7.4
Inverter	MV4-2	369272	4909397	2	0	0	100.3	100.3	1	2375.44	3.25	0	78.51	0	0.23	0	0	14.22	0	0	0	0	0	0	7.35	7.35
Inverter	MV3-14	368684	4907498	2	0	0	100.3	100.3	1	2381.2	3.25	0	78.54	0	0.23	0	0	14.23	0	0	0	0	0	0	7.32	7.32
Inverter	MV3-20	368689	4907317	2	0	0	100.3	100.3	1	2407.08	3.25	0	78.63	0	0.24	0	0	14.28	0	0	0	0	0	0	7.17	7.17
Inverter	MV4-3	369229	4909397	2	0	0	100.3	100.3	1	2407.69	3.25	0	78.63	0	0.24	0	0	14.28	0	0	0	0	0	0	7.16	7.16
Inverter	MV4-4	369027	4909199	2	0	0	100.3	100.3	1	2446.17	3.25	0	78.77	0	0.24	0	0	14.36	0	0	0	0	0	0	6.94	6.94
Inverter	MV3-9	368512	4907703	2	0	0	100.3	100.3	1	2534.48	3.25	0	79.08	0	0.26	0	0	14.52	0	0	0	0	0	0	6.45	6.45
Inverter	MV3-16	368514	4907475	2	0	0	100.3	100.3	1	2552.74	3.25	0	79.14	0	0.27	0	0	14.56	0	0	0	0	0	0	6.35	6.35
Inverter	MV4-1	369011	4909397	2	0	0	100.3	100.3	1	2576.01	3.25	0	79.22	0	0.27	0	0	14.6	0	0	0	0	0	0	6.22	6.22
Inverter	MV3-21	368478	4907206	2	0	0	100.3	100.3	1	2637.28	3.25	0	79.42	0	0.29	0	0	14.72	0	0	0	0	0	0	5.89	5.89
Inverter	MV3-11	368346	4907662	2	0	0	100.3	100.3	1	2702.34	3.25	0	79.63	0	0.3	0	0	14.84	0	0	0	0	0	0	5.54	5.54
Inverter	MV3-15	368357	4907477	2	0	0	100.3	100.3	1	2708.18	3.25	0	79.65	0	0.3	0	0	14.85	0	0	0	0	0	0	5.51	5.51
Inverter	MV3-19	368357	4907347	2	0	0	100.3	100.3	1	2727.45	3.25	0	79.72	0	0.31	0	0	14.88	0	0	0	0	0	0	5.41	5.41
DSTATCOM - 10 MVAR #1	DSAT1	369437	4908757	2.5	0	0	96.6	96.6	1	1862.74	3.5	0	76.4	0	3.19	0	0	1.63	0	0	0	0	0	0	15.4	15.4
Inverter	MV3-10	368167	4907669	2	0	0	100.3	100.3	1	2880.7	3.25	0	80.19	0	0.34	0	0	15.16	0	0	0	0	0	0	4.62	4.62
Inverter	MV3-6	368162	4907834	2	0	0	100.3	100.3	1	2882.06	3.25	0	80.19	0	0.34	0	0	15.16	0	0	0	0	0	0	4.62	4.62
Inverter	MV3-17	368178	4907472	2	0	0	100.3	100.3	1	2886.45	3.25	0	80.21	0	0.34	0	0	15.17	0	0	0	0	0	0	4.59	4.59
DSTATCOM - 10 MVAR #2	DSAT2	369403	4908757	2.5	0	0	96.6	96.6	1	1892.15	3.5	0	76.54	0	3.2	0	0	1.65	0	0	0	0	0	0	15.24	15.24
Inverter	MV3-13	367963	4907577	2	0	0	100.3	100.3	1	3090.18	3.25	0	80.8	0	0.38	0	0	15.53	0	0	0	0	0	0	3.6	3.6
Inverter	MV3-7	367945	4907754	2	0	0	100.3	100.3	1	3099.6	3.25	0	80.83	0	0.38	0	0	15.55	0	0	0	0	0	0	3.56	3.56
Inverter	MV3-3	367939	4907927	2	0	0	100.3	100.3	1	3107.02	3.25	0	80.85	0	0.38	0	0	15.56	0	0	0	0	0	0	3.52	3.52
Inverter	MV3-18	367752	4907412	2	0	0	100.3	100.3	1	3316.58	3.25	0	81.41	0	0.42	0	0	15.92	0	0	0	0	0	0	2.56	2.56
Inverter	MV3-12	367668	4907594	2	0	0	100.3	100.3	1	3383.23	3.25	0	81.59	0	0.43	0	0	16.03	0	0	0	0	0	0	2.26	2.26
Inverter	MV5-6	369982	4908507	2	0	0	89.1	89.1	1	1267.56	3.25	0	73.06	0	0.74	0	0	6.8	0	0	0	0	0	0	8.45	8.45
Inverter	MV2-3	365820	4906641	2	0	0	100.3	100.3	1	5354.29	3.25	0	85.57	0	0.67	0	0	19.09	0	0	0	0	0	0	-5.03	-5.03
Inverter	MV2-4	365586	4906624	2	0	0	100.3	100.3	1	5586.43	3.25	0	85.94	0	0.69	0	0	19.42	0	0	0	0	0	0	-5.74	-5.74
SubstationTransformer	W_ST	369711.17	4906112.3	2.5	0	0	92	92	1	2162.34	3.5	0	77.7	0	-0.13	0	0	4.64	0	0	0	0	0	0	9.76	9.76
Inverter	MV6-4	370250	4906966	2	0	0	86.1	86.1	1	1162.43	3.25	0	72.31	0	0.72	0	0	6.61	0	0	0	0	0	0	6.42	6.42
Fixed Reactor Bank 2	FRB2	369464	4908755	6	0	0	89.8	89.8	1	1838.48	5.25	0	76.29	0	-1.01	0	0	4.09	0	0	0	0	0	0	10.41	10.41
Westbrook Inverter Enclosur	W_INV6	369875	4906578	2	0	0	89.1	89.1	1	1701.98	3.25	0	75.62	0	0.84	0	0	7.55	0	0	0	0	0	0	5.05	5.05
Inverter	MV1-15	365315	4904994	2	0	0	100.3	100.3	1	6385.88	3.25	0	87.1	0	0.71	0	0	20.51	0	0	0	0	0	0	-8.02	-8.02
Fixed Reactor Bank 1	FRB1	369378	4908755	6	0	0	89.8	89.8	1	1912.89	5.25	0	76.63	0	-1	0	0	4.22	0	0	0	0	0	0	9.93	9.93
Inverter	MV1-12	365038	4905386	2	0	0	100.3	100.3	1	6478.59	3.25	0	87.23	0	0.71	0	0	20.63	0	0	0	0	0	0	-8.26	-8.26
Inverter	MV1-4	364815	4905918	2	0	0	100.3	100.3	1	6511.46	3.25	0	87.27	0	0.71	0	0	20.67	0	0	0	0	0	0	-8.35	-8.35
Inverter	MV1-2	364753	4906063	2	0	0	100.3	100.3	1	6530.41	3.25	0	87.3	0	0.71	0	0	20.7	0	0	0	0	0	0	-8.4	-8.4
Inverter	MV1-1	364715	4906166	2	0	0	100.3	100.3	1	6540.29	3.25	0	87.31	0	0.71	0	0	20.71	0	0	0	0	0	0	-8.43	-8.43
Inverter	MV1-8	364788	4905647	2	0	0	100.3	100.3	1	6621.01	3.25	0	87.42	0	0.71	0	0	20.82	0	0	0	0	0	0	-8.64	-8.64
Westbrook Inverter Enclosur	W_INV5	369719	4906574	2	0	0	89.1	89.1	1	1815.41	3.25	0	76.18	0	0.86	0	0	7.74	0	0	0	0	0	0	4.27	4.27
Inverter	MV1-5	364671	4905892	2	0	0	100.3	100.3	1	6656.81	3.25	0	87.47	0	0.71	0	0	20.86	0	0	0	0	0	0	-8.73	-8.73
Inverter	MV1-11	364655	4905414	2	0	0	100.3	100.3	1	6825.26	3.25	0	87.68	0	0.71	0	0	21.08	0	0	0	0	0	0	-9.16	-9.16
Inverter	MV1-9	364561	4905646	2	0	0	100.3	100.3	1	6836.22	3.25	0	87.7	0	0.71	0	0	21.09	0	0	0	0	0	0	-9.19	-9.19
Inverter	MV1-6	364477	4905835	2	0	0	100.3	100.3	1	6859	3.25	0	87.73	0	0.71	0	0	21.12	0	0	0	0	0	0	-9.25	-9.25
Westbrook Inverter Enclosur	W_INV7	369780	4906417	2	0	0	89.1	89.1	1	1884.7	3.25	0	76.5	0	0.88	0	0	7.86	0	0	0	0	0	0	3.82	3.82
Inverter	MV4-15	369176	4908481	2	0	0	89.1	89.1	1	1983.18	3.25	0	76.95	0	0.9	0	0	8.02	0	0	0	0	0	0	3.19	3.19
Inverter	MV4-14	369176	4908507	2	0	0	89.1	89.1	1	1992.06	3.25	0	76.99	0	0.91	0	0	8.03	0	0	0	0	0	0	3.13	3.13
Inverter	MV2-1	365842	4906816	2	0	0	97.3	97.3	1	5297.06	3.25	0	85.48	0	0.67	0	0	19.01	0	0	0	0	0	0	-7.85	-7.85
Inverter	MV4-13	369051	4908605	2	0	0	89.1	89.1	1	2143.86	3.25	0	77.62	0	0.94	0	0	8.28	0	0	0	0	0	0	2.21	2.21
Westbrook Inverter Enclosur	W_INV4	369673	4906164	2	0	0	89.1	89.1	1	2146.03	3.25	0	77.63	0	0.94	0	0	8.28	0	0	0	0	0	0	2.2	2.2
Westbrook Inverter Enclosur	W_INV2	369374	4906388	2	0	0	89.1	89.1	1	2196.64	3.25	0	77.84	0	0.95	0	0	8.36	0	0	0	0	0	0	1.91	1.91
Inverter	MV4-12	369043	4908803	2	0	0	89.1	89.1	1	2231.63	3.25	0	77.97	0	0.96	0	0	8.42	0	0	0	0	0	0	1.7	1.7
Westbrook Inverter Enclosur	W_INV3	369508	4906164	2	0	0	89.1	89.1	1	2255.02	3.25	0	78.06	0	0.97	0	0	8.46	0	0	0	0	0	0	1.57	1.57
Inverter	MV3-2	368671	4907928	2	0	0	89.1	89.1	1	2375.69	3.25	0	78.52	0	1	0	0	8.65	0	0	0	0	0	0	0.9	0.9
Inverter	MV3-22	368656	4907142	2	0	0	89.1	89.1	1	2481.02	3.25	0	78.89	0	1.02	0	0	8.82	0	0	0	0	0	0	0.33	0.33
Inverter	MV1-10	365004	4905564	2	0	0	97.3	97.3	1	6445.82	3.25	0	87.19	0	0.71	0	0	20.59	0	0	0	0	0	0	-11.18	-11.18
Inverter	MV1-7	364925	4905782	2	0	0	97.3	97.3	1	6447.89	3.25	0	87.19	0	0.71	0	0	20.59	0	0	0	0	0	0	-11.18	-11.18
Inverter	MV1-14	365163	4905049	2	0	0	97.3	97.3	1	6498.99	3.25	0	87.26	0	0.71	0	0	20.66	0	0	0	0	0	0	-11.32	-11.32
Inverter	MV3-4	368502	4907925	2	0	0	89.1	89.1	1	2544.38	3.25	0	79.11	0	1.04	0	0	8.92	0	0	0	0	0	0	-0.01	-0.01
Inverter	MV1-13	364731	4905241	2	0	0	97.3	97.3	1	6817.58	3.25	0	87.67	0	0.71	0	0	21.07	0	0	0	0	0	0	-12.14	-12.14
Inverter	MV3-5	368340	4907843	2	0	0	89.1	89.1	1	2704.15	3.25	0	79.64	0	1.07	0	0	9.16	0	0	0	0	0	0	-0.82	-0.82
Inverter	MV3-1	368156	4907976	2	0	0	89.1	89.1	1	2892.49	3.25	0	80.23	0	1.12	0	0	9.45	0	0	0	0	0	0	-1.74	-1.74
Westbrook Inverter Enclosur	W_INV1	369409	4906578	2	0	0	86.1	86.1	1	2050.22	3.25	0	77.24	0	0.92	0	0	8.13	0	0	0	0	0	0	-0.22	-0.22
Gardiner Substation	G_Sub	366586.3	4903349.9	2.5	0	0	90.8	90.8	1	6309.37	4.25	0	87	0	1.94	2.04	0.35	10.07	0	0	0	0	0	0	-10.27	-10.27
Inverter	MV2-2	365977	4906654	2	0	0	89.1	89.1	1	5198.31	3.25	0	85.32	0	1.69	0	0	12.73	0	0	0	0	0	0	-10.68	-10.68
Westbrook Inverter Transfor	W_INVTR6	369881	4906578	2	0	0	77.3	77.3	1	1697.86	3.25	0	75.6	0	-2.29	0	0	1.06	0	0	0	0	0	0	2.98	2.98
Inverter	MV1-3	364440	4906039	2	0	0	89.1	89.1	1	6838.64	3.25	0	87.7	0	2.09	0	0	14.79	0	0	0	0	0	0	-15.52	-15.52
Westbrook Inverter Transfor	W_INVTR5	369725	4906574	2	0	0	77.3	77.3	1	1811.04	3.25	0	76.16	0	-2.33	0	0	1.11	0	0	0	0	0	0	2.4	2.4
Westbrook Inverter Transfor	W_INVTR1	369403	4906578	2	0	0	78.2	78.2	1	2055.01	3.25	0	77.26	0	-2.42	0	0	1.23	0	0	0	0	0	0	2.18	2.18
Westbrook Inverter Transfor	W_INVTR7	369786	4906417	2	0	0	77.3	77.3	1	1880.68	3.25	0	76.49	0	-2.36	0	0	1.15	0	0	0	0	0	0	2.07	2.07
Inverters	G_Inv2	366676.9	4903239.1	2	0	0	87.7	87.7	1	6325.38	3.25	0	87.02	0	2.93	0	0	7.31	0	0	0	0	0	0	-9.6	-9.6
Inverters	G_Inv4	366732.8	4903105	2	0	0	87.7	87.7	1	6385.18	3.25	0	87.1	0	2.93	0	0	7.37	0	0	0	0	0	0	-9.75	-9.75
Inverters	G_Inv1	366526.4	4903225.8	2	0	0	87.7	87.7	1	6439.68	3.25	0	87.18	0	2.93	0	0	7.43	0	0	0	0	0	0	-9.88	-9.88

Inverters	G_Inv6	366788.5	4902972	2	0	0	87.7	87.7	1	6447.01	3.25	0	87.19	0	2.93	0	0	7.43	0	0	0	0	0	0	-9.89	-9.89
Inverters	G_Inv3	366583.7	4903091.4	2	0	0	87.7	87.7	1	6496.67	3.25	0	87.25	0	2.94	0	0	7.48	0	0	0	0	0	0	-10.01	-10.01
Inverters	G_Inv8	366844.5	4902838.5	2	0	0	87.7	87.7	1	6511.63	3.25	0	87.27	0	2.94	0	0	7.5	0	0	0	0	0	0	-10.05	-10.05
Inverters	G_Inv5	366638.5	4902958.1	2	0	0	87.7	87.7	1	6557.28	3.25	0	87.33	0	2.94	0	0	7.55	0	0	0	0	0	0	-10.16	-10.16
Inverters	G_Inv10	366900.7	4902704.8	2	0	0	87.7	87.7	1	6578.84	3.25	0	87.36	0	2.94	0	0	7.57	0	0	0	0	0	0	-10.21	-10.21
Inverters	G_Inv7	366694.6	4902824.7	2	0	0	87.7	87.7	1	6619.7	3.25	0	87.42	0	2.94	0	0	7.61	0	0	0	0	0	0	-10.3	-10.3
Inverters	G_Inv9	366750.9	4902691.8	2	0	0	87.7	87.7	1	6684.15	3.25	0	87.5	0	2.94	0	0	7.67	0	0	0	0	0	0	-10.46	-10.46
Westbrook Inverter Transfor	W_INVTR4	369679	4906164	2	0	0	77.3	77.3	1	2142.2	3.25	0	77.62	0	-2.45	0	0	1.27	0	0	0	0	0	0	0.9	0.9
Westbrook Inverter Transfor	W_INVTR2	369368	4906388	2	0	0	77.3	77.3	1	2201.21	3.25	0	77.85	0	-2.47	0	0	1.3	0	0	0	0	0	0	0.66	0.66
Westbrook Inverter Transfor	W_INVTR3	369514	4906164	2	0	0	77.3	77.3	1	2250.93	3.25	0	78.05	0	-2.49	0	0	1.33	0	0	0	0	0	0	0.46	0.46
Inverter Transformer	MV6-1 T	370230	4907364	2	0	0	69.4	69.4	1	930.59	3.25	0	70.38	0	1.62	0	0	3.71	0	0	0	0	0	0	-6.36	-6.36
Inverter Transformer	MV6-4 T	370244	4906966	2	0	0	69.4	69.4	1	1166.54	3.25	0	72.34	0	1.8	0	0	4.03	0	0	0	0	0	0	-8.82	-8.82
Inverter Transformer	MV6-2 T	370091	4907339	2	0	0	56.1	56.1	1	1065.27	3.25	0	71.55	0	0.03	0	0	5.04	0	0	0	0	0	0	-20.57	-20.57
Inverter Transformer	MV6-3 T	370202	4907140	2	0	0	56.1	56.1	1	1079.16	3.25	0	71.66	0	0.04	0	0	5.08	0	0	0	0	0	0	-20.72	-20.72
Inverter Transformer	MV5-4 T	370330	4908707	2	0	0	56.1	56.1	1	1142.57	3.25	0	72.16	0	0.06	0	0	5.22	0	0	0	0	0	0	-21.39	-21.39
Inverter Transformer	MV2-1 T	365836	4906816	2	0	0	69.4	69.4	1	5302.95	3.25	0	85.49	0	3.07	0	0	7.58	0	0	0	0	0	0	-26.79	-26.79
Inverter Transformer	MV5-6 T	369987	4908507	2	0	0	56.1	56.1	1	1263.38	3.25	0	73.03	0	0.11	0	0	5.5	0	0	0	0	0	0	-22.58	-22.58
Inverter Transformer	MV5-3 T	370237	4908851	2	0	0	56.1	56.1	1	1313.22	3.25	0	73.37	0	0.13	0	0	5.61	0	0	0	0	0	0	-23.04	-23.04
Inverter Transformer	MV5-5 T	370021	4908690	2	0	0	56.1	56.1	1	1346.17	3.25	0	73.58	0	0.14	0	0	5.68	0	0	0	0	0	0	-23.35	-23.35
Inverter Transformer	MV1-10 T	365010	4905564	2	0	0	69.4	69.4	1	6440.2	3.25	0	87.18	0	3.25	0	0	8.28	0	0	0	0	0	0	-29.36	-29.36
Inverter Transformer	MV1-7 T	364919	4905782	2	0	0	69.4	69.4	1	6453.58	3.25	0	87.2	0	3.25	0	0	8.29	0	0	0	0	0	0	-29.39	-29.39
Inverter Transformer	MV1-14 T	365157	4905049	2	0	0	69.4	69.4	1	6504.42	3.25	0	87.26	0	3.26	0	0	8.32	0	0	0	0	0	0	-29.49	-29.49
Inverter Transformer	MV5-2 T	370011	4908853	2	0	0	56.1	56.1	1	1464.42	3.25	0	74.31	0	0.18	0	0	5.94	0	0	0	0	0	0	-24.38	-24.38
Inverter Transformer	MV1-13 T	364725	4905241	2	0	0	69.4	69.4	1	6823.14	3.25	0	87.68	0	3.3	0	0	8.5	0	0	0	0	0	0	-30.13	-30.13
Inverter Transformer	MV5-1 T	370015	4909142	2	0	0	56.1	56.1	1	1679.22	3.25	0	75.5	0	0.27	0	0	6.4	0	0	0	0	0	0	-26.11	-26.11
Inverter Transformer	MV4-14 T	369182	4908507	2	0	0	56.1	56.1	1	1986.43	3.25	0	76.96	0	0.4	0	0	7.02	0	0	0	0	0	0	-28.32	-28.32
Inverter Transformer	MV4-15 T	369170	4908481	2	0	0	56.1	56.1	1	1988.83	3.25	0	76.97	0	0.4	0	0	7.02	0	0	0	0	0	0	-28.33	-28.33
Inverter Transformer	MV4-10 T	369307	4908858	2	0	0	56.1	56.1	1	2026.09	5.18	0	77.13	0	1.3	2.97	0.06	7.09	0	0	0	0	0	0	-32.44	-32.44
Inverter Transformer	MV4-11 T	369269	4908855	2	0	0	56.1	56.1	1	2057.24	3.25	0	77.27	0	0.43	0	0	7.16	0	0	0	0	0	0	-28.79	-28.79
Inverter Transformer	MV4-9 T	369284	4909001	2	0	0	56.1	56.1	1	2122.31	3.25	0	77.54	0	0.46	0	0	7.28	0	0	0	0	0	0	-29.22	-29.22
Inverter Transformer	MV4-13 T	369057	4908605	2	0	0	56.1	56.1	1	2138.29	3.25	0	77.6	0	0.46	0	0	7.31	0	0	0	0	0	0	-29.32	-29.32
Inverter Transformer	MV4-8 T	369262	4909001	2	0	0	56.1	56.1	1	2140.59	3.25	0	77.61	0	0.46	0	0	7.32	0	0	0	0	0	0	-29.33	-29.33
Inverter Transformer	MV4-12 T	369049	4908803	2	0	0	56.1	56.1	1	2226.25	3.25	0	77.95	0	0.5	0	0	7.48	0	0	0	0	0	0	-29.87	-29.87
Inverter Transformer	MV4-5 T	369283	4909199	2	0	0	56.1	56.1	1	2239.77	3.25	0	78	0	0.51	0	0	7.51	0	0	0	0	0	0	-29.96	-29.96
Inverter Transformer	MV4-6 T	369249	4909192	2	0	0	56.1	56.1	1	2262.34	3.25	0	78.09	0	0.52	0	0	7.55	0	0	0	0	0	0	-30.1	-30.1
Inverter Transformer	MV4-7 T	369040	4909001	2	0	0	56.1	56.1	1	2328.65	3.25	0	78.34	0	0.54	0	0	7.67	0	0	0	0	0	0	-30.5	-30.5
Inverter Transformer	MV3-8 T	368685	4907712	2	0	0	56.1	56.1	1	2361.25	3.25	0	78.46	0	0.56	0	0	7.73	0	0	0	0	0	0	-30.7	-30.7
Inverter Transformer	MV3-2 T	368677	4907928	2	0	0	56.1	56.1	1	2369.7	3.25	0	78.49	0	0.56	0	0	7.75	0	0	0	0	0	0	-30.75	-30.75
Inverter Transformer	MV4-2 T	369267	4909397	2	0	0	56.1	56.1	1	2379.17	3.25	0	78.53	0	0.56	0	0	7.77	0	0	0	0	0	0	-30.8	-30.8
Inverter Transformer	MV3-14 T	368678	4907498	2	0	0	56.1	56.1	1	2387.14	3.25	0	78.56	0	0.57	0	0	7.78	0	0	0	0	0	0	-30.85	-30.85
Inverter Transformer	MV4-3 T	369234	4909397	2	0	0	56.1	56.1	1	2403.92	3.25	0	78.62	0	0.58	0	0	7.81	0	0	0	0	0	0	-30.95	-30.95
Inverter Transformer	MV3-20 T	368683	4907317	2	0	0	56.1	56.1	1	2412.95	3.25	0	78.65	0	0.58	0	0	7.83	0	0	0	0	0	0	-31	-31
Inverter Transformer	MV4-4 T	369033	4909199	2	0	0	56.1	56.1	1	2441.23	3.25	0	78.75	0	0.59	0	0	7.88	0	0	0	0	0	0	-31.17	-31.17
Inverter Transformer	MV3-22 T	368661	4907142	2	0	0	56.1	56.1	1	2476.21	3.25	0	78.88	0	0.61	0	0	7.95	0	0	0	0	0	0	-31.37	-31.37
Inverter Transformer	MV3-9 T	368517	4907703	2	0	0	56.1	56.1	1	2529.48	3.25	0	79.06	0	0.63	0	0	8.04	0	0	0	0	0	0	-31.67	-31.67
Inverter Transformer	MV3-4 T	368507	4907925	2	0	0	56.1	56.1	1	2539.38	3.25	0	79.09	0	0.63	0	0	8.06	0	0	0	0	0	0	-31.73	-31.73
Inverter Transformer	MV3-16 T	368509	4907475	2	0	0	56.1	56.1	1	2557.7	3.25	0	79.16	0	0.64	0	0	8.09	0	0	0	0	0	0	-31.83	-31.83
Inverter Transformer	MV4-1 T	369017	4909397	2	0	0	56.1	56.1	1	2571.28	3.25	0	79.2	0	0.65	0	0	8.12	0	0	0	0	0	0	-31.91	-31.91
Inverter Transformer	MV3-21 T	368484	4907206	2	0	0	56.1	56.1	1	2631.44	3.25	0	79.4	0	0.67	0	0	8.23	0	0	0	0	0	0	-32.24	-32.24
Inverter Transformer	MV3-11 T	368340	4907662	2	0	0	56.1	56.1	1	2708.33	3.25	0	79.65	0	0.71	0	0	8.36	0	0	0	0	0	0	-32.66	-32.66
Inverter Transformer	MV3-5 T	368335	4907843	2	0	0	56.1	56.1	1	2709.15	3.25	0	79.66	0	0.71	0	0	8.36	0	0	0	0	0	0	-32.67	-32.67
Inverter Transformer	MV3-15 T	368351	4907477	2	0	0	56.1	56.1	1	2714.13	3.25	0	79.67	0	0.71	0	0	8.37	0	0	0	0	0	0	-32.7	-32.7
Inverter Transformer	MV3-19 T	368352	4907347	2	0	0	56.1	56.1	1	2732.38	3.25	0	79.73	0	0.72	0	0	8.41	0	0	0	0	0	0	-32.79	-32.79
Inverter Transformer	MV3-17 T	368183	4907472	2	0	0	56.1	56.1	1	2881.49	3.25	0	80.19	0	0.78	0	0	8.67	0	0	0	0	0	0	-33.58	-33.58
Inverter Transformer	MV3-10 T	368162	4907669	2	0	0	56.1	56.1	1	2885.7	3.25	0	80.21	0	0.78	0	0	8.67	0	0	0	0	0	0	-33.6	-33.6
Inverter Transformer	MV3-6 T	368156	4907834	2	0	0	56.1	56.1	1	2888.06	3.25	0	80.21	0	0.78	0	0	8.68	0	0	0	0	0	0	-33.61	-33.61
Inverter Transformer	MV3-1 T	368150	4907976	2	0	0	56.1	56.1	1	2898.48	3.25	0	80.24	0	0.79	0	0	8.69	0	0	0	0	0	0	-33.67	-33.67
Inverter Transformer	MV3-7 T	367951	4907754	2	0	0	56.1	56.1	1	3093.6	3.25	0	80.81	0	0.87	0	0	9.03	0	0	0	0	0	0	-34.65	-34.65
Inverter Transformer	MV3-13 T	367958	4907577	2	0	0	56.1	56.1	1	3095.16	3.25	0	80.81	0	0.87	0	0	9.03	0	0	0	0	0	0	-34.65	-34.65
Inverter Transformer	MV3-3 T	367944	4907927	2	0	0	56.1	56.1	1	3102.02	3.25	0	80.83	0	0.87	0	0	9.04	0	0	0	0	0	0	-34.69	-34.69
Inverter Transformer	MV3-18 T	367757	4907412	2	0	0	56.1	56.1	1	3311.61	3.25	0	81.4	0	0.96	0	0	9.39	0	0	0	0	0	0	-35.69	-35.69
Inverter Transformer	MV3-12 T	367674	4907594	2	0	0	56.1	56.1	1	3377.24	3.25	0	81.57	0	0.99	0	0	9.49	0	0	0	0	0	0	-35.99	-35.99
Inverter Transformer	MV2-2 T	365982	4906654	2	0	0	56.1	56.1	1	5193.44	3.25	0	85.31	0	1.69	0	0	12.11	0	0	0	0	0	0	-43.05	-43.05
Inverter Transformer	MV2-3 T	365814	4906641	2	0	0	56.1	56.1	1	5360.15	3.25	0	85.58	0	1.75	0	0	12.32	0	0	0	0	0	0	-43.6	-43.6
Inverter Transformer	MV2-4 T	365590	4906628	2	0	0	56.1	56.1	1	5581.67	3.25	0	85.94	0	1.83	0	0	12.6	0	0	0	0	0	0	-44.3	-44.3
Inverter Transformer	MV1-15 T	365309	4904994	2	0	0	56.1	56.1	1	6391.27	3.25	0	87.11	0	2.09	0	0	13.56	0	0	0	0	0	0	-46.7	-46.7
Inverter Transformer	MV1-12 T	365044	4905386	2	0	0	56.1	56.1	1	6473.02	3.25	0	87.22	0	2.11	0	0	13.65	0	0	0	0	0	0	-46.92	-46.92
Line Reactor	NGR	369421	4908787.5	5	0	0	45.4	45.4	1	1892.06	5.25	0	76.54	0	3.39	1.26	0.06	0.78	0	0	0	0	0	0	-36.61	-36.61
Inverter Transformer	MV1-4 T	364821	4905918	2	0	0	56.1	56.1	1	6505.72	3.25	0	87.27	0	2.12	0	0	13.69	0	0	0	0	0	0	-47.01	-47.01
Inverter Transformer	MV1-2 T	364759	4906063	2	0	0	56.1	56.1	1	6524.63	3.25	0	87.29	0	2.12	0	0	13.71	0	0	0	0	0	0	-47.07	-47.07
Inverter Transformer	MV1-1 T	364721	4906166	2	0	0	56.1	56.1	1	6534.49	3.25	0	87.3	0	2.13	0	0	13.72	0	0	0	0	0	0	-47.09	-47.09
Inverter Transformer	MV1-8 T	364782	4905647	2	0	0	56.1	56.1	1	6626.68	3.25	0	87.43	0	2.15	0	0	13.82	0	0	0	0	0	0	-47.34	-47.34
Inverter Transformer	MV1-5 T	364676	4905892	2	0	0	56.1	56.1	1	6652.02	3.25	0	87.46	0	2.16	0	0	13.85	0	0	0	0	0	0	-47.41	-47.41
Inverter Transformer	MV1-11 T	364649	4905414	2	0	0	56.1	56.1	1	6830.87	3.25	0	87.69	0	2.21	0	0	14.05	0	0	0	0	0	0	-47.89	-47.89

	Inverter Transformer	MV1-9 T	364555	4905646	2	0	0	56.1	56.1	1	6841.91	3.25	0	87.7	0	2.22	0	0	14.06	0	0	0	0	0	0	-47.92	-47.92
	Inverter Transformer	MV1-3 T	364435	4906039	2	0	0	56.1	56.1	1	6843.47	3.25	0	87.71	0	2.22	0	0	14.06	0	0	0	0	0	0	-47.92	-47.92
	Inverter Transformer	MV1-6 T	364482	4905835	2	0	0	56.1	56.1	1	6854.21	3.25	0	87.72	0	2.22	0	0	14.07	0	0	0	0	0	0	-47.95	-47.95
Limit. Valu	0		0																							
Level D/N:	30.4041		30.4041																							

Receiver: Existing Noise Receptor
ID: S-R130
X: 371143
Y: 4907714
Z: 4.5
Ground: 0

ISO	Description	ID	X	Y	Z	Ground	ReflOrd	LxT	LxN	L/A	Dist.	hm	Freq	Adiv	K0b	Agr	Abar	z	Aatm	Afol	Ahous	Cmet	CmetN	Dc	RL	LtotT	LtotN
	Sol_Luce Substation	S_Substation	369426	4908792	3.5	0	0	112.1	112.1	1	2027.36	5.25	0	77.14	0	0.1	4.07	0.4	4.41	0	0	0	0	0	0	26.35	26.35
	Inverter	MV6-3	370207	4907140	2	0	0	100.3	100.3	1	1097.99	3.25	0	71.81	0	-0.2	0	0	11.22	0	0	0	0	0	0	17.48	17.48
	Inverter	MV6-2	370085	4907339	2	0	0	100.3	100.3	1	1122.5	3.25	0	72	0	-0.19	0	0	11.3	0	0	0	0	0	0	17.2	17.2
	Inverter	MV5-4	370324	4908707	2	0	0	100.3	100.3	1	1287.17	3.25	0	73.19	0	-0.12	0	0	11.77	0	0	0	0	0	0	15.47	15.47
	Inverter	MV6-1	370235	4907364	2	0	0	97.3	97.3	1	973.12	3.25	0	70.76	0	-0.26	0	0	10.82	0	0	0	0	0	0	15.99	15.99
	Inverter	MV5-3	370231	4908851	2	0	0	100.3	100.3	1	1457.57	3.25	0	74.27	0	-0.05	0	0	12.22	0	0	0	0	0	0	13.87	13.87
	Inverter	MV5-5	370015	4908690	2	0	0	100.3	100.3	1	1491.63	3.25	0	74.47	0	-0.04	0	0	12.3	0	0	0	0	0	0	13.57	13.57
	Inverter	MV5-2	370006	4908853	2	0	0	100.3	100.3	1	1609.38	3.25	0	75.13	0	0.01	0	0	12.59	0	0	0	0	0	0	12.58	12.58
	Inverter	MV5-1	370020	4909142	2	0	0	100.3	100.3	1	1816.68	3.25	0	76.19	0	0.07	0	0	13.07	0	0	0	0	0	0	10.99	10.99
	Inverter	MV4-10	369312	4908858	2	0	0	100.3	100.3	1	2159.01	5.18	0	77.69	0	0.87	3.41	0.06	13.79	0	0	0	0	0	0	4.56	4.56
	Inverter	MV4-11	369264	4908855	2	0	0	100.3	100.3	1	2198.3	3.25	0	77.84	0	0.18	0	0	13.87	0	0	0	0	0	0	8.42	8.42
	Inverter	MV4-9	369289	4909001	2	0	0	100.3	100.3	1	2256.92	3.25	0	78.07	0	0.2	0	0	13.99	0	0	0	0	0	0	8.06	8.06
	Inverter	MV4-8	369256	4909001	2	0	0	100.3	100.3	1	2284.11	3.25	0	78.17	0	0.21	0	0	14.04	0	0	0	0	0	0	7.89	7.89
	Inverter	MV4-5	369289	4909199	2	0	0	100.3	100.3	1	2375.4	3.25	0	78.51	0	0.23	0	0	14.22	0	0	0	0	0	0	7.35	7.35
	Inverter	MV4-6	369243	4909192	2	0	0	100.3	100.3	1	2407.17	3.25	0	78.63	0	0.24	0	0	14.28	0	0	0	0	0	0	7.17	7.17
	Inverter	MV3-8	368680	4907712	2	0	0	100.3	100.3	1	2463	3.25	0	78.83	0	0.25	0	0	14.39	0	0	0	0	0	0	6.85	6.85
	Inverter	MV3-14	368684	4907498	2	0	0	100.3	100.3	1	2468.47	3.25	0	78.85	0	0.25	0	0	14.4	0	0	0	0	0	0	6.82	6.82
	Inverter	MV4-7	369035	4909001	2	0	0	100.3	100.3	1	2469.83	3.25	0	78.85	0	0.25	0	0	14.4	0	0	0	0	0	0	6.81	6.81
	Inverter	MV3-20	368689	4907317	2	0	0	100.3	100.3	1	2485.91	3.25	0	78.91	0	0.25	0	0	14.43	0	0	0	0	0	0	6.72	6.72
	Inverter	MV4-2	369272	4909397	2	0	0	100.3	100.3	1	2516.57	3.25	0	79.02	0	0.26	0	0	14.49	0	0	0	0	0	0	6.55	6.55
	Inverter	MV4-3	369229	4909397	2	0	0	100.3	100.3	1	2548.7	3.25	0	79.13	0	0.27	0	0	14.55	0	0	0	0	0	0	6.37	6.37
	Inverter	MV4-4	369027	4909199	2	0	0	100.3	100.3	1	2585.09	3.25	0	79.25	0	0.28	0	0	14.62	0	0	0	0	0	0	6.17	6.17
	Inverter	MV3-9	368512	4907703	2	0	0	100.3	100.3	1	2631.02	3.25	0	79.4	0	0.29	0	0	14.7	0	0	0	0	0	0	5.92	5.92
	Inverter	MV3-16	368514	4907475	2	0	0	100.3	100.3	1	2639.84	3.25	0	79.43	0	0.29	0	0	14.72	0	0	0	0	0	0	5.87	5.87
	Inverter	MV3-21	368478	4907206	2	0	0	100.3	100.3	1	2712.99	3.25	0	79.67	0	0.3	0	0	14.86	0	0	0	0	0	0	5.48	5.48
	Inverter	MV4-1	369011	4909397	2	0	0	100.3	100.3	1	2716.23	3.25	0	79.68	0	0.3	0	0	14.86	0	0	0	0	0	0	5.47	5.47
	Inverter	MV3-15	368357	4907477	2	0	0	100.3	100.3	1	2796.06	3.25	0	79.93	0	0.32	0	0	15.01	0	0	0	0	0	0	5.05	5.05
	Inverter	MV3-11	368346	4907662	2	0	0	100.3	100.3	1	2797.48	3.25	0	79.94	0	0.32	0	0	15.01	0	0	0	0	0	0	5.05	5.05
	Inverter	MV3-19	368357	4907347	2	0	0	100.3	100.3	1	2810.07	3.25	0	79.97	0	0.32	0	0	15.03	0	0	0	0	0	0	4.98	4.98
	Inverter	MV3-17	368178	4907472	2	0	0	100.3	100.3	1	2974.86	3.25	0	80.47	0	0.36	0	0	15.33	0	0	0	0	0	0	4.16	4.16
	Inverter	MV3-10	368167	4907669	2	0	0	100.3	100.3	1	2976.34	3.25	0	80.47	0	0.36	0	0	15.33	0	0	0	0	0	0	4.15	4.15
	Inverter	MV3-6	368162	4907834	2	0	0	100.3	100.3	1	2983.42	3.25	0	80.49	0	0.36	0	0	15.34	0	0	0	0	0	0	4.12	4.12
	DSTATCOM - 10 MVAR #1	DSAT1	369437	4908757	2.5	0	0	96.6	96.6	1	1999.57	3.5	0	77.02	0	3.22	0	0	1.72	0	0	0	0	0	0	14.67	14.67
	DSTATCOM - 10 MVAR #2	DSAT2	369403	4908757	2.5	0	0	96.6	96.6	1	2028.66	3.5	0	77.14	0	3.23	0	0	1.74	0	0	0	0	0	0	14.52	14.52
	Inverter	MV3-13	367963	4907577	2	0	0	100.3	100.3	1	3182.95	3.25	0	81.06	0	0.4	0	0	15.69	0	0	0	0	0	0	3.17	3.17
	Inverter	MV3-7	367945	4907754	2	0	0	100.3	100.3	1	3198.25	3.25	0	81.1	0	0.4	0	0	15.72	0	0	0	0	0	0	3.1	3.1
	Inverter	MV3-3	367939	4907927	2	0	0	100.3	100.3	1	3211.07	3.25	0	81.13	0	0.4	0	0	15.74	0	0	0	0	0	0	3.04	3.04
	Inverter	MV3-18	367752	4907412	2	0	0	100.3	100.3	1	3404.42	3.25	0	81.64	0	0.44	0	0	16.07	0	0	0	0	0	0	2.17	2.17
	Inverter	MV3-12	367668	4907594	2	0	0	100.3	100.3	1	3477.07	3.25	0	81.82	0	0.45	0	0	16.19	0	0	0	0	0	0	1.85	1.85
	Inverter	MV5-6	369982	4908507	2	0	0	89.1	89.1	1	1405.98	3.25	0	73.96	0	0.77	0	0	7.05	0	0	0	0	0	0	7.28	7.28
	Inverter	MV2-3	365820	4906641	2	0	0	100.3	100.3	1	5430.07	3.25	0	85.7	0	0.68	0	0	19.2	0	0	0	0	0	0	-5.26	-5.26
	SubstationTransformer	W_ST	369711.17	4906112.3	2.5	0	0	92	92	1	2148.41	3.5	0	77.64	0	-0.13	0	0	4.62	0	0	0	0	0	0	9.85	9.85
	Inverter	MV2-4	365586	4906624	2	0	0	100.3	100.3	1	5662.89	3.25	0	86.06	0	0.69	0	0	19.53	0	0	0	0	0	0	-5.97	-5.97
	Inverter	MV6-4	370250	4906966	2	0	0	86.1	86.1	1	1164.89	3.25	0	72.33	0	0.72	0	0	6.62	0	0	0	0	0	0	6.39	6.39
	Westbrook Inverter Enclosur	W_INV6	369875	4906578	2	0	0	89.1	89.1	1	1702.45	3.25	0	75.62	0	0.84	0	0	7.55	0	0	0	0	0	0	5.05	5.05
	Inverter	MV1-15	365315	4904994	2	0	0	100.3	100.3	1	6431.48	3.25	0	87.17	0	0.71	0	0	20.57	0	0	0	0	0	0	-8.14	-8.14
	Inverter	MV1-12	365038	4905386	2	0	0	100.3	100.3	1	6533.81	3.25	0	87.3	0	0.71	0	0	20.7	0	0	0	0	0	0	-8.41	-8.41
	Inverter	MV1-4	364815	4905918	2	0	0	100.3	100.3	1	6577.93	3.25	0	87.36	0	0.72	0	0	20.76	0	0	0	0	0	0	-8.53	-8.53
	Inverter	MV1-2	364753	4906063	2	0	0	100.3	100.3	1	6599.84	3.25	0	87.39	0	0.72	0	0	20.79	0	0	0	0	0	0	-8.58	-8.58
	Inverter	MV1-1	364715	4906166	2	0	0	100.3	100.3	1	6611.77	3.25	0	87.41	0	0.71	0	0	20.8	0	0	0	0	0	0	-8.61	-8.61
	Fixed Reactor Bank 2	FRB2	369464	4908755	6	0	0	89.8	89.8	1	1975.53	5.25	0	76.91	0	-1	0	0	4.32	0	0	0	0	0	0	9.53	9.53
	Westbrook Inverter Enclosur	W_INV5	369719	4906574	2	0	0	89.1	89.1	1	1824.11	3.25	0	76.22	0	0.87	0	0	7.76	0	0	0	0	0	0	4.22	4.22
	Inverter	MV1-8	364788	4905647	2	0	0	100.3	100.3	1	6682.7	3.25	0	87.5	0	0.71	0	0	20.9	0	0	0	0	0	0	-8.8	-8.8
	Inverter	MV1-5	364671	4905892	2	0	0	100.3	100.3	1	6723.58	3.25	0	87.55	0	0.71	0	0	20.95	0	0	0	0	0	0	-8.9	-8.9
	Westbrook Inverter Enclosur	W_INV7	369780	4906417	2	0	0	89.1	89.1	1	1881.48	3.25	0	76.49	0	0.88	0	0	7.85	0	0	0	0	0	0	3.84	3.84
	Inverter	MV1-11	364655	4905414	2	0	0	100.3	100.3	1	6883.61	3.25	0	87.76	0	0.71	0	0	21.15	0	0	0	0	0	0	-9.31	-9.31
	Fixed Reactor Bank 1	FRB1	369378	4908755	6	0	0	89.8	89.8	1	2049.12	5.25	0	77.23	0	-0.99	0	0	4.45	0	0	0	0	0	0	9.08	9.08
	Inverter	MV1-9	364561	4905646	2	0	0	100.3	100.3	1	6899.23	3.25	0	87.78	0	0.71	0	0	21.17	0	0	0	0	0	0	-9.35	-9.35
	Inverter	MV1-6	364477	4905835	2	0	0	100.3	100.3	1	6925.76	3.25	0	87.81	0	0.71	0	0	21.21	0	0	0	0	0	0	-9.41	-9.41
	Inverter	MV2-1	365842	4906816	2	0	0	97.3	97.3	1	5376.52	3.25	0	85.61	0	0.67	0	0	19.13	0	0	0	0	0	0	-8.1	-8.1

Inverter	MV4-15	369176	4908481	2	0	0	89.1	89.1	1	2111.25	3.25	0	77.49	0	0.93	0	0	8.23	0	0	0	0	0	0	2.41	2.41
Inverter	MV4-14	369176	4908507	2	0	0	89.1	89.1	1	2120.84	3.25	0	77.53	0	0.94	0	0	8.24	0	0	0	0	0	0	2.35	2.35
Westbrook Inverter Enclosur	W_INV4	369673	4906164	2	0	0	89.1	89.1	1	2136.21	3.25	0	77.59	0	0.94	0	0	8.27	0	0	0	0	0	0	2.26	2.26
Westbrook Inverter Enclosur	W_INV2	369374	4906388	2	0	0	89.1	89.1	1	2210.8	3.25	0	77.89	0	0.96	0	0	8.39	0	0	0	0	0	0	1.82	1.82
Westbrook Inverter Enclosur	W_INV3	369508	4906164	2	0	0	89.1	89.1	1	2252.94	3.25	0	78.05	0	0.97	0	0	8.45	0	0	0	0	0	0	1.58	1.58
Inverter	MV4-13	369051	4908605	2	0	0	89.1	89.1	1	2273.84	3.25	0	78.14	0	0.97	0	0	8.49	0	0	0	0	0	0	1.46	1.46
Inverter	MV4-12	369043	4908803	2	0	0	89.1	89.1	1	2365.57	3.25	0	78.48	0	0.99	0	0	8.63	0	0	0	0	0	0	0.95	0.95
Inverter	MV3-2	368671	4907928	2	0	0	89.1	89.1	1	2481.25	3.25	0	78.89	0	1.02	0	0	8.82	0	0	0	0	0	0	0.33	0.33
Inverter	MV1-10	365004	4905564	2	0	0	97.3	97.3	1	6504.6	3.25	0	87.26	0	0.71	0	0	20.66	0	0	0	0	0	0	-11.33	-11.33
Inverter	MV1-7	364925	4905782	2	0	0	97.3	97.3	1	6511.23	3.25	0	87.27	0	0.71	0	0	20.67	0	0	0	0	0	0	-11.35	-11.35
Inverter	MV1-14	365163	4905049	2	0	0	97.3	97.3	1	6546.96	3.25	0	87.32	0	0.71	0	0	20.72	0	0	0	0	0	0	-11.44	-11.44
Inverter	MV3-22	368656	4907142	2	0	0	89.1	89.1	1	2551.93	3.25	0	79.14	0	1.04	0	0	8.93	0	0	0	0	0	0	-0.04	-0.04
Inverter	MV3-4	368502	4907925	2	0	0	89.1	89.1	1	2649.42	3.25	0	79.46	0	1.06	0	0	9.08	0	0	0	0	0	0	-0.55	-0.55
Inverter	MV1-13	364731	4905241	2	0	0	97.3	97.3	1	6872.37	3.25	0	87.74	0	0.71	0	0	21.14	0	0	0	0	0	0	-12.28	-12.28
Inverter	MV3-5	368340	4907843	2	0	0	89.1	89.1	1	2805.97	3.25	0	79.96	0	1.1	0	0	9.32	0	0	0	0	0	0	-1.32	-1.32
Westbrook Inverter Enclosur	W_INV1	369409	4906578	2	0	0	86.1	86.1	1	2072.98	3.25	0	77.33	0	0.92	0	0	8.16	0	0	0	0	0	0	-0.36	-0.36
Inverter	MV3-1	368156	4907976	2	0	0	89.1	89.1	1	2998.47	3.25	0	80.54	0	1.15	0	0	9.61	0	0	0	0	0	0	-2.24	-2.24
Gardiner Substation	G_Sub	366586.3	4903349.9	2.5	0	0	90.8	90.8	1	6309.43	4.25	0	87	0	1.94	2.04	0.34	10.07	0	0	0	0	0	0	-10.27	-10.27
Inverter	MV2-2	365977	4906654	2	0	0	89.1	89.1	1	5273.63	3.25	0	85.44	0	1.71	0	0	12.83	0	0	0	0	0	0	-10.92	-10.92
Westbrook Inverter Transfor	W_INVTR6	369881	4906578	2	0	0	77.3	77.3	1	1697.98	3.25	0	75.6	0	-2.29	0	0	1.06	0	0	0	0	0	0	2.97	2.97
Inverter	MV1-3	364440	4906039	2	0	0	89.1	89.1	1	6909.11	3.25	0	87.79	0	2.11	0	0	14.88	0	0	0	0	0	0	-15.71	-15.71
Westbrook Inverter Transfor	W_INVTR5	369725	4906574	2	0	0	77.3	77.3	1	1819.43	3.25	0	76.2	0	-2.34	0	0	1.12	0	0	0	0	0	0	2.36	2.36
Westbrook Inverter Transfor	W_INVTR1	369403	4906578	2	0	0	78.2	78.2	1	2078	3.25	0	77.35	0	-2.43	0	0	1.24	0	0	0	0	0	0	2.08	2.08
Westbrook Inverter Transfor	W_INVTR7	369786	4906417	2	0	0	77.3	77.3	1	1877.14	3.25	0	76.47	0	-2.36	0	0	1.15	0	0	0	0	0	0	2.08	2.08
Inverters	G_Inv2	366676.9	4903239.1	2	0	0	87.7	87.7	1	6322.25	3.25	0	87.02	0	2.93	0	0	7.31	0	0	0	0	0	0	-9.59	-9.59
Inverters	G_Inv4	366732.8	4903105	2	0	0	87.7	87.7	1	6379.09	3.25	0	87.1	0	2.93	0	0	7.36	0	0	0	0	0	0	-9.73	-9.73
Inverters	G_Inv6	366788.5	4902972	2	0	0	87.7	87.7	1	6438.03	3.25	0	87.18	0	2.93	0	0	7.42	0	0	0	0	0	0	-9.87	-9.87
Inverters	G_Inv1	366526.4	4903225.8	2	0	0	87.7	87.7	1	6438.71	3.25	0	87.18	0	2.93	0	0	7.43	0	0	0	0	0	0	-9.87	-9.87
Inverters	G_Inv3	366583.7	4903091.4	2	0	0	87.7	87.7	1	6492.74	3.25	0	87.25	0	2.94	0	0	7.48	0	0	0	0	0	0	-10	-10
Inverters	G_Inv8	366844.5	4902838.5	2	0	0	87.7	87.7	1	6499.82	3.25	0	87.26	0	2.94	0	0	7.49	0	0	0	0	0	0	-10.02	-10.02
Inverters	G_Inv5	366638.5	4902958.1	2	0	0	87.7	87.7	1	6550.5	3.25	0	87.33	0	2.94	0	0	7.54	0	0	0	0	0	0	-10.14	-10.14
Inverters	G_Inv10	366900.7	4902704.8	2	0	0	87.7	87.7	1	6564.24	3.25	0	87.34	0	2.94	0	0	7.55	0	0	0	0	0	0	-10.17	-10.17
Inverters	G_Inv7	366694.6	4902824.7	2	0	0	87.7	87.7	1	6610.11	3.25	0	87.4	0	2.94	0	0	7.6	0	0	0	0	0	0	-10.28	-10.28
Inverters	G_Inv9	366750.9	4902691.8	2	0	0	87.7	87.7	1	6671.81	3.25	0	87.48	0	2.94	0	0	7.66	0	0	0	0	0	0	-10.43	-10.43
Westbrook Inverter Transfor	W_INVTR4	369679	4906164	2	0	0	77.3	77.3	1	2132.09	3.25	0	77.58	0	-2.45	0	0	1.27	0	0	0	0	0	0	0.95	0.95
Westbrook Inverter Transfor	W_INVTR2	369368	4906388	2	0	0	77.3	77.3	1	2215.61	3.25	0	77.91	0	-2.48	0	0	1.31	0	0	0	0	0	0	0.6	0.6
Westbrook Inverter Transfor	W_INVTR3	369514	4906164	2	0	0	77.3	77.3	1	2248.59	3.25	0	78.04	0	-2.49	0	0	1.32	0	0	0	0	0	0	0.47	0.47
Inverter Transformer	MV6-1 T	370230	4907364	2	0	0	69.4	69.4	1	977.79	3.25	0	70.8	0	1.67	0	0	3.78	0	0	0	0	0	0	-6.9	-6.9
Inverter Transformer	MV6-4 T	370244	4906966	2	0	0	69.4	69.4	1	1169.49	3.25	0	72.36	0	1.8	0	0	4.04	0	0	0	0	0	0	-8.85	-8.85
Inverter Transformer	MV6-3 T	370202	4907140	2	0	0	56.1	56.1	1	1102.25	3.25	0	71.85	0	0.05	0	0	5.13	0	0	0	0	0	0	-20.97	-20.97
Inverter Transformer	MV6-2 T	370091	4907339	2	0	0	56.1	56.1	1	1116.84	3.25	0	71.96	0	0.05	0	0	5.16	0	0	0	0	0	0	-21.12	-21.12
Inverter Transformer	MV2-1 T	365836	4906816	2	0	0	69.4	69.4	1	5382.44	3.25	0	85.62	0	3.09	0	0	7.63	0	0	0	0	0	0	-26.99	-26.99
Inverter Transformer	MV5-4 T	370330	4908707	2	0	0	56.1	56.1	1	1283.36	3.25	0	73.17	0	0.11	0	0	5.54	0	0	0	0	0	0	-22.77	-22.77
Inverter Transformer	MV5-6 T	369987	4908507	2	0	0	56.1	56.1	1	1401.85	3.25	0	73.93	0	0.16	0	0	5.81	0	0	0	0	0	0	-23.84	-23.84
Inverter Transformer	MV1-10 T	365010	4905564	2	0	0	69.4	69.4	1	6498.94	3.25	0	87.26	0	3.26	0	0	8.32	0	0	0	0	0	0	-29.48	-29.48
Inverter Transformer	MV1-7 T	364919	4905782	2	0	0	69.4	69.4	1	6516.96	3.25	0	87.28	0	3.26	0	0	8.33	0	0	0	0	0	0	-29.52	-29.52
Inverter Transformer	MV1-14 T	365157	4905049	2	0	0	69.4	69.4	1	6552.44	3.25	0	87.33	0	3.27	0	0	8.35	0	0	0	0	0	0	-29.59	-29.59
Inverter Transformer	MV5-3 T	370237	4908851	2	0	0	56.1	56.1	1	1453.83	3.25	0	74.25	0	0.18	0	0	5.92	0	0	0	0	0	0	-24.29	-24.29
Inverter Transformer	MV5-5 T	370021	4908690	2	0	0	56.1	56.1	1	1487.1	3.25	0	74.45	0	0.19	0	0	5.99	0	0	0	0	0	0	-24.57	-24.57
Inverter Transformer	MV1-13 T	364725	4905241	2	0	0	69.4	69.4	1	6877.97	3.25	0	87.75	0	3.3	0	0	8.53	0	0	0	0	0	0	-30.24	-30.24
Inverter Transformer	MV5-2 T	370011	4908853	2	0	0	56.1	56.1	1	1605.85	3.25	0	75.11	0	0.24	0	0	6.24	0	0	0	0	0	0	-25.54	-25.54
Inverter Transformer	MV5-1 T	370015	4909142	2	0	0	56.1	56.1	1	1819.77	3.25	0	76.2	0	0.33	0	0	6.68	0	0	0	0	0	0	-27.15	-27.15
Inverter Transformer	MV4-14 T	369182	4908507	2	0	0	56.1	56.1	1	2115.27	3.25	0	77.51	0	0.45	0	0	7.27	0	0	0	0	0	0	-29.17	-29.17
Inverter Transformer	MV4-15 T	369170	4908481	2	0	0	56.1	56.1	1	2116.84	3.25	0	77.51	0	0.45	0	0	7.27	0	0	0	0	0	0	-29.18	-29.18
Inverter Transformer	MV4-10 T	369307	4908858	2	0	0	56.1	56.1	1	2163.25	5.18	0	77.7	0	1.36	2.92	0.06	7.36	0	0	0	0	0	0	-33.29	-33.29
Inverter Transformer	MV4-11 T	369269	4908855	2	0	0	56.1	56.1	1	2194.03	3.25	0	77.82	0	0.49	0	0	7.42	0	0	0	0	0	0	-29.67	-29.67
Inverter Transformer	MV4-9 T	369284	4909001	2	0	0	56.1	56.1	1	2261.03	3.25	0	78.09	0	0.51	0	0	7.55	0	0	0	0	0	0	-30.09	-30.09
Inverter Transformer	MV4-13 T	369057	4908605	2	0	0	56.1	56.1	1	2268.32	3.25	0	78.11	0	0.52	0	0	7.56	0	0	0	0	0	0	-30.13	-30.13
Inverter Transformer	MV4-8 T	369262	4909001	2	0	0	56.1	56.1	1	2279.15	3.25	0	78.16	0	0.52	0	0	7.58	0	0	0	0	0	0	-30.2	-30.2
Inverter Transformer	MV4-12 T	369049	4908803	2	0	0	56.1	56.1	1	2360.25	3.25	0	78.46	0	0.56	0	0	7.73	0	0	0	0	0	0	-30.69	-30.69
Inverter Transformer	MV4-5 T	369283	4909199	2	0	0	56.1	56.1	1	2380.09	3.25	0	78.53	0	0.57	0	0	7.77	0	0	0	0	0	0	-30.81	-30.81
Inverter Transformer	MV4-6 T	369249	4909192	2	0	0	56.1	56.1	1	2402.44	3.25	0	78.61	0	0.57	0	0	7.81	0	0	0	0	0	0	-30.94	-30.94
Inverter Transformer	MV3-8 T	368685	4907712	2	0	0	56.1	56.1	1	2458	3.25	0	78.81	0	0.6	0	0	7.91	0	0	0	0	0	0	-31.26	-31.26
Inverter Transformer	MV4-7 T	369040	4909001	2	0	0	56.1	56.1	1	2465.56	3.25	0	78.84	0	0.6	0	0	7.93	0	0	0	0	0	0	-31.31	-31.31
Inverter Transformer	MV3-14 T	368678	4907498	2	0	0	56.1	56.1	1	2474.45	3.25	0	78.87	0	0.61	0	0	7.94	0	0	0	0	0	0	-31.36	-31.36
Inverter Transformer	MV3-2 T	368677	4907928	2	0	0	56.1	56.1	1	2475.27	3.25	0	78.87	0	0.61	0	0	7.94	0	0	0	0	0	0	-31.36	-31.36
Inverter Transformer	MV3-20 T	368683	4907317	2	0	0	56.1	56.1	1	2491.83	3.25	0	78.93	0	0.61	0	0	7.97	0	0	0	0	0	0	-31.46	-31.46
Inverter Transformer	MV4-2 T	369267	4909397	2	0	0	56.1	56.1	1	2520.29	3.25	0	79.03	0	0.63	0	0	8.03	0	0	0	0	0	0	-31.62	-31.62
Inverter Transformer	MV4-3 T	369234	4909397	2	0	0	56.1	56.1	1	2544.95	3.25	0	79.11	0	0.64	0	0	8.07	0	0	0	0	0	0	-31.76	-31.76
Inverter Transformer	MV3-22 T	368661	4907142	2	0	0	56.1	56.1	1	2547.06	3.25	0	79.12	0	0.64	0	0	8.07	0	0	0	0	0	0	-31.77	-31.77
Inverter Transformer	MV4-4 T	369033	4909199	2	0	0	56.1	56.1	1	2580.18	3.25	0	79.23	0	0.65	0	0	8.13	0	0	0	0	0	0	-31.96	-31.96
Inverter Transformer	MV3-9 T	368517	4907703	2	0	0	56.1	56.1	1	2626.02	3.25	0	79.39	0	0.67	0	0	8.22	0	0	0	0	0	0	-32.21	-32.21
Inverter Transformer	MV3-4 T	368507	4907925	2	0	0	56.1	56.1	1	2644.43	3.25	0	79.45	0	0.68	0	0	8.25	0	0	0	0	0	0	-32.32	-32.32
Inverter Transformer	MV3-16 T	368509	4907475	2	0	0	56.1	56.1	1	2644.82	3.25	0	79.45	0	0.68	0	0	8.25	0	0	0	0	0	0	-32.32	-32.32

	Inverter Transformer	MV3-21 T	368484	4907206	2	0	0	56.1	56.1	1	2707.09	3.25	0	79.65	0	0.7	0	0	8.36	0	0	0	0	0	0	-32.66	-32.66
	Inverter Transformer	MV4-1 T	369017	4909397	2	0	0	56.1	56.1	1	2711.53	3.25	0	79.66	0	0.71	0	0	8.37	0	0	0	0	0	0	-32.68	-32.68
	Inverter Transformer	MV3-15 T	368351	4907477	2	0	0	56.1	56.1	1	2802.04	3.25	0	79.95	0	0.75	0	0	8.53	0	0	0	0	0	0	-33.16	-33.16
	Inverter Transformer	MV3-11 T	368340	4907662	2	0	0	56.1	56.1	1	2803.48	3.25	0	79.95	0	0.75	0	0	8.53	0	0	0	0	0	0	-33.17	-33.17
	Inverter Transformer	MV3-5 T	368335	4907843	2	0	0	56.1	56.1	1	2810.96	3.25	0	79.98	0	0.75	0	0	8.54	0	0	0	0	0	0	-33.21	-33.21
	Inverter Transformer	MV3-19 T	368352	4907347	2	0	0	56.1	56.1	1	2815.03	3.25	0	79.99	0	0.75	0	0	8.55	0	0	0	0	0	0	-33.23	-33.23
	Inverter Transformer	MV3-17 T	368183	4907472	2	0	0	56.1	56.1	1	2969.88	3.25	0	80.45	0	0.82	0	0	8.82	0	0	0	0	0	0	-34.03	-34.03
	Inverter Transformer	MV3-10 T	368162	4907669	2	0	0	56.1	56.1	1	2981.34	3.25	0	80.49	0	0.82	0	0	8.84	0	0	0	0	0	0	-34.09	-34.09
	Inverter Transformer	MV3-6 T	368156	4907834	2	0	0	56.1	56.1	1	2989.41	3.25	0	80.51	0	0.83	0	0	8.85	0	0	0	0	0	0	-34.13	-34.13
	Inverter Transformer	MV3-1 T	368150	4907976	2	0	0	56.1	56.1	1	3004.45	3.25	0	80.56	0	0.83	0	0	8.88	0	0	0	0	0	0	-34.2	-34.2
	Inverter Transformer	MV3-13 T	367958	4907577	2	0	0	56.1	56.1	1	3187.95	3.25	0	81.07	0	0.91	0	0	9.18	0	0	0	0	0	0	-35.1	-35.1
	Inverter Transformer	MV3-7 T	367951	4907754	2	0	0	56.1	56.1	1	3192.25	3.25	0	81.08	0	0.91	0	0	9.19	0	0	0	0	0	0	-35.12	-35.12
	Inverter Transformer	MV3-3 T	367944	4907927	2	0	0	56.1	56.1	1	3206.08	3.25	0	81.12	0	0.92	0	0	9.21	0	0	0	0	0	0	-35.19	-35.19
	Inverter Transformer	MV3-18 T	367757	4907412	2	0	0	56.1	56.1	1	3399.44	3.25	0	81.63	0	1	0	0	9.53	0	0	0	0	0	0	-36.1	-36.1
	Inverter Transformer	MV3-12 T	367674	4907594	2	0	0	56.1	56.1	1	3471.08	3.25	0	81.81	0	1.03	0	0	9.64	0	0	0	0	0	0	-36.42	-36.42
	Inverter Transformer	MV2-2 T	365982	4906654	2	0	0	56.1	56.1	1	5268.73	3.25	0	85.43	0	1.72	0	0	12.2	0	0	0	0	0	0	-43.3	-43.3
	Inverter Transformer	MV2-3 T	365814	4906641	2	0	0	56.1	56.1	1	5435.95	3.25	0	85.71	0	1.78	0	0	12.42	0	0	0	0	0	0	-43.84	-43.84
	Inverter Transformer	MV2-4 T	365590	4906628	2	0	0	56.1	56.1	1	5658.2	3.25	0	86.05	0	1.85	0	0	12.69	0	0	0	0	0	0	-44.54	-44.54
	Inverter Transformer	MV1-15 T	365309	4904994	2	0	0	56.1	56.1	1	6436.92	3.25	0	87.17	0	2.1	0	0	13.61	0	0	0	0	0	0	-46.82	-46.82
	Inverter Transformer	MV1-12 T	365044	4905386	2	0	0	56.1	56.1	1	6528.2	3.25	0	87.3	0	2.13	0	0	13.71	0	0	0	0	0	0	-47.08	-47.08
	Inverter Transformer	MV1-4 T	364821	4905918	2	0	0	56.1	56.1	1	6572.16	3.25	0	87.35	0	2.14	0	0	13.76	0	0	0	0	0	0	-47.2	-47.2
	Inverter Transformer	MV1-2 T	364759	4906063	2	0	0	56.1	56.1	1	6594.03	3.25	0	87.38	0	2.15	0	0	13.79	0	0	0	0	0	0	-47.26	-47.26
	Inverter Transformer	MV1-1 T	364721	4906166	2	0	0	56.1	56.1	1	6605.94	3.25	0	87.4	0	2.15	0	0	13.8	0	0	0	0	0	0	-47.29	-47.29
	Inverter Transformer	MV1-8 T	364782	4905647	2	0	0	56.1	56.1	1	6688.41	3.25	0	87.51	0	2.17	0	0	13.89	0	0	0	0	0	0	-47.51	-47.51
	Inverter Transformer	MV1-5 T	364676	4905892	2	0	0	56.1	56.1	1	6718.76	3.25	0	87.55	0	2.18	0	0	13.92	0	0	0	0	0	0	-47.59	-47.59
	Inverter Transformer	MV1-11 T	364649	4905414	2	0	0	56.1	56.1	1	6889.27	3.25	0	87.76	0	2.23	0	0	14.11	0	0	0	0	0	0	-48.04	-48.04
	Inverter Transformer	MV1-9 T	364555	4905646	2	0	0	56.1	56.1	1	6904.95	3.25	0	87.78	0	2.23	0	0	14.13	0	0	0	0	0	0	-48.09	-48.09
	Inverter Transformer	MV1-3 T	364435	4906039	2	0	0	56.1	56.1	1	6913.96	3.25	0	87.79	0	2.24	0	0	14.14	0	0	0	0	0	0	-48.11	-48.11
	Inverter Transformer	MV1-6 T	364482	4905835	2	0	0	56.1	56.1	1	6920.95	3.25	0	87.8	0	2.24	0	0	14.14	0	0	0	0	0	0	-48.13	-48.13
	Line Reactor	NGR	369421	4908787.5	5	0	0	45.4	45.4	1	2029.21	5.25	0	77.15	0	3.38	1.27	0.06	0.83	0	0	0	0	0	0	-37.27	-37.27
Limit. Valu	0	0																								
Level D/N:	29.6931	29.6931																								

Receiver: Existing Noise Receptor
ID: S-R131
X: 371128
Y: 4907557
Z: 4.5
Ground: 0

ISO	Description	ID	X	Y	Z	Ground	ReflOrd	LxT	LxN	L/A	Dist.	hm	Freq	Adiv	K0b	Agr	Abar	z	Aatm	Afol	Ahous	Cmet	CmetN	Dc	RL	LtotT	LtotN
	Sol_Luce Substation	S_Substation	369426	4908792	3.5	0	0	112.1	112.1	1	2102.86	5.25	0	77.46	0	0.1	3.94	0.39	4.54	0	0	0	0	0	0	26.05	26.05
	Inverter	MV6-3	370207	4907140	2	0	0	100.3	100.3	1	1011.01	3.25	0	71.1	0	-0.24	0	0	10.95	0	0	0	0	0	0	18.51	18.51
	Inverter	MV6-2	370085	4907339	2	0	0	100.3	100.3	1	1065.54	3.25	0	71.55	0	-0.21	0	0	11.12	0	0	0	0	0	0	17.85	17.85
	Inverter	MV6-1	370235	4907364	2	0	0	97.3	97.3	1	913.62	3.25	0	70.22	0	-0.29	0	0	10.61	0	0	0	0	0	0	16.77	16.77
	Inverter	MV5-4	370324	4908707	2	0	0	100.3	100.3	1	1403.18	3.25	0	73.94	0	-0.07	0	0	12.08	0	0	0	0	0	0	14.36	14.36
	Inverter	MV5-3	370231	4908851	2	0	0	100.3	100.3	1	1574.5	3.25	0	74.94	0	-0.01	0	0	12.51	0	0	0	0	0	0	12.87	12.87
	Inverter	MV5-5	370015	4908690	2	0	0	100.3	100.3	1	1588.23	3.25	0	75.02	0	0	0	0	12.54	0	0	0	0	0	0	12.76	12.76
	Inverter	MV5-2	370006	4908853	2	0	0	100.3	100.3	1	1714.21	3.25	0	75.68	0	0.04	0	0	12.84	0	0	0	0	0	0	11.75	11.75
	Inverter	MV5-1	370020	4909142	2	0	0	100.3	100.3	1	1933.88	3.25	0	76.73	0	0.11	0	0	13.32	0	0	0	0	0	0	10.15	10.15
	Inverter	MV4-10	369312	4908858	2	0	0	100.3	100.3	1	2233.93	3.25	0	77.98	0	0.19	0	0	13.94	0	0	0	0	0	0	8.2	8.2
	Inverter	MV4-11	369264	4908855	2	0	0	100.3	100.3	1	2271.41	3.25	0	78.13	0	0.2	0	0	14.02	0	0	0	0	0	0	7.97	7.97
	Inverter	MV4-9	369289	4909001	2	0	0	100.3	100.3	1	2338.18	3.25	0	78.38	0	0.22	0	0	14.15	0	0	0	0	0	0	7.57	7.57
	Inverter	MV4-8	369256	4909001	2	0	0	100.3	100.3	1	2364.22	3.25	0	78.47	0	0.23	0	0	14.2	0	0	0	0	0	0	7.42	7.42
	Inverter	MV3-14	368684	4907498	2	0	0	100.3	100.3	1	2444.71	3.25	0	78.76	0	0.24	0	0	14.35	0	0	0	0	0	0	6.95	6.95
	Inverter	MV3-20	368689	4907317	2	0	0	100.3	100.3	1	2450.78	3.25	0	78.79	0	0.25	0	0	14.36	0	0	0	0	0	0	6.92	6.92
	Inverter	MV3-8	368680	4907712	2	0	0	100.3	100.3	1	2452.9	3.25	0	78.79	0	0.25	0	0	14.37	0	0	0	0	0	0	6.9	6.9
	Inverter	MV4-5	369289	4909199	2	0	0	100.3	100.3	1	2465.38	3.25	0	78.84	0	0.25	0	0	14.39	0	0	0	0	0	0	6.83	6.83
	Inverter	MV4-6	369243	4909192	2	0	0	100.3	100.3	1	2495.29	3.25	0	78.94	0	0.26	0	0	14.45	0	0	0	0	0	0	6.66	6.66
	Inverter	MV4-7	369035	4909001	2	0	0	100.3	100.3	1	2542.79	3.25	0	79.11	0	0.27	0	0	14.54	0	0	0	0	0	0	6.4	6.4
	Inverter	MV4-2	369272	4909397	2	0	0	100.3	100.3	1	2613.49	3.25	0	79.34	0	0.28	0	0	14.67	0	0	0	0	0	0	6.01	6.01
	Inverter	MV3-16	368514	4907475	2	0	0	100.3	100.3	1	2615.29	3.25	0	79.35	0	0.28	0	0	14.67	0	0	0	0	0	0	6	6
	Inverter	MV3-9	368512	4907703	2	0	0	100.3	100.3	1	2620.07	3.25	0	79.37	0	0.28	0	0	14.68	0	0	0	0	0	0	5.98	5.98
	Inverter	MV4-3	369229	4909397	2	0	0	100.3	100.3	1	2644.2	3.25	0	79.45	0	0.29	0	0	14.73	0	0	0	0	0	0	5.85	5.85
	Inverter	MV4-4	369027	4909199	2	0	0	100.3	100.3	1	2666.53	3.25	0	79.52	0	0.29	0	0	14.77	0	0	0	0	0	0	5.73	5.73
	Inverter	MV3-21	368478	4907206	2	0	0	100.3	100.3	1	2673.15	3.25	0	79.54	0	0.3	0	0	14.78	0	0	0	0	0	0	5.69	5.69
	Inverter	MV3-15	368357	4907477	2	0	0	100.3	100.3	1	2772.16	3.25	0	79.86	0	0.32	0	0	14.96	0	0	0	0	0	0	5.18	5.18
	Inverter	MV3-19	368357	4907347	2	0	0	100.3	100.3	1	2778.95	3.25	0	79.88	0	0.32	0	0	14.98	0	0	0	0	0	0	5.14	5.14
	Inverter	MV3-11	368346	4907662	2	0	0	100.3	100.3	1	2783.98	3.25	0	79.89	0	0.32	0	0	14.99	0	0	0	0	0	0	5.11	5.11
	Inverter	MV4-1	369011	4909397	2	0	0	100.3	100.3	1	2804.87	3.25	0	79.96	0	0.32	0	0	15.02	0	0	0	0	0	0	5.01	5.01
	Inverter	MV3-17	368178	4907472	2	0	0	100.3	100.3	1	2951.23	3.25	0	80.4	0	0.35	0	0	15.29	0	0	0	0	0	0	4.27	4.27
	Inverter	MV3-10	368167	4907669	2	0	0	100.3	100.3	1	2963.12	3.25	0	80.43	0	0.35	0	0	15.31	0	0	0	0	0	0	4.22	4.22
	Inverter	MV3-6	368162	4907834	2	0	0	100.3	100.3	1	2978.91	3.25	0	80.48	0	0.36	0	0	15.33	0	0	0	0	0	0	4.14	4.14
	Inverter	MV3-13	367963	4907577	2	0	0	100.3	100.3	1	3165.06	3.25	0	81.01	0	0.39	0	0	15.66	0	0	0	0	0	0	3.25	3.25

DSTATCOM - 10 MVAR #1	DSAT1	369437	4908757	2.5	0	0	96.6	96.6	1	2073.52	3.5	0	77.33	0	3.24	0	0	1.76	0	0	0	0	0	0	14.3	14.3
Inverter	MV3-7	367945	4907754	2	0	0	100.3	100.3	1	3189.09	3.25	0	81.07	0	0.4	0	0	15.7	0	0	0	0	0	0	3.14	3.14
Inverter	MV3-3	367939	4907927	2	0	0	100.3	100.3	1	3210.39	3.25	0	81.13	0	0.4	0	0	15.74	0	0	0	0	0	0	3.04	3.04
DSTATCOM - 10 MVAR #2	DSAT2	369403	4908757	2.5	0	0	96.6	96.6	1	2101.34	3.5	0	77.45	0	3.24	0	0	1.78	0	0	0	0	0	0	14.16	14.16
Inverter	MV3-18	367752	4907412	2	0	0	100.3	100.3	1	3379.11	3.25	0	81.58	0	0.43	0	0	16.03	0	0	0	0	0	0	2.28	2.28
Inverter	MV3-12	367668	4907594	2	0	0	100.3	100.3	1	3460.2	3.25	0	81.78	0	0.44	0	0	16.16	0	0	0	0	0	0	1.92	1.92
SubstationTransformer	W_ST	369711.17	4906112.3	2.5	0	0	92	92	1	2023.53	4.25	0	77.12	0	0.73	3.26	0.19	4.41	0	0	0	0	0	0	6.46	6.46
Inverter	MV2-3	365820	4906641	2	0	0	100.3	100.3	1	5386.46	3.25	0	85.63	0	0.67	0	0	19.14	0	0	0	0	0	0	-5.13	-5.13
Inverter	MV5-6	369982	4908507	2	0	0	89.1	89.1	1	1488.56	3.25	0	74.46	0	0.79	0	0	7.19	0	0	0	0	0	0	6.62	6.62
Inverter	MV6-4	370250	4906966	2	0	0	86.1	86.1	1	1058.38	3.25	0	71.49	0	0.7	0	0	6.42	0	0	0	0	0	0	7.44	7.44
Inverter	MV2-4	365586	4906624	2	0	0	100.3	100.3	1	5619.99	3.25	0	85.99	0	0.69	0	0	19.47	0	0	0	0	0	0	-5.84	-5.84
Westbrook Inverter Enclosur	W_INV6	369875	4906578	2	0	0	89.1	89.1	1	1590.11	3.25	0	75.03	0	0.81	0	0	7.36	0	0	0	0	0	0	5.85	5.85
Westbrook Inverter Enclosur	W_INV5	369719	4906574	2	0	0	89.1	89.1	1	1718.02	3.25	0	75.7	0	0.84	0	0	7.58	0	0	0	0	0	0	4.94	4.94
Inverter	MV1-15	365315	4904994	2	0	0	100.3	100.3	1	6352.95	3.25	0	87.06	0	0.71	0	0	20.47	0	0	0	0	0	0	-7.93	-7.93
Westbrook Inverter Enclosur	W_INV7	369780	4906417	2	0	0	89.1	89.1	1	1765.42	3.25	0	75.94	0	0.85	0	0	7.66	0	0	0	0	0	0	4.61	4.61
Inverter	MV1-12	365038	4905386	2	0	0	100.3	100.3	1	6465.4	3.25	0	87.21	0	0.71	0	0	20.61	0	0	0	0	0	0	-8.23	-8.23
Inverter	MV1-4	364815	4905918	2	0	0	100.3	100.3	1	6522.29	3.25	0	87.29	0	0.71	0	0	20.69	0	0	0	0	0	0	-8.38	-8.38
Inverter	MV1-2	364753	4906063	2	0	0	100.3	100.3	1	6547.72	3.25	0	87.32	0	0.71	0	0	20.72	0	0	0	0	0	0	-8.45	-8.45
Inverter	MV1-1	364715	4906166	2	0	0	100.3	100.3	1	6562.12	3.25	0	87.34	0	0.72	0	0	20.74	0	0	0	0	0	0	-8.48	-8.48
Inverter	MV1-8	364788	4905647	2	0	0	100.3	100.3	1	6621.46	3.25	0	87.42	0	0.71	0	0	20.82	0	0	0	0	0	0	-8.64	-8.64
Inverter	MV1-5	364671	4905892	2	0	0	100.3	100.3	1	6668.21	3.25	0	87.48	0	0.71	0	0	20.88	0	0	0	0	0	0	-8.76	-8.76
Inverter	MV1-11	364655	4905414	2	0	0	100.3	100.3	1	6818.52	3.25	0	87.67	0	0.71	0	0	21.07	0	0	0	0	0	0	-9.14	-9.14
Inverter	MV1-9	364561	4905646	2	0	0	100.3	100.3	1	6839.4	3.25	0	87.7	0	0.71	0	0	21.1	0	0	0	0	0	0	-9.2	-9.2
Inverter	MV1-6	364477	4905835	2	0	0	100.3	100.3	1	6870.31	3.25	0	87.74	0	0.71	0	0	21.14	0	0	0	0	0	0	-9.28	-9.28
Fixed Reactor Bank 2	FRB2	369464	4908755	6	0	0	89.8	89.8	1	2050.39	5.25	0	77.24	0	-0.99	0	0	4.45	0	0	0	0	0	0	9.08	9.08
Fixed Reactor Bank 1	FRB1	369378	4908755	6	0	0	89.8	89.8	1	2120.78	5.25	0	77.53	0	-0.98	0	0	4.57	0	0	0	0	0	0	8.66	8.66
Westbrook Inverter Enclosur	W_INV4	369673	4906164	2	0	0	89.1	89.1	1	2014.32	3.25	0	77.08	0	0.91	0	0	8.07	0	0	0	0	0	0	3	3
Inverter	MV2-1	365842	4906816	2	0	0	97.3	97.3	1	5337.69	3.25	0	85.55	0	0.67	0	0	19.07	0	0	0	0	0	0	-7.97	-7.97
Westbrook Inverter Enclosur	W_INV2	369374	4906388	2	0	0	89.1	89.1	1	2107.86	3.25	0	77.48	0	0.93	0	0	8.22	0	0	0	0	0	0	2.43	2.43
Westbrook Inverter Enclosur	W_INV3	369508	4906164	2	0	0	89.1	89.1	1	2136.55	3.25	0	77.59	0	0.94	0	0	8.27	0	0	0	0	0	0	2.26	2.26
Inverter	MV4-15	369176	4908481	2	0	0	89.1	89.1	1	2159.65	3.25	0	77.69	0	0.94	0	0	8.3	0	0	0	0	0	0	2.12	2.12
Inverter	MV4-14	369176	4908507	2	0	0	89.1	89.1	1	2170.9	3.25	0	77.73	0	0.95	0	0	8.32	0	0	0	0	0	0	2.06	2.06
Inverter	MV4-13	369051	4908605	2	0	0	89.1	89.1	1	2326.42	3.25	0	78.33	0	0.98	0	0	8.57	0	0	0	0	0	0	1.17	1.17
Inverter	MV4-12	369043	4908803	2	0	0	89.1	89.1	1	2428.94	3.25	0	78.71	0	1.01	0	0	8.73	0	0	0	0	0	0	0.61	0.61
Inverter	MV3-2	368671	4907928	2	0	0	89.1	89.1	1	2484.85	3.25	0	78.91	0	1.02	0	0	8.82	0	0	0	0	0	0	0.31	0.31
Inverter	MV1-10	365004	4905564	2	0	0	97.3	97.3	1	6440.14	3.25	0	87.18	0	0.71	0	0	20.58	0	0	0	0	0	0	-11.16	-11.16
Inverter	MV1-7	364925	4905782	2	0	0	97.3	97.3	1	6451.96	3.25	0	87.19	0	0.71	0	0	20.6	0	0	0	0	0	0	-11.19	-11.19
Inverter	MV1-14	365163	4905049	2	0	0	97.3	97.3	1	6470.8	3.25	0	87.22	0	0.71	0	0	20.62	0	0	0	0	0	0	-11.24	-11.24
Inverter	MV3-22	368656	4907142	2	0	0	89.1	89.1	1	2506.59	3.25	0	78.98	0	1.03	0	0	8.86	0	0	0	0	0	0	0.19	0.19
Inverter	MV1-13	364731	4905241	2	0	0	97.3	97.3	1	6803.34	3.25	0	87.65	0	0.71	0	0	21.05	0	0	0	0	0	0	-12.11	-12.11
Inverter	MV3-4	368502	4907925	2	0	0	89.1	89.1	1	2651.66	3.25	0	79.47	0	1.06	0	0	9.08	0	0	0	0	0	0	-0.56	-0.56
Westbrook Inverter Enclosur	W_INV1	369409	4906578	2	0	0	86.1	86.1	1	1978.23	3.25	0	76.93	0	0.9	0	0	8.01	0	0	0	0	0	0	0.22	0.22
Inverter	MV3-5	368340	4907843	2	0	0	89.1	89.1	1	2802.63	3.25	0	79.95	0	1.1	0	0	9.32	0	0	0	0	0	0	-1.31	-1.31
Inverter	MV3-1	368156	4907976	2	0	0	89.1	89.1	1	3001.39	3.25	0	80.55	0	1.15	0	0	9.62	0	0	0	0	0	0	-2.25	-2.25
Gardiner Substation	G_Sub	366586.3	4903349.9	2.5	0	0	90.8	90.8	1	6190.86	4.25	0	86.84	0	1.91	2.06	0.34	9.94	0	0	0	0	0	0	-9.98	-9.98
Inverter	MV2-2	365977	4906654	2	0	0	89.1	89.1	1	5229.55	3.25	0	85.37	0	1.7	0	0	12.77	0	0	0	0	0	0	-10.78	-10.78
Westbrook Inverter Transfor	W_INVTR6	369881	4906578	2	0	0	77.3	77.3	1	1585.39	3.25	0	75	0	-2.24	0	0	1	0	0	0	0	0	0	3.58	3.58
Westbrook Inverter Transfor	W_INVTR5	369725	4906574	2	0	0	77.3	77.3	1	1713.1	3.25	0	75.68	0	-2.29	0	0	1.06	0	0	0	0	0	0	2.9	2.9
Westbrook Inverter Transfor	W_INVTR7	369786	4906417	2	0	0	77.3	77.3	1	1760.84	3.25	0	75.91	0	-2.31	0	0	1.09	0	0	0	0	0	0	2.65	2.65
Inverter	MV1-3	364440	4906039	2	0	0	89.1	89.1	1	6858.11	3.25	0	87.72	0	2.09	0	0	14.82	0	0	0	0	0	0	-15.58	-15.58
Westbrook Inverter Transfor	W_INVTR1	369403	4906578	2	0	0	78.2	78.2	1	1983.45	3.25	0	76.95	0	-2.4	0	0	1.2	0	0	0	0	0	0	2.49	2.49
Inverters	G_Inv2	366676.9	4903239.1	2	0	0	87.7	87.7	1	6201.34	3.25	0	86.85	0	2.93	0	0	7.18	0	0	0	0	0	0	-9.3	-9.3
Inverters	G_Inv4	366732.8	4903105	2	0	0	87.7	87.7	1	6256.04	3.25	0	86.93	0	2.93	0	0	7.24	0	0	0	0	0	0	-9.43	-9.43
Inverters	G_Inv6	366788.5	4902972	2	0	0	87.7	87.7	1	6312.96	3.25	0	87	0	2.93	0	0	7.3	0	0	0	0	0	0	-9.57	-9.57
Inverters	G_Inv1	366526.4	4903225.8	2	0	0	87.7	87.7	1	6319.34	3.25	0	87.01	0	2.93	0	0	7.3	0	0	0	0	0	0	-9.59	-9.59
Inverters	G_Inv3	366583.7	4903091.4	2	0	0	87.7	87.7	1	6371.2	3.25	0	87.08	0	2.93	0	0	7.36	0	0	0	0	0	0	-9.71	-9.71
Inverters	G_Inv8	366844.5	4902838.5	2	0	0	87.7	87.7	1	6372.8	3.25	0	87.09	0	2.93	0	0	7.36	0	0	0	0	0	0	-9.72	-9.72
Inverters	G_Inv5	366638.5	4902958.1	2	0	0	87.7	87.7	1	6426.94	3.39	0	87.16	0	3.27	1.39	0	7.41	0	0	0	0	0	0	-11.58	-11.58
Inverters	G_Inv10	366900.7	4902704.8	2	0	0	87.7	87.7	1	6435.36	3.25	0	87.17	0	2.93	0	0	7.42	0	0	0	0	0	0	-9.87	-9.87
Inverters	G_Inv7	366694.6	4902824.7	2	0	0	87.7	87.7	1	6484.57	3.25	0	87.24	0	2.94	0	0	7.47	0	0	0	0	0	0	-9.98	-9.98
Inverters	G_Inv9	366750.9	4902691.8	2	0	0	87.7	87.7	1	6544.4	3.25	0	87.32	0	2.94	0	0	7.53	0	0	0	0	0	0	-10.13	-10.13
Westbrook Inverter Transfor	W_INVTR4	369679	4906164	2	0	0	77.3	77.3	1	2009.99	3.25	0	77.06	0	-2.41	0	0	1.21	0	0	0	0	0	0	1.48	1.48
Westbrook Inverter Transfor	W_INVTR2	369368	4906388	2	0	0	77.3	77.3	1	2112.86	3.25	0	77.5	0	-2.44	0	0	1.26	0	0	0	0	0	0	1.03	1.03
Westbrook Inverter Transfor	W_INVTR3	369514	4906164	2	0	0	77.3	77.3	1	2132.01	3.25	0	77.58	0	-2.45	0	0	1.27	0	0	0	0	0	0	0.95	0.95
Inverter Transformer	MV6-1 T	370230	4907364	2	0	0	69.4	69.4	1	918.51	3.25	0	70.26	0	1.61	0	0	3.69	0	0	0	0	0	0	-6.22	-6.22
Inverter Transformer	MV6-4 T	370244	4906966	2	0	0	69.4	69.4	1	1063.36	3.25	0	71.53	0	1.73	0	0	3.9	0	0	0	0	0	0	-7.81	-7.81
Inverter Transformer	MV6-3 T	370202	4907140	2	0	0	56.1	56.1	1	1015.56	3.25	0	71.13	0	0.02	0	0	4.93	0	0	0	0	0	0	-20.02	-20.02
Inverter Transformer	MV6-2 T	370091	4907339	2	0	0	56.1	56.1	1	1059.67	3.25	0	71.5	0	0.03	0	0	5.03	0	0	0	0	0	0	-20.51	-20.51
Inverter Transformer	MV2-1 T	365836	4906816	2	0	0	69.4	69.4	1	5343.63	3.25	0	85.56	0	3.08	0	0	7.61	0	0	0	0	0	0	-26.89	-26.89
Inverter Transformer	MV1-10 T	365010	4905564	2	0	0	69.4	69.4	1	6434.44	3.25	0	87.17	0	3.25	0	0	8.28	0	0	0	0	0	0	-29.35	-29.35
Inverter Transformer	MV1-7 T	364919	4905782	2	0	0	69.4	69.4	1	6457.73	3.25	0	87.2	0	3.25	0	0	8.29	0	0	0	0	0	0	-29.4	-29.4
Inverter Transformer	MV5-4 T	370330	4908707	2	0	0	56.1	56.1	1	1399.75	3.25	0	73.92	0	0.16	0	0	5.8	0	0	0	0	0	0	-23.82	-23.82
Inverter Transformer	MV1-14 T	365157	4905049	2	0	0	69.4	69.4	1	6476.33	3.25	0	87.23	0	3.26	0	0	8.3	0	0	0	0	0	0	-29.43	-29.43
Inverter Transformer	MV1-13 T	364725	4905241	2	0	0	69.4	69.4	1	6808.98	3.25	0	87.66	0	3.3	0	0	8.49	0	0	0	0	0	0	-30.1	-30.1

	Inverter Transformer	MV5-6 T	369987	4908507	2	0	0	56.1	56.1	1	1484.72	3.25	0	74.43	0	0.19	0	0	5.99	0	0	0	0	0	0	-24.55	-24.55
	Inverter Transformer	MV5-3 T	370237	4908851	2	0	0	56.1	56.1	1	1571.09	3.25	0	74.92	0	0.23	0	0	6.17	0	0	0	0	0	0	-25.26	-25.26
	Inverter Transformer	MV5-5 T	370021	4908690	2	0	0	56.1	56.1	1	1584.03	3.25	0	75	0	0.23	0	0	6.2	0	0	0	0	0	0	-25.37	-25.37
	Inverter Transformer	MV5-2 T	370011	4908853	2	0	0	56.1	56.1	1	1710.94	3.25	0	75.66	0	0.28	0	0	6.46	0	0	0	0	0	0	-26.35	-26.35
	Inverter Transformer	MV5-1 T	370015	4909142	2	0	0	56.1	56.1	1	1936.75	3.25	0	76.74	0	0.38	0	0	6.92	0	0	0	0	0	0	-27.98	-27.98
	Inverter Transformer	MV4-15 T	369170	4908481	2	0	0	56.1	56.1	1	2165.07	3.25	0	77.71	0	0.47	0	0	7.36	0	0	0	0	0	0	-29.49	-29.49
	Inverter Transformer	MV4-14 T	369182	4908507	2	0	0	56.1	56.1	1	2165.51	3.25	0	77.71	0	0.47	0	0	7.36	0	0	0	0	0	0	-29.49	-29.49
	Inverter Transformer	MV4-10 T	369307	4908858	2	0	0	56.1	56.1	1	2238	3.25	0	78	0	0.5	0	0	7.5	0	0	0	0	0	0	-29.95	-29.95
	Inverter Transformer	MV4-11 T	369269	4908855	2	0	0	56.1	56.1	1	2267.31	3.25	0	78.11	0	0.52	0	0	7.56	0	0	0	0	0	0	-30.13	-30.13
	Inverter Transformer	MV4-13 T	369057	4908605	2	0	0	56.1	56.1	1	2321.07	3.25	0	78.31	0	0.54	0	0	7.66	0	0	0	0	0	0	-30.45	-30.45
	Inverter Transformer	MV4-9 T	369284	4909001	2	0	0	56.1	56.1	1	2342.11	3.25	0	78.39	0	0.55	0	0	7.7	0	0	0	0	0	0	-30.58	-30.58
	Inverter Transformer	MV4-8 T	369262	4909001	2	0	0	56.1	56.1	1	2359.47	3.25	0	78.46	0	0.56	0	0	7.73	0	0	0	0	0	0	-30.69	-30.69
	Inverter Transformer	MV4-12 T	369049	4908803	2	0	0	56.1	56.1	1	2423.79	3.25	0	78.69	0	0.58	0	0	7.85	0	0	0	0	0	0	-31.07	-31.07
	Inverter Transformer	MV3-8 T	368685	4907712	2	0	0	56.1	56.1	1	2447.91	3.25	0	78.78	0	0.59	0	0	7.89	0	0	0	0	0	0	-31.21	-31.21
	Inverter Transformer	MV3-14 T	368678	4907498	2	0	0	56.1	56.1	1	2450.71	3.25	0	78.79	0	0.6	0	0	7.9	0	0	0	0	0	0	-31.22	-31.22
	Inverter Transformer	MV3-20 T	368683	4907317	2	0	0	56.1	56.1	1	2456.75	3.25	0	78.81	0	0.6	0	0	7.91	0	0	0	0	0	0	-31.26	-31.26
	Inverter Transformer	MV4-5 T	369283	4909199	2	0	0	56.1	56.1	1	2469.86	3.25	0	78.85	0	0.6	0	0	7.93	0	0	0	0	0	0	-31.33	-31.33
	Inverter Transformer	MV3-2 T	368677	4907928	2	0	0	56.1	56.1	1	2478.92	3.25	0	78.89	0	0.61	0	0	7.95	0	0	0	0	0	0	-31.39	-31.39
	Inverter Transformer	MV4-6 T	369249	4909192	2	0	0	56.1	56.1	1	2490.76	3.25	0	78.93	0	0.61	0	0	7.97	0	0	0	0	0	0	-31.45	-31.45
	Inverter Transformer	MV3-22 T	368661	4907142	2	0	0	56.1	56.1	1	2501.66	3.25	0	78.96	0	0.62	0	0	7.99	0	0	0	0	0	0	-31.52	-31.52
	Inverter Transformer	MV4-7 T	369040	4909001	2	0	0	56.1	56.1	1	2538.68	3.25	0	79.09	0	0.63	0	0	8.06	0	0	0	0	0	0	-31.73	-31.73
	Inverter Transformer	MV3-9 T	368517	4907703	2	0	0	56.1	56.1	1	2615.08	3.25	0	79.35	0	0.67	0	0	8.2	0	0	0	0	0	0	-32.15	-32.15
	Inverter Transformer	MV4-2 T	369267	4909397	2	0	0	56.1	56.1	1	2617.05	3.25	0	79.36	0	0.67	0	0	8.2	0	0	0	0	0	0	-32.17	-32.17
	Inverter Transformer	MV3-16 T	368509	4907475	2	0	0	56.1	56.1	1	2620.28	3.25	0	79.37	0	0.67	0	0	8.21	0	0	0	0	0	0	-32.18	-32.18
	Inverter Transformer	MV4-3 T	369234	4909397	2	0	0	56.1	56.1	1	2640.61	3.25	0	79.43	0	0.68	0	0	8.24	0	0	0	0	0	0	-32.3	-32.3
	Inverter Transformer	MV3-4 T	368507	4907925	2	0	0	56.1	56.1	1	2646.71	3.25	0	79.45	0	0.68	0	0	8.25	0	0	0	0	0	0	-32.33	-32.33
	Inverter Transformer	MV4-4 T	369033	4909199	2	0	0	56.1	56.1	1	2661.8	3.25	0	79.5	0	0.69	0	0	8.28	0	0	0	0	0	0	-32.41	-32.41
	Inverter Transformer	MV3-21 T	368484	4907206	2	0	0	56.1	56.1	1	2667.2	3.25	0	79.52	0	0.69	0	0	8.29	0	0	0	0	0	0	-32.44	-32.44
	Inverter Transformer	MV3-15 T	368351	4907477	2	0	0	56.1	56.1	1	2778.15	3.25	0	79.88	0	0.74	0	0	8.49	0	0	0	0	0	0	-33.04	-33.04
	Inverter Transformer	MV3-19 T	368352	4907347	2	0	0	56.1	56.1	1	2783.93	3.25	0	79.89	0	0.74	0	0	8.5	0	0	0	0	0	0	-33.07	-33.07
	Inverter Transformer	MV3-11 T	368340	4907662	2	0	0	56.1	56.1	1	2789.98	3.25	0	79.91	0	0.74	0	0	8.51	0	0	0	0	0	0	-33.1	-33.1
	Inverter Transformer	MV4-1 T	369017	4909397	2	0	0	56.1	56.1	1	2800.34	3.25	0	79.94	0	0.74	0	0	8.52	0	0	0	0	0	0	-33.16	-33.16
	Inverter Transformer	MV3-5 T	368335	4907843	2	0	0	56.1	56.1	1	2807.61	3.25	0	79.97	0	0.75	0	0	8.54	0	0	0	0	0	0	-33.19	-33.19
	Inverter Transformer	MV3-17 T	368183	4907472	2	0	0	56.1	56.1	1	2946.23	3.25	0	80.39	0	0.81	0	0	8.78	0	0	0	0	0	0	-33.91	-33.91
	Inverter Transformer	MV3-10 T	368162	4907669	2	0	0	56.1	56.1	1	2968.11	3.25	0	80.45	0	0.82	0	0	8.81	0	0	0	0	0	0	-34.02	-34.02
	Inverter Transformer	MV3-6 T	368156	4907834	2	0	0	56.1	56.1	1	2984.88	3.25	0	80.5	0	0.82	0	0	8.84	0	0	0	0	0	0	-34.11	-34.11
	Inverter Transformer	MV3-1 T	368150	4907976	2	0	0	56.1	56.1	1	3007.33	3.25	0	80.56	0	0.83	0	0	8.88	0	0	0	0	0	0	-34.22	-34.22
	Inverter Transformer	MV3-13 T	367958	4907577	2	0	0	56.1	56.1	1	3170.06	3.25	0	81.02	0	0.9	0	0	9.15	0	0	0	0	0	0	-35.02	-35.02
	Inverter Transformer	MV3-7 T	367951	4907754	2	0	0	56.1	56.1	1	3183.1	3.25	0	81.06	0	0.91	0	0	9.17	0	0	0	0	0	0	-35.08	-35.08
	Inverter Transformer	MV3-3 T	367944	4907927	2	0	0	56.1	56.1	1	3205.43	3.25	0	81.12	0	0.92	0	0	9.21	0	0	0	0	0	0	-35.19	-35.19
	Inverter Transformer	MV3-18 T	367757	4907412	2	0	0	56.1	56.1	1	3374.12	3.25	0	81.56	0	0.99	0	0	9.49	0	0	0	0	0	0	-35.98	-35.98
	Inverter Transformer	MV3-12 T	367674	4907594	2	0	0	56.1	56.1	1	3454.2	3.25	0	81.77	0	1.02	0	0	9.61	0	0	0	0	0	0	-36.34	-36.34
	Inverter Transformer	MV2-2 T	365982	4906654	2	0	0	56.1	56.1	1	5224.63	3.25	0	85.36	0	1.71	0	0	12.15	0	0	0	0	0	0	-43.15	-43.15
	Inverter Transformer	MV2-3 T	365814	4906641	2	0	0	56.1	56.1	1	5392.37	3.25	0	85.64	0	1.76	0	0	12.36	0	0	0	0	0	0	-43.7	-43.7
	Inverter Transformer	MV2-4 T	365590	4906628	2	0	0	56.1	56.1	1	5615.38	3.25	0	85.99	0	1.84	0	0	12.64	0	0	0	0	0	0	-44.41	-44.41
	Inverter Transformer	MV1-15 T	365309	4904994	2	0	0	56.1	56.1	1	6358.44	3.25	0	87.07	0	2.08	0	0	13.52	0	0	0	0	0	0	-46.6	-46.6
	Inverter Transformer	MV1-12 T	365044	4905386	2	0	0	56.1	56.1	1	6459.74	3.25	0	87.2	0	2.11	0	0	13.63	0	0	0	0	0	0	-46.89	-46.89
	Inverter Transformer	MV1-4 T	364821	4905918	2	0	0	56.1	56.1	1	6516.48	3.25	0	87.28	0	2.12	0	0	13.7	0	0	0	0	0	0	-47.04	-47.04
	Inverter Transformer	MV1-2 T	364759	4906063	2	0	0	56.1	56.1	1	6541.88	3.25	0	87.31	0	2.13	0	0	13.73	0	0	0	0	0	0	-47.11	-47.11
	Inverter Transformer	MV1-1 T	364721	4906166	2	0	0	56.1	56.1	1	6556.26	3.25	0	87.33	0	2.13	0	0	13.74	0	0	0	0	0	0	-47.15	-47.15
	Inverter Transformer	MV1-8 T	364782	4905647	2	0	0	56.1	56.1	1	6627.2	3.25	0	87.43	0	2.15	0	0	13.82	0	0	0	0	0	0	-47.35	-47.35
	Inverter Transformer	MV1-5 T	364676	4905892	2	0	0	56.1	56.1	1	6663.37	3.25	0	87.47	0	2.17	0	0	13.86	0	0	0	0	0	0	-47.44	-47.44
	Inverter Transformer	MV1-11 T	364649	4905414	2	0	0	56.1	56.1	1	6824.21	3.25	0	87.68	0	2.21	0	0	14.04	0	0	0	0	0	0	-47.87	-47.87
	Inverter Transformer	MV1-9 T	364555	4905646	2	0	0	56.1	56.1	1	6845.16	3.25	0	87.71	0	2.22	0	0	14.06	0	0	0	0	0	0	-47.93	-47.93
	Inverter Transformer	MV1-3 T	364435	4906039	2	0	0	56.1	56.1	1	6862.99	3.25	0	87.73	0	2.22	0	0	14.08	0	0	0	0	0	0	-47.98	-47.98
	Inverter Transformer	MV1-6 T	364482	4905835	2	0	0	56.1	56.1	1	6865.46	3.25	0	87.73	0	2.22	0	0	14.08	0	0	0	0	0	0	-47.98	-47.98
	Line Reactor	NGR	369421	4908787.5	5	0	0	45.4	45.4	1	2104.28	5.25	0	77.46	0	3.37	1.28	0.07	0.86	0	0	0	0	0	0	-37.62	-37.62
Limit. Valu	0	0																								
Level D/N:	29.5638	29.5638																								

Receiver: Existing Noise Receptor
ID: S-R132
X: 364903
Y: 4904460
Z: 4.5
Ground: 0

ISO	Description	ID	X	Y	Z	Ground	ReflOrd	LxT	LxN	L/A	Dist.	hm	Freq	Adiv	K0b	Agr	Abar	z	Aatm	Afol	Ahous	Cmet	CmetN	Dc	RL	LtotT	LtotN
	Inverter	MV1-15	365315	4904994	2	0	0	100.3	100.3	1	674.47	3.25	0	67.58	0	-0.43	0	0	9.61	0	0	0	0	0	0	23.55	23.55
	Inverter	MV1-14	365163	4905049	2	0	0	97.3	97.3	1	643.84	3.25	0	67.18	0	-0.45	0	0	9.45	0	0	0	0	0	0	21.13	21.13
	Inverter	MV1-12	365038	4905386	2	0	0	100.3	100.3	1	935.79	3.25	0	70.42	0	-0.28	0	0	10.69	0	0	0	0	0	0	19.47	19.47
	Inverter	MV1-11	364655	4905414	2	0	0	100.3	100.3	1	985.71	3.25	0	70.87	0	-0.25	0	0	10.86	0	0	0	0	0	0	18.83	18.83
	Inverter	MV1-13	364731	4905241	2	0	0	97.3	97.3	1	799.72	3.25	0	69.06	0	-0.35	0	0	10.18	0	0	0	0	0	0	18.43	18.43
	Inverter	MV1-8	364788	4905647	2	0	0	100.3	100.3	1	1192.56	3.25	0	72.53	0	-0.16	0	0	11.5	0	0	0	0	0	0	16.44	16.44

Inverter	MV1-9	364561	4905646	2	0	0	100.3	100.3	1	1234.33	3.25	0	72.83	0	-0.14	0	0	11.62	0	0	0	0	0	0	16	16
Inverter	MV1-6	364477	4905835	2	0	0	100.3	100.3	1	1439.48	3.25	0	74.16	0	-0.06	0	0	12.17	0	0	0	0	0	0	14.03	14.03
Inverter	MV1-5	364671	4905892	2	0	0	100.3	100.3	1	1450.67	3.25	0	74.23	0	-0.05	0	0	12.2	0	0	0	0	0	0	13.93	13.93
Inverter	MV1-4	364815	4905918	2	0	0	100.3	100.3	1	1460.66	3.25	0	74.29	0	-0.05	0	0	12.23	0	0	0	0	0	0	13.84	13.84
Inverter	MV1-10	365004	4905564	2	0	0	97.3	97.3	1	1108.61	3.25	0	71.9	0	-0.19	0	0	11.26	0	0	0	0	0	0	14.36	14.36
Inverter	MV1-2	364753	4906063	2	0	0	100.3	100.3	1	1610	3.25	0	75.14	0	0.01	0	0	12.59	0	0	0	0	0	0	12.58	12.58
Sol_Luce Substation	S_Substation	369426	4908792	3.5	0	0	112.1	112.1	1	6262.89	5.25	0	86.94	0	1.22	2.59	0.25	10.02	0	0	0	0	0	0	11.31	11.31
Inverter	MV1-1	364715	4906166	2	0	0	100.3	100.3	1	1716.33	3.25	0	75.69	0	0.04	0	0	12.84	0	0	0	0	0	0	11.74	11.74
Inverter	MV1-7	364925	4905782	2	0	0	97.3	97.3	1	1322.19	3.25	0	73.43	0	-0.1	0	0	11.87	0	0	0	0	0	0	12.12	12.12
Inverter	MV2-4	365586	4906624	2	0	0	100.3	100.3	1	2269.23	3.25	0	78.12	0	0.2	0	0	14.01	0	0	0	0	0	0	7.98	7.98
Inverter	MV2-3	365820	4906641	2	0	0	100.3	100.3	1	2365.94	3.25	0	78.48	0	0.23	0	0	14.2	0	0	0	0	0	0	7.41	7.41
Inverter	MV2-1	365842	4906816	2	0	0	97.3	97.3	1	2536.23	3.25	0	79.08	0	0.27	0	0	14.53	0	0	0	0	0	0	3.44	3.44
Inverter	MV3-18	367752	4907412	2	0	0	100.3	100.3	1	4102.57	3.25	0	83.26	0	0.54	0	0	17.21	0	0	0	0	0	0	-0.7	-0.7
Inverter	MV3-12	367668	4907594	2	0	0	100.3	100.3	1	4179.38	3.25	0	83.42	0	0.55	0	0	17.33	0	0	0	0	0	0	-0.99	-0.99
Inverter	MV3-13	367963	4907577	2	0	0	100.3	100.3	1	4367.99	3.25	0	83.81	0	0.58	0	0	17.63	0	0	0	0	0	0	-1.7	-1.7
Inverter	MV3-17	368178	4907472	2	0	0	100.3	100.3	1	4449.47	3.25	0	83.97	0	0.58	0	0	17.75	0	0	0	0	0	0	-1.99	-1.99
Inverter	MV3-7	367945	4907754	2	0	0	100.3	100.3	1	4483.77	3.25	0	84.03	0	0.59	0	0	17.81	0	0	0	0	0	0	-2.12	-2.12
Inverter	MV3-19	368357	4907347	2	0	0	100.3	100.3	1	4501.65	3.25	0	84.07	0	0.59	0	0	17.83	0	0	0	0	0	0	-2.18	-2.18
Inverter	MV3-21	368478	4907206	2	0	0	100.3	100.3	1	4507.9	3.25	0	84.08	0	0.59	0	0	17.84	0	0	0	0	0	0	-2.2	-2.2
Inverter	MV3-10	368167	4907669	2	0	0	100.3	100.3	1	4577.27	3.25	0	84.21	0	0.6	0	0	17.95	0	0	0	0	0	0	-2.45	-2.45
Inverter	MV3-15	368357	4907477	2	0	0	100.3	100.3	1	4586.11	3.25	0	84.23	0	0.6	0	0	17.96	0	0	0	0	0	0	-2.48	-2.48
Inverter	MV3-3	367939	4907927	2	0	0	100.3	100.3	1	4608.4	3.25	0	84.27	0	0.6	0	0	18	0	0	0	0	0	0	-2.56	-2.56
Inverter	MV3-6	368162	4907834	2	0	0	100.3	100.3	1	4690.94	3.25	0	84.43	0	0.61	0	0	18.12	0	0	0	0	0	0	-2.85	-2.85
Inverter	MV3-11	368346	4907662	2	0	0	100.3	100.3	1	4701.81	3.25	0	84.45	0	0.61	0	0	18.14	0	0	0	0	0	0	-2.88	-2.88
Inverter	MV3-16	368514	4907475	2	0	0	100.3	100.3	1	4704.21	3.25	0	84.45	0	0.61	0	0	18.14	0	0	0	0	0	0	-2.89	-2.89
Inverter	MV3-20	368689	4907317	2	0	0	100.3	100.3	1	4743.02	3.25	0	84.52	0	0.62	0	0	18.2	0	0	0	0	0	0	-3.02	-3.02
Inverter	MV3-14	368684	4907498	2	0	0	100.3	100.3	1	4850.3	3.25	0	84.72	0	0.63	0	0	18.36	0	0	0	0	0	0	-3.39	-3.39
Inverter	MV3-9	368512	4907703	2	0	0	100.3	100.3	1	4852	3.25	0	84.72	0	0.63	0	0	18.36	0	0	0	0	0	0	-3.4	-3.4
Inverter	MV3-8	368680	4907712	2	0	0	100.3	100.3	1	4984.1	3.25	0	84.95	0	0.64	0	0	18.56	0	0	0	0	0	0	-3.84	-3.84
Inverter	MV6-2	370085	4907339	2	0	0	100.3	100.3	1	5928.05	3.25	0	86.46	0	0.7	0	0	19.9	0	0	0	0	0	0	-6.74	-6.74
Inverter	MV6-3	370207	4907140	2	0	0	100.3	100.3	1	5942.63	3.25	0	86.48	0	0.7	0	0	19.92	0	0	0	0	0	0	-6.79	-6.79
Inverter	MV1-3	364440	4906039	2	0	0	89.1	89.1	1	1645.48	3.25	0	75.33	0	0.83	0	0	7.46	0	0	0	0	0	0	5.45	5.45
Gardiner Substation	G_Sub	366586.3	4903349.9	2.5	0	0	90.8	90.8	1	2016.39	4.25	0	77.09	0	0.86	3.74	0.3	4.39	0	0	0	0	0	0	4.69	4.69
Inverter	MV4-7	369035	4909001	2	0	0	100.3	100.3	1	6139.55	3.25	0	86.76	0	0.71	0	0	20.18	0	0	0	0	0	0	-7.34	-7.34
Inverter	MV4-11	369264	4908855	2	0	0	100.3	100.3	1	6191.47	3.25	0	86.84	0	0.71	0	0	20.25	0	0	0	0	0	0	-7.49	-7.49
Inverter	MV4-10	369312	4908858	2	0	0	100.3	100.3	1	6227.49	3.25	0	86.89	0	0.71	0	0	20.3	0	0	0	0	0	0	-7.58	-7.58
Inverter	MV4-4	369027	4909199	2	0	0	100.3	100.3	1	6282.16	3.25	0	86.96	0	0.71	0	0	20.37	0	0	0	0	0	0	-7.73	-7.73
Inverter	MV4-8	369256	4909001	2	0	0	100.3	100.3	1	6290.41	3.25	0	86.97	0	0.71	0	0	20.38	0	0	0	0	0	0	-7.76	-7.76
Inverter	MV4-9	369289	4909001	2	0	0	100.3	100.3	1	6313.29	3.25	0	87.01	0	0.71	0	0	20.41	0	0	0	0	0	0	-7.82	-7.82
Inverter	MV4-6	369243	4909192	2	0	0	100.3	100.3	1	6420.86	3.25	0	87.15	0	0.71	0	0	20.56	0	0	0	0	0	0	-8.11	-8.11
Inverter	MV4-1	369011	4909397	2	0	0	100.3	100.3	1	6422.59	3.25	0	87.15	0	0.71	0	0	20.56	0	0	0	0	0	0	-8.11	-8.11
Inverter	MV4-5	369289	4909199	2	0	0	100.3	100.3	1	6457.18	3.25	0	87.2	0	0.71	0	0	20.6	0	0	0	0	0	0	-8.21	-8.21
Inverter	MV4-3	369229	4909397	2	0	0	100.3	100.3	1	6564.16	3.25	0	87.34	0	0.72	0	0	20.74	0	0	0	0	0	0	-8.49	-8.49
Inverter	MV4-2	369272	4909397	2	0	0	100.3	100.3	1	6592.58	3.25	0	87.38	0	0.72	0	0	20.78	0	0	0	0	0	0	-8.56	-8.56
Inverter	MV5-5	370015	4908690	2	0	0	100.3	100.3	1	6635.17	3.25	0	87.44	0	0.71	0	0	20.83	0	0	0	0	0	0	-8.67	-8.67
Inverter	MV5-2	370006	4908853	2	0	0	100.3	100.3	1	6733.43	3.25	0	87.56	0	0.71	0	0	20.96	0	0	0	0	0	0	-8.93	-8.93
Inverter	MV5-4	370324	4908707	2	0	0	100.3	100.3	1	6886.53	3.25	0	87.76	0	0.71	0	0	21.16	0	0	0	0	0	0	-9.32	-9.32
Inverter	MV5-3	370231	4908851	2	0	0	100.3	100.3	1	6904.24	3.25	0	87.78	0	0.71	0	0	21.18	0	0	0	0	0	0	-9.36	-9.36
Inverter	MV5-1	370020	4909142	2	0	0	100.3	100.3	1	6935.76	3.25	0	87.82	0	0.71	0	0	21.22	0	0	0	0	0	0	-9.44	-9.44
Inverter	MV6-1	370235	4907364	2	0	0	97.3	97.3	1	6071.53	3.25	0	86.67	0	0.71	0	0	20.09	0	0	0	0	0	0	-10.15	-10.15
Inverters	G_Inv1	366526.4	4903225.8	2	0	0	87.7	87.7	1	2039.29	3.25	0	77.19	0	2.59	0	0	2.68	0	0	0	0	0	0	5.2	5.2
Inverter	MV2-2	365977	4906654	2	0	0	89.1	89.1	1	2442.77	3.25	0	78.76	0	1.01	0	0	8.76	0	0	0	0	0	0	0.53	0.53
Inverters	G_Inv2	366676.9	4903239.1	2	0	0	87.7	87.7	1	2153.44	3.25	0	77.66	0	2.6	0	0	2.81	0	0	0	0	0	0	4.58	4.58
Inverters	G_Inv3	366583.7	4903091.4	2	0	0	87.7	87.7	1	2167.45	3.25	0	77.72	0	2.6	0	0	2.83	0	0	0	0	0	0	4.51	4.51
DSTATCOM - 10 MVAR #2	DSAT2	369403	4908757	2.5	0	0	96.6	96.6	1	6222.07	3.5	0	86.88	0	3.79	0	0	3.95	0	0	0	0	0	0	2.02	2.02
DSTATCOM - 10 MVAR #1	DSAT1	369437	4908757	2.5	0	0	96.6	96.6	1	6246.71	3.5	0	86.91	0	3.79	0	0	3.96	0	0	0	0	0	0	1.97	1.97
Inverters	G_Inv4	366732.8	4903105	2	0	0	87.7	87.7	1	2276.88	3.25	0	78.15	0	2.62	0	0	2.96	0	0	0	0	0	0	3.94	3.94
Inverters	G_Inv5	366638.5	4902958.1	2	0	0	87.7	87.7	1	2295.14	3.25	0	78.22	0	2.62	0	0	2.98	0	0	0	0	0	0	3.85	3.85
Inverters	G_Inv6	366788.5	4902972	2	0	0	87.7	87.7	1	2401.93	3.25	0	78.61	0	2.63	0	0	3.1	0	0	0	0	0	0	3.32	3.32
Inverters	G_Inv7	366694.6	4902824.7	2	0	0	87.7	87.7	1	2425.7	3.25	0	78.7	0	2.63	0	0	3.13	0	0	0	0	0	0	3.2	3.2
Inverters	G_Inv8	366844.5	4902838.5	2	0	0	87.7	87.7	1	2529.56	3.25	0	79.06	0	2.65	0	0	3.24	0	0	0	0	0	0	2.71	2.71
Inverters	G_Inv9	366750.9	4902691.8	2	0	0	87.7	87.7	1	2557.59	3.25	0	79.16	0	2.65	0	0	3.28	0	0	0	0	0	0	2.58	2.58
Inverters	G_Inv10	366900.7	4902704.8	2	0	0	87.7	87.7	1	2659.24	3.25	0	79.5	0	2.66	0	0	3.39	0	0	0	0	0	0	2.11	2.11
SubstationTransformer	W_ST	369711.17	4906112.3	2.5	0	0	92	92	1	5084.14	4.25	0	85.12	0	1.66	2.31	0.27	8.72	0	0	0	0	0	0	-5.84	-5.84
Inverter	MV3-22	368656	4907142	2	0	0	89.1	89.1	1	4612.82	3.25	0	84.28	0	1.54	0	0	11.94	0	0	0	0	0	0	-8.7	-8.7
Inverter	MV3-1	368156	4907976	2	0	0	89.1	89.1	1	4790.02	3.25	0	84.61	0	1.59	0	0	12.18	0	0	0	0	0	0	-9.32	-9.32
Inverter	MV3-5	368340	4907843	2	0	0	89.1	89.1	1	4822.62	3.25	0	84.67	0	1.6	0	0	12.23	0	0	0	0	0	0	-9.43	-9.43
Westbrook Inverter Enclosur	W_INV2	369374	4906388	2	0	0	89.1	89.1	1	4868.99	3.25	0	84.75	0	1.61	0	0	12.29	0	0	0	0	0	0	-9.59	-9.59
Westbrook Inverter Enclosur	W_INV3	369508	4906164	2	0	0	89.1	89.1	1	4910.16	3.25	0	84.82	0	1.62	0	0	12.34	0	0	0	0	0	0	-9.72	-9.72
Inverter	MV3-4	368502	4907925	2	0	0	89.1	89.1	1	4995.9	3.25	0	84.97	0	1.64	0	0	12.46	0	0	0	0	0	0	-10.01	-10.01
Westbrook Inverter Enclosur	W_INV4	369673	4906164	2	0	0	89.1	89.1	1	5065.23	3.25	0	85.09	0	1.66	0	0	12.55	0	0	0	0	0	0	-10.24	-10.24
Inverter	MV3-2	368671	4907928	2	0	0	89.1	89.1	1	5121.02	3.25	0	85.19	0	1.67	0	0	12.62	0	0	0	0	0	0	-10.42	-10.42
Westbrook Inverter Enclosur	W_INV7	369780	4906417	2	0	0	89.1	89.1	1	5255	3.25	0	85.41	0	1.7	0	0	12.8	0	0	0	0	0	0	-10.86	-10.86
Westbrook Inverter Enclosur	W_INV5	369719	4906574	2	0	0	89.1	89.1	1	5259.55	3.25	0	85.42	0	1.7	0	0	12.81	0	0	0	0	0	0	-10.87	-10.87

Westbrook Inverter Enclosur	W_INV6	369875	4906578	2	0	0	89.1	89.1	1	5404.32	3.25	0	85.65	0	1.74	0	0	13	0	0	0	0	0	0	-11.33	-11.33
Fixed Reactor Bank 1	FRB1	369378	4908755	6	0	0	89.8	89.8	1	6202.63	5.25	0	86.85	0	-0.39	0	0	9.95	0	0	0	0	0	0	-6.64	-6.64
Fixed Reactor Bank 2	FRB2	369464	4908755	6	0	0	89.8	89.8	1	6264.96	5.25	0	86.94	0	-0.38	0	0	10.02	0	0	0	0	0	0	-6.8	-6.8
Inverter	MV4-13	369051	4908605	2	0	0	89.1	89.1	1	5864.04	3.25	0	86.36	0	1.85	0	0	13.59	0	0	0	0	0	0	-12.75	-12.75
Inverter	MV4-15	369176	4908481	2	0	0	89.1	89.1	1	5867.45	3.25	0	86.37	0	1.85	0	0	13.59	0	0	0	0	0	0	-12.76	-12.76
Inverter	MV4-14	369176	4908507	2	0	0	89.1	89.1	1	5885.3	3.25	0	86.4	0	1.86	0	0	13.62	0	0	0	0	0	0	-12.81	-12.81
Inverter	MV4-12	369043	4908803	2	0	0	89.1	89.1	1	6000.1	3.25	0	86.56	0	1.89	0	0	13.76	0	0	0	0	0	0	-13.15	-13.15
Inverter Transformer	MV1-14 T	365157	4905049	2	0	0	69.4	69.4	1	641.44	3.25	0	67.14	0	1.28	0	0	3.25	0	0	0	0	0	0	-2.31	-2.31
Inverter	MV5-6	369982	4908507	2	0	0	89.1	89.1	1	6494.19	3.25	0	87.25	0	2.01	0	0	14.38	0	0	0	0	0	0	-14.57	-14.57
Westbrook Inverter Enclosur	W_INV1	369409	4906578	2	0	0	86.1	86.1	1	4978.95	3.25	0	84.94	0	1.63	0	0	12.44	0	0	0	0	0	0	-12.95	-12.95
Inverter Transformer	MV1-13 T	364725	4905241	2	0	0	69.4	69.4	1	801.03	3.25	0	69.07	0	1.49	0	0	3.52	0	0	0	0	0	0	-4.73	-4.73
Inverter	MV6-4	370250	4906966	2	0	0	86.1	86.1	1	5905.12	3.25	0	86.42	0	1.86	0	0	13.64	0	0	0	0	0	0	-15.87	-15.87
Inverter Transformer	MV1-10 T	365010	4905564	2	0	0	69.4	69.4	1	1109.18	3.25	0	71.9	0	1.76	0	0	3.96	0	0	0	0	0	0	-8.27	-8.27
Inverter Transformer	MV1-7 T	364919	4905782	2	0	0	69.4	69.4	1	1322.1	3.25	0	73.43	0	1.89	0	0	4.23	0	0	0	0	0	0	-10.19	-10.19
Westbrook Inverter Transfor	W_INVTR1	369403	4906578	2	0	0	78.2	78.2	1	4973.52	3.25	0	84.93	0	-3.17	0	0	2.4	0	0	0	0	0	0	-5.92	-5.92
Westbrook Inverter Transfor	W_INVTR2	369368	4906388	2	0	0	77.3	77.3	1	4863.48	3.25	0	84.74	0	-3.15	0	0	2.37	0	0	0	0	0	0	-6.61	-6.61
Westbrook Inverter Transfor	W_INVTR3	369514	4906164	2	0	0	77.3	77.3	1	4915.79	3.25	0	84.83	0	-3.16	0	0	2.38	0	0	0	0	0	0	-6.71	-6.71
Westbrook Inverter Transfor	W_INVTR4	369679	4906164	2	0	0	77.3	77.3	1	5070.88	3.25	0	85.1	0	-3.19	0	0	2.44	0	0	0	0	0	0	-7.01	-7.01
Westbrook Inverter Transfor	W_INVTR7	369786	4906417	2	0	0	77.3	77.3	1	5260.57	3.25	0	85.42	0	-3.23	0	0	2.5	0	0	0	0	0	0	-7.35	-7.35
Westbrook Inverter Transfor	W_INVTR5	369725	4906574	2	0	0	77.3	77.3	1	5265.04	3.25	0	85.43	0	-3.23	0	0	2.5	0	0	0	0	0	0	-7.36	-7.36
Westbrook Inverter Transfor	W_INVTR6	369881	4906578	2	0	0	77.3	77.3	1	5409.84	3.25	0	85.66	0	-3.26	0	0	2.55	0	0	0	0	0	0	-7.62	-7.62
Inverter Transformer	MV2-1 T	365836	4906816	2	0	0	69.4	69.4	1	2534.01	3.25	0	79.08	0	2.36	0	0	5.47	0	0	0	0	0	0	-17.56	-17.56
Inverter Transformer	MV1-15 T	365309	4904994	2	0	0	56.1	56.1	1	670.82	3.25	0	67.53	0	-0.09	0	0	4.05	0	0	0	0	0	0	-15.44	-15.44
Inverter Transformer	MV1-12 T	365044	4905386	2	0	0	56.1	56.1	1	936.68	3.25	0	70.43	0	-0.01	0	0	4.74	0	0	0	0	0	0	-19.1	-19.1
Inverter Transformer	MV1-11 T	364649	4905414	2	0	0	56.1	56.1	1	987.24	3.25	0	70.89	0	0.01	0	0	4.86	0	0	0	0	0	0	-19.7	-19.7
Inverter Transformer	MV1-8 T	364782	4905647	2	0	0	56.1	56.1	1	1193.15	3.25	0	72.53	0	0.08	0	0	5.34	0	0	0	0	0	0	-21.9	-21.9
Inverter Transformer	MV1-9 T	364555	4905646	2	0	0	56.1	56.1	1	1236	3.25	0	72.84	0	0.1	0	0	5.44	0	0	0	0	0	0	-22.32	-22.32
Inverter Transformer	MV6-4 T	370244	4906966	2	0	0	69.4	69.4	1	5899.69	3.25	0	86.42	0	3.17	0	0	7.96	0	0	0	0	0	0	-28.2	-28.2
Inverter Transformer	MV6-1 T	370230	4907364	2	0	0	69.4	69.4	1	6067.14	3.25	0	86.66	0	3.2	0	0	8.06	0	0	0	0	0	0	-28.57	-28.57
Inverter Transformer	MV1-6 T	364482	4905835	2	0	0	56.1	56.1	1	1438.01	3.25	0	74.16	0	0.17	0	0	5.88	0	0	0	0	0	0	-24.16	-24.16
Inverter Transformer	MV1-5 T	364676	4905892	2	0	0	56.1	56.1	1	1449.88	3.25	0	74.23	0	0.18	0	0	5.91	0	0	0	0	0	0	-24.26	-24.26
Inverter Transformer	MV1-4 T	364821	4905918	2	0	0	56.1	56.1	1	1460.31	3.25	0	74.29	0	0.18	0	0	5.93	0	0	0	0	0	0	-24.35	-24.35
Inverter Transformer	MV1-2 T	364759	4906063	2	0	0	56.1	56.1	1	1609.46	3.25	0	75.13	0	0.24	0	0	6.25	0	0	0	0	0	0	-25.57	-25.57
Inverter Transformer	MV1-3 T	364435	4906039	2	0	0	56.1	56.1	1	1646.9	3.25	0	75.33	0	0.26	0	0	6.33	0	0	0	0	0	0	-25.86	-25.86
Inverter Transformer	MV1-1 T	364721	4906166	2	0	0	56.1	56.1	1	1715.68	3.25	0	75.69	0	0.29	0	0	6.47	0	0	0	0	0	0	-26.39	-26.39
Inverter Transformer	MV2-4 T	365590	4906628	2	0	0	56.1	56.1	1	2274.25	3.25	0	78.14	0	0.52	0	0	7.57	0	0	0	0	0	0	-30.17	-30.17
Inverter Transformer	MV2-3 T	365814	4906641	2	0	0	56.1	56.1	1	2363.62	3.25	0	78.47	0	0.56	0	0	7.74	0	0	0	0	0	0	-30.71	-30.71
Inverter Transformer	MV2-2 T	365982	4906654	2	0	0	56.1	56.1	1	2444.97	3.25	0	78.77	0	0.59	0	0	7.89	0	0	0	0	0	0	-31.19	-31.19
Inverter Transformer	MV3-18 T	367757	4907412	2	0	0	56.1	56.1	1	4106.05	3.25	0	83.27	0	1.29	0	0	10.61	0	0	0	0	0	0	-39.11	-39.11
Inverter Transformer	MV3-12 T	367674	4907594	2	0	0	56.1	56.1	1	4183.35	3.25	0	83.43	0	1.32	0	0	10.72	0	0	0	0	0	0	-39.41	-39.41
Inverter Transformer	MV3-13 T	367958	4907577	2	0	0	56.1	56.1	1	4364.48	3.25	0	83.8	0	1.39	0	0	10.98	0	0	0	0	0	0	-40.11	-40.11
Inverter Transformer	MV3-17 T	368183	4907472	2	0	0	56.1	56.1	1	4453.15	3.25	0	83.97	0	1.42	0	0	11.11	0	0	0	0	0	0	-40.45	-40.45
Inverter Transformer	MV3-7 T	367951	4907754	2	0	0	56.1	56.1	1	4487.84	3.25	0	84.04	0	1.43	0	0	11.16	0	0	0	0	0	0	-40.58	-40.58
Inverter Transformer	MV3-19 T	368352	4907347	2	0	0	56.1	56.1	1	4497.82	3.25	0	84.06	0	1.44	0	0	11.17	0	0	0	0	0	0	-40.61	-40.61
Inverter Transformer	MV3-21 T	368484	4907206	2	0	0	56.1	56.1	1	4512.66	3.25	0	84.09	0	1.44	0	0	11.19	0	0	0	0	0	0	-40.67	-40.67
Inverter Transformer	MV3-10 T	368162	4907669	2	0	0	56.1	56.1	1	4573.7	3.25	0	84.21	0	1.47	0	0	11.28	0	0	0	0	0	0	-40.89	-40.89
Inverter Transformer	MV3-15 T	368351	4907477	2	0	0	56.1	56.1	1	4581.59	3.25	0	84.22	0	1.47	0	0	11.29	0	0	0	0	0	0	-40.92	-40.92
Inverter Transformer	MV3-3 T	367944	4907927	2	0	0	56.1	56.1	1	4611.7	3.25	0	84.28	0	1.48	0	0	11.33	0	0	0	0	0	0	-41.03	-41.03
Inverter Transformer	MV3-22 T	368661	4907142	2	0	0	56.1	56.1	1	4616.89	3.25	0	84.29	0	1.48	0	0	11.34	0	0	0	0	0	0	-41.05	-41.05
Inverter Transformer	MV3-6 T	368156	4907834	2	0	0	56.1	56.1	1	4686.78	3.25	0	84.42	0	1.51	0	0	11.43	0	0	0	0	0	0	-41.3	-41.3
Inverter Transformer	MV3-11 T	368340	4907662	2	0	0	56.1	56.1	1	4697.42	3.25	0	84.44	0	1.51	0	0	11.45	0	0	0	0	0	0	-41.34	-41.34
Inverter Transformer	MV3-16 T	368509	4907475	2	0	0	56.1	56.1	1	4700.37	3.25	0	84.44	0	1.52	0	0	11.45	0	0	0	0	0	0	-41.35	-41.35
Inverter Transformer	MV3-20 T	368683	4907317	2	0	0	56.1	56.1	1	4738.23	3.25	0	84.51	0	1.53	0	0	11.5	0	0	0	0	0	0	-41.49	-41.49
Inverter Transformer	MV3-1 T	368150	4907976	2	0	0	56.1	56.1	1	4785.95	3.25	0	84.6	0	1.55	0	0	11.57	0	0	0	0	0	0	-41.66	-41.66
Inverter Transformer	MV3-5 T	368335	4907843	2	0	0	56.1	56.1	1	4819.06	3.25	0	84.66	0	1.56	0	0	11.61	0	0	0	0	0	0	-41.77	-41.77
Inverter Transformer	MV3-14 T	368678	4907498	2	0	0	56.1	56.1	1	4845.62	3.25	0	84.71	0	1.57	0	0	11.65	0	0	0	0	0	0	-41.87	-41.87
Inverter Transformer	MV3-9 T	368517	4907703	2	0	0	56.1	56.1	1	4855.72	3.25	0	84.73	0	1.57	0	0	11.66	0	0	0	0	0	0	-41.9	-41.9
Inverter Transformer	MV3-8 T	368685	4907712	2	0	0	56.1	56.1	1	4987.89	3.25	0	84.96	0	1.62	0	0	11.84	0	0	0	0	0	0	-42.36	-42.36
Inverter Transformer	MV3-4 T	368507	4907925	2	0	0	56.1	56.1	1	4999.5	3.25	0	84.98	0	1.63	0	0	11.85	0	0	0	0	0	0	-42.4	-42.4
Inverter Transformer	MV3-2 T	368677	4907928	2	0	0	56.1	56.1	1	5125.44	3.25	0	85.19	0	1.67	0	0	12.02	0	0	0	0	0	0	-42.82	-42.82
Inverter Transformer	MV4-15 T	369170	4908481	2	0	0	56.1	56.1	1	5863.08	3.25	0	86.36	0	1.92	0	0	12.94	0	0	0	0	0	0	-45.16	-45.16
Inverter Transformer	MV4-13 T	369057	4908605	2	0	0	56.1	56.1	1	5868.28	3.25	0	86.37	0	1.92	0	0	12.95	0	0	0	0	0	0	-45.18	-45.18
Inverter Transformer	MV4-14 T	369182	4908507	2	0	0	56.1	56.1	1	5889.66	3.25	0	86.4	0	1.93	0	0	12.97	0	0	0	0	0	0	-45.24	-45.24
Inverter Transformer	MV6-2 T	370091	4907339	2	0	0	56.1	56.1	1	5933.3	3.25	0	86.47	0	1.94	0	0	13.02	0	0	0	0	0	0	-45.37	-45.37
Inverter Transformer	MV6-3 T	370202	4907140	2	0	0	56.1	56.1	1	5938.17	3.25	0	86.47	0	1.95	0	0	13.03	0	0	0	0	0	0	-45.39	-45.39
Inverter Transformer	MV4-12 T	369049	4908803	2	0	0	56.1	56.1	1	6004.25	3.25	0	86.57	0	1.97	0	0	13.11	0	0	0	0	0	0	-45.58	-45.58
Inverter Transformer	MV4-7 T	369040	4909001	2	0	0	56.1	56.1	1	6142.92	3.25	0	86.77	0	2.01	0	0	13.27	0	0	0	0	0	0	-45.99	-45.99
Inverter Transformer	MV4-11 T	369269	4908855	2	0	0	56.1	56.1	1	6195	3.25	0	86.84	0	2.03	0	0	13.33	0	0	0	0	0	0	-46.14	-46.14
Inverter Transformer	MV4-10 T	369307	4908858	2	0	0	56.1	56.1	1	6223.96	3.25	0	86.88	0	2.03	0	0	13.36	0	0	0	0	0	0	-46.22	-46.22
Inverter Transformer	MV4-4 T	369033	4909199	2	0	0	56.1	56.1	1	6286.1	3.25	0	86.97	0	2.05	0	0	13.44	0	0	0	0	0	0	-46.4	-46.4
Inverter Transformer	MV4-8 T	369262	4909001	2	0	0	56.1	56.1	1	6294.57	3.25	0	86.98	0	2.06	0	0	13.45	0	0	0	0	0	0	-46.42	-46.42
Inverter Transformer	MV4-9 T	369284	4909001	2	0	0	56.1	56.1	1	6309.82	3.25	0	87	0	2.06	0	0	13.46	0	0	0	0	0	0	-46.47	-46.47
Inverter Transformer	MV4-6 T	369249	4909192	2	0	0	56.1	56.1	1	6424.92	3.25	0	87.16	0	2.1	0	0	13.6	0	0	0	0	0	0	-46.79	-46.79
Inverter Transformer	MV4-1 T	369017	4909397	2	0	0	56.1	56.1	1	6426.43	3.25	0	87.16	0	2.1	0	0	13.6	0	0	0	0	0	0	-46.79	-46.79

	Inverter Transformer	MV4-5 T	369283	4909199	2	0	0	56.1	56.1	1	6453.1	3.25	0	87.2	0	2.1	0	0	13.63	0	0	0	0	0	0	-46.87	-46.87
	Inverter Transformer	MV5-6 T	369987	4908507	2	0	0	56.1	56.1	1	6498.1	3.25	0	87.26	0	2.12	0	0	13.68	0	0	0	0	0	0	-46.99	-46.99
	Inverter Transformer	MV4-3 T	369234	4909397	2	0	0	56.1	56.1	1	6567.46	3.25	0	87.35	0	2.14	0	0	13.76	0	0	0	0	0	0	-47.18	-47.18
	Inverter Transformer	MV4-2 T	369267	4909397	2	0	0	56.1	56.1	1	6589.27	3.25	0	87.38	0	2.14	0	0	13.78	0	0	0	0	0	0	-47.24	-47.24
	Inverter Transformer	MV5-5 T	370021	4908690	2	0	0	56.1	56.1	1	6639.79	3.25	0	87.44	0	2.16	0	0	13.84	0	0	0	0	0	0	-47.38	-47.38
	Inverter Transformer	MV5-2 T	370011	4908853	2	0	0	56.1	56.1	1	6737.22	3.25	0	87.57	0	2.19	0	0	13.94	0	0	0	0	0	0	-47.64	-47.64
	Inverter Transformer	MV5-4 T	370330	4908707	2	0	0	56.1	56.1	1	6891.25	3.25	0	87.77	0	2.23	0	0	14.11	0	0	0	0	0	0	-48.05	-48.05
	Inverter Transformer	MV5-3 T	370237	4908851	2	0	0	56.1	56.1	1	6908.87	3.25	0	87.79	0	2.23	0	0	14.13	0	0	0	0	0	0	-48.1	-48.1
	Inverter Transformer	MV5-1 T	370015	4909142	2	0	0	56.1	56.1	1	6932.08	3.25	0	87.82	0	2.24	0	0	14.16	0	0	0	0	0	0	-48.16	-48.16
	Line Reactor	NGR	369421	4908787.5	5	0	0	45.4	45.4	1	6256.16	5.25	0	86.93	0	3.23	1.36	0.08	2.56	0	0	0	0	0	0	-48.73	-48.73
Limit. Valu	0	0																								
Level D/N:	29.565	29.565																								

Receiver: Existing Noise Receptor
ID: S-R133
X: 364840
Y: 4904440
Z: 4.5
Ground: 0

ISO	Description	ID	X	Y	Z	Ground	ReflOrd	LxT	LxN	L/A	Dist.	hm	Freq	Adiv	K0b	Agr	Abar	z	Aatm	Afol	Ahous	Cmet	CmetN	Dc	RL	LtotT	LtotN
	Inverter	MV1-15	365315	4904994	2	0	0	100.3	100.3	1	729.76	3.25	0	68.26	0	-0.39	0	0	9.88	0	0	0	0	0	0	22.56	22.56
	Inverter	MV1-12	365038	4905386	2	0	0	100.3	100.3	1	966.5	3.25	0	70.7	0	-0.26	0	0	10.8	0	0	0	0	0	0	19.07	19.07
	Inverter	MV1-14	365163	4905049	2	0	0	97.3	97.3	1	689.36	3.25	0	67.77	0	-0.42	0	0	9.69	0	0	0	0	0	0	20.28	20.28
	Inverter	MV1-11	364655	4905414	2	0	0	100.3	100.3	1	991.42	3.25	0	70.93	0	-0.25	0	0	10.88	0	0	0	0	0	0	18.75	18.75
	Inverter	MV1-13	364731	4905241	2	0	0	97.3	97.3	1	808.39	3.25	0	69.15	0	-0.35	0	0	10.21	0	0	0	0	0	0	18.29	18.29
	Inverter	MV1-8	364788	4905647	2	0	0	100.3	100.3	1	1208.12	3.25	0	72.64	0	-0.15	0	0	11.55	0	0	0	0	0	0	16.27	16.27
	Inverter	MV1-9	364561	4905646	2	0	0	100.3	100.3	1	1237.85	3.25	0	72.85	0	-0.14	0	0	11.63	0	0	0	0	0	0	15.96	15.96
	Inverter	MV1-6	364477	4905835	2	0	0	100.3	100.3	1	1441.46	3.25	0	74.18	0	-0.06	0	0	12.18	0	0	0	0	0	0	14.01	14.01
	Inverter	MV1-5	364671	4905892	2	0	0	100.3	100.3	1	1461.8	3.25	0	74.3	0	-0.05	0	0	12.23	0	0	0	0	0	0	13.83	13.83
	Inverter	MV1-4	364815	4905918	2	0	0	100.3	100.3	1	1478.21	3.25	0	74.39	0	-0.04	0	0	12.27	0	0	0	0	0	0	13.69	13.69
	Inverter	MV1-10	365004	4905564	2	0	0	97.3	97.3	1	1135.9	3.25	0	72.11	0	-0.18	0	0	11.34	0	0	0	0	0	0	14.05	14.05
	Inverter	MV1-2	364753	4906063	2	0	0	100.3	100.3	1	1625.33	3.25	0	75.22	0	0.01	0	0	12.63	0	0	0	0	0	0	12.45	12.45
	Sol_Luce Substation	S_Substation	369426	4908792	3.5	0	0	112.1	112.1	1	6322.29	5.25	0	87.02	0	1.24	2.58	0.24	10.08	0	0	0	0	0	0	11.17	11.17
	Inverter	MV1-1	364715	4906166	2	0	0	100.3	100.3	1	1730.52	3.25	0	75.76	0	0.05	0	0	12.87	0	0	0	0	0	0	11.63	11.63
	Inverter	MV1-7	364925	4905782	2	0	0	97.3	97.3	1	1344.69	3.25	0	73.57	0	-0.09	0	0	11.93	0	0	0	0	0	0	11.91	11.91
	Inverter	MV2-4	365586	4906624	2	0	0	100.3	100.3	1	2307.89	3.25	0	78.26	0	0.21	0	0	14.09	0	0	0	0	0	0	7.75	7.75
	Inverter	MV2-3	365820	4906641	2	0	0	100.3	100.3	1	2409.32	3.25	0	78.64	0	0.24	0	0	14.28	0	0	0	0	0	0	7.15	7.15
	Inverter	MV2-1	365842	4906816	2	0	0	97.3	97.3	1	2578.64	3.25	0	79.23	0	0.27	0	0	14.61	0	0	0	0	0	0	3.2	3.2
	Inverter	MV3-18	367752	4907412	2	0	0	100.3	100.3	1	4160.83	3.25	0	83.38	0	0.55	0	0	17.3	0	0	0	0	0	0	-0.92	-0.92
	Inverter	MV3-12	367668	4907594	2	0	0	100.3	100.3	1	4236.19	3.25	0	83.54	0	0.56	0	0	17.42	0	0	0	0	0	0	-1.21	-1.21
	Inverter	MV3-13	367963	4907577	2	0	0	100.3	100.3	1	4426.5	3.25	0	83.92	0	0.58	0	0	17.72	0	0	0	0	0	0	-1.91	-1.91
	Inverter	MV3-17	368178	4907472	2	0	0	100.3	100.3	1	4509.46	3.25	0	84.08	0	0.59	0	0	17.84	0	0	0	0	0	0	-2.21	-2.21
	Inverter	MV3-7	367945	4907754	2	0	0	100.3	100.3	1	4541.32	3.25	0	84.14	0	0.6	0	0	17.89	0	0	0	0	0	0	-2.32	-2.32
	Inverter	MV3-19	368357	4907347	2	0	0	100.3	100.3	1	4562.89	3.25	0	84.18	0	0.6	0	0	17.93	0	0	0	0	0	0	-2.4	-2.4
	Inverter	MV3-21	368478	4907206	2	0	0	100.3	100.3	1	4570.1	3.25	0	84.2	0	0.6	0	0	17.94	0	0	0	0	0	0	-2.42	-2.42
	Inverter	MV3-10	368167	4907669	2	0	0	100.3	100.3	1	4636.31	3.25	0	84.32	0	0.61	0	0	18.04	0	0	0	0	0	0	-2.66	-2.66
	Inverter	MV3-15	368357	4907477	2	0	0	100.3	100.3	1	4646.79	3.25	0	84.34	0	0.61	0	0	18.05	0	0	0	0	0	0	-2.69	-2.69
	Inverter	MV3-3	367939	4907927	2	0	0	100.3	100.3	1	4665.08	3.25	0	84.38	0	0.61	0	0	18.08	0	0	0	0	0	0	-2.76	-2.76
	Inverter	MV3-6	368162	4907834	2	0	0	100.3	100.3	1	4749.2	3.25	0	84.53	0	0.62	0	0	18.21	0	0	0	0	0	0	-3.05	-3.05
	Inverter	MV3-11	368346	4907662	2	0	0	100.3	100.3	1	4761.65	3.25	0	84.56	0	0.62	0	0	18.23	0	0	0	0	0	0	-3.09	-3.09
	Inverter	MV3-16	368514	4907475	2	0	0	100.3	100.3	1	4765.45	3.25	0	84.56	0	0.62	0	0	18.23	0	0	0	0	0	0	-3.1	-3.1
	Inverter	MV3-20	368689	4907317	2	0	0	100.3	100.3	1	4805.41	3.25	0	84.63	0	0.62	0	0	18.29	0	0	0	0	0	0	-3.24	-3.24
	Inverter	MV3-14	368684	4907498	2	0	0	100.3	100.3	1	4912	3.25	0	84.83	0	0.63	0	0	18.45	0	0	0	0	0	0	-3.6	-3.6
	Inverter	MV3-9	368512	4907703	2	0	0	100.3	100.3	1	4912.31	3.25	0	84.83	0	0.63	0	0	18.45	0	0	0	0	0	0	-3.6	-3.6
	Inverter	MV3-8	368680	4907712	2	0	0	100.3	100.3	1	5044.96	3.25	0	85.06	0	0.65	0	0	18.65	0	0	0	0	0	0	-4.04	-4.04
	Inverter	MV6-2	370085	4907339	2	0	0	100.3	100.3	1	5992.85	3.25	0	86.55	0	0.7	0	0	19.98	0	0	0	0	0	0	-6.93	-6.93
	Inverter	MV6-3	370207	4907140	2	0	0	100.3	100.3	1	6007.89	3.25	0	86.57	0	0.71	0	0	20	0	0	0	0	0	0	-6.97	-6.97
	Inverter	MV1-3	364440	4906039	2	0	0	89.1	89.1	1	1648.27	3.25	0	75.34	0	0.83	0	0	7.46	0	0	0	0	0	0	5.43	5.43
	Gardiner Substation	G_Sub	366586.3	4903349.9	2.5	0	0	90.8	90.8	1	2058.61	4.25	0	77.27	0	0.87	3.71	0.3	4.47	0	0	0	0	0	0	4.46	4.46
	Inverter	MV4-7	369035	4909001	2	0	0	100.3	100.3	1	6196.83	3.25	0	86.84	0	0.71	0	0	20.26	0	0	0	0	0	0	-7.5	-7.5
	Inverter	MV4-11	369264	4908855	2	0	0	100.3	100.3	1	6250.12	3.25	0	86.92	0	0.71	0	0	20.33	0	0	0	0	0	0	-7.65	-7.65
	Inverter	MV4-10	369312	4908858	2	0	0	100.3	100.3	1	6286.3	3.25	0	86.97	0	0.71	0	0	20.38	0	0	0	0	0	0	-7.75	-7.75
	Inverter	MV4-4	369027	4909199	2	0	0	100.3	100.3	1	6338.7	3.25	0	87.04	0	0.71	0	0	20.45	0	0	0	0	0	0	-7.89	-7.89
	Inverter	MV4-8	369256	4909001	2	0	0	100.3	100.3	1	6348.53	3.25	0	87.05	0	0.71	0	0	20.46	0	0	0	0	0	0	-7.91	-7.91
	Inverter	MV4-9	369289	4909001	2	0	0	100.3	100.3	1	6371.52	3.25	0	87.08	0	0.71	0	0	20.49	0	0	0	0	0	0	-7.98	-7.98
	Inverter	MV4-6	369243	4909192	2	0	0	100.3	100.3	1	6478.27	3.25	0	87.23	0	0.71	0	0	20.63	0	0	0	0	0	0	-8.26	-8.26
	Inverter	MV4-1	369011	4909397	2	0	0	100.3	100.3	1	6478.36	3.25	0	87.23	0	0.71	0	0	20.63	0	0	0	0	0	0	-8.26	-8.26
	Inverter	MV4-5	369289	4909199	2	0	0	100.3	100.3	1	6514.73	3.25	0	87.28	0	0.71	0	0	20.68	0	0	0	0	0	0	-8.36	-8.36
	Inverter	MV4-3	369229	4909397	2	0	0	100.3	100.3	1	6620.81	3.25	0	87.42	0	0.71	0	0	20.82	0	0	0	0	0	0	-8.64	-8.64
	Inverter	MV4-2	369272	4909397	2	0	0	100.3	100.3	1	6649.4	3.25	0	87.46	0	0.71	0	0	20.85	0	0	0	0	0	0	-8.71	-8.71
	Inverter	MV5-5	370015	4908690	2	0	0	100.3	100.3	1	6696.5	3.25	0	87.52	0	0.71	0	0	20.91	0	0	0	0	0	0	-8.83	-8.83
	Inverter	MV5-2	370006	4908853	2	0	0	100.3	100.3	1	6794.27	3.25	0	87.64	0	0.71	0	0	21.04	0	0	0	0	0	0	-9.08	-9.08
	Inverter	MV5-4	370324	4908707	2	0	0	100.3	100.3	1	6948.49	3.25	0	87.84	0	0.71	0	0	21.23	0	0	0	0	0	0	-9.47	-9.47

Inverter	MV5-3	370231	4908851	2	0	0	100.3	100.3	1	6965.62	3.25	0	87.86	0	0.71	0	0	21.26	0	0	0	0	0	0	-9.51	-9.51
Inverter	MV5-1	370020	4909142	2	0	0	100.3	100.3	1	6995.8	3.25	0	87.9	0	0.71	0	0	21.29	0	0	0	0	0	0	-9.59	-9.59
Inverter	MV6-1	370235	4907364	2	0	0	97.3	97.3	1	6136.43	3.25	0	86.76	0	0.71	0	0	20.18	0	0	0	0	0	0	-10.33	-10.33
Inverters	G_Inv1	366526.4	4903225.8	2	0	0	87.7	87.7	1	2078.04	3.25	0	77.35	0	2.59	0	0	2.73	0	0	0	0	0	0	4.99	4.99
Inverter	MV2-2	365977	4906654	2	0	0	89.1	89.1	1	2488.89	3.25	0	78.92	0	1.02	0	0	8.83	0	0	0	0	0	0	0.29	0.29
Inverters	G_Inv2	366676.9	4903239.1	2	0	0	87.7	87.7	1	2194.62	3.25	0	77.83	0	2.61	0	0	2.86	0	0	0	0	0	0	4.36	4.36
Inverters	G_Inv3	366583.7	4903091.4	2	0	0	87.7	87.7	1	2204.36	3.25	0	77.87	0	2.61	0	0	2.87	0	0	0	0	0	0	4.31	4.31
DSTATCOM - 10 MVAR #2	DSAT2	369403	4908757	2.5	0	0	96.6	96.6	1	6281.52	3.5	0	86.96	0	3.79	0	0	3.97	0	0	0	0	0	0	1.9	1.9
DSTATCOM - 10 MVAR #1	DSAT1	369437	4908757	2.5	0	0	96.6	96.6	1	6306.26	3.5	0	87	0	3.8	0	0	3.99	0	0	0	0	0	0	1.85	1.85
Inverters	G_Inv4	366732.8	4903105	2	0	0	87.7	87.7	1	2316.23	3.25	0	78.3	0	2.62	0	0	3	0	0	0	0	0	0	3.74	3.74
Inverters	G_Inv5	366638.5	4902958.1	2	0	0	87.7	87.7	1	2330.37	3.25	0	78.35	0	2.62	0	0	3.02	0	0	0	0	0	0	3.67	3.67
Inverters	G_Inv6	366788.5	4902972	2	0	0	87.7	87.7	1	2439.61	3.25	0	78.75	0	2.64	0	0	3.14	0	0	0	0	0	0	3.14	3.14
Inverters	G_Inv7	366694.6	4902824.7	2	0	0	87.7	87.7	1	2459.42	3.25	0	78.82	0	2.64	0	0	3.16	0	0	0	0	0	0	3.04	3.04
Inverters	G_Inv8	366844.5	4902838.5	2	0	0	87.7	87.7	1	2565.7	3.25	0	79.18	0	2.65	0	0	3.29	0	0	0	0	0	0	2.54	2.54
Inverters	G_Inv9	366750.9	4902691.8	2	0	0	87.7	87.7	1	2589.93	3.25	0	79.27	0	2.65	0	0	3.31	0	0	0	0	0	0	2.43	2.43
Inverters	G_Inv10	366900.7	4902704.8	2	0	0	87.7	87.7	1	2693.96	3.25	0	79.61	0	2.67	0	0	3.43	0	0	0	0	0	0	1.96	1.96
SubstationTransformer	W_ST	369711.17	4906112.3	2.5	0	0	92	92	1	5150.22	4.25	0	85.24	0	1.68	2.3	0.27	8.8	0	0	0	0	0	0	-6.03	-6.03
Inverter	MV3-22	368656	4907142	2	0	0	89.1	89.1	1	4675.75	3.25	0	84.4	0	1.56	0	0	12.03	0	0	0	0	0	0	-8.92	-8.92
Inverter	MV3-1	368156	4907976	2	0	0	89.1	89.1	1	4847.59	3.25	0	84.71	0	1.6	0	0	12.26	0	0	0	0	0	0	-9.51	-9.51
Inverter	MV3-5	368340	4907843	2	0	0	89.1	89.1	1	4881.64	3.25	0	84.77	0	1.61	0	0	12.3	0	0	0	0	0	0	-9.63	-9.63
Westbrook Inverter Enclosur	W_INV2	369374	4906388	2	0	0	89.1	89.1	1	4934.76	3.25	0	84.87	0	1.62	0	0	12.38	0	0	0	0	0	0	-9.81	-9.81
Westbrook Inverter Enclosur	W_INV3	369508	4906164	2	0	0	89.1	89.1	1	4976.18	3.25	0	84.94	0	1.63	0	0	12.43	0	0	0	0	0	0	-9.95	-9.95
Inverter	MV3-4	368502	4907925	2	0	0	89.1	89.1	1	5055.24	3.25	0	85.07	0	1.65	0	0	12.54	0	0	0	0	0	0	-10.21	-10.21
Westbrook Inverter Enclosur	W_INV4	369673	4906164	2	0	0	89.1	89.1	1	5131.28	3.25	0	85.2	0	1.67	0	0	12.64	0	0	0	0	0	0	-10.46	-10.46
Inverter	MV3-2	368671	4907928	2	0	0	89.1	89.1	1	5181	3.25	0	85.29	0	1.68	0	0	12.7	0	0	0	0	0	0	-10.62	-10.62
Westbrook Inverter Enclosur	W_INV7	369780	4906417	2	0	0	89.1	89.1	1	5320.91	3.25	0	85.52	0	1.72	0	0	12.89	0	0	0	0	0	0	-11.07	-11.07
Westbrook Inverter Enclosur	W_INV5	369719	4906574	2	0	0	89.1	89.1	1	5325.28	3.25	0	85.53	0	1.72	0	0	12.89	0	0	0	0	0	0	-11.08	-11.08
Westbrook Inverter Enclosur	W_INV6	369875	4906578	2	0	0	89.1	89.1	1	5470.13	3.25	0	85.76	0	1.76	0	0	13.08	0	0	0	0	0	0	-11.54	-11.54
Fixed Reactor Bank 1	FRB1	369378	4908755	6	0	0	89.8	89.8	1	6262	5.25	0	86.93	0	-0.38	0	0	10.02	0	0	0	0	0	0	-6.79	-6.79
Fixed Reactor Bank 2	FRB2	369464	4908755	6	0	0	89.8	89.8	1	6324.6	5.25	0	87.02	0	-0.37	0	0	10.08	0	0	0	0	0	0	-6.95	-6.95
Inverter	MV4-13	369051	4908605	2	0	0	89.1	89.1	1	5922.82	3.25	0	86.45	0	1.87	0	0	13.66	0	0	0	0	0	0	-12.92	-12.92
Inverter	MV4-15	369176	4908481	2	0	0	89.1	89.1	1	5927.11	3.25	0	86.46	0	1.87	0	0	13.67	0	0	0	0	0	0	-12.94	-12.94
Inverter	MV4-14	369176	4908507	2	0	0	89.1	89.1	1	5944.86	3.25	0	86.48	0	1.87	0	0	13.69	0	0	0	0	0	0	-12.99	-12.99
Inverter	MV4-12	369043	4908803	2	0	0	89.1	89.1	1	6058.13	3.25	0	86.65	0	1.9	0	0	13.84	0	0	0	0	0	0	-13.32	-13.32
Inverter	MV5-6	369982	4908507	2	0	0	89.1	89.1	1	6555.96	3.25	0	87.33	0	2.02	0	0	14.45	0	0	0	0	0	0	-14.75	-14.75
Inverter Transformer	MV1-14 T	365157	4905049	2	0	0	69.4	69.4	1	686.57	3.25	0	67.73	0	1.34	0	0	3.33	0	0	0	0	0	0	-3.05	-3.05
Westbrook Inverter Enclosur	W_INV1	369409	4906578	2	0	0	86.1	86.1	1	5044.48	3.25	0	85.06	0	1.65	0	0	12.52	0	0	0	0	0	0	-13.17	-13.17
Inverter Transformer	MV1-13 T	364725	4905241	2	0	0	69.4	69.4	1	809.22	3.25	0	69.16	0	1.5	0	0	3.53	0	0	0	0	0	0	-4.84	-4.84
Inverter	MV6-4	370250	4906966	2	0	0	86.1	86.1	1	5970.66	3.25	0	86.52	0	1.88	0	0	13.73	0	0	0	0	0	0	-16.07	-16.07
Inverter Transformer	MV1-10 T	365010	4905564	2	0	0	69.4	69.4	1	1136.79	3.25	0	72.11	0	1.78	0	0	3.99	0	0	0	0	0	0	-8.54	-8.54
Inverter Transformer	MV1-7 T	364919	4905782	2	0	0	69.4	69.4	1	1344.33	3.25	0	73.57	0	1.9	0	0	4.25	0	0	0	0	0	0	-10.37	-10.37
Westbrook Inverter Transfor	W_INVTR1	369403	4906578	2	0	0	78.2	78.2	1	5039.05	3.25	0	85.05	0	-3.19	0	0	2.43	0	0	0	0	0	0	-6.05	-6.05
Westbrook Inverter Transfor	W_INVTR2	369368	4906388	2	0	0	77.3	77.3	1	4929.25	3.25	0	84.86	0	-3.16	0	0	2.39	0	0	0	0	0	0	-6.74	-6.74
Westbrook Inverter Transfor	W_INVTR3	369514	4906164	2	0	0	77.3	77.3	1	4981.81	3.25	0	84.95	0	-3.17	0	0	2.41	0	0	0	0	0	0	-6.84	-6.84
Westbrook Inverter Transfor	W_INVTR4	369679	4906164	2	0	0	77.3	77.3	1	5136.94	3.25	0	85.21	0	-3.2	0	0	2.46	0	0	0	0	0	0	-7.13	-7.13
Westbrook Inverter Transfor	W_INVTR7	369786	4906417	2	0	0	77.3	77.3	1	5326.49	3.25	0	85.53	0	-3.24	0	0	2.52	0	0	0	0	0	0	-7.47	-7.47
Westbrook Inverter Transfor	W_INVTR5	369725	4906574	2	0	0	77.3	77.3	1	5330.78	3.25	0	85.54	0	-3.24	0	0	2.52	0	0	0	0	0	0	-7.48	-7.48
Westbrook Inverter Transfor	W_INVTR6	369881	4906578	2	0	0	77.3	77.3	1	5475.65	3.25	0	85.77	0	-3.27	0	0	2.57	0	0	0	0	0	0	-7.73	-7.73
Inverter Transformer	MV2-1 T	365836	4906816	2	0	0	69.4	69.4	1	2576.31	3.25	0	79.22	0	2.37	0	0	5.51	0	0	0	0	0	0	-17.76	-17.76
Inverter Transformer	MV1-15 T	365309	4904994	2	0	0	56.1	56.1	1	725.87	3.25	0	68.22	0	-0.07	0	0	4.2	0	0	0	0	0	0	-16.29	-16.29
Inverter Transformer	MV1-12 T	365044	4905386	2	0	0	56.1	56.1	1	967.75	3.25	0	70.72	0	0	0	0	4.81	0	0	0	0	0	0	-19.47	-19.47
Inverter Transformer	MV1-11 T	364649	4905414	2	0	0	56.1	56.1	1	992.55	3.25	0	70.94	0	0.01	0	0	4.87	0	0	0	0	0	0	-19.76	-19.76
Inverter Transformer	MV1-8 T	364782	4905647	2	0	0	56.1	56.1	1	1208.4	3.25	0	72.64	0	0.09	0	0	5.37	0	0	0	0	0	0	-22.05	-22.05
Inverter Transformer	MV1-9 T	364555	4905646	2	0	0	56.1	56.1	1	1239.22	3.25	0	72.86	0	0.1	0	0	5.44	0	0	0	0	0	0	-22.35	-22.35
Inverter Transformer	MV6-4 T	370244	4906966	2	0	0	69.4	69.4	1	5965.22	3.25	0	86.51	0	3.18	0	0	8	0	0	0	0	0	0	-28.34	-28.34
Inverter Transformer	MV6-1 T	370230	4907364	2	0	0	69.4	69.4	1	6132.04	3.25	0	86.75	0	3.21	0	0	8.1	0	0	0	0	0	0	-28.71	-28.71
Inverter Transformer	MV1-6 T	364482	4905835	2	0	0	56.1	56.1	1	1440.21	3.25	0	74.17	0	0.18	0	0	5.89	0	0	0	0	0	0	-24.17	-24.17
Inverter Transformer	MV1-5 T	364676	4905892	2	0	0	56.1	56.1	1	1461.23	3.25	0	74.29	0	0.18	0	0	5.93	0	0	0	0	0	0	-24.35	-24.35
Inverter Transformer	MV1-4 T	364821	4905918	2	0	0	56.1	56.1	1	1478.12	3.25	0	74.39	0	0.19	0	0	5.97	0	0	0	0	0	0	-24.5	-24.5
Inverter Transformer	MV1-2 T	364759	4906063	2	0	0	56.1	56.1	1	1625.02	3.25	0	75.22	0	0.25	0	0	6.28	0	0	0	0	0	0	-25.69	-25.69
Inverter Transformer	MV1-3 T	364435	4906039	2	0	0	56.1	56.1	1	1649.49	3.25	0	75.35	0	0.26	0	0	6.33	0	0	0	0	0	0	-25.88	-25.88
Inverter Transformer	MV1-1 T	364721	4906166	2	0	0	56.1	56.1	1	1730.1	3.25	0	75.76	0	0.29	0	0	6.5	0	0	0	0	0	0	-26.5	-26.5
Inverter Transformer	MV2-4 T	365590	4906628	2	0	0	56.1	56.1	1	2312.97	3.25	0	78.28	0	0.54	0	0	7.64	0	0	0	0	0	0	-30.41	-30.41
Inverter Transformer	MV2-3 T	365814	4906641	2	0	0	56.1	56.1	1	2406.88	3.25	0	78.63	0	0.58	0	0	7.82	0	0	0	0	0	0	-30.97	-30.97
Inverter Transformer	MV2-2 T	365982	4906654	2	0	0	56.1	56.1	1	2491.18	3.25	0	78.93	0	0.61	0	0	7.97	0	0	0	0	0	0	-31.46	-31.46
Inverter Transformer	MV3-18 T	367757	4907412	2	0	0	56.1	56.1	1	4164.33	3.25	0	83.39	0	1.31	0	0	10.7	0	0	0	0	0	0	-39.34	-39.34
Inverter Transformer	MV3-12 T	367674	4907594	2	0	0	56.1	56.1	1	4240.2	3.25	0	83.55	0	1.34	0	0	10.81	0	0	0	0	0	0	-39.63	-39.63
Inverter Transformer	MV3-13 T	367958	4907577	2	0	0	56.1	56.1	1	4422.97	3.25	0	83.91	0	1.41	0	0	11.07	0	0	0	0	0	0	-40.33	-40.33
Inverter Transformer	MV3-17 T	368183	4907472	2	0	0	56.1	56.1	1	4513.17	3.25	0	84.09	0	1.44	0	0	11.19	0	0	0	0	0	0	-40.67	-40.67
Inverter Transformer	MV3-7 T	367951	4907754	2	0	0	56.1	56.1	1	4545.43	3.25	0	84.15	0	1.46	0	0	11.24	0	0	0	0	0	0	-40.79	-40.79
Inverter Transformer	MV3-19 T	368352	4907347	2	0	0	56.1	56.1	1	4559.03	3.25	0	84.18	0	1.46	0	0	11.26	0	0	0	0	0	0	-40.84	-40.84
Inverter Transformer	MV3-21 T	368484	4907206	2	0	0	56.1	56.1	1	4574.88	3.25	0	84.21	0	1.47	0	0	11.28	0	0	0	0	0	0	-40.9	-40.9
Inverter Transformer	MV3-10 T	368162	4907669	2	0	0	56.1	56.1	1	4632.72	3.25	0	84.32	0	1.49	0	0	11.36	0	0	0	0	0	0	-41.11	-41.11
Inverter Transformer	MV3-15 T	368351	4907477	2	0	0	56.1	56.1	1	4642.25	3.25	0	84.33	0	1.49	0	0	11.37	0	0	0	0	0	0	-41.14	-41.14

	Inverter Transformer	MV3-3 T	367944	4907927	2	0	0	56.1	56.1	1	4668.4	3.25	0	84.38	0	1.5	0	0	11.41	0	0	0	0	0	0	-41.24	-41.24
	Inverter Transformer	MV3-22 T	368661	4907142	2	0	0	56.1	56.1	1	4679.83	3.25	0	84.4	0	1.51	0	0	11.42	0	0	0	0	0	0	-41.28	-41.28
	Inverter Transformer	MV3-6 T	368156	4907834	2	0	0	56.1	56.1	1	4745.01	3.25	0	84.52	0	1.53	0	0	11.51	0	0	0	0	0	0	-41.51	-41.51
	Inverter Transformer	MV3-11 T	368340	4907662	2	0	0	56.1	56.1	1	4757.24	3.25	0	84.55	0	1.54	0	0	11.53	0	0	0	0	0	0	-41.55	-41.55
	Inverter Transformer	MV3-16 T	368509	4907475	2	0	0	56.1	56.1	1	4761.6	3.25	0	84.56	0	1.54	0	0	11.54	0	0	0	0	0	0	-41.57	-41.57
	Inverter Transformer	MV3-20 T	368683	4907317	2	0	0	56.1	56.1	1	4800.6	3.25	0	84.63	0	1.55	0	0	11.59	0	0	0	0	0	0	-41.71	-41.71
	Inverter Transformer	MV3-1 T	368150	4907976	2	0	0	56.1	56.1	1	4843.49	3.25	0	84.7	0	1.57	0	0	11.65	0	0	0	0	0	0	-41.86	-41.86
	Inverter Transformer	MV3-5 T	368335	4907843	2	0	0	56.1	56.1	1	4878.06	3.25	0	84.76	0	1.58	0	0	11.69	0	0	0	0	0	0	-41.98	-41.98
	Inverter Transformer	MV3-14 T	368678	4907498	2	0	0	56.1	56.1	1	4907.3	3.25	0	84.82	0	1.59	0	0	11.73	0	0	0	0	0	0	-42.08	-42.08
	Inverter Transformer	MV3-9 T	368517	4907703	2	0	0	56.1	56.1	1	4916.05	3.25	0	84.83	0	1.59	0	0	11.74	0	0	0	0	0	0	-42.11	-42.11
	Inverter Transformer	MV3-8 T	368685	4907712	2	0	0	56.1	56.1	1	5048.76	3.25	0	85.06	0	1.64	0	0	11.92	0	0	0	0	0	0	-42.57	-42.57
	Inverter Transformer	MV3-4 T	368507	4907925	2	0	0	56.1	56.1	1	5058.87	3.25	0	85.08	0	1.65	0	0	11.93	0	0	0	0	0	0	-42.6	-42.6
	Inverter Transformer	MV3-2 T	368677	4907928	2	0	0	56.1	56.1	1	5185.43	3.25	0	85.3	0	1.69	0	0	12.1	0	0	0	0	0	0	-43.03	-43.03
	Inverter Transformer	MV4-15 T	369170	4908481	2	0	0	56.1	56.1	1	5922.72	3.25	0	86.45	0	1.94	0	0	13.01	0	0	0	0	0	0	-45.34	-45.34
	Inverter Transformer	MV4-13 T	369057	4908605	2	0	0	56.1	56.1	1	5927.08	3.25	0	86.46	0	1.94	0	0	13.02	0	0	0	0	0	0	-45.36	-45.36
	Inverter Transformer	MV4-14 T	369182	4908507	2	0	0	56.1	56.1	1	5949.24	3.25	0	86.49	0	1.95	0	0	13.04	0	0	0	0	0	0	-45.42	-45.42
	Inverter Transformer	MV6-2 T	370091	4907339	2	0	0	56.1	56.1	1	5998.1	3.25	0	86.56	0	1.96	0	0	13.1	0	0	0	0	0	0	-45.57	-45.57
	Inverter Transformer	MV6-3 T	370202	4907140	2	0	0	56.1	56.1	1	6003.42	3.25	0	86.57	0	1.97	0	0	13.11	0	0	0	0	0	0	-45.58	-45.58
	Inverter Transformer	MV4-12 T	369049	4908803	2	0	0	56.1	56.1	1	6062.3	3.25	0	86.65	0	1.98	0	0	13.18	0	0	0	0	0	0	-45.76	-45.76
	Inverter Transformer	MV4-7 T	369040	4909001	2	0	0	56.1	56.1	1	6200.22	3.25	0	86.85	0	2.03	0	0	13.34	0	0	0	0	0	0	-46.15	-46.15
	Inverter Transformer	MV4-11 T	369269	4908855	2	0	0	56.1	56.1	1	6253.66	3.25	0	86.92	0	2.04	0	0	13.4	0	0	0	0	0	0	-46.31	-46.31
	Inverter Transformer	MV4-10 T	369307	4908858	2	0	0	56.1	56.1	1	6282.74	3.25	0	86.96	0	2.05	0	0	13.43	0	0	0	0	0	0	-46.39	-46.39
	Inverter Transformer	MV4-4 T	369033	4909199	2	0	0	56.1	56.1	1	6342.66	3.25	0	87.05	0	2.07	0	0	13.5	0	0	0	0	0	0	-46.56	-46.56
	Inverter Transformer	MV4-8 T	369262	4909001	2	0	0	56.1	56.1	1	6352.7	3.25	0	87.06	0	2.07	0	0	13.51	0	0	0	0	0	0	-46.59	-46.59
	Inverter Transformer	MV4-9 T	369284	4909001	2	0	0	56.1	56.1	1	6368.03	3.25	0	87.08	0	2.08	0	0	13.53	0	0	0	0	0	0	-46.63	-46.63
	Inverter Transformer	MV4-1 T	369017	4909397	2	0	0	56.1	56.1	1	6482.22	3.25	0	87.23	0	2.11	0	0	13.66	0	0	0	0	0	0	-46.95	-46.95
	Inverter Transformer	MV4-6 T	369249	4909192	2	0	0	56.1	56.1	1	6482.34	3.25	0	87.23	0	2.11	0	0	13.66	0	0	0	0	0	0	-46.95	-46.95
	Inverter Transformer	MV4-5 T	369283	4909199	2	0	0	56.1	56.1	1	6510.63	3.25	0	87.27	0	2.12	0	0	13.69	0	0	0	0	0	0	-47.03	-47.03
	Inverter Transformer	MV5-6 T	369987	4908507	2	0	0	56.1	56.1	1	6559.89	3.25	0	87.34	0	2.14	0	0	13.75	0	0	0	0	0	0	-47.16	-47.16
	Inverter Transformer	MV4-3 T	369234	4909397	2	0	0	56.1	56.1	1	6624.13	3.25	0	87.42	0	2.15	0	0	13.82	0	0	0	0	0	0	-47.34	-47.34
	Inverter Transformer	MV4-2 T	369267	4909397	2	0	0	56.1	56.1	1	6646.07	3.25	0	87.45	0	2.16	0	0	13.84	0	0	0	0	0	0	-47.4	-47.4
	Inverter Transformer	MV5-5 T	370021	4908690	2	0	0	56.1	56.1	1	6701.14	3.25	0	87.52	0	2.18	0	0	13.9	0	0	0	0	0	0	-47.54	-47.54
	Inverter Transformer	MV5-2 T	370011	4908853	2	0	0	56.1	56.1	1	6798.07	3.25	0	87.65	0	2.2	0	0	14.01	0	0	0	0	0	0	-47.8	-47.8
	Inverter Transformer	MV5-4 T	370330	4908707	2	0	0	56.1	56.1	1	6953.23	3.25	0	87.84	0	2.25	0	0	14.18	0	0	0	0	0	0	-48.21	-48.21
	Inverter Transformer	MV5-3 T	370237	4908851	2	0	0	56.1	56.1	1	6970.26	3.25	0	87.86	0	2.25	0	0	14.2	0	0	0	0	0	0	-48.26	-48.26
	Inverter Transformer	MV5-1 T	370015	4909142	2	0	0	56.1	56.1	1	6992.1	3.25	0	87.89	0	2.26	0	0	14.22	0	0	0	0	0	0	-48.31	-48.31
	Line Reactor	NGR	369421	4908787.5	5	0	0	45.4	45.4	1	6315.56	5.25	0	87.01	0	3.23	1.36	0.08	2.58	0	0	0	0	0	0	-48.83	-48.83
Limit. Valu	0	0																								
Level D/N:	29.1063	29.1063																								

Receiver: Existing Noise Receptor
ID: S-R134
X: 364711
Y: 4904288
Z: 4.5
Ground: 0

ISO	Description	ID	X	Y	Z	Ground	ReflOrd	LxT	LxN	L/A	Dist.	hm	Freq	Adiv	K0b	Agr	Abar	z	Aatm	Afol	Ahous	Cmet	CmetN	Dc	RL	LtotT	LtotN
	Inverter	MV1-15	365315	4904994	2	0	0	100.3	100.3	1	929.12	3.25	0	70.36	0	-0.28	0	0	10.67	0	0	0	0	0	0	19.56	19.56
	Inverter	MV1-11	364655	4905414	2	0	0	100.3	100.3	1	1127.39	3.25	0	72.04	0	-0.19	0	0	11.31	0	0	0	0	0	0	17.14	17.14
	Inverter	MV1-12	365038	4905386	2	0	0	100.3	100.3	1	1145.66	3.25	0	72.18	0	-0.18	0	0	11.37	0	0	0	0	0	0	16.94	16.94
	Inverter	MV1-14	365163	4905049	2	0	0	97.3	97.3	1	885.12	3.25	0	69.94	0	-0.3	0	0	10.51	0	0	0	0	0	0	17.17	17.17
	Inverter	MV1-13	364731	4905241	2	0	0	97.3	97.3	1	953.21	3.25	0	70.58	0	-0.27	0	0	10.75	0	0	0	0	0	0	16.24	16.24
	Inverter	MV1-8	364788	4905647	2	0	0	100.3	100.3	1	1361.18	3.25	0	73.68	0	-0.09	0	0	11.97	0	0	0	0	0	0	14.75	14.75
	Inverter	MV1-9	364561	4905646	2	0	0	100.3	100.3	1	1366.26	3.25	0	73.71	0	-0.08	0	0	11.98	0	0	0	0	0	0	14.7	14.7
	Inverter	MV1-6	364477	4905835	2	0	0	100.3	100.3	1	1564.6	3.25	0	74.89	0	-0.01	0	0	12.48	0	0	0	0	0	0	12.95	12.95
	Inverter	MV1-5	364671	4905892	2	0	0	100.3	100.3	1	1604.5	3.25	0	75.11	0	0	0	0	12.58	0	0	0	0	0	0	12.62	12.62
	Inverter	MV1-4	364815	4905918	2	0	0	100.3	100.3	1	1633.32	3.25	0	75.26	0	0.01	0	0	12.65	0	0	0	0	0	0	12.39	12.39
	Sol_Luce Substation	S_Substation	369426	4908792	3.5	0	0	112.1	112.1	1	6520.52	5.25	0	87.29	0	1.28	2.54	0.25	10.28	0	0	0	0	0	0	10.69	10.69
	Inverter	MV1-2	364753	4906063	2	0	0	100.3	100.3	1	1775.5	3.25	0	75.99	0	0.06	0	0	12.97	0	0	0	0	0	0	11.29	11.29
	Inverter	MV1-10	365004	4905564	2	0	0	97.3	97.3	1	1309.21	3.25	0	73.34	0	-0.11	0	0	11.83	0	0	0	0	0	0	12.25	12.25
	Inverter	MV1-1	364715	4906166	2	0	0	100.3	100.3	1	1878.01	3.25	0	76.47	0	0.09	0	0	13.2	0	0	0	0	0	0	10.54	10.54
	Inverter	MV1-7	364925	4905782	2	0	0	97.3	97.3	1	1509.25	3.25	0	74.58	0	-0.03	0	0	12.35	0	0	0	0	0	0	10.42	10.42
	Inverter	MV2-4	365586	4906624	2	0	0	100.3	100.3	1	2494.5	3.25	0	78.94	0	0.26	0	0	14.45	0	0	0	0	0	0	6.67	6.67
	Inverter	MV2-3	365820	4906641	2	0	0	100.3	100.3	1	2601.25	3.25	0	79.3	0	0.28	0	0	14.65	0	0	0	0	0	0	6.08	6.08
	Inverter	MV2-1	365842	4906816	2	0	0	97.3	97.3	1	2769.47	3.25	0	79.85	0	0.32	0	0	14.96	0	0	0	0	0	0	2.19	2.19
	Inverter	MV3-18	367752	4907412	2	0	0	100.3	100.3	1	4359.71	3.25	0	83.79	0	0.57	0	0	17.61	0	0	0	0	0	0	-1.67	-1.67
	Inverter	MV3-12	367668	4907594	2	0	0	100.3	100.3	1	4435.48	3.25	0	83.94	0	0.58	0	0	17.73	0	0	0	0	0	0	-1.94	-1.94
	Inverter	MV3-13	367963	4907577	2	0	0	100.3	100.3	1	4625.26	3.25	0	84.3	0	0.6	0	0	18.02	0	0	0	0	0	0	-2.62	-2.62
	Inverter	MV3-17	368178	4907472	2	0	0	100.3	100.3	1	4707.22	3.25	0	84.46	0	0.61	0	0	18.14	0	0	0	0	0	0	-2.9	-2.9
	Inverter	MV3-7	367945	4907754	2	0	0	100.3	100.3	1	4740.46	3.25	0	84.52	0	0.62	0	0	18.19	0	0	0	0	0	0	-3.02	-3.02
	Inverter	MV3-19	368357	4907347	2	0	0	100.3	100.3	1	4759.29	3.25	0	84.55	0	0.62	0	0	18.22	0	0	0	0	0	0	-3.08	-3.08
	Inverter	MV3-21	368478	4907206	2	0	0	100.3	100.3	1	4764.98	3.25	0	84.56	0	0.62	0	0	18.23	0	0	0	0	0	0	-3.1	-3.1
	Inverter	MV3-10	368167	4907669	2	0	0	100.3	100.3	1	4834.78	3.25	0	84.69	0	0.63	0	0	18.34	0	0	0	0	0	0	-3.34	-3.34

Inverter	MV3-15	368357	4907477	2	0	0	100.3	100.3	1	4843.87	3.25	0	84.7	0	0.63	0	0	18.35	0	0	0	0	0	0	-3.37	-3.37
Inverter	MV3-3	367939	4907927	2	0	0	100.3	100.3	1	4864.39	3.25	0	84.74	0	0.63	0	0	18.38	0	0	0	0	0	0	-3.44	-3.44
Inverter	MV3-6	368162	4907834	2	0	0	100.3	100.3	1	4948.08	3.25	0	84.89	0	0.64	0	0	18.5	0	0	0	0	0	0	-3.72	-3.72
Inverter	MV3-11	368346	4907662	2	0	0	100.3	100.3	1	4959.55	3.25	0	84.91	0	0.64	0	0	18.52	0	0	0	0	0	0	-3.76	-3.76
Inverter	MV3-16	368514	4907475	2	0	0	100.3	100.3	1	4961.83	3.25	0	84.91	0	0.64	0	0	18.52	0	0	0	0	0	0	-3.76	-3.76
Inverter	MV3-20	368689	4907317	2	0	0	100.3	100.3	1	4999.93	3.25	0	84.98	0	0.64	0	0	18.58	0	0	0	0	0	0	-3.89	-3.89
Inverter	MV3-14	368684	4907498	2	0	0	100.3	100.3	1	5107.72	3.25	0	85.16	0	0.65	0	0	18.74	0	0	0	0	0	0	-4.24	-4.24
Inverter	MV3-9	368512	4907703	2	0	0	100.3	100.3	1	5109.78	3.25	0	85.17	0	0.65	0	0	18.74	0	0	0	0	0	0	-4.25	-4.25
Inverter	MV3-8	368680	4907712	2	0	0	100.3	100.3	1	5241.83	3.25	0	85.39	0	0.66	0	0	18.93	0	0	0	0	0	0	-4.67	-4.67
Inverter	MV6-2	370085	4907339	2	0	0	100.3	100.3	1	6179.68	3.25	0	86.82	0	0.71	0	0	20.24	0	0	0	0	0	0	-7.45	-7.45
Inverter	MV6-3	370207	4907140	2	0	0	100.3	100.3	1	6191.92	3.25	0	86.84	0	0.71	0	0	20.25	0	0	0	0	0	0	-7.49	-7.49
Gardiner Substation	G_Sub	366586.3	4903349.9	2.5	0	0	90.8	90.8	1	2096.85	4.25	0	77.43	0	0.88	3.71	0.3	4.53	0	0	0	0	0	0	4.22	4.22
Inverter	MV4-7	369035	4909001	2	0	0	100.3	100.3	1	6396.04	3.25	0	87.12	0	0.71	0	0	20.52	0	0	0	0	0	0	-8.04	-8.04
Inverter	MV4-11	369264	4908855	2	0	0	100.3	100.3	1	6448.82	3.25	0	87.19	0	0.71	0	0	20.59	0	0	0	0	0	0	-8.18	-8.18
Inverter	MV1-3	364440	4906039	2	0	0	89.1	89.1	1	1771.85	3.25	0	75.97	0	0.85	0	0	7.67	0	0	0	0	0	0	4.57	4.57
Inverter	MV4-10	369312	4908858	2	0	0	100.3	100.3	1	6484.91	3.25	0	87.24	0	0.71	0	0	20.64	0	0	0	0	0	0	-8.28	-8.28
Inverter	MV4-4	369027	4909199	2	0	0	100.3	100.3	1	6538.03	3.25	0	87.31	0	0.71	0	0	20.71	0	0	0	0	0	0	-8.42	-8.42
Inverter	MV4-8	369256	4909001	2	0	0	100.3	100.3	1	6547.47	3.25	0	87.32	0	0.71	0	0	20.72	0	0	0	0	0	0	-8.45	-8.45
Inverter	MV4-9	369289	4909001	2	0	0	100.3	100.3	1	6570.42	3.25	0	87.35	0	0.72	0	0	20.75	0	0	0	0	0	0	-8.51	-8.51
Inverter	MV4-6	369243	4909192	2	0	0	100.3	100.3	1	6677.44	3.25	0	87.49	0	0.71	0	0	20.89	0	0	0	0	0	0	-8.78	-8.78
Inverter	MV4-1	369011	4909397	2	0	0	100.3	100.3	1	6677.72	3.25	0	87.49	0	0.71	0	0	20.89	0	0	0	0	0	0	-8.78	-8.78
Inverter	MV4-5	369289	4909199	2	0	0	100.3	100.3	1	6713.87	3.25	0	87.54	0	0.71	0	0	20.94	0	0	0	0	0	0	-8.88	-8.88
Inverter	MV4-3	369229	4909397	2	0	0	100.3	100.3	1	6820.13	3.25	0	87.68	0	0.71	0	0	21.07	0	0	0	0	0	0	-9.15	-9.15
Inverter	MV4-2	369272	4909397	2	0	0	100.3	100.3	1	6848.69	3.25	0	87.71	0	0.71	0	0	21.11	0	0	0	0	0	0	-9.22	-9.22
Inverter	MV5-5	370015	4908690	2	0	0	100.3	100.3	1	6892.75	3.25	0	87.77	0	0.71	0	0	21.16	0	0	0	0	0	0	-9.33	-9.33
Inverter	MV5-2	370006	4908853	2	0	0	100.3	100.3	1	6991.16	3.25	0	87.89	0	0.71	0	0	21.29	0	0	0	0	0	0	-9.58	-9.58
Inverter	MV5-4	370324	4908707	2	0	0	100.3	100.3	1	7143.76	3.25	0	88.08	0	0.71	0	0	21.48	0	0	0	0	0	0	-9.95	-9.95
Inverter	MV5-3	370231	4908851	2	0	0	100.3	100.3	1	7161.8	3.25	0	88.1	0	0.7	0	0	21.5	0	0	0	0	0	0	-9.99	-9.99
Inverter	MV5-1	370020	4909142	2	0	0	100.3	100.3	1	7193.53	3.25	0	88.14	0	0.7	0	0	21.54	0	0	0	0	0	0	-10.07	-10.07
Inverter	MV6-1	370235	4907364	2	0	0	97.3	97.3	1	6322.69	3.25	0	87.02	0	0.71	0	0	20.43	0	0	0	0	0	0	-10.84	-10.84
Inverters	G_Inv1	366526.4	4903225.8	2	0	0	87.7	87.7	1	2103.32	3.25	0	77.46	0	2.6	0	0	2.76	0	0	0	0	0	0	4.85	4.85
Inverters	G_Inv3	366583.7	4903091.4	2	0	0	87.7	87.7	1	2222.36	3.25	0	77.94	0	2.61	0	0	2.89	0	0	0	0	0	0	4.22	4.22
Inverters	G_Inv2	366676.9	4903239.1	2	0	0	87.7	87.7	1	2228.22	3.25	0	77.96	0	2.61	0	0	2.9	0	0	0	0	0	0	4.19	4.19
Inverter	MV2-2	365977	4906654	2	0	0	89.1	89.1	1	2683.42	3.25	0	79.57	0	1.07	0	0	9.13	0	0	0	0	0	0	-0.72	-0.72
DSTATCOM - 10 MVAR #2	DSAT2	369403	4908757	2.5	0	0	96.6	96.6	1	6479.72	3.5	0	87.23	0	3.81	0	0	4.07	0	0	0	0	0	0	1.53	1.53
DSTATCOM - 10 MVAR #1	DSAT1	369437	4908757	2.5	0	0	96.6	96.6	1	6504.39	3.5	0	87.26	0	3.81	0	0	4.08	0	0	0	0	0	0	1.48	1.48
Inverters	G_Inv5	366638.5	4902958.1	2	0	0	87.7	87.7	1	2341.77	3.25	0	78.39	0	2.62	0	0	3.03	0	0	0	0	0	0	3.61	3.61
Inverters	G_Inv4	366732.8	4903105	2	0	0	87.7	87.7	1	2342.47	3.25	0	78.39	0	2.63	0	0	3.03	0	0	0	0	0	0	3.61	3.61
Inverters	G_Inv6	366788.5	4902972	2	0	0	87.7	87.7	1	2459.24	3.25	0	78.82	0	2.64	0	0	3.16	0	0	0	0	0	0	3.04	3.04
Inverters	G_Inv7	366694.6	4902824.7	2	0	0	87.7	87.7	1	2464.94	3.25	0	78.84	0	2.64	0	0	3.17	0	0	0	0	0	0	3.01	3.01
Inverters	G_Inv8	366844.5	4902838.5	2	0	0	87.7	87.7	1	2579.32	3.25	0	79.23	0	2.65	0	0	3.3	0	0	0	0	0	0	2.48	2.48
Inverters	G_Inv9	366750.9	4902691.8	2	0	0	87.7	87.7	1	2590.18	3.25	0	79.27	0	2.65	0	0	3.31	0	0	0	0	0	0	2.43	2.43
Inverters	G_Inv10	366900.7	4902704.8	2	0	0	87.7	87.7	1	2702.09	3.25	0	79.63	0	2.67	0	0	3.44	0	0	0	0	0	0	1.92	1.92
SubstationTransformer	W_ST	369711.17	4906112.3	2.5	0	0	92	92	1	5322.56	4.25	0	85.52	0	1.72	2.25	0.27	9	0	0	0	0	0	0	-6.51	-6.51
Inverter	MV3-22	368656	4907142	2	0	0	89.1	89.1	1	4869.12	3.25	0	84.75	0	1.61	0	0	12.29	0	0	0	0	0	0	-9.59	-9.59
Inverter	MV3-1	368156	4907976	2	0	0	89.1	89.1	1	5046.72	3.25	0	85.06	0	1.65	0	0	12.53	0	0	0	0	0	0	-10.18	-10.18
Inverter	MV3-5	368340	4907843	2	0	0	89.1	89.1	1	5080.13	3.25	0	85.12	0	1.66	0	0	12.57	0	0	0	0	0	0	-10.29	-10.29
Westbrook Inverter Enclosur	W_INV2	369374	4906388	2	0	0	89.1	89.1	1	5114.06	3.25	0	85.18	0	1.67	0	0	12.62	0	0	0	0	0	0	-10.4	-10.4
Westbrook Inverter Enclosur	W_INV3	369508	4906164	2	0	0	89.1	89.1	1	5150.79	3.25	0	85.24	0	1.68	0	0	12.66	0	0	0	0	0	0	-10.52	-10.52
Inverter	MV3-4	368502	4907925	2	0	0	89.1	89.1	1	5253.52	3.25	0	85.41	0	1.7	0	0	12.8	0	0	0	0	0	0	-10.85	-10.85
Westbrook Inverter Enclosur	W_INV4	369673	4906164	2	0	0	89.1	89.1	1	5304.79	3.25	0	85.49	0	1.72	0	0	12.87	0	0	0	0	0	0	-11.02	-11.02
Inverter	MV3-2	368671	4907928	2	0	0	89.1	89.1	1	5378.77	3.25	0	85.61	0	1.73	0	0	12.96	0	0	0	0	0	0	-11.25	-11.25
Westbrook Inverter Enclosur	W_INV7	369780	4906417	2	0	0	89.1	89.1	1	5497.95	3.25	0	85.8	0	1.76	0	0	13.12	0	0	0	0	0	0	-11.63	-11.63
Westbrook Inverter Enclosur	W_INV5	369719	4906574	2	0	0	89.1	89.1	1	5505.08	3.25	0	85.82	0	1.76	0	0	13.13	0	0	0	0	0	0	-11.65	-11.65
Westbrook Inverter Enclosur	W_INV6	369875	4906578	2	0	0	89.1	89.1	1	5648.98	3.25	0	86.04	0	1.8	0	0	13.32	0	0	0	0	0	0	-12.1	-12.1
Fixed Reactor Bank 1	FRB1	369378	4908755	6	0	0	89.8	89.8	1	6460.26	5.25	0	87.21	0	-0.35	0	0	10.22	0	0	0	0	0	0	-7.29	-7.29
Fixed Reactor Bank 2	FRB2	369464	4908755	6	0	0	89.8	89.8	1	6522.66	5.25	0	87.29	0	-0.35	0	0	10.28	0	0	0	0	0	0	-7.45	-7.45
Inverter	MV4-13	369051	4908605	2	0	0	89.1	89.1	1	6121.45	3.25	0	86.74	0	1.92	0	0	13.91	0	0	0	0	0	0	-13.51	-13.51
Inverter	MV4-15	369176	4908481	2	0	0	89.1	89.1	1	6125.15	3.25	0	86.74	0	1.92	0	0	13.92	0	0	0	0	0	0	-13.52	-13.52
Inverter	MV4-14	369176	4908507	2	0	0	89.1	89.1	1	6142.98	3.25	0	86.77	0	1.92	0	0	13.94	0	0	0	0	0	0	-13.57	-13.57
Inverter	MV4-12	369043	4908803	2	0	0	89.1	89.1	1	6257.11	3.25	0	86.93	0	1.95	0	0	14.08	0	0	0	0	0	0	-13.9	-13.9
Inverter	MV5-6	369982	4908507	2	0	0	89.1	89.1	1	6751.55	3.25	0	87.59	0	2.07	0	0	14.69	0	0	0	0	0	0	-15.29	-15.29
Westbrook Inverter Enclosur	W_INV1	369409	4906578	2	0	0	86.1	86.1	1	5226.41	3.25	0	85.36	0	1.7	0	0	12.76	0	0	0	0	0	0	-13.77	-13.77
Inverter Transformer	MV1-14 T	365157	4905049	2	0	0	69.4	69.4	1	882.07	3.25	0	69.91	0	1.58	0	0	3.64	0	0	0	0	0	0	-5.78	-5.78
Inverter	MV6-4	370250	4906966	2	0	0	86.1	86.1	1	6152.42	3.25	0	86.78	0	1.92	0	0	13.95	0	0	0	0	0	0	-16.6	-16.6
Inverter Transformer	MV1-13 T	364725	4905241	2	0	0	69.4	69.4	1	953.11	3.25	0	70.58	0	1.64	0	0	3.74	0	0	0	0	0	0	-6.62	-6.62
Inverter Transformer	MV1-10 T	365010	4905564	2	0	0	69.4	69.4	1	1310.57	3.25	0	73.35	0	1.88	0	0	4.21	0	0	0	0	0	0	-10.09	-10.09
Inverter Transformer	MV1-7 T	364919	4905782	2	0	0	69.4	69.4	1	1508.41	3.25	0	74.57	0	1.98	0	0	4.44	0	0	0	0	0	0	-11.64	-11.64
Westbrook Inverter Transfor	W_INVTR1	369403	4906578	2	0	0	78.2	78.2	1	5221.01	3.25	0	85.36	0	-3.22	0	0	2.49	0	0	0	0	0	0	-6.38	-6.38
Westbrook Inverter Transfor	W_INVTR2	369368	4906388	2	0	0	77.3	77.3	1	5108.59	3.25	0	85.17	0	-3.2	0	0	2.45	0	0	0	0	0	0	-7.08	-7.08
Westbrook Inverter Transfor	W_INVTR3	369514	4906164	2	0	0	77.3	77.3	1	5156.37	3.25	0	85.25	0	-3.21	0	0	2.47	0	0	0	0	0	0	-7.16	-7.16
Westbrook Inverter Transfor	W_INVTR4	369679	4906164	2	0	0	77.3	77.3	1	5310.41	3.25	0	85.5	0	-3.24	0	0	2.52	0	0	0	0	0	0	-7.44	-7.44
Westbrook Inverter Transfor	W_INVTR7	369786	4906417	2	0	0	77.3	77.3	1	5503.48	3.25	0	85.81	0	-3.28	0	0	2.58	0	0	0	0	0	0	-7.78	-7.78
Westbrook Inverter Transfor	W_INVTR5	369725	4906574	2	0	0	77.3	77.3	1	5510.54	3.25	0	85.82	0	-3.28	0	0	2.58	0	0	0	0	0	0	-7.79	-7.79

Westbrook Inverter Transfor	W_INVTR6	369881	4906578	2	0	0	77.3	77.3	1	5654.47	3.25	0	86.05	0	-3.3	0	0	2.63	0	0	0	0	0	0	-8.03	-8.03
Inverter Transformer	MV2-1 T	365836	4906816	2	0	0	69.4	69.4	1	2767.02	3.25	0	79.84	0	2.44	0	0	5.68	0	0	0	0	0	0	-18.61	-18.61
Inverter Transformer	MV1-15 T	365309	4904994	2	0	0	56.1	56.1	1	925.23	3.25	0	70.32	0	-0.01	0	0	4.71	0	0	0	0	0	0	-18.96	-18.96
Inverter Transformer	MV1-11 T	364649	4905414	2	0	0	56.1	56.1	1	1127.71	3.25	0	72.04	0	0.06	0	0	5.19	0	0	0	0	0	0	-21.23	-21.23
Inverter Transformer	MV1-12 T	365044	4905386	2	0	0	56.1	56.1	1	1147.39	3.25	0	72.19	0	0.06	0	0	5.23	0	0	0	0	0	0	-21.43	-21.43
Inverter Transformer	MV6-4 T	370244	4906966	2	0	0	69.4	69.4	1	6147.01	3.25	0	86.77	0	3.21	0	0	8.11	0	0	0	0	0	0	-28.74	-28.74
Inverter Transformer	MV1-8 T	364782	4905647	2	0	0	56.1	56.1	1	1360.86	3.25	0	73.68	0	0.14	0	0	5.72	0	0	0	0	0	0	-23.48	-23.48
Inverter Transformer	MV1-9 T	364555	4905646	2	0	0	56.1	56.1	1	1366.93	3.25	0	73.71	0	0.15	0	0	5.73	0	0	0	0	0	0	-23.53	-23.53
Inverter Transformer	MV6-1 T	370230	4907364	2	0	0	69.4	69.4	1	6318.32	3.25	0	87.01	0	3.23	0	0	8.21	0	0	0	0	0	0	-29.1	-29.1
Inverter Transformer	MV1-6 T	364482	4905835	2	0	0	56.1	56.1	1	1563.86	3.25	0	74.88	0	0.22	0	0	6.15	0	0	0	0	0	0	-25.2	-25.2
Inverter Transformer	MV1-5 T	364676	4905892	2	0	0	56.1	56.1	1	1604.38	3.25	0	75.11	0	0.24	0	0	6.24	0	0	0	0	0	0	-25.53	-25.53
Inverter Transformer	MV1-4 T	364821	4905918	2	0	0	56.1	56.1	1	1633.71	3.25	0	75.26	0	0.25	0	0	6.3	0	0	0	0	0	0	-25.76	-25.76
Inverter Transformer	MV1-3 T	364435	4906039	2	0	0	56.1	56.1	1	1772.62	3.25	0	75.97	0	0.31	0	0	6.59	0	0	0	0	0	0	-26.81	-26.81
Inverter Transformer	MV1-2 T	364759	4906063	2	0	0	56.1	56.1	1	1775.65	3.25	0	75.99	0	0.31	0	0	6.59	0	0	0	0	0	0	-26.83	-26.83
Inverter Transformer	MV1-1 T	364721	4906166	2	0	0	56.1	56.1	1	1878.03	3.25	0	76.47	0	0.35	0	0	6.8	0	0	0	0	0	0	-27.57	-27.57
Inverter Transformer	MV2-4 T	365590	4906628	2	0	0	56.1	56.1	1	2499.65	3.25	0	78.96	0	0.62	0	0	7.99	0	0	0	0	0	0	-31.5	-31.5
Inverter Transformer	MV2-3 T	365814	4906641	2	0	0	56.1	56.1	1	2598.7	3.25	0	79.3	0	0.66	0	0	8.17	0	0	0	0	0	0	-32.06	-32.06
Inverter Transformer	MV2-2 T	365982	4906654	2	0	0	56.1	56.1	1	2685.78	3.25	0	79.58	0	0.7	0	0	8.32	0	0	0	0	0	0	-32.54	-32.54
Inverter Transformer	MV3-18 T	367757	4907412	2	0	0	56.1	56.1	1	4363.2	3.25	0	83.8	0	1.39	0	0	10.98	0	0	0	0	0	0	-40.11	-40.11
Inverter Transformer	MV3-12 T	367674	4907594	2	0	0	56.1	56.1	1	4439.48	3.25	0	83.95	0	1.42	0	0	11.09	0	0	0	0	0	0	-40.4	-40.4
Inverter Transformer	MV3-13 T	367958	4907577	2	0	0	56.1	56.1	1	4621.75	3.25	0	84.3	0	1.49	0	0	11.34	0	0	0	0	0	0	-41.07	-41.07
Inverter Transformer	MV3-17 T	368183	4907472	2	0	0	56.1	56.1	1	4710.91	3.25	0	84.46	0	1.52	0	0	11.47	0	0	0	0	0	0	-41.39	-41.39
Inverter Transformer	MV3-7 T	367951	4907754	2	0	0	56.1	56.1	1	4744.55	3.25	0	84.52	0	1.53	0	0	11.51	0	0	0	0	0	0	-41.51	-41.51
Inverter Transformer	MV3-19 T	368352	4907347	2	0	0	56.1	56.1	1	4755.46	3.25	0	84.54	0	1.54	0	0	11.53	0	0	0	0	0	0	-41.55	-41.55
Inverter Transformer	MV3-21 T	368484	4907206	2	0	0	56.1	56.1	1	4769.72	3.25	0	84.57	0	1.54	0	0	11.55	0	0	0	0	0	0	-41.6	-41.6
Inverter Transformer	MV3-10 T	368162	4907669	2	0	0	56.1	56.1	1	4831.21	3.25	0	84.68	0	1.56	0	0	11.63	0	0	0	0	0	0	-41.82	-41.82
Inverter Transformer	MV3-15 T	368351	4907477	2	0	0	56.1	56.1	1	4839.35	3.25	0	84.7	0	1.57	0	0	11.64	0	0	0	0	0	0	-41.84	-41.84
Inverter Transformer	MV3-3 T	367944	4907927	2	0	0	56.1	56.1	1	4867.71	3.25	0	84.75	0	1.58	0	0	11.68	0	0	0	0	0	0	-41.94	-41.94
Inverter Transformer	MV3-22 T	368661	4907142	2	0	0	56.1	56.1	1	4873.17	3.25	0	84.76	0	1.58	0	0	11.69	0	0	0	0	0	0	-41.96	-41.96
Inverter Transformer	MV3-6 T	368156	4907834	2	0	0	56.1	56.1	1	4943.9	3.25	0	84.88	0	1.61	0	0	11.78	0	0	0	0	0	0	-42.21	-42.21
Inverter Transformer	MV3-11 T	368340	4907662	2	0	0	56.1	56.1	1	4955.15	3.25	0	84.9	0	1.61	0	0	11.79	0	0	0	0	0	0	-42.25	-42.25
Inverter Transformer	MV3-16 T	368509	4907475	2	0	0	56.1	56.1	1	4958	3.25	0	84.91	0	1.61	0	0	11.8	0	0	0	0	0	0	-42.26	-42.26
Inverter Transformer	MV3-20 T	368683	4907317	2	0	0	56.1	56.1	1	4995.16	3.25	0	84.97	0	1.62	0	0	11.85	0	0	0	0	0	0	-42.38	-42.38
Inverter Transformer	MV3-1 T	368150	4907976	2	0	0	56.1	56.1	1	5042.63	3.25	0	85.05	0	1.64	0	0	11.91	0	0	0	0	0	0	-42.55	-42.55
Inverter Transformer	MV3-5 T	368335	4907843	2	0	0	56.1	56.1	1	5076.55	3.25	0	85.11	0	1.65	0	0	11.95	0	0	0	0	0	0	-42.66	-42.66
Inverter Transformer	MV3-14 T	368678	4907498	2	0	0	56.1	56.1	1	5103.06	3.25	0	85.16	0	1.66	0	0	11.99	0	0	0	0	0	0	-42.75	-42.75
Inverter Transformer	MV3-9 T	368517	4907703	2	0	0	56.1	56.1	1	5113.5	3.25	0	85.17	0	1.67	0	0	12	0	0	0	0	0	0	-42.78	-42.78
Inverter Transformer	MV3-8 T	368685	4907712	2	0	0	56.1	56.1	1	5245.61	3.25	0	85.4	0	1.71	0	0	12.17	0	0	0	0	0	0	-43.22	-43.22
Inverter Transformer	MV3-4 T	368507	4907925	2	0	0	56.1	56.1	1	5257.13	3.25	0	85.41	0	1.72	0	0	12.19	0	0	0	0	0	0	-43.26	-43.26
Inverter Transformer	MV3-2 T	368677	4907928	2	0	0	56.1	56.1	1	5383.19	3.25	0	85.62	0	1.76	0	0	12.35	0	0	0	0	0	0	-43.67	-43.67
Inverter Transformer	MV4-15 T	369170	4908481	2	0	0	56.1	56.1	1	6120.78	3.25	0	86.74	0	2	0	0	13.24	0	0	0	0	0	0	-45.93	-45.93
Inverter Transformer	MV4-13 T	369057	4908605	2	0	0	56.1	56.1	1	6125.7	3.25	0	86.74	0	2	0	0	13.25	0	0	0	0	0	0	-45.94	-45.94
Inverter Transformer	MV4-14 T	369182	4908507	2	0	0	56.1	56.1	1	6147.34	3.25	0	86.77	0	2.01	0	0	13.28	0	0	0	0	0	0	-46	-46
Inverter Transformer	MV6-2 T	370091	4907339	2	0	0	56.1	56.1	1	6184.9	3.25	0	86.83	0	2.02	0	0	13.32	0	0	0	0	0	0	-46.11	-46.11
Inverter Transformer	MV6-3 T	370202	4907140	2	0	0	56.1	56.1	1	6187.49	3.25	0	86.83	0	2.02	0	0	13.32	0	0	0	0	0	0	-46.12	-46.12
Inverter Transformer	MV4-12 T	369049	4908803	2	0	0	56.1	56.1	1	6261.27	3.25	0	86.93	0	2.05	0	0	13.41	0	0	0	0	0	0	-46.33	-46.33
Inverter Transformer	MV4-7 T	369040	4909001	2	0	0	56.1	56.1	1	6399.42	3.25	0	87.12	0	2.09	0	0	13.57	0	0	0	0	0	0	-46.72	-46.72
Inverter Transformer	MV4-11 T	369269	4908855	2	0	0	56.1	56.1	1	6452.35	3.25	0	87.19	0	2.1	0	0	13.63	0	0	0	0	0	0	-46.87	-46.87
Inverter Transformer	MV4-10 T	369307	4908858	2	0	0	56.1	56.1	1	6481.37	3.25	0	87.23	0	2.11	0	0	13.66	0	0	0	0	0	0	-46.95	-46.95
Inverter Transformer	MV4-4 T	369033	4909199	2	0	0	56.1	56.1	1	6541.99	3.25	0	87.31	0	2.13	0	0	13.73	0	0	0	0	0	0	-47.11	-47.11
Inverter Transformer	MV4-8 T	369262	4909001	2	0	0	56.1	56.1	1	6551.64	3.25	0	87.33	0	2.13	0	0	13.74	0	0	0	0	0	0	-47.14	-47.14
Inverter Transformer	MV4-9 T	369284	4909001	2	0	0	56.1	56.1	1	6566.94	3.25	0	87.35	0	2.14	0	0	13.76	0	0	0	0	0	0	-47.18	-47.18
Inverter Transformer	MV4-6 T	369249	4909192	2	0	0	56.1	56.1	1	6681.52	3.25	0	87.5	0	2.17	0	0	13.88	0	0	0	0	0	0	-47.49	-47.49
Inverter Transformer	MV4-1 T	369017	4909397	2	0	0	56.1	56.1	1	6681.58	3.25	0	87.5	0	2.17	0	0	13.88	0	0	0	0	0	0	-47.49	-47.49
Inverter Transformer	MV4-5 T	369283	4909199	2	0	0	56.1	56.1	1	6709.78	3.25	0	87.53	0	2.18	0	0	13.91	0	0	0	0	0	0	-47.57	-47.57
Inverter Transformer	MV5-6 T	369987	4908507	2	0	0	56.1	56.1	1	6755.45	3.25	0	87.59	0	2.19	0	0	13.96	0	0	0	0	0	0	-47.69	-47.69
Inverter Transformer	MV4-3 T	369234	4909397	2	0	0	56.1	56.1	1	6823.45	3.25	0	87.68	0	2.21	0	0	14.04	0	0	0	0	0	0	-47.87	-47.87
Inverter Transformer	MV4-2 T	369267	4909397	2	0	0	56.1	56.1	1	6845.37	3.25	0	87.71	0	2.22	0	0	14.06	0	0	0	0	0	0	-47.93	-47.93
Inverter Transformer	MV5-5 T	370021	4908690	2	0	0	56.1	56.1	1	6897.37	3.25	0	87.77	0	2.23	0	0	14.12	0	0	0	0	0	0	-48.07	-48.07
Inverter Transformer	MV5-2 T	370011	4908853	2	0	0	56.1	56.1	1	6994.94	3.25	0	87.9	0	2.26	0	0	14.22	0	0	0	0	0	0	-48.32	-48.32
Inverter Transformer	MV5-4 T	370330	4908707	2	0	0	56.1	56.1	1	7148.48	3.25	0	88.08	0	2.3	0	0	14.39	0	0	0	0	0	0	-48.71	-48.71
Inverter Transformer	MV5-3 T	370237	4908851	2	0	0	56.1	56.1	1	7166.43	3.25	0	88.11	0	2.3	0	0	14.41	0	0	0	0	0	0	-48.76	-48.76
Inverter Transformer	MV5-1 T	370015	4909142	2	0	0	56.1	56.1	1	7189.84	3.25	0	88.13	0	2.31	0	0	14.43	0	0	0	0	0	0	-48.82	-48.82
Line Reactor	NGR	369421	4908787.5	5	0	0	45.4	45.4	1	6513.8	5.25	0	87.28	0	3.23	1.37	0.08	2.66	0	0	0	0	0	0	-49.18	-49.18
Limit. Valu 0	0																								
Level D/N: 27.1666	27.1666																								

Receiver: Existing Noise Receptor
ID: S-R135
X: 364636
Y: 4904016
Z: 4.5
Ground: 0

ISO	Description	ID	X	Y	Z	Ground	ReflOrd	LxT	LxN	L/A	Dist.	hm	Freq	Adiv	K0b	Agr	Abar	z	Aatm	Afol	Ahous	Cmet	CmetN	Dc	RL	LtotT	LtotN
	Inverter	MV1-15	365315	4904994	2	0	0	100.3	100.3	1	1190.6	3.25	0	72.52	0	-0.16	0	0	11.5	0	0	0	0	0	0	16.46	16.46
	Inverter	MV1-11	364655	4905414	2	0	0	100.3	100.3	1	1398.13	3.25	0	73.91	0	-0.07	0	0	12.07	0	0	0	0	0	0	14.41	14.41
	Inverter	MV1-12	365038	4905386	2	0	0	100.3	100.3	1	1427.76	3.25	0	74.09	0	-0.06	0	0	12.14	0	0	0	0	0	0	14.14	14.14
	Inverter	MV1-9	364561	4905646	2	0	0	100.3	100.3	1	1631.73	3.25	0	75.25	0	0.01	0	0	12.64	0	0	0	0	0	0	12.4	12.4
	Inverter	MV1-8	364788	4905647	2	0	0	100.3	100.3	1	1638.07	3.25	0	75.29	0	0.02	0	0	12.66	0	0	0	0	0	0	12.35	12.35
	Inverter	MV1-14	365163	4905049	2	0	0	97.3	97.3	1	1159.67	3.25	0	72.29	0	-0.17	0	0	11.41	0	0	0	0	0	0	13.79	13.79
	Inverter	MV1-13	364731	4905241	2	0	0	97.3	97.3	1	1228.68	3.25	0	72.79	0	-0.14	0	0	11.61	0	0	0	0	0	0	13.06	13.06
	Sol_Luce Substation	S_Substation	369426	4908792	3.5	0	0	112.1	112.1	1	6764.19	5.25	0	87.6	0	1.33	2.49	0.25	10.52	0	0	0	0	0	0	10.13	10.13
	Inverter	MV1-6	364477	4905835	2	0	0	100.3	100.3	1	1825.94	3.25	0	76.23	0	0.08	0	0	13.09	0	0	0	0	0	0	10.92	10.92
	Inverter	MV1-5	364671	4905892	2	0	0	100.3	100.3	1	1876.33	3.25	0	76.47	0	0.09	0	0	13.2	0	0	0	0	0	0	10.56	10.56
	Inverter	MV1-4	364815	4905918	2	0	0	100.3	100.3	1	1910.41	3.25	0	76.62	0	0.1	0	0	13.27	0	0	0	0	0	0	10.32	10.32
	Inverter	MV1-2	364753	4906063	2	0	0	100.3	100.3	1	2050.34	3.25	0	77.24	0	0.14	0	0	13.57	0	0	0	0	0	0	9.36	9.36
	Inverter	MV1-1	364715	4906166	2	0	0	100.3	100.3	1	2151.45	3.25	0	77.65	0	0.17	0	0	13.77	0	0	0	0	0	0	8.71	8.71
	Inverter	MV1-10	365004	4905564	2	0	0	97.3	97.3	1	1591.14	3.25	0	75.03	0	0	0	0	12.55	0	0	0	0	0	0	9.73	9.73
	Inverter	MV1-7	364925	4905782	2	0	0	97.3	97.3	1	1789.49	3.25	0	76.05	0	0.07	0	0	13.01	0	0	0	0	0	0	8.19	8.19
	Inverter	MV2-4	365586	4906624	2	0	0	100.3	100.3	1	2775.64	3.25	0	79.87	0	0.32	0	0	14.97	0	0	0	0	0	0	5.16	5.16
	Inverter	MV2-3	365820	4906641	2	0	0	100.3	100.3	1	2879.67	3.25	0	80.19	0	0.34	0	0	15.16	0	0	0	0	0	0	4.63	4.63
	Inverter	MV2-1	365842	4906816	2	0	0	97.3	97.3	1	3048.68	3.25	0	80.68	0	0.37	0	0	15.46	0	0	0	0	0	0	0.8	0.8
	Inverter	MV3-18	367752	4907412	2	0	0	100.3	100.3	1	4608.93	3.25	0	84.27	0	0.6	0	0	18	0	0	0	0	0	0	-2.56	-2.56
	Inverter	MV3-12	367668	4907594	2	0	0	100.3	100.3	1	4689.89	3.25	0	84.42	0	0.61	0	0	18.12	0	0	0	0	0	0	-2.84	-2.84
	Inverter	MV3-13	367963	4907577	2	0	0	100.3	100.3	1	4873.36	3.25	0	84.76	0	0.63	0	0	18.39	0	0	0	0	0	0	-3.47	-3.47
	Inverter	MV3-17	368178	4907472	2	0	0	100.3	100.3	1	4948.71	3.25	0	84.89	0	0.64	0	0	18.5	0	0	0	0	0	0	-3.72	-3.72
	Inverter	MV3-7	367945	4907754	2	0	0	100.3	100.3	1	4992.21	3.25	0	84.97	0	0.64	0	0	18.57	0	0	0	0	0	0	-3.86	-3.86
	Inverter	MV3-21	368478	4907206	2	0	0	100.3	100.3	1	4993.7	3.25	0	84.97	0	0.64	0	0	18.57	0	0	0	0	0	0	-3.87	-3.87
	Inverter	MV3-19	368357	4907347	2	0	0	100.3	100.3	1	4994.14	3.25	0	84.97	0	0.64	0	0	18.57	0	0	0	0	0	0	-3.87	-3.87
	Inverter	MV3-10	368167	4907669	2	0	0	100.3	100.3	1	5080.59	3.25	0	85.12	0	0.65	0	0	18.7	0	0	0	0	0	0	-4.15	-4.15
	Inverter	MV3-15	368357	4907477	2	0	0	100.3	100.3	1	5081.77	3.25	0	85.12	0	0.65	0	0	18.7	0	0	0	0	0	0	-4.16	-4.16
	Inverter	MV3-3	367939	4907927	2	0	0	100.3	100.3	1	5119.15	3.25	0	85.18	0	0.65	0	0	18.75	0	0	0	0	0	0	-4.28	-4.28
	Inverter	MV3-16	368514	4907475	2	0	0	100.3	100.3	1	5196.5	3.25	0	85.31	0	0.66	0	0	18.87	0	0	0	0	0	0	-4.53	-4.53
	Inverter	MV3-6	368162	4907834	2	0	0	100.3	100.3	1	5197.1	3.25	0	85.32	0	0.66	0	0	18.87	0	0	0	0	0	0	-4.53	-4.53
	Inverter	MV3-11	368346	4907662	2	0	0	100.3	100.3	1	5201.67	3.25	0	85.32	0	0.66	0	0	18.87	0	0	0	0	0	0	-4.54	-4.54
	Inverter	MV3-20	368689	4907317	2	0	0	100.3	100.3	1	5227.18	3.25	0	85.37	0	0.66	0	0	18.91	0	0	0	0	0	0	-4.63	-4.63
	Inverter	MV3-14	368684	4907498	2	0	0	100.3	100.3	1	5339.54	3.25	0	85.55	0	0.67	0	0	19.07	0	0	0	0	0	0	-4.98	-4.98
	Inverter	MV3-9	368512	4907703	2	0	0	100.3	100.3	1	5349.52	3.25	0	85.57	0	0.67	0	0	19.09	0	0	0	0	0	0	-5.01	-5.01
	Inverter	MV3-8	368680	4907712	2	0	0	100.3	100.3	1	5478.54	3.25	0	85.77	0	0.68	0	0	19.27	0	0	0	0	0	0	-5.41	-5.41
	Gardiner Substation	G_Sub	366586.3	4903349.9	2.5	0	0	90.8	90.8	1	2060.91	4.25	0	77.28	0	0.89	3.77	0.31	4.47	0	0	0	0	0	0	4.37	4.37
	Inverter	MV6-2	370085	4907339	2	0	0	100.3	100.3	1	6382.31	3.25	0	87.1	0	0.71	0	0	20.5	0	0	0	0	0	0	-8.01	-8.01
	Inverter	MV6-3	370207	4907140	2	0	0	100.3	100.3	1	6387.13	3.25	0	87.11	0	0.71	0	0	20.51	0	0	0	0	0	0	-8.02	-8.02
	Inverter	MV4-7	369035	4909001	2	0	0	100.3	100.3	1	6648.42	3.25	0	87.45	0	0.71	0	0	20.85	0	0	0	0	0	0	-8.71	-8.71
	Inverter	MV4-11	369264	4908855	2	0	0	100.3	100.3	1	6695.84	3.25	0	87.52	0	0.71	0	0	20.91	0	0	0	0	0	0	-8.83	-8.83
	Inverter	MV4-10	369312	4908858	2	0	0	100.3	100.3	1	6731.27	3.25	0	87.56	0	0.71	0	0	20.96	0	0	0	0	0	0	-8.92	-8.92
	Inverter	MV4-4	369027	4909199	2	0	0	100.3	100.3	1	6792.97	3.25	0	87.64	0	0.71	0	0	21.04	0	0	0	0	0	0	-9.08	-9.08
	Inverter	MV4-8	369256	4909001	2	0	0	100.3	100.3	1	6796.66	3.25	0	87.65	0	0.71	0	0	21.04	0	0	0	0	0	0	-9.09	-9.09
	Inverter	MV4-9	369289	4909001	2	0	0	100.3	100.3	1	6819.14	3.25	0	87.67	0	0.71	0	0	21.07	0	0	0	0	0	0	-9.15	-9.15
	Inverter	MV4-6	369243	4909192	2	0	0	100.3	100.3	1	6929.32	3.25	0	87.81	0	0.71	0	0	21.21	0	0	0	0	0	0	-9.42	-9.42
	Inverter	MV4-1	369011	4909397	2	0	0	100.3	100.3	1	6935.11	3.25	0	87.82	0	0.71	0	0	21.22	0	0	0	0	0	0	-9.44	-9.44
	Inverter	MV4-5	369289	4909199	2	0	0	100.3	100.3	1	6965.19	3.25	0	87.86	0	0.71	0	0	21.26	0	0	0	0	0	0	-9.51	-9.51
	Inverter	MV4-3	369229	4909397	2	0	0	100.3	100.3	1	7074.66	3.25	0	87.99	0	0.71	0	0	21.39	0	0	0	0	0	0	-9.78	-9.78
	Inverter	MV4-2	369272	4909397	2	0	0	100.3	100.3	1	7102.65	3.25	0	88.03	0	0.71	0	0	21.43	0	0	0	0	0	0	-9.85	-9.85
	Inverter	MV5-5	370015	4908690	2	0	0	100.3	100.3	1	7126	3.25	0	88.06	0	0.71	0	0	21.46	0	0	0	0	0	0	-9.91	-9.91
	Inverter	MV5-2	370006	4908853	2	0	0	100.3	100.3	1	7227.27	3.25	0	88.18	0	0.7	0	0	21.58	0	0	0	0	0	0	-10.15	-10.15
	Inverter	MV5-4	370324	4908707	2	0	0	100.3	100.3	1	7372.84	3.25	0	88.35	0	0.7	0	0	21.76	0	0	0	0	0	0	-10.5	-10.5
	Inverter	MV5-3	370231	4908851	2	0	0	100.3	100.3	1	7394.68	3.25	0	88.38	0	0.69	0	0	21.79	0	0	0	0	0	0	-10.55	-10.55
	Inverter	MV1-3	364440	4906039	2	0	0	89.1	89.1	1	2032.47	3.25	0	77.16	0	0.91	0	0	8.1	0	0	0	0	0	0	2.88	2.88
	Inverter	MV5-1	370020	4909142	2	0	0	100.3	100.3	1	7433.93	3.25	0	88.42	0	0.69	0	0	21.83	0	0	0	0	0	0	-10.64	-10.64
	Inverters	G_Inv1	366526.4	4903225.8	2	0	0	87.7	87.7	1	2048.91	3.25	0	77.23	0	2.59	0	0	2.69	0	0	0	0	0	0	5.15	5.15
	Inverter	MV6-1	370235	4907364	2	0	0	97.3	97.3	1	6523.64	3.25	0	87.29	0	0.71	0	0	20.69	0	0	0	0	0	0	-11.38	-11.38
	Inverters	G_Inv3	366583.7	4903091.4	2	0	0	87.7	87.7	1	2156.02	3.25	0	77.67	0	2.6	0	0	2.82	0	0	0	0	0	0	4.57	4.57
	Inverters	G_Inv2	366676.9	4903239.1	2	0	0	87.7	87.7	1	2183.77	3.25	0	77.78	0	2.61	0	0	2.85	0	0	0	0	0	0	4.42	4.42
	Inverters	G_Inv5	366638.5	4902958.1	2	0	0	87.7	87.7	1	2264.77	3.25	0	78.1	0	2.62	0	0	2.94	0	0	0	0	0	0	4	4
	Inverters	G_Inv4	366732.8	4903105	2	0	0	87.7	87.7	1	2286.15	3.25	0	78.18	0	2.62	0	0	2.97	0	0	0	0	0	0	3.89	3.89
	Inverters	G_Inv7	366694.6	4902824.7	2	0	0	87.7	87.7	1	2378.45	3.25	0	78.53	0	2.63	0	0	3.07	0	0	0	0	0	0	3.43	3.43
	Inverters	G_Inv6	366788.5	4902972	2	0	0	87.7	87.7	1	2392.32	3.25	0	78.58	0	2.63	0	0	3.09	0	0	0	0	0	0	3.36	3.36
	DSTATCOM - 10 MVAR #2	DSAT2	369403	4908757	2.5	0	0	96.6	96.6	1	6723.2	3.5	0	87.55	0	3.82	0	0	4.18	0	0	0	0	0	0	1.08	1.08
	DSTATCOM - 10 MVAR #1	DSAT1	369437	4908757	2.5	0	0	96.6	96.6	1	6747.35	3.5	0	87.58	0	3.82	0	0	4.19	0	0	0	0	0	0	1.03	1.03
	Inverters	G_Inv9	366750.9	4902691.8	2	0	0	87.7	87.7	1	2495.26	3.25	0	78.94	0	2.64	0	0	3.21	0	0	0	0	0	0	2.87	2.87
	Inverters	G_Inv8	366844.5	4902838.5	2	0	0	87.7	87.7	1	2502.8	3.25	0	78.97	0	2.64	0	0	3.21	0	0	0	0	0	0	2.83	2.83
	Inverter	MV2-2	365977	4906654	2	0	0	89.1	89.1	1	2959.28	3.25	0	80.42	0	1.14	0	0	9.56	0	0	0	0	0	0	-2.06	-2.06
	Inverters	G_Inv10	366900.7	4902704.8	2	0	0	87.7	87.7	1	2616.89	3.25	0	79.36	0	2.66	0	0	3.34	0	0	0	0	0	0	2.3	2.3
	SubstationTransformer	W_ST	369711.17	4906112.3	2.5	0	0	92	92	1	5491.06	4.25	0	85.79	0	1.76	2.21	0.27	9.19	0	0	0	0	0	0	-6.98	-6.98
	Inverter	MV3-22	368656	4907142	2	0	0	89.1	89.1	1	5092.37	3.25	0	85.14	0	1.66	0	0	12.59	0	0	0	0	0	0	-10.33	-10.33
	Inverter	MV3-1	368156	4907976	2	0	0	89.1	89.1	1	5298.3	3.25	0	85.48	0	1.71	0	0	12.86	0	0	0	0	0	0	-11	-11
	Westbrook Inverter Enclosur	W_INV2	369374	4906388	2	0	0	89.1	89.1	1	5298.59	3.25	0	85.48	0	1.71	0	0	12.86	0	0	0	0	0	0	-11	-11

Westbrook Inverter Enclosur	W_INV3	369508	4906164	2	0	0	89.1	89.1	1	5324.5	3.25	0	85.53	0	1.72	0	0	12.89	0	0	0	0	0	0	-11.08	-11.08
Inverter	MV3-5	368340	4907843	2	0	0	89.1	89.1	1	5325.93	3.25	0	85.53	0	1.72	0	0	12.9	0	0	0	0	0	0	-11.09	-11.09
Westbrook Inverter Enclosur	W_INV4	369673	4906164	2	0	0	89.1	89.1	1	5475.88	3.25	0	85.77	0	1.76	0	0	13.09	0	0	0	0	0	0	-11.56	-11.56
Inverter	MV3-4	368502	4907925	2	0	0	89.1	89.1	1	5497.84	3.25	0	85.8	0	1.76	0	0	13.12	0	0	0	0	0	0	-11.63	-11.63
Inverter	MV3-2	368671	4907928	2	0	0	89.1	89.1	1	5620.05	3.25	0	85.99	0	1.79	0	0	13.28	0	0	0	0	0	0	-12.01	-12.01
Westbrook Inverter Enclosur	W_INV7	369780	4906417	2	0	0	89.1	89.1	1	5676.75	3.25	0	86.08	0	1.81	0	0	13.35	0	0	0	0	0	0	-12.18	-12.18
Westbrook Inverter Enclosur	W_INV5	369719	4906574	2	0	0	89.1	89.1	1	5690.37	3.25	0	86.1	0	1.81	0	0	13.37	0	0	0	0	0	0	-12.22	-12.22
Westbrook Inverter Enclosur	W_INV6	369875	4906578	2	0	0	89.1	89.1	1	5831.89	3.25	0	86.32	0	1.84	0	0	13.55	0	0	0	0	0	0	-12.65	-12.65
Fixed Reactor Bank 1	FRB1	369378	4908755	6	0	0	89.8	89.8	1	6704.08	5.25	0	87.53	0	-0.32	0	0	10.46	0	0	0	0	0	0	-7.89	-7.89
Fixed Reactor Bank 2	FRB2	369464	4908755	6	0	0	89.8	89.8	1	6765.18	5.25	0	87.61	0	-0.31	0	0	10.52	0	0	0	0	0	0	-8.04	-8.04
Inverter	MV4-15	369176	4908481	2	0	0	89.1	89.1	1	6367.72	3.25	0	87.08	0	1.98	0	0	14.22	0	0	0	0	0	0	-14.22	-14.22
Inverter	MV4-13	369051	4908605	2	0	0	89.1	89.1	1	6367.98	3.25	0	87.08	0	1.98	0	0	14.22	0	0	0	0	0	0	-14.22	-14.22
Inverter	MV4-14	369176	4908507	2	0	0	89.1	89.1	1	6385.98	3.25	0	87.1	0	1.98	0	0	14.24	0	0	0	0	0	0	-14.27	-14.27
Inverter	MV4-12	369043	4908803	2	0	0	89.1	89.1	1	6506.69	3.25	0	87.27	0	2.01	0	0	14.39	0	0	0	0	0	0	-14.61	-14.61
Inverter	MV5-6	369982	4908507	2	0	0	89.1	89.1	1	6982.03	3.25	0	87.88	0	2.12	0	0	14.97	0	0	0	0	0	0	-15.91	-15.91
Westbrook Inverter Enclosur	W_INV1	369409	4906578	2	0	0	86.1	86.1	1	5417.14	3.25	0	85.68	0	1.74	0	0	13.01	0	0	0	0	0	0	-14.37	-14.37
Inverter	MV6-4	370250	4906966	2	0	0	86.1	86.1	1	6341.88	3.25	0	87.04	0	1.97	0	0	14.19	0	0	0	0	0	0	-17.14	-17.14
Inverter Transformer	MV1-14 T	365157	4905049	2	0	0	69.4	69.4	1	1156.95	3.25	0	72.27	0	1.8	0	0	4.02	0	0	0	0	0	0	-8.73	-8.73
Inverter Transformer	MV1-13 T	364725	4905241	2	0	0	69.4	69.4	1	1228.23	3.25	0	72.79	0	1.84	0	0	4.11	0	0	0	0	0	0	-9.38	-9.38
Inverter Transformer	MV1-10 T	365010	4905564	2	0	0	69.4	69.4	1	1592.54	3.25	0	75.04	0	2.01	0	0	4.54	0	0	0	0	0	0	-12.24	-12.24
Inverter Transformer	MV1-7 T	364919	4905782	2	0	0	69.4	69.4	1	1788.53	3.25	0	76.05	0	2.09	0	0	4.75	0	0	0	0	0	0	-13.54	-13.54
Westbrook Inverter Transfor	W_INVTR1	369403	4906578	2	0	0	78.2	78.2	1	5411.85	3.25	0	85.67	0	-3.26	0	0	2.55	0	0	0	0	0	0	-6.72	-6.72
Westbrook Inverter Transfor	W_INVTR2	369368	4906388	2	0	0	77.3	77.3	1	5293.22	3.25	0	85.47	0	-3.24	0	0	2.51	0	0	0	0	0	0	-7.41	-7.41
Westbrook Inverter Transfor	W_INVTR3	369514	4906164	2	0	0	77.3	77.3	1	5329.99	3.25	0	85.53	0	-3.24	0	0	2.52	0	0	0	0	0	0	-7.47	-7.47
Westbrook Inverter Transfor	W_INVTR4	369679	4906164	2	0	0	77.3	77.3	1	5481.4	3.25	0	85.78	0	-3.27	0	0	2.57	0	0	0	0	0	0	-7.74	-7.74
Westbrook Inverter Transfor	W_INVTR7	369786	4906417	2	0	0	77.3	77.3	1	5682.19	3.25	0	86.09	0	-3.31	0	0	2.64	0	0	0	0	0	0	-8.08	-8.08
Westbrook Inverter Transfor	W_INVTR5	369725	4906574	2	0	0	77.3	77.3	1	5695.73	3.25	0	86.11	0	-3.31	0	0	2.64	0	0	0	0	0	0	-8.1	-8.1
Westbrook Inverter Transfor	W_INVTR6	369881	4906578	2	0	0	77.3	77.3	1	5837.28	3.25	0	86.32	0	-3.34	0	0	2.69	0	0	0	0	0	0	-8.33	-8.33
Inverter Transformer	MV2-1 T	365836	4906816	2	0	0	69.4	69.4	1	3046.31	3.25	0	80.68	0	2.52	0	0	5.92	0	0	0	0	0	0	-19.77	-19.77
Inverter Transformer	MV1-15 T	365309	4904994	2	0	0	56.1	56.1	1	1187.19	3.25	0	72.49	0	0.08	0	0	5.33	0	0	0	0	0	0	-21.84	-21.84
Inverter Transformer	MV6-4 T	370244	4906966	2	0	0	69.4	69.4	1	6336.57	3.25	0	87.04	0	3.24	0	0	8.22	0	0	0	0	0	0	-29.14	-29.14
Inverter Transformer	MV1-11 T	364649	4905414	2	0	0	56.1	56.1	1	1398.06	3.25	0	73.91	0	0.16	0	0	5.8	0	0	0	0	0	0	-23.81	-23.81
Inverter Transformer	MV6-1 T	370230	4907364	2	0	0	69.4	69.4	1	6519.35	3.25	0	87.28	0	3.26	0	0	8.33	0	0	0	0	0	0	-29.52	-29.52
Inverter Transformer	MV1-12 T	365044	4905386	2	0	0	56.1	56.1	1	1429.47	3.25	0	74.1	0	0.17	0	0	5.87	0	0	0	0	0	0	-24.08	-24.08
Inverter Transformer	MV1-9 T	364555	4905646	2	0	0	56.1	56.1	1	1632.01	3.25	0	75.25	0	0.25	0	0	6.3	0	0	0	0	0	0	-25.75	-25.75
Inverter Transformer	MV1-8 T	364782	4905647	2	0	0	56.1	56.1	1	1637.52	3.25	0	75.28	0	0.25	0	0	6.31	0	0	0	0	0	0	-25.79	-25.79
Inverter Transformer	MV1-6 T	364482	4905835	2	0	0	56.1	56.1	1	1825.51	3.25	0	76.23	0	0.33	0	0	6.7	0	0	0	0	0	0	-27.2	-27.2
Inverter Transformer	MV1-5 T	364676	4905892	2	0	0	56.1	56.1	1	1876.43	3.25	0	76.47	0	0.35	0	0	6.8	0	0	0	0	0	0	-27.56	-27.56
Inverter Transformer	MV1-4 T	364821	4905918	2	0	0	56.1	56.1	1	1910.98	3.25	0	76.63	0	0.37	0	0	6.87	0	0	0	0	0	0	-27.8	-27.8
Inverter Transformer	MV1-3 T	364435	4906039	2	0	0	56.1	56.1	1	2032.96	3.25	0	77.16	0	0.42	0	0	7.11	0	0	0	0	0	0	-28.63	-28.63
Inverter Transformer	MV1-2 T	364759	4906063	2	0	0	56.1	56.1	1	2050.69	3.25	0	77.24	0	0.43	0	0	7.14	0	0	0	0	0	0	-28.75	-28.75
Inverter Transformer	MV1-1 T	364721	4906166	2	0	0	56.1	56.1	1	2151.68	3.25	0	77.66	0	0.47	0	0	7.34	0	0	0	0	0	0	-29.4	-29.4
Inverter Transformer	MV2-4 T	365590	4906628	2	0	0	56.1	56.1	1	2780.77	3.25	0	79.88	0	0.74	0	0	8.49	0	0	0	0	0	0	-33.05	-33.05
Inverter Transformer	MV2-3 T	365814	4906641	2	0	0	56.1	56.1	1	2877.21	3.25	0	80.18	0	0.78	0	0	8.66	0	0	0	0	0	0	-33.56	-33.56
Inverter Transformer	MV2-2 T	365982	4906654	2	0	0	56.1	56.1	1	2961.55	3.25	0	80.43	0	0.81	0	0	8.8	0	0	0	0	0	0	-33.99	-33.99
Inverter Transformer	MV3-18 T	367757	4907412	2	0	0	56.1	56.1	1	4612.32	3.25	0	84.28	0	1.48	0	0	11.33	0	0	0	0	0	0	-41.03	-41.03
Inverter Transformer	MV3-12 T	367674	4907594	2	0	0	56.1	56.1	1	4693.78	3.25	0	84.43	0	1.51	0	0	11.44	0	0	0	0	0	0	-41.33	-41.33
Inverter Transformer	MV3-13 T	367958	4907577	2	0	0	56.1	56.1	1	4869.95	3.25	0	84.75	0	1.58	0	0	11.68	0	0	0	0	0	0	-41.95	-41.95
Inverter Transformer	MV3-17 T	368183	4907472	2	0	0	56.1	56.1	1	4952.29	3.25	0	84.9	0	1.61	0	0	11.79	0	0	0	0	0	0	-42.24	-42.24
Inverter Transformer	MV3-19 T	368352	4907347	2	0	0	56.1	56.1	1	4990.41	3.25	0	84.96	0	1.62	0	0	11.84	0	0	0	0	0	0	-42.37	-42.37
Inverter Transformer	MV3-7 T	367951	4907754	2	0	0	56.1	56.1	1	4996.19	3.25	0	84.97	0	1.62	0	0	11.85	0	0	0	0	0	0	-42.39	-42.39
Inverter Transformer	MV3-21 T	368484	4907206	2	0	0	56.1	56.1	1	4998.32	3.25	0	84.98	0	1.62	0	0	11.85	0	0	0	0	0	0	-42.39	-42.39
Inverter Transformer	MV3-10 T	368162	4907669	2	0	0	56.1	56.1	1	5077.11	3.25	0	85.11	0	1.65	0	0	11.96	0	0	0	0	0	0	-42.66	-42.66
Inverter Transformer	MV3-15 T	368351	4907477	2	0	0	56.1	56.1	1	5077.38	3.25	0	85.11	0	1.65	0	0	11.96	0	0	0	0	0	0	-42.66	-42.66
Inverter Transformer	MV3-22 T	368661	4907142	2	0	0	56.1	56.1	1	5096.32	3.25	0	85.15	0	1.66	0	0	11.98	0	0	0	0	0	0	-42.73	-42.73
Inverter Transformer	MV3-3 T	367944	4907927	2	0	0	56.1	56.1	1	5122.38	3.25	0	85.19	0	1.67	0	0	12.01	0	0	0	0	0	0	-42.81	-42.81
Inverter Transformer	MV3-16 T	368509	4907475	2	0	0	56.1	56.1	1	5192.77	3.25	0	85.31	0	1.69	0	0	12.11	0	0	0	0	0	0	-43.05	-43.05
Inverter Transformer	MV3-6 T	368156	4907834	2	0	0	56.1	56.1	1	5193.03	3.25	0	85.31	0	1.69	0	0	12.11	0	0	0	0	0	0	-43.05	-43.05
Inverter Transformer	MV3-11 T	368340	4907662	2	0	0	56.1	56.1	1	5197.4	3.25	0	85.32	0	1.7	0	0	12.11	0	0	0	0	0	0	-43.06	-43.06
Inverter Transformer	MV3-20 T	368683	4907317	2	0	0	56.1	56.1	1	5222.53	3.25	0	85.36	0	1.7	0	0	12.14	0	0	0	0	0	0	-43.15	-43.15
Inverter Transformer	MV3-1 T	368150	4907976	2	0	0	56.1	56.1	1	5294.32	3.25	0	85.48	0	1.73	0	0	12.24	0	0	0	0	0	0	-43.38	-43.38
Inverter Transformer	MV3-5 T	368335	4907843	2	0	0	56.1	56.1	1	5322.46	3.25	0	85.52	0	1.74	0	0	12.27	0	0	0	0	0	0	-43.48	-43.48
Inverter Transformer	MV3-14 T	368678	4907498	2	0	0	56.1	56.1	1	5334.99	3.25	0	85.54	0	1.74	0	0	12.29	0	0	0	0	0	0	-43.52	-43.52
Inverter Transformer	MV3-9 T	368517	4907703	2	0	0	56.1	56.1	1	5353.14	3.25	0	85.57	0	1.75	0	0	12.31	0	0	0	0	0	0	-43.57	-43.57
Inverter Transformer	MV3-8 T	368685	4907712	2	0	0	56.1	56.1	1	5482.23	3.25	0	85.78	0	1.79	0	0	12.47	0	0	0	0	0	0	-43.99	-43.99
Inverter Transformer	MV3-4 T	368507	4907925	2	0	0	56.1	56.1	1	5501.36	3.25	0	85.81	0	1.8	0	0	12.5	0	0	0	0	0	0	-44.05	-44.05
Inverter Transformer	MV3-2 T	368677	4907928	2	0	0	56.1	56.1	1	5624.36	3.25	0	86	0	1.84	0	0	12.65	0	0	0	0	0	0	-44.43	-44.43
Inverter Transformer	MV4-15 T	369170	4908481	2	0	0	56.1	56.1	1	6363.44	3.25	0	87.07	0	2.08	0	0	13.53	0	0	0	0	0	0	-46.62	-46.62
Inverter Transformer	MV4-13 T	369057	4908605	2	0	0	56.1	56.1	1	6372.14	3.25	0	87.09	0	2.08	0	0	13.54	0	0	0	0	0	0	-46.64	-46.64
Inverter Transformer	MV6-3 T	370202	4907140	2	0	0	56.1	56.1	1	6382.77	3.25	0	87.1	0	2.08	0	0	13.55	0	0	0	0	0	0	-46.67	-46.67
Inverter Transformer	MV6-2 T	370091	4907339	2	0	0	56.1	56.1	1	6387.44	3.25	0	87.11	0	2.08	0	0	13.55	0	0	0	0	0	0	-46.68	-46.68
Inverter Transformer	MV4-14 T	369182	4908507	2	0	0	56.1	56.1	1	6390.24	3.25	0	87.11	0	2.09	0	0	13.56	0	0	0	0	0	0	-46.69	-46.69
Inverter Transformer	MV4-12 T	369049	4908803	2	0	0	56.1	56.1	1	6510.76	3.25	0	87.27	0	2.12	0	0	13.69	0	0	0	0	0	0	-47.03	-47.03
Inverter Transformer	MV4-7 T	369040	4909001	2	0	0	56.1	56.1	1	6651.73	3.25	0	87.46	0	2.16	0	0	13.85	0	0	0	0	0	0	-47.41	-47.41

	Inverter Transformer	MV4-11 T	369269	4908855	2	0	0	56.1	56.1	1	6699.3	3.25	0	87.52	0	2.18	0	0	13.9	0	0	0	0	0	0	-47.54	-47.54
	Inverter Transformer	MV4-10 T	369307	4908858	2	0	0	56.1	56.1	1	6727.79	3.25	0	87.56	0	2.18	0	0	13.93	0	0	0	0	0	0	-47.62	-47.62
	Inverter Transformer	MV4-4 T	369033	4909199	2	0	0	56.1	56.1	1	6796.85	3.25	0	87.65	0	2.2	0	0	14.01	0	0	0	0	0	0	-47.8	-47.8
	Inverter Transformer	MV4-8 T	369262	4909001	2	0	0	56.1	56.1	1	6800.74	3.25	0	87.65	0	2.2	0	0	14.01	0	0	0	0	0	0	-47.81	-47.81
	Inverter Transformer	MV4-9 T	369284	4909001	2	0	0	56.1	56.1	1	6815.73	3.25	0	87.67	0	2.21	0	0	14.03	0	0	0	0	0	0	-47.85	-47.85
	Inverter Transformer	MV4-6 T	369249	4909192	2	0	0	56.1	56.1	1	6933.31	3.25	0	87.82	0	2.24	0	0	14.16	0	0	0	0	0	0	-48.16	-48.16
	Inverter Transformer	MV4-1 T	369017	4909397	2	0	0	56.1	56.1	1	6938.9	3.25	0	87.83	0	2.24	0	0	14.16	0	0	0	0	0	0	-48.17	-48.17
	Inverter Transformer	MV4-5 T	369283	4909199	2	0	0	56.1	56.1	1	6961.19	3.25	0	87.85	0	2.25	0	0	14.19	0	0	0	0	0	0	-48.23	-48.23
	Inverter Transformer	MV5-6 T	369987	4908507	2	0	0	56.1	56.1	1	6985.86	3.25	0	87.88	0	2.26	0	0	14.21	0	0	0	0	0	0	-48.3	-48.3
	Inverter Transformer	MV4-3 T	369234	4909397	2	0	0	56.1	56.1	1	7077.91	3.25	0	88	0	2.28	0	0	14.31	0	0	0	0	0	0	-48.53	-48.53
	Inverter Transformer	MV4-2 T	369267	4909397	2	0	0	56.1	56.1	1	7099.39	3.25	0	88.02	0	2.29	0	0	14.34	0	0	0	0	0	0	-48.59	-48.59
	Inverter Transformer	MV5-5 T	370021	4908690	2	0	0	56.1	56.1	1	7130.53	3.25	0	88.06	0	2.29	0	0	14.37	0	0	0	0	0	0	-48.67	-48.67
	Inverter Transformer	MV5-2 T	370011	4908853	2	0	0	56.1	56.1	1	7230.99	3.25	0	88.18	0	2.32	0	0	14.48	0	0	0	0	0	0	-48.92	-48.92
	Inverter Transformer	MV5-4 T	370330	4908707	2	0	0	56.1	56.1	1	7377.47	3.25	0	88.36	0	2.36	0	0	14.63	0	0	0	0	0	0	-49.29	-49.29
	Inverter Transformer	MV5-3 T	370237	4908851	2	0	0	56.1	56.1	1	7399.22	3.25	0	88.38	0	2.36	0	0	14.65	0	0	0	0	0	0	-49.34	-49.34
	Inverter Transformer	MV5-1 T	370015	4909142	2	0	0	56.1	56.1	1	7430.31	3.25	0	88.42	0	2.37	0	0	14.68	0	0	0	0	0	0	-49.42	-49.42
	Line Reactor	NGR	369421	4908787.5	5	0	0	45.4	45.4	1	6757.47	5.25	0	87.6	0	3.22	1.37	0.08	2.76	0	0	0	0	0	0	-49.59	-49.59
Limit. Valu	0	0																								
Level D/N:	24.8324	24.8324																								

Receiver: Existing Noise Receptor
ID: S-R136
X: 365371
Y: 4905526
Z: 4.5
Ground: 0

ISO	Description	ID	X	Y	Z	Ground	ReflOrd	LxT	LxN	L/A	Dist.	hm	Freq	Adiv	K0b	Agr	Abar	z	Aatm	Afol	Ahous	Cmet	CmetN	Dc	RL	LtotT	LtotN
	Inverter	MV1-12	365038	4905386	2	0	0	100.3	100.3	1	361.24	3.25	0	62.16	0	-0.64	0	0	7.19	0	0	0	0	0	0	31.6	31.6
	Inverter	MV1-10	365004	4905564	2	0	0	97.3	97.3	1	368.97	3.25	0	62.34	0	-0.64	0	0	7.28	0	0	0	0	0	0	28.33	28.33
	Inverter	MV1-15	365315	4904994	2	0	0	100.3	100.3	1	534.95	3.25	0	65.57	0	-0.53	0	0	8.78	0	0	0	0	0	0	26.49	26.49
	Inverter	MV1-8	364788	4905647	2	0	0	100.3	100.3	1	595.43	3.25	0	66.5	0	-0.48	0	0	9.18	0	0	0	0	0	0	25.12	25.12
	Inverter	MV1-4	364815	4905918	2	0	0	100.3	100.3	1	680.3	3.25	0	67.65	0	-0.42	0	0	9.64	0	0	0	0	0	0	23.44	23.44
	Inverter	MV1-11	364655	4905414	2	0	0	100.3	100.3	1	724.71	3.25	0	68.2	0	-0.4	0	0	9.85	0	0	0	0	0	0	22.65	22.65
	Inverter	MV1-7	364925	4905782	2	0	0	97.3	97.3	1	514.26	3.25	0	65.22	0	-0.54	0	0	8.63	0	0	0	0	0	0	24	24
	Inverter	MV1-14	365163	4905049	2	0	0	97.3	97.3	1	520.38	3.25	0	65.33	0	-0.54	0	0	8.68	0	0	0	0	0	0	23.84	23.84
	Inverter	MV1-5	364671	4905892	2	0	0	100.3	100.3	1	789.91	3.25	0	68.95	0	-0.36	0	0	10.14	0	0	0	0	0	0	21.58	21.58
	Inverter	MV1-2	364753	4906063	2	0	0	100.3	100.3	1	818.72	3.25	0	69.26	0	-0.34	0	0	10.26	0	0	0	0	0	0	21.13	21.13
	Inverter	MV1-9	364561	4905646	2	0	0	100.3	100.3	1	818.84	3.25	0	69.26	0	-0.34	0	0	10.26	0	0	0	0	0	0	21.13	21.13
	Inverter	MV1-1	364715	4906166	2	0	0	100.3	100.3	1	916.48	3.25	0	70.24	0	-0.29	0	0	10.62	0	0	0	0	0	0	19.73	19.73
	Inverter	MV1-6	364477	4905835	2	0	0	100.3	100.3	1	945.9	3.25	0	70.52	0	-0.27	0	0	10.73	0	0	0	0	0	0	19.34	19.34
	Inverter	MV1-13	364731	4905241	2	0	0	97.3	97.3	1	700.59	3.25	0	67.91	0	-0.41	0	0	9.74	0	0	0	0	0	0	20.07	20.07
	Inverter	MV2-4	365586	4906624	2	0	0	100.3	100.3	1	1118.85	3.25	0	71.98	0	-0.19	0	0	11.29	0	0	0	0	0	0	17.24	17.24
	Inverter	MV2-3	365820	4906641	2	0	0	100.3	100.3	1	1202.01	3.25	0	72.6	0	-0.15	0	0	11.53	0	0	0	0	0	0	16.34	16.34
	Sol_Luce Substation	S_Substation	369426	4908792	3.5	0	0	112.1	112.1	1	5206.71	5.25	0	85.33	0	0.95	2.82	0.26	8.86	0	0	0	0	0	0	14.11	14.11
	Inverter	MV2-1	365842	4906816	2	0	0	97.3	97.3	1	1373.3	3.25	0	73.76	0	-0.08	0	0	12	0	0	0	0	0	0	11.64	11.64
	Inverter	MV3-18	367752	4907412	2	0	0	100.3	100.3	1	3037.46	3.25	0	80.65	0	0.37	0	0	15.44	0	0	0	0	0	0	3.85	3.85
	Inverter	MV3-12	367668	4907594	2	0	0	100.3	100.3	1	3090.77	3.25	0	80.8	0	0.38	0	0	15.53	0	0	0	0	0	0	3.6	3.6
	Inverter	MV3-13	367963	4907577	2	0	0	100.3	100.3	1	3305.31	3.25	0	81.38	0	0.42	0	0	15.9	0	0	0	0	0	0	2.61	2.61
	Inverter	MV3-7	367945	4907754	2	0	0	100.3	100.3	1	3404.33	3.25	0	81.64	0	0.44	0	0	16.07	0	0	0	0	0	0	2.17	2.17
	Inverter	MV3-17	368178	4907472	2	0	0	100.3	100.3	1	3415.58	3.25	0	81.67	0	0.44	0	0	16.09	0	0	0	0	0	0	2.12	2.12
	Inverter	MV3-19	368357	4907347	2	0	0	100.3	100.3	1	3497.46	3.25	0	81.88	0	0.45	0	0	16.23	0	0	0	0	0	0	1.76	1.76
	Inverter	MV3-3	367939	4907927	2	0	0	100.3	100.3	1	3515.6	3.25	0	81.92	0	0.45	0	0	16.26	0	0	0	0	0	0	1.68	1.68
	Inverter	MV3-10	368167	4907669	2	0	0	100.3	100.3	1	3522.79	3.25	0	81.94	0	0.45	0	0	16.27	0	0	0	0	0	0	1.65	1.65
	Inverter	MV3-21	368478	4907206	2	0	0	100.3	100.3	1	3532.12	3.25	0	81.96	0	0.46	0	0	16.28	0	0	0	0	0	0	1.61	1.61
	Inverter	MV3-15	368357	4907477	2	0	0	100.3	100.3	1	3566.88	3.25	0	82.05	0	0.46	0	0	16.34	0	0	0	0	0	0	1.46	1.46
	Inverter	MV3-6	368162	4907834	2	0	0	100.3	100.3	1	3621.68	3.25	0	82.18	0	0.47	0	0	16.43	0	0	0	0	0	0	1.23	1.23
	Inverter	MV3-11	368346	4907662	2	0	0	100.3	100.3	1	3662.39	3.25	0	82.28	0	0.48	0	0	16.5	0	0	0	0	0	0	1.06	1.06
	Inverter	MV3-16	368514	4907475	2	0	0	100.3	100.3	1	3698.25	3.25	0	82.36	0	0.48	0	0	16.56	0	0	0	0	0	0	0.91	0.91
	Inverter	MV3-20	368689	4907317	2	0	0	100.3	100.3	1	3770.52	3.25	0	82.53	0	0.49	0	0	16.68	0	0	0	0	0	0	0.61	0.61
	Inverter	MV3-9	368512	4907703	2	0	0	100.3	100.3	1	3821.68	3.25	0	82.65	0	0.5	0	0	16.76	0	0	0	0	0	0	0.4	0.4
	Inverter	MV3-14	368684	4907498	2	0	0	100.3	100.3	1	3855.48	3.25	0	82.72	0	0.51	0	0	16.82	0	0	0	0	0	0	0.27	0.27
	Inverter	MV1-3	364440	4906039	2	0	0	89.1	89.1	1	1062.98	3.25	0	71.53	0	0.7	0	0	6.43	0	0	0	0	0	0	10.4	10.4
	Inverter	MV3-8	368680	4907712	2	0	0	100.3	100.3	1	3965.86	3.25	0	82.97	0	0.52	0	0	16.99	0	0	0	0	0	0	-0.17	-0.17
	Inverter	MV2-2	365977	4906654	2	0	0	89.1	89.1	1	1280.48	3.25	0	73.15	0	0.74	0	0	6.83	0	0	0	0	0	0	8.34	8.34
	Inverter	MV4-7	369035	4909001	2	0	0	100.3	100.3	1	5049.8	3.25	0	85.07	0	0.65	0	0	18.65	0	0	0	0	0	0	-4.05	-4.05
	Inverter	MV6-2	370085	4907339	2	0	0	100.3	100.3	1	5050.62	3.25	0	85.07	0	0.65	0	0	18.65	0	0	0	0	0	0	-4.06	-4.06
	Inverter	MV6-3	370207	4907140	2	0	0	100.3	100.3	1	5098.23	3.25	0	85.15	0	0.65	0	0	18.72	0	0	0	0	0	0	-4.21	-4.21
	Inverter	MV4-11	369264	4908855	2	0	0	100.3	100.3	1	5122.27	3.25	0	85.19	0	0.65	0	0	18.76	0	0	0	0	0	0	-4.29	-4.29
	Inverter	MV4-10	369312	4908858	2	0	0	100.3	100.3	1	5160.79	3.25	0	85.25	0	0.66	0	0	18.81	0	0	0	0	0	0	-4.41	-4.41
	Inverter	MV4-4	369027	4909199	2	0	0	100.3	100.3	1	5182.4	3.25	0	85.29	0	0.66	0	0	18.85	0	0	0	0	0	0	-4.48	-4.48
	Inverter	MV4-8	369256	4909001	2	0	0	100.3	100.3	1	5212.38	3.25	0	85.34	0	0.66	0	0	18.89	0	0	0	0	0	0	-4.58	-4.58
	Inverter	MV4-9	369289	4909001	2	0	0	100.3	100.3	1	5237.02	3.25	0	85.38	0	0.66	0	0	18.93	0	0	0	0	0	0	-4.66	-4.66
	Inverter	MV4-1	369011	4909397	2	0	0	100.3	100.3	1	5313.59	3.25	0	85.51	0	0.67	0	0	19.04	0	0	0	0	0	0	-4.9	-4.9

Inverter	MV4-6	369243	4909192	2	0	0	100.3	100.3	1	5332.16	3.25	0	85.54	0	0.67	0	0	19.06	0	0	0	0	0	0	-4.96	-4.96
Inverter	MV4-5	369289	4909199	2	0	0	100.3	100.3	1	5370.44	3.25	0	85.6	0	0.67	0	0	19.12	0	0	0	0	0	0	-5.08	-5.08
Inverter	MV4-3	369229	4909397	2	0	0	100.3	100.3	1	5465.24	3.25	0	85.75	0	0.68	0	0	19.25	0	0	0	0	0	0	-5.37	-5.37
Inverter	MV4-2	369272	4909397	2	0	0	100.3	100.3	1	5495.68	3.25	0	85.8	0	0.68	0	0	19.29	0	0	0	0	0	0	-5.46	-5.46
Inverter	MV5-5	370015	4908690	2	0	0	100.3	100.3	1	5619.4	3.25	0	85.99	0	0.69	0	0	19.47	0	0	0	0	0	0	-5.84	-5.84
Inverter	MV5-2	370006	4908853	2	0	0	100.3	100.3	1	5705.45	3.25	0	86.13	0	0.69	0	0	19.59	0	0	0	0	0	0	-6.09	-6.09
Inverter	MV5-4	370324	4908707	2	0	0	100.3	100.3	1	5886.51	3.25	0	86.4	0	0.7	0	0	19.84	0	0	0	0	0	0	-6.62	-6.62
Inverter	MV5-3	370231	4908851	2	0	0	100.3	100.3	1	5888.57	3.25	0	86.4	0	0.7	0	0	19.84	0	0	0	0	0	0	-6.63	-6.63
Inverter	MV5-1	370020	4909142	2	0	0	100.3	100.3	1	5889.71	3.25	0	86.4	0	0.7	0	0	19.84	0	0	0	0	0	0	-6.63	-6.63
Inverter	MV6-1	370235	4907364	2	0	0	97.3	97.3	1	5199.69	3.25	0	85.32	0	0.66	0	0	18.87	0	0	0	0	0	0	-7.54	-7.54
Gardiner Substation	G_Sub	366586.3	4903349.9	2.5	0	0	90.8	90.8	1	2492.46	4.25	0	78.93	0	0.94	3.27	0.28	5.18	0	0	0	0	0	0	2.46	2.46
DSTATCOM - 10 MVAR #2	DSAT2	369403	4908757	2.5	0	0	96.6	96.6	1	5166.85	3.5	0	85.26	0	3.7	0	0	3.43	0	0	0	0	0	0	4.23	4.23
DSTATCOM - 10 MVAR #1	DSAT1	369437	4908757	2.5	0	0	96.6	96.6	1	5193.43	3.5	0	85.31	0	3.7	0	0	3.45	0	0	0	0	0	0	4.17	4.17
Inverters	G_Inv1	366526.4	4903225.8	2	0	0	87.7	87.7	1	2574.08	3.25	0	79.21	0	2.65	0	0	3.3	0	0	0	0	0	0	2.5	2.5
Inverters	G_Inv2	366676.9	4903239.1	2	0	0	87.7	87.7	1	2633.49	3.25	0	79.41	0	2.66	0	0	3.36	0	0	0	0	0	0	2.23	2.23
SubstationTransformer	W_ST	369711.17	4906112.3	2.5	0	0	92	92	1	4379.59	4.25	0	83.83	0	1.47	2.5	0.29	7.86	0	0	0	0	0	0	-3.68	-3.68
Inverters	G_Inv3	366583.7	4903091.4	2	0	0	87.7	87.7	1	2719.91	3.25	0	79.69	0	2.67	0	0	3.46	0	0	0	0	0	0	1.84	1.84
Inverters	G_Inv4	366732.8	4903105	2	0	0	87.7	87.7	1	2777.72	3.25	0	79.87	0	2.67	0	0	3.53	0	0	0	0	0	0	1.59	1.59
Inverters	G_Inv5	366638.5	4902958.1	2	0	0	87.7	87.7	1	2863.68	3.25	0	80.14	0	2.68	0	0	3.62	0	0	0	0	0	0	1.22	1.22
Inverters	G_Inv6	366788.5	4902972	2	0	0	87.7	87.7	1	2921	3.25	0	80.31	0	2.69	0	0	3.69	0	0	0	0	0	0	0.97	0.97
Inverter Transformer	MV1-10 T	365010	4905564	2	0	0	69.4	69.4	1	363	3.25	0	62.2	0	0.83	0	0	2.59	0	0	0	0	0	0	3.72	3.72
Inverters	G_Inv7	366694.6	4902824.7	2	0	0	87.7	87.7	1	3008.15	3.25	0	80.57	0	2.7	0	0	3.78	0	0	0	0	0	0	0.61	0.61
Inverters	G_Inv8	366844.5	4902838.5	2	0	0	87.7	87.7	1	3064.94	3.25	0	80.73	0	2.7	0	0	3.85	0	0	0	0	0	0	0.38	0.38
Inverter	MV3-22	368656	4907142	2	0	0	89.1	89.1	1	3660.97	3.25	0	82.27	0	1.31	0	0	10.6	0	0	0	0	0	0	-5.12	-5.12
Inverters	G_Inv9	366750.9	4902691.8	2	0	0	87.7	87.7	1	3152.27	3.25	0	80.97	0	2.71	0	0	3.94	0	0	0	0	0	0	0.03	0.03
Inverter	MV3-1	368156	4907976	2	0	0	89.1	89.1	1	3709.28	3.25	0	82.39	0	1.32	0	0	10.67	0	0	0	0	0	0	-5.32	-5.32
Inverter	MV3-5	368340	4907843	2	0	0	89.1	89.1	1	3766.09	3.25	0	82.52	0	1.33	0	0	10.75	0	0	0	0	0	0	-5.54	-5.54
Inverters	G_Inv10	366900.7	4902704.8	2	0	0	87.7	87.7	1	3209.23	3.25	0	81.13	0	2.72	0	0	4.01	0	0	0	0	0	0	-0.2	-0.2
Inverter	MV3-4	368502	4907925	2	0	0	89.1	89.1	1	3944.41	3.25	0	82.92	0	1.38	0	0	11.01	0	0	0	0	0	0	-6.25	-6.25
Inverter	MV3-2	368671	4907928	2	0	0	89.1	89.1	1	4081.62	3.25	0	83.22	0	1.41	0	0	11.2	0	0	0	0	0	0	-6.77	-6.77
Westbrook Inverter Enclosur	W_INV2	369374	4906388	2	0	0	89.1	89.1	1	4094.76	3.25	0	83.24	0	1.42	0	0	11.22	0	0	0	0	0	0	-6.82	-6.82
Westbrook Inverter Enclosur	W_INV3	369508	4906164	2	0	0	89.1	89.1	1	4185.91	3.25	0	83.44	0	1.44	0	0	11.35	0	0	0	0	0	0	-7.16	-7.16
Westbrook Inverter Enclosur	W_INV4	369673	4906164	2	0	0	89.1	89.1	1	4349.05	3.25	0	83.77	0	1.48	0	0	11.58	0	0	0	0	0	0	-7.76	-7.76
Westbrook Inverter Enclosur	W_INV5	369719	4906574	2	0	0	89.1	89.1	1	4472.52	3.25	0	84.01	0	1.51	0	0	11.75	0	0	0	0	0	0	-8.21	-8.21
Westbrook Inverter Enclosur	W_INV7	369780	4906417	2	0	0	89.1	89.1	1	4498.13	3.25	0	84.06	0	1.52	0	0	11.78	0	0	0	0	0	0	-8.3	-8.3
Westbrook Inverter Enclosur	W_INV6	369875	4906578	2	0	0	89.1	89.1	1	4625.23	3.25	0	84.3	0	1.55	0	0	11.96	0	0	0	0	0	0	-8.75	-8.75
Fixed Reactor Bank 1	FRB1	369378	4908755	6	0	0	89.8	89.8	1	5146.11	5.25	0	85.23	0	-0.54	0	0	8.79	0	0	0	0	0	0	-3.7	-3.7
Inverter	MV4-13	369051	4908605	2	0	0	89.1	89.1	1	4798.19	3.25	0	84.62	0	1.59	0	0	12.19	0	0	0	0	0	0	-9.35	-9.35
Fixed Reactor Bank 2	FRB2	369464	4908755	6	0	0	89.8	89.8	1	5213.36	5.25	0	85.34	0	-0.53	0	0	8.87	0	0	0	0	0	0	-3.9	-3.9
Inverter	MV4-15	369176	4908481	2	0	0	89.1	89.1	1	4817.68	3.25	0	84.66	0	1.59	0	0	12.22	0	0	0	0	0	0	-9.41	-9.41
Inverter	MV4-14	369176	4908507	2	0	0	89.1	89.1	1	4833.67	3.25	0	84.69	0	1.6	0	0	12.24	0	0	0	0	0	0	-9.47	-9.47
Inverter	MV4-12	369043	4908803	2	0	0	89.1	89.1	1	4921.62	3.25	0	84.84	0	1.62	0	0	12.36	0	0	0	0	0	0	-9.76	-9.76
Inverter Transformer	MV1-7 T	364919	4905782	2	0	0	69.4	69.4	1	519.47	3.25	0	65.31	0	1.08	0	0	3	0	0	0	0	0	0	-0.04	-0.04
Inverter Transformer	MV1-14 T	365157	4905049	2	0	0	69.4	69.4	1	522.81	3.25	0	65.37	0	1.09	0	0	3.01	0	0	0	0	0	0	-0.11	-0.11
Inverter	MV5-6	369982	4908507	2	0	0	89.1	89.1	1	5490.69	3.25	0	85.79	0	1.76	0	0	13.11	0	0	0	0	0	0	-11.61	-11.61
Westbrook Inverter Enclosur	W_INV1	369409	4906578	2	0	0	86.1	86.1	1	4172.79	3.25	0	83.41	0	1.44	0	0	11.33	0	0	0	0	0	0	-10.11	-10.11
Inverter Transformer	MV1-13 T	364725	4905241	2	0	0	69.4	69.4	1	706.08	3.25	0	67.98	0	1.37	0	0	3.36	0	0	0	0	0	0	-3.36	-3.36
Inverter	MV6-4	370250	4906966	2	0	0	86.1	86.1	1	5087.07	3.25	0	85.13	0	1.66	0	0	12.58	0	0	0	0	0	0	-13.31	-13.31
Inverter Transformer	MV2-1 T	365836	4906816	2	0	0	69.4	69.4	1	1371.25	3.25	0	73.74	0	1.91	0	0	4.28	0	0	0	0	0	0	-10.59	-10.59
Westbrook Inverter Transfor	W_INVTR1	369403	4906578	2	0	0	78.2	78.2	1	4166.98	3.25	0	83.4	0	-3	0	0	2.12	0	0	0	0	0	0	-4.27	-4.27
Westbrook Inverter Transfor	W_INVTR2	369368	4906388	2	0	0	77.3	77.3	1	4088.89	3.25	0	83.23	0	-2.98	0	0	2.09	0	0	0	0	0	0	-5	-5
Inverter Transformer	MV1-12 T	365044	4905386	2	0	0	56.1	56.1	1	355.72	3.25	0	62.02	0	-0.1	0	0	3.03	0	0	0	0	0	0	-8.89	-8.89
Westbrook Inverter Transfor	W_INVTR3	369514	4906164	2	0	0	77.3	77.3	1	4191.84	3.25	0	83.45	0	-3.01	0	0	2.13	0	0	0	0	0	0	-5.23	-5.23
Westbrook Inverter Transfor	W_INVTR4	369679	4906164	2	0	0	77.3	77.3	1	4354.99	3.25	0	83.78	0	-3.04	0	0	2.19	0	0	0	0	0	0	-5.58	-5.58
Westbrook Inverter Transfor	W_INVTR5	369725	4906574	2	0	0	77.3	77.3	1	4478.35	3.25	0	84.02	0	-3.07	0	0	2.23	0	0	0	0	0	0	-5.84	-5.84
Westbrook Inverter Transfor	W_INVTR7	369786	4906417	2	0	0	77.3	77.3	1	4504.01	3.25	0	84.07	0	-3.07	0	0	2.24	0	0	0	0	0	0	-5.9	-5.9
Westbrook Inverter Transfor	W_INVTR6	369881	4906578	2	0	0	77.3	77.3	1	4631.07	3.25	0	84.31	0	-3.1	0	0	2.28	0	0	0	0	0	0	-6.16	-6.16
Inverter Transformer	MV1-15 T	365309	4904994	2	0	0	56.1	56.1	1	535.61	3.25	0	65.58	0	-0.11	0	0	3.66	0	0	0	0	0	0	-13.07	-13.07
Inverter Transformer	MV1-8 T	364782	4905647	2	0	0	56.1	56.1	1	601.31	3.25	0	66.58	0	-0.1	0	0	3.86	0	0	0	0	0	0	-14.28	-14.28
Inverter Transformer	MV1-4 T	364821	4905918	2	0	0	56.1	56.1	1	675.4	3.25	0	67.59	0	-0.09	0	0	4.07	0	0	0	0	0	0	-15.51	-15.51
Inverter Transformer	MV1-11 T	364649	4905414	2	0	0	56.1	56.1	1	730.64	3.25	0	68.27	0	-0.07	0	0	4.21	0	0	0	0	0	0	-16.36	-16.36
Inverter Transformer	MV1-5 T	364676	4905892	2	0	0	56.1	56.1	1	785.49	3.25	0	68.9	0	-0.06	0	0	4.36	0	0	0	0	0	0	-17.15	-17.15
Inverter Transformer	MV1-2 T	364759	4906063	2	0	0	56.1	56.1	1	814.2	3.25	0	69.21	0	-0.05	0	0	4.43	0	0	0	0	0	0	-17.54	-17.54
Inverter Transformer	MV1-9 T	364555	4905646	2	0	0	56.1	56.1	1	824.78	3.25	0	69.33	0	-0.05	0	0	4.46	0	0	0	0	0	0	-17.68	-17.68
Inverter Transformer	MV1-1 T	364721	4906166	2	0	0	56.1	56.1	1	912.2	3.25	0	70.2	0	-0.02	0	0	4.68	0	0	0	0	0	0	-18.8	-18.8
Inverter Transformer	MV1-6 T	364482	4905835	2	0	0	56.1	56.1	1	941.17	3.25	0	70.47	0	-0.01	0	0	4.75	0	0	0	0	0	0	-19.15	-19.15
Inverter Transformer	MV1-3 T	364435	4906039	2	0	0	56.1	56.1	1	1067.37	3.25	0	71.57	0	0.04	0	0	5.05	0	0	0	0	0	0	-20.59	-20.59
Inverter Transformer	MV6-4 T	370244	4906966	2	0	0	69.4	69.4	1	5081.31	3.25	0	85.12	0	3.03	0	0	7.44	0	0	0	0	0	0	-26.23	-26.23
Inverter Transformer	MV2-4 T	365590	4906628	2	0	0	56.1	56.1	1	1123.55	3.25	0	72.01	0	0.06	0	0	5.18	0	0	0	0	0	0	-21.19	-21.19
Inverter Transformer	MV6-1 T	370230	4907364	2	0	0	69.4	69.4	1	5195.01	3.25	0	85.31	0	3.05	0	0	7.51	0	0	0	0	0	0	-26.52	-26.52
Inverter Transformer	MV2-3 T	365814	4906641	2	0	0	56.1	56.1	1	1199.78	3.25	0	72.58	0	0.08	0	0	5.35	0	0	0	0	0	0	-21.96	-21.96
Inverter Transformer	MV2-2 T	365982	4906654	2	0	0	56.1	56.1	1	1282.85	3.25	0	73.16	0	0.11	0	0	5.54	0	0	0	0	0	0	-22.76	-22.76
Inverter Transformer	MV3-18 T	367757	4907412	2	0	0	56.1	56.1	1	3041.38	3.25	0	80.66	0	0.85	0	0	8.94	0	0	0	0	0	0	-34.39	-34.39
Inverter Transformer	MV3-12 T	367674	4907594	2	0	0	56.1	56.1	1	3095.23	3.25	0	80.81	0	0.87	0	0	9.03	0	0	0	0	0	0	-34.65	-34.65

	Inverter Transformer	MV3-13 T	367958	4907577	2	0	0	56.1	56.1	1	3301.39	3.25	0	81.37	0	0.96	0	0	9.37	0	0	0	0	0	0	-35.64	-35.64
	Inverter Transformer	MV3-7 T	367951	4907754	2	0	0	56.1	56.1	1	3408.87	3.25	0	81.65	0	1	0	0	9.54	0	0	0	0	0	0	-36.14	-36.14
	Inverter Transformer	MV3-17 T	368183	4907472	2	0	0	56.1	56.1	1	3419.69	3.25	0	81.68	0	1.01	0	0	9.56	0	0	0	0	0	0	-36.19	-36.19
	Inverter Transformer	MV3-19 T	368352	4907347	2	0	0	56.1	56.1	1	3493.19	3.25	0	81.86	0	1.04	0	0	9.68	0	0	0	0	0	0	-36.52	-36.52
	Inverter Transformer	MV3-10 T	368162	4907669	2	0	0	56.1	56.1	1	3518.83	3.25	0	81.93	0	1.05	0	0	9.72	0	0	0	0	0	0	-36.63	-36.63
	Inverter Transformer	MV3-3 T	367944	4907927	2	0	0	56.1	56.1	1	3519.25	3.25	0	81.93	0	1.05	0	0	9.72	0	0	0	0	0	0	-36.64	-36.64
	Inverter Transformer	MV3-21 T	368484	4907206	2	0	0	56.1	56.1	1	3537.4	3.25	0	81.97	0	1.06	0	0	9.75	0	0	0	0	0	0	-36.72	-36.72
	Inverter Transformer	MV3-15 T	368351	4907477	2	0	0	56.1	56.1	1	3561.85	3.25	0	82.03	0	1.07	0	0	9.79	0	0	0	0	0	0	-36.83	-36.83
	Inverter Transformer	MV3-6 T	368156	4907834	2	0	0	56.1	56.1	1	3617.06	3.25	0	82.17	0	1.09	0	0	9.87	0	0	0	0	0	0	-37.07	-37.07
	Inverter Transformer	MV3-11 T	368340	4907662	2	0	0	56.1	56.1	1	3657.52	3.25	0	82.26	0	1.11	0	0	9.93	0	0	0	0	0	0	-37.25	-37.25
	Inverter Transformer	MV3-22 T	368661	4907142	2	0	0	56.1	56.1	1	3665.46	3.25	0	82.28	0	1.11	0	0	9.95	0	0	0	0	0	0	-37.28	-37.28
	Inverter Transformer	MV3-16 T	368509	4907475	2	0	0	56.1	56.1	1	3694	3.25	0	82.35	0	1.12	0	0	9.99	0	0	0	0	0	0	-37.4	-37.4
	Inverter Transformer	MV3-1 T	368150	4907976	2	0	0	56.1	56.1	1	3704.77	3.25	0	82.38	0	1.12	0	0	10.01	0	0	0	0	0	0	-37.45	-37.45
	Inverter Transformer	MV3-5 T	368335	4907843	2	0	0	56.1	56.1	1	3762.15	3.25	0	82.51	0	1.15	0	0	10.1	0	0	0	0	0	0	-37.69	-37.69
	Inverter Transformer	MV3-20 T	368683	4907317	2	0	0	56.1	56.1	1	3765.24	3.25	0	82.52	0	1.15	0	0	10.1	0	0	0	0	0	0	-37.71	-37.71
	Inverter Transformer	MV3-9 T	368517	4907703	2	0	0	56.1	56.1	1	3825.79	3.25	0	82.65	0	1.17	0	0	10.19	0	0	0	0	0	0	-37.96	-37.96
	Inverter Transformer	MV3-14 T	368678	4907498	2	0	0	56.1	56.1	1	3850.33	3.25	0	82.71	0	1.18	0	0	10.23	0	0	0	0	0	0	-38.07	-38.07
	Inverter Transformer	MV3-4 T	368507	4907925	2	0	0	56.1	56.1	1	3948.38	3.25	0	82.93	0	1.22	0	0	10.38	0	0	0	0	0	0	-38.47	-38.47
	Inverter Transformer	MV3-8 T	368685	4907712	2	0	0	56.1	56.1	1	3970.04	3.25	0	82.98	0	1.23	0	0	10.41	0	0	0	0	0	0	-38.56	-38.56
	Inverter Transformer	MV3-2 T	368677	4907928	2	0	0	56.1	56.1	1	4086.47	3.25	0	83.23	0	1.28	0	0	10.58	0	0	0	0	0	0	-39.03	-39.03
	Inverter Transformer	MV4-13 T	369057	4908605	2	0	0	56.1	56.1	1	4802.8	3.25	0	84.63	0	1.55	0	0	11.59	0	0	0	0	0	0	-41.72	-41.72
	Inverter Transformer	MV4-15 T	369170	4908481	2	0	0	56.1	56.1	1	4812.94	3.25	0	84.65	0	1.56	0	0	11.6	0	0	0	0	0	0	-41.75	-41.75
	Inverter Transformer	MV4-14 T	369182	4908507	2	0	0	56.1	56.1	1	4838.4	3.25	0	84.69	0	1.57	0	0	11.64	0	0	0	0	0	0	-41.84	-41.84
	Inverter Transformer	MV4-12 T	369049	4908803	2	0	0	56.1	56.1	1	4926.1	3.25	0	84.85	0	1.6	0	0	11.76	0	0	0	0	0	0	-42.15	-42.15
	Inverter Transformer	MV4-7 T	369040	4909001	2	0	0	56.1	56.1	1	5053.43	3.25	0	85.07	0	1.64	0	0	11.92	0	0	0	0	0	0	-42.58	-42.58
	Inverter Transformer	MV6-2 T	370091	4907339	2	0	0	56.1	56.1	1	5056.22	3.25	0	85.08	0	1.65	0	0	11.93	0	0	0	0	0	0	-42.59	-42.59
	Inverter Transformer	MV6-3 T	370202	4907140	2	0	0	56.1	56.1	1	5093.48	3.25	0	85.14	0	1.66	0	0	11.98	0	0	0	0	0	0	-42.72	-42.72
	Inverter Transformer	MV4-11 T	369269	4908855	2	0	0	56.1	56.1	1	5126.08	3.25	0	85.2	0	1.67	0	0	12.02	0	0	0	0	0	0	-42.83	-42.83
	Inverter Transformer	MV4-10 T	369307	4908858	2	0	0	56.1	56.1	1	5156.97	3.25	0	85.25	0	1.68	0	0	12.06	0	0	0	0	0	0	-42.93	-42.93
	Inverter Transformer	MV4-4 T	369033	4909199	2	0	0	56.1	56.1	1	5186.63	3.25	0	85.3	0	1.69	0	0	12.1	0	0	0	0	0	0	-43.03	-43.03
	Inverter Transformer	MV4-8 T	369262	4909001	2	0	0	56.1	56.1	1	5216.85	3.25	0	85.35	0	1.7	0	0	12.14	0	0	0	0	0	0	-43.13	-43.13
	Inverter Transformer	MV4-9 T	369284	4909001	2	0	0	56.1	56.1	1	5233.28	3.25	0	85.38	0	1.71	0	0	12.16	0	0	0	0	0	0	-43.18	-43.18
	Inverter Transformer	MV4-1 T	369017	4909397	2	0	0	56.1	56.1	1	5317.7	3.25	0	85.51	0	1.74	0	0	12.27	0	0	0	0	0	0	-43.46	-43.46
	Inverter Transformer	MV4-6 T	369249	4909192	2	0	0	56.1	56.1	1	5336.52	3.25	0	85.55	0	1.74	0	0	12.29	0	0	0	0	0	0	-43.52	-43.52
	Inverter Transformer	MV4-5 T	369283	4909199	2	0	0	56.1	56.1	1	5366.07	3.25	0	85.59	0	1.75	0	0	12.33	0	0	0	0	0	0	-43.62	-43.62
	Inverter Transformer	MV4-3 T	369234	4909397	2	0	0	56.1	56.1	1	5468.77	3.25	0	85.76	0	1.79	0	0	12.46	0	0	0	0	0	0	-43.95	-43.95
	Inverter Transformer	MV4-2 T	369267	4909397	2	0	0	56.1	56.1	1	5492.13	3.25	0	85.79	0	1.8	0	0	12.49	0	0	0	0	0	0	-44.02	-44.02
	Inverter Transformer	MV5-6 T	369987	4908507	2	0	0	56.1	56.1	1	5494.89	3.25	0	85.8	0	1.8	0	0	12.49	0	0	0	0	0	0	-44.03	-44.03
	Inverter Transformer	MV5-5 T	370021	4908690	2	0	0	56.1	56.1	1	5624.36	3.25	0	86	0	1.84	0	0	12.65	0	0	0	0	0	0	-44.43	-44.43
	Inverter Transformer	MV5-2 T	370011	4908853	2	0	0	56.1	56.1	1	5709.51	3.25	0	86.13	0	1.87	0	0	12.75	0	0	0	0	0	0	-44.7	-44.7
	Inverter Transformer	MV5-1 T	370015	4909142	2	0	0	56.1	56.1	1	5885.76	3.25	0	86.4	0	1.93	0	0	12.97	0	0	0	0	0	0	-45.23	-45.23
	Inverter Transformer	MV5-4 T	370330	4908707	2	0	0	56.1	56.1	1	5891.56	3.25	0	86.4	0	1.93	0	0	12.97	0	0	0	0	0	0	-45.25	-45.25
	Inverter Transformer	MV5-3 T	370237	4908851	2	0	0	56.1	56.1	1	5893.52	3.25	0	86.41	0	1.93	0	0	12.98	0	0	0	0	0	0	-45.26	-45.26
	Line Reactor	NGR	369421	4908787.5	5	0	0	45.4	45.4	1	5199.99	5.25	0	85.32	0	3.26	1.35	0.09	2.13	0	0	0	0	0	0	-46.7	-46.7
Limit. Valu	0	0																								
Level D/N:	36.7191	36.7191																								

Receiver: Existing Noise Receptor
ID: S-R137
X: 365349
Y: 4905362
Z: 4.5
Ground: 0

ISO	Description	ID	X	Y	Z	Ground	ReflOrd	LxT	LxN	L/A	Dist.	hm	Freq	Adiv	K0b	Agr	Abar	z	Aatm	Afol	Ahous	Cmet	CmetN	Dc	RL	LtotT	LtotN
	Inverter	MV1-12	365038	4905386	2	0	0	100.3	100.3	1	311.93	3.25	0	60.88	0	-0.65	0	0	6.56	0	0	0	0	0	0	33.52	33.52
	Inverter	MV1-15	365315	4904994	2	0	0	100.3	100.3	1	369.58	3.25	0	62.35	0	-0.63	0	0	7.29	0	0	0	0	0	0	31.31	31.31
	Inverter	MV1-14	365163	4905049	2	0	0	97.3	97.3	1	364.1	3.25	0	62.22	0	-0.64	0	0	7.22	0	0	0	0	0	0	28.5	28.5
	Inverter	MV1-10	365004	4905564	2	0	0	97.3	97.3	1	399.79	3.25	0	63.04	0	-0.62	0	0	7.62	0	0	0	0	0	0	27.27	27.27
	Inverter	MV1-8	364788	4905647	2	0	0	100.3	100.3	1	629.25	3.25	0	66.98	0	-0.46	0	0	9.37	0	0	0	0	0	0	24.42	24.42
	Inverter	MV1-11	364655	4905414	2	0	0	100.3	100.3	1	695.95	3.25	0	67.85	0	-0.41	0	0	9.72	0	0	0	0	0	0	23.16	23.16
	Inverter	MV1-4	364815	4905918	2	0	0	100.3	100.3	1	770.91	3.25	0	68.74	0	-0.37	0	0	10.06	0	0	0	0	0	0	21.88	21.88
	Inverter	MV1-9	364561	4905646	2	0	0	100.3	100.3	1	837.62	3.25	0	69.46	0	-0.33	0	0	10.33	0	0	0	0	0	0	20.85	20.85
	Inverter	MV1-7	364925	4905782	2	0	0	97.3	97.3	1	596.81	3.25	0	66.52	0	-0.48	0	0	9.18	0	0	0	0	0	0	22.09	22.09
	Inverter	MV1-5	364671	4905892	2	0	0	100.3	100.3	1	860.58	3.25	0	69.7	0	-0.32	0	0	10.42	0	0	0	0	0	0	20.52	20.52
	Inverter	MV1-13	364731	4905241	2	0	0	97.3	97.3	1	629.74	3.25	0	66.98	0	-0.46	0	0	9.37	0	0	0	0	0	0	21.41	21.41
	Inverter	MV1-2	364753	4906063	2	0	0	100.3	100.3	1	920.12	3.25	0	70.28	0	-0.29	0	0	10.64	0	0	0	0	0	0	19.68	19.68
	Inverter	MV1-6	364477	4905835	2	0	0	100.3	100.3	1	992.03	3.25	0	70.93	0	-0.25	0	0	10.88	0	0	0	0	0	0	18.75	18.75
	Inverter	MV1-1	364715	4906166	2	0	0	100.3	100.3	1	1023.9	3.25	0	71.21	0	-0.23	0	0	10.99	0	0	0	0	0	0	18.35	18.35
	Inverter	MV2-4	365586	4906624	2	0	0	100.3	100.3	1	1284.06	3.25	0	73.17	0	-0.12	0	0	11.76	0	0	0	0	0	0	15.5	15.5
	Inverter	MV2-3	365820	4906641	2	0	0	100.3	100.3	1	1362.97	3.25	0	73.69	0	-0.09	0	0	11.97	0	0	0	0	0	0	14.73	14.73
	Sol_Luce Substation	S_Substation	369426	4908792	3.5	0	0	112.1	112.1	1	5327.93	5.25	0	85.53	0	0.99	2.79	0.25	9	0	0	0	0	0	0	13.77	13.77
	Inverter	MV2-1	365842	4906816	2	0	0	97.3	97.3	1	1535.31	3.25	0	74.72	0	-0.02	0	0	12.41	0	0	0	0	0	0	10.2	10.2
	Inverter	MV3-18	367752	4907412	2	0	0	100.3	100.3	1	3158.63	3.25	0	80.99	0	0.39	0	0	15.65	0	0	0	0	0	0	3.28	3.28

Inverter	MV3-12	367668	4907594	2	0	0	100.3	100.3	1	3218.63	3.25	0	81.15	0	0.4	0	0	15.75	0	0	0	0	0	0	3	3
Inverter	MV3-13	367963	4907577	2	0	0	100.3	100.3	1	3426.26	3.25	0	81.7	0	0.44	0	0	16.11	0	0	0	0	0	0	2.07	2.07
Inverter	MV3-17	368178	4907472	2	0	0	100.3	100.3	1	3529.21	3.25	0	81.95	0	0.46	0	0	16.28	0	0	0	0	0	0	1.62	1.62
Inverter	MV3-7	367945	4907754	2	0	0	100.3	100.3	1	3530	3.25	0	81.96	0	0.46	0	0	16.28	0	0	0	0	0	0	1.62	1.62
Inverter	MV3-19	368357	4907347	2	0	0	100.3	100.3	1	3603.93	3.25	0	82.14	0	0.47	0	0	16.4	0	0	0	0	0	0	1.3	1.3
Inverter	MV3-21	368478	4907206	2	0	0	100.3	100.3	1	3631.94	3.25	0	82.2	0	0.47	0	0	16.45	0	0	0	0	0	0	1.19	1.19
Inverter	MV3-10	368167	4907669	2	0	0	100.3	100.3	1	3641.89	3.25	0	82.23	0	0.47	0	0	16.47	0	0	0	0	0	0	1.14	1.14
Inverter	MV3-3	367939	4907927	2	0	0	100.3	100.3	1	3645.18	3.25	0	82.23	0	0.47	0	0	16.47	0	0	0	0	0	0	1.13	1.13
Inverter	MV3-15	368357	4907477	2	0	0	100.3	100.3	1	3677.13	3.25	0	82.31	0	0.48	0	0	16.53	0	0	0	0	0	0	1	1
Inverter	MV3-6	368162	4907834	2	0	0	100.3	100.3	1	3744.83	3.25	0	82.47	0	0.49	0	0	16.64	0	0	0	0	0	0	0.72	0.72
Inverter	MV3-11	368346	4907662	2	0	0	100.3	100.3	1	3777.83	3.25	0	82.54	0	0.49	0	0	16.69	0	0	0	0	0	0	0.58	0.58
Inverter	MV3-16	368514	4907475	2	0	0	100.3	100.3	1	3805.52	3.25	0	82.61	0	0.5	0	0	16.74	0	0	0	0	0	0	0.47	0.47
Inverter	MV3-20	368689	4907317	2	0	0	100.3	100.3	1	3870.09	3.25	0	82.75	0	0.51	0	0	16.84	0	0	0	0	0	0	0.21	0.21
Inverter	MV3-9	368512	4907703	2	0	0	100.3	100.3	1	3935.08	3.25	0	82.9	0	0.52	0	0	16.94	0	0	0	0	0	0	-0.05	-0.05
Inverter	MV3-14	368684	4907498	2	0	0	100.3	100.3	1	3960.39	3.25	0	82.95	0	0.52	0	0	16.99	0	0	0	0	0	0	-0.15	-0.15
Inverter	MV3-8	368680	4907712	2	0	0	100.3	100.3	1	4076.53	3.25	0	83.21	0	0.54	0	0	17.17	0	0	0	0	0	0	-0.6	-0.6
Inverter	MV1-3	364440	4906039	2	0	0	89.1	89.1	1	1133.41	3.25	0	72.09	0	0.71	0	0	6.56	0	0	0	0	0	0	9.7	9.7
Inverter	MV6-2	370085	4907339	2	0	0	100.3	100.3	1	5132.08	3.25	0	85.21	0	0.65	0	0	18.77	0	0	0	0	0	0	-4.32	-4.32
Inverter	MV6-3	370207	4907140	2	0	0	100.3	100.3	1	5173.15	3.25	0	85.28	0	0.66	0	0	18.83	0	0	0	0	0	0	-4.45	-4.45
Inverter	MV4-7	369035	4909001	2	0	0	100.3	100.3	1	5179.66	3.25	0	85.29	0	0.66	0	0	18.84	0	0	0	0	0	0	-4.47	-4.47
Inverter	MV4-11	369264	4908855	2	0	0	100.3	100.3	1	5246.74	3.25	0	85.4	0	0.66	0	0	18.94	0	0	0	0	0	0	-4.69	-4.69
Inverter	MV2-2	365977	4906654	2	0	0	89.1	89.1	1	1436.54	3.25	0	74.15	0	0.78	0	0	7.1	0	0	0	0	0	0	7.03	7.03
Inverter	MV4-10	369312	4908858	2	0	0	100.3	100.3	1	5284.64	3.25	0	85.46	0	0.67	0	0	18.99	0	0	0	0	0	0	-4.81	-4.81
Inverter	MV4-4	369027	4909199	2	0	0	100.3	100.3	1	5315.1	3.25	0	85.51	0	0.67	0	0	19.04	0	0	0	0	0	0	-4.9	-4.9
Inverter	MV4-8	369256	4909001	2	0	0	100.3	100.3	1	5339.19	3.25	0	85.55	0	0.67	0	0	19.07	0	0	0	0	0	0	-4.98	-4.98
Inverter	MV4-9	369289	4909001	2	0	0	100.3	100.3	1	5363.39	3.25	0	85.59	0	0.67	0	0	19.11	0	0	0	0	0	0	-5.05	-5.05
Inverter	MV4-1	369011	4909397	2	0	0	100.3	100.3	1	5448.99	3.25	0	85.73	0	0.68	0	0	19.23	0	0	0	0	0	0	-5.32	-5.32
Inverter	MV4-6	369243	4909192	2	0	0	100.3	100.3	1	5461.88	3.25	0	85.75	0	0.68	0	0	19.25	0	0	0	0	0	0	-5.36	-5.36
Inverter	MV4-5	369289	4909199	2	0	0	100.3	100.3	1	5499.65	3.25	0	85.81	0	0.68	0	0	19.3	0	0	0	0	0	0	-5.48	-5.48
Inverter	MV4-3	369229	4909397	2	0	0	100.3	100.3	1	5597.82	3.25	0	85.96	0	0.69	0	0	19.44	0	0	0	0	0	0	-5.77	-5.77
Inverter	MV4-2	369272	4909397	2	0	0	100.3	100.3	1	5627.71	3.25	0	86.01	0	0.69	0	0	19.48	0	0	0	0	0	0	-5.86	-5.86
Inverter	MV5-5	370015	4908690	2	0	0	100.3	100.3	1	5731.24	3.25	0	86.16	0	0.69	0	0	19.62	0	0	0	0	0	0	-6.17	-6.17
Inverter	MV5-2	370006	4908853	2	0	0	100.3	100.3	1	5820.2	3.25	0	86.3	0	0.7	0	0	19.75	0	0	0	0	0	0	-6.43	-6.43
Inverter	MV5-4	370324	4908707	2	0	0	100.3	100.3	1	5994.97	3.25	0	86.56	0	0.7	0	0	19.99	0	0	0	0	0	0	-6.93	-6.93
Inverter	MV5-3	370231	4908851	2	0	0	100.3	100.3	1	6000.59	3.25	0	86.56	0	0.7	0	0	19.99	0	0	0	0	0	0	-6.95	-6.95
Inverter	MV5-1	370020	4909142	2	0	0	100.3	100.3	1	6008.88	3.25	0	86.58	0	0.71	0	0	20.01	0	0	0	0	0	0	-6.97	-6.97
Gardiner Substation	G_Sub	366586.3	4903349.9	2.5	0	0	90.8	90.8	1	2362.09	4.25	0	78.47	0	0.89	3.32	0.27	4.97	0	0	0	0	0	0	3.14	3.14
Inverter	MV6-1	370235	4907364	2	0	0	97.3	97.3	1	5280.25	3.25	0	85.45	0	0.67	0	0	18.99	0	0	0	0	0	0	-7.79	-7.79
DSTATCOM - 10 MVAR #2	DSAT2	369403	4908757	2.5	0	0	96.6	96.6	1	5287.81	3.5	0	85.47	0	3.71	0	0	3.49	0	0	0	0	0	0	3.96	3.96
DSTATCOM - 10 MVAR #1	DSAT1	369437	4908757	2.5	0	0	96.6	96.6	1	5313.92	3.5	0	85.51	0	3.72	0	0	3.51	0	0	0	0	0	0	3.9	3.9
Inverters	G_Inv1	366526.4	4903225.8	2	0	0	87.7	87.7	1	2439.19	3.25	0	78.74	0	2.64	0	0	3.14	0	0	0	0	0	0	3.14	3.14
Inverters	G_Inv2	366676.9	4903239.1	2	0	0	87.7	87.7	1	2504	3.25	0	78.97	0	2.64	0	0	3.22	0	0	0	0	0	0	2.83	2.83
Inverters	G_Inv3	366583.7	4903091.4	2	0	0	87.7	87.7	1	2584.59	3.25	0	79.25	0	2.65	0	0	3.31	0	0	0	0	0	0	2.45	2.45
Inverters	G_Inv4	366732.8	4903105	2	0	0	87.7	87.7	1	2647.44	3.25	0	79.46	0	2.66	0	0	3.38	0	0	0	0	0	0	2.17	2.17
SubstationTransformer	W_ST	369711.17	4906112.3	2.5	0	0	92	92	1	4426.22	4.25	0	83.92	0	1.48	2.49	0.28	7.92	0	0	0	0	0	0	-3.83	-3.83
Inverters	G_Inv5	366638.5	4902958.1	2	0	0	87.7	87.7	1	2727.92	3.25	0	79.72	0	2.67	0	0	3.47	0	0	0	0	0	0	1.81	1.81
Inverters	G_Inv6	366788.5	4902972	2	0	0	87.7	87.7	1	2790.03	3.25	0	79.91	0	2.68	0	0	3.54	0	0	0	0	0	0	1.53	1.53
Inverters	G_Inv7	366694.6	4902824.7	2	0	0	87.7	87.7	1	2872.03	3.25	0	80.16	0	2.68	0	0	3.63	0	0	0	0	0	0	1.18	1.18
Inverters	G_Inv8	366844.5	4902838.5	2	0	0	87.7	87.7	1	2933.36	3.25	0	80.35	0	2.69	0	0	3.7	0	0	0	0	0	0	0.92	0.92
Inverters	G_Inv9	366750.9	4902691.8	2	0	0	87.7	87.7	1	3015.84	3.25	0	80.59	0	2.7	0	0	3.79	0	0	0	0	0	0	0.58	0.58
Inverter Transformer	MV1-14 T	365157	4905049	2	0	0	69.4	69.4	1	367.2	3.25	0	62.3	0	0.84	0	0	2.61	0	0	0	0	0	0	3.61	3.61
Inverters	G_Inv10	366900.7	4902704.8	2	0	0	87.7	87.7	1	3077.09	3.25	0	80.76	0	2.71	0	0	3.86	0	0	0	0	0	0	0.33	0.33
Inverter	MV3-22	368656	4907142	2	0	0	89.1	89.1	1	3755.62	3.25	0	82.49	0	1.33	0	0	10.73	0	0	0	0	0	0	-5.5	-5.5
Inverter Transformer	MV1-10 T	365010	4905564	2	0	0	69.4	69.4	1	394.63	3.25	0	62.92	0	0.88	0	0	2.69	0	0	0	0	0	0	2.86	2.86
Inverter	MV3-1	368156	4907976	2	0	0	89.1	89.1	1	3835.66	3.25	0	82.68	0	1.35	0	0	10.85	0	0	0	0	0	0	-5.82	-5.82
Inverter	MV3-5	368340	4907843	2	0	0	89.1	89.1	1	3886.06	3.25	0	82.79	0	1.36	0	0	10.92	0	0	0	0	0	0	-6.02	-6.02
Inverter	MV3-4	368502	4907925	2	0	0	89.1	89.1	1	4063.3	3.25	0	83.18	0	1.41	0	0	11.17	0	0	0	0	0	0	-6.7	-6.7
Westbrook Inverter Enclosur	W_INV2	369374	4906388	2	0	0	89.1	89.1	1	4153.71	3.25	0	83.37	0	1.43	0	0	11.3	0	0	0	0	0	0	-7.04	-7.04
Inverter	MV3-2	368671	4907928	2	0	0	89.1	89.1	1	4197.62	3.25	0	83.46	0	1.44	0	0	11.36	0	0	0	0	0	0	-7.21	-7.21
Westbrook Inverter Enclosur	W_INV3	369508	4906164	2	0	0	89.1	89.1	1	4235.62	3.25	0	83.54	0	1.45	0	0	11.42	0	0	0	0	0	0	-7.35	-7.35
Westbrook Inverter Enclosur	W_INV4	369673	4906164	2	0	0	89.1	89.1	1	4397.75	3.25	0	83.86	0	1.49	0	0	11.64	0	0	0	0	0	0	-7.94	-7.94
Westbrook Inverter Enclosur	W_INV5	369719	4906574	2	0	0	89.1	89.1	1	4534.96	3.25	0	84.13	0	1.52	0	0	11.83	0	0	0	0	0	0	-8.43	-8.43
Westbrook Inverter Enclosur	W_INV7	369780	4906417	2	0	0	89.1	89.1	1	4554.86	3.25	0	84.17	0	1.53	0	0	11.86	0	0	0	0	0	0	-8.5	-8.5
Westbrook Inverter Enclosur	W_INV6	369875	4906578	2	0	0	89.1	89.1	1	4686.51	3.25	0	84.42	0	1.56	0	0	12.04	0	0	0	0	0	0	-8.96	-8.96
Fixed Reactor Bank 1	FRB1	369378	4908755	6	0	0	89.8	89.8	1	5267.38	5.25	0	85.43	0	-0.53	0	0	8.93	0	0	0	0	0	0	-4.06	-4.06
Fixed Reactor Bank 2	FRB2	369464	4908755	6	0	0	89.8	89.8	1	5333.45	5.25	0	85.54	0	-0.52	0	0	9.01	0	0	0	0	0	0	-4.26	-4.26
Inverter	MV4-13	369051	4908605	2	0	0	89.1	89.1	1	4921.57	3.25	0	84.84	0	1.62	0	0	12.36	0	0	0	0	0	0	-9.76	-9.76
Inverter	MV4-15	369176	4908481	2	0	0	89.1	89.1	1	4937.01	3.25	0	84.87	0	1.62	0	0	12.38	0	0	0	0	0	0	-9.81	-9.81
Inverter	MV4-14	369176	4908507	2	0	0	89.1	89.1	1	4953.48	3.25	0	84.9	0	1.63	0	0	12.4	0	0	0	0	0	0	-9.87	-9.87
Inverter	MV4-12	369043	4908803	2	0	0	89.1	89.1	1	5048.38	3.25	0	85.06	0	1.65	0	0	12.53	0	0	0	0	0	0	-10.19	-10.19
Inverter	MV5-6	369982	4908507	2	0	0	89.1	89.1	1	5599.62	3.25	0	85.96	0	1.79	0	0	13.25	0	0	0	0	0	0	-11.94	-11.94
Inverter Transformer	MV1-7 T	364919	4905782	2	0	0	69.4	69.4	1	601.09	3.25	0	66.58	0	1.21	0	0	3.17	0	0	0	0	0	0	-1.61	-1.61
Westbrook Inverter Enclosur	W_INV1	369409	4906578	2	0	0	86.1	86.1	1	4238.19	3.25	0	83.54	0	1.45	0	0	11.42	0	0	0	0	0	0	-10.36	-10.36
Inverter Transformer	MV1-13 T	364725	4905241	2	0	0	69.4	69.4	1	635.63	3.25	0	67.06	0	1.27	0	0	3.23	0	0	0	0	0	0	-2.22	-2.22

Inverter	MV6-4	370250	4906966	2	0	0	86.1	86.1	1	5156.8	3.25	0	85.25	0	1.68	0	0	12.67	0	0	0	0	0	0	-13.54	-13.54
Inverter Transformer	MV1-12 T	365044	4905386	2	0	0	56.1	56.1	1	305.95	3.25	0	60.71	0	-0.07	0	0	2.81	0	0	0	0	0	0	-7.39	-7.39
Westbrook Inverter Transfor	W_INVTR1	369403	4906578	2	0	0	78.2	78.2	1	4232.44	3.25	0	83.53	0	-3.02	0	0	2.14	0	0	0	0	0	0	-4.42	-4.42
Inverter Transformer	MV2-1 T	365836	4906816	2	0	0	69.4	69.4	1	1533.39	3.25	0	74.71	0	1.99	0	0	4.47	0	0	0	0	0	0	-11.82	-11.82
Westbrook Inverter Transfor	W_INVTR2	369368	4906388	2	0	0	77.3	77.3	1	4147.9	3.25	0	83.36	0	-3	0	0	2.11	0	0	0	0	0	0	-5.13	-5.13
Westbrook Inverter Transfor	W_INVTR3	369514	4906164	2	0	0	77.3	77.3	1	4241.51	3.25	0	83.55	0	-3.02	0	0	2.14	0	0	0	0	0	0	-5.34	-5.34
Inverter Transformer	MV1-15 T	365309	4904994	2	0	0	56.1	56.1	1	370.18	3.25	0	62.37	0	-0.11	0	0	3.09	0	0	0	0	0	0	-9.29	-9.29
Westbrook Inverter Transfor	W_INVTR4	369679	4906164	2	0	0	77.3	77.3	1	4403.65	3.25	0	83.88	0	-3.05	0	0	2.2	0	0	0	0	0	0	-5.69	-5.69
Westbrook Inverter Transfor	W_INVTR5	369725	4906574	2	0	0	77.3	77.3	1	4540.74	3.25	0	84.14	0	-3.08	0	0	2.25	0	0	0	0	0	0	-5.97	-5.97
Westbrook Inverter Transfor	W_INVTR7	369786	4906417	2	0	0	77.3	77.3	1	4560.7	3.25	0	84.18	0	-3.09	0	0	2.26	0	0	0	0	0	0	-6.01	-6.01
Westbrook Inverter Transfor	W_INVTR6	369881	4906578	2	0	0	77.3	77.3	1	4692.3	3.25	0	84.43	0	-3.11	0	0	2.31	0	0	0	0	0	0	-6.28	-6.28
Inverter Transformer	MV1-8 T	364782	4905647	2	0	0	56.1	56.1	1	634.6	3.25	0	67.05	0	-0.1	0	0	3.95	0	0	0	0	0	0	-14.85	-14.85
Inverter Transformer	MV1-11 T	364649	4905414	2	0	0	56.1	56.1	1	701.93	3.25	0	67.93	0	-0.08	0	0	4.14	0	0	0	0	0	0	-15.93	-15.93
Inverter Transformer	MV1-4 T	364821	4905918	2	0	0	56.1	56.1	1	766.76	3.25	0	68.69	0	-0.06	0	0	4.31	0	0	0	0	0	0	-16.88	-16.88
Inverter Transformer	MV1-9 T	364555	4905646	2	0	0	56.1	56.1	1	843.27	3.25	0	69.52	0	-0.04	0	0	4.51	0	0	0	0	0	0	-17.93	-17.93
Inverter Transformer	MV1-5 T	364676	4905892	2	0	0	56.1	56.1	1	856.64	3.25	0	69.66	0	-0.04	0	0	4.54	0	0	0	0	0	0	-18.1	-18.1
Inverter Transformer	MV1-2 T	364759	4906063	2	0	0	56.1	56.1	1	916.25	3.25	0	70.24	0	-0.02	0	0	4.69	0	0	0	0	0	0	-18.85	-18.85
Inverter Transformer	MV1-6 T	364482	4905835	2	0	0	56.1	56.1	1	987.64	3.25	0	70.89	0	0.01	0	0	4.86	0	0	0	0	0	0	-19.7	-19.7
Inverter Transformer	MV1-1 T	364721	4906166	2	0	0	56.1	56.1	1	1020.2	3.25	0	71.17	0	0.02	0	0	4.94	0	0	0	0	0	0	-20.07	-20.07
Inverter Transformer	MV6-4 T	370244	4906966	2	0	0	69.4	69.4	1	5151.1	3.25	0	85.24	0	3.04	0	0	7.48	0	0	0	0	0	0	-26.41	-26.41
Inverter Transformer	MV1-3 T	364435	4906039	2	0	0	56.1	56.1	1	1137.42	3.25	0	72.12	0	0.06	0	0	5.21	0	0	0	0	0	0	-21.33	-21.33
Inverter Transformer	MV6-1 T	370230	4907364	2	0	0	69.4	69.4	1	5275.62	3.25	0	85.45	0	3.07	0	0	7.56	0	0	0	0	0	0	-26.72	-26.72
Inverter Transformer	MV2-4 T	365590	4906628	2	0	0	56.1	56.1	1	1288.74	3.25	0	73.2	0	0.12	0	0	5.56	0	0	0	0	0	0	-22.82	-22.82
Inverter Transformer	MV2-3 T	365814	4906641	2	0	0	56.1	56.1	1	1360.91	3.25	0	73.68	0	0.14	0	0	5.72	0	0	0	0	0	0	-23.48	-23.48
Inverter Transformer	MV2-2 T	365982	4906654	2	0	0	56.1	56.1	1	1438.74	3.25	0	74.16	0	0.17	0	0	5.89	0	0	0	0	0	0	-24.16	-24.16
Inverter Transformer	MV3-18 T	367757	4907412	2	0	0	56.1	56.1	1	3162.43	3.25	0	81	0	0.9	0	0	9.14	0	0	0	0	0	0	-34.98	-34.98
Inverter Transformer	MV3-12 T	367674	4907594	2	0	0	56.1	56.1	1	3222.96	3.25	0	81.17	0	0.92	0	0	9.24	0	0	0	0	0	0	-35.27	-35.27
Inverter Transformer	MV3-13 T	367958	4907577	2	0	0	56.1	56.1	1	3422.44	3.25	0	81.69	0	1.01	0	0	9.56	0	0	0	0	0	0	-36.2	-36.2
Inverter Transformer	MV3-17 T	368183	4907472	2	0	0	56.1	56.1	1	3533.22	3.25	0	81.96	0	1.05	0	0	9.74	0	0	0	0	0	0	-36.7	-36.7
Inverter Transformer	MV3-7 T	367951	4907754	2	0	0	56.1	56.1	1	3534.41	3.25	0	81.97	0	1.05	0	0	9.74	0	0	0	0	0	0	-36.7	-36.7
Inverter Transformer	MV3-19 T	368352	4907347	2	0	0	56.1	56.1	1	3599.76	3.25	0	82.13	0	1.08	0	0	9.84	0	0	0	0	0	0	-36.99	-36.99
Inverter Transformer	MV3-21 T	368484	4907206	2	0	0	56.1	56.1	1	3637.11	3.25	0	82.22	0	1.1	0	0	9.9	0	0	0	0	0	0	-37.16	-37.16
Inverter Transformer	MV3-10 T	368162	4907669	2	0	0	56.1	56.1	1	3638.02	3.25	0	82.22	0	1.1	0	0	9.9	0	0	0	0	0	0	-37.16	-37.16
Inverter Transformer	MV3-3 T	367944	4907927	2	0	0	56.1	56.1	1	3648.73	3.25	0	82.24	0	1.1	0	0	9.92	0	0	0	0	0	0	-37.21	-37.21
Inverter Transformer	MV3-15 T	368351	4907477	2	0	0	56.1	56.1	1	3672.22	3.25	0	82.3	0	1.11	0	0	9.96	0	0	0	0	0	0	-37.31	-37.31
Inverter Transformer	MV3-6 T	368156	4907834	2	0	0	56.1	56.1	1	3740.33	3.25	0	82.46	0	1.14	0	0	10.06	0	0	0	0	0	0	-37.6	-37.6
Inverter Transformer	MV3-22 T	368661	4907142	2	0	0	56.1	56.1	1	3760.02	3.25	0	82.5	0	1.15	0	0	10.09	0	0	0	0	0	0	-37.69	-37.69
Inverter Transformer	MV3-11 T	368340	4907662	2	0	0	56.1	56.1	1	3773.07	3.25	0	82.53	0	1.15	0	0	10.11	0	0	0	0	0	0	-37.74	-37.74
Inverter Transformer	MV3-16 T	368509	4907475	2	0	0	56.1	56.1	1	3801.36	3.25	0	82.6	0	1.16	0	0	10.16	0	0	0	0	0	0	-37.86	-37.86
Inverter Transformer	MV3-1 T	368150	4907976	2	0	0	56.1	56.1	1	3831.27	3.25	0	82.67	0	1.18	0	0	10.2	0	0	0	0	0	0	-37.99	-37.99
Inverter Transformer	MV3-20 T	368683	4907317	2	0	0	56.1	56.1	1	3864.92	3.25	0	82.74	0	1.19	0	0	10.25	0	0	0	0	0	0	-38.13	-38.13
Inverter Transformer	MV3-5 T	368335	4907843	2	0	0	56.1	56.1	1	3882.21	3.25	0	82.78	0	1.2	0	0	10.28	0	0	0	0	0	0	-38.2	-38.2
Inverter Transformer	MV3-9 T	368517	4907703	2	0	0	56.1	56.1	1	3939.1	3.25	0	82.91	0	1.22	0	0	10.36	0	0	0	0	0	0	-38.43	-38.43
Inverter Transformer	MV3-14 T	368678	4907498	2	0	0	56.1	56.1	1	3955.34	3.25	0	82.94	0	1.23	0	0	10.39	0	0	0	0	0	0	-38.5	-38.5
Inverter Transformer	MV3-4 T	368507	4907925	2	0	0	56.1	56.1	1	4067.18	3.25	0	83.19	0	1.27	0	0	10.55	0	0	0	0	0	0	-38.95	-38.95
Inverter Transformer	MV3-8 T	368685	4907712	2	0	0	56.1	56.1	1	4080.61	3.25	0	83.21	0	1.28	0	0	10.57	0	0	0	0	0	0	-39.01	-39.01
Inverter Transformer	MV3-2 T	368677	4907928	2	0	0	56.1	56.1	1	4202.37	3.25	0	83.47	0	1.32	0	0	10.75	0	0	0	0	0	0	-39.49	-39.49
Inverter Transformer	MV4-13 T	369057	4908605	2	0	0	56.1	56.1	1	4926.09	3.25	0	84.85	0	1.6	0	0	11.76	0	0	0	0	0	0	-42.15	-42.15
Inverter Transformer	MV4-15 T	369170	4908481	2	0	0	56.1	56.1	1	4932.36	3.25	0	84.86	0	1.6	0	0	11.76	0	0	0	0	0	0	-42.17	-42.17
Inverter Transformer	MV4-14 T	369182	4908507	2	0	0	56.1	56.1	1	4958.12	3.25	0	84.91	0	1.61	0	0	11.8	0	0	0	0	0	0	-42.26	-42.26
Inverter Transformer	MV4-12 T	369049	4908803	2	0	0	56.1	56.1	1	5052.77	3.25	0	85.07	0	1.64	0	0	11.92	0	0	0	0	0	0	-42.58	-42.58
Inverter Transformer	MV6-2 T	370091	4907339	2	0	0	56.1	56.1	1	5137.62	3.25	0	85.22	0	1.67	0	0	12.03	0	0	0	0	0	0	-42.87	-42.87
Inverter Transformer	MV6-3 T	370202	4907140	2	0	0	56.1	56.1	1	5168.45	3.25	0	85.27	0	1.69	0	0	12.07	0	0	0	0	0	0	-42.97	-42.97
Inverter Transformer	MV4-7 T	369040	4909001	2	0	0	56.1	56.1	1	5183.22	3.25	0	85.29	0	1.69	0	0	12.09	0	0	0	0	0	0	-43.02	-43.02
Inverter Transformer	MV4-11 T	369269	4908855	2	0	0	56.1	56.1	1	5250.47	3.25	0	85.4	0	1.71	0	0	12.18	0	0	0	0	0	0	-43.24	-43.24
Inverter Transformer	MV4-10 T	369307	4908858	2	0	0	56.1	56.1	1	5280.89	3.25	0	85.45	0	1.73	0	0	12.22	0	0	0	0	0	0	-43.34	-43.34
Inverter Transformer	MV4-4 T	369033	4909199	2	0	0	56.1	56.1	1	5319.25	3.25	0	85.52	0	1.74	0	0	12.27	0	0	0	0	0	0	-43.46	-43.46
Inverter Transformer	MV4-8 T	369262	4909001	2	0	0	56.1	56.1	1	5343.58	3.25	0	85.56	0	1.75	0	0	12.3	0	0	0	0	0	0	-43.54	-43.54
Inverter Transformer	MV4-9 T	369284	4909001	2	0	0	56.1	56.1	1	5359.72	3.25	0	85.58	0	1.75	0	0	12.32	0	0	0	0	0	0	-43.6	-43.6
Inverter Transformer	MV4-1 T	369017	4909397	2	0	0	56.1	56.1	1	5453.02	3.25	0	85.73	0	1.78	0	0	12.44	0	0	0	0	0	0	-43.9	-43.9
Inverter Transformer	MV4-6 T	369249	4909192	2	0	0	56.1	56.1	1	5466.16	3.25	0	85.75	0	1.79	0	0	12.45	0	0	0	0	0	0	-43.94	-43.94
Inverter Transformer	MV4-5 T	369283	4909199	2	0	0	56.1	56.1	1	5495.36	3.25	0	85.8	0	1.8	0	0	12.49	0	0	0	0	0	0	-44.03	-44.03
Inverter Transformer	MV4-3 T	369234	4909397	2	0	0	56.1	56.1	1	5601.29	3.25	0	85.97	0	1.83	0	0	12.62	0	0	0	0	0	0	-44.36	-44.36
Inverter Transformer	MV5-6 T	369987	4908507	2	0	0	56.1	56.1	1	5603.76	3.25	0	85.97	0	1.84	0	0	12.62	0	0	0	0	0	0	-44.37	-44.37
Inverter Transformer	MV4-2 T	369267	4909397	2	0	0	56.1	56.1	1	5624.23	3.25	0	86	0	1.84	0	0	12.65	0	0	0	0	0	0	-44.43	-44.43
Inverter Transformer	MV5-5 T	370021	4908690	2	0	0	56.1	56.1	1	5736.13	3.25	0	86.17	0	1.88	0	0	12.79	0	0	0	0	0	0	-44.78	-44.78
Inverter Transformer	MV5-2 T	370011	4908853	2	0	0	56.1	56.1	1	5824.2	3.25	0	86.3	0	1.91	0	0	12.89	0	0	0	0	0	0	-45.05	-45.05
Inverter Transformer	MV5-4 T	370330	4908707	2	0	0	56.1	56.1	1	5999.95	3.25	0	86.56	0	1.96	0	0	13.1	0	0	0	0	0	0	-45.57	-45.57
Inverter Transformer	MV5-1 T	370015	4909142	2	0	0	56.1	56.1	1	6004.99	3.25	0	86.57	0	1.97	0	0	13.11	0	0	0	0	0	0	-45.59	-45.59
Inverter Transformer	MV5-3 T	370237	4908851	2	0	0	56.1	56.1	1	6005.47	3.25	0	86.57	0	1.97	0	0	13.11	0	0	0	0	0	0	-45.59	-45.59
Line Reactor	NGR	369421	4908787.5	5	0	0	45.4	45.4	1	5321.21	5.25	0	85.52	0	3.25	1.35	0.09	2.18	0	0	0	0	0	0	-46.95	-46.95
Limit. Valu 0	0																								
Level D/N: 38.0791	38.0791																								

Receiver: Existing Noise Receptor
ID: S-R138
X: 366418
Y: 4905910
Z: 4.5
Ground: 0

ISO	Description	ID	X	Y	Z	Ground	ReflOrd	LxT	LxN	L/A	Dist.	hm	Freq	Adiv	K0b	Agr	Abar	z	Aatm	Afol	Ahous	Cmet	CmetN	Dc	RL	LtotT	LtotN
	Inverter	MV2-3	365820	4906641	2	0	0	100.3	100.3	1	944.44	3.25	0	70.5	0	-0.27	0	0	10.72	0	0	0	0	0	0	19.36	19.36
	Sol_Luce Substation	S_Substation	369426	4908792	3.5	0	0	112.1	112.1	1	4165.81	5.25	0	83.39	0	0.65	3.07	0.25	7.58	0	0	0	0	0	0	17.38	17.38
	Inverter	MV2-4	365586	4906624	2	0	0	100.3	100.3	1	1096.37	3.25	0	71.8	0	-0.2	0	0	11.22	0	0	0	0	0	0	17.5	17.5
	Inverter	MV1-15	365315	4904994	2	0	0	100.3	100.3	1	1433.76	3.25	0	74.13	0	-0.06	0	0	12.16	0	0	0	0	0	0	14.08	14.08
	Inverter	MV1-12	365038	4905386	2	0	0	100.3	100.3	1	1476.14	3.25	0	74.38	0	-0.04	0	0	12.27	0	0	0	0	0	0	13.71	13.71
	Inverter	MV2-1	365842	4906816	2	0	0	97.3	97.3	1	1073.6	3.25	0	71.62	0	-0.21	0	0	11.15	0	0	0	0	0	0	14.76	14.76
	Inverter	MV1-4	364815	4905918	2	0	0	100.3	100.3	1	1603.02	3.25	0	75.1	0	0	0	0	12.58	0	0	0	0	0	0	12.63	12.63
	Inverter	MV1-8	364788	4905647	2	0	0	100.3	100.3	1	1651.08	3.25	0	75.36	0	0.02	0	0	12.69	0	0	0	0	0	0	12.25	12.25
	Inverter	MV1-2	364753	4906063	2	0	0	100.3	100.3	1	1672.02	3.25	0	75.46	0	0.03	0	0	12.74	0	0	0	0	0	0	12.08	12.08
	Inverter	MV1-1	364715	4906166	2	0	0	100.3	100.3	1	1722.14	3.25	0	75.72	0	0.04	0	0	12.85	0	0	0	0	0	0	11.69	11.69
	Inverter	MV1-5	364671	4905892	2	0	0	100.3	100.3	1	1747.09	3.25	0	75.85	0	0.05	0	0	12.91	0	0	0	0	0	0	11.5	11.5
	Inverter	MV1-11	364655	4905414	2	0	0	100.3	100.3	1	1831.45	3.25	0	76.26	0	0.08	0	0	13.1	0	0	0	0	0	0	10.88	10.88
	Inverter	MV1-9	364561	4905646	2	0	0	100.3	100.3	1	1875.67	3.25	0	76.46	0	0.09	0	0	13.2	0	0	0	0	0	0	10.56	10.56
	Inverter	MV1-6	364477	4905835	2	0	0	100.3	100.3	1	1942.45	3.25	0	76.77	0	0.11	0	0	13.34	0	0	0	0	0	0	10.09	10.09
	Inverter	MV3-18	367752	4907412	2	0	0	100.3	100.3	1	2008.87	3.25	0	77.06	0	0.13	0	0	13.48	0	0	0	0	0	0	9.64	9.64
	Inverter	MV1-10	365004	4905564	2	0	0	97.3	97.3	1	1455.72	3.25	0	74.26	0	-0.05	0	0	12.21	0	0	0	0	0	0	10.89	10.89
	Inverter	MV3-12	367668	4907594	2	0	0	100.3	100.3	1	2097.23	3.25	0	77.43	0	0.16	0	0	13.66	0	0	0	0	0	0	9.06	9.06
	Inverter	MV1-7	364925	4905782	2	0	0	97.3	97.3	1	1498.48	3.25	0	74.51	0	-0.03	0	0	12.32	0	0	0	0	0	0	10.51	10.51
	Inverter	MV1-14	365163	4905049	2	0	0	97.3	97.3	1	1521.96	3.25	0	74.65	0	-0.03	0	0	12.38	0	0	0	0	0	0	10.31	10.31
	Inverter	MV3-13	367963	4907577	2	0	0	100.3	100.3	1	2272.87	3.25	0	78.13	0	0.2	0	0	14.02	0	0	0	0	0	0	7.96	7.96
	Inverter	MV3-17	368178	4907472	2	0	0	100.3	100.3	1	2353.18	3.25	0	78.43	0	0.22	0	0	14.18	0	0	0	0	0	0	7.48	7.48
	Inverter	MV3-7	367945	4907754	2	0	0	100.3	100.3	1	2394.17	3.25	0	78.58	0	0.23	0	0	14.26	0	0	0	0	0	0	7.24	7.24
	Inverter	MV3-19	368357	4907347	2	0	0	100.3	100.3	1	2413.44	3.25	0	78.65	0	0.24	0	0	14.29	0	0	0	0	0	0	7.13	7.13
	Inverter	MV3-21	368478	4907206	2	0	0	100.3	100.3	1	2433.77	3.25	0	78.73	0	0.24	0	0	14.33	0	0	0	0	0	0	7.01	7.01
	Inverter	MV3-10	368167	4907669	2	0	0	100.3	100.3	1	2480.54	3.25	0	78.89	0	0.25	0	0	14.42	0	0	0	0	0	0	6.75	6.75
	Inverter	MV3-15	368357	4907477	2	0	0	100.3	100.3	1	2493.03	3.25	0	78.93	0	0.26	0	0	14.44	0	0	0	0	0	0	6.68	6.68
	Inverter	MV3-3	367939	4907927	2	0	0	100.3	100.3	1	2526.21	3.25	0	79.05	0	0.26	0	0	14.51	0	0	0	0	0	0	6.49	6.49
	Inverter	MV1-13	364731	4905241	2	0	0	97.3	97.3	1	1814.81	3.25	0	76.18	0	0.07	0	0	13.06	0	0	0	0	0	0	8	8
	Inverter	MV3-6	368162	4907834	2	0	0	100.3	100.3	1	2596.79	3.25	0	79.29	0	0.28	0	0	14.64	0	0	0	0	0	0	6.1	6.1
	Inverter	MV3-11	368346	4907662	2	0	0	100.3	100.3	1	2605.13	3.25	0	79.32	0	0.28	0	0	14.66	0	0	0	0	0	0	6.06	6.06
	Inverter	MV3-16	368514	4907475	2	0	0	100.3	100.3	1	2615.81	3.25	0	79.35	0	0.28	0	0	14.68	0	0	0	0	0	0	6	6
	Inverter	MV3-20	368689	4907317	2	0	0	100.3	100.3	1	2671.53	3.25	0	79.54	0	0.3	0	0	14.78	0	0	0	0	0	0	5.7	5.7
	Inverter	MV3-9	368512	4907703	2	0	0	100.3	100.3	1	2756.75	3.25	0	79.81	0	0.31	0	0	14.94	0	0	0	0	0	0	5.26	5.26
	Inverter	MV3-14	368684	4907498	2	0	0	100.3	100.3	1	2767.04	3.25	0	79.84	0	0.32	0	0	14.95	0	0	0	0	0	0	5.2	5.2
	Inverter	MV3-8	368680	4907712	2	0	0	100.3	100.3	1	2892.03	3.25	0	80.22	0	0.34	0	0	15.18	0	0	0	0	0	0	4.57	4.57
	Inverter	MV2-2	365977	4906654	2	0	0	89.1	89.1	1	864.88	3.25	0	69.74	0	0.65	0	0	6.05	0	0	0	0	0	0	12.61	12.61
	Inverter	MV6-2	370085	4907339	2	0	0	100.3	100.3	1	3935.6	3.25	0	82.9	0	0.52	0	0	16.95	0	0	0	0	0	0	-0.05	-0.05
	Inverter	MV6-3	370207	4907140	2	0	0	100.3	100.3	1	3983.64	3.25	0	83.01	0	0.52	0	0	17.02	0	0	0	0	0	0	-0.24	-0.24
	Inverter	MV4-7	369035	4909001	2	0	0	100.3	100.3	1	4050.06	3.25	0	83.15	0	0.53	0	0	17.13	0	0	0	0	0	0	-0.5	-0.5
	Inverter	MV4-11	369264	4908855	2	0	0	100.3	100.3	1	4095.45	3.25	0	83.25	0	0.54	0	0	17.2	0	0	0	0	0	0	-0.67	-0.67
	Inverter	MV4-10	369312	4908858	2	0	0	100.3	100.3	1	4131.1	3.25	0	83.32	0	0.54	0	0	17.26	0	0	0	0	0	0	-0.81	-0.81
	Inverter	MV4-8	369256	4909001	2	0	0	100.3	100.3	1	4196.25	3.25	0	83.46	0	0.55	0	0	17.36	0	0	0	0	0	0	-1.06	-1.06
	Inverter	MV4-4	369027	4909199	2	0	0	100.3	100.3	1	4198.14	3.25	0	83.46	0	0.55	0	0	17.36	0	0	0	0	0	0	-1.07	-1.07
	Inverter	MV4-9	369289	4909001	2	0	0	100.3	100.3	1	4218.64	3.25	0	83.5	0	0.56	0	0	17.39	0	0	0	0	0	0	-1.14	-1.14
	Inverter	MV4-6	369243	4909192	2	0	0	100.3	100.3	1	4330.38	3.25	0	83.73	0	0.57	0	0	17.57	0	0	0	0	0	0	-1.56	-1.56
	Inverter	MV4-1	369011	4909397	2	0	0	100.3	100.3	1	4345.44	3.25	0	83.76	0	0.57	0	0	17.59	0	0	0	0	0	0	-1.61	-1.61
	Inverter	MV4-5	369289	4909199	2	0	0	100.3	100.3	1	4365.8	3.25	0	83.8	0	0.57	0	0	17.62	0	0	0	0	0	0	-1.69	-1.69
	Inverter	MV4-3	369229	4909397	2	0	0	100.3	100.3	1	4478.94	3.25	0	84.02	0	0.59	0	0	17.8	0	0	0	0	0	0	-2.1	-2.1
	Inverter	MV4-2	369272	4909397	2	0	0	100.3	100.3	1	4506.05	3.25	0	84.08	0	0.59	0	0	17.84	0	0	0	0	0	0	-2.19	-2.19
	Inverter	MV5-5	370015	4908690	2	0	0	100.3	100.3	1	4546.08	3.25	0	84.15	0	0.6	0	0	17.9	0	0	0	0	0	0	-2.34	-2.34
	Inverter	MV5-2	370006	4908853	2	0	0	100.3	100.3	1	4640.58	3.25	0	84.33	0	0.61	0	0	18.04	0	0	0	0	0	0	-2.67	-2.67
	Inverter	MV5-4	370324	4908707	2	0	0	100.3	100.3	1	4804.17	3.25	0	84.63	0	0.62	0	0	18.29	0	0	0	0	0	0	-3.23	-3.23
	Inverter	MV5-3	370231	4908851	2	0	0	100.3	100.3	1	4815.44	3.25	0	84.65	0	0.62	0	0	18.31	0	0	0	0	0	0	-3.27	-3.27
	Inverter	MV5-1	370020	4909142	2	0	0	100.3	100.3	1	4839.45	3.25	0	84.7	0	0.63	0	0	18.34	0	0	0	0	0	0	-3.35	-3.35
	Inverter	MV6-1	370235	4907364	2	0	0	97.3	97.3	1	4084.56	3.25	0	83.22	0	0.54	0	0	17.18	0	0	0	0	0	0	-3.63	-3.63
	DSTATCOM - 10 MVAR #2	DSAT2	369403	4908757	2.5	0	0	96.6	96.6	1	4125	3.5	0	83.31	0	3.59	0	0	2.91	0	0	0	0	0	0	6.83	6.83
	DSTATCOM - 10 MVAR #1	DSAT1	369437	4908757	2.5	0	0	96.6	96.6	1	4149.67	3.5	0	83.36	0	3.59	0	0	2.92	0	0	0	0	0	0	6.76	6.76
	Inverter	MV1-3	364440	4906039	2	0	0	89.1	89.1	1	1982.2	3.25	0	76.94	0	0.9	0	0	8.02	0	0	0	0	0	0	3.2	3.2
	Gardiner Substation	G_Sub	366586.3	4903349.9	2.5	0	0	90.8	90.8	1	2565.63	4.25	0	79.18	0	1.06	3.61	0.37	5.29	0	0	0	0	0	0	1.63	1.63
	SubstationTransformer	W_ST	369711.17	4906112.3	2.5	0	0	92	92	1	3299.38	4.25	0	81.37	0	1.16	2.87	0.29	6.4	0	0	0	0	0	0	0.18	0.18
	Inverter	MV3-22	368656	4907142	2	0	0	89.1	89.1	1	2554.7	3.25	0	79.15	0	1.04	0	0	8.93	0	0	0	0	0	0	-0.06	-0.06
	Inverter	MV3-1	368156	4907976	2	0	0	89.1	89.1	1	2699.82	3.25	0	79.63	0	1.07	0	0	9.16	0	0	0	0	0	0	-0.8	-0.8
	Inverter	MV3-5	368340	4907843	2	0	0	89.1	89.1	1	2725.91	3.25	0	79.71	0	1.08	0	0	9.2	0	0	0	0	0	0	-0.93	-0.93
	Inverter	MV3-4	368502	4907925	2	0	0	89.1	89.1	1	2898.84	3.25	0	80.24	0	1.12	0	0	9.46	0	0	0	0	0	0	-1.77	-1.77
	Westbrook Inverter Enclosur	W_INV2	369374	4906388	2	0	0	89.1	89.1	1	2994.4	3.25	0	80.53	0	1.15	0	0	9.61	0	0	0	0	0	0	-2.22	-2.22
	Inverter	MV3-2	368671	4907928	2	0	0	89.1	89.1	1	3024.62	3.25	0	80.61	0	1.15	0	0	9.65	0	0	0	0	0	0	-2.36	-2.36

Westbrook Inverter Enclosur	W_INV3	369508	4906164	2	0	0	89.1	89.1	1	3100.42	3.25	0	80.83	0	1.17	0	0	9.77	0	0	0	0	0	0	-2.71	-2.71
Inverters	G_Inv2	366676.9	4903239.1	2	0	0	87.7	87.7	1	2683.42	3.25	0	79.57	0	2.66	0	0	3.42	0	0	0	0	0	0	2	2
Inverters	G_Inv1	366526.4	4903225.8	2	0	0	87.7	87.7	1	2686.39	3.25	0	79.58	0	2.66	0	0	3.42	0	0	0	0	0	0	1.99	1.99
Westbrook Inverter Enclosur	W_INV4	369673	4906164	2	0	0	89.1	89.1	1	3264.9	3.25	0	81.28	0	1.21	0	0	10.02	0	0	0	0	0	0	-3.45	-3.45
Inverters	G_Inv4	366732.8	4903105	2	0	0	87.7	87.7	1	2822.61	3.25	0	80.01	0	2.68	0	0	3.58	0	0	0	0	0	0	1.39	1.39
Inverters	G_Inv3	366583.7	4903091.4	2	0	0	87.7	87.7	1	2823.47	3.25	0	80.02	0	2.68	0	0	3.58	0	0	0	0	0	0	1.39	1.39
Westbrook Inverter Enclosur	W_INV5	369719	4906574	2	0	0	89.1	89.1	1	3367.12	3.25	0	81.55	0	1.24	0	0	10.17	0	0	0	0	0	0	-3.89	-3.89
Westbrook Inverter Enclosur	W_INV7	369780	4906417	2	0	0	89.1	89.1	1	3400.01	3.25	0	81.63	0	1.24	0	0	10.22	0	0	0	0	0	0	-4.03	-4.03
Inverters	G_Inv5	366638.5	4902958.1	2	0	0	87.7	87.7	1	2960.13	3.25	0	80.43	0	2.69	0	0	3.73	0	0	0	0	0	0	0.81	0.81
Inverters	G_Inv6	366788.5	4902972	2	0	0	87.7	87.7	1	2961.27	3.25	0	80.43	0	2.69	0	0	3.73	0	0	0	0	0	0	0.81	0.81
Westbrook Inverter Enclosur	W_INV6	369875	4906578	2	0	0	89.1	89.1	1	3520.95	3.25	0	81.93	0	1.27	0	0	10.39	0	0	0	0	0	0	-4.54	-4.54
Inverters	G_Inv7	366694.6	4902824.7	2	0	0	87.7	87.7	1	3097.67	3.25	0	80.82	0	2.71	0	0	3.88	0	0	0	0	0	0	0.25	0.25
Inverters	G_Inv8	366844.5	4902838.5	2	0	0	87.7	87.7	1	3100.97	3.25	0	80.83	0	2.71	0	0	3.89	0	0	0	0	0	0	0.23	0.23
Inverter	MV4-13	369051	4908605	2	0	0	89.1	89.1	1	3767.72	3.25	0	82.52	0	1.34	0	0	10.75	0	0	0	0	0	0	-5.55	-5.55
Inverter	MV4-15	369176	4908481	2	0	0	89.1	89.1	1	3770.49	3.25	0	82.53	0	1.34	0	0	10.76	0	0	0	0	0	0	-5.56	-5.56
Fixed Reactor Bank 1	FRB1	369378	4908755	6	0	0	89.8	89.8	1	4105.56	5.25	0	83.27	0	-0.71	0	0	7.5	0	0	0	0	0	0	-0.29	-0.29
Inverter	MV4-14	369176	4908507	2	0	0	89.1	89.1	1	3788.27	3.25	0	82.57	0	1.34	0	0	10.78	0	0	0	0	0	0	-5.63	-5.63
Inverters	G_Inv9	366750.9	4902691.8	2	0	0	87.7	87.7	1	3235.37	3.25	0	81.2	0	2.72	0	0	4.04	0	0	0	0	0	0	-0.3	-0.3
Inverters	G_Inv10	366900.7	4902704.8	2	0	0	87.7	87.7	1	3241.34	3.25	0	81.21	0	2.72	0	0	4.04	0	0	0	0	0	0	-0.32	-0.32
Fixed Reactor Bank 2	FRB2	369464	4908755	6	0	0	89.8	89.8	1	4167.99	5.25	0	83.4	0	-0.7	0	0	7.59	0	0	0	0	0	0	-0.51	-0.51
Inverter	MV4-12	369043	4908803	2	0	0	89.1	89.1	1	3906.42	3.25	0	82.84	0	1.37	0	0	10.95	0	0	0	0	0	0	-6.1	-6.1
Westbrook Inverter Enclosur	W_INV1	369409	4906578	2	0	0	86.1	86.1	1	3064.69	3.25	0	80.73	0	1.16	0	0	9.71	0	0	0	0	0	0	-5.55	-5.55
Inverter	MV5-6	369982	4908507	2	0	0	89.1	89.1	1	4409.82	3.25	0	83.89	0	1.49	0	0	11.66	0	0	0	0	0	0	-7.98	-7.98
Inverter	MV6-4	370250	4906966	2	0	0	86.1	86.1	1	3974.84	3.25	0	82.99	0	1.39	0	0	11.05	0	0	0	0	0	0	-9.36	-9.36
Inverter Transformer	MV2-1 T	365836	4906816	2	0	0	69.4	69.4	1	1076.83	3.25	0	71.64	0	1.74	0	0	3.92	0	0	0	0	0	0	-7.95	-7.95
Westbrook Inverter Transfor	W_INVTR1	369403	4906578	2	0	0	78.2	78.2	1	3058.83	3.25	0	80.71	0	-2.73	0	0	1.68	0	0	0	0	0	0	-1.42	-1.42
Westbrook Inverter Transfor	W_INVTR2	369368	4906388	2	0	0	77.3	77.3	1	2988.48	3.25	0	80.51	0	-2.71	0	0	1.65	0	0	0	0	0	0	-2.11	-2.11
Westbrook Inverter Transfor	W_INVTR3	369514	4906164	2	0	0	77.3	77.3	1	3106.4	3.25	0	80.85	0	-2.74	0	0	1.7	0	0	0	0	0	0	-2.46	-2.46
Westbrook Inverter Transfor	W_INVTR4	369679	4906164	2	0	0	77.3	77.3	1	3270.88	3.25	0	81.29	0	-2.79	0	0	1.77	0	0	0	0	0	0	-2.93	-2.93
Westbrook Inverter Transfor	W_INVTR5	369725	4906574	2	0	0	77.3	77.3	1	3373	3.25	0	81.56	0	-2.81	0	0	1.81	0	0	0	0	0	0	-3.22	-3.22
Westbrook Inverter Transfor	W_INVTR7	369786	4906417	2	0	0	77.3	77.3	1	3405.95	3.25	0	81.64	0	-2.82	0	0	1.82	0	0	0	0	0	0	-3.31	-3.31
Westbrook Inverter Transfor	W_INVTR6	369881	4906578	2	0	0	77.3	77.3	1	3526.84	3.25	0	81.95	0	-2.85	0	0	1.87	0	0	0	0	0	0	-3.63	-3.63
Inverter Transformer	MV1-10 T	365010	4905564	2	0	0	69.4	69.4	1	1449.89	3.25	0	74.23	0	1.95	0	0	4.38	0	0	0	0	0	0	-11.2	-11.2
Inverter Transformer	MV1-7 T	364919	4905782	2	0	0	69.4	69.4	1	1504.46	3.25	0	74.55	0	1.97	0	0	4.44	0	0	0	0	0	0	-11.61	-11.61
Inverter Transformer	MV1-14 T	365157	4905049	2	0	0	69.4	69.4	1	1526.91	3.25	0	74.68	0	1.98	0	0	4.46	0	0	0	0	0	0	-11.78	-11.78
Inverter Transformer	MV1-13 T	364725	4905241	2	0	0	69.4	69.4	1	1820.39	3.25	0	76.2	0	2.11	0	0	4.78	0	0	0	0	0	0	-13.74	-13.74
Inverter Transformer	MV6-4 T	370244	4906966	2	0	0	69.4	69.4	1	3969.06	3.25	0	82.97	0	2.78	0	0	6.65	0	0	0	0	0	0	-23.05	-23.05
Inverter Transformer	MV2-2 T	365982	4906654	2	0	0	56.1	56.1	1	862.34	3.25	0	69.71	0	-0.03	0	0	4.55	0	0	0	0	0	0	-18.17	-18.17
Inverter Transformer	MV6-1 T	370230	4907364	2	0	0	69.4	69.4	1	4079.89	3.25	0	83.21	0	2.81	0	0	6.74	0	0	0	0	0	0	-23.4	-23.4
Inverter Transformer	MV2-3 T	365814	4906641	2	0	0	56.1	56.1	1	948.25	3.25	0	70.54	0	-0.01	0	0	4.76	0	0	0	0	0	0	-19.24	-19.24
Inverter Transformer	MV2-4 T	365590	4906628	2	0	0	56.1	56.1	1	1095.95	3.25	0	71.8	0	0.05	0	0	5.12	0	0	0	0	0	0	-20.9	-20.9
Inverter Transformer	MV1-15 T	365309	4904994	2	0	0	56.1	56.1	1	1438.38	3.25	0	74.16	0	0.17	0	0	5.89	0	0	0	0	0	0	-24.16	-24.16
Inverter Transformer	MV1-12 T	365044	4905386	2	0	0	56.1	56.1	1	1470.53	3.25	0	74.35	0	0.19	0	0	5.95	0	0	0	0	0	0	-24.43	-24.43
Inverter Transformer	MV1-4 T	364821	4905918	2	0	0	56.1	56.1	1	1597.02	3.25	0	75.07	0	0.24	0	0	6.22	0	0	0	0	0	0	-25.47	-25.47
Inverter Transformer	MV1-8 T	364782	4905647	2	0	0	56.1	56.1	1	1657.01	3.25	0	75.39	0	0.26	0	0	6.35	0	0	0	0	0	0	-25.94	-25.94
Inverter Transformer	MV1-2 T	364759	4906063	2	0	0	56.1	56.1	1	1666.04	3.25	0	75.43	0	0.27	0	0	6.37	0	0	0	0	0	0	-26.01	-26.01
Inverter Transformer	MV1-1 T	364721	4906166	2	0	0	56.1	56.1	1	1716.2	3.25	0	75.69	0	0.29	0	0	6.47	0	0	0	0	0	0	-26.39	-26.39
Inverter Transformer	MV1-5 T	364676	4905892	2	0	0	56.1	56.1	1	1742.09	3.25	0	75.82	0	0.3	0	0	6.53	0	0	0	0	0	0	-26.59	-26.59
Inverter Transformer	MV1-11 T	364649	4905414	2	0	0	56.1	56.1	1	1837.22	3.25	0	76.28	0	0.34	0	0	6.72	0	0	0	0	0	0	-27.28	-27.28
Inverter Transformer	MV1-9 T	364555	4905646	2	0	0	56.1	56.1	1	1881.61	3.25	0	76.49	0	0.35	0	0	6.81	0	0	0	0	0	0	-27.6	-27.6
Inverter Transformer	MV1-6 T	364482	4905835	2	0	0	56.1	56.1	1	1937.45	3.25	0	76.74	0	0.38	0	0	6.92	0	0	0	0	0	0	-27.98	-27.98
Inverter Transformer	MV1-3 T	364435	4906039	2	0	0	56.1	56.1	1	1987.19	3.25	0	76.96	0	0.4	0	0	7.02	0	0	0	0	0	0	-28.32	-28.32
Inverter Transformer	MV3-18 T	367757	4907412	2	0	0	56.1	56.1	1	2012.2	3.25	0	77.07	0	0.41	0	0	7.07	0	0	0	0	0	0	-28.49	-28.49
Inverter Transformer	MV3-12 T	367674	4907594	2	0	0	56.1	56.1	1	2100.81	3.25	0	77.45	0	0.45	0	0	7.24	0	0	0	0	0	0	-29.08	-29.08
Inverter Transformer	MV3-13 T	367958	4907577	2	0	0	56.1	56.1	1	2269.47	3.25	0	78.12	0	0.52	0	0	7.56	0	0	0	0	0	0	-30.14	-30.14
Inverter Transformer	MV3-17 T	368183	4907472	2	0	0	56.1	56.1	1	2356.92	3.25	0	78.45	0	0.56	0	0	7.73	0	0	0	0	0	0	-30.67	-30.67
Inverter Transformer	MV3-7 T	367951	4907754	2	0	0	56.1	56.1	1	2398.01	3.25	0	78.6	0	0.57	0	0	7.8	0	0	0	0	0	0	-30.91	-30.91
Inverter Transformer	MV3-19 T	368352	4907347	2	0	0	56.1	56.1	1	2409.43	3.25	0	78.64	0	0.58	0	0	7.82	0	0	0	0	0	0	-30.98	-30.98
Inverter Transformer	MV3-21 T	368484	4907206	2	0	0	56.1	56.1	1	2438.85	3.25	0	78.74	0	0.59	0	0	7.88	0	0	0	0	0	0	-31.15	-31.15
Inverter Transformer	MV3-10 T	368162	4907669	2	0	0	56.1	56.1	1	2477.02	3.25	0	78.88	0	0.61	0	0	7.95	0	0	0	0	0	0	-31.37	-31.37
Inverter Transformer	MV3-15 T	368351	4907477	2	0	0	56.1	56.1	1	2488.37	3.25	0	78.92	0	0.61	0	0	7.97	0	0	0	0	0	0	-31.44	-31.44
Inverter Transformer	MV3-3 T	367944	4907927	2	0	0	56.1	56.1	1	2529.22	3.25	0	79.06	0	0.63	0	0	8.04	0	0	0	0	0	0	-31.67	-31.67
Inverter Transformer	MV3-22 T	368661	4907142	2	0	0	56.1	56.1	1	2559.08	3.25	0	79.16	0	0.64	0	0	8.1	0	0	0	0	0	0	-31.84	-31.84
Inverter Transformer	MV3-6 T	368156	4907834	2	0	0	56.1	56.1	1	2592.76	3.25	0	79.28	0	0.66	0	0	8.16	0	0	0	0	0	0	-32.03	-32.03
Inverter Transformer	MV3-11 T	368340	4907662	2	0	0	56.1	56.1	1	2600.69	3.25	0	79.3	0	0.66	0	0	8.17	0	0	0	0	0	0	-32.07	-32.07
Inverter Transformer	MV3-16 T	368509	4907475	2	0	0	56.1	56.1	1	2611.8	3.25	0	79.34	0	0.66	0	0	8.19	0	0	0	0	0	0	-32.14	-32.14
Inverter Transformer	MV3-20 T	368683	4907317	2	0	0	56.1	56.1	1	2666.44	3.25	0	79.52	0	0.69	0	0	8.29	0	0	0	0	0	0	-32.44	-32.44
Inverter Transformer	MV3-1 T	368150	4907976	2	0	0	56.1	56.1	1	2695.96	3.25	0	79.61	0	0.7	0	0	8.34	0	0	0	0	0	0	-32.6	-32.6
Inverter Transformer	MV3-5 T	368335	4907843	2	0	0	56.1	56.1	1	2722.39	3.25	0	79.7	0	0.71	0	0	8.39	0	0	0	0	0	0	-32.74	-32.74
Inverter Transformer	MV3-9 T	368517	4907703	2	0	0	56.1	56.1	1	2760.55	3.25	0	79.82	0	0.73	0	0	8.46	0	0	0	0	0	0	-32.94	-32.94
Inverter Transformer	MV3-14 T	368678	4907498	2	0	0	56.1	56.1	1	2762.13	3.25	0	79.82	0	0.73	0	0	8.46	0	0	0	0	0	0	-32.95	-32.95
Inverter Transformer	MV3-8 T	368685	4907712	2	0	0	56.1	56.1	1	2895.95	3.25	0	80.24	0	0.79	0	0	8.69	0	0	0	0	0	0	-33.65	-33.65
Inverter Transformer	MV3-4 T	368507	4907925	2	0	0	56.1	56.1	1	2902.44	3.25	0	80.26	0	0.79	0	0	8.7	0	0	0	0	0	0	-33.69	-33.69
Inverter Transformer	MV3-2 T	368677	4907928	2	0	0	56.1	56.1	1	3029.09	3.25	0	80.63	0	0.84	0	0	8.92	0	0	0	0	0	0	-34.33	-34.33

	Inverter Transformer	MV4-15 T	369170	4908481	2	0	0	56.1	56.1	1	3766.11	3.25	0	82.52	0	1.15	0	0	10.1	0	0	0	0	0	0	-37.71	-37.71
	Inverter Transformer	MV4-13 T	369057	4908605	2	0	0	56.1	56.1	1	3771.92	3.25	0	82.53	0	1.15	0	0	10.11	0	0	0	0	0	0	-37.74	-37.74
	Inverter Transformer	MV4-14 T	369182	4908507	2	0	0	56.1	56.1	1	3792.64	3.25	0	82.58	0	1.16	0	0	10.14	0	0	0	0	0	0	-37.82	-37.82
	Inverter Transformer	MV4-12 T	369049	4908803	2	0	0	56.1	56.1	1	3910.45	3.25	0	82.84	0	1.21	0	0	10.32	0	0	0	0	0	0	-38.32	-38.32
	Inverter Transformer	MV6-2 T	370091	4907339	2	0	0	56.1	56.1	1	3941.19	3.25	0	82.91	0	1.22	0	0	10.37	0	0	0	0	0	0	-38.44	-38.44
	Inverter Transformer	MV6-3 T	370202	4907140	2	0	0	56.1	56.1	1	3978.89	3.25	0	83	0	1.24	0	0	10.42	0	0	0	0	0	0	-38.6	-38.6
	Inverter Transformer	MV4-7 T	369040	4909001	2	0	0	56.1	56.1	1	4053.29	3.25	0	83.16	0	1.27	0	0	10.53	0	0	0	0	0	0	-38.9	-38.9
	Inverter Transformer	MV4-11 T	369269	4908855	2	0	0	56.1	56.1	1	4098.93	3.25	0	83.25	0	1.28	0	0	10.6	0	0	0	0	0	0	-39.08	-39.08
	Inverter Transformer	MV4-10 T	369307	4908858	2	0	0	56.1	56.1	1	4127.59	3.25	0	83.31	0	1.29	0	0	10.64	0	0	0	0	0	0	-39.19	-39.19
	Inverter Transformer	MV4-8 T	369262	4909001	2	0	0	56.1	56.1	1	4200.31	3.25	0	83.47	0	1.32	0	0	10.75	0	0	0	0	0	0	-39.48	-39.48
	Inverter Transformer	MV4-4 T	369033	4909199	2	0	0	56.1	56.1	1	4201.87	3.25	0	83.47	0	1.32	0	0	10.75	0	0	0	0	0	0	-39.49	-39.49
	Inverter Transformer	MV4-9 T	369284	4909001	2	0	0	56.1	56.1	1	4215.24	3.25	0	83.5	0	1.33	0	0	10.77	0	0	0	0	0	0	-39.54	-39.54
	Inverter Transformer	MV4-6 T	369249	4909192	2	0	0	56.1	56.1	1	4334.29	3.25	0	83.74	0	1.38	0	0	10.94	0	0	0	0	0	0	-40	-40
	Inverter Transformer	MV4-1 T	369017	4909397	2	0	0	56.1	56.1	1	4349.02	3.25	0	83.77	0	1.38	0	0	10.96	0	0	0	0	0	0	-40.05	-40.05
	Inverter Transformer	MV4-5 T	369283	4909199	2	0	0	56.1	56.1	1	4361.85	3.25	0	83.79	0	1.39	0	0	10.98	0	0	0	0	0	0	-40.1	-40.1
	Inverter Transformer	MV5-6 T	369987	4908507	2	0	0	56.1	56.1	1	4413.86	3.25	0	83.9	0	1.41	0	0	11.05	0	0	0	0	0	0	-40.3	-40.3
	Inverter Transformer	MV4-3 T	369234	4909397	2	0	0	56.1	56.1	1	4482.08	3.25	0	84.03	0	1.43	0	0	11.15	0	0	0	0	0	0	-40.55	-40.55
	Inverter Transformer	MV4-2 T	369267	4909397	2	0	0	56.1	56.1	1	4502.89	3.25	0	84.07	0	1.44	0	0	11.18	0	0	0	0	0	0	-40.63	-40.63
	Inverter Transformer	MV5-5 T	370021	4908690	2	0	0	56.1	56.1	1	4550.83	3.25	0	84.16	0	1.46	0	0	11.25	0	0	0	0	0	0	-40.81	-40.81
	Inverter Transformer	MV5-2 T	370011	4908853	2	0	0	56.1	56.1	1	4644.45	3.25	0	84.34	0	1.49	0	0	11.38	0	0	0	0	0	0	-41.15	-41.15
	Inverter Transformer	MV5-4 T	370330	4908707	2	0	0	56.1	56.1	1	4809.05	3.25	0	84.64	0	1.56	0	0	11.6	0	0	0	0	0	0	-41.74	-41.74
	Inverter Transformer	MV5-3 T	370237	4908851	2	0	0	56.1	56.1	1	4820.19	3.25	0	84.66	0	1.56	0	0	11.61	0	0	0	0	0	0	-41.78	-41.78
	Inverter Transformer	MV5-1 T	370015	4909142	2	0	0	56.1	56.1	1	4835.73	3.25	0	84.69	0	1.57	0	0	11.64	0	0	0	0	0	0	-41.83	-41.83
	Line Reactor	NGR	369421	4908787.5	5	0	0	45.4	45.4	1	4159.09	5.25	0	83.38	0	3.28	1.34	0.08	1.7	0	0	0	0	0	0	-44.35	-44.35
Limit. Valu	0	0																								
Level D/N:	27.6843	27.6843																								

Receiver: Existing Noise Receptor
ID: S-R139
X: 366778
Y: 4906065
Z: 4.5
Ground: 0

ISO	Description	ID	X	Y	Z	Ground	ReflOrd	LxT	LxN	L/A	Dist.	hm	Freq	Adiv	K0b	Agr	Abar	z	Aatm	Afol	Ahous	Cmet	CmetN	Dc	RL	LtotT	LtotN
	Sol_Luce Substation	S_Substation	369426	4908792	3.5	0	0	112.1	112.1	1	3801.11	5.25	0	82.6	0	0.54	3.16	0.26	7.1	0	0	0	0	0	0	18.69	18.69
	Inverter	MV2-3	365820	4906641	2	0	0	100.3	100.3	1	1117.83	3.25	0	71.97	0	-0.19	0	0	11.28	0	0	0	0	0	0	17.25	17.25
	Inverter	MV2-4	365586	4906624	2	0	0	100.3	100.3	1	1316.57	3.25	0	73.39	0	-0.1	0	0	11.85	0	0	0	0	0	0	15.18	15.18
	Inverter	MV3-18	367752	4907412	2	0	0	100.3	100.3	1	1662.25	3.25	0	75.41	0	0.02	0	0	12.71	0	0	0	0	0	0	12.16	12.16
	Inverter	MV2-1	365842	4906816	2	0	0	97.3	97.3	1	1200.04	3.25	0	72.58	0	-0.15	0	0	11.53	0	0	0	0	0	0	13.36	13.36
	Inverter	MV3-12	367668	4907594	2	0	0	100.3	100.3	1	1769.17	3.25	0	75.96	0	0.06	0	0	12.96	0	0	0	0	0	0	11.34	11.34
	Inverter	MV1-15	365315	4904994	2	0	0	100.3	100.3	1	1813.12	3.25	0	76.17	0	0.07	0	0	13.06	0	0	0	0	0	0	11.01	11.01
	Inverter	MV1-12	365038	4905386	2	0	0	100.3	100.3	1	1867.79	3.25	0	76.43	0	0.09	0	0	13.18	0	0	0	0	0	0	10.62	10.62
	Inverter	MV3-13	367963	4907577	2	0	0	100.3	100.3	1	1921.03	3.25	0	76.67	0	0.11	0	0	13.29	0	0	0	0	0	0	10.24	10.24
	Inverter	MV1-4	364815	4905918	2	0	0	100.3	100.3	1	1968.5	3.25	0	76.88	0	0.12	0	0	13.4	0	0	0	0	0	0	9.91	9.91
	Inverter	MV3-17	368178	4907472	2	0	0	100.3	100.3	1	1984.86	3.25	0	76.95	0	0.12	0	0	13.43	0	0	0	0	0	0	9.8	9.8
	Inverter	MV1-2	364753	4906063	2	0	0	100.3	100.3	1	2025	3.25	0	77.13	0	0.14	0	0	13.51	0	0	0	0	0	0	9.53	9.53
	Inverter	MV1-8	364788	4905647	2	0	0	100.3	100.3	1	2033.43	3.25	0	77.16	0	0.14	0	0	13.53	0	0	0	0	0	0	9.48	9.48
	Inverter	MV3-19	368357	4907347	2	0	0	100.3	100.3	1	2033.91	3.25	0	77.17	0	0.14	0	0	13.53	0	0	0	0	0	0	9.47	9.47
	Inverter	MV3-21	368478	4907206	2	0	0	100.3	100.3	1	2047.41	3.25	0	77.22	0	0.14	0	0	13.56	0	0	0	0	0	0	9.38	9.38
	Inverter	MV3-7	367945	4907754	2	0	0	100.3	100.3	1	2052.95	3.25	0	77.25	0	0.14	0	0	13.57	0	0	0	0	0	0	9.35	9.35
	Inverter	MV1-1	364715	4906166	2	0	0	100.3	100.3	1	2065.47	3.25	0	77.3	0	0.15	0	0	13.6	0	0	0	0	0	0	9.27	9.27
	Inverter	MV1-5	364671	4905892	2	0	0	100.3	100.3	1	2114.09	3.25	0	77.5	0	0.16	0	0	13.7	0	0	0	0	0	0	8.95	8.95
	Inverter	MV3-15	368357	4907477	2	0	0	100.3	100.3	1	2118.25	3.25	0	77.52	0	0.16	0	0	13.71	0	0	0	0	0	0	8.92	8.92
	Inverter	MV3-10	368167	4907669	2	0	0	100.3	100.3	1	2121.83	3.25	0	77.53	0	0.16	0	0	13.71	0	0	0	0	0	0	8.9	8.9
	Inverter	MV3-3	367939	4907927	2	0	0	100.3	100.3	1	2194.3	3.25	0	77.83	0	0.18	0	0	13.86	0	0	0	0	0	0	8.44	8.44
	Inverter	MV1-11	364655	4905414	2	0	0	100.3	100.3	1	2220.57	3.25	0	77.93	0	0.19	0	0	13.91	0	0	0	0	0	0	8.28	8.28
	Inverter	MV3-16	368514	4907475	2	0	0	100.3	100.3	1	2236.47	3.25	0	77.99	0	0.19	0	0	13.95	0	0	0	0	0	0	8.18	8.18
	Inverter	MV3-11	368346	4907662	2	0	0	100.3	100.3	1	2238.09	3.25	0	78	0	0.19	0	0	13.95	0	0	0	0	0	0	8.17	8.17
	Inverter	MV3-6	368162	4907834	2	0	0	100.3	100.3	1	2246.07	3.25	0	78.03	0	0.2	0	0	13.97	0	0	0	0	0	0	8.12	8.12
	Inverter	MV1-9	364561	4905646	2	0	0	100.3	100.3	1	2256.25	3.25	0	78.07	0	0.2	0	0	13.99	0	0	0	0	0	0	8.06	8.06
	Inverter	MV3-20	368689	4907317	2	0	0	100.3	100.3	1	2284.61	3.25	0	78.18	0	0.21	0	0	14.04	0	0	0	0	0	0	7.89	7.89
	Inverter	MV1-6	364477	4905835	2	0	0	100.3	100.3	1	2312.47	3.25	0	78.28	0	0.21	0	0	14.1	0	0	0	0	0	0	7.72	7.72
	Inverter	MV3-14	368684	4907498	2	0	0	100.3	100.3	1	2384.6	3.25	0	78.55	0	0.23	0	0	14.24	0	0	0	0	0	0	7.3	7.3
	Inverter	MV3-9	368512	4907703	2	0	0	100.3	100.3	1	2385.33	3.25	0	78.55	0	0.23	0	0	14.24	0	0	0	0	0	0	7.29	7.29
	Inverter	MV3-8	368680	4907712	2	0	0	100.3	100.3	1	2515.99	3.25	0	79.01	0	0.26	0	0	14.49	0	0	0	0	0	0	6.55	6.55
	Inverter	MV1-10	365004	4905564	2	0	0	97.3	97.3	1	1843.39	3.25	0	76.31	0	0.08	0	0	13.12	0	0	0	0	0	0	7.79	7.79
	Inverter	MV1-7	364925	4905782	2	0	0	97.3	97.3	1	1874.49	3.25	0	76.46	0	0.09	0	0	13.19	0	0	0	0	0	0	7.57	7.57
	Inverter	MV1-14	365163	4905049	2	0	0	97.3	97.3	1	1908.01	3.25	0	76.61	0	0.1	0	0	13.27	0	0	0	0	0	0	7.33	7.33
	Inverter	MV1-13	364731	4905241	2	0	0	97.3	97.3	1	2206.62	3.25	0	77.87	0	0.19	0	0	13.89	0	0	0	0	0	0	5.37	5.37
	Inverter	MV6-2	370085	4907339	2	0	0	100.3	100.3	1	3543.91	3.25	0	81.99	0	0.46	0	0	16.3	0	0	0	0	0	0	1.56	1.56
	Inverter	MV6-3	370207	4907140	2	0	0	100.3	100.3	1	3593.56	3.25	0	82.11	0	0.47	0	0	16.39	0	0	0	0	0	0	1.35	1.35
	Inverter	MV2-2	365977	4906654	2	0	0	89.1	89.1	1	994.25	3.25	0	70.95	0	0.68	0	0	6.3	0	0	0	0	0	0	11.12	11.12
	Inverter	MV4-7	369035	4909001	2	0	0	100.3	100.3	1	3703.26	3.25	0	82.37	0	0.48	0	0	16.57	0	0	0	0	0	0	0.89	0.89

Inverter	MV4-11	369264	4908855	2	0	0	100.3	100.3	1	3736.88	3.25	0	82.45	0	0.49	0	0	16.62	0	0	0	0	0	0	0.75	0.75
Inverter	MV4-10	369312	4908858	2	0	0	100.3	100.3	1	3771.21	3.25	0	82.53	0	0.49	0	0	16.68	0	0	0	0	0	0	0.61	0.61
Inverter	MV4-8	369256	4909001	2	0	0	100.3	100.3	1	3841.95	3.25	0	82.69	0	0.5	0	0	16.79	0	0	0	0	0	0	0.32	0.32
Inverter	MV4-4	369027	4909199	2	0	0	100.3	100.3	1	3857.46	3.25	0	82.73	0	0.51	0	0	16.82	0	0	0	0	0	0	0.26	0.26
Inverter	MV4-9	369289	4909001	2	0	0	100.3	100.3	1	3863.32	3.25	0	82.74	0	0.51	0	0	16.83	0	0	0	0	0	0	0.24	0.24
Inverter	MV4-6	369243	4909192	2	0	0	100.3	100.3	1	3981.75	3.25	0	83	0	0.52	0	0	17.02	0	0	0	0	0	0	-0.23	-0.23
Inverter	MV4-1	369011	4909397	2	0	0	100.3	100.3	1	4011.05	3.25	0	83.07	0	0.53	0	0	17.07	0	0	0	0	0	0	-0.35	-0.35
Inverter	MV4-5	369289	4909199	2	0	0	100.3	100.3	1	4015.85	3.25	0	83.08	0	0.53	0	0	17.07	0	0	0	0	0	0	-0.37	-0.37
Inverter	MV4-3	369229	4909397	2	0	0	100.3	100.3	1	4136.38	3.25	0	83.33	0	0.55	0	0	17.27	0	0	0	0	0	0	-0.83	-0.83
Inverter	MV4-2	369272	4909397	2	0	0	100.3	100.3	1	4162	3.25	0	83.39	0	0.55	0	0	17.31	0	0	0	0	0	0	-0.93	-0.93
Inverter	MV5-5	370015	4908690	2	0	0	100.3	100.3	1	4167.59	3.25	0	83.4	0	0.55	0	0	17.31	0	0	0	0	0	0	-0.95	-0.95
Inverter	MV5-2	370006	4908853	2	0	0	100.3	100.3	1	4265.32	3.25	0	83.6	0	0.56	0	0	17.47	0	0	0	0	0	0	-1.32	-1.32
Inverter	MV5-4	370324	4908707	2	0	0	100.3	100.3	1	4422.02	3.25	0	83.91	0	0.58	0	0	17.71	0	0	0	0	0	0	-1.89	-1.89
Inverter	MV5-3	370231	4908851	2	0	0	100.3	100.3	1	4436.78	3.25	0	83.94	0	0.58	0	0	17.73	0	0	0	0	0	0	-1.95	-1.95
Inverter	MV5-1	370020	4909142	2	0	0	100.3	100.3	1	4469.73	3.25	0	84.01	0	0.59	0	0	17.78	0	0	0	0	0	0	-2.06	-2.06
Inverter	MV6-1	370235	4907364	2	0	0	97.3	97.3	1	3693	3.25	0	82.35	0	0.48	0	0	16.55	0	0	0	0	0	0	-2.07	-2.07
DSTATCOM - 10 MVAR #2	DSAT2	369403	4908757	2.5	0	0	96.6	96.6	1	3759.99	3.5	0	82.5	0	3.54	0	0	2.71	0	0	0	0	0	0	7.88	7.88
DSTATCOM - 10 MVAR #1	DSAT1	369437	4908757	2.5	0	0	96.6	96.6	1	3783.8	3.5	0	82.56	0	3.54	0	0	2.73	0	0	0	0	0	0	7.81	7.81
SubstationTransformer	W_ST	369711.17	4906112.3	2.5	0	0	92	92	1	2933.55	4.25	0	80.35	0	1.05	3.04	0.29	5.86	0	0	0	0	0	0	1.68	1.68
Inverter	MV3-22	368656	4907142	2	0	0	89.1	89.1	1	2164.91	3.25	0	77.71	0	0.95	0	0	8.31	0	0	0	0	0	0	2.09	2.09
Gardiner Substation	G_Sub	366586.3	4903349.9	2.5	0	0	90.8	90.8	1	2721.86	4.25	0	79.7	0	1.1	3.53	0.38	5.54	0	0	0	0	0	0	0.91	0.91
Inverter	MV1-3	364440	4906039	2	0	0	89.1	89.1	1	2338.15	3.25	0	78.38	0	0.99	0	0	8.59	0	0	0	0	0	0	1.1	1.1
Inverter	MV3-1	368156	4907976	2	0	0	89.1	89.1	1	2356.02	3.25	0	78.44	0	0.99	0	0	8.62	0	0	0	0	0	0	1	1
Inverter	MV3-5	368340	4907843	2	0	0	89.1	89.1	1	2366.67	3.25	0	78.48	0	0.99	0	0	8.64	0	0	0	0	0	0	0.95	0.95
Inverter	MV3-4	368502	4907925	2	0	0	89.1	89.1	1	2536.1	3.25	0	79.08	0	1.03	0	0	8.9	0	0	0	0	0	0	0.04	0.04
Westbrook Inverter Enclosur	W_INV2	369374	4906388	2	0	0	89.1	89.1	1	2616.02	3.25	0	79.35	0	1.05	0	0	9.03	0	0	0	0	0	0	-0.38	-0.38
Inverter	MV3-2	368671	4907928	2	0	0	89.1	89.1	1	2655.98	3.25	0	79.48	0	1.06	0	0	9.09	0	0	0	0	0	0	-0.58	-0.58
Westbrook Inverter Enclosur	W_INV3	369508	4906164	2	0	0	89.1	89.1	1	2731.8	3.25	0	79.73	0	1.08	0	0	9.21	0	0	0	0	0	0	-0.96	-0.96
Westbrook Inverter Enclosur	W_INV4	369673	4906164	2	0	0	89.1	89.1	1	2896.69	3.25	0	80.24	0	1.12	0	0	9.46	0	0	0	0	0	0	-1.76	-1.76
Westbrook Inverter Enclosur	W_INV5	369719	4906574	2	0	0	89.1	89.1	1	2984.72	3.25	0	80.5	0	1.14	0	0	9.59	0	0	0	0	0	0	-2.18	-2.18
Westbrook Inverter Enclosur	W_INV7	369780	4906417	2	0	0	89.1	89.1	1	3022.57	3.25	0	80.61	0	1.15	0	0	9.65	0	0	0	0	0	0	-2.35	-2.35
Westbrook Inverter Enclosur	W_INV6	369875	4906578	2	0	0	89.1	89.1	1	3139.2	3.25	0	80.94	0	1.18	0	0	9.83	0	0	0	0	0	0	-2.89	-2.89
Inverters	G_Inv2	366676.9	4903239.1	2	0	0	87.7	87.7	1	2827.71	3.25	0	80.03	0	2.68	0	0	3.58	0	0	0	0	0	0	1.37	1.37
Inverters	G_Inv1	366526.4	4903225.8	2	0	0	87.7	87.7	1	2850.33	3.25	0	80.1	0	2.68	0	0	3.61	0	0	0	0	0	0	1.27	1.27
Inverter	MV4-15	369176	4908481	2	0	0	89.1	89.1	1	3404.04	3.25	0	81.64	0	1.25	0	0	10.22	0	0	0	0	0	0	-4.05	-4.05
Inverter	MV4-13	369051	4908605	2	0	0	89.1	89.1	1	3408.54	3.25	0	81.65	0	1.25	0	0	10.23	0	0	0	0	0	0	-4.07	-4.07
Inverter	MV4-14	369176	4908507	2	0	0	89.1	89.1	1	3422.54	3.25	0	81.69	0	1.25	0	0	10.25	0	0	0	0	0	0	-4.13	-4.13
Fixed Reactor Bank 1	FRB1	369378	4908755	6	0	0	89.8	89.8	1	3741.14	5.25	0	82.46	0	-0.76	0	0	7.02	0	0	0	0	0	0	1.06	1.06
Inverters	G_Inv4	366732.8	4903105	2	0	0	87.7	87.7	1	2960.35	3.25	0	80.43	0	2.69	0	0	3.73	0	0	0	0	0	0	0.81	0.81
Fixed Reactor Bank 2	FRB2	369464	4908755	6	0	0	89.8	89.8	1	3801.41	5.25	0	82.6	0	-0.75	0	0	7.1	0	0	0	0	0	0	0.83	0.83
Inverters	G_Inv3	366583.7	4903091.4	2	0	0	87.7	87.7	1	2979.94	3.25	0	80.48	0	2.7	0	0	3.75	0	0	0	0	0	0	0.73	0.73
Inverter	MV4-12	369043	4908803	2	0	0	89.1	89.1	1	3553.43	3.25	0	82.01	0	1.28	0	0	10.44	0	0	0	0	0	0	-4.68	-4.68
Inverters	G_Inv6	366788.5	4902972	2	0	0	87.7	87.7	1	3093.02	3.25	0	80.81	0	2.71	0	0	3.88	0	0	0	0	0	0	0.27	0.27
Inverters	G_Inv5	366638.5	4902958.1	2	0	0	87.7	87.7	1	3110.03	3.25	0	80.86	0	2.71	0	0	3.9	0	0	0	0	0	0	0.2	0.2
Westbrook Inverter Enclosur	W_INV1	369409	4906578	2	0	0	86.1	86.1	1	2680.55	3.25	0	79.56	0	1.07	0	0	9.13	0	0	0	0	0	0	-3.7	-3.7
Inverters	G_Inv8	366844.5	4902838.5	2	0	0	87.7	87.7	1	3227.19	3.25	0	81.18	0	2.72	0	0	4.03	0	0	0	0	0	0	-0.27	-0.27
Inverters	G_Inv7	366694.6	4902824.7	2	0	0	87.7	87.7	1	3241.37	3.25	0	81.21	0	2.72	0	0	4.04	0	0	0	0	0	0	-0.32	-0.32
Inverters	G_Inv10	366900.7	4902704.8	2	0	0	87.7	87.7	1	3362.44	3.25	0	81.53	0	2.73	0	0	4.18	0	0	0	0	0	0	-0.78	-0.78
Inverters	G_Inv9	366750.9	4902691.8	2	0	0	87.7	87.7	1	3373.31	3.25	0	81.56	0	2.74	0	0	4.19	0	0	0	0	0	0	-0.83	-0.83
Inverter	MV5-6	369982	4908507	2	0	0	89.1	89.1	1	4028.52	3.25	0	83.1	0	1.4	0	0	11.13	0	0	0	0	0	0	-6.57	-6.57
Inverter	MV6-4	370250	4906966	2	0	0	86.1	86.1	1	3587	3.25	0	82.09	0	1.29	0	0	10.49	0	0	0	0	0	0	-7.82	-7.82
Westbrook Inverter Transfor	W_INVTR1	369403	4906578	2	0	0	78.2	78.2	1	2674.66	3.25	0	79.55	0	-2.62	0	0	1.52	0	0	0	0	0	0	-0.2	-0.2
Westbrook Inverter Transfor	W_INVTR2	369368	4906388	2	0	0	77.3	77.3	1	2610.06	3.25	0	79.33	0	-2.6	0	0	1.49	0	0	0	0	0	0	-0.88	-0.88
Westbrook Inverter Transfor	W_INVTR3	369514	4906164	2	0	0	77.3	77.3	1	2737.79	3.25	0	79.75	0	-2.64	0	0	1.54	0	0	0	0	0	0	-1.31	-1.31
Westbrook Inverter Transfor	W_INVTR4	369679	4906164	2	0	0	77.3	77.3	1	2902.69	3.25	0	80.26	0	-2.69	0	0	1.62	0	0	0	0	0	0	-1.84	-1.84
Westbrook Inverter Transfor	W_INVTR5	369725	4906574	2	0	0	77.3	77.3	1	2990.63	3.25	0	80.52	0	-2.71	0	0	1.65	0	0	0	0	0	0	-2.11	-2.11
Inverter Transformer	MV2-1 T	365836	4906816	2	0	0	69.4	69.4	1	1204.73	3.25	0	72.62	0	1.82	0	0	4.08	0	0	0	0	0	0	-9.17	-9.17
Westbrook Inverter Transfor	W_INVTR7	369786	4906417	2	0	0	77.3	77.3	1	3028.53	3.25	0	80.62	0	-2.72	0	0	1.67	0	0	0	0	0	0	-2.23	-2.23
Westbrook Inverter Transfor	W_INVTR6	369881	4906578	2	0	0	77.3	77.3	1	3145.12	3.25	0	80.95	0	-2.75	0	0	1.72	0	0	0	0	0	0	-2.58	-2.58
Inverter Transformer	MV1-10 T	365010	4905564	2	0	0	69.4	69.4	1	1837.62	3.25	0	76.29	0	2.11	0	0	4.8	0	0	0	0	0	0	-13.85	-13.85
Inverter Transformer	MV1-7 T	364919	4905782	2	0	0	69.4	69.4	1	1880.42	3.25	0	76.49	0	2.13	0	0	4.84	0	0	0	0	0	0	-14.11	-14.11
Inverter Transformer	MV1-14 T	365157	4905049	2	0	0	69.4	69.4	1	1913.09	3.25	0	76.63	0	2.14	0	0	4.88	0	0	0	0	0	0	-14.3	-14.3
Inverter Transformer	MV1-13 T	364725	4905241	2	0	0	69.4	69.4	1	2212.19	3.25	0	77.9	0	2.25	0	0	5.17	0	0	0	0	0	0	-15.97	-15.97
Inverter Transformer	MV6-4 T	370244	4906966	2	0	0	69.4	69.4	1	3581.2	3.25	0	82.08	0	2.68	0	0	6.36	0	0	0	0	0	0	-21.76	-21.76
Inverter Transformer	MV6-1 T	370230	4907364	2	0	0	69.4	69.4	1	3688.32	3.25	0	82.34	0	2.7	0	0	6.44	0	0	0	0	0	0	-22.13	-22.13
Inverter Transformer	MV2-2 T	365982	4906654	2	0	0	56.1	56.1	1	990.22	3.25	0	70.91	0	0.01	0	0	4.87	0	0	0	0	0	0	-19.73	-19.73
Inverter Transformer	MV2-3 T	365814	4906641	2	0	0	56.1	56.1	1	1122.98	3.25	0	72.01	0	0.06	0	0	5.18	0	0	0	0	0	0	-21.18	-21.18
Inverter Transformer	MV2-4 T	365590	4906628	2	0	0	56.1	56.1	1	1314.66	3.25	0	73.38	0	0.13	0	0	5.61	0	0	0	0	0	0	-23.06	-23.06
Inverter Transformer	MV3-18 T	367757	4907412	2	0	0	56.1	56.1	1	1665.19	3.25	0	75.43	0	0.27	0	0	6.37	0	0	0	0	0	0	-26	-26
Inverter Transformer	MV3-12 T	367674	4907594	2	0	0	56.1	56.1	1	1772.19	3.25	0	75.97	0	0.31	0	0	6.59	0	0	0	0	0	0	-26.81	-26.81
Inverter Transformer	MV1-15 T	365309	4904994	2	0	0	56.1	56.1	1	1817.97	3.25	0	76.19	0	0.33	0	0	6.68	0	0	0	0	0	0	-27.14	-27.14
Inverter Transformer	MV1-12 T	365044	4905386	2	0	0	56.1	56.1	1	1862.2	3.25	0	76.4	0	0.35	0	0	6.77	0	0	0	0	0	0	-27.46	-27.46
Inverter Transformer	MV3-13 T	367958	4907577	2	0	0	56.1	56.1	1	1917.95	3.25	0	76.66	0	0.37	0	0	6.88	0	0	0	0	0	0	-27.85	-27.85
Inverter Transformer	MV1-4 T	364821	4905918	2	0	0	56.1	56.1	1	1962.51	3.25	0	76.86	0	0.39	0	0	6.97	0	0	0	0	0	0	-28.16	-28.16

	Inverter Transformer	MV3-17 T	368183	4907472	2	0	0	56.1	56.1	1	1988.39	3.25	0	76.97	0	0.4	0	0	7.02	0	0	0	0	0	0	-28.33	-28.33
	Inverter Transformer	MV1-2 T	364759	4906063	2	0	0	56.1	56.1	1	2019	3.25	0	77.1	0	0.41	0	0	7.08	0	0	0	0	0	0	-28.54	-28.54
	Inverter Transformer	MV3-19 T	368352	4907347	2	0	0	56.1	56.1	1	2030.03	3.25	0	77.15	0	0.42	0	0	7.1	0	0	0	0	0	0	-28.61	-28.61
	Inverter Transformer	MV1-8 T	364782	4905647	2	0	0	56.1	56.1	1	2039.3	3.25	0	77.19	0	0.42	0	0	7.12	0	0	0	0	0	0	-28.67	-28.67
	Inverter Transformer	MV3-21 T	368484	4907206	2	0	0	56.1	56.1	1	2052.39	3.25	0	77.25	0	0.43	0	0	7.15	0	0	0	0	0	0	-28.76	-28.76
	Inverter Transformer	MV3-7 T	367951	4907754	2	0	0	56.1	56.1	1	2056.37	3.25	0	77.26	0	0.43	0	0	7.15	0	0	0	0	0	0	-28.79	-28.79
	Inverter Transformer	MV1-1 T	364721	4906166	2	0	0	56.1	56.1	1	2059.48	3.25	0	77.28	0	0.43	0	0	7.16	0	0	0	0	0	0	-28.81	-28.81
	Inverter Transformer	MV1-5 T	364676	4905892	2	0	0	56.1	56.1	1	2109.11	3.25	0	77.48	0	0.45	0	0	7.26	0	0	0	0	0	0	-29.13	-29.13
	Inverter Transformer	MV3-15 T	368351	4907477	2	0	0	56.1	56.1	1	2113.78	3.25	0	77.5	0	0.45	0	0	7.27	0	0	0	0	0	0	-29.16	-29.16
	Inverter Transformer	MV3-10 T	368162	4907669	2	0	0	56.1	56.1	1	2118.56	3.25	0	77.52	0	0.45	0	0	7.27	0	0	0	0	0	0	-29.19	-29.19
	Inverter Transformer	MV3-22 T	368661	4907142	2	0	0	56.1	56.1	1	2169.25	3.25	0	77.73	0	0.48	0	0	7.37	0	0	0	0	0	0	-29.52	-29.52
	Inverter Transformer	MV3-3 T	367944	4907927	2	0	0	56.1	56.1	1	2196.95	3.25	0	77.84	0	0.49	0	0	7.42	0	0	0	0	0	0	-29.69	-29.69
	Inverter Transformer	MV1-11 T	364649	4905414	2	0	0	56.1	56.1	1	2226.31	3.25	0	77.95	0	0.5	0	0	7.48	0	0	0	0	0	0	-29.87	-29.87
	Inverter Transformer	MV3-16 T	368509	4907475	2	0	0	56.1	56.1	1	2232.59	3.25	0	77.98	0	0.5	0	0	7.49	0	0	0	0	0	0	-29.91	-29.91
	Inverter Transformer	MV3-11 T	368340	4907662	2	0	0	56.1	56.1	1	2233.89	3.25	0	77.98	0	0.5	0	0	7.5	0	0	0	0	0	0	-29.92	-29.92
	Inverter Transformer	MV3-6 T	368156	4907834	2	0	0	56.1	56.1	1	2242.38	3.25	0	78.01	0	0.51	0	0	7.51	0	0	0	0	0	0	-29.97	-29.97
	Inverter Transformer	MV1-9 T	364555	4905646	2	0	0	56.1	56.1	1	2262.14	3.25	0	78.09	0	0.51	0	0	7.55	0	0	0	0	0	0	-30.1	-30.1
	Inverter Transformer	MV3-20 T	368683	4907317	2	0	0	56.1	56.1	1	2279.59	3.25	0	78.16	0	0.52	0	0	7.58	0	0	0	0	0	0	-30.2	-30.2
	Inverter Transformer	MV1-6 T	364482	4905835	2	0	0	56.1	56.1	1	2307.49	3.25	0	78.26	0	0.53	0	0	7.63	0	0	0	0	0	0	-30.37	-30.37
	Inverter Transformer	MV1-3 T	364435	4906039	2	0	0	56.1	56.1	1	2343.15	3.25	0	78.4	0	0.55	0	0	7.7	0	0	0	0	0	0	-30.59	-30.59
	Inverter Transformer	MV3-1 T	368150	4907976	2	0	0	56.1	56.1	1	2352.51	3.25	0	78.43	0	0.55	0	0	7.72	0	0	0	0	0	0	-30.64	-30.64
	Inverter Transformer	MV3-5 T	368335	4907843	2	0	0	56.1	56.1	1	2363.37	3.25	0	78.47	0	0.56	0	0	7.74	0	0	0	0	0	0	-30.71	-30.71
	Inverter Transformer	MV3-14 T	368678	4907498	2	0	0	56.1	56.1	1	2379.81	3.25	0	78.53	0	0.57	0	0	7.77	0	0	0	0	0	0	-30.81	-30.81
	Inverter Transformer	MV3-9 T	368517	4907703	2	0	0	56.1	56.1	1	2388.97	3.25	0	78.56	0	0.57	0	0	7.79	0	0	0	0	0	0	-30.86	-30.86
	Inverter Transformer	MV3-8 T	368685	4907712	2	0	0	56.1	56.1	1	2519.77	3.25	0	79.03	0	0.62	0	0	8.03	0	0	0	0	0	0	-31.62	-31.62
	Inverter Transformer	MV3-4 T	368507	4907925	2	0	0	56.1	56.1	1	2539.5	3.25	0	79.09	0	0.63	0	0	8.06	0	0	0	0	0	0	-31.73	-31.73
	Inverter Transformer	MV3-2 T	368677	4907928	2	0	0	56.1	56.1	1	2660.26	3.25	0	79.5	0	0.68	0	0	8.28	0	0	0	0	0	0	-32.4	-32.4
	Inverter Transformer	MV4-15 T	369170	4908481	2	0	0	56.1	56.1	1	3399.81	3.25	0	81.63	0	1	0	0	9.53	0	0	0	0	0	0	-36.1	-36.1
	Inverter Transformer	MV4-13 T	369057	4908605	2	0	0	56.1	56.1	1	3412.54	3.25	0	81.66	0	1	0	0	9.55	0	0	0	0	0	0	-36.16	-36.16
	Inverter Transformer	MV4-14 T	369182	4908507	2	0	0	56.1	56.1	1	3426.75	3.25	0	81.7	0	1.01	0	0	9.57	0	0	0	0	0	0	-36.22	-36.22
	Inverter Transformer	MV6-2 T	370091	4907339	2	0	0	56.1	56.1	1	3549.51	3.25	0	82	0	1.06	0	0	9.77	0	0	0	0	0	0	-36.77	-36.77
	Inverter Transformer	MV4-12 T	369049	4908803	2	0	0	56.1	56.1	1	3557.26	3.25	0	82.02	0	1.06	0	0	9.78	0	0	0	0	0	0	-36.81	-36.81
	Inverter Transformer	MV6-3 T	370202	4907140	2	0	0	56.1	56.1	1	3588.79	3.25	0	82.1	0	1.08	0	0	9.83	0	0	0	0	0	0	-36.94	-36.94
	Inverter Transformer	MV4-7 T	369040	4909001	2	0	0	56.1	56.1	1	3706.31	3.25	0	82.38	0	1.13	0	0	10.01	0	0	0	0	0	0	-37.46	-37.46
	Inverter Transformer	MV4-11 T	369269	4908855	2	0	0	56.1	56.1	1	3740.21	3.25	0	82.46	0	1.14	0	0	10.06	0	0	0	0	0	0	-37.6	-37.6
	Inverter Transformer	MV4-10 T	369307	4908858	2	0	0	56.1	56.1	1	3767.85	3.25	0	82.52	0	1.15	0	0	10.1	0	0	0	0	0	0	-37.72	-37.72
	Inverter Transformer	MV4-8 T	369262	4909001	2	0	0	56.1	56.1	1	3845.82	3.25	0	82.7	0	1.18	0	0	10.22	0	0	0	0	0	0	-38.05	-38.05
	Inverter Transformer	MV4-9 T	369284	4909001	2	0	0	56.1	56.1	1	3860.07	3.25	0	82.73	0	1.19	0	0	10.25	0	0	0	0	0	0	-38.11	-38.11
	Inverter Transformer	MV4-4 T	369033	4909199	2	0	0	56.1	56.1	1	3860.96	3.25	0	82.73	0	1.19	0	0	10.25	0	0	0	0	0	0	-38.11	-38.11
	Inverter Transformer	MV4-6 T	369249	4909192	2	0	0	56.1	56.1	1	3985.47	3.25	0	83.01	0	1.24	0	0	10.43	0	0	0	0	0	0	-38.62	-38.62
	Inverter Transformer	MV4-5 T	369283	4909199	2	0	0	56.1	56.1	1	4012.11	3.25	0	83.07	0	1.25	0	0	10.47	0	0	0	0	0	0	-38.73	-38.73
	Inverter Transformer	MV4-1 T	369017	4909397	2	0	0	56.1	56.1	1	4014.39	3.25	0	83.07	0	1.25	0	0	10.48	0	0	0	0	0	0	-38.74	-38.74
	Inverter Transformer	MV5-6 T	369987	4908507	2	0	0	56.1	56.1	1	4032.5	3.25	0	83.11	0	1.26	0	0	10.5	0	0	0	0	0	0	-38.81	-38.81
	Inverter Transformer	MV4-3 T	369234	4909397	2	0	0	56.1	56.1	1	4139.34	3.25	0	83.34	0	1.3	0	0	10.66	0	0	0	0	0	0	-39.24	-39.24
	Inverter Transformer	MV4-2 T	369267	4909397	2	0	0	56.1	56.1	1	4159.01	3.25	0	83.38	0	1.31	0	0	10.69	0	0	0	0	0	0	-39.32	-39.32
	Inverter Transformer	MV5-5 T	370021	4908690	2	0	0	56.1	56.1	1	4172.25	3.25	0	83.41	0	1.31	0	0	10.71	0	0	0	0	0	0	-39.37	-39.37
	Inverter Transformer	MV5-2 T	370011	4908853	2	0	0	56.1	56.1	1	4269.1	3.25	0	83.61	0	1.35	0	0	10.85	0	0	0	0	0	0	-39.75	-39.75
	Inverter Transformer	MV5-4 T	370330	4908707	2	0	0	56.1	56.1	1	4426.84	3.25	0	83.92	0	1.41	0	0	11.07	0	0	0	0	0	0	-40.35	-40.35
	Inverter Transformer	MV5-3 T	370237	4908851	2	0	0	56.1	56.1	1	4441.45	3.25	0	83.95	0	1.42	0	0	11.09	0	0	0	0	0	0	-40.4	-40.4
	Inverter Transformer	MV5-1 T	370015	4909142	2	0	0	56.1	56.1	1	4466.11	3.25	0	84	0	1.43	0	0	11.13	0	0	0	0	0	0	-40.49	-40.49
	Line Reactor	NGR	369421	4908787.5	5	0	0	45.4	45.4	1	3794.4	5.25	0	82.58	0	3.29	1.33	0.09	1.55	0	0	0	0	0	0	-43.41	-43.41
Limit. Valu	0	0																								
Level D/N:	27.0527	27.0527																								

Receiver: Existing Noise Receptor
ID: S-R140
X: 366926
Y: 4906001
Z: 4.5
Ground: 0

ISO	Description	ID	X	Y	Z	Ground	ReflOrd	LxT	LxN	L/A	Dist.	hm	Freq	Adiv	K0b	Agr	Abar	z	Aatm	Afol	Ahous	Cmet	CmetN	Dc	RL	LtotT	LtotN
	Sol_Luce Substation	S_Substation	369426	4908792	3.5	0	0	112.1	112.1	1	3746.96	5.25	0	82.47	0	0.52	3.17	0.26	7.02	0	0	0	0	0	0	18.89	18.89
	Inverter	MV2-3	365820	4906641	2	0	0	100.3	100.3	1	1277.83	3.25	0	73.13	0	-0.12	0	0	11.74	0	0	0	0	0	0	15.56	15.56
	Inverter	MV2-4	365586	4906624	2	0	0	100.3	100.3	1	1477.75	3.25	0	74.39	0	-0.04	0	0	12.27	0	0	0	0	0	0	13.69	13.69
	Inverter	MV3-18	367752	4907412	2	0	0	100.3	100.3	1	1634.99	3.25	0	75.27	0	0.01	0	0	12.65	0	0	0	0	0	0	12.38	12.38
	Inverter	MV3-12	367668	4907594	2	0	0	100.3	100.3	1	1757.33	3.25	0	75.9	0	0.06	0	0	12.93	0	0	0	0	0	0	11.43	11.43
	Inverter	MV3-13	367963	4907577	2	0	0	100.3	100.3	1	1886.57	3.25	0	76.51	0	0.1	0	0	13.22	0	0	0	0	0	0	10.48	10.48
	Inverter	MV1-15	365315	4904994	2	0	0	100.3	100.3	1	1899.84	3.25	0	76.57	0	0.1	0	0	13.25	0	0	0	0	0	0	10.39	10.39
	Inverter	MV2-1	365842	4906816	2	0	0	97.3	97.3	1	1356.2	3.25	0	73.65	0	-0.09	0	0	11.96	0	0	0	0	0	0	11.8	11.8
	Inverter	MV3-17	368178	4907472	2	0	0	100.3	100.3	1	1931.67	3.25	0	76.72	0	0.11	0	0	13.32	0	0	0	0	0	0	10.17	10.17
	Inverter	MV3-19	368357	4907347	2	0	0	100.3	100.3	1	1964.56	3.25	0	76.87	0	0.12	0	0	13.39	0	0	0	0	0	0	9.94	9.94
	Inverter	MV3-21	368478	4907206	2	0	0	100.3	100.3	1	1964.88	3.25	0	76.87	0	0.12	0	0	13.39	0	0	0	0	0	0	9.94	9.94
	Inverter	MV1-12	365038	4905386	2	0	0	100.3	100.3	1	1985.64	3.25	0	76.96	0	0.13	0	0	13.43	0	0	0	0	0	0	9.8	9.8

Inverter	MV3-7	367945	4907754	2	0	0	100.3	100.3	1	2027.65	3.25	0	77.14	0	0.14	0	0	13.52	0	0	0	0	0	0	9.52	9.52
Inverter	MV3-15	368357	4907477	2	0	0	100.3	100.3	1	2055.81	3.25	0	77.26	0	0.15	0	0	13.58	0	0	0	0	0	0	9.33	9.33
Inverter	MV3-10	368167	4907669	2	0	0	100.3	100.3	1	2079.02	3.25	0	77.36	0	0.15	0	0	13.63	0	0	0	0	0	0	9.18	9.18
Inverter	MV1-4	364815	4905918	2	0	0	100.3	100.3	1	2112.63	3.25	0	77.5	0	0.16	0	0	13.7	0	0	0	0	0	0	8.96	8.96
Inverter	MV3-16	368514	4907475	2	0	0	100.3	100.3	1	2166.66	3.25	0	77.72	0	0.18	0	0	13.81	0	0	0	0	0	0	8.62	8.62
Inverter	MV1-8	364788	4905647	2	0	0	100.3	100.3	1	2167.11	3.25	0	77.72	0	0.18	0	0	13.81	0	0	0	0	0	0	8.61	8.61
Inverter	MV1-2	364753	4906063	2	0	0	100.3	100.3	1	2173.89	3.25	0	77.74	0	0.18	0	0	13.82	0	0	0	0	0	0	8.57	8.57
Inverter	MV3-3	367939	4907927	2	0	0	100.3	100.3	1	2176.16	3.25	0	77.75	0	0.18	0	0	13.83	0	0	0	0	0	0	8.56	8.56
Inverter	MV3-11	368346	4907662	2	0	0	100.3	100.3	1	2185.25	3.25	0	77.79	0	0.18	0	0	13.84	0	0	0	0	0	0	8.5	8.5
Inverter	MV3-20	368689	4907317	2	0	0	100.3	100.3	1	2200.01	3.25	0	77.85	0	0.18	0	0	13.87	0	0	0	0	0	0	8.41	8.41
Inverter	MV3-6	368162	4907834	2	0	0	100.3	100.3	1	2210.79	3.25	0	77.89	0	0.19	0	0	13.89	0	0	0	0	0	0	8.34	8.34
Inverter	MV1-1	364715	4906166	2	0	0	100.3	100.3	1	2217.15	3.25	0	77.92	0	0.19	0	0	13.91	0	0	0	0	0	0	8.3	8.3
Inverter	MV1-5	364671	4905892	2	0	0	100.3	100.3	1	2257.63	3.25	0	78.07	0	0.2	0	0	13.99	0	0	0	0	0	0	8.05	8.05
Inverter	MV3-14	368684	4907498	2	0	0	100.3	100.3	1	2309.02	3.25	0	78.27	0	0.21	0	0	14.09	0	0	0	0	0	0	7.74	7.74
Inverter	MV3-9	368512	4907703	2	0	0	100.3	100.3	1	2326.41	3.25	0	78.33	0	0.22	0	0	14.12	0	0	0	0	0	0	7.64	7.64
Inverter	MV1-11	364655	4905414	2	0	0	100.3	100.3	1	2345.64	3.25	0	78.41	0	0.22	0	0	14.16	0	0	0	0	0	0	7.53	7.53
Inverter	MV1-9	364561	4905646	2	0	0	100.3	100.3	1	2391.5	3.25	0	78.57	0	0.23	0	0	14.25	0	0	0	0	0	0	7.26	7.26
Inverter	MV3-8	368680	4907712	2	0	0	100.3	100.3	1	2450.31	3.25	0	78.78	0	0.25	0	0	14.36	0	0	0	0	0	0	6.92	6.92
Inverter	MV1-6	364477	4905835	2	0	0	100.3	100.3	1	2454.62	3.25	0	78.8	0	0.25	0	0	14.37	0	0	0	0	0	0	6.89	6.89
Inverter	MV1-10	365004	4905564	2	0	0	97.3	97.3	1	1971.06	3.25	0	76.89	0	0.12	0	0	13.4	0	0	0	0	0	0	6.9	6.9
Inverter	MV1-14	365163	4905049	2	0	0	97.3	97.3	1	2003.62	3.25	0	77.04	0	0.13	0	0	13.47	0	0	0	0	0	0	6.68	6.68
Inverter	MV1-7	364925	4905782	2	0	0	97.3	97.3	1	2012.95	3.25	0	77.08	0	0.13	0	0	13.49	0	0	0	0	0	0	6.61	6.61
Inverter	MV1-13	364731	4905241	2	0	0	97.3	97.3	1	2322.85	3.25	0	78.32	0	0.21	0	0	14.12	0	0	0	0	0	0	4.66	4.66
Inverter	MV6-2	370085	4907339	2	0	0	100.3	100.3	1	3430.68	3.25	0	81.71	0	0.44	0	0	16.11	0	0	0	0	0	0	2.05	2.05
Inverter	MV6-3	370207	4907140	2	0	0	100.3	100.3	1	3473.08	3.25	0	81.81	0	0.45	0	0	16.19	0	0	0	0	0	0	1.86	1.86
Inverter	MV4-7	369035	4909001	2	0	0	100.3	100.3	1	3667.14	3.25	0	82.29	0	0.48	0	0	16.51	0	0	0	0	0	0	1.04	1.04
Inverter	MV4-11	369264	4908855	2	0	0	100.3	100.3	1	3689.39	3.25	0	82.34	0	0.48	0	0	16.55	0	0	0	0	0	0	0.95	0.95
Inverter	MV4-10	369312	4908858	2	0	0	100.3	100.3	1	3722.29	3.25	0	82.42	0	0.49	0	0	16.6	0	0	0	0	0	0	0.81	0.81
Inverter	MV4-8	369256	4909001	2	0	0	100.3	100.3	1	3798.54	3.25	0	82.59	0	0.5	0	0	16.72	0	0	0	0	0	0	0.5	0.5
Inverter	MV4-9	369289	4909001	2	0	0	100.3	100.3	1	3818.87	3.25	0	82.64	0	0.5	0	0	16.76	0	0	0	0	0	0	0.42	0.42
Inverter	MV4-4	369027	4909199	2	0	0	100.3	100.3	1	3826.41	3.25	0	82.66	0	0.5	0	0	16.77	0	0	0	0	0	0	0.39	0.39
Inverter	MV4-6	369243	4909192	2	0	0	100.3	100.3	1	3943.47	3.25	0	82.92	0	0.52	0	0	16.96	0	0	0	0	0	0	-0.08	-0.08
Inverter	MV4-5	369289	4909199	2	0	0	100.3	100.3	1	3976.3	3.25	0	82.99	0	0.52	0	0	17.01	0	0	0	0	0	0	-0.21	-0.21
Inverter	MV4-1	369011	4909397	2	0	0	100.3	100.3	1	3984.98	3.25	0	83.01	0	0.52	0	0	17.02	0	0	0	0	0	0	-0.25	-0.25
Inverter	MV5-5	370015	4908690	2	0	0	100.3	100.3	1	4095.44	3.25	0	83.25	0	0.54	0	0	17.2	0	0	0	0	0	0	-0.67	-0.67
Inverter	MV4-3	369229	4909397	2	0	0	100.3	100.3	1	4103.25	3.25	0	83.26	0	0.54	0	0	17.21	0	0	0	0	0	0	-0.7	-0.7
Inverter	MV4-2	369272	4909397	2	0	0	100.3	100.3	1	4127.53	3.25	0	83.31	0	0.54	0	0	17.25	0	0	0	0	0	0	-0.8	-0.8
Inverter	MV5-2	370006	4908853	2	0	0	100.3	100.3	1	4197.66	3.25	0	83.46	0	0.55	0	0	17.36	0	0	0	0	0	0	-1.06	-1.06
Inverter	MV2-2	365977	4906654	2	0	0	89.1	89.1	1	1151.96	3.25	0	72.23	0	0.72	0	0	6.6	0	0	0	0	0	0	9.52	9.52
Inverter	MV5-4	370324	4908707	2	0	0	100.3	100.3	1	4343.83	3.25	0	83.76	0	0.57	0	0	17.59	0	0	0	0	0	0	-1.61	-1.61
Inverter	MV5-3	370231	4908851	2	0	0	100.3	100.3	1	4364.12	3.25	0	83.8	0	0.57	0	0	17.62	0	0	0	0	0	0	-1.68	-1.68
Inverter	MV5-1	370020	4909142	2	0	0	100.3	100.3	1	4408.94	3.25	0	83.89	0	0.58	0	0	17.69	0	0	0	0	0	0	-1.85	-1.85
Inverter	MV6-1	370235	4907364	2	0	0	97.3	97.3	1	3578.72	3.25	0	82.07	0	0.46	0	0	16.36	0	0	0	0	0	0	-1.59	-1.59
DSTATCOM - 10 MVAR #2	DSAT2	369403	4908757	2.5	0	0	96.6	96.6	1	3705.55	3.5	0	82.38	0	3.53	0	0	2.68	0	0	0	0	0	0	8.04	8.04
DSTATCOM - 10 MVAR #1	DSAT1	369437	4908757	2.5	0	0	96.6	96.6	1	3728.36	3.5	0	82.43	0	3.53	0	0	2.7	0	0	0	0	0	0	7.97	7.97
SubstationTransformer	W_ST	369711.17	4906112.3	2.5	0	0	92	92	1	2787.39	4.25	0	79.9	0	1.02	3.11	0.29	5.64	0	0	0	0	0	0	2.31	2.31
Inverter	MV3-22	368656	4907142	2	0	0	89.1	89.1	1	2072.39	3.25	0	77.33	0	0.92	0	0	8.16	0	0	0	0	0	0	2.64	2.64
Gardiner Substation	G_Sub	366586.3	4903349.9	2.5	0	0	90.8	90.8	1	2672.78	4.25	0	79.54	0	1.1	3.6	0.39	5.46	0	0	0	0	0	0	1.08	1.08
Inverter	MV3-5	368340	4907843	2	0	0	89.1	89.1	1	2322.15	3.25	0	78.32	0	0.98	0	0	8.56	0	0	0	0	0	0	1.19	1.19
Inverter	MV3-1	368156	4907976	2	0	0	89.1	89.1	1	2326.7	3.25	0	78.33	0	0.98	0	0	8.57	0	0	0	0	0	0	1.17	1.17
Westbrook Inverter Enclosur	W_INV2	369374	4906388	2	0	0	89.1	89.1	1	2478.4	3.25	0	78.88	0	1.02	0	0	8.81	0	0	0	0	0	0	0.34	0.34
Inverter	MV1-3	364440	4906039	2	0	0	89.1	89.1	1	2486.29	3.25	0	78.91	0	1.02	0	0	8.82	0	0	0	0	0	0	0.3	0.3
Inverter	MV3-4	368502	4907925	2	0	0	89.1	89.1	1	2487.08	3.25	0	78.91	0	1.02	0	0	8.83	0	0	0	0	0	0	0.3	0.3
Westbrook Inverter Enclosur	W_INV3	369508	4906164	2	0	0	89.1	89.1	1	2587.14	3.25	0	79.26	0	1.05	0	0	8.98	0	0	0	0	0	0	-0.23	-0.23
Inverter	MV3-2	368671	4907928	2	0	0	89.1	89.1	1	2599.68	3.25	0	79.3	0	1.05	0	0	9	0	0	0	0	0	0	-0.29	-0.29
Westbrook Inverter Enclosur	W_INV4	369673	4906164	2	0	0	89.1	89.1	1	2751.83	3.25	0	79.79	0	1.09	0	0	9.24	0	0	0	0	0	0	-1.06	-1.06
Westbrook Inverter Enclosur	W_INV5	369719	4906574	2	0	0	89.1	89.1	1	2851.17	3.25	0	80.1	0	1.11	0	0	9.39	0	0	0	0	0	0	-1.54	-1.54
Westbrook Inverter Enclosur	W_INV7	369780	4906417	2	0	0	89.1	89.1	1	2884.16	3.25	0	80.2	0	1.12	0	0	9.44	0	0	0	0	0	0	-1.7	-1.7
Westbrook Inverter Enclosur	W_INV6	369875	4906578	2	0	0	89.1	89.1	1	3004.92	3.25	0	80.56	0	1.15	0	0	9.62	0	0	0	0	0	0	-2.27	-2.27
Inverters	G_Inv2	366676.9	4903239.1	2	0	0	87.7	87.7	1	2773.11	3.25	0	79.86	0	2.67	0	0	3.52	0	0	0	0	0	0	1.61	1.61
Inverters	G_Inv1	366526.4	4903225.8	2	0	0	87.7	87.7	1	2803.82	3.25	0	79.96	0	2.68	0	0	3.56	0	0	0	0	0	0	1.47	1.47
Inverter	MV4-15	369176	4908481	2	0	0	89.1	89.1	1	3348.57	3.25	0	81.5	0	1.23	0	0	10.14	0	0	0	0	0	0	-3.81	-3.81
Inverter	MV4-13	369051	4908605	2	0	0	89.1	89.1	1	3361.02	3.25	0	81.53	0	1.24	0	0	10.16	0	0	0	0	0	0	-3.86	-3.86
Inverter	MV4-14	369176	4908507	2	0	0	89.1	89.1	1	3367.87	3.25	0	81.55	0	1.24	0	0	10.17	0	0	0	0	0	0	-3.89	-3.89
Fixed Reactor Bank 1	FRB1	369378	4908755	6	0	0	89.8	89.8	1	3687.39	5.25	0	82.33	0	-0.77	0	0	6.94	0	0	0	0	0	0	1.27	1.27
Inverters	G_Inv4	366732.8	4903105	2	0	0	87.7	87.7	1	2902.44	3.25	0	80.26	0	2.69	0	0	3.67	0	0	0	0	0	0	1.05	1.05
Inverters	G_Inv3	366583.7	4903091.4	2	0	0	87.7	87.7	1	2929.67	3.25	0	80.34	0	2.69	0	0	3.7	0	0	0	0	0	0	0.94	0.94
Fixed Reactor Bank 2	FRB2	369464	4908755	6	0	0	89.8	89.8	1	3745.13	5.25	0	82.47	0	-0.76	0	0	7.02	0	0	0	0	0	0	1.05	1.05
Inverter	MV4-12	369043	4908803	2	0	0	89.1	89.1	1	3511.82	3.25	0	81.91	0	1.27	0	0	10.38	0	0	0	0	0	0	-4.5	-4.5
Inverters	G_Inv6	366788.5	4902972	2	0	0	87.7	87.7	1	3032.12	3.25	0	80.63	0	2.7	0	0	3.81	0	0	0	0	0	0	0.51	0.51
Inverters	G_Inv5	366638.5	4902958.1	2	0	0	87.7	87.7	1	3056.45	3.25	0	80.7	0	2.7	0	0	3.84	0	0	0	0	0	0	0.41	0.41
Westbrook Inverter Enclosur	W_INV1	369409	4906578	2	0	0	86.1	86.1	1	2549.16	3.25	0	79.13	0	1.04	0	0	8.92	0	0	0	0	0	0	-3.03	-3.03
Inverters	G_Inv8	366844.5	4902838.5	2	0	0	87.7	87.7	1	3163.55	3.25	0	81	0	2.71	0	0	3.96	0	0	0	0	0	0	-0.02	-0.02
Inverters	G_Inv7	366694.6	4902824.7	2	0	0	87.7	87.7	1	3184.72	3.25	0	81.06	0	2.72	0	0	3.98	0	0	0	0	0	0	-0.1	-0.1

Inverters	G_Inv10	366900.7	4902704.8	2	0	0	87.7	87.7	1	3296.3	3.25	0	81.36	0	2.73	0	0	4.1	0	0	0	0	0	0	-0.53	-0.53
Inverters	G_Inv9	366750.9	4902691.8	2	0	0	87.7	87.7	1	3313.83	3.25	0	81.41	0	2.73	0	0	4.12	0	0	0	0	0	0	-0.6	-0.6
Inverter	MV5-6	369982	4908507	2	0	0	89.1	89.1	1	3952.11	3.25	0	82.94	0	1.38	0	0	11.02	0	0	0	0	0	0	-6.28	-6.28
Inverter	MV6-4	370250	4906966	2	0	0	86.1	86.1	1	3461.24	3.25	0	81.78	0	1.26	0	0	10.31	0	0	0	0	0	0	-7.29	-7.29
Westbrook Inverter Transfor	W_INVTR1	369403	4906578	2	0	0	78.2	78.2	1	2543.32	3.25	0	79.11	0	-2.58	0	0	1.46	0	0	0	0	0	0	0.26	0.26
Westbrook Inverter Transfor	W_INVTR2	369368	4906388	2	0	0	77.3	77.3	1	2472.48	3.25	0	78.86	0	-2.56	0	0	1.43	0	0	0	0	0	0	-0.39	-0.39
Westbrook Inverter Transfor	W_INVTR3	369514	4906164	2	0	0	77.3	77.3	1	2593.13	3.25	0	79.28	0	-2.6	0	0	1.48	0	0	0	0	0	0	-0.82	-0.82
Westbrook Inverter Transfor	W_INVTR4	369679	4906164	2	0	0	77.3	77.3	1	2757.82	3.25	0	79.81	0	-2.65	0	0	1.55	0	0	0	0	0	0	-1.38	-1.38
Westbrook Inverter Transfor	W_INVTR5	369725	4906574	2	0	0	77.3	77.3	1	2857.05	3.25	0	80.12	0	-2.67	0	0	1.6	0	0	0	0	0	0	-1.7	-1.7
Westbrook Inverter Transfor	W_INVTR7	369786	4906417	2	0	0	77.3	77.3	1	2890.1	3.25	0	80.22	0	-2.68	0	0	1.61	0	0	0	0	0	0	-1.8	-1.8
Westbrook Inverter Transfor	W_INVTR6	369881	4906578	2	0	0	77.3	77.3	1	3010.81	3.25	0	80.57	0	-2.72	0	0	1.66	0	0	0	0	0	0	-2.18	-2.18
Inverter Transformer	MV2-1 T	365836	4906816	2	0	0	69.4	69.4	1	1361	3.25	0	73.68	0	1.91	0	0	4.27	0	0	0	0	0	0	-10.51	-10.51
Inverter Transformer	MV1-10 T	365010	4905564	2	0	0	69.4	69.4	1	1965.21	3.25	0	76.87	0	2.16	0	0	4.93	0	0	0	0	0	0	-14.61	-14.61
Inverter Transformer	MV1-14 T	365157	4905049	2	0	0	69.4	69.4	1	2008.9	3.25	0	77.06	0	2.18	0	0	4.97	0	0	0	0	0	0	-14.86	-14.86
Inverter Transformer	MV1-7 T	364919	4905782	2	0	0	69.4	69.4	1	2018.91	3.25	0	77.1	0	2.18	0	0	4.98	0	0	0	0	0	0	-14.92	-14.92
Inverter Transformer	MV1-13 T	364725	4905241	2	0	0	69.4	69.4	1	2328.52	3.25	0	78.34	0	2.29	0	0	5.28	0	0	0	0	0	0	-16.57	-16.57
Inverter Transformer	MV6-4 T	370244	4906966	2	0	0	69.4	69.4	1	3455.48	3.25	0	81.77	0	2.64	0	0	6.26	0	0	0	0	0	0	-21.32	-21.32
Inverter Transformer	MV6-1 T	370230	4907364	2	0	0	69.4	69.4	1	3574.1	3.25	0	82.06	0	2.67	0	0	6.35	0	0	0	0	0	0	-21.74	-21.74
Inverter Transformer	MV2-2 T	365982	4906654	2	0	0	56.1	56.1	1	1147.85	3.25	0	72.2	0	0.06	0	0	5.24	0	0	0	0	0	0	-21.44	-21.44
Inverter Transformer	MV2-3 T	365814	4906641	2	0	0	56.1	56.1	1	1283.02	3.25	0	73.16	0	0.11	0	0	5.54	0	0	0	0	0	0	-22.76	-22.76
Inverter Transformer	MV2-4 T	365590	4906628	2	0	0	56.1	56.1	1	1475.82	3.25	0	74.38	0	0.19	0	0	5.97	0	0	0	0	0	0	-24.48	-24.48
Inverter Transformer	MV3-18 T	367757	4907412	2	0	0	56.1	56.1	1	1637.53	3.25	0	75.28	0	0.25	0	0	6.31	0	0	0	0	0	0	-25.79	-25.79
Inverter Transformer	MV3-12 T	367674	4907594	2	0	0	56.1	56.1	1	1759.87	3.25	0	75.91	0	0.3	0	0	6.56	0	0	0	0	0	0	-26.72	-26.72
Inverter Transformer	MV3-13 T	367958	4907577	2	0	0	56.1	56.1	1	1883.83	3.25	0	76.5	0	0.36	0	0	6.81	0	0	0	0	0	0	-27.61	-27.61
Inverter Transformer	MV1-15 T	365309	4904994	2	0	0	56.1	56.1	1	1904.93	3.25	0	76.6	0	0.36	0	0	6.86	0	0	0	0	0	0	-27.76	-27.76
Inverter Transformer	MV3-17 T	368183	4907472	2	0	0	56.1	56.1	1	1934.92	3.25	0	76.73	0	0.38	0	0	6.91	0	0	0	0	0	0	-27.97	-27.97
Inverter Transformer	MV3-19 T	368352	4907347	2	0	0	56.1	56.1	1	1960.92	3.25	0	76.85	0	0.39	0	0	6.97	0	0	0	0	0	0	-28.14	-28.14
Inverter Transformer	MV3-21 T	368484	4907206	2	0	0	56.1	56.1	1	1969.62	3.25	0	76.89	0	0.39	0	0	6.98	0	0	0	0	0	0	-28.2	-28.2
Inverter Transformer	MV1-12 T	365044	4905386	2	0	0	56.1	56.1	1	1979.94	3.25	0	76.93	0	0.4	0	0	7	0	0	0	0	0	0	-28.27	-28.27
Inverter Transformer	MV3-7 T	367951	4907754	2	0	0	56.1	56.1	1	2030.67	3.25	0	77.15	0	0.42	0	0	7.1	0	0	0	0	0	0	-28.62	-28.62
Inverter Transformer	MV3-15 T	368351	4907477	2	0	0	56.1	56.1	1	2051.64	3.25	0	77.24	0	0.43	0	0	7.14	0	0	0	0	0	0	-28.75	-28.75
Inverter Transformer	MV3-10 T	368162	4907669	2	0	0	56.1	56.1	1	2076.04	3.25	0	77.34	0	0.44	0	0	7.19	0	0	0	0	0	0	-28.91	-28.91
Inverter Transformer	MV3-22 T	368661	4907142	2	0	0	56.1	56.1	1	2076.56	3.25	0	77.35	0	0.44	0	0	7.19	0	0	0	0	0	0	-28.92	-28.92
Inverter Transformer	MV1-4 T	364821	4905918	2	0	0	56.1	56.1	1	2106.64	3.25	0	77.47	0	0.45	0	0	7.25	0	0	0	0	0	0	-29.11	-29.11
Inverter Transformer	MV3-16 T	368509	4907475	2	0	0	56.1	56.1	1	2163	3.25	0	77.7	0	0.47	0	0	7.36	0	0	0	0	0	0	-29.48	-29.48
Inverter Transformer	MV1-2 T	364759	4906063	2	0	0	56.1	56.1	1	2167.89	3.25	0	77.72	0	0.47	0	0	7.37	0	0	0	0	0	0	-29.51	-29.51
Inverter Transformer	MV1-8 T	364782	4905647	2	0	0	56.1	56.1	1	2173.03	3.25	0	77.74	0	0.48	0	0	7.38	0	0	0	0	0	0	-29.54	-29.54
Inverter Transformer	MV3-3 T	367944	4907927	2	0	0	56.1	56.1	1	2178.49	3.25	0	77.76	0	0.48	0	0	7.39	0	0	0	0	0	0	-29.57	-29.57
Inverter Transformer	MV3-11 T	368340	4907662	2	0	0	56.1	56.1	1	2181.36	3.25	0	77.77	0	0.48	0	0	7.4	0	0	0	0	0	0	-29.59	-29.59
Inverter Transformer	MV3-20 T	368683	4907317	2	0	0	56.1	56.1	1	2195.2	3.25	0	77.83	0	0.49	0	0	7.42	0	0	0	0	0	0	-29.68	-29.68
Inverter Transformer	MV3-6 T	368156	4907834	2	0	0	56.1	56.1	1	2207.44	3.25	0	77.88	0	0.49	0	0	7.44	0	0	0	0	0	0	-29.76	-29.76
Inverter Transformer	MV1-1 T	364721	4906166	2	0	0	56.1	56.1	1	2211.17	3.25	0	77.89	0	0.49	0	0	7.45	0	0	0	0	0	0	-29.78	-29.78
Inverter Transformer	MV1-5 T	364676	4905892	2	0	0	56.1	56.1	1	2252.64	3.25	0	78.05	0	0.51	0	0	7.53	0	0	0	0	0	0	-30.04	-30.04
Inverter Transformer	MV3-14 T	368678	4907498	2	0	0	56.1	56.1	1	2304.46	3.25	0	78.25	0	0.53	0	0	7.63	0	0	0	0	0	0	-30.35	-30.35
Inverter Transformer	MV3-5 T	368335	4907843	2	0	0	56.1	56.1	1	2319.11	3.25	0	78.31	0	0.54	0	0	7.66	0	0	0	0	0	0	-30.44	-30.44
Inverter Transformer	MV3-1 T	368150	4907976	2	0	0	56.1	56.1	1	2323.53	3.25	0	78.32	0	0.54	0	0	7.66	0	0	0	0	0	0	-30.47	-30.47
Inverter Transformer	MV3-9 T	368517	4907703	2	0	0	56.1	56.1	1	2329.83	3.25	0	78.35	0	0.54	0	0	7.68	0	0	0	0	0	0	-30.51	-30.51
Inverter Transformer	MV1-11 T	364649	4905414	2	0	0	56.1	56.1	1	2351.45	3.25	0	78.43	0	0.55	0	0	7.72	0	0	0	0	0	0	-30.64	-30.64
Inverter Transformer	MV1-9 T	364555	4905646	2	0	0	56.1	56.1	1	2397.43	3.25	0	78.59	0	0.57	0	0	7.8	0	0	0	0	0	0	-30.91	-30.91
Inverter Transformer	MV1-6 T	364482	4905835	2	0	0	56.1	56.1	1	2449.63	3.25	0	78.78	0	0.59	0	0	7.9	0	0	0	0	0	0	-31.22	-31.22
Inverter Transformer	MV3-8 T	368685	4907712	2	0	0	56.1	56.1	1	2453.9	3.25	0	78.8	0	0.6	0	0	7.91	0	0	0	0	0	0	-31.24	-31.24
Inverter Transformer	MV3-4 T	368507	4907925	2	0	0	56.1	56.1	1	2490.25	3.25	0	78.92	0	0.61	0	0	7.97	0	0	0	0	0	0	-31.45	-31.45
Inverter Transformer	MV1-3 T	364435	4906039	2	0	0	56.1	56.1	1	2491.29	3.25	0	78.93	0	0.61	0	0	7.97	0	0	0	0	0	0	-31.46	-31.46
Inverter Transformer	MV3-2 T	368677	4907928	2	0	0	56.1	56.1	1	2603.72	3.25	0	79.31	0	0.66	0	0	8.18	0	0	0	0	0	0	-32.09	-32.09
Inverter Transformer	MV4-15 T	369170	4908481	2	0	0	56.1	56.1	1	3344.54	3.25	0	81.49	0	0.98	0	0	9.44	0	0	0	0	0	0	-35.84	-35.84
Inverter Transformer	MV4-13 T	369057	4908605	2	0	0	56.1	56.1	1	3364.82	3.25	0	81.54	0	0.98	0	0	9.47	0	0	0	0	0	0	-35.94	-35.94
Inverter Transformer	MV4-14 T	369182	4908507	2	0	0	56.1	56.1	1	3371.88	3.25	0	81.56	0	0.99	0	0	9.48	0	0	0	0	0	0	-35.97	-35.97
Inverter Transformer	MV6-2 T	370091	4907339	2	0	0	56.1	56.1	1	3436.2	3.25	0	81.72	0	1.01	0	0	9.59	0	0	0	0	0	0	-36.26	-36.26
Inverter Transformer	MV6-3 T	370202	4907140	2	0	0	56.1	56.1	1	3468.36	3.25	0	81.8	0	1.03	0	0	9.64	0	0	0	0	0	0	-36.41	-36.41
Inverter Transformer	MV4-12 T	369049	4908803	2	0	0	56.1	56.1	1	3515.44	3.25	0	81.92	0	1.05	0	0	9.71	0	0	0	0	0	0	-36.62	-36.62
Inverter Transformer	MV4-7 T	369040	4909001	2	0	0	56.1	56.1	1	3670.01	3.25	0	82.29	0	1.11	0	0	9.95	0	0	0	0	0	0	-37.3	-37.3
Inverter Transformer	MV4-11 T	369269	4908855	2	0	0	56.1	56.1	1	3692.56	3.25	0	82.35	0	1.12	0	0	9.99	0	0	0	0	0	0	-37.4	-37.4
Inverter Transformer	MV4-10 T	369307	4908858	2	0	0	56.1	56.1	1	3719.09	3.25	0	82.41	0	1.13	0	0	10.03	0	0	0	0	0	0	-37.51	-37.51
Inverter Transformer	MV4-8 T	369262	4909001	2	0	0	56.1	56.1	1	3802.22	3.25	0	82.6	0	1.16	0	0	10.16	0	0	0	0	0	0	-37.86	-37.86
Inverter Transformer	MV4-9 T	369284	4909001	2	0	0	56.1	56.1	1	3815.78	3.25	0	82.63	0	1.17	0	0	10.18	0	0	0	0	0	0	-37.92	-37.92
Inverter Transformer	MV4-4 T	369033	4909199	2	0	0	56.1	56.1	1	3829.71	3.25	0	82.66	0	1.18	0	0	10.2	0	0	0	0	0	0	-37.98	-37.98
Inverter Transformer	MV4-6 T	369249	4909192	2	0	0	56.1	56.1	1	3947	3.25	0	82.93	0	1.22	0	0	10.38	0	0	0	0	0	0	-38.47	-38.47
Inverter Transformer	MV5-6 T	369987	4908507	2	0	0	56.1	56.1	1	3955.98	3.25	0	82.95	0	1.23	0	0	10.39	0	0	0	0	0	0	-38.5	-38.5
Inverter Transformer	MV4-5 T	369283	4909199	2	0	0	56.1	56.1	1	3972.74	3.25	0	82.98	0	1.23	0	0	10.41	0	0	0	0	0	0	-38.57	-38.57
Inverter Transformer	MV4-1 T	369017	4909397	2	0	0	56.1	56.1	1	3988.12	3.25	0	83.02	0	1.24	0	0	10.44	0	0	0	0	0	0	-38.63	-38.63
Inverter Transformer	MV5-5 T	370021	4908690	2	0	0	56.1	56.1	1	4099.97	3.25	0	83.26	0	1.28	0	0	10.6	0	0	0	0	0	0	-39.08	-39.08
Inverter Transformer	MV4-3 T	369234	4909397	2	0	0	56.1	56.1	1	4106.05	3.25	0	83.27	0	1.29	0	0	10.61	0	0	0	0	0	0	-39.11	-39.11
Inverter Transformer	MV4-2 T	369267	4909397	2	0	0	56.1	56.1	1	4124.69	3.25	0	83.31	0	1.29	0	0	10.64	0	0	0	0	0	0	-39.18	-39.18
Inverter Transformer	MV5-2 T	370011	4908853	2	0	0	56.1	56.1	1	4201.33	3.25	0	83.47	0	1.32	0	0	10.75	0	0	0	0	0	0	-39.48	-39.48

	Inverter Transformer	MV5-4 T	370330	4908707	2	0	0	56.1	56.1	1	4348.52	3.25	0	83.77	0	1.38	0	0	10.96	0	0	0	0	0	0	-40.05	-40.05
	Inverter Transformer	MV5-3 T	370237	4908851	2	0	0	56.1	56.1	1	4368.66	3.25	0	83.81	0	1.39	0	0	10.99	0	0	0	0	0	0	-40.13	-40.13
	Inverter Transformer	MV5-1 T	370015	4909142	2	0	0	56.1	56.1	1	4405.43	3.25	0	83.88	0	1.4	0	0	11.04	0	0	0	0	0	0	-40.27	-40.27
	Line Reactor	NGR	369421	4908787.5	5	0	0	45.4	45.4	1	3740.27	5.25	0	82.46	0	3.3	1.33	0.09	1.53	0	0	0	0	0	0	-43.26	-43.26
Limit. Valu	0	0																								
Level D/N:	26.7132	26.7132																								

Receiver: Existing Noise Receptor
ID: S-R141
X: 367018
Y: 4905998
Z: 4.5
Ground: 0

ISO	Description	ID	X	Y	Z	Ground	ReflOrd	LxT	LxN	L/A	Dist.	hm	Freq	Adiv	K0b	Agr	Abar	z	Aatm	Afol	Ahous	Cmet	CmetN	Dc	RL	LtotT	LtotN
	Sol_Luce Substation	S_Substation	369426	4908792	3.5	0	0	112.1	112.1	1	3688.48	5.25	0	82.34	0	0.5	3.18	0.27	6.94	0	0	0	0	0	0	19.11	19.11
	Inverter	MV2-3	365820	4906641	2	0	0	100.3	100.3	1	1359.65	3.25	0	73.67	0	-0.09	0	0	11.97	0	0	0	0	0	0	14.77	14.77
	Inverter	MV2-4	365586	4906624	2	0	0	100.3	100.3	1	1562.85	3.25	0	74.88	0	-0.01	0	0	12.48	0	0	0	0	0	0	12.97	12.97
	Inverter	MV3-18	367752	4907412	2	0	0	100.3	100.3	1	1593.16	3.25	0	75.05	0	0	0	0	12.55	0	0	0	0	0	0	12.72	12.72
	Inverter	MV3-12	367668	4907594	2	0	0	100.3	100.3	1	1723.29	3.25	0	75.73	0	0.04	0	0	12.86	0	0	0	0	0	0	11.68	11.68
	Inverter	MV3-13	367963	4907577	2	0	0	100.3	100.3	1	1840.18	3.25	0	76.3	0	0.08	0	0	13.12	0	0	0	0	0	0	10.82	10.82
	Inverter	MV3-17	368178	4907472	2	0	0	100.3	100.3	1	1875.71	3.25	0	76.46	0	0.09	0	0	13.2	0	0	0	0	0	0	10.56	10.56
	Inverter	MV3-21	368478	4907206	2	0	0	100.3	100.3	1	1894.96	3.25	0	76.55	0	0.1	0	0	13.24	0	0	0	0	0	0	10.42	10.42
	Inverter	MV3-19	368357	4907347	2	0	0	100.3	100.3	1	1900.72	3.25	0	76.58	0	0.1	0	0	13.25	0	0	0	0	0	0	10.38	10.38
	Inverter	MV1-15	365315	4904994	2	0	0	100.3	100.3	1	1976.92	3.25	0	76.92	0	0.12	0	0	13.41	0	0	0	0	0	0	9.86	9.86
	Inverter	MV3-7	367945	4907754	2	0	0	100.3	100.3	1	1985.67	3.25	0	76.96	0	0.13	0	0	13.43	0	0	0	0	0	0	9.8	9.8
	Inverter	MV3-15	368357	4907477	2	0	0	100.3	100.3	1	1995.09	3.25	0	77	0	0.13	0	0	13.45	0	0	0	0	0	0	9.73	9.73
	Inverter	MV2-1	365842	4906816	2	0	0	97.3	97.3	1	1432.52	3.25	0	74.12	0	-0.06	0	0	12.15	0	0	0	0	0	0	11.09	11.09
	Inverter	MV3-10	368167	4907669	2	0	0	100.3	100.3	1	2027.92	3.25	0	77.14	0	0.14	0	0	13.52	0	0	0	0	0	0	9.51	9.51
	Inverter	MV1-12	365038	4905386	2	0	0	100.3	100.3	1	2072.43	3.25	0	77.33	0	0.15	0	0	13.61	0	0	0	0	0	0	9.22	9.22
	Inverter	MV3-16	368514	4907475	2	0	0	100.3	100.3	1	2102.27	3.25	0	77.45	0	0.16	0	0	13.67	0	0	0	0	0	0	9.03	9.03
	Inverter	MV3-20	368689	4907317	2	0	0	100.3	100.3	1	2128.85	3.25	0	77.56	0	0.17	0	0	13.73	0	0	0	0	0	0	8.86	8.86
	Inverter	MV3-11	368346	4907662	2	0	0	100.3	100.3	1	2128.96	3.25	0	77.56	0	0.17	0	0	13.73	0	0	0	0	0	0	8.85	8.85
	Inverter	MV3-3	367939	4907927	2	0	0	100.3	100.3	1	2137.59	3.25	0	77.6	0	0.17	0	0	13.75	0	0	0	0	0	0	8.8	8.8
	Inverter	MV3-6	368162	4907834	2	0	0	100.3	100.3	1	2163.25	3.25	0	77.7	0	0.17	0	0	13.8	0	0	0	0	0	0	8.64	8.64
	Inverter	MV1-4	364815	4905918	2	0	0	100.3	100.3	1	2204.45	3.25	0	77.87	0	0.18	0	0	13.88	0	0	0	0	0	0	8.38	8.38
	Inverter	MV3-14	368684	4907498	2	0	0	100.3	100.3	1	2241.78	3.25	0	78.01	0	0.19	0	0	13.96	0	0	0	0	0	0	8.15	8.15
	Inverter	MV1-8	364788	4905647	2	0	0	100.3	100.3	1	2257.46	3.25	0	78.07	0	0.2	0	0	13.99	0	0	0	0	0	0	8.05	8.05
	Inverter	MV1-2	364753	4906063	2	0	0	100.3	100.3	1	2265.93	3.25	0	78.1	0	0.2	0	0	14	0	0	0	0	0	0	8	8
	Inverter	MV3-9	368512	4907703	2	0	0	100.3	100.3	1	2266.95	3.25	0	78.11	0	0.2	0	0	14.01	0	0	0	0	0	0	8	8
	Inverter	MV1-1	364715	4906166	2	0	0	100.3	100.3	1	2309.12	3.25	0	78.27	0	0.21	0	0	14.09	0	0	0	0	0	0	7.74	7.74
	Inverter	MV1-5	364671	4905892	2	0	0	100.3	100.3	1	2349.39	3.25	0	78.42	0	0.22	0	0	14.17	0	0	0	0	0	0	7.5	7.5
	Inverter	MV3-8	368680	4907712	2	0	0	100.3	100.3	1	2387.48	3.25	0	78.56	0	0.23	0	0	14.24	0	0	0	0	0	0	7.28	7.28
	Inverter	MV1-11	364655	4905414	2	0	0	100.3	100.3	1	2434.1	3.25	0	78.73	0	0.24	0	0	14.33	0	0	0	0	0	0	7.01	7.01
	Inverter	MV1-9	364561	4905646	2	0	0	100.3	100.3	1	2482.09	3.25	0	78.9	0	0.25	0	0	14.42	0	0	0	0	0	0	6.74	6.74
	Inverter	MV1-6	364477	4905835	2	0	0	100.3	100.3	1	2546.22	3.25	0	79.12	0	0.27	0	0	14.55	0	0	0	0	0	0	6.38	6.38
	Inverter	MV1-10	365004	4905564	2	0	0	97.3	97.3	1	2060.23	3.25	0	77.28	0	0.15	0	0	13.59	0	0	0	0	0	0	6.3	6.3
	Inverter	MV1-14	365163	4905049	2	0	0	97.3	97.3	1	2083.66	3.25	0	77.38	0	0.15	0	0	13.64	0	0	0	0	0	0	6.15	6.15
	Inverter	MV1-7	364925	4905782	2	0	0	97.3	97.3	1	2104.12	3.25	0	77.46	0	0.16	0	0	13.68	0	0	0	0	0	0	6.01	6.01
	Inverter	MV6-2	370085	4907339	2	0	0	100.3	100.3	1	3347.35	3.25	0	81.49	0	0.43	0	0	15.97	0	0	0	0	0	0	2.42	2.42
	Inverter	MV6-3	370207	4907140	2	0	0	100.3	100.3	1	3387.31	3.25	0	81.6	0	0.43	0	0	16.04	0	0	0	0	0	0	2.24	2.24
	Inverter	MV1-13	364731	4905241	2	0	0	97.3	97.3	1	2409.03	3.25	0	78.64	0	0.24	0	0	14.28	0	0	0	0	0	0	4.16	4.16
	Inverter	MV4-7	369035	4909001	2	0	0	100.3	100.3	1	3617.5	3.25	0	82.17	0	0.47	0	0	16.43	0	0	0	0	0	0	1.25	1.25
	Inverter	MV4-11	369264	4908855	2	0	0	100.3	100.3	1	3634.14	3.25	0	82.21	0	0.47	0	0	16.45	0	0	0	0	0	0	1.18	1.18
	Inverter	MV4-10	369312	4908858	2	0	0	100.3	100.3	1	3666.34	3.25	0	82.28	0	0.48	0	0	16.51	0	0	0	0	0	0	1.04	1.04
	Inverter	MV4-8	369256	4909001	2	0	0	100.3	100.3	1	3745.22	3.25	0	82.47	0	0.49	0	0	16.64	0	0	0	0	0	0	0.72	0.72
	Inverter	MV4-9	369289	4909001	2	0	0	100.3	100.3	1	3765.03	3.25	0	82.52	0	0.49	0	0	16.67	0	0	0	0	0	0	0.63	0.63
	Inverter	MV4-4	369027	4909199	2	0	0	100.3	100.3	1	3779.22	3.25	0	82.55	0	0.49	0	0	16.69	0	0	0	0	0	0	0.58	0.58
	Inverter	MV4-6	369243	4909192	2	0	0	100.3	100.3	1	3892.59	3.25	0	82.8	0	0.51	0	0	16.88	0	0	0	0	0	0	0.12	0.12
	Inverter	MV4-5	369289	4909199	2	0	0	100.3	100.3	1	3924.77	3.25	0	82.88	0	0.52	0	0	16.93	0	0	0	0	0	0	-0.01	-0.01
	Inverter	MV4-1	369011	4909397	2	0	0	100.3	100.3	1	3940.21	3.25	0	82.91	0	0.52	0	0	16.95	0	0	0	0	0	0	-0.07	-0.07
	Inverter	MV5-5	370015	4908690	2	0	0	100.3	100.3	1	4028.51	3.25	0	83.1	0	0.53	0	0	17.09	0	0	0	0	0	0	-0.42	-0.42
	Inverter	MV4-3	369229	4909397	2	0	0	100.3	100.3	1	4054.84	3.25	0	83.16	0	0.53	0	0	17.14	0	0	0	0	0	0	-0.52	-0.52
	Inverter	MV4-2	369272	4909397	2	0	0	100.3	100.3	1	4078.45	3.25	0	83.21	0	0.54	0	0	17.17	0	0	0	0	0	0	-0.61	-0.61
	Inverter	MV5-2	370006	4908853	2	0	0	100.3	100.3	1	4132.7	3.25	0	83.32	0	0.55	0	0	17.26	0	0	0	0	0	0	-0.82	-0.82
	Inverter	MV5-4	370324	4908707	2	0	0	100.3	100.3	1	4274.15	3.25	0	83.62	0	0.56	0	0	17.48	0	0	0	0	0	0	-1.35	-1.35
	Inverter	MV5-3	370231	4908851	2	0	0	100.3	100.3	1	4296.86	3.25	0	83.66	0	0.57	0	0	17.52	0	0	0	0	0	0	-1.43	-1.43
	Inverter	MV5-1	370020	4909142	2	0	0	100.3	100.3	1	4347.04	3.25	0	83.76	0	0.57	0	0	17.59	0	0	0	0	0	0	-1.62	-1.62
	Inverter	MV2-2	365977	4906654	2	0	0	89.1	89.1	1	1230.46	3.25	0	72.8	0	0.73	0	0	6.74	0	0	0	0	0	0	8.79	8.79
	Inverter	MV6-1	370235	4907364	2	0	0	97.3	97.3	1	3495	3.25	0	81.87	0	0.45	0	0	16.22	0	0	0	0	0	0	-1.23	-1.23
	DSTATCOM - 10 MVAR #2	DSAT2	369403	4908757	2.5	0	0	96.6	96.6	1	3646.96	3.5	0	82.24	0	3.52	0	0	2.65	0	0	0	0	0	0	8.22	8.22
	DSTATCOM - 10 MVAR #1	DSAT1	369437	4908757	2.5	0	0	96.6	96.6	1	3669.28	3.5	0	82.29	0	3.52	0	0	2.67	0	0	0	0	0	0	8.15	8.15
	SubstationTransformer	W_ST	369711.17	4906112.3	2.5	0	0	92	92	1	2695.59	4.25	0	79.61	0	0.99	3.16	0.29	5.49	0	0	0	0	0	0	2.71	2.71
	Inverter	MV3-22	368656	4907142	2	0	0	89.1	89.1	1	1997.95	3.25	0	77.01	0	0.91	0	0	8.04	0	0	0	0	0	0	3.1	3.1

Gardiner Substation	G_Sub	366586.3	4903349.9	2.5	0	0	90.8	90.8	1	2683.06	4.25	0	79.57	0	1.1	3.59	0.39	5.48	0	0	0	0	0	0	1.03	1.03
Inverter	MV3-5	368340	4907843	2	0	0	89.1	89.1	1	2269.74	3.25	0	78.12	0	0.97	0	0	8.48	0	0	0	0	0	0	1.49	1.49
Inverter	MV3-1	368156	4907976	2	0	0	89.1	89.1	1	2282	3.25	0	78.17	0	0.97	0	0	8.5	0	0	0	0	0	0	1.42	1.42
Westbrook Inverter Enclosur	W_INV2	369374	4906388	2	0	0	89.1	89.1	1	2388.06	3.25	0	78.56	0	1	0	0	8.67	0	0	0	0	0	0	0.83	0.83
Inverter	MV3-4	368502	4907925	2	0	0	89.1	89.1	1	2432.2	3.25	0	78.72	0	1.01	0	0	8.74	0	0	0	0	0	0	0.59	0.59
Westbrook Inverter Enclosur	W_INV3	369508	4906164	2	0	0	89.1	89.1	1	2495.53	3.25	0	78.94	0	1.02	0	0	8.84	0	0	0	0	0	0	0.25	0.25
Inverter	MV3-2	368671	4907928	2	0	0	89.1	89.1	1	2541.12	3.25	0	79.1	0	1.04	0	0	8.91	0	0	0	0	0	0	0.01	0.01
Inverter	MV1-3	364440	4906039	2	0	0	89.1	89.1	1	2578.33	3.25	0	79.23	0	1.04	0	0	8.97	0	0	0	0	0	0	-0.18	-0.18
Westbrook Inverter Enclosur	W_INV4	369673	4906164	2	0	0	89.1	89.1	1	2660.19	3.25	0	79.5	0	1.06	0	0	9.1	0	0	0	0	0	0	-0.6	-0.6
Westbrook Inverter Enclosur	W_INV5	369719	4906574	2	0	0	89.1	89.1	1	2761.74	3.25	0	79.82	0	1.09	0	0	9.25	0	0	0	0	0	0	-1.11	-1.11
Westbrook Inverter Enclosur	W_INV7	369780	4906417	2	0	0	89.1	89.1	1	2793.6	3.25	0	79.92	0	1.1	0	0	9.3	0	0	0	0	0	0	-1.26	-1.26
Westbrook Inverter Enclosur	W_INV6	369875	4906578	2	0	0	89.1	89.1	1	2915.28	3.25	0	80.29	0	1.13	0	0	9.49	0	0	0	0	0	0	-1.85	-1.85
Inverters	G_Inv2	366676.9	4903239.1	2	0	0	87.7	87.7	1	2779.91	3.25	0	79.88	0	2.67	0	0	3.53	0	0	0	0	0	0	1.58	1.58
Inverter	MV4-15	369176	4908481	2	0	0	89.1	89.1	1	3289.72	3.25	0	81.34	0	1.22	0	0	10.05	0	0	0	0	0	0	-3.55	-3.55
Inverter	MV4-13	369051	4908605	2	0	0	89.1	89.1	1	3305.99	3.25	0	81.39	0	1.22	0	0	10.08	0	0	0	0	0	0	-3.63	-3.63
Inverters	G_Inv1	366526.4	4903225.8	2	0	0	87.7	87.7	1	2815.45	3.25	0	79.99	0	2.68	0	0	3.57	0	0	0	0	0	0	1.42	1.42
Inverter	MV4-14	369176	4908507	2	0	0	89.1	89.1	1	3309.39	3.25	0	81.39	0	1.22	0	0	10.08	0	0	0	0	0	0	-3.64	-3.64
Fixed Reactor Bank 1	FRB1	369378	4908755	6	0	0	89.8	89.8	1	3629.14	5.25	0	82.2	0	-0.78	0	0	6.86	0	0	0	0	0	0	1.5	1.5
Fixed Reactor Bank 2	FRB2	369464	4908755	6	0	0	89.8	89.8	1	3685.64	5.25	0	82.33	0	-0.77	0	0	6.94	0	0	0	0	0	0	1.28	1.28
Inverters	G_Inv4	366732.8	4903105	2	0	0	87.7	87.7	1	2907.02	3.25	0	80.27	0	2.69	0	0	3.67	0	0	0	0	0	0	1.03	1.03
Inverters	G_Inv3	366583.7	4903091.4	2	0	0	87.7	87.7	1	2938.87	3.25	0	80.36	0	2.69	0	0	3.71	0	0	0	0	0	0	0.9	0.9
Inverter	MV4-12	369043	4908803	2	0	0	89.1	89.1	1	3459.57	3.25	0	81.78	0	1.26	0	0	10.3	0	0	0	0	0	0	-4.28	-4.28
Westbrook Inverter Enclosur	W_INV1	369409	4906578	2	0	0	86.1	86.1	1	2460.34	3.25	0	78.82	0	1.02	0	0	8.78	0	0	0	0	0	0	-2.56	-2.56
Inverters	G_Inv6	366788.5	4902972	2	0	0	87.7	87.7	1	3034.69	3.25	0	80.64	0	2.7	0	0	3.81	0	0	0	0	0	0	0.5	0.5
Inverters	G_Inv5	366638.5	4902958.1	2	0	0	87.7	87.7	1	3063.5	3.25	0	80.72	0	2.7	0	0	3.85	0	0	0	0	0	0	0.39	0.39
Inverters	G_Inv8	366844.5	4902838.5	2	0	0	87.7	87.7	1	3164.26	3.25	0	81.01	0	2.71	0	0	3.96	0	0	0	0	0	0	-0.02	-0.02
Inverters	G_Inv7	366694.6	4902824.7	2	0	0	87.7	87.7	1	3189.74	3.25	0	81.08	0	2.72	0	0	3.99	0	0	0	0	0	0	-0.12	-0.12
Inverters	G_Inv10	366900.7	4902704.8	2	0	0	87.7	87.7	1	3295.29	3.25	0	81.36	0	2.73	0	0	4.1	0	0	0	0	0	0	-0.53	-0.53
Inverter	MV5-6	369982	4908507	2	0	0	89.1	89.1	1	3883.35	3.25	0	82.78	0	1.36	0	0	10.92	0	0	0	0	0	0	-6.01	-6.01
Inverters	G_Inv9	366750.9	4902691.8	2	0	0	87.7	87.7	1	3316.97	3.25	0	81.41	0	2.73	0	0	4.13	0	0	0	0	0	0	-0.61	-0.61
Inverter	MV6-4	370250	4906966	2	0	0	86.1	86.1	1	3373.85	3.25	0	81.56	0	1.24	0	0	10.18	0	0	0	0	0	0	-6.92	-6.92
Westbrook Inverter Transfor	W_INVTR1	369403	4906578	2	0	0	78.2	78.2	1	2454.51	3.25	0	78.8	0	-2.56	0	0	1.42	0	0	0	0	0	0	0.58	0.58
Westbrook Inverter Transfor	W_INVTR2	369368	4906388	2	0	0	77.3	77.3	1	2382.14	3.25	0	78.54	0	-2.53	0	0	1.39	0	0	0	0	0	0	-0.05	-0.05
Westbrook Inverter Transfor	W_INVTR3	369514	4906164	2	0	0	77.3	77.3	1	2501.52	3.25	0	78.96	0	-2.57	0	0	1.44	0	0	0	0	0	0	-0.49	-0.49
Westbrook Inverter Transfor	W_INVTR4	369679	4906164	2	0	0	77.3	77.3	1	2666.17	3.25	0	79.52	0	-2.62	0	0	1.51	0	0	0	0	0	0	-1.07	-1.07
Westbrook Inverter Transfor	W_INVTR5	369725	4906574	2	0	0	77.3	77.3	1	2767.6	3.25	0	79.84	0	-2.65	0	0	1.56	0	0	0	0	0	0	-1.41	-1.41
Westbrook Inverter Transfor	W_INVTR7	369786	4906417	2	0	0	77.3	77.3	1	2799.53	3.25	0	79.94	0	-2.66	0	0	1.57	0	0	0	0	0	0	-1.51	-1.51
Westbrook Inverter Transfor	W_INVTR6	369881	4906578	2	0	0	77.3	77.3	1	2921.16	3.25	0	80.31	0	-2.69	0	0	1.62	0	0	0	0	0	0	-1.9	-1.9
Inverter Transformer	MV2-1 T	365836	4906816	2	0	0	69.4	69.4	1	1437.45	3.25	0	74.15	0	1.94	0	0	4.36	0	0	0	0	0	0	-11.11	-11.11
Inverter Transformer	MV1-10 T	365010	4905564	2	0	0	69.4	69.4	1	2054.37	3.25	0	77.25	0	2.19	0	0	5.02	0	0	0	0	0	0	-15.12	-15.12
Inverter Transformer	MV1-14 T	365157	4905049	2	0	0	69.4	69.4	1	2089	3.25	0	77.4	0	2.21	0	0	5.05	0	0	0	0	0	0	-15.31	-15.31
Inverter Transformer	MV1-7 T	364919	4905782	2	0	0	69.4	69.4	1	2110.09	3.25	0	77.49	0	2.21	0	0	5.07	0	0	0	0	0	0	-15.42	-15.42
Inverter Transformer	MV1-13 T	364725	4905241	2	0	0	69.4	69.4	1	2414.73	3.25	0	78.66	0	2.32	0	0	5.36	0	0	0	0	0	0	-16.99	-16.99
Inverter Transformer	MV6-4 T	370244	4906966	2	0	0	69.4	69.4	1	3368.1	3.25	0	81.55	0	2.62	0	0	6.19	0	0	0	0	0	0	-21	-21
Inverter Transformer	MV6-1 T	370230	4907364	2	0	0	69.4	69.4	1	3490.4	3.25	0	81.86	0	2.65	0	0	6.28	0	0	0	0	0	0	-21.44	-21.44
Inverter Transformer	MV2-2 T	365982	4906654	2	0	0	56.1	56.1	1	1226.23	3.25	0	72.77	0	0.09	0	0	5.42	0	0	0	0	0	0	-22.22	-22.22
Inverter Transformer	MV2-3 T	365814	4906641	2	0	0	56.1	56.1	1	1364.94	3.25	0	73.7	0	0.15	0	0	5.72	0	0	0	0	0	0	-23.51	-23.51
Inverter Transformer	MV2-4 T	365590	4906628	2	0	0	56.1	56.1	1	1560.8	3.25	0	74.87	0	0.22	0	0	6.15	0	0	0	0	0	0	-25.18	-25.18
Inverter Transformer	MV3-18 T	367757	4907412	2	0	0	56.1	56.1	1	1595.47	3.25	0	75.06	0	0.24	0	0	6.22	0	0	0	0	0	0	-25.46	-25.46
Inverter Transformer	MV3-12 T	367674	4907594	2	0	0	56.1	56.1	1	1725.56	3.25	0	75.74	0	0.29	0	0	6.49	0	0	0	0	0	0	-26.46	-26.46
Inverter Transformer	MV3-13 T	367958	4907577	2	0	0	56.1	56.1	1	1837.62	3.25	0	76.29	0	0.34	0	0	6.72	0	0	0	0	0	0	-27.28	-27.28
Inverter Transformer	MV3-17 T	368183	4907472	2	0	0	56.1	56.1	1	1878.8	3.25	0	76.48	0	0.35	0	0	6.8	0	0	0	0	0	0	-27.58	-27.58
Inverter Transformer	MV3-19 T	368352	4907347	2	0	0	56.1	56.1	1	1897.2	3.25	0	76.56	0	0.36	0	0	6.84	0	0	0	0	0	0	-27.7	-27.7
Inverter Transformer	MV3-21 T	368484	4907206	2	0	0	56.1	56.1	1	1899.59	3.25	0	76.57	0	0.36	0	0	6.84	0	0	0	0	0	0	-27.72	-27.72
Inverter Transformer	MV1-15 T	365309	4904994	2	0	0	56.1	56.1	1	1982.1	3.25	0	76.94	0	0.4	0	0	7.01	0	0	0	0	0	0	-28.29	-28.29
Inverter Transformer	MV3-7 T	367951	4907754	2	0	0	56.1	56.1	1	1988.47	3.25	0	76.97	0	0.4	0	0	7.02	0	0	0	0	0	0	-28.33	-28.33
Inverter Transformer	MV3-15 T	368351	4907477	2	0	0	56.1	56.1	1	1991.06	3.25	0	76.98	0	0.4	0	0	7.03	0	0	0	0	0	0	-28.35	-28.35
Inverter Transformer	MV3-22 T	368661	4907142	2	0	0	56.1	56.1	1	2002.05	3.25	0	77.03	0	0.4	0	0	7.05	0	0	0	0	0	0	-28.42	-28.42
Inverter Transformer	MV3-10 T	368162	4907669	2	0	0	56.1	56.1	1	2025.09	3.25	0	77.13	0	0.41	0	0	7.09	0	0	0	0	0	0	-28.58	-28.58
Inverter Transformer	MV1-12 T	365044	4905386	2	0	0	56.1	56.1	1	2066.69	3.25	0	77.31	0	0.43	0	0	7.17	0	0	0	0	0	0	-28.85	-28.85
Inverter Transformer	MV3-16 T	368509	4907475	2	0	0	56.1	56.1	1	2098.72	3.25	0	77.44	0	0.45	0	0	7.24	0	0	0	0	0	0	-29.06	-29.06
Inverter Transformer	MV3-20 T	368683	4907317	2	0	0	56.1	56.1	1	2124.15	3.25	0	77.54	0	0.46	0	0	7.29	0	0	0	0	0	0	-29.23	-29.23
Inverter Transformer	MV3-11 T	368340	4907662	2	0	0	56.1	56.1	1	2125.23	3.25	0	77.55	0	0.46	0	0	7.29	0	0	0	0	0	0	-29.23	-29.23
Inverter Transformer	MV3-3 T	367944	4907927	2	0	0	56.1	56.1	1	2139.75	3.25	0	77.61	0	0.46	0	0	7.32	0	0	0	0	0	0	-29.33	-29.33
Inverter Transformer	MV3-6 T	368156	4907834	2	0	0	56.1	56.1	1	2160.08	3.25	0	77.69	0	0.47	0	0	7.35	0	0	0	0	0	0	-29.46	-29.46
Inverter Transformer	MV1-4 T	364821	4905918	2	0	0	56.1	56.1	1	2198.46	3.25	0	77.84	0	0.49	0	0	7.43	0	0	0	0	0	0	-29.7	-29.7
Inverter Transformer	MV3-14 T	368678	4907498	2	0	0	56.1	56.1	1	2237.32	3.25	0	77.99	0	0.5	0	0	7.5	0	0	0	0	0	0	-29.94	-29.94
Inverter Transformer	MV1-2 T	364759	4906063	2	0	0	56.1	56.1	1	2259.94	3.25	0	78.08	0	0.51	0	0	7.54	0	0	0	0	0	0	-30.08	-30.08
Inverter Transformer	MV1-8 T	364782	4905647	2	0	0	56.1	56.1	1	2263.38	3.25	0	78.1	0	0.52	0	0	7.55	0	0	0	0	0	0	-30.1	-30.1
Inverter Transformer	MV3-5 T	368335	4907843	2	0	0	56.1	56.1	1	2266.83	3.25	0	78.11	0	0.52	0	0	7.56	0	0	0	0	0	0	-30.12	-30.12
Inverter Transformer	MV3-9 T	368517	4907703	2	0	0	56.1	56.1	1	2270.25	3.25	0	78.12	0	0.52	0	0	7.56	0	0	0	0	0	0	-30.15	-30.15
Inverter Transformer	MV3-1 T	368150	4907976	2	0	0	56.1	56.1	1	2279.02	3.25	0	78.15	0	0.52	0	0	7.58	0	0	0	0	0	0	-30.2	-30.2
Inverter Transformer	MV1-1 T	364721	4906166	2	0	0	56.1	56.1	1	2303.14	3.25	0	78.25	0	0.53	0	0	7.63	0	0	0	0	0	0	-30.35	-30.35
Inverter Transformer	MV1-5 T	364676	4905892	2	0	0	56.1	56.1	1	2344.4	3.25	0	78.4	0	0.55	0	0	7.7	0	0	0	0	0	0	-30.6	-30.6

	Inverter Transformer	MV3-8 T	368685	4907712	2	0	0	56.1	56.1	1	2390.96	3.25	0	78.57	0	0.57	0	0	7.79	0	0	0	0	0	0	-30.87	-30.87
	Inverter Transformer	MV3-4 T	368507	4907925	2	0	0	56.1	56.1	1	2435.25	3.25	0	78.73	0	0.59	0	0	7.87	0	0	0	0	0	0	-31.13	-31.13
	Inverter Transformer	MV1-11 T	364649	4905414	2	0	0	56.1	56.1	1	2439.92	3.25	0	78.75	0	0.59	0	0	7.88	0	0	0	0	0	0	-31.16	-31.16
	Inverter Transformer	MV1-9 T	364555	4905646	2	0	0	56.1	56.1	1	2488.03	3.25	0	78.92	0	0.61	0	0	7.97	0	0	0	0	0	0	-31.44	-31.44
	Inverter Transformer	MV1-6 T	364482	4905835	2	0	0	56.1	56.1	1	2541.23	3.25	0	79.1	0	0.63	0	0	8.06	0	0	0	0	0	0	-31.74	-31.74
	Inverter Transformer	MV3-2 T	368677	4907928	2	0	0	56.1	56.1	1	2545.03	3.25	0	79.11	0	0.64	0	0	8.07	0	0	0	0	0	0	-31.76	-31.76
	Inverter Transformer	MV1-3 T	364435	4906039	2	0	0	56.1	56.1	1	2583.33	3.25	0	79.24	0	0.65	0	0	8.14	0	0	0	0	0	0	-31.98	-31.98
	Inverter Transformer	MV4-15 T	369170	4908481	2	0	0	56.1	56.1	1	3285.79	3.25	0	81.33	0	0.95	0	0	9.34	0	0	0	0	0	0	-35.57	-35.57
	Inverter Transformer	MV4-13 T	369057	4908605	2	0	0	56.1	56.1	1	3309.68	3.25	0	81.4	0	0.96	0	0	9.38	0	0	0	0	0	0	-35.68	-35.68
	Inverter Transformer	MV4-14 T	369182	4908507	2	0	0	56.1	56.1	1	3313.3	3.25	0	81.41	0	0.96	0	0	9.39	0	0	0	0	0	0	-35.7	-35.7
	Inverter Transformer	MV6-2 T	370091	4907339	2	0	0	56.1	56.1	1	3352.85	3.25	0	81.51	0	0.98	0	0	9.45	0	0	0	0	0	0	-35.88	-35.88
	Inverter Transformer	MV6-3 T	370202	4907140	2	0	0	56.1	56.1	1	3382.61	3.25	0	81.59	0	0.99	0	0	9.5	0	0	0	0	0	0	-36.02	-36.02
	Inverter Transformer	MV4-12 T	369049	4908803	2	0	0	56.1	56.1	1	3463.09	3.25	0	81.79	0	1.02	0	0	9.63	0	0	0	0	0	0	-36.38	-36.38
	Inverter Transformer	MV4-7 T	369040	4909001	2	0	0	56.1	56.1	1	3620.29	3.25	0	82.17	0	1.09	0	0	9.88	0	0	0	0	0	0	-37.08	-37.08
	Inverter Transformer	MV4-11 T	369269	4908855	2	0	0	56.1	56.1	1	3637.23	3.25	0	82.22	0	1.1	0	0	9.9	0	0	0	0	0	0	-37.16	-37.16
	Inverter Transformer	MV4-10 T	369307	4908858	2	0	0	56.1	56.1	1	3663.21	3.25	0	82.28	0	1.11	0	0	9.94	0	0	0	0	0	0	-37.27	-37.27
	Inverter Transformer	MV4-8 T	369262	4909001	2	0	0	56.1	56.1	1	3748.81	3.25	0	82.48	0	1.14	0	0	10.08	0	0	0	0	0	0	-37.64	-37.64
	Inverter Transformer	MV4-9 T	369284	4909001	2	0	0	56.1	56.1	1	3762.02	3.25	0	82.51	0	1.15	0	0	10.1	0	0	0	0	0	0	-37.69	-37.69
	Inverter Transformer	MV4-4 T	369033	4909199	2	0	0	56.1	56.1	1	3782.41	3.25	0	82.56	0	1.16	0	0	10.13	0	0	0	0	0	0	-37.78	-37.78
	Inverter Transformer	MV5-6 T	369987	4908507	2	0	0	56.1	56.1	1	3887.16	3.25	0	82.79	0	1.2	0	0	10.29	0	0	0	0	0	0	-38.22	-38.22
	Inverter Transformer	MV4-6 T	369249	4909192	2	0	0	56.1	56.1	1	3896.02	3.25	0	82.81	0	1.2	0	0	10.3	0	0	0	0	0	0	-38.26	-38.26
	Inverter Transformer	MV4-5 T	369283	4909199	2	0	0	56.1	56.1	1	3921.3	3.25	0	82.87	0	1.21	0	0	10.34	0	0	0	0	0	0	-38.36	-38.36
	Inverter Transformer	MV4-1 T	369017	4909397	2	0	0	56.1	56.1	1	3943.25	3.25	0	82.92	0	1.22	0	0	10.37	0	0	0	0	0	0	-38.45	-38.45
	Inverter Transformer	MV5-5 T	370021	4908690	2	0	0	56.1	56.1	1	4032.97	3.25	0	83.11	0	1.26	0	0	10.5	0	0	0	0	0	0	-38.82	-38.82
	Inverter Transformer	MV4-3 T	369234	4909397	2	0	0	56.1	56.1	1	4057.57	3.25	0	83.17	0	1.27	0	0	10.54	0	0	0	0	0	0	-38.91	-38.91
	Inverter Transformer	MV4-2 T	369267	4909397	2	0	0	56.1	56.1	1	4075.69	3.25	0	83.2	0	1.27	0	0	10.57	0	0	0	0	0	0	-38.99	-38.99
	Inverter Transformer	MV5-2 T	370011	4908853	2	0	0	56.1	56.1	1	4136.31	3.25	0	83.33	0	1.3	0	0	10.66	0	0	0	0	0	0	-39.23	-39.23
	Inverter Transformer	MV5-4 T	370330	4908707	2	0	0	56.1	56.1	1	4278.79	3.25	0	83.63	0	1.35	0	0	10.86	0	0	0	0	0	0	-39.78	-39.78
	Inverter Transformer	MV5-3 T	370237	4908851	2	0	0	56.1	56.1	1	4301.35	3.25	0	83.67	0	1.36	0	0	10.89	0	0	0	0	0	0	-39.87	-39.87
	Inverter Transformer	MV5-1 T	370015	4909142	2	0	0	56.1	56.1	1	4343.59	3.25	0	83.76	0	1.38	0	0	10.95	0	0	0	0	0	0	-40.03	-40.03
	Line Reactor	NGR	369421	4908787.5	5	0	0	45.4	45.4	1	3681.81	5.25	0	82.32	0	3.3	1.33	0.09	1.51	0	0	0	0	0	0	-43.1	-43.1
Limit. Valu	0	0																								
Level D/N:	26.6804	26.6804																								

Receiver: Existing Noise Receptor
ID: S-R142
X: 366970
Y: 4905892
Z: 4.5
Ground: 0

ISO	Description	ID	X	Y	Z	Ground	ReflOrd	LxT	LxN	L/A	Dist.	hm	Freq	Adiv	K0b	Agr	Abar	z	Aatm	Afol	Ahous	Cmet	CmetN	Dc	RL	LtotT	LtotN
	Sol_Luce Substation	S_Substation	369426	4908792	3.5	0	0	112.1	112.1	1	3800.25	5.25	0	82.6	0	0.54	3.16	0.27	7.1	0	0	0	0	0	0	18.69	18.69
	Inverter	MV2-3	365820	4906641	2	0	0	100.3	100.3	1	1372.41	3.25	0	73.75	0	-0.08	0	0	12	0	0	0	0	0	0	14.65	14.65
	Inverter	MV2-4	365586	4906624	2	0	0	100.3	100.3	1	1565.66	3.25	0	74.89	0	-0.01	0	0	12.49	0	0	0	0	0	0	12.94	12.94
	Inverter	MV3-18	367752	4907412	2	0	0	100.3	100.3	1	1709.37	3.25	0	75.66	0	0.04	0	0	12.82	0	0	0	0	0	0	11.79	11.79
	Inverter	MV3-12	367668	4907594	2	0	0	100.3	100.3	1	1839.57	3.25	0	76.29	0	0.08	0	0	13.12	0	0	0	0	0	0	10.82	10.82
	Inverter	MV1-15	365315	4904994	2	0	0	100.3	100.3	1	1882.93	3.25	0	76.5	0	0.09	0	0	13.21	0	0	0	0	0	0	10.51	10.51
	Inverter	MV3-13	367963	4907577	2	0	0	100.3	100.3	1	1955.83	3.25	0	76.83	0	0.12	0	0	13.37	0	0	0	0	0	0	10	10
	Inverter	MV3-17	368178	4907472	2	0	0	100.3	100.3	1	1988.89	3.25	0	76.97	0	0.13	0	0	13.44	0	0	0	0	0	0	9.78	9.78
	Inverter	MV1-12	365038	4905386	2	0	0	100.3	100.3	1	1997.16	3.25	0	77.01	0	0.13	0	0	13.46	0	0	0	0	0	0	9.72	9.72
	Inverter	MV3-21	368478	4907206	2	0	0	100.3	100.3	1	2000.17	3.25	0	77.02	0	0.13	0	0	13.46	0	0	0	0	0	0	9.7	9.7
	Inverter	MV3-19	368357	4907347	2	0	0	100.3	100.3	1	2010.17	3.25	0	77.06	0	0.13	0	0	13.48	0	0	0	0	0	0	9.63	9.63
	Inverter	MV2-1	365842	4906816	2	0	0	97.3	97.3	1	1458.14	3.25	0	74.28	0	-0.05	0	0	12.22	0	0	0	0	0	0	10.87	10.87
	Inverter	MV3-7	367945	4907754	2	0	0	100.3	100.3	1	2101.83	3.25	0	77.45	0	0.16	0	0	13.67	0	0	0	0	0	0	9.03	9.03
	Inverter	MV3-15	368357	4907477	2	0	0	100.3	100.3	1	2106.18	3.25	0	77.47	0	0.16	0	0	13.68	0	0	0	0	0	0	9	9
	Inverter	MV3-10	368167	4907669	2	0	0	100.3	100.3	1	2142.56	3.25	0	77.62	0	0.17	0	0	13.76	0	0	0	0	0	0	8.77	8.77
	Inverter	MV1-4	364815	4905918	2	0	0	100.3	100.3	1	2155.16	3.25	0	77.67	0	0.17	0	0	13.78	0	0	0	0	0	0	8.69	8.69
	Inverter	MV1-8	364788	4905647	2	0	0	100.3	100.3	1	2195.71	3.25	0	77.83	0	0.18	0	0	13.86	0	0	0	0	0	0	8.43	8.43
	Inverter	MV3-16	368514	4907475	2	0	0	100.3	100.3	1	2211.3	3.25	0	77.89	0	0.19	0	0	13.9	0	0	0	0	0	0	8.34	8.34
	Inverter	MV1-2	364753	4906063	2	0	0	100.3	100.3	1	2223.59	3.25	0	77.94	0	0.19	0	0	13.92	0	0	0	0	0	0	8.26	8.26
	Inverter	MV3-20	368689	4907317	2	0	0	100.3	100.3	1	2232.84	3.25	0	77.98	0	0.19	0	0	13.94	0	0	0	0	0	0	8.2	8.2
	Inverter	MV3-11	368346	4907662	2	0	0	100.3	100.3	1	2241.94	3.25	0	78.01	0	0.19	0	0	13.96	0	0	0	0	0	0	8.15	8.15
	Inverter	MV3-3	367939	4907927	2	0	0	100.3	100.3	1	2253.93	3.25	0	78.06	0	0.2	0	0	13.98	0	0	0	0	0	0	8.07	8.07
	Inverter	MV1-1	364715	4906166	2	0	0	100.3	100.3	1	2271.59	3.25	0	78.13	0	0.2	0	0	14.02	0	0	0	0	0	0	7.97	7.97
	Inverter	MV3-6	368162	4907834	2	0	0	100.3	100.3	1	2278.65	3.25	0	78.15	0	0.2	0	0	14.03	0	0	0	0	0	0	7.92	7.92
	Inverter	MV1-5	364671	4905892	2	0	0	100.3	100.3	1	2299	3.25	0	78.23	0	0.21	0	0	14.07	0	0	0	0	0	0	7.8	7.8
	Inverter	MV3-14	368684	4907498	2	0	0	100.3	100.3	1	2348.84	3.25	0	78.42	0	0.22	0	0	14.17	0	0	0	0	0	0	7.51	7.51
	Inverter	MV1-11	364655	4905414	2	0	0	100.3	100.3	1	2363.83	3.25	0	78.47	0	0.22	0	0	14.2	0	0	0	0	0	0	7.42	7.42
	Inverter	MV3-9	368512	4907703	2	0	0	100.3	100.3	1	2378.55	3.25	0	78.53	0	0.23	0	0	14.23	0	0	0	0	0	0	7.33	7.33
	Inverter	MV1-9	364561	4905646	2	0	0	100.3	100.3	1	2421.53	3.25	0	78.68	0	0.24	0	0	14.31	0	0	0	0	0	0	7.08	7.08
	Inverter	MV1-6	364477	4905835	2	0	0	100.3	100.3	1	2493.65	3.25	0	78.94	0	0.26	0	0	14.45	0	0	0	0	0	0	6.67	6.67
	Inverter	MV3-8	368680	4907712	2	0	0	100.3	100.3	1	2497.3	3.25	0	78.95	0	0.26	0	0	14.45	0	0	0	0	0	0	6.65	6.65
	Inverter	MV1-10	365004	4905564	2	0	0	97.3	97.3	1	1993.17	3.25	0	76.99	0	0.13	0	0	13.45	0	0	0	0	0	0	6.75	6.75

Inverter	MV1-14	365163	4905049	2	0	0	97.3	97.3	1	1993.97	3.25	0	76.99	0	0.13	0	0	13.45	0	0	0	0	0	0	6.74	6.74
Inverter	MV1-7	364925	4905782	2	0	0	97.3	97.3	1	2047.96	3.25	0	77.23	0	0.14	0	0	13.56	0	0	0	0	0	0	6.38	6.38
Inverter	MV1-13	364731	4905241	2	0	0	97.3	97.3	1	2331.72	3.25	0	78.35	0	0.22	0	0	14.13	0	0	0	0	0	0	4.61	4.61
Inverter	MV6-2	370085	4907339	2	0	0	100.3	100.3	1	3434.68	3.25	0	81.72	0	0.44	0	0	16.12	0	0	0	0	0	0	2.03	2.03
Inverter	MV6-3	370207	4907140	2	0	0	100.3	100.3	1	3469.25	3.25	0	81.8	0	0.45	0	0	16.18	0	0	0	0	0	0	1.88	1.88
Inverter	MV4-7	369035	4909001	2	0	0	100.3	100.3	1	3732.31	3.25	0	82.44	0	0.49	0	0	16.62	0	0	0	0	0	0	0.77	0.77
Inverter	MV4-11	369264	4908855	2	0	0	100.3	100.3	1	3747.24	3.25	0	82.47	0	0.49	0	0	16.64	0	0	0	0	0	0	0.71	0.71
Inverter	MV4-10	369312	4908858	2	0	0	100.3	100.3	1	3779.17	3.25	0	82.55	0	0.49	0	0	16.69	0	0	0	0	0	0	0.58	0.58
Inverter	MV4-8	369256	4909001	2	0	0	100.3	100.3	1	3858.97	3.25	0	82.73	0	0.51	0	0	16.82	0	0	0	0	0	0	0.25	0.25
Inverter	MV4-9	369289	4909001	2	0	0	100.3	100.3	1	3878.61	3.25	0	82.77	0	0.51	0	0	16.85	0	0	0	0	0	0	0.18	0.18
Inverter	MV4-4	369027	4909199	2	0	0	100.3	100.3	1	3894.55	3.25	0	82.81	0	0.51	0	0	16.88	0	0	0	0	0	0	0.11	0.11
Inverter	MV4-6	369243	4909192	2	0	0	100.3	100.3	1	4007.06	3.25	0	83.06	0	0.53	0	0	17.06	0	0	0	0	0	0	-0.33	-0.33
Inverter	MV4-5	369289	4909199	2	0	0	100.3	100.3	1	4039.06	3.25	0	83.13	0	0.53	0	0	17.11	0	0	0	0	0	0	-0.46	-0.46
Inverter	MV4-1	369011	4909397	2	0	0	100.3	100.3	1	4055.95	3.25	0	83.16	0	0.53	0	0	17.14	0	0	0	0	0	0	-0.52	-0.52
Inverter	MV5-5	370015	4908690	2	0	0	100.3	100.3	1	4135.32	3.25	0	83.33	0	0.55	0	0	17.26	0	0	0	0	0	0	-0.83	-0.83
Inverter	MV4-3	369229	4909397	2	0	0	100.3	100.3	1	4169.91	3.25	0	83.4	0	0.55	0	0	17.32	0	0	0	0	0	0	-0.96	-0.96
Inverter	MV4-2	369272	4909397	2	0	0	100.3	100.3	1	4193.36	3.25	0	83.45	0	0.55	0	0	17.35	0	0	0	0	0	0	-1.05	-1.05
Inverter	MV5-2	370006	4908853	2	0	0	100.3	100.3	1	4240.85	3.25	0	83.55	0	0.56	0	0	17.43	0	0	0	0	0	0	-1.23	-1.23
Inverter	MV5-4	370324	4908707	2	0	0	100.3	100.3	1	4378.76	3.25	0	83.83	0	0.58	0	0	17.64	0	0	0	0	0	0	-1.74	-1.74
Inverter	MV5-3	370231	4908851	2	0	0	100.3	100.3	1	4403.39	3.25	0	83.88	0	0.58	0	0	17.68	0	0	0	0	0	0	-1.82	-1.82
Inverter	MV5-1	370020	4909142	2	0	0	100.3	100.3	1	4457.02	3.25	0	83.98	0	0.59	0	0	17.76	0	0	0	0	0	0	-2.02	-2.02
Inverter	MV2-2	365977	4906654	2	0	0	89.1	89.1	1	1251.68	3.25	0	72.95	0	0.74	0	0	6.77	0	0	0	0	0	0	8.6	8.6
Inverter	MV6-1	370235	4907364	2	0	0	97.3	97.3	1	3581.48	3.25	0	82.08	0	0.46	0	0	16.37	0	0	0	0	0	0	-1.6	-1.6
DSTATCOM - 10 MVAR #2	DSAT2	369403	4908757	2.5	0	0	96.6	96.6	1	3758.69	3.5	0	82.5	0	3.53	0	0	2.71	0	0	0	0	0	0	7.88	7.88
DSTATCOM - 10 MVAR #1	DSAT1	369437	4908757	2.5	0	0	96.6	96.6	1	3780.78	3.5	0	82.55	0	3.54	0	0	2.72	0	0	0	0	0	0	7.82	7.82
SubstationTransformer	W_ST	369711.17	4906112.3	2.5	0	0	92	92	1	2750.01	4.25	0	79.79	0	1	3.13	0.29	5.58	0	0	0	0	0	0	2.47	2.47
Inverter	MV3-22	368656	4907142	2	0	0	89.1	89.1	1	2098.83	3.25	0	77.44	0	0.93	0	0	8.21	0	0	0	0	0	0	2.48	2.48
Gardiner Substation	G_Sub	366586.3	4903349.9	2.5	0	0	90.8	90.8	1	2570.9	4.25	0	79.2	0	1.08	3.7	0.39	5.3	0	0	0	0	0	0	1.49	1.49
Inverter	MV3-5	368340	4907843	2	0	0	89.1	89.1	1	2383.97	3.25	0	78.55	0	1	0	0	8.66	0	0	0	0	0	0	0.85	0.85
Inverter	MV3-1	368156	4907976	2	0	0	89.1	89.1	1	2397.84	3.25	0	78.6	0	1	0	0	8.68	0	0	0	0	0	0	0.78	0.78
Westbrook Inverter Enclosur	W_INV2	369374	4906388	2	0	0	89.1	89.1	1	2454.64	3.25	0	78.8	0	1.01	0	0	8.77	0	0	0	0	0	0	0.47	0.47
Inverter	MV1-3	364440	4906039	2	0	0	89.1	89.1	1	2534.27	3.25	0	79.08	0	1.03	0	0	8.9	0	0	0	0	0	0	0.05	0.05
Inverter	MV3-4	368502	4907925	2	0	0	89.1	89.1	1	2545.61	3.25	0	79.12	0	1.04	0	0	8.92	0	0	0	0	0	0	-0.01	-0.01
Westbrook Inverter Enclosur	W_INV3	369508	4906164	2	0	0	89.1	89.1	1	2552.53	3.25	0	79.14	0	1.04	0	0	8.93	0	0	0	0	0	0	-0.05	-0.05
Inverter	MV3-2	368671	4907928	2	0	0	89.1	89.1	1	2653.06	3.25	0	79.47	0	1.06	0	0	9.08	0	0	0	0	0	0	-0.56	-0.56
Westbrook Inverter Enclosur	W_INV4	369673	4906164	2	0	0	89.1	89.1	1	2716.65	3.25	0	79.68	0	1.08	0	0	9.18	0	0	0	0	0	0	-0.88	-0.88
Westbrook Inverter Enclosur	W_INV5	369719	4906574	2	0	0	89.1	89.1	1	2832.34	3.25	0	80.04	0	1.11	0	0	9.36	0	0	0	0	0	0	-1.45	-1.45
Westbrook Inverter Enclosur	W_INV7	369780	4906417	2	0	0	89.1	89.1	1	2858.62	3.25	0	80.12	0	1.11	0	0	9.4	0	0	0	0	0	0	-1.58	-1.58
Westbrook Inverter Enclosur	W_INV6	369875	4906578	2	0	0	89.1	89.1	1	2984.9	3.25	0	80.5	0	1.14	0	0	9.59	0	0	0	0	0	0	-2.18	-2.18
Inverters	G_Inv2	366676.9	4903239.1	2	0	0	87.7	87.7	1	2669.04	3.25	0	79.53	0	2.66	0	0	3.4	0	0	0	0	0	0	2.07	2.07
Inverters	G_Inv1	366526.4	4903225.8	2	0	0	87.7	87.7	1	2702.85	3.25	0	79.64	0	2.67	0	0	3.44	0	0	0	0	0	0	1.92	1.92
Inverters	G_Inv4	366732.8	4903105	2	0	0	87.7	87.7	1	2797.08	3.25	0	79.93	0	2.68	0	0	3.55	0	0	0	0	0	0	1.5	1.5
Inverters	G_Inv3	366583.7	4903091.4	2	0	0	87.7	87.7	1	2827.12	3.25	0	80.03	0	2.68	0	0	3.58	0	0	0	0	0	0	1.37	1.37
Inverter	MV4-15	369176	4908481	2	0	0	89.1	89.1	1	3401.38	3.25	0	81.63	0	1.24	0	0	10.22	0	0	0	0	0	0	-4.04	-4.04
Inverter	MV4-13	369051	4908605	2	0	0	89.1	89.1	1	3419.2	3.25	0	81.68	0	1.25	0	0	10.24	0	0	0	0	0	0	-4.11	-4.11
Inverter	MV4-14	369176	4908507	2	0	0	89.1	89.1	1	3421.21	3.25	0	81.68	0	1.25	0	0	10.25	0	0	0	0	0	0	-4.12	-4.12
Inverters	G_Inv6	366788.5	4902972	2	0	0	87.7	87.7	1	2925.64	3.25	0	80.32	0	2.69	0	0	3.69	0	0	0	0	0	0	0.95	0.95
Fixed Reactor Bank 1	FRB1	369378	4908755	6	0	0	89.8	89.8	1	3741.02	5.25	0	82.46	0	-0.76	0	0	7.02	0	0	0	0	0	0	1.06	1.06
Inverters	G_Inv5	366638.5	4902958.1	2	0	0	87.7	87.7	1	2952.57	3.25	0	80.4	0	2.69	0	0	3.72	0	0	0	0	0	0	0.84	0.84
Fixed Reactor Bank 2	FRB2	369464	4908755	6	0	0	89.8	89.8	1	3796.95	5.25	0	82.59	0	-0.75	0	0	7.09	0	0	0	0	0	0	0.85	0.85
Inverter	MV4-12	369043	4908803	2	0	0	89.1	89.1	1	3573.69	3.25	0	82.06	0	1.29	0	0	10.47	0	0	0	0	0	0	-4.76	-4.76
Westbrook Inverter Enclosur	W_INV1	369409	4906578	2	0	0	86.1	86.1	1	2533.64	3.25	0	79.07	0	1.03	0	0	8.9	0	0	0	0	0	0	-2.95	-2.95
Inverters	G_Inv8	366844.5	4902838.5	2	0	0	87.7	87.7	1	3056.08	3.25	0	80.7	0	2.7	0	0	3.84	0	0	0	0	0	0	0.42	0.42
Inverters	G_Inv7	366694.6	4902824.7	2	0	0	87.7	87.7	1	3079.64	3.25	0	80.77	0	2.71	0	0	3.86	0	0	0	0	0	0	0.32	0.32
Inverters	G_Inv10	366900.7	4902704.8	2	0	0	87.7	87.7	1	3187.95	3.25	0	81.07	0	2.72	0	0	3.98	0	0	0	0	0	0	-0.11	-0.11
Inverters	G_Inv9	366750.9	4902691.8	2	0	0	87.7	87.7	1	3207.69	3.25	0	81.12	0	2.72	0	0	4.01	0	0	0	0	0	0	-0.19	-0.19
Inverter	MV5-6	369982	4908507	2	0	0	89.1	89.1	1	3988.78	3.25	0	83.02	0	1.39	0	0	11.07	0	0	0	0	0	0	-6.42	-6.42
Inverter	MV6-4	370250	4906966	2	0	0	86.1	86.1	1	3451.36	3.25	0	81.76	0	1.26	0	0	10.29	0	0	0	0	0	0	-7.25	-7.25
Westbrook Inverter Transfor	W_INVTR1	369403	4906578	2	0	0	78.2	78.2	1	2527.86	3.25	0	79.06	0	-2.58	0	0	1.45	0	0	0	0	0	0	0.31	0.31
Westbrook Inverter Transfor	W_INVTR2	369368	4906388	2	0	0	77.3	77.3	1	2448.76	3.25	0	78.78	0	-2.55	0	0	1.42	0	0	0	0	0	0	-0.3	-0.3
Westbrook Inverter Transfor	W_INVTR3	369514	4906164	2	0	0	77.3	77.3	1	2558.5	3.25	0	79.16	0	-2.59	0	0	1.47	0	0	0	0	0	0	-0.7	-0.7
Westbrook Inverter Transfor	W_INVTR4	369679	4906164	2	0	0	77.3	77.3	1	2722.62	3.25	0	79.7	0	-2.64	0	0	1.54	0	0	0	0	0	0	-1.26	-1.26
Westbrook Inverter Transfor	W_INVTR5	369725	4906574	2	0	0	77.3	77.3	1	2838.16	3.25	0	80.06	0	-2.67	0	0	1.59	0	0	0	0	0	0	-1.64	-1.64
Westbrook Inverter Transfor	W_INVTR7	369786	4906417	2	0	0	77.3	77.3	1	2864.52	3.25	0	80.14	0	-2.68	0	0	1.6	0	0	0	0	0	0	-1.72	-1.72
Westbrook Inverter Transfor	W_INVTR6	369881	4906578	2	0	0	77.3	77.3	1	2990.74	3.25	0	80.52	0	-2.71	0	0	1.65	0	0	0	0	0	0	-2.12	-2.12
Inverter Transformer	MV2-1 T	365836	4906816	2	0	0	69.4	69.4	1	1462.78	3.25	0	74.3	0	1.96	0	0	4.39	0	0	0	0	0	0	-11.3	-11.3
Inverter Transformer	MV1-10 T	365010	4905564	2	0	0	69.4	69.4	1	1987.26	3.25	0	76.97	0	2.17	0	0	4.95	0	0	0	0	0	0	-14.74	-14.74
Inverter Transformer	MV1-14 T	365157	4905049	2	0	0	69.4	69.4	1	1999.41	3.25	0	77.02	0	2.17	0	0	4.96	0	0	0	0	0	0	-14.81	-14.81
Inverter Transformer	MV1-7 T	364919	4905782	2	0	0	69.4	69.4	1	2053.95	3.25	0	77.25	0	2.19	0	0	5.02	0	0	0	0	0	0	-15.11	-15.11
Inverter Transformer	MV1-13 T	364725	4905241	2	0	0	69.4	69.4	1	2337.48	3.25	0	78.37	0	2.29	0	0	5.29	0	0	0	0	0	0	-16.61	-16.61
Inverter Transformer	MV6-4 T	370244	4906966	2	0	0	69.4	69.4	1	3445.66	3.25	0	81.75	0	2.64	0	0	6.25	0	0	0	0	0	0	-21.28	-21.28
Inverter Transformer	MV6-1 T	370230	4907364	2	0	0	69.4	69.4	1	3576.92	3.25	0	82.07	0	2.67	0	0	6.35	0	0	0	0	0	0	-21.75	-21.75
Inverter Transformer	MV2-2 T	365982	4906654	2	0	0	56.1	56.1	1	1247.72	3.25	0	72.92	0	0.1	0	0	5.46	0	0	0	0	0	0	-22.43	-22.43
Inverter Transformer	MV2-3 T	365814	4906641	2	0	0	56.1	56.1	1	1377.44	3.25	0	73.78	0	0.15	0	0	5.75	0	0	0	0	0	0	-23.63	-23.63

	Inverter Transformer	MV2-4 T	365590	4906628	2	0	0	56.1	56.1	1	1564	3.25	0	74.88	0	0.22	0	0	6.15	0	0	0	0	0	0	-25.2	-25.2
	Inverter Transformer	MV3-18 T	367757	4907412	2	0	0	56.1	56.1	1	1711.66	3.25	0	75.67	0	0.28	0	0	6.46	0	0	0	0	0	0	-26.36	-26.36
	Inverter Transformer	MV3-12 T	367674	4907594	2	0	0	56.1	56.1	1	1841.85	3.25	0	76.31	0	0.34	0	0	6.73	0	0	0	0	0	0	-27.31	-27.31
	Inverter Transformer	MV1-15 T	365309	4904994	2	0	0	56.1	56.1	1	1888.21	3.25	0	76.52	0	0.36	0	0	6.82	0	0	0	0	0	0	-27.64	-27.64
	Inverter Transformer	MV3-13 T	367958	4907577	2	0	0	56.1	56.1	1	1953.3	3.25	0	76.82	0	0.38	0	0	6.95	0	0	0	0	0	0	-28.09	-28.09
	Inverter Transformer	MV1-12 T	365044	4905386	2	0	0	56.1	56.1	1	1991.36	3.25	0	76.98	0	0.4	0	0	7.03	0	0	0	0	0	0	-28.35	-28.35
	Inverter Transformer	MV3-17 T	368183	4907472	2	0	0	56.1	56.1	1	1991.93	3.25	0	76.99	0	0.4	0	0	7.03	0	0	0	0	0	0	-28.36	-28.36
	Inverter Transformer	MV3-21 T	368484	4907206	2	0	0	56.1	56.1	1	2004.69	3.25	0	77.04	0	0.41	0	0	7.05	0	0	0	0	0	0	-28.44	-28.44
	Inverter Transformer	MV3-19 T	368352	4907347	2	0	0	56.1	56.1	1	2006.73	3.25	0	77.05	0	0.41	0	0	7.06	0	0	0	0	0	0	-28.45	-28.45
	Inverter Transformer	MV3-15 T	368351	4907477	2	0	0	56.1	56.1	1	2102.24	3.25	0	77.45	0	0.45	0	0	7.24	0	0	0	0	0	0	-29.09	-29.09
	Inverter Transformer	MV3-22 T	368661	4907142	2	0	0	56.1	56.1	1	2102.85	3.25	0	77.46	0	0.45	0	0	7.24	0	0	0	0	0	0	-29.09	-29.09
	Inverter Transformer	MV3-7 T	367951	4907754	2	0	0	56.1	56.1	1	2104.62	3.25	0	77.46	0	0.45	0	0	7.25	0	0	0	0	0	0	-29.1	-29.1
	Inverter Transformer	MV3-10 T	368162	4907669	2	0	0	56.1	56.1	1	2139.77	3.25	0	77.61	0	0.46	0	0	7.32	0	0	0	0	0	0	-29.33	-29.33
	Inverter Transformer	MV1-4 T	364821	4905918	2	0	0	56.1	56.1	1	2149.16	3.25	0	77.65	0	0.47	0	0	7.33	0	0	0	0	0	0	-29.39	-29.39
	Inverter Transformer	MV1-8 T	364782	4905647	2	0	0	56.1	56.1	1	2201.68	3.25	0	77.86	0	0.49	0	0	7.43	0	0	0	0	0	0	-29.72	-29.72
	Inverter Transformer	MV3-16 T	368509	4907475	2	0	0	56.1	56.1	1	2207.81	3.25	0	77.88	0	0.49	0	0	7.45	0	0	0	0	0	0	-29.76	-29.76
	Inverter Transformer	MV1-2 T	364759	4906063	2	0	0	56.1	56.1	1	2217.6	3.25	0	77.92	0	0.5	0	0	7.46	0	0	0	0	0	0	-29.82	-29.82
	Inverter Transformer	MV3-20 T	368683	4907317	2	0	0	56.1	56.1	1	2228.23	3.25	0	77.96	0	0.5	0	0	7.48	0	0	0	0	0	0	-29.89	-29.89
	Inverter Transformer	MV3-11 T	368340	4907662	2	0	0	56.1	56.1	1	2238.26	3.25	0	78	0	0.5	0	0	7.5	0	0	0	0	0	0	-29.95	-29.95
	Inverter Transformer	MV3-3 T	367944	4907927	2	0	0	56.1	56.1	1	2256.08	3.25	0	78.07	0	0.51	0	0	7.54	0	0	0	0	0	0	-30.06	-30.06
	Inverter Transformer	MV1-1 T	364721	4906166	2	0	0	56.1	56.1	1	2265.63	3.25	0	78.1	0	0.52	0	0	7.56	0	0	0	0	0	0	-30.12	-30.12
	Inverter Transformer	MV3-6 T	368156	4907834	2	0	0	56.1	56.1	1	2275.51	3.25	0	78.14	0	0.52	0	0	7.57	0	0	0	0	0	0	-30.18	-30.18
	Inverter Transformer	MV1-5 T	364676	4905892	2	0	0	56.1	56.1	1	2294	3.25	0	78.21	0	0.53	0	0	7.61	0	0	0	0	0	0	-30.29	-30.29
	Inverter Transformer	MV3-14 T	368678	4907498	2	0	0	56.1	56.1	1	2344.46	3.25	0	78.4	0	0.55	0	0	7.7	0	0	0	0	0	0	-30.6	-30.6
	Inverter Transformer	MV1-11 T	364649	4905414	2	0	0	56.1	56.1	1	2369.71	3.25	0	78.49	0	0.56	0	0	7.75	0	0	0	0	0	0	-30.75	-30.75
	Inverter Transformer	MV3-5 T	368335	4907843	2	0	0	56.1	56.1	1	2381.1	3.25	0	78.54	0	0.57	0	0	7.77	0	0	0	0	0	0	-30.81	-30.81
	Inverter Transformer	MV3-9 T	368517	4907703	2	0	0	56.1	56.1	1	2381.79	3.25	0	78.54	0	0.57	0	0	7.77	0	0	0	0	0	0	-30.82	-30.82
	Inverter Transformer	MV3-1 T	368150	4907976	2	0	0	56.1	56.1	1	2394.88	3.25	0	78.59	0	0.57	0	0	7.8	0	0	0	0	0	0	-30.9	-30.9
	Inverter Transformer	MV1-9 T	364555	4905646	2	0	0	56.1	56.1	1	2427.5	3.25	0	78.7	0	0.59	0	0	7.86	0	0	0	0	0	0	-31.09	-31.09
	Inverter Transformer	MV1-6 T	364482	4905835	2	0	0	56.1	56.1	1	2488.65	3.25	0	78.92	0	0.61	0	0	7.97	0	0	0	0	0	0	-31.44	-31.44
	Inverter Transformer	MV3-8 T	368685	4907712	2	0	0	56.1	56.1	1	2500.73	3.25	0	78.96	0	0.62	0	0	7.99	0	0	0	0	0	0	-31.51	-31.51
	Inverter Transformer	MV1-3 T	364435	4906039	2	0	0	56.1	56.1	1	2539.26	3.25	0	79.09	0	0.63	0	0	8.06	0	0	0	0	0	0	-31.73	-31.73
	Inverter Transformer	MV3-4 T	368507	4907925	2	0	0	56.1	56.1	1	2548.62	3.25	0	79.13	0	0.64	0	0	8.08	0	0	0	0	0	0	-31.78	-31.78
	Inverter Transformer	MV3-2 T	368677	4907928	2	0	0	56.1	56.1	1	2656.91	3.25	0	79.49	0	0.68	0	0	8.27	0	0	0	0	0	0	-32.38	-32.38
	Inverter Transformer	MV4-15 T	369170	4908481	2	0	0	56.1	56.1	1	3397.49	3.25	0	81.62	0	1	0	0	9.52	0	0	0	0	0	0	-36.09	-36.09
	Inverter Transformer	MV4-13 T	369057	4908605	2	0	0	56.1	56.1	1	3422.86	3.25	0	81.69	0	1.01	0	0	9.56	0	0	0	0	0	0	-36.2	-36.2
	Inverter Transformer	MV4-14 T	369182	4908507	2	0	0	56.1	56.1	1	3425.08	3.25	0	81.69	0	1.01	0	0	9.57	0	0	0	0	0	0	-36.21	-36.21
	Inverter Transformer	MV6-2 T	370091	4907339	2	0	0	56.1	56.1	1	3440.12	3.25	0	81.73	0	1.02	0	0	9.59	0	0	0	0	0	0	-36.28	-36.28
	Inverter Transformer	MV6-3 T	370202	4907140	2	0	0	56.1	56.1	1	3464.58	3.25	0	81.79	0	1.03	0	0	9.63	0	0	0	0	0	0	-36.39	-36.39
	Inverter Transformer	MV4-12 T	369049	4908803	2	0	0	56.1	56.1	1	3577.17	3.25	0	82.07	0	1.07	0	0	9.81	0	0	0	0	0	0	-36.89	-36.89
	Inverter Transformer	MV4-7 T	369040	4909001	2	0	0	56.1	56.1	1	3735.08	3.25	0	82.45	0	1.14	0	0	10.05	0	0	0	0	0	0	-37.58	-37.58
	Inverter Transformer	MV4-11 T	369269	4908855	2	0	0	56.1	56.1	1	3750.3	3.25	0	82.48	0	1.14	0	0	10.08	0	0	0	0	0	0	-37.64	-37.64
	Inverter Transformer	MV4-10 T	369307	4908858	2	0	0	56.1	56.1	1	3776.07	3.25	0	82.54	0	1.15	0	0	10.12	0	0	0	0	0	0	-37.75	-37.75
	Inverter Transformer	MV4-8 T	369262	4909001	2	0	0	56.1	56.1	1	3862.53	3.25	0	82.74	0	1.19	0	0	10.25	0	0	0	0	0	0	-38.12	-38.12
	Inverter Transformer	MV4-9 T	369284	4909001	2	0	0	56.1	56.1	1	3875.63	3.25	0	82.77	0	1.19	0	0	10.27	0	0	0	0	0	0	-38.17	-38.17
	Inverter Transformer	MV4-4 T	369033	4909199	2	0	0	56.1	56.1	1	3897.72	3.25	0	82.82	0	1.2	0	0	10.3	0	0	0	0	0	0	-38.26	-38.26
	Inverter Transformer	MV5-6 T	369987	4908507	2	0	0	56.1	56.1	1	3992.56	3.25	0	83.03	0	1.24	0	0	10.44	0	0	0	0	0	0	-38.65	-38.65
	Inverter Transformer	MV4-6 T	369249	4909192	2	0	0	56.1	56.1	1	4010.47	3.25	0	83.06	0	1.25	0	0	10.47	0	0	0	0	0	0	-38.72	-38.72
	Inverter Transformer	MV4-5 T	369283	4909199	2	0	0	56.1	56.1	1	4035.62	3.25	0	83.12	0	1.26	0	0	10.51	0	0	0	0	0	0	-38.83	-38.83
	Inverter Transformer	MV4-1 T	369017	4909397	2	0	0	56.1	56.1	1	4058.97	3.25	0	83.17	0	1.27	0	0	10.54	0	0	0	0	0	0	-38.92	-38.92
	Inverter Transformer	MV5-5 T	370021	4908690	2	0	0	56.1	56.1	1	4139.74	3.25	0	83.34	0	1.3	0	0	10.66	0	0	0	0	0	0	-39.24	-39.24
	Inverter Transformer	MV4-3 T	369234	4909397	2	0	0	56.1	56.1	1	4172.62	3.25	0	83.41	0	1.31	0	0	10.71	0	0	0	0	0	0	-39.37	-39.37
	Inverter Transformer	MV4-2 T	369267	4909397	2	0	0	56.1	56.1	1	4190.61	3.25	0	83.45	0	1.32	0	0	10.73	0	0	0	0	0	0	-39.44	-39.44
	Inverter Transformer	MV5-2 T	370011	4908853	2	0	0	56.1	56.1	1	4244.43	3.25	0	83.56	0	1.34	0	0	10.81	0	0	0	0	0	0	-39.65	-39.65
	Inverter Transformer	MV5-4 T	370330	4908707	2	0	0	56.1	56.1	1	4383.36	3.25	0	83.84	0	1.39	0	0	11.01	0	0	0	0	0	0	-40.18	-40.18
	Inverter Transformer	MV5-3 T	370237	4908851	2	0	0	56.1	56.1	1	4407.83	3.25	0	83.88	0	1.4	0	0	11.05	0	0	0	0	0	0	-40.28	-40.28
	Inverter Transformer	MV5-1 T	370015	4909142	2	0	0	56.1	56.1	1	4453.6	3.25	0	83.97	0	1.42	0	0	11.11	0	0	0	0	0	0	-40.45	-40.45
	Line Reactor	NGR	369421	4908787.5	5	0	0	45.4	45.4	1	3793.59	5.25	0	82.58	0	3.29	1.33	0.09	1.55	0	0	0	0	0	0	-43.41	-43.41
Limit. Valu	0	0																								
Level D/N:	26.3752	26.3752																								

Receiver: Existing Noise Receptor
ID: S-R143
X: 367170
Y: 4906218
Z: 4.5
Ground: 0

ISO	Description	ID	X	Y	Z	Ground	ReflOrd	LxT	LxN	L/A	Dist.	hm	Freq	Adiv	K0b	Agr	Abar	z	Aatm	Afol	Ahous	Cmet	CmetN	Dc	RL	LtotT	LtotN
	Sol_Luce Substation	S_Substation	369426	4908792	3.5	0	0	112.1	112.1	1	3422.72	5.25	0	81.69	0	0.42	3.25	0.27	6.57	0	0	0	0	0	0	20.15	20.15
	Inverter	MV3-18	367752	4907412	2	0	0	100.3	100.3	1	1328.29	3.25	0	73.47	0	-0.1	0	0	11.88	0	0	0	0	0	0	15.06	15.06
	Inverter	MV2-3	365820	4906641	2	0	0	100.3	100.3	1	1414.72	3.25	0	74.01	0	-0.07	0	0	12.11	0	0	0	0	0	0	14.26	14.26
	Inverter	MV3-12	367668	4907594	2	0	0	100.3	100.3	1	1463.35	3.25	0	74.31	0	-0.05	0	0	12.23	0	0	0	0	0	0	13.82	13.82
	Inverter	MV3-13	367963	4907577	2	0	0	100.3	100.3	1	1573.45	3.25	0	74.94	0	-0.01	0	0	12.5	0	0	0	0	0	0	12.88	12.88

Inverter	MV3-17	368178	4907472	2	0	0	100.3	100.3	1	1608.91	3.25	0	75.13	0	0.01	0	0	12.59	0	0	0	0	0	0	12.59	12.59
Inverter	MV2-4	365586	4906624	2	0	0	100.3	100.3	1	1635.21	3.25	0	75.27	0	0.01	0	0	12.65	0	0	0	0	0	0	12.37	12.37
Inverter	MV3-19	368357	4907347	2	0	0	100.3	100.3	1	1638.17	3.25	0	75.29	0	0.02	0	0	12.66	0	0	0	0	0	0	12.35	12.35
Inverter	MV3-21	368478	4907206	2	0	0	100.3	100.3	1	1639.21	3.25	0	75.29	0	0.02	0	0	12.66	0	0	0	0	0	0	12.34	12.34
Inverter	MV3-7	367945	4907754	2	0	0	100.3	100.3	1	1720.44	3.25	0	75.71	0	0.04	0	0	12.85	0	0	0	0	0	0	11.71	11.71
Inverter	MV3-15	368357	4907477	2	0	0	100.3	100.3	1	1730.33	3.25	0	75.76	0	0.05	0	0	12.87	0	0	0	0	0	0	11.63	11.63
Inverter	MV3-10	368167	4907669	2	0	0	100.3	100.3	1	1760.52	3.25	0	75.91	0	0.06	0	0	12.94	0	0	0	0	0	0	11.4	11.4
Inverter	MV3-16	368514	4907475	2	0	0	100.3	100.3	1	1840.22	3.25	0	76.3	0	0.08	0	0	13.12	0	0	0	0	0	0	10.81	10.81
Inverter	MV3-11	368346	4907662	2	0	0	100.3	100.3	1	1862.29	3.25	0	76.4	0	0.09	0	0	13.17	0	0	0	0	0	0	10.66	10.66
Inverter	MV3-3	367939	4907927	2	0	0	100.3	100.3	1	1874.05	3.25	0	76.46	0	0.09	0	0	13.19	0	0	0	0	0	0	10.57	10.57
Inverter	MV3-20	368689	4907317	2	0	0	100.3	100.3	1	1874.88	3.25	0	76.46	0	0.09	0	0	13.19	0	0	0	0	0	0	10.57	10.57
Inverter	MV3-6	368162	4907834	2	0	0	100.3	100.3	1	1896.19	3.25	0	76.56	0	0.1	0	0	13.24	0	0	0	0	0	0	10.42	10.42
Inverter	MV3-14	368684	4907498	2	0	0	100.3	100.3	1	1982.57	3.25	0	76.94	0	0.12	0	0	13.43	0	0	0	0	0	0	9.82	9.82
Inverter	MV3-9	368512	4907703	2	0	0	100.3	100.3	1	2001.55	3.25	0	77.03	0	0.13	0	0	13.47	0	0	0	0	0	0	9.69	9.69
Inverter	MV2-1	365842	4906816	2	0	0	97.3	97.3	1	1456.43	3.25	0	74.27	0	-0.05	0	0	12.22	0	0	0	0	0	0	10.88	10.88
Inverter	MV3-8	368680	4907712	2	0	0	100.3	100.3	1	2124.18	3.25	0	77.54	0	0.16	0	0	13.72	0	0	0	0	0	0	8.89	8.89
Inverter	MV1-15	365315	4904994	2	0	0	100.3	100.3	1	2222.43	3.25	0	77.94	0	0.19	0	0	13.92	0	0	0	0	0	0	8.27	8.27
Inverter	MV1-12	365038	4905386	2	0	0	100.3	100.3	1	2288.59	3.25	0	78.19	0	0.21	0	0	14.05	0	0	0	0	0	0	7.86	7.86
Inverter	MV1-4	364815	4905918	2	0	0	100.3	100.3	1	2374.03	3.25	0	78.51	0	0.23	0	0	14.22	0	0	0	0	0	0	7.36	7.36
Inverter	MV1-2	364753	4906063	2	0	0	100.3	100.3	1	2421.97	3.25	0	78.68	0	0.24	0	0	14.31	0	0	0	0	0	0	7.08	7.08
Inverter	MV1-8	364788	4905647	2	0	0	100.3	100.3	1	2449.48	3.25	0	78.78	0	0.25	0	0	14.36	0	0	0	0	0	0	6.92	6.92
Inverter	MV1-1	364715	4906166	2	0	0	100.3	100.3	1	2455.55	3.25	0	78.8	0	0.25	0	0	14.37	0	0	0	0	0	0	6.89	6.89
Inverter	MV1-5	364671	4905892	2	0	0	100.3	100.3	1	2520.18	3.25	0	79.03	0	0.26	0	0	14.5	0	0	0	0	0	0	6.53	6.53
Inverter	MV1-11	364655	4905414	2	0	0	100.3	100.3	1	2640.39	3.25	0	79.43	0	0.29	0	0	14.72	0	0	0	0	0	0	5.87	5.87
Inverter	MV1-9	364561	4905646	2	0	0	100.3	100.3	1	2670.97	3.25	0	79.53	0	0.3	0	0	14.78	0	0	0	0	0	0	5.71	5.71
Inverter	MV1-6	364477	4905835	2	0	0	100.3	100.3	1	2720.1	3.25	0	79.69	0	0.31	0	0	14.87	0	0	0	0	0	0	5.45	5.45
Inverter	MV6-2	370085	4907339	2	0	0	100.3	100.3	1	3123.12	3.25	0	80.89	0	0.39	0	0	15.59	0	0	0	0	0	0	3.45	3.45
Inverter	MV6-3	370207	4907140	2	0	0	100.3	100.3	1	3173.87	3.25	0	81.03	0	0.39	0	0	15.68	0	0	0	0	0	0	3.21	3.21
Inverter	MV1-10	365004	4905564	2	0	0	97.3	97.3	1	2262.58	3.25	0	78.09	0	0.2	0	0	14	0	0	0	0	0	0	5.02	5.02
Inverter	MV1-7	364925	4905782	2	0	0	97.3	97.3	1	2286.95	3.25	0	78.19	0	0.21	0	0	14.05	0	0	0	0	0	0	4.87	4.87
Inverter	MV1-14	365163	4905049	2	0	0	97.3	97.3	1	2322.63	3.25	0	78.32	0	0.21	0	0	14.12	0	0	0	0	0	0	4.66	4.66
Inverter	MV4-7	369035	4909001	2	0	0	100.3	100.3	1	3350.12	3.25	0	81.5	0	0.43	0	0	15.98	0	0	0	0	0	0	2.41	2.41
Inverter	MV4-11	369264	4908855	2	0	0	100.3	100.3	1	3367.29	3.25	0	81.55	0	0.43	0	0	16.01	0	0	0	0	0	0	2.33	2.33
Inverter	MV4-10	369312	4908858	2	0	0	100.3	100.3	1	3399.67	3.25	0	81.63	0	0.43	0	0	16.06	0	0	0	0	0	0	2.19	2.19
Inverter	MV4-8	369256	4909001	2	0	0	100.3	100.3	1	3478	3.25	0	81.83	0	0.45	0	0	16.19	0	0	0	0	0	0	1.84	1.84
Inverter	MV4-9	369289	4909001	2	0	0	100.3	100.3	1	3497.89	3.25	0	81.88	0	0.45	0	0	16.23	0	0	0	0	0	0	1.76	1.76
Inverter	MV4-4	369027	4909199	2	0	0	100.3	100.3	1	3512.1	3.25	0	81.91	0	0.45	0	0	16.25	0	0	0	0	0	0	1.7	1.7
Inverter	MV4-6	369243	4909192	2	0	0	100.3	100.3	1	3625.19	3.25	0	82.19	0	0.47	0	0	16.44	0	0	0	0	0	0	1.21	1.21
Inverter	MV4-5	369289	4909199	2	0	0	100.3	100.3	1	3657.39	3.25	0	82.26	0	0.48	0	0	16.49	0	0	0	0	0	0	1.08	1.08
Inverter	MV4-1	369011	4909397	2	0	0	100.3	100.3	1	3673.6	3.25	0	82.3	0	0.48	0	0	16.52	0	0	0	0	0	0	1.01	1.01
Inverter	MV1-13	364731	4905241	2	0	0	97.3	97.3	1	2627.4	3.25	0	79.39	0	0.29	0	0	14.7	0	0	0	0	0	0	2.94	2.94
Inverter	MV5-5	370015	4908690	2	0	0	100.3	100.3	1	3768.93	3.25	0	82.52	0	0.49	0	0	16.68	0	0	0	0	0	0	0.62	0.62
Inverter	MV4-3	369229	4909397	2	0	0	100.3	100.3	1	3787.55	3.25	0	82.57	0	0.5	0	0	16.71	0	0	0	0	0	0	0.54	0.54
Inverter	MV4-2	369272	4909397	2	0	0	100.3	100.3	1	3811.1	3.25	0	82.62	0	0.5	0	0	16.74	0	0	0	0	0	0	0.45	0.45
Inverter	MV5-2	370006	4908853	2	0	0	100.3	100.3	1	3871.19	3.25	0	82.76	0	0.51	0	0	16.84	0	0	0	0	0	0	0.2	0.2
Inverter	MV5-4	370324	4908707	2	0	0	100.3	100.3	1	4017.82	3.25	0	83.08	0	0.53	0	0	17.08	0	0	0	0	0	0	-0.37	-0.37
Inverter	MV5-3	370231	4908851	2	0	0	100.3	100.3	1	4037.63	3.25	0	83.12	0	0.53	0	0	17.11	0	0	0	0	0	0	-0.45	-0.45
Inverter	MV5-1	370020	4909142	2	0	0	100.3	100.3	1	4083.17	3.25	0	83.22	0	0.54	0	0	17.18	0	0	0	0	0	0	-0.63	-0.63
Inverter	MV6-1	370235	4907364	2	0	0	97.3	97.3	1	3272.24	3.25	0	81.3	0	0.41	0	0	15.85	0	0	0	0	0	0	-0.24	-0.24
Inverter	MV2-2	365977	4906654	2	0	0	89.1	89.1	1	1270.18	3.25	0	73.08	0	0.74	0	0	6.81	0	0	0	0	0	0	8.43	8.43
DSTATCOM - 10 MVAR #2	DSAT2	369403	4908757	2.5	0	0	96.6	96.6	1	3381.24	3.5	0	81.58	0	3.48	0	0	2.51	0	0	0	0	0	0	9.06	9.06
DSTATCOM - 10 MVAR #1	DSAT1	369437	4908757	2.5	0	0	96.6	96.6	1	3403.79	3.5	0	81.64	0	3.48	0	0	2.52	0	0	0	0	0	0	8.99	8.99
Inverter	MV3-22	368656	4907142	2	0	0	89.1	89.1	1	1749.85	3.25	0	75.86	0	0.85	0	0	7.63	0	0	0	0	0	0	4.72	4.72
SubstationTransformer	W_ST	369711.17	4906112.3	2.5	0	0	92	92	1	2543.37	4.25	0	79.11	0	0.95	3.26	0.29	5.26	0	0	0	0	0	0	3.4	3.4
Inverter	MV3-5	368340	4907843	2	0	0	89.1	89.1	1	2002.38	3.25	0	77.03	0	0.91	0	0	8.05	0	0	0	0	0	0	3.07	3.07
Inverter	MV3-1	368156	4907976	2	0	0	89.1	89.1	1	2015.63	3.25	0	77.09	0	0.91	0	0	8.07	0	0	0	0	0	0	2.99	2.99
Inverter	MV3-4	368502	4907925	2	0	0	89.1	89.1	1	2165.2	3.25	0	77.71	0	0.95	0	0	8.31	0	0	0	0	0	0	2.09	2.09
Westbrook Inverter Enclosur	W_INV2	369374	4906388	2	0	0	89.1	89.1	1	2210.55	3.25	0	77.89	0	0.96	0	0	8.39	0	0	0	0	0	0	1.83	1.83
Inverter	MV3-2	368671	4907928	2	0	0	89.1	89.1	1	2275.33	3.25	0	78.14	0	0.97	0	0	8.49	0	0	0	0	0	0	1.46	1.46
Westbrook Inverter Enclosur	W_INV3	369508	4906164	2	0	0	89.1	89.1	1	2338.62	3.25	0	78.38	0	0.99	0	0	8.59	0	0	0	0	0	0	1.1	1.1
Gardiner Substation	G_Sub	366586.3	4903349.9	2.5	0	0	90.8	90.8	1	2926.89	4.25	0	80.33	0	1.15	3.39	0.39	5.85	0	0	0	0	0	0	0.06	0.06
Westbrook Inverter Enclosur	W_INV4	369673	4906164	2	0	0	89.1	89.1	1	2503.58	3.25	0	78.97	0	1.03	0	0	8.85	0	0	0	0	0	0	0.21	0.21
Westbrook Inverter Enclosur	W_INV5	369719	4906574	2	0	0	89.1	89.1	1	2573.74	3.25	0	79.21	0	1.04	0	0	8.96	0	0	0	0	0	0	-0.16	-0.16
Westbrook Inverter Enclosur	W_INV7	369780	4906417	2	0	0	89.1	89.1	1	2617.58	3.25	0	79.36	0	1.05	0	0	9.03	0	0	0	0	0	0	-0.38	-0.38
Westbrook Inverter Enclosur	W_INV6	369875	4906578	2	0	0	89.1	89.1	1	2728.85	3.25	0	79.72	0	1.08	0	0	9.2	0	0	0	0	0	0	-0.94	-0.94
Inverter	MV1-3	364440	4906039	2	0	0	89.1	89.1	1	2735.86	3.25	0	79.74	0	1.08	0	0	9.21	0	0	0	0	0	0	-0.98	-0.98
Inverter	MV4-15	369176	4908481	2	0	0	89.1	89.1	1	3024.11	3.25	0	80.61	0	1.15	0	0	9.65	0	0	0	0	0	0	-2.36	-2.36
Inverter	MV4-13	369051	4908605	2	0	0	89.1	89.1	1	3039.07	3.25	0	80.65	0	1.16	0	0	9.68	0	0	0	0	0	0	-2.43	-2.43
Inverter	MV4-14	369176	4908507	2	0	0	89.1	89.1	1	3043.61	3.25	0	80.67	0	1.16	0	0	9.68	0	0	0	0	0	0	-2.45	-2.45
Fixed Reactor Bank 1	FRB1	369378	4908755	6	0	0	89.8	89.8	1	3363.28	5.25	0	81.54	0	-0.82	0	0	6.49	0	0	0	0	0	0	2.57	2.57
Fixed Reactor Bank 2	FRB2	369464	4908755	6	0	0	89.8	89.8	1	3420.35	5.25	0	81.68	0	-0.81	0	0	6.57	0	0	0	0	0	0	2.34	2.34
Inverter	MV4-12	369043	4908803	2	0	0	89.1	89.1	1	3192.23	3.25	0	81.08	0	1.19	0	0	9.91	0	0	0	0	0	0	-3.12	-3.12
Westbrook Inverter Enclosur	W_INV1	369409	4906578	2	0	0	86.1	86.1	1	2267.76	3.25	0	78.11	0	0.97	0	0	8.48	0	0	0	0	0	0	-1.5	-1.5
Inverters	G_Inv2	366676.9	4903239.1	2	0	0	87.7	87.7	1	3019.44	3.25	0	80.6	0	2.7	0	0	3.8	0	0	0	0	0	0	0.56	0.56

Inverters	G_Inv1	366526.4	4903225.8	2	0	0	87.7	87.7	1	3060.64	3.25	0	80.72	0	2.7	0	0	3.84	0	0	0	0	0	0	0.4	0.4
Inverter	MV5-6	369982	4908507	2	0	0	89.1	89.1	1	3625.86	3.25	0	82.19	0	1.3	0	0	10.55	0	0	0	0	0	0	-4.98	-4.98
Inverters	G_Inv4	366732.8	4903105	2	0	0	87.7	87.7	1	3143.55	3.25	0	80.95	0	2.71	0	0	3.93	0	0	0	0	0	0	0.06	0.06
Inverters	G_Inv3	366583.7	4903091.4	2	0	0	87.7	87.7	1	3181.1	3.25	0	81.05	0	2.72	0	0	3.98	0	0	0	0	0	0	-0.08	-0.08
Inverters	G_Inv6	366788.5	4902972	2	0	0	87.7	87.7	1	3268.34	3.25	0	81.29	0	2.73	0	0	4.07	0	0	0	0	0	0	-0.42	-0.42
Inverters	G_Inv5	366638.5	4902958.1	2	0	0	87.7	87.7	1	3302.95	3.25	0	81.38	0	2.73	0	0	4.11	0	0	0	0	0	0	-0.56	-0.56
Inverters	G_Inv8	366844.5	4902838.5	2	0	0	87.7	87.7	1	3395.14	3.25	0	81.62	0	2.74	0	0	4.21	0	0	0	0	0	0	-0.91	-0.91
Inverters	G_Inv7	366694.6	4902824.7	2	0	0	87.7	87.7	1	3426.44	3.25	0	81.7	0	2.74	0	0	4.25	0	0	0	0	0	0	-1.03	-1.03
Inverters	G_Inv10	366900.7	4902704.8	2	0	0	87.7	87.7	1	3523.51	3.25	0	81.94	0	2.75	0	0	4.35	0	0	0	0	0	0	-1.38	-1.38
Inverters	G_Inv9	366750.9	4902691.8	2	0	0	87.7	87.7	1	3551.02	3.25	0	82.01	0	2.75	0	0	4.38	0	0	0	0	0	0	-1.48	-1.48
Inverter	MV6-4	370250	4906966	2	0	0	86.1	86.1	1	3169.53	3.25	0	81.02	0	1.19	0	0	9.87	0	0	0	0	0	0	-6.02	-6.02
Westbrook Inverter Transfor	W_INVTR1	369403	4906578	2	0	0	78.2	78.2	1	2261.83	3.25	0	78.09	0	-2.49	0	0	1.33	0	0	0	0	0	0	1.32	1.32
Westbrook Inverter Transfor	W_INVTR2	369368	4906388	2	0	0	77.3	77.3	1	2204.57	3.25	0	77.87	0	-2.48	0	0	1.3	0	0	0	0	0	0	0.65	0.65
Westbrook Inverter Transfor	W_INVTR3	369514	4906164	2	0	0	77.3	77.3	1	2344.62	3.25	0	78.4	0	-2.52	0	0	1.37	0	0	0	0	0	0	0.09	0.09
Westbrook Inverter Transfor	W_INVTR4	369679	4906164	2	0	0	77.3	77.3	1	2509.58	3.25	0	78.99	0	-2.57	0	0	1.44	0	0	0	0	0	0	-0.52	-0.52
Westbrook Inverter Transfor	W_INVTR5	369725	4906574	2	0	0	77.3	77.3	1	2579.68	3.25	0	79.23	0	-2.59	0	0	1.47	0	0	0	0	0	0	-0.77	-0.77
Westbrook Inverter Transfor	W_INVTR7	369786	4906417	2	0	0	77.3	77.3	1	2623.56	3.25	0	79.38	0	-2.61	0	0	1.49	0	0	0	0	0	0	-0.92	-0.92
Westbrook Inverter Transfor	W_INVTR6	369881	4906578	2	0	0	77.3	77.3	1	2734.8	3.25	0	79.74	0	-2.64	0	0	1.54	0	0	0	0	0	0	-1.3	-1.3
Inverter Transformer	MV2-1 T	365836	4906816	2	0	0	69.4	69.4	1	1461.91	3.25	0	74.3	0	1.96	0	0	4.39	0	0	0	0	0	0	-11.29	-11.29
Inverter Transformer	MV1-10 T	365010	4905564	2	0	0	69.4	69.4	1	2256.84	3.25	0	78.07	0	2.27	0	0	5.22	0	0	0	0	0	0	-16.2	-16.2
Inverter Transformer	MV1-7 T	364919	4905782	2	0	0	69.4	69.4	1	2292.84	3.25	0	78.21	0	2.28	0	0	5.25	0	0	0	0	0	0	-16.39	-16.39
Inverter Transformer	MV1-14 T	365157	4905049	2	0	0	69.4	69.4	1	2327.82	3.25	0	78.34	0	2.29	0	0	5.28	0	0	0	0	0	0	-16.56	-16.56
Inverter Transformer	MV1-13 T	364725	4905241	2	0	0	69.4	69.4	1	2632.98	3.25	0	79.41	0	2.39	0	0	5.56	0	0	0	0	0	0	-18.01	-18.01
Inverter Transformer	MV6-4 T	370244	4906966	2	0	0	69.4	69.4	1	3163.7	3.25	0	81	0	2.56	0	0	6.02	0	0	0	0	0	0	-20.23	-20.23
Inverter Transformer	MV6-1 T	370230	4907364	2	0	0	69.4	69.4	1	3267.56	3.25	0	81.28	0	2.59	0	0	6.11	0	0	0	0	0	0	-20.63	-20.63
Inverter Transformer	MV2-2 T	365982	4906654	2	0	0	56.1	56.1	1	1265.48	3.25	0	73.05	0	0.11	0	0	5.5	0	0	0	0	0	0	-22.6	-22.6
Inverter Transformer	MV3-18 T	367757	4907412	2	0	0	56.1	56.1	1	1330.49	3.25	0	73.48	0	0.13	0	0	5.65	0	0	0	0	0	0	-23.2	-23.2
Inverter Transformer	MV2-3 T	365814	4906641	2	0	0	56.1	56.1	1	1420.45	3.25	0	74.05	0	0.17	0	0	5.85	0	0	0	0	0	0	-24	-24
Inverter Transformer	MV3-12 T	367674	4907594	2	0	0	56.1	56.1	1	1465.4	3.25	0	74.32	0	0.19	0	0	5.94	0	0	0	0	0	0	-24.39	-24.39
Inverter Transformer	MV3-13 T	367958	4907577	2	0	0	56.1	56.1	1	1570.93	3.25	0	74.92	0	0.23	0	0	6.17	0	0	0	0	0	0	-25.26	-25.26
Inverter Transformer	MV3-17 T	368183	4907472	2	0	0	56.1	56.1	1	1612.05	3.25	0	75.15	0	0.24	0	0	6.26	0	0	0	0	0	0	-25.59	-25.59
Inverter Transformer	MV2-4 T	365590	4906628	2	0	0	56.1	56.1	1	1632.33	3.25	0	75.26	0	0.25	0	0	6.3	0	0	0	0	0	0	-25.75	-25.75
Inverter Transformer	MV3-19 T	368352	4907347	2	0	0	56.1	56.1	1	1634.56	3.25	0	75.27	0	0.25	0	0	6.3	0	0	0	0	0	0	-25.77	-25.77
Inverter Transformer	MV3-21 T	368484	4907206	2	0	0	56.1	56.1	1	1644	3.25	0	75.32	0	0.26	0	0	6.32	0	0	0	0	0	0	-25.84	-25.84
Inverter Transformer	MV3-7 T	367951	4907754	2	0	0	56.1	56.1	1	1723.16	3.25	0	75.73	0	0.29	0	0	6.49	0	0	0	0	0	0	-26.44	-26.44
Inverter Transformer	MV3-15 T	368351	4907477	2	0	0	56.1	56.1	1	1726.22	3.25	0	75.74	0	0.29	0	0	6.49	0	0	0	0	0	0	-26.47	-26.47
Inverter Transformer	MV3-22 T	368661	4907142	2	0	0	56.1	56.1	1	1754.1	3.25	0	75.88	0	0.3	0	0	6.55	0	0	0	0	0	0	-26.67	-26.67
Inverter Transformer	MV3-10 T	368162	4907669	2	0	0	56.1	56.1	1	1757.69	3.25	0	75.9	0	0.3	0	0	6.56	0	0	0	0	0	0	-26.7	-26.7
Inverter Transformer	MV3-16 T	368509	4907475	2	0	0	56.1	56.1	1	1836.57	3.25	0	76.28	0	0.34	0	0	6.72	0	0	0	0	0	0	-27.28	-27.28
Inverter Transformer	MV3-11 T	368340	4907662	2	0	0	56.1	56.1	1	1858.51	3.25	0	76.38	0	0.34	0	0	6.76	0	0	0	0	0	0	-27.43	-27.43
Inverter Transformer	MV3-20 T	368683	4907317	2	0	0	56.1	56.1	1	1870.02	3.25	0	76.44	0	0.35	0	0	6.79	0	0	0	0	0	0	-27.51	-27.51
Inverter Transformer	MV3-3 T	367944	4907927	2	0	0	56.1	56.1	1	1876.1	3.25	0	76.47	0	0.35	0	0	6.8	0	0	0	0	0	0	-27.56	-27.56
Inverter Transformer	MV3-6 T	368156	4907834	2	0	0	56.1	56.1	1	1893.06	3.25	0	76.54	0	0.36	0	0	6.83	0	0	0	0	0	0	-27.68	-27.68
Inverter Transformer	MV3-14 T	368678	4907498	2	0	0	56.1	56.1	1	1978	3.25	0	76.92	0	0.39	0	0	7	0	0	0	0	0	0	-28.26	-28.26
Inverter Transformer	MV3-5 T	368335	4907843	2	0	0	56.1	56.1	1	1999.46	3.25	0	77.02	0	0.4	0	0	7.04	0	0	0	0	0	0	-28.41	-28.41
Inverter Transformer	MV3-9 T	368517	4907703	2	0	0	56.1	56.1	1	2004.9	3.25	0	77.04	0	0.41	0	0	7.05	0	0	0	0	0	0	-28.44	-28.44
Inverter Transformer	MV3-1 T	368150	4907976	2	0	0	56.1	56.1	1	2012.7	3.25	0	77.08	0	0.41	0	0	7.07	0	0	0	0	0	0	-28.49	-28.49
Inverter Transformer	MV3-8 T	368685	4907712	2	0	0	56.1	56.1	1	2127.74	3.25	0	77.56	0	0.46	0	0	7.29	0	0	0	0	0	0	-29.25	-29.25
Inverter Transformer	MV3-4 T	368507	4907925	2	0	0	56.1	56.1	1	2168.28	3.25	0	77.72	0	0.48	0	0	7.37	0	0	0	0	0	0	-29.51	-29.51
Inverter Transformer	MV1-15 T	365309	4904994	2	0	0	56.1	56.1	1	2227.44	3.25	0	77.96	0	0.5	0	0	7.48	0	0	0	0	0	0	-29.88	-29.88
Inverter Transformer	MV3-2 T	368677	4907928	2	0	0	56.1	56.1	1	2279.29	3.25	0	78.16	0	0.52	0	0	7.58	0	0	0	0	0	0	-30.2	-30.2
Inverter Transformer	MV1-12 T	365044	4905386	2	0	0	56.1	56.1	1	2283	3.25	0	78.17	0	0.52	0	0	7.59	0	0	0	0	0	0	-30.22	-30.22
Inverter Transformer	MV1-4 T	364821	4905918	2	0	0	56.1	56.1	1	2368.08	3.25	0	78.49	0	0.56	0	0	7.75	0	0	0	0	0	0	-30.74	-30.74
Inverter Transformer	MV1-2 T	364759	4906063	2	0	0	56.1	56.1	1	2415.98	3.25	0	78.66	0	0.58	0	0	7.84	0	0	0	0	0	0	-31.02	-31.02
Inverter Transformer	MV1-1 T	364721	4906166	2	0	0	56.1	56.1	1	2449.55	3.25	0	78.78	0	0.59	0	0	7.9	0	0	0	0	0	0	-31.22	-31.22
Inverter Transformer	MV1-8 T	364782	4905647	2	0	0	56.1	56.1	1	2455.32	3.25	0	78.8	0	0.6	0	0	7.91	0	0	0	0	0	0	-31.25	-31.25
Inverter Transformer	MV1-5 T	364676	4905892	2	0	0	56.1	56.1	1	2515.22	3.25	0	79.01	0	0.62	0	0	8.02	0	0	0	0	0	0	-31.59	-31.59
Inverter Transformer	MV1-11 T	364649	4905414	2	0	0	56.1	56.1	1	2646.1	3.25	0	79.45	0	0.68	0	0	8.25	0	0	0	0	0	0	-32.33	-32.33
Inverter Transformer	MV1-9 T	364555	4905646	2	0	0	56.1	56.1	1	2676.83	3.25	0	79.55	0	0.69	0	0	8.31	0	0	0	0	0	0	-32.49	-32.49
Inverter Transformer	MV1-6 T	364482	4905835	2	0	0	56.1	56.1	1	2715.15	3.25	0	79.68	0	0.71	0	0	8.38	0	0	0	0	0	0	-32.7	-32.7
Inverter Transformer	MV1-3 T	364435	4906039	2	0	0	56.1	56.1	1	2740.85	3.25	0	79.76	0	0.72	0	0	8.42	0	0	0	0	0	0	-32.84	-32.84
Inverter Transformer	MV4-15 T	369170	4908481	2	0	0	56.1	56.1	1	3020.13	3.25	0	80.6	0	0.84	0	0	8.9	0	0	0	0	0	0	-34.28	-34.28
Inverter Transformer	MV4-13 T	369057	4908605	2	0	0	56.1	56.1	1	3042.79	3.25	0	80.67	0	0.85	0	0	8.94	0	0	0	0	0	0	-34.4	-34.4
Inverter Transformer	MV4-14 T	369182	4908507	2	0	0	56.1	56.1	1	3047.57	3.25	0	80.68	0	0.85	0	0	8.95	0	0	0	0	0	0	-34.42	-34.42
Inverter Transformer	MV6-2 T	370091	4907339	2	0	0	56.1	56.1	1	3128.72	3.25	0	80.91	0	0.88	0	0	9.08	0	0	0	0	0	0	-34.82	-34.82
Inverter Transformer	MV6-3 T	370202	4907140	2	0	0	56.1	56.1	1	3169.09	3.25	0	81.02	0	0.9	0	0	9.15	0	0	0	0	0	0	-35.01	-35.01
Inverter Transformer	MV4-12 T	369049	4908803	2	0	0	56.1	56.1	1	3195.76	3.25	0	81.09	0	0.91	0	0	9.2	0	0	0	0	0	0	-35.14	-35.14
Inverter Transformer	MV4-7 T	369040	4909001	2	0	0	56.1	56.1	1	3352.91	3.25	0	81.51	0	0.98	0	0	9.45	0	0	0	0	0	0	-35.88	-35.88
Inverter Transformer	MV4-11 T	369269	4908855	2	0	0	56.1	56.1	1	3370.4	3.25	0	81.55	0	0.99	0	0	9.48	0	0	0	0	0	0	-35.96	-35.96
Inverter Transformer	MV4-10 T	369307	4908858	2	0	0	56.1	56.1	1	3396.52	3.25	0	81.62	0	1	0	0	9.52	0	0	0	0	0	0	-36.08	-36.08
Inverter Transformer	MV4-8 T	369262	4909001	2	0	0	56.1	56.1	1	3481.6	3.25	0	81.84	0	1.03	0	0	9.66	0	0	0	0	0	0	-36.47	-36.47
Inverter Transformer	MV4-9 T	369284	4909001	2	0	0	56.1	56.1	1	3494.87	3.25	0	81.87	0	1.04	0	0	9.68	0	0	0	0	0	0	-36.53	-36.53
Inverter Transformer	MV4-4 T	369033	4909199	2	0	0	56.1	56.1	1	3515.27	3.25	0	81.92	0	1.05	0	0	9.71	0	0	0	0	0	0	-36.62	-36.62
Inverter Transformer	MV4-6 T	369249	4909192	2	0	0	56.1	56.1	1	3628.63	3.25	0	82.19	0	1.09	0	0	9.89	0	0	0	0	0	0	-37.12	-37.12

	Inverter Transformer	MV5-6 T	369987	4908507	2	0	0	56.1	56.1	1	3629.74	3.25	0	82.2	0	1.09	0	0	9.89	0	0	0	0	0	0	-37.12	-37.12
	Inverter Transformer	MV4-5 T	369283	4909199	2	0	0	56.1	56.1	1	3653.92	3.25	0	82.26	0	1.1	0	0	9.93	0	0	0	0	0	0	-37.23	-37.23
	Inverter Transformer	MV4-1 T	369017	4909397	2	0	0	56.1	56.1	1	3676.61	3.25	0	82.31	0	1.11	0	0	9.96	0	0	0	0	0	0	-37.33	-37.33
	Inverter Transformer	MV5-5 T	370021	4908690	2	0	0	56.1	56.1	1	3773.46	3.25	0	82.53	0	1.15	0	0	10.11	0	0	0	0	0	0	-37.74	-37.74
	Inverter Transformer	MV4-3 T	369234	4909397	2	0	0	56.1	56.1	1	3790.27	3.25	0	82.57	0	1.16	0	0	10.14	0	0	0	0	0	0	-37.81	-37.81
	Inverter Transformer	MV4-2 T	369267	4909397	2	0	0	56.1	56.1	1	3808.34	3.25	0	82.61	0	1.17	0	0	10.17	0	0	0	0	0	0	-37.89	-37.89
	Inverter Transformer	MV5-2 T	370011	4908853	2	0	0	56.1	56.1	1	3874.86	3.25	0	82.77	0	1.19	0	0	10.27	0	0	0	0	0	0	-38.17	-38.17
	Inverter Transformer	MV5-4 T	370330	4908707	2	0	0	56.1	56.1	1	4022.53	3.25	0	83.09	0	1.25	0	0	10.49	0	0	0	0	0	0	-38.77	-38.77
	Inverter Transformer	MV5-3 T	370237	4908851	2	0	0	56.1	56.1	1	4042.18	3.25	0	83.13	0	1.26	0	0	10.52	0	0	0	0	0	0	-38.85	-38.85
	Inverter Transformer	MV5-1 T	370015	4909142	2	0	0	56.1	56.1	1	4079.68	3.25	0	83.21	0	1.28	0	0	10.57	0	0	0	0	0	0	-39	-39
	Line Reactor	NGR	369421	4908787.5	5	0	0	45.4	45.4	1	3416.04	5.25	0	81.67	0	3.31	1.33	0.09	1.4	0	0	0	0	0	0	-42.35	-42.35
Limit. Valu	0	0																								
Level D/N:	27.5382	27.5382																								

Receiver: Existing Noise Receptor
ID: S-R144
X: 369825
Y: 4906092
Z: 4.5
Ground: 0

ISO	Description	ID	X	Y	Z	Ground	ReflOrd	LxT	LxN	L/A	Dist.	hm	Freq	Adiv	K0b	Agr	Abar	z	Aatm	Afol	Ahous	Cmet	CmetN	Dc	RL	LtotT	LtotN
	SubstationTransformer	W_ST	369711.17	4906112.3	2.5	0	0	92	92	1	115.64	4.21	0	52.26	0	0.66	7.07	0.25	0.41	0	0	0	0	0	0	31.58	31.58
	Westbrook Inverter Enclosur	W_INV4	369673	4906164	2	0	0	89.1	89.1	1	168.21	3.25	0	55.52	0	0.24	0	0	2.85	0	0	0	0	0	0	30.45	30.45
	Sol_Luce Substation	S_Substation	369426	4908792	3.5	0	0	112.1	112.1	1	2729.32	5.25	0	79.72	0	0.22	3.49	0.35	5.55	0	0	0	0	0	0	23.1	23.1
	Inverter	MV6-3	370207	4907140	2	0	0	100.3	100.3	1	1115.45	3.25	0	71.95	0	-0.19	0	0	11.28	0	0	0	0	0	0	17.28	17.28
	Westbrook Inverter Enclosur	W_INV3	369508	4906164	2	0	0	89.1	89.1	1	325.08	3.25	0	61.24	0	0.39	0	0	4.31	0	0	0	0	0	0	23.12	23.12
	Westbrook Inverter Enclosur	W_INV7	369780	4906417	2	0	0	89.1	89.1	1	328.11	3.25	0	61.32	0	0.39	0	0	4.33	0	0	0	0	0	0	23.02	23.02
	Inverter	MV6-2	370085	4907339	2	0	0	100.3	100.3	1	1273.82	3.25	0	73.1	0	-0.12	0	0	11.73	0	0	0	0	0	0	15.6	15.6
	Inverter	MV3-20	368689	4907317	2	0	0	100.3	100.3	1	1670.67	3.25	0	75.46	0	0.03	0	0	12.73	0	0	0	0	0	0	12.09	12.09
	Inverter	MV3-21	368478	4907206	2	0	0	100.3	100.3	1	1747.97	3.25	0	75.85	0	0.05	0	0	12.91	0	0	0	0	0	0	11.5	11.5
	Westbrook Inverter Enclosur	W_INV6	369875	4906578	2	0	0	89.1	89.1	1	488.57	3.25	0	64.78	0	0.52	0	0	5.1	0	0	0	0	0	0	18.66	18.66
	Westbrook Inverter Enclosur	W_INV5	369719	4906574	2	0	0	89.1	89.1	1	493.52	3.25	0	64.87	0	0.52	0	0	5.12	0	0	0	0	0	0	18.55	18.55
	Inverter	MV3-14	368684	4907498	2	0	0	100.3	100.3	1	1810.72	3.25	0	76.16	0	0.07	0	0	13.05	0	0	0	0	0	0	11.03	11.03
	Inverter	MV6-1	370235	4907364	2	0	0	97.3	97.3	1	1336.45	3.25	0	73.52	0	-0.1	0	0	11.9	0	0	0	0	0	0	11.99	11.99
	Inverter	MV3-16	368514	4907475	2	0	0	100.3	100.3	1	1905.63	3.25	0	76.6	0	0.1	0	0	13.26	0	0	0	0	0	0	10.35	10.35
	Inverter	MV3-19	368357	4907347	2	0	0	100.3	100.3	1	1931.34	3.25	0	76.72	0	0.11	0	0	13.32	0	0	0	0	0	0	10.17	10.17
	Westbrook Inverter Enclosur	W_INV2	369374	4906388	2	0	0	89.1	89.1	1	539.47	3.25	0	65.64	0	0.55	0	0	5.27	0	0	0	0	0	0	17.6	17.6
	Inverter	MV3-8	368680	4907712	2	0	0	100.3	100.3	1	1983.79	3.25	0	76.95	0	0.12	0	0	13.43	0	0	0	0	0	0	9.81	9.81
	Inverter	MV3-15	368357	4907477	2	0	0	100.3	100.3	1	2018.23	3.25	0	77.1	0	0.13	0	0	13.5	0	0	0	0	0	0	9.58	9.58
	Inverter	MV3-9	368512	4907703	2	0	0	100.3	100.3	1	2078.29	3.25	0	77.35	0	0.15	0	0	13.63	0	0	0	0	0	0	9.18	9.18
	Inverter	MV3-17	368178	4907472	2	0	0	100.3	100.3	1	2148.72	3.25	0	77.64	0	0.17	0	0	13.77	0	0	0	0	0	0	8.73	8.73
	Inverter	MV3-11	368346	4907662	2	0	0	100.3	100.3	1	2156.93	3.25	0	77.68	0	0.17	0	0	13.79	0	0	0	0	0	0	8.68	8.68
	Inverter	MV3-10	368167	4907669	2	0	0	100.3	100.3	1	2288.21	3.25	0	78.19	0	0.21	0	0	14.05	0	0	0	0	0	0	7.87	7.87
	Westbrook Inverter Transfor	W_INVTR4	369679	4906164	2	0	0	77.3	77.3	1	162.81	3.25	0	55.23	0	-0.37	0	0	0.13	0	0	0	0	0	0	22.34	22.34
	Inverter	MV3-13	367963	4907577	2	0	0	100.3	100.3	1	2381.65	3.25	0	78.54	0	0.23	0	0	14.23	0	0	0	0	0	0	7.31	7.31
	Inverter	MV3-6	368162	4907834	2	0	0	100.3	100.3	1	2408.35	3.25	0	78.63	0	0.24	0	0	14.28	0	0	0	0	0	0	7.16	7.16
	Inverter	MV3-18	367752	4907412	2	0	0	100.3	100.3	1	2457.59	3.25	0	78.81	0	0.25	0	0	14.38	0	0	0	0	0	0	6.88	6.88
	Inverter	MV3-7	367945	4907754	2	0	0	100.3	100.3	1	2509.31	3.25	0	78.99	0	0.26	0	0	14.48	0	0	0	0	0	0	6.59	6.59
	Inverter	MV5-5	370015	4908690	2	0	0	100.3	100.3	1	2604.94	3.25	0	79.32	0	0.28	0	0	14.66	0	0	0	0	0	0	6.06	6.06
	Inverter	MV3-12	367668	4907594	2	0	0	100.3	100.3	1	2628.43	3.25	0	79.39	0	0.29	0	0	14.7	0	0	0	0	0	0	5.93	5.93
	Inverter	MV3-3	367939	4907927	2	0	0	100.3	100.3	1	2631.39	3.25	0	79.4	0	0.29	0	0	14.7	0	0	0	0	0	0	5.92	5.92
	Inverter	MV5-4	370324	4908707	2	0	0	100.3	100.3	1	2662.19	3.25	0	79.5	0	0.29	0	0	14.76	0	0	0	0	0	0	5.75	5.75
	Inverter	MV5-2	370006	4908853	2	0	0	100.3	100.3	1	2766.93	3.25	0	79.84	0	0.32	0	0	14.95	0	0	0	0	0	0	5.2	5.2
	Inverter	MV5-3	370231	4908851	2	0	0	100.3	100.3	1	2788.71	3.25	0	79.91	0	0.32	0	0	14.99	0	0	0	0	0	0	5.09	5.09
	Inverter	MV4-10	369312	4908858	2	0	0	100.3	100.3	1	2813.17	3.25	0	79.98	0	0.32	0	0	15.04	0	0	0	0	0	0	4.97	4.97
	Inverter	MV4-11	369264	4908855	2	0	0	100.3	100.3	1	2819.38	3.25	0	80	0	0.33	0	0	15.05	0	0	0	0	0	0	4.93	4.93
	Inverter	MV4-9	369289	4909001	2	0	0	100.3	100.3	1	2957.97	3.25	0	80.42	0	0.35	0	0	15.3	0	0	0	0	0	0	4.24	4.24
	Inverter	MV4-8	369256	4909001	2	0	0	100.3	100.3	1	2964.13	3.25	0	80.44	0	0.36	0	0	15.31	0	0	0	0	0	0	4.21	4.21
	Inverter	MV4-7	369035	4909001	2	0	0	100.3	100.3	1	3014.36	3.25	0	80.58	0	0.36	0	0	15.4	0	0	0	0	0	0	3.97	3.97
	Inverter	MV5-1	370020	4909142	2	0	0	100.3	100.3	1	3056.23	3.25	0	80.7	0	0.37	0	0	15.47	0	0	0	0	0	0	3.76	3.76
	Inverter	MV4-5	369289	4909199	2	0	0	100.3	100.3	1	3152.9	3.25	0	80.97	0	0.39	0	0	15.64	0	0	0	0	0	0	3.31	3.31
	Inverter	MV4-6	369243	4909192	2	0	0	100.3	100.3	1	3154.16	3.25	0	80.98	0	0.39	0	0	15.64	0	0	0	0	0	0	3.3	3.3
	Inverter	MV4-4	369027	4909199	2	0	0	100.3	100.3	1	3207.84	3.25	0	81.12	0	0.4	0	0	15.74	0	0	0	0	0	0	3.05	3.05
	Westbrook Inverter Enclosur	W_INV1	369409	4906578	2	0	0	86.1	86.1	1	639.73	3.25	0	67.12	0	0.59	0	0	5.56	0	0	0	0	0	0	12.79	12.79
	Inverter	MV4-2	369272	4909397	2	0	0	100.3	100.3	1	3350.95	3.25	0	81.5	0	0.43	0	0	15.98	0	0	0	0	0	0	2.4	2.4
	Inverter	MV4-3	369229	4909397	2	0	0	100.3	100.3	1	3358.31	3.25	0	81.52	0	0.43	0	0	15.99	0	0	0	0	0	0	2.37	2.37
	Inverter	MV4-1	369011	4909397	2	0	0	100.3	100.3	1	3403.77	3.25	0	81.64	0	0.43	0	0	16.07	0	0	0	0	0	0	2.17	2.17
	Inverter	MV2-3	365820	4906641	2	0	0	100.3	100.3	1	4042.45	3.25	0	83.13	0	0.53	0	0	17.12	0	0	0	0	0	0	-0.47	-0.47
	DSTATCOM - 10 MVAR #1	DSAT1	369437	4908757	2.5	0	0	96.6	96.6	1	2693.1	3.5	0	79.61	0	3.36	0	0	2.13	0	0	0	0	0	0	11.54	11.54
	DSTATCOM - 10 MVAR #2	DSAT2	369403	4908757	2.5	0	0	96.6	96.6	1	2698.21	3.5	0	79.62	0	3.36	0	0	2.13	0	0	0	0	0	0	11.52	11.52
	Inverter	MV2-4	365586	4906624	2	0	0	100.3	100.3	1	4272.25	3.25	0	83.61	0	0.56	0	0	17.48	0	0	0	0	0	0	-1.34	-1.34
	Westbrook Inverter Transfor	W_INVTR3	369514	4906164	2	0	0	77.3	77.3	1	319.24	3.25	0	61.08	0	-1.1	0	0	0.25	0	0	0	0	0	0	17.11	17.11
	Westbrook Inverter Transfor	W_INVTR7	369786	4906417	2	0	0	77.3	77.3	1	327.34	3.25	0	61.3	0	-1.12	0	0	0.25	0	0	0	0	0	0	16.91	16.91

Inverter	MV1-15	365315	4904994	2	0	0	100.3	100.3	1	4641.74	3.25	0	84.33	0	0.61	0	0	18.05	0	0	0	0	0	0	-2.67	-2.67
Inverter	MV1-12	365038	4905386	2	0	0	100.3	100.3	1	4838.78	3.25	0	84.69	0	0.63	0	0	18.34	0	0	0	0	0	0	-3.35	-3.35
Inverter	MV1-4	364815	4905918	2	0	0	100.3	100.3	1	5013.02	3.25	0	85	0	0.64	0	0	18.6	0	0	0	0	0	0	-3.93	-3.93
Inverter	MV6-4	370250	4906966	2	0	0	86.1	86.1	1	971.86	3.25	0	70.75	0	0.68	0	0	6.26	0	0	0	0	0	0	8.37	8.37
Inverter	MV1-8	364788	4905647	2	0	0	100.3	100.3	1	5056.62	3.25	0	85.08	0	0.65	0	0	18.66	0	0	0	0	0	0	-4.08	-4.08
Inverter	MV1-2	364753	4906063	2	0	0	100.3	100.3	1	5072.08	3.25	0	85.1	0	0.65	0	0	18.69	0	0	0	0	0	0	-4.13	-4.13
Inverter	MV1-1	364715	4906166	2	0	0	100.3	100.3	1	5110.54	3.25	0	85.17	0	0.65	0	0	18.74	0	0	0	0	0	0	-4.25	-4.25
Inverter	MV1-5	364671	4905892	2	0	0	100.3	100.3	1	5157.88	3.25	0	85.25	0	0.66	0	0	18.81	0	0	0	0	0	0	-4.4	-4.4
Inverter	MV1-11	364655	4905414	2	0	0	100.3	100.3	1	5214.27	3.25	0	85.34	0	0.66	0	0	18.89	0	0	0	0	0	0	-4.58	-4.58
Inverter	MV1-9	364561	4905646	2	0	0	100.3	100.3	1	5282.86	3.25	0	85.46	0	0.67	0	0	18.99	0	0	0	0	0	0	-4.8	-4.8
Inverter	MV1-6	364477	4905835	2	0	0	100.3	100.3	1	5354.17	3.25	0	85.57	0	0.67	0	0	19.09	0	0	0	0	0	0	-5.03	-5.03
Inverter	MV2-1	365842	4906816	2	0	0	97.3	97.3	1	4048.27	3.25	0	83.15	0	0.53	0	0	17.13	0	0	0	0	0	0	-3.49	-3.49
Inverter	MV3-22	368656	4907142	2	0	0	89.1	89.1	1	1571.33	3.25	0	74.93	0	0.81	0	0	7.33	0	0	0	0	0	0	5.99	5.99
Inverter	MV1-14	365163	4905049	2	0	0	97.3	97.3	1	4777.25	3.25	0	84.58	0	0.62	0	0	18.25	0	0	0	0	0	0	-6.14	-6.14
Inverter	MV1-10	365004	4905564	2	0	0	97.3	97.3	1	4849.83	3.25	0	84.71	0	0.63	0	0	18.36	0	0	0	0	0	0	-6.39	-6.39
Westbrook Inverter Transfor	W_INVTR6	369881	4906578	2	0	0	77.3	77.3	1	489.22	3.25	0	64.79	0	-1.49	0	0	0.36	0	0	0	0	0	0	13.68	13.68
Westbrook Inverter Transfor	W_INVTR5	369725	4906574	2	0	0	77.3	77.3	1	492.27	3.25	0	64.84	0	-1.5	0	0	0.37	0	0	0	0	0	0	13.63	13.63
Inverter	MV1-7	364925	4905782	2	0	0	97.3	97.3	1	4909.8	3.25	0	84.82	0	0.63	0	0	18.45	0	0	0	0	0	0	-6.59	-6.59
Inverter	MV1-13	364731	4905241	2	0	0	97.3	97.3	1	5164.6	3.25	0	85.26	0	0.66	0	0	18.82	0	0	0	0	0	0	-7.43	-7.43
Westbrook Inverter Transfor	W_INVTR2	369368	4906388	2	0	0	77.3	77.3	1	544.49	3.25	0	65.72	0	-1.57	0	0	0.4	0	0	0	0	0	0	12.79	12.79
Inverter	MV3-2	368671	4907928	2	0	0	89.1	89.1	1	2168.55	3.25	0	77.72	0	0.95	0	0	8.32	0	0	0	0	0	0	2.07	2.07
Westbrook Inverter Transfor	W_INVTR1	369403	4906578	2	0	0	78.2	78.2	1	643.65	3.25	0	67.17	0	-1.67	0	0	0.46	0	0	0	0	0	0	12.28	12.28
Inverter	MV3-4	368502	4907925	2	0	0	89.1	89.1	1	2260.58	3.25	0	78.08	0	0.97	0	0	8.47	0	0	0	0	0	0	1.54	1.54
Inverter	MV3-5	368340	4907843	2	0	0	89.1	89.1	1	2295.92	3.25	0	78.22	0	0.98	0	0	8.52	0	0	0	0	0	0	1.34	1.34
Inverter	MV5-6	369982	4908507	2	0	0	89.1	89.1	1	2420.1	3.25	0	78.68	0	1.01	0	0	8.72	0	0	0	0	0	0	0.65	0.65
Fixed Reactor Bank 2	FRB2	369464	4908755	6	0	0	89.8	89.8	1	2687.36	5.25	0	79.59	0	-0.91	0	0	5.48	0	0	0	0	0	0	5.62	5.62
Inverter	MV4-15	369176	4908481	2	0	0	89.1	89.1	1	2475.59	3.25	0	78.87	0	1.02	0	0	8.81	0	0	0	0	0	0	0.36	0.36
Fixed Reactor Bank 1	FRB1	369378	4908755	6	0	0	89.8	89.8	1	2700.26	5.25	0	79.63	0	-0.91	0	0	5.5	0	0	0	0	0	0	5.56	5.56
Inverter	MV4-14	369176	4908507	2	0	0	89.1	89.1	1	2500.69	3.25	0	78.96	0	1.03	0	0	8.85	0	0	0	0	0	0	0.22	0.22
Inverter	MV3-1	368156	4907976	2	0	0	89.1	89.1	1	2516.95	3.25	0	79.02	0	1.03	0	0	8.87	0	0	0	0	0	0	0.14	0.14
Inverter	MV4-13	369051	4908605	2	0	0	89.1	89.1	1	2629.5	3.25	0	79.4	0	1.06	0	0	9.05	0	0	0	0	0	0	-0.44	-0.44
Inverter	MV4-12	369043	4908803	2	0	0	89.1	89.1	1	2821.53	3.25	0	80.01	0	1.1	0	0	9.34	0	0	0	0	0	0	-1.4	-1.4
Gardiner Substation	G_Sub	366586.3	4903349.9	2.5	0	0	90.8	90.8	1	4243.62	4.25	0	83.55	0	1.44	2.57	0.33	7.68	0	0	0	0	0	0	-4.48	-4.48
Inverter	MV2-2	365977	4906654	2	0	0	89.1	89.1	1	3888.82	3.25	0	82.8	0	1.36	0	0	10.93	0	0	0	0	0	0	-6.03	-6.03
Inverters	G_Inv2	366676.9	4903239.1	2	0	0	87.7	87.7	1	4248.48	3.25	0	83.56	0	2.81	0	0	5.14	0	0	0	0	0	0	-3.86	-3.86
Inverters	G_Inv4	366732.8	4903105	2	0	0	87.7	87.7	1	4299.29	3.25	0	83.67	0	2.82	0	0	5.2	0	0	0	0	0	0	-4.02	-4.02
Inverters	G_Inv6	366788.5	4902972	2	0	0	87.7	87.7	1	4353.7	3.25	0	83.78	0	2.82	0	0	5.25	0	0	0	0	0	0	-4.19	-4.19
Inverters	G_Inv1	366526.4	4903225.8	2	0	0	87.7	87.7	1	4369.88	3.25	0	83.81	0	2.82	0	0	5.27	0	0	0	0	0	0	-4.24	-4.24
Inverters	G_Inv8	366844.5	4902838.5	2	0	0	87.7	87.7	1	4412.33	3.25	0	83.89	0	2.82	0	0	5.32	0	0	0	0	0	0	-4.37	-4.37
Inverters	G_Inv3	366583.7	4903091.4	2	0	0	87.7	87.7	1	4416.97	3.25	0	83.9	0	2.82	0	0	5.32	0	0	0	0	0	0	-4.39	-4.39
Inverters	G_Inv5	366638.5	4902958.1	2	0	0	87.7	87.7	1	4469.35	3.25	0	84	0	2.83	0	0	5.38	0	0	0	0	0	0	-4.55	-4.55
Inverters	G_Inv10	366900.7	4902704.8	2	0	0	87.7	87.7	1	4474.89	3.25	0	84.02	0	2.83	0	0	5.38	0	0	0	0	0	0	-4.57	-4.57
Inverters	G_Inv7	366694.6	4902824.7	2	0	0	87.7	87.7	1	4524.89	3.25	0	84.11	0	2.83	0	0	5.44	0	0	0	0	0	0	-4.72	-4.72
Inverters	G_Inv9	366750.9	4902691.8	2	0	0	87.7	87.7	1	4583.83	3.25	0	84.22	0	2.84	0	0	5.5	0	0	0	0	0	0	-4.9	-4.9
Inverter	MV1-3	364440	4906039	2	0	0	89.1	89.1	1	5385.26	3.25	0	85.62	0	1.73	0	0	12.97	0	0	0	0	0	0	-11.27	-11.27
Inverter Transformer	MV6-4 T	370244	4906966	2	0	0	69.4	69.4	1	969.25	3.25	0	70.73	0	1.66	0	0	3.77	0	0	0	0	0	0	-6.8	-6.8
Inverter Transformer	MV6-1 T	370230	4907364	2	0	0	69.4	69.4	1	1334.92	3.25	0	73.51	0	1.9	0	0	4.24	0	0	0	0	0	0	-10.3	-10.3
Inverter Transformer	MV2-1 T	365836	4906816	2	0	0	69.4	69.4	1	4054.17	3.25	0	83.16	0	2.8	0	0	6.72	0	0	0	0	0	0	-23.32	-23.32
Inverter Transformer	MV1-14 T	365157	4905049	2	0	0	69.4	69.4	1	4783.1	3.25	0	84.59	0	2.97	0	0	7.24	0	0	0	0	0	0	-25.45	-25.45
Inverter Transformer	MV1-10 T	365010	4905564	2	0	0	69.4	69.4	1	4843.86	3.25	0	84.7	0	2.98	0	0	7.28	0	0	0	0	0	0	-25.61	-25.61
Inverter Transformer	MV1-7 T	364919	4905782	2	0	0	69.4	69.4	1	4915.79	3.25	0	84.83	0	3	0	0	7.33	0	0	0	0	0	0	-25.8	-25.8
Inverter Transformer	MV6-3 T	370202	4907140	2	0	0	56.1	56.1	1	1113.75	3.25	0	71.94	0	0.05	0	0	5.16	0	0	0	0	0	0	-21.09	-21.09
Inverter Transformer	MV1-13 T	364725	4905241	2	0	0	69.4	69.4	1	5170.51	3.25	0	85.27	0	3.05	0	0	7.49	0	0	0	0	0	0	-26.46	-26.46
Inverter Transformer	MV6-2 T	370091	4907339	2	0	0	56.1	56.1	1	1275.06	3.25	0	73.11	0	0.11	0	0	5.53	0	0	0	0	0	0	-22.69	-22.69
Inverter Transformer	MV3-22 T	368661	4907142	2	0	0	56.1	56.1	1	1567.61	3.25	0	74.9	0	0.23	0	0	6.16	0	0	0	0	0	0	-25.23	-25.23
Inverter Transformer	MV3-20 T	368683	4907317	2	0	0	56.1	56.1	1	1674.75	3.25	0	75.48	0	0.27	0	0	6.39	0	0	0	0	0	0	-26.08	-26.08
Inverter Transformer	MV3-21 T	368484	4907206	2	0	0	56.1	56.1	1	1743.35	3.25	0	75.83	0	0.3	0	0	6.53	0	0	0	0	0	0	-26.59	-26.59
Inverter Transformer	MV3-14 T	368678	4907498	2	0	0	56.1	56.1	1	1814.51	3.25	0	76.18	0	0.33	0	0	6.67	0	0	0	0	0	0	-27.12	-27.12
Inverter Transformer	MV3-16 T	368509	4907475	2	0	0	56.1	56.1	1	1909.07	3.25	0	76.62	0	0.37	0	0	6.86	0	0	0	0	0	0	-27.79	-27.79
Inverter Transformer	MV3-19 T	368352	4907347	2	0	0	56.1	56.1	1	1935.14	3.25	0	76.73	0	0.38	0	0	6.92	0	0	0	0	0	0	-27.97	-27.97
Inverter Transformer	MV3-8 T	368685	4907712	2	0	0	56.1	56.1	1	1980.91	3.25	0	76.94	0	0.4	0	0	7.01	0	0	0	0	0	0	-28.28	-28.28
Inverter Transformer	MV3-15 T	368351	4907477	2	0	0	56.1	56.1	1	2022.6	3.25	0	77.12	0	0.41	0	0	7.09	0	0	0	0	0	0	-28.56	-28.56
Inverter Transformer	MV3-9 T	368517	4907703	2	0	0	56.1	56.1	1	2075.14	3.25	0	77.34	0	0.44	0	0	7.19	0	0	0	0	0	0	-28.91	-28.91
Inverter Transformer	MV3-17 T	368183	4907472	2	0	0	56.1	56.1	1	2144.89	3.25	0	77.63	0	0.47	0	0	7.33	0	0	0	0	0	0	-29.36	-29.36
Inverter Transformer	MV3-11 T	368340	4907662	2	0	0	56.1	56.1	1	2161.05	3.25	0	77.69	0	0.47	0	0	7.36	0	0	0	0	0	0	-29.46	-29.46
Inverter Transformer	MV3-2 T	368677	4907928	2	0	0	56.1	56.1	1	2165.37	3.25	0	77.71	0	0.47	0	0	7.36	0	0	0	0	0	0	-29.49	-29.49
Inverter Transformer	MV3-4 T	368507	4907925	2	0	0	56.1	56.1	1	2257.66	3.25	0	78.07	0	0.51	0	0	7.54	0	0	0	0	0	0	-30.07	-30.07
Inverter Transformer	MV3-10 T	368162	4907669	2	0	0	56.1	56.1	1	2291.83	3.25	0	78.2	0	0.53	0	0	7.6	0	0	0	0	0	0	-30.28	-30.28
Inverter Transformer	MV3-5 T	368335	4907843	2	0	0	56.1	56.1	1	2299.15	3.25	0	78.23	0	0.53	0	0	7.62	0	0	0	0	0	0	-30.32	-30.32
Inverter Transformer	MV3-13 T	367958	4907577	2	0	0	56.1	56.1	1	2385.56	3.25	0	78.55	0	0.57	0	0	7.78	0	0	0	0	0	0	-30.84	-30.84
Inverter Transformer	MV3-6 T	368156	4907834	2	0	0	56.1	56.1	1	2412.49	3.25	0	78.65	0	0.58	0	0	7.83	0	0	0	0	0	0	-31	-31
Inverter Transformer	MV5-6 T	369987	4908507	2	0	0	56.1	56.1	1	2420.43	3.25	0	78.68	0	0.58	0	0	7.84	0	0	0	0	0	0	-31.05	-31.05
Inverter Transformer	MV3-18 T	367757	4907412	2	0	0	56.1	56.1	1	2453.37	3.25	0	78.8	0	0.6	0	0	7.9	0	0	0	0	0	0	-31.24	-31.24
Inverter Transformer	MV4-15 T	369170	4908481	2	0	0	56.1	56.1	1	2477.17	3.25	0	78.88	0	0.61	0	0	7.95	0	0	0	0	0	0	-31.38	-31.38

	Inverter Transformer	MV4-14 T	369182	4908507	2	0	0	56.1	56.1	1	2499.14	3.25	0	78.96	0	0.62	0	0	7.99	0	0	0	0	0	0	-31.5	-31.5
	Inverter Transformer	MV3-7 T	367951	4907754	2	0	0	56.1	56.1	1	2504.82	3.25	0	78.98	0	0.62	0	0	8	0	0	0	0	0	0	-31.53	-31.53
	Inverter Transformer	MV3-1 T	368150	4907976	2	0	0	56.1	56.1	1	2520.93	3.25	0	79.03	0	0.63	0	0	8.03	0	0	0	0	0	0	-31.63	-31.63
	Inverter Transformer	MV5-5 T	370021	4908690	2	0	0	56.1	56.1	1	2605.38	3.25	0	79.32	0	0.66	0	0	8.18	0	0	0	0	0	0	-32.1	-32.1
	Inverter Transformer	MV3-12 T	367674	4907594	2	0	0	56.1	56.1	1	2623.51	3.25	0	79.38	0	0.67	0	0	8.21	0	0	0	0	0	0	-32.2	-32.2
	Inverter Transformer	MV4-13 T	369057	4908605	2	0	0	56.1	56.1	1	2627.74	3.25	0	79.39	0	0.67	0	0	8.22	0	0	0	0	0	0	-32.22	-32.22
	Inverter Transformer	MV3-3 T	367944	4907927	2	0	0	56.1	56.1	1	2627.81	3.25	0	79.39	0	0.67	0	0	8.22	0	0	0	0	0	0	-32.22	-32.22
	Inverter Transformer	MV5-4 T	370330	4908707	2	0	0	56.1	56.1	1	2663.32	3.25	0	79.51	0	0.69	0	0	8.28	0	0	0	0	0	0	-32.42	-32.42
	Inverter Transformer	MV5-2 T	370011	4908853	2	0	0	56.1	56.1	1	2767.26	3.25	0	79.84	0	0.73	0	0	8.47	0	0	0	0	0	0	-32.98	-32.98
	Inverter Transformer	MV5-3 T	370237	4908851	2	0	0	56.1	56.1	1	2789.59	3.25	0	79.91	0	0.74	0	0	8.51	0	0	0	0	0	0	-33.1	-33.1
	Inverter Transformer	MV4-10 T	369307	4908858	2	0	0	56.1	56.1	1	2814.09	3.25	0	79.99	0	0.75	0	0	8.55	0	0	0	0	0	0	-33.23	-33.23
	Inverter Transformer	MV4-11 T	369269	4908855	2	0	0	56.1	56.1	1	2818.39	3.25	0	80	0	0.75	0	0	8.56	0	0	0	0	0	0	-33.25	-33.25
	Inverter Transformer	MV4-12 T	369049	4908803	2	0	0	56.1	56.1	1	2819.88	3.25	0	80	0	0.75	0	0	8.56	0	0	0	0	0	0	-33.26	-33.26
	Inverter Transformer	MV4-9 T	369284	4909001	2	0	0	56.1	56.1	1	2958.88	3.25	0	80.42	0	0.81	0	0	8.8	0	0	0	0	0	0	-33.97	-33.97
	Inverter Transformer	MV4-8 T	369262	4909001	2	0	0	56.1	56.1	1	2962.98	3.25	0	80.43	0	0.81	0	0	8.81	0	0	0	0	0	0	-34	-34
	Inverter Transformer	MV4-7 T	369040	4909001	2	0	0	56.1	56.1	1	3013.06	3.25	0	80.58	0	0.84	0	0	8.89	0	0	0	0	0	0	-34.25	-34.25
	Inverter Transformer	MV5-1 T	370015	4909142	2	0	0	56.1	56.1	1	3055.91	3.25	0	80.7	0	0.85	0	0	8.96	0	0	0	0	0	0	-34.46	-34.46
	Inverter Transformer	MV4-6 T	369249	4909192	2	0	0	56.1	56.1	1	3153.06	3.25	0	80.97	0	0.89	0	0	9.12	0	0	0	0	0	0	-34.94	-34.94
	Inverter Transformer	MV4-5 T	369283	4909199	2	0	0	56.1	56.1	1	3153.92	3.25	0	80.98	0	0.9	0	0	9.13	0	0	0	0	0	0	-34.94	-34.94
	Inverter Transformer	MV4-4 T	369033	4909199	2	0	0	56.1	56.1	1	3206.36	3.25	0	81.12	0	0.92	0	0	9.21	0	0	0	0	0	0	-35.19	-35.19
	Inverter Transformer	MV4-2 T	369267	4909397	2	0	0	56.1	56.1	1	3351.77	3.25	0	81.51	0	0.98	0	0	9.45	0	0	0	0	0	0	-35.88	-35.88
	Inverter Transformer	MV4-3 T	369234	4909397	2	0	0	56.1	56.1	1	3357.43	3.25	0	81.52	0	0.98	0	0	9.46	0	0	0	0	0	0	-35.9	-35.9
	Inverter Transformer	MV4-1 T	369017	4909397	2	0	0	56.1	56.1	1	3402.34	3.25	0	81.64	0	1	0	0	9.53	0	0	0	0	0	0	-36.11	-36.11
	Inverter Transformer	MV2-2 T	365982	4906654	2	0	0	56.1	56.1	1	3883.88	3.25	0	82.79	0	1.2	0	0	10.28	0	0	0	0	0	0	-38.21	-38.21
	Inverter Transformer	MV2-3 T	365814	4906641	2	0	0	56.1	56.1	1	4048.4	3.25	0	83.15	0	1.26	0	0	10.53	0	0	0	0	0	0	-38.88	-38.88
	Inverter Transformer	MV2-4 T	365590	4906628	2	0	0	56.1	56.1	1	4268.79	3.25	0	83.61	0	1.35	0	0	10.85	0	0	0	0	0	0	-39.75	-39.75
	Inverter Transformer	MV1-15 T	365309	4904994	2	0	0	56.1	56.1	1	4647.57	3.25	0	84.34	0	1.5	0	0	11.38	0	0	0	0	0	0	-41.16	-41.16
	Inverter Transformer	MV1-12 T	365044	4905386	2	0	0	56.1	56.1	1	4832.85	3.25	0	84.68	0	1.56	0	0	11.63	0	0	0	0	0	0	-41.82	-41.82
	Inverter Transformer	MV1-4 T	364821	4905918	2	0	0	56.1	56.1	1	5007.02	3.25	0	84.99	0	1.63	0	0	11.86	0	0	0	0	0	0	-42.42	-42.42
	Inverter Transformer	MV1-8 T	364782	4905647	2	0	0	56.1	56.1	1	5062.6	3.25	0	85.09	0	1.65	0	0	11.94	0	0	0	0	0	0	-42.61	-42.61
	Inverter Transformer	MV1-2 T	364759	4906063	2	0	0	56.1	56.1	1	5066.08	3.25	0	85.09	0	1.65	0	0	11.94	0	0	0	0	0	0	-42.63	-42.63
	Inverter Transformer	MV1-1 T	364721	4906166	2	0	0	56.1	56.1	1	5104.54	3.25	0	85.16	0	1.66	0	0	11.99	0	0	0	0	0	0	-42.75	-42.75
	Inverter Transformer	MV1-5 T	364676	4905892	2	0	0	56.1	56.1	1	5152.88	3.25	0	85.24	0	1.68	0	0	12.05	0	0	0	0	0	0	-42.92	-42.92
	Inverter Transformer	MV1-11 T	364649	4905414	2	0	0	56.1	56.1	1	5220.22	3.25	0	85.35	0	1.7	0	0	12.14	0	0	0	0	0	0	-43.14	-43.14
	Inverter Transformer	MV1-9 T	364555	4905646	2	0	0	56.1	56.1	1	5288.84	3.25	0	85.47	0	1.73	0	0	12.23	0	0	0	0	0	0	-43.37	-43.37
	Inverter Transformer	MV1-6 T	364482	4905835	2	0	0	56.1	56.1	1	5349.18	3.25	0	85.57	0	1.75	0	0	12.31	0	0	0	0	0	0	-43.56	-43.56
	Inverter Transformer	MV1-3 T	364435	4906039	2	0	0	56.1	56.1	1	5390.26	3.25	0	85.63	0	1.76	0	0	12.36	0	0	0	0	0	0	-43.69	-43.69
	Line Reactor	NGR	369421	4908787.5	5	0	0	45.4	45.4	1	2725.61	5.25	0	79.71	0	3.33	1.31	0.12	1.12	0	0	0	0	0	0	-40.12	-40.12
Limit. Valu	0	0																								
Level D/N:	36.1174	36.1174																								

Receiver: Existing Noise Receptor
ID: S-R145
X: 370306
Y: 4906505
Z: 4.5
Ground: 0

ISO	Description	ID	X	Y	Z	Ground	ReflOrd	LxT	LxN	L/A	Dist.	hm	Freq	Adiv	K0b	Agr	Abar	z	Aatm	Afol	Ahous	Cmet	CmetN	Dc	RL	LtotT	LtotN
	Sol_Luce Substation	S_Substation	369426	4908792	3.5	0	0	112.1	112.1	1	2450.46	5.25	0	78.78	0	0.13	3.58	0.33	5.11	0	0	0	0	0	0	24.47	24.47
	Inverter	MV6-3	370207	4907140	2	0	0	100.3	100.3	1	642.68	3.25	0	67.16	0	-0.45	0	0	9.45	0	0	0	0	0	0	24.16	24.16
	Inverter	MV6-2	370085	4907339	2	0	0	100.3	100.3	1	862.79	3.25	0	69.72	0	-0.32	0	0	10.43	0	0	0	0	0	0	20.48	20.48
	Inverter	MV6-1	370235	4907364	2	0	0	97.3	97.3	1	861.93	3.25	0	69.71	0	-0.32	0	0	10.42	0	0	0	0	0	0	17.5	17.5
	Westbrook Inverter Enclosur	W_INV6	369875	4906578	2	0	0	89.1	89.1	1	437.15	3.25	0	63.81	0	0.48	0	0	4.9	0	0	0	0	0	0	19.86	19.86
	Inverter	MV3-20	368689	4907317	2	0	0	100.3	100.3	1	1809.43	3.25	0	76.15	0	0.07	0	0	13.05	0	0	0	0	0	0	11.04	11.04
	SubstationTransformer	W_ST	369711.17	4906112.3	2.5	0	0	92	92	1	712.79	4.24	0	68.06	0	0.38	3.55	0.23	1.91	0	0	0	0	0	0	18.06	18.06
	Inverter	MV3-14	368684	4907498	2	0	0	100.3	100.3	1	1901.83	3.25	0	76.58	0	0.1	0	0	13.25	0	0	0	0	0	0	10.38	10.38
	Westbrook Inverter Enclosur	W_INV7	369780	4906417	2	0	0	89.1	89.1	1	533.32	3.25	0	65.54	0	0.54	0	0	5.25	0	0	0	0	0	0	17.72	17.72
	Inverter	MV3-21	368478	4907206	2	0	0	100.3	100.3	1	1957.8	3.25	0	76.84	0	0.12	0	0	13.37	0	0	0	0	0	0	9.99	9.99
	Inverter	MV3-8	368680	4907712	2	0	0	100.3	100.3	1	2025.03	3.25	0	77.13	0	0.14	0	0	13.51	0	0	0	0	0	0	9.53	9.53
	Inverter	MV3-16	368514	4907475	2	0	0	100.3	100.3	1	2037.69	3.25	0	77.18	0	0.14	0	0	13.54	0	0	0	0	0	0	9.45	9.45
	Inverter	MV3-19	368357	4907347	2	0	0	100.3	100.3	1	2123.1	3.25	0	77.54	0	0.16	0	0	13.72	0	0	0	0	0	0	8.89	8.89
	Inverter	MV3-9	368512	4907703	2	0	0	100.3	100.3	1	2157.23	3.25	0	77.68	0	0.17	0	0	13.79	0	0	0	0	0	0	8.67	8.67
	Westbrook Inverter Enclosur	W_INV5	369719	4906574	2	0	0	89.1	89.1	1	591.05	3.25	0	66.43	0	0.57	0	0	5.43	0	0	0	0	0	0	16.63	16.63
	Inverter	MV3-15	368357	4907477	2	0	0	100.3	100.3	1	2177.93	3.25	0	77.76	0	0.18	0	0	13.83	0	0	0	0	0	0	8.54	8.54
	Inverter	MV5-4	370324	4908707	2	0	0	100.3	100.3	1	2202.07	3.25	0	77.86	0	0.18	0	0	13.88	0	0	0	0	0	0	8.39	8.39
	Inverter	MV5-5	370015	4908690	2	0	0	100.3	100.3	1	2204.29	3.25	0	77.87	0	0.18	0	0	13.88	0	0	0	0	0	0	8.38	8.38
	Inverter	MV3-11	368346	4907662	2	0	0	100.3	100.3	1	2276.02	3.25	0	78.14	0	0.2	0	0	14.02	0	0	0	0	0	0	7.94	7.94
	Inverter	MV3-17	368178	4907472	2	0	0	100.3	100.3	1	2337.41	3.25	0	78.37	0	0.22	0	0	14.15	0	0	0	0	0	0	7.57	7.57
	Inverter	MV5-3	370231	4908851	2	0	0	100.3	100.3	1	2347.2	3.25	0	78.41	0	0.22	0	0	14.16	0	0	0	0	0	0	7.52	7.52
	Inverter	MV5-2	370006	4908853	2	0	0	100.3	100.3	1	2367.09	3.25	0	78.48	0	0.23	0	0	14.2	0	0	0	0	0	0	7.4	7.4
	Inverter	MV6-4	370250	4906966	2	0	0	86.1	86.1	1	464.4	3.25	0	64.34	0	0.5	0	0	5.01	0	0	0	0	0	0	16.2	16.2
	Inverter	MV3-10	368167	4907669	2	0	0	100.3	100.3	1	2435.2	3.25	0	78.73	0	0.24	0	0	14.33	0	0	0	0	0	0	7	7
	Inverter	MV3-6	368162	4907834	2	0	0	100.3	100.3	1	2522.5	3.25	0	79.04	0	0.26	0	0	14.5	0	0	0	0	0	0	6.51	6.51

Inverter	MV4-10	369312	4908858	2	0	0	100.3	100.3	1	2554.34	3.25	0	79.15	0	0.27	0	0	14.56	0	0	0	0	0	0	6.34	6.34
Inverter	MV4-11	369264	4908855	2	0	0	100.3	100.3	1	2570.66	3.25	0	79.2	0	0.27	0	0	14.59	0	0	0	0	0	0	6.25	6.25
Inverter	MV3-13	367963	4907577	2	0	0	100.3	100.3	1	2576.59	3.25	0	79.22	0	0.27	0	0	14.6	0	0	0	0	0	0	6.21	6.21
Westbrook Inverter Enclosur	W_INV4	369673	4906164	2	0	0	89.1	89.1	1	719.01	3.25	0	68.13	0	0.62	0	0	5.74	0	0	0	0	0	0	14.56	14.56
Inverter	MV5-1	370020	4909142	2	0	0	100.3	100.3	1	2652.47	3.25	0	79.47	0	0.29	0	0	14.74	0	0	0	0	0	0	5.8	5.8
Inverter	MV3-7	367945	4907754	2	0	0	100.3	100.3	1	2671.02	3.25	0	79.53	0	0.3	0	0	14.78	0	0	0	0	0	0	5.71	5.71
Inverter	MV4-9	369289	4909001	2	0	0	100.3	100.3	1	2695.24	3.25	0	79.61	0	0.3	0	0	14.82	0	0	0	0	0	0	5.58	5.58
Inverter	MV4-8	369256	4909001	2	0	0	100.3	100.3	1	2707.86	3.25	0	79.65	0	0.3	0	0	14.85	0	0	0	0	0	0	5.51	5.51
Inverter	MV3-18	367752	4907412	2	0	0	100.3	100.3	1	2710.27	3.25	0	79.66	0	0.3	0	0	14.85	0	0	0	0	0	0	5.5	5.5
Inverter	MV3-3	367939	4907927	2	0	0	100.3	100.3	1	2761.3	3.25	0	79.82	0	0.31	0	0	14.94	0	0	0	0	0	0	5.23	5.23
Inverter	MV4-7	369035	4909001	2	0	0	100.3	100.3	1	2800.98	3.25	0	79.95	0	0.32	0	0	15.02	0	0	0	0	0	0	5.03	5.03
Inverter	MV3-12	367668	4907594	2	0	0	100.3	100.3	1	2853.94	3.25	0	80.11	0	0.33	0	0	15.11	0	0	0	0	0	0	4.76	4.76
Inverter	MV4-5	369289	4909199	2	0	0	100.3	100.3	1	2879.57	3.25	0	80.19	0	0.34	0	0	15.16	0	0	0	0	0	0	4.63	4.63
Inverter	MV4-6	369243	4909192	2	0	0	100.3	100.3	1	2889.63	3.25	0	80.22	0	0.34	0	0	15.18	0	0	0	0	0	0	4.58	4.58
Inverter	MV4-4	369027	4909199	2	0	0	100.3	100.3	1	2982.19	3.25	0	80.49	0	0.36	0	0	15.34	0	0	0	0	0	0	4.12	4.12
Inverter	MV4-2	369272	4909397	2	0	0	100.3	100.3	1	3071.29	3.25	0	80.75	0	0.38	0	0	15.5	0	0	0	0	0	0	3.69	3.69
Inverter	MV4-3	369229	4909397	2	0	0	100.3	100.3	1	3086.03	3.25	0	80.79	0	0.38	0	0	15.52	0	0	0	0	0	0	3.62	3.62
Inverter	MV4-1	369011	4909397	2	0	0	100.3	100.3	1	3168.71	3.25	0	81.02	0	0.39	0	0	15.67	0	0	0	0	0	0	3.23	3.23
Westbrook Inverter Enclosur	W_INV3	369508	4906164	2	0	0	89.1	89.1	1	867.81	3.25	0	69.77	0	0.66	0	0	6.06	0	0	0	0	0	0	12.57	12.57
Westbrook Inverter Enclosur	W_INV2	369374	4906388	2	0	0	89.1	89.1	1	939.32	3.25	0	70.46	0	0.67	0	0	6.2	0	0	0	0	0	0	11.73	11.73
DSTATCOM - 10 MVAR #1	DSAT1	369437	4908757	2.5	0	0	96.6	96.6	1	2413.85	3.5	0	78.65	0	3.31	0	0	1.97	0	0	0	0	0	0	12.71	12.71
DSTATCOM - 10 MVAR #2	DSAT2	369403	4908757	2.5	0	0	96.6	96.6	1	2426.3	3.5	0	78.7	0	3.31	0	0	1.97	0	0	0	0	0	0	12.65	12.65
Inverter	MV2-3	365820	4906641	2	0	0	100.3	100.3	1	4488.06	3.25	0	84.04	0	0.59	0	0	17.81	0	0	0	0	0	0	-2.13	-2.13
Westbrook Inverter Enclosur	W_INV1	369409	4906578	2	0	0	86.1	86.1	1	899.97	3.25	0	70.08	0	0.66	0	0	6.12	0	0	0	0	0	0	9.19	9.19
Inverter	MV2-4	365586	4906624	2	0	0	100.3	100.3	1	4721.5	3.25	0	84.48	0	0.62	0	0	18.17	0	0	0	0	0	0	-2.95	-2.95
Inverter	MV1-15	365315	4904994	2	0	0	100.3	100.3	1	5214.71	3.25	0	85.34	0	0.66	0	0	18.89	0	0	0	0	0	0	-4.59	-4.59
Inverter	MV1-12	365038	4905386	2	0	0	100.3	100.3	1	5385.54	3.25	0	85.62	0	0.67	0	0	19.14	0	0	0	0	0	0	-5.12	-5.12
Inverter	MV1-4	364815	4905918	2	0	0	100.3	100.3	1	5522.29	3.25	0	85.84	0	0.68	0	0	19.33	0	0	0	0	0	0	-5.54	-5.54
Inverter	MV1-2	364753	4906063	2	0	0	100.3	100.3	1	5570.56	3.25	0	85.92	0	0.68	0	0	19.4	0	0	0	0	0	0	-5.69	-5.69
Inverter	MV1-8	364788	4905647	2	0	0	100.3	100.3	1	5584.31	3.25	0	85.94	0	0.69	0	0	19.42	0	0	0	0	0	0	-5.73	-5.73
Inverter	MV1-1	364715	4906166	2	0	0	100.3	100.3	1	5601.27	3.25	0	85.97	0	0.69	0	0	19.44	0	0	0	0	0	0	-5.78	-5.78
Inverter	MV1-5	364671	4905892	2	0	0	100.3	100.3	1	5668.24	3.25	0	86.07	0	0.69	0	0	19.54	0	0	0	0	0	0	-5.98	-5.98
Inverter	MV1-11	364655	4905414	2	0	0	100.3	100.3	1	5755.35	3.25	0	86.2	0	0.69	0	0	19.66	0	0	0	0	0	0	-6.24	-6.24
Inverter	MV1-9	364561	4905646	2	0	0	100.3	100.3	1	5808.86	3.25	0	86.28	0	0.7	0	0	19.73	0	0	0	0	0	0	-6.4	-6.4
Inverter	MV1-6	364477	4905835	2	0	0	100.3	100.3	1	5867.38	3.25	0	86.37	0	0.7	0	0	19.81	0	0	0	0	0	0	-6.57	-6.57
Westbrook Inverter Transfor	W_INVTR6	369881	4906578	2	0	0	77.3	77.3	1	431.23	3.25	0	63.69	0	-1.4	0	0	0.33	0	0	0	0	0	0	14.72	14.72
Inverter	MV2-1	365842	4906816	2	0	0	97.3	97.3	1	4474.82	3.25	0	84.02	0	0.59	0	0	17.79	0	0	0	0	0	0	-5.08	-5.08
Inverter	MV3-22	368656	4907142	2	0	0	89.1	89.1	1	1768.69	3.25	0	75.95	0	0.85	0	0	7.66	0	0	0	0	0	0	4.59	4.59
Inverter	MV5-6	369982	4908507	2	0	0	89.1	89.1	1	2028.05	3.25	0	77.14	0	0.91	0	0	8.09	0	0	0	0	0	0	2.91	2.91
Westbrook Inverter Transfor	W_INVTR7	369786	4906417	2	0	0	77.3	77.3	1	527.4	3.25	0	65.44	0	-1.55	0	0	0.39	0	0	0	0	0	0	13.06	13.06
Inverter	MV1-14	365163	4905049	2	0	0	97.3	97.3	1	5345.13	3.25	0	85.56	0	0.67	0	0	19.08	0	0	0	0	0	0	-8	-8
Inverter	MV1-10	365004	4905564	2	0	0	97.3	97.3	1	5384.86	3.25	0	85.62	0	0.67	0	0	19.14	0	0	0	0	0	0	-8.12	-8.12
Inverter	MV1-7	364925	4905782	2	0	0	97.3	97.3	1	5429.36	3.25	0	85.69	0	0.68	0	0	19.2	0	0	0	0	0	0	-8.26	-8.26
Inverter	MV3-2	368671	4907928	2	0	0	89.1	89.1	1	2167.52	3.25	0	77.72	0	0.95	0	0	8.32	0	0	0	0	0	0	2.08	2.08
Inverter	MV1-13	364731	4905241	2	0	0	97.3	97.3	1	5716.5	3.25	0	86.14	0	0.69	0	0	19.6	0	0	0	0	0	0	-9.13	-9.13
Fixed Reactor Bank 2	FRB2	369464	4908755	6	0	0	89.8	89.8	1	2402.39	5.25	0	78.61	0	-0.95	0	0	5.03	0	0	0	0	0	0	7.08	7.08
Fixed Reactor Bank 1	FRB1	369378	4908755	6	0	0	89.8	89.8	1	2433.86	5.25	0	78.73	0	-0.95	0	0	5.08	0	0	0	0	0	0	6.91	6.91
Westbrook Inverter Transfor	W_INVTR5	369725	4906574	2	0	0	77.3	77.3	1	585.09	3.25	0	66.34	0	-1.61	0	0	0.43	0	0	0	0	0	0	12.18	12.18
Inverter	MV4-15	369176	4908481	2	0	0	89.1	89.1	1	2276.29	3.25	0	78.14	0	0.97	0	0	8.49	0	0	0	0	0	0	1.45	1.45
Inverter	MV3-4	368502	4907925	2	0	0	89.1	89.1	1	2295.83	3.25	0	78.22	0	0.98	0	0	8.52	0	0	0	0	0	0	1.34	1.34
Inverter	MV4-14	369176	4908507	2	0	0	89.1	89.1	1	2298.89	3.25	0	78.23	0	0.98	0	0	8.53	0	0	0	0	0	0	1.32	1.32
Inverter	MV3-5	368340	4907843	2	0	0	89.1	89.1	1	2378.11	3.25	0	78.52	0	1	0	0	8.65	0	0	0	0	0	0	0.88	0.88
Inverter	MV4-13	369051	4908605	2	0	0	89.1	89.1	1	2446.43	3.25	0	78.77	0	1.01	0	0	8.76	0	0	0	0	0	0	0.51	0.51
Inverter	MV3-1	368156	4907976	2	0	0	89.1	89.1	1	2605.06	3.25	0	79.32	0	1.05	0	0	9.01	0	0	0	0	0	0	-0.32	-0.32
Inverter	MV4-12	369043	4908803	2	0	0	89.1	89.1	1	2622.21	3.25	0	79.37	0	1.06	0	0	9.04	0	0	0	0	0	0	-0.41	-0.41
Westbrook Inverter Transfor	W_INVTR4	369679	4906164	2	0	0	77.3	77.3	1	713.73	3.25	0	68.07	0	-1.73	0	0	0.51	0	0	0	0	0	0	10.5	10.5
Westbrook Inverter Transfor	W_INVTR1	369403	4906578	2	0	0	78.2	78.2	1	905.95	3.25	0	70.14	0	-1.87	0	0	0.62	0	0	0	0	0	0	9.35	9.35
Westbrook Inverter Transfor	W_INVTR3	369514	4906164	2	0	0	77.3	77.3	1	862.29	3.25	0	69.71	0	-1.84	0	0	0.6	0	0	0	0	0	0	8.87	8.87
Westbrook Inverter Transfor	W_INVTR2	369368	4906388	2	0	0	77.3	77.3	1	945.27	3.25	0	70.51	0	-1.9	0	0	0.65	0	0	0	0	0	0	8.08	8.08
Gardiner Substation	G_Sub	366586.3	4903349.9	2.5	0	0	90.8	90.8	1	4877.58	4.25	0	84.76	0	1.61	2.38	0.33	8.47	0	0	0	0	0	0	-6.46	-6.46
Inverter	MV2-2	365977	4906654	2	0	0	89.1	89.1	1	4331.56	3.25	0	83.73	0	1.47	0	0	11.55	0	0	0	0	0	0	-7.7	-7.7
Inverter Transformer	MV6-4 T	370244	4906966	2	0	0	69.4	69.4	1	465.16	3.25	0	64.35	0	0.99	0	0	2.87	0	0	0	0	0	0	1.13	1.13
Inverters	G_Inv2	366676.9	4903239.1	2	0	0	87.7	87.7	1	4882.26	3.25	0	84.77	0	2.86	0	0	5.82	0	0	0	0	0	0	-5.79	-5.79
Inverters	G_Inv4	366732.8	4903105	2	0	0	87.7	87.7	1	4932.32	3.25	0	84.86	0	2.86	0	0	5.87	0	0	0	0	0	0	-5.93	-5.93
Inverters	G_Inv6	366788.5	4902972	2	0	0	87.7	87.7	1	4985.47	3.25	0	84.95	0	2.86	0	0	5.92	0	0	0	0	0	0	-6.08	-6.08
Inverters	G_Inv1	366526.4	4903225.8	2	0	0	87.7	87.7	1	5003.85	3.25	0	84.99	0	2.87	0	0	5.94	0	0	0	0	0	0	-6.14	-6.14
Inverter	MV1-3	364440	4906039	2	0	0	89.1	89.1	1	5884.48	3.25	0	86.39	0	1.86	0	0	13.62	0	0	0	0	0	0	-12.81	-12.81
Inverters	G_Inv8	366844.5	4902838.5	2	0	0	87.7	87.7	1	5042.34	3.25	0	85.05	0	2.87	0	0	5.98	0	0	0	0	0	0	-6.24	-6.24
Inverters	G_Inv3	366583.7	4903091.4	2	0	0	87.7	87.7	1	5050.56	3.25	0	85.07	0	2.87	0	0	5.99	0	0	0	0	0	0	-6.27	-6.27
Inverters	G_Inv5	366638.5	4902958.1	2	0	0	87.7	87.7	1	5102.06	3.25	0	85.15	0	2.87	0	0	6.05	0	0	0	0	0	0	-6.41	-6.41
Inverters	G_Inv10	366900.7	4902704.8	2	0	0	87.7	87.7	1	5102.7	3.25	0	85.16	0	2.87	0	0	6.05	0	0	0	0	0	0	-6.41	-6.41
Inverters	G_Inv7	366694.6	4902824.7	2	0	0	87.7	87.7	1	5156.24	3.25	0	85.25	0	2.87	0	0	6.1	0	0	0	0	0	0	-6.56	-6.56
Inverters	G_Inv9	366750.9	4902691.8	2	0	0	87.7	87.7	1	5213.37	3.25	0	85.34	0	2.88	0	0	6.16	0	0	0	0	0	0	-6.72	-6.72
Inverter Transformer	MV6-1 T	370230	4907364	2	0	0	69.4	69.4	1	862.36	3.25	0	69.71	0	1.56	0	0	3.61	0	0	0	0	0	0	-5.53	-5.53

Inverter Transformer	MV6-3 T	370202	4907140	2	0	0	56.1	56.1	1	643.47	3.25	0	67.17	0	-0.09	0	0	3.98	0	0	0	0	0	0	-15	-15
Inverter Transformer	MV6-2 T	370091	4907339	2	0	0	56.1	56.1	1	861.27	3.25	0	69.7	0	-0.03	0	0	4.55	0	0	0	0	0	0	-18.16	-18.16
Inverter Transformer	MV2-1 T	365836	4906816	2	0	0	69.4	69.4	1	4480.81	3.25	0	84.03	0	2.9	0	0	7.03	0	0	0	0	0	0	-24.6	-24.6
Inverter Transformer	MV1-14 T	365157	4905049	2	0	0	69.4	69.4	1	5350.9	3.25	0	85.57	0	3.08	0	0	7.61	0	0	0	0	0	0	-26.91	-26.91
Inverter Transformer	MV1-10 T	365010	4905564	2	0	0	69.4	69.4	1	5378.95	3.25	0	85.61	0	3.08	0	0	7.63	0	0	0	0	0	0	-26.98	-26.98
Inverter Transformer	MV1-7 T	364919	4905782	2	0	0	69.4	69.4	1	5435.3	3.25	0	85.7	0	3.1	0	0	7.67	0	0	0	0	0	0	-27.12	-27.12
Inverter Transformer	MV1-13 T	364725	4905241	2	0	0	69.4	69.4	1	5722.35	3.25	0	86.15	0	3.14	0	0	7.85	0	0	0	0	0	0	-27.79	-27.79
Inverter Transformer	MV3-22 T	368661	4907142	2	0	0	56.1	56.1	1	1764.03	3.25	0	75.93	0	0.31	0	0	6.57	0	0	0	0	0	0	-26.75	-26.75
Inverter Transformer	MV3-20 T	368683	4907317	2	0	0	56.1	56.1	1	1814.79	3.25	0	76.18	0	0.33	0	0	6.67	0	0	0	0	0	0	-27.12	-27.12
Inverter Transformer	MV3-14 T	368678	4907498	2	0	0	56.1	56.1	1	1906.95	3.25	0	76.61	0	0.36	0	0	6.86	0	0	0	0	0	0	-27.77	-27.77
Inverter Transformer	MV3-21 T	368484	4907206	2	0	0	56.1	56.1	1	1952.2	3.25	0	76.81	0	0.38	0	0	6.95	0	0	0	0	0	0	-28.09	-28.09
Inverter Transformer	MV3-8 T	368685	4907712	2	0	0	56.1	56.1	1	2021.01	3.25	0	77.11	0	0.41	0	0	7.08	0	0	0	0	0	0	-28.55	-28.55
Inverter Transformer	MV5-6 T	369987	4908507	2	0	0	56.1	56.1	1	2027.26	3.25	0	77.14	0	0.42	0	0	7.1	0	0	0	0	0	0	-28.59	-28.59
Inverter Transformer	MV3-16 T	368509	4907475	2	0	0	56.1	56.1	1	2042.09	3.25	0	77.2	0	0.42	0	0	7.13	0	0	0	0	0	0	-28.69	-28.69
Inverter Transformer	MV3-19 T	368352	4907347	2	0	0	56.1	56.1	1	2127.7	3.25	0	77.56	0	0.46	0	0	7.29	0	0	0	0	0	0	-29.25	-29.25
Inverter Transformer	MV3-9 T	368517	4907703	2	0	0	56.1	56.1	1	2153.07	3.25	0	77.66	0	0.47	0	0	7.34	0	0	0	0	0	0	-29.41	-29.41
Inverter Transformer	MV3-2 T	368677	4907928	2	0	0	56.1	56.1	1	2163	3.25	0	77.7	0	0.47	0	0	7.36	0	0	0	0	0	0	-29.48	-29.48
Inverter Transformer	MV3-15 T	368351	4907477	2	0	0	56.1	56.1	1	2183.3	3.25	0	77.78	0	0.48	0	0	7.4	0	0	0	0	0	0	-29.6	-29.6
Inverter Transformer	MV5-4 T	370330	4908707	2	0	0	56.1	56.1	1	2202.13	3.25	0	77.86	0	0.49	0	0	7.43	0	0	0	0	0	0	-29.72	-29.72
Inverter Transformer	MV5-5 T	370021	4908690	2	0	0	56.1	56.1	1	2203.51	3.25	0	77.86	0	0.49	0	0	7.44	0	0	0	0	0	0	-29.73	-29.73
Inverter Transformer	MV4-15 T	369170	4908481	2	0	0	56.1	56.1	1	2279.27	3.25	0	78.16	0	0.52	0	0	7.58	0	0	0	0	0	0	-30.2	-30.2
Inverter Transformer	MV3-11 T	368340	4907662	2	0	0	56.1	56.1	1	2281.19	3.25	0	78.16	0	0.52	0	0	7.58	0	0	0	0	0	0	-30.21	-30.21
Inverter Transformer	MV3-4 T	368507	4907925	2	0	0	56.1	56.1	1	2291.9	3.25	0	78.2	0	0.53	0	0	7.6	0	0	0	0	0	0	-30.28	-30.28
Inverter Transformer	MV4-14 T	369182	4908507	2	0	0	56.1	56.1	1	2295.95	3.25	0	78.22	0	0.53	0	0	7.61	0	0	0	0	0	0	-30.3	-30.3
Inverter Transformer	MV3-17 T	368183	4907472	2	0	0	56.1	56.1	1	2332.86	3.25	0	78.36	0	0.55	0	0	7.68	0	0	0	0	0	0	-30.53	-30.53
Inverter Transformer	MV5-3 T	370237	4908851	2	0	0	56.1	56.1	1	2347.02	3.25	0	78.41	0	0.55	0	0	7.71	0	0	0	0	0	0	-30.61	-30.61
Inverter Transformer	MV5-2 T	370011	4908853	2	0	0	56.1	56.1	1	2366.46	3.25	0	78.48	0	0.56	0	0	7.74	0	0	0	0	0	0	-30.73	-30.73
Inverter Transformer	MV3-5 T	368335	4907843	2	0	0	56.1	56.1	1	2382.25	3.25	0	78.54	0	0.57	0	0	7.77	0	0	0	0	0	0	-30.82	-30.82
Inverter Transformer	MV3-10 T	368162	4907669	2	0	0	56.1	56.1	1	2439.6	3.25	0	78.75	0	0.59	0	0	7.88	0	0	0	0	0	0	-31.16	-31.16
Inverter Transformer	MV4-13 T	369057	4908605	2	0	0	56.1	56.1	1	2443.36	3.25	0	78.76	0	0.59	0	0	7.89	0	0	0	0	0	0	-31.18	-31.18
Inverter Transformer	MV3-6 T	368156	4907834	2	0	0	56.1	56.1	1	2527.6	3.25	0	79.05	0	0.63	0	0	8.04	0	0	0	0	0	0	-31.66	-31.66
Inverter Transformer	MV4-10 T	369307	4908858	2	0	0	56.1	56.1	1	2556.29	3.25	0	79.15	0	0.64	0	0	8.09	0	0	0	0	0	0	-31.83	-31.83
Inverter Transformer	MV4-11 T	369269	4908855	2	0	0	56.1	56.1	1	2568.63	3.25	0	79.19	0	0.65	0	0	8.11	0	0	0	0	0	0	-31.9	-31.9
Inverter Transformer	MV3-13 T	367958	4907577	2	0	0	56.1	56.1	1	2581.14	3.25	0	79.24	0	0.65	0	0	8.14	0	0	0	0	0	0	-31.97	-31.97
Inverter Transformer	MV3-1 T	368150	4907976	2	0	0	56.1	56.1	1	2610.02	3.25	0	79.33	0	0.66	0	0	8.19	0	0	0	0	0	0	-32.13	-32.13
Inverter Transformer	MV4-12 T	369049	4908803	2	0	0	56.1	56.1	1	2619.32	3.25	0	79.36	0	0.67	0	0	8.2	0	0	0	0	0	0	-32.18	-32.18
Inverter Transformer	MV5-1 T	370015	4909142	2	0	0	56.1	56.1	1	2653.01	3.25	0	79.47	0	0.68	0	0	8.27	0	0	0	0	0	0	-32.36	-32.36
Inverter Transformer	MV3-7 T	367951	4907754	2	0	0	56.1	56.1	1	2665.71	3.25	0	79.52	0	0.69	0	0	8.29	0	0	0	0	0	0	-32.43	-32.43
Inverter Transformer	MV4-9 T	369284	4909001	2	0	0	56.1	56.1	1	2697.13	3.25	0	79.62	0	0.7	0	0	8.34	0	0	0	0	0	0	-32.6	-32.6
Inverter Transformer	MV4-8 T	369262	4909001	2	0	0	56.1	56.1	1	2705.54	3.25	0	79.65	0	0.7	0	0	8.36	0	0	0	0	0	0	-32.65	-32.65
Inverter Transformer	MV3-18 T	367757	4907412	2	0	0	56.1	56.1	1	2705.56	3.25	0	79.65	0	0.7	0	0	8.36	0	0	0	0	0	0	-32.65	-32.65
Inverter Transformer	MV3-3 T	367944	4907927	2	0	0	56.1	56.1	1	2757.02	3.25	0	79.81	0	0.73	0	0	8.45	0	0	0	0	0	0	-32.93	-32.93
Inverter Transformer	MV4-7 T	369040	4909001	2	0	0	56.1	56.1	1	2798.71	3.25	0	79.94	0	0.74	0	0	8.52	0	0	0	0	0	0	-33.15	-33.15
Inverter Transformer	MV3-12 T	367674	4907594	2	0	0	56.1	56.1	1	2848.39	3.25	0	80.09	0	0.77	0	0	8.61	0	0	0	0	0	0	-33.41	-33.41
Inverter Transformer	MV4-5 T	369283	4909199	2	0	0	56.1	56.1	1	2881.7	3.25	0	80.19	0	0.78	0	0	8.67	0	0	0	0	0	0	-33.58	-33.58
Inverter Transformer	MV4-6 T	369249	4909192	2	0	0	56.1	56.1	1	2887.43	3.25	0	80.21	0	0.78	0	0	8.68	0	0	0	0	0	0	-33.61	-33.61
Inverter Transformer	MV4-4 T	369033	4909199	2	0	0	56.1	56.1	1	2979.63	3.25	0	80.48	0	0.82	0	0	8.83	0	0	0	0	0	0	-34.08	-34.08
Inverter Transformer	MV4-2 T	369267	4909397	2	0	0	56.1	56.1	1	3072.98	3.25	0	80.75	0	0.86	0	0	8.99	0	0	0	0	0	0	-34.54	-34.54
Inverter Transformer	MV4-3 T	369234	4909397	2	0	0	56.1	56.1	1	3084.29	3.25	0	80.78	0	0.87	0	0	9.01	0	0	0	0	0	0	-34.6	-34.6
Inverter Transformer	MV4-1 T	369017	4909397	2	0	0	56.1	56.1	1	3166.26	3.25	0	81.01	0	0.9	0	0	9.15	0	0	0	0	0	0	-35	-35
Inverter Transformer	MV2-2 T	365982	4906654	2	0	0	56.1	56.1	1	4326.57	3.25	0	83.72	0	1.37	0	0	10.93	0	0	0	0	0	0	-39.97	-39.97
Inverter Transformer	MV2-3 T	365814	4906641	2	0	0	56.1	56.1	1	4494.06	3.25	0	84.05	0	1.44	0	0	11.17	0	0	0	0	0	0	-40.6	-40.6
Inverter Transformer	MV2-4 T	365590	4906628	2	0	0	56.1	56.1	1	4717.6	3.25	0	84.47	0	1.52	0	0	11.48	0	0	0	0	0	0	-41.41	-41.41
Inverter Transformer	MV1-15 T	365309	4904994	2	0	0	56.1	56.1	1	5220.45	3.25	0	85.35	0	1.7	0	0	12.14	0	0	0	0	0	0	-43.14	-43.14
Inverter Transformer	MV1-12 T	365044	4905386	2	0	0	56.1	56.1	1	5379.67	3.25	0	85.62	0	1.76	0	0	12.34	0	0	0	0	0	0	-43.66	-43.66
Inverter Transformer	MV1-4 T	364821	4905918	2	0	0	56.1	56.1	1	5516.32	3.25	0	85.83	0	1.81	0	0	12.52	0	0	0	0	0	0	-44.1	-44.1
Inverter Transformer	MV1-2 T	364759	4906063	2	0	0	56.1	56.1	1	5564.58	3.25	0	85.91	0	1.82	0	0	12.58	0	0	0	0	0	0	-44.25	-44.25
Inverter Transformer	MV1-8 T	364782	4905647	2	0	0	56.1	56.1	1	5590.24	3.25	0	85.95	0	1.83	0	0	12.61	0	0	0	0	0	0	-44.33	-44.33
Inverter Transformer	MV1-1 T	364721	4906166	2	0	0	56.1	56.1	1	5595.28	3.25	0	85.96	0	1.83	0	0	12.61	0	0	0	0	0	0	-44.34	-44.34
Inverter Transformer	MV1-5 T	364676	4905892	2	0	0	56.1	56.1	1	5663.27	3.25	0	86.06	0	1.86	0	0	12.7	0	0	0	0	0	0	-44.56	-44.56
Inverter Transformer	MV1-11 T	364649	4905414	2	0	0	56.1	56.1	1	5761.24	3.25	0	86.21	0	1.89	0	0	12.82	0	0	0	0	0	0	-44.86	-44.86
Inverter Transformer	MV1-9 T	364555	4905646	2	0	0	56.1	56.1	1	5814.8	3.25	0	86.29	0	1.91	0	0	12.88	0	0	0	0	0	0	-45.02	-45.02
Inverter Transformer	MV1-6 T	364482	4905835	2	0	0	56.1	56.1	1	5862.41	3.25	0	86.36	0	1.92	0	0	12.94	0	0	0	0	0	0	-45.16	-45.16
Inverter Transformer	MV1-3 T	364435	4906039	2	0	0	56.1	56.1	1	5889.47	3.25	0	86.4	0	1.93	0	0	12.97	0	0	0	0	0	0	-45.24	-45.24
Line Reactor	NGR	369421	4908787.5	5	0	0	45.4	45.4	1	2448.07	5.25	0	78.78	0	3.35	1.3	0.11	1	0	0	0	0	0	0	-39.07	-39.07
Limit. Valu 0	0																								
Level D/N: 31.5611	31.5611																								

Receiver: Existing Noise Receptor
ID: S-R146
X: 370307
Y: 4906437
Z: 4.5
Ground: 0

ISO	Description	ID	X	Y	Z	Ground	ReflOrd	LxT	LxN	L/A	Dist.	hm	Freq	Adiv	K0b	Agr	Abar	z	Aatm	Afol	Ahous	Cmet	CmetN	Dc	RL	LtotT	LtotN
	Sol_Luce Substation	S_Substation	369426	4908792	3.5	0	0	112.1	112.1	1	2514.4	5.25	0	79.01	0	0.15	3.56	0.33	5.21	0	0	0	0	0	0	24.15	24.15
	Inverter	MV6-3	370207	4907140	2	0	0	100.3	100.3	1	710.08	3.25	0	68.03	0	-0.41	0	0	9.79	0	0	0	0	0	0	22.91	22.91
	Inverter	MV6-2	370085	4907339	2	0	0	100.3	100.3	1	928.92	3.25	0	70.36	0	-0.28	0	0	10.67	0	0	0	0	0	0	19.57	19.57
	Inverter	MV6-1	370235	4907364	2	0	0	97.3	97.3	1	929.8	3.25	0	70.37	0	-0.28	0	0	10.67	0	0	0	0	0	0	16.55	16.55
	Westbrook Inverter Enclosur	W_INV6	369875	4906578	2	0	0	89.1	89.1	1	454.44	3.25	0	64.15	0	0.5	0	0	4.97	0	0	0	0	0	0	19.44	19.44
	SubstationTransformer	W_ST	369711.17	4906112.3	2.5	0	0	92	92	1	678.58	4.24	0	67.63	0	0.47	4.21	0.24	1.84	0	0	0	0	0	0	17.83	17.83
	Inverter	MV3-20	368689	4907317	2	0	0	100.3	100.3	1	1841.83	3.25	0	76.3	0	0.08	0	0	13.12	0	0	0	0	0	0	10.8	10.8
	Westbrook Inverter Enclosur	W_INV7	369780	4906417	2	0	0	89.1	89.1	1	527.39	3.25	0	65.44	0	0.54	0	0	5.24	0	0	0	0	0	0	17.84	17.84
	Inverter	MV3-14	368684	4907498	2	0	0	100.3	100.3	1	1939.03	3.25	0	76.75	0	0.11	0	0	13.33	0	0	0	0	0	0	10.12	10.12
	Inverter	MV3-21	368478	4907206	2	0	0	100.3	100.3	1	1984.09	3.25	0	76.95	0	0.12	0	0	13.43	0	0	0	0	0	0	9.81	9.81
	Inverter	MV3-8	368680	4907712	2	0	0	100.3	100.3	1	2067.07	3.25	0	77.31	0	0.15	0	0	13.6	0	0	0	0	0	0	9.25	9.25
	Inverter	MV3-16	368514	4907475	2	0	0	100.3	100.3	1	2071.79	3.25	0	77.33	0	0.15	0	0	13.61	0	0	0	0	0	0	9.22	9.22
	Inverter	MV3-19	368357	4907347	2	0	0	100.3	100.3	1	2151.88	3.25	0	77.66	0	0.17	0	0	13.78	0	0	0	0	0	0	8.71	8.71
	Inverter	MV3-9	368512	4907703	2	0	0	100.3	100.3	1	2196.54	3.25	0	77.83	0	0.18	0	0	13.87	0	0	0	0	0	0	8.43	8.43
	Westbrook Inverter Enclosur	W_INV5	369719	4906574	2	0	0	89.1	89.1	1	603.75	3.25	0	66.62	0	0.58	0	0	5.46	0	0	0	0	0	0	16.4	16.4
	Inverter	MV3-15	368357	4907477	2	0	0	100.3	100.3	1	2210	3.25	0	77.89	0	0.19	0	0	13.89	0	0	0	0	0	0	8.34	8.34
	Inverter	MV5-4	370324	4908707	2	0	0	100.3	100.3	1	2270.07	3.25	0	78.12	0	0.2	0	0	14.01	0	0	0	0	0	0	7.98	7.98
	Inverter	MV5-5	370015	4908690	2	0	0	100.3	100.3	1	2271.84	3.25	0	78.13	0	0.2	0	0	14.02	0	0	0	0	0	0	7.97	7.97
	Inverter	MV3-11	368346	4907662	2	0	0	100.3	100.3	1	2312.17	3.25	0	78.28	0	0.21	0	0	14.1	0	0	0	0	0	0	7.72	7.72
	Inverter	MV3-17	368178	4907472	2	0	0	100.3	100.3	1	2367.25	3.25	0	78.48	0	0.23	0	0	14.2	0	0	0	0	0	0	7.4	7.4
	Inverter	MV5-3	370231	4908851	2	0	0	100.3	100.3	1	2415.2	3.25	0	78.66	0	0.24	0	0	14.3	0	0	0	0	0	0	7.12	7.12
	Inverter	MV5-2	370006	4908853	2	0	0	100.3	100.3	1	2434.68	3.25	0	78.73	0	0.24	0	0	14.33	0	0	0	0	0	0	7.01	7.01
	Inverter	MV3-10	368167	4907669	2	0	0	100.3	100.3	1	2469.3	3.25	0	78.85	0	0.25	0	0	14.4	0	0	0	0	0	0	6.81	6.81
	Westbrook Inverter Enclosur	W_INV4	369673	4906164	2	0	0	89.1	89.1	1	690.28	3.25	0	67.78	0	0.61	0	0	5.68	0	0	0	0	0	0	14.99	14.99
	Inverter	MV3-6	368162	4907834	2	0	0	100.3	100.3	1	2559.81	3.25	0	79.16	0	0.27	0	0	14.57	0	0	0	0	0	0	6.31	6.31
	Inverter	MV3-13	367963	4907577	2	0	0	100.3	100.3	1	2606.52	3.25	0	79.32	0	0.28	0	0	14.66	0	0	0	0	0	0	6.05	6.05
	Inverter	MV4-10	369312	4908858	2	0	0	100.3	100.3	1	2617.49	3.25	0	79.36	0	0.28	0	0	14.68	0	0	0	0	0	0	5.99	5.99
	Inverter	MV4-11	369264	4908855	2	0	0	100.3	100.3	1	2633.36	3.25	0	79.41	0	0.29	0	0	14.71	0	0	0	0	0	0	5.91	5.91
	Inverter	MV3-7	367945	4907754	2	0	0	100.3	100.3	1	2704.36	3.25	0	79.64	0	0.3	0	0	14.84	0	0	0	0	0	0	5.53	5.53
	Inverter	MV5-1	370020	4909142	2	0	0	100.3	100.3	1	2720.18	3.25	0	79.69	0	0.31	0	0	14.87	0	0	0	0	0	0	5.45	5.45
	Inverter	MV3-18	367752	4907412	2	0	0	100.3	100.3	1	2734.71	3.25	0	79.74	0	0.31	0	0	14.9	0	0	0	0	0	0	5.37	5.37
	Inverter	MV6-4	370250	4906966	2	0	0	86.1	86.1	1	532.07	3.25	0	65.52	0	0.54	0	0	5.25	0	0	0	0	0	0	14.74	14.74
	Inverter	MV4-9	369289	4909001	2	0	0	100.3	100.3	1	2758.7	3.25	0	79.81	0	0.31	0	0	14.94	0	0	0	0	0	0	5.25	5.25
	Inverter	MV4-8	369256	4909001	2	0	0	100.3	100.3	1	2771.05	3.25	0	79.85	0	0.32	0	0	14.96	0	0	0	0	0	0	5.18	5.18
	Inverter	MV3-3	367939	4907927	2	0	0	100.3	100.3	1	2797.77	3.25	0	79.94	0	0.32	0	0	15.01	0	0	0	0	0	0	5.04	5.04
	Inverter	MV4-7	369035	4909001	2	0	0	100.3	100.3	1	2862.18	3.25	0	80.13	0	0.33	0	0	15.13	0	0	0	0	0	0	4.72	4.72
	Inverter	MV3-12	367668	4907594	2	0	0	100.3	100.3	1	2881.49	3.25	0	80.19	0	0.34	0	0	15.16	0	0	0	0	0	0	4.62	4.62
	Inverter	MV4-5	369289	4909199	2	0	0	100.3	100.3	1	2943.63	3.25	0	80.38	0	0.35	0	0	15.27	0	0	0	0	0	0	4.31	4.31
	Inverter	MV4-6	369243	4909192	2	0	0	100.3	100.3	1	2953.32	3.25	0	80.41	0	0.35	0	0	15.29	0	0	0	0	0	0	4.26	4.26
	Inverter	MV4-4	369027	4909199	2	0	0	100.3	100.3	1	3044.18	3.25	0	80.67	0	0.37	0	0	15.45	0	0	0	0	0	0	3.82	3.82
	Westbrook Inverter Enclosur	W_INV3	369508	4906164	2	0	0	89.1	89.1	1	844.36	3.25	0	69.53	0	0.65	0	0	6.01	0	0	0	0	0	0	12.87	12.87
	Inverter	MV4-2	369272	4909397	2	0	0	100.3	100.3	1	3135.73	3.25	0	80.93	0	0.39	0	0	15.61	0	0	0	0	0	0	3.39	3.39
	Inverter	MV4-3	369229	4909397	2	0	0	100.3	100.3	1	3150.19	3.25	0	80.97	0	0.39	0	0	15.64	0	0	0	0	0	0	3.32	3.32
	Inverter	MV4-1	369011	4909397	2	0	0	100.3	100.3	1	3231.29	3.25	0	81.19	0	0.4	0	0	15.78	0	0	0	0	0	0	2.94	2.94
	Westbrook Inverter Enclosur	W_INV2	369374	4906388	2	0	0	89.1	89.1	1	934.29	3.25	0	70.41	0	0.67	0	0	6.19	0	0	0	0	0	0	11.79	11.79
	DSTATCOM - 10 MVAR #1	DSAT1	369437	4908757	2.5	0	0	96.6	96.6	1	2477.76	3.5	0	78.88	0	3.32	0	0	2	0	0	0	0	0	0	12.43	12.43
	DSTATCOM - 10 MVAR #2	DSAT2	369403	4908757	2.5	0	0	96.6	96.6	1	2489.9	3.5	0	78.92	0	3.32	0	0	2.01	0	0	0	0	0	0	12.38	12.38
	Inverter	MV2-3	365820	4906641	2	0	0	100.3	100.3	1	4491.64	3.25	0	84.05	0	0.59	0	0	17.82	0	0	0	0	0	0	-2.14	-2.14
	Westbrook Inverter Enclosur	W_INV1	369409	4906578	2	0	0	86.1	86.1	1	909.01	3.25	0	70.17	0	0.67	0	0	6.14	0	0	0	0	0	0	9.08	9.08
	Inverter	MV2-4	365586	4906624	2	0	0	100.3	100.3	1	4724.7	3.25	0	84.49	0	0.62	0	0	18.17	0	0	0	0	0	0	-2.96	-2.96
	Inverter	MV1-15	365315	4904994	2	0	0	100.3	100.3	1	5196.38	3.25	0	85.31	0	0.66	0	0	18.87	0	0	0	0	0	0	-4.53	-4.53
	Inverter	MV1-12	365038	4905386	2	0	0	100.3	100.3	1	5372.8	3.25	0	85.6	0	0.67	0	0	19.12	0	0	0	0	0	0	-5.08	-5.08
	Inverter	MV1-4	364815	4905918	2	0	0	100.3	100.3	1	5516.47	3.25	0	85.83	0	0.68	0	0	19.32	0	0	0	0	0	0	-5.53	-5.53
	Inverter	MV1-2	364753	4906063	2	0	0	100.3	100.3	1	5566.58	3.25	0	85.91	0	0.68	0	0	19.39	0	0	0	0	0	0	-5.68	-5.68
	Inverter	MV1-8	364788	4905647	2	0	0	100.3	100.3	1	5575.25	3.25	0	85.93	0	0.68	0	0	19.41	0	0	0	0	0	0	-5.7	-5.7
	Inverter	MV1-1	364715	4906166	2	0	0	100.3	100.3	1	5598.56	3.25	0	85.96	0	0.69	0	0	19.44	0	0	0	0	0	0	-5.78	-5.78
	Inverter	MV1-5	364671	4905892	2	0	0	100.3	100.3	1	5662.29	3.25	0	86.06	0	0.69	0	0	19.53	0	0	0	0	0	0	-5.97	-5.97
	Inverter	MV1-11	364655	4905414	2	0	0	100.3	100.3	1	5743.83	3.25	0	86.18	0	0.69	0	0	19.64	0	0	0	0	0	0	-6.21	-6.21
	Inverter	MV1-9	364561	4905646	2	0	0	100.3	100.3	1	5800.19	3.25	0	86.27	0	0.7	0	0	19.72	0	0	0	0	0	0	-6.37	-6.37
	Inverter	MV1-6	364477	4905835	2	0	0	100.3	100.3	1	5861	3.25	0	86.36	0	0.7	0	0	19.8	0	0	0	0	0	0	-6.55	-6.55
	Westbrook Inverter Transfor	W_INVTR6	369881	4906578	2	0	0	77.3	77.3	1	448.74	3.25	0	64.04	0	-1.43	0	0	0.34	0	0	0	0	0	0	14.39	14.39
	Inverter	MV2-1	365842	4906816	2	0	0	97.3	97.3	1	4481.06	3.25	0	84.03	0	0.59	0	0	17.8	0	0	0	0	0	0	-5.11	-5.11
	Inverter	MV3-22	368656	4907142	2	0	0	89.1	89.1	1	1795.22	3.25	0	76.08	0	0.86	0	0	7.71	0	0	0	0	0	0	4.41	4.41
	Westbrook Inverter Transfor	W_INVTR7	369786	4906417	2	0	0	77.3	77.3	1	521.39	3.25	0	65.34	0	-1.54	0	0	0.39	0	0	0	0	0	0	13.15	13.15
	Inverter	MV1-14	365163	4905049	2	0	0	97.3	97.3	1	5327.97	3.25	0	85.53	0	0.67	0	0	19.06	0	0	0	0	0	0	-7.94	-7.94
	Inverter	MV1-10	365004	4905564	2	0	0	97.3	97.3	1	5374.38	3.25	0	85.61	0	0.67	0	0	19.12	0	0	0	0	0	0	-8.09	-8.09
	Inverter	MV5-6	369982	4908507	2	0	0	89.1	89.1	1	2095.36	3.25	0	77.43	0	0.93	0	0	8.2	0	0	0	0	0	0	2.5	2.5
	Inverter	MV1-7	364925	4905782	2	0	0	97.3	97.3	1	5421.71	3.25	0	85.68	0	0.68	0	0	19.19	0	0	0	0	0	0	-8.24	-8.24
	Inverter	MV1-13	364731	4905241	2	0	0	97.3	97.3	1	5702.82	3.25	0	86.12	0	0.69	0	0	19.58	0	0	0	0	0	0	-9.09	-9.09
	Inverter	MV3-2	368671	4907928	2	0	0	89.1	89.1	1	2213.5	3.25	0	77.9	0	0.96	0	0	8.39	0	0	0	0	0	0	1.81	1.81
	Fixed Reactor Bank 2	FRB2	369464	4908755	6	0	0	89.8	89.8	1	2466.53	5.25	0	78.84	0	-0.94	0	0	5.13	0	0	0	0	0	0	6.74	6.74
	Fixed Reactor Bank 1	FRB1	369378	4908755	6	0	0	89.8	89.8	1	2497.23	5.25	0	78.95	0	-0.94	0	0	5.18	0	0	0	0	0	0	6.58	6.58

Westbrook Inverter Transfor	W_INVTR5	369725	4906574	2	0	0	77.3	77.3	1	597.91	3.25	0	66.53	0	-1.63	0	0	0.43	0	0	0	0	0	0	12	12
Inverter	MV4-15	369176	4908481	2	0	0	89.1	89.1	1	2336.04	3.25	0	78.37	0	0.99	0	0	8.59	0	0	0	0	0	0	1.12	1.12
Inverter	MV3-4	368502	4907925	2	0	0	89.1	89.1	1	2339.27	3.25	0	78.38	0	0.99	0	0	8.59	0	0	0	0	0	0	1.1	1.1
Inverter	MV4-14	369176	4908507	2	0	0	89.1	89.1	1	2358.83	3.25	0	78.45	0	0.99	0	0	8.62	0	0	0	0	0	0	0.99	0.99
Inverter	MV3-5	368340	4907843	2	0	0	89.1	89.1	1	2417.84	3.25	0	78.67	0	1.01	0	0	8.72	0	0	0	0	0	0	0.67	0.67
Inverter	MV4-13	369051	4908605	2	0	0	89.1	89.1	1	2505.55	3.25	0	78.98	0	1.03	0	0	8.85	0	0	0	0	0	0	0.2	0.2
Westbrook Inverter Transfor	W_INVTR4	369679	4906164	2	0	0	77.3	77.3	1	684.78	3.25	0	67.71	0	-1.71	0	0	0.49	0	0	0	0	0	0	10.85	10.85
Inverter	MV3-1	368156	4907976	2	0	0	89.1	89.1	1	2644.87	3.25	0	79.45	0	1.06	0	0	9.07	0	0	0	0	0	0	-0.52	-0.52
Inverter	MV4-12	369043	4908803	2	0	0	89.1	89.1	1	2682.47	3.25	0	79.57	0	1.07	0	0	9.13	0	0	0	0	0	0	-0.71	-0.71
Westbrook Inverter Transfor	W_INVTR1	369403	4906578	2	0	0	78.2	78.2	1	914.93	3.25	0	70.23	0	-1.88	0	0	0.63	0	0	0	0	0	0	9.26	9.26
Westbrook Inverter Transfor	W_INVTR3	369514	4906164	2	0	0	77.3	77.3	1	838.68	3.25	0	69.47	0	-1.83	0	0	0.58	0	0	0	0	0	0	9.11	9.11
Westbrook Inverter Transfor	W_INVTR2	369368	4906388	2	0	0	77.3	77.3	1	940.28	3.25	0	70.47	0	-1.89	0	0	0.64	0	0	0	0	0	0	8.13	8.13
Gardiner Substation	G_Sub	366586.3	4903349.9	2.5	0	0	90.8	90.8	1	4834.65	4.25	0	84.69	0	1.6	2.39	0.33	8.42	0	0	0	0	0	0	-6.33	-6.33
Inverter	MV2-2	365977	4906654	2	0	0	89.1	89.1	1	4335.43	3.25	0	83.74	0	1.48	0	0	11.56	0	0	0	0	0	0	-7.71	-7.71
Inverter Transformer	MV6-4 T	370244	4906966	2	0	0	69.4	69.4	1	532.74	3.25	0	65.53	0	1.1	0	0	3.03	0	0	0	0	0	0	-0.31	-0.31
Inverters	G_Inv2	366676.9	4903239.1	2	0	0	87.7	87.7	1	4837.79	3.25	0	84.69	0	2.85	0	0	5.77	0	0	0	0	0	0	-5.66	-5.66
Inverters	G_Inv4	366732.8	4903105	2	0	0	87.7	87.7	1	4886.42	3.25	0	84.78	0	2.86	0	0	5.82	0	0	0	0	0	0	-5.8	-5.8
Inverters	G_Inv6	366788.5	4902972	2	0	0	87.7	87.7	1	4938.23	3.25	0	84.87	0	2.86	0	0	5.88	0	0	0	0	0	0	-5.95	-5.95
Inverters	G_Inv1	366526.4	4903225.8	2	0	0	87.7	87.7	1	4960.32	3.25	0	84.91	0	2.86	0	0	5.9	0	0	0	0	0	0	-6.01	-6.01
Inverters	G_Inv8	366844.5	4902838.5	2	0	0	87.7	87.7	1	4993.81	3.25	0	84.97	0	2.86	0	0	5.93	0	0	0	0	0	0	-6.11	-6.11
Inverters	G_Inv3	366583.7	4903091.4	2	0	0	87.7	87.7	1	5005.6	3.25	0	84.99	0	2.87	0	0	5.95	0	0	0	0	0	0	-6.14	-6.14
Inverter	MV1-3	364440	4906039	2	0	0	89.1	89.1	1	5880.48	3.25	0	86.39	0	1.86	0	0	13.61	0	0	0	0	0	0	-12.8	-12.8
Inverters	G_Inv10	366900.7	4902704.8	2	0	0	87.7	87.7	1	5052.94	3.25	0	85.07	0	2.87	0	0	6	0	0	0	0	0	0	-6.27	-6.27
Inverters	G_Inv5	366638.5	4902958.1	2	0	0	87.7	87.7	1	5055.75	3.25	0	85.08	0	2.87	0	0	6	0	0	0	0	0	0	-6.28	-6.28
Inverters	G_Inv7	366694.6	4902824.7	2	0	0	87.7	87.7	1	5108.63	3.25	0	85.17	0	2.87	0	0	6.05	0	0	0	0	0	0	-6.43	-6.43
Inverters	G_Inv9	366750.9	4902691.8	2	0	0	87.7	87.7	1	5164.53	3.25	0	85.26	0	2.87	0	0	6.11	0	0	0	0	0	0	-6.59	-6.59
Inverter Transformer	MV6-1 T	370230	4907364	2	0	0	69.4	69.4	1	930.2	3.25	0	70.37	0	1.62	0	0	3.71	0	0	0	0	0	0	-6.36	-6.36
Inverter Transformer	MV6-3 T	370202	4907140	2	0	0	56.1	56.1	1	710.8	3.25	0	68.03	0	-0.08	0	0	4.16	0	0	0	0	0	0	-16.06	-16.06
Inverter Transformer	MV6-2 T	370091	4907339	2	0	0	56.1	56.1	1	927.51	3.25	0	70.35	0	-0.01	0	0	4.71	0	0	0	0	0	0	-18.99	-18.99
Inverter Transformer	MV2-1 T	365836	4906816	2	0	0	69.4	69.4	1	4487.04	3.25	0	84.04	0	2.9	0	0	7.03	0	0	0	0	0	0	-24.62	-24.62
Inverter Transformer	MV1-14 T	365157	4905049	2	0	0	69.4	69.4	1	5333.77	3.25	0	85.54	0	3.08	0	0	7.6	0	0	0	0	0	0	-26.87	-26.87
Inverter Transformer	MV1-10 T	365010	4905564	2	0	0	69.4	69.4	1	5368.46	3.25	0	85.6	0	3.08	0	0	7.62	0	0	0	0	0	0	-26.95	-26.95
Inverter Transformer	MV1-7 T	364919	4905782	2	0	0	69.4	69.4	1	5427.67	3.25	0	85.69	0	3.09	0	0	7.66	0	0	0	0	0	0	-27.1	-27.1
Inverter Transformer	MV1-13 T	364725	4905241	2	0	0	69.4	69.4	1	5708.69	3.25	0	86.13	0	3.14	0	0	7.84	0	0	0	0	0	0	-27.76	-27.76
Inverter Transformer	MV3-22 T	368661	4907142	2	0	0	56.1	56.1	1	1790.63	3.25	0	76.06	0	0.32	0	0	6.62	0	0	0	0	0	0	-26.94	-26.94
Inverter Transformer	MV3-20 T	368683	4907317	2	0	0	56.1	56.1	1	1847.1	3.25	0	76.33	0	0.34	0	0	6.74	0	0	0	0	0	0	-27.35	-27.35
Inverter Transformer	MV3-14 T	368678	4907498	2	0	0	56.1	56.1	1	1944.06	3.25	0	76.77	0	0.38	0	0	6.93	0	0	0	0	0	0	-28.03	-28.03
Inverter Transformer	MV3-21 T	368484	4907206	2	0	0	56.1	56.1	1	1978.56	3.25	0	76.93	0	0.39	0	0	7	0	0	0	0	0	0	-28.26	-28.26
Inverter Transformer	MV3-8 T	368685	4907712	2	0	0	56.1	56.1	1	2063.13	3.25	0	77.29	0	0.43	0	0	7.17	0	0	0	0	0	0	-28.83	-28.83
Inverter Transformer	MV3-16 T	368509	4907475	2	0	0	56.1	56.1	1	2076.12	3.25	0	77.35	0	0.44	0	0	7.19	0	0	0	0	0	0	-28.91	-28.91
Inverter Transformer	MV5-6 T	369987	4908507	2	0	0	56.1	56.1	1	2094.59	3.25	0	77.42	0	0.44	0	0	7.23	0	0	0	0	0	0	-29.04	-29.04
Inverter Transformer	MV3-19 T	368352	4907347	2	0	0	56.1	56.1	1	2156.42	3.25	0	77.67	0	0.47	0	0	7.35	0	0	0	0	0	0	-29.43	-29.43
Inverter Transformer	MV3-9 T	368517	4907703	2	0	0	56.1	56.1	1	2192.46	3.25	0	77.82	0	0.49	0	0	7.42	0	0	0	0	0	0	-29.66	-29.66
Inverter Transformer	MV3-2 T	368677	4907928	2	0	0	56.1	56.1	1	2209.07	3.25	0	77.88	0	0.49	0	0	7.45	0	0	0	0	0	0	-29.77	-29.77
Inverter Transformer	MV3-15 T	368351	4907477	2	0	0	56.1	56.1	1	2215.3	3.25	0	77.91	0	0.49	0	0	7.46	0	0	0	0	0	0	-29.81	-29.81
Inverter Transformer	MV5-4 T	370330	4908707	2	0	0	56.1	56.1	1	2270.12	3.25	0	78.12	0	0.52	0	0	7.56	0	0	0	0	0	0	-30.14	-30.14
Inverter Transformer	MV5-5 T	370021	4908690	2	0	0	56.1	56.1	1	2271.08	3.25	0	78.12	0	0.52	0	0	7.57	0	0	0	0	0	0	-30.15	-30.15
Inverter Transformer	MV3-11 T	368340	4907662	2	0	0	56.1	56.1	1	2317.27	3.25	0	78.3	0	0.54	0	0	7.65	0	0	0	0	0	0	-30.43	-30.43
Inverter Transformer	MV3-4 T	368507	4907925	2	0	0	56.1	56.1	1	2335.41	3.25	0	78.37	0	0.55	0	0	7.69	0	0	0	0	0	0	-30.54	-30.54
Inverter Transformer	MV4-15 T	369170	4908481	2	0	0	56.1	56.1	1	2338.96	3.25	0	78.38	0	0.55	0	0	7.69	0	0	0	0	0	0	-30.56	-30.56
Inverter Transformer	MV4-14 T	369182	4908507	2	0	0	56.1	56.1	1	2355.96	3.25	0	78.44	0	0.55	0	0	7.72	0	0	0	0	0	0	-30.66	-30.66
Inverter Transformer	MV3-17 T	368183	4907472	2	0	0	56.1	56.1	1	2362.75	3.25	0	78.47	0	0.56	0	0	7.74	0	0	0	0	0	0	-30.7	-30.7
Inverter Transformer	MV5-3 T	370237	4908851	2	0	0	56.1	56.1	1	2415.02	3.25	0	78.66	0	0.58	0	0	7.83	0	0	0	0	0	0	-31.01	-31.01
Inverter Transformer	MV3-5 T	368335	4907843	2	0	0	56.1	56.1	1	2421.91	3.25	0	78.68	0	0.58	0	0	7.85	0	0	0	0	0	0	-31.05	-31.05
Inverter Transformer	MV5-2 T	370011	4908853	2	0	0	56.1	56.1	1	2434.07	3.25	0	78.73	0	0.59	0	0	7.87	0	0	0	0	0	0	-31.13	-31.13
Inverter Transformer	MV3-10 T	368162	4907669	2	0	0	56.1	56.1	1	2473.63	3.25	0	78.87	0	0.61	0	0	7.94	0	0	0	0	0	0	-31.35	-31.35
Inverter Transformer	MV4-13 T	369057	4908605	2	0	0	56.1	56.1	1	2502.54	3.25	0	78.97	0	0.62	0	0	7.99	0	0	0	0	0	0	-31.52	-31.52
Inverter Transformer	MV3-6 T	368156	4907834	2	0	0	56.1	56.1	1	2564.84	3.25	0	79.18	0	0.64	0	0	8.11	0	0	0	0	0	0	-31.87	-31.87
Inverter Transformer	MV3-13 T	367958	4907577	2	0	0	56.1	56.1	1	2611.02	3.25	0	79.34	0	0.66	0	0	8.19	0	0	0	0	0	0	-32.13	-32.13
Inverter Transformer	MV4-10 T	369307	4908858	2	0	0	56.1	56.1	1	2619.4	3.25	0	79.36	0	0.67	0	0	8.21	0	0	0	0	0	0	-32.18	-32.18
Inverter Transformer	MV4-11 T	369269	4908855	2	0	0	56.1	56.1	1	2631.38	3.25	0	79.4	0	0.67	0	0	8.23	0	0	0	0	0	0	-32.24	-32.24
Inverter Transformer	MV3-1 T	368150	4907976	2	0	0	56.1	56.1	1	2649.75	3.25	0	79.46	0	0.68	0	0	8.26	0	0	0	0	0	0	-32.35	-32.35
Inverter Transformer	MV4-12 T	369049	4908803	2	0	0	56.1	56.1	1	2679.65	3.25	0	79.56	0	0.69	0	0	8.31	0	0	0	0	0	0	-32.51	-32.51
Inverter Transformer	MV3-7 T	367951	4907754	2	0	0	56.1	56.1	1	2699.12	3.25	0	79.62	0	0.7	0	0	8.35	0	0	0	0	0	0	-32.61	-32.61
Inverter Transformer	MV5-1 T	370015	4909142	2	0	0	56.1	56.1	1	2720.72	3.25	0	79.69	0	0.71	0	0	8.39	0	0	0	0	0	0	-32.73	-32.73
Inverter Transformer	MV3-18 T	367757	4907412	2	0	0	56.1	56.1	1	2730.04	3.25	0	79.72	0	0.71	0	0	8.4	0	0	0	0	0	0	-32.78	-32.78
Inverter Transformer	MV4-9 T	369284	4909001	2	0	0	56.1	56.1	1	2760.55	3.25	0	79.82	0	0.73	0	0	8.46	0	0	0	0	0	0	-32.94	-32.94
Inverter Transformer	MV4-8 T	369262	4909001	2	0	0	56.1	56.1	1	2768.78	3.25	0	79.85	0	0.73	0	0	8.47	0	0	0	0	0	0	-32.99	-32.99
Inverter Transformer	MV3-3 T	367944	4907927	2	0	0	56.1	56.1	1	2793.54	3.25	0	79.92	0	0.74	0	0	8.51	0	0	0	0	0	0	-33.12	-33.12
Inverter Transformer	MV4-7 T	369040	4909001	2	0	0	56.1	56.1	1	2859.96	3.25	0	80.13	0	0.77	0	0	8.63	0	0	0	0	0	0	-33.47	-33.47
Inverter Transformer	MV3-12 T	367674	4907594	2	0	0	56.1	56.1	1	2875.99	3.25	0	80.18	0	0.78	0	0	8.66	0	0	0	0	0	0	-33.55	-33.55
Inverter Transformer	MV4-5 T	369283	4909199	2	0	0	56.1	56.1	1	2945.71	5.07	0	80.38	0	1.74	2.65	0.02	8.78	0	0	0	0	0	0	-37.48	-37.48
Inverter Transformer	MV4-6 T	369249	4909192	2	0	0	56.1	56.1	1	2951.17	3.25	0	80.4	0	0.81	0	0	8.78	0	0	0	0	0	0	-33.94	-33.94
Inverter Transformer	MV4-4 T	369033	4909199	2	0	0	56.1	56.1	1	3041.67	3.25	0	80.66	0	0.85	0	0	8.94	0	0	0	0	0	0	-34.39	-34.39

	Inverter Transformer	MV4-2 T	369267	4909397	2	0	0	56.1	56.1	1	3137.39	3.25	0	80.93	0	0.89	0	0	9.1	0	0	0	0	0	0	-34.86	-34.86
	Inverter Transformer	MV4-3 T	369234	4909397	2	0	0	56.1	56.1	1	3148.48	3.25	0	80.96	0	0.89	0	0	9.12	0	0	0	0	0	0	-34.91	-34.91
	Inverter Transformer	MV4-1 T	369017	4909397	2	0	0	56.1	56.1	1	3228.89	3.25	0	81.18	0	0.93	0	0	9.25	0	0	0	0	0	0	-35.3	-35.3
	Inverter Transformer	MV2-2 T	365982	4906654	2	0	0	56.1	56.1	1	4330.44	3.25	0	83.73	0	1.37	0	0	10.94	0	0	0	0	0	0	-39.98	-39.98
	Inverter Transformer	MV2-3 T	365814	4906641	2	0	0	56.1	56.1	1	4497.63	3.25	0	84.06	0	1.44	0	0	11.17	0	0	0	0	0	0	-40.61	-40.61
	Inverter Transformer	MV2-4 T	365590	4906628	2	0	0	56.1	56.1	1	4720.87	3.25	0	84.48	0	1.52	0	0	11.48	0	0	0	0	0	0	-41.43	-41.43
	Inverter Transformer	MV1-15 T	365309	4904994	2	0	0	56.1	56.1	1	5202.14	3.25	0	85.32	0	1.7	0	0	12.12	0	0	0	0	0	0	-43.08	-43.08
	Inverter Transformer	MV1-12 T	365044	4905386	2	0	0	56.1	56.1	1	5366.91	3.25	0	85.59	0	1.76	0	0	12.33	0	0	0	0	0	0	-43.62	-43.62
	Inverter Transformer	MV1-4 T	364821	4905918	2	0	0	56.1	56.1	1	5510.5	3.25	0	85.82	0	1.8	0	0	12.51	0	0	0	0	0	0	-44.08	-44.08
	Inverter Transformer	MV1-2 T	364759	4906063	2	0	0	56.1	56.1	1	5560.59	3.25	0	85.9	0	1.82	0	0	12.57	0	0	0	0	0	0	-44.24	-44.24
	Inverter Transformer	MV1-8 T	364782	4905647	2	0	0	56.1	56.1	1	5581.19	3.25	0	85.93	0	1.83	0	0	12.6	0	0	0	0	0	0	-44.3	-44.3
	Inverter Transformer	MV1-1 T	364721	4906166	2	0	0	56.1	56.1	1	5592.57	3.25	0	85.95	0	1.83	0	0	12.61	0	0	0	0	0	0	-44.34	-44.34
	Inverter Transformer	MV1-5 T	364676	4905892	2	0	0	56.1	56.1	1	5657.31	3.25	0	86.05	0	1.85	0	0	12.69	0	0	0	0	0	0	-44.54	-44.54
	Inverter Transformer	MV1-11 T	364649	4905414	2	0	0	56.1	56.1	1	5749.74	3.25	0	86.19	0	1.88	0	0	12.8	0	0	0	0	0	0	-44.82	-44.82
	Inverter Transformer	MV1-9 T	364555	4905646	2	0	0	56.1	56.1	1	5806.13	3.25	0	86.28	0	1.9	0	0	12.87	0	0	0	0	0	0	-44.99	-44.99
	Inverter Transformer	MV1-6 T	364482	4905835	2	0	0	56.1	56.1	1	5856.03	3.25	0	86.35	0	1.92	0	0	12.93	0	0	0	0	0	0	-45.14	-45.14
	Inverter Transformer	MV1-3 T	364435	4906039	2	0	0	56.1	56.1	1	5885.47	3.25	0	86.4	0	1.93	0	0	12.97	0	0	0	0	0	0	-45.23	-45.23
	Line Reactor	NGR	369421	4908787.5	5	0	0	45.4	45.4	1	2511.94	5.25	0	79	0	3.35	1.3	0.11	1.03	0	0	0	0	0	0	-39.32	-39.32
Limit. Valu	0	0																								
Level D/N:	31.0691	31.0691																								

Receiver: Existing Noise Receptor
ID: S-R147
X: 371199
Y: 4908176
Z: 4.5
Ground: 0

ISO	Description	ID	X	Y	Z	Ground	ReflOrd	LxT	LxN	L/A	Dist.	hm	Freq	Adiv	K0b	Agr	Abar	z	Aatm	Afol	Ahous	Cmet	CmetN	Dc	RL	LtotT	LtotN
	Sol_Luce Substation	S_Substation	369426	4908792	3.5	0	0	112.1	112.1	1	1876.96	5.25	0	76.47	0	0.14	4.48	0.45	4.16	0	0	0	0	0	0	26.84	26.84
	Inverter	MV5-4	370324	4908707	2	0	0	100.3	100.3	1	1023.52	3.25	0	71.2	0	-0.23	0	0	10.99	0	0	0	0	0	0	18.36	18.36
	Inverter	MV5-3	370231	4908851	2	0	0	100.3	100.3	1	1180.11	3.25	0	72.44	0	-0.16	0	0	11.47	0	0	0	0	0	0	16.57	16.57
	Inverter	MV5-5	370015	4908690	2	0	0	100.3	100.3	1	1290.76	3.25	0	73.22	0	-0.12	0	0	11.78	0	0	0	0	0	0	15.43	15.43
	Inverter	MV5-2	370006	4908853	2	0	0	100.3	100.3	1	1371.71	3.25	0	73.75	0	-0.08	0	0	12	0	0	0	0	0	0	14.65	14.65
	Inverter	MV6-2	370085	4907339	2	0	0	100.3	100.3	1	1393.4	3.25	0	73.88	0	-0.07	0	0	12.05	0	0	0	0	0	0	14.45	14.45
	Inverter	MV6-3	370207	4907140	2	0	0	100.3	100.3	1	1434.35	3.25	0	74.13	0	-0.06	0	0	12.16	0	0	0	0	0	0	14.08	14.08
	Inverter	MV5-1	370020	4909142	2	0	0	100.3	100.3	1	1524.21	3.25	0	74.66	0	-0.02	0	0	12.38	0	0	0	0	0	0	13.29	13.29
	Inverter	MV6-1	370235	4907364	2	0	0	97.3	97.3	1	1260.42	3.25	0	73.01	0	-0.13	0	0	11.7	0	0	0	0	0	0	12.73	12.73
	Inverter	MV4-10	369312	4908858	2	0	0	100.3	100.3	1	2006.46	3.25	0	77.05	0	0.13	0	0	13.48	0	0	0	0	0	0	9.66	9.66
	Inverter	MV4-11	369264	4908855	2	0	0	100.3	100.3	1	2050.68	5.16	0	77.24	0	0.83	3.44	0.05	13.57	0	0	0	0	0	0	5.24	5.24
	Inverter	MV4-9	369289	4909001	2	0	0	100.3	100.3	1	2080.56	3.25	0	77.36	0	0.15	0	0	13.63	0	0	0	0	0	0	9.17	9.17
	Inverter	MV4-8	369256	4909001	2	0	0	100.3	100.3	1	2110.9	3.25	0	77.49	0	0.16	0	0	13.69	0	0	0	0	0	0	8.97	8.97
	Inverter	MV4-5	369289	4909199	2	0	0	100.3	100.3	1	2166.71	3.25	0	77.72	0	0.18	0	0	13.81	0	0	0	0	0	0	8.62	8.62
	Inverter	MV4-6	369243	4909192	2	0	0	100.3	100.3	1	2204.13	3.25	0	77.86	0	0.18	0	0	13.88	0	0	0	0	0	0	8.38	8.38
	Inverter	MV4-2	369272	4909397	2	0	0	100.3	100.3	1	2281.27	3.25	0	78.16	0	0.2	0	0	14.03	0	0	0	0	0	0	7.91	7.91
	Inverter	MV4-7	369035	4909001	2	0	0	100.3	100.3	1	2315.93	3.25	0	78.29	0	0.21	0	0	14.1	0	0	0	0	0	0	7.7	7.7
	Inverter	MV4-3	369229	4909397	2	0	0	100.3	100.3	1	2317.7	3.25	0	78.3	0	0.21	0	0	14.11	0	0	0	0	0	0	7.69	7.69
	Inverter	MV4-4	369027	4909199	2	0	0	100.3	100.3	1	2400.86	3.25	0	78.61	0	0.23	0	0	14.27	0	0	0	0	0	0	7.2	7.2
	Inverter	MV4-1	369011	4909397	2	0	0	100.3	100.3	1	2505.63	3.25	0	78.98	0	0.26	0	0	14.47	0	0	0	0	0	0	6.61	6.61
	Inverter	MV3-8	368680	4907712	2	0	0	100.3	100.3	1	2561.38	3.25	0	79.17	0	0.27	0	0	14.57	0	0	0	0	0	0	6.3	6.3
	Inverter	MV3-14	368684	4907498	2	0	0	100.3	100.3	1	2604.79	3.25	0	79.32	0	0.28	0	0	14.66	0	0	0	0	0	0	6.06	6.06
	Inverter	MV3-20	368689	4907317	2	0	0	100.3	100.3	1	2652.92	3.25	0	79.47	0	0.29	0	0	14.74	0	0	0	0	0	0	5.8	5.8
	Inverter	MV3-9	368512	4907703	2	0	0	100.3	100.3	1	2728.32	3.25	0	79.72	0	0.31	0	0	14.88	0	0	0	0	0	0	5.4	5.4
	Inverter	MV3-16	368514	4907475	2	0	0	100.3	100.3	1	2775	3.25	0	79.87	0	0.32	0	0	14.97	0	0	0	0	0	0	5.16	5.16
	DSTATCOM - 10 MVAR #1	DSAT1	369437	4908757	2.5	0	0	96.6	96.6	1	1855.32	3.5	0	76.37	0	3.19	0	0	1.63	0	0	0	0	0	0	15.44	15.44
	DSTATCOM - 10 MVAR #2	DSAT2	369403	4908757	2.5	0	0	96.6	96.6	1	1887.64	3.5	0	76.52	0	3.2	0	0	1.65	0	0	0	0	0	0	15.26	15.26
	Inverter	MV3-21	368478	4907206	2	0	0	100.3	100.3	1	2888.73	3.25	0	80.21	0	0.34	0	0	15.17	0	0	0	0	0	0	4.58	4.58
	Inverter	MV3-11	368346	4907662	2	0	0	100.3	100.3	1	2898.93	3.25	0	80.24	0	0.34	0	0	15.19	0	0	0	0	0	0	4.53	4.53
	Inverter	MV3-15	368357	4907477	2	0	0	100.3	100.3	1	2926.7	3.25	0	80.33	0	0.35	0	0	15.24	0	0	0	0	0	0	4.39	4.39
	Inverter	MV3-19	368357	4907347	2	0	0	100.3	100.3	1	2960.44	3.25	0	80.43	0	0.35	0	0	15.3	0	0	0	0	0	0	4.23	4.23
	Inverter	MV3-6	368162	4907834	2	0	0	100.3	100.3	1	3056.2	3.25	0	80.7	0	0.37	0	0	15.47	0	0	0	0	0	0	3.76	3.76
	Inverter	MV3-10	368167	4907669	2	0	0	100.3	100.3	1	3074.1	3.25	0	80.75	0	0.38	0	0	15.5	0	0	0	0	0	0	3.68	3.68
	Inverter	MV3-17	368178	4907472	2	0	0	100.3	100.3	1	3101.95	3.25	0	80.83	0	0.38	0	0	15.55	0	0	0	0	0	0	3.55	3.55
	Inverter	MV3-3	367939	4907927	2	0	0	100.3	100.3	1	3269.5	3.25	0	81.29	0	0.41	0	0	15.84	0	0	0	0	0	0	2.77	2.77
	Inverter	MV3-7	367945	4907754	2	0	0	100.3	100.3	1	3281.25	3.25	0	81.32	0	0.41	0	0	15.86	0	0	0	0	0	0	2.72	2.72
	Inverter	MV3-13	367963	4907577	2	0	0	100.3	100.3	1	3290.97	3.25	0	81.35	0	0.42	0	0	15.88	0	0	0	0	0	0	2.67	2.67
	Inverter	MV3-18	367752	4907412	2	0	0	100.3	100.3	1	3530.65	3.25	0	81.96	0	0.46	0	0	16.28	0	0	0	0	0	0	1.62	1.62
	Inverter	MV3-12	367668	4907594	2	0	0	100.3	100.3	1	3578.64	3.25	0	82.07	0	0.46	0	0	16.36	0	0	0	0	0	0	1.41	1.41
	Inverter	MV5-6	369982	4908507	2	0	0	89.1	89.1	1	1261.21	3.25	0	73.02	0	0.74	0	0	6.79	0	0	0	0	0	0	8.51	8.51
	Inverter	MV2-3	365820	4906641	2	0	0	100.3	100.3	1	5593.74	3.25	0	85.95	0	0.69	0	0	19.43	0	0	0	0	0	0	-5.76	-5.76
	Inverter	MV2-4	365586	4906624	2	0	0	100.3	100.3	1	5823.61	3.25	0	86.3	0	0.7	0	0	19.75	0	0	0	0	0	0	-6.44	-6.44
	Fixed Reactor Bank 2	FRB2	369464	4908755	6	0	0	89.8	89.8	1	1829.06	5.25	0	76.24	0	-1.01	0	0	4.07	0	0	0	0	0	0	10.47	10.47
	Fixed Reactor Bank 1	FRB1	369378	4908755	6	0	0	89.8	89.8	1	1910.83	5.25	0	76.62	0	-1	0	0	4.21	0	0	0	0	0	0	9.94	9.94
	SubstationTransformer	W_ST	369711.17	4906112.3	2.5	0	0	92	92	1	2544.14	3.5	0	79.11	0	-0.03	0	0	5.26	0	0	0	0	0	0	7.64	7.64

Inverter	MV1-15	365315	4904994	2	0	0	100.3	100.3	1	6689.29	3.25	0	87.51	0	0.71	0	0	20.9	0	0	0	0	0	0	-8.81	-8.81
Inverter	MV1-12	365038	4905386	2	0	0	100.3	100.3	1	6763.29	3.25	0	87.6	0	0.71	0	0	21	0	0	0	0	0	0	-9	-9
Inverter	MV1-4	364815	4905918	2	0	0	100.3	100.3	1	6771.56	3.25	0	87.61	0	0.71	0	0	21.01	0	0	0	0	0	0	-9.03	-9.03
Inverter	MV1-2	364753	4906063	2	0	0	100.3	100.3	1	6783.49	3.25	0	87.63	0	0.71	0	0	21.03	0	0	0	0	0	0	-9.06	-9.06
Inverter	MV1-1	364715	4906166	2	0	0	100.3	100.3	1	6788.4	3.25	0	87.64	0	0.71	0	0	21.03	0	0	0	0	0	0	-9.07	-9.07
Inverter	MV1-8	364788	4905647	2	0	0	100.3	100.3	1	6891.79	3.25	0	87.77	0	0.71	0	0	21.16	0	0	0	0	0	0	-9.33	-9.33
Inverter	MV1-5	364671	4905892	2	0	0	100.3	100.3	1	6916.03	3.25	0	87.8	0	0.71	0	0	21.19	0	0	0	0	0	0	-9.39	-9.39
Inverter	MV1-11	364655	4905414	2	0	0	100.3	100.3	1	7103	3.25	0	88.03	0	0.71	0	0	21.43	0	0	0	0	0	0	-9.85	-9.85
Inverter	MV1-9	364561	4905646	2	0	0	100.3	100.3	1	7103.8	3.25	0	88.03	0	0.71	0	0	21.43	0	0	0	0	0	0	-9.85	-9.85
Inverter	MV1-6	364477	4905835	2	0	0	100.3	100.3	1	7117.98	3.25	0	88.05	0	0.71	0	0	21.45	0	0	0	0	0	0	-9.89	-9.89
Inverter	MV4-15	369176	4908481	2	0	0	89.1	89.1	1	2045.86	3.25	0	77.22	0	0.92	0	0	8.12	0	0	0	0	0	0	2.8	2.8
Inverter	MV4-14	369176	4908507	2	0	0	89.1	89.1	1	2049.9	3.25	0	77.23	0	0.92	0	0	8.13	0	0	0	0	0	0	2.78	2.78
Westbrook Inverter Enclosur	W_INV6	369875	4906578	2	0	0	89.1	89.1	1	2075.23	3.25	0	77.34	0	0.92	0	0	8.17	0	0	0	0	0	0	2.62	2.62
Inverter	MV2-1	365842	4906816	2	0	0	97.3	97.3	1	5526.94	3.25	0	85.85	0	0.68	0	0	19.34	0	0	0	0	0	0	-8.56	-8.56
Inverter	MV6-4	370250	4906966	2	0	0	86.1	86.1	1	1537.76	3.25	0	74.74	0	0.8	0	0	7.27	0	0	0	0	0	0	3.25	3.25
Westbrook Inverter Enclosur	W_INV5	369719	4906574	2	0	0	89.1	89.1	1	2181.01	3.25	0	77.77	0	0.95	0	0	8.34	0	0	0	0	0	0	2	2
Inverter	MV4-13	369051	4908605	2	0	0	89.1	89.1	1	2190.42	3.25	0	77.81	0	0.95	0	0	8.35	0	0	0	0	0	0	1.94	1.94
Inverter	MV4-12	369043	4908803	2	0	0	89.1	89.1	1	2245.32	3.25	0	78.03	0	0.96	0	0	8.44	0	0	0	0	0	0	1.63	1.63
Westbrook Inverter Enclosur	W_INV7	369780	4906417	2	0	0	89.1	89.1	1	2260.01	3.25	0	78.08	0	0.97	0	0	8.47	0	0	0	0	0	0	1.54	1.54
Westbrook Inverter Enclosur	W_INV4	369673	4906164	2	0	0	89.1	89.1	1	2525.24	3.25	0	79.05	0	1.03	0	0	8.89	0	0	0	0	0	0	0.09	0.09
Inverter	MV3-2	368671	4907928	2	0	0	89.1	89.1	1	2540.14	3.25	0	79.1	0	1.04	0	0	8.91	0	0	0	0	0	0	0.02	0.02
Westbrook Inverter Enclosur	W_INV2	369374	4906388	2	0	0	89.1	89.1	1	2554.91	3.25	0	79.15	0	1.04	0	0	8.93	0	0	0	0	0	0	-0.06	-0.06
Inverter	MV1-7	364925	4905782	2	0	0	97.3	97.3	1	6715.23	3.25	0	87.54	0	0.71	0	0	20.94	0	0	0	0	0	0	-11.88	-11.88
Inverter	MV1-10	365004	4905564	2	0	0	97.3	97.3	1	6723.14	3.25	0	87.55	0	0.71	0	0	20.95	0	0	0	0	0	0	-11.9	-11.9
Westbrook Inverter Enclosur	W_INV3	369508	4906164	2	0	0	89.1	89.1	1	2628.24	3.25	0	79.39	0	1.06	0	0	9.05	0	0	0	0	0	0	-0.44	-0.44
Inverter	MV1-14	365163	4905049	2	0	0	97.3	97.3	1	6797.9	3.25	0	87.65	0	0.71	0	0	21.04	0	0	0	0	0	0	-12.09	-12.09
Inverter	MV3-4	368502	4907925	2	0	0	89.1	89.1	1	2708.66	3.25	0	79.66	0	1.08	0	0	9.17	0	0	0	0	0	0	-0.84	-0.84
Inverter	MV3-22	368656	4907142	2	0	0	89.1	89.1	1	2745.18	3.25	0	79.77	0	1.08	0	0	9.23	0	0	0	0	0	0	-1.03	-1.03
Inverter	MV1-13	364731	4905241	2	0	0	97.3	97.3	1	7102.76	3.25	0	88.03	0	0.71	0	0	21.43	0	0	0	0	0	0	-12.85	-12.85
Inverter	MV3-5	368340	4907843	2	0	0	89.1	89.1	1	2878.33	3.25	0	80.18	0	1.12	0	0	9.43	0	0	0	0	0	0	-1.67	-1.67
Inverter	MV3-1	368156	4907976	2	0	0	89.1	89.1	1	3049.57	3.25	0	80.68	0	1.16	0	0	9.69	0	0	0	0	0	0	-2.48	-2.48
Westbrook Inverter Enclosur	W_INV1	369409	4906578	2	0	0	86.1	86.1	1	2399.52	3.25	0	78.6	0	1	0	0	8.69	0	0	0	0	0	0	-2.23	-2.23
Inverter	MV2-2	365977	4906654	2	0	0	89.1	89.1	1	5439.28	3.25	0	85.71	0	1.75	0	0	13.04	0	0	0	0	0	0	-11.44	-11.44
Gardiner Substation	G_Sub	366586.3	4903349.9	2.5	0	0	90.8	90.8	1	6675.95	4.25	0	87.49	0	2.01	1.96	0.35	10.43	0	0	0	0	0	0	-11.12	-11.12
Inverter	MV1-3	364440	4906039	2	0	0	89.1	89.1	1	7088.78	3.25	0	88.01	0	2.15	0	0	15.09	0	0	0	0	0	0	-16.19	-16.19
Inverters	G_Inv2	366676.9	4903239.1	2	0	0	87.7	87.7	1	6694.95	3.25	0	87.51	0	2.94	0	0	7.68	0	0	0	0	0	0	-10.48	-10.48
Inverters	G_Inv4	366732.8	4903105	2	0	0	87.7	87.7	1	6757.37	3.25	0	87.6	0	2.94	0	0	7.75	0	0	0	0	0	0	-10.63	-10.63
Westbrook Inverter Transfor	W_INVTR6	369881	4906578	2	0	0	77.3	77.3	1	2071.41	3.25	0	77.33	0	-2.43	0	0	1.24	0	0	0	0	0	0	1.21	1.21
Inverters	G_Inv1	366526.4	4903225.8	2	0	0	87.7	87.7	1	6807.18	3.25	0	87.66	0	2.95	0	0	7.8	0	0	0	0	0	0	-10.74	-10.74
Inverters	G_Inv6	366788.5	4902972	2	0	0	87.7	87.7	1	6821.59	3.25	0	87.68	0	2.95	0	0	7.81	0	0	0	0	0	0	-10.77	-10.77
Inverters	G_Inv3	366583.7	4903091.4	2	0	0	87.7	87.7	1	6866.89	3.25	0	87.74	0	2.95	0	0	7.86	0	0	0	0	0	0	-10.88	-10.88
Inverters	G_Inv8	366844.5	4902838.5	2	0	0	87.7	87.7	1	6888.44	3.25	0	87.76	0	2.95	0	0	7.88	0	0	0	0	0	0	-10.93	-10.93
Inverters	G_Inv5	366638.5	4902958.1	2	0	0	87.7	87.7	1	6929.98	3.25	0	87.81	0	2.95	0	0	7.92	0	0	0	0	0	0	-11.02	-11.02
Inverters	G_Inv10	366900.7	4902704.8	2	0	0	87.7	87.7	1	6957.69	3.25	0	87.85	0	2.95	0	0	7.95	0	0	0	0	0	0	-11.09	-11.09
Inverters	G_Inv7	366694.6	4902824.7	2	0	0	87.7	87.7	1	6994.71	3.25	0	87.9	0	2.95	0	0	7.98	0	0	0	0	0	0	-11.17	-11.17
Inverters	G_Inv9	366750.9	4902691.8	2	0	0	87.7	87.7	1	7061.31	3.25	0	87.98	0	2.95	0	0	8.05	0	0	0	0	0	0	-11.32	-11.32
Westbrook Inverter Transfor	W_INVTR1	369403	4906578	2	0	0	78.2	78.2	1	2404	3.25	0	78.62	0	-2.54	0	0	1.4	0	0	0	0	0	0	0.77	0.77
Westbrook Inverter Transfor	W_INVTR5	369725	4906574	2	0	0	77.3	77.3	1	2176.94	3.25	0	77.76	0	-2.47	0	0	1.29	0	0	0	0	0	0	0.76	0.76
Westbrook Inverter Transfor	W_INVTR7	369786	4906417	2	0	0	77.3	77.3	1	2256.25	3.25	0	78.07	0	-2.49	0	0	1.33	0	0	0	0	0	0	0.44	0.44
Westbrook Inverter Transfor	W_INVTR4	369679	4906164	2	0	0	77.3	77.3	1	2521.62	3.25	0	79.03	0	-2.58	0	0	1.45	0	0	0	0	0	0	-0.56	-0.56
Westbrook Inverter Transfor	W_INVTR2	369368	4906388	2	0	0	77.3	77.3	1	2559.2	3.25	0	79.16	0	-2.59	0	0	1.47	0	0	0	0	0	0	-0.7	-0.7
Westbrook Inverter Transfor	W_INVTR3	369514	4906164	2	0	0	77.3	77.3	1	2624.38	3.25	0	79.38	0	-2.61	0	0	1.49	0	0	0	0	0	0	-0.93	-0.93
Inverter Transformer	MV6-1 T	370230	4907364	2	0	0	69.4	69.4	1	1264.24	3.25	0	73.04	0	1.86	0	0	4.16	0	0	0	0	0	0	-9.7	-9.7
Inverter Transformer	MV6-4 T	370244	4906966	2	0	0	69.4	69.4	1	1541.47	3.25	0	74.76	0	1.99	0	0	4.48	0	0	0	0	0	0	-11.88	-11.88
Inverter Transformer	MV5-4 T	370330	4908707	2	0	0	56.1	56.1	1	1018.39	3.25	0	71.16	0	0.02	0	0	4.93	0	0	0	0	0	0	-20.05	-20.05
Inverter Transformer	MV5-3 T	370237	4908851	2	0	0	56.1	56.1	1	1175.19	3.25	0	72.4	0	0.07	0	0	5.3	0	0	0	0	0	0	-21.72	-21.72
Inverter Transformer	MV2-1 T	365836	4906816	2	0	0	69.4	69.4	1	5532.75	3.25	0	85.86	0	3.11	0	0	7.73	0	0	0	0	0	0	-27.35	-27.35
Inverter Transformer	MV5-6 T	369987	4908507	2	0	0	56.1	56.1	1	1256.39	3.25	0	72.98	0	0.1	0	0	5.48	0	0	0	0	0	0	-22.51	-22.51
Inverter Transformer	MV5-5 T	370021	4908690	2	0	0	56.1	56.1	1	1285.26	3.25	0	73.18	0	0.12	0	0	5.55	0	0	0	0	0	0	-22.78	-22.78
Inverter Transformer	MV5-2 T	370011	4908853	2	0	0	56.1	56.1	1	1367.36	3.25	0	73.72	0	0.15	0	0	5.73	0	0	0	0	0	0	-23.54	-23.54
Inverter Transformer	MV6-2 T	370091	4907339	2	0	0	56.1	56.1	1	1388.61	3.25	0	73.85	0	0.16	0	0	5.78	0	0	0	0	0	0	-23.72	-23.72
Inverter Transformer	MV6-3 T	370202	4907140	2	0	0	56.1	56.1	1	1437.81	3.25	0	74.15	0	0.17	0	0	5.88	0	0	0	0	0	0	-24.15	-24.15
Inverter Transformer	MV1-10 T	365010	4905564	2	0	0	69.4	69.4	1	6717.61	3.25	0	87.54	0	3.29	0	0	8.44	0	0	0	0	0	0	-29.92	-29.92
Inverter Transformer	MV1-7 T	364919	4905782	2	0	0	69.4	69.4	1	6720.84	3.25	0	87.55	0	3.29	0	0	8.44	0	0	0	0	0	0	-29.93	-29.93
Inverter Transformer	MV1-14 T	365157	4905049	2	0	0	69.4	69.4	1	6803.23	3.25	0	87.65	0	3.3	0	0	8.49	0	0	0	0	0	0	-30.09	-30.09
Inverter Transformer	MV5-1 T	370015	4909142	2	0	0	56.1	56.1	1	1528.08	3.25	0	74.68	0	0.21	0	0	6.08	0	0	0	0	0	0	-24.91	-24.91
Inverter Transformer	MV1-13 T	364725	4905241	2	0	0	69.4	69.4	1	7108.23	3.25	0	88.04	0	3.33	0	0	8.66	0	0	0	0	0	0	-30.68	-30.68
Inverter Transformer	MV4-10 T	369307	4908858	2	0	0	56.1	56.1	1	2011.17	3.25	0	77.07	0	0.41	0	0	7.07	0	0	0	0	0	0	-28.48	-28.48
Inverter Transformer	MV4-14 T	369182	4908507	2	0	0	56.1	56.1	1	2043.98	3.25	0	77.21	0	0.42	0	0	7.13	0	0	0	0	0	0	-28.7	-28.7
Inverter Transformer	MV4-11 T	369269	4908855	2	0	0	56.1	56.1	1	2045.96	5.14	0	77.22	0	1.31	2.96	0.05	7.13	0	0	0	0	0	0	-32.56	-32.56
Inverter Transformer	MV4-15 T	369170	4908481	2	0	0	56.1	56.1	1	2051.8	3.25	0	77.24	0	0.43	0	0	7.15	0	0	0	0	0	0	-28.76	-28.76
Inverter Transformer	MV4-9 T	369284	4909001	2	0	0	56.1	56.1	1	2085.15	3.25	0	77.38	0	0.44	0	0	7.21	0	0	0	0	0	0	-28.97	-28.97
Inverter Transformer	MV4-8 T	369262	4909001	2	0	0	56.1	56.1	1	2105.37	3.25	0	77.47	0	0.45	0	0	7.25	0	0	0	0	0	0	-29.11	-29.11
Inverter Transformer	MV4-5 T	369283	4909199	2	0	0	56.1	56.1	1	2172	3.25	0	77.74	0	0.48	0	0	7.38	0	0	0	0	0	0	-29.53	-29.53

	Inverter Transformer	MV4-13 T	369057	4908605	2	0	0	56.1	56.1	1	2184.54	3.25	0	77.79	0	0.48	0	0	7.4	0	0	0	0	0	0	-29.61	-29.61
	Inverter Transformer	MV4-6 T	369249	4909192	2	0	0	56.1	56.1	1	2198.81	3.25	0	77.84	0	0.49	0	0	7.43	0	0	0	0	0	0	-29.7	-29.7
	Inverter Transformer	MV4-12 T	369049	4908803	2	0	0	56.1	56.1	1	2239.56	3.25	0	78	0	0.51	0	0	7.51	0	0	0	0	0	0	-29.96	-29.96
	Inverter Transformer	MV4-2 T	369267	4909397	2	0	0	56.1	56.1	1	2285.49	3.25	0	78.18	0	0.52	0	0	7.59	0	0	0	0	0	0	-30.24	-30.24
	Inverter Transformer	MV4-7 T	369040	4909001	2	0	0	56.1	56.1	1	2311.26	3.25	0	78.28	0	0.54	0	0	7.64	0	0	0	0	0	0	-30.4	-30.4
	Inverter Transformer	MV4-3 T	369234	4909397	2	0	0	56.1	56.1	1	2313.45	3.25	0	78.29	0	0.54	0	0	7.65	0	0	0	0	0	0	-30.41	-30.41
	Inverter Transformer	MV4-4 T	369033	4909199	2	0	0	56.1	56.1	1	2395.43	3.25	0	78.59	0	0.57	0	0	7.8	0	0	0	0	0	0	-30.9	-30.9
	Inverter Transformer	MV4-1 T	369017	4909397	2	0	0	56.1	56.1	1	2500.39	3.25	0	78.96	0	0.62	0	0	7.99	0	0	0	0	0	0	-31.51	-31.51
	Inverter Transformer	MV3-2 T	368677	4907928	2	0	0	56.1	56.1	1	2534.17	3.25	0	79.08	0	0.63	0	0	8.05	0	0	0	0	0	0	-31.7	-31.7
	Inverter Transformer	MV3-8 T	368685	4907712	2	0	0	56.1	56.1	1	2556.46	3.25	0	79.15	0	0.64	0	0	8.09	0	0	0	0	0	0	-31.83	-31.83
	Inverter Transformer	MV3-14 T	368678	4907498	2	0	0	56.1	56.1	1	2610.58	3.25	0	79.33	0	0.66	0	0	8.19	0	0	0	0	0	0	-32.13	-32.13
	Inverter Transformer	MV3-20 T	368683	4907317	2	0	0	56.1	56.1	1	2658.6	3.25	0	79.49	0	0.68	0	0	8.28	0	0	0	0	0	0	-32.39	-32.39
	Inverter Transformer	MV3-4 T	368507	4907925	2	0	0	56.1	56.1	1	2703.68	3.25	0	79.64	0	0.7	0	0	8.35	0	0	0	0	0	0	-32.64	-32.64
	Inverter Transformer	MV3-9 T	368517	4907703	2	0	0	56.1	56.1	1	2723.39	3.25	0	79.7	0	0.71	0	0	8.39	0	0	0	0	0	0	-32.75	-32.75
	Inverter Transformer	MV3-22 T	368661	4907142	2	0	0	56.1	56.1	1	2740.55	3.25	0	79.76	0	0.72	0	0	8.42	0	0	0	0	0	0	-32.84	-32.84
	Inverter Transformer	MV3-16 T	368509	4907475	2	0	0	56.1	56.1	1	2779.84	3.25	0	79.88	0	0.74	0	0	8.49	0	0	0	0	0	0	-33.05	-33.05
	Inverter Transformer	MV3-21 T	368484	4907206	2	0	0	56.1	56.1	1	2883.08	3.25	0	80.2	0	0.78	0	0	8.67	0	0	0	0	0	0	-33.59	-33.59
	Inverter Transformer	MV3-5 T	368335	4907843	2	0	0	56.1	56.1	1	2883.3	3.25	0	80.2	0	0.78	0	0	8.67	0	0	0	0	0	0	-33.59	-33.59
	Inverter Transformer	MV3-11 T	368340	4907662	2	0	0	56.1	56.1	1	2904.84	3.25	0	80.26	0	0.79	0	0	8.71	0	0	0	0	0	0	-33.7	-33.7
	Inverter Transformer	MV3-15 T	368351	4907477	2	0	0	56.1	56.1	1	2932.53	3.25	0	80.34	0	0.8	0	0	8.75	0	0	0	0	0	0	-33.84	-33.84
	Inverter Transformer	MV3-19 T	368352	4907347	2	0	0	56.1	56.1	1	2965.24	3.25	0	80.44	0	0.82	0	0	8.81	0	0	0	0	0	0	-34.01	-34.01
	Inverter Transformer	MV3-1 T	368150	4907976	2	0	0	56.1	56.1	1	3055.55	3.25	0	80.7	0	0.85	0	0	8.96	0	0	0	0	0	0	-34.46	-34.46
	Inverter Transformer	MV3-6 T	368156	4907834	2	0	0	56.1	56.1	1	3062.16	3.25	0	80.72	0	0.86	0	0	8.97	0	0	0	0	0	0	-34.49	-34.49
	Inverter Transformer	MV3-10 T	368162	4907669	2	0	0	56.1	56.1	1	3079.03	3.25	0	80.77	0	0.86	0	0	9	0	0	0	0	0	0	-34.57	-34.57
	Inverter Transformer	MV3-17 T	368183	4907472	2	0	0	56.1	56.1	1	3097.08	3.25	0	80.82	0	0.87	0	0	9.03	0	0	0	0	0	0	-34.66	-34.66
	Inverter Transformer	MV3-3 T	367944	4907927	2	0	0	56.1	56.1	1	3264.51	3.25	0	81.28	0	0.94	0	0	9.31	0	0	0	0	0	0	-35.47	-35.47
	Inverter Transformer	MV3-7 T	367951	4907754	2	0	0	56.1	56.1	1	3275.3	3.25	0	81.31	0	0.95	0	0	9.33	0	0	0	0	0	0	-35.52	-35.52
	Inverter Transformer	MV3-13 T	367958	4907577	2	0	0	56.1	56.1	1	3295.89	3.25	0	81.36	0	0.95	0	0	9.36	0	0	0	0	0	0	-35.62	-35.62
	Inverter Transformer	MV3-18 T	367757	4907412	2	0	0	56.1	56.1	1	3525.77	3.25	0	81.95	0	1.05	0	0	9.73	0	0	0	0	0	0	-36.67	-36.67
	Inverter Transformer	MV3-12 T	367674	4907594	2	0	0	56.1	56.1	1	3572.72	3.25	0	82.06	0	1.07	0	0	9.8	0	0	0	0	0	0	-36.87	-36.87
	Inverter Transformer	MV2-2 T	365982	4906654	2	0	0	56.1	56.1	1	5434.48	3.25	0	85.7	0	1.78	0	0	12.41	0	0	0	0	0	0	-43.84	-43.84
	Inverter Transformer	MV2-3 T	365814	4906641	2	0	0	56.1	56.1	1	5599.51	3.25	0	85.96	0	1.83	0	0	12.62	0	0	0	0	0	0	-44.36	-44.36
	Inverter Transformer	MV2-4 T	365590	4906628	2	0	0	56.1	56.1	1	5818.69	3.25	0	86.3	0	1.91	0	0	12.89	0	0	0	0	0	0	-45.03	-45.03
	Line Reactor	NGR	369421	4908787.5	5	0	0	45.4	45.4	1	1880.22	5.25	0	76.48	0	3.39	1.26	0.04	0.77	0	0	0	0	0	0	-36.55	-36.55
	Inverter Transformer	MV1-15 T	365309	4904994	2	0	0	56.1	56.1	1	6694.57	3.25	0	87.51	0	2.17	0	0	13.9	0	0	0	0	0	0	-47.53	-47.53
	Inverter Transformer	MV1-12 T	365044	4905386	2	0	0	56.1	56.1	1	6757.82	3.25	0	87.6	0	2.19	0	0	13.97	0	0	0	0	0	0	-47.7	-47.7
	Inverter Transformer	MV1-4 T	364821	4905918	2	0	0	56.1	56.1	1	6765.9	3.25	0	87.61	0	2.19	0	0	13.98	0	0	0	0	0	0	-47.72	-47.72
	Inverter Transformer	MV1-2 T	364759	4906063	2	0	0	56.1	56.1	1	6777.79	3.25	0	87.62	0	2.2	0	0	13.99	0	0	0	0	0	0	-47.75	-47.75
	Inverter Transformer	MV1-1 T	364721	4906166	2	0	0	56.1	56.1	1	6782.67	3.25	0	87.63	0	2.2	0	0	13.99	0	0	0	0	0	0	-47.76	-47.76
	Inverter Transformer	MV1-8 T	364782	4905647	2	0	0	56.1	56.1	1	6897.37	3.25	0	87.77	0	2.23	0	0	14.12	0	0	0	0	0	0	-48.07	-48.07
	Inverter Transformer	MV1-5 T	364676	4905892	2	0	0	56.1	56.1	1	6911.31	3.25	0	87.79	0	2.24	0	0	14.13	0	0	0	0	0	0	-48.1	-48.1
	Inverter Transformer	MV1-3 T	364435	4906039	2	0	0	56.1	56.1	1	7093.55	3.25	0	88.02	0	2.28	0	0	14.33	0	0	0	0	0	0	-48.57	-48.57
	Inverter Transformer	MV1-11 T	364649	4905414	2	0	0	56.1	56.1	1	7108.53	3.25	0	88.04	0	2.29	0	0	14.35	0	0	0	0	0	0	-48.61	-48.61
	Inverter Transformer	MV1-9 T	364555	4905646	2	0	0	56.1	56.1	1	7109.41	3.25	0	88.04	0	2.29	0	0	14.35	0	0	0	0	0	0	-48.61	-48.61
	Inverter Transformer	MV1-6 T	364482	4905835	2	0	0	56.1	56.1	1	7113.25	3.25	0	88.04	0	2.29	0	0	14.35	0	0	0	0	0	0	-48.62	-48.62
Limit. Valu	0	0																								
Level D/N:	30.0193	30.0193																								

Receiver: Existing Noise Receptor
ID: S-R148
X: 371110
Y: 4908369
Z: 4.5
Ground: 0

ISO	Description	ID	X	Y	Z	Ground	ReflOrd	LxT	LxN	L/A	Dist.	hm	Freq	Adiv	K0b	Agr	Abar	z	Aatm	Afol	Ahous	Cmet	CmetN	Dc	RL	LtotT	LtotN
	Sol_Luce Substation	S_Substation	369426	4908792	3.5	0	0	112.1	112.1	1	1736.31	5.25	0	75.79	0	0.15	4.76	0.46	3.91	0	0	0	0	0	0	27.47	27.47
	Inverter	MV5-4	370324	4908707	2	0	0	100.3	100.3	1	855.6	3.25	0	69.65	0	-0.32	0	0	10.4	0	0	0	0	0	0	20.59	20.59
	Inverter	MV5-3	370231	4908851	2	0	0	100.3	100.3	1	1002.48	3.25	0	71.02	0	-0.25	0	0	10.92	0	0	0	0	0	0	18.62	18.62
	Inverter	MV5-5	370015	4908690	2	0	0	100.3	100.3	1	1141.08	3.25	0	72.15	0	-0.18	0	0	11.35	0	0	0	0	0	0	16.99	16.99
	Inverter	MV5-2	370006	4908853	2	0	0	100.3	100.3	1	1205.44	3.25	0	72.62	0	-0.15	0	0	11.54	0	0	0	0	0	0	16.3	16.3
	Inverter	MV5-1	370020	4909142	2	0	0	100.3	100.3	1	1336.28	3.25	0	73.52	0	-0.1	0	0	11.9	0	0	0	0	0	0	14.99	14.99
	Inverter	MV6-2	370085	4907339	2	0	0	100.3	100.3	1	1453.11	3.25	0	74.25	0	-0.05	0	0	12.21	0	0	0	0	0	0	13.91	13.91
	Inverter	MV6-3	370207	4907140	2	0	0	100.3	100.3	1	1525.08	3.25	0	74.67	0	-0.02	0	0	12.39	0	0	0	0	0	0	13.28	13.28
	Inverter	MV4-10	369312	4908858	2	0	0	100.3	100.3	1	1863.31	3.25	0	76.41	0	0.09	0	0	13.17	0	0	0	0	0	0	10.65	10.65
	Inverter	MV6-1	370235	4907364	2	0	0	97.3	97.3	1	1332.54	3.25	0	73.49	0	-0.1	0	0	11.89	0	0	0	0	0	0	12.02	12.02
	Inverter	MV4-11	369264	4908855	2	0	0	100.3	100.3	1	1908.9	3.25	0	76.62	0	0.1	0	0	13.27	0	0	0	0	0	0	10.33	10.33
	Inverter	MV4-9	369289	4909001	2	0	0	100.3	100.3	1	1927.56	3.25	0	76.7	0	0.11	0	0	13.31	0	0	0	0	0	0	10.2	10.2
	Inverter	MV4-8	369256	4909001	2	0	0	100.3	100.3	1	1958.76	3.25	0	76.84	0	0.12	0	0	13.37	0	0	0	0	0	0	9.98	9.98
	Inverter	MV4-5	369289	4909199	2	0	0	100.3	100.3	1	2001.24	3.25	0	77.03	0	0.13	0	0	13.46	0	0	0	0	0	0	9.69	9.69
	Inverter	MV4-6	369243	4909192	2	0	0	100.3	100.3	1	2040.35	3.25	0	77.19	0	0.14	0	0	13.55	0	0	0	0	0	0	9.43	9.43
	Inverter	MV4-2	369272	4909397	2	0	0	100.3	100.3	1	2105.95	3.25	0	77.47	0	0.16	0	0	13.68	0	0	0	0	0	0	9	9
	Inverter	MV4-3	369229	4909397	2	0	0	100.3	100.3	1	2143.58	3.25	0	77.62	0	0.17	0	0	13.76	0	0	0	0	0	0	8.76	8.76
	Inverter	MV4-7	369035	4909001	2	0	0	100.3	100.3	1	2169.11	3.25	0	77.73	0	0.18	0	0	13.81	0	0	0	0	0	0	8.6	8.6

Inverter	MV4-4	369027	4909199	2	0	0	100.3	100.3	1	2242.27	3.25	0	78.01	0	0.19	0	0	13.96	0	0	0	0	0	0	8.15	8.15
Inverter	MV4-1	369011	4909397	2	0	0	100.3	100.3	1	2337.22	3.25	0	78.37	0	0.22	0	0	14.14	0	0	0	0	0	0	7.57	7.57
Inverter	MV3-8	368680	4907712	2	0	0	100.3	100.3	1	2517.25	3.25	0	79.02	0	0.26	0	0	14.49	0	0	0	0	0	0	6.54	6.54
Inverter	MV3-14	368684	4907498	2	0	0	100.3	100.3	1	2577.62	3.25	0	79.22	0	0.27	0	0	14.6	0	0	0	0	0	0	6.21	6.21
DSTATCOM - 10 MVAR #1	DSAT1	369437	4908757	2.5	0	0	96.6	96.6	1	1717.4	3.5	0	75.7	0	3.16	0	0	1.54	0	0	0	0	0	0	16.23	16.23
Inverter	MV3-20	368689	4907317	2	0	0	100.3	100.3	1	2639.69	3.25	0	79.43	0	0.29	0	0	14.72	0	0	0	0	0	0	5.87	5.87
DSTATCOM - 10 MVAR #2	DSAT2	369403	4908757	2.5	0	0	96.6	96.6	1	1750.54	3.5	0	75.86	0	3.17	0	0	1.56	0	0	0	0	0	0	16.03	16.03
Inverter	MV3-9	368512	4907703	2	0	0	100.3	100.3	1	2682.01	3.25	0	79.57	0	0.3	0	0	14.8	0	0	0	0	0	0	5.65	5.65
Inverter	MV3-16	368514	4907475	2	0	0	100.3	100.3	1	2745.63	3.25	0	79.77	0	0.31	0	0	14.92	0	0	0	0	0	0	5.31	5.31
Inverter	MV3-11	368346	4907662	2	0	0	100.3	100.3	1	2852.99	3.25	0	80.11	0	0.33	0	0	15.11	0	0	0	0	0	0	4.76	4.76
Inverter	MV3-21	368478	4907206	2	0	0	100.3	100.3	1	2877.5	3.25	0	80.18	0	0.34	0	0	15.15	0	0	0	0	0	0	4.64	4.64
Inverter	MV3-15	368357	4907477	2	0	0	100.3	100.3	1	2893.9	3.25	0	80.23	0	0.34	0	0	15.18	0	0	0	0	0	0	4.56	4.56
Inverter	MV3-19	368357	4907347	2	0	0	100.3	100.3	1	2936.58	3.25	0	80.36	0	0.35	0	0	15.26	0	0	0	0	0	0	4.35	4.35
Inverter	MV3-6	368162	4907834	2	0	0	100.3	100.3	1	2996.15	3.25	0	80.53	0	0.36	0	0	15.37	0	0	0	0	0	0	4.05	4.05
Inverter	MV3-10	368167	4907669	2	0	0	100.3	100.3	1	3025.1	3.25	0	80.61	0	0.37	0	0	15.42	0	0	0	0	0	0	3.91	3.91
Inverter	MV3-17	368178	4907472	2	0	0	100.3	100.3	1	3066.14	3.25	0	80.73	0	0.37	0	0	15.49	0	0	0	0	0	0	3.72	3.72
Inverter	MV3-3	367939	4907927	2	0	0	100.3	100.3	1	3201.66	3.25	0	81.11	0	0.4	0	0	15.72	0	0	0	0	0	0	3.08	3.08
Inverter	MV3-7	367945	4907754	2	0	0	100.3	100.3	1	3224.2	3.25	0	81.17	0	0.4	0	0	15.76	0	0	0	0	0	0	2.98	2.98
Inverter	MV3-13	367963	4907577	2	0	0	100.3	100.3	1	3245.13	3.25	0	81.22	0	0.41	0	0	15.8	0	0	0	0	0	0	2.88	2.88
Inverter	MV3-18	367752	4907412	2	0	0	100.3	100.3	1	3491.71	3.25	0	81.86	0	0.45	0	0	16.22	0	0	0	0	0	0	1.78	1.78
Inverter	MV3-12	367668	4907594	2	0	0	100.3	100.3	1	3528.17	3.25	0	81.95	0	0.46	0	0	16.28	0	0	0	0	0	0	1.63	1.63
Inverter	MV5-6	369982	4908507	2	0	0	89.1	89.1	1	1136.41	3.25	0	72.11	0	0.71	0	0	6.57	0	0	0	0	0	0	9.67	9.67
Inverter	MV2-3	365820	4906641	2	0	0	100.3	100.3	1	5565.08	3.25	0	85.91	0	0.68	0	0	19.39	0	0	0	0	0	0	-5.67	-5.67
Fixed Reactor Bank 2	FRB2	369464	4908755	6	0	0	89.8	89.8	1	1690.65	5.25	0	75.56	0	-1.02	0	0	3.83	0	0	0	0	0	0	11.4	11.4
Inverter	MV2-4	365586	4906624	2	0	0	100.3	100.3	1	5793.07	3.25	0	86.26	0	0.7	0	0	19.71	0	0	0	0	0	0	-6.35	-6.35
Fixed Reactor Bank 1	FRB1	369378	4908755	6	0	0	89.8	89.8	1	1774.49	5.25	0	75.98	0	-1.01	0	0	3.98	0	0	0	0	0	0	10.83	10.83
Inverter	MV1-15	365315	4904994	2	0	0	100.3	100.3	1	6706.17	3.25	0	87.53	0	0.71	0	0	20.93	0	0	0	0	0	0	-8.86	-8.86
Inverter	MV1-4	364815	4905918	2	0	0	100.3	100.3	1	6755.33	3.25	0	87.59	0	0.71	0	0	20.99	0	0	0	0	0	0	-8.98	-8.98
Inverter	MV1-2	364753	4906063	2	0	0	100.3	100.3	1	6762.33	3.25	0	87.6	0	0.71	0	0	21	0	0	0	0	0	0	-9	-9
Inverter	MV1-1	364715	4906166	2	0	0	100.3	100.3	1	6763.82	3.25	0	87.6	0	0.71	0	0	21	0	0	0	0	0	0	-9.01	-9.01
Inverter	MV1-12	365038	4905386	2	0	0	100.3	100.3	1	6765.17	3.25	0	87.61	0	0.71	0	0	21	0	0	0	0	0	0	-9.01	-9.01
Inverter	MV1-8	364788	4905647	2	0	0	100.3	100.3	1	6883.09	3.25	0	87.76	0	0.71	0	0	21.15	0	0	0	0	0	0	-9.31	-9.31
Inverter	MV1-5	364671	4905892	2	0	0	100.3	100.3	1	6899	3.25	0	87.78	0	0.71	0	0	21.17	0	0	0	0	0	0	-9.35	-9.35
SubstationTransformer	W_ST	369711.17	4906112.3	2.5	0	0	92	92	1	2655.1	3.5	0	79.48	0	0	0	0	5.43	0	0	0	0	0	0	7.07	7.07
Inverter	MV4-15	369176	4908481	2	0	0	89.1	89.1	1	1937.24	3.25	0	76.74	0	0.89	0	0	7.94	0	0	0	0	0	0	3.48	3.48
Inverter	MV4-14	369176	4908507	2	0	0	89.1	89.1	1	1938.92	3.25	0	76.75	0	0.89	0	0	7.95	0	0	0	0	0	0	3.47	3.47
Inverter	MV1-9	364561	4905646	2	0	0	100.3	100.3	1	7092.54	3.25	0	88.02	0	0.71	0	0	21.41	0	0	0	0	0	0	-9.83	-9.83
Inverter	MV1-11	364655	4905414	2	0	0	100.3	100.3	1	7099.23	3.25	0	88.02	0	0.71	0	0	21.42	0	0	0	0	0	0	-9.84	-9.84
Inverter	MV1-6	364477	4905835	2	0	0	100.3	100.3	1	7100.55	3.25	0	88.03	0	0.71	0	0	21.42	0	0	0	0	0	0	-9.85	-9.85
Inverter	MV4-13	369051	4908605	2	0	0	89.1	89.1	1	2072.48	3.25	0	77.33	0	0.92	0	0	8.16	0	0	0	0	0	0	2.64	2.64
Inverter	MV4-12	369043	4908803	2	0	0	89.1	89.1	1	2112.07	3.25	0	77.49	0	0.93	0	0	8.23	0	0	0	0	0	0	2.4	2.4
Inverter	MV2-1	365842	4906816	2	0	0	97.3	97.3	1	5492.14	3.25	0	85.79	0	0.68	0	0	19.29	0	0	0	0	0	0	-8.45	-8.45
Westbrook Inverter Enclosur	W_INV6	369875	4906578	2	0	0	89.1	89.1	1	2175.53	3.25	0	77.75	0	0.95	0	0	8.33	0	0	0	0	0	0	2.03	2.03
Westbrook Inverter Enclosur	W_INV5	369719	4906574	2	0	0	89.1	89.1	1	2270.88	3.25	0	78.12	0	0.97	0	0	8.48	0	0	0	0	0	0	1.48	1.48
Inverter	MV6-4	370250	4906966	2	0	0	86.1	86.1	1	1645.6	3.25	0	75.33	0	0.83	0	0	7.46	0	0	0	0	0	0	2.45	2.45
Westbrook Inverter Enclosur	W_INV7	369780	4906417	2	0	0	89.1	89.1	1	2362.04	3.25	0	78.47	0	0.99	0	0	8.63	0	0	0	0	0	0	0.97	0.97
Inverter	MV3-2	368671	4907928	2	0	0	89.1	89.1	1	2478.55	3.25	0	78.88	0	1.02	0	0	8.81	0	0	0	0	0	0	0.34	0.34
Inverter	MV1-7	364925	4905782	2	0	0	97.3	97.3	1	6704.24	3.25	0	87.53	0	0.71	0	0	20.92	0	0	0	0	0	0	-11.85	-11.85
Inverter	MV1-10	365004	4905564	2	0	0	97.3	97.3	1	6719.47	3.25	0	87.55	0	0.71	0	0	20.94	0	0	0	0	0	0	-11.89	-11.89
Westbrook Inverter Enclosur	W_INV4	369673	4906164	2	0	0	89.1	89.1	1	2631.92	3.25	0	79.41	0	1.06	0	0	9.05	0	0	0	0	0	0	-0.46	-0.46
Inverter	MV1-14	365163	4905049	2	0	0	97.3	97.3	1	6810.96	3.25	0	87.66	0	0.71	0	0	21.06	0	0	0	0	0	0	-12.13	-12.13
Westbrook Inverter Enclosur	W_INV2	369374	4906388	2	0	0	89.1	89.1	1	2634.02	3.25	0	79.41	0	1.06	0	0	9.06	0	0	0	0	0	0	-0.47	-0.47
Inverter	MV3-4	368502	4907925	2	0	0	89.1	89.1	1	2645.53	3.25	0	79.45	0	1.06	0	0	9.07	0	0	0	0	0	0	-0.53	-0.53
Westbrook Inverter Enclosur	W_INV3	369508	4906164	2	0	0	89.1	89.1	1	2725.52	3.25	0	79.71	0	1.08	0	0	9.2	0	0	0	0	0	0	-0.93	-0.93
Inverter	MV3-22	368656	4907142	2	0	0	89.1	89.1	1	2743.66	3.25	0	79.77	0	1.08	0	0	9.23	0	0	0	0	0	0	-1.02	-1.02
Inverter	MV1-13	364731	4905241	2	0	0	97.3	97.3	1	7104.65	3.25	0	88.03	0	0.71	0	0	21.43	0	0	0	0	0	0	-12.86	-12.86
Inverter	MV3-5	368340	4907843	2	0	0	89.1	89.1	1	2819.5	3.25	0	80	0	1.1	0	0	9.34	0	0	0	0	0	0	-1.39	-1.39
Inverter	MV3-1	368156	4907976	2	0	0	89.1	89.1	1	2980.03	3.25	0	80.48	0	1.14	0	0	9.59	0	0	0	0	0	0	-2.16	-2.16
Westbrook Inverter Enclosur	W_INV1	369409	4906578	2	0	0	86.1	86.1	1	2470.04	3.25	0	78.85	0	1.02	0	0	8.8	0	0	0	0	0	0	-2.61	-2.61
Inverter	MV2-2	365977	4906654	2	0	0	89.1	89.1	1	5411.92	3.25	0	85.67	0	1.74	0	0	13.01	0	0	0	0	0	0	-11.36	-11.36
Gardiner Substation	G_Sub	366586.3	4903349.9	2.5	0	0	90.8	90.8	1	6756.87	4.25	0	87.59	0	2.02	1.95	0.36	10.51	0	0	0	0	0	0	-11.3	-11.3
Inverter	MV1-3	364440	4906039	2	0	0	89.1	89.1	1	7065.25	3.25	0	87.98	0	2.14	0	0	15.06	0	0	0	0	0	0	-16.13	-16.13
Inverters	G_Inv2	366676.9	4903239.1	2	0	0	87.7	87.7	1	6779.99	3.25	0	87.62	0	2.94	0	0	7.77	0	0	0	0	0	0	-10.68	-10.68
Inverters	G_Inv4	366732.8	4903105	2	0	0	87.7	87.7	1	6846.14	3.25	0	87.71	0	2.95	0	0	7.84	0	0	0	0	0	0	-10.83	-10.83
Inverters	G_Inv1	366526.4	4903225.8	2	0	0	87.7	87.7	1	6889.26	3.25	0	87.76	0	2.95	0	0	7.88	0	0	0	0	0	0	-10.93	-10.93
Inverters	G_Inv6	366788.5	4902972	2	0	0	87.7	87.7	1	6913.97	3.25	0	87.79	0	2.95	0	0	7.9	0	0	0	0	0	0	-10.99	-10.99
Inverters	G_Inv3	366583.7	4903091.4	2	0	0	87.7	87.7	1	6952.73	3.25	0	87.84	0	2.95	0	0	7.94	0	0	0	0	0	0	-11.07	-11.07
Inverters	G_Inv8	366844.5	4902838.5	2	0	0	87.7	87.7	1	6984.33	3.25	0	87.88	0	2.95	0	0	7.97	0	0	0	0	0	0	-11.15	-11.15
Inverters	G_Inv5	366638.5	4902958.1	2	0	0	87.7	87.7	1	7019.41	3.25	0	87.93	0	2.95	0	0	8.01	0	0	0	0	0	0	-11.23	-11.23
Inverters	G_Inv10	366900.7	4902704.8	2	0	0	87.7	87.7	1	7057.01	3.25	0	87.97	0	2.95	0	0	8.05	0	0	0	0	0	0	-11.31	-11.31
Inverters	G_Inv7	366694.6	4902824.7	2	0	0	87.7	87.7	1	7087.67	3.25	0	88.01	0	2.95	0	0	8.08	0	0	0	0	0	0	-11.38	-11.38
Westbrook Inverter Transfor	W_INVTR6	369881	4906578	2	0	0	77.3	77.3	1	2172.13	3.25	0	77.74	0	-2.46	0	0	1.29	0	0	0	0	0	0	0.78	0.78
Inverters	G_Inv9	366750.9	4902691.8	2	0	0	87.7	87.7	1	7157.68	3.25	0	88.1	0	2.95	0	0	8.15	0	0	0	0	0	0	-11.54	-11.54
Westbrook Inverter Transfor	W_INVTR1	369403	4906578	2	0	0	78.2	78.2	1	2474.17	3.25	0	78.87	0	-2.56	0	0	1.43	0	0	0	0	0	0	0.51	0.51

Westbrook Inverter Transfor	W_INVTR5	369725	4906574	2	0	0	77.3	77.3	1	2267.21	3.25	0	78.11	0	-2.5	0	0	1.33	0	0	0	0	0	0	0.4	0.4
Westbrook Inverter Transfor	W_INVTR7	369786	4906417	2	0	0	77.3	77.3	1	2358.66	3.25	0	78.45	0	-2.53	0	0	1.37	0	0	0	0	0	0	0.04	0.04
Westbrook Inverter Transfor	W_INVTR4	369679	4906164	2	0	0	77.3	77.3	1	2628.65	3.25	0	79.39	0	-2.61	0	0	1.5	0	0	0	0	0	0	-0.94	-0.94
Westbrook Inverter Transfor	W_INVTR2	369368	4906388	2	0	0	77.3	77.3	1	2637.98	3.25	0	79.43	0	-2.61	0	0	1.5	0	0	0	0	0	0	-0.97	-0.97
Westbrook Inverter Transfor	W_INVTR3	369514	4906164	2	0	0	77.3	77.3	1	2721.99	3.25	0	79.7	0	-2.64	0	0	1.54	0	0	0	0	0	0	-1.26	-1.26
Inverter Transformer	MV6-1 T	370230	4907364	2	0	0	69.4	69.4	1	1335.83	3.25	0	73.51	0	1.9	0	0	4.24	0	0	0	0	0	0	-10.3	-10.3
Inverter Transformer	MV6-4 T	370244	4906966	2	0	0	69.4	69.4	1	1648.75	3.25	0	75.34	0	2.04	0	0	4.6	0	0	0	0	0	0	-12.63	-12.63
Inverter Transformer	MV5-4 T	370330	4908707	2	0	0	56.1	56.1	1	850.09	3.25	0	69.59	0	-0.04	0	0	4.52	0	0	0	0	0	0	-18.02	-18.02
Inverter Transformer	MV5-3 T	370237	4908851	2	0	0	56.1	56.1	1	997.23	3.25	0	70.98	0	0.01	0	0	4.88	0	0	0	0	0	0	-19.81	-19.81
Inverter Transformer	MV5-6 T	369987	4908507	2	0	0	56.1	56.1	1	1131.45	3.25	0	72.07	0	0.06	0	0	5.2	0	0	0	0	0	0	-21.27	-21.27
Inverter Transformer	MV5-5 T	370021	4908690	2	0	0	56.1	56.1	1	1135.33	3.25	0	72.1	0	0.06	0	0	5.21	0	0	0	0	0	0	-21.31	-21.31
Inverter Transformer	MV2-1 T	365836	4906816	2	0	0	69.4	69.4	1	5497.9	3.25	0	85.8	0	3.11	0	0	7.71	0	0	0	0	0	0	-27.27	-27.27
Inverter Transformer	MV5-2 T	370011	4908853	2	0	0	56.1	56.1	1	1200.86	3.25	0	72.59	0	0.08	0	0	5.36	0	0	0	0	0	0	-21.97	-21.97
Inverter Transformer	MV5-1 T	370015	4909142	2	0	0	56.1	56.1	1	1340.36	3.25	0	73.54	0	0.14	0	0	5.67	0	0	0	0	0	0	-23.29	-23.29
Inverter Transformer	MV6-2 T	370091	4907339	2	0	0	56.1	56.1	1	1448.88	3.25	0	74.22	0	0.18	0	0	5.91	0	0	0	0	0	0	-24.25	-24.25
Inverter Transformer	MV1-7 T	364919	4905782	2	0	0	69.4	69.4	1	6709.77	3.25	0	87.53	0	3.28	0	0	8.44	0	0	0	0	0	0	-29.91	-29.91
Inverter Transformer	MV1-10 T	365010	4905564	2	0	0	69.4	69.4	1	6714.02	3.25	0	87.54	0	3.28	0	0	8.44	0	0	0	0	0	0	-29.91	-29.91
Inverter Transformer	MV1-14 T	365157	4905049	2	0	0	69.4	69.4	1	6816.2	3.25	0	87.67	0	3.3	0	0	8.5	0	0	0	0	0	0	-30.12	-30.12
Inverter Transformer	MV6-3 T	370202	4907140	2	0	0	56.1	56.1	1	1528.04	3.25	0	74.68	0	0.21	0	0	6.08	0	0	0	0	0	0	-24.91	-24.91
Inverter Transformer	MV1-13 T	364725	4905241	2	0	0	69.4	69.4	1	7110.04	3.25	0	88.04	0	3.33	0	0	8.66	0	0	0	0	0	0	-30.68	-30.68
Inverter Transformer	MV4-10 T	369307	4908858	2	0	0	56.1	56.1	1	1868.14	3.25	0	76.43	0	0.35	0	0	6.78	0	0	0	0	0	0	-27.5	-27.5
Inverter Transformer	MV4-11 T	369269	4908855	2	0	0	56.1	56.1	1	1904.07	3.25	0	76.59	0	0.36	0	0	6.85	0	0	0	0	0	0	-27.75	-27.75
Inverter Transformer	MV4-9 T	369284	4909001	2	0	0	56.1	56.1	1	1932.28	3.25	0	76.72	0	0.38	0	0	6.91	0	0	0	0	0	0	-27.95	-27.95
Inverter Transformer	MV4-14 T	369182	4908507	2	0	0	56.1	56.1	1	1932.93	3.25	0	76.72	0	0.38	0	0	6.91	0	0	0	0	0	0	-27.95	-27.95
Inverter Transformer	MV4-15 T	369170	4908481	2	0	0	56.1	56.1	1	1943.23	3.25	0	76.77	0	0.38	0	0	6.93	0	0	0	0	0	0	-28.02	-28.02
Inverter Transformer	MV4-8 T	369262	4909001	2	0	0	56.1	56.1	1	1953.08	3.25	0	76.81	0	0.38	0	0	6.95	0	0	0	0	0	0	-28.09	-28.09
Inverter Transformer	MV4-5 T	369283	4909199	2	0	0	56.1	56.1	1	2006.7	3.25	0	77.05	0	0.41	0	0	7.06	0	0	0	0	0	0	-28.45	-28.45
Inverter Transformer	MV4-6 T	369249	4909192	2	0	0	56.1	56.1	1	2034.86	3.25	0	77.17	0	0.42	0	0	7.11	0	0	0	0	0	0	-28.64	-28.64
Inverter Transformer	MV4-13 T	369057	4908605	2	0	0	56.1	56.1	1	2066.52	3.25	0	77.3	0	0.43	0	0	7.17	0	0	0	0	0	0	-28.85	-28.85
Inverter Transformer	MV4-12 T	369049	4908803	2	0	0	56.1	56.1	1	2106.2	3.25	0	77.47	0	0.45	0	0	7.25	0	0	0	0	0	0	-29.11	-29.11
Inverter Transformer	MV4-2 T	369267	4909397	2	0	0	56.1	56.1	1	2110.32	3.25	0	77.49	0	0.45	0	0	7.26	0	0	0	0	0	0	-29.14	-29.14
Inverter Transformer	MV4-3 T	369234	4909397	2	0	0	56.1	56.1	1	2139.2	3.25	0	77.61	0	0.46	0	0	7.31	0	0	0	0	0	0	-29.32	-29.32
Inverter Transformer	MV4-7 T	369040	4909001	2	0	0	56.1	56.1	1	2164.33	3.25	0	77.71	0	0.47	0	0	7.36	0	0	0	0	0	0	-29.48	-29.48
Inverter Transformer	MV4-4 T	369033	4909199	2	0	0	56.1	56.1	1	2236.7	3.25	0	77.99	0	0.5	0	0	7.5	0	0	0	0	0	0	-29.94	-29.94
Inverter Transformer	MV4-1 T	369017	4909397	2	0	0	56.1	56.1	1	2331.83	3.25	0	78.35	0	0.54	0	0	7.68	0	0	0	0	0	0	-30.52	-30.52
Inverter Transformer	MV3-2 T	368677	4907928	2	0	0	56.1	56.1	1	2472.65	3.25	0	78.86	0	0.6	0	0	7.94	0	0	0	0	0	0	-31.35	-31.35
Inverter Transformer	MV3-8 T	368685	4907712	2	0	0	56.1	56.1	1	2512.43	3.25	0	79	0	0.62	0	0	8.01	0	0	0	0	0	0	-31.58	-31.58
Inverter Transformer	MV3-14 T	368678	4907498	2	0	0	56.1	56.1	1	2583.27	3.25	0	79.24	0	0.65	0	0	8.14	0	0	0	0	0	0	-31.98	-31.98
Inverter Transformer	MV3-4 T	368507	4907925	2	0	0	56.1	56.1	1	2640.6	3.25	0	79.43	0	0.68	0	0	8.24	0	0	0	0	0	0	-32.3	-32.3
Inverter Transformer	MV3-20 T	368683	4907317	2	0	0	56.1	56.1	1	2645.19	3.25	0	79.45	0	0.68	0	0	8.25	0	0	0	0	0	0	-32.32	-32.32
Inverter Transformer	MV3-9 T	368517	4907703	2	0	0	56.1	56.1	1	2677.16	3.25	0	79.55	0	0.69	0	0	8.31	0	0	0	0	0	0	-32.5	-32.5
Inverter Transformer	MV3-22 T	368661	4907142	2	0	0	56.1	56.1	1	2739.19	3.25	0	79.75	0	0.72	0	0	8.42	0	0	0	0	0	0	-32.83	-32.83
Inverter Transformer	MV3-16 T	368509	4907475	2	0	0	56.1	56.1	1	2750.35	3.25	0	79.79	0	0.72	0	0	8.44	0	0	0	0	0	0	-32.89	-32.89
Inverter Transformer	MV3-5 T	368335	4907843	2	0	0	56.1	56.1	1	2824.41	3.25	0	80.02	0	0.76	0	0	8.57	0	0	0	0	0	0	-33.28	-33.28
Inverter Transformer	MV3-11 T	368340	4907662	2	0	0	56.1	56.1	1	2858.8	3.25	0	80.12	0	0.77	0	0	8.63	0	0	0	0	0	0	-33.46	-33.46
Inverter Transformer	MV3-21 T	368484	4907206	2	0	0	56.1	56.1	1	2872.01	3.25	0	80.16	0	0.78	0	0	8.65	0	0	0	0	0	0	-33.53	-33.53
Inverter Transformer	MV3-15 T	368351	4907477	2	0	0	56.1	56.1	1	2899.61	3.25	0	80.25	0	0.79	0	0	8.7	0	0	0	0	0	0	-33.67	-33.67
Inverter Transformer	MV3-19 T	368352	4907347	2	0	0	56.1	56.1	1	2941.27	3.25	0	80.37	0	0.8	0	0	8.77	0	0	0	0	0	0	-33.89	-33.89
Inverter Transformer	MV3-1 T	368150	4907976	2	0	0	56.1	56.1	1	2985.98	3.25	0	80.5	0	0.82	0	0	8.84	0	0	0	0	0	0	-34.11	-34.11
Inverter Transformer	MV3-6 T	368156	4907834	2	0	0	56.1	56.1	1	3002.06	3.25	0	80.55	0	0.83	0	0	8.87	0	0	0	0	0	0	-34.19	-34.19
Inverter Transformer	MV3-10 T	368162	4907669	2	0	0	56.1	56.1	1	3029.97	3.25	0	80.63	0	0.84	0	0	8.92	0	0	0	0	0	0	-34.33	-34.33
Inverter Transformer	MV3-17 T	368183	4907472	2	0	0	56.1	56.1	1	3061.36	3.25	0	80.72	0	0.86	0	0	8.97	0	0	0	0	0	0	-34.49	-34.49
Inverter Transformer	MV3-3 T	367944	4907927	2	0	0	56.1	56.1	1	3196.71	3.25	0	81.09	0	0.91	0	0	9.2	0	0	0	0	0	0	-35.15	-35.15
Inverter Transformer	MV3-7 T	367951	4907754	2	0	0	56.1	56.1	1	3218.31	3.25	0	81.15	0	0.92	0	0	9.23	0	0	0	0	0	0	-35.25	-35.25
Inverter Transformer	MV3-13 T	367958	4907577	2	0	0	56.1	56.1	1	3249.98	3.25	0	81.24	0	0.94	0	0	9.28	0	0	0	0	0	0	-35.4	-35.4
Inverter Transformer	MV3-18 T	367757	4907412	2	0	0	56.1	56.1	1	3486.9	3.25	0	81.85	0	1.03	0	0	9.67	0	0	0	0	0	0	-36.49	-36.49
Inverter Transformer	MV3-12 T	367674	4907594	2	0	0	56.1	56.1	1	3522.32	3.25	0	81.94	0	1.05	0	0	9.72	0	0	0	0	0	0	-36.65	-36.65
Inverter Transformer	MV2-2 T	365982	4906654	2	0	0	56.1	56.1	1	5407.18	3.25	0	85.66	0	1.77	0	0	12.38	0	0	0	0	0	0	-43.75	-43.75
Inverter Transformer	MV2-3 T	365814	4906641	2	0	0	56.1	56.1	1	5570.78	3.25	0	85.92	0	1.82	0	0	12.58	0	0	0	0	0	0	-44.27	-44.27
Inverter Transformer	MV2-4 T	365590	4906628	2	0	0	56.1	56.1	1	5788.05	3.25	0	86.25	0	1.9	0	0	12.85	0	0	0	0	0	0	-44.94	-44.94
Line Reactor	NGR	369421	4908787.5	5	0	0	45.4	45.4	1	1740.08	5.25	0	75.81	0	3.4	1.25	0.04	0.71	0	0	0	0	0	0	-35.83	-35.83
Inverter Transformer	MV1-15 T	365309	4904994	2	0	0	56.1	56.1	1	6711.35	3.25	0	87.54	0	2.18	0	0	13.92	0	0	0	0	0	0	-47.57	-47.57
Inverter Transformer	MV1-4 T	364821	4905918	2	0	0	56.1	56.1	1	6749.74	3.25	0	87.59	0	2.19	0	0	13.96	0	0	0	0	0	0	-47.68	-47.68
Inverter Transformer	MV1-2 T	364759	4906063	2	0	0	56.1	56.1	1	6756.69	3.25	0	87.59	0	2.19	0	0	13.97	0	0	0	0	0	0	-47.69	-47.69
Inverter Transformer	MV1-1 T	364721	4906166	2	0	0	56.1	56.1	1	6758.15	3.25	0	87.6	0	2.19	0	0	13.97	0	0	0	0	0	0	-47.7	-47.7
Inverter Transformer	MV1-12 T	365044	4905386	2	0	0	56.1	56.1	1	6759.78	3.25	0	87.6	0	2.19	0	0	13.97	0	0	0	0	0	0	-47.7	-47.7
Inverter Transformer	MV1-8 T	364782	4905647	2	0	0	56.1	56.1	1	6888.6	3.25	0	87.76	0	2.23	0	0	14.11	0	0	0	0	0	0	-48.04	-48.04
Inverter Transformer	MV1-5 T	364676	4905892	2	0	0	56.1	56.1	1	6894.34	3.25	0	87.77	0	2.23	0	0	14.12	0	0	0	0	0	0	-48.06	-48.06
Inverter Transformer	MV1-3 T	364435	4906039	2	0	0	56.1	56.1	1	7069.97	3.25	0	87.99	0	2.28	0	0	14.3	0	0	0	0	0	0	-48.51	-48.51
Inverter Transformer	MV1-6 T	364482	4905835	2	0	0	56.1	56.1	1	7095.88	3.25	0	88.02	0	2.29	0	0	14.33	0	0	0	0	0	0	-48.58	-48.58
Inverter Transformer	MV1-9 T	364555	4905646	2	0	0	56.1	56.1	1	7098.08	3.25	0	88.02	0	2.29	0	0	14.33	0	0	0	0	0	0	-48.58	-48.58
Inverter Transformer	MV1-11 T	364649	4905414	2	0	0	56.1	56.1	1	7104.69	3.25	0	88.03	0	2.29	0	0	14.34	0	0	0	0	0	0	-48.6	-48.6
Limit. Valu	0	0																							
Level D/N:	30.8931	30.8931																							

Receiver: Existing Noise Receptor
ID: S-R149
X: 370276
Y: 4910278
Z: 4.5
Ground: 0

ISO	Description	ID	X	Y	Z	Ground	ReflOrd	LxT	LxN	L/A	Dist.	hm	Freq	Adiv	K0b	Agr	Abar	z	Aatm	Afol	Ahous	Cmet	CmetN	Dc	RL	LtotT	LtotN
	Sol_Luce Substation	S_Substation	369426	4908792	3.5	0	0	112.1	112.1	1	1711.93	4	0	75.67	0	-0.72	0	0	3.87	0	0	0	0	0	0	33.26	33.26
	Inverter	MV5-1	370020	4909142	2	0	0	100.3	100.3	1	1164.49	3.25	0	72.32	0	-0.17	0	0	11.42	0	0	0	0	0	0	16.74	16.74
	Inverter	MV4-2	369272	4909397	2	0	0	100.3	100.3	1	1335.73	3.25	0	73.51	0	-0.1	0	0	11.9	0	0	0	0	0	0	14.99	14.99
	Inverter	MV4-3	369229	4909397	2	0	0	100.3	100.3	1	1368.35	3.25	0	73.72	0	-0.08	0	0	11.99	0	0	0	0	0	0	14.68	14.68
	Inverter	MV5-3	370231	4908851	2	0	0	100.3	100.3	1	1427.71	3.25	0	74.09	0	-0.06	0	0	12.14	0	0	0	0	0	0	14.14	14.14
	Inverter	MV5-2	370006	4908853	2	0	0	100.3	100.3	1	1450.36	3.25	0	74.23	0	-0.05	0	0	12.2	0	0	0	0	0	0	13.93	13.93
	Inverter	MV4-5	369289	4909199	2	0	0	100.3	100.3	1	1462.33	3.25	0	74.3	0	-0.05	0	0	12.23	0	0	0	0	0	0	13.83	13.83
	Inverter	MV4-6	369243	4909192	2	0	0	100.3	100.3	1	1498.83	3.25	0	74.52	0	-0.03	0	0	12.32	0	0	0	0	0	0	13.51	13.51
	Inverter	MV4-1	369011	4909397	2	0	0	100.3	100.3	1	1541.56	3.25	0	74.76	0	-0.02	0	0	12.43	0	0	0	0	0	0	13.14	13.14
	Inverter	MV5-4	370324	4908707	2	0	0	100.3	100.3	1	1571.74	3.25	0	74.93	0	-0.01	0	0	12.5	0	0	0	0	0	0	12.89	12.89
	Inverter	MV5-5	370015	4908690	2	0	0	100.3	100.3	1	1609.31	3.25	0	75.13	0	0.01	0	0	12.59	0	0	0	0	0	0	12.58	12.58
	Inverter	MV4-9	369289	4909001	2	0	0	100.3	100.3	1	1613.97	3.25	0	75.16	0	0.01	0	0	12.6	0	0	0	0	0	0	12.55	12.55
	Inverter	MV4-8	369256	4909001	2	0	0	100.3	100.3	1	1634.36	3.25	0	75.27	0	0.01	0	0	12.65	0	0	0	0	0	0	12.38	12.38
	Inverter	MV4-4	369027	4909199	2	0	0	100.3	100.3	1	1650.53	3.25	0	75.35	0	0.02	0	0	12.69	0	0	0	0	0	0	12.25	12.25
	Inverter	MV4-10	369312	4908858	2	0	0	100.3	100.3	1	1716.3	3.25	0	75.69	0	0.04	0	0	12.84	0	0	0	0	0	0	11.74	11.74
	Inverter	MV4-11	369264	4908855	2	0	0	100.3	100.3	1	1746.16	3.25	0	75.84	0	0.05	0	0	12.91	0	0	0	0	0	0	11.51	11.51
	Inverter	MV4-7	369035	4909001	2	0	0	100.3	100.3	1	1780.68	3.25	0	76.01	0	0.06	0	0	12.99	0	0	0	0	0	0	11.25	11.25
	DSTATCOM - 10 MVAR #1	DSAT1	369437	4908757	2.5	0	0	96.6	96.6	1	1737.06	3.5	0	75.8	0	3.17	0	0	1.56	0	0	0	0	0	0	16.11	16.11
	DSTATCOM - 10 MVAR #2	DSAT2	369403	4908757	2.5	0	0	96.6	96.6	1	1753.73	5.23	0	75.88	0	3.72	0.91	0.2	1.57	0	0	0	0	0	0	14.55	14.55
	Inverter	MV6-2	370085	4907339	2	0	0	100.3	100.3	1	2945.2	3.25	0	80.38	0	0.35	0	0	15.28	0	0	0	0	0	0	4.3	4.3
	Inverter	MV3-8	368680	4907712	2	0	0	100.3	100.3	1	3021.85	3.25	0	80.61	0	0.37	0	0	15.41	0	0	0	0	0	0	3.93	3.93
	Inverter	MV3-9	368512	4907703	2	0	0	100.3	100.3	1	3121.27	3.25	0	80.89	0	0.38	0	0	15.58	0	0	0	0	0	0	3.46	3.46
	Inverter	MV6-3	370207	4907140	2	0	0	100.3	100.3	1	3138.76	3.25	0	80.94	0	0.39	0	0	15.62	0	0	0	0	0	0	3.37	3.37
	Inverter	MV3-14	368684	4907498	2	0	0	100.3	100.3	1	3203.57	4.67	0	81.11	0	1.18	3.14	0.01	15.73	0	0	0	0	0	0	-0.85	-0.85
	Inverter	MV3-6	368162	4907834	2	0	0	100.3	100.3	1	3231.43	3.25	0	81.19	0	0.4	0	0	15.78	0	0	0	0	0	0	2.94	2.94
	Inverter	MV3-11	368346	4907662	2	0	0	100.3	100.3	1	3250.9	3.25	0	81.24	0	0.41	0	0	15.81	0	0	0	0	0	0	2.85	2.85
	Inverter	MV3-16	368514	4907475	2	0	0	100.3	100.3	1	3310.81	3.25	0	81.4	0	0.42	0	0	15.91	0	0	0	0	0	0	2.58	2.58
	Inverter	MV3-3	367939	4907927	2	0	0	100.3	100.3	1	3314.93	3.25	0	81.41	0	0.42	0	0	15.92	0	0	0	0	0	0	2.56	2.56
	Inverter	MV3-10	368167	4907669	2	0	0	100.3	100.3	1	3354.81	3.25	0	81.51	0	0.43	0	0	15.99	0	0	0	0	0	0	2.39	2.39
	Inverter	MV3-20	368689	4907317	2	0	0	100.3	100.3	1	3359.48	3.25	0	81.53	0	0.43	0	0	15.99	0	0	0	0	0	0	2.36	2.36
	Inverter	MV3-15	368357	4907477	2	0	0	100.3	100.3	1	3395.32	3.25	0	81.62	0	0.43	0	0	16.06	0	0	0	0	0	0	2.21	2.21
	Inverter	MV3-7	367945	4907754	2	0	0	100.3	100.3	1	3435.72	3.25	0	81.72	0	0.44	0	0	16.12	0	0	0	0	0	0	2.03	2.03
	Inverter	MV3-19	368357	4907347	2	0	0	100.3	100.3	1	3503.33	3.25	0	81.89	0	0.45	0	0	16.24	0	0	0	0	0	0	1.73	1.73
	Inverter	MV3-17	368178	4907472	2	0	0	100.3	100.3	1	3503.6	3.25	0	81.89	0	0.45	0	0	16.24	0	0	0	0	0	0	1.73	1.73
	Inverter	MV3-13	367963	4907577	2	0	0	100.3	100.3	1	3556.03	3.25	0	82.02	0	0.46	0	0	16.32	0	0	0	0	0	0	1.51	1.51
	Inverter	MV3-21	368478	4907206	2	0	0	100.3	100.3	1	3559.49	3.25	0	82.03	0	0.46	0	0	16.33	0	0	0	0	0	0	1.49	1.49
	Inverter	MV3-12	367668	4907594	2	0	0	100.3	100.3	1	3742.4	3.25	0	82.46	0	0.49	0	0	16.63	0	0	0	0	0	0	0.73	0.73
	Inverter	MV3-18	367752	4907412	2	0	0	100.3	100.3	1	3818.97	3.25	0	82.64	0	0.5	0	0	16.76	0	0	0	0	0	0	0.42	0.42
	Inverter	MV6-1	370235	4907364	2	0	0	97.3	97.3	1	2914.29	3.25	0	80.29	0	0.35	0	0	15.22	0	0	0	0	0	0	1.46	1.46
	Inverter	MV2-3	365820	4906641	2	0	0	100.3	100.3	1	5751.84	3.25	0	86.2	0	0.69	0	0	19.65	0	0	0	0	0	0	-6.23	-6.23
	Fixed Reactor Bank 2	FRB2	369464	4908755	6	0	0	89.8	89.8	1	1725.94	5.25	0	75.74	0	-1.01	0	0	3.89	0	0	0	0	0	0	11.16	11.16
	Inverter	MV2-4	365586	4906624	2	0	0	100.3	100.3	1	5945.4	3.25	0	86.48	0	0.7	0	0	19.92	0	0	0	0	0	0	-6.79	-6.79
	Fixed Reactor Bank 1	FRB1	369378	4908755	6	0	0	89.8	89.8	1	1768.03	5.25	0	75.95	0	-1.01	0	0	3.97	0	0	0	0	0	0	10.87	10.87
	Inverter	MV5-6	369982	4908507	2	0	0	89.1	89.1	1	1795.24	3.25	0	76.08	0	0.86	0	0	7.71	0	0	0	0	0	0	4.41	4.41
	Inverter	MV1-1	364715	4906166	2	0	0	100.3	100.3	1	6916.16	3.25	0	87.8	0	0.71	0	0	21.19	0	0	0	0	0	0	-9.39	-9.39
	Inverter	MV1-2	364753	4906063	2	0	0	100.3	100.3	1	6947.64	3.25	0	87.84	0	0.71	0	0	21.23	0	0	0	0	0	0	-9.47	-9.47
	Inverter	MV1-4	364815	4905918	2	0	0	100.3	100.3	1	6988	3.25	0	87.89	0	0.71	0	0	21.28	0	0	0	0	0	0	-9.57	-9.57
	Inverter	MV4-12	369043	4908803	2	0	0	89.1	89.1	1	1922.48	3.25	0	76.68	0	0.89	0	0	7.92	0	0	0	0	0	0	3.57	3.57
	Inverter	MV1-5	364671	4905892	2	0	0	100.3	100.3	1	7117.09	3.25	0	88.05	0	0.71	0	0	21.45	0	0	0	0	0	0	-9.89	-9.89
	Inverter	MV1-12	365038	4905386	2	0	0	100.3	100.3	1	7167.17	3.25	0	88.11	0	0.7	0	0	21.51	0	0	0	0	0	0	-10.01	-10.01
	Inverter	MV1-8	364788	4905647	2	0	0	100.3	100.3	1	7180.83	3.25	0	88.12	0	0.7	0	0	21.52	0	0	0	0	0	0	-10.04	-10.04
	Inverter	MV1-15	365315	4904994	2	0	0	100.3	100.3	1	7247.91	3.25	0	88.2	0	0.7	0	0	21.61	0	0	0	0	0	0	-10.2	-10.2
	Inverter	MV1-6	364477	4905835	2	0	0	100.3	100.3	1	7305.39	3.25	0	88.27	0	0.7	0	0	21.68	0	0	0	0	0	0	-10.34	-10.34
	Inverter	MV1-9	364561	4905646	2	0	0	100.3	100.3	1	7356.4	3.25	0	88.33	0	0.7	0	0	21.74	0	0	0	0	0	0	-10.46	-10.46
	Inverter	MV1-11	364655	4905414	2	0	0	100.3	100.3	1	7433.31	3.25	0	88.42	0	0.69	0	0	21.83	0	0	0	0	0	0	-10.64	-10.64
	Inverter	MV4-13	369051	4908605	2	0	0	89.1	89.1	1	2073.54	3.25	0	77.33	0	0.92	0	0	8.17	0	0	0	0	0	0	2.63	2.63
	Inverter	MV4-14	369176	4908507	2	0	0	89.1	89.1	1	2084.81	3.25	0	77.38	0	0.93	0	0	8.18	0	0	0	0	0	0	2.57	2.57
	Inverter	MV4-15	369176	4908481	2	0	0	89.1	89.1	1	2106.94	3.25	0	77.47	0	0.93	0	0	8.22	0	0	0	0	0	0	2.43	2.43
	Inverter	MV2-1	365842	4906816	2	0	0	97.3	97.3	1	5625.46	3.25	0	86	0	0.69	0	0	19.48	0	0	0	0	0	0	-8.86	-8.86
	Inverter	MV1-7	364925	4905782	2	0	0	97.3	97.3	1	6989.08	3.25	0	87.89	0	0.71	0	0	21.29	0	0	0	0	0	0	-12.57	-12.57
	Inverter	MV1-10	365004	4905564	2	0	0	97.3	97.3	1	7072.18	3.25	0	87.99	0	0.71	0	0	21.39	0	0	0	0	0	0	-12.78	-12.78
	Inverter	MV1-14	365163	4905049	2	0	0	97.3	97.3	1	7313.36	3.25	0	88.28	0	0.7	0	0	21.69	0	0	0	0	0	0	-13.36	-13.36
	Inverter	MV3-2	368671	4907928	2	0	0	89.1	89.1	1	2845.79	3.25	0	80.08	0	1.11	0	0	9.38	0	0	0	0	0	0	-1.52	-1.52
	Inverter	MV1-13	364731	4905241	2	0	0	97.3	97.3	1	7491.22	3.25	0	88.49	0	0.69	0	0	21.9	0	0	0	0	0	0	-13.77	-13.77
	Inverter	MV3-4	368502	4907925	2	0	0	89.1	89.1	1	2946.81	3.25	0	80.39	0	1.13	0	0	9.54	0	0	0	0	0	0	-2	-2

SubstationTransformer	W_ST	369711.17	4906112.3	2.5	0	0	92	92	1	4203.85	3.5	0	83.47	0	0.38	0	0	7.63	0	0	0	0	0	0	0.49	0.49
Inverter	MV3-5	368340	4907843	2	0	0	89.1	89.1	1	3110.84	3.25	0	80.86	0	1.17	0	0	9.78	0	0	0	0	0	0	-2.76	-2.76
Inverter	MV3-1	368156	4907976	2	0	0	89.1	89.1	1	3129.47	3.25	0	80.91	0	1.18	0	0	9.81	0	0	0	0	0	0	-2.84	-2.84
Inverter	MV3-22	368656	4907142	2	0	0	89.1	89.1	1	3529.72	3.25	0	81.95	0	1.28	0	0	10.41	0	0	0	0	0	0	-4.58	-4.58
Westbrook Inverter Enclosur	W_INV6	369875	4906578	2	0	0	89.1	89.1	1	3721.67	3.25	0	82.41	0	1.32	0	0	10.69	0	0	0	0	0	0	-5.37	-5.37
Westbrook Inverter Enclosur	W_INV5	369719	4906574	2	0	0	89.1	89.1	1	3745.65	3.25	0	82.47	0	1.33	0	0	10.72	0	0	0	0	0	0	-5.46	-5.46
Westbrook Inverter Enclosur	W_INV7	369780	4906417	2	0	0	89.1	89.1	1	3892.73	3.25	0	82.81	0	1.37	0	0	10.93	0	0	0	0	0	0	-6.04	-6.04
Westbrook Inverter Enclosur	W_INV2	369374	4906388	2	0	0	89.1	89.1	1	3993.21	3.25	0	83.03	0	1.39	0	0	11.07	0	0	0	0	0	0	-6.43	-6.43
Westbrook Inverter Enclosur	W_INV4	369673	4906164	2	0	0	89.1	89.1	1	4157.96	3.25	0	83.38	0	1.43	0	0	11.31	0	0	0	0	0	0	-7.06	-7.06
Westbrook Inverter Enclosur	W_INV3	369508	4906164	2	0	0	89.1	89.1	1	4185.07	3.25	0	83.43	0	1.44	0	0	11.35	0	0	0	0	0	0	-7.16	-7.16
Inverter	MV6-4	370250	4906966	2	0	0	86.1	86.1	1	3312.1	3.25	0	81.4	0	1.22	0	0	10.09	0	0	0	0	0	0	-6.65	-6.65
Westbrook Inverter Enclosur	W_INV1	369409	4906578	2	0	0	86.1	86.1	1	3800.22	3.25	0	82.6	0	1.34	0	0	10.8	0	0	0	0	0	0	-8.68	-8.68
Inverter	MV2-2	365977	4906654	2	0	0	89.1	89.1	1	5622.7	3.25	0	86	0	1.79	0	0	13.28	0	0	0	0	0	0	-12.02	-12.02
Gardiner Substation	G_Sub	366586.3	4903349.9	2.5	0	0	90.8	90.8	1	7849.36	4.25	0	88.9	0	2.18	1.76	0.38	11.52	0	0	0	0	0	0	-13.58	-13.58
Inverter	MV1-3	364440	4906039	2	0	0	89.1	89.1	1	7213.05	3.25	0	88.16	0	2.18	0	0	15.24	0	0	0	0	0	0	-16.52	-16.52
Inverters	G_Inv2	366676.9	4903239.1	2	0	0	87.7	87.7	1	7905.67	3.25	0	88.96	0	2.96	0	0	8.89	0	0	0	0	0	0	-13.15	-13.15
Inverters	G_Inv1	366526.4	4903225.8	2	0	0	87.7	87.7	1	7987.05	3.25	0	89.05	0	2.96	0	0	8.96	0	0	0	0	0	0	-13.32	-13.32
Inverters	G_Inv4	366732.8	4903105	2	0	0	87.7	87.7	1	8000.39	3.25	0	89.06	0	2.96	0	0	8.98	0	0	0	0	0	0	-13.34	-13.34
Inverters	G_Inv3	366583.7	4903091.4	2	0	0	87.7	87.7	1	8079.62	3.25	0	89.15	0	2.96	0	0	9.05	0	0	0	0	0	0	-13.51	-13.51
Inverters	G_Inv6	366788.5	4902972	2	0	0	87.7	87.7	1	8095.7	3.25	0	89.17	0	2.96	0	0	9.07	0	0	0	0	0	0	-13.54	-13.54
Inverters	G_Inv5	366638.5	4902958.1	2	0	0	87.7	87.7	1	8173.88	3.25	0	89.25	0	2.96	0	0	9.15	0	0	0	0	0	0	-13.7	-13.7
Inverters	G_Inv8	366844.5	4902838.5	2	0	0	87.7	87.7	1	8192.76	3.25	0	89.27	0	2.96	0	0	9.16	0	0	0	0	0	0	-13.74	-13.74
Inverters	G_Inv7	366694.6	4902824.7	2	0	0	87.7	87.7	1	8269.11	3.25	0	89.35	0	2.96	0	0	9.24	0	0	0	0	0	0	-13.89	-13.89
Inverters	G_Inv10	366900.7	4902704.8	2	0	0	87.7	87.7	1	8291.32	3.25	0	89.37	0	2.96	0	0	9.26	0	0	0	0	0	0	-13.94	-13.94
Inverters	G_Inv9	366750.9	4902691.8	2	0	0	87.7	87.7	1	8365.21	3.25	0	89.45	0	2.96	0	0	9.33	0	0	0	0	0	0	-14.09	-14.09
Westbrook Inverter Transfor	W_INVTR1	369403	4906578	2	0	0	78.2	78.2	1	3801.6	3.25	0	82.6	0	-2.92	0	0	1.98	0	0	0	0	0	0	-3.42	-3.42
Westbrook Inverter Transfor	W_INVTR6	369881	4906578	2	0	0	77.3	77.3	1	3721.03	3.25	0	82.41	0	-2.9	0	0	1.95	0	0	0	0	0	0	-4.12	-4.12
Westbrook Inverter Transfor	W_INVTR5	369725	4906574	2	0	0	77.3	77.3	1	3744.76	3.25	0	82.47	0	-2.9	0	0	1.96	0	0	0	0	0	0	-4.18	-4.18
Westbrook Inverter Transfor	W_INVTR7	369786	4906417	2	0	0	77.3	77.3	1	3891.97	3.25	0	82.8	0	-2.94	0	0	2.01	0	0	0	0	0	0	-4.54	-4.54
Westbrook Inverter Transfor	W_INVTR2	369368	4906388	2	0	0	77.3	77.3	1	3994.57	3.25	0	83.03	0	-2.96	0	0	2.05	0	0	0	0	0	0	-4.78	-4.78
Westbrook Inverter Transfor	W_INVTR4	369679	4906164	2	0	0	77.3	77.3	1	4157.09	3.25	0	83.38	0	-3	0	0	2.11	0	0	0	0	0	0	-5.15	-5.15
Westbrook Inverter Transfor	W_INVTR3	369514	4906164	2	0	0	77.3	77.3	1	4183.97	3.25	0	83.43	0	-3	0	0	2.12	0	0	0	0	0	0	-5.21	-5.21
Inverter Transformer	MV6-1 T	370230	4907364	2	0	0	69.4	69.4	1	2914.36	3.25	0	80.29	0	2.48	0	0	5.81	0	0	0	0	0	0	-19.23	-19.23
Inverter Transformer	MV6-4 T	370244	4906966	2	0	0	69.4	69.4	1	3312.16	3.25	0	81.4	0	2.6	0	0	6.14	0	0	0	0	0	0	-20.79	-20.79
Inverter Transformer	MV5-1 T	370015	4909142	2	0	0	56.1	56.1	1	1165.6	3.25	0	72.33	0	0.07	0	0	5.28	0	0	0	0	0	0	-21.62	-21.62
Inverter Transformer	MV2-1 T	365836	4906816	2	0	0	69.4	69.4	1	5630.19	3.25	0	86.01	0	3.13	0	0	7.79	0	0	0	0	0	0	-27.58	-27.58
Inverter Transformer	MV4-2 T	369267	4909397	2	0	0	56.1	56.1	1	1339.5	3.25	0	73.54	0	0.14	0	0	5.67	0	0	0	0	0	0	-23.29	-23.29
Inverter Transformer	MV4-3 T	369234	4909397	2	0	0	56.1	56.1	1	1364.53	3.25	0	73.7	0	0.15	0	0	5.72	0	0	0	0	0	0	-23.51	-23.51
Inverter Transformer	MV5-3 T	370237	4908851	2	0	0	56.1	56.1	1	1427.54	3.25	0	74.09	0	0.17	0	0	5.86	0	0	0	0	0	0	-24.07	-24.07
Inverter Transformer	MV5-2 T	370011	4908853	2	0	0	56.1	56.1	1	1449.43	3.25	0	74.22	0	0.18	0	0	5.91	0	0	0	0	0	0	-24.25	-24.25
Inverter Transformer	MV4-5 T	369283	4909199	2	0	0	56.1	56.1	1	1466.39	3.25	0	74.32	0	0.19	0	0	5.95	0	0	0	0	0	0	-24.4	-24.4
Inverter Transformer	MV4-6 T	369249	4909192	2	0	0	56.1	56.1	1	1494.7	3.25	0	74.49	0	0.2	0	0	6.01	0	0	0	0	0	0	-24.64	-24.64
Inverter Transformer	MV1-7 T	364919	4905782	2	0	0	69.4	69.4	1	6993.67	3.25	0	87.89	0	3.32	0	0	8.6	0	0	0	0	0	0	-30.46	-30.46
Inverter Transformer	MV1-10 T	365010	4905564	2	0	0	69.4	69.4	1	7067.71	3.25	0	87.99	0	3.32	0	0	8.64	0	0	0	0	0	0	-30.6	-30.6
Inverter Transformer	MV4-1 T	369017	4909397	2	0	0	56.1	56.1	1	1536.64	3.25	0	74.73	0	0.21	0	0	6.1	0	0	0	0	0	0	-24.98	-24.98
Inverter Transformer	MV5-4 T	370330	4908707	2	0	0	56.1	56.1	1	1571.93	3.25	0	74.93	0	0.23	0	0	6.17	0	0	0	0	0	0	-25.27	-25.27
Inverter Transformer	MV1-14 T	365157	4905049	2	0	0	69.4	69.4	1	7317.55	3.25	0	88.29	0	3.35	0	0	8.78	0	0	0	0	0	0	-31.06	-31.06
Inverter Transformer	MV5-5 T	370021	4908690	2	0	0	56.1	56.1	1	1608.35	3.25	0	75.13	0	0.24	0	0	6.25	0	0	0	0	0	0	-25.56	-25.56
Inverter Transformer	MV4-9 T	369284	4909001	2	0	0	56.1	56.1	1	1617.03	3.25	0	75.17	0	0.25	0	0	6.27	0	0	0	0	0	0	-25.63	-25.63
Inverter Transformer	MV1-13 T	364725	4905241	2	0	0	69.4	69.4	1	7495.66	3.25	0	88.5	0	3.37	0	0	8.87	0	0	0	0	0	0	-31.39	-31.39
Inverter Transformer	MV4-8 T	369262	4909001	2	0	0	56.1	56.1	1	1630.62	3.25	0	75.25	0	0.25	0	0	6.29	0	0	0	0	0	0	-25.73	-25.73
Inverter Transformer	MV4-4 T	369033	4909199	2	0	0	56.1	56.1	1	1645.99	3.25	0	75.33	0	0.26	0	0	6.33	0	0	0	0	0	0	-25.85	-25.85
Inverter Transformer	MV4-10 T	369307	4908858	2	0	0	56.1	56.1	1	1719.12	3.25	0	75.71	0	0.29	0	0	6.48	0	0	0	0	0	0	-26.41	-26.41
Inverter Transformer	MV4-11 T	369269	4908855	2	0	0	56.1	56.1	1	1743.27	3.25	0	75.83	0	0.3	0	0	6.53	0	0	0	0	0	0	-26.59	-26.59
Inverter Transformer	MV4-7 T	369040	4909001	2	0	0	56.1	56.1	1	1777.2	3.25	0	75.99	0	0.31	0	0	6.6	0	0	0	0	0	0	-26.84	-26.84
Inverter Transformer	MV5-6 T	369987	4908507	2	0	0	56.1	56.1	1	1794.43	3.25	0	76.08	0	0.32	0	0	6.63	0	0	0	0	0	0	-26.97	-26.97
Inverter Transformer	MV4-12 T	369049	4908803	2	0	0	56.1	56.1	1	1918.63	3.25	0	76.66	0	0.37	0	0	6.88	0	0	0	0	0	0	-27.85	-27.85
Inverter Transformer	MV4-13 T	369057	4908605	2	0	0	56.1	56.1	1	2070	3.25	0	77.32	0	0.43	0	0	7.18	0	0	0	0	0	0	-28.87	-28.87
Inverter Transformer	MV4-14 T	369182	4908507	2	0	0	56.1	56.1	1	2081.65	3.25	0	77.37	0	0.44	0	0	7.2	0	0	0	0	0	0	-28.95	-28.95
Inverter Transformer	MV4-15 T	369170	4908481	2	0	0	56.1	56.1	1	2110.08	3.25	0	77.49	0	0.45	0	0	7.26	0	0	0	0	0	0	-29.14	-29.14
Inverter Transformer	MV3-2 T	368677	4907928	2	0	0	56.1	56.1	1	2842.41	3.25	0	80.07	0	0.76	0	0	8.6	0	0	0	0	0	0	-33.38	-33.38
Inverter Transformer	MV3-4 T	368507	4907925	2	0	0	56.1	56.1	1	2943.8	3.25	0	80.38	0	0.81	0	0	8.77	0	0	0	0	0	0	-33.9	-33.9
Inverter Transformer	MV6-2 T	370091	4907339	2	0	0	56.1	56.1	1	2944.82	3.25	0	80.38	0	0.81	0	0	8.77	0	0	0	0	0	0	-33.9	-33.9
Inverter Transformer	MV3-8 T	368685	4907712	2	0	0	56.1	56.1	1	3019.21	3.25	0	80.6	0	0.84	0	0	8.9	0	0	0	0	0	0	-34.28	-34.28
Inverter Transformer	MV3-5 T	368335	4907843	2	0	0	56.1	56.1	1	3113.95	3.25	0	80.87	0	0.88	0	0	9.06	0	0	0	0	0	0	-34.75	-34.75
Inverter Transformer	MV3-9 T	368517	4907703	2	0	0	56.1	56.1	1	3118.45	3.25	0	80.88	0	0.88	0	0	9.07	0	0	0	0	0	0	-34.77	-34.77
Inverter Transformer	MV3-1 T	368150	4907976	2	0	0	56.1	56.1	1	3133.54	3.25	0	80.92	0	0.89	0	0	9.09	0	0	0	0	0	0	-34.84	-34.84
Inverter Transformer	MV6-3 T	370202	4907140	2	0	0	56.1	56.1	1	3138.87	3.25	0	80.94	0	0.89	0	0	9.1	0	0	0	0	0	0	-34.87	-34.87
Inverter Transformer	MV3-14 T	368678	4907498	2	0	0	56.1	56.1	1	3206.56	4.67	0	81.12	0	1.85	2.56	0.01	9.21	0	0	0	0	0	0	-38.69	-38.69
Inverter Transformer	MV3-6 T	368156	4907834	2	0	0	56.1	56.1	1	3235.36	3.25	0	81.2	0	0.93	0	0	9.26	0	0	0	0	0	0	-35.33	-35.33
Inverter Transformer	MV3-11 T	368340	4907662	2	0	0	56.1	56.1	1	3254.47	3.25	0	81.25	0	0.94	0	0	9.29	0	0	0	0	0	0	-35.42	-35.42
Inverter Transformer	MV3-3 T	367944	4907927	2	0	0	56.1	56.1	1	3311.41	3.25	0	81.4	0	0.96	0	0	9.39	0	0	0	0	0	0	-35.69	-35.69
Inverter Transformer	MV3-16 T	368509	4907475	2	0	0	56.1	56.1	1	3313.47	3.25	0	81.41	0	0.96	0	0	9.39	0	0	0	0	0	0	-35.7	-35.7
Inverter Transformer	MV3-10 T	368162	4907669	2	0	0	56.1	56.1	1	3357.96	3.25	0	81.52	0	0.98	0	0	9.46	0	0	0	0	0	0	-35.9	-35.9

	Inverter Transformer	MV3-20 T	368683	4907317	2	0	0	56.1	56.1	1	3362.32	3.25	0	81.53	0	0.98	0	0	9.47	0	0	0	0	0	0	-35.92	-35.92
	Inverter Transformer	MV3-15 T	368351	4907477	2	0	0	56.1	56.1	1	3398.71	3.25	0	81.63	0	1	0	0	9.53	0	0	0	0	0	0	-36.09	-36.09
	Inverter Transformer	MV3-7 T	367951	4907754	2	0	0	56.1	56.1	1	3431.65	3.25	0	81.71	0	1.01	0	0	9.58	0	0	0	0	0	0	-36.24	-36.24
	Inverter Transformer	MV3-17 T	368183	4907472	2	0	0	56.1	56.1	1	3500.61	3.25	0	81.88	0	1.04	0	0	9.69	0	0	0	0	0	0	-36.55	-36.55
	Inverter Transformer	MV3-19 T	368352	4907347	2	0	0	56.1	56.1	1	3506.07	3.25	0	81.9	0	1.04	0	0	9.7	0	0	0	0	0	0	-36.58	-36.58
	Inverter Transformer	MV3-22 T	368661	4907142	2	0	0	56.1	56.1	1	3527.43	3.25	0	81.95	0	1.05	0	0	9.73	0	0	0	0	0	0	-36.67	-36.67
	Inverter Transformer	MV3-21 T	368484	4907206	2	0	0	56.1	56.1	1	3556.47	3.25	0	82.02	0	1.06	0	0	9.78	0	0	0	0	0	0	-36.8	-36.8
	Inverter Transformer	MV3-13 T	367958	4907577	2	0	0	56.1	56.1	1	3559.29	3.25	0	82.03	0	1.06	0	0	9.78	0	0	0	0	0	0	-36.81	-36.81
	Inverter Transformer	MV3-12 T	367674	4907594	2	0	0	56.1	56.1	1	3738.22	3.25	0	82.45	0	1.14	0	0	10.06	0	0	0	0	0	0	-37.59	-37.59
	Inverter Transformer	MV3-18 T	367757	4907412	2	0	0	56.1	56.1	1	3815.67	3.25	0	82.63	0	1.17	0	0	10.18	0	0	0	0	0	0	-37.92	-37.92
	Inverter Transformer	MV2-2 T	365982	4906654	2	0	0	56.1	56.1	1	5618.88	3.25	0	85.99	0	1.84	0	0	12.64	0	0	0	0	0	0	-44.42	-44.42
	Inverter Transformer	MV2-3 T	365814	4906641	2	0	0	56.1	56.1	1	5756.49	3.25	0	86.2	0	1.89	0	0	12.81	0	0	0	0	0	0	-44.84	-44.84
	Line Reactor	NGR	369421	4908787.5	5	0	0	45.4	45.4	1	1718.32	4.75	0	75.7	0	3.23	0	0	0.7	0	0	0	0	0	0	-34.28	-34.28
	Inverter Transformer	MV2-4 T	365590	4906628	2	0	0	56.1	56.1	1	5939.79	3.25	0	86.48	0	1.95	0	0	13.03	0	0	0	0	0	0	-45.39	-45.39
	Inverter Transformer	MV1-1 T	364721	4906166	2	0	0	56.1	56.1	1	6911.34	3.25	0	87.79	0	2.24	0	0	14.13	0	0	0	0	0	0	-48.1	-48.1
	Inverter Transformer	MV1-2 T	364759	4906063	2	0	0	56.1	56.1	1	6942.88	3.25	0	87.83	0	2.24	0	0	14.17	0	0	0	0	0	0	-48.18	-48.18
	Inverter Transformer	MV1-4 T	364821	4905918	2	0	0	56.1	56.1	1	6983.31	3.25	0	87.88	0	2.25	0	0	14.21	0	0	0	0	0	0	-48.29	-48.29
	Inverter Transformer	MV1-5 T	364676	4905892	2	0	0	56.1	56.1	1	7113.16	3.25	0	88.04	0	2.29	0	0	14.35	0	0	0	0	0	0	-48.62	-48.62
	Inverter Transformer	MV1-12 T	365044	4905386	2	0	0	56.1	56.1	1	7162.79	3.25	0	88.1	0	2.3	0	0	14.4	0	0	0	0	0	0	-48.75	-48.75
	Inverter Transformer	MV1-8 T	364782	4905647	2	0	0	56.1	56.1	1	7185.42	3.25	0	88.13	0	2.31	0	0	14.43	0	0	0	0	0	0	-48.81	-48.81
	Inverter Transformer	MV1-3 T	364435	4906039	2	0	0	56.1	56.1	1	7217.09	3.25	0	88.17	0	2.32	0	0	14.46	0	0	0	0	0	0	-48.89	-48.89
	Inverter Transformer	MV1-15 T	365309	4904994	2	0	0	56.1	56.1	1	7252.02	3.25	0	88.21	0	2.33	0	0	14.5	0	0	0	0	0	0	-48.97	-48.97
	Inverter Transformer	MV1-6 T	364482	4905835	2	0	0	56.1	56.1	1	7301.42	3.25	0	88.27	0	2.34	0	0	14.55	0	0	0	0	0	0	-49.1	-49.1
	Inverter Transformer	MV1-9 T	364555	4905646	2	0	0	56.1	56.1	1	7361.06	3.25	0	88.34	0	2.35	0	0	14.61	0	0	0	0	0	0	-49.25	-49.25
	Inverter Transformer	MV1-11 T	364649	4905414	2	0	0	56.1	56.1	1	7437.85	3.25	0	88.43	0	2.37	0	0	14.69	0	0	0	0	0	0	-49.44	-49.44
Limit. Valu	0	0																								
Level D/N:	34.1931	34.1931																								

Receiver: Existing Noise Receptor
ID: S-R150
X: 367978
Y: 4908780
Z: 4.5
Ground: 0

ISO	Description	ID	X	Y	Z	Ground	ReflOrd	LxT	LxN	L/A	Dist.	hm	Freq	Adiv	K0b	Agr	Abar	z	Aatm	Afol	Ahous	Cmet	CmetN	Dc	RL	LtotT	LtotN
	Sol_Luce Substation	S_Substation	369426	4908792	3.5	0	0	112.1	112.1	1	1448.05	5.25	0	74.22	0	-0.04	4.35	0.33	3.39	0	0	0	0	0	0	30.16	30.16
	Inverter	MV3-3	367939	4907927	2	0	0	100.3	100.3	1	853.89	3.25	0	69.63	0	-0.32	0	0	10.39	0	0	0	0	0	0	20.61	20.61
	Inverter	MV3-6	368162	4907834	2	0	0	100.3	100.3	1	963.73	3.25	0	70.68	0	-0.26	0	0	10.79	0	0	0	0	0	0	19.11	19.11
	Inverter	MV3-7	367945	4907754	2	0	0	100.3	100.3	1	1026.53	3.25	0	71.23	0	-0.23	0	0	11	0	0	0	0	0	0	18.32	18.32
	Inverter	MV4-7	369035	4909001	2	0	0	100.3	100.3	1	1079.86	3.25	0	71.67	0	-0.21	0	0	11.17	0	0	0	0	0	0	17.69	17.69
	Inverter	MV3-10	368167	4907669	2	0	0	100.3	100.3	1	1126.96	3.25	0	72.04	0	-0.19	0	0	11.31	0	0	0	0	0	0	17.15	17.15
	Inverter	MV4-4	369027	4909199	2	0	0	100.3	100.3	1	1129.59	3.25	0	72.06	0	-0.19	0	0	11.32	0	0	0	0	0	0	17.12	17.12
	Inverter	MV3-11	368346	4907662	2	0	0	100.3	100.3	1	1177.01	3.25	0	72.42	0	-0.16	0	0	11.46	0	0	0	0	0	0	16.6	16.6
	Inverter	MV3-9	368512	4907703	2	0	0	100.3	100.3	1	1202.12	3.25	0	72.6	0	-0.15	0	0	11.53	0	0	0	0	0	0	16.33	16.33
	Inverter	MV3-13	367963	4907577	2	0	0	100.3	100.3	1	1203.1	3.25	0	72.61	0	-0.15	0	0	11.53	0	0	0	0	0	0	16.32	16.32
	Inverter	MV4-1	369011	4909397	2	0	0	100.3	100.3	1	1203.24	3.25	0	72.61	0	-0.15	0	0	11.53	0	0	0	0	0	0	16.32	16.32
	Inverter	MV3-12	367668	4907594	2	0	0	100.3	100.3	1	1225.85	3.25	0	72.77	0	-0.14	0	0	11.6	0	0	0	0	0	0	16.09	16.09
	Inverter	MV3-8	368680	4907712	2	0	0	100.3	100.3	1	1278.06	3.25	0	73.13	0	-0.12	0	0	11.75	0	0	0	0	0	0	15.56	15.56
	Inverter	MV4-11	369264	4908855	2	0	0	100.3	100.3	1	1288.19	3.25	0	73.2	0	-0.12	0	0	11.77	0	0	0	0	0	0	15.46	15.46
	Inverter	MV4-8	369256	4909001	2	0	0	100.3	100.3	1	1296.97	3.25	0	73.26	0	-0.11	0	0	11.8	0	0	0	0	0	0	15.37	15.37
	Inverter	MV3-17	368178	4907472	2	0	0	100.3	100.3	1	1323.2	3.25	0	73.43	0	-0.1	0	0	11.87	0	0	0	0	0	0	15.11	15.11
	Inverter	MV4-9	369289	4909001	2	0	0	100.3	100.3	1	1329.5	3.25	0	73.47	0	-0.1	0	0	11.89	0	0	0	0	0	0	15.05	15.05
	Inverter	MV4-6	369243	4909192	2	0	0	100.3	100.3	1	1330.4	3.25	0	73.48	0	-0.1	0	0	11.89	0	0	0	0	0	0	15.04	15.04
	Inverter	MV4-10	369312	4908858	2	0	0	100.3	100.3	1	1336.28	3.25	0	73.52	0	-0.1	0	0	11.9	0	0	0	0	0	0	14.99	14.99
	Inverter	MV3-15	368357	4907477	2	0	0	100.3	100.3	1	1357	3.25	0	73.65	0	-0.09	0	0	11.96	0	0	0	0	0	0	14.79	14.79
	Inverter	MV4-5	369289	4909199	2	0	0	100.3	100.3	1	1376.33	3.25	0	73.77	0	-0.08	0	0	12.01	0	0	0	0	0	0	14.61	14.61
	Inverter	MV3-18	367752	4907412	2	0	0	100.3	100.3	1	1386.54	3.25	0	73.84	0	-0.08	0	0	12.04	0	0	0	0	0	0	14.51	14.51
	Inverter	MV4-3	369229	4909397	2	0	0	100.3	100.3	1	1394.88	3.25	0	73.89	0	-0.07	0	0	12.06	0	0	0	0	0	0	14.44	14.44
	Inverter	MV3-16	368514	4907475	2	0	0	100.3	100.3	1	1410.79	3.25	0	73.99	0	-0.07	0	0	12.1	0	0	0	0	0	0	14.29	14.29
	Inverter	MV4-2	369272	4909397	2	0	0	100.3	100.3	1	1433.57	3.25	0	74.13	0	-0.06	0	0	12.16	0	0	0	0	0	0	14.08	14.08
	Inverter	MV3-14	368684	4907498	2	0	0	100.3	100.3	1	1463.55	3.25	0	74.31	0	-0.05	0	0	12.23	0	0	0	0	0	0	13.82	13.82
	Inverter	MV3-19	368357	4907347	2	0	0	100.3	100.3	1	1482.27	3.25	0	74.42	0	-0.04	0	0	12.28	0	0	0	0	0	0	13.65	13.65
	Inverter	MV3-20	368689	4907317	2	0	0	100.3	100.3	1	1626.62	3.25	0	75.23	0	0.01	0	0	12.63	0	0	0	0	0	0	12.44	12.44
	Inverter	MV3-21	368478	4907206	2	0	0	100.3	100.3	1	1651.51	3.25	0	75.36	0	0.02	0	0	12.69	0	0	0	0	0	0	12.24	12.24
	Inverter	MV5-2	370006	4908853	2	0	0	100.3	100.3	1	2029.31	3.25	0	77.15	0	0.14	0	0	13.52	0	0	0	0	0	0	9.5	9.5
	Inverter	MV5-5	370015	4908690	2	0	0	100.3	100.3	1	2038.99	3.25	0	77.19	0	0.14	0	0	13.54	0	0	0	0	0	0	9.44	9.44
	Inverter	MV5-1	370020	4909142	2	0	0	100.3	100.3	1	2073.84	3.25	0	77.34	0	0.15	0	0	13.62	0	0	0	0	0	0	9.21	9.21
	DSTATCOM - 10 MVAR #2	DSAT2	369403	4908757	2.5	0	0	96.6	96.6	1	1425.19	3.5	0	74.08	0	3.09	0	0	1.36	0	0	0	0	0	0	18.1	18.1
	DSTATCOM - 10 MVAR #1	DSAT1	369437	4908757	2.5	0	0	96.6	96.6	1	1459.18	3.5	0	74.28	0	3.1	0	0	1.38	0	0	0	0	0	0	17.87	17.87
	Inverter	MV5-3	370231	4908851	2	0	0	100.3	100.3	1	2254.12	3.25	0	78.06	0	0.2	0	0	13.98	0	0	0	0	0	0	8.07	8.07
	Inverter	MV5-4	370324	4908707	2	0	0	100.3	100.3	1	2347.14	3.25	0	78.41	0	0.22	0	0	14.16	0	0	0	0	0	0	7.52	7.52
	Inverter	MV6-2	370085	4907339	2	0	0	100.3	100.3	1	2552.63	3.25	0	79.14	0	0.27	0	0	14.56	0	0	0	0	0	0	6.35	6.35
	Inverter	MV6-3	370207	4907140	2	0	0	100.3	100.3	1	2767.32	3.25	0	79.84	0	0.32	0	0	14.95	0	0	0	0	0	0	5.2	5.2

Inverter	MV3-1	368156	4907976	2	0	0	89.1	89.1	1	823.47	3.25	0	69.31	0	0.65	0	0	5.97	0	0	0	0	0	0	13.13	13.13
Inverter	MV2-3	365820	4906641	2	0	0	100.3	100.3	1	3038.47	3.25	0	80.65	0	0.37	0	0	15.44	0	0	0	0	0	0	3.85	3.85
Inverter	MV2-4	365586	4906624	2	0	0	100.3	100.3	1	3220.25	3.25	0	81.16	0	0.4	0	0	15.76	0	0	0	0	0	0	2.99	2.99
Inverter	MV3-4	368502	4907925	2	0	0	89.1	89.1	1	1002.8	3.25	0	71.02	0	0.69	0	0	6.32	0	0	0	0	0	0	11.03	11.03
Inverter	MV3-5	368340	4907843	2	0	0	89.1	89.1	1	1004.5	3.25	0	71.04	0	0.69	0	0	6.32	0	0	0	0	0	0	11.01	11.01
Inverter	MV6-1	370235	4907364	2	0	0	97.3	97.3	1	2664.42	3.25	0	79.51	0	0.29	0	0	14.77	0	0	0	0	0	0	2.74	2.74
Inverter	MV4-12	369043	4908803	2	0	0	89.1	89.1	1	1065.25	3.25	0	71.55	0	0.7	0	0	6.44	0	0	0	0	0	0	10.37	10.37
Inverter	MV4-13	369051	4908605	2	0	0	89.1	89.1	1	1087.18	3.25	0	71.73	0	0.7	0	0	6.48	0	0	0	0	0	0	10.15	10.15
Inverter	MV3-2	368671	4907928	2	0	0	89.1	89.1	1	1098.25	3.25	0	71.81	0	0.71	0	0	6.5	0	0	0	0	0	0	10.04	10.04
Inverter	MV2-1	365842	4906816	2	0	0	97.3	97.3	1	2901.69	3.25	0	80.25	0	0.34	0	0	15.2	0	0	0	0	0	0	1.52	1.52
Inverter	MV1-1	364715	4906166	2	0	0	100.3	100.3	1	4180.93	3.25	0	83.43	0	0.55	0	0	17.34	0	0	0	0	0	0	-1	-1
Inverter	MV1-2	364753	4906063	2	0	0	100.3	100.3	1	4216.96	3.25	0	83.5	0	0.56	0	0	17.39	0	0	0	0	0	0	-1.14	-1.14
Inverter	MV1-4	364815	4905918	2	0	0	100.3	100.3	1	4265.63	3.25	0	83.6	0	0.56	0	0	17.47	0	0	0	0	0	0	-1.32	-1.32
Inverter	MV1-5	364671	4905892	2	0	0	100.3	100.3	1	4390.54	3.25	0	83.85	0	0.58	0	0	17.66	0	0	0	0	0	0	-1.78	-1.78
Inverter	MV1-8	364788	4905647	2	0	0	100.3	100.3	1	4471.22	3.25	0	84.01	0	0.59	0	0	17.79	0	0	0	0	0	0	-2.07	-2.07
Inverter	MV4-14	369176	4908507	2	0	0	89.1	89.1	1	1228.71	3.25	0	72.79	0	0.73	0	0	6.73	0	0	0	0	0	0	8.8	8.8
Inverter	MV1-12	365038	4905386	2	0	0	100.3	100.3	1	4490.31	3.25	0	84.05	0	0.59	0	0	17.82	0	0	0	0	0	0	-2.14	-2.14
Inverter	MV4-15	369176	4908481	2	0	0	89.1	89.1	1	1234.75	3.25	0	72.83	0	0.73	0	0	6.74	0	0	0	0	0	0	8.75	8.75
Inverter	MV1-6	364477	4905835	2	0	0	100.3	100.3	1	4574.94	3.25	0	84.21	0	0.6	0	0	17.94	0	0	0	0	0	0	-2.44	-2.44
Inverter	MV1-15	365315	4904994	2	0	0	100.3	100.3	1	4628.75	3.25	0	84.31	0	0.61	0	0	18.03	0	0	0	0	0	0	-2.63	-2.63
Inverter	MV1-9	364561	4905646	2	0	0	100.3	100.3	1	4636.58	3.25	0	84.32	0	0.61	0	0	18.04	0	0	0	0	0	0	-2.66	-2.66
Fixed Reactor Bank 1	FRB1	369378	4908755	6	0	0	89.8	89.8	1	1400.22	5.25	0	73.92	0	-1.03	0	0	3.3	0	0	0	0	0	0	13.58	13.58
Inverter	MV1-11	364655	4905414	2	0	0	100.3	100.3	1	4729.94	3.25	0	84.5	0	0.62	0	0	18.18	0	0	0	0	0	0	-2.98	-2.98
Fixed Reactor Bank 2	FRB2	369464	4908755	6	0	0	89.8	89.8	1	1486.21	5.25	0	74.44	0	-1.03	0	0	3.46	0	0	0	0	0	0	12.9	12.9
Inverter	MV1-7	364925	4905782	2	0	0	97.3	97.3	1	4278.88	3.25	0	83.63	0	0.56	0	0	17.49	0	0	0	0	0	0	-4.37	-4.37
Inverter	MV1-10	365004	4905564	2	0	0	97.3	97.3	1	4380.34	3.25	0	83.83	0	0.58	0	0	17.65	0	0	0	0	0	0	-4.74	-4.74
Inverter	MV3-22	368656	4907142	2	0	0	89.1	89.1	1	1772.78	3.25	0	75.97	0	0.85	0	0	7.67	0	0	0	0	0	0	4.56	4.56
Inverter	MV1-14	365163	4905049	2	0	0	97.3	97.3	1	4673.82	3.25	0	84.39	0	0.61	0	0	18.09	0	0	0	0	0	0	-5.79	-5.79
Inverter	MV1-13	364731	4905241	2	0	0	97.3	97.3	1	4802.87	3.25	0	84.63	0	0.62	0	0	18.29	0	0	0	0	0	0	-6.23	-6.23
Inverter	MV5-6	369982	4908507	2	0	0	89.1	89.1	1	2022.51	3.25	0	77.12	0	0.91	0	0	8.08	0	0	0	0	0	0	2.95	2.95
SubstationTransformer	W_ST	369711.17	4906112.3	2.5	0	0	92	92	1	3181.3	3.5	0	81.05	0	0.13	0	0	6.23	0	0	0	0	0	0	4.57	4.57
Westbrook Inverter Enclosur	W_INV2	369374	4906388	2	0	0	89.1	89.1	1	2769.56	3.25	0	79.85	0	1.09	0	0	9.26	0	0	0	0	0	0	-1.15	-1.15
Westbrook Inverter Enclosur	W_INV5	369719	4906574	2	0	0	89.1	89.1	1	2810.25	3.25	0	79.97	0	1.1	0	0	9.33	0	0	0	0	0	0	-1.35	-1.35
Westbrook Inverter Enclosur	W_INV6	369875	4906578	2	0	0	89.1	89.1	1	2906.44	3.25	0	80.27	0	1.12	0	0	9.47	0	0	0	0	0	0	-1.81	-1.81
Inverter	MV2-2	365977	4906654	2	0	0	89.1	89.1	1	2919.57	3.25	0	80.31	0	1.13	0	0	9.49	0	0	0	0	0	0	-1.87	-1.87
Westbrook Inverter Enclosur	W_INV7	369780	4906417	2	0	0	89.1	89.1	1	2971.7	3.25	0	80.46	0	1.14	0	0	9.57	0	0	0	0	0	0	-2.12	-2.12
Westbrook Inverter Enclosur	W_INV3	369508	4906164	2	0	0	89.1	89.1	1	3030.57	3.25	0	80.63	0	1.15	0	0	9.66	0	0	0	0	0	0	-2.39	-2.39
Westbrook Inverter Enclosur	W_INV4	369673	4906164	2	0	0	89.1	89.1	1	3117.13	3.25	0	80.88	0	1.18	0	0	9.79	0	0	0	0	0	0	-2.79	-2.79
Westbrook Inverter Enclosur	W_INV1	369409	4906578	2	0	0	86.1	86.1	1	2626.13	3.25	0	79.39	0	1.06	0	0	9.04	0	0	0	0	0	0	-3.43	-3.43
Inverter	MV6-4	370250	4906966	2	0	0	86.1	86.1	1	2907.33	3.25	0	80.27	0	1.12	0	0	9.48	0	0	0	0	0	0	-4.81	-4.81
Inverter	MV1-3	364440	4906039	2	0	0	89.1	89.1	1	4475.55	3.25	0	84.02	0	1.51	0	0	11.75	0	0	0	0	0	0	-8.22	-8.22
Gardiner Substation	G_Sub	366586.3	4903349.9	2.5	0	0	90.8	90.8	1	5605.61	4.25	0	85.97	0	1.79	2.21	0.39	9.31	0	0	0	0	0	0	-8.52	-8.52
Inverters	G_Inv2	366676.9	4903239.1	2	0	0	87.7	87.7	1	5691.61	3.25	0	86.1	0	2.9	0	0	6.66	0	0	0	0	0	0	-8.01	-8.01
Inverters	G_Inv1	366526.4	4903225.8	2	0	0	87.7	87.7	1	5740.76	3.25	0	86.18	0	2.91	0	0	6.71	0	0	0	0	0	0	-8.14	-8.14
Inverters	G_Inv4	366732.8	4903105	2	0	0	87.7	87.7	1	5810	3.25	0	86.28	0	2.91	0	0	6.78	0	0	0	0	0	0	-8.32	-8.32
Inverters	G_Inv3	366583.7	4903091.4	2	0	0	87.7	87.7	1	5856.98	3.25	0	86.35	0	2.91	0	0	6.83	0	0	0	0	0	0	-8.44	-8.44
Inverters	G_Inv6	366788.5	4902972	2	0	0	87.7	87.7	1	5928.56	3.25	0	86.46	0	2.91	0	0	6.9	0	0	0	0	0	0	-8.62	-8.62
Inverters	G_Inv5	366638.5	4902958.1	2	0	0	87.7	87.7	1	5974.01	3.25	0	86.53	0	2.92	0	0	6.95	0	0	0	0	0	0	-8.73	-8.73
Inverters	G_Inv8	366844.5	4902838.5	2	0	0	87.7	87.7	1	6048.66	3.25	0	86.63	0	2.92	0	0	7.03	0	0	0	0	0	0	-8.92	-8.92
Inverters	G_Inv7	366694.6	4902824.7	2	0	0	87.7	87.7	1	6092.02	3.25	0	86.7	0	2.92	0	0	7.07	0	0	0	0	0	0	-9.03	-9.03
Inverters	G_Inv10	366900.7	4902704.8	2	0	0	87.7	87.7	1	6169.98	3.25	0	86.81	0	2.92	0	0	7.15	0	0	0	0	0	0	-9.22	-9.22
Inverters	G_Inv9	366750.9	4902691.8	2	0	0	87.7	87.7	1	6210.63	3.25	0	86.86	0	2.93	0	0	7.19	0	0	0	0	0	0	-9.32	-9.32
Westbrook Inverter Transfor	W_INVTR1	369403	4906578	2	0	0	78.2	78.2	1	2622.87	3.25	0	79.38	0	-2.61	0	0	1.49	0	0	0	0	0	0	-0.02	-0.02
Westbrook Inverter Transfor	W_INVTR2	369368	4906388	2	0	0	77.3	77.3	1	2766.54	3.25	0	79.84	0	-2.65	0	0	1.56	0	0	0	0	0	0	-1.41	-1.41
Westbrook Inverter Transfor	W_INVTR5	369725	4906574	2	0	0	77.3	77.3	1	2813.97	3.25	0	79.99	0	-2.66	0	0	1.58	0	0	0	0	0	0	-1.56	-1.56
Westbrook Inverter Transfor	W_INVTR6	369881	4906578	2	0	0	77.3	77.3	1	2910.36	3.25	0	80.28	0	-2.69	0	0	1.62	0	0	0	0	0	0	-1.87	-1.87
Westbrook Inverter Transfor	W_INVTR7	369786	4906417	2	0	0	77.3	77.3	1	2975.34	3.25	0	80.47	0	-2.71	0	0	1.65	0	0	0	0	0	0	-2.07	-2.07
Westbrook Inverter Transfor	W_INVTR3	369514	4906164	2	0	0	77.3	77.3	1	3033.6	3.25	0	80.64	0	-2.72	0	0	1.67	0	0	0	0	0	0	-2.25	-2.25
Westbrook Inverter Transfor	W_INVTR4	369679	4906164	2	0	0	77.3	77.3	1	3120.39	3.25	0	80.88	0	-2.75	0	0	1.71	0	0	0	0	0	0	-2.5	-2.5
Inverter Transformer	MV6-1 T	370230	4907364	2	0	0	69.4	69.4	1	2660.18	3.25	0	79.5	0	2.4	0	0	5.59	0	0	0	0	0	0	-18.14	-18.14
Inverter Transformer	MV6-4 T	370244	4906966	2	0	0	69.4	69.4	1	2902.65	3.25	0	80.26	0	2.48	0	0	5.8	0	0	0	0	0	0	-19.18	-19.18
Inverter Transformer	MV2-1 T	365836	4906816	2	0	0	69.4	69.4	1	2906.11	3.25	0	80.27	0	2.48	0	0	5.8	0	0	0	0	0	0	-19.2	-19.2
Inverter Transformer	MV3-1 T	368150	4907976	2	0	0	56.1	56.1	1	822.2	3.25	0	69.3	0	-0.05	0	0	4.45	0	0	0	0	0	0	-17.65	-17.65
Inverter Transformer	MV3-3 T	367944	4907927	2	0	0	56.1	56.1	1	853.68	3.25	0	69.63	0	-0.04	0	0	4.53	0	0	0	0	0	0	-18.06	-18.06
Inverter Transformer	MV1-7 T	364919	4905782	2	0	0	69.4	69.4	1	4283.16	3.25	0	83.64	0	2.86	0	0	6.88	0	0	0	0	0	0	-24.02	-24.02
Inverter Transformer	MV1-10 T	365010	4905564	2	0	0	69.4	69.4	1	4376.26	3.25	0	83.82	0	2.88	0	0	6.95	0	0	0	0	0	0	-24.3	-24.3
Inverter Transformer	MV3-6 T	368156	4907834	2	0	0	56.1	56.1	1	962.6	3.25	0	70.67	0	0	0	0	4.8	0	0	0	0	0	0	-19.41	-19.41
Inverter Transformer	MV3-5 T	368335	4907843	2	0	0	56.1	56.1	1	1002.71	3.25	0	71.02	0	0.01	0	0	4.9	0	0	0	0	0	0	-19.87	-19.87
Inverter Transformer	MV3-4 T	368507	4907925	2	0	0	56.1	56.1	1	1005.42	3.25	0	71.05	0	0.01	0	0	4.9	0	0	0	0	0	0	-19.9	-19.9
Inverter Transformer	MV1-14 T	365157	4905049	2	0	0	69.4	69.4	1	4677.44	3.25	0	84.4	0	2.95	0	0	7.16	0	0	0	0	0	0	-25.16	-25.16
Inverter Transformer	MV3-7 T	367951	4907754	2	0	0	56.1	56.1	1	1026.36	3.25	0	71.23	0	0.02	0	0	4.95	0	0	0	0	0	0	-20.14	-20.14
Inverter Transformer	MV1-13 T	364725	4905241	2	0	0	69.4	69.4	1	4806.93	3.25	0	84.64	0	2.97	0	0	7.25	0	0	0	0	0	0	-25.51	-25.51
Inverter Transformer	MV4-12 T	369049	4908803	2	0	0	56.1	56.1	1	1071.25	3.25	0	71.6	0	0.04	0	0	5.06	0	0	0	0	0	0	-20.63	-20.63
Inverter Transformer	MV4-7 T	369040	4909001	2	0	0	56.1	56.1	1	1084.75	3.25	0	71.71	0	0.04	0	0	5.09	0	0	0	0	0	0	-20.78	-20.78

	Inverter Transformer	MV4-13 T	369057	4908605	2	0	0	56.1	56.1	1	1093.1	3.25	0	71.77	0	0.04	0	0	5.11	0	0	0	0	0	0	-20.87	-20.87
	Inverter Transformer	MV3-2 T	368677	4907928	2	0	0	56.1	56.1	1	1102.05	3.25	0	71.84	0	0.05	0	0	5.13	0	0	0	0	0	0	-20.96	-20.96
	Inverter Transformer	MV3-10 T	368162	4907669	2	0	0	56.1	56.1	1	1126.14	3.25	0	72.03	0	0.06	0	0	5.19	0	0	0	0	0	0	-21.22	-21.22
	Inverter Transformer	MV4-4 T	369033	4909199	2	0	0	56.1	56.1	1	1135.16	3.25	0	72.1	0	0.06	0	0	5.21	0	0	0	0	0	0	-21.31	-21.31
	Inverter Transformer	MV3-11 T	368340	4907662	2	0	0	56.1	56.1	1	1175.15	3.25	0	72.4	0	0.07	0	0	5.3	0	0	0	0	0	0	-21.72	-21.72
	Inverter Transformer	MV3-13 T	367958	4907577	2	0	0	56.1	56.1	1	1203.17	3.25	0	72.61	0	0.08	0	0	5.36	0	0	0	0	0	0	-22	-22
	Inverter Transformer	MV3-9 T	368517	4907703	2	0	0	56.1	56.1	1	1204.35	3.25	0	72.62	0	0.09	0	0	5.37	0	0	0	0	0	0	-22.01	-22.01
	Inverter Transformer	MV4-1 T	369017	4909397	2	0	0	56.1	56.1	1	1208.39	3.25	0	72.64	0	0.09	0	0	5.37	0	0	0	0	0	0	-22.05	-22.05
	Inverter Transformer	MV3-12 T	367674	4907594	2	0	0	56.1	56.1	1	1224.34	3.25	0	72.76	0	0.09	0	0	5.41	0	0	0	0	0	0	-22.2	-22.2
	Inverter Transformer	MV4-15 T	369170	4908481	2	0	0	56.1	56.1	1	1228.93	3.25	0	72.79	0	0.09	0	0	5.42	0	0	0	0	0	0	-22.25	-22.25
	Inverter Transformer	MV4-14 T	369182	4908507	2	0	0	56.1	56.1	1	1234.57	3.25	0	72.83	0	0.1	0	0	5.43	0	0	0	0	0	0	-22.3	-22.3
	Inverter Transformer	MV3-8 T	368685	4907712	2	0	0	56.1	56.1	1	1280.81	3.25	0	73.15	0	0.11	0	0	5.54	0	0	0	0	0	0	-22.74	-22.74
	Inverter Transformer	MV4-11 T	369269	4908855	2	0	0	56.1	56.1	1	1293.18	3.25	0	73.23	0	0.12	0	0	5.57	0	0	0	0	0	0	-22.86	-22.86
	Inverter Transformer	MV4-8 T	369262	4909001	2	0	0	56.1	56.1	1	1302.88	3.25	0	73.3	0	0.12	0	0	5.59	0	0	0	0	0	0	-22.95	-22.95
	Inverter Transformer	MV3-17 T	368183	4907472	2	0	0	56.1	56.1	1	1323.97	3.25	0	73.44	0	0.13	0	0	5.63	0	0	0	0	0	0	-23.14	-23.14
	Inverter Transformer	MV4-9 T	369284	4909001	2	0	0	56.1	56.1	1	1324.57	3.25	0	73.44	0	0.13	0	0	5.64	0	0	0	0	0	0	-23.15	-23.15
	Inverter Transformer	MV4-10 T	369307	4908858	2	0	0	56.1	56.1	1	1331.29	3.25	0	73.49	0	0.13	0	0	5.65	0	0	0	0	0	0	-23.21	-23.21
	Inverter Transformer	MV4-6 T	369249	4909192	2	0	0	56.1	56.1	1	1336.11	3.25	0	73.52	0	0.13	0	0	5.66	0	0	0	0	0	0	-23.25	-23.25
	Inverter Transformer	MV3-15 T	368351	4907477	2	0	0	56.1	56.1	1	1355.34	3.25	0	73.64	0	0.14	0	0	5.7	0	0	0	0	0	0	-23.43	-23.43
	Inverter Transformer	MV4-5 T	369283	4909199	2	0	0	56.1	56.1	1	1370.62	3.25	0	73.74	0	0.15	0	0	5.74	0	0	0	0	0	0	-23.57	-23.57
	Inverter Transformer	MV3-18 T	367757	4907412	2	0	0	56.1	56.1	1	1385.74	3.25	0	73.83	0	0.15	0	0	5.77	0	0	0	0	0	0	-23.7	-23.7
	Inverter Transformer	MV4-3 T	369234	4909397	2	0	0	56.1	56.1	1	1399.37	3.25	0	73.92	0	0.16	0	0	5.8	0	0	0	0	0	0	-23.82	-23.82
	Inverter Transformer	MV3-16 T	368509	4907475	2	0	0	56.1	56.1	1	1408.9	3.25	0	73.98	0	0.16	0	0	5.82	0	0	0	0	0	0	-23.9	-23.9
	Inverter Transformer	MV4-2 T	369267	4909397	2	0	0	56.1	56.1	1	1429.06	3.25	0	74.1	0	0.17	0	0	5.86	0	0	0	0	0	0	-24.08	-24.08
	Inverter Transformer	MV3-14 T	368678	4907498	2	0	0	56.1	56.1	1	1460.66	3.25	0	74.29	0	0.18	0	0	5.93	0	0	0	0	0	0	-24.35	-24.35
	Inverter Transformer	MV3-19 T	368352	4907347	2	0	0	56.1	56.1	1	1481	3.25	0	74.41	0	0.19	0	0	5.98	0	0	0	0	0	0	-24.52	-24.52
	Inverter Transformer	MV3-20 T	368683	4907317	2	0	0	56.1	56.1	1	1624.01	3.25	0	75.21	0	0.25	0	0	6.28	0	0	0	0	0	0	-25.68	-25.68
	Inverter Transformer	MV3-21 T	368484	4907206	2	0	0	56.1	56.1	1	1653.34	3.25	0	75.37	0	0.26	0	0	6.34	0	0	0	0	0	0	-25.91	-25.91
	Inverter Transformer	MV3-22 T	368661	4907142	2	0	0	56.1	56.1	1	1774.69	3.25	0	75.98	0	0.31	0	0	6.59	0	0	0	0	0	0	-26.83	-26.83
	Inverter Transformer	MV5-6 T	369987	4908507	2	0	0	56.1	56.1	1	2027.47	3.25	0	77.14	0	0.42	0	0	7.1	0	0	0	0	0	0	-28.59	-28.59
	Inverter Transformer	MV5-2 T	370011	4908853	2	0	0	56.1	56.1	1	2034.31	3.25	0	77.17	0	0.42	0	0	7.11	0	0	0	0	0	0	-28.64	-28.64
	Inverter Transformer	MV5-5 T	370021	4908690	2	0	0	56.1	56.1	1	2044.98	3.25	0	77.21	0	0.42	0	0	7.13	0	0	0	0	0	0	-28.71	-28.71
	Inverter Transformer	MV5-1 T	370015	4909142	2	0	0	56.1	56.1	1	2068.92	3.25	0	77.31	0	0.43	0	0	7.18	0	0	0	0	0	0	-28.87	-28.87
	Inverter Transformer	MV5-3 T	370237	4908851	2	0	0	56.1	56.1	1	2260.12	3.25	0	78.08	0	0.51	0	0	7.54	0	0	0	0	0	0	-30.08	-30.08
	Inverter Transformer	MV5-4 T	370330	4908707	2	0	0	56.1	56.1	1	2353.13	3.25	0	78.43	0	0.55	0	0	7.72	0	0	0	0	0	0	-30.65	-30.65
	Inverter Transformer	MV6-2 T	370091	4907339	2	0	0	56.1	56.1	1	2557.59	3.25	0	79.16	0	0.64	0	0	8.09	0	0	0	0	0	0	-31.83	-31.83
	Inverter Transformer	MV6-3 T	370202	4907140	2	0	0	56.1	56.1	1	2763.29	3.25	0	79.83	0	0.73	0	0	8.46	0	0	0	0	0	0	-32.96	-32.96
	Inverter Transformer	MV2-2 T	365982	4906654	2	0	0	56.1	56.1	1	2916.14	3.25	0	80.3	0	0.79	0	0	8.73	0	0	0	0	0	0	-33.76	-33.76
	Inverter Transformer	MV2-3 T	365814	4906641	2	0	0	56.1	56.1	1	3042.73	3.25	0	80.67	0	0.85	0	0	8.94	0	0	0	0	0	0	-34.4	-34.4
	Inverter Transformer	MV2-4 T	365590	4906628	2	0	0	56.1	56.1	1	3214.6	3.25	0	81.14	0	0.92	0	0	9.23	0	0	0	0	0	0	-35.23	-35.23
	Inverter Transformer	MV1-1 T	364721	4906166	2	0	0	56.1	56.1	1	4176.25	3.25	0	83.42	0	1.31	0	0	10.71	0	0	0	0	0	0	-39.39	-39.39
	Inverter Transformer	MV1-2 T	364759	4906063	2	0	0	56.1	56.1	1	4212.37	3.25	0	83.49	0	1.33	0	0	10.77	0	0	0	0	0	0	-39.53	-39.53
	Inverter Transformer	MV1-4 T	364821	4905918	2	0	0	56.1	56.1	1	4261.19	3.25	0	83.59	0	1.35	0	0	10.84	0	0	0	0	0	0	-39.72	-39.72
	Inverter Transformer	MV1-5 T	364676	4905892	2	0	0	56.1	56.1	1	4386.77	3.25	0	83.84	0	1.4	0	0	11.02	0	0	0	0	0	0	-40.2	-40.2
	Inverter Transformer	MV1-8 T	364782	4905647	2	0	0	56.1	56.1	1	4475.5	3.25	0	84.02	0	1.43	0	0	11.14	0	0	0	0	0	0	-40.53	-40.53
	Inverter Transformer	MV1-3 T	364435	4906039	2	0	0	56.1	56.1	1	4479.5	3.25	0	84.02	0	1.43	0	0	11.15	0	0	0	0	0	0	-40.54	-40.54
	Inverter Transformer	MV1-12 T	365044	4905386	2	0	0	56.1	56.1	1	4486.38	3.25	0	84.04	0	1.43	0	0	11.16	0	0	0	0	0	0	-40.57	-40.57
	Inverter Transformer	MV1-6 T	364482	4905835	2	0	0	56.1	56.1	1	4571.11	3.25	0	84.2	0	1.47	0	0	11.27	0	0	0	0	0	0	-40.88	-40.88
	Inverter Transformer	MV1-15 T	365309	4904994	2	0	0	56.1	56.1	1	4632.21	3.25	0	84.32	0	1.49	0	0	11.36	0	0	0	0	0	0	-41.11	-41.11
	Inverter Transformer	MV1-9 T	364555	4905646	2	0	0	56.1	56.1	1	4641	3.25	0	84.33	0	1.49	0	0	11.37	0	0	0	0	0	0	-41.14	-41.14
	Inverter Transformer	MV1-11 T	364649	4905414	2	0	0	56.1	56.1	1	4734.15	3.25	0	84.5	0	1.53	0	0	11.5	0	0	0	0	0	0	-41.47	-41.47
	Line Reactor	NGR	369421	4908787.5	5	0	0	45.4	45.4	1	1443.02	5.25	0	74.19	0	3.44	1.27	0.11	0.59	0	0	0	0	0	0	-34.13	-34.13
Limit. Valu	0	0																								
Level D/N:	33.9838	33.9838																								

Receiver: Existing Noise Receptor
ID: S-R151
X: 365493
Y: 4904759
Z: 4.5
Ground: 0

ISO	Description	ID	X	Y	Z	Ground	ReflOrd	LxT	LxN	L/A	Dist.	hm	Freq	Adiv	K0b	Agr	Abar	z	Aatm	Afol	Ahous	Cmet	CmetN	Dc	RL	LtotT	LtotN
	Inverter	MV1-15	365315	4904994	2	0	0	100.3	100.3	1	294.81	3.25	0	60.39	0	-0.65	0	0	6.32	0	0	0	0	0	0	34.25	34.25
	Inverter	MV1-14	365163	4905049	2	0	0	97.3	97.3	1	439.32	3.25	0	63.86	0	-0.59	0	0	8.01	0	0	0	0	0	0	26.04	26.04
	Inverter	MV1-12	365038	4905386	2	0	0	100.3	100.3	1	774.7	3.25	0	68.78	0	-0.37	0	0	10.07	0	0	0	0	0	0	21.82	21.82
	Inverter	MV1-11	364655	4905414	2	0	0	100.3	100.3	1	1063.61	3.25	0	71.54	0	-0.22	0	0	11.12	0	0	0	0	0	0	17.88	17.88
	Inverter	MV1-8	364788	4905647	2	0	0	100.3	100.3	1	1133.83	3.25	0	72.09	0	-0.18	0	0	11.33	0	0	0	0	0	0	17.07	17.07
	Inverter	MV1-13	364731	4905241	2	0	0	97.3	97.3	1	901.65	3.25	0	70.1	0	-0.3	0	0	10.57	0	0	0	0	0	0	16.94	16.94
	Inverter	MV1-9	364561	4905646	2	0	0	100.3	100.3	1	1286.62	3.25	0	73.19	0	-0.12	0	0	11.77	0	0	0	0	0	0	15.47	15.47
	Inverter	MV1-10	365004	4905564	2	0	0	97.3	97.3	1	941.89	3.25	0	70.48	0	-0.28	0	0	10.71	0	0	0	0	0	0	16.39	16.39
	Inverter	MV1-4	364815	4905918	2	0	0	100.3	100.3	1	1342.75	3.25	0	73.56	0	-0.09	0	0	11.92	0	0	0	0	0	0	14.93	14.93
	Inverter	MV1-5	364671	4905892	2	0	0	100.3	100.3	1	1399.78	3.25	0	73.92	0	-0.07	0	0	12.07	0	0	0	0	0	0	14.39	14.39
	Sol_Luce Substation	S_Substation	369426	4908792	3.5	0	0	112.1	112.1	1	5633.26	5.25	0	86.02	0	1.07	2.72	0.25	9.34	0	0	0	0	0	0	12.93	12.93

Inverter	MV1-6	364477	4905835	2	0	0	100.3	100.3	1	1479.88	3.25	0	74.4	0	-0.04	0	0	12.27	0	0	0	0	0	0	13.67	13.67
Inverter	MV1-2	364753	4906063	2	0	0	100.3	100.3	1	1499.34	3.25	0	74.52	0	-0.03	0	0	12.32	0	0	0	0	0	0	13.5	13.5
Inverter	MV1-1	364715	4906166	2	0	0	100.3	100.3	1	1607.77	3.25	0	75.12	0	0.01	0	0	12.59	0	0	0	0	0	0	12.6	12.6
Inverter	MV1-7	364925	4905782	2	0	0	97.3	97.3	1	1170.11	3.25	0	72.36	0	-0.17	0	0	11.44	0	0	0	0	0	0	13.68	13.68
Inverter	MV2-4	365586	4906624	2	0	0	100.3	100.3	1	1867.32	3.25	0	76.42	0	0.09	0	0	13.18	0	0	0	0	0	0	10.62	10.62
Inverter	MV2-3	365820	4906641	2	0	0	100.3	100.3	1	1910.2	3.25	0	76.62	0	0.1	0	0	13.27	0	0	0	0	0	0	10.32	10.32
Inverter	MV2-1	365842	4906816	2	0	0	97.3	97.3	1	2086.4	3.25	0	77.39	0	0.15	0	0	13.64	0	0	0	0	0	0	6.13	6.13
Inverter	MV3-18	367752	4907412	2	0	0	100.3	100.3	1	3484.46	3.25	0	81.84	0	0.45	0	0	16.21	0	0	0	0	0	0	1.82	1.82
Inverter	MV3-12	367668	4907594	2	0	0	100.3	100.3	1	3573.21	3.25	0	82.06	0	0.46	0	0	16.35	0	0	0	0	0	0	1.43	1.43
Inverter	MV3-13	367963	4907577	2	0	0	100.3	100.3	1	3747.27	3.25	0	82.47	0	0.49	0	0	16.64	0	0	0	0	0	0	0.71	0.71
Inverter	MV3-17	368178	4907472	2	0	0	100.3	100.3	1	3817.01	3.25	0	82.63	0	0.5	0	0	16.75	0	0	0	0	0	0	0.42	0.42
Inverter	MV3-21	368478	4907206	2	0	0	100.3	100.3	1	3859.8	3.25	0	82.73	0	0.51	0	0	16.82	0	0	0	0	0	0	0.25	0.25
Inverter	MV3-19	368357	4907347	2	0	0	100.3	100.3	1	3860.08	3.25	0	82.73	0	0.51	0	0	16.82	0	0	0	0	0	0	0.25	0.25
Inverter	MV3-7	367945	4907754	2	0	0	100.3	100.3	1	3870.7	3.25	0	82.76	0	0.51	0	0	16.84	0	0	0	0	0	0	0.21	0.21
Inverter	MV3-15	368357	4907477	2	0	0	100.3	100.3	1	3948.42	3.25	0	82.93	0	0.52	0	0	16.97	0	0	0	0	0	0	-0.1	-0.1
Inverter	MV3-10	368167	4907669	2	0	0	100.3	100.3	1	3952.01	3.25	0	82.94	0	0.52	0	0	16.97	0	0	0	0	0	0	-0.12	-0.12
Inverter	MV3-3	367939	4907927	2	0	0	100.3	100.3	1	4002.39	3.25	0	83.05	0	0.53	0	0	17.05	0	0	0	0	0	0	-0.31	-0.31
Inverter	MV3-16	368514	4907475	2	0	0	100.3	100.3	1	4062.4	3.25	0	83.18	0	0.54	0	0	17.15	0	0	0	0	0	0	-0.55	-0.55
Inverter	MV3-11	368346	4907662	2	0	0	100.3	100.3	1	4070.26	3.25	0	83.19	0	0.54	0	0	17.16	0	0	0	0	0	0	-0.58	-0.58
Inverter	MV3-6	368162	4907834	2	0	0	100.3	100.3	1	4071.76	3.25	0	83.2	0	0.54	0	0	17.16	0	0	0	0	0	0	-0.58	-0.58
Inverter	MV3-20	368689	4907317	2	0	0	100.3	100.3	1	4093.63	3.25	0	83.24	0	0.54	0	0	17.2	0	0	0	0	0	0	-0.67	-0.67
Inverter	MV3-14	368684	4907498	2	0	0	100.3	100.3	1	4205.31	3.25	0	83.48	0	0.55	0	0	17.37	0	0	0	0	0	0	-1.09	-1.09
Inverter	MV3-9	368512	4907703	2	0	0	100.3	100.3	1	4216.81	3.25	0	83.5	0	0.56	0	0	17.39	0	0	0	0	0	0	-1.14	-1.14
Inverter	MV3-8	368680	4907712	2	0	0	100.3	100.3	1	4344.79	3.25	0	83.76	0	0.57	0	0	17.59	0	0	0	0	0	0	-1.61	-1.61
Inverter	MV6-2	370085	4907339	2	0	0	100.3	100.3	1	5267.15	3.25	0	85.43	0	0.66	0	0	18.97	0	0	0	0	0	0	-4.75	-4.75
Inverter	MV6-3	370207	4907140	2	0	0	100.3	100.3	1	5281.19	3.25	0	85.45	0	0.67	0	0	18.99	0	0	0	0	0	0	-4.8	-4.8
Gardiner Substation	G_Sub	366586.3	4903349.9	2.5	0	0	90.8	90.8	1	1783.5	4.25	0	76.03	0	0.75	3.72	0.25	3.99	0	0	0	0	0	0	6.29	6.29
Inverter	MV4-7	369035	4909001	2	0	0	100.3	100.3	1	5526.33	3.25	0	85.85	0	0.68	0	0	19.34	0	0	0	0	0	0	-5.56	-5.56
Inverter	MV4-11	369264	4908855	2	0	0	100.3	100.3	1	5567.55	3.25	0	85.91	0	0.68	0	0	19.4	0	0	0	0	0	0	-5.68	-5.68
Inverter	MV4-10	369312	4908858	2	0	0	100.3	100.3	1	5602.37	3.25	0	85.97	0	0.69	0	0	19.44	0	0	0	0	0	0	-5.79	-5.79
Inverter	MV4-8	369256	4909001	2	0	0	100.3	100.3	1	5670.51	3.25	0	86.07	0	0.69	0	0	19.54	0	0	0	0	0	0	-5.99	-5.99
Inverter	MV4-4	369027	4909199	2	0	0	100.3	100.3	1	5674.75	3.25	0	86.08	0	0.69	0	0	19.55	0	0	0	0	0	0	-6	-6
Inverter	MV4-9	369289	4909001	2	0	0	100.3	100.3	1	5692.47	3.25	0	86.11	0	0.69	0	0	19.57	0	0	0	0	0	0	-6.06	-6.06
Inverter	MV4-6	369243	4909192	2	0	0	100.3	100.3	1	5806.38	3.25	0	86.28	0	0.7	0	0	19.73	0	0	0	0	0	0	-6.39	-6.39
Inverter	MV4-1	369011	4909397	2	0	0	100.3	100.3	1	5821.29	3.25	0	86.3	0	0.7	0	0	19.75	0	0	0	0	0	0	-6.43	-6.43
Inverter	MV4-5	369289	4909199	2	0	0	100.3	100.3	1	5841.51	3.25	0	86.33	0	0.7	0	0	19.78	0	0	0	0	0	0	-6.49	-6.49
Inverter	MV4-3	369229	4909397	2	0	0	100.3	100.3	1	5955.56	3.25	0	86.5	0	0.7	0	0	19.93	0	0	0	0	0	0	-6.82	-6.82
Inverter	MV4-2	369272	4909397	2	0	0	100.3	100.3	1	5982.63	3.25	0	86.54	0	0.7	0	0	19.97	0	0	0	0	0	0	-6.9	-6.9
Inverter	MV5-5	370015	4908690	2	0	0	100.3	100.3	1	5991.77	3.25	0	86.55	0	0.7	0	0	19.98	0	0	0	0	0	0	-6.93	-6.93
Inverter	MV1-3	364440	4906039	2	0	0	89.1	89.1	1	1657.47	3.25	0	75.39	0	0.83	0	0	7.48	0	0	0	0	0	0	5.36	5.36
Inverter	MV5-2	370006	4908853	2	0	0	100.3	100.3	1	6093.28	3.25	0	86.7	0	0.71	0	0	20.12	0	0	0	0	0	0	-7.21	-7.21
Inverter	MV5-4	370324	4908707	2	0	0	100.3	100.3	1	6239.01	3.25	0	86.9	0	0.71	0	0	20.31	0	0	0	0	0	0	-7.62	-7.62
Inverter	MV5-3	370231	4908851	2	0	0	100.3	100.3	1	6260.44	3.25	0	86.93	0	0.71	0	0	20.34	0	0	0	0	0	0	-7.68	-7.68
Inverter	MV5-1	370020	4909142	2	0	0	100.3	100.3	1	6301.14	3.25	0	86.99	0	0.71	0	0	20.4	0	0	0	0	0	0	-7.79	-7.79
Inverter	MV2-2	365977	4906654	2	0	0	89.1	89.1	1	1955.83	3.25	0	76.83	0	0.9	0	0	7.97	0	0	0	0	0	0	3.36	3.36
Inverter	MV6-1	370235	4907364	2	0	0	97.3	97.3	1	5410.42	3.25	0	85.66	0	0.67	0	0	19.17	0	0	0	0	0	0	-8.2	-8.2
Inverters	G_Inv1	366526.4	4903225.8	2	0	0	87.7	87.7	1	1848.95	3.25	0	76.34	0	2.56	0	0	2.46	0	0	0	0	0	0	6.3	6.3
Inverters	G_Inv2	366676.9	4903239.1	2	0	0	87.7	87.7	1	1926.58	4.16	0	76.7	0	3.05	1.64	0.01	2.55	0	0	0	0	0	0	3.72	3.72
DSTATCOM - 10 MVAR #2	DSAT2	369403	4908757	2.5	0	0	96.6	96.6	1	5592.15	3.5	0	85.95	0	3.74	0	0	3.64	0	0	0	0	0	0	3.3	3.3
Inverters	G_Inv3	366583.7	4903091.4	2	0	0	87.7	87.7	1	1992.62	3.25	0	76.99	0	2.58	0	0	2.63	0	0	0	0	0	0	5.46	5.46
DSTATCOM - 10 MVAR #1	DSAT1	369437	4908757	2.5	0	0	96.6	96.6	1	5615.97	3.5	0	85.99	0	3.74	0	0	3.65	0	0	0	0	0	0	3.25	3.25
Inverters	G_Inv4	366732.8	4903105	2	0	0	87.7	87.7	1	2067.08	3.25	0	77.31	0	2.59	0	0	2.71	0	0	0	0	0	0	5.05	5.05
Inverters	G_Inv5	366638.5	4902958.1	2	0	0	87.7	87.7	1	2134.34	3.25	0	77.59	0	2.6	0	0	2.79	0	0	0	0	0	0	4.68	4.68
Inverters	G_Inv6	366788.5	4902972	2	0	0	87.7	87.7	1	2207.19	3.25	0	77.88	0	2.61	0	0	2.88	0	0	0	0	0	0	4.3	4.3
Inverters	G_Inv7	366694.6	4902824.7	2	0	0	87.7	87.7	1	2277.14	3.25	0	78.15	0	2.62	0	0	2.96	0	0	0	0	0	0	3.94	3.94
Inverters	G_Inv8	366844.5	4902838.5	2	0	0	87.7	87.7	1	2348.38	3.25	0	78.42	0	2.63	0	0	3.04	0	0	0	0	0	0	3.58	3.58
Inverters	G_Inv9	366750.9	4902691.8	2	0	0	87.7	87.7	1	2419.84	3.25	0	78.68	0	2.63	0	0	3.12	0	0	0	0	0	0	3.23	3.23
Inverters	G_Inv10	366900.7	4902704.8	2	0	0	87.7	87.7	1	2490.25	3.25	0	78.92	0	2.64	0	0	3.2	0	0	0	0	0	0	2.89	2.89
SubstationTransformer	W_ST	369711.17	4906112.3	2.5	0	0	92	92	1	4429.93	4.25	0	83.93	0	1.48	2.48	0.28	7.92	0	0	0	0	0	0	-3.84	-3.84
Inverter	MV3-22	368656	4907142	2	0	0	89.1	89.1	1	3960.21	3.25	0	82.95	0	1.38	0	0	11.03	0	0	0	0	0	0	-6.31	-6.31
Inverter	MV3-1	368156	4907976	2	0	0	89.1	89.1	1	4176.2	3.25	0	83.42	0	1.44	0	0	11.33	0	0	0	0	0	0	-7.13	-7.13
Inverter	MV3-5	368340	4907843	2	0	0	89.1	89.1	1	4197.2	3.25	0	83.46	0	1.44	0	0	11.36	0	0	0	0	0	0	-7.21	-7.21
Westbrook Inverter Enclosur	W_INV2	369374	4906388	2	0	0	89.1	89.1	1	4209.02	3.25	0	83.48	0	1.44	0	0	11.38	0	0	0	0	0	0	-7.25	-7.25
Westbrook Inverter Enclosur	W_INV3	369508	4906164	2	0	0	89.1	89.1	1	4253.73	3.25	0	83.58	0	1.46	0	0	11.44	0	0	0	0	0	0	-7.42	-7.42
Inverter Transformer	MV1-14 T	365157	4905049	2	0	0	69.4	69.4	1	443.85	3.25	0	63.94	0	0.96	0	0	2.82	0	0	0	0	0	0	1.63	1.63
Inverter	MV3-4	368502	4907925	2	0	0	89.1	89.1	1	4367.8	3.25	0	83.81	0	1.48	0	0	11.6	0	0	0	0	0	0	-7.83	-7.83
Westbrook Inverter Enclosur	W_INV4	369673	4906164	2	0	0	89.1	89.1	1	4409.81	3.25	0	83.89	0	1.49	0	0	11.66	0	0	0	0	0	0	-7.98	-7.98
Inverter	MV3-2	368671	4907928	2	0	0	89.1	89.1	1	4488.01	3.25	0	84.04	0	1.51	0	0	11.77	0	0	0	0	0	0	-8.26	-8.26
Westbrook Inverter Enclosur	W_INV7	369780	4906417	2	0	0	89.1	89.1	1	4596.45	3.25	0	84.25	0	1.54	0	0	11.92	0	0	0	0	0	0	-8.65	-8.65
Westbrook Inverter Enclosur	W_INV5	369719	4906574	2	0	0	89.1	89.1	1	4599.27	3.25	0	84.25	0	1.54	0	0	11.92	0	0	0	0	0	0	-8.66	-8.66
Westbrook Inverter Enclosur	W_INV6	369875	4906578	2	0	0	89.1	89.1	1	4744.54	3.25	0	84.52	0	1.58	0	0	12.12	0	0	0	0	0	0	-9.16	-9.16
Fixed Reactor Bank 1	FRB1	369378	4908755	6	0	0	89.8	89.8	1	5573.26	5.25	0	85.92	0	-0.48	0	0	9.28	0	0	0	0	0	0	-4.94	-4.94
Fixed Reactor Bank 2	FRB2	369464	4908755	6	0	0	89.8	89.8	1	5633.55	5.25	0	86.02	0	-0.47	0	0	9.35	0	0	0	0	0	0	-5.11	-5.11
Inverter	MV4-15	369176	4908481	2	0	0	89.1	89.1	1	5236.2	3.25	0	85.38	0	1.7	0	0	12.78	0	0	0	0	0	0	-10.8	-10.8

Inverter	MV4-13	369051	4908605	2	0	0	89.1	89.1	1	5239.38	3.25	0	85.39	0	1.7	0	0	12.78	0	0	0	0	0	0	-10.81	-10.81
Inverter	MV4-14	369176	4908507	2	0	0	89.1	89.1	1	5254.71	3.25	0	85.41	0	1.7	0	0	12.8	0	0	0	0	0	0	-10.86	-10.86
Inverter	MV4-12	369043	4908803	2	0	0	89.1	89.1	1	5381.12	3.25	0	85.62	0	1.73	0	0	12.97	0	0	0	0	0	0	-11.26	-11.26
Inverter	MV5-6	369982	4908507	2	0	0	89.1	89.1	1	5847.96	3.25	0	86.34	0	1.85	0	0	13.57	0	0	0	0	0	0	-12.7	-12.7
Westbrook Inverter Enclosur	W_INV1	369409	4906578	2	0	0	86.1	86.1	1	4317.85	3.25	0	83.71	0	1.47	0	0	11.53	0	0	0	0	0	0	-10.65	-10.65
Inverter	MV6-4	370250	4906966	2	0	0	86.1	86.1	1	5244.04	3.25	0	85.39	0	1.7	0	0	12.79	0	0	0	0	0	0	-13.82	-13.82
Inverter Transformer	MV1-13 T	364725	4905241	2	0	0	69.4	69.4	1	906.73	3.25	0	70.15	0	1.6	0	0	3.68	0	0	0	0	0	0	-6.08	-6.08
Inverter Transformer	MV1-10 T	365010	4905564	2	0	0	69.4	69.4	1	938.79	3.25	0	70.45	0	1.63	0	0	3.72	0	0	0	0	0	0	-6.46	-6.46
Inverter Transformer	MV1-7 T	364919	4905782	2	0	0	69.4	69.4	1	1173.04	3.25	0	72.39	0	1.81	0	0	4.04	0	0	0	0	0	0	-8.88	-8.88
Inverter Transformer	MV1-15 T	365309	4904994	2	0	0	56.1	56.1	1	298.47	3.25	0	60.5	0	-0.07	0	0	2.78	0	0	0	0	0	0	-7.15	-7.15
Westbrook Inverter Transfor	W_INVTR1	369403	4906578	2	0	0	78.2	78.2	1	4312.41	3.25	0	83.69	0	-3.03	0	0	2.17	0	0	0	0	0	0	-4.59	-4.59
Westbrook Inverter Transfor	W_INVTR2	369368	4906388	2	0	0	77.3	77.3	1	4203.48	3.25	0	83.47	0	-3.01	0	0	2.13	0	0	0	0	0	0	-5.25	-5.25
Westbrook Inverter Transfor	W_INVTR3	369514	4906164	2	0	0	77.3	77.3	1	4259.4	3.25	0	83.59	0	-3.02	0	0	2.15	0	0	0	0	0	0	-5.38	-5.38
Westbrook Inverter Transfor	W_INVTR4	369679	4906164	2	0	0	77.3	77.3	1	4415.5	3.25	0	83.9	0	-3.06	0	0	2.21	0	0	0	0	0	0	-5.71	-5.71
Westbrook Inverter Transfor	W_INVTR7	369786	4906417	2	0	0	77.3	77.3	1	4602.05	3.25	0	84.26	0	-3.1	0	0	2.27	0	0	0	0	0	0	-6.1	-6.1
Westbrook Inverter Transfor	W_INVTR5	369725	4906574	2	0	0	77.3	77.3	1	4604.79	3.25	0	84.26	0	-3.1	0	0	2.28	0	0	0	0	0	0	-6.1	-6.1
Westbrook Inverter Transfor	W_INVTR6	369881	4906578	2	0	0	77.3	77.3	1	4750.09	3.25	0	84.53	0	-3.13	0	0	2.33	0	0	0	0	0	0	-6.39	-6.39
Inverter Transformer	MV2-1 T	365836	4906816	2	0	0	69.4	69.4	1	2085.4	3.25	0	77.38	0	2.2	0	0	5.05	0	0	0	0	0	0	-15.29	-15.29
Inverter Transformer	MV1-12 T	365044	4905386	2	0	0	56.1	56.1	1	771.19	3.25	0	68.74	0	-0.06	0	0	4.32	0	0	0	0	0	0	-16.94	-16.94
Inverter Transformer	MV1-11 T	364649	4905414	2	0	0	56.1	56.1	1	1068.35	3.25	0	71.57	0	0.04	0	0	5.05	0	0	0	0	0	0	-20.6	-20.6
Inverter Transformer	MV6-4 T	370244	4906966	2	0	0	69.4	69.4	1	5238.59	3.25	0	85.38	0	3.06	0	0	7.54	0	0	0	0	0	0	-26.63	-26.63
Inverter Transformer	MV1-8 T	364782	4905647	2	0	0	56.1	56.1	1	1137.57	3.25	0	72.12	0	0.06	0	0	5.21	0	0	0	0	0	0	-21.33	-21.33
Inverter Transformer	MV6-1 T	370230	4907364	2	0	0	69.4	69.4	1	5406.03	3.25	0	85.66	0	3.09	0	0	7.65	0	0	0	0	0	0	-27.04	-27.04
Inverter Transformer	MV1-9 T	364555	4905646	2	0	0	56.1	56.1	1	1290.98	3.25	0	73.22	0	0.12	0	0	5.56	0	0	0	0	0	0	-22.84	-22.84
Inverter Transformer	MV1-4 T	364821	4905918	2	0	0	56.1	56.1	1	1339.73	3.25	0	73.54	0	0.14	0	0	5.67	0	0	0	0	0	0	-23.29	-23.29
Inverter Transformer	MV1-5 T	364676	4905892	2	0	0	56.1	56.1	1	1396.85	3.25	0	73.9	0	0.16	0	0	5.79	0	0	0	0	0	0	-23.8	-23.8
Inverter Transformer	MV1-6 T	364482	4905835	2	0	0	56.1	56.1	1	1476.45	3.25	0	74.38	0	0.19	0	0	5.97	0	0	0	0	0	0	-24.48	-24.48
Inverter Transformer	MV1-2 T	364759	4906063	2	0	0	56.1	56.1	1	1496.39	3.25	0	74.5	0	0.2	0	0	6.01	0	0	0	0	0	0	-24.65	-24.65
Inverter Transformer	MV1-1 T	364721	4906166	2	0	0	56.1	56.1	1	1604.88	3.25	0	75.11	0	0.24	0	0	6.24	0	0	0	0	0	0	-25.53	-25.53
Inverter Transformer	MV1-3 T	364435	4906039	2	0	0	56.1	56.1	1	1660.65	3.25	0	75.41	0	0.26	0	0	6.36	0	0	0	0	0	0	-25.97	-25.97
Inverter Transformer	MV2-4 T	365590	4906628	2	0	0	56.1	56.1	1	1871.52	3.25	0	76.44	0	0.35	0	0	6.79	0	0	0	0	0	0	-27.52	-27.52
Inverter Transformer	MV2-3 T	365814	4906641	2	0	0	56.1	56.1	1	1909.18	3.25	0	76.62	0	0.37	0	0	6.86	0	0	0	0	0	0	-27.79	-27.79
Inverter Transformer	MV2-2 T	365982	4906654	2	0	0	56.1	56.1	1	1957.08	3.25	0	76.83	0	0.39	0	0	6.96	0	0	0	0	0	0	-28.12	-28.12
Inverter Transformer	MV3-18 T	367757	4907412	2	0	0	56.1	56.1	1	3487.71	3.25	0	81.85	0	1.03	0	0	9.67	0	0	0	0	0	0	-36.5	-36.5
Inverter Transformer	MV3-12 T	367674	4907594	2	0	0	56.1	56.1	1	3576.87	3.25	0	82.07	0	1.07	0	0	9.81	0	0	0	0	0	0	-36.89	-36.89
Inverter Transformer	MV3-13 T	367958	4907577	2	0	0	56.1	56.1	1	3743.98	3.25	0	82.47	0	1.14	0	0	10.07	0	0	0	0	0	0	-37.62	-37.62
Inverter Transformer	MV3-17 T	368183	4907472	2	0	0	56.1	56.1	1	3820.53	3.25	0	82.64	0	1.17	0	0	10.19	0	0	0	0	0	0	-37.94	-37.94
Inverter Transformer	MV3-19 T	368352	4907347	2	0	0	56.1	56.1	1	3856.38	3.25	0	82.72	0	1.19	0	0	10.24	0	0	0	0	0	0	-38.09	-38.09
Inverter Transformer	MV3-21 T	368484	4907206	2	0	0	56.1	56.1	1	3864.44	3.25	0	82.74	0	1.19	0	0	10.25	0	0	0	0	0	0	-38.12	-38.12
Inverter Transformer	MV3-7 T	367951	4907754	2	0	0	56.1	56.1	1	3874.51	3.25	0	82.76	0	1.19	0	0	10.27	0	0	0	0	0	0	-38.17	-38.17
Inverter Transformer	MV3-15 T	368351	4907477	2	0	0	56.1	56.1	1	3944.07	3.25	0	82.92	0	1.22	0	0	10.37	0	0	0	0	0	0	-38.45	-38.45
Inverter Transformer	MV3-10 T	368162	4907669	2	0	0	56.1	56.1	1	3948.63	3.25	0	82.93	0	1.22	0	0	10.38	0	0	0	0	0	0	-38.47	-38.47
Inverter Transformer	MV3-22 T	368661	4907142	2	0	0	56.1	56.1	1	3964.2	3.25	0	82.96	0	1.23	0	0	10.4	0	0	0	0	0	0	-38.54	-38.54
Inverter Transformer	MV3-3 T	367944	4907927	2	0	0	56.1	56.1	1	4005.45	3.25	0	83.05	0	1.25	0	0	10.46	0	0	0	0	0	0	-38.7	-38.7
Inverter Transformer	MV3-16 T	368509	4907475	2	0	0	56.1	56.1	1	4058.68	3.25	0	83.17	0	1.27	0	0	10.54	0	0	0	0	0	0	-38.92	-38.92
Inverter Transformer	MV3-11 T	368340	4907662	2	0	0	56.1	56.1	1	4066.06	3.25	0	83.18	0	1.27	0	0	10.55	0	0	0	0	0	0	-38.95	-38.95
Inverter Transformer	MV3-6 T	368156	4907834	2	0	0	56.1	56.1	1	4067.83	3.25	0	83.19	0	1.27	0	0	10.56	0	0	0	0	0	0	-38.96	-38.96
Inverter Transformer	MV3-20 T	368683	4907317	2	0	0	56.1	56.1	1	4088.94	3.25	0	83.23	0	1.28	0	0	10.59	0	0	0	0	0	0	-39.04	-39.04
Inverter Transformer	MV3-1 T	368150	4907976	2	0	0	56.1	56.1	1	4172.38	3.25	0	83.41	0	1.31	0	0	10.71	0	0	0	0	0	0	-39.37	-39.37
Inverter Transformer	MV3-5 T	368335	4907843	2	0	0	56.1	56.1	1	4193.81	3.25	0	83.45	0	1.32	0	0	10.74	0	0	0	0	0	0	-39.45	-39.45
Inverter Transformer	MV3-14 T	368678	4907498	2	0	0	56.1	56.1	1	4200.76	3.25	0	83.47	0	1.32	0	0	10.75	0	0	0	0	0	0	-39.48	-39.48
Inverter Transformer	MV3-9 T	368517	4907703	2	0	0	56.1	56.1	1	4220.39	3.25	0	83.51	0	1.33	0	0	10.78	0	0	0	0	0	0	-39.56	-39.56
Inverter Transformer	MV3-8 T	368685	4907712	2	0	0	56.1	56.1	1	4348.46	3.25	0	83.77	0	1.38	0	0	10.96	0	0	0	0	0	0	-40.05	-40.05
Inverter Transformer	MV3-4 T	368507	4907925	2	0	0	56.1	56.1	1	4371.24	3.25	0	83.81	0	1.39	0	0	10.99	0	0	0	0	0	0	-40.14	-40.14
Inverter Transformer	MV3-2 T	368677	4907928	2	0	0	56.1	56.1	1	4492.26	3.25	0	84.05	0	1.44	0	0	11.16	0	0	0	0	0	0	-40.59	-40.59
Inverter Transformer	MV4-15 T	369170	4908481	2	0	0	56.1	56.1	1	5231.98	3.25	0	85.37	0	1.71	0	0	12.16	0	0	0	0	0	0	-43.18	-43.18
Inverter Transformer	MV4-13 T	369057	4908605	2	0	0	56.1	56.1	1	5243.45	3.25	0	85.39	0	1.71	0	0	12.17	0	0	0	0	0	0	-43.22	-43.22
Inverter Transformer	MV4-14 T	369182	4908507	2	0	0	56.1	56.1	1	5258.92	3.25	0	85.42	0	1.72	0	0	12.19	0	0	0	0	0	0	-43.27	-43.27
Inverter Transformer	MV6-2 T	370091	4907339	2	0	0	56.1	56.1	1	5272.38	3.25	0	85.44	0	1.72	0	0	12.21	0	0	0	0	0	0	-43.31	-43.31
Inverter Transformer	MV6-3 T	370202	4907140	2	0	0	56.1	56.1	1	5276.73	3.25	0	85.45	0	1.72	0	0	12.21	0	0	0	0	0	0	-43.33	-43.33
Inverter Transformer	MV4-12 T	369049	4908803	2	0	0	56.1	56.1	1	5385.08	3.25	0	85.62	0	1.76	0	0	12.35	0	0	0	0	0	0	-43.68	-43.68
Inverter Transformer	MV4-7 T	369040	4909001	2	0	0	56.1	56.1	1	5529.54	3.25	0	85.85	0	1.81	0	0	12.53	0	0	0	0	0	0	-44.14	-44.14
Inverter Transformer	MV4-11 T	369269	4908855	2	0	0	56.1	56.1	1	5570.94	3.25	0	85.92	0	1.82	0	0	12.58	0	0	0	0	0	0	-44.27	-44.27
Inverter Transformer	MV4-10 T	369307	4908858	2	0	0	56.1	56.1	1	5598.96	3.25	0	85.96	0	1.83	0	0	12.62	0	0	0	0	0	0	-44.36	-44.36
Inverter Transformer	MV4-8 T	369262	4909001	2	0	0	56.1	56.1	1	5674.5	3.25	0	86.08	0	1.86	0	0	12.71	0	0	0	0	0	0	-44.59	-44.59
Inverter Transformer	MV4-4 T	369033	4909199	2	0	0	56.1	56.1	1	5678.49	3.25	0	86.08	0	1.86	0	0	12.72	0	0	0	0	0	0	-44.6	-44.6
Inverter Transformer	MV4-9 T	369284	4909001	2	0	0	56.1	56.1	1	5689.13	3.25	0	86.1	0	1.86	0	0	12.73	0	0	0	0	0	0	-44.64	-44.64
Inverter Transformer	MV4-6 T	369249	4909192	2	0	0	56.1	56.1	1	5810.25	3.25	0	86.28	0	1.9	0	0	12.88	0	0	0	0	0	0	-45.01	-45.01
Inverter Transformer	MV4-1 T	369017	4909397	2	0	0	56.1	56.1	1	5824.91	3.25	0	86.31	0	1.91	0	0	12.89	0	0	0	0	0	0	-45.05	-45.05
Inverter Transformer	MV4-5 T	369283	4909199	2	0	0	56.1	56.1	1	5837.61	3.25	0	86.32	0	1.91	0	0	12.91	0	0	0	0	0	0	-45.09	-45.09
Inverter Transformer	MV5-6 T	369987	4908507	2	0	0	56.1	56.1	1	5851.8	3.25	0	86.35	0	1.92	0	0	12.93	0	0	0	0	0	0	-45.13	-45.13
Inverter Transformer	MV4-3 T	369234	4909397	2	0	0	56.1	56.1	1	5958.7	3.25	0	86.5	0	1.95	0	0	13.05	0	0	0	0	0	0	-45.45	-45.45
Inverter Transformer	MV4-2 T	369267	4909397	2	0	0	56.1	56.1	1	5979.48	3.25	0	86.53	0	1.96	0	0	13.08	0	0	0	0	0	0	-45.51	-45.51
Inverter Transformer	MV5-5 T	370021	4908690	2	0	0	56.1	56.1	1	5996.29	3.25	0	86.56	0	1.96	0	0	13.1	0	0	0	0	0	0	-45.56	-45.56

	Inverter Transformer	MV5-2 T	370011	4908853	2	0	0	56.1	56.1	1	6096.98	3.25	0	86.7	0	2	0	0	13.22	0	0	0	0	0	0	-45.86	-45.86
	Inverter Transformer	MV5-4 T	370330	4908707	2	0	0	56.1	56.1	1	6243.66	3.25	0	86.91	0	2.04	0	0	13.39	0	0	0	0	0	0	-46.28	-46.28
	Inverter Transformer	MV5-3 T	370237	4908851	2	0	0	56.1	56.1	1	6264.98	3.25	0	86.94	0	2.05	0	0	13.41	0	0	0	0	0	0	-46.34	-46.34
	Inverter Transformer	MV5-1 T	370015	4909142	2	0	0	56.1	56.1	1	6297.55	3.25	0	86.98	0	2.06	0	0	13.45	0	0	0	0	0	0	-46.43	-46.43
	Line Reactor	NGR	369421	4908787.5	5	0	0	45.4	45.4	1	5626.54	5.25	0	86	0	3.25	1.36	0.08	2.3	0	0	0	0	0	0	-47.56	-47.56
Limit. Valu	0	0																								
Level D/N:	35.7018	35.7018																								

Receiver: Existing Noise Receptor
ID: S-R152
X: 365449
Y: 4905529
Z: 4.5
Ground: 0

ISO	Description	ID	X	Y	Z	Ground	ReflOrd	LxT	LxN	L/A	Dist.	hm	Freq	Adiv	K0b	Agr	Abar	z	Aatm	Afol	Ahous	Cmet	CmetN	Dc	RL	LtotT	LtotN
	Inverter	MV1-12	365038	4905386	2	0	0	100.3	100.3	1	435.17	3.25	0	63.77	0	-0.6	0	0	7.97	0	0	0	0	0	0	29.16	29.16
	Inverter	MV1-15	365315	4904994	2	0	0	100.3	100.3	1	551.53	3.25	0	65.83	0	-0.51	0	0	8.9	0	0	0	0	0	0	26.1	26.1
	Inverter	MV1-10	365004	4905564	2	0	0	97.3	97.3	1	446.38	3.25	0	63.99	0	-0.59	0	0	8.07	0	0	0	0	0	0	25.83	25.83
	Inverter	MV1-8	364788	4905647	2	0	0	100.3	100.3	1	671.45	3.25	0	67.54	0	-0.43	0	0	9.6	0	0	0	0	0	0	23.61	23.61
	Inverter	MV1-4	364815	4905918	2	0	0	100.3	100.3	1	743.83	3.25	0	68.43	0	-0.38	0	0	9.94	0	0	0	0	0	0	22.33	22.33
	Inverter	MV1-14	365163	4905049	2	0	0	97.3	97.3	1	558.75	3.25	0	65.94	0	-0.51	0	0	8.95	0	0	0	0	0	0	22.93	22.93
	Inverter	MV1-11	364655	4905414	2	0	0	100.3	100.3	1	802.29	3.25	0	69.09	0	-0.35	0	0	10.19	0	0	0	0	0	0	21.39	21.39
	Inverter	MV1-7	364925	4905782	2	0	0	97.3	97.3	1	581.89	3.25	0	66.3	0	-0.49	0	0	9.09	0	0	0	0	0	0	22.41	22.41
	Inverter	MV1-5	364671	4905892	2	0	0	100.3	100.3	1	858.52	3.25	0	69.68	0	-0.32	0	0	10.41	0	0	0	0	0	0	20.54	20.54
	Inverter	MV1-2	364753	4906063	2	0	0	100.3	100.3	1	877.26	3.25	0	69.86	0	-0.31	0	0	10.48	0	0	0	0	0	0	20.28	20.28
	Inverter	MV1-9	364561	4905646	2	0	0	100.3	100.3	1	895.68	3.25	0	70.04	0	-0.3	0	0	10.55	0	0	0	0	0	0	20.02	20.02
	Inverter	MV1-1	364715	4906166	2	0	0	100.3	100.3	1	971.87	3.25	0	70.75	0	-0.26	0	0	10.82	0	0	0	0	0	0	19	19
	Inverter	MV1-6	364477	4905835	2	0	0	100.3	100.3	1	1019.03	3.25	0	71.16	0	-0.24	0	0	10.97	0	0	0	0	0	0	18.41	18.41
	Inverter	MV1-13	364731	4905241	2	0	0	97.3	97.3	1	773.61	3.25	0	68.77	0	-0.37	0	0	10.07	0	0	0	0	0	0	18.84	18.84
	Inverter	MV2-4	365586	4906624	2	0	0	100.3	100.3	1	1103.54	3.25	0	71.86	0	-0.2	0	0	11.24	0	0	0	0	0	0	17.41	17.41
	Inverter	MV2-3	365820	4906641	2	0	0	100.3	100.3	1	1172.26	3.25	0	72.38	0	-0.17	0	0	11.45	0	0	0	0	0	0	16.65	16.65
	Sol_Luce Substation	S_Substation	369426	4908792	3.5	0	0	112.1	112.1	1	5144.29	5.25	0	85.23	0	0.94	2.83	0.25	8.79	0	0	0	0	0	0	14.29	14.29
	Inverter	MV2-1	365842	4906816	2	0	0	97.3	97.3	1	1345.67	3.25	0	73.58	0	-0.09	0	0	11.93	0	0	0	0	0	0	11.9	11.9
	Inverter	MV3-18	367752	4907412	2	0	0	100.3	100.3	1	2974.81	3.25	0	80.47	0	0.36	0	0	15.33	0	0	0	0	0	0	4.16	4.16
	Inverter	MV3-12	367668	4907594	2	0	0	100.3	100.3	1	3031.2	3.25	0	80.63	0	0.37	0	0	15.43	0	0	0	0	0	0	3.88	3.88
	Inverter	MV3-13	367963	4907577	2	0	0	100.3	100.3	1	3242.61	3.25	0	81.22	0	0.41	0	0	15.79	0	0	0	0	0	0	2.89	2.89
	Inverter	MV3-7	367945	4907754	2	0	0	100.3	100.3	1	3343.75	3.25	0	81.48	0	0.42	0	0	15.97	0	0	0	0	0	0	2.43	2.43
	Inverter	MV3-17	368178	4907472	2	0	0	100.3	100.3	1	3350.03	3.25	0	81.5	0	0.43	0	0	15.98	0	0	0	0	0	0	2.41	2.41
	Inverter	MV3-19	368357	4907347	2	0	0	100.3	100.3	1	3429.52	3.25	0	81.7	0	0.44	0	0	16.11	0	0	0	0	0	0	2.06	2.06
	Inverter	MV3-3	367939	4907927	2	0	0	100.3	100.3	1	3456.95	3.25	0	81.77	0	0.44	0	0	16.16	0	0	0	0	0	0	1.94	1.94
	Inverter	MV3-10	368167	4907669	2	0	0	100.3	100.3	1	3459.35	3.25	0	81.78	0	0.44	0	0	16.16	0	0	0	0	0	0	1.92	1.92
	Inverter	MV3-21	368478	4907206	2	0	0	100.3	100.3	1	3462.25	3.25	0	81.79	0	0.44	0	0	16.17	0	0	0	0	0	0	1.91	1.91
	Inverter	MV3-15	368357	4907477	2	0	0	100.3	100.3	1	3500.17	3.25	0	81.88	0	0.45	0	0	16.23	0	0	0	0	0	0	1.75	1.75
	Inverter	MV3-6	368162	4907834	2	0	0	100.3	100.3	1	3559.97	3.25	0	82.03	0	0.46	0	0	16.33	0	0	0	0	0	0	1.49	1.49
	Inverter	MV3-11	368346	4907662	2	0	0	100.3	100.3	1	3597.54	3.25	0	82.12	0	0.47	0	0	16.39	0	0	0	0	0	0	1.33	1.33
	Inverter	MV3-16	368514	4907475	2	0	0	100.3	100.3	1	3630.58	3.25	0	82.2	0	0.47	0	0	16.45	0	0	0	0	0	0	1.19	1.19
	Inverter	MV3-20	368689	4907317	2	0	0	100.3	100.3	1	3700.61	3.25	0	82.37	0	0.48	0	0	16.56	0	0	0	0	0	0	0.9	0.9
	Inverter	MV3-9	368512	4907703	2	0	0	100.3	100.3	1	3756.1	3.25	0	82.49	0	0.49	0	0	16.65	0	0	0	0	0	0	0.67	0.67
	Inverter	MV3-14	368684	4907498	2	0	0	100.3	100.3	1	3787.11	3.25	0	82.57	0	0.5	0	0	16.71	0	0	0	0	0	0	0.54	0.54
	Inverter	MV3-8	368680	4907712	2	0	0	100.3	100.3	1	3899.34	3.25	0	82.82	0	0.51	0	0	16.89	0	0	0	0	0	0	0.09	0.09
	Inverter	MV1-3	364440	4906039	2	0	0	89.1	89.1	1	1130.57	3.25	0	72.07	0	0.71	0	0	6.56	0	0	0	0	0	0	9.72	9.72
	Inverter	MV2-2	365977	4906654	2	0	0	89.1	89.1	1	1242.75	3.25	0	72.89	0	0.74	0	0	6.76	0	0	0	0	0	0	8.68	8.68
	Inverter	MV6-2	370085	4907339	2	0	0	100.3	100.3	1	4976.81	3.25	0	84.94	0	0.64	0	0	18.55	0	0	0	0	0	0	-3.81	-3.81
	Inverter	MV4-7	369035	4909001	2	0	0	100.3	100.3	1	4991.41	3.25	0	84.96	0	0.64	0	0	18.57	0	0	0	0	0	0	-3.86	-3.86
	Inverter	MV6-3	370207	4907140	2	0	0	100.3	100.3	1	5023.33	3.25	0	85.02	0	0.64	0	0	18.61	0	0	0	0	0	0	-3.97	-3.97
	Inverter	MV4-11	369264	4908855	2	0	0	100.3	100.3	1	5061.28	3.25	0	85.09	0	0.65	0	0	18.67	0	0	0	0	0	0	-4.09	-4.09
	Inverter	MV4-10	369312	4908858	2	0	0	100.3	100.3	1	5099.51	3.25	0	85.15	0	0.65	0	0	18.73	0	0	0	0	0	0	-4.22	-4.22
	Inverter	MV4-4	369027	4909199	2	0	0	100.3	100.3	1	5125.52	3.25	0	85.19	0	0.65	0	0	18.76	0	0	0	0	0	0	-4.3	-4.3
	Inverter	MV4-8	369256	4909001	2	0	0	100.3	100.3	1	5152.48	3.25	0	85.24	0	0.66	0	0	18.8	0	0	0	0	0	0	-4.39	-4.39
	Inverter	MV4-9	369289	4909001	2	0	0	100.3	100.3	1	5176.91	3.25	0	85.28	0	0.66	0	0	18.84	0	0	0	0	0	0	-4.46	-4.46
	Inverter	MV4-1	369011	4909397	2	0	0	100.3	100.3	1	5258.26	3.25	0	85.42	0	0.66	0	0	18.96	0	0	0	0	0	0	-4.72	-4.72
	Inverter	MV4-6	369243	4909192	2	0	0	100.3	100.3	1	5273.71	3.25	0	85.44	0	0.66	0	0	18.98	0	0	0	0	0	0	-4.77	-4.77
	Inverter	MV4-5	369289	4909199	2	0	0	100.3	100.3	1	5311.73	3.25	0	85.5	0	0.67	0	0	19.03	0	0	0	0	0	0	-4.89	-4.89
	Inverter	MV4-3	369229	4909397	2	0	0	100.3	100.3	1	5408.31	3.25	0	85.66	0	0.67	0	0	19.17	0	0	0	0	0	0	-5.19	-5.19
	Inverter	MV4-2	369272	4909397	2	0	0	100.3	100.3	1	5438.45	3.25	0	85.71	0	0.68	0	0	19.21	0	0	0	0	0	0	-5.29	-5.29
	Inverter	MV5-5	370015	4908690	2	0	0	100.3	100.3	1	5553.4	3.25	0	85.89	0	0.68	0	0	19.38	0	0	0	0	0	0	-5.64	-5.64
	Inverter	MV5-2	370006	4908853	2	0	0	100.3	100.3	1	5640.5	3.25	0	86.03	0	0.69	0	0	19.5	0	0	0	0	0	0	-5.9	-5.9
	Inverter	MV5-4	370324	4908707	2	0	0	100.3	100.3	1	5819.39	3.25	0	86.3	0	0.7	0	0	19.75	0	0	0	0	0	0	-6.43	-6.43
	Inverter	MV5-3	370231	4908851	2	0	0	100.3	100.3	1	5822.65	3.25	0	86.3	0	0.7	0	0	19.75	0	0	0	0	0	0	-6.44	-6.44
	Inverter	MV5-1	370020	4909142	2	0	0	100.3	100.3	1	5826.48	3.25	0	86.31	0	0.7	0	0	19.76	0	0	0	0	0	0	-6.45	-6.45
	Inverter	MV6-1	370235	4907364	2	0	0	97.3	97.3	1	5125.72	3.25	0	85.2	0	0.65	0	0	18.76	0	0	0	0	0	0	-7.3	-7.3
	Gardiner Substation	G_Sub	366586.3	4903349.9	2.5	0	0	90.8	90.8	1	2458.03	4.25	0	78.81	0	0.94	3.33	0.29	5.12	0	0	0	0	0	0	2.58	2.58
	DSTATCOM - 10 MVAR #2	DSAT2	369403	4908757	2.5	0	0	96.6	96.6	1	5104.32	3.5	0	85.16	0	3.7	0	0	3.4	0	0	0	0	0	0	4.37	4.37

DSTATCOM - 10 MVAR #1	DSAT1	369437	4908757	2.5	0	0	96.6	96.6	1	5130.7	3.5	0	85.2	0	3.7	0	0	3.42	0	0	0	0	0	0	4.31	4.31
Inverters	G_Inv1	366526.4	4903225.8	2	0	0	87.7	87.7	1	2542.74	3.25	0	79.11	0	2.65	0	0	3.26	0	0	0	0	0	0	2.65	2.65
Inverters	G_Inv2	366676.9	4903239.1	2	0	0	87.7	87.7	1	2598.34	3.25	0	79.29	0	2.65	0	0	3.32	0	0	0	0	0	0	2.39	2.39
SubstationTransformer	W_ST	369711.17	4906112.3	2.5	0	0	92	92	1	4301.9	4.25	0	83.67	0	1.45	2.52	0.29	7.76	0	0	0	0	0	0	-3.43	-3.43
Inverters	G_Inv3	366583.7	4903091.4	2	0	0	87.7	87.7	1	2688.76	3.25	0	79.59	0	2.66	0	0	3.43	0	0	0	0	0	0	1.98	1.98
Inverters	G_Inv4	366732.8	4903105	2	0	0	87.7	87.7	1	2742.98	3.25	0	79.76	0	2.67	0	0	3.49	0	0	0	0	0	0	1.74	1.74
Inverters	G_Inv5	366638.5	4902958.1	2	0	0	87.7	87.7	1	2832.74	3.25	0	80.04	0	2.68	0	0	3.59	0	0	0	0	0	0	1.35	1.35
Inverters	G_Inv6	366788.5	4902972	2	0	0	87.7	87.7	1	2886.61	4.06	0	80.21	0	3.11	1.58	0	3.65	0	0	0	0	0	0	-0.89	-0.89
Inverters	G_Inv7	366694.6	4902824.7	2	0	0	87.7	87.7	1	2977.38	3.25	0	80.48	0	2.7	0	0	3.75	0	0	0	0	0	0	0.74	0.74
Inverters	G_Inv8	366844.5	4902838.5	2	0	0	87.7	87.7	1	3030.88	3.25	0	80.63	0	2.7	0	0	3.81	0	0	0	0	0	0	0.52	0.52
Inverter	MV3-22	368656	4907142	2	0	0	89.1	89.1	1	3589.79	3.25	0	82.1	0	1.29	0	0	10.49	0	0	0	0	0	0	-4.83	-4.83
Inverter	MV3-1	368156	4907976	2	0	0	89.1	89.1	1	3649.06	3.25	0	82.24	0	1.31	0	0	10.58	0	0	0	0	0	0	-5.07	-5.07
Inverters	G_Inv9	366750.9	4902691.8	2	0	0	87.7	87.7	1	3121.64	3.25	0	80.89	0	2.71	0	0	3.91	0	0	0	0	0	0	0.15	0.15
Inverter	MV3-5	368340	4907843	2	0	0	89.1	89.1	1	3703.04	3.25	0	82.37	0	1.32	0	0	10.66	0	0	0	0	0	0	-5.29	-5.29
Inverters	G_Inv10	366900.7	4902704.8	2	0	0	87.7	87.7	1	3175.46	3.25	0	81.04	0	2.72	0	0	3.97	0	0	0	0	0	0	-0.06	-0.06
Inverter	MV3-4	368502	4907925	2	0	0	89.1	89.1	1	3880.93	3.25	0	82.78	0	1.36	0	0	10.91	0	0	0	0	0	0	-6	-6
Inverter	MV3-2	368671	4907928	2	0	0	89.1	89.1	1	4017.03	3.25	0	83.08	0	1.4	0	0	11.11	0	0	0	0	0	0	-6.53	-6.53
Westbrook Inverter Enclosur	W_INV2	369374	4906388	2	0	0	89.1	89.1	1	4017.9	3.25	0	83.08	0	1.4	0	0	11.11	0	0	0	0	0	0	-6.53	-6.53
Westbrook Inverter Enclosur	W_INV3	369508	4906164	2	0	0	89.1	89.1	1	4108.37	3.25	0	83.27	0	1.42	0	0	11.24	0	0	0	0	0	0	-6.87	-6.87
Inverter Transformer	MV1-10 T	365010	4905564	2	0	0	69.4	69.4	1	440.4	3.25	0	63.88	0	0.95	0	0	2.81	0	0	0	0	0	0	1.71	1.71
Westbrook Inverter Enclosur	W_INV4	369673	4906164	2	0	0	89.1	89.1	1	4271.46	3.25	0	83.61	0	1.46	0	0	11.47	0	0	0	0	0	0	-7.48	-7.48
Westbrook Inverter Enclosur	W_INV5	369719	4906574	2	0	0	89.1	89.1	1	4396.01	3.25	0	83.86	0	1.49	0	0	11.64	0	0	0	0	0	0	-7.93	-7.93
Westbrook Inverter Enclosur	W_INV7	369780	4906417	2	0	0	89.1	89.1	1	4421.1	3.25	0	83.91	0	1.5	0	0	11.68	0	0	0	0	0	0	-8.02	-8.02
Westbrook Inverter Enclosur	W_INV6	369875	4906578	2	0	0	89.1	89.1	1	4548.61	3.25	0	84.16	0	1.53	0	0	11.85	0	0	0	0	0	0	-8.48	-8.48
Fixed Reactor Bank 1	FRB1	369378	4908755	6	0	0	89.8	89.8	1	5083.71	5.25	0	85.12	0	-0.55	0	0	8.72	0	0	0	0	0	0	-3.51	-3.51
Inverter	MV4-13	369051	4908605	2	0	0	89.1	89.1	1	4736.69	3.25	0	84.51	0	1.57	0	0	12.11	0	0	0	0	0	0	-9.13	-9.13
Fixed Reactor Bank 2	FRB2	369464	4908755	6	0	0	89.8	89.8	1	5150.47	5.25	0	85.24	0	-0.54	0	0	8.8	0	0	0	0	0	0	-3.71	-3.71
Inverter	MV4-15	369176	4908481	2	0	0	89.1	89.1	1	4754.45	3.25	0	84.54	0	1.58	0	0	12.13	0	0	0	0	0	0	-9.2	-9.2
Inverter	MV4-14	369176	4908507	2	0	0	89.1	89.1	1	4770.64	3.25	0	84.57	0	1.58	0	0	12.15	0	0	0	0	0	0	-9.25	-9.25
Inverter	MV4-12	369043	4908803	2	0	0	89.1	89.1	1	4861.68	3.25	0	84.74	0	1.61	0	0	12.28	0	0	0	0	0	0	-9.56	-9.56
Inverter	MV5-6	369982	4908507	2	0	0	89.1	89.1	1	5423.71	3.25	0	85.69	0	1.74	0	0	13.02	0	0	0	0	0	0	-11.4	-11.4
Inverter Transformer	MV1-14 T	365157	4905049	2	0	0	69.4	69.4	1	561.85	3.25	0	65.99	0	1.15	0	0	3.09	0	0	0	0	0	0	-0.88	-0.88
Inverter Transformer	MV1-7 T	364919	4905782	2	0	0	69.4	69.4	1	587.29	3.25	0	66.38	0	1.19	0	0	3.14	0	0	0	0	0	0	-1.36	-1.36
Westbrook Inverter Enclosur	W_INV1	369409	4906578	2	0	0	86.1	86.1	1	4096.58	3.25	0	83.25	0	1.42	0	0	11.22	0	0	0	0	0	0	-9.83	-9.83
Inverter	MV6-4	370250	4906966	2	0	0	86.1	86.1	1	5011.44	3.25	0	85	0	1.64	0	0	12.48	0	0	0	0	0	0	-13.06	-13.06
Inverter Transformer	MV1-13 T	364725	4905241	2	0	0	69.4	69.4	1	779.18	3.25	0	68.83	0	1.46	0	0	3.48	0	0	0	0	0	0	-4.43	-4.43
Inverter Transformer	MV2-1 T	365836	4906816	2	0	0	69.4	69.4	1	1343.93	3.25	0	73.57	0	1.9	0	0	4.25	0	0	0	0	0	0	-10.37	-10.37
Westbrook Inverter Transfor	W_INVTR1	369403	4906578	2	0	0	78.2	78.2	1	4090.79	3.25	0	83.24	0	-2.98	0	0	2.09	0	0	0	0	0	0	-4.1	-4.1
Westbrook Inverter Transfor	W_INVTR2	369368	4906388	2	0	0	77.3	77.3	1	4012.04	3.25	0	83.07	0	-2.97	0	0	2.06	0	0	0	0	0	0	-4.82	-4.82
Westbrook Inverter Transfor	W_INVTR3	369514	4906164	2	0	0	77.3	77.3	1	4114.3	3.25	0	83.29	0	-2.99	0	0	2.1	0	0	0	0	0	0	-5.05	-5.05
Westbrook Inverter Transfor	W_INVTR4	369679	4906164	2	0	0	77.3	77.3	1	4277.4	3.25	0	83.62	0	-3.03	0	0	2.16	0	0	0	0	0	0	-5.41	-5.41
Westbrook Inverter Transfor	W_INVTR5	369725	4906574	2	0	0	77.3	77.3	1	4401.84	3.25	0	83.87	0	-3.05	0	0	2.2	0	0	0	0	0	0	-5.68	-5.68
Westbrook Inverter Transfor	W_INVTR7	369786	4906417	2	0	0	77.3	77.3	1	4426.98	3.25	0	83.92	0	-3.06	0	0	2.21	0	0	0	0	0	0	-5.73	-5.73
Westbrook Inverter Transfor	W_INVTR6	369881	4906578	2	0	0	77.3	77.3	1	4554.45	3.25	0	84.17	0	-3.09	0	0	2.26	0	0	0	0	0	0	-6	-6
Inverter Transformer	MV1-12 T	365044	4905386	2	0	0	56.1	56.1	1	429.51	3.25	0	63.66	0	-0.12	0	0	3.31	0	0	0	0	0	0	-10.8	-10.8
Inverter Transformer	MV1-15 T	365309	4904994	2	0	0	56.1	56.1	1	553.02	3.25	0	65.85	0	-0.11	0	0	3.72	0	0	0	0	0	0	-13.4	-13.4
Inverter Transformer	MV1-8 T	364782	4905647	2	0	0	56.1	56.1	1	677.36	3.25	0	67.62	0	-0.09	0	0	4.07	0	0	0	0	0	0	-15.54	-15.54
Inverter Transformer	MV1-4 T	364821	4905918	2	0	0	56.1	56.1	1	738.72	3.25	0	68.37	0	-0.07	0	0	4.24	0	0	0	0	0	0	-16.48	-16.48
Inverter Transformer	MV1-11 T	364649	4905414	2	0	0	56.1	56.1	1	808.23	3.25	0	69.15	0	-0.05	0	0	4.42	0	0	0	0	0	0	-17.46	-17.46
Inverter Transformer	MV1-5 T	364676	4905892	2	0	0	56.1	56.1	1	853.99	3.25	0	69.63	0	-0.04	0	0	4.53	0	0	0	0	0	0	-18.07	-18.07
Inverter Transformer	MV1-2 T	364759	4906063	2	0	0	56.1	56.1	1	872.5	3.25	0	69.82	0	-0.03	0	0	4.58	0	0	0	0	0	0	-18.3	-18.3
Inverter Transformer	MV1-9 T	364555	4905646	2	0	0	56.1	56.1	1	901.63	3.25	0	70.1	0	-0.02	0	0	4.65	0	0	0	0	0	0	-18.67	-18.67
Inverter Transformer	MV1-1 T	364721	4906166	2	0	0	56.1	56.1	1	967.35	3.25	0	70.71	0	0	0	0	4.81	0	0	0	0	0	0	-19.46	-19.46
Inverter Transformer	MV1-6 T	364482	4905835	2	0	0	56.1	56.1	1	1014.26	3.25	0	71.12	0	0.02	0	0	4.92	0	0	0	0	0	0	-20	-20
Inverter Transformer	MV6-4 T	370244	4906966	2	0	0	69.4	69.4	1	5005.7	3.25	0	84.99	0	3.01	0	0	7.39	0	0	0	0	0	0	-26.04	-26.04
Inverter Transformer	MV2-4 T	365590	4906628	2	0	0	56.1	56.1	1	1108.01	3.25	0	71.89	0	0.05	0	0	5.14	0	0	0	0	0	0	-21.03	-21.03
Inverter Transformer	MV6-1 T	370230	4907364	2	0	0	69.4	69.4	1	5121.05	3.25	0	85.19	0	3.04	0	0	7.46	0	0	0	0	0	0	-26.34	-26.34
Inverter Transformer	MV1-3 T	364435	4906039	2	0	0	56.1	56.1	1	1135.03	3.25	0	72.1	0	0.06	0	0	5.21	0	0	0	0	0	0	-21.31	-21.31
Inverter Transformer	MV2-3 T	365814	4906641	2	0	0	56.1	56.1	1	1170.37	3.25	0	72.37	0	0.07	0	0	5.29	0	0	0	0	0	0	-21.67	-21.67
Inverter Transformer	MV2-2 T	365982	4906654	2	0	0	56.1	56.1	1	1244.88	3.25	0	72.9	0	0.1	0	0	5.46	0	0	0	0	0	0	-22.4	-22.4
Inverter Transformer	MV3-18 T	367757	4907412	2	0	0	56.1	56.1	1	2978.68	3.25	0	80.48	0	0.82	0	0	8.83	0	0	0	0	0	0	-34.07	-34.07
Inverter Transformer	MV3-12 T	367674	4907594	2	0	0	56.1	56.1	1	3035.6	3.25	0	80.64	0	0.84	0	0	8.93	0	0	0	0	0	0	-34.36	-34.36
Inverter Transformer	MV3-13 T	367958	4907577	2	0	0	56.1	56.1	1	3238.73	3.25	0	81.21	0	0.93	0	0	9.27	0	0	0	0	0	0	-35.35	-35.35
Inverter Transformer	MV3-7 T	367951	4907754	2	0	0	56.1	56.1	1	3348.23	3.25	0	81.5	0	0.98	0	0	9.44	0	0	0	0	0	0	-35.86	-35.86
Inverter Transformer	MV3-17 T	368183	4907472	2	0	0	56.1	56.1	1	3354.1	3.25	0	81.51	0	0.98	0	0	9.45	0	0	0	0	0	0	-35.89	-35.89
Inverter Transformer	MV3-19 T	368352	4907347	2	0	0	56.1	56.1	1	3425.28	3.25	0	81.69	0	1.01	0	0	9.57	0	0	0	0	0	0	-36.21	-36.21
Inverter Transformer	MV3-10 T	368162	4907669	2	0	0	56.1	56.1	1	3455.43	3.25	0	81.77	0	1.02	0	0	9.62	0	0	0	0	0	0	-36.35	-36.35
Inverter Transformer	MV3-3 T	367944	4907927	2	0	0	56.1	56.1	1	3460.55	3.25	0	81.78	0	1.02	0	0	9.63	0	0	0	0	0	0	-36.37	-36.37
Inverter Transformer	MV3-21 T	368484	4907206	2	0	0	56.1	56.1	1	3467.5	3.25	0	81.8	0	1.03	0	0	9.64	0	0	0	0	0	0	-36.4	-36.4
Inverter Transformer	MV3-15 T	368351	4907477	2	0	0	56.1	56.1	1	3495.18	3.25	0	81.87	0	1.04	0	0	9.68	0	0	0	0	0	0	-36.53	-36.53
Inverter Transformer	MV3-6 T	368156	4907834	2	0	0	56.1	56.1	1	3555.4	3.25	0	82.02	0	1.06	0	0	9.78	0	0	0	0	0	0	-36.8	-36.8
Inverter Transformer	MV3-11 T	368340	4907662	2	0	0	56.1	56.1	1	3592.71	3.25	0	82.11	0	1.08	0	0	9.83	0	0	0	0	0	0	-36.96	-36.96
Inverter Transformer	MV3-22 T	368661	4907142	2	0	0	56.1	56.1	1	3594.26	3.25	0	82.11	0	1.08	0	0	9.84	0	0	0	0	0	0	-36.97	-36.97
Inverter Transformer	MV3-16 T	368509	4907475	2	0	0	56.1	56.1	1	3626.36	3.25	0	82.19	0	1.09	0	0	9.89	0	0	0	0	0	0	-37.11	-37.11

	Inverter Transformer	MV3-1 T	368150	4907976	2	0	0	56.1	56.1	1	3644.61	3.25	0	82.23	0	1.1	0	0	9.91	0	0	0	0	0	0	-37.19	-37.19
	Inverter Transformer	MV3-20 T	368683	4907317	2	0	0	56.1	56.1	1	3695.36	3.25	0	82.35	0	1.12	0	0	9.99	0	0	0	0	0	0	-37.41	-37.41
	Inverter Transformer	MV3-5 T	368335	4907843	2	0	0	56.1	56.1	1	3699.13	3.25	0	82.36	0	1.12	0	0	10	0	0	0	0	0	0	-37.42	-37.42
	Inverter Transformer	MV3-9 T	368517	4907703	2	0	0	56.1	56.1	1	3760.17	3.25	0	82.5	0	1.15	0	0	10.09	0	0	0	0	0	0	-37.69	-37.69
	Inverter Transformer	MV3-14 T	368678	4907498	2	0	0	56.1	56.1	1	3781.98	3.25	0	82.55	0	1.16	0	0	10.13	0	0	0	0	0	0	-37.78	-37.78
	Inverter Transformer	MV3-4 T	368507	4907925	2	0	0	56.1	56.1	1	3884.87	3.25	0	82.79	0	1.2	0	0	10.28	0	0	0	0	0	0	-38.21	-38.21
	Inverter Transformer	MV3-8 T	368685	4907712	2	0	0	56.1	56.1	1	3903.48	3.25	0	82.83	0	1.21	0	0	10.31	0	0	0	0	0	0	-38.29	-38.29
	Inverter Transformer	MV3-2 T	368677	4907928	2	0	0	56.1	56.1	1	4021.84	3.25	0	83.09	0	1.25	0	0	10.49	0	0	0	0	0	0	-38.77	-38.77
	Inverter Transformer	MV4-13 T	369057	4908605	2	0	0	56.1	56.1	1	4741.25	3.25	0	84.52	0	1.53	0	0	11.51	0	0	0	0	0	0	-41.5	-41.5
	Inverter Transformer	MV4-15 T	369170	4908481	2	0	0	56.1	56.1	1	4749.75	3.25	0	84.53	0	1.53	0	0	11.52	0	0	0	0	0	0	-41.53	-41.53
	Inverter Transformer	MV4-14 T	369182	4908507	2	0	0	56.1	56.1	1	4775.33	3.25	0	84.58	0	1.54	0	0	11.55	0	0	0	0	0	0	-41.62	-41.62
	Inverter Transformer	MV4-12 T	369049	4908803	2	0	0	56.1	56.1	1	4866.12	3.25	0	84.74	0	1.58	0	0	11.68	0	0	0	0	0	0	-41.94	-41.94
	Inverter Transformer	MV6-2 T	370091	4907339	2	0	0	56.1	56.1	1	4982.4	3.25	0	84.95	0	1.62	0	0	11.83	0	0	0	0	0	0	-42.34	-42.34
	Inverter Transformer	MV4-7 T	369040	4909001	2	0	0	56.1	56.1	1	4995	3.25	0	84.97	0	1.62	0	0	11.85	0	0	0	0	0	0	-42.38	-42.38
	Inverter Transformer	MV6-3 T	370202	4907140	2	0	0	56.1	56.1	1	5018.6	3.25	0	85.01	0	1.63	0	0	11.88	0	0	0	0	0	0	-42.46	-42.46
	Inverter Transformer	MV4-11 T	369269	4908855	2	0	0	56.1	56.1	1	5065.05	3.25	0	85.09	0	1.65	0	0	11.94	0	0	0	0	0	0	-42.62	-42.62
	Inverter Transformer	MV4-10 T	369307	4908858	2	0	0	56.1	56.1	1	5095.72	3.25	0	85.14	0	1.66	0	0	11.98	0	0	0	0	0	0	-42.73	-42.73
	Inverter Transformer	MV4-4 T	369033	4909199	2	0	0	56.1	56.1	1	5129.71	3.25	0	85.2	0	1.67	0	0	12.02	0	0	0	0	0	0	-42.84	-42.84
	Inverter Transformer	MV4-8 T	369262	4909001	2	0	0	56.1	56.1	1	5156.91	3.25	0	85.25	0	1.68	0	0	12.06	0	0	0	0	0	0	-42.93	-42.93
	Inverter Transformer	MV4-9 T	369284	4909001	2	0	0	56.1	56.1	1	5173.2	3.25	0	85.28	0	1.69	0	0	12.08	0	0	0	0	0	0	-42.98	-42.98
	Inverter Transformer	MV4-1 T	369017	4909397	2	0	0	56.1	56.1	1	5262.32	3.25	0	85.42	0	1.72	0	0	12.19	0	0	0	0	0	0	-43.28	-43.28
	Inverter Transformer	MV4-6 T	369249	4909192	2	0	0	56.1	56.1	1	5278.03	3.25	0	85.45	0	1.72	0	0	12.22	0	0	0	0	0	0	-43.33	-43.33
	Inverter Transformer	MV4-5 T	369283	4909199	2	0	0	56.1	56.1	1	5307.4	3.25	0	85.5	0	1.73	0	0	12.25	0	0	0	0	0	0	-43.43	-43.43
	Inverter Transformer	MV4-3 T	369234	4909397	2	0	0	56.1	56.1	1	5411.81	3.25	0	85.67	0	1.77	0	0	12.38	0	0	0	0	0	0	-43.76	-43.76
	Inverter Transformer	MV5-6 T	369987	4908507	2	0	0	56.1	56.1	1	5427.88	3.25	0	85.69	0	1.78	0	0	12.41	0	0	0	0	0	0	-43.82	-43.82
	Inverter Transformer	MV4-2 T	369267	4909397	2	0	0	56.1	56.1	1	5434.94	3.25	0	85.7	0	1.78	0	0	12.41	0	0	0	0	0	0	-43.84	-43.84
	Inverter Transformer	MV5-5 T	370021	4908690	2	0	0	56.1	56.1	1	5558.34	3.25	0	85.9	0	1.82	0	0	12.57	0	0	0	0	0	0	-44.23	-44.23
	Inverter Transformer	MV5-2 T	370011	4908853	2	0	0	56.1	56.1	1	5644.54	3.25	0	86.03	0	1.85	0	0	12.67	0	0	0	0	0	0	-44.5	-44.5
	Inverter Transformer	MV5-1 T	370015	4909142	2	0	0	56.1	56.1	1	5822.55	3.25	0	86.3	0	1.91	0	0	12.89	0	0	0	0	0	0	-45.04	-45.04
	Inverter Transformer	MV5-4 T	370330	4908707	2	0	0	56.1	56.1	1	5824.42	3.25	0	86.31	0	1.91	0	0	12.89	0	0	0	0	0	0	-45.05	-45.05
	Inverter Transformer	MV5-3 T	370237	4908851	2	0	0	56.1	56.1	1	5827.58	3.25	0	86.31	0	1.91	0	0	12.9	0	0	0	0	0	0	-45.06	-45.06
	Line Reactor	NGR	369421	4908787.5	5	0	0	45.4	45.4	1	5137.57	5.25	0	85.22	0	3.26	1.35	0.09	2.1	0	0	0	0	0	0	-46.57	-46.57
Limit. Valu	0	0																								
Level D/N:	35.1767	35.1767																								

Receiver: Existing Noise Receptor
ID: S-R153
X: 364710
Y: 4907137
Z: 4.5
Ground: 0

ISO	Description	ID	X	Y	Z	Ground	ReflOrd	LxT	LxN	L/A	Dist.	hm	Freq	Adiv	K0b	Agr	Abar	z	Aatm	Afol	Ahous	Cmet	CmetN	Dc	RL	LtotT	LtotN
	Inverter	MV1-1	364715	4906166	2	0	0	100.3	100.3	1	971.02	3.25	0	70.74	0	-0.26	0	0	10.81	0	0	0	0	0	0	19.01	19.01
	Inverter	MV2-4	365586	4906624	2	0	0	100.3	100.3	1	1015.16	3.25	0	71.13	0	-0.24	0	0	10.96	0	0	0	0	0	0	18.46	18.46
	Inverter	MV1-2	364753	4906063	2	0	0	100.3	100.3	1	1074.86	3.25	0	71.63	0	-0.21	0	0	11.15	0	0	0	0	0	0	17.74	17.74
	Inverter	MV2-3	365820	4906641	2	0	0	100.3	100.3	1	1215.78	3.25	0	72.7	0	-0.15	0	0	11.57	0	0	0	0	0	0	16.19	16.19
	Inverter	MV1-4	364815	4905918	2	0	0	100.3	100.3	1	1223.52	3.25	0	72.75	0	-0.14	0	0	11.59	0	0	0	0	0	0	16.11	16.11
	Inverter	MV1-5	364671	4905892	2	0	0	100.3	100.3	1	1245.61	3.25	0	72.91	0	-0.13	0	0	11.66	0	0	0	0	0	0	15.88	15.88
	Sol_Luce Substation	S_Substation	369426	4908792	3.5	0	0	112.1	112.1	1	4997.97	5.25	0	84.98	0	0.9	2.87	0.31	8.62	0	0	0	0	0	0	14.72	14.72
	Inverter	MV1-6	364477	4905835	2	0	0	100.3	100.3	1	1322.69	3.25	0	73.43	0	-0.1	0	0	11.87	0	0	0	0	0	0	15.12	15.12
	Inverter	MV1-8	364788	4905647	2	0	0	100.3	100.3	1	1492.04	3.25	0	74.48	0	-0.04	0	0	12.3	0	0	0	0	0	0	13.57	13.57
	Inverter	MV1-9	364561	4905646	2	0	0	100.3	100.3	1	1498.43	3.25	0	74.51	0	-0.03	0	0	12.32	0	0	0	0	0	0	13.51	13.51
	Inverter	MV2-1	365842	4906816	2	0	0	97.3	97.3	1	1176.64	3.25	0	72.41	0	-0.16	0	0	11.46	0	0	0	0	0	0	13.61	13.61
	Inverter	MV1-11	364655	4905414	2	0	0	100.3	100.3	1	1723.88	3.25	0	75.73	0	0.04	0	0	12.86	0	0	0	0	0	0	11.68	11.68
	Inverter	MV1-12	365038	4905386	2	0	0	100.3	100.3	1	1781.46	3.25	0	76.02	0	0.06	0	0	12.99	0	0	0	0	0	0	11.25	11.25
	Inverter	MV1-7	364925	4905782	2	0	0	97.3	97.3	1	1371.95	3.25	0	73.75	0	-0.08	0	0	12	0	0	0	0	0	0	11.65	11.65
	Inverter	MV1-15	365315	4904994	2	0	0	100.3	100.3	1	2226.76	3.25	0	77.95	0	0.19	0	0	13.93	0	0	0	0	0	0	8.24	8.24
	Inverter	MV1-10	365004	4905564	2	0	0	97.3	97.3	1	1600.24	3.25	0	75.08	0	0	0	0	12.57	0	0	0	0	0	0	9.66	9.66
	Inverter	MV1-13	364731	4905241	2	0	0	97.3	97.3	1	1896.12	3.25	0	76.56	0	0.1	0	0	13.24	0	0	0	0	0	0	7.42	7.42
	Inverter	MV3-12	367668	4907594	2	0	0	100.3	100.3	1	2993.1	3.25	0	80.52	0	0.36	0	0	15.36	0	0	0	0	0	0	4.07	4.07
	Inverter	MV1-14	365163	4905049	2	0	0	97.3	97.3	1	2136.58	3.25	0	77.59	0	0.17	0	0	13.74	0	0	0	0	0	0	5.81	5.81
	Inverter	MV3-18	367752	4907412	2	0	0	100.3	100.3	1	3054.41	3.25	0	80.7	0	0.37	0	0	15.47	0	0	0	0	0	0	3.77	3.77
	Inverter	MV3-13	367963	4907577	2	0	0	100.3	100.3	1	3282.62	3.25	0	81.32	0	0.41	0	0	15.86	0	0	0	0	0	0	2.71	2.71
	Inverter	MV3-7	367945	4907754	2	0	0	100.3	100.3	1	3293.31	3.25	0	81.35	0	0.42	0	0	15.88	0	0	0	0	0	0	2.66	2.66
	Inverter	MV3-3	367939	4907927	2	0	0	100.3	100.3	1	3324.24	3.25	0	81.43	0	0.42	0	0	15.93	0	0	0	0	0	0	2.52	2.52
	Inverter	MV3-17	368178	4907472	2	0	0	100.3	100.3	1	3484.14	3.25	0	81.84	0	0.45	0	0	16.2	0	0	0	0	0	0	1.82	1.82
	Inverter	MV3-10	368167	4907669	2	0	0	100.3	100.3	1	3497.7	3.25	0	81.88	0	0.45	0	0	16.23	0	0	0	0	0	0	1.76	1.76
	Inverter	MV3-6	368162	4907834	2	0	0	100.3	100.3	1	3521.66	3.25	0	81.93	0	0.45	0	0	16.27	0	0	0	0	0	0	1.65	1.65
	Inverter	MV3-19	368357	4907347	2	0	0	100.3	100.3	1	3653.04	3.25	0	82.25	0	0.48	0	0	16.49	0	0	0	0	0	0	1.1	1.1
	Inverter	MV3-15	368357	4907477	2	0	0	100.3	100.3	1	3662.82	3.25	0	82.28	0	0.48	0	0	16.5	0	0	0	0	0	0	1.06	1.06
	Inverter	MV3-11	368346	4907662	2	0	0	100.3	100.3	1	3673.71	3.25	0	82.3	0	0.48	0	0	16.52	0	0	0	0	0	0	1.01	1.01
	Inverter	MV3-21	368478	4907206	2	0	0	100.3	100.3	1	3768.63	3.25	0	82.52	0	0.49	0	0	16.68	0	0	0	0	0	0	0.62	0.62
	Inverter	MV3-16	368514	4907475	2	0	0	100.3	100.3	1	3818.99	3.25	0	82.64	0	0.5	0	0	16.76	0	0	0	0	0	0	0.42	0.42

Inverter	MV3-9	368512	4907703	2	0	0	100.3	100.3	1	3843.9	3.25	0	82.7	0	0.5	0	0	16.8	0	0	0	0	0	0	0.31	0.31
Inverter	MV3-20	368689	4907317	2	0	0	100.3	100.3	1	3983.07	3.25	0	83	0	0.52	0	0	17.02	0	0	0	0	0	0	-0.24	-0.24
Inverter	MV3-14	368684	4907498	2	0	0	100.3	100.3	1	3990.36	3.25	0	83.02	0	0.53	0	0	17.03	0	0	0	0	0	0	-0.27	-0.27
Inverter	MV3-8	368680	4907712	2	0	0	100.3	100.3	1	4011.43	3.25	0	83.07	0	0.53	0	0	17.07	0	0	0	0	0	0	-0.35	-0.35
Inverter	MV1-3	364440	4906039	2	0	0	89.1	89.1	1	1130.71	3.25	0	72.07	0	0.71	0	0	6.56	0	0	0	0	0	0	9.72	9.72
Inverter	MV4-7	369035	4909001	2	0	0	100.3	100.3	1	4709.58	3.25	0	84.46	0	0.61	0	0	18.15	0	0	0	0	0	0	-2.91	-2.91
Inverter	MV4-4	369027	4909199	2	0	0	100.3	100.3	1	4784.18	3.25	0	84.6	0	0.62	0	0	18.26	0	0	0	0	0	0	-3.17	-3.17
Inverter	MV4-1	369011	4909397	2	0	0	100.3	100.3	1	4858.62	3.25	0	84.73	0	0.63	0	0	18.37	0	0	0	0	0	0	-3.42	-3.42
Inverter	MV4-11	369264	4908855	2	0	0	100.3	100.3	1	4867.28	3.25	0	84.75	0	0.63	0	0	18.38	0	0	0	0	0	0	-3.45	-3.45
Inverter	MV4-10	369312	4908858	2	0	0	100.3	100.3	1	4913.27	3.25	0	84.83	0	0.63	0	0	18.45	0	0	0	0	0	0	-3.6	-3.6
Inverter	MV4-8	369256	4909001	2	0	0	100.3	100.3	1	4913.31	3.25	0	84.83	0	0.63	0	0	18.45	0	0	0	0	0	0	-3.6	-3.6
Inverter	MV4-9	369289	4909001	2	0	0	100.3	100.3	1	4943.86	3.25	0	84.88	0	0.64	0	0	18.5	0	0	0	0	0	0	-3.7	-3.7
Inverter	MV2-2	365977	4906654	2	0	0	89.1	89.1	1	1355.94	3.25	0	73.64	0	0.76	0	0	6.96	0	0	0	0	0	0	7.69	7.69
Inverter	MV4-6	369243	4909192	2	0	0	100.3	100.3	1	4977.06	3.25	0	84.94	0	0.64	0	0	18.55	0	0	0	0	0	0	-3.81	-3.81
Inverter	MV4-5	369289	4909199	2	0	0	100.3	100.3	1	5021.86	3.25	0	85.02	0	0.64	0	0	18.61	0	0	0	0	0	0	-3.96	-3.96
Inverter	MV4-3	369229	4909397	2	0	0	100.3	100.3	1	5052.62	3.25	0	85.07	0	0.65	0	0	18.66	0	0	0	0	0	0	-4.06	-4.06
Inverter	MV4-2	369272	4909397	2	0	0	100.3	100.3	1	5091.11	3.25	0	85.14	0	0.65	0	0	18.71	0	0	0	0	0	0	-4.19	-4.19
Inverter	MV6-2	370085	4907339	2	0	0	100.3	100.3	1	5378.79	3.25	0	85.61	0	0.67	0	0	19.13	0	0	0	0	0	0	-5.1	-5.1
Inverter	MV6-3	370207	4907140	2	0	0	100.3	100.3	1	5497	3.25	0	85.8	0	0.68	0	0	19.3	0	0	0	0	0	0	-5.47	-5.47
Inverter	MV5-5	370015	4908690	2	0	0	100.3	100.3	1	5527.64	3.25	0	85.85	0	0.68	0	0	19.34	0	0	0	0	0	0	-5.56	-5.56
Inverter	MV5-2	370006	4908853	2	0	0	100.3	100.3	1	5567.07	3.25	0	85.91	0	0.68	0	0	19.4	0	0	0	0	0	0	-5.68	-5.68
Inverter	MV5-1	370020	4909142	2	0	0	100.3	100.3	1	5675.93	3.25	0	86.08	0	0.69	0	0	19.55	0	0	0	0	0	0	-6.01	-6.01
Inverter	MV5-3	370231	4908851	2	0	0	100.3	100.3	1	5780.94	3.25	0	86.24	0	0.7	0	0	19.69	0	0	0	0	0	0	-6.32	-6.32
Inverter	MV5-4	370324	4908707	2	0	0	100.3	100.3	1	5829.4	3.25	0	86.31	0	0.7	0	0	19.76	0	0	0	0	0	0	-6.46	-6.46
DSTATCOM - 10 MVAR #2	DSAT2	369403	4908757	2.5	0	0	96.6	96.6	1	4964.74	3.5	0	84.92	0	3.68	0	0	3.33	0	0	0	0	0	0	4.7	4.7
DSTATCOM - 10 MVAR #1	DSAT1	369437	4908757	2.5	0	0	96.6	96.6	1	4996.89	3.5	0	84.97	0	3.69	0	0	3.35	0	0	0	0	0	0	4.62	4.62
Inverter	MV6-1	370235	4907364	2	0	0	97.3	97.3	1	5529.66	3.25	0	85.85	0	0.68	0	0	19.34	0	0	0	0	0	0	-8.57	-8.57
Gardiner Substation	G_Sub	366586.3	4903349.9	2.5	0	0	90.8	90.8	1	4226.42	4.25	0	83.52	0	1.43	2.55	0.3	7.66	0	0	0	0	0	0	-4.39	-4.39
Inverter	MV3-1	368156	4907976	2	0	0	89.1	89.1	1	3546.67	3.25	0	82	0	1.28	0	0	10.43	0	0	0	0	0	0	-4.65	-4.65
SubstationTransformer	W_ST	369711.17	4906112.3	2.5	0	0	92	92	1	5105.07	4.25	0	85.16	0	1.67	2.31	0.28	8.74	0	0	0	0	0	0	-5.9	-5.9
Inverter	MV3-5	368340	4907843	2	0	0	89.1	89.1	1	3698.02	3.25	0	82.36	0	1.32	0	0	10.65	0	0	0	0	0	0	-5.27	-5.27
Inverter	MV3-4	368502	4907925	2	0	0	89.1	89.1	1	3873.01	3.25	0	82.76	0	1.36	0	0	10.9	0	0	0	0	0	0	-5.97	-5.97
Inverter	MV3-22	368656	4907142	2	0	0	89.1	89.1	1	3946	3.25	0	82.92	0	1.38	0	0	11.01	0	0	0	0	0	0	-6.25	-6.25
Inverter	MV3-2	368671	4907928	2	0	0	89.1	89.1	1	4039.21	3.25	0	83.13	0	1.4	0	0	11.14	0	0	0	0	0	0	-6.61	-6.61
Fixed Reactor Bank 1	FRB1	369378	4908755	6	0	0	89.8	89.8	1	4940.46	5.25	0	84.88	0	-0.58	0	0	8.55	0	0	0	0	0	0	-3.07	-3.07
Inverter	MV4-13	369051	4908605	2	0	0	89.1	89.1	1	4582.5	3.25	0	84.22	0	1.54	0	0	11.9	0	0	0	0	0	0	-8.6	-8.6
Fixed Reactor Bank 2	FRB2	369464	4908755	6	0	0	89.8	89.8	1	5021.8	5.25	0	85.02	0	-0.56	0	0	8.65	0	0	0	0	0	0	-3.32	-3.32
Inverter	MV4-12	369043	4908803	2	0	0	89.1	89.1	1	4642.25	3.25	0	84.33	0	1.55	0	0	11.98	0	0	0	0	0	0	-8.81	-8.81
Inverter	MV4-15	369176	4908481	2	0	0	89.1	89.1	1	4663.85	3.25	0	84.37	0	1.56	0	0	12.01	0	0	0	0	0	0	-8.88	-8.88
Inverter	MV4-14	369176	4908507	2	0	0	89.1	89.1	1	4671.41	3.25	0	84.39	0	1.56	0	0	12.02	0	0	0	0	0	0	-8.91	-8.91
Westbrook Inverter Enclosur	W_INV2	369374	4906388	2	0	0	89.1	89.1	1	4723.76	3.25	0	84.49	0	1.57	0	0	12.09	0	0	0	0	0	0	-9.09	-9.09
Westbrook Inverter Enclosur	W_INV3	369508	4906164	2	0	0	89.1	89.1	1	4895.67	3.25	0	84.8	0	1.61	0	0	12.32	0	0	0	0	0	0	-9.68	-9.68
Westbrook Inverter Enclosur	W_INV5	369719	4906574	2	0	0	89.1	89.1	1	5040.54	3.25	0	85.05	0	1.65	0	0	12.52	0	0	0	0	0	0	-10.16	-10.16
Westbrook Inverter Enclosur	W_INV4	369673	4906164	2	0	0	89.1	89.1	1	5057.48	3.25	0	85.08	0	1.65	0	0	12.54	0	0	0	0	0	0	-10.22	-10.22
Inverters	G_Inv1	366526.4	4903225.8	2	0	0	87.7	87.7	1	4312.4	3.25	0	83.69	0	2.82	0	0	5.21	0	0	0	0	0	0	-4.06	-4.06
Westbrook Inverter Enclosur	W_INV7	369780	4906417	2	0	0	89.1	89.1	1	5120.87	3.25	0	85.19	0	1.67	0	0	12.62	0	0	0	0	0	0	-10.42	-10.42
Inverters	G_Inv2	366676.9	4903239.1	2	0	0	87.7	87.7	1	4366.04	3.25	0	83.8	0	2.82	0	0	5.27	0	0	0	0	0	0	-4.23	-4.23
Westbrook Inverter Enclosur	W_INV6	369875	4906578	2	0	0	89.1	89.1	1	5195.16	3.25	0	85.31	0	1.69	0	0	12.72	0	0	0	0	0	0	-10.67	-10.67
Inverters	G_Inv3	366583.7	4903091.4	2	0	0	87.7	87.7	1	4458.43	3.25	0	83.98	0	2.83	0	0	5.37	0	0	0	0	0	0	-4.52	-4.52
Inverters	G_Inv4	366732.8	4903105	2	0	0	87.7	87.7	1	4510.96	3.25	0	84.09	0	2.83	0	0	5.42	0	0	0	0	0	0	-4.68	-4.68
Inverters	G_Inv5	366638.5	4902958.1	2	0	0	87.7	87.7	1	4602.43	3.25	0	84.26	0	2.84	0	0	5.52	0	0	0	0	0	0	-4.96	-4.96
Inverter	MV5-6	369982	4908507	2	0	0	89.1	89.1	1	5447.1	3.25	0	85.72	0	1.75	0	0	13.05	0	0	0	0	0	0	-11.47	-11.47
Inverters	G_Inv6	366788.5	4902972	2	0	0	87.7	87.7	1	4654.82	3.25	0	84.36	0	2.84	0	0	5.58	0	0	0	0	0	0	-5.12	-5.12
Inverters	G_Inv7	366694.6	4902824.7	2	0	0	87.7	87.7	1	4747.06	3.25	0	84.53	0	2.85	0	0	5.67	0	0	0	0	0	0	-5.39	-5.39
Inverters	G_Inv8	366844.5	4902838.5	2	0	0	87.7	87.7	1	4799.29	4.1	0	84.62	0	3.21	1.47	0	5.73	0	0	0	0	0	0	-7.37	-7.37
Inverters	G_Inv9	366750.9	4902691.8	2	0	0	87.7	87.7	1	4891.33	3.25	0	84.79	0	2.86	0	0	5.83	0	0	0	0	0	0	-5.81	-5.81
Inverters	G_Inv10	366900.7	4902704.8	2	0	0	87.7	87.7	1	4944.04	3.25	0	84.88	0	2.86	0	0	5.88	0	0	0	0	0	0	-5.96	-5.96
Westbrook Inverter Enclosur	W_INV1	369409	4906578	2	0	0	86.1	86.1	1	4732.13	3.25	0	84.5	0	1.57	0	0	12.1	0	0	0	0	0	0	-12.12	-12.12
Inverter	MV6-4	370250	4906966	2	0	0	86.1	86.1	1	5542.64	3.25	0	85.87	0	1.77	0	0	13.18	0	0	0	0	0	0	-14.77	-14.77
Inverter Transformer	MV2-1 T	365836	4906816	2	0	0	69.4	69.4	1	1170.86	3.25	0	72.37	0	1.8	0	0	4.04	0	0	0	0	0	0	-8.86	-8.86
Inverter Transformer	MV1-7 T	364919	4905782	2	0	0	69.4	69.4	1	1371.03	3.25	0	73.74	0	1.91	0	0	4.28	0	0	0	0	0	0	-10.59	-10.59
Inverter Transformer	MV1-10 T	365010	4905564	2	0	0	69.4	69.4	1	1601.35	3.25	0	75.09	0	2.02	0	0	4.55	0	0	0	0	0	0	-12.3	-12.3
Westbrook Inverter Transfor	W_INVTR1	369403	4906578	2	0	0	78.2	78.2	1	4726.18	3.25	0	84.49	0	-3.12	0	0	2.32	0	0	0	0	0	0	-5.45	-5.45
Westbrook Inverter Transfor	W_INVTR2	369368	4906388	2	0	0	77.3	77.3	1	4717.84	3.25	0	84.47	0	-3.12	0	0	2.32	0	0	0	0	0	0	-6.33	-6.33
Inverter Transformer	MV1-13 T	364725	4905241	2	0	0	69.4	69.4	1	1896.06	3.25	0	76.56	0	2.13	0	0	4.86	0	0	0	0	0	0	-14.2	-14.2
Westbrook Inverter Transfor	W_INVTR3	369514	4906164	2	0	0	77.3	77.3	1	4901.55	3.25	0	84.81	0	-3.16	0	0	2.38	0	0	0	0	0	0	-6.69	-6.69
Westbrook Inverter Transfor	W_INVTR5	369725	4906574	2	0	0	77.3	77.3	1	5046.5	3.25	0	85.06	0	-3.19	0	0	2.43	0	0	0	0	0	0	-6.96	-6.96
Westbrook Inverter Transfor	W_INVTR4	369679	4906164	2	0	0	77.3	77.3	1	5063.37	3.25	0	85.09	0	-3.19	0	0	2.43	0	0	0	0	0	0	-6.99	-6.99
Westbrook Inverter Transfor	W_INVTR7	369786	4906417	2	0	0	77.3	77.3	1	5126.81	3.25	0	85.2	0	-3.2	0	0	2.46	0	0	0	0	0	0	-7.11	-7.11
Westbrook Inverter Transfor	W_INVTR6	369881	4906578	2	0	0	77.3	77.3	1	5201.13	3.25	0	85.32	0	-3.22	0	0	2.48	0	0	0	0	0	0	-7.24	-7.24
Inverter Transformer	MV1-14 T	365157	4905049	2	0	0	69.4	69.4	1	2135.31	3.25	0	77.59	0	2.22	0	0	5.1	0	0	0	0	0	0	-15.56	-15.56
Inverter Transformer	MV1-1 T	364721	4906166	2	0	0	56.1	56.1	1	971.07	3.25	0	70.74	0	0	0	0	4.82	0	0	0	0	0	0	-19.51	-19.51
Inverter Transformer	MV2-4 T	365590	4906628	2	0	0	56.1	56.1	1	1016.61	3.25	0	71.14	0	0.02	0	0	4.93	0	0	0	0	0	0	-20.03	-20.03
Inverter Transformer	MV1-2 T	364759	4906063	2	0	0	56.1	56.1	1	1075.12	3.25	0	71.63	0	0.04	0	0	5.07	0	0	0	0	0	0	-20.68	-20.68

	Inverter Transformer	MV1-3 T	364435	4906039	2	0	0	56.1	56.1	1	1131.92	3.25	0	72.08	0	0.06	0	0	5.2	0	0	0	0	0	0	-21.28	-21.28
	Inverter Transformer	MV6-1 T	370230	4907364	2	0	0	69.4	69.4	1	5524.67	3.25	0	85.85	0	3.11	0	0	7.72	0	0	0	0	0	0	-27.33	-27.33
	Inverter Transformer	MV6-4 T	370244	4906966	2	0	0	69.4	69.4	1	5536.64	3.25	0	85.86	0	3.11	0	0	7.73	0	0	0	0	0	0	-27.36	-27.36
	Inverter Transformer	MV2-3 T	365814	4906641	2	0	0	56.1	56.1	1	1210.31	3.25	0	72.66	0	0.09	0	0	5.38	0	0	0	0	0	0	-22.07	-22.07
	Inverter Transformer	MV1-4 T	364821	4905918	2	0	0	56.1	56.1	1	1224.05	3.25	0	72.76	0	0.09	0	0	5.41	0	0	0	0	0	0	-22.2	-22.2
	Inverter Transformer	MV1-5 T	364676	4905892	2	0	0	56.1	56.1	1	1245.47	3.25	0	72.91	0	0.1	0	0	5.46	0	0	0	0	0	0	-22.41	-22.41
	Inverter Transformer	MV1-6 T	364482	4905835	2	0	0	56.1	56.1	1	1321.81	3.25	0	73.42	0	0.13	0	0	5.63	0	0	0	0	0	0	-23.12	-23.12
	Inverter Transformer	MV2-2 T	365982	4906654	2	0	0	56.1	56.1	1	1360.62	3.25	0	73.67	0	0.14	0	0	5.72	0	0	0	0	0	0	-23.48	-23.48
	Inverter Transformer	MV1-8 T	364782	4905647	2	0	0	56.1	56.1	1	1491.74	3.25	0	74.47	0	0.2	0	0	6	0	0	0	0	0	0	-24.61	-24.61
	Inverter Transformer	MV1-9 T	364555	4905646	2	0	0	56.1	56.1	1	1499.04	3.25	0	74.52	0	0.2	0	0	6.02	0	0	0	0	0	0	-24.67	-24.67
	Inverter Transformer	MV1-11 T	364649	4905414	2	0	0	56.1	56.1	1	1724.08	3.25	0	75.73	0	0.29	0	0	6.49	0	0	0	0	0	0	-26.45	-26.45
	Inverter Transformer	MV1-12 T	365044	4905386	2	0	0	56.1	56.1	1	1782.57	3.25	0	76.02	0	0.31	0	0	6.61	0	0	0	0	0	0	-26.88	-26.88
	Inverter Transformer	MV1-15 T	365309	4904994	2	0	0	56.1	56.1	1	2225.14	3.25	0	77.95	0	0.5	0	0	7.48	0	0	0	0	0	0	-29.87	-29.87
	Inverter Transformer	MV3-12 T	367674	4907594	2	0	0	56.1	56.1	1	2999.03	3.25	0	80.54	0	0.83	0	0	8.87	0	0	0	0	0	0	-34.18	-34.18
	Inverter Transformer	MV3-18 T	367757	4907412	2	0	0	56.1	56.1	1	3059.39	3.25	0	80.71	0	0.86	0	0	8.97	0	0	0	0	0	0	-34.48	-34.48
	Inverter Transformer	MV3-13 T	367958	4907577	2	0	0	56.1	56.1	1	3277.67	3.25	0	81.31	0	0.95	0	0	9.33	0	0	0	0	0	0	-35.53	-35.53
	Inverter Transformer	MV3-7 T	367951	4907754	2	0	0	56.1	56.1	1	3299.21	3.25	0	81.37	0	0.96	0	0	9.37	0	0	0	0	0	0	-35.63	-35.63
	Inverter Transformer	MV3-3 T	367944	4907927	2	0	0	56.1	56.1	1	3329.09	3.25	0	81.45	0	0.97	0	0	9.41	0	0	0	0	0	0	-35.77	-35.77
	Inverter Transformer	MV3-17 T	368183	4907472	2	0	0	56.1	56.1	1	3489.12	3.25	0	81.85	0	1.04	0	0	9.67	0	0	0	0	0	0	-36.5	-36.5
	Inverter Transformer	MV3-10 T	368162	4907669	2	0	0	56.1	56.1	1	3492.75	3.25	0	81.86	0	1.04	0	0	9.68	0	0	0	0	0	0	-36.52	-36.52
	Inverter Transformer	MV3-6 T	368156	4907834	2	0	0	56.1	56.1	1	3515.78	3.25	0	81.92	0	1.05	0	0	9.71	0	0	0	0	0	0	-36.62	-36.62
	Inverter Transformer	MV3-1 T	368150	4907976	2	0	0	56.1	56.1	1	3540.84	3.25	0	81.98	0	1.06	0	0	9.75	0	0	0	0	0	0	-36.73	-36.73
	Inverter Transformer	MV3-19 T	368352	4907347	2	0	0	56.1	56.1	1	3648.05	3.25	0	82.24	0	1.1	0	0	9.92	0	0	0	0	0	0	-37.2	-37.2
	Inverter Transformer	MV3-15 T	368351	4907477	2	0	0	56.1	56.1	1	3656.84	3.25	0	82.26	0	1.1	0	0	9.93	0	0	0	0	0	0	-37.24	-37.24
	Inverter Transformer	MV3-11 T	368340	4907662	2	0	0	56.1	56.1	1	3667.77	3.25	0	82.29	0	1.11	0	0	9.95	0	0	0	0	0	0	-37.29	-37.29
	Inverter Transformer	MV3-5 T	368335	4907843	2	0	0	56.1	56.1	1	3693.11	3.25	0	82.35	0	1.12	0	0	9.99	0	0	0	0	0	0	-37.4	-37.4
	Inverter Transformer	MV3-21 T	368484	4907206	2	0	0	56.1	56.1	1	3774.63	3.25	0	82.54	0	1.15	0	0	10.12	0	0	0	0	0	0	-37.75	-37.75
	Inverter Transformer	MV3-16 T	368509	4907475	2	0	0	56.1	56.1	1	3814.01	3.25	0	82.63	0	1.17	0	0	10.18	0	0	0	0	0	0	-37.91	-37.91
	Inverter Transformer	MV3-9 T	368517	4907703	2	0	0	56.1	56.1	1	3848.85	3.25	0	82.71	0	1.18	0	0	10.23	0	0	0	0	0	0	-38.06	-38.06
	Inverter Transformer	MV3-4 T	368507	4907925	2	0	0	56.1	56.1	1	3877.91	3.25	0	82.77	0	1.19	0	0	10.27	0	0	0	0	0	0	-38.18	-38.18
	Inverter Transformer	MV3-22 T	368661	4907142	2	0	0	56.1	56.1	1	3951	3.25	0	82.93	0	1.22	0	0	10.38	0	0	0	0	0	0	-38.48	-38.48
	Inverter Transformer	MV3-20 T	368683	4907317	2	0	0	56.1	56.1	1	3977.08	3.25	0	82.99	0	1.23	0	0	10.42	0	0	0	0	0	0	-38.59	-38.59
	Inverter Transformer	MV3-14 T	368678	4907498	2	0	0	56.1	56.1	1	3984.39	3.25	0	83.01	0	1.24	0	0	10.43	0	0	0	0	0	0	-38.62	-38.62
	Inverter Transformer	MV3-8 T	368685	4907712	2	0	0	56.1	56.1	1	4016.37	3.25	0	83.08	0	1.25	0	0	10.48	0	0	0	0	0	0	-38.75	-38.75
	Inverter Transformer	MV3-2 T	368677	4907928	2	0	0	56.1	56.1	1	4045.09	3.25	0	83.14	0	1.26	0	0	10.52	0	0	0	0	0	0	-38.86	-38.86
	Inverter Transformer	MV4-13 T	369057	4908605	2	0	0	56.1	56.1	1	4588.18	3.25	0	84.23	0	1.47	0	0	11.3	0	0	0	0	0	0	-40.95	-40.95
	Inverter Transformer	MV4-12 T	369049	4908803	2	0	0	56.1	56.1	1	4647.85	3.25	0	84.35	0	1.5	0	0	11.38	0	0	0	0	0	0	-41.16	-41.16
	Inverter Transformer	MV4-15 T	369170	4908481	2	0	0	56.1	56.1	1	4658.11	3.25	0	84.36	0	1.5	0	0	11.39	0	0	0	0	0	0	-41.2	-41.2
	Inverter Transformer	MV4-14 T	369182	4908507	2	0	0	56.1	56.1	1	4677.15	3.25	0	84.4	0	1.51	0	0	11.42	0	0	0	0	0	0	-41.27	-41.27
	Inverter Transformer	MV4-7 T	369040	4909001	2	0	0	56.1	56.1	1	4714.17	3.25	0	84.47	0	1.52	0	0	11.47	0	0	0	0	0	0	-41.4	-41.4
	Inverter Transformer	MV4-4 T	369033	4909199	2	0	0	56.1	56.1	1	4789.59	3.25	0	84.61	0	1.55	0	0	11.57	0	0	0	0	0	0	-41.67	-41.67
	Inverter Transformer	MV4-1 T	369017	4909397	2	0	0	56.1	56.1	1	4863.93	3.25	0	84.74	0	1.58	0	0	11.67	0	0	0	0	0	0	-41.93	-41.93
	Inverter Transformer	MV4-11 T	369269	4908855	2	0	0	56.1	56.1	1	4871.96	3.25	0	84.75	0	1.58	0	0	11.68	0	0	0	0	0	0	-41.96	-41.96
	Inverter Transformer	MV4-10 T	369307	4908858	2	0	0	56.1	56.1	1	4908.59	3.25	0	84.82	0	1.59	0	0	11.73	0	0	0	0	0	0	-42.09	-42.09
	Inverter Transformer	MV4-8 T	369262	4909001	2	0	0	56.1	56.1	1	4918.86	3.25	0	84.84	0	1.6	0	0	11.75	0	0	0	0	0	0	-42.12	-42.12
	Inverter Transformer	MV4-9 T	369284	4909001	2	0	0	56.1	56.1	1	4939.23	3.25	0	84.87	0	1.6	0	0	11.77	0	0	0	0	0	0	-42.19	-42.19
	Inverter Transformer	MV4-6 T	369249	4909192	2	0	0	56.1	56.1	1	4982.52	3.25	0	84.95	0	1.62	0	0	11.83	0	0	0	0	0	0	-42.34	-42.34
	Inverter Transformer	MV4-5 T	369283	4909199	2	0	0	56.1	56.1	1	5016.39	3.25	0	85.01	0	1.63	0	0	11.88	0	0	0	0	0	0	-42.46	-42.46
	Inverter Transformer	MV4-3 T	369234	4909397	2	0	0	56.1	56.1	1	5057.09	3.25	0	85.08	0	1.65	0	0	11.93	0	0	0	0	0	0	-42.59	-42.59
	Inverter Transformer	MV4-2 T	369267	4909397	2	0	0	56.1	56.1	1	5086.63	3.25	0	85.13	0	1.66	0	0	11.97	0	0	0	0	0	0	-42.69	-42.69
	Inverter Transformer	MV6-2 T	370091	4907339	2	0	0	56.1	56.1	1	5384.79	3.25	0	85.62	0	1.76	0	0	12.35	0	0	0	0	0	0	-43.68	-43.68
	Inverter Transformer	MV5-6 T	369987	4908507	2	0	0	56.1	56.1	1	5451.94	3.25	0	85.73	0	1.78	0	0	12.44	0	0	0	0	0	0	-43.89	-43.89
	Inverter Transformer	MV6-3 T	370202	4907140	2	0	0	56.1	56.1	1	5492	3.25	0	85.79	0	1.8	0	0	12.49	0	0	0	0	0	0	-44.02	-44.02
	Inverter Transformer	MV5-5 T	370021	4908690	2	0	0	56.1	56.1	1	5533.4	3.25	0	85.86	0	1.81	0	0	12.54	0	0	0	0	0	0	-44.15	-44.15
	Inverter Transformer	MV5-2 T	370011	4908853	2	0	0	56.1	56.1	1	5571.83	3.25	0	85.92	0	1.82	0	0	12.58	0	0	0	0	0	0	-44.27	-44.27
	Inverter Transformer	MV5-1 T	370015	4909142	2	0	0	56.1	56.1	1	5671.25	3.25	0	86.07	0	1.86	0	0	12.71	0	0	0	0	0	0	-44.58	-44.58
	Inverter Transformer	MV5-3 T	370237	4908851	2	0	0	56.1	56.1	1	5786.67	3.25	0	86.25	0	1.9	0	0	12.85	0	0	0	0	0	0	-44.93	-44.93
	Inverter Transformer	MV5-4 T	370330	4908707	2	0	0	56.1	56.1	1	5835.18	3.25	0	86.32	0	1.91	0	0	12.91	0	0	0	0	0	0	-45.08	-45.08
	Line Reactor	NGR	369421	4908787.5	5	0	0	45.4	45.4	1	4991.76	5.25	0	84.97	0	3.26	1.35	0.11	2.04	0	0	0	0	0	0	-46.27	-46.27
Limit. Valu	0	0																								
Level D/N:	27.7138	27.7138																								

Receiver: Existing Noise Receptor
ID: S-R154
X: 370413
Y: 4910229
Z: 4.5
Ground: 0

ISO	Description	ID	X	Y	Z	Ground	ReflOrd	LxT	LxN	L/A	Dist.	hm	Freq	Adiv	K0b	Agr	Abar	z	Aatm	Afol	Ahous	Cmet	CmetN	Dc	RL	LtotT	LtotN
	Sol_Luce Substation	S_Substation	369426	4908792	3.5	0	0	112.1	112.1	1	1743.31	5.25	0	75.83	0	-0.06	3.82	0.27	3.92	0	0	0	0	0	0	28.56	28.56
	Inverter	MV5-1	370020	4909142	2	0	0	100.3	100.3	1	1155.87	3.25	0	72.26	0	-0.17	0	0	11.4	0	0	0	0	0	0	16.83	16.83
	Inverter	MV5-3	370231	4908851	2	0	0	100.3	100.3	1	1389.97	3.25	0	73.86	0	-0.08	0	0	12.04	0	0	0	0	0	0	14.48	14.48
	Inverter	MV4-2	369272	4909397	2	0	0	100.3	100.3	1	1412.13	3.25	0	74	0	-0.07	0	0	12.1	0	0	0	0	0	0	14.28	14.28

Inverter	MV5-2	370006	4908853	2	0	0	100.3	100.3	1	1434.93	3.25	0	74.14	0	-0.06	0	0	12.16	0	0	0	0	0	0	14.07	14.07
Inverter	MV4-3	369229	4909397	2	0	0	100.3	100.3	1	1447.1	3.25	0	74.21	0	-0.05	0	0	12.19	0	0	0	0	0	0	13.96	13.96
Inverter	MV4-5	369289	4909199	2	0	0	100.3	100.3	1	1524.56	3.25	0	74.66	0	-0.02	0	0	12.39	0	0	0	0	0	0	13.29	13.29
Inverter	MV5-4	370324	4908707	2	0	0	100.3	100.3	1	1524.6	3.25	0	74.66	0	-0.02	0	0	12.39	0	0	0	0	0	0	13.29	13.29
Inverter	MV4-6	369243	4909192	2	0	0	100.3	100.3	1	1563.42	3.25	0	74.88	0	-0.01	0	0	12.48	0	0	0	0	0	0	12.96	12.96
Inverter	MV5-5	370015	4908690	2	0	0	100.3	100.3	1	1589.63	3.25	0	75.03	0	0	0	0	12.54	0	0	0	0	0	0	12.74	12.74
Inverter	MV4-1	369011	4909397	2	0	0	100.3	100.3	1	1630.29	3.25	0	75.25	0	0.01	0	0	12.64	0	0	0	0	0	0	12.41	12.41
Inverter	MV4-9	369289	4909001	2	0	0	100.3	100.3	1	1664.74	3.25	0	75.43	0	0.02	0	0	12.72	0	0	0	0	0	0	12.14	12.14
Inverter	MV4-8	369256	4909001	2	0	0	100.3	100.3	1	1687.2	3.25	0	75.54	0	0.03	0	0	12.77	0	0	0	0	0	0	11.96	11.96
Inverter	MV4-4	369027	4909199	2	0	0	100.3	100.3	1	1726.82	3.25	0	75.74	0	0.05	0	0	12.86	0	0	0	0	0	0	11.66	11.66
Inverter	MV4-10	369312	4908858	2	0	0	100.3	100.3	1	1758.37	3.25	0	75.9	0	0.06	0	0	12.94	0	0	0	0	0	0	11.42	11.42
Inverter	MV4-11	369264	4908855	2	0	0	100.3	100.3	1	1791.11	3.25	0	76.06	0	0.07	0	0	13.01	0	0	0	0	0	0	11.17	11.17
Inverter	MV4-7	369035	4909001	2	0	0	100.3	100.3	1	1845.77	3.25	0	76.32	0	0.08	0	0	13.13	0	0	0	0	0	0	10.77	10.77
DSTATCOM - 10 MVAR #1	DSAT1	369437	4908757	2.5	0	0	96.6	96.6	1	1766.17	3.5	0	75.94	0	3.17	0	0	1.57	0	0	0	0	0	0	15.94	15.94
DSTATCOM - 10 MVAR #2	DSAT2	369403	4908757	2.5	0	0	96.6	96.6	1	1785.19	5.24	0	76.03	0	3.73	0.91	0.19	1.59	0	0	0	0	0	0	14.38	14.38
Inverter	MV6-2	370085	4907339	2	0	0	100.3	100.3	1	2908.55	3.25	0	80.27	0	0.34	0	0	15.21	0	0	0	0	0	0	4.48	4.48
Inverter	MV3-8	368680	4907712	2	0	0	100.3	100.3	1	3055.91	4.72	0	80.7	0	1.14	3.17	0.01	15.47	0	0	0	0	0	0	-0.18	-0.18
Inverter	MV6-3	370207	4907140	2	0	0	100.3	100.3	1	3095.86	3.25	0	80.82	0	0.38	0	0	15.54	0	0	0	0	0	0	3.58	3.58
Inverter	MV3-9	368512	4907703	2	0	0	100.3	100.3	1	3161.41	3.25	0	81	0	0.39	0	0	15.65	0	0	0	0	0	0	3.27	3.27
Inverter	MV3-14	368684	4907498	2	0	0	100.3	100.3	1	3232.31	3.25	0	81.19	0	0.41	0	0	15.78	0	0	0	0	0	0	2.94	2.94
Inverter	MV3-6	368162	4907834	2	0	0	100.3	100.3	1	3286.8	3.25	0	81.34	0	0.41	0	0	15.87	0	0	0	0	0	0	2.69	2.69
Inverter	MV3-11	368346	4907662	2	0	0	100.3	100.3	1	3295.75	3.25	0	81.36	0	0.42	0	0	15.89	0	0	0	0	0	0	2.65	2.65
Inverter	MV3-16	368514	4907475	2	0	0	100.3	100.3	1	3345.25	4.66	0	81.49	0	1.22	3.1	0	15.97	0	0	0	0	0	0	-1.47	-1.47
Inverter	MV3-3	367939	4907927	2	0	0	100.3	100.3	1	3379.33	3.25	0	81.58	0	0.43	0	0	16.03	0	0	0	0	0	0	2.28	2.28
Inverter	MV3-20	368689	4907317	2	0	0	100.3	100.3	1	3384.07	3.25	0	81.59	0	0.43	0	0	16.04	0	0	0	0	0	0	2.26	2.26
Inverter	MV3-10	368167	4907669	2	0	0	100.3	100.3	1	3405.6	3.25	0	81.64	0	0.44	0	0	16.07	0	0	0	0	0	0	2.16	2.16
Inverter	MV3-15	368357	4907477	2	0	0	100.3	100.3	1	3435.21	3.25	0	81.72	0	0.44	0	0	16.12	0	0	0	0	0	0	2.03	2.03
Inverter	MV3-7	367945	4907754	2	0	0	100.3	100.3	1	3495.23	3.25	0	81.87	0	0.45	0	0	16.22	0	0	0	0	0	0	1.77	1.77
Inverter	MV3-19	368357	4907347	2	0	0	100.3	100.3	1	3540.21	3.25	0	81.98	0	0.46	0	0	16.3	0	0	0	0	0	0	1.58	1.58
Inverter	MV3-17	368178	4907472	2	0	0	100.3	100.3	1	3549.12	3.25	0	82	0	0.46	0	0	16.31	0	0	0	0	0	0	1.54	1.54
Inverter	MV3-21	368478	4907206	2	0	0	100.3	100.3	1	3589.26	3.25	0	82.1	0	0.47	0	0	16.38	0	0	0	0	0	0	1.37	1.37
Inverter	MV3-13	367963	4907577	2	0	0	100.3	100.3	1	3610.49	3.25	0	82.15	0	0.47	0	0	16.42	0	0	0	0	0	0	1.28	1.28
Inverter	MV3-12	367668	4907594	2	0	0	100.3	100.3	1	3805.03	3.25	0	82.61	0	0.5	0	0	16.73	0	0	0	0	0	0	0.47	0.47
Inverter	MV3-18	367752	4907412	2	0	0	100.3	100.3	1	3875.1	3.25	0	82.77	0	0.51	0	0	16.85	0	0	0	0	0	0	0.19	0.19
Inverter	MV6-1	370235	4907364	2	0	0	97.3	97.3	1	2870.53	3.25	0	80.16	0	0.34	0	0	15.14	0	0	0	0	0	0	1.67	1.67
Inverter	MV2-3	365820	4906641	2	0	0	100.3	100.3	1	5828.33	3.25	0	86.31	0	0.7	0	0	19.76	0	0	0	0	0	0	-6.46	-6.46
Fixed Reactor Bank 2	FRB2	369464	4908755	6	0	0	89.8	89.8	1	1753.08	5.25	0	75.88	0	-1.01	0	0	3.94	0	0	0	0	0	0	10.97	10.97
Inverter	MV2-4	365586	4906624	2	0	0	100.3	100.3	1	6024.61	3.25	0	86.6	0	0.71	0	0	20.03	0	0	0	0	0	0	-7.02	-7.02
Fixed Reactor Bank 1	FRB1	369378	4908755	6	0	0	89.8	89.8	1	1801.08	5.25	0	76.11	0	-1.01	0	0	4.02	0	0	0	0	0	0	10.65	10.65
Inverter	MV5-6	369982	4908507	2	0	0	89.1	89.1	1	1775.12	3.25	0	75.98	0	0.85	0	0	7.67	0	0	0	0	0	0	4.54	4.54
Inverter	MV1-1	364715	4906166	2	0	0	100.3	100.3	1	6998.23	3.25	0	87.9	0	0.71	0	0	21.3	0	0	0	0	0	0	-9.59	-9.59
Inverter	MV1-2	364753	4906063	2	0	0	100.3	100.3	1	7027.88	3.25	0	87.94	0	0.71	0	0	21.33	0	0	0	0	0	0	-9.67	-9.67
Inverter	MV1-4	364815	4905918	2	0	0	100.3	100.3	1	7065.57	3.25	0	87.98	0	0.71	0	0	21.38	0	0	0	0	0	0	-9.76	-9.76
Inverter	MV1-5	364671	4905892	2	0	0	100.3	100.3	1	7195.84	3.25	0	88.14	0	0.7	0	0	21.54	0	0	0	0	0	0	-10.08	-10.08
Inverter	MV4-12	369043	4908803	2	0	0	89.1	89.1	1	1977.47	3.25	0	76.92	0	0.9	0	0	8.01	0	0	0	0	0	0	3.23	3.23
Inverter	MV1-12	365038	4905386	2	0	0	100.3	100.3	1	7235	3.25	0	88.19	0	0.7	0	0	21.59	0	0	0	0	0	0	-10.17	-10.17
Inverter	MV1-8	364788	4905647	2	0	0	100.3	100.3	1	7255.02	3.25	0	88.21	0	0.7	0	0	21.62	0	0	0	0	0	0	-10.22	-10.22
Inverter	MV1-15	365315	4904994	2	0	0	100.3	100.3	1	7307.18	3.25	0	88.27	0	0.7	0	0	21.68	0	0	0	0	0	0	-10.34	-10.34
Inverter	MV1-6	364477	4905835	2	0	0	100.3	100.3	1	7385.35	3.25	0	88.37	0	0.7	0	0	21.78	0	0	0	0	0	0	-10.53	-10.53
Inverter	MV1-9	364561	4905646	2	0	0	100.3	100.3	1	7433.02	3.25	0	88.42	0	0.69	0	0	21.83	0	0	0	0	0	0	-10.64	-10.64
Inverter	MV1-11	364655	4905414	2	0	0	100.3	100.3	1	7505.92	3.25	0	88.51	0	0.69	0	0	21.92	0	0	0	0	0	0	-10.81	-10.81
Inverter	MV4-13	369051	4908605	2	0	0	89.1	89.1	1	2119.53	3.25	0	77.52	0	0.94	0	0	8.24	0	0	0	0	0	0	2.36	2.36
Inverter	MV4-14	369176	4908507	2	0	0	89.1	89.1	1	2120.25	3.25	0	77.53	0	0.94	0	0	8.24	0	0	0	0	0	0	2.35	2.35
Inverter	MV4-15	369176	4908481	2	0	0	89.1	89.1	1	2141.42	3.25	0	77.61	0	0.94	0	0	8.27	0	0	0	0	0	0	2.23	2.23
Inverter	MV2-1	365842	4906816	2	0	0	97.3	97.3	1	5704.61	3.25	0	86.12	0	0.69	0	0	19.59	0	0	0	0	0	0	-9.09	-9.09
Inverter	MV1-7	364925	4905782	2	0	0	97.3	97.3	1	7063.57	3.25	0	87.98	0	0.71	0	0	21.38	0	0	0	0	0	0	-12.76	-12.76
Inverter	MV1-10	365004	4905564	2	0	0	97.3	97.3	1	7142.79	3.25	0	88.08	0	0.71	0	0	21.48	0	0	0	0	0	0	-12.95	-12.95
Inverter	MV1-14	365163	4905049	2	0	0	97.3	97.3	1	7375.29	3.25	0	88.36	0	0.7	0	0	21.76	0	0	0	0	0	0	-13.5	-13.5
Inverter	MV3-2	368671	4907928	2	0	0	89.1	89.1	1	2886.03	3.25	0	80.21	0	1.12	0	0	9.44	0	0	0	0	0	0	-1.71	-1.71
Inverter	MV1-13	364731	4905241	2	0	0	97.3	97.3	1	7560.77	3.25	0	88.57	0	0.69	0	0	21.99	0	0	0	0	0	0	-13.93	-13.93
SubstationTransformer	W_ST	369711.17	4906112.3	2.5	0	0	92	92	1	4176.13	3.5	0	83.42	0	0.37	0	0	7.6	0	0	0	0	0	0	0.59	0.59
Inverter	MV3-4	368502	4907925	2	0	0	89.1	89.1	1	2993.38	3.25	0	80.52	0	1.15	0	0	9.61	0	0	0	0	0	0	-2.22	-2.22
Inverter	MV3-5	368340	4907843	2	0	0	89.1	89.1	1	3160.75	3.25	0	81	0	1.19	0	0	9.86	0	0	0	0	0	0	-2.98	-2.98
Inverter	MV3-1	368156	4907976	2	0	0	89.1	89.1	1	3189.05	3.25	0	81.07	0	1.19	0	0	9.9	0	0	0	0	0	0	-3.11	-3.11
Inverter	MV3-22	368656	4907142	2	0	0	89.1	89.1	1	3551.99	3.25	0	82.01	0	1.28	0	0	10.44	0	0	0	0	0	0	-4.67	-4.67
Westbrook Inverter Enclosur	W_INV6	369875	4906578	2	0	0	89.1	89.1	1	3690.43	3.25	0	82.34	0	1.32	0	0	10.64	0	0	0	0	0	0	-5.24	-5.24
Westbrook Inverter Enclosur	W_INV5	369719	4906574	2	0	0	89.1	89.1	1	3720.3	3.25	0	82.41	0	1.32	0	0	10.68	0	0	0	0	0	0	-5.36	-5.36
Westbrook Inverter Enclosur	W_INV7	369780	4906417	2	0	0	89.1	89.1	1	3864.2	3.25	0	82.74	0	1.36	0	0	10.89	0	0	0	0	0	0	-5.93	-5.93
Westbrook Inverter Enclosur	W_INV2	369374	4906388	2	0	0	89.1	89.1	1	3979.05	3.25	0	83	0	1.39	0	0	11.05	0	0	0	0	0	0	-6.38	-6.38
Westbrook Inverter Enclosur	W_INV4	369673	4906164	2	0	0	89.1	89.1	1	4131.81	3.25	0	83.32	0	1.42	0	0	11.27	0	0	0	0	0	0	-6.96	-6.96
Westbrook Inverter Enclosur	W_INV3	369508	4906164	2	0	0	89.1	89.1	1	4164.52	3.25	0	83.39	0	1.43	0	0	11.32	0	0	0	0	0	0	-7.08	-7.08
Inverter	MV6-4	370250	4906966	2	0	0	86.1	86.1	1	3267.07	3.25	0	81.28	0	1.21	0	0	10.02	0	0	0	0	0	0	-6.46	-6.46
Westbrook Inverter Enclosur	W_INV1	369409	4906578	2	0	0	86.1	86.1	1	3786.53	3.25	0	82.56	0	1.34	0	0	10.78	0	0	0	0	0	0	-8.63	-8.63
Inverter	MV2-2	365977	4906654	2	0	0	89.1	89.1	1	5697.26	3.25	0	86.11	0	1.81	0	0	13.38	0	0	0	0	0	0	-12.24	-12.24

Gardiner Substation	G_Sub	366586.3	4903349.9	2.5	0	0	90.8	90.8	1	7871.83	4.25	0	88.92	0	2.18	1.75	0.38	11.54	0	0	0	0	0	0	-13.63	-13.63
Inverter	MV1-3	364440	4906039	2	0	0	89.1	89.1	1	7296.08	3.25	0	88.26	0	2.2	0	0	15.34	0	0	0	0	0	0	-16.74	-16.74
Inverters	G_Inv2	366676.9	4903239.1	2	0	0	87.7	87.7	1	7925.73	3.25	0	88.98	0	2.96	0	0	8.9	0	0	0	0	0	0	-13.19	-13.19
Inverters	G_Inv1	366526.4	4903225.8	2	0	0	87.7	87.7	1	8009.4	3.25	0	89.07	0	2.96	0	0	8.99	0	0	0	0	0	0	-13.36	-13.36
Inverters	G_Inv4	366732.8	4903105	2	0	0	87.7	87.7	1	8018.43	3.25	0	89.08	0	2.96	0	0	9	0	0	0	0	0	0	-13.38	-13.38
Inverters	G_Inv3	366583.7	4903091.4	2	0	0	87.7	87.7	1	8099.93	3.25	0	89.17	0	2.96	0	0	9.07	0	0	0	0	0	0	-13.55	-13.55
Inverters	G_Inv6	366788.5	4902972	2	0	0	87.7	87.7	1	8111.78	3.25	0	89.18	0	2.96	0	0	9.09	0	0	0	0	0	0	-13.57	-13.57
Inverters	G_Inv5	366638.5	4902958.1	2	0	0	87.7	87.7	1	8192.24	3.25	0	89.27	0	2.96	0	0	9.16	0	0	0	0	0	0	-13.74	-13.74
Inverters	G_Inv8	366844.5	4902838.5	2	0	0	87.7	87.7	1	8206.93	3.25	0	89.28	0	2.96	0	0	9.18	0	0	0	0	0	0	-13.77	-13.77
Inverters	G_Inv7	366694.6	4902824.7	2	0	0	87.7	87.7	1	8285.54	3.25	0	89.37	0	2.96	0	0	9.25	0	0	0	0	0	0	-13.93	-13.93
Inverters	G_Inv10	366900.7	4902704.8	2	0	0	87.7	87.7	1	8303.6	3.25	0	89.39	0	2.96	0	0	9.27	0	0	0	0	0	0	-13.96	-13.96
Inverters	G_Inv9	366750.9	4902691.8	2	0	0	87.7	87.7	1	8379.76	3.25	0	89.46	0	2.96	0	0	9.35	0	0	0	0	0	0	-14.11	-14.11
Westbrook Inverter Transfor	W_INVTR1	369403	4906578	2	0	0	78.2	78.2	1	3788.13	3.25	0	82.57	0	-2.91	0	0	1.97	0	0	0	0	0	0	-3.39	-3.39
Westbrook Inverter Transfor	W_INVTR6	369881	4906578	2	0	0	77.3	77.3	1	3689.56	3.25	0	82.34	0	-2.89	0	0	1.94	0	0	0	0	0	0	-4.04	-4.04
Westbrook Inverter Transfor	W_INVTR5	369725	4906574	2	0	0	77.3	77.3	1	3719.19	3.25	0	82.41	0	-2.9	0	0	1.95	0	0	0	0	0	0	-4.12	-4.12
Westbrook Inverter Transfor	W_INVTR7	369786	4906417	2	0	0	77.3	77.3	1	3863.22	3.25	0	82.74	0	-2.93	0	0	2	0	0	0	0	0	0	-4.47	-4.47
Westbrook Inverter Transfor	W_INVTR2	369368	4906388	2	0	0	77.3	77.3	1	3980.62	3.25	0	83	0	-2.96	0	0	2.05	0	0	0	0	0	0	-4.75	-4.75
Westbrook Inverter Transfor	W_INVTR4	369679	4906164	2	0	0	77.3	77.3	1	4130.74	3.25	0	83.32	0	-2.99	0	0	2.1	0	0	0	0	0	0	-5.09	-5.09
Westbrook Inverter Transfor	W_INVTR3	369514	4906164	2	0	0	77.3	77.3	1	4163.22	3.25	0	83.39	0	-3	0	0	2.12	0	0	0	0	0	0	-5.16	-5.16
Inverter Transformer	MV6-1 T	370230	4907364	2	0	0	69.4	69.4	1	2870.84	3.25	0	80.16	0	2.47	0	0	5.77	0	0	0	0	0	0	-19.05	-19.05
Inverter Transformer	MV6-4 T	370244	4906966	2	0	0	69.4	69.4	1	3267.37	3.25	0	81.28	0	2.59	0	0	6.1	0	0	0	0	0	0	-20.63	-20.63
Inverter Transformer	MV5-1 T	370015	4909142	2	0	0	56.1	56.1	1	1157.57	3.25	0	72.27	0	0.07	0	0	5.26	0	0	0	0	0	0	-21.54	-21.54
Inverter Transformer	MV2-1 T	365836	4906816	2	0	0	69.4	69.4	1	5709.42	3.25	0	86.13	0	3.14	0	0	7.84	0	0	0	0	0	0	-27.76	-27.76
Inverter Transformer	MV5-3 T	370237	4908851	2	0	0	56.1	56.1	1	1389.2	3.25	0	73.86	0	0.16	0	0	5.78	0	0	0	0	0	0	-23.73	-23.73
Inverter Transformer	MV4-2 T	369267	4909397	2	0	0	56.1	56.1	1	1416.17	3.25	0	74.02	0	0.17	0	0	5.84	0	0	0	0	0	0	-23.97	-23.97
Inverter Transformer	MV5-2 T	370011	4908853	2	0	0	56.1	56.1	1	1433.52	3.25	0	74.13	0	0.17	0	0	5.87	0	0	0	0	0	0	-24.12	-24.12
Inverter Transformer	MV4-3 T	369234	4909397	2	0	0	56.1	56.1	1	1443.01	3.25	0	74.19	0	0.18	0	0	5.9	0	0	0	0	0	0	-24.2	-24.2
Inverter Transformer	MV5-4 T	370330	4908707	2	0	0	56.1	56.1	1	1524.26	3.25	0	74.66	0	0.21	0	0	6.07	0	0	0	0	0	0	-24.88	-24.88
Inverter Transformer	MV4-5 T	369283	4909199	2	0	0	56.1	56.1	1	1528.99	3.25	0	74.69	0	0.21	0	0	6.08	0	0	0	0	0	0	-24.92	-24.92
Inverter Transformer	MV1-7 T	364919	4905782	2	0	0	69.4	69.4	1	7068.23	3.25	0	87.99	0	3.32	0	0	8.64	0	0	0	0	0	0	-30.6	-30.6
Inverter Transformer	MV1-10 T	365010	4905564	2	0	0	69.4	69.4	1	7138.25	3.25	0	88.07	0	3.33	0	0	8.68	0	0	0	0	0	0	-30.73	-30.73
Inverter Transformer	MV4-6 T	369249	4909192	2	0	0	56.1	56.1	1	1558.93	3.25	0	74.86	0	0.22	0	0	6.14	0	0	0	0	0	0	-25.16	-25.16
Inverter Transformer	MV5-5 T	370021	4908690	2	0	0	56.1	56.1	1	1588.14	3.25	0	75.02	0	0.23	0	0	6.21	0	0	0	0	0	0	-25.4	-25.4
Inverter Transformer	MV1-14 T	365157	4905049	2	0	0	69.4	69.4	1	7379.56	3.25	0	88.36	0	3.36	0	0	8.81	0	0	0	0	0	0	-31.18	-31.18
Inverter Transformer	MV4-1 T	369017	4909397	2	0	0	56.1	56.1	1	1625.13	3.25	0	75.22	0	0.25	0	0	6.28	0	0	0	0	0	0	-25.69	-25.69
Inverter Transformer	MV1-13 T	364725	4905241	2	0	0	69.4	69.4	1	7565.28	3.25	0	88.58	0	3.37	0	0	8.91	0	0	0	0	0	0	-31.51	-31.51
Inverter Transformer	MV4-9 T	369284	4909001	2	0	0	56.1	56.1	1	1668.12	3.25	0	75.44	0	0.27	0	0	6.37	0	0	0	0	0	0	-26.03	-26.03
Inverter Transformer	MV4-8 T	369262	4909001	2	0	0	56.1	56.1	1	1683.09	3.25	0	75.52	0	0.27	0	0	6.4	0	0	0	0	0	0	-26.14	-26.14
Inverter Transformer	MV4-4 T	369033	4909199	2	0	0	56.1	56.1	1	1722.01	3.25	0	75.72	0	0.29	0	0	6.48	0	0	0	0	0	0	-26.43	-26.43
Inverter Transformer	MV4-10 T	369307	4908858	2	0	0	56.1	56.1	1	1761.5	3.25	0	75.92	0	0.3	0	0	6.57	0	0	0	0	0	0	-26.73	-26.73
Inverter Transformer	MV5-6 T	369987	4908507	2	0	0	56.1	56.1	1	1773.91	3.25	0	75.98	0	0.31	0	0	6.59	0	0	0	0	0	0	-26.82	-26.82
Inverter Transformer	MV4-11 T	369269	4908855	2	0	0	56.1	56.1	1	1787.91	3.25	0	76.05	0	0.32	0	0	6.62	0	0	0	0	0	0	-26.92	-26.92
Inverter Transformer	MV4-7 T	369040	4909001	2	0	0	56.1	56.1	1	1842.04	3.25	0	76.31	0	0.34	0	0	6.73	0	0	0	0	0	0	-27.31	-27.31
Inverter Transformer	MV4-12 T	369049	4908803	2	0	0	56.1	56.1	1	1973.32	3.25	0	76.9	0	0.39	0	0	6.99	0	0	0	0	0	0	-28.23	-28.23
Inverter Transformer	MV4-13 T	369057	4908605	2	0	0	56.1	56.1	1	2115.68	3.25	0	77.51	0	0.45	0	0	7.27	0	0	0	0	0	0	-29.17	-29.17
Inverter Transformer	MV4-14 T	369182	4908507	2	0	0	56.1	56.1	1	2116.75	3.25	0	77.51	0	0.45	0	0	7.27	0	0	0	0	0	0	-29.18	-29.18
Inverter Transformer	MV4-15 T	369170	4908481	2	0	0	56.1	56.1	1	2144.89	3.25	0	77.63	0	0.47	0	0	7.33	0	0	0	0	0	0	-29.36	-29.36
Inverter Transformer	MV3-2 T	368677	4907928	2	0	0	56.1	56.1	1	2882.41	3.25	0	80.2	0	0.78	0	0	8.67	0	0	0	0	0	0	-33.58	-33.58
Inverter Transformer	MV6-2 T	370091	4907339	2	0	0	56.1	56.1	1	2907.88	3.25	0	80.27	0	0.79	0	0	8.71	0	0	0	0	0	0	-33.71	-33.71
Inverter Transformer	MV3-4 T	368507	4907925	2	0	0	56.1	56.1	1	2990.19	3.25	0	80.51	0	0.83	0	0	8.85	0	0	0	0	0	0	-34.13	-34.13
Inverter Transformer	MV3-8 T	368685	4907712	2	0	0	56.1	56.1	1	3053.08	4.72	0	80.69	0	1.78	2.61	0.01	8.96	0	0	0	0	0	0	-37.99	-37.99
Inverter Transformer	MV6-3 T	370202	4907140	2	0	0	56.1	56.1	1	3096.2	3.25	0	80.82	0	0.87	0	0	9.03	0	0	0	0	0	0	-34.66	-34.66
Inverter Transformer	MV3-9 T	368517	4907703	2	0	0	56.1	56.1	1	3158.4	3.25	0	80.99	0	0.9	0	0	9.13	0	0	0	0	0	0	-34.96	-34.96
Inverter Transformer	MV3-5 T	368335	4907843	2	0	0	56.1	56.1	1	3164.03	3.25	0	81	0	0.9	0	0	9.14	0	0	0	0	0	0	-34.99	-34.99
Inverter Transformer	MV3-1 T	368150	4907976	2	0	0	56.1	56.1	1	3193.3	3.25	0	81.08	0	0.91	0	0	9.19	0	0	0	0	0	0	-35.13	-35.13
Inverter Transformer	MV3-14 T	368678	4907498	2	0	0	56.1	56.1	1	3235.52	3.25	0	81.2	0	0.93	0	0	9.26	0	0	0	0	0	0	-35.33	-35.33
Inverter Transformer	MV3-6 T	368156	4907834	2	0	0	56.1	56.1	1	3290.91	3.25	0	81.35	0	0.95	0	0	9.35	0	0	0	0	0	0	-35.59	-35.59
Inverter Transformer	MV3-11 T	368340	4907662	2	0	0	56.1	56.1	1	3299.52	3.25	0	81.37	0	0.96	0	0	9.37	0	0	0	0	0	0	-35.63	-35.63
Inverter Transformer	MV3-16 T	368509	4907475	2	0	0	56.1	56.1	1	3348.09	4.65	0	81.5	0	1.91	2.51	0	9.44	0	0	0	0	0	0	-39.31	-39.31
Inverter Transformer	MV3-3 T	367944	4907927	2	0	0	56.1	56.1	1	3375.67	3.25	0	81.57	0	0.99	0	0	9.49	0	0	0	0	0	0	-35.99	-35.99
Inverter Transformer	MV3-20 T	368683	4907317	2	0	0	56.1	56.1	1	3387.13	3.25	0	81.6	0	0.99	0	0	9.51	0	0	0	0	0	0	-36.04	-36.04
Inverter Transformer	MV3-10 T	368162	4907669	2	0	0	56.1	56.1	1	3408.9	3.25	0	81.65	0	1	0	0	9.54	0	0	0	0	0	0	-36.14	-36.14
Inverter Transformer	MV3-15 T	368351	4907477	2	0	0	56.1	56.1	1	3438.8	3.25	0	81.73	0	1.01	0	0	9.59	0	0	0	0	0	0	-36.27	-36.27
Inverter Transformer	MV3-7 T	367951	4907754	2	0	0	56.1	56.1	1	3491	3.25	0	81.86	0	1.04	0	0	9.67	0	0	0	0	0	0	-36.51	-36.51
Inverter Transformer	MV3-19 T	368352	4907347	2	0	0	56.1	56.1	1	3543.11	3.25	0	81.99	0	1.06	0	0	9.76	0	0	0	0	0	0	-36.74	-36.74
Inverter Transformer	MV3-17 T	368183	4907472	2	0	0	56.1	56.1	1	3545.98	3.25	0	81.99	0	1.06	0	0	9.76	0	0	0	0	0	0	-36.76	-36.76
Inverter Transformer	MV3-22 T	368661	4907142	2	0	0	56.1	56.1	1	3549.52	3.25	0	82	0	1.06	0	0	9.77	0	0	0	0	0	0	-36.77	-36.77
Inverter Transformer	MV3-21 T	368484	4907206	2	0	0	56.1	56.1	1	3586.03	3.25	0	82.09	0	1.08	0	0	9.82	0	0	0	0	0	0	-36.93	-36.93
Inverter Transformer	MV3-13 T	367958	4907577	2	0	0	56.1	56.1	1	3613.88	3.25	0	82.16	0	1.09	0	0	9.87	0	0	0	0	0	0	-37.05	-37.05
Inverter Transformer	MV3-12 T	367674	4907594	2	0	0	56.1	56.1	1	3800.7	3.25	0	82.6	0	1.16	0	0	10.16	0	0	0	0	0	0	-37.86	-37.86
Inverter Transformer	MV3-18 T	367757	4907412	2	0	0	56.1	56.1	1	3871.67	3.25	0	82.76	0	1.19	0	0	10.26	0	0	0	0	0	0	-38.15	-38.15
Inverter Transformer	MV2-2 T	365982	4906654	2	0	0	56.1	56.1	1	5693.36	3.25	0	86.11	0	1.87	0	0	12.73	0	0	0	0	0	0	-44.65	-44.65
Inverter Transformer	MV2-3 T	365814	4906641	2	0	0	56.1	56.1	1	5833.06	3.25	0	86.32	0	1.91	0	0	12.9	0	0	0	0	0	0	-45.07	-45.07
Line Reactor	NGR	369421	4908787.5	5	0	0	45.4	45.4	1	1749.85	4.75	0	75.86	0	3.22	0	0	0.72	0	0	0	0	0	0	-34.45	-34.45

	Inverter Transformer	MV2-4 T	365590	4906628	2	0	0	56.1	56.1	1	6019.01	3.25	0	86.59	0	1.97	0	0	13.13	0	0	0	0	0	0	-45.63	-45.63
	Inverter Transformer	MV1-1 T	364721	4906166	2	0	0	56.1	56.1	1	6993.34	3.25	0	87.89	0	2.26	0	0	14.22	0	0	0	0	0	0	-48.32	-48.32
	Inverter Transformer	MV1-2 T	364759	4906063	2	0	0	56.1	56.1	1	7023.05	3.25	0	87.93	0	2.27	0	0	14.25	0	0	0	0	0	0	-48.39	-48.39
	Inverter Transformer	MV1-4 T	364821	4905918	2	0	0	56.1	56.1	1	7060.82	3.25	0	87.98	0	2.28	0	0	14.29	0	0	0	0	0	0	-48.49	-48.49
	Inverter Transformer	MV1-5 T	364676	4905892	2	0	0	56.1	56.1	1	7191.85	3.25	0	88.14	0	2.31	0	0	14.43	0	0	0	0	0	0	-48.82	-48.82
	Inverter Transformer	MV1-12 T	365044	4905386	2	0	0	56.1	56.1	1	7230.55	3.25	0	88.18	0	2.32	0	0	14.47	0	0	0	0	0	0	-48.92	-48.92
	Inverter Transformer	MV1-8 T	364782	4905647	2	0	0	56.1	56.1	1	7259.68	3.25	0	88.22	0	2.33	0	0	14.51	0	0	0	0	0	0	-48.99	-48.99
	Inverter Transformer	MV1-3 T	364435	4906039	2	0	0	56.1	56.1	1	7300.18	3.25	0	88.27	0	2.34	0	0	14.55	0	0	0	0	0	0	-49.1	-49.1
	Inverter Transformer	MV1-15 T	365309	4904994	2	0	0	56.1	56.1	1	7311.36	3.25	0	88.28	0	2.34	0	0	14.56	0	0	0	0	0	0	-49.12	-49.12
	Inverter Transformer	MV1-6 T	364482	4905835	2	0	0	56.1	56.1	1	7381.33	3.25	0	88.36	0	2.36	0	0	14.63	0	0	0	0	0	0	-49.3	-49.3
	Inverter Transformer	MV1-9 T	364555	4905646	2	0	0	56.1	56.1	1	7437.75	3.25	0	88.43	0	2.37	0	0	14.69	0	0	0	0	0	0	-49.44	-49.44
	Inverter Transformer	MV1-11 T	364649	4905414	2	0	0	56.1	56.1	1	7510.52	3.25	0	88.51	0	2.39	0	0	14.77	0	0	0	0	0	0	-49.61	-49.61
Limit. Valu	0	0																								
Level D/N:	30.789	30.789																								

Receiver: Existing Noise Receptor
ID: S-R155
X: 370710
Y: 4909195
Z: 4.5
Ground: 0

ISO	Description	ID	X	Y	Z	Ground	ReflOrd	LxT	LxN	L/A	Dist.	hm	Freq	Adiv	K0b	Agr	Abar	z	Aatm	Afol	Ahous	Cmet	CmetN	Dc	RL	LtotT	LtotN
	Sol_Luce Substation	S_Substation	369426	4908792	3.5	0	0	112.1	112.1	1	1345.76	5.25	0	73.58	0	0.16	5.46	0.45	3.2	0	0	0	0	0	0	29.68	29.68
	Inverter	MV5-3	370231	4908851	2	0	0	100.3	100.3	1	589.73	3.25	0	66.41	0	-0.49	0	0	9.14	0	0	0	0	0	0	25.24	25.24
	Inverter	MV5-4	370324	4908707	2	0	0	100.3	100.3	1	622.21	3.25	0	66.88	0	-0.46	0	0	9.33	0	0	0	0	0	0	24.56	24.56
	Inverter	MV5-1	370020	4909142	2	0	0	100.3	100.3	1	692.04	3.25	0	67.8	0	-0.42	0	0	9.7	0	0	0	0	0	0	23.23	23.23
	Inverter	MV5-2	370006	4908853	2	0	0	100.3	100.3	1	782.68	3.25	0	68.87	0	-0.36	0	0	10.11	0	0	0	0	0	0	21.69	21.69
	Inverter	MV5-5	370015	4908690	2	0	0	100.3	100.3	1	859.1	3.25	0	69.68	0	-0.32	0	0	10.41	0	0	0	0	0	0	20.54	20.54
	Inverter	MV4-5	369289	4909199	2	0	0	100.3	100.3	1	1421.01	3.25	0	74.05	0	-0.06	0	0	12.13	0	0	0	0	0	0	14.2	14.2
	Inverter	MV4-9	369289	4909001	2	0	0	100.3	100.3	1	1434.18	3.25	0	74.13	0	-0.06	0	0	12.16	0	0	0	0	0	0	14.08	14.08
	Inverter	MV4-10	369312	4908858	2	0	0	100.3	100.3	1	1438.05	3.25	0	74.16	0	-0.06	0	0	12.17	0	0	0	0	0	0	14.04	14.04
	Inverter	MV4-2	369272	4909397	2	0	0	100.3	100.3	1	1452.12	3.25	0	74.24	0	-0.05	0	0	12.2	0	0	0	0	0	0	13.92	13.92
	Inverter	MV4-8	369256	4909001	2	0	0	100.3	100.3	1	1466.89	3.25	0	74.33	0	-0.05	0	0	12.24	0	0	0	0	0	0	13.79	13.79
	Inverter	MV4-6	369243	4909192	2	0	0	100.3	100.3	1	1467.01	3.25	0	74.33	0	-0.05	0	0	12.24	0	0	0	0	0	0	13.79	13.79
	Inverter	MV4-11	369264	4908855	2	0	0	100.3	100.3	1	1485.44	3.25	0	74.44	0	-0.04	0	0	12.29	0	0	0	0	0	0	13.63	13.63
	Inverter	MV4-3	369229	4909397	2	0	0	100.3	100.3	1	1494.71	3.25	0	74.49	0	-0.04	0	0	12.31	0	0	0	0	0	0	13.54	13.54
	Inverter	MV4-4	369027	4909199	2	0	0	100.3	100.3	1	1683.01	3.25	0	75.52	0	0.03	0	0	12.76	0	0	0	0	0	0	12	12
	Inverter	MV4-7	369035	4909001	2	0	0	100.3	100.3	1	1686.2	3.25	0	75.54	0	0.03	0	0	12.77	0	0	0	0	0	0	11.97	11.97
	Inverter	MV4-1	369011	4909397	2	0	0	100.3	100.3	1	1710.97	3.25	0	75.66	0	0.04	0	0	12.83	0	0	0	0	0	0	11.78	11.78
	Inverter	MV6-2	370085	4907339	2	0	0	100.3	100.3	1	1958.41	3.25	0	76.84	0	0.12	0	0	13.37	0	0	0	0	0	0	9.98	9.98
	DSTATCOM - 10 MVAR #1	DSAT1	369437	4908757	2.5	0	0	96.6	96.6	1	1346.25	3.5	0	73.58	0	3.07	0	0	1.31	0	0	0	0	0	0	18.67	18.67
	DSTATCOM - 10 MVAR #2	DSAT2	369403	4908757	2.5	0	0	96.6	96.6	1	1378.44	3.5	0	73.79	0	3.08	0	0	1.33	0	0	0	0	0	0	18.43	18.43
	Inverter	MV6-3	370207	4907140	2	0	0	100.3	100.3	1	2115.67	3.25	0	77.51	0	0.16	0	0	13.7	0	0	0	0	0	0	8.94	8.94
	Inverter	MV3-8	368680	4907712	2	0	0	100.3	100.3	1	2514	3.25	0	79.01	0	0.26	0	0	14.48	0	0	0	0	0	0	6.56	6.56
	Inverter	MV3-14	368684	4907498	2	0	0	100.3	100.3	1	2642.82	3.25	0	79.44	0	0.29	0	0	14.73	0	0	0	0	0	0	5.86	5.86
	Inverter	MV3-9	368512	4907703	2	0	0	100.3	100.3	1	2656.55	3.25	0	79.49	0	0.29	0	0	14.75	0	0	0	0	0	0	5.78	5.78
	Inverter	MV6-1	370235	4907364	2	0	0	97.3	97.3	1	1891.61	3.25	0	76.54	0	0.1	0	0	13.23	0	0	0	0	0	0	7.45	7.45
	Inverter	MV3-20	368689	4907317	2	0	0	100.3	100.3	1	2758.86	3.25	0	79.81	0	0.31	0	0	14.94	0	0	0	0	0	0	5.24	5.24
	Inverter	MV3-16	368514	4907475	2	0	0	100.3	100.3	1	2789.41	3.25	0	79.91	0	0.32	0	0	15	0	0	0	0	0	0	5.09	5.09
	Inverter	MV3-11	368346	4907662	2	0	0	100.3	100.3	1	2817.55	3.25	0	80	0	0.33	0	0	15.05	0	0	0	0	0	0	4.94	4.94
	Inverter	MV3-6	368162	4907834	2	0	0	100.3	100.3	1	2888.71	3.25	0	80.21	0	0.34	0	0	15.17	0	0	0	0	0	0	4.58	4.58
	Inverter	MV3-15	368357	4907477	2	0	0	100.3	100.3	1	2913.44	3.25	0	80.29	0	0.35	0	0	15.22	0	0	0	0	0	0	4.46	4.46
	Inverter	MV3-10	368167	4907669	2	0	0	100.3	100.3	1	2965.73	3.25	0	80.44	0	0.36	0	0	15.31	0	0	0	0	0	0	4.2	4.2
	Inverter	MV3-21	368478	4907206	2	0	0	100.3	100.3	1	2989.64	3.25	0	80.51	0	0.36	0	0	15.35	0	0	0	0	0	0	4.09	4.09
	Inverter	MV3-19	368357	4907347	2	0	0	100.3	100.3	1	2991.94	3.25	0	80.52	0	0.36	0	0	15.36	0	0	0	0	0	0	4.07	4.07
	Inverter	MV3-3	367939	4907927	2	0	0	100.3	100.3	1	3047.34	3.25	0	80.68	0	0.37	0	0	15.46	0	0	0	0	0	0	3.81	3.81
	Inverter	MV3-17	368178	4907472	2	0	0	100.3	100.3	1	3062.64	3.25	0	80.72	0	0.37	0	0	15.48	0	0	0	0	0	0	3.73	3.73
	Inverter	MV3-7	367945	4907754	2	0	0	100.3	100.3	1	3117.97	3.25	0	80.88	0	0.38	0	0	15.58	0	0	0	0	0	0	3.47	3.47
	Inverter	MV3-13	367963	4907577	2	0	0	100.3	100.3	1	3188.09	3.25	0	81.07	0	0.4	0	0	15.7	0	0	0	0	0	0	3.14	3.14
	Inverter	MV3-12	367668	4907594	2	0	0	100.3	100.3	1	3437.58	3.25	0	81.73	0	0.44	0	0	16.13	0	0	0	0	0	0	2.02	2.02
	Inverter	MV3-18	367752	4907412	2	0	0	100.3	100.3	1	3453.82	3.25	0	81.77	0	0.44	0	0	16.15	0	0	0	0	0	0	1.95	1.95
	Inverter	MV5-6	369982	4908507	2	0	0	89.1	89.1	1	1001.67	3.25	0	71.01	0	0.69	0	0	6.32	0	0	0	0	0	0	11.04	11.04
	Fixed Reactor Bank 2	FRB2	369464	4908755	6	0	0	89.8	89.8	1	1321.41	5.25	0	73.42	0	-1.03	0	0	3.15	0	0	0	0	0	0	14.23	14.23
	Fixed Reactor Bank 1	FRB1	369378	4908755	6	0	0	89.8	89.8	1	1402.79	5.25	0	73.94	0	-1.03	0	0	3.3	0	0	0	0	0	0	13.56	13.56
	Inverter	MV2-3	365820	4906641	2	0	0	100.3	100.3	1	5516.79	3.25	0	85.83	0	0.68	0	0	19.32	0	0	0	0	0	0	-5.53	-5.53
	Inverter	MV2-4	365586	4906624	2	0	0	100.3	100.3	1	5732.84	3.25	0	86.17	0	0.69	0	0	19.63	0	0	0	0	0	0	-6.18	-6.18
	Inverter	MV4-14	369176	4908507	2	0	0	89.1	89.1	1	1681.22	3.25	0	75.51	0	0.83	0	0	7.52	0	0	0	0	0	0	5.2	5.2
	Inverter	MV4-15	369176	4908481	2	0	0	89.1	89.1	1	1692.03	3.25	0	75.57	0	0.84	0	0	7.53	0	0	0	0	0	0	5.12	5.12
	Inverter	MV4-12	369043	4908803	2	0	0	89.1	89.1	1	1712.47	3.25	0	75.67	0	0.84	0	0	7.57	0	0	0	0	0	0	4.98	4.98
	Inverter	MV4-13	369051	4908605	2	0	0	89.1	89.1	1	1760.79	3.25	0	75.91	0	0.85	0	0	7.65	0	0	0	0	0	0	4.64	4.64
	Inverter	MV1-1	364715	4906166	2	0	0	100.3	100.3	1	6716.76	3.25	0	87.54	0	0.71	0	0	20.94	0	0	0	0	0	0	-8.89	-8.89
	Inverter	MV1-2	364753	4906063	2	0	0	100.3	100.3	1	6730.18	3.25	0	87.56	0	0.71	0	0	20.96	0	0	0	0	0	0	-8.92	-8.92
	Inverter	MV1-4	364815	4905918	2	0	0	100.3	100.3	1	6744.61	3.25	0	87.58	0	0.71	0	0	20.98	0	0	0	0	0	0	-8.96	-8.96

Inverter	MV1-12	365038	4905386	2	0	0	100.3	100.3	1	6832.28	3.25	0	87.69	0	0.71	0	0	21.09	0	0	0	0	0	0	-9.18	-9.18
Inverter	MV1-15	365315	4904994	2	0	0	100.3	100.3	1	6837.72	3.25	0	87.7	0	0.71	0	0	21.09	0	0	0	0	0	0	-9.19	-9.19
Inverter	MV1-5	364671	4905892	2	0	0	100.3	100.3	1	6883.26	3.25	0	87.76	0	0.71	0	0	21.15	0	0	0	0	0	0	-9.31	-9.31
Inverter	MV1-8	364788	4905647	2	0	0	100.3	100.3	1	6903.51	3.25	0	87.78	0	0.71	0	0	21.18	0	0	0	0	0	0	-9.36	-9.36
Inverter	MV1-6	364477	4905835	2	0	0	100.3	100.3	1	7080.95	3.25	0	88	0	0.71	0	0	21.4	0	0	0	0	0	0	-9.8	-9.8
Inverter	MV1-9	364561	4905646	2	0	0	100.3	100.3	1	7099.69	3.25	0	88.02	0	0.71	0	0	21.42	0	0	0	0	0	0	-9.84	-9.84
Inverter	MV1-11	364655	4905414	2	0	0	100.3	100.3	1	7138.56	3.25	0	88.07	0	0.71	0	0	21.47	0	0	0	0	0	0	-9.94	-9.94
Inverter	MV2-1	365842	4906816	2	0	0	97.3	97.3	1	5418.22	3.25	0	85.68	0	0.68	0	0	19.18	0	0	0	0	0	0	-8.22	-8.22
SubstationTransformer	W_ST	369711.17	4906112.3	2.5	0	0	92	92	1	3240.51	3.5	0	81.21	0	0.14	0	0	6.31	0	0	0	0	0	0	4.31	4.31
Inverter	MV3-2	368671	4907928	2	0	0	89.1	89.1	1	2400.59	3.25	0	78.61	0	1	0	0	8.69	0	0	0	0	0	0	0.76	0.76
Inverter	MV3-4	368502	4907925	2	0	0	89.1	89.1	1	2547.19	3.25	0	79.12	0	1.04	0	0	8.92	0	0	0	0	0	0	-0.02	-0.02
Inverter	MV1-7	364925	4905782	2	0	0	97.3	97.3	1	6716.76	3.25	0	87.54	0	0.71	0	0	20.94	0	0	0	0	0	0	-11.89	-11.89
Inverter	MV1-10	365004	4905564	2	0	0	97.3	97.3	1	6763.33	3.25	0	87.6	0	0.71	0	0	21	0	0	0	0	0	0	-12	-12
Inverter	MV1-14	365163	4905049	2	0	0	97.3	97.3	1	6925.21	3.25	0	87.81	0	0.71	0	0	21.21	0	0	0	0	0	0	-12.41	-12.41
Inverter	MV3-5	368340	4907843	2	0	0	89.1	89.1	1	2728.52	3.25	0	79.72	0	1.08	0	0	9.2	0	0	0	0	0	0	-0.94	-0.94
Westbrook Inverter Enclosur	W_INV6	369875	4906578	2	0	0	89.1	89.1	1	2746.98	3.25	0	79.78	0	1.09	0	0	9.23	0	0	0	0	0	0	-1.03	-1.03
Inverter	MV1-13	364731	4905241	2	0	0	97.3	97.3	1	7168.16	3.25	0	88.11	0	0.7	0	0	21.51	0	0	0	0	0	0	-13.01	-13.01
Westbrook Inverter Enclosur	W_INV5	369719	4906574	2	0	0	89.1	89.1	1	2802.09	3.25	0	79.95	0	1.1	0	0	9.32	0	0	0	0	0	0	-1.31	-1.31
Inverter	MV3-1	368156	4907976	2	0	0	89.1	89.1	1	2830	3.25	0	80.04	0	1.11	0	0	9.36	0	0	0	0	0	0	-1.44	-1.44
Inverter	MV3-22	368656	4907142	2	0	0	89.1	89.1	1	2904.09	3.25	0	80.26	0	1.12	0	0	9.47	0	0	0	0	0	0	-1.8	-1.8
Westbrook Inverter Enclosur	W_INV7	369780	4906417	2	0	0	89.1	89.1	1	2929.54	3.25	0	80.34	0	1.13	0	0	9.51	0	0	0	0	0	0	-1.92	-1.92
Westbrook Inverter Enclosur	W_INV2	369374	4906388	2	0	0	89.1	89.1	1	3108.72	3.25	0	80.85	0	1.17	0	0	9.78	0	0	0	0	0	0	-2.75	-2.75
Westbrook Inverter Enclosur	W_INV4	369673	4906164	2	0	0	89.1	89.1	1	3203.49	3.25	0	81.11	0	1.2	0	0	9.92	0	0	0	0	0	0	-3.17	-3.17
Inverter	MV6-4	370250	4906966	2	0	0	86.1	86.1	1	2275.97	3.25	0	78.14	0	0.97	0	0	8.49	0	0	0	0	0	0	-1.55	-1.55
Westbrook Inverter Enclosur	W_INV3	369508	4906164	2	0	0	89.1	89.1	1	3260.64	3.25	0	81.27	0	1.21	0	0	10.01	0	0	0	0	0	0	-3.43	-3.43
Westbrook Inverter Enclosur	W_INV1	369409	4906578	2	0	0	86.1	86.1	1	2922.55	3.25	0	80.32	0	1.13	0	0	9.5	0	0	0	0	0	0	-4.88	-4.88
Inverter	MV2-2	365977	4906654	2	0	0	89.1	89.1	1	5371.96	3.25	0	85.6	0	1.73	0	0	12.96	0	0	0	0	0	0	-11.23	-11.23
Gardiner Substation	G_Sub	366586.3	4903349.9	2.5	0	0	90.8	90.8	1	7153.33	4.25	0	88.09	0	2.09	1.88	0.37	10.89	0	0	0	0	0	0	-12.17	-12.17
Inverter	MV1-3	364440	4906039	2	0	0	89.1	89.1	1	7019.49	3.25	0	87.93	0	2.13	0	0	15.01	0	0	0	0	0	0	-16.01	-16.01
Inverters	G_Inv2	366676.9	4903239.1	2	0	0	87.7	87.7	1	7192.96	3.25	0	88.14	0	2.95	0	0	8.18	0	0	0	0	0	0	-11.61	-11.61
Inverters	G_Inv4	366732.8	4903105	2	0	0	87.7	87.7	1	7273.67	3.25	0	88.24	0	2.96	0	0	8.26	0	0	0	0	0	0	-11.79	-11.79
Inverters	G_Inv1	366526.4	4903225.8	2	0	0	87.7	87.7	1	7289.3	3.25	0	88.25	0	2.96	0	0	8.28	0	0	0	0	0	0	-11.83	-11.83
Inverters	G_Inv6	366788.5	4902972	2	0	0	87.7	87.7	1	7355.54	3.25	0	88.33	0	2.96	0	0	8.34	0	0	0	0	0	0	-11.97	-11.97
Inverters	G_Inv3	366583.7	4903091.4	2	0	0	87.7	87.7	1	7367.52	3.25	0	88.35	0	2.96	0	0	8.36	0	0	0	0	0	0	-12	-12
Inverters	G_Inv8	366844.5	4902838.5	2	0	0	87.7	87.7	1	7439.57	3.25	0	88.43	0	2.96	0	0	8.43	0	0	0	0	0	0	-12.16	-12.16
Inverters	G_Inv5	366638.5	4902958.1	2	0	0	87.7	87.7	1	7448.22	3.25	0	88.44	0	2.96	0	0	8.44	0	0	0	0	0	0	-12.17	-12.17
Inverters	G_Inv10	366900.7	4902704.8	2	0	0	87.7	87.7	1	7525.52	3.25	0	88.53	0	2.96	0	0	8.51	0	0	0	0	0	0	-12.34	-12.34
Inverters	G_Inv7	366694.6	4902824.7	2	0	0	87.7	87.7	1	7530.22	3.25	0	88.54	0	2.96	0	0	8.52	0	0	0	0	0	0	-12.35	-12.35
Inverters	G_Inv9	366750.9	4902691.8	2	0	0	87.7	87.7	1	7613.55	3.25	0	88.63	0	2.96	0	0	8.6	0	0	0	0	0	0	-12.53	-12.53
Westbrook Inverter Transfor	W_INVTR1	369403	4906578	2	0	0	78.2	78.2	1	2925.23	3.25	0	80.32	0	-2.69	0	0	1.63	0	0	0	0	0	0	-1.01	-1.01
Westbrook Inverter Transfor	W_INVTR6	369881	4906578	2	0	0	77.3	77.3	1	2745.17	3.25	0	79.77	0	-2.64	0	0	1.55	0	0	0	0	0	0	-1.33	-1.33
Westbrook Inverter Transfor	W_INVTR5	369725	4906574	2	0	0	77.3	77.3	1	2799.98	3.25	0	79.94	0	-2.66	0	0	1.57	0	0	0	0	0	0	-1.51	-1.51
Westbrook Inverter Transfor	W_INVTR7	369786	4906417	2	0	0	77.3	77.3	1	2927.64	3.25	0	80.33	0	-2.69	0	0	1.63	0	0	0	0	0	0	-1.92	-1.92
Westbrook Inverter Transfor	W_INVTR2	369368	4906388	2	0	0	77.3	77.3	1	3111.31	3.25	0	80.86	0	-2.74	0	0	1.7	0	0	0	0	0	0	-2.48	-2.48
Westbrook Inverter Transfor	W_INVTR4	369679	4906164	2	0	0	77.3	77.3	1	3201.55	3.25	0	81.11	0	-2.77	0	0	1.74	0	0	0	0	0	0	-2.74	-2.74
Westbrook Inverter Transfor	W_INVTR3	369514	4906164	2	0	0	77.3	77.3	1	3258.43	3.25	0	81.26	0	-2.78	0	0	1.76	0	0	0	0	0	0	-2.9	-2.9
Inverter Transformer	MV6-1 T	370230	4907364	2	0	0	69.4	69.4	1	1892.87	3.25	0	76.54	0	2.13	0	0	4.86	0	0	0	0	0	0	-14.18	-14.18
Inverter Transformer	MV6-4 T	370244	4906966	2	0	0	69.4	69.4	1	2277.19	3.25	0	78.15	0	2.27	0	0	5.24	0	0	0	0	0	0	-16.31	-16.31
Inverter Transformer	MV5-3 T	370237	4908851	2	0	0	56.1	56.1	1	584.87	3.25	0	66.34	0	-0.11	0	0	3.81	0	0	0	0	0	0	-13.99	-13.99
Inverter Transformer	MV5-4 T	370330	4908707	2	0	0	56.1	56.1	1	618.51	3.25	0	66.83	0	-0.1	0	0	3.91	0	0	0	0	0	0	-14.58	-14.58
Inverter Transformer	MV5-1 T	370015	4909142	2	0	0	56.1	56.1	1	697.02	3.25	0	67.86	0	-0.08	0	0	4.13	0	0	0	0	0	0	-15.85	-15.85
Inverter Transformer	MV5-2 T	370011	4908853	2	0	0	56.1	56.1	1	778.18	3.25	0	68.82	0	-0.06	0	0	4.34	0	0	0	0	0	0	-17.04	-17.04
Inverter Transformer	MV5-5 T	370021	4908690	2	0	0	56.1	56.1	1	854.26	3.25	0	69.63	0	-0.04	0	0	4.53	0	0	0	0	0	0	-18.07	-18.07
Inverter Transformer	MV5-6 T	369987	4908507	2	0	0	56.1	56.1	1	998.04	3.25	0	70.98	0	0.01	0	0	4.88	0	0	0	0	0	0	-19.82	-19.82
Inverter Transformer	MV2-1 T	365836	4906816	2	0	0	69.4	69.4	1	5423.61	3.25	0	85.69	0	3.09	0	0	7.66	0	0	0	0	0	0	-27.09	-27.09
Inverter Transformer	MV4-5 T	369283	4909199	2	0	0	56.1	56.1	1	1427.01	3.25	0	74.09	0	0.17	0	0	5.86	0	0	0	0	0	0	-24.06	-24.06
Inverter Transformer	MV4-9 T	369284	4909001	2	0	0	56.1	56.1	1	1439.14	3.25	0	74.16	0	0.17	0	0	5.89	0	0	0	0	0	0	-24.17	-24.17
Inverter Transformer	MV4-10 T	369307	4908858	2	0	0	56.1	56.1	1	1442.91	3.25	0	74.18	0	0.18	0	0	5.89	0	0	0	0	0	0	-24.2	-24.2
Inverter Transformer	MV1-7 T	364919	4905782	2	0	0	69.4	69.4	1	6721.92	3.25	0	87.55	0	3.29	0	0	8.44	0	0	0	0	0	0	-29.93	-29.93
Inverter Transformer	MV4-2 T	369267	4909397	2	0	0	56.1	56.1	1	1457.07	3.25	0	74.27	0	0.18	0	0	5.93	0	0	0	0	0	0	-24.32	-24.32
Inverter Transformer	MV4-8 T	369262	4909001	2	0	0	56.1	56.1	1	1460.94	3.25	0	74.29	0	0.18	0	0	5.93	0	0	0	0	0	0	-24.35	-24.35
Inverter Transformer	MV4-6 T	369249	4909192	2	0	0	56.1	56.1	1	1461.01	3.25	0	74.29	0	0.18	0	0	5.93	0	0	0	0	0	0	-24.35	-24.35
Inverter Transformer	MV1-10 T	365010	4905564	2	0	0	69.4	69.4	1	6758.27	3.25	0	87.6	0	3.29	0	0	8.46	0	0	0	0	0	0	-30	-30
Inverter Transformer	MV4-11 T	369269	4908855	2	0	0	56.1	56.1	1	1480.57	3.25	0	74.41	0	0.19	0	0	5.98	0	0	0	0	0	0	-24.52	-24.52
Inverter Transformer	MV4-3 T	369234	4909397	2	0	0	56.1	56.1	1	1489.76	3.25	0	74.46	0	0.19	0	0	6	0	0	0	0	0	0	-24.59	-24.59
Inverter Transformer	MV1-14 T	365157	4905049	2	0	0	69.4	69.4	1	6930.02	3.25	0	87.81	0	3.31	0	0	8.56	0	0	0	0	0	0	-30.34	-30.34
Inverter Transformer	MV1-13 T	364725	4905241	2	0	0	69.4	69.4	1	7173.17	3.25	0	88.11	0	3.34	0	0	8.7	0	0	0	0	0	0	-30.8	-30.8
Inverter Transformer	MV4-14 T	369182	4908507	2	0	0	56.1	56.1	1	1675.75	3.25	0	75.48	0	0.27	0	0	6.39	0	0	0	0	0	0	-26.08	-26.08
Inverter Transformer	MV4-4 T	369033	4909199	2	0	0	56.1	56.1	1	1677.01	3.25	0	75.49	0	0.27	0	0	6.39	0	0	0	0	0	0	-26.09	-26.09
Inverter Transformer	MV4-7 T	369040	4909001	2	0	0	56.1	56.1	1	1681.23	3.25	0	75.51	0	0.27	0	0	6.4	0	0	0	0	0	0	-26.13	-26.13
Inverter Transformer	MV4-15 T	369170	4908481	2	0	0	56.1	56.1	1	1697.47	3.25	0	75.6	0	0.28	0	0	6.43	0	0	0	0	0	0	-26.25	-26.25
Inverter Transformer	MV4-1 T	369017	4909397	2	0	0	56.1	56.1	1	1705.01	3.25	0	75.63	0	0.28	0	0	6.45	0	0	0	0	0	0	-26.31	-26.31
Inverter Transformer	MV4-12 T	369049	4908803	2	0	0	56.1	56.1	1	1706.63	3.25	0	75.64	0	0.28	0	0	6.45	0	0	0	0	0	0	-26.32	-26.32
Inverter Transformer	MV4-13 T	369057	4908605	2	0	0	56.1	56.1	1	1755.14	3.25	0	75.89	0	0.3	0	0	6.55	0	0	0	0	0	0	-26.68	-26.68

	Inverter Transformer	MV6-2 T	370091	4907339	2	0	0	56.1	56.1	1	1956.5	3.25	0	76.83	0	0.39	0	0	6.96	0	0	0	0	0	0	-28.11	-28.11
	Inverter Transformer	MV6-3 T	370202	4907140	2	0	0	56.1	56.1	1	2116.86	3.25	0	77.51	0	0.45	0	0	7.27	0	0	0	0	0	0	-29.18	-29.18
	Inverter Transformer	MV3-2 T	368677	4907928	2	0	0	56.1	56.1	1	2395.49	3.25	0	78.59	0	0.57	0	0	7.8	0	0	0	0	0	0	-30.9	-30.9
	Inverter Transformer	MV3-8 T	368685	4907712	2	0	0	56.1	56.1	1	2509.96	3.25	0	78.99	0	0.62	0	0	8.01	0	0	0	0	0	0	-31.56	-31.56
	Inverter Transformer	MV3-4 T	368507	4907925	2	0	0	56.1	56.1	1	2542.86	3.25	0	79.11	0	0.63	0	0	8.07	0	0	0	0	0	0	-31.75	-31.75
	Inverter Transformer	MV3-14 T	368678	4907498	2	0	0	56.1	56.1	1	2647.42	3.25	0	79.46	0	0.68	0	0	8.26	0	0	0	0	0	0	-32.33	-32.33
	Inverter Transformer	MV3-9 T	368517	4907703	2	0	0	56.1	56.1	1	2652.42	3.25	0	79.47	0	0.68	0	0	8.26	0	0	0	0	0	0	-32.36	-32.36
	Inverter Transformer	MV3-5 T	368335	4907843	2	0	0	56.1	56.1	1	2732.86	3.25	0	79.73	0	0.72	0	0	8.41	0	0	0	0	0	0	-32.8	-32.8
	Inverter Transformer	MV3-20 T	368683	4907317	2	0	0	56.1	56.1	1	2763.26	3.25	0	79.83	0	0.73	0	0	8.46	0	0	0	0	0	0	-32.96	-32.96
	Inverter Transformer	MV3-16 T	368509	4907475	2	0	0	56.1	56.1	1	2793.35	3.25	0	79.92	0	0.74	0	0	8.51	0	0	0	0	0	0	-33.12	-33.12
	Inverter Transformer	MV3-11 T	368340	4907662	2	0	0	56.1	56.1	1	2822.59	3.25	0	80.01	0	0.75	0	0	8.56	0	0	0	0	0	0	-33.27	-33.27
	Inverter Transformer	MV3-1 T	368150	4907976	2	0	0	56.1	56.1	1	2835.41	3.25	0	80.05	0	0.76	0	0	8.59	0	0	0	0	0	0	-33.34	-33.34
	Inverter Transformer	MV3-6 T	368156	4907834	2	0	0	56.1	56.1	1	2894	3.25	0	80.23	0	0.78	0	0	8.69	0	0	0	0	0	0	-33.64	-33.64
	Inverter Transformer	MV3-22 T	368661	4907142	2	0	0	56.1	56.1	1	2900.55	3.25	0	80.25	0	0.79	0	0	8.7	0	0	0	0	0	0	-33.68	-33.68
	Inverter Transformer	MV3-15 T	368351	4907477	2	0	0	56.1	56.1	1	2918.29	3.25	0	80.3	0	0.8	0	0	8.73	0	0	0	0	0	0	-33.77	-33.77
	Inverter Transformer	MV3-10 T	368162	4907669	2	0	0	56.1	56.1	1	2970.01	3.25	0	80.46	0	0.82	0	0	8.82	0	0	0	0	0	0	-34.03	-34.03
	Inverter Transformer	MV3-21 T	368484	4907206	2	0	0	56.1	56.1	1	2985.16	3.25	0	80.5	0	0.82	0	0	8.84	0	0	0	0	0	0	-34.11	-34.11
	Inverter Transformer	MV3-19 T	368352	4907347	2	0	0	56.1	56.1	1	2995.88	3.25	0	80.53	0	0.83	0	0	8.86	0	0	0	0	0	0	-34.16	-34.16
	Inverter Transformer	MV3-3 T	367944	4907927	2	0	0	56.1	56.1	1	3042.79	3.25	0	80.67	0	0.85	0	0	8.94	0	0	0	0	0	0	-34.4	-34.4
	Inverter Transformer	MV3-17 T	368183	4907472	2	0	0	56.1	56.1	1	3058.51	3.25	0	80.71	0	0.85	0	0	8.97	0	0	0	0	0	0	-34.47	-34.47
	Inverter Transformer	MV3-7 T	367951	4907754	2	0	0	56.1	56.1	1	3112.65	3.25	0	80.86	0	0.88	0	0	9.06	0	0	0	0	0	0	-34.74	-34.74
	Inverter Transformer	MV3-13 T	367958	4907577	2	0	0	56.1	56.1	1	3192.4	3.25	0	81.08	0	0.91	0	0	9.19	0	0	0	0	0	0	-35.13	-35.13
	Inverter Transformer	MV3-12 T	367674	4907594	2	0	0	56.1	56.1	1	3432.27	3.25	0	81.71	0	1.01	0	0	9.58	0	0	0	0	0	0	-36.24	-36.24
	Inverter Transformer	MV3-18 T	367757	4907412	2	0	0	56.1	56.1	1	3449.54	3.25	0	81.76	0	1.02	0	0	9.61	0	0	0	0	0	0	-36.32	-36.32
	Line Reactor	NGR	369421	4908787.5	5	0	0	45.4	45.4	1	1351.88	5.25	0	73.62	0	3.45	1.22	0.04	0.55	0	0	0	0	0	0	-33.48	-33.48
	Inverter Transformer	MV2-2 T	365982	4906654	2	0	0	56.1	56.1	1	5367.56	3.25	0	85.6	0	1.76	0	0	12.33	0	0	0	0	0	0	-43.62	-43.62
	Inverter Transformer	MV2-3 T	365814	4906641	2	0	0	56.1	56.1	1	5522.11	3.25	0	85.84	0	1.81	0	0	12.52	0	0	0	0	0	0	-44.11	-44.11
	Inverter Transformer	MV2-4 T	365590	4906628	2	0	0	56.1	56.1	1	5727.47	3.25	0	86.16	0	1.88	0	0	12.78	0	0	0	0	0	0	-44.75	-44.75
	Inverter Transformer	MV1-1 T	364721	4906166	2	0	0	56.1	56.1	1	6711.41	3.25	0	87.54	0	2.18	0	0	13.92	0	0	0	0	0	0	-47.57	-47.57
	Inverter Transformer	MV1-2 T	364759	4906063	2	0	0	56.1	56.1	1	6724.87	3.25	0	87.55	0	2.18	0	0	13.93	0	0	0	0	0	0	-47.61	-47.61
	Inverter Transformer	MV1-4 T	364821	4905918	2	0	0	56.1	56.1	1	6739.37	3.25	0	87.57	0	2.19	0	0	13.95	0	0	0	0	0	0	-47.65	-47.65
	Inverter Transformer	MV1-12 T	365044	4905386	2	0	0	56.1	56.1	1	6827.3	3.25	0	87.68	0	2.21	0	0	14.04	0	0	0	0	0	0	-47.88	-47.88
	Inverter Transformer	MV1-15 T	365309	4904994	2	0	0	56.1	56.1	1	6842.46	3.25	0	87.7	0	2.22	0	0	14.06	0	0	0	0	0	0	-47.92	-47.92
	Inverter Transformer	MV1-5 T	364676	4905892	2	0	0	56.1	56.1	1	6878.88	3.25	0	87.75	0	2.23	0	0	14.1	0	0	0	0	0	0	-48.02	-48.02
	Inverter Transformer	MV1-8 T	364782	4905647	2	0	0	56.1	56.1	1	6908.65	3.25	0	87.79	0	2.23	0	0	14.13	0	0	0	0	0	0	-48.1	-48.1
	Inverter Transformer	MV1-3 T	364435	4906039	2	0	0	56.1	56.1	1	7023.96	3.25	0	87.93	0	2.27	0	0	14.26	0	0	0	0	0	0	-48.39	-48.39
	Inverter Transformer	MV1-6 T	364482	4905835	2	0	0	56.1	56.1	1	7076.55	3.25	0	88	0	2.28	0	0	14.31	0	0	0	0	0	0	-48.53	-48.53
	Inverter Transformer	MV1-9 T	364555	4905646	2	0	0	56.1	56.1	1	7104.89	3.25	0	88.03	0	2.29	0	0	14.34	0	0	0	0	0	0	-48.6	-48.6
	Inverter Transformer	MV1-11 T	364649	4905414	2	0	0	56.1	56.1	1	7143.65	3.25	0	88.08	0	2.3	0	0	14.38	0	0	0	0	0	0	-48.7	-48.7
Limit. Valu	0	0																								
Level D/N:	34.1003	34.1003																								

Receiver: Existing Noise Receptor
ID: S-R156
X: 370399
Y: 4908293
Z: 4.5
Ground: 0

ISO	Description	ID	X	Y	Z	Ground	ReflOrd	LxT	LxN	L/A	Dist.	hm	Freq	Adiv	K0b	Agr	Abar	z	Aatm	Afol	Ahous	Cmet	CmetN	Dc	RL	LtotT	LtotN
	Sol_Luce Substation	S_Substation	369426	4908792	3.5	0	0	112.1	112.1	1	1093.49	5.25	0	71.78	0	0.14	5.85	0.42	2.71	0	0	0	0	0	0	31.59	31.59
	Inverter	MV5-4	370324	4908707	2	0	0	100.3	100.3	1	420.75	3.25	0	63.48	0	-0.61	0	0	7.83	0	0	0	0	0	0	29.61	29.61
	Inverter	MV5-5	370015	4908690	2	0	0	100.3	100.3	1	552.33	3.25	0	65.84	0	-0.51	0	0	8.9	0	0	0	0	0	0	26.08	26.08
	Inverter	MV5-3	370231	4908851	2	0	0	100.3	100.3	1	582.75	3.25	0	66.31	0	-0.49	0	0	9.1	0	0	0	0	0	0	25.39	25.39
	Inverter	MV5-2	370006	4908853	2	0	0	100.3	100.3	1	684.15	3.25	0	67.7	0	-0.42	0	0	9.66	0	0	0	0	0	0	23.37	23.37
	Inverter	MV5-1	370020	4909142	2	0	0	100.3	100.3	1	929.76	3.25	0	70.37	0	-0.28	0	0	10.67	0	0	0	0	0	0	19.55	19.55
	Inverter	MV6-2	370085	4907339	2	0	0	100.3	100.3	1	1004.35	3.25	0	71.04	0	-0.24	0	0	10.93	0	0	0	0	0	0	18.59	18.59
	Inverter	MV6-3	370207	4907140	2	0	0	100.3	100.3	1	1168.88	3.25	0	72.36	0	-0.17	0	0	11.44	0	0	0	0	0	0	16.69	16.69
	Inverter	MV4-10	369312	4908858	2	0	0	100.3	100.3	1	1225.07	5.11	0	72.76	0	0.45	3.71	0.06	11.6	0	0	0	0	0	0	11.8	11.8
	Inverter	MV4-11	369264	4908855	2	0	0	100.3	100.3	1	1266.52	3.25	0	73.05	0	-0.13	0	0	11.71	0	0	0	0	0	0	15.67	15.67
	Inverter	MV4-9	369289	4909001	2	0	0	100.3	100.3	1	1316.58	3.25	0	73.39	0	-0.1	0	0	11.85	0	0	0	0	0	0	15.18	15.18
	Inverter	MV6-1	370235	4907364	2	0	0	97.3	97.3	1	943.37	3.25	0	70.49	0	-0.27	0	0	10.72	0	0	0	0	0	0	16.37	16.37
	Inverter	MV4-8	369256	4909001	2	0	0	100.3	100.3	1	1344.51	3.25	0	73.57	0	-0.09	0	0	11.93	0	0	0	0	0	0	14.91	14.91
	Inverter	MV4-5	369289	4909199	2	0	0	100.3	100.3	1	1432.81	3.25	0	74.12	0	-0.06	0	0	12.16	0	0	0	0	0	0	14.09	14.09
	Inverter	MV4-6	369243	4909192	2	0	0	100.3	100.3	1	1464.43	3.25	0	74.31	0	-0.05	0	0	12.24	0	0	0	0	0	0	13.81	13.81
	Inverter	MV4-7	369035	4909001	2	0	0	100.3	100.3	1	1536.8	4.89	0	74.73	0	0.61	3.6	0.02	12.42	0	0	0	0	0	0	8.95	8.95
	Inverter	MV4-2	369272	4909397	2	0	0	100.3	100.3	1	1577.64	3.25	0	74.96	0	-0.01	0	0	12.51	0	0	0	0	0	0	12.84	12.84
	Inverter	MV4-3	369229	4909397	2	0	0	100.3	100.3	1	1608.64	3.25	0	75.13	0	0.01	0	0	12.59	0	0	0	0	0	0	12.59	12.59
	DSTATCOM - 10 MVAR #1	DSAT1	369437	4908757	2.5	0	0	96.6	96.6	1	1068.06	3.5	0	71.57	0	2.96	0	0	1.12	0	0	0	0	0	0	20.98	20.98
	Inverter	MV4-4	369027	4909199	2	0	0	100.3	100.3	1	1644.15	3.25	0	75.32	0	0.02	0	0	12.67	0	0	0	0	0	0	12.3	12.3
	DSTATCOM - 10 MVAR #2	DSAT2	369403	4908757	2.5	0	0	96.6	96.6	1	1098.78	3.5	0	71.82	0	2.98	0	0	1.14	0	0	0	0	0	0	20.69	20.69
	Inverter	MV5-6	369982	4908507	2	0	0	89.1	89.1	1	468.71	3.25	0	64.42	0	0.51	0	0	5.03	0	0	0	0	0	0	19.1	19.1
	Inverter	MV4-1	369011	4909397	2	0	0	100.3	100.3	1	1773.52	3.25	0	75.98	0	0.06	0	0	12.97	0	0	0	0	0	0	11.3	11.3
	Inverter	MV3-8	368680	4907712	2	0	0	100.3	100.3	1	1814.53	3.25	0	76.18	0	0.07	0	0	13.06	0	0	0	0	0	0	11	11

Inverter	MV3-14	368684	4907498	2	0	0	100.3	100.3	1	1890.31	3.25	0	76.53	0	0.1	0	0	13.23	0	0	0	0	0	0	10.46	10.46
Inverter	MV3-20	368689	4907317	2	0	0	100.3	100.3	1	1968.93	3.25	0	76.88	0	0.12	0	0	13.4	0	0	0	0	0	0	9.91	9.91
Inverter	MV3-9	368512	4907703	2	0	0	100.3	100.3	1	1977.09	3.25	0	76.92	0	0.12	0	0	13.41	0	0	0	0	0	0	9.86	9.86
Inverter	MV3-16	368514	4907475	2	0	0	100.3	100.3	1	2054.84	3.25	0	77.26	0	0.14	0	0	13.58	0	0	0	0	0	0	9.34	9.34
Inverter	MV3-11	368346	4907662	2	0	0	100.3	100.3	1	2147.78	3.25	0	77.64	0	0.17	0	0	13.77	0	0	0	0	0	0	8.73	8.73
Inverter	MV3-15	368357	4907477	2	0	0	100.3	100.3	1	2199.01	3.25	0	77.84	0	0.18	0	0	13.87	0	0	0	0	0	0	8.41	8.41
Inverter	MV3-21	368478	4907206	2	0	0	100.3	100.3	1	2207.22	3.25	0	77.88	0	0.19	0	0	13.89	0	0	0	0	0	0	8.36	8.36
Inverter	MV3-19	368357	4907347	2	0	0	100.3	100.3	1	2250.49	3.25	0	78.05	0	0.2	0	0	13.97	0	0	0	0	0	0	8.1	8.1
Inverter	MV3-6	368162	4907834	2	0	0	100.3	100.3	1	2283.61	3.25	0	78.17	0	0.21	0	0	14.04	0	0	0	0	0	0	7.89	7.89
Inverter	MV3-10	368167	4907669	2	0	0	100.3	100.3	1	2317.59	3.25	0	78.3	0	0.21	0	0	14.11	0	0	0	0	0	0	7.69	7.69
Inverter	MV3-17	368178	4907472	2	0	0	100.3	100.3	1	2367.89	3.25	0	78.49	0	0.23	0	0	14.2	0	0	0	0	0	0	7.39	7.39
Inverter	MV3-3	367939	4907927	2	0	0	100.3	100.3	1	2487.08	3.25	0	78.91	0	0.25	0	0	14.43	0	0	0	0	0	0	6.71	6.71
Inverter	MV3-7	367945	4907754	2	0	0	100.3	100.3	1	2512.5	3.25	0	79	0	0.26	0	0	14.48	0	0	0	0	0	0	6.57	6.57
Inverter	MV3-13	367963	4907577	2	0	0	100.3	100.3	1	2539.05	3.25	0	79.09	0	0.27	0	0	14.53	0	0	0	0	0	0	6.42	6.42
Inverter	MV3-18	367752	4907412	2	0	0	100.3	100.3	1	2789.76	3.25	0	79.91	0	0.32	0	0	15	0	0	0	0	0	0	5.08	5.08
Inverter	MV3-12	367668	4907594	2	0	0	100.3	100.3	1	2819.04	3.25	0	80	0	0.33	0	0	15.05	0	0	0	0	0	0	4.94	4.94
Fixed Reactor Bank 2	FRB2	369464	4908755	6	0	0	89.8	89.8	1	1042.91	5.25	0	71.36	0	-1.02	0	0	2.61	0	0	0	0	0	0	16.82	16.82
Fixed Reactor Bank 1	FRB1	369378	4908755	6	0	0	89.8	89.8	1	1120.66	5.25	0	71.99	0	-1.02	0	0	2.76	0	0	0	0	0	0	16.05	16.05
Inverter	MV4-15	369176	4908481	2	0	0	89.1	89.1	1	1237.37	3.25	0	72.85	0	0.74	0	0	6.75	0	0	0	0	0	0	8.72	8.72
Inverter	MV4-14	369176	4908507	2	0	0	89.1	89.1	1	1241.58	3.25	0	72.88	0	0.74	0	0	6.76	0	0	0	0	0	0	8.69	8.69
Inverter	MV2-3	365820	4906641	2	0	0	100.3	100.3	1	4867.89	3.25	0	84.75	0	0.63	0	0	18.38	0	0	0	0	0	0	-3.45	-3.45
Inverter	MV4-13	369051	4908605	2	0	0	89.1	89.1	1	1383.64	3.25	0	73.82	0	0.77	0	0	7.01	0	0	0	0	0	0	7.46	7.46
Inverter	MV2-4	365586	4906624	2	0	0	100.3	100.3	1	5094.17	3.25	0	85.14	0	0.65	0	0	18.72	0	0	0	0	0	0	-4.2	-4.2
Inverter	MV4-12	369043	4908803	2	0	0	89.1	89.1	1	1448.74	3.25	0	74.22	0	0.78	0	0	7.12	0	0	0	0	0	0	6.94	6.94
SubstationTransformer	W_ST	369711.17	4906112.3	2.5	0	0	92	92	1	2286.63	3.5	0	78.18	0	-0.1	0	0	4.84	0	0	0	0	0	0	9.04	9.04
Inverter	MV1-15	365315	4904994	2	0	0	100.3	100.3	1	6060.57	3.25	0	86.65	0	0.71	0	0	20.08	0	0	0	0	0	0	-7.12	-7.12
Inverter	MV1-4	364815	4905918	2	0	0	100.3	100.3	1	6068.09	3.25	0	86.66	0	0.71	0	0	20.09	0	0	0	0	0	0	-7.14	-7.14
Inverter	MV1-1	364715	4906166	2	0	0	100.3	100.3	1	6068.94	3.25	0	86.66	0	0.71	0	0	20.09	0	0	0	0	0	0	-7.14	-7.14
Inverter	MV1-2	364753	4906063	2	0	0	100.3	100.3	1	6070.44	3.25	0	86.66	0	0.71	0	0	20.09	0	0	0	0	0	0	-7.15	-7.15
Inverter	MV1-12	365038	4905386	2	0	0	100.3	100.3	1	6098.44	3.25	0	86.7	0	0.71	0	0	20.13	0	0	0	0	0	0	-7.23	-7.23
Inverter	MV1-8	364788	4905647	2	0	0	100.3	100.3	1	6203.6	3.25	0	86.85	0	0.71	0	0	20.27	0	0	0	0	0	0	-7.52	-7.52
Inverter	MV1-5	364671	4905892	2	0	0	100.3	100.3	1	6210.86	3.25	0	86.86	0	0.71	0	0	20.28	0	0	0	0	0	0	-7.54	-7.54
Inverter	MV1-9	364561	4905646	2	0	0	100.3	100.3	1	6410.06	3.25	0	87.14	0	0.71	0	0	20.54	0	0	0	0	0	0	-8.08	-8.08
Inverter	MV1-6	364477	4905835	2	0	0	100.3	100.3	1	6411.85	3.25	0	87.14	0	0.71	0	0	20.54	0	0	0	0	0	0	-8.09	-8.09
Inverter	MV1-11	364655	4905414	2	0	0	100.3	100.3	1	6425.12	3.25	0	87.16	0	0.71	0	0	20.56	0	0	0	0	0	0	-8.12	-8.12
Inverter	MV3-2	368671	4907928	2	0	0	89.1	89.1	1	1766.13	3.25	0	75.94	0	0.85	0	0	7.66	0	0	0	0	0	0	4.61	4.61
Westbrook Inverter Enclosur	W_INV6	369875	4906578	2	0	0	89.1	89.1	1	1793.27	3.25	0	76.07	0	0.86	0	0	7.7	0	0	0	0	0	0	4.42	4.42
Westbrook Inverter Enclosur	W_INV5	369719	4906574	2	0	0	89.1	89.1	1	1848.61	3.25	0	76.34	0	0.87	0	0	7.8	0	0	0	0	0	0	4.05	4.05
Inverter	MV2-1	365842	4906816	2	0	0	97.3	97.3	1	4790.38	3.25	0	84.61	0	0.62	0	0	18.27	0	0	0	0	0	0	-6.19	-6.19
Inverter	MV6-4	370250	4906966	2	0	0	86.1	86.1	1	1335.34	3.25	0	73.51	0	0.76	0	0	6.92	0	0	0	0	0	0	4.87	4.87
Inverter	MV3-4	368502	4907925	2	0	0	89.1	89.1	1	1932.37	3.25	0	76.72	0	0.89	0	0	7.93	0	0	0	0	0	0	3.51	3.51
Westbrook Inverter Enclosur	W_INV7	369780	4906417	2	0	0	89.1	89.1	1	1975.49	3.25	0	76.91	0	0.9	0	0	8.01	0	0	0	0	0	0	3.24	3.24
Inverter	MV3-22	368656	4907142	2	0	0	89.1	89.1	1	2088.75	3.25	0	77.4	0	0.93	0	0	8.19	0	0	0	0	0	0	2.54	2.54
Inverter	MV3-5	368340	4907843	2	0	0	89.1	89.1	1	2107.6	3.25	0	77.48	0	0.93	0	0	8.22	0	0	0	0	0	0	2.43	2.43
Westbrook Inverter Enclosur	W_INV2	369374	4906388	2	0	0	89.1	89.1	1	2163.25	3.25	0	77.7	0	0.95	0	0	8.31	0	0	0	0	0	0	2.1	2.1
Westbrook Inverter Enclosur	W_INV4	369673	4906164	2	0	0	89.1	89.1	1	2249.38	3.25	0	78.04	0	0.97	0	0	8.45	0	0	0	0	0	0	1.6	1.6
Inverter	MV3-1	368156	4907976	2	0	0	89.1	89.1	1	2265.29	3.25	0	78.1	0	0.97	0	0	8.47	0	0	0	0	0	0	1.51	1.51
Westbrook Inverter Enclosur	W_INV3	369508	4906164	2	0	0	89.1	89.1	1	2307.93	3.25	0	78.26	0	0.98	0	0	8.54	0	0	0	0	0	0	1.27	1.27
Inverter	MV1-7	364925	4905782	2	0	0	97.3	97.3	1	6022.44	3.25	0	86.6	0	0.71	0	0	20.02	0	0	0	0	0	0	-10.01	-10.01
Inverter	MV1-10	365004	4905564	2	0	0	97.3	97.3	1	6045.95	3.25	0	86.63	0	0.71	0	0	20.06	0	0	0	0	0	0	-10.08	-10.08
Inverter	MV1-14	365163	4905049	2	0	0	97.3	97.3	1	6159.48	3.25	0	86.79	0	0.71	0	0	20.21	0	0	0	0	0	0	-10.4	-10.4
Inverter	MV1-13	364731	4905241	2	0	0	97.3	97.3	1	6437.46	3.25	0	87.17	0	0.71	0	0	20.58	0	0	0	0	0	0	-11.15	-11.15
Westbrook Inverter Enclosur	W_INV1	369409	4906578	2	0	0	86.1	86.1	1	1980.24	3.25	0	76.93	0	0.9	0	0	8.01	0	0	0	0	0	0	0.21	0.21
Inverter	MV2-2	365977	4906654	2	0	0	89.1	89.1	1	4715.97	3.25	0	84.47	0	1.57	0	0	12.08	0	0	0	0	0	0	-9.06	-9.06
Gardiner Substation	G_Sub	366586.3	4903349.9	2.5	0	0	90.8	90.8	1	6242.67	4.25	0	86.91	0	1.93	2.06	0.37	10	0	0	0	0	0	0	-10.11	-10.11
Inverter	MV1-3	364440	4906039	2	0	0	89.1	89.1	1	6371.04	3.25	0	87.08	0	1.98	0	0	14.22	0	0	0	0	0	0	-14.23	-14.23
Westbrook Inverter Transfor	W_INVTR1	369403	4906578	2	0	0	78.2	78.2	1	1983.24	3.25	0	76.95	0	-2.4	0	0	1.2	0	0	0	0	0	0	2.49	2.49
Westbrook Inverter Transfor	W_INVTR6	369881	4906578	2	0	0	77.3	77.3	1	1791.52	3.25	0	76.06	0	-2.33	0	0	1.1	0	0	0	0	0	0	2.5	2.5
Westbrook Inverter Transfor	W_INVTR5	369725	4906574	2	0	0	77.3	77.3	1	1846.41	3.25	0	76.33	0	-2.35	0	0	1.13	0	0	0	0	0	0	2.23	2.23
Inverters	G_Inv2	366676.9	4903239.1	2	0	0	87.7	87.7	1	6276.62	3.25	0	86.95	0	2.93	0	0	7.26	0	0	0	0	0	0	-9.48	-9.48
Inverters	G_Inv4	366732.8	4903105	2	0	0	87.7	87.7	1	6352.67	3.25	0	87.06	0	2.93	0	0	7.34	0	0	0	0	0	0	-9.67	-9.67
Inverters	G_Inv1	366526.4	4903225.8	2	0	0	87.7	87.7	1	6377.58	3.25	0	87.09	0	2.93	0	0	7.36	0	0	0	0	0	0	-9.73	-9.73
Inverters	G_Inv6	366788.5	4902972	2	0	0	87.7	87.7	1	6430.3	3.25	0	87.16	0	2.93	0	0	7.42	0	0	0	0	0	0	-9.85	-9.85
Inverters	G_Inv3	366583.7	4903091.4	2	0	0	87.7	87.7	1	6450.83	3.25	0	87.19	0	2.93	0	0	7.44	0	0	0	0	0	0	-9.9	-9.9
Westbrook Inverter Transfor	W_INVTR7	369786	4906417	2	0	0	77.3	77.3	1	1973.61	3.25	0	76.91	0	-2.4	0	0	1.19	0	0	0	0	0	0	1.64	1.64
Inverters	G_Inv8	366844.5	4902838.5	2	0	0	87.7	87.7	1	6510.46	3.25	0	87.27	0	2.94	0	0	7.5	0	0	0	0	0	0	-10.05	-10.05
Inverters	G_Inv5	366638.5	4902958.1	2	0	0	87.7	87.7	1	6527.06	3.25	0	87.29	0	2.94	0	0	7.51	0	0	0	0	0	0	-10.09	-10.09
Inverters	G_Inv10	366900.7	4902704.8	2	0	0	87.7	87.7	1	6592.88	3.25	0	87.38	0	2.94	0	0	7.58	0	0	0	0	0	0	-10.24	-10.24
Inverters	G_Inv7	366694.6	4902824.7	2	0	0	87.7	87.7	1	6604.91	3.25	0	87.4	0	2.94	0	0	7.59	0	0	0	0	0	0	-10.27	-10.27
Inverters	G_Inv9	366750.9	4902691.8	2	0	0	87.7	87.7	1	6684.47	3.25	0	87.5	0	2.94	0	0	7.67	0	0	0	0	0	0	-10.46	-10.46
Westbrook Inverter Transfor	W_INVTR2	369368	4906388	2	0	0	77.3	77.3	1	2166.1	3.25	0	77.71	0	-2.46	0	0	1.29	0	0	0	0	0	0	0.81	0.81
Westbrook Inverter Transfor	W_INVTR4	369679	4906164	2	0	0	77.3	77.3	1	2247.45	3.25	0	78.03	0	-2.49	0	0	1.32	0	0	0	0	0	0	0.47	0.47
Westbrook Inverter Transfor	W_INVTR3	369514	4906164	2	0	0	77.3	77.3	1	2305.62	3.25	0	78.26	0	-2.51	0	0	1.35	0	0	0	0	0	0	0.24	0.24
Inverter Transformer	MV6-1 T	370230	4907364	2	0	0	69.4	69.4	1	944.25	3.25	0	70.5	0	1.64	0	0	3.73	0	0	0	0	0	0	-6.52	-6.52

Inverter Transformer	MV6-4 T	370244	4906966	2	0	0	69.4	69.4	1	1336.02	3.25	0	73.52	0	1.9	0	0	4.24	0	0	0	0	0	0	-10.3	-10.3
Inverter Transformer	MV5-4 T	370330	4908707	2	0	0	56.1	56.1	1	419.72	3.25	0	63.46	0	-0.12	0	0	3.28	0	0	0	0	0	0	-10.56	-10.56
Inverter Transformer	MV5-6 T	369987	4908507	2	0	0	56.1	56.1	1	464.27	3.25	0	64.34	0	-0.12	0	0	3.43	0	0	0	0	0	0	-11.59	-11.59
Inverter Transformer	MV5-5 T	370021	4908690	2	0	0	56.1	56.1	1	548.18	3.25	0	65.78	0	-0.11	0	0	3.7	0	0	0	0	0	0	-13.31	-13.31
Inverter Transformer	MV5-3 T	370237	4908851	2	0	0	56.1	56.1	1	581.05	3.25	0	66.28	0	-0.11	0	0	3.8	0	0	0	0	0	0	-13.92	-13.92
Inverter Transformer	MV5-2 T	370011	4908853	2	0	0	56.1	56.1	1	681.29	3.25	0	67.67	0	-0.09	0	0	4.08	0	0	0	0	0	0	-15.61	-15.61
Inverter Transformer	MV5-1 T	370015	4909142	2	0	0	56.1	56.1	1	931.81	3.25	0	70.39	0	-0.01	0	0	4.72	0	0	0	0	0	0	-19.04	-19.04
Inverter Transformer	MV6-2 T	370091	4907339	2	0	0	56.1	56.1	1	1002.49	3.25	0	71.02	0	0.01	0	0	4.89	0	0	0	0	0	0	-19.87	-19.87
Inverter Transformer	MV2-1 T	365836	4906816	2	0	0	69.4	69.4	1	4796.09	3.25	0	84.62	0	2.97	0	0	7.24	0	0	0	0	0	0	-25.48	-25.48
Inverter Transformer	MV6-3 T	370202	4907140	2	0	0	56.1	56.1	1	1169.71	3.25	0	72.36	0	0.07	0	0	5.29	0	0	0	0	0	0	-21.66	-21.66
Inverter Transformer	MV4-10 T	369307	4908858	2	0	0	56.1	56.1	1	1229.51	5.14	0	72.79	0	0.89	3.27	0.06	5.42	0	0	0	0	0	0	-26.32	-26.32
Inverter Transformer	MV4-14 T	369182	4908507	2	0	0	56.1	56.1	1	1235.67	3.25	0	72.84	0	0.1	0	0	5.44	0	0	0	0	0	0	-22.31	-22.31
Inverter Transformer	MV4-15 T	369170	4908481	2	0	0	56.1	56.1	1	1243.3	3.25	0	72.89	0	0.1	0	0	5.45	0	0	0	0	0	0	-22.39	-22.39
Inverter Transformer	MV4-11 T	369269	4908855	2	0	0	56.1	56.1	1	1262.04	3.25	0	73.02	0	0.11	0	0	5.5	0	0	0	0	0	0	-22.57	-22.57
Inverter Transformer	MV1-7 T	364919	4905782	2	0	0	69.4	69.4	1	6027.9	3.25	0	86.6	0	3.19	0	0	8.04	0	0	0	0	0	0	-28.48	-28.48
Inverter Transformer	MV1-10 T	365010	4905564	2	0	0	69.4	69.4	1	6040.59	3.25	0	86.62	0	3.19	0	0	8.04	0	0	0	0	0	0	-28.51	-28.51
Inverter Transformer	MV4-9 T	369284	4909001	2	0	0	56.1	56.1	1	1320.79	3.25	0	73.42	0	0.13	0	0	5.63	0	0	0	0	0	0	-23.11	-23.11
Inverter Transformer	MV1-14 T	365157	4905049	2	0	0	69.4	69.4	1	6164.58	3.25	0	86.8	0	3.21	0	0	8.12	0	0	0	0	0	0	-28.78	-28.78
Inverter Transformer	MV4-8 T	369262	4909001	2	0	0	56.1	56.1	1	1339.42	3.25	0	73.54	0	0.14	0	0	5.67	0	0	0	0	0	0	-23.28	-23.28
Inverter Transformer	MV4-13 T	369057	4908605	2	0	0	56.1	56.1	1	1377.79	3.25	0	73.78	0	0.15	0	0	5.75	0	0	0	0	0	0	-23.63	-23.63
Inverter Transformer	MV1-13 T	364725	4905241	2	0	0	69.4	69.4	1	6442.75	3.25	0	87.18	0	3.25	0	0	8.28	0	0	0	0	0	0	-29.36	-29.36
Inverter Transformer	MV4-5 T	369283	4909199	2	0	0	56.1	56.1	1	1437.46	3.25	0	74.15	0	0.17	0	0	5.88	0	0	0	0	0	0	-24.15	-24.15
Inverter Transformer	MV4-12 T	369049	4908803	2	0	0	56.1	56.1	1	1443.12	3.25	0	74.19	0	0.18	0	0	5.9	0	0	0	0	0	0	-24.2	-24.2
Inverter Transformer	MV4-6 T	369249	4909192	2	0	0	56.1	56.1	1	1459.69	3.25	0	74.29	0	0.18	0	0	5.93	0	0	0	0	0	0	-24.34	-24.34
Inverter Transformer	MV4-7 T	369040	4909001	2	0	0	56.1	56.1	1	1532.37	4.89	0	74.71	0	1.05	3.15	0.02	6.09	0	0	0	0	0	0	-28.94	-28.94
Inverter Transformer	MV4-2 T	369267	4909397	2	0	0	56.1	56.1	1	1581.22	3.25	0	74.98	0	0.23	0	0	6.19	0	0	0	0	0	0	-25.34	-25.34
Inverter Transformer	MV4-3 T	369234	4909397	2	0	0	56.1	56.1	1	1605.01	3.25	0	75.11	0	0.24	0	0	6.24	0	0	0	0	0	0	-25.53	-25.53
Inverter Transformer	MV4-4 T	369033	4909199	2	0	0	56.1	56.1	1	1639.15	3.25	0	75.29	0	0.25	0	0	6.31	0	0	0	0	0	0	-25.8	-25.8
Inverter Transformer	MV3-2 T	368677	4907928	2	0	0	56.1	56.1	1	1760.26	3.25	0	75.91	0	0.3	0	0	6.56	0	0	0	0	0	0	-26.72	-26.72
Inverter Transformer	MV4-1 T	369017	4909397	2	0	0	56.1	56.1	1	1768.83	3.25	0	75.95	0	0.31	0	0	6.58	0	0	0	0	0	0	-26.78	-26.78
Inverter Transformer	MV3-8 T	368685	4907712	2	0	0	56.1	56.1	1	1809.8	3.25	0	76.15	0	0.32	0	0	6.66	0	0	0	0	0	0	-27.08	-27.08
Inverter Transformer	MV3-14 T	368678	4907498	2	0	0	56.1	56.1	1	1895.75	3.25	0	76.56	0	0.36	0	0	6.84	0	0	0	0	0	0	-27.69	-27.69
Inverter Transformer	MV3-4 T	368507	4907925	2	0	0	56.1	56.1	1	1927.46	3.25	0	76.7	0	0.37	0	0	6.9	0	0	0	0	0	0	-27.91	-27.91
Inverter Transformer	MV3-9 T	368517	4907703	2	0	0	56.1	56.1	1	1972.32	3.25	0	76.9	0	0.39	0	0	6.99	0	0	0	0	0	0	-28.22	-28.22
Inverter Transformer	MV3-20 T	368683	4907317	2	0	0	56.1	56.1	1	1974.14	3.25	0	76.91	0	0.39	0	0	6.99	0	0	0	0	0	0	-28.23	-28.23
Inverter Transformer	MV3-16 T	368509	4907475	2	0	0	56.1	56.1	1	2059.42	3.25	0	77.27	0	0.43	0	0	7.16	0	0	0	0	0	0	-28.81	-28.81
Inverter Transformer	MV3-22 T	368661	4907142	2	0	0	56.1	56.1	1	2084.57	3.25	0	77.38	0	0.44	0	0	7.21	0	0	0	0	0	0	-28.97	-28.97
Inverter Transformer	MV3-5 T	368335	4907843	2	0	0	56.1	56.1	1	2112.49	3.25	0	77.5	0	0.45	0	0	7.26	0	0	0	0	0	0	-29.15	-29.15
Inverter Transformer	MV3-11 T	368340	4907662	2	0	0	56.1	56.1	1	2153.52	3.25	0	77.66	0	0.47	0	0	7.34	0	0	0	0	0	0	-29.42	-29.42
Inverter Transformer	MV3-21 T	368484	4907206	2	0	0	56.1	56.1	1	2202	3.25	0	77.86	0	0.49	0	0	7.43	0	0	0	0	0	0	-29.72	-29.72
Inverter Transformer	MV3-15 T	368351	4907477	2	0	0	56.1	56.1	1	2204.58	3.25	0	77.87	0	0.49	0	0	7.44	0	0	0	0	0	0	-29.74	-29.74
Inverter Transformer	MV3-19 T	368352	4907347	2	0	0	56.1	56.1	1	2255.02	3.25	0	78.06	0	0.51	0	0	7.54	0	0	0	0	0	0	-30.05	-30.05
Inverter Transformer	MV3-1 T	368150	4907976	2	0	0	56.1	56.1	1	2271.23	3.25	0	78.13	0	0.52	0	0	7.57	0	0	0	0	0	0	-30.15	-30.15
Inverter Transformer	MV3-6 T	368156	4907834	2	0	0	56.1	56.1	1	2289.48	3.25	0	78.19	0	0.53	0	0	7.6	0	0	0	0	0	0	-30.26	-30.26
Inverter Transformer	MV3-10 T	368162	4907669	2	0	0	56.1	56.1	1	2322.4	3.25	0	78.32	0	0.54	0	0	7.66	0	0	0	0	0	0	-30.46	-30.46
Inverter Transformer	MV3-17 T	368183	4907472	2	0	0	56.1	56.1	1	2363.2	3.25	0	78.47	0	0.56	0	0	7.74	0	0	0	0	0	0	-30.71	-30.71
Inverter Transformer	MV3-3 T	367944	4907927	2	0	0	56.1	56.1	1	2482.13	3.25	0	78.9	0	0.61	0	0	7.96	0	0	0	0	0	0	-31.4	-31.4
Inverter Transformer	MV3-7 T	367951	4907754	2	0	0	56.1	56.1	1	2506.64	3.25	0	78.98	0	0.62	0	0	8	0	0	0	0	0	0	-31.54	-31.54
Inverter Transformer	MV3-13 T	367958	4907577	2	0	0	56.1	56.1	1	2543.84	3.25	0	79.11	0	0.64	0	0	8.07	0	0	0	0	0	0	-31.76	-31.76
Inverter Transformer	MV3-18 T	367757	4907412	2	0	0	56.1	56.1	1	2785.02	3.25	0	79.9	0	0.74	0	0	8.5	0	0	0	0	0	0	-33.07	-33.07
Inverter Transformer	MV3-12 T	367674	4907594	2	0	0	56.1	56.1	1	2813.22	3.25	0	79.98	0	0.75	0	0	8.55	0	0	0	0	0	0	-33.22	-33.22
Line Reactor	NGR	369421	4908787.5	5	0	0	45.4	45.4	1	1095.91	5.25	0	71.8	0	3.47	1.21	0.05	0.45	0	0	0	0	0	0	-31.56	-31.56
Inverter Transformer	MV2-2 T	365982	4906654	2	0	0	56.1	56.1	1	4711.29	3.25	0	84.46	0	1.52	0	0	11.47	0	0	0	0	0	0	-41.39	-41.39
Inverter Transformer	MV2-3 T	365814	4906641	2	0	0	56.1	56.1	1	4873.53	3.25	0	84.76	0	1.58	0	0	11.69	0	0	0	0	0	0	-41.96	-41.96
Inverter Transformer	MV2-4 T	365590	4906628	2	0	0	56.1	56.1	1	5089.08	3.25	0	85.13	0	1.66	0	0	11.97	0	0	0	0	0	0	-42.7	-42.7
Inverter Transformer	MV1-4 T	364821	4905918	2	0	0	56.1	56.1	1	6062.57	3.25	0	86.65	0	1.98	0	0	13.18	0	0	0	0	0	0	-45.76	-45.76
Inverter Transformer	MV1-1 T	364721	4906166	2	0	0	56.1	56.1	1	6063.32	3.25	0	86.65	0	1.98	0	0	13.18	0	0	0	0	0	0	-45.76	-45.76
Inverter Transformer	MV1-2 T	364759	4906063	2	0	0	56.1	56.1	1	6064.86	3.25	0	86.66	0	1.99	0	0	13.18	0	0	0	0	0	0	-45.76	-45.76
Inverter Transformer	MV1-15 T	365309	4904994	2	0	0	56.1	56.1	1	6065.6	3.25	0	86.66	0	1.99	0	0	13.18	0	0	0	0	0	0	-45.76	-45.76
Inverter Transformer	MV1-12 T	365044	4905386	2	0	0	56.1	56.1	1	6093.17	3.25	0	86.7	0	1.99	0	0	13.21	0	0	0	0	0	0	-45.85	-45.85
Inverter Transformer	MV1-5 T	364676	4905892	2	0	0	56.1	56.1	1	6206.25	3.25	0	86.86	0	2.03	0	0	13.34	0	0	0	0	0	0	-46.17	-46.17
Inverter Transformer	MV1-8 T	364782	4905647	2	0	0	56.1	56.1	1	6209.03	3.25	0	86.86	0	2.03	0	0	13.35	0	0	0	0	0	0	-46.18	-46.18
Inverter Transformer	MV1-3 T	364435	4906039	2	0	0	56.1	56.1	1	6375.72	3.25	0	87.09	0	2.08	0	0	13.54	0	0	0	0	0	0	-46.65	-46.65
Inverter Transformer	MV1-6 T	364482	4905835	2	0	0	56.1	56.1	1	6407.23	3.25	0	87.13	0	2.09	0	0	13.58	0	0	0	0	0	0	-46.74	-46.74
Inverter Transformer	MV1-9 T	364555	4905646	2	0	0	56.1	56.1	1	6415.52	3.25	0	87.14	0	2.09	0	0	13.58	0	0	0	0	0	0	-46.76	-46.76
Inverter Transformer	MV1-11 T	364649	4905414	2	0	0	56.1	56.1	1	6430.49	3.25	0	87.16	0	2.1	0	0	13.6	0	0	0	0	0	0	-46.81	-46.81
Limit. Valu 0		0																								
Level D/N: 36.4575		36.4575																								

Receiver: Existing Noise Receptor
ID: S-R157
X: 370851
Y: 4907277
Z: 4.5

Ground: 0

ISO	Description	ID	X	Y	Z	Ground	ReflOrd	LxT	LxN	L/A	Dist.	hm	Freq	Adiv	K0b	Agr	Abar	z	Aatm	Afol	Ahous	Cmet	CmetN	Dc	RL	LtotT	LtotN
	Sol_Luce Substation	S_Substation	369426	4908792	3.5	0	0	112.1	112.1	1	2079.87	5.25	0	77.36	0	0.05	3.77	0.33	4.5	0	0	0	0	0	0	26.4	26.4
	Inverter	MV6-3	370207	4907140	2	0	0	100.3	100.3	1	658.42	3.25	0	67.37	0	-0.44	0	0	9.53	0	0	0	0	0	0	23.85	23.85
	Inverter	MV6-2	370085	4907339	2	0	0	100.3	100.3	1	768.51	3.25	0	68.71	0	-0.37	0	0	10.05	0	0	0	0	0	0	21.92	21.92
	Inverter	MV6-1	370235	4907364	2	0	0	97.3	97.3	1	622.12	3.25	0	66.88	0	-0.46	0	0	9.33	0	0	0	0	0	0	21.57	21.57
	Inverter	MV5-4	370324	4908707	2	0	0	100.3	100.3	1	1524.02	3.25	0	74.66	0	-0.02	0	0	12.38	0	0	0	0	0	0	13.29	13.29
	Inverter	MV5-5	370015	4908690	2	0	0	100.3	100.3	1	1641.79	3.25	0	75.31	0	0.02	0	0	12.67	0	0	0	0	0	0	12.32	12.32
	Inverter	MV5-3	370231	4908851	2	0	0	100.3	100.3	1	1691.71	3.25	0	75.57	0	0.03	0	0	12.78	0	0	0	0	0	0	11.93	11.93
	Inverter	MV5-2	370006	4908853	2	0	0	100.3	100.3	1	1788.24	3.25	0	76.05	0	0.07	0	0	13	0	0	0	0	0	0	11.2	11.2
	Inverter	MV5-1	370020	4909142	2	0	0	100.3	100.3	1	2041.76	3.25	0	77.2	0	0.14	0	0	13.55	0	0	0	0	0	0	9.42	9.42
	Inverter	MV3-20	368689	4907317	2	0	0	100.3	100.3	1	2162.37	3.25	0	77.7	0	0.17	0	0	13.8	0	0	0	0	0	0	8.64	8.64
	Inverter	MV3-14	368684	4907498	2	0	0	100.3	100.3	1	2178.24	3.25	0	77.76	0	0.18	0	0	13.83	0	0	0	0	0	0	8.54	8.54
	Inverter	MV4-10	369312	4908858	2	0	0	100.3	100.3	1	2206.37	3.25	0	77.87	0	0.19	0	0	13.89	0	0	0	0	0	0	8.37	8.37
	Inverter	MV3-8	368680	4907712	2	0	0	100.3	100.3	1	2214.15	3.25	0	77.9	0	0.19	0	0	13.9	0	0	0	0	0	0	8.32	8.32
	Inverter	MV4-11	369264	4908855	2	0	0	100.3	100.3	1	2238	3.25	0	78	0	0.19	0	0	13.95	0	0	0	0	0	0	8.17	8.17
	Inverter	MV4-9	369289	4909001	2	0	0	100.3	100.3	1	2326.38	3.25	0	78.33	0	0.22	0	0	14.12	0	0	0	0	0	0	7.64	7.64
	Inverter	MV3-16	368514	4907475	2	0	0	100.3	100.3	1	2345.37	3.25	0	78.4	0	0.22	0	0	14.16	0	0	0	0	0	0	7.53	7.53
	Inverter	MV4-8	369256	4909001	2	0	0	100.3	100.3	1	2348.66	3.25	0	78.42	0	0.22	0	0	14.17	0	0	0	0	0	0	7.51	7.51
	Inverter	MV3-21	368478	4907206	2	0	0	100.3	100.3	1	2374.06	3.25	0	78.51	0	0.23	0	0	14.22	0	0	0	0	0	0	7.36	7.36
	Inverter	MV3-9	368512	4907703	2	0	0	100.3	100.3	1	2377.48	3.25	0	78.52	0	0.23	0	0	14.22	0	0	0	0	0	0	7.34	7.34
	Inverter	MV4-5	369289	4909199	2	0	0	100.3	100.3	1	2476.68	3.25	0	78.88	0	0.25	0	0	14.41	0	0	0	0	0	0	6.77	6.77
	Inverter	MV3-19	368357	4907347	2	0	0	100.3	100.3	1	2494.98	3.25	0	78.94	0	0.26	0	0	14.45	0	0	0	0	0	0	6.67	6.67
	Inverter	MV4-6	369243	4909192	2	0	0	100.3	100.3	1	2500.58	3.25	0	78.96	0	0.26	0	0	14.46	0	0	0	0	0	0	6.63	6.63
	Inverter	MV3-15	368357	4907477	2	0	0	100.3	100.3	1	2502.01	3.25	0	78.97	0	0.26	0	0	14.46	0	0	0	0	0	0	6.63	6.63
	Inverter	MV4-7	369035	4909001	2	0	0	100.3	100.3	1	2504	3.25	0	78.97	0	0.26	0	0	14.47	0	0	0	0	0	0	6.62	6.62
	Inverter	MV3-11	368346	4907662	2	0	0	100.3	100.3	1	2534.41	3.25	0	79.08	0	0.26	0	0	14.52	0	0	0	0	0	0	6.45	6.45
	Inverter	MV4-2	369272	4909397	2	0	0	100.3	100.3	1	2643.42	3.25	0	79.44	0	0.29	0	0	14.73	0	0	0	0	0	0	5.85	5.85
	Inverter	MV4-4	369027	4909199	2	0	0	100.3	100.3	1	2649.73	4.99	0	79.46	0	1.03	3.28	0.01	14.74	0	0	0	0	0	0	1.8	1.8
	Inverter	MV4-3	369229	4909397	2	0	0	100.3	100.3	1	2669.32	3.25	0	79.53	0	0.29	0	0	14.78	0	0	0	0	0	0	5.71	5.71
	Inverter	MV3-17	368178	4907472	2	0	0	100.3	100.3	1	2680.1	3.25	0	79.56	0	0.3	0	0	14.8	0	0	0	0	0	0	5.66	5.66
	Inverter	MV3-10	368167	4907669	2	0	0	100.3	100.3	1	2712.48	3.25	0	79.67	0	0.3	0	0	14.85	0	0	0	0	0	0	5.49	5.49
	Inverter	MV3-6	368162	4907834	2	0	0	100.3	100.3	1	2746.08	3.25	0	79.77	0	0.31	0	0	14.92	0	0	0	0	0	0	5.31	5.31
	Inverter	MV4-1	369011	4909397	2	0	0	100.3	100.3	1	2807.13	3.25	0	79.97	0	0.32	0	0	15.03	0	0	0	0	0	0	5	5
	Inverter	MV3-13	367963	4907577	2	0	0	100.3	100.3	1	2903.54	3.25	0	80.26	0	0.34	0	0	15.2	0	0	0	0	0	0	4.51	4.51
	Inverter	MV3-7	367945	4907754	2	0	0	100.3	100.3	1	2944.89	3.25	0	80.38	0	0.35	0	0	15.27	0	0	0	0	0	0	4.3	4.3
	Inverter	MV3-3	367939	4907927	2	0	0	100.3	100.3	1	2983.66	3.25	0	80.49	0	0.36	0	0	15.34	0	0	0	0	0	0	4.11	4.11
	Inverter	MV3-18	367752	4907412	2	0	0	100.3	100.3	1	3101.94	3.25	0	80.83	0	0.38	0	0	15.55	0	0	0	0	0	0	3.55	3.55
	DSTATCOM - 10 MVAR #1	DSAT1	369437	4908757	2.5	0	0	96.6	96.6	1	2046.9	3.5	0	77.22	0	3.23	0	0	1.75	0	0	0	0	0	0	14.43	14.43
	DSTATCOM - 10 MVAR #2	DSAT2	369403	4908757	2.5	0	0	96.6	96.6	1	2070.53	3.5	0	77.32	0	3.24	0	0	1.76	0	0	0	0	0	0	14.31	14.31
	Inverter	MV3-12	367668	4907594	2	0	0	100.3	100.3	1	3198.75	3.25	0	81.1	0	0.4	0	0	15.72	0	0	0	0	0	0	3.09	3.09
	Inverter	MV6-4	370250	4906966	2	0	0	86.1	86.1	1	676.7	3.25	0	67.61	0	0.6	0	0	5.65	0	0	0	0	0	0	12.2	12.2
	SubstationTransformer	W_ST	369711.17	4906112.3	2.5	0	0	92	92	1	1629.67	4.25	0	75.24	0	0.63	3.51	0.19	3.72	0	0	0	0	0	0	8.88	8.88
	Westbrook Inverter Enclosur	W_INV6	369875	4906578	2	0	0	89.1	89.1	1	1200.49	3.25	0	72.59	0	0.73	0	0	6.68	0	0	0	0	0	0	9.06	9.06
	Westbrook Inverter Enclosur	W_INV5	369719	4906574	2	0	0	89.1	89.1	1	1332.53	3.25	0	73.49	0	0.76	0	0	6.92	0	0	0	0	0	0	7.89	7.89
	Westbrook Inverter Enclosur	W_INV7	369780	4906417	2	0	0	89.1	89.1	1	1373.55	3.25	0	73.76	0	0.76	0	0	6.99	0	0	0	0	0	0	7.55	7.55
	Inverter	MV2-3	365820	4906641	2	0	0	100.3	100.3	1	5071.04	3.25	0	85.1	0	0.65	0	0	18.68	0	0	0	0	0	0	-4.12	-4.12
	Inverter	MV2-4	365586	4906624	2	0	0	100.3	100.3	1	5305.34	3.25	0	85.49	0	0.67	0	0	19.02	0	0	0	0	0	0	-4.87	-4.87
	Inverter	MV5-6	369982	4908507	2	0	0	89.1	89.1	1	1506.01	3.25	0	74.56	0	0.79	0	0	7.22	0	0	0	0	0	0	6.49	6.49
	Westbrook Inverter Enclosur	W_INV4	369673	4906164	2	0	0	89.1	89.1	1	1620.64	3.25	0	75.19	0	0.82	0	0	7.41	0	0	0	0	0	0	5.63	5.63
	Inverter	MV1-15	365315	4904994	2	0	0	100.3	100.3	1	5988.27	3.25	0	86.55	0	0.7	0	0	19.98	0	0	0	0	0	0	-6.92	-6.92
	Inverter	MV1-12	365038	4905386	2	0	0	100.3	100.3	1	6112.84	3.25	0	86.72	0	0.71	0	0	20.15	0	0	0	0	0	0	-7.27	-7.27
	Inverter	MV1-4	364815	4905918	2	0	0	100.3	100.3	1	6187.1	3.25	0	86.83	0	0.71	0	0	20.25	0	0	0	0	0	0	-7.47	-7.47
	Inverter	MV1-2	364753	4906063	2	0	0	100.3	100.3	1	6217.67	3.25	0	86.87	0	0.71	0	0	20.29	0	0	0	0	0	0	-7.56	-7.56
	Inverter	MV1-1	364715	4906166	2	0	0	100.3	100.3	1	6235.77	3.25	0	86.9	0	0.71	0	0	20.31	0	0	0	0	0	0	-7.61	-7.61
	Inverter	MV1-8	364788	4905647	2	0	0	100.3	100.3	1	6278.29	3.25	0	86.96	0	0.71	0	0	20.37	0	0	0	0	0	0	-7.72	-7.72
	Westbrook Inverter Enclosur	W_INV2	369374	4906388	2	0	0	89.1	89.1	1	1723.91	3.25	0	75.73	0	0.84	0	0	7.59	0	0	0	0	0	0	4.9	4.9
	Inverter	MV1-5	364671	4905892	2	0	0	100.3	100.3	1	6333.3	3.25	0	87.03	0	0.71	0	0	20.44	0	0	0	0	0	0	-7.87	-7.87
	Westbrook Inverter Enclosur	W_INV3	369508	4906164	2	0	0	89.1	89.1	1	1744.25	3.25	0	75.83	0	0.85	0	0	7.62	0	0	0	0	0	0	4.76	4.76
	Inverter	MV1-11	364655	4905414	2	0	0	100.3	100.3	1	6470.02	3.25	0	87.22	0	0.71	0	0	20.62	0	0	0	0	0	0	-8.24	-8.24
	Inverter	MV1-9	364561	4905646	2	0	0	100.3	100.3	1	6498.02	3.25	0	87.26	0	0.71	0	0	20.66	0	0	0	0	0	0	-8.31	-8.31
	Inverter	MV1-6	364477	4905835	2	0	0	100.3	100.3	1	6535.08	3.25	0	87.31	0	0.71	0	0	20.7	0	0	0	0	0	0	-8.41	-8.41
	Fixed Reactor Bank 2	FRB2	369464	4908755	6	0	0	89.8	89.8	1	2026.88	5.25	0	77.14	0	-0.99	0	0	4.41	0	0	0	0	0	0	9.22	9.22
	Fixed Reactor Bank 1	FRB1	369378	4908755	6	0	0	89.8	89.8	1	2086.68	5.25	0	77.39	0	-0.98	0	0	4.51	0	0	0	0	0	0	8.86	8.86
	Inverter	MV2-1	365842	4906816	2	0	0	97.3	97.3	1	5030.17	3.25	0	85.03	0	0.64	0	0	18.62	0	0	0	0	0	0	-6.99	-6.99
	Inverter	MV4-15	369176	4908481	2	0	0	89.1	89.1	1	2062.83	3.25	0	77.29	0	0.92	0	0	8.15	0	0	0	0	0	0	2.7	2.7
	Inverter	MV4-14	369176	4908507	2	0	0	89.1	89.1	1	2078.11	3.25	0	77.35	0	0.93	0	0	8.17	0	0	0	0	0	0	2.61	2.61
	Inverter	MV3-22	368656	4907142	2	0	0	89.1	89.1	1	2199.15	3.25	0	77.85	0	0.95	0	0	8.37	0	0	0	0	0	0	1.89	1.89
	Inverter	MV4-13	369051	4908605	2	0	0	89.1	89.1	1	2236.87	3.25	0	77.99	0	0.96	0	0	8.43	0	0	0	0	0	0	1.67	1.67
	Westbrook Inverter Enclosur	W_INV1	369409	4906578	2	0	0	86.1	86.1	1	1602.49	3.25	0	75.1	0	0.82	0	0	7.38	0	0	0	0	0	0	2.76	2.76
	Inverter	MV3-2	368671	4907928	2	0	0	89.1	89.1	1	2275.13	3.25	0	78.14	0	0.97	0	0	8.49	0	0	0	0	0	0	1.46	1.46
	Inverter	MV1-10	365004	4905564	2	0	0	97.3	97.3	1	6092.76	3.25	0	86.7	0	0.71	0	0	20.12	0	0	0	0	0	0	-10.21	-10.21
	Inverter	MV1-14	365163	4905049	2	0	0	97.3	97.3	1	6108.79	3.25	0	86.72	0	0.71	0	0	20.14	0	0	0	0	0	0	-10.26	-10.26

Inverter	MV1-7	364925	4905782	2	0	0	97.3	97.3	1	6111.67	3.25	0	86.72	0	0.71	0	0	20.14	0	0	0	0	0	0	-10.26	-10.26
Inverter	MV4-12	369043	4908803	2	0	0	89.1	89.1	1	2365.91	3.25	0	78.48	0	0.99	0	0	8.63	0	0	0	0	0	0	0.95	0.95
Inverter	MV3-4	368502	4907925	2	0	0	89.1	89.1	1	2436.74	3.25	0	78.74	0	1.01	0	0	8.75	0	0	0	0	0	0	0.56	0.56
Inverter	MV1-13	364731	4905241	2	0	0	97.3	97.3	1	6449.78	3.25	0	87.19	0	0.71	0	0	20.59	0	0	0	0	0	0	-11.19	-11.19
Inverter	MV3-5	368340	4907843	2	0	0	89.1	89.1	1	2574	3.25	0	79.21	0	1.04	0	0	8.96	0	0	0	0	0	0	-0.16	-0.16
Inverter	MV3-1	368156	4907976	2	0	0	89.1	89.1	1	2784.18	3.25	0	79.89	0	1.09	0	0	9.29	0	0	0	0	0	0	-1.22	-1.22
Westbrook Inverter Transfor	W_INVTR6	369881	4906578	2	0	0	77.3	77.3	1	1195.62	3.25	0	72.55	0	-2.05	0	0	0.79	0	0	0	0	0	0	6.05	6.05
Gardiner Substation	G_Sub	366586.3	4903349.9	2.5	0	0	90.8	90.8	1	5797.39	4.25	0	86.26	0	1.83	2.15	0.34	9.52	0	0	0	0	0	0	-9	-9
Inverter	MV2-2	365977	4906654	2	0	0	89.1	89.1	1	4913.66	3.25	0	84.83	0	1.62	0	0	12.35	0	0	0	0	0	0	-9.74	-9.74
Westbrook Inverter Transfor	W_INVTR5	369725	4906574	2	0	0	77.3	77.3	1	1327.44	3.25	0	73.46	0	-2.12	0	0	0.86	0	0	0	0	0	0	5.14	5.14
Westbrook Inverter Transfor	W_INVTR7	369786	4906417	2	0	0	77.3	77.3	1	1368.88	3.25	0	73.73	0	-2.14	0	0	0.88	0	0	0	0	0	0	4.87	4.87
Westbrook Inverter Transfor	W_INVTR1	369403	4906578	2	0	0	78.2	78.2	1	1607.89	3.25	0	75.13	0	-2.25	0	0	1.01	0	0	0	0	0	0	4.36	4.36
Inverter Transformer	MV6-1 T	370230	4907364	2	0	0	69.4	69.4	1	627.07	3.25	0	66.95	0	1.25	0	0	3.22	0	0	0	0	0	0	-2.07	-2.07
Westbrook Inverter Transfor	W_INVTR4	369679	4906164	2	0	0	77.3	77.3	1	1616.28	3.25	0	75.17	0	-2.25	0	0	1.01	0	0	0	0	0	0	3.41	3.41
Inverter	MV1-3	364440	4906039	2	0	0	89.1	89.1	1	6529.44	3.25	0	87.3	0	2.01	0	0	14.42	0	0	0	0	0	0	-14.67	-14.67
Inverter Transformer	MV6-4 T	370244	4906966	2	0	0	69.4	69.4	1	682.04	3.25	0	67.68	0	1.33	0	0	3.32	0	0	0	0	0	0	-2.98	-2.98
Westbrook Inverter Transfor	W_INVTR2	369368	4906388	2	0	0	77.3	77.3	1	1729.05	3.25	0	75.76	0	-2.3	0	0	1.07	0	0	0	0	0	0	2.81	2.81
Westbrook Inverter Transfor	W_INVTR3	369514	4906164	2	0	0	77.3	77.3	1	1739.64	3.25	0	75.81	0	-2.31	0	0	1.08	0	0	0	0	0	0	2.76	2.76
Inverters	G_Inv2	366676.9	4903239.1	2	0	0	87.7	87.7	1	5807.56	3.25	0	86.28	0	2.91	0	0	6.78	0	0	0	0	0	0	-8.31	-8.31
Inverters	G_Inv4	366732.8	4903105	2	0	0	87.7	87.7	1	5862.18	3.25	0	86.36	0	2.91	0	0	6.84	0	0	0	0	0	0	-8.45	-8.45
Inverters	G_Inv6	366788.5	4902972	2	0	0	87.7	87.7	1	5919.2	3.25	0	86.45	0	2.91	0	0	6.9	0	0	0	0	0	0	-8.59	-8.59
Inverters	G_Inv1	366526.4	4903225.8	2	0	0	87.7	87.7	1	5925.74	3.25	0	86.45	0	2.91	0	0	6.9	0	0	0	0	0	0	-8.61	-8.61
Inverters	G_Inv3	366583.7	4903091.4	2	0	0	87.7	87.7	1	5977.38	3.25	0	86.53	0	2.92	0	0	6.95	0	0	0	0	0	0	-8.74	-8.74
Inverters	G_Inv8	366844.5	4902838.5	2	0	0	87.7	87.7	1	5979.33	3.25	0	86.53	0	2.92	0	0	6.96	0	0	0	0	0	0	-8.75	-8.75
Inverters	G_Inv5	366638.5	4902958.1	2	0	0	87.7	87.7	1	6033.08	3.34	0	86.61	0	3.26	1.41	0	7.01	0	0	0	0	0	0	-10.63	-10.63
Inverters	G_Inv10	366900.7	4902704.8	2	0	0	87.7	87.7	1	6042.34	3.25	0	86.62	0	2.92	0	0	7.02	0	0	0	0	0	0	-8.9	-8.9
Inverters	G_Inv7	366694.6	4902824.7	2	0	0	87.7	87.7	1	6090.87	3.25	0	86.69	0	2.92	0	0	7.07	0	0	0	0	0	0	-9.03	-9.03
Inverters	G_Inv9	366750.9	4902691.8	2	0	0	87.7	87.7	1	6151.01	3.25	0	86.78	0	2.92	0	0	7.13	0	0	0	0	0	0	-9.17	-9.17
Inverter Transformer	MV6-3 T	370202	4907140	2	0	0	56.1	56.1	1	663.31	3.25	0	67.43	0	-0.09	0	0	4.03	0	0	0	0	0	0	-15.32	-15.32
Inverter Transformer	MV6-2 T	370091	4907339	2	0	0	56.1	56.1	1	762.53	3.25	0	68.65	0	-0.06	0	0	4.3	0	0	0	0	0	0	-16.82	-16.82
Inverter Transformer	MV2-1 T	365836	4906816	2	0	0	69.4	69.4	1	5036.14	3.25	0	85.04	0	3.02	0	0	7.41	0	0	0	0	0	0	-26.12	-26.12
Inverter Transformer	MV1-10 T	365010	4905564	2	0	0	69.4	69.4	1	6087.01	3.25	0	86.69	0	3.2	0	0	8.07	0	0	0	0	0	0	-28.61	-28.61
Inverter Transformer	MV1-14 T	365157	4905049	2	0	0	69.4	69.4	1	6114.38	3.25	0	86.73	0	3.21	0	0	8.09	0	0	0	0	0	0	-28.67	-28.67
Inverter Transformer	MV1-7 T	364919	4905782	2	0	0	69.4	69.4	1	6117.49	3.25	0	86.73	0	3.21	0	0	8.09	0	0	0	0	0	0	-28.68	-28.68
Inverter Transformer	MV1-13 T	364725	4905241	2	0	0	69.4	69.4	1	6455.48	3.25	0	87.2	0	3.25	0	0	8.29	0	0	0	0	0	0	-29.39	-29.39
Inverter Transformer	MV5-6 T	369987	4908507	2	0	0	56.1	56.1	1	1503.13	3.25	0	74.54	0	0.2	0	0	6.02	0	0	0	0	0	0	-24.71	-24.71
Inverter Transformer	MV5-4 T	370330	4908707	2	0	0	56.1	56.1	1	1521.96	3.25	0	74.65	0	0.21	0	0	6.06	0	0	0	0	0	0	-24.86	-24.86
Inverter Transformer	MV5-5 T	370021	4908690	2	0	0	56.1	56.1	1	1638.74	3.25	0	75.29	0	0.25	0	0	6.31	0	0	0	0	0	0	-25.8	-25.8
Inverter Transformer	MV5-3 T	370237	4908851	2	0	0	56.1	56.1	1	1689.52	3.25	0	75.56	0	0.28	0	0	6.42	0	0	0	0	0	0	-26.19	-26.19
Inverter Transformer	MV5-2 T	370011	4908853	2	0	0	56.1	56.1	1	1785.88	3.25	0	76.04	0	0.31	0	0	6.62	0	0	0	0	0	0	-26.91	-26.91
Inverter Transformer	MV5-1 T	370015	4909142	2	0	0	56.1	56.1	1	2043.8	3.25	0	77.21	0	0.42	0	0	7.13	0	0	0	0	0	0	-28.7	-28.7
Inverter Transformer	MV4-15 T	369170	4908481	2	0	0	56.1	56.1	1	2067.7	3.25	0	77.31	0	0.43	0	0	7.18	0	0	0	0	0	0	-28.86	-28.86
Inverter Transformer	MV4-14 T	369182	4908507	2	0	0	56.1	56.1	1	2073.27	3.25	0	77.33	0	0.43	0	0	7.19	0	0	0	0	0	0	-28.9	-28.9
Inverter Transformer	MV3-20 T	368683	4907317	2	0	0	56.1	56.1	1	2168.37	3.25	0	77.72	0	0.48	0	0	7.37	0	0	0	0	0	0	-29.51	-29.51
Inverter Transformer	MV3-14 T	368678	4907498	2	0	0	56.1	56.1	1	2184.21	3.25	0	77.79	0	0.48	0	0	7.4	0	0	0	0	0	0	-29.61	-29.61
Inverter Transformer	MV3-22 T	368661	4907142	2	0	0	56.1	56.1	1	2194.16	3.25	0	77.83	0	0.49	0	0	7.42	0	0	0	0	0	0	-29.67	-29.67
Inverter Transformer	MV3-8 T	368685	4907712	2	0	0	56.1	56.1	1	2209.25	3.25	0	77.88	0	0.49	0	0	7.45	0	0	0	0	0	0	-29.77	-29.77
Inverter Transformer	MV4-10 T	369307	4908858	2	0	0	56.1	56.1	1	2209.86	3.25	0	77.89	0	0.49	0	0	7.45	0	0	0	0	0	0	-29.77	-29.77
Inverter Transformer	MV4-13 T	369057	4908605	2	0	0	56.1	56.1	1	2232.05	3.25	0	77.97	0	0.5	0	0	7.49	0	0	0	0	0	0	-29.91	-29.91
Inverter Transformer	MV4-11 T	369269	4908855	2	0	0	56.1	56.1	1	2234.46	3.25	0	77.98	0	0.5	0	0	7.5	0	0	0	0	0	0	-29.92	-29.92
Inverter Transformer	MV3-2 T	368677	4907928	2	0	0	56.1	56.1	1	2269.38	3.25	0	78.12	0	0.52	0	0	7.56	0	0	0	0	0	0	-30.14	-30.14
Inverter Transformer	MV4-9 T	369284	4909001	2	0	0	56.1	56.1	1	2329.74	3.25	0	78.35	0	0.54	0	0	7.68	0	0	0	0	0	0	-30.51	-30.51
Inverter Transformer	MV4-8 T	369262	4909001	2	0	0	56.1	56.1	1	2344.59	3.25	0	78.4	0	0.55	0	0	7.7	0	0	0	0	0	0	-30.6	-30.6
Inverter Transformer	MV3-16 T	368509	4907475	2	0	0	56.1	56.1	1	2350.36	3.25	0	78.42	0	0.55	0	0	7.71	0	0	0	0	0	0	-30.63	-30.63
Inverter Transformer	MV4-12 T	369049	4908803	2	0	0	56.1	56.1	1	2361.33	3.25	0	78.46	0	0.56	0	0	7.73	0	0	0	0	0	0	-30.7	-30.7
Inverter Transformer	MV3-21 T	368484	4907206	2	0	0	56.1	56.1	1	2368.07	3.25	0	78.49	0	0.56	0	0	7.75	0	0	0	0	0	0	-30.74	-30.74
Inverter Transformer	MV3-9 T	368517	4907703	2	0	0	56.1	56.1	1	2372.56	3.25	0	78.5	0	0.56	0	0	7.76	0	0	0	0	0	0	-30.76	-30.76
Inverter Transformer	MV3-4 T	368507	4907925	2	0	0	56.1	56.1	1	2431.92	3.25	0	78.72	0	0.59	0	0	7.86	0	0	0	0	0	0	-31.11	-31.11
Inverter Transformer	MV4-5 T	369283	4909199	2	0	0	56.1	56.1	1	2480.47	3.25	0	78.89	0	0.61	0	0	7.95	0	0	0	0	0	0	-31.39	-31.39
Inverter Transformer	MV4-6 T	369249	4909192	2	0	0	56.1	56.1	1	2496.72	3.25	0	78.95	0	0.62	0	0	7.98	0	0	0	0	0	0	-31.49	-31.49
Inverter Transformer	MV3-19 T	368352	4907347	2	0	0	56.1	56.1	1	2499.98	3.25	0	78.96	0	0.62	0	0	7.99	0	0	0	0	0	0	-31.51	-31.51
Inverter Transformer	MV4-7 T	369040	4909001	2	0	0	56.1	56.1	1	2500.38	3.25	0	78.96	0	0.62	0	0	7.99	0	0	0	0	0	0	-31.51	-31.51
Inverter Transformer	MV3-15 T	368351	4907477	2	0	0	56.1	56.1	1	2507.99	3.25	0	78.99	0	0.62	0	0	8	0	0	0	0	0	0	-31.55	-31.55
Inverter Transformer	MV3-11 T	368340	4907662	2	0	0	56.1	56.1	1	2540.34	3.25	0	79.1	0	0.63	0	0	8.06	0	0	0	0	0	0	-31.74	-31.74
Inverter Transformer	MV3-5 T	368335	4907843	2	0	0	56.1	56.1	1	2578.88	3.25	0	79.23	0	0.65	0	0	8.13	0	0	0	0	0	0	-31.95	-31.95
Inverter Transformer	MV4-4 T	369033	4909199	2	0	0	56.1	56.1	1	2645.6	4.99	0	79.45	0	1.6	2.75	0.01	8.25	0	0	0	0	0	0	-35.99	-35.99
Inverter Transformer	MV4-2 T	369267	4909397	2	0	0	56.1	56.1	1	2646.41	3.25	0	79.45	0	0.68	0	0	8.25	0	0	0	0	0	0	-32.33	-32.33
Inverter Transformer	MV4-3 T	369234	4909397	2	0	0	56.1	56.1	1	2666.29	3.25	0	79.52	0	0.69	0	0	8.29	0	0	0	0	0	0	-32.44	-32.44
Inverter Transformer	MV3-17 T	368183	4907472	2	0	0	56.1	56.1	1	2675.12	3.25	0	79.55	0	0.69	0	0	8.3	0	0	0	0	0	0	-32.48	-32.48
Inverter Transformer	MV3-10 T	368162	4907669	2	0	0	56.1	56.1	1	2717.42	3.25	0	79.68	0	0.71	0	0	8.38	0	0	0	0	0	0	-32.71	-32.71
Inverter Transformer	MV3-6 T	368156	4907834	2	0	0	56.1	56.1	1	2751.96	3.25	0	79.79	0	0.72	0	0	8.44	0	0	0	0	0	0	-32.9	-32.9
Inverter Transformer	MV3-1 T	368150	4907976	2	0	0	56.1	56.1	1	2789.98	3.25	0	79.91	0	0.74	0	0	8.51	0	0	0	0	0	0	-33.1	-33.1
Inverter Transformer	MV4-1 T	369017	4909397	2	0	0	56.1	56.1	1	2803.21	3.25	0	79.95	0	0.75	0	0	8.53	0	0	0	0	0	0	-33.17	-33.17
Inverter Transformer	MV3-13 T	367958	4907577	2	0	0	56.1	56.1	1	2908.51	3.25	0	80.27	0	0.79	0	0	8.71	0	0	0	0	0	0	-33.72	-33.72

	Inverter Transformer	MV3-7 T	367951	4907754	2	0	0	56.1	56.1	1	2938.97	3.25	0	80.36	0	0.8	0	0	8.76	0	0	0	0	0	0	-33.87	-33.87
	Inverter Transformer	MV3-3 T	367944	4907927	2	0	0	56.1	56.1	1	2978.78	3.25	0	80.48	0	0.82	0	0	8.83	0	0	0	0	0	0	-34.08	-34.08
	Inverter Transformer	MV3-18 T	367757	4907412	2	0	0	56.1	56.1	1	3096.94	3.25	0	80.82	0	0.87	0	0	9.03	0	0	0	0	0	0	-34.66	-34.66
	Inverter Transformer	MV3-12 T	367674	4907594	2	0	0	56.1	56.1	1	3192.78	3.25	0	81.08	0	0.91	0	0	9.19	0	0	0	0	0	0	-35.13	-35.13
	Inverter Transformer	MV2-2 T	365982	4906654	2	0	0	56.1	56.1	1	4908.7	3.25	0	84.82	0	1.59	0	0	11.73	0	0	0	0	0	0	-42.09	-42.09
	Inverter Transformer	MV2-3 T	365814	4906641	2	0	0	56.1	56.1	1	5076.99	3.25	0	85.11	0	1.65	0	0	11.96	0	0	0	0	0	0	-42.66	-42.66
	Inverter Transformer	MV2-4 T	365590	4906628	2	0	0	56.1	56.1	1	5300.88	3.25	0	85.49	0	1.73	0	0	12.24	0	0	0	0	0	0	-43.4	-43.4
	Inverter Transformer	MV1-15 T	365309	4904994	2	0	0	56.1	56.1	1	5993.82	3.25	0	86.55	0	1.96	0	0	13.1	0	0	0	0	0	0	-45.55	-45.55
	Inverter Transformer	MV1-12 T	365044	4905386	2	0	0	56.1	56.1	1	6107.14	3.25	0	86.72	0	2	0	0	13.23	0	0	0	0	0	0	-45.89	-45.89
	Inverter Transformer	MV1-4 T	364821	4905918	2	0	0	56.1	56.1	1	6181.24	3.25	0	86.82	0	2.02	0	0	13.32	0	0	0	0	0	0	-46.1	-46.1
	Inverter Transformer	MV1-2 T	364759	4906063	2	0	0	56.1	56.1	1	6211.78	3.25	0	86.86	0	2.03	0	0	13.35	0	0	0	0	0	0	-46.19	-46.19
	Inverter Transformer	MV1-1 T	364721	4906166	2	0	0	56.1	56.1	1	6229.87	3.25	0	86.89	0	2.04	0	0	13.37	0	0	0	0	0	0	-46.24	-46.24
	Inverter Transformer	MV1-8 T	364782	4905647	2	0	0	56.1	56.1	1	6284.08	3.25	0	86.96	0	2.05	0	0	13.43	0	0	0	0	0	0	-46.39	-46.39
	Inverter Transformer	MV1-5 T	364676	4905892	2	0	0	56.1	56.1	1	6328.42	3.25	0	87.03	0	2.07	0	0	13.49	0	0	0	0	0	0	-46.52	-46.52
	Inverter Transformer	MV1-11 T	364649	4905414	2	0	0	56.1	56.1	1	6475.77	3.25	0	87.23	0	2.11	0	0	13.65	0	0	0	0	0	0	-46.93	-46.93
	Inverter Transformer	MV1-9 T	364555	4905646	2	0	0	56.1	56.1	1	6503.83	3.25	0	87.26	0	2.12	0	0	13.68	0	0	0	0	0	0	-47.01	-47.01
	Inverter Transformer	MV1-6 T	364482	4905835	2	0	0	56.1	56.1	1	6530.2	3.25	0	87.3	0	2.13	0	0	13.71	0	0	0	0	0	0	-47.08	-47.08
	Inverter Transformer	MV1-3 T	364435	4906039	2	0	0	56.1	56.1	1	6534.35	3.25	0	87.3	0	2.13	0	0	13.72	0	0	0	0	0	0	-47.09	-47.09
	Line Reactor	NGR	369421	4908787.5	5	0	0	45.4	45.4	1	2080.03	5.25	0	77.36	0	3.37	1.28	0.09	0.85	0	0	0	0	0	0	-37.51	-37.51
Limit. Valu	0	0																								
Level D/N:	31.2964	31.2964																								

Receiver: Vacant Lot Receptor
ID: S-VLR1
X: 363609
Y: 4905431
Z: 4.5
Ground: 0

ISO	Description	ID	X	Y	Z	Ground	ReflOrd	LxT	LxN	L/A	Dist.	hm	Freq	Adiv	K0b	Agr	Abar	z	Aatm	Afol	Ahous	Cmet	CmetN	Dc	RL	LtotT	LtotN
	Inverter	MV1-6	364477	4905835	2	0	0	100.3	100.3	1	957.42	3.25	0	70.62	0	-0.27	0	0	10.77	0	0	0	0	0	0	19.19	19.19
	Inverter	MV1-9	364561	4905646	2	0	0	100.3	100.3	1	975.98	3.25	0	70.79	0	-0.26	0	0	10.83	0	0	0	0	0	0	18.95	18.95
	Inverter	MV1-11	364655	4905414	2	0	0	100.3	100.3	1	1046.14	3.25	0	71.39	0	-0.22	0	0	11.06	0	0	0	0	0	0	18.08	18.08
	Inverter	MV1-5	364671	4905892	2	0	0	100.3	100.3	1	1157.74	3.25	0	72.27	0	-0.17	0	0	11.4	0	0	0	0	0	0	16.81	16.81
	Inverter	MV1-8	364788	4905647	2	0	0	100.3	100.3	1	1198.63	3.25	0	72.57	0	-0.15	0	0	11.52	0	0	0	0	0	0	16.37	16.37
	Inverter	MV1-4	364815	4905918	2	0	0	100.3	100.3	1	1300.62	3.25	0	73.28	0	-0.11	0	0	11.81	0	0	0	0	0	0	15.33	15.33
	Inverter	MV1-2	364753	4906063	2	0	0	100.3	100.3	1	1306.97	3.25	0	73.33	0	-0.11	0	0	11.82	0	0	0	0	0	0	15.27	15.27
	Inverter	MV1-1	364715	4906166	2	0	0	100.3	100.3	1	1327.96	3.25	0	73.46	0	-0.1	0	0	11.88	0	0	0	0	0	0	15.07	15.07
	Inverter	MV1-12	365038	4905386	2	0	0	100.3	100.3	1	1429.71	3.25	0	74.1	0	-0.06	0	0	12.15	0	0	0	0	0	0	14.12	14.12
	Inverter	MV1-13	364731	4905241	2	0	0	97.3	97.3	1	1137.98	3.25	0	72.12	0	-0.18	0	0	11.34	0	0	0	0	0	0	14.03	14.03
	Sol_Luce Substation	S_Substation	369426	4908792	3.5	0	0	112.1	112.1	1	6718.17	5.25	0	87.55	0	1.32	2.5	0.28	10.48	0	0	0	0	0	0	10.24	10.24
	Inverter	MV1-15	365315	4904994	2	0	0	100.3	100.3	1	1761.08	3.25	0	75.92	0	0.06	0	0	12.94	0	0	0	0	0	0	11.4	11.4
	Inverter	MV1-7	364925	4905782	2	0	0	97.3	97.3	1	1362.01	3.25	0	73.68	0	-0.09	0	0	11.97	0	0	0	0	0	0	11.74	11.74
	Inverter	MV1-10	365004	4905564	2	0	0	97.3	97.3	1	1401.33	3.25	0	73.93	0	-0.07	0	0	12.07	0	0	0	0	0	0	11.38	11.38
	Inverter	MV1-14	365163	4905049	2	0	0	97.3	97.3	1	1600.26	3.25	0	75.08	0	0	0	0	12.57	0	0	0	0	0	0	9.66	9.66
	Inverter	MV2-4	365586	4906624	2	0	0	100.3	100.3	1	2309.07	3.25	0	78.27	0	0.21	0	0	14.09	0	0	0	0	0	0	7.74	7.74
	Inverter	MV2-3	365820	4906641	2	0	0	100.3	100.3	1	2520.44	3.25	0	79.03	0	0.26	0	0	14.5	0	0	0	0	0	0	6.52	6.52
	Inverter	MV2-1	365842	4906816	2	0	0	97.3	97.3	1	2627.65	3.25	0	79.39	0	0.29	0	0	14.7	0	0	0	0	0	0	2.94	2.94
	Inverter	MV1-3	364440	4906039	2	0	0	89.1	89.1	1	1029.68	3.25	0	71.25	0	0.69	0	0	6.37	0	0	0	0	0	0	10.74	10.74
	Inverter	MV3-18	367752	4907412	2	0	0	100.3	100.3	1	4592.26	3.25	0	84.24	0	0.6	0	0	17.97	0	0	0	0	0	0	-2.5	-2.5
	Inverter	MV3-12	367668	4907594	2	0	0	100.3	100.3	1	4599.35	3.25	0	84.25	0	0.6	0	0	17.98	0	0	0	0	0	0	-2.53	-2.53
	Inverter	MV3-13	367963	4907577	2	0	0	100.3	100.3	1	4854.14	3.25	0	84.72	0	0.63	0	0	18.36	0	0	0	0	0	0	-3.4	-3.4
	Inverter	MV3-7	367945	4907754	2	0	0	100.3	100.3	1	4919.07	3.25	0	84.84	0	0.63	0	0	18.46	0	0	0	0	0	0	-3.62	-3.62
	Inverter	MV3-3	367939	4907927	2	0	0	100.3	100.3	1	4997.89	3.25	0	84.98	0	0.64	0	0	18.58	0	0	0	0	0	0	-3.88	-3.88
	Inverter	MV3-17	368178	4907472	2	0	0	100.3	100.3	1	5004.14	3.25	0	84.99	0	0.64	0	0	18.59	0	0	0	0	0	0	-3.9	-3.9
	Inverter	MV3-10	368167	4907669	2	0	0	100.3	100.3	1	5077.8	3.25	0	85.11	0	0.65	0	0	18.69	0	0	0	0	0	0	-4.14	-4.14
	Inverter	MV3-19	368357	4907347	2	0	0	100.3	100.3	1	5120.02	3.25	0	85.19	0	0.65	0	0	18.76	0	0	0	0	0	0	-4.28	-4.28
	Inverter	MV3-6	368162	4907834	2	0	0	100.3	100.3	1	5148.23	3.25	0	85.23	0	0.65	0	0	18.8	0	0	0	0	0	0	-4.37	-4.37
	Inverter	MV3-15	368357	4907477	2	0	0	100.3	100.3	1	5170.07	3.25	0	85.27	0	0.66	0	0	18.83	0	0	0	0	0	0	-4.44	-4.44
	Inverter	MV3-21	368478	4907206	2	0	0	100.3	100.3	1	5182.45	3.25	0	85.29	0	0.66	0	0	18.85	0	0	0	0	0	0	-4.48	-4.48
	Inverter	MV3-11	368346	4907662	2	0	0	100.3	100.3	1	5236.08	3.25	0	85.38	0	0.66	0	0	18.92	0	0	0	0	0	0	-4.65	-4.65
	Inverter	MV3-16	368514	4907475	2	0	0	100.3	100.3	1	5313.85	3.25	0	85.51	0	0.67	0	0	19.04	0	0	0	0	0	0	-4.9	-4.9
	Inverter	MV3-9	368512	4907703	2	0	0	100.3	100.3	1	5403.83	3.25	0	85.65	0	0.67	0	0	19.16	0	0	0	0	0	0	-5.18	-5.18
	Inverter	MV3-20	368689	4907317	2	0	0	100.3	100.3	1	5418.8	3.25	0	85.68	0	0.68	0	0	19.19	0	0	0	0	0	0	-5.23	-5.23
	Inverter	MV3-14	368684	4907498	2	0	0	100.3	100.3	1	5479.79	3.25	0	85.78	0	0.68	0	0	19.27	0	0	0	0	0	0	-5.41	-5.41
	Inverter	MV3-8	368680	4907712	2	0	0	100.3	100.3	1	5560.4	3.25	0	85.9	0	0.68	0	0	19.39	0	0	0	0	0	0	-5.66	-5.66
	Inverter	MV4-7	369035	4909001	2	0	0	100.3	100.3	1	6495.1	3.25	0	87.25	0	0.71	0	0	20.65	0	0	0	0	0	0	-8.31	-8.31
	Inverter	MV4-4	369027	4909199	2	0	0	100.3	100.3	1	6599.44	3.25	0	87.39	0	0.72	0	0	20.79	0	0	0	0	0	0	-8.58	-8.58
	Inverter	MV4-11	369264	4908855	2	0	0	100.3	100.3	1	6610.81	3.25	0	87.41	0	0.72	0	0	20.8	0	0	0	0	0	0	-8.61	-8.61
	Inverter	MV4-10	369312	4908858	2	0	0	100.3	100.3	1	6653.46	3.25	0	87.46	0	0.71	0	0	20.86	0	0	0	0	0	0	-8.72	-8.72
	Inverter	MV4-8	369256	4909001	2	0	0	100.3	100.3	1	6680.83	3.25	0	87.5	0	0.71	0	0	20.89	0	0	0	0	0	0	-8.79	-8.79
	Inverter	MV4-1	369011	4909397	2	0	0	100.3	100.3	1	6701.55	3.25	0	87.52	0	0.71	0	0	20.92	0	0	0	0	0	0	-8.85	-8.85
	Inverter	MV4-9	369289	4909001	2	0	0	100.3	100.3	1	6708.75	3.25	0	87.53	0	0.71	0	0	20.93	0	0	0	0	0	0	-8.86	-8.86
	Inverter	MV6-2	370085	4907339	2	0	0	100.3	100.3	1	6751.23	3.25	0	87.59	0	0.71	0	0	20.98	0	0	0	0	0	0	-8.97	-8.97

Inverter	MV4-6	369243	4909192	2	0	0	100.3	100.3	1	6774	3.25	0	87.62	0	0.71	0	0	21.01	0	0	0	0	0	0	-9.03	-9.03
Inverter	MV6-3	370207	4907140	2	0	0	100.3	100.3	1	6815.74	3.25	0	87.67	0	0.71	0	0	21.07	0	0	0	0	0	0	-9.14	-9.14
Inverter	MV4-5	369289	4909199	2	0	0	100.3	100.3	1	6816.17	3.25	0	87.67	0	0.71	0	0	21.07	0	0	0	0	0	0	-9.14	-9.14
Inverter	MV4-3	369229	4909397	2	0	0	100.3	100.3	1	6878.49	3.25	0	87.75	0	0.71	0	0	21.15	0	0	0	0	0	0	-9.3	-9.3
Inverter	MV4-2	369272	4909397	2	0	0	100.3	100.3	1	6913.66	3.25	0	87.79	0	0.71	0	0	21.19	0	0	0	0	0	0	-9.38	-9.38
Inverter	MV5-5	370015	4908690	2	0	0	100.3	100.3	1	7187.34	3.25	0	88.13	0	0.7	0	0	21.53	0	0	0	0	0	0	-10.06	-10.06
Inverter	MV5-2	370006	4908853	2	0	0	100.3	100.3	1	7254.77	3.25	0	88.21	0	0.7	0	0	21.62	0	0	0	0	0	0	-10.22	-10.22
Inverter	MV5-1	370020	4909142	2	0	0	100.3	100.3	1	7407.59	5.14	0	88.39	0	1.79	2.23	0.01	21.8	0	0	0	0	0	0	-13.9	-13.9
Inverter	MV5-3	370231	4908851	2	0	0	100.3	100.3	1	7453.01	3.25	0	88.45	0	0.69	0	0	21.86	0	0	0	0	0	0	-10.68	-10.68
Inverter	MV5-4	370324	4908707	2	0	0	100.3	100.3	1	7471.51	3.25	0	88.47	0	0.69	0	0	21.88	0	0	0	0	0	0	-10.73	-10.73
Inverter	MV2-2	365977	4906654	2	0	0	89.1	89.1	1	2665.18	3.25	0	79.51	0	1.07	0	0	9.1	0	0	0	0	0	0	-0.63	-0.63
Inverter	MV6-1	370235	4907364	2	0	0	97.3	97.3	1	6902.2	3.25	0	87.78	0	0.71	0	0	21.18	0	0	0	0	0	0	-12.36	-12.36
DSTATCOM - 10 MVAR #2	DSAT2	369403	4908757	2.5	0	0	96.6	96.6	1	6680.77	3.5	0	87.5	0	3.82	0	0	4.16	0	0	0	0	0	0	1.15	1.15
DSTATCOM - 10 MVAR #1	DSAT1	369437	4908757	2.5	0	0	96.6	96.6	1	6710.28	3.5	0	87.53	0	3.82	0	0	4.18	0	0	0	0	0	0	1.1	1.1
Gardiner Substation	G_Sub	366586.3	4903349.9	2.5	0	0	90.8	90.8	1	3632.53	4.25	0	82.2	0	1.26	2.75	0.29	6.87	0	0	0	0	0	0	-2.3	-2.3
Inverters	G_Inv1	366526.4	4903225.8	2	0	0	87.7	87.7	1	3657.07	3.25	0	82.26	0	2.76	0	0	4.5	0	0	0	0	0	0	-1.87	-1.87
SubstationTransformer	W_ST	369711.17	4906112.3	2.5	0	0	92	92	1	6140.08	4.25	0	86.76	0	1.9	2.07	0.29	9.89	0	0	0	0	0	0	-8.65	-8.65
Inverters	G_Inv2	366676.9	4903239.1	2	0	0	87.7	87.7	1	3770.47	3.25	0	82.53	0	2.77	0	0	4.62	0	0	0	0	0	0	-2.26	-2.26
Inverters	G_Inv3	366583.7	4903091.4	2	0	0	87.7	87.7	1	3784.52	3.25	0	82.56	0	2.77	0	0	4.64	0	0	0	0	0	0	-2.31	-2.31
Inverters	G_Inv4	366732.8	4903105	2	0	0	87.7	87.7	1	3894.66	3.25	0	82.81	0	2.78	0	0	4.76	0	0	0	0	0	0	-2.69	-2.69
Inverters	G_Inv5	366638.5	4902958.1	2	0	0	87.7	87.7	1	3910.64	3.25	0	82.84	0	2.78	0	0	4.78	0	0	0	0	0	0	-2.75	-2.75
Inverters	G_Inv6	366788.5	4902972	2	0	0	87.7	87.7	1	4019.44	3.25	0	83.08	0	2.79	0	0	4.89	0	0	0	0	0	0	-3.11	-3.11
Inverters	G_Inv7	366694.6	4902824.7	2	0	0	87.7	87.7	1	4039.03	3.25	0	83.13	0	2.8	0	0	4.92	0	0	0	0	0	0	-3.18	-3.18
Inverters	G_Inv8	366844.5	4902838.5	2	0	0	87.7	87.7	1	4146.02	3.25	0	83.35	0	2.8	0	0	5.03	0	0	0	0	0	0	-3.53	-3.53
Inverters	G_Inv9	366750.9	4902691.8	2	0	0	87.7	87.7	1	4168.3	3.25	0	83.4	0	2.81	0	0	5.06	0	0	0	0	0	0	-3.6	-3.6
Inverters	G_Inv10	366900.7	4902704.8	2	0	0	87.7	87.7	1	4274.05	3.25	0	83.62	0	2.81	0	0	5.17	0	0	0	0	0	0	-3.94	-3.94
Inverter	MV3-1	368156	4907976	2	0	0	89.1	89.1	1	5210.78	3.25	0	85.34	0	1.69	0	0	12.74	0	0	0	0	0	0	-10.72	-10.72
Inverter	MV3-5	368340	4907843	2	0	0	89.1	89.1	1	5310.38	3.25	0	85.5	0	1.72	0	0	12.87	0	0	0	0	0	0	-11.04	-11.04
Inverter	MV3-22	368656	4907142	2	0	0	89.1	89.1	1	5329.14	3.25	0	85.53	0	1.72	0	0	12.9	0	0	0	0	0	0	-11.1	-11.1
Inverter	MV3-4	368502	4907925	2	0	0	89.1	89.1	1	5491.95	3.25	0	85.79	0	1.76	0	0	13.11	0	0	0	0	0	0	-11.61	-11.61
Inverter	MV3-2	368671	4907928	2	0	0	89.1	89.1	1	5644.37	3.25	0	86.03	0	1.8	0	0	13.31	0	0	0	0	0	0	-12.08	-12.08
Westbrook Inverter Enclosur	W_INV2	369374	4906388	2	0	0	89.1	89.1	1	5843.89	3.25	0	86.33	0	1.85	0	0	13.56	0	0	0	0	0	0	-12.69	-12.69
Westbrook Inverter Enclosur	W_INV3	369508	4906164	2	0	0	89.1	89.1	1	5944.37	3.25	0	86.48	0	1.87	0	0	13.69	0	0	0	0	0	0	-12.99	-12.99
Westbrook Inverter Enclosur	W_INV4	369673	4906164	2	0	0	89.1	89.1	1	6108.14	3.25	0	86.72	0	1.91	0	0	13.9	0	0	0	0	0	0	-13.47	-13.47
Fixed Reactor Bank 1	FRB1	369378	4908755	6	0	0	89.8	89.8	1	6658.1	5.25	0	87.47	0	-0.33	0	0	10.42	0	0	0	0	0	0	-7.78	-7.78
Fixed Reactor Bank 2	FRB2	369464	4908755	6	0	0	89.8	89.8	1	6732.76	5.25	0	87.56	0	-0.32	0	0	10.49	0	0	0	0	0	0	-7.96	-7.96
Westbrook Inverter Enclosur	W_INV5	369719	4906574	2	0	0	89.1	89.1	1	6215.99	3.25	0	86.87	0	1.94	0	0	14.03	0	0	0	0	0	0	-13.78	-13.78
Westbrook Inverter Enclosur	W_INV7	369780	4906417	2	0	0	89.1	89.1	1	6249.28	3.25	0	86.92	0	1.95	0	0	14.07	0	0	0	0	0	0	-13.88	-13.88
Inverter	MV4-13	369051	4908605	2	0	0	89.1	89.1	1	6299.97	3.25	0	86.99	0	1.96	0	0	14.14	0	0	0	0	0	0	-14.02	-14.02
Inverter	MV4-15	369176	4908481	2	0	0	89.1	89.1	1	6347.76	3.25	0	87.05	0	1.97	0	0	14.2	0	0	0	0	0	0	-14.16	-14.16
Inverter	MV4-14	369176	4908507	2	0	0	89.1	89.1	1	6360.29	3.25	0	87.07	0	1.97	0	0	14.21	0	0	0	0	0	0	-14.2	-14.2
Westbrook Inverter Enclosur	W_INV6	369875	4906578	2	0	0	89.1	89.1	1	6370.12	3.25	0	87.08	0	1.98	0	0	14.22	0	0	0	0	0	0	-14.22	-14.22
Inverter	MV4-12	369043	4908803	2	0	0	89.1	89.1	1	6395.21	3.25	0	87.12	0	1.98	0	0	14.25	0	0	0	0	0	0	-14.3	-14.3
Inverter	MV5-6	369982	4908507	2	0	0	89.1	89.1	1	7076.5	3.25	0	88	0	2.15	0	0	15.08	0	0	0	0	0	0	-16.16	-16.16
Westbrook Inverter Enclosur	W_INV1	369409	4906578	2	0	0	86.1	86.1	1	5912.33	3.25	0	86.44	0	1.86	0	0	13.65	0	0	0	0	0	0	-15.89	-15.89
Inverter	MV6-4	370250	4906966	2	0	0	86.1	86.1	1	6816.09	3.25	0	87.67	0	2.08	0	0	14.77	0	0	0	0	0	0	-18.46	-18.46
Inverter Transformer	MV1-13 T	364725	4905241	2	0	0	69.4	69.4	1	1132.06	3.25	0	72.08	0	1.78	0	0	3.99	0	0	0	0	0	0	-8.5	-8.5
Inverter Transformer	MV1-7 T	364919	4905782	2	0	0	69.4	69.4	1	1356.21	3.25	0	73.65	0	1.91	0	0	4.27	0	0	0	0	0	0	-10.47	-10.47
Inverter Transformer	MV1-10 T	365010	4905564	2	0	0	69.4	69.4	1	1407.3	3.25	0	73.97	0	1.93	0	0	4.33	0	0	0	0	0	0	-10.88	-10.88
Inverter Transformer	MV1-14 T	365157	4905049	2	0	0	69.4	69.4	1	1594.44	3.25	0	75.05	0	2.01	0	0	4.54	0	0	0	0	0	0	-12.26	-12.26
Westbrook Inverter Transfor	W_INVTR1	369403	4906578	2	0	0	78.2	78.2	1	5906.44	3.25	0	86.43	0	-3.35	0	0	2.71	0	0	0	0	0	0	-7.55	-7.55
Westbrook Inverter Transfor	W_INVTR2	369368	4906388	2	0	0	77.3	77.3	1	5837.97	3.25	0	86.33	0	-3.34	0	0	2.69	0	0	0	0	0	0	-8.34	-8.34
Westbrook Inverter Transfor	W_INVTR3	369514	4906164	2	0	0	77.3	77.3	1	5950.32	3.25	0	86.49	0	-3.36	0	0	2.73	0	0	0	0	0	0	-8.52	-8.52
Westbrook Inverter Transfor	W_INVTR4	369679	4906164	2	0	0	77.3	77.3	1	6114.1	3.25	0	86.73	0	-3.39	0	0	2.78	0	0	0	0	0	0	-8.77	-8.77
Westbrook Inverter Transfor	W_INVTR5	369725	4906574	2	0	0	77.3	77.3	1	6221.89	3.25	0	86.88	0	-3.41	0	0	2.81	0	0	0	0	0	0	-8.94	-8.94
Westbrook Inverter Transfor	W_INVTR7	369786	4906417	2	0	0	77.3	77.3	1	6255.2	3.25	0	86.92	0	-3.41	0	0	2.82	0	0	0	0	0	0	-8.99	-8.99
Westbrook Inverter Transfor	W_INVTR6	369881	4906578	2	0	0	77.3	77.3	1	6376.02	3.25	0	87.09	0	-3.43	0	0	2.86	0	0	0	0	0	0	-9.17	-9.17
Inverter Transformer	MV2-1 T	365836	4906816	2	0	0	69.4	69.4	1	2622.55	3.25	0	79.37	0	2.39	0	0	5.55	0	0	0	0	0	0	-17.97	-17.97
Inverter Transformer	MV1-6 T	364482	4905835	2	0	0	56.1	56.1	1	961.95	3.25	0	70.66	0	0	0	0	4.8	0	0	0	0	0	0	-19.4	-19.4
Inverter Transformer	MV1-9 T	364555	4905646	2	0	0	56.1	56.1	1	970.13	3.25	0	70.74	0	0	0	0	4.82	0	0	0	0	0	0	-19.5	-19.5
Inverter Transformer	MV1-3 T	364435	4906039	2	0	0	56.1	56.1	1	1025.64	3.25	0	71.22	0	0.02	0	0	4.95	0	0	0	0	0	0	-20.13	-20.13
Inverter Transformer	MV1-11 T	364649	4905414	2	0	0	56.1	56.1	1	1040.14	3.25	0	71.34	0	0.03	0	0	4.98	0	0	0	0	0	0	-20.29	-20.29
Inverter Transformer	MV1-5 T	364676	4905892	2	0	0	56.1	56.1	1	1162.33	3.25	0	72.31	0	0.07	0	0	5.27	0	0	0	0	0	0	-21.59	-21.59
Inverter Transformer	MV1-8 T	364782	4905647	2	0	0	56.1	56.1	1	1192.72	3.25	0	72.53	0	0.08	0	0	5.34	0	0	0	0	0	0	-21.89	-21.89
Inverter Transformer	MV1-4 T	364821	4905918	2	0	0	56.1	56.1	1	1306.18	3.25	0	73.32	0	0.12	0	0	5.59	0	0	0	0	0	0	-22.98	-22.98
Inverter Transformer	MV1-2 T	364759	4906063	2	0	0	56.1	56.1	1	1312.22	3.25	0	73.36	0	0.13	0	0	5.61	0	0	0	0	0	0	-23.04	-23.04
Inverter Transformer	MV1-1 T	364721	4906166	2	0	0	56.1	56.1	1	1332.96	3.25	0	73.5	0	0.13	0	0	5.65	0	0	0	0	0	0	-23.23	-23.23
Inverter Transformer	MV1-12 T	365044	4905386	2	0	0	56.1	56.1	1	1435.71	3.25	0	74.14	0	0.17	0	0	5.88	0	0	0	0	0	0	-24.14	-24.14
Inverter Transformer	MV6-4 T	370244	4906966	2	0	0	69.4	69.4	1	6810.25	3.25	0	87.66	0	3.3	0	0	8.49	0	0	0	0	0	0	-30.1	-30.1
Inverter Transformer	MV6-1 T	370230	4907364	2	0	0	69.4	69.4	1	6897.4	3.25	0	87.77	0	3.31	0	0	8.54	0	0	0	0	0	0	-30.27	-30.27
Inverter Transformer	MV1-15 T	365309	4904994	2	0	0	56.1	56.1	1	1755.27	3.25	0	75.89	0	0.3	0	0	6.55	0	0	0	0	0	0	-26.68	-26.68
Inverter Transformer	MV2-4 T	365590	4906628	2	0	0	56.1	56.1	1	2314.56	3.25	0	78.29	0	0.54	0	0	7.65	0	0	0	0	0	0	-30.42	-30.42
Inverter Transformer	MV2-3 T	365814	4906641	2	0	0	56.1	56.1	1	2515.18	3.25	0	79.01	0	0.62	0	0	8.02	0	0	0	0	0	0	-31.59	-31.59
Inverter Transformer	MV2-2 T	365982	4906654	2	0	0	56.1	56.1	1	2669.62	3.25	0	79.53	0	0.69	0	0	8.29	0	0	0	0	0	0	-32.45	-32.45

	Inverter Transformer	MV3-18 T	367757	4907412	2	0	0	56.1	56.1	1	4596.77	3.25	0	84.25	0	1.48	0	0	11.31	0	0	0	0	0	0	-40.98	-40.98
	Inverter Transformer	MV3-12 T	367674	4907594	2	0	0	56.1	56.1	1	4604.65	3.25	0	84.26	0	1.48	0	0	11.32	0	0	0	0	0	0	-41.01	-41.01
	Inverter Transformer	MV3-13 T	367958	4907577	2	0	0	56.1	56.1	1	4849.65	3.25	0	84.71	0	1.57	0	0	11.65	0	0	0	0	0	0	-41.88	-41.88
	Inverter Transformer	MV3-7 T	367951	4907754	2	0	0	56.1	56.1	1	4924.36	3.25	0	84.85	0	1.6	0	0	11.75	0	0	0	0	0	0	-42.14	-42.14
	Inverter Transformer	MV3-3 T	367944	4907927	2	0	0	56.1	56.1	1	5002.22	3.25	0	84.98	0	1.63	0	0	11.86	0	0	0	0	0	0	-42.41	-42.41
	Inverter Transformer	MV3-17 T	368183	4907472	2	0	0	56.1	56.1	1	5008.71	3.25	0	84.99	0	1.63	0	0	11.87	0	0	0	0	0	0	-42.43	-42.43
	Inverter Transformer	MV3-10 T	368162	4907669	2	0	0	56.1	56.1	1	5073.31	3.25	0	85.11	0	1.65	0	0	11.95	0	0	0	0	0	0	-42.65	-42.65
	Inverter Transformer	MV3-19 T	368352	4907347	2	0	0	56.1	56.1	1	5115.38	3.25	0	85.18	0	1.67	0	0	12.01	0	0	0	0	0	0	-42.79	-42.79
	Inverter Transformer	MV3-6 T	368156	4907834	2	0	0	56.1	56.1	1	5142.92	3.25	0	85.22	0	1.68	0	0	12.04	0	0	0	0	0	0	-42.88	-42.88
	Inverter Transformer	MV3-15 T	368351	4907477	2	0	0	56.1	56.1	1	5164.56	3.25	0	85.26	0	1.68	0	0	12.07	0	0	0	0	0	0	-42.96	-42.96
	Inverter Transformer	MV3-21 T	368484	4907206	2	0	0	56.1	56.1	1	5188.09	3.25	0	85.3	0	1.69	0	0	12.1	0	0	0	0	0	0	-43.03	-43.03
	Inverter Transformer	MV3-1 T	368150	4907976	2	0	0	56.1	56.1	1	5205.55	3.25	0	85.33	0	1.7	0	0	12.12	0	0	0	0	0	0	-43.09	-43.09
	Inverter Transformer	MV3-11 T	368340	4907662	2	0	0	56.1	56.1	1	5230.65	3.25	0	85.37	0	1.71	0	0	12.15	0	0	0	0	0	0	-43.17	-43.17
	Inverter Transformer	MV3-5 T	368335	4907843	2	0	0	56.1	56.1	1	5305.92	3.25	0	85.5	0	1.73	0	0	12.25	0	0	0	0	0	0	-43.42	-43.42
	Inverter Transformer	MV3-16 T	368509	4907475	2	0	0	56.1	56.1	1	5309.23	3.25	0	85.5	0	1.74	0	0	12.25	0	0	0	0	0	0	-43.43	-43.43
	Inverter Transformer	MV3-22 T	368661	4907142	2	0	0	56.1	56.1	1	5333.88	3.25	0	85.54	0	1.74	0	0	12.29	0	0	0	0	0	0	-43.51	-43.51
	Inverter Transformer	MV3-9 T	368517	4907703	2	0	0	56.1	56.1	1	5408.37	3.25	0	85.66	0	1.77	0	0	12.38	0	0	0	0	0	0	-43.75	-43.75
	Inverter Transformer	MV3-20 T	368683	4907317	2	0	0	56.1	56.1	1	5413.18	3.25	0	85.67	0	1.77	0	0	12.39	0	0	0	0	0	0	-43.77	-43.77
	Inverter Transformer	MV3-14 T	368678	4907498	2	0	0	56.1	56.1	1	5474.24	3.25	0	85.77	0	1.79	0	0	12.46	0	0	0	0	0	0	-43.96	-43.96
	Inverter Transformer	MV3-4 T	368507	4907925	2	0	0	56.1	56.1	1	5496.4	3.25	0	85.8	0	1.8	0	0	12.49	0	0	0	0	0	0	-44.03	-44.03
	Inverter Transformer	MV3-8 T	368685	4907712	2	0	0	56.1	56.1	1	5564.96	3.25	0	85.91	0	1.82	0	0	12.58	0	0	0	0	0	0	-44.25	-44.25
	Inverter Transformer	MV3-2 T	368677	4907928	2	0	0	56.1	56.1	1	5649.75	3.25	0	86.04	0	1.85	0	0	12.68	0	0	0	0	0	0	-44.51	-44.51
	Inverter Transformer	MV4-13 T	369057	4908605	2	0	0	56.1	56.1	1	6305.16	3.25	0	86.99	0	2.06	0	0	13.46	0	0	0	0	0	0	-46.45	-46.45
	Inverter Transformer	MV4-15 T	369170	4908481	2	0	0	56.1	56.1	1	6342.49	3.25	0	87.05	0	2.07	0	0	13.5	0	0	0	0	0	0	-46.56	-46.56
	Inverter Transformer	MV4-14 T	369182	4908507	2	0	0	56.1	56.1	1	6365.54	3.25	0	87.08	0	2.08	0	0	13.53	0	0	0	0	0	0	-46.62	-46.62
	Inverter Transformer	MV4-12 T	369049	4908803	2	0	0	56.1	56.1	1	6400.31	3.25	0	87.12	0	2.09	0	0	13.57	0	0	0	0	0	0	-46.72	-46.72
	Inverter Transformer	MV4-7 T	369040	4909001	2	0	0	56.1	56.1	1	6499.28	3.25	0	87.26	0	2.12	0	0	13.68	0	0	0	0	0	0	-47	-47
	Inverter Transformer	MV4-4 T	369033	4909199	2	0	0	56.1	56.1	1	6604.36	3.25	0	87.4	0	2.15	0	0	13.8	0	0	0	0	0	0	-47.28	-47.28
	Inverter Transformer	MV4-11 T	369269	4908855	2	0	0	56.1	56.1	1	6615.09	3.25	0	87.41	0	2.15	0	0	13.81	0	0	0	0	0	0	-47.31	-47.31
	Inverter Transformer	MV4-10 T	369307	4908858	2	0	0	56.1	56.1	1	6649.18	3.25	0	87.46	0	2.16	0	0	13.85	0	0	0	0	0	0	-47.4	-47.4
	Inverter Transformer	MV4-8 T	369262	4909001	2	0	0	56.1	56.1	1	6685.9	3.25	0	87.5	0	2.17	0	0	13.89	0	0	0	0	0	0	-47.5	-47.5
	Inverter Transformer	MV4-9 T	369284	4909001	2	0	0	56.1	56.1	1	6704.52	3.25	0	87.53	0	2.18	0	0	13.91	0	0	0	0	0	0	-47.55	-47.55
	Inverter Transformer	MV4-1 T	369017	4909397	2	0	0	56.1	56.1	1	6706.39	3.25	0	87.53	0	2.18	0	0	13.91	0	0	0	0	0	0	-47.56	-47.56
	Inverter Transformer	MV6-2 T	370091	4907339	2	0	0	56.1	56.1	1	6756.98	3.25	0	87.6	0	2.19	0	0	13.97	0	0	0	0	0	0	-47.69	-47.69
	Inverter Transformer	MV4-6 T	369249	4909192	2	0	0	56.1	56.1	1	6778.99	3.25	0	87.62	0	2.2	0	0	13.99	0	0	0	0	0	0	-47.75	-47.75
	Inverter Transformer	MV6-3 T	370202	4907140	2	0	0	56.1	56.1	1	6810.9	3.25	0	87.66	0	2.21	0	0	14.02	0	0	0	0	0	0	-47.84	-47.84
	Inverter Transformer	MV4-5 T	369283	4909199	2	0	0	56.1	56.1	1	6811.18	3.25	0	87.66	0	2.21	0	0	14.03	0	0	0	0	0	0	-47.84	-47.84
	Inverter Transformer	MV4-3 T	369234	4909397	2	0	0	56.1	56.1	1	6882.57	3.25	0	87.76	0	2.23	0	0	14.1	0	0	0	0	0	0	-48.03	-48.03
	Inverter Transformer	MV4-2 T	369267	4909397	2	0	0	56.1	56.1	1	6909.57	3.25	0	87.79	0	2.23	0	0	14.13	0	0	0	0	0	0	-48.1	-48.1
	Inverter Transformer	MV5-6 T	369987	4908507	2	0	0	56.1	56.1	1	7081.01	3.25	0	88	0	2.28	0	0	14.32	0	0	0	0	0	0	-48.54	-48.54
	Inverter Transformer	MV5-5 T	370021	4908690	2	0	0	56.1	56.1	1	7192.69	3.25	0	88.14	0	2.31	0	0	14.43	0	0	0	0	0	0	-48.83	-48.83
	Inverter Transformer	MV5-2 T	370011	4908853	2	0	0	56.1	56.1	1	7259.18	3.25	0	88.22	0	2.33	0	0	14.5	0	0	0	0	0	0	-48.99	-48.99
	Inverter Transformer	MV5-1 T	370015	4909142	2	0	0	56.1	56.1	1	7403.27	5.13	0	88.39	0	3.12	1.51	0.01	14.65	0	0	0	0	0	0	-51.61	-51.61
	Inverter Transformer	MV5-3 T	370237	4908851	2	0	0	56.1	56.1	1	7458.34	3.25	0	88.45	0	2.38	0	0	14.71	0	0	0	0	0	0	-49.49	-49.49
	Inverter Transformer	MV5-4 T	370330	4908707	2	0	0	56.1	56.1	1	7476.9	3.25	0	88.47	0	2.38	0	0	14.73	0	0	0	0	0	0	-49.53	-49.53
	Line Reactor	NGR	369421	4908787.5	5	0	0	45.4	45.4	1	6711.59	5.25	0	87.54	0	3.22	1.37	0.1	2.74	0	0	0	0	0	0	-49.52	-49.52
Limit. Valu	0	0																								
Level D/N:	27.5992	27.5992																								

Receiver: Vacant Lot Receptor
ID: S-VLR2
X: 363929
Y: 4905712
Z: 4.5
Ground: 0

ISO	Description	ID	X	Y	Z	Ground	ReflOrd	LxT	LxN	L/A	Dist.	hm	Freq	Adiv	K0b	Agr	Abar	z	Aatm	Afol	Ahous	Cmet	CmetN	Dc	RL	LtotT	LtotN
	Inverter	MV1-6	364477	4905835	2	0	0	100.3	100.3	1	561.64	3.25	0	65.99	0	-0.51	0	0	8.96	0	0	0	0	0	0	25.86	25.86
	Inverter	MV1-9	364561	4905646	2	0	0	100.3	100.3	1	635.44	3.25	0	67.06	0	-0.45	0	0	9.41	0	0	0	0	0	0	24.3	24.3
	Inverter	MV1-5	364671	4905892	2	0	0	100.3	100.3	1	763.52	3.25	0	68.66	0	-0.37	0	0	10.03	0	0	0	0	0	0	22	22
	Inverter	MV1-11	364655	4905414	2	0	0	100.3	100.3	1	784.78	3.25	0	68.9	0	-0.36	0	0	10.12	0	0	0	0	0	0	21.66	21.66
	Inverter	MV1-8	364788	4905647	2	0	0	100.3	100.3	1	861.46	3.25	0	69.7	0	-0.32	0	0	10.42	0	0	0	0	0	0	20.5	20.5
	Inverter	MV1-2	364753	4906063	2	0	0	100.3	100.3	1	895.65	3.25	0	70.04	0	-0.3	0	0	10.55	0	0	0	0	0	0	20.02	20.02
	Inverter	MV1-1	364715	4906166	2	0	0	100.3	100.3	1	907.7	3.25	0	70.16	0	-0.29	0	0	10.59	0	0	0	0	0	0	19.85	19.85
	Inverter	MV1-4	364815	4905918	2	0	0	100.3	100.3	1	909.64	3.25	0	70.18	0	-0.29	0	0	10.6	0	0	0	0	0	0	19.83	19.83
	Inverter	MV1-12	365038	4905386	2	0	0	100.3	100.3	1	1155.93	3.25	0	72.26	0	-0.17	0	0	11.4	0	0	0	0	0	0	16.83	16.83
	Inverter	MV1-13	364731	4905241	2	0	0	97.3	97.3	1	930.08	3.25	0	70.37	0	-0.28	0	0	10.67	0	0	0	0	0	0	16.55	16.55
	Inverter	MV1-7	364925	4905782	2	0	0	97.3	97.3	1	998.46	3.25	0	70.99	0	-0.25	0	0	10.91	0	0	0	0	0	0	15.67	15.67
	Inverter	MV1-10	365004	4905564	2	0	0	97.3	97.3	1	1085.14	3.25	0	71.71	0	-0.21	0	0	11.18	0	0	0	0	0	0	14.62	14.62
	Inverter	MV1-15	365315	4904994	2	0	0	100.3	100.3	1	1560.94	3.25	0	74.87	0	-0.01	0	0	12.47	0	0	0	0	0	0	12.98	12.98
	Sol_Luce Substation	S_Substation	369426	4908792	3.5	0	0	112.1	112.1	1	6301.06	5.25	0	86.99	0	1.23	2.58	0.29	10.06	0	0	0	0	0	0	11.22	11.22
	Inverter	MV2-4	365586	4906624	2	0	0	100.3	100.3	1	1891.4	3.25	0	76.54	0	0.1	0	0	13.23	0	0	0	0	0	0	10.45	10.45
	Inverter	MV1-14	365163	4905049	2	0	0	97.3	97.3	1	1400.83	3.25	0	73.93	0	-0.07	0	0	12.07	0	0	0	0	0	0	11.38	11.38
	Inverter	MV2-3	365820	4906641	2	0	0	100.3	100.3	1	2106.88	3.25	0	77.47	0	0.16	0	0	13.68	0	0	0	0	0	0	9	9

Inverter	MV1-3	364440	4906039	2	0	0	89.1	89.1	1	606.68	3.25	0	66.66	0	0.58	0	0	5.47	0	0	0	0	0	0	16.35	16.35
Inverter	MV2-1	365842	4906816	2	0	0	97.3	97.3	1	2208.71	3.25	0	77.88	0	0.19	0	0	13.89	0	0	0	0	0	0	5.35	5.35
Inverter	MV3-18	367752	4907412	2	0	0	100.3	100.3	1	4183.94	3.25	0	83.43	0	0.55	0	0	17.34	0	0	0	0	0	0	-1.01	-1.01
Inverter	MV3-12	367668	4907594	2	0	0	100.3	100.3	1	4185.93	3.25	0	83.44	0	0.55	0	0	17.34	0	0	0	0	0	0	-1.02	-1.02
Inverter	MV3-13	367963	4907577	2	0	0	100.3	100.3	1	4444.25	3.25	0	83.96	0	0.58	0	0	17.74	0	0	0	0	0	0	-1.97	-1.97
Inverter	MV3-7	367945	4907754	2	0	0	100.3	100.3	1	4505.33	3.25	0	84.07	0	0.59	0	0	17.84	0	0	0	0	0	0	-2.19	-2.19
Inverter	MV3-3	367939	4907927	2	0	0	100.3	100.3	1	4581.08	3.25	0	84.22	0	0.6	0	0	17.95	0	0	0	0	0	0	-2.46	-2.46
Inverter	MV3-17	368178	4907472	2	0	0	100.3	100.3	1	4599.09	3.25	0	84.25	0	0.6	0	0	17.98	0	0	0	0	0	0	-2.52	-2.52
Inverter	MV3-10	368167	4907669	2	0	0	100.3	100.3	1	4668.03	3.25	0	84.38	0	0.61	0	0	18.09	0	0	0	0	0	0	-2.77	-2.77
Inverter	MV3-19	368357	4907347	2	0	0	100.3	100.3	1	4720.21	3.25	0	84.48	0	0.61	0	0	18.16	0	0	0	0	0	0	-2.95	-2.95
Inverter	MV3-6	368162	4907834	2	0	0	100.3	100.3	1	4735.1	3.25	0	84.51	0	0.62	0	0	18.19	0	0	0	0	0	0	-3	-3
Inverter	MV3-15	368357	4907477	2	0	0	100.3	100.3	1	4766.8	3.25	0	84.56	0	0.62	0	0	18.23	0	0	0	0	0	0	-3.11	-3.11
Inverter	MV3-21	368478	4907206	2	0	0	100.3	100.3	1	4788.05	3.25	0	84.6	0	0.62	0	0	18.27	0	0	0	0	0	0	-3.18	-3.18
Inverter	MV3-11	368346	4907662	2	0	0	100.3	100.3	1	4828.29	3.25	0	84.68	0	0.63	0	0	18.33	0	0	0	0	0	0	-3.32	-3.32
Inverter	MV3-16	368514	4907475	2	0	0	100.3	100.3	1	4912.27	3.25	0	84.83	0	0.63	0	0	18.45	0	0	0	0	0	0	-3.6	-3.6
Inverter	MV3-9	368512	4907703	2	0	0	100.3	100.3	1	4996.8	3.25	0	84.97	0	0.64	0	0	18.58	0	0	0	0	0	0	-3.88	-3.88
Inverter	MV3-20	368689	4907317	2	0	0	100.3	100.3	1	5023.31	3.25	0	85.02	0	0.64	0	0	18.61	0	0	0	0	0	0	-3.97	-3.97
Inverter	MV3-14	368684	4907498	2	0	0	100.3	100.3	1	5079.35	3.25	0	85.12	0	0.65	0	0	18.7	0	0	0	0	0	0	-4.15	-4.15
Inverter	MV3-8	368680	4907712	2	0	0	100.3	100.3	1	5154.8	3.25	0	85.24	0	0.66	0	0	18.81	0	0	0	0	0	0	-4.39	-4.39
Inverter	MV4-7	369035	4909001	2	0	0	100.3	100.3	1	6073.61	3.25	0	86.67	0	0.71	0	0	20.09	0	0	0	0	0	0	-7.16	-7.16
Inverter	MV4-4	369027	4909199	2	0	0	100.3	100.3	1	6176.47	3.25	0	86.81	0	0.71	0	0	20.23	0	0	0	0	0	0	-7.44	-7.44
Inverter	MV4-11	369264	4908855	2	0	0	100.3	100.3	1	6191.99	3.25	0	86.84	0	0.71	0	0	20.25	0	0	0	0	0	0	-7.49	-7.49
Inverter	MV4-10	369312	4908858	2	0	0	100.3	100.3	1	6234.9	3.25	0	86.9	0	0.71	0	0	20.31	0	0	0	0	0	0	-7.61	-7.61
Inverter	MV4-8	369256	4909001	2	0	0	100.3	100.3	1	6260.55	3.25	0	86.93	0	0.71	0	0	20.34	0	0	0	0	0	0	-7.68	-7.68
Inverter	MV4-1	369011	4909397	2	0	0	100.3	100.3	1	6277.42	3.25	0	86.96	0	0.71	0	0	20.37	0	0	0	0	0	0	-7.72	-7.72
Inverter	MV4-9	369289	4909001	2	0	0	100.3	100.3	1	6288.65	3.25	0	86.97	0	0.71	0	0	20.38	0	0	0	0	0	0	-7.75	-7.75
Inverter	MV4-6	369243	4909192	2	0	0	100.3	100.3	1	6352.09	3.25	0	87.06	0	0.71	0	0	20.46	0	0	0	0	0	0	-7.92	-7.92
Inverter	MV6-2	370085	4907339	2	0	0	100.3	100.3	1	6367.38	3.25	0	87.08	0	0.71	0	0	20.48	0	0	0	0	0	0	-7.97	-7.97
Inverter	MV4-5	369289	4909199	2	0	0	100.3	100.3	1	6394.43	3.25	0	87.12	0	0.71	0	0	20.52	0	0	0	0	0	0	-8.04	-8.04
Inverter	MV6-3	370207	4907140	2	0	0	100.3	100.3	1	6438.36	3.25	0	87.18	0	0.71	0	0	20.58	0	0	0	0	0	0	-8.16	-8.16
Inverter	MV4-3	369229	4909397	2	0	0	100.3	100.3	1	6455.17	3.25	0	87.2	0	0.71	0	0	20.6	0	0	0	0	0	0	-8.2	-8.2
Inverter	MV4-2	369272	4909397	2	0	0	100.3	100.3	1	6490.52	3.25	0	87.25	0	0.71	0	0	20.65	0	0	0	0	0	0	-8.29	-8.29
Inverter	MV5-5	370015	4908690	2	0	0	100.3	100.3	1	6775.54	3.25	0	87.62	0	0.71	0	0	21.01	0	0	0	0	0	0	-9.04	-9.04
Inverter	MV5-2	370006	4908853	2	0	0	100.3	100.3	1	6840.75	3.25	0	87.7	0	0.71	0	0	21.1	0	0	0	0	0	0	-9.2	-9.2
Inverter	MV5-1	370020	4909142	2	0	0	100.3	100.3	1	6990.36	5.13	0	87.89	0	1.77	2.31	0.01	21.29	0	0	0	0	0	0	-12.94	-12.94
Inverter	MV5-3	370231	4908851	2	0	0	100.3	100.3	1	7040.49	3.25	0	87.95	0	0.71	0	0	21.35	0	0	0	0	0	0	-9.7	-9.7
Inverter	MV5-4	370324	4908707	2	0	0	100.3	100.3	1	7061.59	3.25	0	87.98	0	0.71	0	0	21.38	0	0	0	0	0	0	-9.75	-9.75
Inverter	MV2-2	365977	4906654	2	0	0	89.1	89.1	1	2254.26	3.25	0	78.06	0	0.97	0	0	8.46	0	0	0	0	0	0	1.57	1.57
Inverter	MV6-1	370235	4907364	2	0	0	97.3	97.3	1	6518.8	3.25	0	87.28	0	0.71	0	0	20.68	0	0	0	0	0	0	-11.37	-11.37
DSTATCOM - 10 MVAR #2	DSAT2	369403	4908757	2.5	0	0	96.6	96.6	1	6263.92	3.5	0	86.94	0	3.79	0	0	3.97	0	0	0	0	0	0	1.94	1.94
DSTATCOM - 10 MVAR #1	DSAT1	369437	4908757	2.5	0	0	96.6	96.6	1	6293.65	3.5	0	86.98	0	3.79	0	0	3.98	0	0	0	0	0	0	1.88	1.88
Gardiner Substation	G_Sub	366586.3	4903349.9	2.5	0	0	90.8	90.8	1	3555.39	4.25	0	82.02	0	1.23	2.76	0.28	6.76	0	0	0	0	0	0	-1.99	-1.99
SubstationTransformer	W_ST	369711.17	4906112.3	2.5	0	0	92	92	1	5796.01	4.25	0	86.26	0	1.83	2.15	0.29	9.52	0	0	0	0	0	0	-7.78	-7.78
Inverters	G_Inv1	366526.4	4903225.8	2	0	0	87.7	87.7	1	3595.51	3.25	0	82.12	0	2.76	0	0	4.43	0	0	0	0	0	0	-1.64	-1.64
Inverters	G_Inv2	366676.9	4903239.1	2	0	0	87.7	87.7	1	3696.78	3.25	0	82.36	0	2.77	0	0	4.54	0	0	0	0	0	0	-2.01	-2.01
Inverters	G_Inv3	366583.7	4903091.4	2	0	0	87.7	87.7	1	3730.28	3.25	0	82.43	0	2.77	0	0	4.58	0	0	0	0	0	0	-2.12	-2.12
Inverters	G_Inv4	366732.8	4903105	2	0	0	87.7	87.7	1	3828.54	3.25	0	82.66	0	2.78	0	0	4.69	0	0	0	0	0	0	-2.47	-2.47
Inverters	G_Inv5	366638.5	4902958.1	2	0	0	87.7	87.7	1	3863.34	3.25	0	82.74	0	2.78	0	0	4.73	0	0	0	0	0	0	-2.58	-2.58
Inverters	G_Inv6	366788.5	4902972	2	0	0	87.7	87.7	1	3960.35	3.25	0	82.95	0	2.79	0	0	4.83	0	0	0	0	0	0	-2.91	-2.91
Inverters	G_Inv7	366694.6	4902824.7	2	0	0	87.7	87.7	1	3998.13	3.25	0	83.04	0	2.79	0	0	4.87	0	0	0	0	0	0	-3.04	-3.04
Inverter	MV3-1	368156	4907976	2	0	0	89.1	89.1	1	4795.13	3.25	0	84.62	0	1.59	0	0	12.19	0	0	0	0	0	0	-9.33	-9.33
Inverters	G_Inv8	366844.5	4902838.5	2	0	0	87.7	87.7	1	4093.55	3.25	0	83.24	0	2.8	0	0	4.97	0	0	0	0	0	0	-3.36	-3.36
Inverters	G_Inv9	366750.9	4902691.8	2	0	0	87.7	87.7	1	4133.37	3.25	0	83.33	0	2.8	0	0	5.02	0	0	0	0	0	0	-3.49	-3.49
Inverter	MV3-5	368340	4907843	2	0	0	89.1	89.1	1	4898.78	3.25	0	84.8	0	1.61	0	0	12.33	0	0	0	0	0	0	-9.69	-9.69
Inverter	MV3-22	368656	4907142	2	0	0	89.1	89.1	1	4938.57	3.25	0	84.87	0	1.62	0	0	12.38	0	0	0	0	0	0	-9.82	-9.82
Inverters	G_Inv10	366900.7	4902704.8	2	0	0	87.7	87.7	1	4227.8	3.25	0	83.52	0	2.81	0	0	5.12	0	0	0	0	0	0	-3.79	-3.79
Inverter	MV3-4	368502	4907925	2	0	0	89.1	89.1	1	5080.33	3.25	0	85.12	0	1.66	0	0	12.57	0	0	0	0	0	0	-10.29	-10.29
Inverter	MV3-2	368671	4907928	2	0	0	89.1	89.1	1	5234.24	3.25	0	85.38	0	1.7	0	0	12.77	0	0	0	0	0	0	-10.79	-10.79
Westbrook Inverter Enclosur	W_INV2	369374	4906388	2	0	0	89.1	89.1	1	5486.8	3.25	0	85.79	0	1.76	0	0	13.11	0	0	0	0	0	0	-11.59	-11.59
Westbrook Inverter Enclosur	W_INV3	369508	4906164	2	0	0	89.1	89.1	1	5597.28	3.25	0	85.96	0	1.79	0	0	13.25	0	0	0	0	0	0	-11.94	-11.94
Fixed Reactor Bank 1	FRB1	369378	4908755	6	0	0	89.8	89.8	1	6241.11	5.25	0	86.91	0	-0.38	0	0	9.99	0	0	0	0	0	0	-6.74	-6.74
Westbrook Inverter Enclosur	W_INV4	369673	4906164	2	0	0	89.1	89.1	1	5761.76	3.25	0	86.21	0	1.83	0	0	13.46	0	0	0	0	0	0	-12.44	-12.44
Fixed Reactor Bank 2	FRB2	369464	4908755	6	0	0	89.8	89.8	1	6316.33	5.25	0	87.01	0	-0.37	0	0	10.07	0	0	0	0	0	0	-6.93	-6.93
Westbrook Inverter Enclosur	W_INV5	369719	4906574	2	0	0	89.1	89.1	1	5853.82	3.25	0	86.35	0	1.85	0	0	13.58	0	0	0	0	0	0	-12.72	-12.72
Inverter	MV4-13	369051	4908605	2	0	0	89.1	89.1	1	5882.55	3.25	0	86.39	0	1.86	0	0	13.61	0	0	0	0	0	0	-12.8	-12.8
Westbrook Inverter Enclosur	W_INV7	369780	4906417	2	0	0	89.1	89.1	1	5893.32	3.25	0	86.41	0	1.86	0	0	13.63	0	0	0	0	0	0	-12.84	-12.84
Inverter	MV4-15	369176	4908481	2	0	0	89.1	89.1	1	5932.82	3.25	0	86.47	0	1.87	0	0	13.68	0	0	0	0	0	0	-12.95	-12.95
Inverter	MV4-14	369176	4908507	2	0	0	89.1	89.1	1	5945	3.25	0	86.48	0	1.87	0	0	13.69	0	0	0	0	0	0	-12.99	-12.99
Inverter	MV4-12	369043	4908803	2	0	0	89.1	89.1	1	5975.56	3.25	0	86.53	0	1.88	0	0	13.73	0	0	0	0	0	0	-13.08	-13.08
Westbrook Inverter Enclosur	W_INV6	369875	4906578	2	0	0	89.1	89.1	1	6008.73	3.25	0	86.58	0	1.89	0	0	13.77	0	0	0	0	0	0	-13.18	-13.18
Inverter	MV5-6	369982	4908507	2	0	0	89.1	89.1	1	6667.15	3.25	0	87.48	0	2.05	0	0	14.59	0	0	0	0	0	0	-15.06	-15.06
Westbrook Inverter Enclosur	W_INV1	369409	4906578	2	0	0	86.1	86.1	1	5548.01	3.25	0	85.88	0	1.77	0	0	13.18	0	0	0	0	0	0	-14.78	-14.78
Inverter Transformer	MV1-13 T	364725	4905241	2	0	0	69.4	69.4	1	924.91	3.25	0	70.32	0	1.62	0	0	3.7	0	0	0	0	0	0	-6.29	-6.29
Inverter	MV6-4	370250	4906966	2	0	0	86.1	86.1	1	6444.19	3.25	0	87.18	0	1.99	0	0	14.31	0	0	0	0	0	0	-17.43	-17.43

Inverter Transformer	MV1-7 T	364919	4905782	2	0	0	69.4	69.4	1	992.47	3.25	0	70.93	0	1.68	0	0	3.8	0	0	0	0	0	0	-7.06	-7.06
Inverter Transformer	MV1-10 T	365010	4905564	2	0	0	69.4	69.4	1	1091.09	3.25	0	71.76	0	1.75	0	0	3.93	0	0	0	0	0	0	-8.09	-8.09
Inverter Transformer	MV1-14 T	365157	4905049	2	0	0	69.4	69.4	1	1395.55	3.25	0	73.89	0	1.92	0	0	4.31	0	0	0	0	0	0	-10.78	-10.78
Westbrook Inverter Transfor	W_INVTR1	369403	4906578	2	0	0	78.2	78.2	1	5542.08	3.25	0	85.87	0	-3.28	0	0	2.59	0	0	0	0	0	0	-6.94	-6.94
Westbrook Inverter Transfor	W_INVTR2	369368	4906388	2	0	0	77.3	77.3	1	5480.85	3.25	0	85.78	0	-3.27	0	0	2.57	0	0	0	0	0	0	-7.74	-7.74
Inverter Transformer	MV2-1 T	365836	4906816	2	0	0	69.4	69.4	1	2203.51	3.25	0	77.86	0	2.25	0	0	5.17	0	0	0	0	0	0	-15.92	-15.92
Westbrook Inverter Transfor	W_INVTR3	369514	4906164	2	0	0	77.3	77.3	1	5603.26	3.25	0	85.97	0	-3.29	0	0	2.61	0	0	0	0	0	0	-7.95	-7.95
Westbrook Inverter Transfor	W_INVTR4	369679	4906164	2	0	0	77.3	77.3	1	5767.74	3.25	0	86.22	0	-3.33	0	0	2.67	0	0	0	0	0	0	-8.22	-8.22
Westbrook Inverter Transfor	W_INVTR5	369725	4906574	2	0	0	77.3	77.3	1	5859.75	3.25	0	86.36	0	-3.34	0	0	2.7	0	0	0	0	0	0	-8.37	-8.37
Westbrook Inverter Transfor	W_INVTR7	369786	4906417	2	0	0	77.3	77.3	1	5899.28	3.25	0	86.42	0	-3.35	0	0	2.71	0	0	0	0	0	0	-8.43	-8.43
Westbrook Inverter Transfor	W_INVTR6	369881	4906578	2	0	0	77.3	77.3	1	6014.67	3.25	0	86.58	0	-3.37	0	0	2.75	0	0	0	0	0	0	-8.62	-8.62
Inverter Transformer	MV1-6 T	364482	4905835	2	0	0	56.1	56.1	1	566.52	3.25	0	66.06	0	-0.11	0	0	3.76	0	0	0	0	0	0	-13.65	-13.65
Inverter Transformer	MV1-3 T	364435	4906039	2	0	0	56.1	56.1	1	602.47	3.25	0	66.6	0	-0.1	0	0	3.86	0	0	0	0	0	0	-14.3	-14.3
Inverter Transformer	MV1-9 T	364555	4905646	2	0	0	56.1	56.1	1	629.47	3.25	0	66.98	0	-0.1	0	0	3.94	0	0	0	0	0	0	-14.76	-14.76
Inverter Transformer	MV1-5 T	364676	4905892	2	0	0	56.1	56.1	1	768.38	3.25	0	68.71	0	-0.06	0	0	4.31	0	0	0	0	0	0	-16.9	-16.9
Inverter Transformer	MV1-11 T	364649	4905414	2	0	0	56.1	56.1	1	779.24	3.25	0	68.83	0	-0.06	0	0	4.34	0	0	0	0	0	0	-17.06	-17.06
Inverter Transformer	MV1-8 T	364782	4905647	2	0	0	56.1	56.1	1	855.48	3.25	0	69.64	0	-0.04	0	0	4.54	0	0	0	0	0	0	-18.09	-18.09
Inverter Transformer	MV1-2 T	364759	4906063	2	0	0	56.1	56.1	1	901.17	3.25	0	70.1	0	-0.02	0	0	4.65	0	0	0	0	0	0	-18.67	-18.67
Inverter Transformer	MV1-1 T	364721	4906166	2	0	0	56.1	56.1	1	912.9	3.25	0	70.21	0	-0.02	0	0	4.68	0	0	0	0	0	0	-18.81	-18.81
Inverter Transformer	MV1-4 T	364821	4905918	2	0	0	56.1	56.1	1	915.48	3.25	0	70.23	0	-0.02	0	0	4.68	0	0	0	0	0	0	-18.84	-18.84
Inverter Transformer	MV1-12 T	365044	4905386	2	0	0	56.1	56.1	1	1161.68	3.25	0	72.3	0	0.07	0	0	5.27	0	0	0	0	0	0	-21.58	-21.58
Inverter Transformer	MV6-4 T	370244	4906966	2	0	0	69.4	69.4	1	6438.3	3.25	0	87.18	0	3.25	0	0	8.28	0	0	0	0	0	0	-29.36	-29.36
Inverter Transformer	MV6-1 T	370230	4907364	2	0	0	69.4	69.4	1	6513.96	3.25	0	87.28	0	3.26	0	0	8.32	0	0	0	0	0	0	-29.51	-29.51
Inverter Transformer	MV1-15 T	365309	4904994	2	0	0	56.1	56.1	1	1555.61	3.25	0	74.84	0	0.22	0	0	6.14	0	0	0	0	0	0	-25.14	-25.14
Inverter Transformer	MV2-4 T	365590	4906628	2	0	0	56.1	56.1	1	1896.84	3.25	0	76.56	0	0.36	0	0	6.84	0	0	0	0	0	0	-27.7	-27.7
Inverter Transformer	MV2-3 T	365814	4906641	2	0	0	56.1	56.1	1	2101.49	3.25	0	77.45	0	0.45	0	0	7.24	0	0	0	0	0	0	-29.08	-29.08
Inverter Transformer	MV2-2 T	365982	4906654	2	0	0	56.1	56.1	1	2258.8	3.25	0	78.08	0	0.51	0	0	7.54	0	0	0	0	0	0	-30.07	-30.07
Inverter Transformer	MV3-18 T	367757	4907412	2	0	0	56.1	56.1	1	4188.51	3.25	0	83.44	0	1.32	0	0	10.73	0	0	0	0	0	0	-39.43	-39.43
Inverter Transformer	MV3-12 T	367674	4907594	2	0	0	56.1	56.1	1	4191.3	3.25	0	83.45	0	1.32	0	0	10.74	0	0	0	0	0	0	-39.44	-39.44
Inverter Transformer	MV3-13 T	367958	4907577	2	0	0	56.1	56.1	1	4439.72	3.25	0	83.95	0	1.42	0	0	11.09	0	0	0	0	0	0	-40.4	-40.4
Inverter Transformer	MV3-7 T	367951	4907754	2	0	0	56.1	56.1	1	4510.68	3.25	0	84.08	0	1.44	0	0	11.19	0	0	0	0	0	0	-40.66	-40.66
Inverter Transformer	MV3-3 T	367944	4907927	2	0	0	56.1	56.1	1	4585.46	3.25	0	84.23	0	1.47	0	0	11.29	0	0	0	0	0	0	-40.94	-40.94
Inverter Transformer	MV3-17 T	368183	4907472	2	0	0	56.1	56.1	1	4603.71	3.25	0	84.26	0	1.48	0	0	11.32	0	0	0	0	0	0	-41	-41
Inverter Transformer	MV3-10 T	368162	4907669	2	0	0	56.1	56.1	1	4663.49	3.25	0	84.37	0	1.5	0	0	11.4	0	0	0	0	0	0	-41.22	-41.22
Inverter Transformer	MV3-19 T	368352	4907347	2	0	0	56.1	56.1	1	4715.52	3.25	0	84.47	0	1.52	0	0	11.47	0	0	0	0	0	0	-41.41	-41.41
Inverter Transformer	MV3-6 T	368156	4907834	2	0	0	56.1	56.1	1	4729.74	3.25	0	84.5	0	1.53	0	0	11.49	0	0	0	0	0	0	-41.46	-41.46
Inverter Transformer	MV3-15 T	368351	4907477	2	0	0	56.1	56.1	1	4761.23	3.25	0	84.55	0	1.54	0	0	11.53	0	0	0	0	0	0	-41.57	-41.57
Inverter Transformer	MV3-1 T	368150	4907976	2	0	0	56.1	56.1	1	4789.84	3.25	0	84.61	0	1.55	0	0	11.57	0	0	0	0	0	0	-41.67	-41.67
Inverter Transformer	MV3-21 T	368484	4907206	2	0	0	56.1	56.1	1	4793.75	3.25	0	84.61	0	1.55	0	0	11.58	0	0	0	0	0	0	-41.68	-41.68
Inverter Transformer	MV3-11 T	368340	4907662	2	0	0	56.1	56.1	1	4822.8	3.25	0	84.67	0	1.56	0	0	11.62	0	0	0	0	0	0	-41.79	-41.79
Inverter Transformer	MV3-5 T	368335	4907843	2	0	0	56.1	56.1	1	4894.28	3.25	0	84.79	0	1.59	0	0	11.71	0	0	0	0	0	0	-42.04	-42.04
Inverter Transformer	MV3-16 T	368509	4907475	2	0	0	56.1	56.1	1	4907.6	3.25	0	84.82	0	1.59	0	0	11.73	0	0	0	0	0	0	-42.08	-42.08
Inverter Transformer	MV3-22 T	368661	4907142	2	0	0	56.1	56.1	1	4943.35	3.25	0	84.88	0	1.6	0	0	11.78	0	0	0	0	0	0	-42.21	-42.21
Inverter Transformer	MV3-9 T	368517	4907703	2	0	0	56.1	56.1	1	5001.38	3.25	0	84.98	0	1.63	0	0	11.86	0	0	0	0	0	0	-42.41	-42.41
Inverter Transformer	MV3-20 T	368683	4907317	2	0	0	56.1	56.1	1	5017.62	3.25	0	85.01	0	1.63	0	0	11.88	0	0	0	0	0	0	-42.46	-42.46
Inverter Transformer	MV3-14 T	368678	4907498	2	0	0	56.1	56.1	1	5073.74	3.25	0	85.11	0	1.65	0	0	11.95	0	0	0	0	0	0	-42.65	-42.65
Inverter Transformer	MV3-4 T	368507	4907925	2	0	0	56.1	56.1	1	5084.83	3.25	0	85.13	0	1.66	0	0	11.97	0	0	0	0	0	0	-42.69	-42.69
Inverter Transformer	MV3-8 T	368685	4907712	2	0	0	56.1	56.1	1	5159.41	3.25	0	85.25	0	1.68	0	0	12.06	0	0	0	0	0	0	-42.94	-42.94
Inverter Transformer	MV3-2 T	368677	4907928	2	0	0	56.1	56.1	1	5239.67	3.25	0	85.39	0	1.71	0	0	12.17	0	0	0	0	0	0	-43.2	-43.2
Inverter Transformer	MV4-13 T	369057	4908605	2	0	0	56.1	56.1	1	5887.77	3.25	0	86.4	0	1.93	0	0	12.97	0	0	0	0	0	0	-45.24	-45.24
Inverter Transformer	MV4-15 T	369170	4908481	2	0	0	56.1	56.1	1	5927.52	3.25	0	86.46	0	1.94	0	0	13.02	0	0	0	0	0	0	-45.36	-45.36
Inverter Transformer	MV4-14 T	369182	4908507	2	0	0	56.1	56.1	1	5950.3	3.25	0	86.49	0	1.95	0	0	13.04	0	0	0	0	0	0	-45.43	-45.43
Inverter Transformer	MV4-12 T	369049	4908803	2	0	0	56.1	56.1	1	5980.69	3.25	0	86.54	0	1.96	0	0	13.08	0	0	0	0	0	0	-45.52	-45.52
Inverter Transformer	MV4-7 T	369040	4909001	2	0	0	56.1	56.1	1	6077.82	3.25	0	86.67	0	1.99	0	0	13.19	0	0	0	0	0	0	-45.8	-45.8
Inverter Transformer	MV4-4 T	369033	4909199	2	0	0	56.1	56.1	1	6181.42	3.25	0	86.82	0	2.02	0	0	13.32	0	0	0	0	0	0	-46.1	-46.1
Inverter Transformer	MV4-11 T	369269	4908855	2	0	0	56.1	56.1	1	6196.29	3.25	0	86.84	0	2.03	0	0	13.33	0	0	0	0	0	0	-46.14	-46.14
Inverter Transformer	MV4-10 T	369307	4908858	2	0	0	56.1	56.1	1	6230.59	3.25	0	86.89	0	2.04	0	0	13.37	0	0	0	0	0	0	-46.24	-46.24
Inverter Transformer	MV4-8 T	369262	4909001	2	0	0	56.1	56.1	1	6265.65	3.25	0	86.94	0	2.05	0	0	13.41	0	0	0	0	0	0	-46.34	-46.34
Inverter Transformer	MV4-1 T	369017	4909397	2	0	0	56.1	56.1	1	6282.27	3.25	0	86.96	0	2.05	0	0	13.43	0	0	0	0	0	0	-46.39	-46.39
Inverter Transformer	MV4-9 T	369284	4909001	2	0	0	56.1	56.1	1	6284.39	3.25	0	86.97	0	2.05	0	0	13.43	0	0	0	0	0	0	-46.39	-46.39
Inverter Transformer	MV4-6 T	369249	4909192	2	0	0	56.1	56.1	1	6357.11	3.25	0	87.07	0	2.08	0	0	13.52	0	0	0	0	0	0	-46.6	-46.6
Inverter Transformer	MV6-2 T	370091	4907339	2	0	0	56.1	56.1	1	6373.18	3.25	0	87.09	0	2.08	0	0	13.54	0	0	0	0	0	0	-46.64	-46.64
Inverter Transformer	MV4-5 T	369283	4909199	2	0	0	56.1	56.1	1	6389.4	3.25	0	87.11	0	2.08	0	0	13.55	0	0	0	0	0	0	-46.69	-46.69
Inverter Transformer	MV6-3 T	370202	4907140	2	0	0	56.1	56.1	1	6433.48	3.25	0	87.17	0	2.1	0	0	13.6	0	0	0	0	0	0	-46.81	-46.81
Inverter Transformer	MV4-3 T	369234	4909397	2	0	0	56.1	56.1	1	6459.28	3.25	0	87.2	0	2.11	0	0	13.63	0	0	0	0	0	0	-46.88	-46.88
Inverter Transformer	MV4-2 T	369267	4909397	2	0	0	56.1	56.1	1	6486.41	3.25	0	87.24	0	2.11	0	0	13.66	0	0	0	0	0	0	-46.96	-46.96
Inverter Transformer	MV5-6 T	369987	4908507	2	0	0	56.1	56.1	1	6671.69	3.25	0	87.48	0	2.17	0	0	13.87	0	0	0	0	0	0	-47.47	-47.47
Inverter Transformer	MV5-5 T	370021	4908690	2	0	0	56.1	56.1	1	6780.93	3.25	0	87.63	0	2.2	0	0	13.99	0	0	0	0	0	0	-47.76	-47.76
Inverter Transformer	MV5-2 T	370011	4908853	2	0	0	56.1	56.1	1	6845.19	3.25	0	87.71	0	2.22	0	0	14.06	0	0	0	0	0	0	-47.93	-47.93
Inverter Transformer	MV5-1 T	370015	4909142	2	0	0	56.1	56.1	1	6986.01	3.25	0	87.88	0	2.26	0	0	14.21	0	0	0	0	0	0	-48.3	-48.3
Inverter Transformer	MV5-3 T	370237	4908851	2	0	0	56.1	56.1	1	7045.86	3.25	0	87.96	0	2.27	0	0	14.28	0	0	0	0	0	0	-48.45	-48.45
Inverter Transformer	MV5-4 T	370330	4908707	2	0	0	56.1	56.1	1	7067.02	3.25	0	87.98	0	2.28	0	0	14.3	0	0	0	0	0	0	-48.51	-48.51
Line Reactor	NGR	369421	4908787.5	5	0	0	45.4	45.4	1	6294.5	5.25	0	86.98	0	3.23	1.36	0.1	2.57	0	0	0	0	0	0	-48.8	-48.8
Limit. Valu 0	0																									

Level D/N: 32.2093 32.2093

Receiver: Vacant Lot Receptor
ID: S-VLR3
X: 364213
Y: 4906222
Z: 4.5
Ground: 0

ISO	Description	ID	X	Y	Z	Ground	ReflOrd	LxT	LxN	L/A	Dist.	hm	Freq	Adiv	K0b	Agr	Abar	z	Aatm	Afol	Ahous	Cmet	CmetN	Dc	RL	LtotT	LtotN
	Inverter	MV1-6	364477	4905835	2	0	0	100.3	100.3	1	468.48	3.25	0	64.41	0	-0.57	0	0	8.27	0	0	0	0	0	0	28.2	28.2
	Inverter	MV1-1	364715	4906166	2	0	0	100.3	100.3	1	505.12	3.25	0	65.07	0	-0.55	0	0	8.56	0	0	0	0	0	0	27.23	27.23
	Inverter	MV1-2	364753	4906063	2	0	0	100.3	100.3	1	562.93	3.25	0	66.01	0	-0.5	0	0	8.97	0	0	0	0	0	0	25.84	25.84
	Inverter	MV1-5	364671	4905892	2	0	0	100.3	100.3	1	564.51	3.25	0	66.03	0	-0.5	0	0	8.98	0	0	0	0	0	0	25.8	25.8
	Inverter	MV1-9	364561	4905646	2	0	0	100.3	100.3	1	672.97	3.25	0	67.56	0	-0.43	0	0	9.6	0	0	0	0	0	0	23.58	23.58
	Inverter	MV1-4	364815	4905918	2	0	0	100.3	100.3	1	674.41	3.25	0	67.58	0	-0.43	0	0	9.61	0	0	0	0	0	0	23.55	23.55
	Inverter	MV1-8	364788	4905647	2	0	0	100.3	100.3	1	813.18	3.25	0	69.2	0	-0.34	0	0	10.23	0	0	0	0	0	0	21.22	21.22
	Inverter	MV1-11	364655	4905414	2	0	0	100.3	100.3	1	921	3.25	0	70.29	0	-0.29	0	0	10.64	0	0	0	0	0	0	19.67	19.67
	Inverter	MV1-3	364440	4906039	2	0	0	89.1	89.1	1	291.59	3.25	0	60.3	0	0.36	0	0	4.07	0	0	0	0	0	0	24.33	24.33
	Inverter	MV1-12	365038	4905386	2	0	0	100.3	100.3	1	1174.53	3.25	0	72.4	0	-0.17	0	0	11.45	0	0	0	0	0	0	16.63	16.63
	Inverter	MV1-7	364925	4905782	2	0	0	97.3	97.3	1	836.99	3.25	0	69.45	0	-0.33	0	0	10.33	0	0	0	0	0	0	17.86	17.86
	Inverter	MV2-4	365586	4906624	2	0	0	100.3	100.3	1	1430.64	3.25	0	74.11	0	-0.06	0	0	12.15	0	0	0	0	0	0	14.11	14.11
	Inverter	MV1-10	365004	4905564	2	0	0	97.3	97.3	1	1028.91	3.25	0	71.25	0	-0.23	0	0	11.01	0	0	0	0	0	0	15.29	15.29
	Sol_Luce Substation	S_Substation	369426	4908792	3.5	0	0	112.1	112.1	1	5812.08	5.25	0	86.29	0	1.11	2.68	0.29	9.54	0	0	0	0	0	0	12.45	12.45
	Inverter	MV1-13	364731	4905241	2	0	0	97.3	97.3	1	1109.37	3.25	0	71.9	0	-0.19	0	0	11.26	0	0	0	0	0	0	14.35	14.35
	Inverter	MV1-15	365315	4904994	2	0	0	100.3	100.3	1	1649.97	3.25	0	75.35	0	0.02	0	0	12.69	0	0	0	0	0	0	12.26	12.26
	Inverter	MV2-3	365820	4906641	2	0	0	100.3	100.3	1	1660.73	3.25	0	75.41	0	0.02	0	0	12.71	0	0	0	0	0	0	12.17	12.17
	Inverter	MV1-14	365163	4905049	2	0	0	97.3	97.3	1	1509.45	3.25	0	74.58	0	-0.03	0	0	12.35	0	0	0	0	0	0	10.42	10.42
	Inverter	MV2-1	365842	4906816	2	0	0	97.3	97.3	1	1733.92	3.25	0	75.78	0	0.05	0	0	12.88	0	0	0	0	0	0	8.6	8.6
	Inverter	MV3-12	367668	4907594	2	0	0	100.3	100.3	1	3717.45	3.25	0	82.4	0	0.49	0	0	16.59	0	0	0	0	0	0	0.83	0.83
	Inverter	MV3-18	367752	4907412	2	0	0	100.3	100.3	1	3733.71	3.25	0	82.44	0	0.49	0	0	16.62	0	0	0	0	0	0	0.76	0.76
	Inverter	MV3-13	367963	4907577	2	0	0	100.3	100.3	1	3987.3	3.25	0	83.01	0	0.53	0	0	17.03	0	0	0	0	0	0	-0.25	-0.25
	Inverter	MV3-7	367945	4907754	2	0	0	100.3	100.3	1	4034.21	3.25	0	83.12	0	0.53	0	0	17.1	0	0	0	0	0	0	-0.44	-0.44
	Inverter	MV3-3	367939	4907927	2	0	0	100.3	100.3	1	4097.57	3.25	0	83.25	0	0.54	0	0	17.2	0	0	0	0	0	0	-0.68	-0.68
	Inverter	MV3-17	368178	4907472	2	0	0	100.3	100.3	1	4157.37	3.25	0	83.38	0	0.55	0	0	17.3	0	0	0	0	0	0	-0.91	-0.91
	Inverter	MV3-10	368167	4907669	2	0	0	100.3	100.3	1	4210.45	3.25	0	83.49	0	0.56	0	0	17.38	0	0	0	0	0	0	-1.11	-1.11
	Inverter	MV3-6	368162	4907834	2	0	0	100.3	100.3	1	4265.34	3.25	0	83.6	0	0.56	0	0	17.47	0	0	0	0	0	0	-1.32	-1.32
	Inverter	MV3-19	368357	4907347	2	0	0	100.3	100.3	1	4293.99	3.25	0	83.66	0	0.57	0	0	17.51	0	0	0	0	0	0	-1.42	-1.42
	Inverter	MV3-15	368357	4907477	2	0	0	100.3	100.3	1	4329.87	3.25	0	83.73	0	0.57	0	0	17.57	0	0	0	0	0	0	-1.56	-1.56
	Inverter	MV3-11	368346	4907662	2	0	0	100.3	100.3	1	4376.68	3.25	0	83.82	0	0.58	0	0	17.64	0	0	0	0	0	0	-1.73	-1.73
	Inverter	MV3-21	368478	4907206	2	0	0	100.3	100.3	1	4377.04	3.25	0	83.82	0	0.58	0	0	17.64	0	0	0	0	0	0	-1.73	-1.73
	Inverter	MV3-16	368514	4907475	2	0	0	100.3	100.3	1	4479.8	3.25	0	84.03	0	0.59	0	0	17.8	0	0	0	0	0	0	-2.1	-2.1
	Inverter	MV3-9	368512	4907703	2	0	0	100.3	100.3	1	4546.95	3.25	0	84.15	0	0.6	0	0	17.9	0	0	0	0	0	0	-2.34	-2.34
	Inverter	MV3-20	368689	4907317	2	0	0	100.3	100.3	1	4607.99	3.25	0	84.27	0	0.6	0	0	17.99	0	0	0	0	0	0	-2.56	-2.56
	Inverter	MV3-14	368684	4907498	2	0	0	100.3	100.3	1	4649.52	3.25	0	84.35	0	0.61	0	0	18.06	0	0	0	0	0	0	-2.7	-2.7
	Inverter	MV3-8	368680	4907712	2	0	0	100.3	100.3	1	4708.95	3.25	0	84.46	0	0.61	0	0	18.15	0	0	0	0	0	0	-2.91	-2.91
	Inverter	MV4-7	369035	4909001	2	0	0	100.3	100.3	1	5565.48	3.25	0	85.91	0	0.68	0	0	19.39	0	0	0	0	0	0	-5.68	-5.68
	Inverter	MV4-4	369027	4909199	2	0	0	100.3	100.3	1	5660.14	3.25	0	86.06	0	0.69	0	0	19.53	0	0	0	0	0	0	-5.96	-5.96
	Inverter	MV4-11	369264	4908855	2	0	0	100.3	100.3	1	5696.08	3.25	0	86.11	0	0.69	0	0	19.58	0	0	0	0	0	0	-6.07	-6.07
	Inverter	MV4-10	369312	4908858	2	0	0	100.3	100.3	1	5740.06	3.25	0	86.18	0	0.69	0	0	19.64	0	0	0	0	0	0	-6.2	-6.2
	Inverter	MV4-1	369011	4909397	2	0	0	100.3	100.3	1	5753.38	3.25	0	86.2	0	0.69	0	0	19.65	0	0	0	0	0	0	-6.24	-6.24
	Inverter	MV4-8	369256	4909001	2	0	0	100.3	100.3	1	5758.01	3.25	0	86.21	0	0.69	0	0	19.66	0	0	0	0	0	0	-6.25	-6.25
	Inverter	MV4-9	369289	4909001	2	0	0	100.3	100.3	1	5786.94	3.25	0	86.25	0	0.7	0	0	19.7	0	0	0	0	0	0	-6.33	-6.33
	Inverter	MV4-6	369243	4909192	2	0	0	100.3	100.3	1	5841.39	3.25	0	86.33	0	0.7	0	0	19.78	0	0	0	0	0	0	-6.49	-6.49
	Inverter	MV4-5	369289	4909199	2	0	0	100.3	100.3	1	5884.58	3.25	0	86.39	0	0.7	0	0	19.84	0	0	0	0	0	0	-6.62	-6.62
	Inverter	MV4-3	369229	4909397	2	0	0	100.3	100.3	1	5936.4	3.25	0	86.47	0	0.7	0	0	19.91	0	0	0	0	0	0	-6.77	-6.77
	Inverter	MV4-2	369272	4909397	2	0	0	100.3	100.3	1	5972.78	3.25	0	86.52	0	0.7	0	0	19.96	0	0	0	0	0	0	-6.87	-6.87
	Inverter	MV6-2	370085	4907339	2	0	0	100.3	100.3	1	5977.3	3.25	0	86.53	0	0.7	0	0	19.96	0	0	0	0	0	0	-6.88	-6.88
	Inverter	MV6-3	370207	4907140	2	0	0	100.3	100.3	1	6063.89	3.25	0	86.66	0	0.71	0	0	20.08	0	0	0	0	0	0	-7.13	-7.13
	Inverter	MV5-5	370015	4908690	2	0	0	100.3	100.3	1	6305.1	3.25	0	86.99	0	0.71	0	0	20.4	0	0	0	0	0	0	-7.8	-7.8
	Inverter	MV5-2	370006	4908853	2	0	0	100.3	100.3	1	6362.47	3.25	0	87.07	0	0.71	0	0	20.48	0	0	0	0	0	0	-7.95	-7.95
	Inverter	MV5-1	370020	4909142	2	0	0	100.3	100.3	1	6499.82	3.25	0	87.26	0	0.71	0	0	20.66	0	0	0	0	0	0	-8.32	-8.32
	Inverter	MV5-3	370231	4908851	2	0	0	100.3	100.3	1	6567.19	3.25	0	87.35	0	0.72	0	0	20.75	0	0	0	0	0	0	-8.5	-8.5
	Inverter	MV5-4	370324	4908707	2	0	0	100.3	100.3	1	6596.94	3.25	0	87.39	0	0.72	0	0	20.79	0	0	0	0	0	0	-8.57	-8.57
	Inverter	MV2-2	365977	4906654	2	0	0	89.1	89.1	1	1816.13	3.25	0	76.18	0	0.86	0	0	7.74	0	0	0	0	0	0	4.27	4.27
	Inverter	MV6-1	370235	4907364	2	0	0	97.3	97.3	1	6129.33	3.25	0	86.75	0	0.71	0	0	20.17	0	0	0	0	0	0	-10.31	-10.31
	DSTATCOM - 10 MVAR #2	DSAT2	369403	4908757	2.5	0	0	96.6	96.6	1	5776.01	3.5	0	86.23	0	3.76	0	0	3.73	0	0	0	0	0	0	2.91	2.91
	DSTATCOM - 10 MVAR #1	DSAT1	369437	4908757	2.5	0	0	96.6	96.6	1	5806.58	3.5	0	86.28	0	3.76	0	0	3.75	0	0	0	0	0	0	2.85	2.85
	Gardiner Substation	G_Sub	366586.3	4903349.9	2.5	0	0	90.8	90.8	1	3725.79	4.25	0	82.42	0	1.28	2.69	0.26	7	0	0	0	0	0	0	-2.6	-2.6
	SubstationTransformer	W_ST	369711.17	4906112.3	2.5	0	0	92	92	1	5499.27	4.25	0	85.81	0	1.76	2.21	0.29	9.2	0	0	0	0	0	0	-7	-7
	Inverter	MV3-1	368156	4907976	2	0	0	89.1	89.1	1	4315.53	3.25	0	83.7	0	1.47	0	0	11.53	0	0	0	0	0	0	-7.64	-7.64
	Inverter	MV3-5	368340	4907843	2	0	0	89.1	89.1	1	4433.93	3.25	0	83.94	0	1.5	0	0	11.69	0	0	0	0	0	0	-8.07	-8.07
	Inverters	G_Inv1	366526.4	4903225.8	2	0	0	87.7	87.7	1	3785.37	3.25	0	82.56	0	2.77	0	0	4.64	0	0	0	0	0	0	-2.32	-2.32
	Inverter	MV3-22	368656	4907142	2	0	0	89.1	89.1	1	4537.25	3.25	0	84.14	0	1.53	0	0	11.84	0	0	0	0	0	0	-8.44	-8.44

Inverters	G_Inv2	366676.9	4903239.1	2	0	0	87.7	87.7	1	3868.91	4.2	0	82.75	0	3.17	1.52	0.01	4.73	0	0	0	0	0	0	-4.51	-4.51
Inverters	G_Inv3	366583.7	4903091.4	2	0	0	87.7	87.7	1	3926.94	3.25	0	82.88	0	2.79	0	0	4.79	0	0	0	0	0	0	-2.8	-2.8
Inverter	MV3-4	368502	4907925	2	0	0	89.1	89.1	1	4614.73	3.25	0	84.28	0	1.54	0	0	11.94	0	0	0	0	0	0	-8.71	-8.71
Inverters	G_Inv4	366732.8	4903105	2	0	0	87.7	87.7	1	4008.13	3.25	0	83.06	0	2.79	0	0	4.88	0	0	0	0	0	0	-3.07	-3.07
Inverter	MV3-2	368671	4907928	2	0	0	89.1	89.1	1	4773.28	3.25	0	84.58	0	1.58	0	0	12.16	0	0	0	0	0	0	-9.26	-9.26
Inverters	G_Inv5	366638.5	4902958.1	2	0	0	87.7	87.7	1	4066.46	3.25	0	83.18	0	2.8	0	0	4.95	0	0	0	0	0	0	-3.27	-3.27
Inverters	G_Inv6	366788.5	4902972	2	0	0	87.7	87.7	1	4146.77	3.25	0	83.35	0	2.8	0	0	5.03	0	0	0	0	0	0	-3.53	-3.53
Inverters	G_Inv7	366694.6	4902824.7	2	0	0	87.7	87.7	1	4207.14	3.25	0	83.48	0	2.81	0	0	5.1	0	0	0	0	0	0	-3.73	-3.73
Inverters	G_Inv8	366844.5	4902838.5	2	0	0	87.7	87.7	1	4286.36	3.25	0	83.64	0	2.81	0	0	5.18	0	0	0	0	0	0	-3.98	-3.98
Inverters	G_Inv9	366750.9	4902691.8	2	0	0	87.7	87.7	1	4347.79	3.25	0	83.77	0	2.82	0	0	5.25	0	0	0	0	0	0	-4.17	-4.17
Westbrook Inverter Enclosur	W_INV2	369374	4906388	2	0	0	89.1	89.1	1	5163.67	3.25	0	85.26	0	1.68	0	0	12.68	0	0	0	0	0	0	-10.56	-10.56
Inverters	G_Inv10	366900.7	4902704.8	2	0	0	87.7	87.7	1	4426.56	3.25	0	83.92	0	2.83	0	0	5.33	0	0	0	0	0	0	-4.42	-4.42
Westbrook Inverter Enclosur	W_INV3	369508	4906164	2	0	0	89.1	89.1	1	5295.32	3.25	0	85.48	0	1.71	0	0	12.86	0	0	0	0	0	0	-10.99	-10.99
Fixed Reactor Bank 1	FRB1	369378	4908755	6	0	0	89.8	89.8	1	5752.68	5.25	0	86.2	0	-0.45	0	0	9.48	0	0	0	0	0	0	-5.44	-5.44
Fixed Reactor Bank 2	FRB2	369464	4908755	6	0	0	89.8	89.8	1	5830.02	5.25	0	86.31	0	-0.44	0	0	9.56	0	0	0	0	0	0	-5.65	-5.65
Inverter	MV4-13	369051	4908605	2	0	0	89.1	89.1	1	5393.05	3.25	0	85.64	0	1.74	0	0	12.98	0	0	0	0	0	0	-11.3	-11.3
Inverter	MV4-15	369176	4908481	2	0	0	89.1	89.1	1	5452.93	3.25	0	85.73	0	1.75	0	0	13.06	0	0	0	0	0	0	-11.49	-11.49
Westbrook Inverter Enclosur	W_INV4	369673	4906164	2	0	0	89.1	89.1	1	5460.31	3.25	0	85.74	0	1.75	0	0	13.07	0	0	0	0	0	0	-11.51	-11.51
Inverter	MV4-14	369176	4908507	2	0	0	89.1	89.1	1	5463.75	3.25	0	85.75	0	1.75	0	0	13.08	0	0	0	0	0	0	-11.52	-11.52
Inverter	MV4-12	369043	4908803	2	0	0	89.1	89.1	1	5476.36	3.25	0	85.77	0	1.76	0	0	13.09	0	0	0	0	0	0	-11.56	-11.56
Westbrook Inverter Enclosur	W_INV5	369719	4906574	2	0	0	89.1	89.1	1	5517.24	3.25	0	85.83	0	1.77	0	0	13.14	0	0	0	0	0	0	-11.69	-11.69
Westbrook Inverter Enclosur	W_INV7	369780	4906417	2	0	0	89.1	89.1	1	5570.41	3.25	0	85.92	0	1.78	0	0	13.21	0	0	0	0	0	0	-11.85	-11.85
Westbrook Inverter Enclosur	W_INV6	369875	4906578	2	0	0	89.1	89.1	1	5673.18	3.25	0	86.08	0	1.81	0	0	13.35	0	0	0	0	0	0	-12.17	-12.17
Inverter	MV5-6	369982	4908507	2	0	0	89.1	89.1	1	6205.05	3.25	0	86.85	0	1.94	0	0	14.02	0	0	0	0	0	0	-13.75	-13.75
Westbrook Inverter Enclosur	W_INV1	369409	4906578	2	0	0	86.1	86.1	1	5208.18	3.25	0	85.33	0	1.69	0	0	12.74	0	0	0	0	0	0	-13.71	-13.71
Inverter Transformer	MV1-7 T	364919	4905782	2	0	0	69.4	69.4	1	831.89	3.25	0	69.4	0	1.52	0	0	3.56	0	0	0	0	0	0	-5.14	-5.14
Inverter	MV6-4	370250	4906966	2	0	0	86.1	86.1	1	6082.67	3.25	0	86.68	0	1.91	0	0	13.87	0	0	0	0	0	0	-16.4	-16.4
Inverter Transformer	MV1-10 T	365010	4905564	2	0	0	69.4	69.4	1	1033.53	3.25	0	71.29	0	1.71	0	0	3.86	0	0	0	0	0	0	-7.5	-7.5
Inverter Transformer	MV1-13 T	364725	4905241	2	0	0	69.4	69.4	1	1106.58	3.25	0	71.88	0	1.76	0	0	3.95	0	0	0	0	0	0	-8.25	-8.25
Inverter Transformer	MV1-3 T	364435	4906039	2	0	0	56.1	56.1	1	287.71	3.25	0	60.18	0	-0.06	0	0	2.73	0	0	0	0	0	0	-6.79	-6.79
Inverter Transformer	MV1-14 T	365157	4905049	2	0	0	69.4	69.4	1	1505.68	3.25	0	74.55	0	1.98	0	0	4.44	0	0	0	0	0	0	-11.62	-11.62
Inverter Transformer	MV2-1 T	365836	4906816	2	0	0	69.4	69.4	1	1728.29	3.25	0	75.75	0	2.07	0	0	4.69	0	0	0	0	0	0	-13.16	-13.16
Westbrook Inverter Transfor	W_INVTR1	369403	4906578	2	0	0	78.2	78.2	1	5202.2	3.25	0	85.32	0	-3.22	0	0	2.48	0	0	0	0	0	0	-6.35	-6.35
Westbrook Inverter Transfor	W_INVTR2	369368	4906388	2	0	0	77.3	77.3	1	5157.67	3.25	0	85.25	0	-3.21	0	0	2.47	0	0	0	0	0	0	-7.17	-7.17
Westbrook Inverter Transfor	W_INVTR3	369514	4906164	2	0	0	77.3	77.3	1	5301.32	3.25	0	85.49	0	-3.24	0	0	2.51	0	0	0	0	0	0	-7.42	-7.42
Inverter Transformer	MV1-6 T	364482	4905835	2	0	0	56.1	56.1	1	471.31	3.25	0	64.47	0	-0.12	0	0	3.46	0	0	0	0	0	0	-11.75	-11.75
Westbrook Inverter Transfor	W_INVTR4	369679	4906164	2	0	0	77.3	77.3	1	5466.31	3.25	0	85.75	0	-3.27	0	0	2.57	0	0	0	0	0	0	-7.71	-7.71
Westbrook Inverter Transfor	W_INVTR5	369725	4906574	2	0	0	77.3	77.3	1	5523.23	3.25	0	85.84	0	-3.28	0	0	2.59	0	0	0	0	0	0	-7.81	-7.81
Westbrook Inverter Transfor	W_INVTR7	369786	4906417	2	0	0	77.3	77.3	1	5576.41	3.25	0	85.93	0	-3.29	0	0	2.61	0	0	0	0	0	0	-7.9	-7.9
Westbrook Inverter Transfor	W_INVTR6	369881	4906578	2	0	0	77.3	77.3	1	5679.17	3.25	0	86.09	0	-3.31	0	0	2.64	0	0	0	0	0	0	-8.07	-8.07
Inverter Transformer	MV1-1 T	364721	4906166	2	0	0	56.1	56.1	1	511.08	3.25	0	65.17	0	-0.12	0	0	3.59	0	0	0	0	0	0	-12.58	-12.58
Inverter Transformer	MV1-5 T	364676	4905892	2	0	0	56.1	56.1	1	568.57	3.25	0	66.1	0	-0.11	0	0	3.76	0	0	0	0	0	0	-13.69	-13.69
Inverter Transformer	MV1-2 T	364759	4906063	2	0	0	56.1	56.1	1	568.69	3.25	0	66.1	0	-0.11	0	0	3.76	0	0	0	0	0	0	-13.69	-13.69
Inverter Transformer	MV1-9 T	364555	4905646	2	0	0	56.1	56.1	1	669.89	3.25	0	67.52	0	-0.09	0	0	4.05	0	0	0	0	0	0	-15.42	-15.42
Inverter Transformer	MV1-4 T	364821	4905918	2	0	0	56.1	56.1	1	679.77	3.25	0	67.65	0	-0.09	0	0	4.08	0	0	0	0	0	0	-15.58	-15.58
Inverter Transformer	MV1-8 T	364782	4905647	2	0	0	56.1	56.1	1	808.95	3.25	0	69.16	0	-0.05	0	0	4.42	0	0	0	0	0	0	-17.47	-17.47
Inverter Transformer	MV1-11 T	364649	4905414	2	0	0	56.1	56.1	1	918.13	3.25	0	70.26	0	-0.02	0	0	4.69	0	0	0	0	0	0	-18.87	-18.87
Inverter Transformer	MV1-12 T	365044	4905386	2	0	0	56.1	56.1	1	1178.75	3.25	0	72.43	0	0.08	0	0	5.31	0	0	0	0	0	0	-21.75	-21.75
Inverter Transformer	MV6-4 T	370244	4906966	2	0	0	69.4	69.4	1	6076.72	3.25	0	86.67	0	3.2	0	0	8.06	0	0	0	0	0	0	-28.59	-28.59
Inverter Transformer	MV6-1 T	370230	4907364	2	0	0	69.4	69.4	1	6124.42	3.25	0	86.74	0	3.21	0	0	8.09	0	0	0	0	0	0	-28.69	-28.69
Inverter Transformer	MV2-4 T	365590	4906628	2	0	0	56.1	56.1	1	1435.61	3.25	0	74.14	0	0.17	0	0	5.88	0	0	0	0	0	0	-24.13	-24.13
Inverter Transformer	MV1-15 T	365309	4904994	2	0	0	56.1	56.1	1	1645.97	3.25	0	75.33	0	0.26	0	0	6.33	0	0	0	0	0	0	-25.85	-25.85
Inverter Transformer	MV2-3 T	365814	4906641	2	0	0	56.1	56.1	1	1654.92	3.25	0	75.38	0	0.26	0	0	6.35	0	0	0	0	0	0	-25.92	-25.92
Inverter Transformer	MV2-2 T	365982	4906654	2	0	0	56.1	56.1	1	1820.99	3.25	0	76.21	0	0.33	0	0	6.69	0	0	0	0	0	0	-27.16	-27.16
Inverter Transformer	MV3-12 T	367674	4907594	2	0	0	56.1	56.1	1	3723.02	3.25	0	82.42	0	1.13	0	0	10.04	0	0	0	0	0	0	-37.53	-37.53
Inverter Transformer	MV3-18 T	367757	4907412	2	0	0	56.1	56.1	1	3738.45	3.25	0	82.45	0	1.14	0	0	10.06	0	0	0	0	0	0	-37.59	-37.59
Inverter Transformer	MV3-13 T	367958	4907577	2	0	0	56.1	56.1	1	3982.59	3.25	0	83	0	1.24	0	0	10.43	0	0	0	0	0	0	-38.61	-38.61
Inverter Transformer	MV3-7 T	367951	4907754	2	0	0	56.1	56.1	1	4039.76	3.25	0	83.13	0	1.26	0	0	10.51	0	0	0	0	0	0	-38.84	-38.84
Inverter Transformer	MV3-3 T	367944	4907927	2	0	0	56.1	56.1	1	4102.12	3.25	0	83.26	0	1.28	0	0	10.61	0	0	0	0	0	0	-39.09	-39.09
Inverter Transformer	MV3-17 T	368183	4907472	2	0	0	56.1	56.1	1	4162.14	3.25	0	83.39	0	1.31	0	0	10.69	0	0	0	0	0	0	-39.33	-39.33
Inverter Transformer	MV3-10 T	368162	4907669	2	0	0	56.1	56.1	1	4205.76	3.25	0	83.48	0	1.33	0	0	10.76	0	0	0	0	0	0	-39.5	-39.5
Inverter Transformer	MV3-6 T	368156	4907834	2	0	0	56.1	56.1	1	4259.79	3.25	0	83.59	0	1.35	0	0	10.83	0	0	0	0	0	0	-39.71	-39.71
Inverter Transformer	MV3-19 T	368352	4907347	2	0	0	56.1	56.1	1	4289.17	3.25	0	83.65	0	1.36	0	0	10.88	0	0	0	0	0	0	-39.82	-39.82
Inverter Transformer	MV3-1 T	368150	4907976	2	0	0	56.1	56.1	1	4310.05	3.25	0	83.69	0	1.37	0	0	10.91	0	0	0	0	0	0	-39.9	-39.9
Inverter Transformer	MV3-15 T	368351	4907477	2	0	0	56.1	56.1	1	4324.13	3.25	0	83.72	0	1.37	0	0	10.93	0	0	0	0	0	0	-39.96	-39.96
Inverter Transformer	MV3-11 T	368340	4907662	2	0	0	56.1	56.1	1	4371.01	3.25	0	83.81	0	1.39	0	0	10.99	0	0	0	0	0	0	-40.14	-40.14
Inverter Transformer	MV3-21 T	368484	4907206	2	0	0	56.1	56.1	1	4382.89	3.25	0	83.84	0	1.39	0	0	11.01	0	0	0	0	0	0	-40.18	-40.18
Inverter Transformer	MV3-5 T	368335	4907843	2	0	0	56.1	56.1	1	4429.28	3.25	0	83.93	0	1.41	0	0	11.08	0	0	0	0	0	0	-40.36	-40.36
Inverter Transformer	MV3-16 T	368509	4907475	2	0	0	56.1	56.1	1	4475	3.25	0	84.02	0	1.43	0	0	11.14	0	0	0	0	0	0	-40.53	-40.53
Inverter Transformer	MV3-22 T	368661	4907142	2	0	0	56.1	56.1	1	4542.15	3.25	0	84.15	0	1.46	0	0	11.23	0	0	0	0	0	0	-40.78	-40.78
Inverter Transformer	MV3-9 T	368517	4907703	2	0	0	56.1	56.1	1	4551.68	3.25	0	84.16	0	1.46	0	0	11.25	0	0	0	0	0	0	-40.81	-40.81
Inverter Transformer	MV3-20 T	368683	4907317	2	0	0	56.1	56.1	1	4602.17	3.25	0	84.26	0	1.48	0	0	11.32	0	0	0	0	0	0	-41	-41
Inverter Transformer	MV3-4 T	368507	4907925	2	0	0	56.1	56.1	1	4619.38	3.25	0	84.29	0	1.48	0	0	11.34	0	0	0	0	0	0	-41.06	-41.06
Inverter Transformer	MV3-14 T	368678	4907498	2	0	0	56.1	56.1	1	4643.75	3.25	0	84.34	0	1.49	0	0	11.37	0	0	0	0	0	0	-41.15	-41.15

	Inverter Transformer	MV3-8 T	368685	4907712	2	0	0	56.1	56.1	1	4713.69	3.25	0	84.47	0	1.52	0	0	11.47	0	0	0	0	0	0	-41.4	-41.4
	Inverter Transformer	MV3-2 T	368677	4907928	2	0	0	56.1	56.1	1	4778.88	3.25	0	84.59	0	1.54	0	0	11.56	0	0	0	0	0	0	-41.63	-41.63
	Inverter Transformer	MV4-13 T	369057	4908605	2	0	0	56.1	56.1	1	5398.43	3.25	0	85.65	0	1.77	0	0	12.37	0	0	0	0	0	0	-43.72	-43.72
	Inverter Transformer	MV4-15 T	369170	4908481	2	0	0	56.1	56.1	1	5447.47	3.25	0	85.72	0	1.78	0	0	12.43	0	0	0	0	0	0	-43.88	-43.88
	Inverter Transformer	MV4-14 T	369182	4908507	2	0	0	56.1	56.1	1	5469.2	3.25	0	85.76	0	1.79	0	0	12.46	0	0	0	0	0	0	-43.95	-43.95
	Inverter Transformer	MV4-12 T	369049	4908803	2	0	0	56.1	56.1	1	5481.65	3.25	0	85.78	0	1.79	0	0	12.47	0	0	0	0	0	0	-43.99	-43.99
	Inverter Transformer	MV4-7 T	369040	4909001	2	0	0	56.1	56.1	1	5569.81	3.25	0	85.92	0	1.82	0	0	12.58	0	0	0	0	0	0	-44.26	-44.26
	Inverter Transformer	MV4-4 T	369033	4909199	2	0	0	56.1	56.1	1	5665.24	3.25	0	86.06	0	1.86	0	0	12.7	0	0	0	0	0	0	-44.56	-44.56
	Inverter Transformer	MV4-11 T	369269	4908855	2	0	0	56.1	56.1	1	5700.51	3.25	0	86.12	0	1.87	0	0	12.74	0	0	0	0	0	0	-44.67	-44.67
	Inverter Transformer	MV4-10 T	369307	4908858	2	0	0	56.1	56.1	1	5735.62	3.25	0	86.17	0	1.88	0	0	12.79	0	0	0	0	0	0	-44.78	-44.78
	Inverter Transformer	MV4-1 T	369017	4909397	2	0	0	56.1	56.1	1	5758.39	3.25	0	86.21	0	1.89	0	0	12.81	0	0	0	0	0	0	-44.85	-44.85
	Inverter Transformer	MV4-8 T	369262	4909001	2	0	0	56.1	56.1	1	5763.27	3.25	0	86.21	0	1.89	0	0	12.82	0	0	0	0	0	0	-44.86	-44.86
	Inverter Transformer	MV4-9 T	369284	4909001	2	0	0	56.1	56.1	1	5782.55	3.25	0	86.24	0	1.89	0	0	12.84	0	0	0	0	0	0	-44.92	-44.92
	Inverter Transformer	MV4-6 T	369249	4909192	2	0	0	56.1	56.1	1	5846.55	3.25	0	86.34	0	1.92	0	0	12.92	0	0	0	0	0	0	-45.11	-45.11
	Inverter Transformer	MV4-5 T	369283	4909199	2	0	0	56.1	56.1	1	5879.41	3.25	0	86.39	0	1.93	0	0	12.96	0	0	0	0	0	0	-45.21	-45.21
	Inverter Transformer	MV4-3 T	369234	4909397	2	0	0	56.1	56.1	1	5940.63	3.25	0	86.48	0	1.95	0	0	13.03	0	0	0	0	0	0	-45.4	-45.4
	Inverter Transformer	MV4-2 T	369267	4909397	2	0	0	56.1	56.1	1	5968.55	3.25	0	86.52	0	1.95	0	0	13.07	0	0	0	0	0	0	-45.48	-45.48
	Inverter Transformer	MV6-2 T	370091	4907339	2	0	0	56.1	56.1	1	5983.19	3.25	0	86.54	0	1.96	0	0	13.08	0	0	0	0	0	0	-45.52	-45.52
	Inverter Transformer	MV6-3 T	370202	4907140	2	0	0	56.1	56.1	1	6058.95	3.25	0	86.65	0	1.98	0	0	13.17	0	0	0	0	0	0	-45.75	-45.75
	Inverter Transformer	MV5-6 T	369987	4908507	2	0	0	56.1	56.1	1	6209.69	3.25	0	86.86	0	2.03	0	0	13.35	0	0	0	0	0	0	-46.18	-46.18
	Inverter Transformer	MV5-5 T	370021	4908690	2	0	0	56.1	56.1	1	6310.62	3.25	0	87	0	2.06	0	0	13.46	0	0	0	0	0	0	-46.47	-46.47
	Inverter Transformer	MV5-2 T	370011	4908853	2	0	0	56.1	56.1	1	6367.02	3.25	0	87.08	0	2.08	0	0	13.53	0	0	0	0	0	0	-46.63	-46.63
	Inverter Transformer	MV5-1 T	370015	4909142	2	0	0	56.1	56.1	1	6495.35	3.25	0	87.25	0	2.12	0	0	13.67	0	0	0	0	0	0	-46.98	-46.98
	Inverter Transformer	MV5-3 T	370237	4908851	2	0	0	56.1	56.1	1	6572.69	3.25	0	87.35	0	2.14	0	0	13.76	0	0	0	0	0	0	-47.2	-47.2
	Inverter Transformer	MV5-4 T	370330	4908707	2	0	0	56.1	56.1	1	6602.49	3.25	0	87.39	0	2.15	0	0	13.79	0	0	0	0	0	0	-47.28	-47.28
	Line Reactor	NGR	369421	4908787.5	5	0	0	45.4	45.4	1	5805.61	5.25	0	86.28	0	3.24	1.36	0.1	2.37	0	0	0	0	0	0	-47.9	-47.9
Limit. Valu	0	0																								
Level D/N:	35.0507	35.0507																								

Receiver: Vacant Lot Receptor
ID: S-VLR4
X: 364272
Y: 4906314
Z: 4.5
Ground: 0

ISO	Description	ID	X	Y	Z	Ground	ReflOrd	LxT	LxN	L/A	Dist.	hm	Freq	Adiv	K0b	Agr	Abar	z	Aatm	Afol	Ahous	Cmet	CmetN	Dc	RL	LtotT	LtotN
	Inverter	MV1-1	364715	4906166	2	0	0	100.3	100.3	1	467.08	3.25	0	64.39	0	-0.57	0	0	8.26	0	0	0	0	0	0	28.24	28.24
	Inverter	MV1-6	364477	4905835	2	0	0	100.3	100.3	1	521.03	3.25	0	65.34	0	-0.54	0	0	8.68	0	0	0	0	0	0	26.83	26.83
	Inverter	MV1-2	364753	4906063	2	0	0	100.3	100.3	1	542.56	3.25	0	65.69	0	-0.52	0	0	8.84	0	0	0	0	0	0	26.31	26.31
	Inverter	MV1-5	364671	4905892	2	0	0	100.3	100.3	1	580.77	3.25	0	66.28	0	-0.49	0	0	9.09	0	0	0	0	0	0	25.44	25.44
	Inverter	MV1-4	364815	4905918	2	0	0	100.3	100.3	1	672.06	3.25	0	67.55	0	-0.43	0	0	9.6	0	0	0	0	0	0	23.59	23.59
	Inverter	MV1-9	364561	4905646	2	0	0	100.3	100.3	1	727.84	3.25	0	68.24	0	-0.39	0	0	9.87	0	0	0	0	0	0	22.6	22.6
	Inverter	MV1-8	364788	4905647	2	0	0	100.3	100.3	1	843.3	3.25	0	69.52	0	-0.33	0	0	10.35	0	0	0	0	0	0	20.77	20.77
	Inverter	MV1-11	364655	4905414	2	0	0	100.3	100.3	1	978.11	3.25	0	70.81	0	-0.26	0	0	10.84	0	0	0	0	0	0	18.92	18.92
	Inverter	MV1-3	364440	4906039	2	0	0	89.1	89.1	1	322.27	3.25	0	61.16	0	0.39	0	0	4.29	0	0	0	0	0	0	23.22	23.22
	Inverter	MV1-7	364925	4905782	2	0	0	97.3	97.3	1	842.28	3.25	0	69.51	0	-0.33	0	0	10.35	0	0	0	0	0	0	17.78	17.78
	Inverter	MV1-12	365038	4905386	2	0	0	100.3	100.3	1	1203.31	3.25	0	72.61	0	-0.15	0	0	11.54	0	0	0	0	0	0	16.32	16.32
	Inverter	MV2-4	365586	4906624	2	0	0	100.3	100.3	1	1350.07	3.25	0	73.61	0	-0.09	0	0	11.94	0	0	0	0	0	0	14.86	14.86
	Sol_Luce Substation	S_Substation	369426	4908792	3.5	0	0	112.1	112.1	1	5718.76	5.25	0	86.15	0	1.09	2.7	0.3	9.44	0	0	0	0	0	0	12.7	12.7
	Inverter	MV1-10	365004	4905564	2	0	0	97.3	97.3	1	1048.01	3.25	0	71.41	0	-0.22	0	0	11.07	0	0	0	0	0	0	15.06	15.06
	Inverter	MV2-3	365820	4906641	2	0	0	100.3	100.3	1	1582.16	3.25	0	74.99	0	0	0	0	12.53	0	0	0	0	0	0	12.81	12.81
	Inverter	MV1-13	364731	4905241	2	0	0	97.3	97.3	1	1167.05	3.25	0	72.34	0	-0.17	0	0	11.43	0	0	0	0	0	0	13.71	13.71
	Inverter	MV1-15	365315	4904994	2	0	0	100.3	100.3	1	1682.34	3.25	0	75.52	0	0.03	0	0	12.76	0	0	0	0	0	0	12	12
	Inverter	MV1-14	365163	4905049	2	0	0	97.3	97.3	1	1547.29	3.25	0	74.79	0	-0.02	0	0	12.44	0	0	0	0	0	0	10.1	10.1
	Inverter	MV2-1	365842	4906816	2	0	0	97.3	97.3	1	1648.31	3.25	0	75.34	0	0.02	0	0	12.68	0	0	0	0	0	0	9.27	9.27
	Inverter	MV3-12	367668	4907594	2	0	0	100.3	100.3	1	3629.22	3.25	0	82.2	0	0.47	0	0	16.45	0	0	0	0	0	0	1.2	1.2
	Inverter	MV3-18	367752	4907412	2	0	0	100.3	100.3	1	3649.11	3.25	0	82.24	0	0.47	0	0	16.48	0	0	0	0	0	0	1.11	1.11
	Inverter	MV3-13	367963	4907577	2	0	0	100.3	100.3	1	3901.11	3.25	0	82.82	0	0.51	0	0	16.89	0	0	0	0	0	0	0.09	0.09
	Inverter	MV3-7	367945	4907754	2	0	0	100.3	100.3	1	3945.19	3.25	0	82.92	0	0.52	0	0	16.96	0	0	0	0	0	0	-0.09	-0.09
	Inverter	MV3-3	367939	4907927	2	0	0	100.3	100.3	1	4006.08	3.25	0	83.05	0	0.53	0	0	17.06	0	0	0	0	0	0	-0.33	-0.33
	Inverter	MV3-17	368178	4907472	2	0	0	100.3	100.3	1	4074.04	3.25	0	83.2	0	0.54	0	0	17.17	0	0	0	0	0	0	-0.59	-0.59
	Inverter	MV3-10	368167	4907669	2	0	0	100.3	100.3	1	4123.96	3.25	0	83.31	0	0.54	0	0	17.25	0	0	0	0	0	0	-0.78	-0.78
	Inverter	MV3-6	368162	4907834	2	0	0	100.3	100.3	1	4176.42	3.25	0	83.42	0	0.55	0	0	17.33	0	0	0	0	0	0	-0.98	-0.98
	Inverter	MV3-19	368357	4907347	2	0	0	100.3	100.3	1	4213.59	3.25	0	83.49	0	0.56	0	0	17.39	0	0	0	0	0	0	-1.12	-1.12
	Inverter	MV3-15	368357	4907477	2	0	0	100.3	100.3	1	4247.33	3.25	0	83.56	0	0.56	0	0	17.44	0	0	0	0	0	0	-1.25	-1.25
	Inverter	MV3-11	368346	4907662	2	0	0	100.3	100.3	1	4291.22	3.25	0	83.65	0	0.57	0	0	17.51	0	0	0	0	0	0	-1.41	-1.41
	Inverter	MV3-21	368478	4907206	2	0	0	100.3	100.3	1	4299.55	3.25	0	83.67	0	0.57	0	0	17.52	0	0	0	0	0	0	-1.44	-1.44
	Inverter	MV3-16	368514	4907475	2	0	0	100.3	100.3	1	4398.01	3.25	0	83.87	0	0.58	0	0	17.67	0	0	0	0	0	0	-1.81	-1.81
	Inverter	MV3-9	368512	4907703	2	0	0	100.3	100.3	1	4461.72	3.25	0	83.99	0	0.59	0	0	17.77	0	0	0	0	0	0	-2.04	-2.04
	Inverter	MV3-20	368689	4907317	2	0	0	100.3	100.3	1	4529.45	3.25	0	84.12	0	0.59	0	0	17.88	0	0	0	0	0	0	-2.28	-2.28
	Inverter	MV3-14	368684	4907498	2	0	0	100.3	100.3	1	4568.11	3.25	0	84.19	0	0.6	0	0	17.93	0	0	0	0	0	0	-2.42	-2.42
	Inverter	MV3-8	368680	4907712	2	0	0	100.3	100.3	1	4624.38	3.25	0	84.3	0	0.6	0	0	18.02	0	0	0	0	0	0	-2.61	-2.61
	Inverter	MV4-7	369035	4909001	2	0	0	100.3	100.3	1	5468.65	3.25	0	85.76	0	0.68	0	0	19.26	0	0	0	0	0	0	-5.38	-5.38

Inverter	MV4-4	369027	4909199	2	0	0	100.3	100.3	1	5561.77	3.25	0	85.9	0	0.68	0	0	19.39	0	0	0	0	0	0	-5.66	-5.66
Inverter	MV4-11	369264	4908855	2	0	0	100.3	100.3	1	5601.5	3.25	0	85.97	0	0.69	0	0	19.44	0	0	0	0	0	0	-5.78	-5.78
Inverter	MV4-10	369312	4908858	2	0	0	100.3	100.3	1	5645.67	3.25	0	86.03	0	0.69	0	0	19.51	0	0	0	0	0	0	-5.92	-5.92
Inverter	MV4-1	369011	4909397	2	0	0	100.3	100.3	1	5653.58	3.25	0	86.05	0	0.69	0	0	19.52	0	0	0	0	0	0	-5.94	-5.94
Inverter	MV4-8	369256	4909001	2	0	0	100.3	100.3	1	5662.18	3.25	0	86.06	0	0.69	0	0	19.53	0	0	0	0	0	0	-5.97	-5.97
Inverter	MV4-9	369289	4909001	2	0	0	100.3	100.3	1	5691.24	3.25	0	86.1	0	0.69	0	0	19.57	0	0	0	0	0	0	-6.05	-6.05
Inverter	MV4-6	369243	4909192	2	0	0	100.3	100.3	1	5744.02	3.25	0	86.18	0	0.69	0	0	19.64	0	0	0	0	0	0	-6.21	-6.21
Inverter	MV4-5	369289	4909199	2	0	0	100.3	100.3	1	5787.36	3.25	0	86.25	0	0.7	0	0	19.7	0	0	0	0	0	0	-6.34	-6.34
Inverter	MV4-3	369229	4909397	2	0	0	100.3	100.3	1	5837.53	3.25	0	86.32	0	0.7	0	0	19.77	0	0	0	0	0	0	-6.48	-6.48
Inverter	MV4-2	369272	4909397	2	0	0	100.3	100.3	1	5874.09	3.25	0	86.38	0	0.7	0	0	19.82	0	0	0	0	0	0	-6.59	-6.59
Inverter	MV6-2	370085	4907339	2	0	0	100.3	100.3	1	5902.68	3.25	0	86.42	0	0.7	0	0	19.86	0	0	0	0	0	0	-6.67	-6.67
Inverter	MV6-3	370207	4907140	2	0	0	100.3	100.3	1	5992.2	3.25	0	86.55	0	0.7	0	0	19.98	0	0	0	0	0	0	-6.93	-6.93
Inverter	MV5-5	370015	4908690	2	0	0	100.3	100.3	1	6215.1	3.25	0	86.87	0	0.71	0	0	20.28	0	0	0	0	0	0	-7.55	-7.55
Inverter	MV5-2	370006	4908853	2	0	0	100.3	100.3	1	6270.99	3.25	0	86.95	0	0.71	0	0	20.36	0	0	0	0	0	0	-7.7	-7.7
Inverter	MV2-2	365977	4906654	2	0	0	89.1	89.1	1	1738.57	3.25	0	75.8	0	0.85	0	0	7.61	0	0	0	0	0	0	4.79	4.79
Inverter	MV5-1	370020	4909142	2	0	0	100.3	100.3	1	6406.02	3.25	0	87.13	0	0.71	0	0	20.54	0	0	0	0	0	0	-8.07	-8.07
Inverter	MV5-3	370231	4908851	2	0	0	100.3	100.3	1	6476.58	3.25	0	87.23	0	0.71	0	0	20.63	0	0	0	0	0	0	-8.26	-8.26
Inverter	MV5-4	370324	4908707	2	0	0	100.3	100.3	1	6507.93	3.25	0	87.27	0	0.71	0	0	20.67	0	0	0	0	0	0	-8.34	-8.34
Inverter	MV6-1	370235	4907364	2	0	0	97.3	97.3	1	6054.74	3.25	0	86.64	0	0.71	0	0	20.07	0	0	0	0	0	0	-10.1	-10.1
DSTATCOM - 10 MVAR #2	DSAT2	369403	4908757	2.5	0	0	96.6	96.6	1	5682.91	3.5	0	86.09	0	3.75	0	0	3.69	0	0	0	0	0	0	3.1	3.1
DSTATCOM - 10 MVAR #1	DSAT1	369437	4908757	2.5	0	0	96.6	96.6	1	5713.62	3.5	0	86.14	0	3.75	0	0	3.7	0	0	0	0	0	0	3.04	3.04
Gardiner Substation	G_Sub	366586.3	4903349.9	2.5	0	0	90.8	90.8	1	3760.57	4.25	0	82.51	0	1.29	2.67	0.25	7.04	0	0	0	0	0	0	-2.73	-2.73
SubstationTransformer	W_ST	369711.17	4906112.3	2.5	0	0	92	92	1	5442.91	4.25	0	85.72	0	1.75	2.23	0.29	9.13	0	0	0	0	0	0	-6.85	-6.85
Inverter	MV3-1	368156	4907976	2	0	0	89.1	89.1	1	4224.65	3.25	0	83.52	0	1.45	0	0	11.4	0	0	0	0	0	0	-7.31	-7.31
Inverter	MV3-5	368340	4907843	2	0	0	89.1	89.1	1	4345.86	3.25	0	83.76	0	1.48	0	0	11.57	0	0	0	0	0	0	-7.75	-7.75
Inverter	MV3-22	368656	4907142	2	0	0	89.1	89.1	1	4461.51	3.25	0	83.99	0	1.51	0	0	11.73	0	0	0	0	0	0	-8.17	-8.17
Inverters	G_Inv1	366526.4	4903225.8	2	0	0	87.7	87.7	1	3823.52	3.25	0	82.65	0	2.78	0	0	4.68	0	0	0	0	0	0	-2.45	-2.45
Inverter	MV3-4	368502	4907925	2	0	0	89.1	89.1	1	4526.39	3.25	0	84.12	0	1.52	0	0	11.82	0	0	0	0	0	0	-8.4	-8.4
Inverters	G_Inv2	366676.9	4903239.1	2	0	0	87.7	87.7	1	3903.66	4.2	0	82.83	0	3.17	1.52	0.01	4.77	0	0	0	0	0	0	-4.63	-4.63
Inverters	G_Inv3	366583.7	4903091.4	2	0	0	87.7	87.7	1	3965.99	3.25	0	82.97	0	2.79	0	0	4.84	0	0	0	0	0	0	-2.93	-2.93
Inverter	MV3-2	368671	4907928	2	0	0	89.1	89.1	1	4685.74	3.25	0	84.42	0	1.56	0	0	12.04	0	0	0	0	0	0	-8.96	-8.96
Inverters	G_Inv4	366732.8	4903105	2	0	0	87.7	87.7	1	4043.91	3.25	0	83.14	0	2.8	0	0	4.92	0	0	0	0	0	0	-3.19	-3.19
Inverters	G_Inv5	366638.5	4902958.1	2	0	0	87.7	87.7	1	4106.38	3.25	0	83.27	0	2.8	0	0	4.99	0	0	0	0	0	0	-3.4	-3.4
Inverters	G_Inv6	366788.5	4902972	2	0	0	87.7	87.7	1	4183.51	3.25	0	83.43	0	2.81	0	0	5.07	0	0	0	0	0	0	-3.65	-3.65
Inverters	G_Inv7	366694.6	4902824.7	2	0	0	87.7	87.7	1	4247.85	3.25	0	83.56	0	2.81	0	0	5.14	0	0	0	0	0	0	-3.86	-3.86
Inverters	G_Inv8	366844.5	4902838.5	2	0	0	87.7	87.7	1	4323.99	3.25	0	83.72	0	2.82	0	0	5.22	0	0	0	0	0	0	-4.1	-4.1
Westbrook Inverter Enclosur	W_INV2	369374	4906388	2	0	0	89.1	89.1	1	5102.54	3.25	0	85.16	0	1.67	0	0	12.6	0	0	0	0	0	0	-10.36	-10.36
Inverters	G_Inv9	366750.9	4902691.8	2	0	0	87.7	87.7	1	4389.22	3.25	0	83.85	0	2.82	0	0	5.29	0	0	0	0	0	0	-4.3	-4.3
Fixed Reactor Bank 1	FRB1	369378	4908755	6	0	0	89.8	89.8	1	5659.48	5.25	0	86.06	0	-0.47	0	0	9.37	0	0	0	0	0	0	-5.19	-5.19
Westbrook Inverter Enclosur	W_INV3	369508	4906164	2	0	0	89.1	89.1	1	5238.15	3.25	0	85.38	0	1.7	0	0	12.78	0	0	0	0	0	0	-10.8	-10.8
Inverters	G_Inv10	366900.7	4902704.8	2	0	0	87.7	87.7	1	4465.02	3.25	0	84	0	2.83	0	0	5.37	0	0	0	0	0	0	-4.54	-4.54
Fixed Reactor Bank 2	FRB2	369464	4908755	6	0	0	89.8	89.8	1	5737.19	5.25	0	86.17	0	-0.46	0	0	9.46	0	0	0	0	0	0	-5.4	-5.4
Inverter	MV4-13	369051	4908605	2	0	0	89.1	89.1	1	5299.77	3.25	0	85.49	0	1.71	0	0	12.86	0	0	0	0	0	0	-11	-11
Inverter	MV4-15	369176	4908481	2	0	0	89.1	89.1	1	5361.45	3.25	0	85.59	0	1.73	0	0	12.94	0	0	0	0	0	0	-11.2	-11.2
Inverter	MV4-14	369176	4908507	2	0	0	89.1	89.1	1	5372.01	3.25	0	85.6	0	1.73	0	0	12.96	0	0	0	0	0	0	-11.23	-11.23
Inverter	MV4-12	369043	4908803	2	0	0	89.1	89.1	1	5381.22	3.25	0	85.62	0	1.73	0	0	12.97	0	0	0	0	0	0	-11.26	-11.26
Westbrook Inverter Enclosur	W_INV4	369673	4906164	2	0	0	89.1	89.1	1	5403.08	3.25	0	85.65	0	1.74	0	0	13	0	0	0	0	0	0	-11.33	-11.33
Westbrook Inverter Enclosur	W_INV5	369719	4906574	2	0	0	89.1	89.1	1	5453.2	3.25	0	85.73	0	1.75	0	0	13.06	0	0	0	0	0	0	-11.49	-11.49
Westbrook Inverter Enclosur	W_INV7	369780	4906417	2	0	0	89.1	89.1	1	5508.96	3.25	0	85.82	0	1.77	0	0	13.13	0	0	0	0	0	0	-11.66	-11.66
Westbrook Inverter Enclosur	W_INV6	369875	4906578	2	0	0	89.1	89.1	1	5609.22	3.25	0	85.98	0	1.79	0	0	13.26	0	0	0	0	0	0	-11.97	-11.97
Inverter	MV5-6	369982	4908507	2	0	0	89.1	89.1	1	6116.65	3.25	0	86.73	0	1.91	0	0	13.91	0	0	0	0	0	0	-13.5	-13.5
Westbrook Inverter Enclosur	W_INV1	369409	4906578	2	0	0	86.1	86.1	1	5143.78	3.25	0	85.23	0	1.68	0	0	12.66	0	0	0	0	0	0	-13.5	-13.5
Inverter Transformer	MV1-7 T	364919	4905782	2	0	0	69.4	69.4	1	837.64	3.25	0	69.46	0	1.53	0	0	3.57	0	0	0	0	0	0	-5.21	-5.21
Inverter	MV6-4	370250	4906966	2	0	0	86.1	86.1	1	6013.45	3.25	0	86.58	0	1.89	0	0	13.78	0	0	0	0	0	0	-16.19	-16.19
Inverter Transformer	MV1-10 T	365010	4905564	2	0	0	69.4	69.4	1	1052.21	3.25	0	71.44	0	1.72	0	0	3.88	0	0	0	0	0	0	-7.7	-7.7
Inverter Transformer	MV1-13 T	364725	4905241	2	0	0	69.4	69.4	1	1164.71	3.25	0	72.32	0	1.8	0	0	4.03	0	0	0	0	0	0	-8.8	-8.8
Inverter Transformer	MV1-3 T	364435	4906039	2	0	0	56.1	56.1	1	319.69	3.25	0	61.09	0	-0.08	0	0	2.88	0	0	0	0	0	0	-7.83	-7.83
Inverter Transformer	MV1-14 T	365157	4905049	2	0	0	69.4	69.4	1	1543.84	3.25	0	74.77	0	1.99	0	0	4.48	0	0	0	0	0	0	-11.9	-11.9
Inverter Transformer	MV2-1 T	365836	4906816	2	0	0	69.4	69.4	1	1642.59	3.25	0	75.31	0	2.03	0	0	4.59	0	0	0	0	0	0	-12.59	-12.59
Westbrook Inverter Transfor	W_INVTR1	369403	4906578	2	0	0	78.2	78.2	1	5137.79	3.5	0	85.22	0	-3.2	0	0	2.46	0	0	0	0	0	0	-6.23	-6.23
Westbrook Inverter Transfor	W_INVTR2	369368	4906388	2	0	0	77.3	77.3	1	5096.54	3.25	0	85.15	0	-3.2	0	0	2.45	0	0	0	0	0	0	-7.05	-7.05
Westbrook Inverter Transfor	W_INVTR3	369514	4906164	2	0	0	77.3	77.3	1	5244.15	3.25	0	85.39	0	-3.23	0	0	2.5	0	0	0	0	0	0	-7.32	-7.32
Westbrook Inverter Transfor	W_INVTR4	369679	4906164	2	0	0	77.3	77.3	1	5409.08	3.25	0	85.66	0	-3.26	0	0	2.55	0	0	0	0	0	0	-7.61	-7.61
Westbrook Inverter Transfor	W_INVTR5	369725	4906574	2	0	0	77.3	77.3	1	5459.2	3.25	0	85.74	0	-3.27	0	0	2.57	0	0	0	0	0	0	-7.7	-7.7
Inverter Transformer	MV1-1 T	364721	4906166	2	0	0	56.1	56.1	1	472.77	3.25	0	64.49	0	-0.12	0	0	3.46	0	0	0	0	0	0	-11.78	-11.78
Westbrook Inverter Transfor	W_INVTR7	369786	4906417	2	0	0	77.3	77.3	1	5514.96	3.25	0	85.83	0	-3.28	0	0	2.59	0	0	0	0	0	0	-7.8	-7.8
Westbrook Inverter Transfor	W_INVTR6	369881	4906578	2	0	0	77.3	77.3	1	5615.21	3.25	0	85.99	0	-3.3	0	0	2.62	0	0	0	0	0	0	-7.97	-7.97
Inverter Transformer	MV1-6 T	364482	4905835	2	0	0	56.1	56.1	1	523.02	3.25	0	65.37	0	-0.12	0	0	3.62	0	0	0	0	0	0	-12.82	-12.82
Inverter Transformer	MV1-2 T	364759	4906063	2	0	0	56.1	56.1	1	547.88	3.25	0	65.77	0	-0.11	0	0	3.7	0	0	0	0	0	0	-13.3	-13.3
Inverter Transformer	MV1-5 T	364676	4905892	2	0	0	56.1	56.1	1	584.21	3.25	0	66.33	0	-0.11	0	0	3.81	0	0	0	0	0	0	-13.98	-13.98
Inverter Transformer	MV1-4 T	364821	4905918	2	0	0	56.1	56.1	1	676.92	3.25	0	67.61	0	-0.09	0	0	4.07	0	0	0	0	0	0	-15.54	-15.54
Inverter Transformer	MV1-9 T	364555	4905646	2	0	0	56.1	56.1	1	725.48	3.25	0	68.21	0	-0.07	0	0	4.2	0	0	0	0	0	0	-16.28	-16.28
Inverter Transformer	MV1-8 T	364782	4905647	2	0	0	56.1	56.1	1	839.64	3.25	0	69.48	0	-0.04	0	0	4.5	0	0	0	0	0	0	-17.88	-17.88
Inverter Transformer	MV1-11 T	364649	4905414	2	0	0	56.1	56.1	1	975.77	3.25	0	70.79	0	0	0	0	4.83	0	0	0	0	0	0	-19.56	-19.56

	Inverter Transformer	MV1-12 T	365044	4905386	2	0	0	56.1	56.1	1	1207.13	3.25	0	72.64	0	0.09	0	0	5.37	0	0	0	0	0	0	-22.03	-22.03
	Inverter Transformer	MV6-4 T	370244	4906966	2	0	0	69.4	69.4	1	6007.49	3.25	0	86.57	0	3.19	0	0	8.02	0	0	0	0	0	0	-28.44	-28.44
	Inverter Transformer	MV6-1 T	370230	4907364	2	0	0	69.4	69.4	1	6049.82	3.25	0	86.63	0	3.2	0	0	8.05	0	0	0	0	0	0	-28.53	-28.53
	Inverter Transformer	MV2-4 T	365590	4906628	2	0	0	56.1	56.1	1	1354.89	3.25	0	73.64	0	0.14	0	0	5.7	0	0	0	0	0	0	-23.42	-23.42
	Inverter Transformer	MV2-3 T	365814	4906641	2	0	0	56.1	56.1	1	1576.29	3.25	0	74.95	0	0.23	0	0	6.18	0	0	0	0	0	0	-25.3	-25.3
	Inverter Transformer	MV1-15 T	365309	4904994	2	0	0	56.1	56.1	1	1678.62	3.25	0	75.5	0	0.27	0	0	6.39	0	0	0	0	0	0	-26.11	-26.11
	Inverter Transformer	MV2-2 T	365982	4906654	2	0	0	56.1	56.1	1	1743.48	3.25	0	75.83	0	0.3	0	0	6.53	0	0	0	0	0	0	-26.6	-26.6
	Inverter Transformer	MV3-12 T	367674	4907594	2	0	0	56.1	56.1	1	3634.83	3.25	0	82.21	0	1.1	0	0	9.9	0	0	0	0	0	0	-37.15	-37.15
	Inverter Transformer	MV3-18 T	367757	4907412	2	0	0	56.1	56.1	1	3653.88	3.25	0	82.26	0	1.1	0	0	9.93	0	0	0	0	0	0	-37.23	-37.23
	Inverter Transformer	MV3-13 T	367958	4907577	2	0	0	56.1	56.1	1	3896.38	3.25	0	82.81	0	1.2	0	0	10.3	0	0	0	0	0	0	-38.26	-38.26
	Inverter Transformer	MV3-7 T	367951	4907754	2	0	0	56.1	56.1	1	3950.78	3.25	0	82.93	0	1.22	0	0	10.38	0	0	0	0	0	0	-38.48	-38.48
	Inverter Transformer	MV3-3 T	367944	4907927	2	0	0	56.1	56.1	1	4010.66	3.25	0	83.06	0	1.25	0	0	10.47	0	0	0	0	0	0	-38.72	-38.72
	Inverter Transformer	MV3-17 T	368183	4907472	2	0	0	56.1	56.1	1	4078.83	3.25	0	83.21	0	1.28	0	0	10.57	0	0	0	0	0	0	-39	-39
	Inverter Transformer	MV3-10 T	368162	4907669	2	0	0	56.1	56.1	1	4119.24	3.25	0	83.3	0	1.29	0	0	10.63	0	0	0	0	0	0	-39.16	-39.16
	Inverter Transformer	MV3-6 T	368156	4907834	2	0	0	56.1	56.1	1	4170.83	3.25	0	83.4	0	1.31	0	0	10.71	0	0	0	0	0	0	-39.36	-39.36
	Inverter Transformer	MV3-19 T	368352	4907347	2	0	0	56.1	56.1	1	4208.74	3.25	0	83.48	0	1.33	0	0	10.76	0	0	0	0	0	0	-39.51	-39.51
	Inverter Transformer	MV3-1 T	368150	4907976	2	0	0	56.1	56.1	1	4219.14	3.25	0	83.5	0	1.33	0	0	10.78	0	0	0	0	0	0	-39.55	-39.55
	Inverter Transformer	MV3-15 T	368351	4907477	2	0	0	56.1	56.1	1	4241.56	3.25	0	83.55	0	1.34	0	0	10.81	0	0	0	0	0	0	-39.64	-39.64
	Inverter Transformer	MV3-11 T	368340	4907662	2	0	0	56.1	56.1	1	4285.53	3.25	0	83.64	0	1.36	0	0	10.87	0	0	0	0	0	0	-39.81	-39.81
	Inverter Transformer	MV3-21 T	368484	4907206	2	0	0	56.1	56.1	1	4305.42	3.25	0	83.68	0	1.36	0	0	10.9	0	0	0	0	0	0	-39.89	-39.89
	Inverter Transformer	MV3-5 T	368335	4907843	2	0	0	56.1	56.1	1	4341.18	3.25	0	83.75	0	1.38	0	0	10.95	0	0	0	0	0	0	-40.02	-40.02
	Inverter Transformer	MV3-16 T	368509	4907475	2	0	0	56.1	56.1	1	4393.19	3.25	0	83.86	0	1.4	0	0	11.03	0	0	0	0	0	0	-40.22	-40.22
	Inverter Transformer	MV3-22 T	368661	4907142	2	0	0	56.1	56.1	1	4466.42	3.25	0	84	0	1.43	0	0	11.13	0	0	0	0	0	0	-40.5	-40.5
	Inverter Transformer	MV3-9 T	368517	4907703	2	0	0	56.1	56.1	1	4466.47	3.25	0	84	0	1.43	0	0	11.13	0	0	0	0	0	0	-40.5	-40.5
	Inverter Transformer	MV3-20 T	368683	4907317	2	0	0	56.1	56.1	1	4523.6	3.25	0	84.11	0	1.45	0	0	11.21	0	0	0	0	0	0	-40.71	-40.71
	Inverter Transformer	MV3-4 T	368507	4907925	2	0	0	56.1	56.1	1	4531.07	3.25	0	84.12	0	1.45	0	0	11.22	0	0	0	0	0	0	-40.74	-40.74
	Inverter Transformer	MV3-14 T	368678	4907498	2	0	0	56.1	56.1	1	4562.31	3.25	0	84.18	0	1.46	0	0	11.26	0	0	0	0	0	0	-40.85	-40.85
	Inverter Transformer	MV3-8 T	368685	4907712	2	0	0	56.1	56.1	1	4629.14	3.25	0	84.31	0	1.49	0	0	11.35	0	0	0	0	0	0	-41.09	-41.09
	Inverter Transformer	MV3-2 T	368677	4907928	2	0	0	56.1	56.1	1	4691.38	3.25	0	84.43	0	1.51	0	0	11.44	0	0	0	0	0	0	-41.32	-41.32
	Inverter Transformer	MV4-13 T	369057	4908605	2	0	0	56.1	56.1	1	5305.18	3.25	0	85.49	0	1.73	0	0	12.25	0	0	0	0	0	0	-43.42	-43.42
	Inverter Transformer	MV4-15 T	369170	4908481	2	0	0	56.1	56.1	1	5355.96	3.25	0	85.58	0	1.75	0	0	12.31	0	0	0	0	0	0	-43.58	-43.58
	Inverter Transformer	MV4-14 T	369182	4908507	2	0	0	56.1	56.1	1	5377.49	3.25	0	85.61	0	1.76	0	0	12.34	0	0	0	0	0	0	-43.65	-43.65
	Inverter Transformer	MV4-12 T	369049	4908803	2	0	0	56.1	56.1	1	5386.54	3.25	0	85.63	0	1.76	0	0	12.35	0	0	0	0	0	0	-43.68	-43.68
	Inverter Transformer	MV4-7 T	369040	4909001	2	0	0	56.1	56.1	1	5473.01	3.25	0	85.76	0	1.79	0	0	12.46	0	0	0	0	0	0	-43.96	-43.96
	Inverter Transformer	MV4-4 T	369033	4909199	2	0	0	56.1	56.1	1	5566.9	3.25	0	85.91	0	1.82	0	0	12.58	0	0	0	0	0	0	-44.26	-44.26
	Inverter Transformer	MV4-11 T	369269	4908855	2	0	0	56.1	56.1	1	5605.95	3.25	0	85.97	0	1.84	0	0	12.63	0	0	0	0	0	0	-44.38	-44.38
	Inverter Transformer	MV4-10 T	369307	4908858	2	0	0	56.1	56.1	1	5641.2	3.25	0	86.03	0	1.85	0	0	12.67	0	0	0	0	0	0	-44.49	-44.49
	Inverter Transformer	MV4-1 T	369017	4909397	2	0	0	56.1	56.1	1	5658.61	3.25	0	86.05	0	1.85	0	0	12.69	0	0	0	0	0	0	-44.54	-44.54
	Inverter Transformer	MV4-8 T	369262	4909001	2	0	0	56.1	56.1	1	5667.46	3.25	0	86.07	0	1.86	0	0	12.7	0	0	0	0	0	0	-44.57	-44.57
	Inverter Transformer	MV4-9 T	369284	4909001	2	0	0	56.1	56.1	1	5686.84	3.25	0	86.1	0	1.86	0	0	12.73	0	0	0	0	0	0	-44.63	-44.63
	Inverter Transformer	MV4-6 T	369249	4909192	2	0	0	56.1	56.1	1	5749.21	3.25	0	86.19	0	1.88	0	0	12.8	0	0	0	0	0	0	-44.82	-44.82
	Inverter Transformer	MV4-5 T	369283	4909199	2	0	0	56.1	56.1	1	5782.16	3.25	0	86.24	0	1.89	0	0	12.84	0	0	0	0	0	0	-44.92	-44.92
	Inverter Transformer	MV4-3 T	369234	4909397	2	0	0	56.1	56.1	1	5841.78	3.25	0	86.33	0	1.91	0	0	12.91	0	0	0	0	0	0	-45.1	-45.1
	Inverter Transformer	MV4-2 T	369267	4909397	2	0	0	56.1	56.1	1	5869.83	3.25	0	86.37	0	1.92	0	0	12.95	0	0	0	0	0	0	-45.18	-45.18
	Inverter Transformer	MV6-2 T	370091	4907339	2	0	0	56.1	56.1	1	5908.59	3.25	0	86.43	0	1.94	0	0	12.99	0	0	0	0	0	0	-45.3	-45.3
	Inverter Transformer	MV6-3 T	370202	4907140	2	0	0	56.1	56.1	1	5987.25	3.25	0	86.54	0	1.96	0	0	13.09	0	0	0	0	0	0	-45.53	-45.53
	Inverter Transformer	MV5-6 T	369987	4908507	2	0	0	56.1	56.1	1	6121.31	3.25	0	86.74	0	2	0	0	13.25	0	0	0	0	0	0	-45.93	-45.93
	Inverter Transformer	MV5-5 T	370021	4908690	2	0	0	56.1	56.1	1	6220.64	3.25	0	86.88	0	2.03	0	0	13.36	0	0	0	0	0	0	-46.21	-46.21
	Inverter Transformer	MV5-2 T	370011	4908853	2	0	0	56.1	56.1	1	6275.56	3.25	0	86.95	0	2.05	0	0	13.42	0	0	0	0	0	0	-46.37	-46.37
	Inverter Transformer	MV5-1 T	370015	4909142	2	0	0	56.1	56.1	1	6401.53	3.25	0	87.13	0	2.09	0	0	13.57	0	0	0	0	0	0	-46.72	-46.72
	Inverter Transformer	MV5-3 T	370237	4908851	2	0	0	56.1	56.1	1	6482.1	3.25	0	87.23	0	2.11	0	0	13.66	0	0	0	0	0	0	-46.95	-46.95
	Inverter Transformer	MV5-4 T	370330	4908707	2	0	0	56.1	56.1	1	6513.51	3.25	0	87.28	0	2.12	0	0	13.7	0	0	0	0	0	0	-47.03	-47.03
	Line Reactor	NGR	369421	4908787.5	5	0	0	45.4	45.4	1	5712.3	5.25	0	86.14	0	3.25	1.36	0.1	2.34	0	0	0	0	0	0	-47.72	-47.72
Limit. Valu	0	0																								
Level D/N:	34.8283	34.8283																								

Receiver: Vacant Lot Receptor
ID: S-VLR5
X: 364467
Y: 4906635
Z: 4.5
Ground: 0

ISO	Description	ID	X	Y	Z	Ground	ReflOrd	LxT	LxN	L/A	Dist.	hm	Freq	Adiv	K0b	Agr	Abar	z	Aatm	Afol	Ahous	Cmet	CmetN	Dc	RL	LtotT	LtotN
	Inverter	MV1-1	364715	4906166	2	0	0	100.3	100.3	1	530.54	3.25	0	65.49	0	-0.53	0	0	8.75	0	0	0	0	0	0	26.59	26.59
	Inverter	MV1-2	364753	4906063	2	0	0	100.3	100.3	1	639.52	3.25	0	67.12	0	-0.45	0	0	9.43	0	0	0	0	0	0	24.22	24.22
	Inverter	MV1-5	364671	4905892	2	0	0	100.3	100.3	1	770.5	3.25	0	68.74	0	-0.37	0	0	10.06	0	0	0	0	0	0	21.89	21.89
	Inverter	MV1-4	364815	4905918	2	0	0	100.3	100.3	1	796.99	3.25	0	69.03	0	-0.35	0	0	10.17	0	0	0	0	0	0	21.47	21.47
	Inverter	MV1-6	364477	4905835	2	0	0	100.3	100.3	1	800.07	3.25	0	69.06	0	-0.35	0	0	10.18	0	0	0	0	0	0	21.42	21.42
	Inverter	MV1-9	364561	4905646	2	0	0	100.3	100.3	1	993.46	3.25	0	70.94	0	-0.25	0	0	10.89	0	0	0	0	0	0	18.73	18.73
	Inverter	MV1-8	364788	4905647	2	0	0	100.3	100.3	1	1038.84	3.25	0	71.33	0	-0.23	0	0	11.04	0	0	0	0	0	0	18.17	18.17
	Inverter	MV2-4	365586	4906624	2	0	0	100.3	100.3	1	1119.06	3.25	0	71.98	0	-0.19	0	0	11.29	0	0	0	0	0	0	17.24	17.24
	Inverter	MV1-11	364655	4905414	2	0	0	100.3	100.3	1	1235.39	3.25	0	72.84	0	-0.14	0	0	11.63	0	0	0	0	0	0	15.99	15.99
	Inverter	MV2-3	365820	4906641	2	0	0	100.3	100.3	1	1353.02	3.25	0	73.63	0	-0.09	0	0	11.95	0	0	0	0	0	0	14.83	14.83

Inverter	MV1-7	364925	4905782	2	0	0	97.3	97.3	1	968.18	3.25	0	70.72	0	-0.26	0	0	10.8	0	0	0	0	0	0	16.05	16.05
Inverter	MV1-12	365038	4905386	2	0	0	100.3	100.3	1	1373.33	3.25	0	73.76	0	-0.08	0	0	12	0	0	0	0	0	0	14.64	14.64
Sol_Luce Substation	S_Substation	369426	4908792	3.5	0	0	112.1	112.1	1	5407.8	5.25	0	85.66	0	1.01	2.77	0.3	9.09	0	0	0	0	0	0	13.54	13.54
Inverter	MV1-10	365004	4905564	2	0	0	97.3	97.3	1	1198.09	3.25	0	72.57	0	-0.15	0	0	11.52	0	0	0	0	0	0	13.38	13.38
Inverter	MV1-15	365315	4904994	2	0	0	100.3	100.3	1	1847.16	3.25	0	76.33	0	0.08	0	0	13.13	0	0	0	0	0	0	10.76	10.76
Inverter	MV2-1	365842	4906816	2	0	0	97.3	97.3	1	1386.86	3.25	0	73.84	0	-0.08	0	0	12.04	0	0	0	0	0	0	11.51	11.51
Inverter	MV1-13	364731	4905241	2	0	0	97.3	97.3	1	1418.78	3.25	0	74.04	0	-0.06	0	0	12.12	0	0	0	0	0	0	11.22	11.22
Inverter	MV1-3	364440	4906039	2	0	0	89.1	89.1	1	596.62	3.25	0	66.51	0	0.57	0	0	5.44	0	0	0	0	0	0	16.53	16.53
Inverter	MV1-14	365163	4905049	2	0	0	97.3	97.3	1	1732	3.25	0	75.77	0	0.05	0	0	12.88	0	0	0	0	0	0	8.62	8.62
Inverter	MV3-12	367668	4907594	2	0	0	100.3	100.3	1	3341.57	3.25	0	81.48	0	0.42	0	0	15.96	0	0	0	0	0	0	2.44	2.44
Inverter	MV3-18	367752	4907412	2	0	0	100.3	100.3	1	3375.64	3.25	0	81.57	0	0.43	0	0	16.02	0	0	0	0	0	0	2.29	2.29
Inverter	MV3-13	367963	4907577	2	0	0	100.3	100.3	1	3620.69	3.25	0	82.18	0	0.47	0	0	16.43	0	0	0	0	0	0	1.23	1.23
Inverter	MV3-7	367945	4907754	2	0	0	100.3	100.3	1	3653.58	3.25	0	82.25	0	0.48	0	0	16.49	0	0	0	0	0	0	1.1	1.1
Inverter	MV3-3	367939	4907927	2	0	0	100.3	100.3	1	3704.6	3.25	0	82.37	0	0.48	0	0	16.57	0	0	0	0	0	0	0.88	0.88
Inverter	MV3-17	368178	4907472	2	0	0	100.3	100.3	1	3804.22	3.25	0	82.61	0	0.5	0	0	16.73	0	0	0	0	0	0	0.47	0.47
Inverter	MV3-10	368167	4907669	2	0	0	100.3	100.3	1	3841.77	3.25	0	82.69	0	0.5	0	0	16.79	0	0	0	0	0	0	0.32	0.32
Inverter	MV3-6	368162	4907834	2	0	0	100.3	100.3	1	3884.67	3.25	0	82.79	0	0.51	0	0	16.86	0	0	0	0	0	0	0.15	0.15
Inverter	MV3-19	368357	4907347	2	0	0	100.3	100.3	1	3954.62	3.25	0	82.94	0	0.52	0	0	16.98	0	0	0	0	0	0	-0.13	-0.13
Inverter	MV3-15	368357	4907477	2	0	0	100.3	100.3	1	3980.08	3.25	0	83	0	0.52	0	0	17.02	0	0	0	0	0	0	-0.23	-0.23
Inverter	MV3-11	368346	4907662	2	0	0	100.3	100.3	1	4012.65	3.25	0	83.07	0	0.53	0	0	17.07	0	0	0	0	0	0	-0.35	-0.35
Inverter	MV3-21	368478	4907206	2	0	0	100.3	100.3	1	4051.44	3.25	0	83.15	0	0.53	0	0	17.13	0	0	0	0	0	0	-0.5	-0.5
Inverter	MV3-16	368514	4907475	2	0	0	100.3	100.3	1	4133.26	3.25	0	83.33	0	0.55	0	0	17.26	0	0	0	0	0	0	-0.82	-0.82
Inverter	MV3-9	368512	4907703	2	0	0	100.3	100.3	1	4183.62	3.25	0	83.43	0	0.55	0	0	17.34	0	0	0	0	0	0	-1.01	-1.01
Inverter	MV3-20	368689	4907317	2	0	0	100.3	100.3	1	4276.73	3.25	0	83.62	0	0.56	0	0	17.49	0	0	0	0	0	0	-1.36	-1.36
Inverter	MV3-14	368684	4907498	2	0	0	100.3	100.3	1	4304.4	3.25	0	83.68	0	0.57	0	0	17.53	0	0	0	0	0	0	-1.46	-1.46
Inverter	MV3-8	368680	4907712	2	0	0	100.3	100.3	1	4348.48	3.25	0	83.77	0	0.57	0	0	17.6	0	0	0	0	0	0	-1.62	-1.62
Inverter	MV4-7	369035	4909001	2	0	0	100.3	100.3	1	5144.37	3.25	0	85.23	0	0.65	0	0	18.79	0	0	0	0	0	0	-4.36	-4.36
Inverter	MV4-4	369027	4909199	2	0	0	100.3	100.3	1	5231.41	3.25	0	85.37	0	0.66	0	0	18.92	0	0	0	0	0	0	-4.64	-4.64
Inverter	MV4-11	369264	4908855	2	0	0	100.3	100.3	1	5285.79	3.25	0	85.46	0	0.67	0	0	19	0	0	0	0	0	0	-4.81	-4.81
Inverter	MV4-1	369011	4909397	2	0	0	100.3	100.3	1	5317.57	3.25	0	85.51	0	0.67	0	0	19.04	0	0	0	0	0	0	-4.91	-4.91
Inverter	MV4-10	369312	4908858	2	0	0	100.3	100.3	1	5330.64	3.25	0	85.54	0	0.67	0	0	19.06	0	0	0	0	0	0	-4.95	-4.95
Inverter	MV4-8	369256	4909001	2	0	0	100.3	100.3	1	5341.58	3.25	0	85.55	0	0.67	0	0	19.08	0	0	0	0	0	0	-4.99	-4.99
Inverter	MV4-9	369289	4909001	2	0	0	100.3	100.3	1	5371.19	3.25	0	85.6	0	0.67	0	0	19.12	0	0	0	0	0	0	-5.08	-5.08
Inverter	MV4-6	369243	4909192	2	0	0	100.3	100.3	1	5417.42	3.25	0	85.68	0	0.67	0	0	19.18	0	0	0	0	0	0	-5.22	-5.22
Inverter	MV4-5	369289	4909199	2	0	0	100.3	100.3	1	5461.3	3.25	0	85.75	0	0.68	0	0	19.25	0	0	0	0	0	0	-5.36	-5.36
Inverter	MV4-3	369229	4909397	2	0	0	100.3	100.3	1	5505.02	3.25	0	85.82	0	0.68	0	0	19.31	0	0	0	0	0	0	-5.49	-5.49
Inverter	MV2-2	365977	4906654	2	0	0	89.1	89.1	1	1510.12	3.25	0	74.58	0	0.79	0	0	7.23	0	0	0	0	0	0	6.46	6.46
Inverter	MV4-2	369272	4909397	2	0	0	100.3	100.3	1	5542.26	3.25	0	85.87	0	0.68	0	0	19.36	0	0	0	0	0	0	-5.6	-5.6
Inverter	MV6-2	370085	4907339	2	0	0	100.3	100.3	1	5661.94	3.25	0	86.06	0	0.69	0	0	19.53	0	0	0	0	0	0	-5.96	-5.96
Inverter	MV6-3	370207	4907140	2	0	0	100.3	100.3	1	5762.17	3.25	0	86.21	0	0.69	0	0	19.67	0	0	0	0	0	0	-6.26	-6.26
Inverter	MV5-5	370015	4908690	2	0	0	100.3	100.3	1	5916.36	3.25	0	86.44	0	0.7	0	0	19.88	0	0	0	0	0	0	-6.71	-6.71
Inverter	MV5-2	370006	4908853	2	0	0	100.3	100.3	1	5966.58	3.25	0	86.51	0	0.7	0	0	19.95	0	0	0	0	0	0	-6.85	-6.85
Inverter	MV5-1	370020	4909142	2	0	0	100.3	100.3	1	6092.69	3.25	0	86.7	0	0.71	0	0	20.12	0	0	0	0	0	0	-7.21	-7.21
Inverter	MV5-3	370231	4908851	2	0	0	100.3	100.3	1	6175.3	3.25	0	86.81	0	0.71	0	0	20.23	0	0	0	0	0	0	-7.44	-7.44
Inverter	MV5-4	370324	4908707	2	0	0	100.3	100.3	1	6212.7	3.25	0	86.87	0	0.71	0	0	20.28	0	0	0	0	0	0	-7.54	-7.54
DSTATCOM - 10 MVAR #2	DSAT2	369403	4908757	2.5	0	0	96.6	96.6	1	5372.8	3.5	0	85.6	0	3.72	0	0	3.54	0	0	0	0	0	0	3.77	3.77
Inverter	MV6-1	370235	4907364	2	0	0	97.3	97.3	1	5813.89	3.25	0	86.29	0	0.7	0	0	19.74	0	0	0	0	0	0	-9.41	-9.41
DSTATCOM - 10 MVAR #1	DSAT1	369437	4908757	2.5	0	0	96.6	96.6	1	5404.05	3.5	0	85.65	0	3.72	0	0	3.55	0	0	0	0	0	0	3.7	3.7
Gardiner Substation	G_Sub	366586.3	4903349.9	2.5	0	0	90.8	90.8	1	3909.39	4.25	0	82.84	0	1.33	2.63	0.26	7.24	0	0	0	0	0	0	-3.27	-3.27
SubstationTransformer	W_ST	369711.17	4906112.3	2.5	0	0	92	92	1	5270.16	4.25	0	85.44	0	1.71	2.27	0.29	8.94	0	0	0	0	0	0	-6.37	-6.37
Inverter	MV3-1	368156	4907976	2	0	0	89.1	89.1	1	3925.18	3.25	0	82.88	0	1.37	0	0	10.98	0	0	0	0	0	0	-6.17	-6.17
Inverter	MV3-5	368340	4907843	2	0	0	89.1	89.1	1	4057.02	3.25	0	83.16	0	1.41	0	0	11.17	0	0	0	0	0	0	-6.68	-6.68
Inverter	MV3-22	368656	4907142	2	0	0	89.1	89.1	1	4219.57	3.25	0	83.51	0	1.45	0	0	11.39	0	0	0	0	0	0	-7.29	-7.29
Inverter	MV3-4	368502	4907925	2	0	0	89.1	89.1	1	4236.19	3.25	0	83.54	0	1.45	0	0	11.42	0	0	0	0	0	0	-7.35	-7.35
Inverter	MV3-2	368671	4907928	2	0	0	89.1	89.1	1	4398.35	3.25	0	83.87	0	1.49	0	0	11.64	0	0	0	0	0	0	-7.94	-7.94
Inverters	G_Inv1	366526.4	4903225.8	2	0	0	87.7	87.7	1	3982.94	3.25	0	83	0	2.79	0	0	4.86	0	0	0	0	0	0	-2.99	-2.99
Inverters	G_Inv2	366676.9	4903239.1	2	0	0	87.7	87.7	1	4051.64	3.25	0	83.15	0	2.8	0	0	4.93	0	0	0	0	0	0	-3.22	-3.22
Inverters	G_Inv3	366583.7	4903091.4	2	0	0	87.7	87.7	1	4127.65	3.25	0	83.31	0	2.8	0	0	5.01	0	0	0	0	0	0	-3.47	-3.47
Westbrook Inverter Enclosur	W_INV2	369374	4906388	2	0	0	89.1	89.1	1	4913.21	3.25	0	84.83	0	1.62	0	0	12.35	0	0	0	0	0	0	-9.73	-9.73
Fixed Reactor Bank 1	FRB1	369378	4908755	6	0	0	89.8	89.8	1	5349.05	5.25	0	85.57	0	-0.51	0	0	9.03	0	0	0	0	0	0	-4.3	-4.3
Inverters	G_Inv4	366732.8	4903105	2	0	0	87.7	87.7	1	4194.61	3.25	0	83.45	0	2.81	0	0	5.08	0	0	0	0	0	0	-3.68	-3.68
Inverter	MV4-13	369051	4908605	2	0	0	89.1	89.1	1	4989.38	3.25	0	84.96	0	1.64	0	0	12.45	0	0	0	0	0	0	-9.99	-9.99
Fixed Reactor Bank 2	FRB2	369464	4908755	6	0	0	89.8	89.8	1	5428.11	5.25	0	85.69	0	-0.5	0	0	9.12	0	0	0	0	0	0	-4.53	-4.53
Inverters	G_Inv5	366638.5	4902958.1	2	0	0	87.7	87.7	1	4270.25	3.25	0	83.61	0	2.81	0	0	5.16	0	0	0	0	0	0	-3.93	-3.93
Inverter	MV4-15	369176	4908481	2	0	0	89.1	89.1	1	5057.91	3.25	0	85.08	0	1.65	0	0	12.54	0	0	0	0	0	0	-10.22	-10.22
Westbrook Inverter Enclosur	W_INV3	369508	4906164	2	0	0	89.1	89.1	1	5062.96	3.25	0	85.09	0	1.66	0	0	12.55	0	0	0	0	0	0	-10.23	-10.23
Inverter	MV4-12	369043	4908803	2	0	0	89.1	89.1	1	5063.6	3.25	0	85.09	0	1.66	0	0	12.55	0	0	0	0	0	0	-10.24	-10.24
Inverter	MV4-14	369176	4908507	2	0	0	89.1	89.1	1	5067.45	3.25	0	85.1	0	1.66	0	0	12.55	0	0	0	0	0	0	-10.25	-10.25
Inverters	G_Inv6	366788.5	4902972	2	0	0	87.7	87.7	1	4336.7	3.25	0	83.74	0	2.82	0	0	5.24	0	0	0	0	0	0	-4.14	-4.14
Inverters	G_Inv7	366694.6	4902824.7	2	0	0	87.7	87.7	1	4413.68	3.25	0	83.9	0	2.82	0	0	5.32	0	0	0	0	0	0	-4.38	-4.38
Westbrook Inverter Enclosur	W_INV4	369673	4906164	2	0	0	89.1	89.1	1	5227.26	3.25	0	85.37	0	1.7	0	0	12.77	0	0	0	0	0	0	-10.77	-10.77
Westbrook Inverter Enclosur	W_INV5	369719	4906574	2	0	0	89.1	89.1	1	5252.35	3.25	0	85.41	0	1.7	0	0	12.8	0	0	0	0	0	0	-10.85	-10.85
Inverters	G_Inv8	366844.5	4902838.5	2	0	0	87.7	87.7	1	4479.5	3.25	0	84.02	0	2.83	0	0	5.39	0	0	0	0	0	0	-4.58	-4.58
Westbrook Inverter Enclosur	W_INV7	369780	4906417	2	0	0	89.1	89.1	1	5317.47	3.25	0	85.51	0	1.72	0	0	12.88	0	0	0	0	0	0	-11.06	-11.06

Inverters	G_Inv9	366750.9	4902691.8	2	0	0	87.7	87.7	1	4556.87	3.25	0	84.17	0	2.84	0	0	5.47	0	0	0	0	0	0	-4.82	-4.82
Westbrook Inverter Enclosur	W_INV6	369875	4906578	2	0	0	89.1	89.1	1	5408.3	3.25	0	85.66	0	1.74	0	0	13	0	0	0	0	0	0	-11.35	-11.35
Inverters	G_Inv10	366900.7	4902704.8	2	0	0	87.7	87.7	1	4622.7	3.25	0	84.3	0	2.84	0	0	5.54	0	0	0	0	0	0	-5.02	-5.02
Inverter	MV5-6	369982	4908507	2	0	0	89.1	89.1	1	5824.05	3.25	0	86.3	0	1.84	0	0	13.54	0	0	0	0	0	0	-12.63	-12.63
Westbrook Inverter Enclosur	W_INV1	369409	4906578	2	0	0	86.1	86.1	1	4942.33	3.25	0	84.88	0	1.63	0	0	12.39	0	0	0	0	0	0	-12.83	-12.83
Inverter	MV6-4	370250	4906966	2	0	0	86.1	86.1	1	5792.47	3.25	0	86.26	0	1.84	0	0	13.5	0	0	0	0	0	0	-15.53	-15.53
Inverter Transformer	MV1-7 T	364919	4905782	2	0	0	69.4	69.4	1	965.36	3.25	0	70.69	0	1.65	0	0	3.76	0	0	0	0	0	0	-6.76	-6.76
Inverter Transformer	MV1-10 T	365010	4905564	2	0	0	69.4	69.4	1	1200.79	3.25	0	72.59	0	1.82	0	0	4.08	0	0	0	0	0	0	-9.14	-9.14
Inverter Transformer	MV2-1 T	365836	4906816	2	0	0	69.4	69.4	1	1380.92	3.25	0	73.8	0	1.92	0	0	4.3	0	0	0	0	0	0	-10.67	-10.67
Inverter Transformer	MV1-13 T	364725	4905241	2	0	0	69.4	69.4	1	1417.68	3.25	0	74.03	0	1.94	0	0	4.34	0	0	0	0	0	0	-10.96	-10.96
Inverter Transformer	MV1-14 T	365157	4905049	2	0	0	69.4	69.4	1	1729.6	3.25	0	75.76	0	2.07	0	0	4.69	0	0	0	0	0	0	-13.16	-13.16
Westbrook Inverter Transfor	W_INVTR1	369403	4906578	2	0	0	78.2	78.2	1	4936.33	3.25	0	84.87	0	-3.16	0	0	2.39	0	0	0	0	0	0	-5.85	-5.85
Westbrook Inverter Transfor	W_INVTR2	369368	4906388	2	0	0	77.3	77.3	1	4907.22	3.25	0	84.82	0	-3.16	0	0	2.38	0	0	0	0	0	0	-6.7	-6.7
Westbrook Inverter Transfor	W_INVTR3	369514	4906164	2	0	0	77.3	77.3	1	5068.93	3.25	0	85.1	0	-3.19	0	0	2.44	0	0	0	0	0	0	-7	-7
Westbrook Inverter Transfor	W_INVTR4	369679	4906164	2	0	0	77.3	77.3	1	5233.24	3.25	0	85.38	0	-3.22	0	0	2.49	0	0	0	0	0	0	-7.3	-7.3
Westbrook Inverter Transfor	W_INVTR5	369725	4906574	2	0	0	77.3	77.3	1	5258.35	3.25	0	85.42	0	-3.23	0	0	2.5	0	0	0	0	0	0	-7.35	-7.35
Westbrook Inverter Transfor	W_INVTR7	369786	4906417	2	0	0	77.3	77.3	1	5323.47	3.25	0	85.52	0	-3.24	0	0	2.52	0	0	0	0	0	0	-7.46	-7.46
Westbrook Inverter Transfor	W_INVTR6	369881	4906578	2	0	0	77.3	77.3	1	5414.3	3.25	0	85.67	0	-3.26	0	0	2.55	0	0	0	0	0	0	-7.62	-7.62
Inverter Transformer	MV1-1 T	364721	4906166	2	0	0	56.1	56.1	1	533.37	3.25	0	65.54	0	-0.11	0	0	3.66	0	0	0	0	0	0	-13.02	-13.02
Inverter Transformer	MV1-3 T	364435	4906039	2	0	0	56.1	56.1	1	596.86	3.25	0	66.52	0	-0.1	0	0	3.85	0	0	0	0	0	0	-14.2	-14.2
Inverter Transformer	MV1-2 T	364759	4906063	2	0	0	56.1	56.1	1	642.23	3.25	0	67.15	0	-0.09	0	0	3.98	0	0	0	0	0	0	-14.98	-14.98
Inverter Transformer	MV1-5 T	364676	4905892	2	0	0	56.1	56.1	1	771.84	3.25	0	68.75	0	-0.06	0	0	4.32	0	0	0	0	0	0	-16.95	-16.95
Inverter Transformer	MV1-4 T	364821	4905918	2	0	0	56.1	56.1	1	799.63	3.25	0	69.06	0	-0.05	0	0	4.39	0	0	0	0	0	0	-17.34	-17.34
Inverter Transformer	MV1-6 T	364482	4905835	2	0	0	56.1	56.1	1	800.14	3.25	0	69.06	0	-0.05	0	0	4.4	0	0	0	0	0	0	-17.35	-17.35
Inverter Transformer	MV1-9 T	364555	4905646	2	0	0	56.1	56.1	1	992.91	3.25	0	70.94	0	0.01	0	0	4.87	0	0	0	0	0	0	-19.76	-19.76
Inverter Transformer	MV1-8 T	364782	4905647	2	0	0	56.1	56.1	1	1037	3.25	0	71.32	0	0.02	0	0	4.98	0	0	0	0	0	0	-20.26	-20.26
Inverter Transformer	MV2-4 T	365590	4906628	2	0	0	56.1	56.1	1	1123.02	3.25	0	72.01	0	0.06	0	0	5.18	0	0	0	0	0	0	-21.18	-21.18
Inverter Transformer	MV1-11 T	364649	4905414	2	0	0	56.1	56.1	1	1234.49	3.25	0	72.83	0	0.1	0	0	5.43	0	0	0	0	0	0	-22.3	-22.3
Inverter Transformer	MV6-4 T	370244	4906966	2	0	0	69.4	69.4	1	5786.48	3.25	0	86.25	0	3.15	0	0	7.89	0	0	0	0	0	0	-27.94	-27.94
Inverter Transformer	MV6-1 T	370230	4907364	2	0	0	69.4	69.4	1	5808.93	3.25	0	86.28	0	3.16	0	0	7.9	0	0	0	0	0	0	-27.99	-27.99
Inverter Transformer	MV2-3 T	365814	4906641	2	0	0	56.1	56.1	1	1347.02	3.25	0	73.59	0	0.14	0	0	5.69	0	0	0	0	0	0	-23.35	-23.35
Inverter Transformer	MV1-12 T	365044	4905386	2	0	0	56.1	56.1	1	1375.84	3.25	0	73.77	0	0.15	0	0	5.75	0	0	0	0	0	0	-23.61	-23.61
Inverter Transformer	MV2-2 T	365982	4906654	2	0	0	56.1	56.1	1	1515.12	3.25	0	74.61	0	0.2	0	0	6.05	0	0	0	0	0	0	-24.81	-24.81
Inverter Transformer	MV1-15 T	365309	4904994	2	0	0	56.1	56.1	1	1844.41	3.25	0	76.32	0	0.34	0	0	6.73	0	0	0	0	0	0	-27.33	-27.33
Inverter Transformer	MV3-12 T	367674	4907594	2	0	0	56.1	56.1	1	3347.32	3.25	0	81.49	0	0.98	0	0	9.44	0	0	0	0	0	0	-35.86	-35.86
Inverter Transformer	MV3-18 T	367757	4907412	2	0	0	56.1	56.1	1	3380.51	3.25	0	81.58	0	0.99	0	0	9.5	0	0	0	0	0	0	-36.01	-36.01
Inverter Transformer	MV3-13 T	367958	4907577	2	0	0	56.1	56.1	1	3615.86	3.25	0	82.16	0	1.09	0	0	9.87	0	0	0	0	0	0	-37.06	-37.06
Inverter Transformer	MV3-7 T	367951	4907754	2	0	0	56.1	56.1	1	3659.29	3.25	0	82.27	0	1.11	0	0	9.94	0	0	0	0	0	0	-37.25	-37.25
Inverter Transformer	MV3-3 T	367944	4907927	2	0	0	56.1	56.1	1	3709.29	3.25	0	82.39	0	1.13	0	0	10.01	0	0	0	0	0	0	-37.47	-37.47
Inverter Transformer	MV3-17 T	368183	4907472	2	0	0	56.1	56.1	1	3809.1	3.25	0	82.62	0	1.17	0	0	10.17	0	0	0	0	0	0	-37.89	-37.89
Inverter Transformer	MV3-10 T	368162	4907669	2	0	0	56.1	56.1	1	3836.95	3.25	0	82.68	0	1.18	0	0	10.21	0	0	0	0	0	0	-38.01	-38.01
Inverter Transformer	MV3-6 T	368156	4907834	2	0	0	56.1	56.1	1	3878.96	3.25	0	82.77	0	1.2	0	0	10.27	0	0	0	0	0	0	-38.18	-38.18
Inverter Transformer	MV3-1 T	368150	4907976	2	0	0	56.1	56.1	1	3919.54	3.25	0	82.86	0	1.21	0	0	10.33	0	0	0	0	0	0	-38.35	-38.35
Inverter Transformer	MV3-19 T	368352	4907347	2	0	0	56.1	56.1	1	3949.71	3.25	0	82.93	0	1.22	0	0	10.38	0	0	0	0	0	0	-38.48	-38.48
Inverter Transformer	MV3-15 T	368351	4907477	2	0	0	56.1	56.1	1	3974.22	3.25	0	82.99	0	1.23	0	0	10.42	0	0	0	0	0	0	-38.58	-38.58
Inverter Transformer	MV3-11 T	368340	4907662	2	0	0	56.1	56.1	1	4006.85	3.25	0	83.06	0	1.25	0	0	10.47	0	0	0	0	0	0	-38.71	-38.71
Inverter Transformer	MV3-5 T	368335	4907843	2	0	0	56.1	56.1	1	4052.25	3.25	0	83.15	0	1.26	0	0	10.53	0	0	0	0	0	0	-38.89	-38.89
Inverter Transformer	MV3-21 T	368484	4907206	2	0	0	56.1	56.1	1	4057.38	3.25	0	83.16	0	1.27	0	0	10.54	0	0	0	0	0	0	-38.91	-38.91
Inverter Transformer	MV3-16 T	368509	4907475	2	0	0	56.1	56.1	1	4128.36	3.25	0	83.32	0	1.3	0	0	10.64	0	0	0	0	0	0	-39.2	-39.2
Inverter Transformer	MV3-9 T	368517	4907703	2	0	0	56.1	56.1	1	4188.45	3.25	0	83.44	0	1.32	0	0	10.73	0	0	0	0	0	0	-39.43	-39.43
Inverter Transformer	MV3-22 T	368661	4907142	2	0	0	56.1	56.1	1	4224.53	3.25	0	83.52	0	1.33	0	0	10.78	0	0	0	0	0	0	-39.57	-39.57
Inverter Transformer	MV3-4 T	368507	4907925	2	0	0	56.1	56.1	1	4240.96	3.25	0	83.55	0	1.34	0	0	10.81	0	0	0	0	0	0	-39.64	-39.64
Inverter Transformer	MV3-20 T	368683	4907317	2	0	0	56.1	56.1	1	4270.81	3.25	0	83.61	0	1.35	0	0	10.85	0	0	0	0	0	0	-39.75	-39.75
Inverter Transformer	MV3-14 T	368678	4907498	2	0	0	56.1	56.1	1	4298.52	3.25	0	83.67	0	1.36	0	0	10.89	0	0	0	0	0	0	-39.86	-39.86
Inverter Transformer	MV3-8 T	368685	4907712	2	0	0	56.1	56.1	1	4353.33	3.25	0	83.78	0	1.38	0	0	10.97	0	0	0	0	0	0	-40.07	-40.07
Inverter Transformer	MV3-2 T	368677	4907928	2	0	0	56.1	56.1	1	4404.08	3.25	0	83.88	0	1.4	0	0	11.04	0	0	0	0	0	0	-40.26	-40.26
Inverter Transformer	MV4-13 T	369057	4908605	2	0	0	56.1	56.1	1	4994.9	3.25	0	84.97	0	1.62	0	0	11.85	0	0	0	0	0	0	-42.38	-42.38
Inverter Transformer	MV4-15 T	369170	4908481	2	0	0	56.1	56.1	1	5052.32	3.25	0	85.07	0	1.64	0	0	11.92	0	0	0	0	0	0	-42.58	-42.58
Inverter Transformer	MV4-12 T	369049	4908803	2	0	0	56.1	56.1	1	5069.02	3.25	0	85.1	0	1.65	0	0	11.94	0	0	0	0	0	0	-42.64	-42.64
Inverter Transformer	MV4-14 T	369182	4908507	2	0	0	56.1	56.1	1	5073.03	3.25	0	85.11	0	1.65	0	0	11.95	0	0	0	0	0	0	-42.65	-42.65
Inverter Transformer	MV4-7 T	369040	4909001	2	0	0	56.1	56.1	1	5148.81	3.25	0	85.23	0	1.68	0	0	12.05	0	0	0	0	0	0	-42.9	-42.9
Inverter Transformer	MV4-4 T	369033	4909199	2	0	0	56.1	56.1	1	5236.65	3.25	0	85.38	0	1.71	0	0	12.16	0	0	0	0	0	0	-43.19	-43.19
Inverter Transformer	MV4-11 T	369269	4908855	2	0	0	56.1	56.1	1	5290.33	3.25	0	85.47	0	1.73	0	0	12.23	0	0	0	0	0	0	-43.37	-43.37
Inverter Transformer	MV4-1 T	369017	4909397	2	0	0	56.1	56.1	1	5322.7	3.25	0	85.52	0	1.74	0	0	12.27	0	0	0	0	0	0	-43.48	-43.48
Inverter Transformer	MV4-10 T	369307	4908858	2	0	0	56.1	56.1	1	5326.1	3.25	0	85.53	0	1.74	0	0	12.28	0	0	0	0	0	0	-43.49	-43.49
Inverter Transformer	MV4-8 T	369262	4909001	2	0	0	56.1	56.1	1	5346.96	3.25	0	85.56	0	1.75	0	0	12.3	0	0	0	0	0	0	-43.55	-43.55
Inverter Transformer	MV4-9 T	369284	4909001	2	0	0	56.1	56.1	1	5366.7	3.25	0	85.59	0	1.75	0	0	12.33	0	0	0	0	0	0	-43.62	-43.62
Inverter Transformer	MV4-6 T	369249	4909192	2	0	0	56.1	56.1	1	5422.71	3.25	0	85.68	0	1.77	0	0	12.4	0	0	0	0	0	0	-43.8	-43.8
Inverter Transformer	MV4-5 T	369283	4909199	2	0	0	56.1	56.1	1	5456	3.25	0	85.74	0	1.79	0	0	12.44	0	0	0	0	0	0	-43.91	-43.91
Inverter Transformer	MV4-3 T	369234	4909397	2	0	0	56.1	56.1	1	5509.35	3.25	0	85.82	0	1.8	0	0	12.51	0	0	0	0	0	0	-44.07	-44.07
Inverter Transformer	MV4-2 T	369267	4909397	2	0	0	56.1	56.1	1	5537.93	3.25	0	85.87	0	1.81	0	0	12.54	0	0	0	0	0	0	-44.16	-44.16
Inverter Transformer	MV6-2 T	370091	4907339	2	0	0	56.1	56.1	1	5667.89	3.25	0	86.07	0	1.86	0	0	12.7	0	0	0	0	0	0	-44.57	-44.57
Inverter Transformer	MV6-3 T	370202	4907140	2	0	0	56.1	56.1	1	5757.19	3.25	0	86.2	0	1.89	0	0	12.81	0	0	0	0	0	0	-44.84	-44.84
Inverter Transformer	MV5-6 T	369987	4908507	2	0	0	56.1	56.1	1	5828.79	3.25	0	86.31	0	1.91	0	0	12.9	0	0	0	0	0	0	-45.06	-45.06

	Inverter Transformer	MV5-5 T	370021	4908690	2	0	0	56.1	56.1	1	5921.99	3.25	0	86.45	0	1.94	0	0	13.01	0	0	0	0	0	0	-45.34	-45.34
	Inverter Transformer	MV5-2 T	370011	4908853	2	0	0	56.1	56.1	1	5971.22	3.25	0	86.52	0	1.96	0	0	13.07	0	0	0	0	0	0	-45.49	-45.49
	Inverter Transformer	MV5-1 T	370015	4909142	2	0	0	56.1	56.1	1	6088.13	3.25	0	86.69	0	1.99	0	0	13.21	0	0	0	0	0	0	-45.83	-45.83
	Inverter Transformer	MV5-3 T	370237	4908851	2	0	0	56.1	56.1	1	6180.9	3.25	0	86.82	0	2.02	0	0	13.31	0	0	0	0	0	0	-46.1	-46.1
	Inverter Transformer	MV5-4 T	370330	4908707	2	0	0	56.1	56.1	1	6218.36	3.25	0	86.87	0	2.03	0	0	13.36	0	0	0	0	0	0	-46.21	-46.21
	Line Reactor	NGR	369421	4908787.5	5	0	0	45.4	45.4	1	5401.42	5.25	0	85.65	0	3.25	1.36	0.1	2.21	0	0	0	0	0	0	-47.11	-47.11
Limit. Valu	0	0																								
Level D/N:	32.2125	32.2125																								

Receiver: Vacant Lot Receptor
ID: S-VLR6
X: 364762
Y: 4906754
Z: 4.5
Ground: 0

ISO	Description	ID	X	Y	Z	Ground	ReflOrd	LxT	LxN	L/A	Dist.	hm	Freq	Adiv	K0b	Agr	Abar	z	Aatm	Afol	Ahous	Cmet	CmetN	Dc	RL	LtotT	LtotN
	Inverter	MV1-1	364715	4906166	2	0	0	100.3	100.3	1	589.88	3.25	0	66.42	0	-0.49	0	0	9.14	0	0	0	0	0	0	25.24	25.24
	Inverter	MV1-2	364753	4906063	2	0	0	100.3	100.3	1	691.06	3.25	0	67.79	0	-0.42	0	0	9.69	0	0	0	0	0	0	23.24	23.24
	Inverter	MV2-4	365586	4906624	2	0	0	100.3	100.3	1	834.2	3.25	0	69.43	0	-0.33	0	0	10.32	0	0	0	0	0	0	20.9	20.9
	Inverter	MV1-4	364815	4905918	2	0	0	100.3	100.3	1	837.68	3.25	0	69.46	0	-0.33	0	0	10.33	0	0	0	0	0	0	20.85	20.85
	Inverter	MV1-5	364671	4905892	2	0	0	100.3	100.3	1	866.79	3.25	0	69.76	0	-0.31	0	0	10.44	0	0	0	0	0	0	20.43	20.43
	Inverter	MV1-6	364477	4905835	2	0	0	100.3	100.3	1	962.18	3.25	0	70.67	0	-0.26	0	0	10.78	0	0	0	0	0	0	19.13	19.13
	Inverter	MV2-3	365820	4906641	2	0	0	100.3	100.3	1	1064.02	3.25	0	71.54	0	-0.22	0	0	11.12	0	0	0	0	0	0	17.87	17.87
	Inverter	MV1-8	364788	4905647	2	0	0	100.3	100.3	1	1107.31	3.25	0	71.89	0	-0.2	0	0	11.25	0	0	0	0	0	0	17.37	17.37
	Inverter	MV1-9	364561	4905646	2	0	0	100.3	100.3	1	1126.09	3.25	0	72.03	0	-0.19	0	0	11.31	0	0	0	0	0	0	17.16	17.16
	Sol_Luce Substation	S_Substation	369426	4908792	3.5	0	0	112.1	112.1	1	5089.83	5.25	0	85.13	0	0.92	2.85	0.3	8.73	0	0	0	0	0	0	14.45	14.45
	Inverter	MV1-11	364655	4905414	2	0	0	100.3	100.3	1	1344.27	3.25	0	73.57	0	-0.09	0	0	11.92	0	0	0	0	0	0	14.91	14.91
	Inverter	MV1-7	364925	4905782	2	0	0	97.3	97.3	1	985.58	3.25	0	70.87	0	-0.25	0	0	10.86	0	0	0	0	0	0	15.83	15.83
	Inverter	MV1-12	365038	4905386	2	0	0	100.3	100.3	1	1395.57	3.25	0	73.9	0	-0.07	0	0	12.06	0	0	0	0	0	0	14.43	14.43
	Inverter	MV2-1	365842	4906816	2	0	0	97.3	97.3	1	1081.78	3.25	0	71.68	0	-0.21	0	0	11.17	0	0	0	0	0	0	14.66	14.66
	Inverter	MV1-10	365004	4905564	2	0	0	97.3	97.3	1	1214.36	3.25	0	72.69	0	-0.15	0	0	11.57	0	0	0	0	0	0	13.21	13.21
	Inverter	MV1-15	365315	4904994	2	0	0	100.3	100.3	1	1844.83	3.25	0	76.32	0	0.08	0	0	13.13	0	0	0	0	0	0	10.78	10.78
	Inverter	MV1-13	364731	4905241	2	0	0	97.3	97.3	1	1513.32	3.25	0	74.6	0	-0.03	0	0	12.36	0	0	0	0	0	0	10.38	10.38
	Inverter	MV1-14	365163	4905049	2	0	0	97.3	97.3	1	1751.52	3.25	0	75.87	0	0.05	0	0	12.92	0	0	0	0	0	0	8.47	8.47
	Inverter	MV1-3	364440	4906039	2	0	0	89.1	89.1	1	784.17	3.25	0	68.89	0	0.64	0	0	5.89	0	0	0	0	0	0	13.65	13.65
	Inverter	MV3-12	367668	4907594	2	0	0	100.3	100.3	1	3024.97	3.25	0	80.61	0	0.37	0	0	15.42	0	0	0	0	0	0	3.91	3.91
	Inverter	MV3-18	367752	4907412	2	0	0	100.3	100.3	1	3061.55	3.25	0	80.72	0	0.37	0	0	15.48	0	0	0	0	0	0	3.74	3.74
	Inverter	MV3-13	367963	4907577	2	0	0	100.3	100.3	1	3305.11	3.25	0	81.38	0	0.42	0	0	15.9	0	0	0	0	0	0	2.61	2.61
	Inverter	MV3-7	367945	4907754	2	0	0	100.3	100.3	1	3336.39	3.25	0	81.47	0	0.42	0	0	15.96	0	0	0	0	0	0	2.47	2.47
	Inverter	MV3-3	367939	4907927	2	0	0	100.3	100.3	1	3386.63	3.25	0	81.6	0	0.43	0	0	16.04	0	0	0	0	0	0	2.24	2.24
	Inverter	MV3-17	368178	4907472	2	0	0	100.3	100.3	1	3490.64	3.25	0	81.86	0	0.45	0	0	16.22	0	0	0	0	0	0	1.79	1.79
	Inverter	MV3-10	368167	4907669	2	0	0	100.3	100.3	1	3525.8	3.25	0	81.95	0	0.46	0	0	16.27	0	0	0	0	0	0	1.64	1.64
	Inverter	MV3-6	368162	4907834	2	0	0	100.3	100.3	1	3567.41	3.25	0	82.05	0	0.46	0	0	16.34	0	0	0	0	0	0	1.46	1.46
	Inverter	MV3-19	368357	4907347	2	0	0	100.3	100.3	1	3643.58	3.25	0	82.23	0	0.47	0	0	16.47	0	0	0	0	0	0	1.14	1.14
	Inverter	MV3-15	368357	4907477	2	0	0	100.3	100.3	1	3666.98	3.25	0	82.29	0	0.48	0	0	16.51	0	0	0	0	0	0	1.04	1.04
	Inverter	MV3-11	368346	4907662	2	0	0	100.3	100.3	1	3697.23	3.25	0	82.36	0	0.48	0	0	16.56	0	0	0	0	0	0	0.91	0.91
	Inverter	MV3-21	368478	4907206	2	0	0	100.3	100.3	1	3743.39	3.25	0	82.47	0	0.49	0	0	16.63	0	0	0	0	0	0	0.72	0.72
	Inverter	MV3-16	368514	4907475	2	0	0	100.3	100.3	1	3820.65	3.25	0	82.64	0	0.5	0	0	16.76	0	0	0	0	0	0	0.41	0.41
	Inverter	MV3-9	368512	4907703	2	0	0	100.3	100.3	1	3868.22	3.25	0	82.75	0	0.51	0	0	16.84	0	0	0	0	0	0	0.22	0.22
	Inverter	MV3-20	368689	4907317	2	0	0	100.3	100.3	1	3967.15	3.25	0	82.97	0	0.52	0	0	17	0	0	0	0	0	0	-0.18	-0.18
	Inverter	MV3-14	368684	4907498	2	0	0	100.3	100.3	1	3991.95	3.25	0	83.02	0	0.53	0	0	17.04	0	0	0	0	0	0	-0.27	-0.27
	Inverter	MV3-8	368680	4907712	2	0	0	100.3	100.3	1	4033.42	3.25	0	83.11	0	0.53	0	0	17.1	0	0	0	0	0	0	-0.43	-0.43
	Inverter	MV2-2	365977	4906654	2	0	0	89.1	89.1	1	1219.11	3.25	0	72.72	0	0.73	0	0	6.72	0	0	0	0	0	0	8.89	8.89
	Inverter	MV4-7	369035	4909001	2	0	0	100.3	100.3	1	4827.79	3.25	0	84.67	0	0.63	0	0	18.33	0	0	0	0	0	0	-3.31	-3.31
	Inverter	MV4-4	369027	4909199	2	0	0	100.3	100.3	1	4916.12	3.25	0	84.83	0	0.63	0	0	18.46	0	0	0	0	0	0	-3.61	-3.61
	Inverter	MV4-11	369264	4908855	2	0	0	100.3	100.3	1	4968.12	3.25	0	84.92	0	0.64	0	0	18.53	0	0	0	0	0	0	-3.78	-3.78
	Inverter	MV4-1	369011	4909397	2	0	0	100.3	100.3	1	5003.94	3.25	0	84.99	0	0.64	0	0	18.59	0	0	0	0	0	0	-3.9	-3.9
	Inverter	MV4-10	369312	4908858	2	0	0	100.3	100.3	1	5012.92	3.25	0	85	0	0.64	0	0	18.6	0	0	0	0	0	0	-3.93	-3.93
	Inverter	MV4-8	369256	4909001	2	0	0	100.3	100.3	1	5024.45	3.25	0	85.02	0	0.64	0	0	18.62	0	0	0	0	0	0	-3.97	-3.97
	Inverter	MV4-9	369289	4909001	2	0	0	100.3	100.3	1	5053.98	3.25	0	85.07	0	0.65	0	0	18.66	0	0	0	0	0	0	-4.07	-4.07
	Inverter	MV4-6	369243	4909192	2	0	0	100.3	100.3	1	5101.3	3.25	0	85.15	0	0.65	0	0	18.73	0	0	0	0	0	0	-4.22	-4.22
	Inverter	MV4-5	369289	4909199	2	0	0	100.3	100.3	1	5145.07	3.25	0	85.23	0	0.65	0	0	18.79	0	0	0	0	0	0	-4.36	-4.36
	Inverter	MV4-3	369229	4909397	2	0	0	100.3	100.3	1	5190.33	3.25	0	85.3	0	0.66	0	0	18.86	0	0	0	0	0	0	-4.51	-4.51
	Inverter	MV4-2	369272	4909397	2	0	0	100.3	100.3	1	5227.39	3.25	0	85.37	0	0.66	0	0	18.91	0	0	0	0	0	0	-4.63	-4.63
	Inverter	MV6-2	370085	4907339	2	0	0	100.3	100.3	1	5355.05	3.25	0	85.58	0	0.67	0	0	19.09	0	0	0	0	0	0	-5.03	-5.03
	Inverter	MV6-3	370207	4907140	2	0	0	100.3	100.3	1	5458.67	3.25	0	85.74	0	0.68	0	0	19.24	0	0	0	0	0	0	-5.35	-5.35
	Inverter	MV5-5	370015	4908690	2	0	0	100.3	100.3	1	5598.4	3.25	0	85.96	0	0.69	0	0	19.44	0	0	0	0	0	0	-5.77	-5.77
	Inverter	MV5-2	370006	4908853	2	0	0	100.3	100.3	1	5648.48	3.25	0	86.04	0	0.69	0	0	19.51	0	0	0	0	0	0	-5.92	-5.92
	Inverter	MV5-1	370020	4909142	2	0	0	100.3	100.3	1	5774.87	3.25	0	86.23	0	0.7	0	0	19.68	0	0	0	0	0	0	-6.3	-6.3
	Inverter	MV5-3	370231	4908851	2	0	0	100.3	100.3	1	5857.25	3.25	0	86.35	0	0.7	0	0	19.8	0	0	0	0	0	0	-6.54	-6.54
	Inverter	MV5-4	370324	4908707	2	0	0	100.3	100.3	1	5894.92	3.25	0	86.41	0	0.7	0	0	19.85	0	0	0	0	0	0	-6.65	-6.65
	DSTATCOM - 10 MVAR #2	DSAT2	369403	4908757	2.5	0	0	96.6	96.6	1	5054.79	3.5	0	85.07	0	3.69	0	0	3.38	0	0	0	0	0	0	4.49	4.49
	DSTATCOM - 10 MVAR #1	DSAT1	369437	4908757	2.5	0	0	96.6	96.6	1	5086.02	3.5	0	85.13	0	3.69	0	0	3.39	0	0	0	0	0	0	4.41	4.41

Inverter	MV6-1	370235	4907364	2	0	0	97.3	97.3	1	5506.89	3.25	0	85.82	0	0.68	0	0	19.31	0	0	0	0	0	0	-8.5	-8.5
Gardiner Substation	G_Sub	366586.3	4903349.9	2.5	0	0	90.8	90.8	1	3862.12	4.25	0	82.74	0	1.32	2.66	0.29	7.18	0	0	0	0	0	0	-3.13	-3.13
SubstationTransformer	W_ST	369711.17	4906112.3	2.5	0	0	92	92	1	4990.6	4.25	0	84.96	0	1.64	2.34	0.29	8.61	0	0	0	0	0	0	-5.57	-5.57
Inverter	MV3-1	368156	4907976	2	0	0	89.1	89.1	1	3607.29	3.25	0	82.14	0	1.3	0	0	10.52	0	0	0	0	0	0	-4.9	-4.9
Inverter	MV3-5	368340	4907843	2	0	0	89.1	89.1	1	3740.05	3.25	0	82.46	0	1.33	0	0	10.71	0	0	0	0	0	0	-5.44	-5.44
Inverter	MV3-22	368656	4907142	2	0	0	89.1	89.1	1	3913.28	3.25	0	82.85	0	1.37	0	0	10.96	0	0	0	0	0	0	-6.12	-6.12
Inverter	MV3-4	368502	4907925	2	0	0	89.1	89.1	1	3919.04	3.25	0	82.86	0	1.37	0	0	10.97	0	0	0	0	0	0	-6.15	-6.15
Inverter	MV3-2	368671	4907928	2	0	0	89.1	89.1	1	4081.49	3.25	0	83.22	0	1.41	0	0	11.2	0	0	0	0	0	0	-6.77	-6.77
Westbrook Inverter Enclosur	W_INV2	369374	4906388	2	0	0	89.1	89.1	1	4626.5	3.25	0	84.31	0	1.55	0	0	11.96	0	0	0	0	0	0	-8.75	-8.75
Fixed Reactor Bank 1	FRB1	369378	4908755	6	0	0	89.8	89.8	1	5031.05	5.25	0	85.03	0	-0.56	0	0	8.66	0	0	0	0	0	0	-3.35	-3.35
Inverters	G_Inv1	366526.4	4903225.8	2	0	0	87.7	87.7	1	3944.78	3.25	0	82.92	0	2.79	0	0	4.81	0	0	0	0	0	0	-2.86	-2.86
Inverter	MV4-13	369051	4908605	2	0	0	89.1	89.1	1	4671.37	3.25	0	84.39	0	1.56	0	0	12.02	0	0	0	0	0	0	-8.91	-8.91
Inverters	G_Inv2	366676.9	4903239.1	2	0	0	87.7	87.7	1	4002.67	3.25	0	83.05	0	2.79	0	0	4.88	0	0	0	0	0	0	-3.06	-3.06
Fixed Reactor Bank 2	FRB2	369464	4908755	6	0	0	89.8	89.8	1	5110.07	5.25	0	85.17	0	-0.55	0	0	8.75	0	0	0	0	0	0	-3.59	-3.59
Inverter	MV4-15	369176	4908481	2	0	0	89.1	89.1	1	4739.82	3.25	0	84.52	0	1.58	0	0	12.11	0	0	0	0	0	0	-9.15	-9.15
Inverter	MV4-12	369043	4908803	2	0	0	89.1	89.1	1	4746.09	3.25	0	84.53	0	1.58	0	0	12.12	0	0	0	0	0	0	-9.17	-9.17
Inverter	MV4-14	369176	4908507	2	0	0	89.1	89.1	1	4749.36	3.25	0	84.53	0	1.58	0	0	12.13	0	0	0	0	0	0	-9.18	-9.18
Westbrook Inverter Enclosur	W_INV3	369508	4906164	2	0	0	89.1	89.1	1	4782.53	3.25	0	84.59	0	1.59	0	0	12.17	0	0	0	0	0	0	-9.29	-9.29
Inverters	G_Inv3	366583.7	4903091.4	2	0	0	87.7	87.7	1	4090.63	3.25	0	83.24	0	2.8	0	0	4.97	0	0	0	0	0	0	-3.35	-3.35
Inverters	G_Inv4	366732.8	4903105	2	0	0	87.7	87.7	1	4147.2	3.25	0	83.36	0	2.8	0	0	5.03	0	0	0	0	0	0	-3.53	-3.53
Westbrook Inverter Enclosur	W_INV4	369673	4906164	2	0	0	89.1	89.1	1	4946.31	3.25	0	84.89	0	1.63	0	0	12.39	0	0	0	0	0	0	-9.85	-9.85
Westbrook Inverter Enclosur	W_INV5	369719	4906574	2	0	0	89.1	89.1	1	4960.27	3.25	0	84.91	0	1.63	0	0	12.41	0	0	0	0	0	0	-9.89	-9.89
Inverters	G_Inv5	366638.5	4902958.1	2	0	0	87.7	87.7	1	4234.4	3.25	0	83.54	0	2.81	0	0	5.13	0	0	0	0	0	0	-3.81	-3.81
Westbrook Inverter Enclosur	W_INV7	369780	4906417	2	0	0	89.1	89.1	1	5029.3	3.25	0	85.03	0	1.65	0	0	12.5	0	0	0	0	0	0	-10.12	-10.12
Inverters	G_Inv6	366788.5	4902972	2	0	0	87.7	87.7	1	4290.71	4.12	0	83.65	0	3.19	1.5	0	5.19	0	0	0	0	0	0	-5.86	-5.86
Westbrook Inverter Enclosur	W_INV6	369875	4906578	2	0	0	89.1	89.1	1	5116.03	3.25	0	85.18	0	1.67	0	0	12.62	0	0	0	0	0	0	-10.41	-10.41
Inverters	G_Inv7	366694.6	4902824.7	2	0	0	87.7	87.7	1	4378.85	3.25	0	83.83	0	2.82	0	0	5.28	0	0	0	0	0	0	-4.27	-4.27
Inverters	G_Inv8	366844.5	4902838.5	2	0	0	87.7	87.7	1	4434.86	3.25	0	83.94	0	2.83	0	0	5.34	0	0	0	0	0	0	-4.44	-4.44
Inverters	G_Inv9	366750.9	4902691.8	2	0	0	87.7	87.7	1	4522.96	3.25	0	84.11	0	2.83	0	0	5.44	0	0	0	0	0	0	-4.72	-4.72
Inverters	G_Inv10	366900.7	4902704.8	2	0	0	87.7	87.7	1	4579.31	3.25	0	84.22	0	2.84	0	0	5.5	0	0	0	0	0	0	-4.89	-4.89
Inverter	MV5-6	369982	4908507	2	0	0	89.1	89.1	1	5506.49	3.25	0	85.82	0	1.76	0	0	13.13	0	0	0	0	0	0	-11.66	-11.66
Westbrook Inverter Enclosur	W_INV1	369409	4906578	2	0	0	86.1	86.1	1	4650.33	3.25	0	84.35	0	1.55	0	0	11.99	0	0	0	0	0	0	-11.84	-11.84
Inverter	MV6-4	370250	4906966	2	0	0	86.1	86.1	1	5492.09	3.25	0	85.79	0	1.76	0	0	13.11	0	0	0	0	0	0	-14.61	-14.61
Inverter Transformer	MV1-7 T	364919	4905782	2	0	0	69.4	69.4	1	984.6	3.25	0	70.87	0	1.67	0	0	3.79	0	0	0	0	0	0	-6.98	-6.98
Inverter Transformer	MV2-1 T	365836	4906816	2	0	0	69.4	69.4	1	1075.79	3.25	0	71.63	0	1.74	0	0	3.91	0	0	0	0	0	0	-7.94	-7.94
Inverter Transformer	MV1-10 T	365010	4905564	2	0	0	69.4	69.4	1	1215.57	3.25	0	72.7	0	1.83	0	0	4.1	0	0	0	0	0	0	-9.27	-9.27
Inverter Transformer	MV1-13 T	364725	4905241	2	0	0	69.4	69.4	1	1513.45	3.25	0	74.6	0	1.98	0	0	4.45	0	0	0	0	0	0	-11.68	-11.68
Westbrook Inverter Transfor	W_INVTR1	369403	4906578	2	0	0	78.2	78.2	1	4644.34	3.25	0	84.34	0	-3.1	0	0	2.29	0	0	0	0	0	0	-5.28	-5.28
Inverter Transformer	MV1-14 T	365157	4905049	2	0	0	69.4	69.4	1	1750.16	3.25	0	75.86	0	2.08	0	0	4.71	0	0	0	0	0	0	-13.3	-13.3
Westbrook Inverter Transfor	W_INVTR2	369368	4906388	2	0	0	77.3	77.3	1	4620.52	3.25	0	84.29	0	-3.1	0	0	2.28	0	0	0	0	0	0	-6.13	-6.13
Westbrook Inverter Transfor	W_INVTR3	369514	4906164	2	0	0	77.3	77.3	1	4788.49	3.25	0	84.6	0	-3.13	0	0	2.34	0	0	0	0	0	0	-6.47	-6.47
Westbrook Inverter Transfor	W_INVTR4	369679	4906164	2	0	0	77.3	77.3	1	4952.27	3.25	0	84.9	0	-3.17	0	0	2.4	0	0	0	0	0	0	-6.78	-6.78
Westbrook Inverter Transfor	W_INVTR5	369725	4906574	2	0	0	77.3	77.3	1	4966.26	3.25	0	84.92	0	-3.17	0	0	2.4	0	0	0	0	0	0	-6.81	-6.81
Westbrook Inverter Transfor	W_INVTR7	369786	4906417	2	0	0	77.3	77.3	1	5035.29	3.25	0	85.04	0	-3.18	0	0	2.43	0	0	0	0	0	0	-6.94	-6.94
Westbrook Inverter Transfor	W_INVTR6	369881	4906578	2	0	0	77.3	77.3	1	5122.03	3.25	0	85.19	0	-3.2	0	0	2.45	0	0	0	0	0	0	-7.1	-7.1
Inverter Transformer	MV1-1 T	364721	4906166	2	0	0	56.1	56.1	1	589.43	3.25	0	66.41	0	-0.11	0	0	3.82	0	0	0	0	0	0	-14.07	-14.07
Inverter Transformer	MV1-2 T	364759	4906063	2	0	0	56.1	56.1	1	691.01	3.25	0	67.79	0	-0.08	0	0	4.11	0	0	0	0	0	0	-15.76	-15.76
Inverter Transformer	MV1-3 T	364435	4906039	2	0	0	56.1	56.1	1	786.23	3.25	0	68.91	0	-0.06	0	0	4.36	0	0	0	0	0	0	-17.16	-17.16
Inverter Transformer	MV2-4 T	365590	4906628	2	0	0	56.1	56.1	1	837.54	3.25	0	69.46	0	-0.04	0	0	4.49	0	0	0	0	0	0	-17.85	-17.85
Inverter Transformer	MV1-4 T	364821	4905918	2	0	0	56.1	56.1	1	838.08	3.25	0	69.47	0	-0.04	0	0	4.49	0	0	0	0	0	0	-17.86	-17.86
Inverter Transformer	MV1-5 T	364676	4905892	2	0	0	56.1	56.1	1	866.28	3.25	0	69.75	0	-0.03	0	0	4.56	0	0	0	0	0	0	-18.23	-18.23
Inverter Transformer	MV1-6 T	364482	4905835	2	0	0	56.1	56.1	1	960.71	3.25	0	70.65	0	0	0	0	4.79	0	0	0	0	0	0	-19.39	-19.39
Inverter Transformer	MV2-3 T	365814	4906641	2	0	0	56.1	56.1	1	1058.05	3.25	0	71.49	0	0.03	0	0	5.03	0	0	0	0	0	0	-20.49	-20.49
Inverter Transformer	MV1-8 T	364782	4905647	2	0	0	56.1	56.1	1	1107.18	3.25	0	71.88	0	0.05	0	0	5.14	0	0	0	0	0	0	-21.02	-21.02
Inverter Transformer	MV1-9 T	364555	4905646	2	0	0	56.1	56.1	1	1127.17	3.25	0	72.04	0	0.06	0	0	5.19	0	0	0	0	0	0	-21.23	-21.23
Inverter Transformer	MV6-4 T	370244	4906966	2	0	0	69.4	69.4	1	5486.1	3.25	0	85.79	0	3.1	0	0	7.7	0	0	0	0	0	0	-27.24	-27.24
Inverter Transformer	MV6-1 T	370230	4907364	2	0	0	69.4	69.4	1	5501.92	3.25	0	85.81	0	3.11	0	0	7.71	0	0	0	0	0	0	-27.28	-27.28
Inverter Transformer	MV2-2 T	365982	4906654	2	0	0	56.1	56.1	1	1224.09	3.25	0	72.76	0	0.09	0	0	5.41	0	0	0	0	0	0	-22.2	-22.2
Inverter Transformer	MV1-11 T	364649	4905414	2	0	0	56.1	56.1	1	1344.76	3.25	0	73.57	0	0.14	0	0	5.68	0	0	0	0	0	0	-23.33	-23.33
Inverter Transformer	MV1-12 T	365044	4905386	2	0	0	56.1	56.1	1	1396.77	3.25	0	73.9	0	0.16	0	0	5.79	0	0	0	0	0	0	-23.8	-23.8
Inverter Transformer	MV1-15 T	365309	4904994	2	0	0	56.1	56.1	1	1843.05	3.25	0	76.31	0	0.34	0	0	6.73	0	0	0	0	0	0	-27.32	-27.32
Inverter Transformer	MV3-12 T	367674	4907594	2	0	0	56.1	56.1	1	3030.73	3.25	0	80.63	0	0.84	0	0	8.92	0	0	0	0	0	0	-34.34	-34.34
Inverter Transformer	MV3-18 T	367757	4907412	2	0	0	56.1	56.1	1	3066.43	3.25	0	80.73	0	0.86	0	0	8.98	0	0	0	0	0	0	-34.51	-34.51
Inverter Transformer	MV3-13 T	367958	4907577	2	0	0	56.1	56.1	1	3300.27	3.25	0	81.37	0	0.96	0	0	9.37	0	0	0	0	0	0	-35.64	-35.64
Inverter Transformer	MV3-7 T	367951	4907754	2	0	0	56.1	56.1	1	3342.11	3.25	0	81.48	0	0.97	0	0	9.43	0	0	0	0	0	0	-35.83	-35.83
Inverter Transformer	MV3-3 T	367944	4907927	2	0	0	56.1	56.1	1	3391.32	3.25	0	81.61	0	0.99	0	0	9.51	0	0	0	0	0	0	-36.06	-36.06
Inverter Transformer	MV3-17 T	368183	4907472	2	0	0	56.1	56.1	1	3495.54	3.25	0	81.87	0	1.04	0	0	9.68	0	0	0	0	0	0	-36.53	-36.53
Inverter Transformer	MV3-10 T	368162	4907669	2	0	0	56.1	56.1	1	3520.97	3.25	0	81.93	0	1.05	0	0	9.72	0	0	0	0	0	0	-36.64	-36.64
Inverter Transformer	MV3-6 T	368156	4907834	2	0	0	56.1	56.1	1	3561.69	3.25	0	82.03	0	1.07	0	0	9.79	0	0	0	0	0	0	-36.83	-36.83
Inverter Transformer	MV3-1 T	368150	4907976	2	0	0	56.1	56.1	1	3601.64	3.25	0	82.13	0	1.08	0	0	9.85	0	0	0	0	0	0	-37	-37
Inverter Transformer	MV3-19 T	368352	4907347	2	0	0	56.1	56.1	1	3638.65	3.25	0	82.22	0	1.1	0	0	9.91	0	0	0	0	0	0	-37.16	-37.16
Inverter Transformer	MV3-15 T	368351	4907477	2	0	0	56.1	56.1	1	3661.1	3.25	0	82.27	0	1.11	0	0	9.94	0	0	0	0	0	0	-37.26	-37.26
Inverter Transformer	MV3-11 T	368340	4907662	2	0	0	56.1	56.1	1	3691.42	3.25	0	82.34	0	1.12	0	0	9.99	0	0	0	0	0	0	-37.39	-37.39
Inverter Transformer	MV3-5 T	368335	4907843	2	0	0	56.1	56.1	1	3735.27	3.25	0	82.45	0	1.14	0	0	10.05	0	0	0	0	0	0	-37.58	-37.58

	Inverter Transformer	MV3-21 T	368484	4907206	2	0	0	56.1	56.1	1	3749.35	3.25	0	82.48	0	1.14	0	0	10.08	0	0	0	0	0	0	-37.64	-37.64
	Inverter Transformer	MV3-16 T	368509	4907475	2	0	0	56.1	56.1	1	3815.74	3.25	0	82.63	0	1.17	0	0	10.18	0	0	0	0	0	0	-37.92	-37.92
	Inverter Transformer	MV3-9 T	368517	4907703	2	0	0	56.1	56.1	1	3873.06	3.25	0	82.76	0	1.19	0	0	10.26	0	0	0	0	0	0	-38.16	-38.16
	Inverter Transformer	MV3-22 T	368661	4907142	2	0	0	56.1	56.1	1	3918.26	3.25	0	82.86	0	1.21	0	0	10.33	0	0	0	0	0	0	-38.35	-38.35
	Inverter Transformer	MV3-4 T	368507	4907925	2	0	0	56.1	56.1	1	3923.81	3.25	0	82.87	0	1.21	0	0	10.34	0	0	0	0	0	0	-38.37	-38.37
	Inverter Transformer	MV3-20 T	368683	4907317	2	0	0	56.1	56.1	1	3961.21	3.25	0	82.96	0	1.23	0	0	10.4	0	0	0	0	0	0	-38.52	-38.52
	Inverter Transformer	MV3-14 T	368678	4907498	2	0	0	56.1	56.1	1	3986.05	3.25	0	83.01	0	1.24	0	0	10.43	0	0	0	0	0	0	-38.63	-38.63
	Inverter Transformer	MV3-8 T	368685	4907712	2	0	0	56.1	56.1	1	4038.28	3.25	0	83.12	0	1.26	0	0	10.51	0	0	0	0	0	0	-38.84	-38.84
	Inverter Transformer	MV3-2 T	368677	4907928	2	0	0	56.1	56.1	1	4087.24	3.25	0	83.23	0	1.28	0	0	10.58	0	0	0	0	0	0	-39.03	-39.03
	Inverter Transformer	MV4-13 T	369057	4908605	2	0	0	56.1	56.1	1	4676.88	3.25	0	84.4	0	1.51	0	0	11.42	0	0	0	0	0	0	-41.27	-41.27
	Inverter Transformer	MV4-15 T	369170	4908481	2	0	0	56.1	56.1	1	4734.24	3.25	0	84.5	0	1.53	0	0	11.5	0	0	0	0	0	0	-41.47	-41.47
	Inverter Transformer	MV4-12 T	369049	4908803	2	0	0	56.1	56.1	1	4751.5	3.25	0	84.54	0	1.53	0	0	11.52	0	0	0	0	0	0	-41.53	-41.53
	Inverter Transformer	MV4-14 T	369182	4908507	2	0	0	56.1	56.1	1	4754.94	3.25	0	84.54	0	1.54	0	0	11.53	0	0	0	0	0	0	-41.55	-41.55
	Inverter Transformer	MV4-7 T	369040	4909001	2	0	0	56.1	56.1	1	4832.21	3.25	0	84.68	0	1.56	0	0	11.63	0	0	0	0	0	0	-41.82	-41.82
	Inverter Transformer	MV4-4 T	369033	4909199	2	0	0	56.1	56.1	1	4921.33	3.25	0	84.84	0	1.6	0	0	11.75	0	0	0	0	0	0	-42.13	-42.13
	Inverter Transformer	MV4-11 T	369269	4908855	2	0	0	56.1	56.1	1	4972.65	3.25	0	84.93	0	1.62	0	0	11.82	0	0	0	0	0	0	-42.31	-42.31
	Inverter Transformer	MV4-10 T	369307	4908858	2	0	0	56.1	56.1	1	5008.38	3.25	0	84.99	0	1.63	0	0	11.87	0	0	0	0	0	0	-42.43	-42.43
	Inverter Transformer	MV4-1 T	369017	4909397	2	0	0	56.1	56.1	1	5009.04	3.25	0	85	0	1.63	0	0	11.87	0	0	0	0	0	0	-42.43	-42.43
	Inverter Transformer	MV4-8 T	369262	4909001	2	0	0	56.1	56.1	1	5029.81	3.25	0	85.03	0	1.64	0	0	11.89	0	0	0	0	0	0	-42.5	-42.5
	Inverter Transformer	MV4-9 T	369284	4909001	2	0	0	56.1	56.1	1	5049.5	3.25	0	85.06	0	1.64	0	0	11.92	0	0	0	0	0	0	-42.57	-42.57
	Inverter Transformer	MV4-6 T	369249	4909192	2	0	0	56.1	56.1	1	5106.57	3.25	0	85.16	0	1.66	0	0	11.99	0	0	0	0	0	0	-42.76	-42.76
	Inverter Transformer	MV4-5 T	369283	4909199	2	0	0	56.1	56.1	1	5139.79	3.25	0	85.22	0	1.68	0	0	12.04	0	0	0	0	0	0	-42.87	-42.87
	Inverter Transformer	MV4-3 T	369234	4909397	2	0	0	56.1	56.1	1	5194.64	3.25	0	85.31	0	1.69	0	0	12.11	0	0	0	0	0	0	-43.06	-43.06
	Inverter Transformer	MV4-2 T	369267	4909397	2	0	0	56.1	56.1	1	5223.07	3.25	0	85.36	0	1.7	0	0	12.14	0	0	0	0	0	0	-43.15	-43.15
	Inverter Transformer	MV6-2 T	370091	4907339	2	0	0	56.1	56.1	1	5361.01	3.25	0	85.58	0	1.75	0	0	12.32	0	0	0	0	0	0	-43.6	-43.6
	Inverter Transformer	MV6-3 T	370202	4907140	2	0	0	56.1	56.1	1	5453.68	3.25	0	85.73	0	1.78	0	0	12.44	0	0	0	0	0	0	-43.9	-43.9
	Inverter Transformer	MV5-6 T	369987	4908507	2	0	0	56.1	56.1	1	5511.23	3.25	0	85.82	0	1.8	0	0	12.51	0	0	0	0	0	0	-44.08	-44.08
	Inverter Transformer	MV5-5 T	370021	4908690	2	0	0	56.1	56.1	1	5604.03	3.25	0	85.97	0	1.84	0	0	12.62	0	0	0	0	0	0	-44.37	-44.37
	Inverter Transformer	MV5-2 T	370011	4908853	2	0	0	56.1	56.1	1	5653.12	3.25	0	86.05	0	1.85	0	0	12.68	0	0	0	0	0	0	-44.52	-44.52
	Inverter Transformer	MV5-1 T	370015	4909142	2	0	0	56.1	56.1	1	5770.32	3.25	0	86.22	0	1.89	0	0	12.83	0	0	0	0	0	0	-44.88	-44.88
	Inverter Transformer	MV5-3 T	370237	4908851	2	0	0	56.1	56.1	1	5862.85	3.25	0	86.36	0	1.92	0	0	12.94	0	0	0	0	0	0	-45.16	-45.16
	Inverter Transformer	MV5-4 T	370330	4908707	2	0	0	56.1	56.1	1	5900.58	3.25	0	86.42	0	1.93	0	0	12.98	0	0	0	0	0	0	-45.28	-45.28
	Line Reactor	NGR	369421	4908787.5	5	0	0	45.4	45.4	1	5083.44	5.25	0	85.12	0	3.26	1.35	0.1	2.08	0	0	0	0	0	0	-46.46	-46.46
Limit. Valu	0	0																								
Level D/N:	31.5615	31.5615																								

Receiver: Vacant Lot Receptor
ID: S-VLR7
X: 365386
Y: 4907135
Z: 4.5
Ground: 0

ISO	Description	ID	X	Y	Z	Ground	ReflOrd	LxT	LxN	L/A	Dist.	hm	Freq	Adiv	K0b	Agr	Abar	z	Aatm	Afol	Ahous	Cmet	CmetN	Dc	RL	LtotT	LtotN
	Inverter	MV2-4	365586	4906624	2	0	0	100.3	100.3	1	548.75	3.25	0	65.79	0	-0.52	0	0	8.88	0	0	0	0	0	0	26.16	26.16
	Inverter	MV2-3	365820	4906641	2	0	0	100.3	100.3	1	657.57	3.25	0	67.36	0	-0.44	0	0	9.52	0	0	0	0	0	0	23.87	23.87
	Inverter	MV2-1	365842	4906816	2	0	0	97.3	97.3	1	556.51	3.25	0	65.91	0	-0.51	0	0	8.93	0	0	0	0	0	0	22.98	22.98
	Sol_Luce Substation	S_Substation	369426	4908792	3.5	0	0	112.1	112.1	1	4366.61	5.25	0	83.8	0	0.71	3.02	0.3	7.84	0	0	0	0	0	0	16.7	16.7
	Inverter	MV1-1	364715	4906166	2	0	0	100.3	100.3	1	1178.65	3.25	0	72.43	0	-0.16	0	0	11.46	0	0	0	0	0	0	16.58	16.58
	Inverter	MV1-2	364753	4906063	2	0	0	100.3	100.3	1	1244.94	3.25	0	72.9	0	-0.13	0	0	11.65	0	0	0	0	0	0	15.89	15.89
	Inverter	MV1-4	364815	4905918	2	0	0	100.3	100.3	1	1344.3	3.25	0	73.57	0	-0.09	0	0	11.92	0	0	0	0	0	0	14.91	14.91
	Inverter	MV1-5	364671	4905892	2	0	0	100.3	100.3	1	1433.97	3.25	0	74.13	0	-0.06	0	0	12.16	0	0	0	0	0	0	14.08	14.08
	Inverter	MV1-6	364477	4905835	2	0	0	100.3	100.3	1	1586.28	3.25	0	75.01	0	0	0	0	12.54	0	0	0	0	0	0	12.77	12.77
	Inverter	MV1-8	364788	4905647	2	0	0	100.3	100.3	1	1603.67	3.25	0	75.1	0	0	0	0	12.58	0	0	0	0	0	0	12.63	12.63
	Inverter	MV1-9	364561	4905646	2	0	0	100.3	100.3	1	1702.28	3.25	0	75.62	0	0.04	0	0	12.81	0	0	0	0	0	0	11.85	11.85
	Inverter	MV1-12	365038	4905386	2	0	0	100.3	100.3	1	1783.29	3.25	0	76.02	0	0.06	0	0	12.99	0	0	0	0	0	0	11.23	11.23
	Inverter	MV1-11	364655	4905414	2	0	0	100.3	100.3	1	1869.82	3.25	0	76.44	0	0.09	0	0	13.18	0	0	0	0	0	0	10.6	10.6
	Inverter	MV1-7	364925	4905782	2	0	0	97.3	97.3	1	1429.38	3.25	0	74.1	0	-0.06	0	0	12.15	0	0	0	0	0	0	11.12	11.12
	Inverter	MV1-15	365315	4904994	2	0	0	100.3	100.3	1	2142.18	3.25	0	77.62	0	0.17	0	0	13.76	0	0	0	0	0	0	8.77	8.77
	Inverter	MV1-10	365004	4905564	2	0	0	97.3	97.3	1	1616.78	3.25	0	75.17	0	0.01	0	0	12.61	0	0	0	0	0	0	9.52	9.52
	Inverter	MV3-12	367668	4907594	2	0	0	100.3	100.3	1	2327.71	3.25	0	78.34	0	0.22	0	0	14.13	0	0	0	0	0	0	7.63	7.63
	Inverter	MV3-18	367752	4907412	2	0	0	100.3	100.3	1	2382.16	3.25	0	78.54	0	0.23	0	0	14.23	0	0	0	0	0	0	7.31	7.31
	Inverter	MV3-13	367963	4907577	2	0	0	100.3	100.3	1	2614.63	3.25	0	79.35	0	0.28	0	0	14.67	0	0	0	0	0	0	6.01	6.01
	Inverter	MV3-7	367945	4907754	2	0	0	100.3	100.3	1	2632.8	3.25	0	79.41	0	0.29	0	0	14.71	0	0	0	0	0	0	5.91	5.91
	Inverter	MV3-3	367939	4907927	2	0	0	100.3	100.3	1	2673.03	3.25	0	79.54	0	0.3	0	0	14.78	0	0	0	0	0	0	5.69	5.69
	Inverter	MV2-2	365977	4906654	2	0	0	89.1	89.1	1	762	3.25	0	68.64	0	0.63	0	0	5.84	0	0	0	0	0	0	13.95	13.95
	Inverter	MV3-17	368178	4907472	2	0	0	100.3	100.3	1	2812.27	3.25	0	79.98	0	0.32	0	0	15.04	0	0	0	0	0	0	4.97	4.97
	Inverter	MV1-13	364731	4905241	2	0	0	97.3	97.3	1	2004.06	3.25	0	77.04	0	0.13	0	0	13.47	0	0	0	0	0	0	6.67	6.67
	Inverter	MV3-10	368167	4907669	2	0	0	100.3	100.3	1	2831.81	3.25	0	80.04	0	0.33	0	0	15.07	0	0	0	0	0	0	4.87	4.87
	Inverter	MV3-6	368162	4907834	2	0	0	100.3	100.3	1	2862.65	3.25	0	80.14	0	0.33	0	0	15.13	0	0	0	0	0	0	4.71	4.71
	Inverter	MV1-14	365163	4905049	2	0	0	97.3	97.3	1	2097.89	3.25	0	77.44	0	0.16	0	0	13.67	0	0	0	0	0	0	6.05	6.05
	Inverter	MV3-19	368357	4907347	2	0	0	100.3	100.3	1	2978.56	3.25	0	80.48	0	0.36	0	0	15.33	0	0	0	0	0	0	4.14	4.14
	Inverter	MV3-15	368357	4907477	2	0	0	100.3	100.3	1	2990.62	3.25	0	80.52	0	0.36	0	0	15.36	0	0	0	0	0	0	4.08	4.08
	Inverter	MV3-11	368346	4907662	2	0	0	100.3	100.3	1	3006.55	3.25	0	80.56	0	0.36	0	0	15.38	0	0	0	0	0	0	4	4

Inverter	MV3-21	368478	4907206	2	0	0	100.3	100.3	1	3092.82	3.25	0	80.81	0	0.38	0	0	15.54	0	0	0	0	0	0	3.59	3.59
Inverter	MV3-16	368514	4907475	2	0	0	100.3	100.3	1	3146.42	3.25	0	80.96	0	0.39	0	0	15.63	0	0	0	0	0	0	3.34	3.34
Inverter	MV3-9	368512	4907703	2	0	0	100.3	100.3	1	3177.19	3.25	0	81.04	0	0.4	0	0	15.68	0	0	0	0	0	0	3.19	3.19
Inverter	MV3-20	368689	4907317	2	0	0	100.3	100.3	1	3308.01	3.25	0	81.39	0	0.42	0	0	15.91	0	0	0	0	0	0	2.6	2.6
Inverter	MV3-14	368684	4907498	2	0	0	100.3	100.3	1	3317.92	3.25	0	81.42	0	0.42	0	0	15.92	0	0	0	0	0	0	2.55	2.55
Inverter	MV3-8	368680	4907712	2	0	0	100.3	100.3	1	3344.15	3.25	0	81.49	0	0.42	0	0	15.97	0	0	0	0	0	0	2.43	2.43
Inverter	MV4-7	369035	4909001	2	0	0	100.3	100.3	1	4098.43	3.25	0	83.25	0	0.54	0	0	17.21	0	0	0	0	0	0	-0.69	-0.69
Inverter	MV4-4	369027	4909199	2	0	0	100.3	100.3	1	4185.33	3.25	0	83.43	0	0.55	0	0	17.34	0	0	0	0	0	0	-1.02	-1.02
Inverter	MV4-11	369264	4908855	2	0	0	100.3	100.3	1	4242.32	3.25	0	83.55	0	0.56	0	0	17.43	0	0	0	0	0	0	-1.23	-1.23
Inverter	MV4-1	369011	4909397	2	0	0	100.3	100.3	1	4272.85	3.25	0	83.61	0	0.56	0	0	17.48	0	0	0	0	0	0	-1.34	-1.34
Inverter	MV4-10	369312	4908858	2	0	0	100.3	100.3	1	4287.45	3.25	0	83.64	0	0.57	0	0	17.5	0	0	0	0	0	0	-1.4	-1.4
Inverter	MV4-8	369256	4909001	2	0	0	100.3	100.3	1	4296.38	3.25	0	83.66	0	0.57	0	0	17.52	0	0	0	0	0	0	-1.43	-1.43
Inverter	MV4-9	369289	4909001	2	0	0	100.3	100.3	1	4326.13	3.25	0	83.72	0	0.57	0	0	17.56	0	0	0	0	0	0	-1.54	-1.54
Inverter	MV4-6	369243	4909192	2	0	0	100.3	100.3	1	4371.24	3.25	0	83.81	0	0.58	0	0	17.63	0	0	0	0	0	0	-1.71	-1.71
Inverter	MV4-5	369289	4909199	2	0	0	100.3	100.3	1	4415.15	3.25	0	83.9	0	0.58	0	0	17.7	0	0	0	0	0	0	-1.87	-1.87
Inverter	MV4-3	369229	4909397	2	0	0	100.3	100.3	1	4459.29	3.25	0	83.99	0	0.59	0	0	17.77	0	0	0	0	0	0	-2.03	-2.03
Inverter	MV4-2	369272	4909397	2	0	0	100.3	100.3	1	4496.4	3.25	0	84.06	0	0.59	0	0	17.82	0	0	0	0	0	0	-2.16	-2.16
Inverter	MV6-2	370085	4907339	2	0	0	100.3	100.3	1	4703.43	3.25	0	84.45	0	0.61	0	0	18.14	0	0	0	0	0	0	-2.89	-2.89
Inverter	MV6-3	370207	4907140	2	0	0	100.3	100.3	1	4821	3.25	0	84.66	0	0.63	0	0	18.32	0	0	0	0	0	0	-3.29	-3.29
Inverter	MV5-5	370015	4908690	2	0	0	100.3	100.3	1	4883.2	3.25	0	84.77	0	0.63	0	0	18.41	0	0	0	0	0	0	-3.5	-3.5
Inverter	MV5-2	370006	4908853	2	0	0	100.3	100.3	1	4929.09	3.25	0	84.86	0	0.64	0	0	18.48	0	0	0	0	0	0	-3.65	-3.65
Inverter	MV5-1	370020	4909142	2	0	0	100.3	100.3	1	5049.95	3.25	0	85.07	0	0.65	0	0	18.65	0	0	0	0	0	0	-4.05	-4.05
Inverter	MV5-3	370231	4908851	2	0	0	100.3	100.3	1	5139.91	3.25	0	85.22	0	0.65	0	0	18.78	0	0	0	0	0	0	-4.35	-4.35
Inverter	MV5-4	370324	4908707	2	0	0	100.3	100.3	1	5182.18	3.25	0	85.29	0	0.66	0	0	18.85	0	0	0	0	0	0	-4.48	-4.48
Inverter	MV1-3	364440	4906039	2	0	0	89.1	89.1	1	1447.8	3.25	0	74.21	0	0.78	0	0	7.12	0	0	0	0	0	0	6.94	6.94
DSTATCOM - 10 MVAR #2	DSAT2	369403	4908757	2.5	0	0	96.6	96.6	1	4332.11	3.5	0	83.73	0	3.61	0	0	3.01	0	0	0	0	0	0	6.27	6.27
DSTATCOM - 10 MVAR #1	DSAT1	369437	4908757	2.5	0	0	96.6	96.6	1	4363.66	3.5	0	83.8	0	3.62	0	0	3.03	0	0	0	0	0	0	6.19	6.19
Inverter	MV6-1	370235	4907364	2	0	0	97.3	97.3	1	4854.41	3.25	0	84.72	0	0.63	0	0	18.36	0	0	0	0	0	0	-6.4	-6.4
Inverter	MV3-1	368156	4907976	2	0	0	89.1	89.1	1	2894.86	3.25	0	80.23	0	1.12	0	0	9.46	0	0	0	0	0	0	-1.75	-1.75
Inverter	MV3-5	368340	4907843	2	0	0	89.1	89.1	1	3037.66	3.25	0	80.65	0	1.16	0	0	9.67	0	0	0	0	0	0	-2.42	-2.42
SubstationTransformer	W_ST	369711.17	4906112.3	2.5	0	0	92	92	1	4444.44	4.25	0	83.96	0	1.49	2.48	0.28	7.94	0	0	0	0	0	0	-3.89	-3.89
Inverter	MV3-4	368502	4907925	2	0	0	89.1	89.1	1	3214.59	3.25	0	81.14	0	1.2	0	0	9.94	0	0	0	0	0	0	-3.22	-3.22
Gardiner Substation	G_Sub	366586.3	4903349.9	2.5	0	0	90.8	90.8	1	3970.86	4.25	0	82.98	0	1.37	2.67	0.33	7.33	0	0	0	0	0	0	-3.56	-3.56
Inverter	MV3-22	368656	4907142	2	0	0	89.1	89.1	1	3270.01	3.25	0	81.29	0	1.21	0	0	10.02	0	0	0	0	0	0	-3.47	-3.47
Inverter	MV3-2	368671	4907928	2	0	0	89.1	89.1	1	3379.36	3.25	0	81.58	0	1.24	0	0	10.18	0	0	0	0	0	0	-3.94	-3.94
Inverter	MV4-13	369051	4908605	2	0	0	89.1	89.1	1	3948.81	3.25	0	82.93	0	1.38	0	0	11.01	0	0	0	0	0	0	-6.26	-6.26
Fixed Reactor Bank 1	FRB1	369378	4908755	6	0	0	89.8	89.8	1	4308.19	5.25	0	83.69	0	-0.68	0	0	7.77	0	0	0	0	0	0	-1	-1
Inverter	MV4-12	369043	4908803	2	0	0	89.1	89.1	1	4019.44	3.25	0	83.08	0	1.4	0	0	11.11	0	0	0	0	0	0	-6.53	-6.53
Inverter	MV4-15	369176	4908481	2	0	0	89.1	89.1	1	4021.92	3.25	0	83.09	0	1.4	0	0	11.12	0	0	0	0	0	0	-6.54	-6.54
Inverter	MV4-14	369176	4908507	2	0	0	89.1	89.1	1	4030.69	3.25	0	83.11	0	1.4	0	0	11.13	0	0	0	0	0	0	-6.58	-6.58
Fixed Reactor Bank 2	FRB2	369464	4908755	6	0	0	89.8	89.8	1	4387.99	5.25	0	83.85	0	-0.66	0	0	7.87	0	0	0	0	0	0	-1.28	-1.28
Westbrook Inverter Enclosur	W_INV2	369374	4906388	2	0	0	89.1	89.1	1	4057.36	3.25	0	83.16	0	1.41	0	0	11.17	0	0	0	0	0	0	-6.68	-6.68
Westbrook Inverter Enclosur	W_INV3	369508	4906164	2	0	0	89.1	89.1	1	4234.82	3.25	0	83.54	0	1.45	0	0	11.42	0	0	0	0	0	0	-7.35	-7.35
Westbrook Inverter Enclosur	W_INV5	369719	4906574	2	0	0	89.1	89.1	1	4369.17	3.25	0	83.81	0	1.48	0	0	11.6	0	0	0	0	0	0	-7.84	-7.84
Westbrook Inverter Enclosur	W_INV4	369673	4906164	2	0	0	89.1	89.1	1	4395.59	3.25	0	83.86	0	1.49	0	0	11.64	0	0	0	0	0	0	-7.93	-7.93
Westbrook Inverter Enclosur	W_INV7	369780	4906417	2	0	0	89.1	89.1	1	4452.28	3.25	0	83.97	0	1.5	0	0	11.72	0	0	0	0	0	0	-8.14	-8.14
Westbrook Inverter Enclosur	W_INV6	369875	4906578	2	0	0	89.1	89.1	1	4523.43	3.25	0	84.11	0	1.52	0	0	11.82	0	0	0	0	0	0	-8.39	-8.39
Inverters	G_Inv1	366526.4	4903225.8	2	0	0	87.7	87.7	1	4072.14	3.25	0	83.2	0	2.8	0	0	4.95	0	0	0	0	0	0	-3.29	-3.29
Inverter	MV5-6	369982	4908507	2	0	0	89.1	89.1	1	4796.42	3.25	0	84.62	0	1.59	0	0	12.19	0	0	0	0	0	0	-9.34	-9.34
Inverters	G_Inv2	366676.9	4903239.1	2	0	0	87.7	87.7	1	4104.2	3.25	0	83.26	0	2.8	0	0	4.99	0	0	0	0	0	0	-3.39	-3.39
Inverters	G_Inv3	366583.7	4903091.4	2	0	0	87.7	87.7	1	4217.25	3.25	0	83.5	0	2.81	0	0	5.11	0	0	0	0	0	0	-3.76	-3.76
Inverters	G_Inv4	366732.8	4903105	2	0	0	87.7	87.7	1	4249.09	3.25	0	83.57	0	2.81	0	0	5.14	0	0	0	0	0	0	-3.86	-3.86
Inverters	G_Inv5	366638.5	4902958.1	2	0	0	87.7	87.7	1	4360.65	3.25	0	83.79	0	2.82	0	0	5.26	0	0	0	0	0	0	-4.21	-4.21
Inverters	G_Inv6	366788.5	4902972	2	0	0	87.7	87.7	1	4392.9	3.25	0	83.86	0	2.82	0	0	5.3	0	0	0	0	0	0	-4.31	-4.31
Inverters	G_Inv7	366694.6	4902824.7	2	0	0	87.7	87.7	1	4504.57	3.25	0	84.07	0	2.83	0	0	5.42	0	0	0	0	0	0	-4.66	-4.66
Inverters	G_Inv8	366844.5	4902838.5	2	0	0	87.7	87.7	1	4537.31	3.25	0	84.14	0	2.83	0	0	5.45	0	0	0	0	0	0	-4.76	-4.76
Inverter Transformer	MV2-1 T	365836	4906816	2	0	0	69.4	69.4	1	551.6	3.25	0	65.83	0	1.14	0	0	3.07	0	0	0	0	0	0	-0.69	-0.69
Inverters	G_Inv9	366750.9	4902691.8	2	0	0	87.7	87.7	1	4648.12	3.25	0	84.35	0	2.84	0	0	5.57	0	0	0	0	0	0	-5.1	-5.1
Inverters	G_Inv10	366900.7	4902704.8	2	0	0	87.7	87.7	1	4681.99	3.25	0	84.41	0	2.84	0	0	5.6	0	0	0	0	0	0	-5.2	-5.2
Westbrook Inverter Enclosur	W_INV1	369409	4906578	2	0	0	86.1	86.1	1	4061.38	3.25	0	83.17	0	1.41	0	0	11.17	0	0	0	0	0	0	-9.69	-9.69
Inverter	MV6-4	370250	4906966	2	0	0	86.1	86.1	1	4866.94	3.25	0	84.75	0	1.61	0	0	12.28	0	0	0	0	0	0	-12.58	-12.58
Inverter Transformer	MV1-7 T	364919	4905782	2	0	0	69.4	69.4	1	1431.33	3.25	0	74.11	0	1.94	0	0	4.36	0	0	0	0	0	0	-11.06	-11.06
Westbrook Inverter Transfor	W_INVTR1	369403	4906578	2	0	0	78.2	78.2	1	4055.43	3.25	0	83.16	0	-2.98	0	0	2.08	0	0	0	0	0	0	-4.02	-4.02
Westbrook Inverter Transfor	W_INVTR2	369368	4906388	2	0	0	77.3	77.3	1	4051.46	3.25	0	83.15	0	-2.97	0	0	2.07	0	0	0	0	0	0	-4.91	-4.91
Inverter Transformer	MV1-10 T	365010	4905564	2	0	0	69.4	69.4	1	1615.37	3.25	0	75.17	0	2.02	0	0	4.56	0	0	0	0	0	0	-12.4	-12.4
Westbrook Inverter Transfor	W_INVTR3	369514	4906164	2	0	0	77.3	77.3	1	4240.66	3.25	0	83.55	0	-3.02	0	0	2.14	0	0	0	0	0	0	-5.33	-5.33
Westbrook Inverter Transfor	W_INVTR5	369725	4906574	2	0	0	77.3	77.3	1	4375.12	3.25	0	83.82	0	-3.05	0	0	2.19	0	0	0	0	0	0	-5.62	-5.62
Westbrook Inverter Transfor	W_INVTR4	369679	4906164	2	0	0	77.3	77.3	1	4401.44	3.25	0	83.87	0	-3.05	0	0	2.2	0	0	0	0	0	0	-5.68	-5.68
Westbrook Inverter Transfor	W_INVTR7	369786	4906417	2	0	0	77.3	77.3	1	4458.2	3.25	0	83.98	0	-3.06	0	0	2.22	0	0	0	0	0	0	-5.8	-5.8
Westbrook Inverter Transfor	W_INVTR6	369881	4906578	2	0	0	77.3	77.3	1	4529.38	3.25	0	84.12	0	-3.08	0	0	2.25	0	0	0	0	0	0	-5.95	-5.95
Inverter Transformer	MV1-13 T	364725	4905241	2	0	0	69.4	69.4	1	2006.03	3.25	0	77.05	0	2.18	0	0	4.97	0	0	0	0	0	0	-14.84	-14.84
Inverter Transformer	MV1-14 T	365157	4905049	2	0	0	69.4	69.4	1	2098.53	3.25	0	77.44	0	2.21	0	0	5.06	0	0	0	0	0	0	-15.36	-15.36
Inverter Transformer	MV2-4 T	365590	4906628	2	0	0	56.1	56.1	1	546.51	3.25	0	65.75	0	-0.11	0	0	3.7	0	0	0	0	0	0	-13.28	-13.28
Inverter Transformer	MV2-3 T	365814	4906641	2	0	0	56.1	56.1	1	653.63	3.25	0	67.31	0	-0.09	0	0	4.01	0	0	0	0	0	0	-15.16	-15.16

	Inverter Transformer	MV2-2 T	365982	4906654	2	0	0	56.1	56.1	1	765.89	3.25	0	68.68	0	-0.06	0	0	4.31	0	0	0	0	0	0	-16.87	-16.87
	Inverter Transformer	MV6-1 T	370230	4907364	2	0	0	69.4	69.4	1	4849.41	3.25	0	84.71	0	2.98	0	0	7.28	0	0	0	0	0	0	-25.63	-25.63
	Inverter Transformer	MV6-4 T	370244	4906966	2	0	0	69.4	69.4	1	4860.94	3.25	0	84.73	0	2.98	0	0	7.29	0	0	0	0	0	0	-25.66	-25.66
	Inverter Transformer	MV1-1 T	364721	4906166	2	0	0	56.1	56.1	1	1175.24	3.25	0	72.4	0	0.07	0	0	5.3	0	0	0	0	0	0	-21.72	-21.72
	Inverter Transformer	MV1-2 T	364759	4906063	2	0	0	56.1	56.1	1	1241.9	3.25	0	72.88	0	0.1	0	0	5.45	0	0	0	0	0	0	-22.37	-22.37
	Inverter Transformer	MV1-4 T	364821	4905918	2	0	0	56.1	56.1	1	1341.76	3.25	0	73.55	0	0.14	0	0	5.67	0	0	0	0	0	0	-23.31	-23.31
	Inverter Transformer	MV1-5 T	364676	4905892	2	0	0	56.1	56.1	1	1431.49	3.25	0	74.12	0	0.17	0	0	5.87	0	0	0	0	0	0	-24.1	-24.1
	Inverter Transformer	MV1-3 T	364435	4906039	2	0	0	56.1	56.1	1	1451.08	3.25	0	74.23	0	0.18	0	0	5.91	0	0	0	0	0	0	-24.27	-24.27
	Inverter Transformer	MV1-6 T	364482	4905835	2	0	0	56.1	56.1	1	1583.42	3.25	0	74.99	0	0.23	0	0	6.2	0	0	0	0	0	0	-25.36	-25.36
	Inverter Transformer	MV1-8 T	364782	4905647	2	0	0	56.1	56.1	1	1605.92	3.25	0	75.11	0	0.24	0	0	6.24	0	0	0	0	0	0	-25.54	-25.54
	Inverter Transformer	MV1-9 T	364555	4905646	2	0	0	56.1	56.1	1	1705.19	3.25	0	75.64	0	0.28	0	0	6.45	0	0	0	0	0	0	-26.31	-26.31
	Inverter Transformer	MV1-12 T	365044	4905386	2	0	0	56.1	56.1	1	1782.13	3.25	0	76.02	0	0.31	0	0	6.61	0	0	0	0	0	0	-26.88	-26.88
	Inverter Transformer	MV1-11 T	364649	4905414	2	0	0	56.1	56.1	1	1872.17	3.25	0	76.45	0	0.35	0	0	6.79	0	0	0	0	0	0	-27.53	-27.53
	Inverter Transformer	MV1-15 T	365309	4904994	2	0	0	56.1	56.1	1	2142.39	3.25	0	77.62	0	0.46	0	0	7.32	0	0	0	0	0	0	-29.34	-29.34
	Inverter Transformer	MV3-12 T	367674	4907594	2	0	0	56.1	56.1	1	2333.59	3.25	0	78.36	0	0.55	0	0	7.68	0	0	0	0	0	0	-30.53	-30.53
	Inverter Transformer	MV3-18 T	367757	4907412	2	0	0	56.1	56.1	1	2387.13	3.25	0	78.56	0	0.57	0	0	7.78	0	0	0	0	0	0	-30.85	-30.85
	Inverter Transformer	MV3-13 T	367958	4907577	2	0	0	56.1	56.1	1	2609.7	3.25	0	79.33	0	0.66	0	0	8.19	0	0	0	0	0	0	-32.12	-32.12
	Inverter Transformer	MV3-7 T	367951	4907754	2	0	0	56.1	56.1	1	2638.63	3.25	0	79.43	0	0.68	0	0	8.24	0	0	0	0	0	0	-32.28	-32.28
	Inverter Transformer	MV3-3 T	367944	4907927	2	0	0	56.1	56.1	1	2677.8	3.25	0	79.56	0	0.69	0	0	8.31	0	0	0	0	0	0	-32.5	-32.5
	Inverter Transformer	MV3-17 T	368183	4907472	2	0	0	56.1	56.1	1	2817.23	3.25	0	80	0	0.75	0	0	8.55	0	0	0	0	0	0	-33.24	-33.24
	Inverter Transformer	MV3-10 T	368162	4907669	2	0	0	56.1	56.1	1	2826.9	3.25	0	80.03	0	0.76	0	0	8.57	0	0	0	0	0	0	-33.29	-33.29
	Inverter Transformer	MV3-6 T	368156	4907834	2	0	0	56.1	56.1	1	2856.84	3.25	0	80.12	0	0.77	0	0	8.62	0	0	0	0	0	0	-33.45	-33.45
	Inverter Transformer	MV3-1 T	368150	4907976	2	0	0	56.1	56.1	1	2889.11	3.25	0	80.22	0	0.78	0	0	8.68	0	0	0	0	0	0	-33.62	-33.62
	Inverter Transformer	MV3-19 T	368352	4907347	2	0	0	56.1	56.1	1	2973.57	3.25	0	80.47	0	0.82	0	0	8.82	0	0	0	0	0	0	-34.05	-34.05
	Inverter Transformer	MV3-15 T	368351	4907477	2	0	0	56.1	56.1	1	2984.66	3.25	0	80.5	0	0.82	0	0	8.84	0	0	0	0	0	0	-34.1	-34.1
	Inverter Transformer	MV3-11 T	368340	4907662	2	0	0	56.1	56.1	1	3000.64	3.25	0	80.54	0	0.83	0	0	8.87	0	0	0	0	0	0	-34.19	-34.19
	Inverter Transformer	MV3-5 T	368335	4907843	2	0	0	56.1	56.1	1	3032.8	3.25	0	80.64	0	0.84	0	0	8.92	0	0	0	0	0	0	-34.35	-34.35
	Inverter Transformer	MV3-21 T	368484	4907206	2	0	0	56.1	56.1	1	3098.81	3.25	0	80.82	0	0.87	0	0	9.03	0	0	0	0	0	0	-34.67	-34.67
	Inverter Transformer	MV3-16 T	368509	4907475	2	0	0	56.1	56.1	1	3141.45	3.25	0	80.94	0	0.89	0	0	9.11	0	0	0	0	0	0	-34.88	-34.88
	Inverter Transformer	MV3-9 T	368517	4907703	2	0	0	56.1	56.1	1	3182.1	3.25	0	81.05	0	0.91	0	0	9.17	0	0	0	0	0	0	-35.08	-35.08
	Inverter Transformer	MV3-4 T	368507	4907925	2	0	0	56.1	56.1	1	3219.43	3.25	0	81.16	0	0.92	0	0	9.23	0	0	0	0	0	0	-35.25	-35.25
	Inverter Transformer	MV3-22 T	368661	4907142	2	0	0	56.1	56.1	1	3275.01	3.25	0	81.3	0	0.95	0	0	9.33	0	0	0	0	0	0	-35.52	-35.52
	Inverter Transformer	MV3-20 T	368683	4907317	2	0	0	56.1	56.1	1	3302.02	3.25	0	81.38	0	0.96	0	0	9.37	0	0	0	0	0	0	-35.64	-35.64
	Inverter Transformer	MV3-14 T	368678	4907498	2	0	0	56.1	56.1	1	3311.95	3.25	0	81.4	0	0.96	0	0	9.39	0	0	0	0	0	0	-35.69	-35.69
	Inverter Transformer	MV3-8 T	368685	4907712	2	0	0	56.1	56.1	1	3349.08	3.25	0	81.5	0	0.98	0	0	9.45	0	0	0	0	0	0	-35.86	-35.86
	Inverter Transformer	MV3-2 T	368677	4907928	2	0	0	56.1	56.1	1	3385.19	3.25	0	81.59	0	0.99	0	0	9.5	0	0	0	0	0	0	-36.03	-36.03
	Inverter Transformer	MV4-13 T	369057	4908605	2	0	0	56.1	56.1	1	3954.38	3.25	0	82.94	0	1.23	0	0	10.39	0	0	0	0	0	0	-38.5	-38.5
	Inverter Transformer	MV4-15 T	369170	4908481	2	0	0	56.1	56.1	1	4016.26	3.25	0	83.08	0	1.25	0	0	10.48	0	0	0	0	0	0	-38.75	-38.75
	Inverter Transformer	MV4-12 T	369049	4908803	2	0	0	56.1	56.1	1	4024.9	3.25	0	83.1	0	1.25	0	0	10.49	0	0	0	0	0	0	-38.78	-38.78
	Inverter Transformer	MV4-14 T	369182	4908507	2	0	0	56.1	56.1	1	4036.34	3.25	0	83.12	0	1.26	0	0	10.51	0	0	0	0	0	0	-38.83	-38.83
	Inverter Transformer	MV4-7 T	369040	4909001	2	0	0	56.1	56.1	1	4102.89	3.25	0	83.26	0	1.28	0	0	10.61	0	0	0	0	0	0	-39.1	-39.1
	Inverter Transformer	MV4-4 T	369033	4909199	2	0	0	56.1	56.1	1	4190.55	3.25	0	83.45	0	1.32	0	0	10.73	0	0	0	0	0	0	-39.44	-39.44
	Inverter Transformer	MV4-11 T	369269	4908855	2	0	0	56.1	56.1	1	4246.89	3.25	0	83.56	0	1.34	0	0	10.82	0	0	0	0	0	0	-39.66	-39.66
	Inverter Transformer	MV4-1 T	369017	4909397	2	0	0	56.1	56.1	1	4277.94	3.25	0	83.62	0	1.35	0	0	10.86	0	0	0	0	0	0	-39.78	-39.78
	Inverter Transformer	MV4-10 T	369307	4908858	2	0	0	56.1	56.1	1	4282.87	3.25	0	83.63	0	1.36	0	0	10.87	0	0	0	0	0	0	-39.8	-39.8
	Inverter Transformer	MV4-8 T	369262	4909001	2	0	0	56.1	56.1	1	4301.78	3.25	0	83.67	0	1.36	0	0	10.9	0	0	0	0	0	0	-39.87	-39.87
	Inverter Transformer	MV4-9 T	369284	4909001	2	0	0	56.1	56.1	1	4321.62	3.25	0	83.71	0	1.37	0	0	10.92	0	0	0	0	0	0	-39.95	-39.95
	Inverter Transformer	MV4-6 T	369249	4909192	2	0	0	56.1	56.1	1	4376.53	3.25	0	83.82	0	1.39	0	0	11	0	0	0	0	0	0	-40.16	-40.16
	Inverter Transformer	MV4-5 T	369283	4909199	2	0	0	56.1	56.1	1	4409.84	3.25	0	83.89	0	1.4	0	0	11.05	0	0	0	0	0	0	-40.28	-40.28
	Inverter Transformer	MV4-3 T	369234	4909397	2	0	0	56.1	56.1	1	4463.6	3.25	0	83.99	0	1.43	0	0	11.12	0	0	0	0	0	0	-40.49	-40.49
	Inverter Transformer	MV4-2 T	369267	4909397	2	0	0	56.1	56.1	1	4492.08	3.25	0	84.05	0	1.44	0	0	11.16	0	0	0	0	0	0	-40.59	-40.59
	Inverter Transformer	MV6-2 T	370091	4907339	2	0	0	56.1	56.1	1	4709.42	3.25	0	84.46	0	1.52	0	0	11.46	0	0	0	0	0	0	-41.38	-41.38
	Inverter Transformer	MV5-6 T	369987	4908507	2	0	0	56.1	56.1	1	4801.21	3.25	0	84.63	0	1.55	0	0	11.59	0	0	0	0	0	0	-41.71	-41.71
	Inverter Transformer	MV6-3 T	370202	4907140	2	0	0	56.1	56.1	1	4816	3.25	0	84.65	0	1.56	0	0	11.61	0	0	0	0	0	0	-41.76	-41.76
	Inverter Transformer	MV5-5 T	370021	4908690	2	0	0	56.1	56.1	1	4888.89	3.25	0	84.78	0	1.58	0	0	11.71	0	0	0	0	0	0	-42.02	-42.02
	Inverter Transformer	MV5-2 T	370011	4908853	2	0	0	56.1	56.1	1	4933.78	3.25	0	84.86	0	1.6	0	0	11.77	0	0	0	0	0	0	-42.17	-42.17
	Inverter Transformer	MV5-1 T	370015	4909142	2	0	0	56.1	56.1	1	5045.36	3.25	0	85.06	0	1.64	0	0	11.91	0	0	0	0	0	0	-42.55	-42.55
	Inverter Transformer	MV5-3 T	370237	4908851	2	0	0	56.1	56.1	1	5145.57	3.25	0	85.23	0	1.68	0	0	12.04	0	0	0	0	0	0	-42.89	-42.89
	Inverter Transformer	MV5-4 T	370330	4908707	2	0	0	56.1	56.1	1	5187.9	3.25	0	85.3	0	1.69	0	0	12.1	0	0	0	0	0	0	-43.03	-43.03
	Line Reactor	NGR	369421	4908787.5	5	0	0	45.4	45.4	1	4360.27	5.25	0	83.79	0	3.28	1.34	0.1	1.78	0	0	0	0	0	0	-44.84	-44.84
Limit. Valu	0	0																								
Level D/N:	31.0505	31.0505																								

Receiver: Vacant Lot Receptor
ID: S-VLR8
X: 365468
Y: 4907176
Z: 4.5
Ground: 0

ISO	Description	ID	X	Y	Z	Ground	ReflOrd	LxT	LxN	L/A	Dist.	hm	Freq	Adiv	K0b	Agr	Abar	z	Aatm	Afol	Ahous	Cmet	CmetN	Dc	RL	LtotT	LtotN
	Inverter	MV2-4	365586	4906624	2	0	0	100.3	100.3	1	564.48	3.25	0	66.03	0	-0.5	0	0	8.98	0	0	0	0	0	0	25.8	25.8
	Inverter	MV2-3	365820	4906641	2	0	0	100.3	100.3	1	640.42	3.25	0	67.13	0	-0.45	0	0	9.43	0	0	0	0	0	0	24.2	24.2
	Inverter	MV2-1	365842	4906816	2	0	0	97.3	97.3	1	519.12	3.25	0	65.31	0	-0.54	0	0	8.67	0	0	0	0	0	0	23.87	23.87

Sol_Luce Substation	S_Substation	369426	4908792	3.5	0	0	112.1	112.1	1	4275.19	5.25	0	83.62	0	0.68	3.04	0.3	7.73	0	0	0	0	0	0	17.01	17.01
Inverter	MV1-1	364715	4906166	2	0	0	100.3	100.3	1	1259.81	3.25	0	73.01	0	-0.13	0	0	11.69	0	0	0	0	0	0	15.74	15.74
Inverter	MV1-2	364753	4906063	2	0	0	100.3	100.3	1	1322.88	3.25	0	73.43	0	-0.1	0	0	11.87	0	0	0	0	0	0	15.12	15.12
Inverter	MV1-4	364815	4905918	2	0	0	100.3	100.3	1	1417.38	3.25	0	74.03	0	-0.06	0	0	12.12	0	0	0	0	0	0	14.23	14.23
Inverter	MV1-5	364671	4905892	2	0	0	100.3	100.3	1	1511.25	3.25	0	74.59	0	-0.03	0	0	12.35	0	0	0	0	0	0	13.4	13.4
Inverter	MV1-6	364477	4905835	2	0	0	100.3	100.3	1	1667.44	3.25	0	75.44	0	0.03	0	0	12.73	0	0	0	0	0	0	12.12	12.12
Inverter	MV1-8	364788	4905647	2	0	0	100.3	100.3	1	1673.39	3.25	0	75.47	0	0.03	0	0	12.74	0	0	0	0	0	0	12.07	12.07
Inverter	MV1-9	364561	4905646	2	0	0	100.3	100.3	1	1778.64	3.25	0	76	0	0.06	0	0	12.98	0	0	0	0	0	0	11.27	11.27
Inverter	MV1-12	365038	4905386	2	0	0	100.3	100.3	1	1840.93	3.25	0	76.3	0	0.08	0	0	13.12	0	0	0	0	0	0	10.81	10.81
Inverter	MV1-11	364655	4905414	2	0	0	100.3	100.3	1	1940.52	3.25	0	76.76	0	0.11	0	0	13.34	0	0	0	0	0	0	10.11	10.11
Inverter	MV1-7	364925	4905782	2	0	0	97.3	97.3	1	1496.03	3.25	0	74.5	0	-0.03	0	0	12.31	0	0	0	0	0	0	10.53	10.53
Inverter	MV1-15	365315	4904994	2	0	0	100.3	100.3	1	2187.36	3.25	0	77.8	0	0.18	0	0	13.85	0	0	0	0	0	0	8.49	8.49
Inverter	MV3-12	367668	4907594	2	0	0	100.3	100.3	1	2239.36	3.25	0	78	0	0.19	0	0	13.95	0	0	0	0	0	0	8.16	8.16
Inverter	MV3-18	367752	4907412	2	0	0	100.3	100.3	1	2296.16	3.25	0	78.22	0	0.21	0	0	14.06	0	0	0	0	0	0	7.82	7.82
Inverter	MV1-10	365004	4905564	2	0	0	97.3	97.3	1	1677.45	3.25	0	75.49	0	0.03	0	0	12.75	0	0	0	0	0	0	9.04	9.04
Inverter	MV3-13	367963	4907577	2	0	0	100.3	100.3	1	2527.02	3.25	0	79.05	0	0.26	0	0	14.51	0	0	0	0	0	0	6.49	6.49
Inverter	MV3-7	367945	4907754	2	0	0	100.3	100.3	1	2543.54	3.25	0	79.11	0	0.27	0	0	14.54	0	0	0	0	0	0	6.4	6.4
Inverter	MV3-3	367939	4907927	2	0	0	100.3	100.3	1	2582.6	3.25	0	79.24	0	0.28	0	0	14.61	0	0	0	0	0	0	6.18	6.18
Inverter	MV2-2	365977	4906654	2	0	0	89.1	89.1	1	729.09	3.25	0	68.26	0	0.62	0	0	5.77	0	0	0	0	0	0	14.41	14.41
Inverter	MV3-17	368178	4907472	2	0	0	100.3	100.3	1	2726.12	3.25	0	79.71	0	0.31	0	0	14.88	0	0	0	0	0	0	5.41	5.41
Inverter	MV3-10	368167	4907669	2	0	0	100.3	100.3	1	2743.66	3.25	0	79.77	0	0.31	0	0	14.91	0	0	0	0	0	0	5.32	5.32
Inverter	MV3-6	368162	4907834	2	0	0	100.3	100.3	1	2773.19	3.25	0	79.86	0	0.32	0	0	14.97	0	0	0	0	0	0	5.17	5.17
Inverter	MV3-19	368357	4907347	2	0	0	100.3	100.3	1	2894.06	3.25	0	80.23	0	0.34	0	0	15.18	0	0	0	0	0	0	4.56	4.56
Inverter	MV3-15	368357	4907477	2	0	0	100.3	100.3	1	2904.64	3.25	0	80.26	0	0.34	0	0	15.2	0	0	0	0	0	0	4.5	4.5
Inverter	MV3-11	368346	4907662	2	0	0	100.3	100.3	1	2918.75	3.25	0	80.3	0	0.35	0	0	15.23	0	0	0	0	0	0	4.43	4.43
Inverter	MV1-13	364731	4905241	2	0	0	97.3	97.3	1	2070.6	3.25	0	77.32	0	0.15	0	0	13.61	0	0	0	0	0	0	6.23	6.23
Inverter	MV3-21	368478	4907206	2	0	0	100.3	100.3	1	3010.15	3.25	0	80.57	0	0.36	0	0	15.39	0	0	0	0	0	0	3.99	3.99
Inverter	MV1-14	365163	4905049	2	0	0	97.3	97.3	1	2148.76	3.25	0	77.64	0	0.17	0	0	13.77	0	0	0	0	0	0	5.73	5.73
Inverter	MV3-16	368514	4907475	2	0	0	100.3	100.3	1	3060.64	3.25	0	80.72	0	0.37	0	0	15.48	0	0	0	0	0	0	3.74	3.74
Inverter	MV3-9	368512	4907703	2	0	0	100.3	100.3	1	3089.28	3.25	0	80.8	0	0.38	0	0	15.53	0	0	0	0	0	0	3.61	3.61
Inverter	MV3-20	368689	4907317	2	0	0	100.3	100.3	1	3224.09	3.25	0	81.17	0	0.4	0	0	15.76	0	0	0	0	0	0	2.98	2.98
Inverter	MV3-14	368684	4907498	2	0	0	100.3	100.3	1	3232.08	3.25	0	81.19	0	0.41	0	0	15.78	0	0	0	0	0	0	2.94	2.94
Inverter	MV3-8	368680	4907712	2	0	0	100.3	100.3	1	3256.42	3.25	0	81.25	0	0.41	0	0	15.82	0	0	0	0	0	0	2.83	2.83
Inverter	MV4-7	369035	4909001	2	0	0	100.3	100.3	1	4006.76	3.25	0	83.06	0	0.53	0	0	17.06	0	0	0	0	0	0	-0.33	-0.33
Inverter	MV4-4	369027	4909199	2	0	0	100.3	100.3	1	4093.78	3.25	0	83.24	0	0.54	0	0	17.2	0	0	0	0	0	0	-0.67	-0.67
Inverter	MV4-11	369264	4908855	2	0	0	100.3	100.3	1	4150.74	3.25	0	83.36	0	0.55	0	0	17.29	0	0	0	0	0	0	-0.89	-0.89
Inverter	MV4-1	369011	4909397	2	0	0	100.3	100.3	1	4181.59	3.25	0	83.43	0	0.55	0	0	17.34	0	0	0	0	0	0	-1	-1
Inverter	MV4-10	369312	4908858	2	0	0	100.3	100.3	1	4195.89	3.25	0	83.46	0	0.55	0	0	17.36	0	0	0	0	0	0	-1.06	-1.06
Inverter	MV4-8	369256	4909001	2	0	0	100.3	100.3	1	4204.71	3.25	0	83.47	0	0.55	0	0	17.37	0	0	0	0	0	0	-1.09	-1.09
Inverter	MV4-9	369289	4909001	2	0	0	100.3	100.3	1	4234.46	3.25	0	83.54	0	0.56	0	0	17.42	0	0	0	0	0	0	-1.2	-1.2
Inverter	MV4-6	369243	4909192	2	0	0	100.3	100.3	1	4279.59	3.25	0	83.63	0	0.56	0	0	17.49	0	0	0	0	0	0	-1.37	-1.37
Inverter	MV4-5	369289	4909199	2	0	0	100.3	100.3	1	4323.49	3.25	0	83.72	0	0.57	0	0	17.56	0	0	0	0	0	0	-1.53	-1.53
Inverter	MV4-3	369229	4909397	2	0	0	100.3	100.3	1	4367.83	3.25	0	83.81	0	0.58	0	0	17.63	0	0	0	0	0	0	-1.7	-1.7
Inverter	MV4-2	369272	4909397	2	0	0	100.3	100.3	1	4404.91	3.25	0	83.88	0	0.58	0	0	17.68	0	0	0	0	0	0	-1.83	-1.83
Inverter	MV6-2	370085	4907339	2	0	0	100.3	100.3	1	4619.88	3.25	0	84.29	0	0.6	0	0	18.01	0	0	0	0	0	0	-2.6	-2.6
Inverter	MV6-3	370207	4907140	2	0	0	100.3	100.3	1	4739.14	3.25	0	84.51	0	0.62	0	0	18.19	0	0	0	0	0	0	-3.01	-3.01
Inverter	MV5-5	370015	4908690	2	0	0	100.3	100.3	1	4792.43	3.25	0	84.61	0	0.62	0	0	18.27	0	0	0	0	0	0	-3.19	-3.19
Inverter	MV5-2	370006	4908853	2	0	0	100.3	100.3	1	4837.95	3.25	0	84.69	0	0.63	0	0	18.34	0	0	0	0	0	0	-3.35	-3.35
Inverter	MV5-1	370020	4909142	2	0	0	100.3	100.3	1	4958.41	3.25	0	84.91	0	0.64	0	0	18.52	0	0	0	0	0	0	-3.75	-3.75
Inverter	MV5-3	370231	4908851	2	0	0	100.3	100.3	1	5048.94	3.25	0	85.06	0	0.65	0	0	18.65	0	0	0	0	0	0	-4.05	-4.05
Inverter	MV5-4	370324	4908707	2	0	0	100.3	100.3	1	5091.63	3.25	0	85.14	0	0.65	0	0	18.71	0	0	0	0	0	0	-4.19	-4.19
Inverter	MV1-3	364440	4906039	2	0	0	89.1	89.1	1	1532.83	3.25	0	74.71	0	0.8	0	0	7.26	0	0	0	0	0	0	6.28	6.28
DSTATCOM - 10 MVAR #2	DSAT2	369403	4908757	2.5	0	0	96.6	96.6	1	4240.73	3.5	0	83.55	0	3.6	0	0	2.97	0	0	0	0	0	0	6.52	6.52
DSTATCOM - 10 MVAR #1	DSAT1	369437	4908757	2.5	0	0	96.6	96.6	1	4272.3	3.5	0	83.61	0	3.6	0	0	2.98	0	0	0	0	0	0	6.43	6.43
Inverter	MV6-1	370235	4907364	2	0	0	97.3	97.3	1	4770.71	3.25	0	84.57	0	0.62	0	0	18.24	0	0	0	0	0	0	-6.12	-6.12
Inverter	MV3-1	368156	4907976	2	0	0	89.1	89.1	1	2804.52	3.25	0	79.96	0	1.1	0	0	9.32	0	0	0	0	0	0	-1.32	-1.32
Inverter	MV3-5	368340	4907843	2	0	0	89.1	89.1	1	2948.44	3.25	0	80.39	0	1.13	0	0	9.54	0	0	0	0	0	0	-2.01	-2.01
Inverter	MV3-4	368502	4907925	2	0	0	89.1	89.1	1	3125.09	3.25	0	80.9	0	1.18	0	0	9.81	0	0	0	0	0	0	-2.82	-2.82
SubstationTransformer	W_ST	369711.17	4906112.3	2.5	0	0	92	92	1	4374.47	4.25	0	83.82	0	1.47	2.5	0.28	7.85	0	0	0	0	0	0	-3.66	-3.66
Inverter	MV3-22	368656	4907142	2	0	0	89.1	89.1	1	3188.18	3.25	0	81.07	0	1.19	0	0	9.9	0	0	0	0	0	0	-3.11	-3.11
Gardiner Substation	G_Sub	366586.3	4903349.9	2.5	0	0	90.8	90.8	1	3986.18	4.25	0	83.01	0	1.37	2.67	0.33	7.35	0	0	0	0	0	0	-3.62	-3.62
Inverter	MV3-2	368671	4907928	2	0	0	89.1	89.1	1	3290.09	3.25	0	81.34	0	1.22	0	0	10.05	0	0	0	0	0	0	-3.56	-3.56
Inverter	MV4-13	369051	4908605	2	0	0	89.1	89.1	1	3857.45	3.25	0	82.73	0	1.36	0	0	10.88	0	0	0	0	0	0	-5.91	-5.91
Fixed Reactor Bank 1	FRB1	369378	4908755	6	0	0	89.8	89.8	1	4216.79	5.25	0	83.5	0	-0.69	0	0	7.65	0	0	0	0	0	0	-0.68	-0.68
Inverter	MV4-12	369043	4908803	2	0	0	89.1	89.1	1	3927.82	3.25	0	82.88	0	1.37	0	0	10.98	0	0	0	0	0	0	-6.18	-6.18
Inverter	MV4-15	369176	4908481	2	0	0	89.1	89.1	1	3930.94	3.25	0	82.89	0	1.38	0	0	10.99	0	0	0	0	0	0	-6.19	-6.19
Inverter	MV4-14	369176	4908507	2	0	0	89.1	89.1	1	3939.65	3.25	0	82.91	0	1.38	0	0	11	0	0	0	0	0	0	-6.23	-6.23
Fixed Reactor Bank 2	FRB2	369464	4908755	6	0	0	89.8	89.8	1	4296.66	5.25	0	83.66	0	-0.68	0	0	7.75	0	0	0	0	0	0	-0.96	-0.96
Westbrook Inverter Enclosur	W_INV2	369374	4906388	2	0	0	89.1	89.1	1	3984.69	3.25	0	83.01	0	1.39	0	0	11.06	0	0	0	0	0	0	-6.4	-6.4
Westbrook Inverter Enclosur	W_INV3	369508	4906164	2	0	0	89.1	89.1	1	4164.82	3.25	0	83.39	0	1.43	0	0	11.32	0	0	0	0	0	0	-7.08	-7.08
Westbrook Inverter Enclosur	W_INV5	369719	4906574	2	0	0	89.1	89.1	1	4293.41	3.25	0	83.66	0	1.46	0	0	11.5	0	0	0	0	0	0	-7.56	-7.56
Westbrook Inverter Enclosur	W_INV4	369673	4906164	2	0	0	89.1	89.1	1	4325.06	3.25	0	83.72	0	1.47	0	0	11.54	0	0	0	0	0	0	-7.68	-7.68
Westbrook Inverter Enclosur	W_INV7	369780	4906417	2	0	0	89.1	89.1	1	4378.29	3.25	0	83.83	0	1.49	0	0	11.62	0	0	0	0	0	0	-7.87	-7.87
Westbrook Inverter Enclosur	W_INV6	369875	4906578	2	0	0	89.1	89.1	1	4447.39	3.25	0	83.96	0	1.5	0	0	11.71	0	0	0	0	0	0	-8.12	-8.12

Inverter	MV5-6	369982	4908507	2	0	0	89.1	89.1	1	4706.14	3.25	0	84.45	0	1.57	0	0	12.07	0	0	0	0	0	0	-9.03	-9.03
Inverters	G_Inv1	366526.4	4903225.8	2	0	0	87.7	87.7	1	4089.54	3.25	0	83.23	0	2.8	0	0	4.97	0	0	0	0	0	0	-3.34	-3.34
Inverters	G_Inv2	366676.9	4903239.1	2	0	0	87.7	87.7	1	4118.33	3.25	0	83.29	0	2.8	0	0	5	0	0	0	0	0	0	-3.44	-3.44
Inverters	G_Inv3	366583.7	4903091.4	2	0	0	87.7	87.7	1	4234.24	3.25	0	83.54	0	2.81	0	0	5.13	0	0	0	0	0	0	-3.81	-3.81
Inverter Transformer	MV2-1 T	365836	4906816	2	0	0	69.4	69.4	1	514.81	3.25	0	65.23	0	1.07	0	0	2.99	0	0	0	0	0	0	0.05	0.05
Inverters	G_Inv4	366732.8	4903105	2	0	0	87.7	87.7	1	4262.95	3.25	0	83.59	0	2.81	0	0	5.16	0	0	0	0	0	0	-3.9	-3.9
Inverters	G_Inv5	366638.5	4902958.1	2	0	0	87.7	87.7	1	4377.3	3.25	0	83.82	0	2.82	0	0	5.28	0	0	0	0	0	0	-4.27	-4.27
Inverters	G_Inv6	366788.5	4902972	2	0	0	87.7	87.7	1	4406.51	3.25	0	83.88	0	2.82	0	0	5.31	0	0	0	0	0	0	-4.36	-4.36
Inverters	G_Inv7	366694.6	4902824.7	2	0	0	87.7	87.7	1	4520.88	3.25	0	84.1	0	2.83	0	0	5.43	0	0	0	0	0	0	-4.71	-4.71
Inverters	G_Inv8	366844.5	4902838.5	2	0	0	87.7	87.7	1	4550.68	3.25	0	84.16	0	2.83	0	0	5.46	0	0	0	0	0	0	-4.8	-4.8
Inverters	G_Inv9	366750.9	4902691.8	2	0	0	87.7	87.7	1	4664.11	3.25	0	84.38	0	2.84	0	0	5.59	0	0	0	0	0	0	-5.14	-5.14
Inverters	G_Inv10	366900.7	4902704.8	2	0	0	87.7	87.7	1	4695.13	3.25	0	84.43	0	2.84	0	0	5.62	0	0	0	0	0	0	-5.24	-5.24
Westbrook Inverter Enclosur	W_INV1	369409	4906578	2	0	0	86.1	86.1	1	3986.11	3.25	0	83.01	0	1.39	0	0	11.06	0	0	0	0	0	0	-9.41	-9.41
Inverter	MV6-4	370250	4906966	2	0	0	86.1	86.1	1	4786.61	3.25	0	84.6	0	1.59	0	0	12.18	0	0	0	0	0	0	-12.31	-12.31
Westbrook Inverter Transfor	W_INVTR1	369403	4906578	2	0	0	78.2	78.2	1	3980.18	3.25	0	83	0	-2.96	0	0	2.05	0	0	0	0	0	0	-3.85	-3.85
Inverter Transformer	MV1-7 T	364919	4905782	2	0	0	69.4	69.4	1	1498.21	3.25	0	74.51	0	1.97	0	0	4.43	0	0	0	0	0	0	-11.57	-11.57
Westbrook Inverter Transfor	W_INVTR2	369368	4906388	2	0	0	77.3	77.3	1	3978.81	3.25	0	83	0	-2.96	0	0	2.05	0	0	0	0	0	0	-4.74	-4.74
Westbrook Inverter Transfor	W_INVTR3	369514	4906164	2	0	0	77.3	77.3	1	4170.64	3.25	0	83.4	0	-3	0	0	2.12	0	0	0	0	0	0	-5.18	-5.18
Inverter Transformer	MV1-10 T	365010	4905564	2	0	0	69.4	69.4	1	1675.8	3.25	0	75.48	0	2.05	0	0	4.63	0	0	0	0	0	0	-12.81	-12.81
Westbrook Inverter Transfor	W_INVTR5	369725	4906574	2	0	0	77.3	77.3	1	4299.36	3.25	0	83.67	0	-3.03	0	0	2.17	0	0	0	0	0	0	-5.46	-5.46
Westbrook Inverter Transfor	W_INVTR4	369679	4906164	2	0	0	77.3	77.3	1	4330.9	3.25	0	83.73	0	-3.04	0	0	2.18	0	0	0	0	0	0	-5.53	-5.53
Westbrook Inverter Transfor	W_INVTR7	369786	4906417	2	0	0	77.3	77.3	1	4384.2	3.25	0	83.84	0	-3.05	0	0	2.2	0	0	0	0	0	0	-5.64	-5.64
Westbrook Inverter Transfor	W_INVTR6	369881	4906578	2	0	0	77.3	77.3	1	4453.33	3.25	0	83.97	0	-3.06	0	0	2.22	0	0	0	0	0	0	-5.79	-5.79
Inverter Transformer	MV1-13 T	364725	4905241	2	0	0	69.4	69.4	1	2072.75	3.25	0	77.33	0	2.2	0	0	5.04	0	0	0	0	0	0	-15.22	-15.22
Inverter Transformer	MV1-14 T	365157	4905049	2	0	0	69.4	69.4	1	2149.62	3.25	0	77.65	0	2.23	0	0	5.11	0	0	0	0	0	0	-15.64	-15.64
Inverter Transformer	MV2-4 T	365590	4906628	2	0	0	56.1	56.1	1	561.42	3.25	0	65.99	0	-0.11	0	0	3.74	0	0	0	0	0	0	-13.56	-13.56
Inverter Transformer	MV2-3 T	365814	4906641	2	0	0	56.1	56.1	1	637.14	3.25	0	67.08	0	-0.1	0	0	3.96	0	0	0	0	0	0	-14.89	-14.89
Inverter Transformer	MV2-2 T	365982	4906654	2	0	0	56.1	56.1	1	732.59	3.25	0	68.3	0	-0.07	0	0	4.22	0	0	0	0	0	0	-16.39	-16.39
Inverter Transformer	MV6-1 T	370230	4907364	2	0	0	69.4	69.4	1	4765.71	3.25	0	84.56	0	2.96	0	0	7.22	0	0	0	0	0	0	-25.4	-25.4
Inverter Transformer	MV6-4 T	370244	4906966	2	0	0	69.4	69.4	1	4780.62	3.25	0	84.59	0	2.97	0	0	7.23	0	0	0	0	0	0	-25.44	-25.44
Inverter Transformer	MV1-1 T	364721	4906166	2	0	0	56.1	56.1	1	1256.23	3.25	0	72.98	0	0.1	0	0	5.48	0	0	0	0	0	0	-22.51	-22.51
Inverter Transformer	MV1-2 T	364759	4906063	2	0	0	56.1	56.1	1	1319.64	3.25	0	73.41	0	0.13	0	0	5.62	0	0	0	0	0	0	-23.1	-23.1
Inverter Transformer	MV1-4 T	364821	4905918	2	0	0	56.1	56.1	1	1414.63	3.25	0	74.01	0	0.17	0	0	5.83	0	0	0	0	0	0	-23.95	-23.95
Inverter Transformer	MV1-5 T	364676	4905892	2	0	0	56.1	56.1	1	1508.62	3.25	0	74.57	0	0.2	0	0	6.04	0	0	0	0	0	0	-24.75	-24.75
Inverter Transformer	MV1-3 T	364435	4906039	2	0	0	56.1	56.1	1	1536.18	3.25	0	74.73	0	0.21	0	0	6.1	0	0	0	0	0	0	-24.98	-24.98
Inverter Transformer	MV1-6 T	364482	4905835	2	0	0	56.1	56.1	1	1664.48	3.25	0	75.43	0	0.26	0	0	6.37	0	0	0	0	0	0	-26	-26
Inverter Transformer	MV1-8 T	364782	4905647	2	0	0	56.1	56.1	1	1675.84	3.25	0	75.48	0	0.27	0	0	6.39	0	0	0	0	0	0	-26.08	-26.08
Inverter Transformer	MV1-9 T	364555	4905646	2	0	0	56.1	56.1	1	1781.71	3.25	0	76.02	0	0.31	0	0	6.61	0	0	0	0	0	0	-26.88	-26.88
Inverter Transformer	MV1-12 T	365044	4905386	2	0	0	56.1	56.1	1	1839.53	3.25	0	76.29	0	0.34	0	0	6.72	0	0	0	0	0	0	-27.3	-27.3
Inverter Transformer	MV1-11 T	364649	4905414	2	0	0	56.1	56.1	1	1943.04	3.25	0	76.77	0	0.38	0	0	6.93	0	0	0	0	0	0	-28.02	-28.02
Inverter Transformer	MV1-15 T	365309	4904994	2	0	0	56.1	56.1	1	2187.79	3.25	0	77.8	0	0.48	0	0	7.41	0	0	0	0	0	0	-29.63	-29.63
Inverter Transformer	MV3-12 T	367674	4907594	2	0	0	56.1	56.1	1	2245.25	3.25	0	78.03	0	0.51	0	0	7.52	0	0	0	0	0	0	-29.99	-29.99
Inverter Transformer	MV3-18 T	367757	4907412	2	0	0	56.1	56.1	1	2301.14	3.25	0	78.24	0	0.53	0	0	7.62	0	0	0	0	0	0	-30.33	-30.33
Inverter Transformer	MV3-13 T	367958	4907577	2	0	0	56.1	56.1	1	2522.08	3.25	0	79.04	0	0.63	0	0	8.03	0	0	0	0	0	0	-31.63	-31.63
Inverter Transformer	MV3-7 T	367951	4907754	2	0	0	56.1	56.1	1	2549.39	3.25	0	79.13	0	0.64	0	0	8.08	0	0	0	0	0	0	-31.79	-31.79
Inverter Transformer	MV3-3 T	367944	4907927	2	0	0	56.1	56.1	1	2587.39	3.25	0	79.26	0	0.65	0	0	8.15	0	0	0	0	0	0	-32	-32
Inverter Transformer	MV3-17 T	368183	4907472	2	0	0	56.1	56.1	1	2731.09	3.25	0	79.73	0	0.72	0	0	8.4	0	0	0	0	0	0	-32.79	-32.79
Inverter Transformer	MV3-10 T	368162	4907669	2	0	0	56.1	56.1	1	2738.74	3.25	0	79.75	0	0.72	0	0	8.42	0	0	0	0	0	0	-32.83	-32.83
Inverter Transformer	MV3-6 T	368156	4907834	2	0	0	56.1	56.1	1	2767.37	3.25	0	79.84	0	0.73	0	0	8.47	0	0	0	0	0	0	-32.98	-32.98
Inverter Transformer	MV3-1 T	368150	4907976	2	0	0	56.1	56.1	1	2798.77	3.25	0	79.94	0	0.74	0	0	8.52	0	0	0	0	0	0	-33.15	-33.15
Inverter Transformer	MV3-19 T	368352	4907347	2	0	0	56.1	56.1	1	2889.07	3.25	0	80.22	0	0.78	0	0	8.68	0	0	0	0	0	0	-33.62	-33.62
Inverter Transformer	MV3-15 T	368351	4907477	2	0	0	56.1	56.1	1	2898.67	3.25	0	80.24	0	0.79	0	0	8.7	0	0	0	0	0	0	-33.67	-33.67
Inverter Transformer	MV3-11 T	368340	4907662	2	0	0	56.1	56.1	1	2912.83	3.25	0	80.29	0	0.79	0	0	8.72	0	0	0	0	0	0	-33.74	-33.74
Inverter Transformer	MV3-5 T	368335	4907843	2	0	0	56.1	56.1	1	2943.57	3.25	0	80.38	0	0.81	0	0	8.77	0	0	0	0	0	0	-33.9	-33.9
Inverter Transformer	MV3-21 T	368484	4907206	2	0	0	56.1	56.1	1	3016.15	3.25	0	80.59	0	0.84	0	0	8.9	0	0	0	0	0	0	-34.26	-34.26
Inverter Transformer	MV3-16 T	368509	4907475	2	0	0	56.1	56.1	1	3055.66	3.25	0	80.7	0	0.85	0	0	8.96	0	0	0	0	0	0	-34.46	-34.46
Inverter Transformer	MV3-9 T	368517	4907703	2	0	0	56.1	56.1	1	3094.21	3.25	0	80.81	0	0.87	0	0	9.03	0	0	0	0	0	0	-34.65	-34.65
Inverter Transformer	MV3-4 T	368507	4907925	2	0	0	56.1	56.1	1	3129.94	3.25	0	80.91	0	0.88	0	0	9.09	0	0	0	0	0	0	-34.82	-34.82
Inverter Transformer	MV3-22 T	368661	4907142	2	0	0	56.1	56.1	1	3193.18	3.25	0	81.08	0	0.91	0	0	9.19	0	0	0	0	0	0	-35.13	-35.13
Inverter Transformer	MV3-20 T	368683	4907317	2	0	0	56.1	56.1	1	3218.09	3.25	0	81.15	0	0.92	0	0	9.23	0	0	0	0	0	0	-35.25	-35.25
Inverter Transformer	MV3-14 T	368678	4907498	2	0	0	56.1	56.1	1	3226.11	3.25	0	81.17	0	0.93	0	0	9.25	0	0	0	0	0	0	-35.29	-35.29
Inverter Transformer	MV3-8 T	368685	4907712	2	0	0	56.1	56.1	1	3261.35	3.25	0	81.27	0	0.94	0	0	9.3	0	0	0	0	0	0	-35.45	-35.45
Inverter Transformer	MV3-2 T	368677	4907928	2	0	0	56.1	56.1	1	3295.94	3.25	0	81.36	0	0.95	0	0	9.36	0	0	0	0	0	0	-35.62	-35.62
Inverter Transformer	MV4-13 T	369057	4908605	2	0	0	56.1	56.1	1	3863.03	3.25	0	82.74	0	1.19	0	0	10.25	0	0	0	0	0	0	-38.12	-38.12
Inverter Transformer	MV4-15 T	369170	4908481	2	0	0	56.1	56.1	1	3925.28	3.25	0	82.88	0	1.21	0	0	10.34	0	0	0	0	0	0	-38.38	-38.38
Inverter Transformer	MV4-12 T	369049	4908803	2	0	0	56.1	56.1	1	3933.28	3.25	0	82.9	0	1.22	0	0	10.36	0	0	0	0	0	0	-38.41	-38.41
Inverter Transformer	MV4-14 T	369182	4908507	2	0	0	56.1	56.1	1	3945.3	3.25	0	82.92	0	1.22	0	0	10.37	0	0	0	0	0	0	-38.46	-38.46
Inverter Transformer	MV4-7 T	369040	4909001	2	0	0	56.1	56.1	1	4011.21	3.25	0	83.07	0	1.25	0	0	10.47	0	0	0	0	0	0	-38.73	-38.73
Inverter Transformer	MV4-4 T	369033	4909199	2	0	0	56.1	56.1	1	4099	3.25	0	83.25	0	1.28	0	0	10.6	0	0	0	0	0	0	-39.08	-39.08
Inverter Transformer	MV4-11 T	369269	4908855	2	0	0	56.1	56.1	1	4155.32	3.25	0	83.37	0	1.31	0	0	10.68	0	0	0	0	0	0	-39.3	-39.3
Inverter Transformer	MV4-1 T	369017	4909397	2	0	0	56.1	56.1	1	4186.68	3.25	0	83.44	0	1.32	0	0	10.73	0	0	0	0	0	0	-39.43	-39.43
Inverter Transformer	MV4-10 T	369307	4908858	2	0	0	56.1	56.1	1	4191.31	3.25	0	83.45	0	1.32	0	0	10.74	0	0	0	0	0	0	-39.44	-39.44
Inverter Transformer	MV4-8 T	369262	4909001	2	0	0	56.1	56.1	1	4210.11	3.25	0	83.49	0	1.33	0	0	10.76	0	0	0	0	0	0	-39.52	-39.52
Inverter Transformer	MV4-9 T	369284	4909001	2	0	0	56.1	56.1	1	4229.95	3.25	0	83.53	0	1.34	0	0	10.79	0	0	0	0	0	0	-39.6	-39.6

	Inverter Transformer	MV4-6 T	369249	4909192	2	0	0	56.1	56.1	1	4284.88	3.25	0	83.64	0	1.36	0	0	10.87	0	0	0	0	0	0	-39.81	-39.81
	Inverter Transformer	MV4-5 T	369283	4909199	2	0	0	56.1	56.1	1	4318.19	3.25	0	83.71	0	1.37	0	0	10.92	0	0	0	0	0	0	-39.94	-39.94
	Inverter Transformer	MV4-3 T	369234	4909397	2	0	0	56.1	56.1	1	4372.14	3.25	0	83.81	0	1.39	0	0	11	0	0	0	0	0	0	-40.14	-40.14
	Inverter Transformer	MV4-2 T	369267	4909397	2	0	0	56.1	56.1	1	4400.6	3.25	0	83.87	0	1.4	0	0	11.04	0	0	0	0	0	0	-40.25	-40.25
	Inverter Transformer	MV6-2 T	370091	4907339	2	0	0	56.1	56.1	1	4625.87	3.25	0	84.3	0	1.49	0	0	11.35	0	0	0	0	0	0	-41.08	-41.08
	Inverter Transformer	MV5-6 T	369987	4908507	2	0	0	56.1	56.1	1	4710.94	3.25	0	84.46	0	1.52	0	0	11.47	0	0	0	0	0	0	-41.39	-41.39
	Inverter Transformer	MV6-3 T	370202	4907140	2	0	0	56.1	56.1	1	4734.14	3.25	0	84.5	0	1.53	0	0	11.5	0	0	0	0	0	0	-41.47	-41.47
	Inverter Transformer	MV5-5 T	370021	4908690	2	0	0	56.1	56.1	1	4798.13	3.25	0	84.62	0	1.55	0	0	11.58	0	0	0	0	0	0	-41.7	-41.7
	Inverter Transformer	MV5-2 T	370011	4908853	2	0	0	56.1	56.1	1	4842.64	3.25	0	84.7	0	1.57	0	0	11.64	0	0	0	0	0	0	-41.86	-41.86
	Inverter Transformer	MV5-1 T	370015	4909142	2	0	0	56.1	56.1	1	4953.82	3.25	0	84.9	0	1.61	0	0	11.79	0	0	0	0	0	0	-42.24	-42.24
	Inverter Transformer	MV5-3 T	370237	4908851	2	0	0	56.1	56.1	1	5054.6	3.25	0	85.07	0	1.65	0	0	11.93	0	0	0	0	0	0	-42.59	-42.59
	Inverter Transformer	MV5-4 T	370330	4908707	2	0	0	56.1	56.1	1	5097.35	3.25	0	85.15	0	1.66	0	0	11.98	0	0	0	0	0	0	-42.73	-42.73
	Line Reactor	NGR	369421	4908787.5	5	0	0	45.4	45.4	1	4268.86	5.25	0	83.61	0	3.28	1.34	0.1	1.75	0	0	0	0	0	0	-44.62	-44.62
Limit. Valu	0	0																									
Level D/N:	31.0826	31.0826																									

Receiver: Vacant Lot Receptor
ID: S-VLR9
X: 366122
Y: 4907498
Z: 4.5
Ground: 0

ISO	Description	ID	X	Y	Z	Ground	ReflOrd	LxT	LxN	L/A	Dist.	hm	Freq	Adiv	K0b	Agr	Abar	z	Aatm	Afol	Ahous	Cmet	CmetN	Dc	RL	LtotT	LtotN
	Inverter	MV2-3	365820	4906641	2	0	0	100.3	100.3	1	908.66	3.25	0	70.17	0	-0.29	0	0	10.6	0	0	0	0	0	0	19.84	19.84
	Sol_Luce Substation	S_Substation	369426	4908792	3.5	0	0	112.1	112.1	1	3548.36	5.25	0	82	0	0.46	3.22	0.3	6.75	0	0	0	0	0	0	19.64	19.64
	Inverter	MV2-4	365586	4906624	2	0	0	100.3	100.3	1	1025.27	3.25	0	71.22	0	-0.23	0	0	10.99	0	0	0	0	0	0	18.34	18.34
	Inverter	MV2-1	365842	4906816	2	0	0	97.3	97.3	1	737.25	3.25	0	68.35	0	-0.39	0	0	9.91	0	0	0	0	0	0	19.44	19.44
	Inverter	MV3-12	367668	4907594	2	0	0	100.3	100.3	1	1548.98	3.25	0	74.8	0	-0.02	0	0	12.45	0	0	0	0	0	0	13.08	13.08
	Inverter	MV3-18	367752	4907412	2	0	0	100.3	100.3	1	1632.27	3.25	0	75.26	0	0.01	0	0	12.64	0	0	0	0	0	0	12.4	12.4
	Inverter	MV3-7	367945	4907754	2	0	0	100.3	100.3	1	1840.89	3.25	0	76.3	0	0.08	0	0	13.12	0	0	0	0	0	0	10.81	10.81
	Inverter	MV3-13	367963	4907577	2	0	0	100.3	100.3	1	1842.7	3.25	0	76.31	0	0.08	0	0	13.12	0	0	0	0	0	0	10.8	10.8
	Inverter	MV3-3	367939	4907927	2	0	0	100.3	100.3	1	1866.96	3.25	0	76.42	0	0.09	0	0	13.18	0	0	0	0	0	0	10.62	10.62
	Inverter	MV1-1	364715	4906166	2	0	0	100.3	100.3	1	1937.49	3.25	0	76.74	0	0.11	0	0	13.33	0	0	0	0	0	0	10.13	10.13
	Inverter	MV1-2	364753	4906063	2	0	0	100.3	100.3	1	1983.28	3.25	0	76.95	0	0.12	0	0	13.43	0	0	0	0	0	0	9.81	9.81
	Inverter	MV1-4	364815	4905918	2	0	0	100.3	100.3	1	2050.53	3.25	0	77.24	0	0.14	0	0	13.57	0	0	0	0	0	0	9.36	9.36
	Inverter	MV3-10	368167	4907669	2	0	0	100.3	100.3	1	2052.14	3.25	0	77.24	0	0.14	0	0	13.57	0	0	0	0	0	0	9.35	9.35
	Inverter	MV3-17	368178	4907472	2	0	0	100.3	100.3	1	2056.17	3.25	0	77.26	0	0.15	0	0	13.58	0	0	0	0	0	0	9.33	9.33
	Inverter	MV3-6	368162	4907834	2	0	0	100.3	100.3	1	2067.49	3.25	0	77.31	0	0.15	0	0	13.6	0	0	0	0	0	0	9.25	9.25
	Inverter	MV1-5	364671	4905892	2	0	0	100.3	100.3	1	2164.4	3.25	0	77.71	0	0.17	0	0	13.8	0	0	0	0	0	0	8.63	8.63
	Inverter	MV3-11	368346	4907662	2	0	0	100.3	100.3	1	2230.04	3.25	0	77.97	0	0.19	0	0	13.93	0	0	0	0	0	0	8.22	8.22
	Inverter	MV3-15	368357	4907477	2	0	0	100.3	100.3	1	2235.1	3.25	0	77.99	0	0.19	0	0	13.94	0	0	0	0	0	0	8.19	8.19
	Inverter	MV3-19	368357	4907347	2	0	0	100.3	100.3	1	2240.1	3.25	0	78.01	0	0.19	0	0	13.95	0	0	0	0	0	0	8.16	8.16
	Inverter	MV1-8	364788	4905647	2	0	0	100.3	100.3	1	2281.61	3.25	0	78.16	0	0.2	0	0	14.04	0	0	0	0	0	0	7.91	7.91
	Inverter	MV1-6	364477	4905835	2	0	0	100.3	100.3	1	2339.15	3.25	0	78.38	0	0.22	0	0	14.15	0	0	0	0	0	0	7.56	7.56
	Inverter	MV1-12	365038	4905386	2	0	0	100.3	100.3	1	2373.94	3.25	0	78.51	0	0.23	0	0	14.22	0	0	0	0	0	0	7.36	7.36
	Inverter	MV3-21	368478	4907206	2	0	0	100.3	100.3	1	2374.03	3.25	0	78.51	0	0.23	0	0	14.22	0	0	0	0	0	0	7.36	7.36
	Inverter	MV3-16	368514	4907475	2	0	0	100.3	100.3	1	2392.11	3.25	0	78.58	0	0.23	0	0	14.25	0	0	0	0	0	0	7.25	7.25
	Inverter	MV3-9	368512	4907703	2	0	0	100.3	100.3	1	2398.78	3.25	0	78.6	0	0.23	0	0	14.26	0	0	0	0	0	0	7.21	7.21
	Inverter	MV1-9	364561	4905646	2	0	0	100.3	100.3	1	2422.11	3.25	0	78.68	0	0.24	0	0	14.31	0	0	0	0	0	0	7.08	7.08
	Inverter	MV1-11	364655	4905414	2	0	0	100.3	100.3	1	2548.56	3.25	0	79.13	0	0.27	0	0	14.55	0	0	0	0	0	0	6.37	6.37
	Inverter	MV3-14	368684	4907498	2	0	0	100.3	100.3	1	2562	3.25	0	79.17	0	0.27	0	0	14.58	0	0	0	0	0	0	6.29	6.29
	Inverter	MV3-8	368680	4907712	2	0	0	100.3	100.3	1	2566.94	3.25	0	79.19	0	0.27	0	0	14.58	0	0	0	0	0	0	6.27	6.27
	Inverter	MV3-20	368689	4907317	2	0	0	100.3	100.3	1	2573.37	3.25	0	79.21	0	0.27	0	0	14.6	0	0	0	0	0	0	6.23	6.23
	Inverter	MV1-15	365315	4904994	2	0	0	100.3	100.3	1	2630.83	3.25	0	79.4	0	0.29	0	0	14.7	0	0	0	0	0	0	5.92	5.92
	Inverter	MV1-7	364925	4905782	2	0	0	97.3	97.3	1	2092.24	3.25	0	77.41	0	0.16	0	0	13.65	0	0	0	0	0	0	6.09	6.09
	Inverter	MV2-2	365977	4906654	2	0	0	89.1	89.1	1	856.37	3.25	0	69.65	0	0.65	0	0	6.04	0	0	0	0	0	0	12.72	12.72
	Inverter	MV1-10	365004	4905564	2	0	0	97.3	97.3	1	2233.89	3.25	0	77.98	0	0.19	0	0	13.94	0	0	0	0	0	0	5.2	5.2
	Inverter	MV4-7	369035	4909001	2	0	0	100.3	100.3	1	3277.89	3.25	0	81.31	0	0.41	0	0	15.86	0	0	0	0	0	0	2.73	2.73
	Inverter	MV4-4	369027	4909199	2	0	0	100.3	100.3	1	3366.37	3.25	0	81.54	0	0.43	0	0	16.01	0	0	0	0	0	0	2.33	2.33
	Inverter	MV4-11	369264	4908855	2	0	0	100.3	100.3	1	3422.52	3.25	0	81.69	0	0.44	0	0	16.1	0	0	0	0	0	0	2.09	2.09
	Inverter	MV4-1	369011	4909397	2	0	0	100.3	100.3	1	3457.24	3.25	0	81.77	0	0.44	0	0	16.16	0	0	0	0	0	0	1.93	1.93
	Inverter	MV4-10	369312	4908858	2	0	0	100.3	100.3	1	3467.81	3.25	0	81.8	0	0.45	0	0	16.18	0	0	0	0	0	0	1.89	1.89
	Inverter	MV4-8	369256	4909001	2	0	0	100.3	100.3	1	3475.77	3.25	0	81.82	0	0.45	0	0	16.19	0	0	0	0	0	0	1.85	1.85
	Inverter	MV4-9	369289	4909001	2	0	0	100.3	100.3	1	3505.55	3.25	0	81.9	0	0.45	0	0	16.24	0	0	0	0	0	0	1.72	1.72
	Inverter	MV4-6	369243	4909192	2	0	0	100.3	100.3	1	3551.1	3.25	0	82.01	0	0.46	0	0	16.32	0	0	0	0	0	0	1.53	1.53
	Inverter	MV4-5	369289	4909199	2	0	0	100.3	100.3	1	3594.9	3.25	0	82.11	0	0.47	0	0	16.39	0	0	0	0	0	0	1.34	1.34
	Inverter	MV4-3	369229	4909397	2	0	0	100.3	100.3	1	3641.38	3.25	0	82.23	0	0.47	0	0	16.47	0	0	0	0	0	0	1.15	1.15
	Inverter	MV4-2	369272	4909397	2	0	0	100.3	100.3	1	3678.14	3.25	0	82.31	0	0.48	0	0	16.53	0	0	0	0	0	0	0.99	0.99
	Inverter	MV1-14	365163	4905049	2	0	0	97.3	97.3	1	2630.07	3.25	0	79.4	0	0.29	0	0	14.7	0	0	0	0	0	0	2.92	2.92
	Inverter	MV1-13	364731	4905241	2	0	0	97.3	97.3	1	2651.21	3.25	0	79.47	0	0.29	0	0	14.74	0	0	0	0	0	0	2.81	2.81
	Inverter	MV6-2	370085	4907339	2	0	0	100.3	100.3	1	3966.19	3.25	0	82.97	0	0.52	0	0	16.99	0	0	0	0	0	0	-0.17	-0.17
	Inverter	MV5-5	370015	4908690	2	0	0	100.3	100.3	1	4071.4	3.25	0	83.19	0	0.54	0	0	17.16	0	0	0	0	0	0	-0.58	-0.58
	Inverter	MV6-3	370207	4907140	2	0	0	100.3	100.3	1	4100.66	3.25	0	83.26	0	0.54	0	0	17.21	0	0	0	0	0	0	-0.69	-0.69

Inverter	MV5-2	370006	4908853	2	0	0	100.3	100.3	1	4113.57	3.25	0	83.28	0	0.54	0	0	17.23	0	0	0	0	0	0	-0.74	-0.74
Inverter	MV5-1	370020	4909142	2	0	0	100.3	100.3	1	4230.5	3.25	0	83.53	0	0.56	0	0	17.41	0	0	0	0	0	0	-1.19	-1.19
Inverter	MV5-3	370231	4908851	2	0	0	100.3	100.3	1	4326.03	3.25	0	83.72	0	0.57	0	0	17.56	0	0	0	0	0	0	-1.54	-1.54
Inverter	MV5-4	370324	4908707	2	0	0	100.3	100.3	1	4372.47	3.25	0	83.81	0	0.58	0	0	17.63	0	0	0	0	0	0	-1.71	-1.71
DSTATCOM - 10 MVAR #2	DSAT2	369403	4908757	2.5	0	0	96.6	96.6	1	3514.26	3.5	0	81.92	0	3.5	0	0	2.58	0	0	0	0	0	0	8.63	8.63
DSTATCOM - 10 MVAR #1	DSAT1	369437	4908757	2.5	0	0	96.6	96.6	1	3546.03	3.5	0	81.99	0	3.5	0	0	2.6	0	0	0	0	0	0	8.53	8.53
Inverter	MV6-1	370235	4907364	2	0	0	97.3	97.3	1	4115.18	3.25	0	83.29	0	0.54	0	0	17.23	0	0	0	0	0	0	-3.75	-3.75
Inverter	MV3-1	368156	4907976	2	0	0	89.1	89.1	1	2089.41	3.25	0	77.4	0	0.93	0	0	8.19	0	0	0	0	0	0	2.54	2.54
Inverter	MV1-3	364440	4906039	2	0	0	89.1	89.1	1	2226.61	3.25	0	77.95	0	0.96	0	0	8.41	0	0	0	0	0	0	1.73	1.73
Inverter	MV3-5	368340	4907843	2	0	0	89.1	89.1	1	2244.67	3.25	0	78.02	0	0.96	0	0	8.44	0	0	0	0	0	0	1.63	1.63
Inverter	MV3-4	368502	4907925	2	0	0	89.1	89.1	1	2418	3.25	0	78.67	0	1.01	0	0	8.72	0	0	0	0	0	0	0.67	0.67
Inverter	MV3-22	368656	4907142	2	0	0	89.1	89.1	1	2558.89	3.25	0	79.16	0	1.04	0	0	8.94	0	0	0	0	0	0	-0.08	-0.08
Inverter	MV3-2	368671	4907928	2	0	0	89.1	89.1	1	2585.02	3.25	0	79.25	0	1.05	0	0	8.98	0	0	0	0	0	0	-0.22	-0.22
SubstationTransformer	W_ST	369711.17	4906112.3	2.5	0	0	92	92	1	3847.39	4.25	0	82.7	0	1.31	2.65	0.27	7.16	0	0	0	0	0	0	-1.86	-1.86
Inverter	MV4-13	369051	4908605	2	0	0	89.1	89.1	1	3131.21	3.25	0	80.91	0	1.18	0	0	9.82	0	0	0	0	0	0	-2.85	-2.85
Inverter	MV4-12	369043	4908803	2	0	0	89.1	89.1	1	3199.26	3.25	0	81.1	0	1.2	0	0	9.92	0	0	0	0	0	0	-3.16	-3.16
Inverter	MV4-15	369176	4908481	2	0	0	89.1	89.1	1	3208.3	3.25	0	81.13	0	1.2	0	0	9.93	0	0	0	0	0	0	-3.2	-3.2
Fixed Reactor Bank 1	FRB1	369378	4908755	6	0	0	89.8	89.8	1	3490.21	5.25	0	81.86	0	-0.8	0	0	6.67	0	0	0	0	0	0	2.05	2.05
Inverter	MV4-14	369176	4908507	2	0	0	89.1	89.1	1	3216.36	3.25	0	81.15	0	1.2	0	0	9.94	0	0	0	0	0	0	-3.23	-3.23
Fixed Reactor Bank 2	FRB2	369464	4908755	6	0	0	89.8	89.8	1	3570.58	5.25	0	82.05	0	-0.79	0	0	6.78	0	0	0	0	0	0	1.73	1.73
Gardiner Substation	G_Sub	366586.3	4903349.9	2.5	0	0	90.8	90.8	1	4174	4.25	0	83.41	0	1.43	2.64	0.36	7.59	0	0	0	0	0	0	-4.3	-4.3
Westbrook Inverter Enclosur	W_INV2	369374	4906388	2	0	0	89.1	89.1	1	3436.22	3.25	0	81.72	0	1.25	0	0	10.27	0	0	0	0	0	0	-4.19	-4.19
Westbrook Inverter Enclosur	W_INV3	369508	4906164	2	0	0	89.1	89.1	1	3639.31	3.25	0	82.22	0	1.3	0	0	10.57	0	0	0	0	0	0	-5.03	-5.03
Westbrook Inverter Enclosur	W_INV5	369719	4906574	2	0	0	89.1	89.1	1	3713.78	3.25	0	82.4	0	1.32	0	0	10.67	0	0	0	0	0	0	-5.33	-5.33
Westbrook Inverter Enclosur	W_INV4	369673	4906164	2	0	0	89.1	89.1	1	3793.31	3.25	0	82.58	0	1.34	0	0	10.79	0	0	0	0	0	0	-5.65	-5.65
Westbrook Inverter Enclosur	W_INV7	369780	4906417	2	0	0	89.1	89.1	1	3814.38	3.25	0	82.63	0	1.35	0	0	10.82	0	0	0	0	0	0	-5.74	-5.74
Westbrook Inverter Enclosur	W_INV6	369875	4906578	2	0	0	89.1	89.1	1	3864.12	3.25	0	82.74	0	1.36	0	0	10.89	0	0	0	0	0	0	-5.93	-5.93
Inverter	MV5-6	369982	4908507	2	0	0	89.1	89.1	1	3989.7	3.25	0	83.02	0	1.39	0	0	11.07	0	0	0	0	0	0	-6.42	-6.42
Westbrook Inverter Enclosur	W_INV1	369409	4906578	2	0	0	86.1	86.1	1	3413.32	3.25	0	81.66	0	1.25	0	0	10.24	0	0	0	0	0	0	-7.09	-7.09
Inverters	G_Inv1	366526.4	4903225.8	2	0	0	87.7	87.7	1	4291.3	3.25	0	83.65	0	2.82	0	0	5.19	0	0	0	0	0	0	-3.99	-3.99
Inverters	G_Inv2	366676.9	4903239.1	2	0	0	87.7	87.7	1	4294.9	3.25	0	83.66	0	2.82	0	0	5.19	0	0	0	0	0	0	-4.01	-4.01
Inverters	G_Inv3	366583.7	4903091.4	2	0	0	87.7	87.7	1	4430.72	3.25	0	83.93	0	2.83	0	0	5.34	0	0	0	0	0	0	-4.43	-4.43
Inverters	G_Inv4	366732.8	4903105	2	0	0	87.7	87.7	1	4435.26	3.25	0	83.94	0	2.83	0	0	5.34	0	0	0	0	0	0	-4.45	-4.45
Inverters	G_Inv5	366638.5	4902958.1	2	0	0	87.7	87.7	1	4569.19	3.25	0	84.2	0	2.84	0	0	5.48	0	0	0	0	0	0	-4.86	-4.86
Inverters	G_Inv6	366788.5	4902972	2	0	0	87.7	87.7	1	4574.81	3.25	0	84.21	0	2.84	0	0	5.49	0	0	0	0	0	0	-4.87	-4.87
Inverters	G_Inv7	366694.6	4902824.7	2	0	0	87.7	87.7	1	4708.25	3.25	0	84.46	0	2.85	0	0	5.63	0	0	0	0	0	0	-5.27	-5.27
Inverters	G_Inv8	366844.5	4902838.5	2	0	0	87.7	87.7	1	4715.18	3.25	0	84.47	0	2.85	0	0	5.64	0	0	0	0	0	0	-5.3	-5.3
Inverters	G_Inv9	366750.9	4902691.8	2	0	0	87.7	87.7	1	4847.17	3.25	0	84.71	0	2.86	0	0	5.78	0	0	0	0	0	0	-5.68	-5.68
Inverters	G_Inv10	366900.7	4902704.8	2	0	0	87.7	87.7	1	4856.04	3.25	0	84.73	0	2.86	0	0	5.79	0	0	0	0	0	0	-5.71	-5.71
Inverter	MV6-4	370250	4906966	2	0	0	86.1	86.1	1	4162.14	3.25	0	83.39	0	1.43	0	0	11.31	0	0	0	0	0	0	-10.07	-10.07
Inverter Transformer	MV2-1 T	365836	4906816	2	0	0	69.4	69.4	1	739.54	3.25	0	68.38	0	1.41	0	0	3.42	0	0	0	0	0	0	-3.86	-3.86
Westbrook Inverter Transfor	W_INVTR1	369403	4906578	2	0	0	78.2	78.2	1	3407.55	3.25	0	81.65	0	-2.82	0	0	1.82	0	0	0	0	0	0	-2.41	-2.41
Westbrook Inverter Transfor	W_INVTR2	369368	4906388	2	0	0	77.3	77.3	1	3430.54	3.25	0	81.71	0	-2.83	0	0	1.83	0	0	0	0	0	0	-3.37	-3.37
Westbrook Inverter Transfor	W_INVTR3	369514	4906164	2	0	0	77.3	77.3	1	3644.89	3.25	0	82.23	0	-2.88	0	0	1.92	0	0	0	0	0	0	-3.93	-3.93
Westbrook Inverter Transfor	W_INVTR5	369725	4906574	2	0	0	77.3	77.3	1	3719.6	3.25	0	82.41	0	-2.9	0	0	1.95	0	0	0	0	0	0	-4.12	-4.12
Westbrook Inverter Transfor	W_INVTR4	369679	4906164	2	0	0	77.3	77.3	1	3798.92	3.25	0	82.59	0	-2.92	0	0	1.98	0	0	0	0	0	0	-4.31	-4.31
Westbrook Inverter Transfor	W_INVTR7	369786	4906417	2	0	0	77.3	77.3	1	3820.14	3.25	0	82.64	0	-2.92	0	0	1.99	0	0	0	0	0	0	-4.37	-4.37
Westbrook Inverter Transfor	W_INVTR6	369881	4906578	2	0	0	77.3	77.3	1	3869.95	3.25	0	82.75	0	-2.93	0	0	2.01	0	0	0	0	0	0	-4.49	-4.49
Inverter Transformer	MV1-7 T	364919	4905782	2	0	0	69.4	69.4	1	2095.68	3.25	0	77.43	0	2.21	0	0	5.06	0	0	0	0	0	0	-15.34	-15.34
Inverter Transformer	MV1-10 T	365010	4905564	2	0	0	69.4	69.4	1	2230.9	3.25	0	77.97	0	2.26	0	0	5.19	0	0	0	0	0	0	-16.07	-16.07
Inverter Transformer	MV1-14 T	365157	4905049	2	0	0	69.4	69.4	1	2632.27	3.25	0	79.41	0	2.39	0	0	5.56	0	0	0	0	0	0	-18.01	-18.01
Inverter Transformer	MV1-13 T	364725	4905241	2	0	0	69.4	69.4	1	2654.37	3.25	0	79.48	0	2.4	0	0	5.58	0	0	0	0	0	0	-18.11	-18.11
Inverter Transformer	MV2-2 T	365982	4906654	2	0	0	56.1	56.1	1	855.54	3.25	0	69.64	0	-0.04	0	0	4.54	0	0	0	0	0	0	-18.09	-18.09
Inverter Transformer	MV6-1 T	370230	4907364	2	0	0	69.4	69.4	1	4110.19	3.25	0	83.28	0	2.81	0	0	6.76	0	0	0	0	0	0	-23.5	-23.5
Inverter Transformer	MV6-4 T	370244	4906966	2	0	0	69.4	69.4	1	4156.19	3.25	0	83.37	0	2.82	0	0	6.79	0	0	0	0	0	0	-23.64	-23.64
Inverter Transformer	MV2-3 T	365814	4906641	2	0	0	56.1	56.1	1	910.67	3.25	0	70.19	0	-0.02	0	0	4.67	0	0	0	0	0	0	-18.78	-18.78
Inverter Transformer	MV2-4 T	365590	4906628	2	0	0	56.1	56.1	1	1019.77	3.25	0	71.17	0	0.02	0	0	4.94	0	0	0	0	0	0	-20.07	-20.07
Inverter Transformer	MV3-12 T	367674	4907594	2	0	0	56.1	56.1	1	1554.97	3.25	0	74.83	0	0.22	0	0	6.14	0	0	0	0	0	0	-25.13	-25.13
Inverter Transformer	MV3-18 T	367757	4907412	2	0	0	56.1	56.1	1	1637.26	3.25	0	75.28	0	0.25	0	0	6.31	0	0	0	0	0	0	-25.79	-25.79
Inverter Transformer	MV3-13 T	367958	4907577	2	0	0	56.1	56.1	1	1837.7	3.25	0	76.29	0	0.34	0	0	6.72	0	0	0	0	0	0	-27.28	-27.28
Inverter Transformer	MV3-7 T	367951	4907754	2	0	0	56.1	56.1	1	1846.83	3.25	0	76.33	0	0.34	0	0	6.74	0	0	0	0	0	0	-27.35	-27.35
Inverter Transformer	MV3-3 T	367944	4907927	2	0	0	56.1	56.1	1	1871.83	3.25	0	76.45	0	0.35	0	0	6.79	0	0	0	0	0	0	-27.53	-27.53
Inverter Transformer	MV1-1 T	364721	4906166	2	0	0	56.1	56.1	1	1933.14	3.25	0	76.73	0	0.38	0	0	6.91	0	0	0	0	0	0	-27.95	-27.95
Inverter Transformer	MV1-2 T	364759	4906063	2	0	0	56.1	56.1	1	1979.14	3.25	0	76.93	0	0.4	0	0	7	0	0	0	0	0	0	-28.27	-28.27
Inverter Transformer	MV1-4 T	364821	4905918	2	0	0	56.1	56.1	1	2046.71	3.25	0	77.22	0	0.42	0	0	7.14	0	0	0	0	0	0	-28.72	-28.72
Inverter Transformer	MV3-10 T	368162	4907669	2	0	0	56.1	56.1	1	2047.16	3.25	0	77.22	0	0.42	0	0	7.14	0	0	0	0	0	0	-28.72	-28.72
Inverter Transformer	MV3-17 T	368183	4907472	2	0	0	56.1	56.1	1	2061.17	3.25	0	77.28	0	0.43	0	0	7.16	0	0	0	0	0	0	-28.82	-28.82
Inverter Transformer	MV3-6 T	368156	4907834	2	0	0	56.1	56.1	1	2061.57	3.25	0	77.28	0	0.43	0	0	7.16	0	0	0	0	0	0	-28.82	-28.82
Inverter Transformer	MV3-1 T	368150	4907976	2	0	0	56.1	56.1	1	2083.57	3.25	0	77.38	0	0.44	0	0	7.21	0	0	0	0	0	0	-28.96	-28.96
Inverter Transformer	MV1-5 T	364676	4905892	2	0	0	56.1	56.1	1	2161.05	3.25	0	77.69	0	0.47	0	0	7.36	0	0	0	0	0	0	-29.46	-29.46
Inverter Transformer	MV3-11 T	368340	4907662	2	0	0	56.1	56.1	1	2224.06	3.25	0	77.94	0	0.5	0	0	7.48	0	0	0	0	0	0	-29.86	-29.86
Inverter Transformer	MV3-15 T	368351	4907477	2	0	0	56.1	56.1	1	2229.1	3.25	0	77.96	0	0.5	0	0	7.49	0	0	0	0	0	0	-29.89	-29.89
Inverter Transformer	MV1-3 T	364435	4906039	2	0	0	56.1	56.1	1	2230.39	3.25	0	77.97	0	0.5	0	0	7.49	0	0	0	0	0	0	-29.9	-29.9
Inverter Transformer	MV3-19 T	368352	4907347	2	0	0	56.1	56.1	1	2235.11	3.25	0	77.99	0	0.5	0	0	7.5	0	0	0	0	0	0	-29.93	-29.93

	Inverter Transformer	MV3-5 T	368335	4907843	2	0	0	56.1	56.1	1	2239.73	3.25	0	78	0	0.51	0	0	7.51	0	0	0	0	0	0	-29.96	-29.96
	Inverter Transformer	MV1-8 T	364782	4905647	2	0	0	56.1	56.1	1	2285.13	3.25	0	78.18	0	0.52	0	0	7.59	0	0	0	0	0	0	-30.24	-30.24
	Inverter Transformer	MV1-6 T	364482	4905835	2	0	0	56.1	56.1	1	2335.63	3.25	0	78.37	0	0.55	0	0	7.69	0	0	0	0	0	0	-30.54	-30.54
	Inverter Transformer	MV1-12 T	365044	4905386	2	0	0	56.1	56.1	1	2371.21	3.25	0	78.5	0	0.56	0	0	7.75	0	0	0	0	0	0	-30.76	-30.76
	Inverter Transformer	MV3-21 T	368484	4907206	2	0	0	56.1	56.1	1	2379.98	3.25	0	78.53	0	0.57	0	0	7.77	0	0	0	0	0	0	-30.81	-30.81
	Inverter Transformer	MV3-16 T	368509	4907475	2	0	0	56.1	56.1	1	2387.11	3.25	0	78.56	0	0.57	0	0	7.78	0	0	0	0	0	0	-30.85	-30.85
	Inverter Transformer	MV3-9 T	368517	4907703	2	0	0	56.1	56.1	1	2403.76	3.25	0	78.62	0	0.58	0	0	7.81	0	0	0	0	0	0	-30.95	-30.95
	Inverter Transformer	MV3-4 T	368507	4907925	2	0	0	56.1	56.1	1	2422.92	3.25	0	78.69	0	0.58	0	0	7.85	0	0	0	0	0	0	-31.06	-31.06
	Inverter Transformer	MV1-9 T	364555	4905646	2	0	0	56.1	56.1	1	2425.98	3.25	0	78.7	0	0.58	0	0	7.85	0	0	0	0	0	0	-31.08	-31.08
	Inverter Transformer	MV1-11 T	364649	4905414	2	0	0	56.1	56.1	1	2552.02	3.25	0	79.14	0	0.64	0	0	8.08	0	0	0	0	0	0	-31.8	-31.8
	Inverter Transformer	MV3-14 T	368678	4907498	2	0	0	56.1	56.1	1	2556	3.25	0	79.15	0	0.64	0	0	8.09	0	0	0	0	0	0	-31.82	-31.82
	Inverter Transformer	MV3-22 T	368661	4907142	2	0	0	56.1	56.1	1	2563.84	3.25	0	79.18	0	0.64	0	0	8.11	0	0	0	0	0	0	-31.87	-31.87
	Inverter Transformer	MV3-20 T	368683	4907317	2	0	0	56.1	56.1	1	2567.39	3.25	0	79.19	0	0.65	0	0	8.11	0	0	0	0	0	0	-31.89	-31.89
	Inverter Transformer	MV3-8 T	368685	4907712	2	0	0	56.1	56.1	1	2571.92	3.25	0	79.21	0	0.65	0	0	8.12	0	0	0	0	0	0	-31.91	-31.91
	Inverter Transformer	MV3-2 T	368677	4907928	2	0	0	56.1	56.1	1	2590.93	3.25	0	79.27	0	0.66	0	0	8.15	0	0	0	0	0	0	-32.02	-32.02
	Inverter Transformer	MV1-15 T	365309	4904994	2	0	0	56.1	56.1	1	2632.68	3.25	0	79.41	0	0.67	0	0	8.23	0	0	0	0	0	0	-32.25	-32.25
	Inverter Transformer	MV4-13 T	369057	4908605	2	0	0	56.1	56.1	1	3136.83	3.25	0	80.93	0	0.89	0	0	9.1	0	0	0	0	0	0	-34.86	-34.86
	Inverter Transformer	MV4-15 T	369170	4908481	2	0	0	56.1	56.1	1	3202.59	3.25	0	81.11	0	0.92	0	0	9.21	0	0	0	0	0	0	-35.17	-35.17
	Inverter Transformer	MV4-12 T	369049	4908803	2	0	0	56.1	56.1	1	3204.74	3.25	0	81.12	0	0.92	0	0	9.21	0	0	0	0	0	0	-35.18	-35.18
	Inverter Transformer	MV4-14 T	369182	4908507	2	0	0	56.1	56.1	1	3222.06	3.25	0	81.16	0	0.92	0	0	9.24	0	0	0	0	0	0	-35.27	-35.27
	Inverter Transformer	MV4-7 T	369040	4909001	2	0	0	56.1	56.1	1	3282.34	3.25	0	81.32	0	0.95	0	0	9.34	0	0	0	0	0	0	-35.55	-35.55
	Inverter Transformer	MV4-4 T	369033	4909199	2	0	0	56.1	56.1	1	3371.55	3.25	0	81.56	0	0.99	0	0	9.48	0	0	0	0	0	0	-35.97	-35.97
	Inverter Transformer	MV4-11 T	369269	4908855	2	0	0	56.1	56.1	1	3427.11	3.25	0	81.7	0	1.01	0	0	9.57	0	0	0	0	0	0	-36.22	-36.22
	Inverter Transformer	MV4-1 T	369017	4909397	2	0	0	56.1	56.1	1	3462.26	3.25	0	81.79	0	1.02	0	0	9.63	0	0	0	0	0	0	-36.38	-36.38
	Inverter Transformer	MV4-10 T	369307	4908858	2	0	0	56.1	56.1	1	3463.21	3.25	0	81.79	0	1.02	0	0	9.63	0	0	0	0	0	0	-36.39	-36.39
	Inverter Transformer	MV4-8 T	369262	4909001	2	0	0	56.1	56.1	1	3481.18	3.25	0	81.83	0	1.03	0	0	9.66	0	0	0	0	0	0	-36.47	-36.47
	Inverter Transformer	MV4-9 T	369284	4909001	2	0	0	56.1	56.1	1	3501.04	3.25	0	81.88	0	1.04	0	0	9.69	0	0	0	0	0	0	-36.56	-36.56
	Inverter Transformer	MV4-6 T	369249	4909192	2	0	0	56.1	56.1	1	3556.37	3.25	0	82.02	0	1.06	0	0	9.78	0	0	0	0	0	0	-36.8	-36.8
	Inverter Transformer	MV4-5 T	369283	4909199	2	0	0	56.1	56.1	1	3589.61	3.25	0	82.1	0	1.08	0	0	9.83	0	0	0	0	0	0	-36.95	-36.95
	Inverter Transformer	MV4-3 T	369234	4909397	2	0	0	56.1	56.1	1	3645.65	3.25	0	82.24	0	1.1	0	0	9.92	0	0	0	0	0	0	-37.19	-37.19
	Inverter Transformer	MV4-2 T	369267	4909397	2	0	0	56.1	56.1	1	3673.86	3.25	0	82.3	0	1.11	0	0	9.96	0	0	0	0	0	0	-37.32	-37.32
	Inverter Transformer	MV6-2 T	370091	4907339	2	0	0	56.1	56.1	1	3972.18	3.25	0	82.98	0	1.23	0	0	10.41	0	0	0	0	0	0	-38.57	-38.57
	Inverter Transformer	MV5-6 T	369987	4908507	2	0	0	56.1	56.1	1	3994.54	3.25	0	83.03	0	1.24	0	0	10.45	0	0	0	0	0	0	-38.66	-38.66
	Inverter Transformer	MV5-5 T	370021	4908690	2	0	0	56.1	56.1	1	4077.14	3.25	0	83.21	0	1.27	0	0	10.57	0	0	0	0	0	0	-38.99	-38.99
	Inverter Transformer	MV6-3 T	370202	4907140	2	0	0	56.1	56.1	1	4095.68	3.25	0	83.25	0	1.28	0	0	10.6	0	0	0	0	0	0	-39.07	-39.07
	Inverter Transformer	MV5-2 T	370011	4908853	2	0	0	56.1	56.1	1	4118.29	3.25	0	83.29	0	1.29	0	0	10.63	0	0	0	0	0	0	-39.16	-39.16
	Inverter Transformer	MV5-1 T	370015	4909142	2	0	0	56.1	56.1	1	4225.9	3.25	0	83.52	0	1.33	0	0	10.79	0	0	0	0	0	0	-39.58	-39.58
	Inverter Transformer	MV5-3 T	370237	4908851	2	0	0	56.1	56.1	1	4331.72	3.25	0	83.73	0	1.37	0	0	10.94	0	0	0	0	0	0	-39.99	-39.99
	Inverter Transformer	MV5-4 T	370330	4908707	2	0	0	56.1	56.1	1	4378.24	3.25	0	83.83	0	1.39	0	0	11	0	0	0	0	0	0	-40.16	-40.16
	Line Reactor	NGR	369421	4908787.5	5	0	0	45.4	45.4	1	3542.06	5.25	0	81.99	0	3.3	1.33	0.1	1.45	0	0	0	0	0	0	-42.71	-42.71
Limit. Valu	0	0																								
Level D/N:	28.1193	28.1193																								

Receiver: Vacant Lot Receptor
ID: S-VLR10
X: 366669
Y: 4908059
Z: 4.5
Ground: 0

ISO	Description	ID	X	Y	Z	Ground	ReflOrd	LxT	LxN	L/A	Dist.	hm	Freq	Adiv	K0b	Agr	Abar	z	Aatm	Afol	Ahous	Cmet	CmetN	Dc	RL	LtotT	LtotN
	Sol_Luce Substation	S_Substation	369426	4908792	3.5	0	0	112.1	112.1	1	2852.78	5.25	0	80.11	0	0.25	3.42	0.32	5.74	0	0	0	0	0	0	22.57	22.57
	Inverter	MV3-12	367668	4907594	2	0	0	100.3	100.3	1	1101.92	3.25	0	71.84	0	-0.2	0	0	11.23	0	0	0	0	0	0	17.43	17.43
	Inverter	MV3-18	367752	4907412	2	0	0	100.3	100.3	1	1261.55	3.25	0	73.02	0	-0.13	0	0	11.7	0	0	0	0	0	0	15.72	15.72
	Inverter	MV3-3	367939	4907927	2	0	0	100.3	100.3	1	1276.84	3.25	0	73.12	0	-0.12	0	0	11.74	0	0	0	0	0	0	15.57	15.57
	Inverter	MV3-7	367945	4907754	2	0	0	100.3	100.3	1	1311.95	3.25	0	73.36	0	-0.11	0	0	11.84	0	0	0	0	0	0	15.22	15.22
	Inverter	MV3-13	367963	4907577	2	0	0	100.3	100.3	1	1380.86	3.25	0	73.8	0	-0.08	0	0	12.02	0	0	0	0	0	0	14.57	14.57
	Inverter	MV3-6	368162	4907834	2	0	0	100.3	100.3	1	1509.86	3.25	0	74.58	0	-0.03	0	0	12.35	0	0	0	0	0	0	13.41	13.41
	Inverter	MV3-10	368167	4907669	2	0	0	100.3	100.3	1	1547.94	3.25	0	74.8	0	-0.02	0	0	12.44	0	0	0	0	0	0	13.09	13.09
	Inverter	MV3-17	368178	4907472	2	0	0	100.3	100.3	1	1619.15	3.25	0	75.19	0	0.01	0	0	12.61	0	0	0	0	0	0	12.5	12.5
	Inverter	MV2-3	365820	4906641	2	0	0	100.3	100.3	1	1652.73	3.25	0	75.36	0	0.02	0	0	12.69	0	0	0	0	0	0	12.23	12.23
	Inverter	MV3-11	368346	4907662	2	0	0	100.3	100.3	1	1723.35	3.25	0	75.73	0	0.04	0	0	12.86	0	0	0	0	0	0	11.68	11.68
	Inverter	MV3-15	368357	4907477	2	0	0	100.3	100.3	1	1785.52	3.25	0	76.04	0	0.06	0	0	13	0	0	0	0	0	0	11.22	11.22
	Inverter	MV2-4	365586	4906624	2	0	0	100.3	100.3	1	1797.81	3.25	0	76.09	0	0.07	0	0	13.02	0	0	0	0	0	0	11.12	11.12
	Inverter	MV3-19	368357	4907347	2	0	0	100.3	100.3	1	1832.02	3.25	0	76.26	0	0.08	0	0	13.1	0	0	0	0	0	0	10.87	10.87
	Inverter	MV3-9	368512	4907703	2	0	0	100.3	100.3	1	1877.07	3.25	0	76.47	0	0.09	0	0	13.2	0	0	0	0	0	0	10.55	10.55
	Inverter	MV3-16	368514	4907475	2	0	0	100.3	100.3	1	1935.22	3.25	0	76.73	0	0.11	0	0	13.32	0	0	0	0	0	0	10.14	10.14
	Inverter	MV3-21	368478	4907206	2	0	0	100.3	100.3	1	2000.02	3.25	0	77.02	0	0.13	0	0	13.46	0	0	0	0	0	0	9.7	9.7
	Inverter	MV3-8	368680	4907712	2	0	0	100.3	100.3	1	2040.72	3.25	0	77.2	0	0.14	0	0	13.55	0	0	0	0	0	0	9.43	9.43
	Inverter	MV3-14	368684	4907498	2	0	0	100.3	100.3	1	2091.64	3.25	0	77.41	0	0.15	0	0	13.65	0	0	0	0	0	0	9.09	9.09
	Inverter	MV2-1	365842	4906816	2	0	0	97.3	97.3	1	1492.98	3.25	0	74.48	0	-0.04	0	0	12.31	0	0	0	0	0	0	10.56	10.56
	Inverter	MV3-20	368689	4907317	2	0	0	100.3	100.3	1	2151.97	3.25	0	77.66	0	0.17	0	0	13.78	0	0	0	0	0	0	8.71	8.71
	Inverter	MV4-7	369035	4909001	2	0	0	100.3	100.3	1	2546.63	3.25	0	79.12	0	0.27	0	0	14.55	0	0	0	0	0	0	6.38	6.38
	Inverter	MV4-4	369027	4909199	2	0	0	100.3	100.3	1	2619.12	3.25	0	79.36	0	0.28	0	0	14.68	0	0	0	0	0	0	5.98	5.98

Inverter	MV4-1	369011	4909397	2	0	0	100.3	100.3	1	2697.26	3.25	0	79.62	0	0.3	0	0	14.83	0	0	0	0	0	0	5.57	5.57
Inverter	MV4-11	369264	4908855	2	0	0	100.3	100.3	1	2714.34	3.25	0	79.67	0	0.3	0	0	14.86	0	0	0	0	0	0	5.48	5.48
Inverter	MV1-1	364715	4906166	2	0	0	100.3	100.3	1	2720.58	3.25	0	79.69	0	0.31	0	0	14.87	0	0	0	0	0	0	5.44	5.44
Inverter	MV4-8	369256	4909001	2	0	0	100.3	100.3	1	2753.17	3.25	0	79.8	0	0.31	0	0	14.93	0	0	0	0	0	0	5.27	5.27
Inverter	MV4-10	369312	4908858	2	0	0	100.3	100.3	1	2761.13	3.25	0	79.82	0	0.31	0	0	14.94	0	0	0	0	0	0	5.23	5.23
Inverter	MV1-2	364753	4906063	2	0	0	100.3	100.3	1	2766.78	3.25	0	79.84	0	0.32	0	0	14.95	0	0	0	0	0	0	5.2	5.2
Inverter	MV4-9	369289	4909001	2	0	0	100.3	100.3	1	2784.2	3.25	0	79.89	0	0.32	0	0	14.99	0	0	0	0	0	0	5.11	5.11
Inverter	MV4-6	369243	4909192	2	0	0	100.3	100.3	1	2812.32	3.25	0	79.98	0	0.32	0	0	15.04	0	0	0	0	0	0	4.97	4.97
Inverter	MV1-4	364815	4905918	2	0	0	100.3	100.3	1	2832.17	3.25	0	80.04	0	0.33	0	0	15.07	0	0	0	0	0	0	4.87	4.87
Inverter	MV4-5	369289	4909199	2	0	0	100.3	100.3	1	2857.27	3.25	0	80.12	0	0.33	0	0	15.12	0	0	0	0	0	0	4.74	4.74
Inverter	MV4-3	369229	4909397	2	0	0	100.3	100.3	1	2888.57	3.25	0	80.21	0	0.34	0	0	15.17	0	0	0	0	0	0	4.58	4.58
Inverter	MV4-2	369272	4909397	2	0	0	100.3	100.3	1	2926.75	3.25	0	80.33	0	0.35	0	0	15.24	0	0	0	0	0	0	4.39	4.39
Inverter	MV1-5	364671	4905892	2	0	0	100.3	100.3	1	2947.52	3.25	0	80.39	0	0.35	0	0	15.28	0	0	0	0	0	0	4.29	4.29
Inverter	MV1-8	364788	4905647	2	0	0	100.3	100.3	1	3058.74	3.25	0	80.71	0	0.37	0	0	15.48	0	0	0	0	0	0	3.75	3.75
Inverter	MV1-6	364477	4905835	2	0	0	100.3	100.3	1	3122.67	3.25	0	80.89	0	0.39	0	0	15.59	0	0	0	0	0	0	3.45	3.45
Inverter	MV1-12	365038	4905386	2	0	0	100.3	100.3	1	3131.31	3.25	0	80.91	0	0.39	0	0	15.6	0	0	0	0	0	0	3.41	3.41
Inverter	MV1-9	364561	4905646	2	0	0	100.3	100.3	1	3204.1	3.25	0	81.11	0	0.4	0	0	15.73	0	0	0	0	0	0	3.07	3.07
Inverter	MV1-11	364655	4905414	2	0	0	100.3	100.3	1	3324.49	3.25	0	81.43	0	0.42	0	0	15.94	0	0	0	0	0	0	2.52	2.52
Inverter	MV1-15	365315	4904994	2	0	0	100.3	100.3	1	3350.75	3.25	0	81.5	0	0.43	0	0	15.98	0	0	0	0	0	0	2.4	2.4
Inverter	MV5-5	370015	4908690	2	0	0	100.3	100.3	1	3404.98	3.25	0	81.64	0	0.44	0	0	16.07	0	0	0	0	0	0	2.16	2.16
Inverter	MV5-2	370006	4908853	2	0	0	100.3	100.3	1	3430.16	3.25	0	81.71	0	0.44	0	0	16.11	0	0	0	0	0	0	2.05	2.05
Inverter	MV6-2	370085	4907339	2	0	0	100.3	100.3	1	3491.05	3.25	0	81.86	0	0.45	0	0	16.22	0	0	0	0	0	0	1.79	1.79
Inverter	MV5-1	370020	4909142	2	0	0	100.3	100.3	1	3521.66	3.25	0	81.93	0	0.45	0	0	16.27	0	0	0	0	0	0	1.65	1.65
Inverter	MV5-3	370231	4908851	2	0	0	100.3	100.3	1	3648.99	3.25	0	82.24	0	0.47	0	0	16.48	0	0	0	0	0	0	1.11	1.11
Inverter	MV6-3	370207	4907140	2	0	0	100.3	100.3	1	3655.41	3.25	0	82.26	0	0.48	0	0	16.49	0	0	0	0	0	0	1.09	1.09
Inverter	MV5-4	370324	4908707	2	0	0	100.3	100.3	1	3712	3.25	0	82.39	0	0.48	0	0	16.58	0	0	0	0	0	0	0.85	0.85
Inverter	MV1-7	364925	4905782	2	0	0	97.3	97.3	1	2868.15	3.25	0	80.15	0	0.34	0	0	15.14	0	0	0	0	0	0	1.69	1.69
Inverter	MV1-10	365004	4905564	2	0	0	97.3	97.3	1	2999.54	3.25	0	80.54	0	0.36	0	0	15.37	0	0	0	0	0	0	1.04	1.04
DSTATCOM - 10 MVAR #2	DSAT2	369403	4908757	2.5	0	0	96.6	96.6	1	2821.7	3.5	0	80.01	0	3.38	0	0	2.2	0	0	0	0	0	0	11.04	11.04
DSTATCOM - 10 MVAR #1	DSAT1	369437	4908757	2.5	0	0	96.6	96.6	1	2854.65	3.5	0	80.11	0	3.39	0	0	2.22	0	0	0	0	0	0	10.91	10.91
Inverter	MV1-14	365163	4905049	2	0	0	97.3	97.3	1	3365.73	3.25	0	81.54	0	0.43	0	0	16.01	0	0	0	0	0	0	-0.66	-0.66
Inverter	MV1-13	364731	4905241	2	0	0	97.3	97.3	1	3420.08	3.25	0	81.68	0	0.44	0	0	16.1	0	0	0	0	0	0	-0.9	-0.9
Inverter	MV6-1	370235	4907364	2	0	0	97.3	97.3	1	3633.1	3.25	0	82.21	0	0.47	0	0	16.45	0	0	0	0	0	0	-1.82	-1.82
Inverter	MV3-1	368156	4907976	2	0	0	89.1	89.1	1	1489.32	3.25	0	74.46	0	0.79	0	0	7.19	0	0	0	0	0	0	6.62	6.62
Inverter	MV2-2	365977	4906654	2	0	0	89.1	89.1	1	1566.17	3.25	0	74.9	0	0.81	0	0	7.32	0	0	0	0	0	0	6.03	6.03
Inverter	MV3-5	368340	4907843	2	0	0	89.1	89.1	1	1684.9	3.25	0	75.53	0	0.83	0	0	7.52	0	0	0	0	0	0	5.17	5.17
Inverter	MV3-4	368502	4907925	2	0	0	89.1	89.1	1	1837.89	3.25	0	76.29	0	0.87	0	0	7.78	0	0	0	0	0	0	4.12	4.12
Inverter	MV3-2	368671	4907928	2	0	0	89.1	89.1	1	2006.28	3.25	0	77.05	0	0.91	0	0	8.06	0	0	0	0	0	0	3.05	3.05
Inverter	MV3-22	368656	4907142	2	0	0	89.1	89.1	1	2188.39	3.25	0	77.8	0	0.95	0	0	8.35	0	0	0	0	0	0	1.95	1.95
Inverter	MV4-13	369051	4908605	2	0	0	89.1	89.1	1	2443.78	3.25	0	78.76	0	1.01	0	0	8.76	0	0	0	0	0	0	0.53	0.53
Inverter	MV4-12	369043	4908803	2	0	0	89.1	89.1	1	2487.85	3.25	0	78.92	0	1.02	0	0	8.83	0	0	0	0	0	0	0.29	0.29
Inverter	MV4-15	369176	4908481	2	0	0	89.1	89.1	1	2542.27	3.25	0	79.1	0	1.04	0	0	8.91	0	0	0	0	0	0	0.01	0.01
Inverter	MV4-14	369176	4908507	2	0	0	89.1	89.1	1	2546.72	3.25	0	79.12	0	1.04	0	0	8.92	0	0	0	0	0	0	-0.02	-0.02
Fixed Reactor Bank 1	FRB1	369378	4908755	6	0	0	89.8	89.8	1	2796.98	5.25	0	79.93	0	-0.9	0	0	5.65	0	0	0	0	0	0	5.09	5.09
SubstationTransformer	W_ST	369711.17	4906112.3	2.5	0	0	92	92	1	3611.73	4.25	0	82.15	0	1.24	2.71	0.24	6.84	0	0	0	0	0	0	-0.97	-0.97
Fixed Reactor Bank 2	FRB2	369464	4908755	6	0	0	89.8	89.8	1	2880.35	5.25	0	80.19	0	-0.89	0	0	5.78	0	0	0	0	0	0	4.7	4.7
Inverter	MV1-3	364440	4906039	2	0	0	89.1	89.1	1	3008.13	3.25	0	80.57	0	1.15	0	0	9.63	0	0	0	0	0	0	-2.29	-2.29
Westbrook Inverter Enclosur	W_INV2	369374	4906388	2	0	0	89.1	89.1	1	3179.51	3.25	0	81.05	0	1.19	0	0	9.89	0	0	0	0	0	0	-3.07	-3.07
Inverter	MV5-6	369982	4908507	2	0	0	89.1	89.1	1	3343.15	3.25	0	81.48	0	1.23	0	0	10.13	0	0	0	0	0	0	-3.79	-3.79
Westbrook Inverter Enclosur	W_INV5	369719	4906574	2	0	0	89.1	89.1	1	3392.3	3.25	0	81.61	0	1.24	0	0	10.2	0	0	0	0	0	0	-4	-4
Westbrook Inverter Enclosur	W_INV3	369508	4906164	2	0	0	89.1	89.1	1	3413.35	3.25	0	81.66	0	1.25	0	0	10.24	0	0	0	0	0	0	-4.09	-4.09
Westbrook Inverter Enclosur	W_INV7	369780	4906417	2	0	0	89.1	89.1	1	3517.74	3.25	0	81.93	0	1.27	0	0	10.39	0	0	0	0	0	0	-4.53	-4.53
Westbrook Inverter Enclosur	W_INV6	369875	4906578	2	0	0	89.1	89.1	1	3531.54	3.25	0	81.96	0	1.28	0	0	10.41	0	0	0	0	0	0	-4.59	-4.59
Westbrook Inverter Enclosur	W_INV4	369673	4906164	2	0	0	89.1	89.1	1	3551.77	3.25	0	82.01	0	1.28	0	0	10.44	0	0	0	0	0	0	-4.67	-4.67
Gardiner Substation	G_Sub	366586.3	4903349.9	2.5	0	0	90.8	90.8	1	4709.83	4.25	0	84.46	0	1.58	2.46	0.38	8.27	0	0	0	0	0	0	-6	-6
Westbrook Inverter Enclosur	W_INV1	369409	4906578	2	0	0	86.1	86.1	1	3114.64	3.25	0	80.87	0	1.17	0	0	9.79	0	0	0	0	0	0	-5.78	-5.78
Inverter	MV6-4	370250	4906966	2	0	0	86.1	86.1	1	3744.09	3.25	0	82.47	0	1.33	0	0	10.72	0	0	0	0	0	0	-8.46	-8.46
Inverters	G_Inv2	366676.9	4903239.1	2	0	0	87.7	87.7	1	4819.91	3.25	0	84.66	0	2.85	0	0	5.75	0	0	0	0	0	0	-5.6	-5.6
Inverters	G_Inv1	366526.4	4903225.8	2	0	0	87.7	87.7	1	4835.3	3.25	0	84.69	0	2.85	0	0	5.77	0	0	0	0	0	0	-5.65	-5.65
Inverters	G_Inv4	366732.8	4903105	2	0	0	87.7	87.7	1	4954.41	3.25	0	84.9	0	2.86	0	0	5.89	0	0	0	0	0	0	-5.99	-5.99
Inverters	G_Inv3	366583.7	4903091.4	2	0	0	87.7	87.7	1	4968.33	4.18	0	84.92	0	3.22	1.46	0.01	5.91	0	0	0	0	0	0	-7.85	-7.85
Inverters	G_Inv6	366788.5	4902972	2	0	0	87.7	87.7	1	5088.4	3.25	0	85.13	0	2.87	0	0	6.03	0	0	0	0	0	0	-6.37	-6.37
Inverters	G_Inv5	366638.5	4902958.1	2	0	0	87.7	87.7	1	5100.99	3.25	0	85.15	0	2.87	0	0	6.05	0	0	0	0	0	0	-6.41	-6.41
Inverters	G_Inv8	366844.5	4902838.5	2	0	0	87.7	87.7	1	5223.45	3.25	0	85.36	0	2.88	0	0	6.17	0	0	0	0	0	0	-6.75	-6.75
Inverters	G_Inv7	366694.6	4902824.7	2	0	0	87.7	87.7	1	5234.36	3.25	0	85.38	0	2.88	0	0	6.19	0	0	0	0	0	0	-6.78	-6.78
Inverters	G_Inv10	366900.7	4902704.8	2	0	0	87.7	87.7	1	5359.21	3.25	0	85.58	0	2.89	0	0	6.32	0	0	0	0	0	0	-7.12	-7.12
Inverters	G_Inv9	366750.9	4902691.8	2	0	0	87.7	87.7	1	5367.83	3.25	0	85.6	0	2.89	0	0	6.32	0	0	0	0	0	0	-7.15	-7.15
Westbrook Inverter Transfor	W_INVTR1	369403	4906578	2	0	0	78.2	78.2	1	3109.36	3.25	0	80.85	0	-2.74	0	0	1.7	0	0	0	0	0	0	-1.57	-1.57
Westbrook Inverter Transfor	W_INVTR2	369368	4906388	2	0	0	77.3	77.3	1	3174.41	3.25	0	81.03	0	-2.76	0	0	1.73	0	0	0	0	0	0	-2.66	-2.66
Westbrook Inverter Transfor	W_INVTR5	369725	4906574	2	0	0	77.3	77.3	1	3397.7	3.25	0	81.62	0	-2.82	0	0	1.82	0	0	0	0	0	0	-3.28	-3.28
Westbrook Inverter Transfor	W_INVTR3	369514	4906164	2	0	0	77.3	77.3	1	3418.34	3.25	0	81.68	0	-2.82	0	0	1.83	0	0	0	0	0	0	-3.34	-3.34
Westbrook Inverter Transfor	W_INVTR7	369786	4906417	2	0	0	77.3	77.3	1	3523.05	3.25	0	81.94	0	-2.85	0	0	1.87	0	0	0	0	0	0	-3.62	-3.62
Westbrook Inverter Transfor	W_INVTR6	369881	4906578	2	0	0	77.3	77.3	1	3536.99	3.25	0	81.97	0	-2.85	0	0	1.88	0	0	0	0	0	0	-3.65	-3.65
Westbrook Inverter Transfor	W_INVTR4	369679	4906164	2	0	0	77.3	77.3	1	3556.84	3.25	0	82.02	0	-2.86	0	0	1.88	0	0	0	0	0	0	-3.71	-3.71

Inverter Transformer	MV2-1 T	365836	4906816	2	0	0	69.4	69.4	1	1496.31	3.25	0	74.5	0	1.97	0	0	4.43	0	0	0	0	0	0	-11.55	-11.55
Inverter Transformer	MV1-7 T	364919	4905782	2	0	0	69.4	69.4	1	2871.8	3.25	0	80.16	0	2.47	0	0	5.77	0	0	0	0	0	0	-19.05	-19.05
Inverter Transformer	MV1-10 T	365010	4905564	2	0	0	69.4	69.4	1	2996.22	3.25	0	80.53	0	2.51	0	0	5.88	0	0	0	0	0	0	-19.57	-19.57
Inverter Transformer	MV1-14 T	365157	4905049	2	0	0	69.4	69.4	1	3368.42	3.25	0	81.55	0	2.62	0	0	6.19	0	0	0	0	0	0	-21	-21
Inverter Transformer	MV1-13 T	364725	4905241	2	0	0	69.4	69.4	1	3423.49	3.25	0	81.69	0	2.63	0	0	6.23	0	0	0	0	0	0	-21.2	-21.2
Inverter Transformer	MV6-1 T	370230	4907364	2	0	0	69.4	69.4	1	3628.19	3.25	0	82.19	0	2.69	0	0	6.39	0	0	0	0	0	0	-21.92	-21.92
Inverter Transformer	MV6-4 T	370244	4906966	2	0	0	69.4	69.4	1	3738.35	3.25	0	82.45	0	2.72	0	0	6.48	0	0	0	0	0	0	-22.3	-22.3
Inverter Transformer	MV3-12 T	367674	4907594	2	0	0	56.1	56.1	1	1107.36	3.25	0	71.89	0	0.05	0	0	5.14	0	0	0	0	0	0	-21.02	-21.02
Inverter Transformer	MV3-18 T	367757	4907412	2	0	0	56.1	56.1	1	1265.84	3.25	0	73.05	0	0.11	0	0	5.5	0	0	0	0	0	0	-22.6	-22.6
Inverter Transformer	MV3-3 T	367944	4907927	2	0	0	56.1	56.1	1	1281.82	3.25	0	73.16	0	0.11	0	0	5.54	0	0	0	0	0	0	-22.75	-22.75
Inverter Transformer	MV3-7 T	367951	4907754	2	0	0	56.1	56.1	1	1317.78	3.25	0	73.4	0	0.13	0	0	5.62	0	0	0	0	0	0	-23.09	-23.09
Inverter Transformer	MV3-13 T	367958	4907577	2	0	0	56.1	56.1	1	1376.17	3.25	0	73.77	0	0.15	0	0	5.75	0	0	0	0	0	0	-23.61	-23.61
Inverter Transformer	MV3-1 T	368150	4907976	2	0	0	56.1	56.1	1	1483.33	3.25	0	74.42	0	0.19	0	0	5.98	0	0	0	0	0	0	-24.54	-24.54
Inverter Transformer	MV3-6 T	368156	4907834	2	0	0	56.1	56.1	1	1503.93	3.25	0	74.54	0	0.2	0	0	6.03	0	0	0	0	0	0	-24.71	-24.71
Inverter Transformer	MV3-10 T	368162	4907669	2	0	0	56.1	56.1	1	1543.1	3.25	0	74.77	0	0.22	0	0	6.11	0	0	0	0	0	0	-25.04	-25.04
Inverter Transformer	MV2-2 T	365982	4906654	2	0	0	56.1	56.1	1	1563.97	3.25	0	74.88	0	0.22	0	0	6.15	0	0	0	0	0	0	-25.2	-25.2
Inverter Transformer	MV3-17 T	368183	4907472	2	0	0	56.1	56.1	1	1623.81	3.25	0	75.21	0	0.25	0	0	6.28	0	0	0	0	0	0	-25.68	-25.68
Inverter Transformer	MV2-3 T	365814	4906641	2	0	0	56.1	56.1	1	1655.82	3.25	0	75.38	0	0.26	0	0	6.35	0	0	0	0	0	0	-25.93	-25.93
Inverter Transformer	MV3-5 T	368335	4907843	2	0	0	56.1	56.1	1	1679.95	3.25	0	75.51	0	0.27	0	0	6.4	0	0	0	0	0	0	-26.12	-26.12
Inverter Transformer	MV3-11 T	368340	4907662	2	0	0	56.1	56.1	1	1717.51	3.25	0	75.7	0	0.29	0	0	6.47	0	0	0	0	0	0	-26.4	-26.4
Inverter Transformer	MV3-15 T	368351	4907477	2	0	0	56.1	56.1	1	1779.85	3.25	0	76.01	0	0.31	0	0	6.6	0	0	0	0	0	0	-26.86	-26.86
Inverter Transformer	MV2-4 T	365590	4906628	2	0	0	56.1	56.1	1	1792.21	3.25	0	76.07	0	0.32	0	0	6.63	0	0	0	0	0	0	-26.95	-26.95
Inverter Transformer	MV3-19 T	368352	4907347	2	0	0	56.1	56.1	1	1827.41	3.25	0	76.24	0	0.33	0	0	6.7	0	0	0	0	0	0	-27.21	-27.21
Inverter Transformer	MV3-4 T	368507	4907925	2	0	0	56.1	56.1	1	1842.88	3.25	0	76.31	0	0.34	0	0	6.73	0	0	0	0	0	0	-27.32	-27.32
Inverter Transformer	MV3-9 T	368517	4907703	2	0	0	56.1	56.1	1	1881.98	3.25	0	76.49	0	0.35	0	0	6.81	0	0	0	0	0	0	-27.6	-27.6
Inverter Transformer	MV3-16 T	368509	4907475	2	0	0	56.1	56.1	1	1930.46	3.25	0	76.71	0	0.37	0	0	6.91	0	0	0	0	0	0	-27.94	-27.94
Inverter Transformer	MV3-21 T	368484	4907206	2	0	0	56.1	56.1	1	2005.45	3.25	0	77.04	0	0.41	0	0	7.05	0	0	0	0	0	0	-28.45	-28.45
Inverter Transformer	MV3-2 T	368677	4907928	2	0	0	56.1	56.1	1	2012.27	3.25	0	77.07	0	0.41	0	0	7.07	0	0	0	0	0	0	-28.49	-28.49
Inverter Transformer	MV3-8 T	368685	4907712	2	0	0	56.1	56.1	1	2045.65	3.25	0	77.22	0	0.42	0	0	7.13	0	0	0	0	0	0	-28.71	-28.71
Inverter Transformer	MV3-14 T	368678	4907498	2	0	0	56.1	56.1	1	2085.86	3.25	0	77.39	0	0.44	0	0	7.21	0	0	0	0	0	0	-28.98	-28.98
Inverter Transformer	MV3-20 T	368683	4907317	2	0	0	56.1	56.1	1	2146.34	3.25	0	77.63	0	0.47	0	0	7.33	0	0	0	0	0	0	-29.37	-29.37
Inverter Transformer	MV3-22 T	368661	4907142	2	0	0	56.1	56.1	1	2192.93	3.25	0	77.82	0	0.49	0	0	7.42	0	0	0	0	0	0	-29.66	-29.66
Inverter Transformer	MV4-13 T	369057	4908605	2	0	0	56.1	56.1	1	2449.63	3.25	0	78.78	0	0.59	0	0	7.9	0	0	0	0	0	0	-31.22	-31.22
Inverter Transformer	MV4-12 T	369049	4908803	2	0	0	56.1	56.1	1	2493.58	3.25	0	78.94	0	0.61	0	0	7.98	0	0	0	0	0	0	-31.47	-31.47
Inverter Transformer	MV4-15 T	369170	4908481	2	0	0	56.1	56.1	1	2536.35	3.25	0	79.08	0	0.63	0	0	8.06	0	0	0	0	0	0	-31.71	-31.71
Inverter Transformer	MV4-7 T	369040	4909001	2	0	0	56.1	56.1	1	2551.28	3.25	0	79.14	0	0.64	0	0	8.08	0	0	0	0	0	0	-31.8	-31.8
Inverter Transformer	MV4-14 T	369182	4908507	2	0	0	56.1	56.1	1	2552.62	3.25	0	79.14	0	0.64	0	0	8.08	0	0	0	0	0	0	-31.81	-31.81
Inverter Transformer	MV4-4 T	369033	4909199	2	0	0	56.1	56.1	1	2624.52	3.25	0	79.38	0	0.67	0	0	8.21	0	0	0	0	0	0	-32.21	-32.21
Inverter Transformer	MV4-1 T	369017	4909397	2	0	0	56.1	56.1	1	2702.47	3.25	0	79.64	0	0.7	0	0	8.35	0	0	0	0	0	0	-32.63	-32.63
Inverter Transformer	MV1-1 T	364721	4906166	2	0	0	56.1	56.1	1	2716.28	3.25	0	79.68	0	0.71	0	0	8.38	0	0	0	0	0	0	-32.71	-32.71
Inverter Transformer	MV4-11 T	369269	4908855	2	0	0	56.1	56.1	1	2719.12	3.25	0	79.69	0	0.71	0	0	8.38	0	0	0	0	0	0	-32.72	-32.72
Inverter Transformer	MV4-10 T	369307	4908858	2	0	0	56.1	56.1	1	2756.35	3.25	0	79.81	0	0.73	0	0	8.45	0	0	0	0	0	0	-32.92	-32.92
Inverter Transformer	MV4-8 T	369262	4909001	2	0	0	56.1	56.1	1	2758.81	3.25	0	79.81	0	0.73	0	0	8.45	0	0	0	0	0	0	-32.94	-32.94
Inverter Transformer	MV1-2 T	364759	4906063	2	0	0	56.1	56.1	1	2762.63	3.25	0	79.83	0	0.73	0	0	8.46	0	0	0	0	0	0	-32.96	-32.96
Inverter Transformer	MV4-9 T	369284	4909001	2	0	0	56.1	56.1	1	2779.5	3.25	0	79.88	0	0.74	0	0	8.49	0	0	0	0	0	0	-33.05	-33.05
Inverter Transformer	MV4-6 T	369249	4909192	2	0	0	56.1	56.1	1	2817.82	3.25	0	80	0	0.75	0	0	8.56	0	0	0	0	0	0	-33.25	-33.25
Inverter Transformer	MV1-4 T	364821	4905918	2	0	0	56.1	56.1	1	2828.25	3.25	0	80.03	0	0.76	0	0	8.57	0	0	0	0	0	0	-33.3	-33.3
Inverter Transformer	MV4-5 T	369283	4909199	2	0	0	56.1	56.1	1	2851.77	3.25	0	80.1	0	0.77	0	0	8.61	0	0	0	0	0	0	-33.42	-33.42
Inverter Transformer	MV4-3 T	369234	4909397	2	0	0	56.1	56.1	1	2893	3.25	0	80.23	0	0.78	0	0	8.69	0	0	0	0	0	0	-33.64	-33.64
Inverter Transformer	MV4-2 T	369267	4909397	2	0	0	56.1	56.1	1	2922.3	3.25	0	80.31	0	0.8	0	0	8.74	0	0	0	0	0	0	-33.79	-33.79
Inverter Transformer	MV1-5 T	364676	4905892	2	0	0	56.1	56.1	1	2944.14	3.25	0	80.38	0	0.81	0	0	8.77	0	0	0	0	0	0	-33.9	-33.9
Inverter Transformer	MV1-3 T	364435	4906039	2	0	0	56.1	56.1	1	3011.84	3.25	0	80.58	0	0.83	0	0	8.89	0	0	0	0	0	0	-34.24	-34.24
Inverter Transformer	MV1-8 T	364782	4905647	2	0	0	56.1	56.1	1	3062.44	3.25	0	80.72	0	0.86	0	0	8.97	0	0	0	0	0	0	-34.49	-34.49
Inverter Transformer	MV1-6 T	364482	4905835	2	0	0	56.1	56.1	1	3119.16	3.25	0	80.88	0	0.88	0	0	9.07	0	0	0	0	0	0	-34.77	-34.77
Inverter Transformer	MV1-12 T	365044	4905386	2	0	0	56.1	56.1	1	3128.19	3.25	0	80.91	0	0.88	0	0	9.08	0	0	0	0	0	0	-34.82	-34.82
Inverter Transformer	MV1-9 T	364555	4905646	2	0	0	56.1	56.1	1	3208.05	3.25	0	81.12	0	0.92	0	0	9.22	0	0	0	0	0	0	-35.2	-35.2
Inverter Transformer	MV1-11 T	364649	4905414	2	0	0	56.1	56.1	1	3328.13	3.25	0	81.44	0	0.97	0	0	9.41	0	0	0	0	0	0	-35.77	-35.77
Inverter Transformer	MV5-6 T	369987	4908507	2	0	0	56.1	56.1	1	3348.11	3.25	0	81.5	0	0.98	0	0	9.44	0	0	0	0	0	0	-35.86	-35.86
Inverter Transformer	MV1-15 T	365309	4904994	2	0	0	56.1	56.1	1	3353.18	3.25	0	81.51	0	0.98	0	0	9.45	0	0	0	0	0	0	-35.88	-35.88
Inverter Transformer	MV5-5 T	370021	4908690	2	0	0	56.1	56.1	1	3410.88	3.25	0	81.66	0	1	0	0	9.55	0	0	0	0	0	0	-36.15	-36.15
Inverter Transformer	MV5-2 T	370011	4908853	2	0	0	56.1	56.1	1	3435.03	3.25	0	81.72	0	1.01	0	0	9.58	0	0	0	0	0	0	-36.26	-36.26
Inverter Transformer	MV6-2 T	370091	4907339	2	0	0	56.1	56.1	1	3496.93	3.25	0	81.87	0	1.04	0	0	9.68	0	0	0	0	0	0	-36.54	-36.54
Inverter Transformer	MV5-1 T	370015	4909142	2	0	0	56.1	56.1	1	3516.9	3.25	0	81.92	0	1.05	0	0	9.71	0	0	0	0	0	0	-36.63	-36.63
Inverter Transformer	MV6-3 T	370202	4907140	2	0	0	56.1	56.1	1	3650.57	3.25	0	82.25	0	1.1	0	0	9.92	0	0	0	0	0	0	-37.21	-37.21
Inverter Transformer	MV5-3 T	370237	4908851	2	0	0	56.1	56.1	1	3654.85	3.25	0	82.26	0	1.1	0	0	9.93	0	0	0	0	0	0	-37.23	-37.23
Inverter Transformer	MV5-4 T	370330	4908707	2	0	0	56.1	56.1	1	3717.91	3.25	0	82.41	0	1.13	0	0	10.03	0	0	0	0	0	0	-37.51	-37.51
Line Reactor	NGR	369421	4908787.5	5	0	0	45.4	45.4	1	2846.79	5.25	0	80.09	0	3.33	1.31	0.11	1.17	0	0	0	0	0	0	-40.54	-40.54
Limit. Valu 0	0																									
Level D/N: 28.5082	28.5082																									

Receiver: Vacant Lot Receptor
ID: S-VLR11
X: 366889
Y: 4908100

Z: 4.5
Ground: 0

ISO	Description	ID	X	Y	Z	Ground	ReflOrd	LxT	LxN	L/A	Dist.	hm	Freq	Adiv	K0b	Agr	Abar	z	Aatm	Afol	Ahous	Cmet	CmetN	Dc	RL	LtotT	LtotN
	Sol_Luce Substation	S_Substation	369426	4908792	3.5	0	0	112.1	112.1	1	2629.68	5.25	0	79.4	0	0.18	3.49	0.32	5.39	0	0	0	0	0	0	23.61	23.61
	Inverter	MV3-12	367668	4907594	2	0	0	100.3	100.3	1	928.92	3.25	0	70.36	0	-0.28	0	0	10.67	0	0	0	0	0	0	19.57	19.57
	Inverter	MV3-3	367939	4907927	2	0	0	100.3	100.3	1	1064.16	3.25	0	71.54	0	-0.22	0	0	11.12	0	0	0	0	0	0	17.87	17.87
	Inverter	MV3-18	367752	4907412	2	0	0	100.3	100.3	1	1103.68	3.25	0	71.86	0	-0.2	0	0	11.24	0	0	0	0	0	0	17.41	17.41
	Inverter	MV3-7	367945	4907754	2	0	0	100.3	100.3	1	1111.24	3.25	0	71.92	0	-0.19	0	0	11.26	0	0	0	0	0	0	17.33	17.33
	Inverter	MV3-13	367963	4907577	2	0	0	100.3	100.3	1	1194.58	3.25	0	72.54	0	-0.16	0	0	11.51	0	0	0	0	0	0	16.41	16.41
	Inverter	MV3-6	368162	4907834	2	0	0	100.3	100.3	1	1300.5	3.25	0	73.28	0	-0.11	0	0	11.81	0	0	0	0	0	0	15.33	15.33
	Inverter	MV3-10	368167	4907669	2	0	0	100.3	100.3	1	1348.72	3.25	0	73.6	0	-0.09	0	0	11.94	0	0	0	0	0	0	14.87	14.87
	Inverter	MV3-17	368178	4907472	2	0	0	100.3	100.3	1	1433.84	3.25	0	74.13	0	-0.06	0	0	12.16	0	0	0	0	0	0	14.08	14.08
	Inverter	MV3-11	368346	4907662	2	0	0	100.3	100.3	1	1521.41	3.25	0	74.64	0	-0.03	0	0	12.38	0	0	0	0	0	0	13.32	13.32
	Inverter	MV3-15	368357	4907477	2	0	0	100.3	100.3	1	1594.73	3.25	0	75.05	0	0	0	0	12.56	0	0	0	0	0	0	12.7	12.7
	Inverter	MV3-19	368357	4907347	2	0	0	100.3	100.3	1	1649.86	3.25	0	75.35	0	0.02	0	0	12.69	0	0	0	0	0	0	12.26	12.26
	Inverter	MV3-9	368512	4907703	2	0	0	100.3	100.3	1	1670.85	3.25	0	75.46	0	0.03	0	0	12.73	0	0	0	0	0	0	12.09	12.09
	Inverter	MV3-16	368514	4907475	2	0	0	100.3	100.3	1	1741.05	3.25	0	75.82	0	0.05	0	0	12.9	0	0	0	0	0	0	11.55	11.55
	Inverter	MV2-3	365820	4906641	2	0	0	100.3	100.3	1	1808.71	3.25	0	76.15	0	0.07	0	0	13.05	0	0	0	0	0	0	11.04	11.04
	Inverter	MV3-21	368478	4907206	2	0	0	100.3	100.3	1	1823.23	3.25	0	76.22	0	0.08	0	0	13.08	0	0	0	0	0	0	10.94	10.94
	Inverter	MV3-8	368680	4907712	2	0	0	100.3	100.3	1	1832.55	3.25	0	76.26	0	0.08	0	0	13.1	0	0	0	0	0	0	10.87	10.87
	Inverter	MV3-14	368684	4907498	2	0	0	100.3	100.3	1	1893.26	3.25	0	76.54	0	0.1	0	0	13.23	0	0	0	0	0	0	10.44	10.44
	Inverter	MV3-20	368689	4907317	2	0	0	100.3	100.3	1	1962.93	3.25	0	76.86	0	0.12	0	0	13.38	0	0	0	0	0	0	9.95	9.95
	Inverter	MV2-4	365586	4906624	2	0	0	100.3	100.3	1	1968.86	3.25	0	76.88	0	0.12	0	0	13.4	0	0	0	0	0	0	9.91	9.91
	Inverter	MV4-7	369035	4909001	2	0	0	100.3	100.3	1	2327.47	3.25	0	78.34	0	0.22	0	0	14.13	0	0	0	0	0	0	7.63	7.63
	Inverter	MV2-1	365842	4906816	2	0	0	97.3	97.3	1	1656.77	3.25	0	75.39	0	0.02	0	0	12.7	0	0	0	0	0	0	9.2	9.2
	Inverter	MV4-4	369027	4909199	2	0	0	100.3	100.3	1	2403.92	3.25	0	78.62	0	0.23	0	0	14.27	0	0	0	0	0	0	7.18	7.18
	Inverter	MV4-1	369011	4909397	2	0	0	100.3	100.3	1	2486.99	3.25	0	78.91	0	0.25	0	0	14.43	0	0	0	0	0	0	6.71	6.71
	Inverter	MV4-11	369264	4908855	2	0	0	100.3	100.3	1	2492.12	3.25	0	78.93	0	0.26	0	0	14.44	0	0	0	0	0	0	6.68	6.68
	Inverter	MV4-8	369256	4909001	2	0	0	100.3	100.3	1	2532.69	3.25	0	79.07	0	0.26	0	0	14.52	0	0	0	0	0	0	6.46	6.46
	Inverter	MV4-10	369312	4908858	2	0	0	100.3	100.3	1	2538.8	3.25	0	79.09	0	0.27	0	0	14.53	0	0	0	0	0	0	6.42	6.42
	Inverter	MV4-9	369289	4909001	2	0	0	100.3	100.3	1	2563.55	3.25	0	79.18	0	0.27	0	0	14.58	0	0	0	0	0	0	6.29	6.29
	Inverter	MV4-6	369243	4909192	2	0	0	100.3	100.3	1	2594.95	3.25	0	79.28	0	0.28	0	0	14.64	0	0	0	0	0	0	6.11	6.11
	Inverter	MV4-5	369289	4909199	2	0	0	100.3	100.3	1	2639.66	3.25	0	79.43	0	0.29	0	0	14.72	0	0	0	0	0	0	5.87	5.87
	Inverter	MV4-3	369229	4909397	2	0	0	100.3	100.3	1	2675.41	3.25	0	79.55	0	0.3	0	0	14.79	0	0	0	0	0	0	5.68	5.68
	Inverter	MV4-2	369272	4909397	2	0	0	100.3	100.3	1	2713.1	3.25	0	79.67	0	0.3	0	0	14.86	0	0	0	0	0	0	5.48	5.48
	Inverter	MV1-1	364715	4906166	2	0	0	100.3	100.3	1	2909.75	3.25	0	80.28	0	0.34	0	0	15.21	0	0	0	0	0	0	4.48	4.48
	Inverter	MV1-2	364753	4906063	2	0	0	100.3	100.3	1	2951.59	3.25	0	80.4	0	0.35	0	0	15.29	0	0	0	0	0	0	4.27	4.27
	Inverter	MV1-4	364815	4905918	2	0	0	100.3	100.3	1	3010.42	3.25	0	80.57	0	0.36	0	0	15.39	0	0	0	0	0	0	3.98	3.98
	Inverter	MV1-5	364671	4905892	2	0	0	100.3	100.3	1	3129.66	3.25	0	80.91	0	0.39	0	0	15.6	0	0	0	0	0	0	3.42	3.42
	Inverter	MV5-5	370015	4908690	2	0	0	100.3	100.3	1	3181.19	3.25	0	81.05	0	0.4	0	0	15.69	0	0	0	0	0	0	3.18	3.18
	Inverter	MV5-2	370006	4908853	2	0	0	100.3	100.3	1	3206.67	3.25	0	81.12	0	0.4	0	0	15.73	0	0	0	0	0	0	3.06	3.06
	Inverter	MV1-8	364788	4905647	2	0	0	100.3	100.3	1	3229.77	3.25	0	81.18	0	0.4	0	0	15.77	0	0	0	0	0	0	2.95	2.95
	Inverter	MV1-12	365038	4905386	2	0	0	100.3	100.3	1	3285.12	3.25	0	81.33	0	0.41	0	0	15.87	0	0	0	0	0	0	2.7	2.7
	Inverter	MV6-2	370085	4907339	2	0	0	100.3	100.3	1	3285.35	3.25	0	81.33	0	0.41	0	0	15.87	0	0	0	0	0	0	2.7	2.7
	Inverter	MV5-1	370020	4909142	2	0	0	100.3	100.3	1	3299.84	3.25	0	81.37	0	0.42	0	0	15.89	0	0	0	0	0	0	2.63	2.63
	Inverter	MV1-6	364477	4905835	2	0	0	100.3	100.3	1	3308.77	3.25	0	81.39	0	0.42	0	0	15.91	0	0	0	0	0	0	2.59	2.59
	Inverter	MV1-9	364561	4905646	2	0	0	100.3	100.3	1	3382.56	3.25	0	81.58	0	0.43	0	0	16.03	0	0	0	0	0	0	2.26	2.26
	Inverter	MV5-3	370231	4908851	2	0	0	100.3	100.3	1	3425.34	3.25	0	81.69	0	0.44	0	0	16.11	0	0	0	0	0	0	2.07	2.07
	Inverter	MV6-3	370207	4907140	2	0	0	100.3	100.3	1	3454.09	3.25	0	81.77	0	0.44	0	0	16.15	0	0	0	0	0	0	1.95	1.95
	Inverter	MV1-15	365315	4904994	2	0	0	100.3	100.3	1	3482.06	3.25	0	81.84	0	0.45	0	0	16.2	0	0	0	0	0	0	1.83	1.83
	Inverter	MV5-4	370324	4908707	2	0	0	100.3	100.3	1	3488.22	3.25	0	81.85	0	0.45	0	0	16.21	0	0	0	0	0	0	1.8	1.8
	Inverter	MV1-11	364655	4905414	2	0	0	100.3	100.3	1	3493.62	3.25	0	81.87	0	0.45	0	0	16.22	0	0	0	0	0	0	1.78	1.78
	DSTATCOM - 10 MVAR #2	DSAT2	369403	4908757	2.5	0	0	96.6	96.6	1	2598.43	3.5	0	79.29	0	3.34	0	0	2.07	0	0	0	0	0	0	11.92	11.92
	DSTATCOM - 10 MVAR #1	DSAT1	369437	4908757	2.5	0	0	96.6	96.6	1	2631.34	3.5	0	79.4	0	3.35	0	0	2.09	0	0	0	0	0	0	11.79	11.79
	Inverter	MV1-7	364925	4905782	2	0	0	97.3	97.3	1	3038.16	3.25	0	80.65	0	0.37	0	0	15.44	0	0	0	0	0	0	0.85	0.85
	Inverter	MV1-10	365004	4905564	2	0	0	97.3	97.3	1	3159.83	3.25	0	80.99	0	0.39	0	0	15.65	0	0	0	0	0	0	0.27	0.27
	Inverter	MV3-1	368156	4907976	2	0	0	89.1	89.1	1	1273.06	3.25	0	73.1	0	0.74	0	0	6.81	0	0	0	0	0	0	8.41	8.41
	Inverter	MV6-1	370235	4907364	2	0	0	97.3	97.3	1	3425.99	3.25	0	81.7	0	0.44	0	0	16.11	0	0	0	0	0	0	-0.93	-0.93
	Inverter	MV1-14	365163	4905049	2	0	0	97.3	97.3	1	3505.38	3.25	0	81.89	0	0.45	0	0	16.24	0	0	0	0	0	0	-1.27	-1.27
	Inverter	MV1-13	364731	4905241	2	0	0	97.3	97.3	1	3582.02	3.25	0	82.08	0	0.46	0	0	16.37	0	0	0	0	0	0	-1.6	-1.6
	Inverter	MV3-5	368340	4907843	2	0	0	89.1	89.1	1	1473.59	3.25	0	74.37	0	0.79	0	0	7.16	0	0	0	0	0	0	6.74	6.74
	Inverter	MV3-4	368502	4907925	2	0	0	89.1	89.1	1	1622.47	3.25	0	75.2	0	0.82	0	0	7.42	0	0	0	0	0	0	5.62	5.62
	Inverter	MV2-2	365977	4906654	2	0	0	89.1	89.1	1	1709.58	3.25	0	75.66	0	0.84	0	0	7.56	0	0	0	0	0	0	5	5
	Inverter	MV3-2	368671	4907928	2	0	0	89.1	89.1	1	1790.28	3.25	0	76.06	0	0.86	0	0	7.7	0	0	0	0	0	0	4.44	4.44
	Inverter	MV3-22	368656	4907142	2	0	0	89.1	89.1	1	2009.99	3.25	0	77.06	0	0.91	0	0	8.06	0	0	0	0	0	0	3.02	3.02
	Inverter	MV4-13	369051	4908605	2	0	0	89.1	89.1	1	2220.2	3.25	0	77.93	0	0.96	0	0	8.4	0	0	0	0	0	0	1.77	1.77
	Inverter	MV4-12	369043	4908803	2	0	0	89.1	89.1	1	2265.82	3.25	0	78.1	0	0.97	0	0	8.47	0	0	0	0	0	0	1.51	1.51
	Inverter	MV4-15	369176	4908481	2	0	0	89.1	89.1	1	2318.52	3.25	0	78.3	0	0.98	0	0	8.56	0	0	0	0	0	0	1.21	1.21
	Inverter	MV4-14	369176	4908507	2	0	0	89.1	89.1	1	2322.93	3.25	0	78.32	0	0.98	0	0	8.57	0	0	0	0	0	0	1.19	1.19
	Fixed Reactor Bank 1	FRB1	369378	4908755	6	0	0	89.8	89.8	1	2573.74	5.25	0	79.21	0	-0.93	0	0	5.3	0	0	0	0	0	0	6.19	6.19
	Fixed Reactor Bank 2	FRB2	369464	4908755	6	0	0	89.8	89.8	1	2657	5.25	0	79.49	0	-0.92	0	0	5.43	0	0	0	0	0	0	5.77	5.77
	SubstationTransformer	W_ST	369711.17	4906112.3	2.5	0	0	92	92	1	3451.92	4.25	0	81.76	0	1.19	2.76	0.24	6.61	0	0	0	0	0	0	-0.35	-0.35
	Westbrook Inverter Enclosur	W_INV2	369374	4906388	2	0	0	89.1	89.1	1	3017.64	3.25	0	80.59	0	1.15	0	0	9.64	0	0	0	0	0	0	-2.33	-2.33

Inverter	MV5-6	369982	4908507	2	0	0	89.1	89.1	1	3119.66	3.25	0	80.88	0	1.18	0	0	9.8	0	0	0	0	0	0	-2.8	-2.8
Inverter	MV1-3	364440	4906039	2	0	0	89.1	89.1	1	3200.83	3.25	0	81.11	0	1.2	0	0	9.92	0	0	0	0	0	0	-3.16	-3.16
Westbrook Inverter Enclosur	W_INV5	369719	4906574	2	0	0	89.1	89.1	1	3215.21	3.25	0	81.14	0	1.2	0	0	9.94	0	0	0	0	0	0	-3.23	-3.23
Westbrook Inverter Enclosur	W_INV3	369508	4906164	2	0	0	89.1	89.1	1	3256.88	3.25	0	81.26	0	1.21	0	0	10	0	0	0	0	0	0	-3.41	-3.41
Westbrook Inverter Enclosur	W_INV7	369780	4906417	2	0	0	89.1	89.1	1	3345.2	3.25	0	81.49	0	1.23	0	0	10.13	0	0	0	0	0	0	-3.8	-3.8
Westbrook Inverter Enclosur	W_INV6	369875	4906578	2	0	0	89.1	89.1	1	3351.52	3.25	0	81.5	0	1.23	0	0	10.14	0	0	0	0	0	0	-3.82	-3.82
Westbrook Inverter Enclosur	W_INV4	369673	4906164	2	0	0	89.1	89.1	1	3390.98	3.25	0	81.61	0	1.24	0	0	10.2	0	0	0	0	0	0	-3.99	-3.99
Gardiner Substation	G_Sub	366586.3	4903349.9	2.5	0	0	90.8	90.8	1	4759.74	4.25	0	84.55	0	1.59	2.45	0.38	8.33	0	0	0	0	0	0	-6.15	-6.15
Westbrook Inverter Enclosur	W_INV1	369409	4906578	2	0	0	86.1	86.1	1	2943.96	3.25	0	80.38	0	1.13	0	0	9.53	0	0	0	0	0	0	-4.99	-4.99
Inverter	MV6-4	370250	4906966	2	0	0	86.1	86.1	1	3547.15	3.25	0	82	0	1.28	0	0	10.43	0	0	0	0	0	0	-7.65	-7.65
Inverters	G_Inv2	366676.9	4903239.1	2	0	0	87.7	87.7	1	4865.53	3.25	0	84.74	0	2.86	0	0	5.8	0	0	0	0	0	0	-5.74	-5.74
Inverters	G_Inv1	366526.4	4903225.8	2	0	0	87.7	87.7	1	4887.67	3.25	0	84.78	0	2.86	0	0	5.82	0	0	0	0	0	0	-5.8	-5.8
Inverters	G_Inv4	366732.8	4903105	2	0	0	87.7	87.7	1	4997.44	3.25	0	84.97	0	2.86	0	0	5.94	0	0	0	0	0	0	-6.12	-6.12
Inverters	G_Inv3	366583.7	4903091.4	2	0	0	87.7	87.7	1	5017.9	3.25	0	85.01	0	2.87	0	0	5.96	0	0	0	0	0	0	-6.18	-6.18
Inverters	G_Inv6	366788.5	4902972	2	0	0	87.7	87.7	1	5128.99	3.25	0	85.2	0	2.87	0	0	6.08	0	0	0	0	0	0	-6.49	-6.49
Inverters	G_Inv5	366638.5	4902958.1	2	0	0	87.7	87.7	1	5148	3.25	0	85.23	0	2.87	0	0	6.1	0	0	0	0	0	0	-6.54	-6.54
Inverters	G_Inv8	366844.5	4902838.5	2	0	0	87.7	87.7	1	5261.69	3.25	0	85.42	0	2.88	0	0	6.21	0	0	0	0	0	0	-6.86	-6.86
Inverters	G_Inv7	366694.6	4902824.7	2	0	0	87.7	87.7	1	5278.88	3.25	0	85.45	0	2.88	0	0	6.23	0	0	0	0	0	0	-6.9	-6.9
Inverters	G_Inv10	366900.7	4902704.8	2	0	0	87.7	87.7	1	5395.21	3.25	0	85.64	0	2.89	0	0	6.35	0	0	0	0	0	0	-7.22	-7.22
Inverters	G_Inv9	366750.9	4902691.8	2	0	0	87.7	87.7	1	5409.96	3.25	0	85.66	0	2.89	0	0	6.37	0	0	0	0	0	0	-7.26	-7.26
Westbrook Inverter Transfor	W_INVTR1	369403	4906578	2	0	0	78.2	78.2	1	2938.82	3.25	0	80.36	0	-2.7	0	0	1.63	0	0	0	0	0	0	-1.06	-1.06
Westbrook Inverter Transfor	W_INVTR2	369368	4906388	2	0	0	77.3	77.3	1	3012.7	3.25	0	80.58	0	-2.72	0	0	1.66	0	0	0	0	0	0	-2.18	-2.18
Westbrook Inverter Transfor	W_INVTR5	369725	4906574	2	0	0	77.3	77.3	1	3220.49	3.25	0	81.16	0	-2.77	0	0	1.75	0	0	0	0	0	0	-2.79	-2.79
Westbrook Inverter Transfor	W_INVTR3	369514	4906164	2	0	0	77.3	77.3	1	3261.71	3.25	0	81.27	0	-2.78	0	0	1.77	0	0	0	0	0	0	-2.91	-2.91
Westbrook Inverter Transfor	W_INVTR7	369786	4906417	2	0	0	77.3	77.3	1	3350.39	3.25	0	81.5	0	-2.81	0	0	1.8	0	0	0	0	0	0	-3.16	-3.16
Westbrook Inverter Transfor	W_INVTR6	369881	4906578	2	0	0	77.3	77.3	1	3356.87	3.25	0	81.52	0	-2.81	0	0	1.8	0	0	0	0	0	0	-3.17	-3.17
Westbrook Inverter Transfor	W_INVTR4	369679	4906164	2	0	0	77.3	77.3	1	3395.91	3.25	0	81.62	0	-2.82	0	0	1.82	0	0	0	0	0	0	-3.28	-3.28
Inverter Transformer	MV2-1 T	365836	4906816	2	0	0	69.4	69.4	1	1660.56	3.25	0	75.41	0	2.04	0	0	4.61	0	0	0	0	0	0	-12.71	-12.71
Inverter Transformer	MV1-7 T	364919	4905782	2	0	0	69.4	69.4	1	3042.04	3.25	0	80.66	0	2.52	0	0	5.92	0	0	0	0	0	0	-19.75	-19.75
Inverter Transformer	MV1-10 T	365010	4905564	2	0	0	69.4	69.4	1	3156.25	3.25	0	80.98	0	2.55	0	0	6.01	0	0	0	0	0	0	-20.2	-20.2
Inverter Transformer	MV6-1 T	370230	4907364	2	0	0	69.4	69.4	1	3421.11	3.25	0	81.68	0	2.63	0	0	6.23	0	0	0	0	0	0	-21.19	-21.19
Inverter Transformer	MV1-14 T	365157	4905049	2	0	0	69.4	69.4	1	3508.34	3.25	0	81.9	0	2.66	0	0	6.3	0	0	0	0	0	0	-21.51	-21.51
Inverter Transformer	MV6-4 T	370244	4906966	2	0	0	69.4	69.4	1	3541.47	3.25	0	81.98	0	2.66	0	0	6.32	0	0	0	0	0	0	-21.62	-21.62
Inverter Transformer	MV1-13 T	364725	4905241	2	0	0	69.4	69.4	1	3585.64	3.25	0	82.09	0	2.68	0	0	6.36	0	0	0	0	0	0	-21.78	-21.78
Inverter Transformer	MV3-12 T	367674	4907594	2	0	0	56.1	56.1	1	933.95	3.25	0	70.41	0	-0.01	0	0	4.73	0	0	0	0	0	0	-19.07	-19.07
Inverter Transformer	MV3-3 T	367944	4907927	2	0	0	56.1	56.1	1	1069.09	3.25	0	71.58	0	0.04	0	0	5.05	0	0	0	0	0	0	-20.61	-20.61
Inverter Transformer	MV3-18 T	367757	4907412	2	0	0	56.1	56.1	1	1107.6	3.25	0	71.89	0	0.05	0	0	5.14	0	0	0	0	0	0	-21.02	-21.02
Inverter Transformer	MV3-7 T	367951	4907754	2	0	0	56.1	56.1	1	1116.95	3.25	0	71.96	0	0.05	0	0	5.16	0	0	0	0	0	0	-21.12	-21.12
Inverter Transformer	MV3-13 T	367958	4907577	2	0	0	56.1	56.1	1	1190.08	3.25	0	72.51	0	0.08	0	0	5.33	0	0	0	0	0	0	-21.87	-21.87
Inverter Transformer	MV3-1 T	368150	4907976	2	0	0	56.1	56.1	1	1267.08	3.25	0	73.06	0	0.11	0	0	5.51	0	0	0	0	0	0	-22.61	-22.61
Inverter Transformer	MV3-6 T	368156	4907834	2	0	0	56.1	56.1	1	1294.62	3.25	0	73.24	0	0.12	0	0	5.57	0	0	0	0	0	0	-22.87	-22.87
Inverter Transformer	MV3-10 T	368162	4907669	2	0	0	56.1	56.1	1	1343.99	3.25	0	73.57	0	0.14	0	0	5.68	0	0	0	0	0	0	-23.33	-23.33
Inverter Transformer	MV3-17 T	368183	4907472	2	0	0	56.1	56.1	1	1438.34	3.25	0	74.16	0	0.17	0	0	5.88	0	0	0	0	0	0	-24.16	-24.16
Inverter Transformer	MV3-5 T	368335	4907843	2	0	0	56.1	56.1	1	1468.66	3.25	0	74.34	0	0.19	0	0	5.95	0	0	0	0	0	0	-24.42	-24.42
Inverter Transformer	MV3-11 T	368340	4907662	2	0	0	56.1	56.1	1	1515.67	3.25	0	74.61	0	0.2	0	0	6.05	0	0	0	0	0	0	-24.81	-24.81
Inverter Transformer	MV3-15 T	368351	4907477	2	0	0	56.1	56.1	1	1589.21	3.25	0	75.02	0	0.23	0	0	6.21	0	0	0	0	0	0	-25.41	-25.41
Inverter Transformer	MV3-4 T	368507	4907925	2	0	0	56.1	56.1	1	1627.44	3.25	0	75.23	0	0.25	0	0	6.29	0	0	0	0	0	0	-25.71	-25.71
Inverter Transformer	MV3-19 T	368352	4907347	2	0	0	56.1	56.1	1	1645.41	3.25	0	75.33	0	0.26	0	0	6.33	0	0	0	0	0	0	-25.85	-25.85
Inverter Transformer	MV3-9 T	368517	4907703	2	0	0	56.1	56.1	1	1675.71	3.25	0	75.48	0	0.27	0	0	6.39	0	0	0	0	0	0	-26.08	-26.08
Inverter Transformer	MV2-2 T	365982	4906654	2	0	0	56.1	56.1	1	1706.92	3.25	0	75.64	0	0.28	0	0	6.45	0	0	0	0	0	0	-26.32	-26.32
Inverter Transformer	MV3-16 T	368509	4907475	2	0	0	56.1	56.1	1	1736.38	3.25	0	75.79	0	0.29	0	0	6.51	0	0	0	0	0	0	-26.54	-26.54
Inverter Transformer	MV3-2 T	368677	4907928	2	0	0	56.1	56.1	1	1796.26	3.25	0	76.09	0	0.32	0	0	6.64	0	0	0	0	0	0	-26.98	-26.98
Inverter Transformer	MV2-3 T	365814	4906641	2	0	0	56.1	56.1	1	1812.27	3.25	0	76.16	0	0.33	0	0	6.67	0	0	0	0	0	0	-27.1	-27.1
Inverter Transformer	MV3-21 T	368484	4907206	2	0	0	56.1	56.1	1	1828.46	3.25	0	76.24	0	0.33	0	0	6.7	0	0	0	0	0	0	-27.22	-27.22
Inverter Transformer	MV3-8 T	368685	4907712	2	0	0	56.1	56.1	1	1837.43	3.25	0	76.28	0	0.34	0	0	6.72	0	0	0	0	0	0	-27.28	-27.28
Inverter Transformer	MV3-14 T	368678	4907498	2	0	0	56.1	56.1	1	1887.57	3.25	0	76.52	0	0.36	0	0	6.82	0	0	0	0	0	0	-27.64	-27.64
Inverter Transformer	MV3-20 T	368683	4907317	2	0	0	56.1	56.1	1	1957.43	3.25	0	76.83	0	0.39	0	0	6.96	0	0	0	0	0	0	-28.12	-28.12
Inverter Transformer	MV2-4 T	365590	4906628	2	0	0	56.1	56.1	1	1963.21	3.25	0	76.86	0	0.39	0	0	6.97	0	0	0	0	0	0	-28.16	-28.16
Inverter Transformer	MV3-22 T	368661	4907142	2	0	0	56.1	56.1	1	2014.39	3.25	0	77.08	0	0.41	0	0	7.07	0	0	0	0	0	0	-28.51	-28.51
Inverter Transformer	MV4-13 T	369057	4908605	2	0	0	56.1	56.1	1	2226.04	3.25	0	77.95	0	0.5	0	0	7.48	0	0	0	0	0	0	-29.87	-29.87
Inverter Transformer	MV4-12 T	369049	4908803	2	0	0	56.1	56.1	1	2271.52	3.25	0	78.13	0	0.52	0	0	7.57	0	0	0	0	0	0	-30.15	-30.15
Inverter Transformer	MV4-15 T	369170	4908481	2	0	0	56.1	56.1	1	2312.6	3.25	0	78.28	0	0.54	0	0	7.64	0	0	0	0	0	0	-30.4	-30.4
Inverter Transformer	MV4-14 T	369182	4908507	2	0	0	56.1	56.1	1	2328.84	3.25	0	78.34	0	0.54	0	0	7.67	0	0	0	0	0	0	-30.5	-30.5
Inverter Transformer	MV4-7 T	369040	4909001	2	0	0	56.1	56.1	1	2332.08	3.25	0	78.35	0	0.54	0	0	7.68	0	0	0	0	0	0	-30.52	-30.52
Inverter Transformer	MV4-4 T	369033	4909199	2	0	0	56.1	56.1	1	2409.26	3.25	0	78.64	0	0.58	0	0	7.82	0	0	0	0	0	0	-30.98	-30.98
Inverter Transformer	MV4-1 T	369017	4909397	2	0	0	56.1	56.1	1	2492.11	3.25	0	78.93	0	0.61	0	0	7.98	0	0	0	0	0	0	-31.46	-31.46
Inverter Transformer	MV4-11 T	369269	4908855	2	0	0	56.1	56.1	1	2496.88	3.25	0	78.95	0	0.62	0	0	7.98	0	0	0	0	0	0	-31.49	-31.49
Inverter Transformer	MV4-10 T	369307	4908858	2	0	0	56.1	56.1	1	2534.03	3.25	0	79.08	0	0.63	0	0	8.05	0	0	0	0	0	0	-31.7	-31.7
Inverter Transformer	MV4-8 T	369262	4909001	2	0	0	56.1	56.1	1	2538.29	3.25	0	79.09	0	0.63	0	0	8.06	0	0	0	0	0	0	-31.72	-31.72
Inverter Transformer	MV4-9 T	369284	4909001	2	0	0	56.1	56.1	1	2558.87	3.25	0	79.16	0	0.64	0	0	8.1	0	0	0	0	0	0	-31.84	-31.84
Inverter Transformer	MV4-6 T	369249	4909192	2	0	0	56.1	56.1	1	2600.4	3.25	0	79.3	0	0.66	0	0	8.17	0	0	0	0	0	0	-32.07	-32.07
Inverter Transformer	MV4-5 T	369283	4909199	2	0	0	56.1	56.1	1	2634.21	3.25	0	79.41	0	0.67	0	0	8.23	0	0	0	0	0	0	-32.26	-32.26
Inverter Transformer	MV4-3 T	369234	4909397	2	0	0	56.1	56.1	1	2679.78	3.25	0	79.56	0	0.69	0	0	8.31	0	0	0	0	0	0	-32.51	-32.51
Inverter Transformer	MV4-2 T	369267	4909397	2	0	0	56.1	56.1	1	2708.71	3.25	0	79.66	0	0.71	0	0	8.36	0	0	0	0	0	0	-32.67	-32.67

	Inverter Transformer	MV1-1 T	364721	4906166	2	0	0	56.1	56.1	1	2905.27	3.25	0	80.26	0	0.79	0	0	8.71	0	0	0	0	0	0	-33.7	-33.7
	Inverter Transformer	MV1-2 T	364759	4906063	2	0	0	56.1	56.1	1	2947.25	3.25	0	80.39	0	0.81	0	0	8.78	0	0	0	0	0	0	-33.92	-33.92
	Inverter Transformer	MV1-4 T	364821	4905918	2	0	0	56.1	56.1	1	3006.29	3.25	0	80.56	0	0.83	0	0	8.88	0	0	0	0	0	0	-34.21	-34.21
	Inverter Transformer	MV5-6 T	369987	4908507	2	0	0	56.1	56.1	1	3124.62	3.25	0	80.9	0	0.88	0	0	9.08	0	0	0	0	0	0	-34.8	-34.8
	Inverter Transformer	MV1-5 T	364676	4905892	2	0	0	56.1	56.1	1	3126.12	3.25	0	80.9	0	0.88	0	0	9.08	0	0	0	0	0	0	-34.81	-34.81
	Inverter Transformer	MV5-5 T	370021	4908690	2	0	0	56.1	56.1	1	3187.09	3.25	0	81.07	0	0.91	0	0	9.18	0	0	0	0	0	0	-35.1	-35.1
	Inverter Transformer	MV1-3 T	364435	4906039	2	0	0	56.1	56.1	1	3204.66	3.25	0	81.12	0	0.92	0	0	9.21	0	0	0	0	0	0	-35.18	-35.18
	Inverter Transformer	MV5-2 T	370011	4908853	2	0	0	56.1	56.1	1	3211.53	3.25	0	81.13	0	0.92	0	0	9.22	0	0	0	0	0	0	-35.22	-35.22
	Inverter Transformer	MV1-8 T	364782	4905647	2	0	0	56.1	56.1	1	3233.68	3.25	0	81.19	0	0.93	0	0	9.26	0	0	0	0	0	0	-35.32	-35.32
	Inverter Transformer	MV1-12 T	365044	4905386	2	0	0	56.1	56.1	1	3281.74	3.25	0	81.32	0	0.95	0	0	9.34	0	0	0	0	0	0	-35.55	-35.55
	Inverter Transformer	MV6-2 T	370091	4907339	2	0	0	56.1	56.1	1	3291.19	3.25	0	81.35	0	0.95	0	0	9.35	0	0	0	0	0	0	-35.59	-35.59
	Inverter Transformer	MV5-1 T	370015	4909142	2	0	0	56.1	56.1	1	3295.09	3.25	0	81.36	0	0.95	0	0	9.36	0	0	0	0	0	0	-35.61	-35.61
	Inverter Transformer	MV1-6 T	364482	4905835	2	0	0	56.1	56.1	1	3305.13	3.25	0	81.38	0	0.96	0	0	9.37	0	0	0	0	0	0	-35.66	-35.66
	Inverter Transformer	MV1-9 T	364555	4905646	2	0	0	56.1	56.1	1	3386.69	3.25	0	81.6	0	0.99	0	0	9.51	0	0	0	0	0	0	-36.04	-36.04
	Inverter Transformer	MV5-3 T	370237	4908851	2	0	0	56.1	56.1	1	3431.2	3.25	0	81.71	0	1.01	0	0	9.58	0	0	0	0	0	0	-36.24	-36.24
	Inverter Transformer	MV6-3 T	370202	4907140	2	0	0	56.1	56.1	1	3449.29	3.25	0	81.75	0	1.02	0	0	9.61	0	0	0	0	0	0	-36.32	-36.32
	Inverter Transformer	MV1-15 T	365309	4904994	2	0	0	56.1	56.1	1	3484.77	3.25	0	81.84	0	1.03	0	0	9.66	0	0	0	0	0	0	-36.48	-36.48
	Inverter Transformer	MV5-4 T	370330	4908707	2	0	0	56.1	56.1	1	3494.13	3.25	0	81.87	0	1.04	0	0	9.68	0	0	0	0	0	0	-36.52	-36.52
	Inverter Transformer	MV1-11 T	364649	4905414	2	0	0	56.1	56.1	1	3497.46	3.25	0	81.88	0	1.04	0	0	9.68	0	0	0	0	0	0	-36.54	-36.54
	Line Reactor	NGR	369421	4908787.5	5	0	0	45.4	45.4	1	2623.68	5.25	0	79.38	0	3.34	1.3	0.11	1.07	0	0	0	0	0	0	-39.74	-39.74
Limit. Valu	0	0																								
Level D/N:	29.7949	29.7949																								

Receiver: Vacant Lot Receptor
ID: S-VLR12
X: 366755
Y: 4907982
Z: 4.5
Ground: 0

ISO	Description	ID	X	Y	Z	Ground	ReflOrd	LxT	LxN	L/A	Dist.	hm	Freq	Adiv	K0b	Agr	Abar	z	Aatm	Afol	Ahous	Cmet	CmetN	Dc	RL	LtotT	LtotN
	Sol_Luce Substation	S_Substation	369426	4908792	3.5	0	0	112.1	112.1	1	2791.12	5.25	0	79.92	0	0.23	3.44	0.31	5.64	0	0	0	0	0	0	22.85	22.85
	Inverter	MV3-12	367668	4907594	2	0	0	100.3	100.3	1	992.03	3.25	0	70.93	0	-0.25	0	0	10.88	0	0	0	0	0	0	18.75	18.75
	Inverter	MV3-18	367752	4907412	2	0	0	100.3	100.3	1	1148.44	3.25	0	72.2	0	-0.18	0	0	11.37	0	0	0	0	0	0	16.91	16.91
	Inverter	MV3-3	367939	4907927	2	0	0	100.3	100.3	1	1185.28	3.25	0	72.48	0	-0.16	0	0	11.48	0	0	0	0	0	0	16.51	16.51
	Inverter	MV3-7	367945	4907754	2	0	0	100.3	100.3	1	1211.65	3.25	0	72.67	0	-0.15	0	0	11.56	0	0	0	0	0	0	16.23	16.23
	Inverter	MV3-13	367963	4907577	2	0	0	100.3	100.3	1	1274.09	3.25	0	73.1	0	-0.12	0	0	11.73	0	0	0	0	0	0	15.6	15.6
	Inverter	MV3-6	368162	4907834	2	0	0	100.3	100.3	1	1414.76	3.25	0	74.01	0	-0.07	0	0	12.11	0	0	0	0	0	0	14.26	14.26
	Inverter	MV3-10	368167	4907669	2	0	0	100.3	100.3	1	1446.28	3.25	0	74.21	0	-0.05	0	0	12.19	0	0	0	0	0	0	13.97	13.97
	Inverter	MV3-17	368178	4907472	2	0	0	100.3	100.3	1	1511.63	3.25	0	74.59	0	-0.03	0	0	12.35	0	0	0	0	0	0	13.4	13.4
	Inverter	MV3-11	368346	4907662	2	0	0	100.3	100.3	1	1622.86	3.25	0	75.21	0	0.01	0	0	12.62	0	0	0	0	0	0	12.47	12.47
	Inverter	MV2-3	365820	4906641	2	0	0	100.3	100.3	1	1634.78	3.25	0	75.27	0	0.01	0	0	12.65	0	0	0	0	0	0	12.38	12.38
	Inverter	MV3-15	368357	4907477	2	0	0	100.3	100.3	1	1679.71	3.25	0	75.5	0	0.03	0	0	12.76	0	0	0	0	0	0	12.02	12.02
	Inverter	MV3-19	368357	4907347	2	0	0	100.3	100.3	1	1723.26	3.25	0	75.73	0	0.04	0	0	12.86	0	0	0	0	0	0	11.68	11.68
	Inverter	MV3-9	368512	4907703	2	0	0	100.3	100.3	1	1779.02	3.25	0	76	0	0.06	0	0	12.98	0	0	0	0	0	0	11.26	11.26
	Inverter	MV2-4	365586	4906624	2	0	0	100.3	100.3	1	1791.85	3.25	0	76.07	0	0.07	0	0	13.01	0	0	0	0	0	0	11.17	11.17
	Inverter	MV3-16	368514	4907475	2	0	0	100.3	100.3	1	1830.61	3.25	0	76.25	0	0.08	0	0	13.1	0	0	0	0	0	0	10.88	10.88
	Inverter	MV3-21	368478	4907206	2	0	0	100.3	100.3	1	1889.69	3.25	0	76.53	0	0.1	0	0	13.23	0	0	0	0	0	0	10.46	10.46
	Inverter	MV3-8	368680	4907712	2	0	0	100.3	100.3	1	1943.84	3.25	0	76.77	0	0.11	0	0	13.34	0	0	0	0	0	0	10.08	10.08
	Inverter	MV3-14	368684	4907498	2	0	0	100.3	100.3	1	1988.79	3.25	0	76.97	0	0.13	0	0	13.44	0	0	0	0	0	0	9.78	9.78
	Inverter	MV3-20	368689	4907317	2	0	0	100.3	100.3	1	2045.14	3.25	0	77.21	0	0.14	0	0	13.56	0	0	0	0	0	0	9.4	9.4
	Inverter	MV2-1	365842	4906816	2	0	0	97.3	97.3	1	1480.92	3.25	0	74.41	0	-0.04	0	0	12.28	0	0	0	0	0	0	10.66	10.66
	Inverter	MV4-7	369035	4909001	2	0	0	100.3	100.3	1	2497.35	3.25	0	78.95	0	0.26	0	0	14.45	0	0	0	0	0	0	6.65	6.65
	Inverter	MV4-4	369027	4909199	2	0	0	100.3	100.3	1	2577.42	3.25	0	79.22	0	0.27	0	0	14.6	0	0	0	0	0	0	6.21	6.21
	Inverter	MV4-11	369264	4908855	2	0	0	100.3	100.3	1	2656.54	3.25	0	79.49	0	0.29	0	0	14.75	0	0	0	0	0	0	5.78	5.78
	Inverter	MV4-1	369011	4909397	2	0	0	100.3	100.3	1	2663.04	3.25	0	79.51	0	0.29	0	0	14.76	0	0	0	0	0	0	5.75	5.75
	Inverter	MV4-8	369256	4909001	2	0	0	100.3	100.3	1	2700.62	3.25	0	79.63	0	0.3	0	0	14.83	0	0	0	0	0	0	5.55	5.55
	Inverter	MV4-10	369312	4908858	2	0	0	100.3	100.3	1	2702.89	3.25	0	79.64	0	0.3	0	0	14.84	0	0	0	0	0	0	5.54	5.54
	Inverter	MV1-1	364715	4906166	2	0	0	100.3	100.3	1	2731.2	3.25	0	79.73	0	0.31	0	0	14.89	0	0	0	0	0	0	5.39	5.39
	Inverter	MV4-9	369289	4909001	2	0	0	100.3	100.3	1	2731.21	3.25	0	79.73	0	0.31	0	0	14.89	0	0	0	0	0	0	5.39	5.39
	Inverter	MV4-6	369243	4909192	2	0	0	100.3	100.3	1	2766.63	3.25	0	79.84	0	0.32	0	0	14.95	0	0	0	0	0	0	5.2	5.2
	Inverter	MV1-2	364753	4906063	2	0	0	100.3	100.3	1	2773.19	3.25	0	79.86	0	0.32	0	0	14.97	0	0	0	0	0	0	5.17	5.17
	Inverter	MV4-5	369289	4909199	2	0	0	100.3	100.3	1	2811.09	3.25	0	79.98	0	0.32	0	0	15.03	0	0	0	0	0	0	4.98	4.98
	Inverter	MV1-4	364815	4905918	2	0	0	100.3	100.3	1	2832.61	3.25	0	80.04	0	0.33	0	0	15.07	0	0	0	0	0	0	4.87	4.87
	Inverter	MV4-3	369229	4909397	2	0	0	100.3	100.3	1	2850.07	3.25	0	80.1	0	0.33	0	0	15.1	0	0	0	0	0	0	4.78	4.78
	Inverter	MV4-2	369272	4909397	2	0	0	100.3	100.3	1	2887.48	3.25	0	80.21	0	0.34	0	0	15.17	0	0	0	0	0	0	4.59	4.59
	Inverter	MV1-5	364671	4905892	2	0	0	100.3	100.3	1	2951.47	3.25	0	80.4	0	0.35	0	0	15.29	0	0	0	0	0	0	4.27	4.27
	Inverter	MV1-8	364788	4905647	2	0	0	100.3	100.3	1	3053.08	3.25	0	80.69	0	0.37	0	0	15.47	0	0	0	0	0	0	3.78	3.78
	Inverter	MV1-12	365038	4905386	2	0	0	100.3	100.3	1	3112.44	3.25	0	80.86	0	0.38	0	0	15.57	0	0	0	0	0	0	3.5	3.5
	Inverter	MV1-6	364477	4905835	2	0	0	100.3	100.3	1	3130.32	3.25	0	80.91	0	0.39	0	0	15.6	0	0	0	0	0	0	3.41	3.41
	Inverter	MV1-9	364561	4905646	2	0	0	100.3	100.3	1	3204.77	3.25	0	81.12	0	0.4	0	0	15.73	0	0	0	0	0	0	3.07	3.07
	Inverter	MV1-15	365315	4904994	2	0	0	100.3	100.3	1	3316.89	3.25	0	81.41	0	0.42	0	0	15.92	0	0	0	0	0	0	2.56	2.56
	Inverter	MV1-11	364655	4905414	2	0	0	100.3	100.3	1	3317.32	3.25	0	81.42	0	0.42	0	0	15.92	0	0	0	0	0	0	2.55	2.55
	Inverter	MV5-5	370015	4908690	2	0	0	100.3	100.3	1	3336	3.25	0	81.46	0	0.42	0	0	15.95	0	0	0	0	0	0	2.47	2.47

Inverter	MV5-2	370006	4908853	2	0	0	100.3	100.3	1	3365.66	3.25	0	81.54	0	0.43	0	0	16	0	0	0	0	0	0	2.34	2.34
Inverter	MV6-2	370085	4907339	2	0	0	100.3	100.3	1	3391.51	3.25	0	81.61	0	0.43	0	0	16.05	0	0	0	0	0	0	2.22	2.22
Inverter	MV5-1	370020	4909142	2	0	0	100.3	100.3	1	3464.94	3.25	0	81.79	0	0.45	0	0	16.17	0	0	0	0	0	0	1.9	1.9
Inverter	MV6-3	370207	4907140	2	0	0	100.3	100.3	1	3553.21	3.25	0	82.01	0	0.46	0	0	16.32	0	0	0	0	0	0	1.52	1.52
Inverter	MV5-3	370231	4908851	2	0	0	100.3	100.3	1	3582.98	3.25	0	82.08	0	0.46	0	0	16.37	0	0	0	0	0	0	1.39	1.39
Inverter	MV5-4	370324	4908707	2	0	0	100.3	100.3	1	3641.89	3.25	0	82.23	0	0.47	0	0	16.47	0	0	0	0	0	0	1.14	1.14
Inverter	MV1-7	364925	4905782	2	0	0	97.3	97.3	1	2861.63	3.25	0	80.13	0	0.33	0	0	15.13	0	0	0	0	0	0	1.72	1.72
DSTATCOM - 10 MVAR #2	DSAT2	369403	4908757	2.5	0	0	96.6	96.6	1	2759.08	3.5	0	79.82	0	3.37	0	0	2.16	0	0	0	0	0	0	11.28	11.28
Inverter	MV1-10	365004	4905564	2	0	0	97.3	97.3	1	2985.42	3.25	0	80.5	0	0.36	0	0	15.35	0	0	0	0	0	0	1.11	1.11
DSTATCOM - 10 MVAR #1	DSAT1	369437	4908757	2.5	0	0	96.6	96.6	1	2791.73	3.5	0	79.92	0	3.38	0	0	2.18	0	0	0	0	0	0	11.15	11.15
Inverter	MV1-14	365163	4905049	2	0	0	97.3	97.3	1	3337.21	3.25	0	81.47	0	0.42	0	0	15.96	0	0	0	0	0	0	-0.54	-0.54
Inverter	MV1-13	364731	4905241	2	0	0	97.3	97.3	1	3407.3	3.25	0	81.65	0	0.44	0	0	16.08	0	0	0	0	0	0	-0.85	-0.85
Inverter	MV6-1	370235	4907364	2	0	0	97.3	97.3	1	3534.45	3.25	0	81.97	0	0.46	0	0	16.29	0	0	0	0	0	0	-1.4	-1.4
Inverter	MV3-1	368156	4907976	2	0	0	89.1	89.1	1	1401.02	3.25	0	73.93	0	0.77	0	0	7.04	0	0	0	0	0	0	7.32	7.32
Inverter	MV2-2	365977	4906654	2	0	0	89.1	89.1	1	1539.11	3.25	0	74.75	0	0.8	0	0	7.28	0	0	0	0	0	0	6.24	6.24
Inverter	MV3-5	368340	4907843	2	0	0	89.1	89.1	1	1591.09	3.25	0	75.03	0	0.81	0	0	7.36	0	0	0	0	0	0	5.85	5.85
Inverter	MV3-4	368502	4907925	2	0	0	89.1	89.1	1	1747.93	3.25	0	75.85	0	0.85	0	0	7.63	0	0	0	0	0	0	4.73	4.73
Inverter	MV3-2	368671	4907928	2	0	0	89.1	89.1	1	1916.76	3.25	0	76.65	0	0.89	0	0	7.91	0	0	0	0	0	0	3.61	3.61
Inverter	MV3-22	368656	4907142	2	0	0	89.1	89.1	1	2078.32	3.25	0	77.35	0	0.93	0	0	8.17	0	0	0	0	0	0	2.61	2.61
Inverter	MV4-13	369051	4908605	2	0	0	89.1	89.1	1	2379.02	3.25	0	78.53	0	1	0	0	8.65	0	0	0	0	0	0	0.88	0.88
Inverter	MV4-12	369043	4908803	2	0	0	89.1	89.1	1	2430.84	3.25	0	78.72	0	1.01	0	0	8.74	0	0	0	0	0	0	0.6	0.6
Inverter	MV4-15	369176	4908481	2	0	0	89.1	89.1	1	2471.89	3.25	0	78.86	0	1.02	0	0	8.8	0	0	0	0	0	0	0.38	0.38
Inverter	MV4-14	369176	4908507	2	0	0	89.1	89.1	1	2477.27	3.25	0	78.88	0	1.02	0	0	8.81	0	0	0	0	0	0	0.35	0.35
SubstationTransformer	W_ST	369711.17	4906112.3	2.5	0	0	92	92	1	3497.83	4.25	0	81.88	0	1.2	2.75	0.24	6.68	0	0	0	0	0	0	-0.53	-0.53
Fixed Reactor Bank 1	FRB1	369378	4908755	6	0	0	89.8	89.8	1	2734.53	5.25	0	79.74	0	-0.91	0	0	5.55	0	0	0	0	0	0	5.39	5.39
Fixed Reactor Bank 2	FRB2	369464	4908755	6	0	0	89.8	89.8	1	2817.13	5.25	0	80	0	-0.9	0	0	5.68	0	0	0	0	0	0	5	5
Inverter	MV1-3	364440	4906039	2	0	0	89.1	89.1	1	3022.33	3.25	0	80.61	0	1.15	0	0	9.65	0	0	0	0	0	0	-2.35	-2.35
Westbrook Inverter Enclosur	W_INV2	369374	4906388	2	0	0	89.1	89.1	1	3065.94	3.25	0	80.73	0	1.16	0	0	9.72	0	0	0	0	0	0	-2.55	-2.55
Inverter	MV5-6	369982	4908507	2	0	0	89.1	89.1	1	3269.43	3.25	0	81.29	0	1.21	0	0	10.02	0	0	0	0	0	0	-3.47	-3.47
Westbrook Inverter Enclosur	W_INV5	369719	4906574	2	0	0	89.1	89.1	1	3281.43	3.25	0	81.32	0	1.22	0	0	10.04	0	0	0	0	0	0	-3.52	-3.52
Westbrook Inverter Enclosur	W_INV3	369508	4906164	2	0	0	89.1	89.1	1	3299.11	3.25	0	81.37	0	1.22	0	0	10.07	0	0	0	0	0	0	-3.6	-3.6
Westbrook Inverter Enclosur	W_INV7	369780	4906417	2	0	0	89.1	89.1	1	3405.86	3.25	0	81.64	0	1.25	0	0	10.22	0	0	0	0	0	0	-4.06	-4.06
Westbrook Inverter Enclosur	W_INV6	369875	4906578	2	0	0	89.1	89.1	1	3421.35	3.25	0	81.68	0	1.25	0	0	10.25	0	0	0	0	0	0	-4.12	-4.12
Westbrook Inverter Enclosur	W_INV4	369673	4906164	2	0	0	89.1	89.1	1	3438	3.25	0	81.73	0	1.25	0	0	10.27	0	0	0	0	0	0	-4.19	-4.19
Gardiner Substation	G_Sub	366586.3	4903349.9	2.5	0	0	90.8	90.8	1	4635.17	4.25	0	84.32	0	1.56	2.49	0.38	8.18	0	0	0	0	0	0	-5.77	-5.77
Westbrook Inverter Enclosur	W_INV1	369409	4906578	2	0	0	86.1	86.1	1	3002.49	3.25	0	80.55	0	1.15	0	0	9.62	0	0	0	0	0	0	-5.26	-5.26
Inverter	MV6-4	370250	4906966	2	0	0	86.1	86.1	1	3639.68	3.25	0	82.22	0	1.3	0	0	10.57	0	0	0	0	0	0	-8.03	-8.03
Inverters	G_Inv2	366676.9	4903239.1	2	0	0	87.7	87.7	1	4743.54	3.25	0	84.52	0	2.85	0	0	5.67	0	0	0	0	0	0	-5.38	-5.38
Inverters	G_Inv1	366526.4	4903225.8	2	0	0	87.7	87.7	1	4761.69	3.25	0	84.56	0	2.85	0	0	5.69	0	0	0	0	0	0	-5.43	-5.43
Inverters	G_Inv4	366732.8	4903105	2	0	0	87.7	87.7	1	4877.05	3.25	0	84.76	0	2.86	0	0	5.81	0	0	0	0	0	0	-5.77	-5.77
Inverters	G_Inv3	366583.7	4903091.4	2	0	0	87.7	87.7	1	4893.6	3.25	0	84.79	0	2.86	0	0	5.83	0	0	0	0	0	0	-5.82	-5.82
Inverters	G_Inv6	366788.5	4902972	2	0	0	87.7	87.7	1	5010.11	3.25	0	85	0	2.87	0	0	5.95	0	0	0	0	0	0	-6.15	-6.15
Inverters	G_Inv5	366638.5	4902958.1	2	0	0	87.7	87.7	1	5025.25	3.25	0	85.02	0	2.87	0	0	5.97	0	0	0	0	0	0	-6.2	-6.2
Inverters	G_Inv8	366844.5	4902838.5	2	0	0	87.7	87.7	1	5144.28	3.25	0	85.23	0	2.87	0	0	6.09	0	0	0	0	0	0	-6.53	-6.53
Inverters	G_Inv7	366694.6	4902824.7	2	0	0	87.7	87.7	1	5157.65	3.25	0	85.25	0	2.87	0	0	6.11	0	0	0	0	0	0	-6.57	-6.57
Inverters	G_Inv10	366900.7	4902704.8	2	0	0	87.7	87.7	1	5279.21	3.25	0	85.45	0	2.88	0	0	6.23	0	0	0	0	0	0	-6.91	-6.91
Inverters	G_Inv9	366750.9	4902691.8	2	0	0	87.7	87.7	1	5290.2	3.25	0	85.47	0	2.88	0	0	6.24	0	0	0	0	0	0	-6.94	-6.94
Westbrook Inverter Transfor	W_INVTR1	369403	4906578	2	0	0	78.2	78.2	1	2997.19	3.25	0	80.53	0	-2.71	0	0	1.66	0	0	0	0	0	0	-1.23	-1.23
Westbrook Inverter Transfor	W_INVTR2	369368	4906388	2	0	0	77.3	77.3	1	3060.82	3.25	0	80.72	0	-2.73	0	0	1.68	0	0	0	0	0	0	-2.33	-2.33
Westbrook Inverter Transfor	W_INVTR5	369725	4906574	2	0	0	77.3	77.3	1	3286.85	3.25	0	81.34	0	-2.79	0	0	1.78	0	0	0	0	0	0	-2.98	-2.98
Westbrook Inverter Transfor	W_INVTR3	369514	4906164	2	0	0	77.3	77.3	1	3304.12	3.25	0	81.38	0	-2.79	0	0	1.78	0	0	0	0	0	0	-3.03	-3.03
Westbrook Inverter Transfor	W_INVTR7	369786	4906417	2	0	0	77.3	77.3	1	3411.19	3.25	0	81.66	0	-2.82	0	0	1.83	0	0	0	0	0	0	-3.32	-3.32
Westbrook Inverter Transfor	W_INVTR6	369881	4906578	2	0	0	77.3	77.3	1	3426.82	3.25	0	81.7	0	-2.83	0	0	1.83	0	0	0	0	0	0	-3.36	-3.36
Westbrook Inverter Transfor	W_INVTR4	369679	4906164	2	0	0	77.3	77.3	1	3443.1	3.25	0	81.74	0	-2.83	0	0	1.84	0	0	0	0	0	0	-3.41	-3.41
Inverter Transformer	MV2-1 T	365836	4906816	2	0	0	69.4	69.4	1	1484.63	3.25	0	74.43	0	1.97	0	0	4.42	0	0	0	0	0	0	-11.46	-11.46
Inverter Transformer	MV1-7 T	364919	4905782	2	0	0	69.4	69.4	1	2865.47	3.25	0	80.14	0	2.47	0	0	5.77	0	0	0	0	0	0	-19.03	-19.03
Inverter Transformer	MV1-10 T	365010	4905564	2	0	0	69.4	69.4	1	2981.9	3.25	0	80.49	0	2.5	0	0	5.87	0	0	0	0	0	0	-19.51	-19.51
Inverter Transformer	MV1-14 T	365157	4905049	2	0	0	69.4	69.4	1	3340.07	3.25	0	81.48	0	2.61	0	0	6.16	0	0	0	0	0	0	-20.9	-20.9
Inverter Transformer	MV1-13 T	364725	4905241	2	0	0	69.4	69.4	1	3410.86	3.25	0	81.66	0	2.63	0	0	6.22	0	0	0	0	0	0	-21.16	-21.16
Inverter Transformer	MV6-1 T	370230	4907364	2	0	0	69.4	69.4	1	3529.53	3.25	0	81.95	0	2.66	0	0	6.32	0	0	0	0	0	0	-21.58	-21.58
Inverter Transformer	MV6-4 T	370244	4906966	2	0	0	69.4	69.4	1	3633.92	3.25	0	82.21	0	2.69	0	0	6.4	0	0	0	0	0	0	-21.94	-21.94
Inverter Transformer	MV3-12 T	367674	4907594	2	0	0	56.1	56.1	1	997.55	3.25	0	70.98	0	0.01	0	0	4.88	0	0	0	0	0	0	-19.81	-19.81
Inverter Transformer	MV3-18 T	367757	4907412	2	0	0	56.1	56.1	1	1152.78	3.25	0	72.23	0	0.07	0	0	5.25	0	0	0	0	0	0	-21.49	-21.49
Inverter Transformer	MV3-3 T	367944	4907927	2	0	0	56.1	56.1	1	1190.27	3.25	0	72.51	0	0.08	0	0	5.33	0	0	0	0	0	0	-21.87	-21.87
Inverter Transformer	MV3-7 T	367951	4907754	2	0	0	56.1	56.1	1	1217.54	3.25	0	72.71	0	0.09	0	0	5.4	0	0	0	0	0	0	-22.14	-22.14
Inverter Transformer	MV3-13 T	367958	4907577	2	0	0	56.1	56.1	1	1269.35	3.25	0	73.07	0	0.11	0	0	5.51	0	0	0	0	0	0	-22.63	-22.63
Inverter Transformer	MV3-1 T	368150	4907976	2	0	0	56.1	56.1	1	1395.02	3.25	0	73.89	0	0.16	0	0	5.79	0	0	0	0	0	0	-23.78	-23.78
Inverter Transformer	MV3-6 T	368156	4907834	2	0	0	56.1	56.1	1	1408.8	3.25	0	73.98	0	0.16	0	0	5.82	0	0	0	0	0	0	-23.9	-23.9
Inverter Transformer	MV3-10 T	368162	4907669	2	0	0	56.1	56.1	1	1441.4	3.25	0	74.18	0	0.18	0	0	5.89	0	0	0	0	0	0	-24.18	-24.18
Inverter Transformer	MV3-17 T	368183	4907472	2	0	0	56.1	56.1	1	1516.34	3.25	0	74.62	0	0.21	0	0	6.05	0	0	0	0	0	0	-24.82	-24.82
Inverter Transformer	MV2-2 T	365982	4906654	2	0	0	56.1	56.1	1	1536.59	3.25	0	74.73	0	0.21	0	0	6.1	0	0	0	0	0	0	-24.98	-24.98
Inverter Transformer	MV3-5 T	368335	4907843	2	0	0	56.1	56.1	1	1586.1	3.25	0	75.01	0	0.23	0	0	6.2	0	0	0	0	0	0	-25.38	-25.38
Inverter Transformer	MV3-11 T	368340	4907662	2	0	0	56.1	56.1	1	1616.98	3.25	0	75.17	0	0.25	0	0	6.27	0	0	0	0	0	0	-25.63	-25.63
Inverter Transformer	MV2-3 T	365814	4906641	2	0	0	56.1	56.1	1	1638.22	3.25	0	75.29	0	0.25	0	0	6.31	0	0	0	0	0	0	-25.79	-25.79

	Inverter Transformer	MV3-15 T	368351	4907477	2	0	0	56.1	56.1	1	1673.99	3.25	0	75.48	0	0.27	0	0	6.38	0	0	0	0	0	0	-26.07	-26.07
	Inverter Transformer	MV3-19 T	368352	4907347	2	0	0	56.1	56.1	1	1718.62	3.25	0	75.7	0	0.29	0	0	6.48	0	0	0	0	0	0	-26.41	-26.41
	Inverter Transformer	MV3-4 T	368507	4907925	2	0	0	56.1	56.1	1	1752.93	3.25	0	75.88	0	0.3	0	0	6.55	0	0	0	0	0	0	-26.67	-26.67
	Inverter Transformer	MV3-9 T	368517	4907703	2	0	0	56.1	56.1	1	1783.95	3.25	0	76.03	0	0.31	0	0	6.61	0	0	0	0	0	0	-26.89	-26.89
	Inverter Transformer	MV2-4 T	365590	4906628	2	0	0	56.1	56.1	1	1786.21	3.25	0	76.04	0	0.31	0	0	6.62	0	0	0	0	0	0	-26.91	-26.91
	Inverter Transformer	MV3-16 T	368509	4907475	2	0	0	56.1	56.1	1	1825.81	3.25	0	76.23	0	0.33	0	0	6.7	0	0	0	0	0	0	-27.2	-27.2
	Inverter Transformer	MV3-21 T	368484	4907206	2	0	0	56.1	56.1	1	1895.16	3.25	0	76.55	0	0.36	0	0	6.84	0	0	0	0	0	0	-27.69	-27.69
	Inverter Transformer	MV3-2 T	368677	4907928	2	0	0	56.1	56.1	1	1922.76	3.25	0	76.68	0	0.37	0	0	6.89	0	0	0	0	0	0	-27.88	-27.88
	Inverter Transformer	MV3-8 T	368685	4907712	2	0	0	56.1	56.1	1	1948.8	3.25	0	76.8	0	0.38	0	0	6.94	0	0	0	0	0	0	-28.06	-28.06
	Inverter Transformer	MV3-14 T	368678	4907498	2	0	0	56.1	56.1	1	1982.98	3.25	0	76.95	0	0.4	0	0	7.01	0	0	0	0	0	0	-28.29	-28.29
	Inverter Transformer	MV3-20 T	368683	4907317	2	0	0	56.1	56.1	1	2039.46	3.25	0	77.19	0	0.42	0	0	7.12	0	0	0	0	0	0	-28.67	-28.67
	Inverter Transformer	MV3-22 T	368661	4907142	2	0	0	56.1	56.1	1	2082.89	3.25	0	77.37	0	0.44	0	0	7.21	0	0	0	0	0	0	-28.96	-28.96
	Inverter Transformer	MV4-13 T	369057	4908605	2	0	0	56.1	56.1	1	2384.81	3.25	0	78.55	0	0.57	0	0	7.78	0	0	0	0	0	0	-30.84	-30.84
	Inverter Transformer	MV4-12 T	369049	4908803	2	0	0	56.1	56.1	1	2436.49	3.25	0	78.74	0	0.59	0	0	7.87	0	0	0	0	0	0	-31.14	-31.14
	Inverter Transformer	MV4-15 T	369170	4908481	2	0	0	56.1	56.1	1	2466.02	3.25	0	78.84	0	0.6	0	0	7.93	0	0	0	0	0	0	-31.31	-31.31
	Inverter Transformer	MV4-14 T	369182	4908507	2	0	0	56.1	56.1	1	2483.14	3.25	0	78.9	0	0.61	0	0	7.96	0	0	0	0	0	0	-31.41	-31.41
	Inverter Transformer	MV4-7 T	369040	4909001	2	0	0	56.1	56.1	1	2501.92	3.25	0	78.97	0	0.62	0	0	7.99	0	0	0	0	0	0	-31.52	-31.52
	Inverter Transformer	MV4-4 T	369033	4909199	2	0	0	56.1	56.1	1	2582.71	3.25	0	79.24	0	0.65	0	0	8.14	0	0	0	0	0	0	-31.97	-31.97
	Inverter Transformer	MV4-11 T	369269	4908855	2	0	0	56.1	56.1	1	2661.26	3.25	0	79.5	0	0.69	0	0	8.28	0	0	0	0	0	0	-32.41	-32.41
	Inverter Transformer	MV4-1 T	369017	4909397	2	0	0	56.1	56.1	1	2668.12	3.25	0	79.52	0	0.69	0	0	8.29	0	0	0	0	0	0	-32.45	-32.45
	Inverter Transformer	MV4-10 T	369307	4908858	2	0	0	56.1	56.1	1	2698.16	3.25	0	79.62	0	0.7	0	0	8.35	0	0	0	0	0	0	-32.61	-32.61
	Inverter Transformer	MV4-8 T	369262	4909001	2	0	0	56.1	56.1	1	2706.18	3.25	0	79.65	0	0.7	0	0	8.36	0	0	0	0	0	0	-32.65	-32.65
	Inverter Transformer	MV4-9 T	369284	4909001	2	0	0	56.1	56.1	1	2726.57	3.25	0	79.71	0	0.71	0	0	8.4	0	0	0	0	0	0	-32.76	-32.76
	Inverter Transformer	MV1-1 T	364721	4906166	2	0	0	56.1	56.1	1	2726.72	3.25	0	79.71	0	0.71	0	0	8.4	0	0	0	0	0	0	-32.76	-32.76
	Inverter Transformer	MV1-2 T	364759	4906063	2	0	0	56.1	56.1	1	2768.86	3.25	0	79.85	0	0.73	0	0	8.47	0	0	0	0	0	0	-32.99	-32.99
	Inverter Transformer	MV4-6 T	369249	4909192	2	0	0	56.1	56.1	1	2772.03	3.25	0	79.86	0	0.73	0	0	8.48	0	0	0	0	0	0	-33.01	-33.01
	Inverter Transformer	MV4-5 T	369283	4909199	2	0	0	56.1	56.1	1	2805.69	3.25	0	79.96	0	0.75	0	0	8.53	0	0	0	0	0	0	-33.18	-33.18
	Inverter Transformer	MV1-4 T	364821	4905918	2	0	0	56.1	56.1	1	2828.51	3.25	0	80.03	0	0.76	0	0	8.57	0	0	0	0	0	0	-33.3	-33.3
	Inverter Transformer	MV4-3 T	369234	4909397	2	0	0	56.1	56.1	1	2854.41	3.25	0	80.11	0	0.77	0	0	8.62	0	0	0	0	0	0	-33.44	-33.44
	Inverter Transformer	MV4-2 T	369267	4909397	2	0	0	56.1	56.1	1	2883.12	3.25	0	80.2	0	0.78	0	0	8.67	0	0	0	0	0	0	-33.59	-33.59
	Inverter Transformer	MV1-5 T	364676	4905892	2	0	0	56.1	56.1	1	2947.94	3.25	0	80.39	0	0.81	0	0	8.78	0	0	0	0	0	0	-33.92	-33.92
	Inverter Transformer	MV1-3 T	364435	4906039	2	0	0	56.1	56.1	1	3026.16	3.25	0	80.62	0	0.84	0	0	8.91	0	0	0	0	0	0	-34.31	-34.31
	Inverter Transformer	MV1-8 T	364782	4905647	2	0	0	56.1	56.1	1	3056.95	3.25	0	80.71	0	0.85	0	0	8.96	0	0	0	0	0	0	-34.47	-34.47
	Inverter Transformer	MV1-12 T	365044	4905386	2	0	0	56.1	56.1	1	3109.14	3.25	0	80.85	0	0.88	0	0	9.05	0	0	0	0	0	0	-34.72	-34.72
	Inverter Transformer	MV1-6 T	364482	4905835	2	0	0	56.1	56.1	1	3126.68	3.25	0	80.9	0	0.88	0	0	9.08	0	0	0	0	0	0	-34.81	-34.81
	Inverter Transformer	MV1-9 T	364555	4905646	2	0	0	56.1	56.1	1	3208.88	3.25	0	81.13	0	0.92	0	0	9.22	0	0	0	0	0	0	-35.2	-35.2
	Inverter Transformer	MV5-6 T	369987	4908507	2	0	0	56.1	56.1	1	3274.36	3.25	0	81.3	0	0.95	0	0	9.32	0	0	0	0	0	0	-35.51	-35.51
	Inverter Transformer	MV1-15 T	365309	4904994	2	0	0	56.1	56.1	1	3319.5	3.25	0	81.42	0	0.96	0	0	9.4	0	0	0	0	0	0	-35.73	-35.73
	Inverter Transformer	MV1-11 T	364649	4905414	2	0	0	56.1	56.1	1	3321.12	3.25	0	81.43	0	0.97	0	0	9.4	0	0	0	0	0	0	-35.73	-35.73
	Inverter Transformer	MV5-5 T	370021	4908690	2	0	0	56.1	56.1	1	3341.86	3.25	0	81.48	0	0.97	0	0	9.43	0	0	0	0	0	0	-35.83	-35.83
	Inverter Transformer	MV5-2 T	370011	4908853	2	0	0	56.1	56.1	1	3370.49	3.25	0	81.55	0	0.99	0	0	9.48	0	0	0	0	0	0	-35.96	-35.96
	Inverter Transformer	MV6-2 T	370091	4907339	2	0	0	56.1	56.1	1	3397.4	3.25	0	81.62	0	1	0	0	9.52	0	0	0	0	0	0	-36.09	-36.09
	Inverter Transformer	MV5-1 T	370015	4909142	2	0	0	56.1	56.1	1	3460.23	3.25	0	81.78	0	1.02	0	0	9.62	0	0	0	0	0	0	-36.37	-36.37
	Inverter Transformer	MV6-3 T	370202	4907140	2	0	0	56.1	56.1	1	3548.35	3.25	0	82	0	1.06	0	0	9.76	0	0	0	0	0	0	-36.77	-36.77
	Inverter Transformer	MV5-3 T	370237	4908851	2	0	0	56.1	56.1	1	3588.8	3.25	0	82.1	0	1.08	0	0	9.83	0	0	0	0	0	0	-36.94	-36.94
	Inverter Transformer	MV5-4 T	370330	4908707	2	0	0	56.1	56.1	1	3647.77	3.25	0	82.24	0	1.1	0	0	9.92	0	0	0	0	0	0	-37.2	-37.2
	Line Reactor	NGR	369421	4908787.5	5	0	0	45.4	45.4	1	2785.03	5.25	0	79.9	0	3.33	1.31	0.11	1.14	0	0	0	0	0	0	-40.32	-40.32
Limit. Valu	0	0																								
Level D/N:	29.1332	29.1332																								

Receiver: Vacant Lot Receptor
ID: S-VLR13
X: 366607
Y: 4907632
Z: 4.5
Ground: 0

ISO	Description	ID	X	Y	Z	Ground	ReflOrd	LxT	LxN	L/A	Dist.	hm	Freq	Adiv	K0b	Agr	Abar	z	Aatm	Afol	Ahous	Cmet	CmetN	Dc	RL	LtotT	LtotN
	Sol_Luce Substation	S_Substation	369426	4908792	3.5	0	0	112.1	112.1	1	3048.34	5.25	0	80.68	0	0.3	3.36	0.3	6.03	0	0	0	0	0	0	21.7	21.7
	Inverter	MV3-12	367668	4907594	2	0	0	100.3	100.3	1	1061.68	3.25	0	71.52	0	-0.22	0	0	11.11	0	0	0	0	0	0	17.9	17.9
	Inverter	MV3-18	367752	4907412	2	0	0	100.3	100.3	1	1165.95	3.25	0	72.33	0	-0.17	0	0	11.43	0	0	0	0	0	0	16.72	16.72
	Inverter	MV2-3	365820	4906641	2	0	0	100.3	100.3	1	1265.49	3.25	0	73.05	0	-0.13	0	0	11.71	0	0	0	0	0	0	15.68	15.68
	Inverter	MV3-7	367945	4907754	2	0	0	100.3	100.3	1	1343.55	3.25	0	73.57	0	-0.09	0	0	11.92	0	0	0	0	0	0	14.92	14.92
	Inverter	MV3-13	367963	4907577	2	0	0	100.3	100.3	1	1357.12	3.25	0	73.65	0	-0.09	0	0	11.96	0	0	0	0	0	0	14.79	14.79
	Inverter	MV3-3	367939	4907927	2	0	0	100.3	100.3	1	1364.28	3.25	0	73.7	0	-0.09	0	0	11.98	0	0	0	0	0	0	14.72	14.72
	Inverter	MV2-4	365586	4906624	2	0	0	100.3	100.3	1	1434.75	3.25	0	74.14	0	-0.06	0	0	12.16	0	0	0	0	0	0	14.07	14.07
	Inverter	MV3-10	368167	4907669	2	0	0	100.3	100.3	1	1560.44	3.25	0	74.86	0	-0.01	0	0	12.47	0	0	0	0	0	0	12.99	12.99
	Inverter	MV3-6	368162	4907834	2	0	0	100.3	100.3	1	1568.07	3.25	0	74.91	0	-0.01	0	0	12.49	0	0	0	0	0	0	12.92	12.92
	Inverter	MV3-17	368178	4907472	2	0	0	100.3	100.3	1	1579.13	3.25	0	74.97	0	0	0	0	12.52	0	0	0	0	0	0	12.83	12.83
	Inverter	MV2-1	365842	4906816	2	0	0	97.3	97.3	1	1118.52	3.25	0	71.97	0	-0.19	0	0	11.29	0	0	0	0	0	0	14.24	14.24
	Inverter	MV3-11	368346	4907662	2	0	0	100.3	100.3	1	1739.26	3.25	0	75.81	0	0.05	0	0	12.89	0	0	0	0	0	0	11.56	11.56
	Inverter	MV3-15	368357	4907477	2	0	0	100.3	100.3	1	1756.85	3.25	0	75.89	0	0.06	0	0	12.93	0	0	0	0	0	0	11.43	11.43
	Inverter	MV3-19	368357	4907347	2	0	0	100.3	100.3	1	1773.06	3.25	0	75.97	0	0.06	0	0	12.97	0	0	0	0	0	0	11.31	11.31
	Inverter	MV3-9	368512	4907703	2	0	0	100.3	100.3	1	1906.32	3.25	0	76.6	0	0.1	0	0	13.26	0	0	0	0	0	0	10.34	10.34

Inverter	MV3-16	368514	4907475	2	0	0	100.3	100.3	1	1913.45	3.25	0	76.64	0	0.1	0	0	13.28	0	0	0	0	0	0	10.29	10.29
Inverter	MV3-21	368478	4907206	2	0	0	100.3	100.3	1	1918.89	3.25	0	76.66	0	0.11	0	0	13.29	0	0	0	0	0	0	10.26	10.26
Inverter	MV3-8	368680	4907712	2	0	0	100.3	100.3	1	2074.54	3.25	0	77.34	0	0.15	0	0	13.62	0	0	0	0	0	0	9.21	9.21
Inverter	MV3-14	368684	4907498	2	0	0	100.3	100.3	1	2081.32	3.25	0	77.37	0	0.15	0	0	13.63	0	0	0	0	0	0	9.16	9.16
Inverter	MV3-20	368689	4907317	2	0	0	100.3	100.3	1	2105.7	3.25	0	77.47	0	0.16	0	0	13.68	0	0	0	0	0	0	9	9
Inverter	MV1-1	364715	4906166	2	0	0	100.3	100.3	1	2393.5	3.25	0	78.58	0	0.23	0	0	14.25	0	0	0	0	0	0	7.25	7.25
Inverter	MV1-2	364753	4906063	2	0	0	100.3	100.3	1	2428.8	3.25	0	78.71	0	0.24	0	0	14.32	0	0	0	0	0	0	7.04	7.04
Inverter	MV1-4	364815	4905918	2	0	0	100.3	100.3	1	2479.73	3.25	0	78.89	0	0.25	0	0	14.42	0	0	0	0	0	0	6.75	6.75
Inverter	MV1-5	364671	4905892	2	0	0	100.3	100.3	1	2603.02	3.25	0	79.31	0	0.28	0	0	14.65	0	0	0	0	0	0	6.07	6.07
Inverter	MV1-8	364788	4905647	2	0	0	100.3	100.3	1	2692.4	3.25	0	79.6	0	0.3	0	0	14.82	0	0	0	0	0	0	5.59	5.59
Inverter	MV1-12	365038	4905386	2	0	0	100.3	100.3	1	2739.76	3.25	0	79.75	0	0.31	0	0	14.9	0	0	0	0	0	0	5.34	5.34
Inverter	MV1-6	364477	4905835	2	0	0	100.3	100.3	1	2786.78	3.25	0	79.9	0	0.32	0	0	14.99	0	0	0	0	0	0	5.1	5.1
Inverter	MV4-7	369035	4909001	2	0	0	100.3	100.3	1	2787.36	3.25	0	79.9	0	0.32	0	0	14.99	0	0	0	0	0	0	5.1	5.1
Inverter	MV1-9	364561	4905646	2	0	0	100.3	100.3	1	2851.37	3.25	0	80.1	0	0.33	0	0	15.11	0	0	0	0	0	0	4.77	4.77
Inverter	MV4-4	369027	4909199	2	0	0	100.3	100.3	1	2883.04	3.25	0	80.2	0	0.34	0	0	15.16	0	0	0	0	0	0	4.61	4.61
Inverter	MV4-11	369264	4908855	2	0	0	100.3	100.3	1	2924.96	3.25	0	80.32	0	0.35	0	0	15.24	0	0	0	0	0	0	4.4	4.4
Inverter	MV1-15	365315	4904994	2	0	0	100.3	100.3	1	2937.4	3.25	0	80.36	0	0.35	0	0	15.26	0	0	0	0	0	0	4.34	4.34
Inverter	MV1-11	364655	4905414	2	0	0	100.3	100.3	1	2954.63	3.25	0	80.41	0	0.35	0	0	15.29	0	0	0	0	0	0	4.26	4.26
Inverter	MV4-10	369312	4908858	2	0	0	100.3	100.3	1	2969.87	3.25	0	80.45	0	0.36	0	0	15.32	0	0	0	0	0	0	4.18	4.18
Inverter	MV4-8	369256	4909001	2	0	0	100.3	100.3	1	2981.84	3.25	0	80.49	0	0.36	0	0	15.34	0	0	0	0	0	0	4.12	4.12
Inverter	MV4-1	369011	4909397	2	0	0	100.3	100.3	1	2982.36	3.25	0	80.49	0	0.36	0	0	15.34	0	0	0	0	0	0	4.12	4.12
Inverter	MV4-9	369289	4909001	2	0	0	100.3	100.3	1	3011.19	3.25	0	80.57	0	0.36	0	0	15.39	0	0	0	0	0	0	3.98	3.98
Inverter	MV4-6	369243	4909192	2	0	0	100.3	100.3	1	3063.02	3.25	0	80.72	0	0.37	0	0	15.48	0	0	0	0	0	0	3.73	3.73
Inverter	MV4-5	369289	4909199	2	0	0	100.3	100.3	1	3106.22	3.25	0	80.84	0	0.38	0	0	15.56	0	0	0	0	0	0	3.53	3.53
Inverter	MV4-3	369229	4909397	2	0	0	100.3	100.3	1	3160.71	3.25	0	81	0	0.39	0	0	15.65	0	0	0	0	0	0	3.27	3.27
Inverter	MV4-2	369272	4909397	2	0	0	100.3	100.3	1	3196.48	3.25	0	81.09	0	0.4	0	0	15.72	0	0	0	0	0	0	3.1	3.1
Inverter	MV6-2	370085	4907339	2	0	0	100.3	100.3	1	3490.32	3.25	0	81.86	0	0.45	0	0	16.22	0	0	0	0	0	0	1.79	1.79
Inverter	MV1-7	364925	4905782	2	0	0	97.3	97.3	1	2500.33	3.25	0	78.96	0	0.26	0	0	14.46	0	0	0	0	0	0	3.64	3.64
Inverter	MV5-5	370015	4908690	2	0	0	100.3	100.3	1	3568.45	3.25	0	82.05	0	0.46	0	0	16.35	0	0	0	0	0	0	1.45	1.45
Inverter	MV5-2	370006	4908853	2	0	0	100.3	100.3	1	3611.65	3.25	0	82.15	0	0.47	0	0	16.42	0	0	0	0	0	0	1.27	1.27
Inverter	MV6-3	370207	4907140	2	0	0	100.3	100.3	1	3633.47	3.25	0	82.21	0	0.47	0	0	16.45	0	0	0	0	0	0	1.18	1.18
Inverter	MV1-10	365004	4905564	2	0	0	97.3	97.3	1	2616.53	3.25	0	79.35	0	0.28	0	0	14.68	0	0	0	0	0	0	3	3
Inverter	MV5-1	370020	4909142	2	0	0	100.3	100.3	1	3732.11	3.25	0	82.44	0	0.49	0	0	16.62	0	0	0	0	0	0	0.77	0.77
Inverter	MV5-3	370231	4908851	2	0	0	100.3	100.3	1	3823.52	3.25	0	82.65	0	0.5	0	0	16.76	0	0	0	0	0	0	0.4	0.4
Inverter	MV5-4	370324	4908707	2	0	0	100.3	100.3	1	3869.33	3.25	0	82.75	0	0.51	0	0	16.84	0	0	0	0	0	0	0.21	0.21
Inverter	MV1-14	365163	4905049	2	0	0	97.3	97.3	1	2959.23	3.25	0	80.42	0	0.35	0	0	15.3	0	0	0	0	0	0	1.23	1.23
Inverter	MV2-2	365977	4906654	2	0	0	89.1	89.1	1	1163.35	3.25	0	72.31	0	0.72	0	0	6.62	0	0	0	0	0	0	9.41	9.41
Inverter	MV1-13	364731	4905241	2	0	0	97.3	97.3	1	3039.12	3.25	0	80.65	0	0.37	0	0	15.44	0	0	0	0	0	0	0.85	0.85
DSTATCOM - 10 MVAR #2	DSAT2	369403	4908757	2.5	0	0	96.6	96.6	1	3013.84	3.5	0	80.58	0	3.42	0	0	2.31	0	0	0	0	0	0	10.32	10.32
DSTATCOM - 10 MVAR #1	DSAT1	369437	4908757	2.5	0	0	96.6	96.6	1	3045.41	3.5	0	80.67	0	3.42	0	0	2.33	0	0	0	0	0	0	10.21	10.21
Inverter	MV6-1	370235	4907364	2	0	0	97.3	97.3	1	3637.89	3.25	0	82.22	0	0.47	0	0	16.46	0	0	0	0	0	0	-1.84	-1.84
Inverter	MV3-1	368156	4907976	2	0	0	89.1	89.1	1	1586.74	3.25	0	75.01	0	0.81	0	0	7.36	0	0	0	0	0	0	5.88	5.88
Inverter	MV3-5	368340	4907843	2	0	0	89.1	89.1	1	1745.8	3.25	0	75.84	0	0.85	0	0	7.63	0	0	0	0	0	0	4.75	4.75
Inverter	MV3-4	368502	4907925	2	0	0	89.1	89.1	1	1917.52	3.25	0	76.65	0	0.89	0	0	7.91	0	0	0	0	0	0	3.61	3.61
Inverter	MV3-2	368671	4907928	2	0	0	89.1	89.1	1	2085.12	3.25	0	77.38	0	0.93	0	0	8.18	0	0	0	0	0	0	2.56	2.56
Inverter	MV3-22	368656	4907142	2	0	0	89.1	89.1	1	2106.78	3.25	0	77.47	0	0.93	0	0	8.22	0	0	0	0	0	0	2.43	2.43
SubstationTransformer	W_ST	369711.17	4906112.3	2.5	0	0	92	92	1	3456.22	4.25	0	81.77	0	1.19	2.77	0.26	6.62	0	0	0	0	0	0	-0.39	-0.39
Inverter	MV4-13	369051	4908605	2	0	0	89.1	89.1	1	2630.56	3.25	0	79.4	0	1.06	0	0	9.05	0	0	0	0	0	0	-0.45	-0.45
Inverter	MV1-3	364440	4906039	2	0	0	89.1	89.1	1	2689.52	3.25	0	79.59	0	1.07	0	0	9.14	0	0	0	0	0	0	-0.75	-0.75
Inverter	MV4-12	369043	4908803	2	0	0	89.1	89.1	1	2702.84	3.25	0	79.64	0	1.07	0	0	9.16	0	0	0	0	0	0	-0.82	-0.82
Inverter	MV4-15	369176	4908481	2	0	0	89.1	89.1	1	2705.65	3.25	0	79.65	0	1.08	0	0	9.17	0	0	0	0	0	0	-0.83	-0.83
Inverter	MV4-14	369176	4908507	2	0	0	89.1	89.1	1	2713.93	3.25	0	79.67	0	1.08	0	0	9.18	0	0	0	0	0	0	-0.87	-0.87
Fixed Reactor Bank 1	FRB1	369378	4908755	6	0	0	89.8	89.8	1	2989.91	5.25	0	80.51	0	-0.87	0	0	5.94	0	0	0	0	0	0	4.19	4.19
Fixed Reactor Bank 2	FRB2	369464	4908755	6	0	0	89.8	89.8	1	3069.79	5.25	0	80.74	0	-0.86	0	0	6.06	0	0	0	0	0	0	3.84	3.84
Westbrook Inverter Enclosur	W_INV2	369374	4906388	2	0	0	89.1	89.1	1	3033.78	3.25	0	80.64	0	1.16	0	0	9.67	0	0	0	0	0	0	-2.4	-2.4
Westbrook Inverter Enclosur	W_INV3	369508	4906164	2	0	0	89.1	89.1	1	3251.28	3.25	0	81.24	0	1.21	0	0	9.99	0	0	0	0	0	0	-3.39	-3.39
Westbrook Inverter Enclosur	W_INV5	369719	4906574	2	0	0	89.1	89.1	1	3286.93	3.25	0	81.34	0	1.22	0	0	10.05	0	0	0	0	0	0	-3.54	-3.54
Westbrook Inverter Enclosur	W_INV7	369780	4906417	2	0	0	89.1	89.1	1	3397.67	3.25	0	81.62	0	1.24	0	0	10.21	0	0	0	0	0	0	-4.02	-4.02
Westbrook Inverter Enclosur	W_INV4	369673	4906164	2	0	0	89.1	89.1	1	3399.32	3.25	0	81.63	0	1.24	0	0	10.21	0	0	0	0	0	0	-4.03	-4.03
Westbrook Inverter Enclosur	W_INV6	369875	4906578	2	0	0	89.1	89.1	1	3433.77	3.25	0	81.72	0	1.25	0	0	10.27	0	0	0	0	0	0	-4.18	-4.18
Inverter	MV5-6	369982	4908507	2	0	0	89.1	89.1	1	3486.58	3.25	0	81.85	0	1.27	0	0	10.34	0	0	0	0	0	0	-4.4	-4.4
Gardiner Substation	G_Sub	366586.3	4903349.9	2.5	0	0	90.8	90.8	1	4282.15	4.25	0	83.63	0	1.47	2.61	0.38	7.73	0	0	0	0	0	0	-4.67	-4.67
Westbrook Inverter Enclosur	W_INV1	369409	4906578	2	0	0	86.1	86.1	1	2993.68	3.25	0	80.52	0	1.15	0	0	9.61	0	0	0	0	0	0	-5.22	-5.22
Inverters	G_Inv2	366676.9	4903239.1	2	0	0	87.7	87.7	1	4393.46	3.25	0	83.86	0	2.82	0	0	5.3	0	0	0	0	0	0	-4.32	-4.32
Inverters	G_Inv1	366526.4	4903225.8	2	0	0	87.7	87.7	1	4406.94	3.25	0	83.88	0	2.82	0	0	5.31	0	0	0	0	0	0	-4.36	-4.36
Inverter	MV6-4	370250	4906966	2	0	0	86.1	86.1	1	3703.38	3.25	0	82.37	0	1.32	0	0	10.66	0	0	0	0	0	0	-8.29	-8.29
Inverters	G_Inv4	366732.8	4903105	2	0	0	87.7	87.7	1	4528.75	3.25	0	84.12	0	2.83	0	0	5.44	0	0	0	0	0	0	-4.73	-4.73
Inverters	G_Inv3	366583.7	4903091.4	2	0	0	87.7	87.7	1	4540.66	4.18	0	84.14	0	3.2	1.49	0.01	5.45	0	0	0	0	0	0	-6.62	-6.62
Inverters	G_Inv6	366788.5	4902972	2	0	0	87.7	87.7	1	4663.53	3.25	0	84.37	0	2.84	0	0	5.58	0	0	0	0	0	0	-5.14	-5.14
Inverters	G_Inv5	366638.5	4902958.1	2	0	0	87.7	87.7	1	4674.01	3.25	0	84.39	0	2.84	0	0	5.6	0	0	0	0	0	0	-5.17	-5.17
Inverters	G_Inv8	366844.5	4902838.5	2	0	0	87.7	87.7	1	4799.38	3.25	0	84.62	0	2.85	0	0	5.73	0	0	0	0	0	0	-5.54	-5.54
Inverters	G_Inv7	366694.6	4902824.7	2	0	0	87.7	87.7	1	4808.1	3.25	0	84.64	0	2.85	0	0	5.74	0	0	0	0	0	0	-5.57	-5.57
Inverters	G_Inv10	366900.7	4902704.8	2	0	0	87.7	87.7	1	4935.95	3.25	0	84.87	0	2.86	0	0	5.87	0	0	0	0	0	0	-5.94	-5.94
Inverters	G_Inv9	366750.9	4902691.8	2	0	0	87.7	87.7	1	4942.3	3.25	0	84.88	0	2.86	0	0	5.88	0	0	0	0	0	0	-5.96	-5.96

Westbrook Inverter Transfor	W_INVTR1	369403	4906578	2	0	0	78.2	78.2	1	2988.07	3.25	0	80.51	0	-2.71	0	0	1.65	0	0	0	0	0	0	-1.21	-1.21
Inverter Transformer	MV2-1 T	365836	4906816	2	0	0	69.4	69.4	1	1122.63	3.25	0	72	0	1.77	0	0	3.98	0	0	0	0	0	0	-8.4	-8.4
Westbrook Inverter Transfor	W_INVTR2	369368	4906388	2	0	0	77.3	77.3	1	3028.31	3.25	0	80.62	0	-2.72	0	0	1.67	0	0	0	0	0	0	-2.23	-2.23
Westbrook Inverter Transfor	W_INVTR3	369514	4906164	2	0	0	77.3	77.3	1	3256.64	3.25	0	81.26	0	-2.78	0	0	1.76	0	0	0	0	0	0	-2.89	-2.89
Westbrook Inverter Transfor	W_INVTR5	369725	4906574	2	0	0	77.3	77.3	1	3292.61	3.25	0	81.35	0	-2.79	0	0	1.78	0	0	0	0	0	0	-3	-3
Westbrook Inverter Transfor	W_INVTR7	369786	4906417	2	0	0	77.3	77.3	1	3403.27	3.25	0	81.64	0	-2.82	0	0	1.82	0	0	0	0	0	0	-3.3	-3.3
Westbrook Inverter Transfor	W_INVTR4	369679	4906164	2	0	0	77.3	77.3	1	3404.73	3.25	0	81.64	0	-2.82	0	0	1.82	0	0	0	0	0	0	-3.3	-3.3
Westbrook Inverter Transfor	W_INVTR6	369881	4906578	2	0	0	77.3	77.3	1	3439.48	3.25	0	81.73	0	-2.83	0	0	1.84	0	0	0	0	0	0	-3.4	-3.4
Inverter Transformer	MV1-7 T	364919	4905782	2	0	0	69.4	69.4	1	2504.37	3.25	0	78.97	0	2.35	0	0	5.45	0	0	0	0	0	0	-17.42	-17.42
Inverter Transformer	MV1-10 T	365010	4905564	2	0	0	69.4	69.4	1	2612.86	3.25	0	79.34	0	2.39	0	0	5.55	0	0	0	0	0	0	-17.92	-17.92
Inverter Transformer	MV1-14 T	365157	4905049	2	0	0	69.4	69.4	1	2962.16	3.25	0	80.43	0	2.5	0	0	5.85	0	0	0	0	0	0	-19.43	-19.43
Inverter Transformer	MV1-13 T	364725	4905241	2	0	0	69.4	69.4	1	3042.83	3.25	0	80.67	0	2.52	0	0	5.92	0	0	0	0	0	0	-19.75	-19.75
Inverter Transformer	MV6-1 T	370230	4907364	2	0	0	69.4	69.4	1	3632.9	3.25	0	82.21	0	2.69	0	0	6.4	0	0	0	0	0	0	-21.94	-21.94
Inverter Transformer	MV6-4 T	370244	4906966	2	0	0	69.4	69.4	1	3697.48	3.25	0	82.36	0	2.71	0	0	6.45	0	0	0	0	0	0	-22.16	-22.16
Inverter Transformer	MV3-12 T	367674	4907594	2	0	0	56.1	56.1	1	1067.68	3.25	0	71.57	0	0.04	0	0	5.05	0	0	0	0	0	0	-20.6	-20.6
Inverter Transformer	MV2-2 T	365982	4906654	2	0	0	56.1	56.1	1	1160.65	3.25	0	72.29	0	0.07	0	0	5.27	0	0	0	0	0	0	-21.57	-21.57
Inverter Transformer	MV3-18 T	367757	4907412	2	0	0	56.1	56.1	1	1170.86	3.25	0	72.37	0	0.07	0	0	5.29	0	0	0	0	0	0	-21.67	-21.67
Inverter Transformer	MV2-3 T	365814	4906641	2	0	0	56.1	56.1	1	1269.23	3.25	0	73.07	0	0.11	0	0	5.51	0	0	0	0	0	0	-22.63	-22.63
Inverter Transformer	MV3-7 T	367951	4907754	2	0	0	56.1	56.1	1	1349.53	3.25	0	73.6	0	0.14	0	0	5.69	0	0	0	0	0	0	-23.38	-23.38
Inverter Transformer	MV3-13 T	367958	4907577	2	0	0	56.1	56.1	1	1352.12	3.25	0	73.62	0	0.14	0	0	5.7	0	0	0	0	0	0	-23.4	-23.4
Inverter Transformer	MV3-3 T	367944	4907927	2	0	0	56.1	56.1	1	1369.16	3.25	0	73.73	0	0.15	0	0	5.73	0	0	0	0	0	0	-23.55	-23.55
Inverter Transformer	MV2-4 T	365590	4906628	2	0	0	56.1	56.1	1	1429.09	3.25	0	74.1	0	0.17	0	0	5.86	0	0	0	0	0	0	-24.08	-24.08
Inverter Transformer	MV3-10 T	368162	4907669	2	0	0	56.1	56.1	1	1555.44	3.25	0	74.84	0	0.22	0	0	6.14	0	0	0	0	0	0	-25.14	-25.14
Inverter Transformer	MV3-6 T	368156	4907834	2	0	0	56.1	56.1	1	1562.12	3.25	0	74.87	0	0.22	0	0	6.15	0	0	0	0	0	0	-25.19	-25.19
Inverter Transformer	MV3-1 T	368150	4907976	2	0	0	56.1	56.1	1	1580.88	3.25	0	74.98	0	0.23	0	0	6.19	0	0	0	0	0	0	-25.34	-25.34
Inverter Transformer	MV3-17 T	368183	4907472	2	0	0	56.1	56.1	1	1584.1	3.25	0	75	0	0.23	0	0	6.2	0	0	0	0	0	0	-25.37	-25.37
Inverter Transformer	MV3-11 T	368340	4907662	2	0	0	56.1	56.1	1	1733.26	3.25	0	75.78	0	0.29	0	0	6.51	0	0	0	0	0	0	-26.52	-26.52
Inverter Transformer	MV3-5 T	368335	4907843	2	0	0	56.1	56.1	1	1740.84	3.25	0	75.82	0	0.3	0	0	6.52	0	0	0	0	0	0	-26.58	-26.58
Inverter Transformer	MV3-15 T	368351	4907477	2	0	0	56.1	56.1	1	1750.88	3.25	0	75.87	0	0.3	0	0	6.54	0	0	0	0	0	0	-26.65	-26.65
Inverter Transformer	MV3-19 T	368352	4907347	2	0	0	56.1	56.1	1	1768.12	3.25	0	75.95	0	0.31	0	0	6.58	0	0	0	0	0	0	-26.78	-26.78
Inverter Transformer	MV3-16 T	368509	4907475	2	0	0	56.1	56.1	1	1908.47	3.25	0	76.61	0	0.37	0	0	6.86	0	0	0	0	0	0	-27.78	-27.78
Inverter Transformer	MV3-9 T	368517	4907703	2	0	0	56.1	56.1	1	1911.32	3.25	0	76.63	0	0.37	0	0	6.87	0	0	0	0	0	0	-27.8	-27.8
Inverter Transformer	MV3-4 T	368507	4907925	2	0	0	56.1	56.1	1	1922.46	3.25	0	76.68	0	0.37	0	0	6.89	0	0	0	0	0	0	-27.88	-27.88
Inverter Transformer	MV3-21 T	368484	4907206	2	0	0	56.1	56.1	1	1924.74	3.25	0	76.69	0	0.37	0	0	6.89	0	0	0	0	0	0	-27.9	-27.9
Inverter Transformer	MV3-14 T	368678	4907498	2	0	0	56.1	56.1	1	2075.33	3.25	0	77.34	0	0.44	0	0	7.19	0	0	0	0	0	0	-28.91	-28.91
Inverter Transformer	MV3-8 T	368685	4907712	2	0	0	56.1	56.1	1	2079.54	3.25	0	77.36	0	0.44	0	0	7.2	0	0	0	0	0	0	-28.94	-28.94
Inverter Transformer	MV3-2 T	368677	4907928	2	0	0	56.1	56.1	1	2091.06	3.25	0	77.41	0	0.44	0	0	7.22	0	0	0	0	0	0	-29.01	-29.01
Inverter Transformer	MV3-20 T	368683	4907317	2	0	0	56.1	56.1	1	2099.76	3.25	0	77.44	0	0.45	0	0	7.24	0	0	0	0	0	0	-29.07	-29.07
Inverter Transformer	MV3-22 T	368661	4907142	2	0	0	56.1	56.1	1	2111.64	3.25	0	77.49	0	0.45	0	0	7.26	0	0	0	0	0	0	-29.15	-29.15
Inverter Transformer	MV1-1 T	364721	4906166	2	0	0	56.1	56.1	1	2388.76	3.25	0	78.56	0	0.57	0	0	7.79	0	0	0	0	0	0	-30.86	-30.86
Inverter Transformer	MV1-2 T	364759	4906063	2	0	0	56.1	56.1	1	2424.23	3.25	0	78.69	0	0.58	0	0	7.85	0	0	0	0	0	0	-31.07	-31.07
Inverter Transformer	MV1-4 T	364821	4905918	2	0	0	56.1	56.1	1	2475.4	3.25	0	78.87	0	0.61	0	0	7.94	0	0	0	0	0	0	-31.37	-31.37
Inverter Transformer	MV1-5 T	364676	4905892	2	0	0	56.1	56.1	1	2599.3	3.25	0	79.3	0	0.66	0	0	8.17	0	0	0	0	0	0	-32.07	-32.07
Inverter Transformer	MV4-13 T	369057	4908605	2	0	0	56.1	56.1	1	2636.14	3.25	0	79.42	0	0.67	0	0	8.23	0	0	0	0	0	0	-32.27	-32.27
Inverter Transformer	MV1-3 T	364435	4906039	2	0	0	56.1	56.1	1	2693.56	3.25	0	79.61	0	0.7	0	0	8.34	0	0	0	0	0	0	-32.58	-32.58
Inverter Transformer	MV1-8 T	364782	4905647	2	0	0	56.1	56.1	1	2696.45	3.25	0	79.62	0	0.7	0	0	8.34	0	0	0	0	0	0	-32.6	-32.6
Inverter Transformer	MV4-15 T	369170	4908481	2	0	0	56.1	56.1	1	2699.96	3.25	0	79.63	0	0.7	0	0	8.35	0	0	0	0	0	0	-32.62	-32.62
Inverter Transformer	MV4-12 T	369049	4908803	2	0	0	56.1	56.1	1	2708.25	3.25	0	79.65	0	0.71	0	0	8.36	0	0	0	0	0	0	-32.66	-32.66
Inverter Transformer	MV4-14 T	369182	4908507	2	0	0	56.1	56.1	1	2719.61	3.25	0	79.69	0	0.71	0	0	8.38	0	0	0	0	0	0	-32.73	-32.73
Inverter Transformer	MV1-12 T	365044	4905386	2	0	0	56.1	56.1	1	2736.33	3.25	0	79.74	0	0.72	0	0	8.41	0	0	0	0	0	0	-32.82	-32.82
Inverter Transformer	MV1-6 T	364482	4905835	2	0	0	56.1	56.1	1	2782.96	3.25	0	79.89	0	0.74	0	0	8.49	0	0	0	0	0	0	-33.06	-33.06
Inverter Transformer	MV4-7 T	369040	4909001	2	0	0	56.1	56.1	1	2791.71	3.25	0	79.92	0	0.74	0	0	8.51	0	0	0	0	0	0	-33.11	-33.11
Inverter Transformer	MV1-9 T	364555	4905646	2	0	0	56.1	56.1	1	2855.68	3.25	0	80.11	0	0.77	0	0	8.62	0	0	0	0	0	0	-33.45	-33.45
Inverter Transformer	MV4-4 T	369033	4909199	2	0	0	56.1	56.1	1	2888.07	3.25	0	80.21	0	0.78	0	0	8.68	0	0	0	0	0	0	-33.61	-33.61
Inverter Transformer	MV4-11 T	369269	4908855	2	0	0	56.1	56.1	1	2929.5	3.25	0	80.34	0	0.8	0	0	8.75	0	0	0	0	0	0	-33.83	-33.83
Inverter Transformer	MV1-15 T	365309	4904994	2	0	0	56.1	56.1	1	2940.04	3.25	0	80.37	0	0.8	0	0	8.77	0	0	0	0	0	0	-33.88	-33.88
Inverter Transformer	MV1-11 T	364649	4905414	2	0	0	56.1	56.1	1	2958.6	3.25	0	80.42	0	0.81	0	0	8.8	0	0	0	0	0	0	-33.97	-33.97
Inverter Transformer	MV4-10 T	369307	4908858	2	0	0	56.1	56.1	1	2965.31	3.25	0	80.44	0	0.82	0	0	8.81	0	0	0	0	0	0	-34.01	-34.01
Inverter Transformer	MV4-8 T	369262	4909001	2	0	0	56.1	56.1	1	2987.17	3.25	0	80.51	0	0.82	0	0	8.85	0	0	0	0	0	0	-34.12	-34.12
Inverter Transformer	MV4-1 T	369017	4909397	2	0	0	56.1	56.1	1	2987.19	3.25	0	80.51	0	0.82	0	0	8.85	0	0	0	0	0	0	-34.12	-34.12
Inverter Transformer	MV4-9 T	369284	4909001	2	0	0	56.1	56.1	1	3006.74	3.25	0	80.56	0	0.83	0	0	8.88	0	0	0	0	0	0	-34.22	-34.22
Inverter Transformer	MV4-6 T	369249	4909192	2	0	0	56.1	56.1	1	3068.19	3.25	0	80.74	0	0.86	0	0	8.98	0	0	0	0	0	0	-34.52	-34.52
Inverter Transformer	MV4-5 T	369283	4909199	2	0	0	56.1	56.1	1	3101.04	3.25	0	80.83	0	0.87	0	0	9.04	0	0	0	0	0	0	-34.68	-34.68
Inverter Transformer	MV4-3 T	369234	4909397	2	0	0	56.1	56.1	1	3164.86	3.25	0	81.01	0	0.9	0	0	9.14	0	0	0	0	0	0	-34.99	-34.99
Inverter Transformer	MV4-2 T	369267	4909397	2	0	0	56.1	56.1	1	3192.31	3.25	0	81.08	0	0.91	0	0	9.19	0	0	0	0	0	0	-35.12	-35.12
Inverter Transformer	MV5-6 T	369987	4908507	2	0	0	56.1	56.1	1	3491.42	3.25	0	81.86	0	1.04	0	0	9.67	0	0	0	0	0	0	-36.51	-36.51
Inverter Transformer	MV6-2 T	370091	4907339	2	0	0	56.1	56.1	1	3496.3	3.25	0	81.87	0	1.04	0	0	9.68	0	0	0	0	0	0	-36.53	-36.53
Inverter Transformer	MV5-5 T	370021	4908690	2	0	0	56.1	56.1	1	3574.18	3.25	0	82.06	0	1.07	0	0	9.8	0	0	0	0	0	0	-36.88	-36.88
Inverter Transformer	MV5-2 T	370011	4908853	2	0	0	56.1	56.1	1	3616.36	3.25	0	82.17	0	1.09	0	0	9.87	0	0	0	0	0	0	-37.07	-37.07
Inverter Transformer	MV6-3 T	370202	4907140	2	0	0	56.1	56.1	1	3628.51	3.25	0	82.19	0	1.09	0	0	9.89	0	0	0	0	0	0	-37.12	-37.12
Inverter Transformer	MV5-1 T	370015	4909142	2	0	0	56.1	56.1	1	3727.54	3.25	0	82.43	0	1.13	0	0	10.04	0	0	0	0	0	0	-37.55	-37.55
Inverter Transformer	MV5-3 T	370237	4908851	2	0	0	56.1	56.1	1	3829.21	3.25	0	82.66	0	1.18	0	0	10.2	0	0	0	0	0	0	-37.98	-37.98
Inverter Transformer	MV5-4 T	370330	4908707	2	0	0	56.1	56.1	1	3875.09	3.25	0	82.77	0	1.19	0	0	10.27	0	0	0	0	0	0	-38.17	-38.17
Line Reactor	NGR	369421	4908787.5	5	0	0	45.4	45.4	1	3042	5.25	0	80.66	0	3.32	1.32	0.1	1.25	0	0	0	0	0	0	-41.19	-41.19

Limit. Valu 0 0
Level D/N: 28.6901 28.6901

Receiver: Vacant Lot Receptor
ID: S-VLR14
X: 366290
Y: 4906421
Z: 4.5
Ground: 0

ISO	Description	ID	X	Y	Z	Ground	ReflOrd	LxT	LxN	L/A	Dist.	hm	Freq	Adiv	K0b	Agr	Abar	z	Aatm	Afol	Ahous	Cmet	CmetN	Dc	RL	LtotT	LtotN
	Inverter	MV2-3	365820	4906641	2	0	0	100.3	100.3	1	518.95	3.25	0	65.3	0	-0.54	0	0	8.67	0	0	0	0	0	0	26.88	26.88
	Inverter	MV2-4	365586	4906624	2	0	0	100.3	100.3	1	732.69	3.25	0	68.3	0	-0.39	0	0	9.89	0	0	0	0	0	0	22.51	22.51
	Inverter	MV2-1	365842	4906816	2	0	0	97.3	97.3	1	597.27	3.25	0	66.52	0	-0.48	0	0	9.19	0	0	0	0	0	0	22.08	22.08
	Sol_Luce Substation	S_Substation	369426	4908792	3.5	0	0	112.1	112.1	1	3931.43	5.25	0	82.89	0	0.58	3.12	0.26	7.27	0	0	0	0	0	0	18.21	18.21
	Inverter	MV2-2	365977	4906654	2	0	0	89.1	89.1	1	390.21	3.25	0	62.83	0	0.45	0	0	4.68	0	0	0	0	0	0	21.1	21.1
	Inverter	MV1-4	364815	4905918	2	0	0	100.3	100.3	1	1558.41	3.25	0	74.85	0	-0.01	0	0	12.47	0	0	0	0	0	0	13	13
	Inverter	MV1-2	364753	4906063	2	0	0	100.3	100.3	1	1578.14	3.25	0	74.96	0	-0.01	0	0	12.52	0	0	0	0	0	0	12.84	12.84
	Inverter	MV1-1	364715	4906166	2	0	0	100.3	100.3	1	1595.51	3.25	0	75.06	0	0	0	0	12.56	0	0	0	0	0	0	12.7	12.7
	Inverter	MV1-12	365038	4905386	2	0	0	100.3	100.3	1	1624.42	3.25	0	75.21	0	0.01	0	0	12.63	0	0	0	0	0	0	12.46	12.46
	Inverter	MV1-8	364788	4905647	2	0	0	100.3	100.3	1	1689.7	3.25	0	75.56	0	0.03	0	0	12.78	0	0	0	0	0	0	11.94	11.94
	Inverter	MV1-5	364671	4905892	2	0	0	100.3	100.3	1	1703.23	3.25	0	75.63	0	0.04	0	0	12.81	0	0	0	0	0	0	11.84	11.84
	Inverter	MV1-15	365315	4904994	2	0	0	100.3	100.3	1	1728.28	3.25	0	75.75	0	0.05	0	0	12.87	0	0	0	0	0	0	11.65	11.65
	Inverter	MV3-18	367752	4907412	2	0	0	100.3	100.3	1	1766.22	3.25	0	75.94	0	0.06	0	0	12.95	0	0	0	0	0	0	11.36	11.36
	Inverter	MV3-12	367668	4907594	2	0	0	100.3	100.3	1	1809.65	3.25	0	76.15	0	0.07	0	0	13.05	0	0	0	0	0	0	11.04	11.04
	Inverter	MV1-9	364561	4905646	2	0	0	100.3	100.3	1	1894.75	3.25	0	76.55	0	0.1	0	0	13.24	0	0	0	0	0	0	10.43	10.43
	Inverter	MV1-6	364477	4905835	2	0	0	100.3	100.3	1	1905.35	3.25	0	76.6	0	0.1	0	0	13.26	0	0	0	0	0	0	10.35	10.35
	Inverter	MV1-11	364655	4905414	2	0	0	100.3	100.3	1	1920.23	3.25	0	76.67	0	0.11	0	0	13.29	0	0	0	0	0	0	10.25	10.25
	Inverter	MV3-13	367963	4907577	2	0	0	100.3	100.3	1	2033.54	3.25	0	77.17	0	0.14	0	0	13.53	0	0	0	0	0	0	9.48	9.48
	Inverter	MV3-7	367945	4907754	2	0	0	100.3	100.3	1	2125.07	3.25	0	77.55	0	0.16	0	0	13.72	0	0	0	0	0	0	8.88	8.88
	Inverter	MV1-7	364925	4905782	2	0	0	97.3	97.3	1	1507.17	3.25	0	74.56	0	-0.03	0	0	12.34	0	0	0	0	0	0	10.44	10.44
	Inverter	MV3-17	368178	4907472	2	0	0	100.3	100.3	1	2160.82	3.25	0	77.69	0	0.17	0	0	13.79	0	0	0	0	0	0	8.65	8.65
	Inverter	MV1-10	365004	4905564	2	0	0	97.3	97.3	1	1545.4	3.25	0	74.78	0	-0.02	0	0	12.44	0	0	0	0	0	0	10.11	10.11
	Inverter	MV3-3	367939	4907927	2	0	0	100.3	100.3	1	2233.21	3.25	0	77.98	0	0.19	0	0	13.94	0	0	0	0	0	0	8.2	8.2
	Inverter	MV3-10	368167	4907669	2	0	0	100.3	100.3	1	2254.03	3.25	0	78.06	0	0.2	0	0	13.98	0	0	0	0	0	0	8.07	8.07
	Inverter	MV3-19	368357	4907347	2	0	0	100.3	100.3	1	2264.94	3.25	0	78.1	0	0.2	0	0	14	0	0	0	0	0	0	8.01	8.01
	Inverter	MV3-15	368357	4907477	2	0	0	100.3	100.3	1	2321.13	3.25	0	78.31	0	0.21	0	0	14.11	0	0	0	0	0	0	7.67	7.67
	Inverter	MV3-21	368478	4907206	2	0	0	100.3	100.3	1	2324.56	3.25	0	78.33	0	0.22	0	0	14.12	0	0	0	0	0	0	7.65	7.65
	Inverter	MV3-6	368162	4907834	2	0	0	100.3	100.3	1	2345.41	3.25	0	78.4	0	0.22	0	0	14.16	0	0	0	0	0	0	7.53	7.53
	Inverter	MV3-11	368346	4907662	2	0	0	100.3	100.3	1	2401.5	3.25	0	78.61	0	0.23	0	0	14.27	0	0	0	0	0	0	7.2	7.2
	Inverter	MV3-16	368514	4907475	2	0	0	100.3	100.3	1	2461.12	3.25	0	78.82	0	0.25	0	0	14.38	0	0	0	0	0	0	6.86	6.86
	Inverter	MV1-14	365163	4905049	2	0	0	97.3	97.3	1	1775.53	3.25	0	75.99	0	0.06	0	0	12.97	0	0	0	0	0	0	8.29	8.29
	Inverter	MV3-20	368689	4907317	2	0	0	100.3	100.3	1	2560.86	3.25	0	79.17	0	0.27	0	0	14.57	0	0	0	0	0	0	6.3	6.3
	Inverter	MV3-9	368512	4907703	2	0	0	100.3	100.3	1	2565.31	3.25	0	79.18	0	0.27	0	0	14.58	0	0	0	0	0	0	6.28	6.28
	Inverter	MV3-14	368684	4907498	2	0	0	100.3	100.3	1	2625.1	3.25	0	79.38	0	0.29	0	0	14.69	0	0	0	0	0	0	5.95	5.95
	Inverter	MV3-8	368680	4907712	2	0	0	100.3	100.3	1	2716.39	3.25	0	79.68	0	0.3	0	0	14.86	0	0	0	0	0	0	5.47	5.47
	Inverter	MV1-13	364731	4905241	2	0	0	97.3	97.3	1	1955.22	3.25	0	76.82	0	0.12	0	0	13.37	0	0	0	0	0	0	7	7
	Inverter	MV4-7	369035	4909001	2	0	0	100.3	100.3	1	3767.15	3.25	0	82.52	0	0.49	0	0	16.67	0	0	0	0	0	0	0.63	0.63
	Inverter	MV4-11	369264	4908855	2	0	0	100.3	100.3	1	3843.05	3.25	0	82.69	0	0.5	0	0	16.8	0	0	0	0	0	0	0.32	0.32
	Inverter	MV4-10	369312	4908858	2	0	0	100.3	100.3	1	3882.2	3.25	0	82.78	0	0.51	0	0	16.86	0	0	0	0	0	0	0.16	0.16
	Inverter	MV4-4	369027	4909199	2	0	0	100.3	100.3	1	3899.8	3.25	0	82.82	0	0.51	0	0	16.89	0	0	0	0	0	0	0.09	0.09
	Inverter	MV6-2	370085	4907339	2	0	0	100.3	100.3	1	3904.45	3.25	0	82.83	0	0.51	0	0	16.9	0	0	0	0	0	0	0.07	0.07
	Inverter	MV4-8	369256	4909001	2	0	0	100.3	100.3	1	3931.1	3.25	0	82.89	0	0.52	0	0	16.94	0	0	0	0	0	0	-0.03	-0.03
	Inverter	MV4-9	369289	4909001	2	0	0	100.3	100.3	1	3956.06	3.25	0	82.95	0	0.52	0	0	16.98	0	0	0	0	0	0	-0.13	-0.13
	Inverter	MV6-3	370207	4907140	2	0	0	100.3	100.3	1	3982.44	3.25	0	83	0	0.52	0	0	17.02	0	0	0	0	0	0	-0.24	-0.24
	Inverter	MV4-1	369011	4909397	2	0	0	100.3	100.3	1	4032.42	3.25	0	83.11	0	0.53	0	0	17.1	0	0	0	0	0	0	-0.43	-0.43
	Inverter	MV4-6	369243	4909192	2	0	0	100.3	100.3	1	4049.53	3.25	0	83.15	0	0.53	0	0	17.13	0	0	0	0	0	0	-0.5	-0.5
	Inverter	MV4-5	369289	4909199	2	0	0	100.3	100.3	1	4087.94	3.25	0	83.23	0	0.54	0	0	17.19	0	0	0	0	0	0	-0.65	-0.65
	Inverter	MV4-3	369229	4909397	2	0	0	100.3	100.3	1	4182.62	3.25	0	83.43	0	0.55	0	0	17.34	0	0	0	0	0	0	-1.01	-1.01
	Inverter	MV4-2	369272	4909397	2	0	0	100.3	100.3	1	4212.95	3.25	0	83.49	0	0.56	0	0	17.39	0	0	0	0	0	0	-1.12	-1.12
	Inverter	MV5-5	370015	4908690	2	0	0	100.3	100.3	1	4361.65	3.25	0	83.79	0	0.57	0	0	17.62	0	0	0	0	0	0	-1.67	-1.67
	Inverter	MV5-2	370006	4908853	2	0	0	100.3	100.3	1	4441.09	3.25	0	83.95	0	0.58	0	0	17.74	0	0	0	0	0	0	-1.96	-1.96
	Inverter	MV5-1	370020	4909142	2	0	0	100.3	100.3	1	4617.01	3.25	0	84.29	0	0.6	0	0	18.01	0	0	0	0	0	0	-2.59	-2.59
	Inverter	MV5-3	370231	4908851	2	0	0	100.3	100.3	1	4629.94	3.25	0	84.31	0	0.61	0	0	18.03	0	0	0	0	0	0	-2.63	-2.63
	Inverter	MV5-4	370324	4908707	2	0	0	100.3	100.3	1	4636.7	3.25	0	84.32	0	0.61	0	0	18.04	0	0	0	0	0	0	-2.66	-2.66
	Inverter	MV6-1	370235	4907364	2	0	0	97.3	97.3	1	4056.14	3.25	0	83.16	0	0.53	0	0	17.14	0	0	0	0	0	0	-3.52	-3.52
	DSTATCOM - 10 MVAR #2	DSAT2	369403	4908757	2.5	0	0	96.6	96.6	1	3892	3.5	0	82.8	0	3.55	0	0	2.78	0	0	0	0	0	0	7.49	7.49
	DSTATCOM - 10 MVAR #1	DSAT1	369437	4908757	2.5	0	0	96.6	96.6	1	3919.25	3.5	0	82.86	0	3.56	0	0	2.8	0	0	0	0	0	0	7.41	7.41
	Inverter	MV1-3	364440	4906039	2	0	0	89.1	89.1	1	1889.03	3.25	0	76.52	0	0.88	0	0	7.86	0	0	0	0	0	0	3.79	3.79
	Inverter	MV3-1	368156	4907976	2	0	0	89.1	89.1	1	2428.99	3.25	0	78.71	0	1.01	0	0	8.73	0	0	0	0	0	0	0.61	0.61
	SubstationTransformer	W_ST	369711.17	4906112.3	2.5	0	0	92	92	1	3435.07	4.25	0	81.72	0	1.2	2.81	0.29	6.59	0	0	0	0	0	0	-0.34	-0.34
	Inverter	MV3-22	368656	4907142	2	0	0	89.1	89.1	1	2473.42	3.25	0	78.87	0	1.02	0	0	8.8	0	0	0	0	0	0	0.37	0.37
	Inverter	MV3-5	368340	4907843	2	0	0	89.1	89.1	1	2494.91	3.25	0	78.94	0	1.02	0	0	8.84	0	0	0	0	0	0	0.25	0.25
	Gardiner Substation	G_Sub	366586.3	4903349.9	2.5	0	0	90.8	90.8	1	3085.36	4.25	0	80.79	0	1.16	3.18	0.36	6.08	0	0	0	0	0	0	-0.43	-0.43

Inverter	MV3-4	368502	4907925	2	0	0	89.1	89.1	1	2674.88	3.25	0	79.55	0	1.07	0	0	9.12	0	0	0	0	0	0	-0.67	-0.67
Inverter	MV3-2	368671	4907928	2	0	0	89.1	89.1	1	2817.84	3.25	0	80	0	1.1	0	0	9.34	0	0	0	0	0	0	-1.38	-1.38
Westbrook Inverter Enclosur	W_INV2	369374	4906388	2	0	0	89.1	89.1	1	3084.18	3.25	0	80.78	0	1.17	0	0	9.74	0	0	0	0	0	0	-2.64	-2.64
Westbrook Inverter Enclosur	W_INV3	369508	4906164	2	0	0	89.1	89.1	1	3228.25	3.25	0	81.18	0	1.2	0	0	9.96	0	0	0	0	0	0	-3.28	-3.28
Westbrook Inverter Enclosur	W_INV4	369673	4906164	2	0	0	89.1	89.1	1	3392.75	3.25	0	81.61	0	1.24	0	0	10.2	0	0	0	0	0	0	-4	-4
Westbrook Inverter Enclosur	W_INV5	369719	4906574	2	0	0	89.1	89.1	1	3432.41	3.25	0	81.71	0	1.25	0	0	10.26	0	0	0	0	0	0	-4.17	-4.17
Westbrook Inverter Enclosur	W_INV7	369780	4906417	2	0	0	89.1	89.1	1	3490	3.25	0	81.86	0	1.27	0	0	10.35	0	0	0	0	0	0	-4.41	-4.41
Inverter	MV4-13	369051	4908605	2	0	0	89.1	89.1	1	3520.37	3.25	0	81.93	0	1.27	0	0	10.39	0	0	0	0	0	0	-4.54	-4.54
Inverter	MV4-15	369176	4908481	2	0	0	89.1	89.1	1	3545.79	3.25	0	81.99	0	1.28	0	0	10.43	0	0	0	0	0	0	-4.65	-4.65
Inverter	MV4-14	369176	4908507	2	0	0	89.1	89.1	1	3560.95	3.25	0	82.03	0	1.28	0	0	10.45	0	0	0	0	0	0	-4.71	-4.71
Fixed Reactor Bank 1	FRB1	369378	4908755	6	0	0	89.8	89.8	1	3870.83	5.25	0	82.76	0	-0.74	0	0	7.19	0	0	0	0	0	0	0.57	0.57
Westbrook Inverter Enclosur	W_INV6	369875	4906578	2	0	0	89.1	89.1	1	3588.44	3.25	0	82.1	0	1.29	0	0	10.49	0	0	0	0	0	0	-4.82	-4.82
Fixed Reactor Bank 2	FRB2	369464	4908755	6	0	0	89.8	89.8	1	3939.78	5.25	0	82.91	0	-0.73	0	0	7.29	0	0	0	0	0	0	0.31	0.31
Inverter	MV4-12	369043	4908803	2	0	0	89.1	89.1	1	3640.46	3.25	0	82.22	0	1.3	0	0	10.57	0	0	0	0	0	0	-5.04	-5.04
Inverters	G_Inv1	366526.4	4903225.8	2	0	0	87.7	87.7	1	3203.93	3.25	0	81.11	0	2.72	0	0	4	0	0	0	0	0	0	-0.17	-0.17
Inverters	G_Inv2	366676.9	4903239.1	2	0	0	87.7	87.7	1	3205.34	3.25	0	81.12	0	2.72	0	0	4	0	0	0	0	0	0	-0.18	-0.18
Inverters	G_Inv3	366583.7	4903091.4	2	0	0	87.7	87.7	1	3342.53	3.25	0	81.48	0	2.73	0	0	4.16	0	0	0	0	0	0	-0.71	-0.71
Inverters	G_Inv4	366732.8	4903105	2	0	0	87.7	87.7	1	3345.43	3.25	0	81.49	0	2.73	0	0	4.16	0	0	0	0	0	0	-0.72	-0.72
Inverters	G_Inv5	366638.5	4902958.1	2	0	0	87.7	87.7	1	3480.39	3.25	0	81.83	0	2.75	0	0	4.31	0	0	0	0	0	0	-1.23	-1.23
Inverters	G_Inv6	366788.5	4902972	2	0	0	87.7	87.7	1	3484.84	3.25	0	81.84	0	2.75	0	0	4.31	0	0	0	0	0	0	-1.24	-1.24
Inverter	MV5-6	369982	4908507	2	0	0	89.1	89.1	1	4240.55	3.25	0	83.55	0	1.45	0	0	11.42	0	0	0	0	0	0	-7.37	-7.37
Inverters	G_Inv7	366694.6	4902824.7	2	0	0	87.7	87.7	1	3618.99	3.25	0	82.17	0	2.76	0	0	4.46	0	0	0	0	0	0	-1.73	-1.73
Inverters	G_Inv8	366844.5	4902838.5	2	0	0	87.7	87.7	1	3625.16	3.25	0	82.19	0	2.76	0	0	4.47	0	0	0	0	0	0	-1.75	-1.75
Westbrook Inverter Enclosur	W_INV1	369409	4906578	2	0	0	86.1	86.1	1	3122.95	3.25	0	80.89	0	1.18	0	0	9.8	0	0	0	0	0	0	-5.81	-5.81
Inverters	G_Inv9	366750.9	4902691.8	2	0	0	87.7	87.7	1	3757.57	3.25	0	82.5	0	2.77	0	0	4.61	0	0	0	0	0	0	-2.22	-2.22
Inverters	G_Inv10	366900.7	4902704.8	2	0	0	87.7	87.7	1	3766.05	3.25	0	82.52	0	2.77	0	0	4.62	0	0	0	0	0	0	-2.25	-2.25
Inverter	MV6-4	370250	4906966	2	0	0	86.1	86.1	1	3997.33	3.25	0	83.04	0	1.39	0	0	11.08	0	0	0	0	0	0	-9.45	-9.45
Inverter Transformer	MV2-1 T	365836	4906816	2	0	0	69.4	69.4	1	601.79	3.25	0	66.59	0	1.22	0	0	3.17	0	0	0	0	0	0	-1.62	-1.62
Westbrook Inverter Transfor	W_INVTR1	369403	4906578	2	0	0	78.2	78.2	1	3116.96	3.25	0	80.87	0	-2.75	0	0	1.71	0	0	0	0	0	0	-1.59	-1.59
Westbrook Inverter Transfor	W_INVTR2	369368	4906388	2	0	0	77.3	77.3	1	3078.18	3.25	0	80.77	0	-2.74	0	0	1.69	0	0	0	0	0	0	-2.38	-2.38
Westbrook Inverter Transfor	W_INVTR3	369514	4906164	2	0	0	77.3	77.3	1	3234.23	3.25	0	81.2	0	-2.78	0	0	1.75	0	0	0	0	0	0	-2.83	-2.83
Westbrook Inverter Transfor	W_INVTR4	369679	4906164	2	0	0	77.3	77.3	1	3398.73	3.25	0	81.63	0	-2.82	0	0	1.82	0	0	0	0	0	0	-3.29	-3.29
Westbrook Inverter Transfor	W_INVTR5	369725	4906574	2	0	0	77.3	77.3	1	3438.41	3.25	0	81.73	0	-2.83	0	0	1.84	0	0	0	0	0	0	-3.39	-3.39
Westbrook Inverter Transfor	W_INVTR7	369786	4906417	2	0	0	77.3	77.3	1	3496	3.25	0	81.87	0	-2.84	0	0	1.86	0	0	0	0	0	0	-3.55	-3.55
Westbrook Inverter Transfor	W_INVTR6	369881	4906578	2	0	0	77.3	77.3	1	3594.43	3.25	0	82.11	0	-2.87	0	0	1.9	0	0	0	0	0	0	-3.8	-3.8
Inverter Transformer	MV1-7 T	364919	4905782	2	0	0	69.4	69.4	1	1512.6	3.25	0	74.59	0	1.98	0	0	4.45	0	0	0	0	0	0	-11.67	-11.67
Inverter Transformer	MV1-10 T	365010	4905564	2	0	0	69.4	69.4	1	1540.41	3.25	0	74.75	0	1.99	0	0	4.48	0	0	0	0	0	0	-11.87	-11.87
Inverter Transformer	MV1-14 T	365157	4905049	2	0	0	69.4	69.4	1	1779.35	3.25	0	76.01	0	2.09	0	0	4.74	0	0	0	0	0	0	-13.48	-13.48
Inverter Transformer	MV2-2 T	365982	4906654	2	0	0	56.1	56.1	1	386.21	3.25	0	62.74	0	-0.11	0	0	3.15	0	0	0	0	0	0	-9.72	-9.72
Inverter Transformer	MV1-13 T	364725	4905241	2	0	0	69.4	69.4	1	1960.01	3.25	0	76.85	0	2.16	0	0	4.93	0	0	0	0	0	0	-14.58	-14.58
Inverter Transformer	MV2-3 T	365814	4906641	2	0	0	56.1	56.1	1	524.39	3.25	0	65.39	0	-0.12	0	0	3.63	0	0	0	0	0	0	-12.85	-12.85
Inverter Transformer	MV2-4 T	365590	4906628	2	0	0	56.1	56.1	1	729.97	3.25	0	68.27	0	-0.07	0	0	4.21	0	0	0	0	0	0	-16.35	-16.35
Inverter Transformer	MV6-4 T	370244	4906966	2	0	0	69.4	69.4	1	3991.38	3.25	0	83.02	0	2.78	0	0	6.67	0	0	0	0	0	0	-23.13	-23.13
Inverter Transformer	MV6-1 T	370230	4907364	2	0	0	69.4	69.4	1	4051.28	3.25	0	83.15	0	2.8	0	0	6.71	0	0	0	0	0	0	-23.31	-23.31
Inverter Transformer	MV1-4 T	364821	4905918	2	0	0	56.1	56.1	1	1552.73	3.25	0	74.82	0	0.22	0	0	6.13	0	0	0	0	0	0	-25.11	-25.11
Inverter Transformer	MV1-2 T	364759	4906063	2	0	0	56.1	56.1	1	1572.3	3.25	0	74.93	0	0.23	0	0	6.17	0	0	0	0	0	0	-25.27	-25.27
Inverter Transformer	MV1-1 T	364721	4906166	2	0	0	56.1	56.1	1	1589.59	3.25	0	75.03	0	0.23	0	0	6.21	0	0	0	0	0	0	-25.41	-25.41
Inverter Transformer	MV1-12 T	365044	4905386	2	0	0	56.1	56.1	1	1619.8	3.25	0	75.19	0	0.25	0	0	6.27	0	0	0	0	0	0	-25.65	-25.65
Inverter Transformer	MV1-8 T	364782	4905647	2	0	0	56.1	56.1	1	1695.04	3.25	0	75.58	0	0.28	0	0	6.43	0	0	0	0	0	0	-26.23	-26.23
Inverter Transformer	MV1-5 T	364676	4905892	2	0	0	56.1	56.1	1	1698.48	3.25	0	75.6	0	0.28	0	0	6.44	0	0	0	0	0	0	-26.26	-26.26
Inverter Transformer	MV1-15 T	365309	4904994	2	0	0	56.1	56.1	1	1731.67	3.25	0	75.77	0	0.29	0	0	6.5	0	0	0	0	0	0	-26.51	-26.51
Inverter Transformer	MV3-18 T	367757	4907412	2	0	0	56.1	56.1	1	1770.36	3.25	0	75.96	0	0.31	0	0	6.58	0	0	0	0	0	0	-26.79	-26.79
Inverter Transformer	MV3-12 T	367674	4907594	2	0	0	56.1	56.1	1	1814.22	3.25	0	76.17	0	0.33	0	0	6.67	0	0	0	0	0	0	-27.11	-27.11
Inverter Transformer	MV1-3 T	364435	4906039	2	0	0	56.1	56.1	1	1893.93	3.25	0	76.55	0	0.36	0	0	6.83	0	0	0	0	0	0	-27.68	-27.68
Inverter Transformer	MV1-9 T	364555	4905646	2	0	0	56.1	56.1	1	1900.23	3.25	0	76.58	0	0.36	0	0	6.85	0	0	0	0	0	0	-27.73	-27.73
Inverter Transformer	MV1-6 T	364482	4905835	2	0	0	56.1	56.1	1	1900.6	3.25	0	76.58	0	0.36	0	0	6.85	0	0	0	0	0	0	-27.73	-27.73
Inverter Transformer	MV1-11 T	364649	4905414	2	0	0	56.1	56.1	1	1925.34	3.25	0	76.69	0	0.37	0	0	6.9	0	0	0	0	0	0	-27.9	-27.9
Inverter Transformer	MV3-13 T	367958	4907577	2	0	0	56.1	56.1	1	2029.43	3.25	0	77.15	0	0.42	0	0	7.1	0	0	0	0	0	0	-28.61	-28.61
Inverter Transformer	MV3-7 T	367951	4907754	2	0	0	56.1	56.1	1	2129.75	3.25	0	77.57	0	0.46	0	0	7.3	0	0	0	0	0	0	-29.26	-29.26
Inverter Transformer	MV3-17 T	368183	4907472	2	0	0	56.1	56.1	1	2165.19	3.25	0	77.71	0	0.47	0	0	7.36	0	0	0	0	0	0	-29.49	-29.49
Inverter Transformer	MV3-3 T	367944	4907927	2	0	0	56.1	56.1	1	2236.91	3.25	0	77.99	0	0.5	0	0	7.5	0	0	0	0	0	0	-29.94	-29.94
Inverter Transformer	MV3-10 T	368162	4907669	2	0	0	56.1	56.1	1	2249.87	3.25	0	78.04	0	0.51	0	0	7.53	0	0	0	0	0	0	-30.02	-30.02
Inverter Transformer	MV3-19 T	368352	4907347	2	0	0	56.1	56.1	1	2260.38	3.25	0	78.08	0	0.51	0	0	7.55	0	0	0	0	0	0	-30.08	-30.08
Inverter Transformer	MV3-15 T	368351	4907477	2	0	0	56.1	56.1	1	2315.79	3.25	0	78.29	0	0.54	0	0	7.65	0	0	0	0	0	0	-30.42	-30.42
Inverter Transformer	MV3-21 T	368484	4907206	2	0	0	56.1	56.1	1	2330.21	3.25	0	78.35	0	0.54	0	0	7.68	0	0	0	0	0	0	-30.51	-30.51
Inverter Transformer	MV3-6 T	368156	4907834	2	0	0	56.1	56.1	1	2340.63	3.25	0	78.39	0	0.55	0	0	7.7	0	0	0	0	0	0	-30.57	-30.57
Inverter Transformer	MV3-11 T	368340	4907662	2	0	0	56.1	56.1	1	2396.37	3.25	0	78.59	0	0.57	0	0	7.8	0	0	0	0	0	0	-30.9	-30.9
Inverter Transformer	MV3-1 T	368150	4907976	2	0	0	56.1	56.1	1	2424.38	3.25	0	78.69	0	0.58	0	0	7.85	0	0	0	0	0	0	-31.07	-31.07
Inverter Transformer	MV3-16 T	368509	4907475	2	0	0	56.1	56.1	1	2456.6	3.25	0	78.81	0	0.6	0	0	7.91	0	0	0	0	0	0	-31.26	-31.26
Inverter Transformer	MV3-22 T	368661	4907142	2	0	0	56.1	56.1	1	2478.2	3.25	0	78.88	0	0.61	0	0	7.95	0	0	0	0	0	0	-31.38	-31.38
Inverter Transformer	MV3-5 T	368335	4907843	2	0	0	56.1	56.1	1	2490.81	3.25	0	78.93	0	0.61	0	0	7.97	0	0	0	0	0	0	-31.45	-31.45
Inverter Transformer	MV3-20 T	368683	4907317	2	0	0	56.1	56.1	1	2555.24	3.25	0	79.15	0	0.64	0	0	8.09	0	0	0	0	0	0	-31.82	-31.82
Inverter Transformer	MV3-9 T	368517	4907703	2	0	0	56.1	56.1	1	2569.64	3.25	0	79.2	0	0.65	0	0	8.12	0	0	0	0	0	0	-31.9	-31.9
Inverter Transformer	MV3-14 T	368678	4907498	2	0	0	56.1	56.1	1	2619.63	3.25	0	79.36	0	0.67	0	0	8.21	0	0	0	0	0	0	-32.18	-32.18

	Inverter Transformer	MV3-4 T	368507	4907925	2	0	0	56.1	56.1	1	2679.01	3.25	0	79.56	0	0.69	0	0	8.31	0	0	0	0	0	0	-32.51	-32.51
	Inverter Transformer	MV3-8 T	368685	4907712	2	0	0	56.1	56.1	1	2720.79	3.25	0	79.69	0	0.71	0	0	8.39	0	0	0	0	0	0	-32.73	-32.73
	Inverter Transformer	MV3-2 T	368677	4907928	2	0	0	56.1	56.1	1	2822.91	3.25	0	80.01	0	0.75	0	0	8.56	0	0	0	0	0	0	-33.27	-33.27
	Inverter Transformer	MV4-13 T	369057	4908605	2	0	0	56.1	56.1	1	3525.07	3.25	0	81.94	0	1.05	0	0	9.73	0	0	0	0	0	0	-36.66	-36.66
	Inverter Transformer	MV4-15 T	369170	4908481	2	0	0	56.1	56.1	1	3540.9	3.25	0	81.98	0	1.06	0	0	9.75	0	0	0	0	0	0	-36.73	-36.73
	Inverter Transformer	MV4-14 T	369182	4908507	2	0	0	56.1	56.1	1	3565.82	3.25	0	82.04	0	1.07	0	0	9.79	0	0	0	0	0	0	-36.84	-36.84
	Inverter Transformer	MV4-12 T	369049	4908803	2	0	0	56.1	56.1	1	3645	3.25	0	82.23	0	1.1	0	0	9.92	0	0	0	0	0	0	-37.19	-37.19
	Inverter Transformer	MV4-7 T	369040	4909001	2	0	0	56.1	56.1	1	3770.8	3.25	0	82.53	0	1.15	0	0	10.11	0	0	0	0	0	0	-37.73	-37.73
	Inverter Transformer	MV4-11 T	369269	4908855	2	0	0	56.1	56.1	1	3846.92	3.25	0	82.7	0	1.18	0	0	10.23	0	0	0	0	0	0	-38.05	-38.05
	Inverter Transformer	MV4-10 T	369307	4908858	2	0	0	56.1	56.1	1	3878.31	3.25	0	82.77	0	1.2	0	0	10.27	0	0	0	0	0	0	-38.18	-38.18
	Inverter Transformer	MV4-4 T	369033	4909199	2	0	0	56.1	56.1	1	3904.02	3.25	0	82.83	0	1.21	0	0	10.31	0	0	0	0	0	0	-38.29	-38.29
	Inverter Transformer	MV6-2 T	370091	4907339	2	0	0	56.1	56.1	1	3910.29	3.25	0	82.84	0	1.21	0	0	10.32	0	0	0	0	0	0	-38.31	-38.31
	Inverter Transformer	MV4-8 T	369262	4909001	2	0	0	56.1	56.1	1	3935.63	3.25	0	82.9	0	1.22	0	0	10.36	0	0	0	0	0	0	-38.42	-38.42
	Inverter Transformer	MV4-9 T	369284	4909001	2	0	0	56.1	56.1	1	3952.27	3.25	0	82.94	0	1.22	0	0	10.38	0	0	0	0	0	0	-38.49	-38.49
	Inverter Transformer	MV6-3 T	370202	4907140	2	0	0	56.1	56.1	1	3977.53	3.25	0	82.99	0	1.23	0	0	10.42	0	0	0	0	0	0	-38.59	-38.59
	Inverter Transformer	MV4-1 T	369017	4909397	2	0	0	56.1	56.1	1	4036.47	3.25	0	83.12	0	1.26	0	0	10.51	0	0	0	0	0	0	-38.83	-38.83
	Inverter Transformer	MV4-6 T	369249	4909192	2	0	0	56.1	56.1	1	4053.9	3.25	0	83.16	0	1.27	0	0	10.53	0	0	0	0	0	0	-38.9	-38.9
	Inverter Transformer	MV4-5 T	369283	4909199	2	0	0	56.1	56.1	1	4083.54	3.25	0	83.22	0	1.28	0	0	10.58	0	0	0	0	0	0	-39.02	-39.02
	Inverter Transformer	MV4-3 T	369234	4909397	2	0	0	56.1	56.1	1	4186.13	3.25	0	83.44	0	1.32	0	0	10.73	0	0	0	0	0	0	-39.42	-39.42
	Inverter Transformer	MV4-2 T	369267	4909397	2	0	0	56.1	56.1	1	4209.41	3.25	0	83.48	0	1.33	0	0	10.76	0	0	0	0	0	0	-39.52	-39.52
	Inverter Transformer	MV5-6 T	369987	4908507	2	0	0	56.1	56.1	1	4244.9	3.25	0	83.56	0	1.34	0	0	10.81	0	0	0	0	0	0	-39.65	-39.65
	Inverter Transformer	MV5-5 T	370021	4908690	2	0	0	56.1	56.1	1	4366.78	3.25	0	83.8	0	1.39	0	0	10.99	0	0	0	0	0	0	-40.12	-40.12
	Inverter Transformer	MV5-2 T	370011	4908853	2	0	0	56.1	56.1	1	4445.28	3.25	0	83.96	0	1.42	0	0	11.1	0	0	0	0	0	0	-40.42	-40.42
	Inverter Transformer	MV5-1 T	370015	4909142	2	0	0	56.1	56.1	1	4612.97	3.25	0	84.28	0	1.48	0	0	11.33	0	0	0	0	0	0	-41.04	-41.04
	Inverter Transformer	MV5-3 T	370237	4908851	2	0	0	56.1	56.1	1	4635.05	3.25	0	84.32	0	1.49	0	0	11.36	0	0	0	0	0	0	-41.12	-41.12
	Inverter Transformer	MV5-4 T	370330	4908707	2	0	0	56.1	56.1	1	4641.92	3.25	0	84.33	0	1.49	0	0	11.37	0	0	0	0	0	0	-41.14	-41.14
	Line Reactor	NGR	369421	4908787.5	5	0	0	45.4	45.4	1	3924.73	5.25	0	82.88	0	3.29	1.34	0.09	1.61	0	0	0	0	0	0	-43.75	-43.75
Limit. Valu	0	0																								
Level D/N:	31.3892	31.3892																								

Receiver: Vacant Lot Receptor
ID: S-VLR15
X: 367554
Y: 4908128
Z: 4.5
Ground: 0

ISO	Description	ID	X	Y	Z	Ground	ReflOrd	LxT	LxN	L/A	Dist.	hm	Freq	Adiv	K0b	Agr	Abar	z	Aatm	Afol	Ahous	Cmet	CmetN	Dc	RL	LtotT	LtotN
	Inverter	MV3-3	367939	4907927	2	0	0	100.3	100.3	1	434.32	3.25	0	63.76	0	-0.6	0	0	7.96	0	0	0	0	0	0	29.19	29.19
	Sol_Luce Substation	S_Substation	369426	4908792	3.5	0	0	112.1	112.1	1	1986.27	5.25	0	76.96	0	0.01	3.77	0.31	4.34	0	0	0	0	0	0	26.99	26.99
	Inverter	MV3-7	367945	4907754	2	0	0	100.3	100.3	1	541.08	3.25	0	65.67	0	-0.52	0	0	8.83	0	0	0	0	0	0	26.34	26.34
	Inverter	MV3-12	367668	4907594	2	0	0	100.3	100.3	1	546.04	3.25	0	65.74	0	-0.52	0	0	8.86	0	0	0	0	0	0	26.22	26.22
	Inverter	MV3-6	368162	4907834	2	0	0	100.3	100.3	1	675.36	3.25	0	67.59	0	-0.43	0	0	9.62	0	0	0	0	0	0	23.53	23.53
	Inverter	MV3-13	367963	4907577	2	0	0	100.3	100.3	1	686.21	3.25	0	67.73	0	-0.42	0	0	9.67	0	0	0	0	0	0	23.33	23.33
	Inverter	MV3-18	367752	4907412	2	0	0	100.3	100.3	1	742.88	3.25	0	68.42	0	-0.38	0	0	9.94	0	0	0	0	0	0	22.34	22.34
	Inverter	MV3-10	368167	4907669	2	0	0	100.3	100.3	1	765.8	3.25	0	68.68	0	-0.37	0	0	10.04	0	0	0	0	0	0	21.96	21.96
	Inverter	MV3-17	368178	4907472	2	0	0	100.3	100.3	1	905.38	3.25	0	70.14	0	-0.29	0	0	10.58	0	0	0	0	0	0	19.88	19.88
	Inverter	MV3-11	368346	4907662	2	0	0	100.3	100.3	1	918.93	3.25	0	70.27	0	-0.29	0	0	10.63	0	0	0	0	0	0	19.7	19.7
	Inverter	MV3-15	368357	4907477	2	0	0	100.3	100.3	1	1033.74	3.25	0	71.29	0	-0.23	0	0	11.02	0	0	0	0	0	0	18.23	18.23
	Inverter	MV3-9	368512	4907703	2	0	0	100.3	100.3	1	1048.04	3.25	0	71.41	0	-0.22	0	0	11.07	0	0	0	0	0	0	18.06	18.06
	Inverter	MV3-19	368357	4907347	2	0	0	100.3	100.3	1	1120.17	3.25	0	71.99	0	-0.19	0	0	11.29	0	0	0	0	0	0	17.23	17.23
	Inverter	MV3-16	368514	4907475	2	0	0	100.3	100.3	1	1161.04	3.25	0	72.3	0	-0.17	0	0	11.41	0	0	0	0	0	0	16.77	16.77
	Inverter	MV3-8	368680	4907712	2	0	0	100.3	100.3	1	1200.39	3.25	0	72.59	0	-0.15	0	0	11.53	0	0	0	0	0	0	16.35	16.35
	Inverter	MV3-14	368684	4907498	2	0	0	100.3	100.3	1	1293.76	3.25	0	73.24	0	-0.11	0	0	11.79	0	0	0	0	0	0	15.4	15.4
	Inverter	MV3-21	368478	4907206	2	0	0	100.3	100.3	1	1305.32	3.25	0	73.31	0	-0.11	0	0	11.82	0	0	0	0	0	0	15.29	15.29
	Inverter	MV3-20	368689	4907317	2	0	0	100.3	100.3	1	1394.97	3.25	0	73.89	0	-0.07	0	0	12.06	0	0	0	0	0	0	14.44	14.44
	Inverter	MV4-7	369035	4909001	2	0	0	100.3	100.3	1	1719.16	3.25	0	75.71	0	0.04	0	0	12.85	0	0	0	0	0	0	11.72	11.72
	Inverter	MV4-4	369027	4909199	2	0	0	100.3	100.3	1	1821.2	3.25	0	76.21	0	0.08	0	0	13.08	0	0	0	0	0	0	10.95	10.95
	Inverter	MV4-11	369264	4908855	2	0	0	100.3	100.3	1	1858.13	3.25	0	76.38	0	0.09	0	0	13.16	0	0	0	0	0	0	10.69	10.69
	Inverter	MV4-10	369312	4908858	2	0	0	100.3	100.3	1	1903.54	3.25	0	76.59	0	0.1	0	0	13.26	0	0	0	0	0	0	10.36	10.36
	Inverter	MV4-8	369256	4909001	2	0	0	100.3	100.3	1	1912.84	3.25	0	76.63	0	0.1	0	0	13.28	0	0	0	0	0	0	10.3	10.3
	Inverter	MV4-1	369011	4909397	2	0	0	100.3	100.3	1	1932.15	3.25	0	76.72	0	0.11	0	0	13.32	0	0	0	0	0	0	10.16	10.16
	Inverter	MV4-9	369289	4909001	2	0	0	100.3	100.3	1	1942.26	3.25	0	76.77	0	0.11	0	0	13.34	0	0	0	0	0	0	10.09	10.09
	Inverter	MV4-6	369243	4909192	2	0	0	100.3	100.3	1	1996.2	3.25	0	77	0	0.13	0	0	13.45	0	0	0	0	0	0	9.73	9.73
	Inverter	MV4-5	369289	4909199	2	0	0	100.3	100.3	1	2038.94	3.25	0	77.19	0	0.14	0	0	13.54	0	0	0	0	0	0	9.44	9.44
	Inverter	MV4-3	369229	4909397	2	0	0	100.3	100.3	1	2101.43	3.25	0	77.45	0	0.16	0	0	13.67	0	0	0	0	0	0	9.03	9.03
	Inverter	MV4-2	369272	4909397	2	0	0	100.3	100.3	1	2135.86	3.25	0	77.59	0	0.17	0	0	13.74	0	0	0	0	0	0	8.81	8.81
	Inverter	MV3-1	368156	4907976	2	0	0	89.1	89.1	1	620.9	3.25	0	66.86	0	0.58	0	0	5.51	0	0	0	0	0	0	16.11	16.11
	Inverter	MV2-3	365820	4906641	2	0	0	100.3	100.3	1	2284.28	3.25	0	78.17	0	0.21	0	0	14.04	0	0	0	0	0	0	7.89	7.89
	Inverter	MV2-4	365586	4906624	2	0	0	100.3	100.3	1	2476.9	3.25	0	78.88	0	0.25	0	0	14.41	0	0	0	0	0	0	6.77	6.77
	Inverter	MV5-5	370015	4908690	2	0	0	100.3	100.3	1	2524.36	3.25	0	79.04	0	0.26	0	0	14.5	0	0	0	0	0	0	6.5	6.5
	Inverter	MV5-2	370006	4908853	2	0	0	100.3	100.3	1	2556.94	3.25	0	79.15	0	0.27	0	0	14.57	0	0	0	0	0	0	6.32	6.32
	Inverter	MV6-2	370085	4907339	2	0	0	100.3	100.3	1	2651.13	3.25	0	79.47	0	0.29	0	0	14.74	0	0	0	0	0	0	5.81	5.81
	Inverter	MV5-1	370020	4909142	2	0	0	100.3	100.3	1	2666.34	3.25	0	79.52	0	0.29	0	0	14.77	0	0	0	0	0	0	5.73	5.73

Inverter	MV5-3	370231	4908851	2	0	0	100.3	100.3	1	2772.92	3.25	0	79.86	0	0.32	0	0	14.97	0	0	0	0	0	0	5.17	5.17
Inverter	MV5-4	370324	4908707	2	0	0	100.3	100.3	1	2829.87	3.25	0	80.04	0	0.33	0	0	15.07	0	0	0	0	0	0	4.88	4.88
Inverter	MV6-3	370207	4907140	2	0	0	100.3	100.3	1	2831	3.25	0	80.04	0	0.33	0	0	15.07	0	0	0	0	0	0	4.87	4.87
DSTATCOM - 10 MVAR #2	DSAT2	369403	4908757	2.5	0	0	96.6	96.6	1	1953.06	3.5	0	76.81	0	3.21	0	0	1.69	0	0	0	0	0	0	14.91	14.91
DSTATCOM - 10 MVAR #1	DSAT1	369437	4908757	2.5	0	0	96.6	96.6	1	1985.28	3.5	0	76.96	0	3.22	0	0	1.71	0	0	0	0	0	0	14.75	14.75
Inverter	MV2-1	365842	4906816	2	0	0	97.3	97.3	1	2156.92	3.25	0	77.68	0	0.17	0	0	13.79	0	0	0	0	0	0	5.68	5.68
Inverter	MV3-5	368340	4907843	2	0	0	89.1	89.1	1	836.08	3.25	0	69.44	0	0.65	0	0	6	0	0	0	0	0	0	12.97	12.97
Inverter	MV1-1	364715	4906166	2	0	0	100.3	100.3	1	3451	3.25	0	81.76	0	0.44	0	0	16.15	0	0	0	0	0	0	1.96	1.96
Inverter	MV1-2	364753	4906063	2	0	0	100.3	100.3	1	3479.92	3.25	0	81.83	0	0.45	0	0	16.2	0	0	0	0	0	0	1.84	1.84
Inverter	MV1-4	364815	4905918	2	0	0	100.3	100.3	1	3519.41	3.25	0	81.93	0	0.45	0	0	16.26	0	0	0	0	0	0	1.66	1.66
Inverter	MV3-4	368502	4907925	2	0	0	89.1	89.1	1	969.49	3.25	0	70.73	0	0.68	0	0	6.26	0	0	0	0	0	0	11.39	11.39
Inverter	MV1-5	364671	4905892	2	0	0	100.3	100.3	1	3648.48	3.25	0	82.24	0	0.47	0	0	16.48	0	0	0	0	0	0	1.12	1.12
Inverter	MV1-8	364788	4905647	2	0	0	100.3	100.3	1	3715.66	3.25	0	82.4	0	0.49	0	0	16.59	0	0	0	0	0	0	0.84	0.84
Inverter	MV1-12	365038	4905386	2	0	0	100.3	100.3	1	3721.4	3.25	0	82.41	0	0.49	0	0	16.6	0	0	0	0	0	0	0.81	0.81
Inverter	MV1-6	364477	4905835	2	0	0	100.3	100.3	1	3837.42	3.25	0	82.68	0	0.5	0	0	16.79	0	0	0	0	0	0	0.34	0.34
Inverter	MV1-15	365315	4904994	2	0	0	100.3	100.3	1	3851.63	3.25	0	82.71	0	0.51	0	0	16.81	0	0	0	0	0	0	0.28	0.28
Inverter	MV1-9	364561	4905646	2	0	0	100.3	100.3	1	3888.24	3.25	0	82.8	0	0.51	0	0	16.87	0	0	0	0	0	0	0.14	0.14
Inverter	MV6-1	370235	4907364	2	0	0	97.3	97.3	1	2787.73	3.25	0	79.91	0	0.32	0	0	14.99	0	0	0	0	0	0	2.1	2.1
Inverter	MV1-11	364655	4905414	2	0	0	100.3	100.3	1	3971.15	3.25	0	82.98	0	0.52	0	0	17	0	0	0	0	0	0	-0.19	-0.19
Inverter	MV3-2	368671	4907928	2	0	0	89.1	89.1	1	1134.77	3.25	0	72.1	0	0.71	0	0	6.56	0	0	0	0	0	0	9.68	9.68
Inverter	MV1-7	364925	4905782	2	0	0	97.3	97.3	1	3523.54	3.25	0	81.94	0	0.45	0	0	16.27	0	0	0	0	0	0	-1.35	-1.35
Inverter	MV1-10	365004	4905564	2	0	0	97.3	97.3	1	3616.16	3.25	0	82.16	0	0.47	0	0	16.42	0	0	0	0	0	0	-1.75	-1.75
Inverter	MV3-22	368656	4907142	2	0	0	89.1	89.1	1	1478.72	3.25	0	74.4	0	0.79	0	0	7.17	0	0	0	0	0	0	6.7	6.7
Inverter	MV1-14	365163	4905049	2	0	0	97.3	97.3	1	3898.35	3.25	0	82.82	0	0.51	0	0	16.89	0	0	0	0	0	0	-2.9	-2.9
Inverter	MV1-13	364731	4905241	2	0	0	97.3	97.3	1	4037.83	3.25	0	83.12	0	0.53	0	0	17.11	0	0	0	0	0	0	-3.45	-3.45
Inverter	MV4-13	369051	4908605	2	0	0	89.1	89.1	1	1571.16	3.25	0	74.92	0	0.81	0	0	7.33	0	0	0	0	0	0	6	6
Inverter	MV4-12	369043	4908803	2	0	0	89.1	89.1	1	1634.86	3.25	0	75.27	0	0.82	0	0	7.44	0	0	0	0	0	0	5.53	5.53
Inverter	MV4-15	369176	4908481	2	0	0	89.1	89.1	1	1659.97	3.25	0	75.4	0	0.83	0	0	7.48	0	0	0	0	0	0	5.35	5.35
Inverter	MV4-14	369176	4908507	2	0	0	89.1	89.1	1	1665.69	3.25	0	75.43	0	0.83	0	0	7.49	0	0	0	0	0	0	5.31	5.31
Fixed Reactor Bank 1	FRB1	369378	4908755	6	0	0	89.8	89.8	1	1928.76	5.25	0	76.71	0	-1	0	0	4.24	0	0	0	0	0	0	9.83	9.83
Fixed Reactor Bank 2	FRB2	369464	4908755	6	0	0	89.8	89.8	1	2010.28	5.25	0	77.07	0	-0.99	0	0	4.38	0	0	0	0	0	0	9.32	9.32
SubstationTransformer	W_ST	369711.17	4906112.3	2.5	0	0	92	92	1	2952.38	4.25	0	80.4	0	1.02	2.91	0.21	5.89	0	0	0	0	0	0	1.76	1.76
Inverter	MV2-2	365977	4906654	2	0	0	89.1	89.1	1	2158.61	3.25	0	77.68	0	0.94	0	0	8.3	0	0	0	0	0	0	2.13	2.13
Inverter	MV5-6	369982	4908507	2	0	0	89.1	89.1	1	2457.4	3.25	0	78.81	0	1.02	0	0	8.78	0	0	0	0	0	0	0.45	0.45
Westbrook Inverter Enclosur	W_INV2	369374	4906388	2	0	0	89.1	89.1	1	2517.94	3.25	0	79.02	0	1.03	0	0	8.87	0	0	0	0	0	0	0.13	0.13
Westbrook Inverter Enclosur	W_INV5	369719	4906574	2	0	0	89.1	89.1	1	2664.99	3.25	0	79.51	0	1.07	0	0	9.1	0	0	0	0	0	0	-0.62	-0.62
Westbrook Inverter Enclosur	W_INV3	369508	4906164	2	0	0	89.1	89.1	1	2770.45	3.25	0	79.85	0	1.09	0	0	9.27	0	0	0	0	0	0	-1.15	-1.15
Westbrook Inverter Enclosur	W_INV6	369875	4906578	2	0	0	89.1	89.1	1	2790.98	3.25	0	79.92	0	1.1	0	0	9.3	0	0	0	0	0	0	-1.25	-1.25
Westbrook Inverter Enclosur	W_INV7	369780	4906417	2	0	0	89.1	89.1	1	2807.6	3.25	0	79.97	0	1.1	0	0	9.32	0	0	0	0	0	0	-1.33	-1.33
Westbrook Inverter Enclosur	W_INV4	369673	4906164	2	0	0	89.1	89.1	1	2889.2	3.25	0	80.22	0	1.12	0	0	9.45	0	0	0	0	0	0	-1.73	-1.73
Westbrook Inverter Enclosur	W_INV1	369409	4906578	2	0	0	86.1	86.1	1	2417.34	3.25	0	78.67	0	1.01	0	0	8.72	0	0	0	0	0	0	-2.33	-2.33
Inverter	MV1-3	364440	4906039	2	0	0	89.1	89.1	1	3749.79	3.25	0	82.48	0	1.33	0	0	10.73	0	0	0	0	0	0	-5.48	-5.48
Gardiner Substation	G_Sub	366586.3	4903349.9	2.5	0	0	90.8	90.8	1	4875.11	4.25	0	84.76	0	1.62	2.42	0.39	8.47	0	0	0	0	0	0	-6.5	-6.5
Inverter	MV6-4	370250	4906966	2	0	0	86.1	86.1	1	2935.76	3.25	0	80.35	0	1.13	0	0	9.52	0	0	0	0	0	0	-4.95	-4.95
Inverters	G_Inv2	366676.9	4903239.1	2	0	0	87.7	87.7	1	4966.96	3.25	0	84.92	0	2.86	0	0	5.91	0	0	0	0	0	0	-6.03	-6.03
Inverters	G_Inv1	366526.4	4903225.8	2	0	0	87.7	87.7	1	5008.75	3.25	0	84.99	0	2.87	0	0	5.95	0	0	0	0	0	0	-6.15	-6.15
Inverters	G_Inv4	366732.8	4903105	2	0	0	87.7	87.7	1	5089.69	3.25	0	85.13	0	2.87	0	0	6.03	0	0	0	0	0	0	-6.38	-6.38
Inverters	G_Inv3	366583.7	4903091.4	2	0	0	87.7	87.7	1	5129.21	3.25	0	85.2	0	2.87	0	0	6.08	0	0	0	0	0	0	-6.49	-6.49
Inverters	G_Inv6	366788.5	4902972	2	0	0	87.7	87.7	1	5212.52	3.25	0	85.34	0	2.88	0	0	6.16	0	0	0	0	0	0	-6.72	-6.72
Inverters	G_Inv5	366638.5	4902958.1	2	0	0	87.7	87.7	1	5250.33	3.25	0	85.4	0	2.88	0	0	6.2	0	0	0	0	0	0	-6.83	-6.83
Inverters	G_Inv8	366844.5	4902838.5	2	0	0	87.7	87.7	1	5336.87	3.25	0	85.55	0	2.88	0	0	6.29	0	0	0	0	0	0	-7.06	-7.06
Inverters	G_Inv7	366694.6	4902824.7	2	0	0	87.7	87.7	1	5372.48	3.25	0	85.6	0	2.89	0	0	6.33	0	0	0	0	0	0	-7.16	-7.16
Inverters	G_Inv10	366900.7	4902704.8	2	0	0	87.7	87.7	1	5462.41	3.25	0	85.75	0	2.89	0	0	6.42	0	0	0	0	0	0	-7.4	-7.4
Inverters	G_Inv9	366750.9	4902691.8	2	0	0	87.7	87.7	1	5495.2	3.25	0	85.8	0	2.89	0	0	6.46	0	0	0	0	0	0	-7.49	-7.49
Westbrook Inverter Transfor	W_INVTR1	369403	4906578	2	0	0	78.2	78.2	1	2412.74	3.25	0	78.65	0	-2.54	0	0	1.4	0	0	0	0	0	0	0.73	0.73
Westbrook Inverter Transfor	W_INVTR2	369368	4906388	2	0	0	77.3	77.3	1	2513.6	3.25	0	79.01	0	-2.57	0	0	1.45	0	0	0	0	0	0	-0.54	-0.54
Westbrook Inverter Transfor	W_INVTR5	369725	4906574	2	0	0	77.3	77.3	1	2669.86	3.25	0	79.53	0	-2.62	0	0	1.51	0	0	0	0	0	0	-1.08	-1.08
Westbrook Inverter Transfor	W_INVTR3	369514	4906164	2	0	0	77.3	77.3	1	2774.69	3.25	0	79.86	0	-2.65	0	0	1.56	0	0	0	0	0	0	-1.43	-1.43
Westbrook Inverter Transfor	W_INVTR6	369881	4906578	2	0	0	77.3	77.3	1	2795.97	3.25	0	79.93	0	-2.66	0	0	1.57	0	0	0	0	0	0	-1.5	-1.5
Westbrook Inverter Transfor	W_INVTR7	369786	4906417	2	0	0	77.3	77.3	1	2812.36	3.25	0	79.98	0	-2.66	0	0	1.58	0	0	0	0	0	0	-1.55	-1.55
Westbrook Inverter Transfor	W_INVTR4	369679	4906164	2	0	0	77.3	77.3	1	2893.6	3.25	0	80.23	0	-2.69	0	0	1.61	0	0	0	0	0	0	-1.81	-1.81
Inverter Transformer	MV3-3 T	367944	4907927	2	0	0	56.1	56.1	1	438.76	3.25	0	63.84	0	-0.12	0	0	3.35	0	0	0	0	0	0	-11.01	-11.01
Inverter Transformer	MV2-1 T	365836	4906816	2	0	0	69.4	69.4	1	2161.68	3.25	0	77.7	0	2.23	0	0	5.12	0	0	0	0	0	0	-15.7	-15.7
Inverter Transformer	MV3-7 T	367951	4907754	2	0	0	56.1	56.1	1	545.43	3.25	0	65.73	0	-0.11	0	0	3.69	0	0	0	0	0	0	-13.26	-13.26
Inverter Transformer	MV3-12 T	367674	4907594	2	0	0	56.1	56.1	1	547.32	3.25	0	65.76	0	-0.11	0	0	3.7	0	0	0	0	0	0	-13.29	-13.29
Inverter Transformer	MV6-1 T	370230	4907364	2	0	0	69.4	69.4	1	2782.93	3.25	0	79.89	0	2.44	0	0	5.7	0	0	0	0	0	0	-18.68	-18.68
Inverter Transformer	MV3-1 T	368150	4907976	2	0	0	56.1	56.1	1	615.08	3.25	0	66.78	0	-0.1	0	0	3.9	0	0	0	0	0	0	-14.52	-14.52
Inverter Transformer	MV6-4 T	370244	4906966	2	0	0	69.4	69.4	1	2930.25	3.25	0	80.34	0	2.49	0	0	5.82	0	0	0	0	0	0	-19.3	-19.3
Inverter Transformer	MV3-6 T	368156	4907834	2	0	0	56.1	56.1	1	669.96	3.25	0	67.52	0	-0.09	0	0	4.05	0	0	0	0	0	0	-15.43	-15.43
Inverter Transformer	MV3-13 T	367958	4907577	2	0	0	56.1	56.1	1	683.24	3.25	0	67.69	0	-0.09	0	0	4.09	0	0	0	0	0	0	-15.64	-15.64
Inverter Transformer	MV3-18 T	367757	4907412	2	0	0	56.1	56.1	1	744.23	3.25	0	68.43	0	-0.07	0	0	4.25	0	0	0	0	0	0	-16.56	-16.56
Inverter Transformer	MV3-10 T	368162	4907669	2	0	0	56.1	56.1	1	761.81	3.25	0	68.64	0	-0.06	0	0	4.3	0	0	0	0	0	0	-16.81	-16.81
Inverter Transformer	MV1-7 T	364919	4905782	2	0	0	69.4	69.4	1	3528.02	3.25	0	81.95	0	2.66	0	0	6.31	0	0	0	0	0	0	-21.58	-21.58
Inverter Transformer	MV1-10 T	365010	4905564	2	0	0	69.4	69.4	1	3611.93	3.25	0	82.15	0	2.68	0	0	6.38	0	0	0	0	0	0	-21.87	-21.87

	Inverter Transformer	MV3-5 T	368335	4907843	2	0	0	56.1	56.1	1	831.38	3.25	0	69.4	0	-0.04	0	0	4.48	0	0	0	0	0	0	-17.77	-17.77
	Inverter Transformer	MV1-14 T	365157	4905049	2	0	0	69.4	69.4	1	3902.03	3.25	0	82.83	0	2.76	0	0	6.6	0	0	0	0	0	0	-22.84	-22.84
	Inverter Transformer	MV1-13 T	364725	4905241	2	0	0	69.4	69.4	1	4042.03	3.25	0	83.13	0	2.8	0	0	6.71	0	0	0	0	0	0	-23.29	-23.29
	Inverter Transformer	MV3-17 T	368183	4907472	2	0	0	56.1	56.1	1	908.84	3.25	0	70.17	0	-0.02	0	0	4.67	0	0	0	0	0	0	-18.76	-18.76
	Inverter Transformer	MV3-11 T	368340	4907662	2	0	0	56.1	56.1	1	913.76	3.25	0	70.22	0	-0.02	0	0	4.68	0	0	0	0	0	0	-18.82	-18.82
	Inverter Transformer	MV3-4 T	368507	4907925	2	0	0	56.1	56.1	1	974.38	3.25	0	70.77	0	0	0	0	4.83	0	0	0	0	0	0	-19.55	-19.55
	Inverter Transformer	MV3-15 T	368351	4907477	2	0	0	56.1	56.1	1	1029.09	3.25	0	71.25	0	0.02	0	0	4.96	0	0	0	0	0	0	-20.17	-20.17
	Inverter Transformer	MV3-9 T	368517	4907703	2	0	0	56.1	56.1	1	1052.62	3.25	0	71.45	0	0.03	0	0	5.01	0	0	0	0	0	0	-20.43	-20.43
	Inverter Transformer	MV3-19 T	368352	4907347	2	0	0	56.1	56.1	1	1116.59	3.25	0	71.96	0	0.05	0	0	5.16	0	0	0	0	0	0	-21.12	-21.12
	Inverter Transformer	MV3-2 T	368677	4907928	2	0	0	56.1	56.1	1	1140.67	3.25	0	72.14	0	0.06	0	0	5.22	0	0	0	0	0	0	-21.37	-21.37
	Inverter Transformer	MV3-16 T	368509	4907475	2	0	0	56.1	56.1	1	1156.91	3.25	0	72.27	0	0.07	0	0	5.26	0	0	0	0	0	0	-21.53	-21.53
	Inverter Transformer	MV3-8 T	368685	4907712	2	0	0	56.1	56.1	1	1205.08	3.25	0	72.62	0	0.09	0	0	5.37	0	0	0	0	0	0	-22.01	-22.01
	Inverter Transformer	MV3-14 T	368678	4907498	2	0	0	56.1	56.1	1	1288.52	3.25	0	73.2	0	0.12	0	0	5.56	0	0	0	0	0	0	-22.82	-22.82
	Inverter Transformer	MV3-21 T	368484	4907206	2	0	0	56.1	56.1	1	1309.58	3.25	0	73.34	0	0.12	0	0	5.6	0	0	0	0	0	0	-23.01	-23.01
	Inverter Transformer	MV3-20 T	368683	4907317	2	0	0	56.1	56.1	1	1390.1	3.25	0	73.86	0	0.16	0	0	5.78	0	0	0	0	0	0	-23.74	-23.74
	Inverter Transformer	MV3-22 T	368661	4907142	2	0	0	56.1	56.1	1	1482.45	3.25	0	74.42	0	0.19	0	0	5.98	0	0	0	0	0	0	-24.53	-24.53
	Inverter Transformer	MV4-13 T	369057	4908605	2	0	0	56.1	56.1	1	1576.88	3.25	0	74.96	0	0.23	0	0	6.18	0	0	0	0	0	0	-25.31	-25.31
	Inverter Transformer	MV4-12 T	369049	4908803	2	0	0	56.1	56.1	1	1640.32	3.25	0	75.3	0	0.26	0	0	6.31	0	0	0	0	0	0	-25.81	-25.81
	Inverter Transformer	MV4-15 T	369170	4908481	2	0	0	56.1	56.1	1	1654.11	3.25	0	75.37	0	0.26	0	0	6.34	0	0	0	0	0	0	-25.92	-25.92
	Inverter Transformer	MV4-14 T	369182	4908507	2	0	0	56.1	56.1	1	1671.54	3.25	0	75.46	0	0.27	0	0	6.38	0	0	0	0	0	0	-26.05	-26.05
	Inverter Transformer	MV4-7 T	369040	4909001	2	0	0	56.1	56.1	1	1723.46	3.25	0	75.73	0	0.29	0	0	6.49	0	0	0	0	0	0	-26.45	-26.45
	Inverter Transformer	MV4-4 T	369033	4909199	2	0	0	56.1	56.1	1	1826.06	3.25	0	76.23	0	0.33	0	0	6.7	0	0	0	0	0	0	-27.2	-27.2
	Inverter Transformer	MV4-11 T	369269	4908855	2	0	0	56.1	56.1	1	1862.73	3.25	0	76.4	0	0.35	0	0	6.77	0	0	0	0	0	0	-27.46	-27.46
	Inverter Transformer	MV4-10 T	369307	4908858	2	0	0	56.1	56.1	1	1898.92	3.25	0	76.57	0	0.36	0	0	6.84	0	0	0	0	0	0	-27.72	-27.72
	Inverter Transformer	MV4-8 T	369262	4909001	2	0	0	56.1	56.1	1	1918.18	3.25	0	76.66	0	0.37	0	0	6.88	0	0	0	0	0	0	-27.85	-27.85
	Inverter Transformer	MV4-1 T	369017	4909397	2	0	0	56.1	56.1	1	1936.68	3.25	0	76.74	0	0.38	0	0	6.92	0	0	0	0	0	0	-27.98	-27.98
	Inverter Transformer	MV4-9 T	369284	4909001	2	0	0	56.1	56.1	1	1937.79	3.25	0	76.75	0	0.38	0	0	6.92	0	0	0	0	0	0	-27.99	-27.99
	Inverter Transformer	MV4-6 T	369249	4909192	2	0	0	56.1	56.1	1	2001.28	3.25	0	77.03	0	0.4	0	0	7.05	0	0	0	0	0	0	-28.42	-28.42
	Inverter Transformer	MV4-5 T	369283	4909199	2	0	0	56.1	56.1	1	2033.84	3.25	0	77.17	0	0.42	0	0	7.11	0	0	0	0	0	0	-28.64	-28.64
	Inverter Transformer	MV4-3 T	369234	4909397	2	0	0	56.1	56.1	1	2105.41	3.25	0	77.47	0	0.45	0	0	7.25	0	0	0	0	0	0	-29.11	-29.11
	Inverter Transformer	MV4-2 T	369267	4909397	2	0	0	56.1	56.1	1	2131.84	3.25	0	77.58	0	0.46	0	0	7.3	0	0	0	0	0	0	-29.28	-29.28
	Inverter Transformer	MV2-2 T	365982	4906654	2	0	0	56.1	56.1	1	2154.96	3.25	0	77.67	0	0.47	0	0	7.34	0	0	0	0	0	0	-29.42	-29.42
	Inverter Transformer	MV2-3 T	365814	4906641	2	0	0	56.1	56.1	1	2288.84	3.25	0	78.19	0	0.53	0	0	7.6	0	0	0	0	0	0	-30.26	-30.26
	Inverter Transformer	MV5-6 T	369987	4908507	2	0	0	56.1	56.1	1	2462.34	3.25	0	78.83	0	0.6	0	0	7.92	0	0	0	0	0	0	-31.29	-31.29
	Inverter Transformer	MV2-4 T	365590	4906628	2	0	0	56.1	56.1	1	2471.3	3.25	0	78.86	0	0.6	0	0	7.94	0	0	0	0	0	0	-31.34	-31.34
	Inverter Transformer	MV5-5 T	370021	4908690	2	0	0	56.1	56.1	1	2530.21	3.25	0	79.06	0	0.63	0	0	8.04	0	0	0	0	0	0	-31.68	-31.68
	Inverter Transformer	MV5-2 T	370011	4908853	2	0	0	56.1	56.1	1	2561.73	3.25	0	79.17	0	0.64	0	0	8.1	0	0	0	0	0	0	-31.86	-31.86
	Inverter Transformer	MV6-2 T	370091	4907339	2	0	0	56.1	56.1	1	2656.86	3.25	0	79.49	0	0.68	0	0	8.27	0	0	0	0	0	0	-32.38	-32.38
	Inverter Transformer	MV5-1 T	370015	4909142	2	0	0	56.1	56.1	1	2661.71	3.25	0	79.5	0	0.69	0	0	8.28	0	0	0	0	0	0	-32.41	-32.41
	Inverter Transformer	MV5-3 T	370237	4908851	2	0	0	56.1	56.1	1	2778.71	3.25	0	79.88	0	0.74	0	0	8.49	0	0	0	0	0	0	-33.04	-33.04
	Inverter Transformer	MV6-3 T	370202	4907140	2	0	0	56.1	56.1	1	2826.31	3.25	0	80.02	0	0.76	0	0	8.57	0	0	0	0	0	0	-33.29	-33.29
	Inverter Transformer	MV5-4 T	370330	4908707	2	0	0	56.1	56.1	1	2835.74	3.25	0	80.05	0	0.76	0	0	8.59	0	0	0	0	0	0	-33.34	-33.34
	Inverter Transformer	MV1-1 T	364721	4906166	2	0	0	56.1	56.1	1	3446.06	3.25	0	81.75	0	1.02	0	0	9.6	0	0	0	0	0	0	-36.31	-36.31
	Inverter Transformer	MV1-2 T	364759	4906063	2	0	0	56.1	56.1	1	3475.09	3.25	0	81.82	0	1.03	0	0	9.65	0	0	0	0	0	0	-36.44	-36.44
	Inverter Transformer	MV1-4 T	364821	4905918	2	0	0	56.1	56.1	1	3514.74	3.25	0	81.92	0	1.05	0	0	9.71	0	0	0	0	0	0	-36.62	-36.62
	Inverter Transformer	MV1-5 T	364676	4905892	2	0	0	56.1	56.1	1	3644.53	3.25	0	82.23	0	1.1	0	0	9.91	0	0	0	0	0	0	-37.19	-37.19
	Inverter Transformer	MV1-12 T	365044	4905386	2	0	0	56.1	56.1	1	3717.35	3.25	0	82.4	0	1.13	0	0	10.03	0	0	0	0	0	0	-37.5	-37.5
	Inverter Transformer	MV1-8 T	364782	4905647	2	0	0	56.1	56.1	1	3720.13	3.25	0	82.41	0	1.13	0	0	10.03	0	0	0	0	0	0	-37.52	-37.52
	Inverter Transformer	MV1-3 T	364435	4906039	2	0	0	56.1	56.1	1	3753.94	3.25	0	82.49	0	1.14	0	0	10.08	0	0	0	0	0	0	-37.66	-37.66
	Inverter Transformer	MV1-6 T	364482	4905835	2	0	0	56.1	56.1	1	3833.41	3.25	0	82.67	0	1.18	0	0	10.2	0	0	0	0	0	0	-37.99	-37.99
	Inverter Transformer	MV1-15 T	365309	4904994	2	0	0	56.1	56.1	1	3855.12	3.25	0	82.72	0	1.19	0	0	10.24	0	0	0	0	0	0	-38.09	-38.09
	Inverter Transformer	MV1-9 T	364555	4905646	2	0	0	56.1	56.1	1	3892.86	3.25	0	82.81	0	1.2	0	0	10.29	0	0	0	0	0	0	-38.24	-38.24
	Inverter Transformer	MV1-11 T	364649	4905414	2	0	0	56.1	56.1	1	3975.53	3.25	0	82.99	0	1.23	0	0	10.42	0	0	0	0	0	0	-38.58	-38.58
	Line Reactor	NGR	369421	4908787.5	5	0	0	45.4	45.4	1	1980.06	5.25	0	76.93	0	3.38	1.28	0.11	0.81	0	0	0	0	0	0	-37.05	-37.05
Limit. Valu	0	0																								
Level D/N:	35.8913	35.8913																								

Receiver: Vacant Lot Receptor
ID: S-VLR16
X: 368417
Y: 4908173
Z: 4.5
Ground: 0

ISO	Description	ID	X	Y	Z	Ground	ReflOrd	LxT	LxN	L/A	Dist.	hm	Freq	Adiv	K0b	Agr	Abar	z	Aatm	Afol	Ahous	Cmet	CmetN	Dc	RL	LtotT	LtotN
	Sol_Luce Substation	S_Substation	369426	4908792	3.5	0	0	112.1	112.1	1	1183.74	5.25	0	72.47	0	-0.1	4.44	0.28	2.89	0	0	0	0	0	0	32.39	32.39
	Inverter	MV3-6	368162	4907834	2	0	0	100.3	100.3	1	424.21	3.25	0	63.55	0	-0.6	0	0	7.87	0	0	0	0	0	0	29.5	29.5
	Inverter	MV3-9	368512	4907703	2	0	0	100.3	100.3	1	479.51	3.25	0	64.62	0	-0.57	0	0	8.36	0	0	0	0	0	0	27.9	27.9
	Inverter	MV3-11	368346	4907662	2	0	0	100.3	100.3	1	515.91	3.25	0	65.25	0	-0.54	0	0	8.65	0	0	0	0	0	0	26.95	26.95
	Inverter	MV3-8	368680	4907712	2	0	0	100.3	100.3	1	530.75	3.25	0	65.5	0	-0.53	0	0	8.75	0	0	0	0	0	0	26.59	26.59
	Inverter	MV3-3	367939	4907927	2	0	0	100.3	100.3	1	537.59	3.25	0	65.61	0	-0.52	0	0	8.8	0	0	0	0	0	0	26.42	26.42
	Inverter	MV3-10	368167	4907669	2	0	0	100.3	100.3	1	562.6	3.25	0	66	0	-0.51	0	0	8.97	0	0	0	0	0	0	25.84	25.84
	Inverter	MV3-7	367945	4907754	2	0	0	100.3	100.3	1	631.15	3.25	0	67	0	-0.46	0	0	9.38	0	0	0	0	0	0	24.38	24.38
	Inverter	MV3-15	368357	4907477	2	0	0	100.3	100.3	1	698.59	3.25	0	67.88	0	-0.41	0	0	9.73	0	0	0	0	0	0	23.11	23.11

Inverter	MV3-16	368514	4907475	2	0	0	100.3	100.3	1	704.71	3.25	0	67.96	0	-0.41	0	0	9.76	0	0	0	0	0	0	23	23
Inverter	MV3-14	368684	4907498	2	0	0	100.3	100.3	1	725.89	3.25	0	68.22	0	-0.4	0	0	9.86	0	0	0	0	0	0	22.63	22.63
Inverter	MV3-17	368178	4907472	2	0	0	100.3	100.3	1	740.63	3.25	0	68.39	0	-0.39	0	0	9.93	0	0	0	0	0	0	22.38	22.38
Inverter	MV3-13	367963	4907577	2	0	0	100.3	100.3	1	749.23	3.25	0	68.49	0	-0.38	0	0	9.96	0	0	0	0	0	0	22.24	22.24
Inverter	MV3-19	368357	4907347	2	0	0	100.3	100.3	1	828.18	3.25	0	69.36	0	-0.34	0	0	10.29	0	0	0	0	0	0	20.99	20.99
Inverter	MV3-20	368689	4907317	2	0	0	100.3	100.3	1	898.18	3.25	0	70.07	0	-0.3	0	0	10.56	0	0	0	0	0	0	19.98	19.98
Inverter	MV3-12	367668	4907594	2	0	0	100.3	100.3	1	946.7	3.25	0	70.52	0	-0.27	0	0	10.73	0	0	0	0	0	0	19.33	19.33
Inverter	MV3-4	368502	4907925	2	0	0	89.1	89.1	1	262.17	3.25	0	59.37	0	0.34	0	0	3.83	0	0	0	0	0	0	25.51	25.51
Inverter	MV3-21	368478	4907206	2	0	0	100.3	100.3	1	968.93	3.25	0	70.73	0	-0.26	0	0	10.81	0	0	0	0	0	0	19.04	19.04
Inverter	MV3-18	367752	4907412	2	0	0	100.3	100.3	1	1010.62	3.25	0	71.09	0	-0.24	0	0	10.95	0	0	0	0	0	0	18.52	18.52
Inverter	MV4-7	369035	4909001	2	0	0	100.3	100.3	1	1033.21	3.25	0	71.28	0	-0.23	0	0	11.02	0	0	0	0	0	0	18.24	18.24
Inverter	MV4-11	369264	4908855	2	0	0	100.3	100.3	1	1087.45	3.25	0	71.73	0	-0.2	0	0	11.19	0	0	0	0	0	0	17.6	17.6
Inverter	MV4-10	369312	4908858	2	0	0	100.3	100.3	1	1127.06	3.25	0	72.04	0	-0.19	0	0	11.31	0	0	0	0	0	0	17.15	17.15
Inverter	MV4-8	369256	4909001	2	0	0	100.3	100.3	1	1178.78	3.25	0	72.43	0	-0.16	0	0	11.46	0	0	0	0	0	0	16.58	16.58
Inverter	MV4-4	369027	4909199	2	0	0	100.3	100.3	1	1193.64	3.25	0	72.54	0	-0.16	0	0	11.51	0	0	0	0	0	0	16.42	16.42
Inverter	MV3-1	368156	4907976	2	0	0	89.1	89.1	1	327.01	3.25	0	61.29	0	0.39	0	0	4.32	0	0	0	0	0	0	23.06	23.06
Inverter	MV4-9	369289	4909001	2	0	0	100.3	100.3	1	1202.49	3.25	0	72.6	0	-0.15	0	0	11.53	0	0	0	0	0	0	16.33	16.33
Inverter	MV3-5	368340	4907843	2	0	0	89.1	89.1	1	338.87	3.25	0	61.6	0	0.4	0	0	4.39	0	0	0	0	0	0	22.66	22.66
Inverter	MV3-2	368671	4907928	2	0	0	89.1	89.1	1	352.91	3.25	0	61.95	0	0.42	0	0	4.48	0	0	0	0	0	0	22.21	22.21
Inverter	MV4-6	369243	4909192	2	0	0	100.3	100.3	1	1311.73	3.25	0	73.36	0	-0.11	0	0	11.84	0	0	0	0	0	0	15.22	15.22
Inverter	MV4-5	369289	4909199	2	0	0	100.3	100.3	1	1346.5	3.25	0	73.58	0	-0.09	0	0	11.93	0	0	0	0	0	0	14.89	14.89
Inverter	MV4-1	369011	4909397	2	0	0	100.3	100.3	1	1360.52	3.25	0	73.67	0	-0.09	0	0	11.97	0	0	0	0	0	0	14.76	14.76
Inverter	MV4-3	369229	4909397	2	0	0	100.3	100.3	1	1468.85	3.25	0	74.34	0	-0.05	0	0	12.25	0	0	0	0	0	0	13.77	13.77
Inverter	MV4-2	369272	4909397	2	0	0	100.3	100.3	1	1493.05	3.25	0	74.48	0	-0.04	0	0	12.31	0	0	0	0	0	0	13.56	13.56
Inverter	MV5-5	370015	4908690	2	0	0	100.3	100.3	1	1679.55	3.25	0	75.5	0	0.03	0	0	12.76	0	0	0	0	0	0	12.02	12.02
Inverter	MV5-2	370006	4908853	2	0	0	100.3	100.3	1	1728.39	3.25	0	75.75	0	0.05	0	0	12.87	0	0	0	0	0	0	11.65	11.65
DSTATCOM - 10 MVAR #2	DSAT2	369403	4908757	2.5	0	0	96.6	96.6	1	1145.97	3.5	0	72.18	0	3	0	0	1.18	0	0	0	0	0	0	20.27	20.27
DSTATCOM - 10 MVAR #1	DSAT1	369437	4908757	2.5	0	0	96.6	96.6	1	1175.36	3.5	0	72.4	0	3.01	0	0	1.19	0	0	0	0	0	0	20.02	20.02
Inverter	MV6-2	370085	4907339	2	0	0	100.3	100.3	1	1864.88	3.25	0	76.41	0	0.09	0	0	13.17	0	0	0	0	0	0	10.64	10.64
Inverter	MV5-1	370020	4909142	2	0	0	100.3	100.3	1	1873.12	4.79	0	76.45	0	0.76	3.49	0.01	13.19	0	0	0	0	0	0	6.42	6.42
Inverter	MV5-3	370231	4908851	2	0	0	100.3	100.3	1	1936.57	3.25	0	76.74	0	0.11	0	0	13.33	0	0	0	0	0	0	10.13	10.13
Inverter	MV5-4	370324	4908707	2	0	0	100.3	100.3	1	1980.36	3.25	0	76.93	0	0.12	0	0	13.42	0	0	0	0	0	0	9.83	9.83
Inverter	MV6-3	370207	4907140	2	0	0	100.3	100.3	1	2066.69	3.25	0	77.31	0	0.15	0	0	13.6	0	0	0	0	0	0	9.26	9.26
Inverter	MV4-13	369051	4908605	2	0	0	89.1	89.1	1	767.19	3.25	0	68.7	0	0.63	0	0	5.85	0	0	0	0	0	0	13.88	13.88
Inverter	MV6-1	370235	4907364	2	0	0	97.3	97.3	1	1989.88	3.25	0	76.98	0	0.13	0	0	13.44	0	0	0	0	0	0	6.77	6.77
Inverter	MV4-15	369176	4908481	2	0	0	89.1	89.1	1	819.12	3.25	0	69.27	0	0.64	0	0	5.96	0	0	0	0	0	0	13.19	13.19
Inverter	MV2-3	365820	4906641	2	0	0	100.3	100.3	1	3015.2	3.25	0	80.59	0	0.36	0	0	15.4	0	0	0	0	0	0	3.96	3.96
Inverter	MV4-14	369176	4908507	2	0	0	89.1	89.1	1	829.24	3.25	0	69.37	0	0.65	0	0	5.98	0	0	0	0	0	0	13.06	13.06
Inverter	MV2-4	365586	4906624	2	0	0	100.3	100.3	1	3227.07	3.25	0	81.18	0	0.4	0	0	15.77	0	0	0	0	0	0	2.96	2.96
Inverter	MV4-12	369043	4908803	2	0	0	89.1	89.1	1	888.13	3.25	0	69.97	0	0.66	0	0	6.1	0	0	0	0	0	0	12.33	12.33
Fixed Reactor Bank 1	FRB1	369378	4908755	6	0	0	89.8	89.8	1	1123.5	5.25	0	72.01	0	-1.02	0	0	2.77	0	0	0	0	0	0	16.02	16.02
Inverter	MV3-22	368656	4907142	2	0	0	89.1	89.1	1	1058.34	3.25	0	71.49	0	0.7	0	0	6.42	0	0	0	0	0	0	10.44	10.44
Fixed Reactor Bank 2	FRB2	369464	4908755	6	0	0	89.8	89.8	1	1197.89	5.25	0	72.57	0	-1.03	0	0	2.91	0	0	0	0	0	0	15.32	15.32
Inverter	MV2-1	365842	4906816	2	0	0	97.3	97.3	1	2910.68	3.25	0	80.28	0	0.34	0	0	15.21	0	0	0	0	0	0	1.47	1.47
Inverter	MV1-1	364715	4906166	2	0	0	100.3	100.3	1	4211.04	3.25	0	83.49	0	0.56	0	0	17.38	0	0	0	0	0	0	-1.11	-1.11
Inverter	MV1-2	364753	4906063	2	0	0	100.3	100.3	1	4228.12	3.25	0	83.52	0	0.56	0	0	17.41	0	0	0	0	0	0	-1.18	-1.18
Inverter	MV1-4	364815	4905918	2	0	0	100.3	100.3	1	4249.64	3.25	0	83.57	0	0.56	0	0	17.44	0	0	0	0	0	0	-1.26	-1.26
Inverter	MV1-12	365038	4905386	2	0	0	100.3	100.3	1	4380.07	3.25	0	83.83	0	0.58	0	0	17.65	0	0	0	0	0	0	-1.74	-1.74
Inverter	MV1-5	364671	4905892	2	0	0	100.3	100.3	1	4385.83	3.25	0	83.84	0	0.58	0	0	17.65	0	0	0	0	0	0	-1.76	-1.76
Inverter	MV1-8	364788	4905647	2	0	0	100.3	100.3	1	4421.57	3.25	0	83.91	0	0.58	0	0	17.71	0	0	0	0	0	0	-1.89	-1.89
Inverter	MV1-15	365315	4904994	2	0	0	100.3	100.3	1	4441.67	3.25	0	83.95	0	0.58	0	0	17.74	0	0	0	0	0	0	-1.96	-1.96
Inverter	MV1-6	364477	4905835	2	0	0	100.3	100.3	1	4581.47	3.25	0	84.22	0	0.6	0	0	17.95	0	0	0	0	0	0	-2.46	-2.46
Inverter	MV1-9	364561	4905646	2	0	0	100.3	100.3	1	4610.26	3.25	0	84.27	0	0.6	0	0	18	0	0	0	0	0	0	-2.56	-2.56
Inverter	MV1-11	364655	4905414	2	0	0	100.3	100.3	1	4665.27	3.25	0	84.38	0	0.61	0	0	18.08	0	0	0	0	0	0	-2.76	-2.76
Inverter	MV5-6	369982	4908507	2	0	0	89.1	89.1	1	1600.25	3.25	0	75.08	0	0.81	0	0	7.38	0	0	0	0	0	0	5.78	5.78
Inverter	MV1-7	364925	4905782	2	0	0	97.3	97.3	1	4232.13	3.25	0	83.53	0	0.56	0	0	17.42	0	0	0	0	0	0	-4.19	-4.19
Inverter	MV1-10	365004	4905564	2	0	0	97.3	97.3	1	4295.98	3.25	0	83.66	0	0.57	0	0	17.52	0	0	0	0	0	0	-4.43	-4.43
SubstationTransformer	W_ST	369711.17	4906112.3	2.5	0	0	92	92	1	2433.41	3.5	0	78.72	0	-0.06	0	0	5.08	0	0	0	0	0	0	8.23	8.23
Inverter	MV1-14	365163	4905049	2	0	0	97.3	97.3	1	4510.86	3.25	0	84.09	0	0.59	0	0	17.85	0	0	0	0	0	0	-5.21	-5.21
Inverter	MV1-13	364731	4905241	2	0	0	97.3	97.3	1	4709.91	3.25	0	84.46	0	0.61	0	0	18.15	0	0	0	0	0	0	-5.91	-5.91
Westbrook Inverter Enclosur	W_INV2	369374	4906388	2	0	0	89.1	89.1	1	2025.36	3.25	0	77.13	0	0.91	0	0	8.09	0	0	0	0	0	0	2.93	2.93
Westbrook Inverter Enclosur	W_INV5	369719	4906574	2	0	0	89.1	89.1	1	2062.04	3.25	0	77.29	0	0.92	0	0	8.15	0	0	0	0	0	0	2.7	2.7
Westbrook Inverter Enclosur	W_INV6	369875	4906578	2	0	0	89.1	89.1	1	2160.97	3.25	0	77.69	0	0.94	0	0	8.31	0	0	0	0	0	0	2.11	2.11
Westbrook Inverter Enclosur	W_INV7	369780	4906417	2	0	0	89.1	89.1	1	2222.91	3.25	0	77.94	0	0.96	0	0	8.41	0	0	0	0	0	0	1.75	1.75
Westbrook Inverter Enclosur	W_INV3	369508	4906164	2	0	0	89.1	89.1	1	2286.13	3.25	0	78.18	0	0.97	0	0	8.51	0	0	0	0	0	0	1.39	1.39
Westbrook Inverter Enclosur	W_INV4	369673	4906164	2	0	0	89.1	89.1	1	2369.31	3.25	0	78.49	0	0.99	0	0	8.64	0	0	0	0	0	0	0.93	0.93
Westbrook Inverter Enclosur	W_INV1	369409	4906578	2	0	0	86.1	86.1	1	1878.32	3.25	0	76.48	0	0.88	0	0	7.85	0	0	0	0	0	0	0.86	0.86
Inverter	MV2-2	365977	4906654	2	0	0	89.1	89.1	1	2874.19	3.25	0	80.17	0	1.12	0	0	9.43	0	0	0	0	0	0	-1.65	-1.65
Inverter	MV6-4	370250	4906966	2	0	0	86.1	86.1	1	2194.71	3.25	0	77.83	0	0.95	0	0	8.36	0	0	0	0	0	0	-1.08	-1.08
Gardiner Substation	G_Sub	366586.3	4903349.9	2.5	0	0	90.8	90.8	1	5158.85	4.25	0	85.25	0	1.69	2.34	0.39	8.81	0	0	0	0	0	0	-7.31	-7.31
Inverter	MV1-3	364440	4906039	2	0	0	89.1	89.1	1	4513.37	3.25	0	84.09	0	1.52	0	0	11.8	0	0	0	0	0	0	-8.35	-8.35
Inverters	G_Inv2	366676.9	4903239.1	2	0	0	87.7	87.7	1	5231.76	3.25	0	85.37	0	2.88	0	0	6.18	0	0	0	0	0	0	-6.77	-6.77
Inverters	G_Inv1	366526.4	4903225.8	2	0	0	87.7	87.7	1	5296.15	3.25	0	85.48	0	2.88	0	0	6.25	0	0	0	0	0	0	-6.95	-6.95
Inverters	G_Inv4	366732.8	4903105	2	0	0	87.7	87.7	1	5340.52	3.25	0	85.55	0	2.89	0	0	6.3	0	0	0	0	0	0	-7.07	-7.07

Inverters	G_Inv3	366583.7	4903091.4	2	0	0	87.7	87.7	1	5402.19	3.25	0	85.65	0	2.89	0	0	6.36	0	0	0	0	0	0	-7.24	-7.24
Inverters	G_Inv6	366788.5	4902972	2	0	0	87.7	87.7	1	5449.99	3.25	0	85.73	0	2.89	0	0	6.41	0	0	0	0	0	0	-7.37	-7.37
Inverters	G_Inv5	366638.5	4902958.1	2	0	0	87.7	87.7	1	5509.83	3.25	0	85.82	0	2.89	0	0	6.47	0	0	0	0	0	0	-7.53	-7.53
Westbrook Inverter Transfor	W_INVTR1	369403	4906578	2	0	0	78.2	78.2	1	1875.16	3.25	0	76.46	0	-2.36	0	0	1.15	0	0	0	0	0	0	2.99	2.99
Inverters	G_Inv8	366844.5	4902838.5	2	0	0	87.7	87.7	1	5561.44	3.25	0	85.9	0	2.9	0	0	6.53	0	0	0	0	0	0	-7.67	-7.67
Inverters	G_Inv7	366694.6	4902824.7	2	0	0	87.7	87.7	1	5618.81	3.25	0	85.99	0	2.9	0	0	6.59	0	0	0	0	0	0	-7.82	-7.82
Inverters	G_Inv10	366900.7	4902704.8	2	0	0	87.7	87.7	1	5674.54	3.25	0	86.08	0	2.9	0	0	6.64	0	0	0	0	0	0	-7.96	-7.96
Inverters	G_Inv9	366750.9	4902691.8	2	0	0	87.7	87.7	1	5728.83	3.25	0	86.16	0	2.91	0	0	6.7	0	0	0	0	0	0	-8.11	-8.11
Westbrook Inverter Transfor	W_INVTR2	369368	4906388	2	0	0	77.3	77.3	1	2022.53	3.25	0	77.12	0	-2.41	0	0	1.22	0	0	0	0	0	0	1.42	1.42
Westbrook Inverter Transfor	W_INVTR5	369725	4906574	2	0	0	77.3	77.3	1	2065.83	3.25	0	77.3	0	-2.43	0	0	1.24	0	0	0	0	0	0	1.23	1.23
Westbrook Inverter Transfor	W_INVTR6	369881	4906578	2	0	0	77.3	77.3	1	2165.02	3.25	0	77.71	0	-2.46	0	0	1.28	0	0	0	0	0	0	0.81	0.81
Westbrook Inverter Transfor	W_INVTR7	369786	4906417	2	0	0	77.3	77.3	1	2226.59	3.25	0	77.95	0	-2.48	0	0	1.31	0	0	0	0	0	0	0.56	0.56
Westbrook Inverter Transfor	W_INVTR3	369514	4906164	2	0	0	77.3	77.3	1	2288.99	3.25	0	78.19	0	-2.5	0	0	1.34	0	0	0	0	0	0	0.31	0.31
Westbrook Inverter Transfor	W_INVTR4	369679	4906164	2	0	0	77.3	77.3	1	2372.49	3.25	0	78.5	0	-2.53	0	0	1.38	0	0	0	0	0	0	-0.01	-0.01
Inverter Transformer	MV3-4 T	368507	4907925	2	0	0	56.1	56.1	1	263.84	3.25	0	59.43	0	-0.03	0	0	2.6	0	0	0	0	0	0	-5.94	-5.94
Inverter Transformer	MV3-1 T	368150	4907976	2	0	0	56.1	56.1	1	331.82	3.25	0	61.42	0	-0.09	0	0	2.93	0	0	0	0	0	0	-8.2	-8.2
Inverter Transformer	MV3-5 T	368335	4907843	2	0	0	56.1	56.1	1	340.04	3.25	0	61.63	0	-0.09	0	0	2.97	0	0	0	0	0	0	-8.44	-8.44
Inverter Transformer	MV3-2 T	368677	4907928	2	0	0	56.1	56.1	1	357.26	3.25	0	62.06	0	-0.1	0	0	3.04	0	0	0	0	0	0	-8.94	-8.94
Inverter Transformer	MV3-6 T	368156	4907834	2	0	0	56.1	56.1	1	427.84	3.25	0	63.63	0	-0.12	0	0	3.31	0	0	0	0	0	0	-10.76	-10.76
Inverter Transformer	MV6-1 T	370230	4907364	2	0	0	69.4	69.4	1	1985.31	3.25	0	76.96	0	2.17	0	0	4.95	0	0	0	0	0	0	-14.72	-14.72
Inverter Transformer	MV6-4 T	370244	4906966	2	0	0	69.4	69.4	1	2189.7	3.25	0	77.81	0	2.24	0	0	5.15	0	0	0	0	0	0	-15.85	-15.85
Inverter Transformer	MV3-9 T	368517	4907703	2	0	0	56.1	56.1	1	480.53	3.25	0	64.63	0	-0.12	0	0	3.49	0	0	0	0	0	0	-11.95	-11.95
Inverter Transformer	MV3-11 T	368340	4907662	2	0	0	56.1	56.1	1	516.77	3.25	0	65.27	0	-0.12	0	0	3.61	0	0	0	0	0	0	-12.7	-12.7
Inverter Transformer	MV3-3 T	367944	4907927	2	0	0	56.1	56.1	1	533.15	3.25	0	65.54	0	-0.11	0	0	3.66	0	0	0	0	0	0	-13.02	-13.02
Inverter Transformer	MV3-8 T	368685	4907712	2	0	0	56.1	56.1	1	533.25	3.25	0	65.54	0	-0.11	0	0	3.66	0	0	0	0	0	0	-13.02	-13.02
Inverter Transformer	MV3-10 T	368162	4907669	2	0	0	56.1	56.1	1	564.84	3.25	0	66.04	0	-0.11	0	0	3.75	0	0	0	0	0	0	-13.62	-13.62
Inverter Transformer	MV3-7 T	367951	4907754	2	0	0	56.1	56.1	1	626.68	3.25	0	66.94	0	-0.1	0	0	3.93	0	0	0	0	0	0	-14.72	-14.72
Inverter Transformer	MV2-1 T	365836	4906816	2	0	0	69.4	69.4	1	2915.99	3.25	0	80.3	0	2.48	0	0	5.81	0	0	0	0	0	0	-19.24	-19.24
Inverter Transformer	MV3-15 T	368351	4907477	2	0	0	56.1	56.1	1	699.13	3.25	0	67.89	0	-0.08	0	0	4.13	0	0	0	0	0	0	-15.88	-15.88
Inverter Transformer	MV3-16 T	368509	4907475	2	0	0	56.1	56.1	1	704.04	3.25	0	67.95	0	-0.08	0	0	4.14	0	0	0	0	0	0	-15.96	-15.96
Inverter Transformer	MV3-14 T	368678	4907498	2	0	0	56.1	56.1	1	723.71	3.25	0	68.19	0	-0.07	0	0	4.2	0	0	0	0	0	0	-16.25	-16.25
Inverter Transformer	MV3-17 T	368183	4907472	2	0	0	56.1	56.1	1	739.03	3.25	0	68.37	0	-0.07	0	0	4.24	0	0	0	0	0	0	-16.48	-16.48
Inverter Transformer	MV3-13 T	367958	4907577	2	0	0	56.1	56.1	1	752.27	3.25	0	68.53	0	-0.07	0	0	4.27	0	0	0	0	0	0	-16.67	-16.67
Inverter Transformer	MV4-13 T	369057	4908605	2	0	0	56.1	56.1	1	772.16	3.25	0	68.75	0	-0.06	0	0	4.32	0	0	0	0	0	0	-16.96	-16.96
Inverter Transformer	MV4-15 T	369170	4908481	2	0	0	56.1	56.1	1	813.56	3.25	0	69.21	0	-0.05	0	0	4.43	0	0	0	0	0	0	-17.53	-17.53
Inverter Transformer	MV3-19 T	368352	4907347	2	0	0	56.1	56.1	1	828.56	3.25	0	69.37	0	-0.04	0	0	4.47	0	0	0	0	0	0	-17.73	-17.73
Inverter Transformer	MV4-14 T	369182	4908507	2	0	0	56.1	56.1	1	834.74	3.25	0	69.43	0	-0.04	0	0	4.48	0	0	0	0	0	0	-17.81	-17.81
Inverter Transformer	MV4-12 T	369049	4908803	2	0	0	56.1	56.1	1	892.37	3.25	0	70.01	0	-0.02	0	0	4.63	0	0	0	0	0	0	-18.56	-18.56
Inverter Transformer	MV3-20 T	368683	4907317	2	0	0	56.1	56.1	1	896.38	3.25	0	70.05	0	-0.02	0	0	4.64	0	0	0	0	0	0	-18.61	-18.61
Inverter Transformer	MV1-7 T	364919	4905782	2	0	0	69.4	69.4	1	4237.09	3.25	0	83.54	0	2.84	0	0	6.85	0	0	0	0	0	0	-23.89	-23.89
Inverter Transformer	MV1-10 T	365010	4905564	2	0	0	69.4	69.4	1	4291.22	3.25	0	83.65	0	2.86	0	0	6.89	0	0	0	0	0	0	-24.05	-24.05
Inverter Transformer	MV3-12 T	367674	4907594	2	0	0	56.1	56.1	1	941.96	3.25	0	70.48	0	-0.01	0	0	4.75	0	0	0	0	0	0	-19.16	-19.16
Inverter Transformer	MV3-21 T	368484	4907206	2	0	0	56.1	56.1	1	969.32	3.25	0	70.73	0	0	0	0	4.82	0	0	0	0	0	0	-19.49	-19.49
Inverter Transformer	MV1-14 T	365157	4905049	2	0	0	69.4	69.4	1	4515.19	3.25	0	84.09	0	2.91	0	0	7.05	0	0	0	0	0	0	-24.7	-24.7
Inverter Transformer	MV3-18 T	367757	4907412	2	0	0	56.1	56.1	1	1007.34	3.25	0	71.06	0	0.01	0	0	4.91	0	0	0	0	0	0	-19.93	-19.93
Inverter Transformer	MV1-13 T	364725	4905241	2	0	0	69.4	69.4	1	4714.6	3.25	0	84.47	0	2.95	0	0	7.19	0	0	0	0	0	0	-25.26	-25.26
Inverter Transformer	MV4-7 T	369040	4909001	2	0	0	56.1	56.1	1	1036.2	3.25	0	71.31	0	0.02	0	0	4.98	0	0	0	0	0	0	-20.25	-20.25
Inverter Transformer	MV3-22 T	368661	4907142	2	0	0	56.1	56.1	1	1059.48	3.25	0	71.5	0	0.03	0	0	5.03	0	0	0	0	0	0	-20.51	-20.51
Inverter Transformer	MV4-11 T	369269	4908855	2	0	0	56.1	56.1	1	1091.35	3.25	0	71.76	0	0.04	0	0	5.1	0	0	0	0	0	0	-20.85	-20.85
Inverter Transformer	MV4-10 T	369307	4908858	2	0	0	56.1	56.1	1	1123.09	3.25	0	72.01	0	0.06	0	0	5.18	0	0	0	0	0	0	-21.18	-21.18
Inverter Transformer	MV4-8 T	369262	4909001	2	0	0	56.1	56.1	1	1183.05	3.25	0	72.46	0	0.08	0	0	5.32	0	0	0	0	0	0	-21.8	-21.8
Inverter Transformer	MV4-4 T	369033	4909199	2	0	0	56.1	56.1	1	1196.72	3.25	0	72.56	0	0.08	0	0	5.35	0	0	0	0	0	0	-21.93	-21.93
Inverter Transformer	MV4-9 T	369284	4909001	2	0	0	56.1	56.1	1	1198.87	3.25	0	72.58	0	0.08	0	0	5.35	0	0	0	0	0	0	-21.95	-21.95
Inverter Transformer	MV4-6 T	369249	4909192	2	0	0	56.1	56.1	1	1315.52	3.25	0	73.38	0	0.13	0	0	5.62	0	0	0	0	0	0	-23.07	-23.07
Inverter Transformer	MV4-5 T	369283	4909199	2	0	0	56.1	56.1	1	1342.62	3.25	0	73.56	0	0.14	0	0	5.68	0	0	0	0	0	0	-23.31	-23.31
Inverter Transformer	MV4-1 T	369017	4909397	2	0	0	56.1	56.1	1	1363.15	3.25	0	73.69	0	0.15	0	0	5.72	0	0	0	0	0	0	-23.5	-23.5
Inverter Transformer	MV4-3 T	369234	4909397	2	0	0	56.1	56.1	1	1471.62	3.25	0	74.36	0	0.19	0	0	5.96	0	0	0	0	0	0	-24.44	-24.44
Inverter Transformer	MV4-2 T	369267	4909397	2	0	0	56.1	56.1	1	1490.2	3.25	0	74.46	0	0.19	0	0	6	0	0	0	0	0	0	-24.6	-24.6
Inverter Transformer	MV5-6 T	369987	4908507	2	0	0	56.1	56.1	1	1605.14	3.25	0	75.11	0	0.24	0	0	6.24	0	0	0	0	0	0	-25.53	-25.53
Inverter Transformer	MV5-5 T	370021	4908690	2	0	0	56.1	56.1	1	1685.26	3.25	0	75.53	0	0.27	0	0	6.41	0	0	0	0	0	0	-26.16	-26.16
Inverter Transformer	MV5-2 T	370011	4908853	2	0	0	56.1	56.1	1	1732.99	3.25	0	75.78	0	0.29	0	0	6.51	0	0	0	0	0	0	-26.52	-26.52
Inverter Transformer	MV5-1 T	370015	4909142	2	0	0	56.1	56.1	1	1868.84	4.8	0	76.43	0	1.22	3.03	0.01	6.78	0	0	0	0	0	0	-31.4	-31.4
Inverter Transformer	MV6-2 T	370091	4907339	2	0	0	56.1	56.1	1	1870.25	3.25	0	76.44	0	0.35	0	0	6.79	0	0	0	0	0	0	-27.51	-27.51
Inverter Transformer	MV5-3 T	370237	4908851	2	0	0	56.1	56.1	1	1942.19	3.25	0	76.77	0	0.38	0	0	6.93	0	0	0	0	0	0	-28.02	-28.02
Inverter Transformer	MV5-4 T	370330	4908707	2	0	0	56.1	56.1	1	1986.13	3.25	0	76.96	0	0.4	0	0	7.02	0	0	0	0	0	0	-28.32	-28.32
Inverter Transformer	MV6-3 T	370202	4907140	2	0	0	56.1	56.1	1	2062.36	3.25	0	77.29	0	0.43	0	0	7.17	0	0	0	0	0	0	-28.82	-28.82
Inverter Transformer	MV2-2 T	365982	4906654	2	0	0	56.1	56.1	1	2869.95	3.25	0	80.16	0	0.77	0	0	8.65	0	0	0	0	0	0	-33.52	-33.52
Inverter Transformer	MV2-3 T	365814	4906641	2	0	0	56.1	56.1	1	3020.37	3.25	0	80.6	0	0.84	0	0	8.9	0	0	0	0	0	0	-34.28	-34.28
Inverter Transformer	MV2-4 T	365590	4906628	2	0	0	56.1	56.1	1	3221.64	3.25	0	81.16	0	0.92	0	0	9.24	0	0	0	0	0	0	-35.26	-35.26
Line Reactor	NGR	369421	4908787.5	5	0	0	45.4	45.4	1	1177.13	5.25	0	72.42	0	3.46	1.25	0.1	0.48	0	0	0	0	0	0	-32.26	-32.26
Inverter Transformer	MV1-1 T	364721	4906166	2	0	0	56.1	56.1	1	4205.77	3.25	0	83.48	0	1.33	0	0	10.76	0	0	0	0	0	0	-39.5	-39.5
Inverter Transformer	MV1-2 T	364759	4906063	2	0	0	56.1	56.1	1	4222.92	3.25	0	83.51	0	1.33	0	0	10.78	0	0	0	0	0	0	-39.57	-39.57
Inverter Transformer	MV1-4 T	364821	4905918	2	0	0	56.1	56.1	1	4244.56	3.25	0	83.56	0	1.34	0	0	10.81	0	0	0	0	0	0	-39.65	-39.65
Inverter Transformer	MV1-12 T	365044	4905386	2	0	0	56.1	56.1	1	4375.44	3.25	0	83.82	0	1.39	0	0	11	0	0	0	0	0	0	-40.15	-40.15

	Inverter Transformer	MV1-5 T	364676	4905892	2	0	0	56.1	56.1	1	4381.56	3.25	0	83.83	0	1.39	0	0	11.01	0	0	0	0	0	0	-40.18	-40.18
	Inverter Transformer	MV1-8 T	364782	4905647	2	0	0	56.1	56.1	1	4426.5	3.25	0	83.92	0	1.41	0	0	11.07	0	0	0	0	0	0	-40.35	-40.35
	Inverter Transformer	MV1-15 T	365309	4904994	2	0	0	56.1	56.1	1	4445.86	3.25	0	83.96	0	1.42	0	0	11.1	0	0	0	0	0	0	-40.42	-40.42
	Inverter Transformer	MV1-3 T	364435	4906039	2	0	0	56.1	56.1	1	4517.77	3.25	0	84.1	0	1.45	0	0	11.2	0	0	0	0	0	0	-40.69	-40.69
	Inverter Transformer	MV1-6 T	364482	4905835	2	0	0	56.1	56.1	1	4577.17	3.25	0	84.21	0	1.47	0	0	11.28	0	0	0	0	0	0	-40.91	-40.91
	Inverter Transformer	MV1-9 T	364555	4905646	2	0	0	56.1	56.1	1	4615.28	3.25	0	84.28	0	1.48	0	0	11.34	0	0	0	0	0	0	-41.04	-41.04
	Inverter Transformer	MV1-11 T	364649	4905414	2	0	0	56.1	56.1	1	4670.11	3.25	0	84.39	0	1.5	0	0	11.41	0	0	0	0	0	0	-41.24	-41.24
Limit. Valu	0		0																							
Level D/N:	39.3156		39.3156																							

Receiver: Vacant Lot Receptor
ID: S-VLR17
X: 368821
Y: 4908037
Z: 4.5
Ground: 0

ISO	Description	ID	X	Y	Z	Ground	ReflOrd	LxT	LxN	L/A	Dist.	hm	Freq	Adiv	K0b	Agr	Abar	z	Aatm	Afol	Ahous	Cmet	CmetN	Dc	RL	LtotT	LtotN
	Sol_Luce Substation	S_Substation	369426	4908792	3.5	0	0	112.1	112.1	1	967.5	5.24	0	70.71	0	-0.09	4.79	0.28	2.45	0	0	0	0	0	0	34.22	34.22
	Inverter	MV3-8	368680	4907712	2	0	0	100.3	100.3	1	354.28	3.25	0	61.99	0	-0.64	0	0	7.11	0	0	0	0	0	0	31.86	31.86
	Inverter	MV3-9	368512	4907703	2	0	0	100.3	100.3	1	455.02	3.25	0	64.16	0	-0.58	0	0	8.15	0	0	0	0	0	0	28.58	28.58
	Inverter	MV3-14	368684	4907498	2	0	0	100.3	100.3	1	556.14	3.25	0	65.9	0	-0.51	0	0	8.93	0	0	0	0	0	0	25.99	25.99
	Inverter	MV3-11	368346	4907662	2	0	0	100.3	100.3	1	605.19	3.25	0	66.64	0	-0.47	0	0	9.23	0	0	0	0	0	0	24.91	24.91
	Inverter	MV3-16	368514	4907475	2	0	0	100.3	100.3	1	640.39	3.25	0	67.13	0	-0.45	0	0	9.43	0	0	0	0	0	0	24.2	24.2
	Inverter	MV3-2	368671	4907928	2	0	0	89.1	89.1	1	185.44	3.25	0	56.36	0	0.31	0	0	3.06	0	0	0	0	0	0	29.33	29.33
	Inverter	MV3-6	368162	4907834	2	0	0	100.3	100.3	1	689.56	3.25	0	67.77	0	-0.42	0	0	9.69	0	0	0	0	0	0	23.27	23.27
	Inverter	MV3-15	368357	4907477	2	0	0	100.3	100.3	1	727.26	3.25	0	68.23	0	-0.39	0	0	9.87	0	0	0	0	0	0	22.61	22.61
	Inverter	MV3-20	368689	4907317	2	0	0	100.3	100.3	1	732	3.25	0	68.29	0	-0.39	0	0	9.89	0	0	0	0	0	0	22.53	22.53
	Inverter	MV3-10	368167	4907669	2	0	0	100.3	100.3	1	750.43	3.25	0	68.51	0	-0.38	0	0	9.97	0	0	0	0	0	0	22.22	22.22
	Inverter	MV3-19	368357	4907347	2	0	0	100.3	100.3	1	831.51	3.25	0	69.4	0	-0.33	0	0	10.31	0	0	0	0	0	0	20.94	20.94
	Inverter	MV3-17	368178	4907472	2	0	0	100.3	100.3	1	855.97	3.25	0	69.65	0	-0.32	0	0	10.4	0	0	0	0	0	0	20.58	20.58
	Inverter	MV3-3	367939	4907927	2	0	0	100.3	100.3	1	888.84	3.25	0	69.98	0	-0.3	0	0	10.52	0	0	0	0	0	0	20.11	20.11
	Inverter	MV3-21	368478	4907206	2	0	0	100.3	100.3	1	899.01	3.25	0	70.08	0	-0.3	0	0	10.56	0	0	0	0	0	0	19.97	19.97
	Inverter	MV3-7	367945	4907754	2	0	0	100.3	100.3	1	920.58	3.25	0	70.28	0	-0.29	0	0	10.64	0	0	0	0	0	0	19.68	19.68
	Inverter	MV4-11	369264	4908855	2	0	0	100.3	100.3	1	930.26	3.25	0	70.37	0	-0.28	0	0	10.67	0	0	0	0	0	0	19.55	19.55
	Inverter	MV4-10	369312	4908858	2	0	0	100.3	100.3	1	956.62	3.25	0	70.61	0	-0.27	0	0	10.76	0	0	0	0	0	0	19.2	19.2
	Inverter	MV3-13	367963	4907577	2	0	0	100.3	100.3	1	973.53	3.25	0	70.77	0	-0.26	0	0	10.82	0	0	0	0	0	0	18.98	18.98
	Inverter	MV4-7	369035	4909001	2	0	0	100.3	100.3	1	987.47	3.25	0	70.89	0	-0.25	0	0	10.87	0	0	0	0	0	0	18.8	18.8
	Inverter	MV4-8	369256	4909001	2	0	0	100.3	100.3	1	1057.6	3.25	0	71.49	0	-0.22	0	0	11.1	0	0	0	0	0	0	17.95	17.95
	Inverter	MV4-9	369289	4909001	2	0	0	100.3	100.3	1	1071.6	3.25	0	71.6	0	-0.21	0	0	11.14	0	0	0	0	0	0	17.78	17.78
	Inverter	MV4-4	369027	4909199	2	0	0	100.3	100.3	1	1180.12	3.25	0	72.44	0	-0.16	0	0	11.47	0	0	0	0	0	0	16.57	16.57
	Inverter	MV4-6	369243	4909192	2	0	0	100.3	100.3	1	1229.68	3.25	0	72.8	0	-0.14	0	0	11.61	0	0	0	0	0	0	16.05	16.05
	Inverter	MV3-12	367668	4907594	2	0	0	100.3	100.3	1	1235.18	3.25	0	72.83	0	-0.14	0	0	11.63	0	0	0	0	0	0	15.99	15.99
	Inverter	MV3-4	368502	4907925	2	0	0	89.1	89.1	1	338.1	3.25	0	61.58	0	0.4	0	0	4.39	0	0	0	0	0	0	22.69	22.69
	Inverter	MV3-18	367752	4907412	2	0	0	100.3	100.3	1	1238.3	3.25	0	72.86	0	-0.14	0	0	11.63	0	0	0	0	0	0	15.96	15.96
	Inverter	MV4-5	369289	4909199	2	0	0	100.3	100.3	1	1252.71	3.25	0	72.96	0	-0.13	0	0	11.67	0	0	0	0	0	0	15.81	15.81
	Inverter	MV5-5	370015	4908690	2	0	0	100.3	100.3	1	1360.9	3.25	0	73.68	0	-0.09	0	0	11.97	0	0	0	0	0	0	14.75	14.75
	Inverter	MV4-1	369011	4909397	2	0	0	100.3	100.3	1	1373.21	3.25	0	73.75	0	-0.08	0	0	12	0	0	0	0	0	0	14.64	14.64
	DSTATCOM - 10 MVAR #2	DSAT2	369403	4908757	2.5	0	0	96.6	96.6	1	925.81	3.5	0	70.33	0	2.85	0	0	1.03	0	0	0	0	0	0	22.42	22.42
	Inverter	MV4-3	369229	4909397	2	0	0	100.3	100.3	1	1419.88	3.25	0	74.05	0	-0.06	0	0	12.12	0	0	0	0	0	0	14.21	14.21
	Inverter	MV4-2	369272	4909397	2	0	0	100.3	100.3	1	1432.83	3.25	0	74.12	0	-0.06	0	0	12.16	0	0	0	0	0	0	14.09	14.09
	Inverter	MV5-2	370006	4908853	2	0	0	100.3	100.3	1	1438.78	3.25	0	74.16	0	-0.06	0	0	12.17	0	0	0	0	0	0	14.04	14.04
	Inverter	MV6-2	370085	4907339	2	0	0	100.3	100.3	1	1443.92	3.25	0	74.19	0	-0.05	0	0	12.18	0	0	0	0	0	0	13.99	13.99
	DSTATCOM - 10 MVAR #1	DSAT1	369437	4908757	2.5	0	0	96.6	96.6	1	947.55	3.5	0	70.53	0	2.87	0	0	1.04	0	0	0	0	0	0	22.18	22.18
	Inverter	MV5-3	370231	4908851	2	0	0	100.3	100.3	1	1628.1	3.25	0	75.23	0	0.01	0	0	12.63	0	0	0	0	0	0	12.43	12.43
	Inverter	MV5-1	370020	4909142	2	0	0	100.3	100.3	1	1630.53	3.25	0	75.25	0	0.01	0	0	12.64	0	0	0	0	0	0	12.41	12.41
	Inverter	MV5-4	370324	4908707	2	0	0	100.3	100.3	1	1645.57	3.25	0	75.33	0	0.02	0	0	12.68	0	0	0	0	0	0	12.29	12.29
	Inverter	MV6-3	370207	4907140	2	0	0	100.3	100.3	1	1650.94	3.25	0	75.35	0	0.02	0	0	12.69	0	0	0	0	0	0	12.25	12.25
	Inverter	MV3-5	368340	4907843	2	0	0	89.1	89.1	1	518.66	3.25	0	65.3	0	0.54	0	0	5.21	0	0	0	0	0	0	18.02	18.02
	Inverter	MV4-15	369176	4908481	2	0	0	89.1	89.1	1	568.48	3.25	0	66.09	0	0.56	0	0	5.36	0	0	0	0	0	0	17.04	17.04
	Inverter	MV4-14	369176	4908507	2	0	0	89.1	89.1	1	589.01	3.25	0	66.4	0	0.57	0	0	5.42	0	0	0	0	0	0	16.66	16.66
	Inverter	MV6-1	370235	4907364	2	0	0	97.3	97.3	1	1565.99	3.25	0	74.9	0	-0.01	0	0	12.49	0	0	0	0	0	0	9.94	9.94
	Inverter	MV4-13	369051	4908605	2	0	0	89.1	89.1	1	612.81	3.25	0	66.75	0	0.58	0	0	5.49	0	0	0	0	0	0	16.24	16.24
	Inverter	MV3-1	368156	4907976	2	0	0	89.1	89.1	1	667.8	3.25	0	67.49	0	0.6	0	0	5.62	0	0	0	0	0	0	15.34	15.34
	Inverter	MV4-12	369043	4908803	2	0	0	89.1	89.1	1	797.53	3.25	0	69.03	0	0.64	0	0	5.92	0	0	0	0	0	0	13.47	13.47
	Fixed Reactor Bank 1	FRB1	369378	4908755	6	0	0	89.8	89.8	1	908.72	5.25	0	70.17	0	-1	0	0	2.33	0	0	0	0	0	0	18.27	18.27
	Fixed Reactor Bank 2	FRB2	369464	4908755	6	0	0	89.8	89.8	1	963.83	5.25	0	70.68	0	-1.01	0	0	2.45	0	0	0	0	0	0	17.66	17.66
	Inverter	MV2-3	365820	4906641	2	0	0	100.3	100.3	1	3309.81	3.25	0	81.4	0	0.42	0	0	15.91	0	0	0	0	0	0	2.59	2.59
	Inverter	MV3-22	368656	4907142	2	0	0	89.1	89.1	1	910.09	3.25	0	70.18	0	0.67	0	0	6.14	0	0	0	0	0	0	12.07	12.07
	Inverter	MV2-4	365586	4906624	2	0	0	100.3	100.3	1	3530.13	3.25	0	81.96	0	0.46	0	0	16.28	0	0	0	0	0	0	1.62	1.62
	Inverter	MV1-1	364715	4906166	2	0	0	100.3	100.3	1	4512.19	3.25	0	84.09	0	0.59	0	0	17.85	0	0	0	0	0	0	-2.22	-2.22
	Inverter	MV1-2	364753	4906063	2	0	0	100.3	100.3	1	4521.65	3.25	0	84.11	0	0.59	0	0	17.86	0	0	0	0	0	0	-2.25	-2.25
	Inverter	MV1-4	364815	4905918	2	0	0	100.3	100.3	1	4531.91	3.25	0	84.13	0	0.59	0	0	17.88	0	0	0	0	0	0	-2.29	-2.29
	Inverter	MV2-1	365842	4906816	2	0	0	97.3	97.3	1	3219.52	3.25	0	81.16	0	0.4	0	0	15.76	0	0	0	0	0	0	0	0

Inverter	MV5-6	369982	4908507	2	0	0	89.1	89.1	1	1252.53	3.25	0	72.96	0	0.74	0	0	6.78	0	0	0	0	0	0	8.59	8.59
Inverter	MV1-12	365038	4905386	2	0	0	100.3	100.3	1	4619.4	3.25	0	84.29	0	0.6	0	0	18.01	0	0	0	0	0	0	-2.6	-2.6
Inverter	MV1-15	365315	4904994	2	0	0	100.3	100.3	1	4642.4	3.25	0	84.33	0	0.61	0	0	18.05	0	0	0	0	0	0	-2.68	-2.68
Inverter	MV1-5	364671	4905892	2	0	0	100.3	100.3	1	4671.57	3.25	0	84.39	0	0.61	0	0	18.09	0	0	0	0	0	0	-2.78	-2.78
Inverter	MV1-8	364788	4905647	2	0	0	100.3	100.3	1	4687.98	3.25	0	84.42	0	0.61	0	0	18.12	0	0	0	0	0	0	-2.84	-2.84
Inverter	MV1-6	364477	4905835	2	0	0	100.3	100.3	1	4870.23	3.25	0	84.75	0	0.63	0	0	18.39	0	0	0	0	0	0	-3.46	-3.46
Inverter	MV1-9	364561	4905646	2	0	0	100.3	100.3	1	4885.13	3.25	0	84.78	0	0.63	0	0	18.41	0	0	0	0	0	0	-3.51	-3.51
Inverter	MV1-11	364655	4905414	2	0	0	100.3	100.3	1	4922.98	3.25	0	84.84	0	0.64	0	0	18.47	0	0	0	0	0	0	-3.63	-3.63
SubstationTransformer	W_ST	369711.17	4906112.3	2.5	0	0	92	92	1	2120.61	3.5	0	77.53	0	-0.14	0	0	4.57	0	0	0	0	0	0	10.01	10.01
Westbrook Inverter Enclosur	W_INV5	369719	4906574	2	0	0	89.1	89.1	1	1716.62	3.25	0	75.69	0	0.84	0	0	7.58	0	0	0	0	0	0	4.95	4.95
Westbrook Inverter Enclosur	W_INV2	369374	4906388	2	0	0	89.1	89.1	1	1739.26	3.25	0	75.81	0	0.85	0	0	7.61	0	0	0	0	0	0	4.79	4.79
Inverter	MV1-7	364925	4905782	2	0	0	97.3	97.3	1	4501.54	3.25	0	84.07	0	0.59	0	0	17.83	0	0	0	0	0	0	-5.18	-5.18
Inverter	MV1-10	365004	4905564	2	0	0	97.3	97.3	1	4548.1	3.25	0	84.16	0	0.6	0	0	17.9	0	0	0	0	0	0	-5.34	-5.34
Westbrook Inverter Enclosur	W_INV6	369875	4906578	2	0	0	89.1	89.1	1	1799.89	3.25	0	76.1	0	0.86	0	0	7.72	0	0	0	0	0	0	4.38	4.38
Inverter	MV1-14	365163	4905049	2	0	0	97.3	97.3	1	4723.25	3.25	0	84.48	0	0.62	0	0	18.17	0	0	0	0	0	0	-5.96	-5.96
Westbrook Inverter Enclosur	W_INV7	369780	4906417	2	0	0	89.1	89.1	1	1882.57	3.25	0	76.5	0	0.88	0	0	7.85	0	0	0	0	0	0	3.83	3.83
Inverter	MV1-13	364731	4905241	2	0	0	97.3	97.3	1	4954.36	3.25	0	84.9	0	0.64	0	0	18.51	0	0	0	0	0	0	-6.74	-6.74
Westbrook Inverter Enclosur	W_INV3	369508	4906164	2	0	0	89.1	89.1	1	1995.02	3.25	0	77	0	0.91	0	0	8.04	0	0	0	0	0	0	3.12	3.12
Westbrook Inverter Enclosur	W_INV4	369673	4906164	2	0	0	89.1	89.1	1	2057.68	3.25	0	77.27	0	0.92	0	0	8.14	0	0	0	0	0	0	2.73	2.73
Westbrook Inverter Enclosur	W_INV1	369409	4906578	2	0	0	86.1	86.1	1	1573.03	3.25	0	74.93	0	0.81	0	0	7.33	0	0	0	0	0	0	2.98	2.98
Inverter	MV6-4	370250	4906966	2	0	0	86.1	86.1	1	1785.8	3.25	0	76.04	0	0.86	0	0	7.69	0	0	0	0	0	0	1.47	1.47
Inverter	MV2-2	365977	4906654	2	0	0	89.1	89.1	1	3162.44	3.25	0	81	0	1.19	0	0	9.86	0	0	0	0	0	0	-2.99	-2.99
Gardiner Substation	G_Sub	366586.3	4903349.9	2.5	0	0	90.8	90.8	1	5192.57	4.25	0	85.31	0	1.7	2.32	0.39	8.85	0	0	0	0	0	0	-7.4	-7.4
Inverter	MV1-3	364440	4906039	2	0	0	89.1	89.1	1	4815.1	3.25	0	84.65	0	1.59	0	0	12.21	0	0	0	0	0	0	-9.4	-9.4
Westbrook Inverter Transfor	W_INVTR1	369403	4906578	2	0	0	78.2	78.2	1	1570.8	3.25	0	74.92	0	-2.23	0	0	0.99	0	0	0	0	0	0	4.56	4.56
Inverters	G_Inv2	366676.9	4903239.1	2	0	0	87.7	87.7	1	5255.19	3.25	0	85.41	0	2.88	0	0	6.21	0	0	0	0	0	0	-6.84	-6.84
Inverters	G_Inv1	366526.4	4903225.8	2	0	0	87.7	87.7	1	5330.37	4.22	0	85.54	0	3.23	1.45	0.01	6.29	0	0	0	0	0	0	-8.84	-8.84
Inverters	G_Inv4	366732.8	4903105	2	0	0	87.7	87.7	1	5355.86	3.25	0	85.58	0	2.89	0	0	6.31	0	0	0	0	0	0	-7.11	-7.11
Inverters	G_Inv3	366583.7	4903091.4	2	0	0	87.7	87.7	1	5428.12	3.25	0	85.69	0	2.89	0	0	6.39	0	0	0	0	0	0	-7.31	-7.31
Inverters	G_Inv6	366788.5	4902972	2	0	0	87.7	87.7	1	5457.59	3.25	0	85.74	0	2.89	0	0	6.42	0	0	0	0	0	0	-7.39	-7.39
Inverters	G_Inv5	366638.5	4902958.1	2	0	0	87.7	87.7	1	5527.98	3.25	0	85.85	0	2.9	0	0	6.49	0	0	0	0	0	0	-7.58	-7.58
Inverters	G_Inv8	366844.5	4902838.5	2	0	0	87.7	87.7	1	5561.56	3.25	0	85.9	0	2.9	0	0	6.53	0	0	0	0	0	0	-7.67	-7.67
Inverters	G_Inv7	366694.6	4902824.7	2	0	0	87.7	87.7	1	5629.36	3.25	0	86.01	0	2.9	0	0	6.6	0	0	0	0	0	0	-7.85	-7.85
Westbrook Inverter Transfor	W_INVTR5	369725	4906574	2	0	0	77.3	77.3	1	1719.76	3.25	0	75.71	0	-2.3	0	0	1.07	0	0	0	0	0	0	2.86	2.86
Inverters	G_Inv10	366900.7	4902704.8	2	0	0	87.7	87.7	1	5667.44	3.25	0	86.07	0	2.9	0	0	6.64	0	0	0	0	0	0	-7.95	-7.95
Westbrook Inverter Transfor	W_INVTR2	369368	4906388	2	0	0	77.3	77.3	1	1737.36	3.25	0	75.8	0	-2.3	0	0	1.08	0	0	0	0	0	0	2.77	2.77
Inverters	G_Inv9	366750.9	4902691.8	2	0	0	87.7	87.7	1	5732.06	3.25	0	86.17	0	2.91	0	0	6.7	0	0	0	0	0	0	-8.11	-8.11
Westbrook Inverter Transfor	W_INVTR6	369881	4906578	2	0	0	77.3	77.3	1	1803.41	3.25	0	76.12	0	-2.33	0	0	1.11	0	0	0	0	0	0	2.44	2.44
Westbrook Inverter Transfor	W_INVTR7	369786	4906417	2	0	0	77.3	77.3	1	1885.64	3.25	0	76.51	0	-2.36	0	0	1.15	0	0	0	0	0	0	2.04	2.04
Westbrook Inverter Transfor	W_INVTR3	369514	4906164	2	0	0	77.3	77.3	1	1997.09	3.25	0	77.01	0	-2.4	0	0	1.2	0	0	0	0	0	0	1.53	1.53
Westbrook Inverter Transfor	W_INVTR4	369679	4906164	2	0	0	77.3	77.3	1	2060.17	3.25	0	77.28	0	-2.43	0	0	1.23	0	0	0	0	0	0	1.25	1.25
Inverter Transformer	MV3-2 T	368677	4907928	2	0	0	56.1	56.1	1	180.62	3.25	0	56.14	0	0.07	0	0	2.1	0	0	0	0	0	0	-2.25	-2.25
Inverter Transformer	MV3-4 T	368507	4907925	2	0	0	56.1	56.1	1	333.39	3.25	0	61.46	0	-0.09	0	0	2.94	0	0	0	0	0	0	-8.25	-8.25
Inverter Transformer	MV6-1 T	370230	4907364	2	0	0	69.4	69.4	1	1561.48	3.25	0	74.87	0	2	0	0	4.5	0	0	0	0	0	0	-12.02	-12.02
Inverter Transformer	MV3-8 T	368685	4907712	2	0	0	56.1	56.1	1	352.32	3.25	0	61.94	0	-0.1	0	0	3.02	0	0	0	0	0	0	-8.8	-8.8
Inverter Transformer	MV6-4 T	370244	4906966	2	0	0	69.4	69.4	1	1781	3.25	0	76.01	0	2.09	0	0	4.74	0	0	0	0	0	0	-13.49	-13.49
Inverter Transformer	MV3-9 T	368517	4907703	2	0	0	56.1	56.1	1	451.64	3.25	0	64.1	0	-0.12	0	0	3.39	0	0	0	0	0	0	-11.31	-11.31
Inverter Transformer	MV3-5 T	368335	4907843	2	0	0	56.1	56.1	1	523.3	3.25	0	65.37	0	-0.12	0	0	3.63	0	0	0	0	0	0	-12.83	-12.83
Inverter Transformer	MV3-14 T	368678	4907498	2	0	0	56.1	56.1	1	557.65	3.25	0	65.93	0	-0.11	0	0	3.73	0	0	0	0	0	0	-13.49	-13.49
Inverter Transformer	MV4-15 T	369170	4908481	2	0	0	56.1	56.1	1	564.75	3.25	0	66.04	0	-0.11	0	0	3.75	0	0	0	0	0	0	-13.62	-13.62
Inverter Transformer	MV4-14 T	369182	4908507	2	0	0	56.1	56.1	1	592.64	3.25	0	66.46	0	-0.11	0	0	3.83	0	0	0	0	0	0	-14.13	-14.13
Inverter Transformer	MV3-11 T	368340	4907662	2	0	0	56.1	56.1	1	609.91	3.25	0	66.71	0	-0.1	0	0	3.88	0	0	0	0	0	0	-14.43	-14.43
Inverter Transformer	MV4-13 T	369057	4908605	2	0	0	56.1	56.1	1	615.08	3.25	0	66.78	0	-0.1	0	0	3.9	0	0	0	0	0	0	-14.52	-14.52
Inverter Transformer	MV3-16 T	368509	4907475	2	0	0	56.1	56.1	1	642.8	3.25	0	67.16	0	-0.09	0	0	3.98	0	0	0	0	0	0	-14.99	-14.99
Inverter Transformer	MV3-1 T	368150	4907976	2	0	0	56.1	56.1	1	673.77	3.25	0	67.57	0	-0.09	0	0	4.06	0	0	0	0	0	0	-15.49	-15.49
Inverter Transformer	MV3-6 T	368156	4907834	2	0	0	56.1	56.1	1	695.3	3.25	0	67.84	0	-0.08	0	0	4.12	0	0	0	0	0	0	-15.82	-15.82
Inverter Transformer	MV2-1 T	365836	4906816	2	0	0	69.4	69.4	1	3225.07	3.25	0	81.17	0	2.57	0	0	6.07	0	0	0	0	0	0	-20.47	-20.47
Inverter Transformer	MV3-15 T	368351	4907477	2	0	0	56.1	56.1	1	731.1	3.25	0	68.28	0	-0.07	0	0	4.22	0	0	0	0	0	0	-16.36	-16.36
Inverter Transformer	MV3-20 T	368683	4907317	2	0	0	56.1	56.1	1	733.11	3.25	0	68.3	0	-0.07	0	0	4.22	0	0	0	0	0	0	-16.39	-16.39
Inverter Transformer	MV3-10 T	368162	4907669	2	0	0	56.1	56.1	1	754.79	3.25	0	68.56	0	-0.07	0	0	4.28	0	0	0	0	0	0	-16.71	-16.71
Inverter Transformer	MV4-12 T	369049	4908803	2	0	0	56.1	56.1	1	799.22	3.25	0	69.05	0	-0.05	0	0	4.39	0	0	0	0	0	0	-17.34	-17.34
Inverter Transformer	MV3-19 T	368352	4907347	2	0	0	56.1	56.1	1	834.31	3.25	0	69.43	0	-0.04	0	0	4.48	0	0	0	0	0	0	-17.81	-17.81
Inverter Transformer	MV3-17 T	368183	4907472	2	0	0	56.1	56.1	1	852.22	3.25	0	69.61	0	-0.04	0	0	4.53	0	0	0	0	0	0	-18.04	-18.04
Inverter Transformer	MV3-3 T	367944	4907927	2	0	0	56.1	56.1	1	883.88	3.25	0	69.93	0	-0.03	0	0	4.61	0	0	0	0	0	0	-18.45	-18.45
Inverter Transformer	MV3-21 T	368484	4907206	2	0	0	56.1	56.1	1	896.74	3.25	0	70.05	0	-0.02	0	0	4.64	0	0	0	0	0	0	-18.61	-18.61
Inverter Transformer	MV3-22 T	368661	4907142	2	0	0	56.1	56.1	1	909.19	3.25	0	70.17	0	-0.02	0	0	4.67	0	0	0	0	0	0	-18.77	-18.77
Inverter Transformer	MV3-7 T	367951	4907754	2	0	0	56.1	56.1	1	914.87	3.25	0	70.23	0	-0.02	0	0	4.68	0	0	0	0	0	0	-18.84	-18.84
Inverter Transformer	MV4-11 T	369269	4908855	2	0	0	56.1	56.1	1	932.65	3.25	0	70.39	0	-0.01	0	0	4.73	0	0	0	0	0	0	-19.05	-19.05
Inverter Transformer	MV4-10 T	369307	4908858	2	0	0	56.1	56.1	1	954.07	3.25	0	70.59	0	0	0	0	4.78	0	0	0	0	0	0	-19.31	-19.31
Inverter Transformer	MV1-7 T	364919	4905782	2	0	0	69.4	69.4	1	4506.73	3.25	0	84.08	0	2.91	0	0	7.04	0	0	0	0	0	0	-24.68	-24.68
Inverter Transformer	MV3-13 T	367958	4907577	2	0	0	56.1	56.1	1	977.94	3.25	0	70.81	0	0	0	0	4.84	0	0	0	0	0	0	-19.59	-19.59
Inverter Transformer	MV1-10 T	365010	4905564	2	0	0	69.4	69.4	1	4543.07	3.25	0	84.15	0	2.92	0	0	7.07	0	0	0	0	0	0	-24.78	-24.78
Inverter Transformer	MV4-7 T	369040	4909001	2	0	0	56.1	56.1	1	988.57	3.25	0	70.9	0	0.01	0	0	4.86	0	0	0	0	0	0	-19.71	-19.71
Inverter Transformer	MV1-14 T	365157	4905049	2	0	0	69.4	69.4	1	4727.9	3.25	0	84.49	0	2.96	0	0	7.2	0	0	0	0	0	0	-25.3	-25.3

	Inverter Transformer	MV4-8 T	369262	4909001	2	0	0	56.1	56.1	1	1060.09	3.25	0	71.51	0	0.03	0	0	5.03	0	0	0	0	0	0	-20.51	-20.51
	Inverter Transformer	MV4-9 T	369284	4909001	2	0	0	56.1	56.1	1	1069.43	3.25	0	71.58	0	0.04	0	0	5.05	0	0	0	0	0	0	-20.61	-20.61
	Inverter Transformer	MV1-13 T	364725	4905241	2	0	0	69.4	69.4	1	4959.32	3.25	0	84.91	0	3	0	0	7.35	0	0	0	0	0	0	-25.92	-25.92
	Inverter Transformer	MV4-4 T	369033	4909199	2	0	0	56.1	56.1	1	1181.18	3.25	0	72.45	0	0.08	0	0	5.31	0	0	0	0	0	0	-21.78	-21.78
	Inverter Transformer	MV3-12 T	367674	4907594	2	0	0	56.1	56.1	1	1229.58	3.25	0	72.8	0	0.09	0	0	5.42	0	0	0	0	0	0	-22.25	-22.25
	Inverter Transformer	MV4-6 T	369249	4909192	2	0	0	56.1	56.1	1	1231.75	3.25	0	72.81	0	0.1	0	0	5.43	0	0	0	0	0	0	-22.27	-22.27
	Inverter Transformer	MV3-18 T	367757	4907412	2	0	0	56.1	56.1	1	1233.99	3.25	0	72.83	0	0.1	0	0	5.43	0	0	0	0	0	0	-22.3	-22.3
	Inverter Transformer	MV4-5 T	369283	4909199	2	0	0	56.1	56.1	1	1250.48	3.25	0	72.94	0	0.1	0	0	5.47	0	0	0	0	0	0	-22.46	-22.46
	Inverter Transformer	MV5-6 T	369987	4908507	2	0	0	56.1	56.1	1	1257.16	3.25	0	72.99	0	0.1	0	0	5.48	0	0	0	0	0	0	-22.52	-22.52
	Inverter Transformer	MV5-5 T	370021	4908690	2	0	0	56.1	56.1	1	1366.17	3.25	0	73.71	0	0.15	0	0	5.73	0	0	0	0	0	0	-23.53	-23.53
	Inverter Transformer	MV4-1 T	369017	4909397	2	0	0	56.1	56.1	1	1374.05	3.25	0	73.76	0	0.15	0	0	5.74	0	0	0	0	0	0	-23.6	-23.6
	Inverter Transformer	MV4-3 T	369234	4909397	2	0	0	56.1	56.1	1	1421.33	3.25	0	74.05	0	0.17	0	0	5.85	0	0	0	0	0	0	-24.01	-24.01
	Inverter Transformer	MV4-2 T	369267	4909397	2	0	0	56.1	56.1	1	1431.27	3.25	0	74.11	0	0.17	0	0	5.87	0	0	0	0	0	0	-24.1	-24.1
	Inverter Transformer	MV5-2 T	370011	4908853	2	0	0	56.1	56.1	1	1442.9	3.25	0	74.18	0	0.18	0	0	5.89	0	0	0	0	0	0	-24.2	-24.2
	Inverter Transformer	MV6-2 T	370091	4907339	2	0	0	56.1	56.1	1	1449.18	3.25	0	74.22	0	0.18	0	0	5.91	0	0	0	0	0	0	-24.25	-24.25
	Inverter Transformer	MV5-1 T	370015	4909142	2	0	0	56.1	56.1	1	1626.86	3.25	0	75.23	0	0.25	0	0	6.29	0	0	0	0	0	0	-25.7	-25.7
	Inverter Transformer	MV5-3 T	370237	4908851	2	0	0	56.1	56.1	1	1633.3	3.25	0	75.26	0	0.25	0	0	6.3	0	0	0	0	0	0	-25.76	-25.76
	Inverter Transformer	MV6-3 T	370202	4907140	2	0	0	56.1	56.1	1	1646.75	3.25	0	75.33	0	0.26	0	0	6.33	0	0	0	0	0	0	-25.86	-25.86
	Inverter Transformer	MV5-4 T	370330	4908707	2	0	0	56.1	56.1	1	1651.06	3.25	0	75.36	0	0.26	0	0	6.34	0	0	0	0	0	0	-25.89	-25.89
	Inverter Transformer	MV2-2 T	365982	4906654	2	0	0	56.1	56.1	1	3157.94	3.25	0	80.99	0	0.9	0	0	9.13	0	0	0	0	0	0	-34.96	-34.96
	Line Reactor	NGR	369421	4908787.5	5	0	0	45.4	45.4	1	960.86	5.25	0	70.65	0	3.46	1.29	0.09	0.39	0	0	0	0	0	0	-30.44	-30.44
	Inverter Transformer	MV2-3 T	365814	4906641	2	0	0	56.1	56.1	1	3315.25	3.25	0	81.41	0	0.96	0	0	9.39	0	0	0	0	0	0	-35.71	-35.71
	Inverter Transformer	MV2-4 T	365590	4906628	2	0	0	56.1	56.1	1	3524.86	3.25	0	81.94	0	1.05	0	0	9.73	0	0	0	0	0	0	-36.66	-36.66
	Inverter Transformer	MV1-1 T	364721	4906166	2	0	0	56.1	56.1	1	4506.73	3.25	0	84.08	0	1.44	0	0	11.18	0	0	0	0	0	0	-40.65	-40.65
	Inverter Transformer	MV1-2 T	364759	4906063	2	0	0	56.1	56.1	1	4516.25	3.25	0	84.1	0	1.45	0	0	11.2	0	0	0	0	0	0	-40.68	-40.68
	Inverter Transformer	MV1-4 T	364821	4905918	2	0	0	56.1	56.1	1	4526.61	3.25	0	84.12	0	1.45	0	0	11.21	0	0	0	0	0	0	-40.72	-40.72
	Inverter Transformer	MV1-12 T	365044	4905386	2	0	0	56.1	56.1	1	4614.49	3.25	0	84.28	0	1.48	0	0	11.33	0	0	0	0	0	0	-41.04	-41.04
	Inverter Transformer	MV1-15 T	365309	4904994	2	0	0	56.1	56.1	1	4646.93	3.25	0	84.34	0	1.5	0	0	11.38	0	0	0	0	0	0	-41.16	-41.16
	Inverter Transformer	MV1-5 T	364676	4905892	2	0	0	56.1	56.1	1	4667.13	3.25	0	84.38	0	1.5	0	0	11.41	0	0	0	0	0	0	-41.23	-41.23
	Inverter Transformer	MV1-8 T	364782	4905647	2	0	0	56.1	56.1	1	4693.15	3.25	0	84.43	0	1.51	0	0	11.44	0	0	0	0	0	0	-41.33	-41.33
	Inverter Transformer	MV1-3 T	364435	4906039	2	0	0	56.1	56.1	1	4819.65	3.25	0	84.66	0	1.56	0	0	11.61	0	0	0	0	0	0	-41.78	-41.78
	Inverter Transformer	MV1-6 T	364482	4905835	2	0	0	56.1	56.1	1	4865.77	3.25	0	84.74	0	1.58	0	0	11.68	0	0	0	0	0	0	-41.94	-41.94
	Inverter Transformer	MV1-9 T	364555	4905646	2	0	0	56.1	56.1	1	4890.36	3.25	0	84.79	0	1.59	0	0	11.71	0	0	0	0	0	0	-42.02	-42.02
	Inverter Transformer	MV1-11 T	364649	4905414	2	0	0	56.1	56.1	1	4928.05	3.25	0	84.85	0	1.6	0	0	11.76	0	0	0	0	0	0	-42.15	-42.15
Limit. Valu	0	0																								
Level D/N:	39.9483	39.9483																								

Receiver: Vacant Lot Receptor
ID: S-VLR18
X: 369317
Y: 4908090
Z: 4.5
Ground: 0

ISO	Description	ID	X	Y	Z	Ground	ReflOrd	LxT	LxN	L/A	Dist.	hm	Freq	Adiv	K0b	Agr	Abar	z	Aatm	Afol	Ahous	Cmet	CmetN	Dc	RL	LtotT	LtotN
	Sol_Luce Substation	S_Substation	369426	4908792	3.5	0	0	112.1	112.1	1	710.41	5.24	0	68.03	0	0.06	6.34	0.35	1.91	0	0	0	0	0	0	35.74	35.74
	Inverter	MV3-8	368680	4907712	2	0	0	100.3	100.3	1	740.72	3.25	0	68.39	0	-0.39	0	0	9.93	0	0	0	0	0	0	22.38	22.38
	Inverter	MV4-11	369264	4908855	2	0	0	100.3	100.3	1	766.84	3.25	0	68.69	0	-0.37	0	0	10.04	0	0	0	0	0	0	21.95	21.95
	Inverter	MV4-10	369312	4908858	2	0	0	100.3	100.3	1	768.02	3.25	0	68.71	0	-0.37	0	0	10.05	0	0	0	0	0	0	21.93	21.93
	Inverter	MV3-14	368684	4907498	2	0	0	100.3	100.3	1	866.69	3.25	0	69.76	0	-0.31	0	0	10.44	0	0	0	0	0	0	20.43	20.43
	Inverter	MV3-9	368512	4907703	2	0	0	100.3	100.3	1	893.2	3.25	0	70.02	0	-0.3	0	0	10.54	0	0	0	0	0	0	20.05	20.05
	Inverter	MV4-9	369289	4909001	2	0	0	100.3	100.3	1	911.43	3.25	0	70.19	0	-0.29	0	0	10.61	0	0	0	0	0	0	19.8	19.8
	Inverter	MV4-8	369256	4909001	2	0	0	100.3	100.3	1	913.04	3.25	0	70.21	0	-0.29	0	0	10.61	0	0	0	0	0	0	19.78	19.78
	Inverter	MV5-5	370015	4908690	2	0	0	100.3	100.3	1	920.44	3.25	0	70.28	0	-0.29	0	0	10.64	0	0	0	0	0	0	19.68	19.68
	Inverter	MV4-7	369035	4909001	2	0	0	100.3	100.3	1	953.65	3.25	0	70.59	0	-0.27	0	0	10.75	0	0	0	0	0	0	19.24	19.24
	Inverter	MV3-20	368689	4907317	2	0	0	100.3	100.3	1	995.95	3.25	0	70.96	0	-0.25	0	0	10.9	0	0	0	0	0	0	18.7	18.7
	Inverter	MV3-16	368514	4907475	2	0	0	100.3	100.3	1	1011.45	3.25	0	71.1	0	-0.24	0	0	10.95	0	0	0	0	0	0	18.51	18.51
	DSTATCOM - 10 MVAR #2	DSAT2	369403	4908757	2.5	0	0	96.6	96.6	1	672.52	3.5	0	67.55	0	2.52	0	0	0.85	0	0	0	0	0	0	25.71	25.71
	Inverter	MV5-2	370006	4908853	2	0	0	100.3	100.3	1	1028.05	3.25	0	71.24	0	-0.23	0	0	11	0	0	0	0	0	0	18.3	18.3
	DSTATCOM - 10 MVAR #1	DSAT1	369437	4908757	2.5	0	0	96.6	96.6	1	677.71	3.5	0	67.62	0	2.53	0	0	0.85	0	0	0	0	0	0	25.63	25.63
	Inverter	MV3-11	368346	4907662	2	0	0	100.3	100.3	1	1061.15	3.25	0	71.52	0	-0.22	0	0	11.11	0	0	0	0	0	0	17.91	17.91
	Inverter	MV6-2	370085	4907339	2	0	0	100.3	100.3	1	1074.17	3.25	0	71.62	0	-0.21	0	0	11.15	0	0	0	0	0	0	17.75	17.75
	Inverter	MV4-6	369243	4909192	2	0	0	100.3	100.3	1	1104.48	3.25	0	71.86	0	-0.2	0	0	11.24	0	0	0	0	0	0	17.4	17.4
	Inverter	MV4-5	369289	4909199	2	0	0	100.3	100.3	1	1109.36	3.25	0	71.9	0	-0.19	0	0	11.26	0	0	0	0	0	0	17.35	17.35
	Inverter	MV3-15	368357	4907477	2	0	0	100.3	100.3	1	1139.02	3.25	0	72.13	0	-0.18	0	0	11.35	0	0	0	0	0	0	17.02	17.02
	Inverter	MV4-4	369027	4909199	2	0	0	100.3	100.3	1	1146.29	3.25	0	72.19	0	-0.18	0	0	11.37	0	0	0	0	0	0	16.94	16.94
	Inverter	MV5-4	370324	4908707	2	0	0	100.3	100.3	1	1180.99	3.25	0	72.44	0	-0.16	0	0	11.47	0	0	0	0	0	0	16.56	16.56
	Inverter	MV3-6	368162	4907834	2	0	0	100.3	100.3	1	1183.03	3.25	0	72.46	0	-0.16	0	0	11.48	0	0	0	0	0	0	16.54	16.54
	Inverter	MV5-3	370231	4908851	2	0	0	100.3	100.3	1	1189.34	3.25	0	72.51	0	-0.16	0	0	11.49	0	0	0	0	0	0	16.47	16.47
	Inverter	MV3-19	368357	4907347	2	0	0	100.3	100.3	1	1213.94	3.25	0	72.68	0	-0.15	0	0	11.57	0	0	0	0	0	0	16.21	16.21
	Inverter	MV3-21	368478	4907206	2	0	0	100.3	100.3	1	1218.76	3.25	0	72.72	0	-0.15	0	0	11.58	0	0	0	0	0	0	16.16	16.16
	Inverter	MV3-10	368167	4907669	2	0	0	100.3	100.3	1	1224.64	3.25	0	72.76	0	-0.14	0	0	11.6	0	0	0	0	0	0	16.1	16.1
	Inverter	MV5-1	370020	4909142	2	0	0	100.3	100.3	1	1265.27	3.25	0	73.04	0	-0.13	0	0	11.71	0	0	0	0	0	0	15.68	15.68
	Inverter	MV3-17	368178	4907472	2	0	0	100.3	100.3	1	1295.86	3.25	0	73.25	0	-0.11	0	0	11.79	0	0	0	0	0	0	15.38	15.38

Inverter	MV6-3	370207	4907140	2	0	0	100.3	100.3	1	1301.77	3.25	0	73.29	0	-0.11	0	0	11.81	0	0	0	0	0	0	15.32	15.32
Inverter	MV4-2	369272	4909397	2	0	0	100.3	100.3	1	1307.78	3.25	0	73.33	0	-0.11	0	0	11.83	0	0	0	0	0	0	15.26	15.26
Inverter	MV4-3	369229	4909397	2	0	0	100.3	100.3	1	1309.96	3.25	0	73.35	0	-0.11	0	0	11.83	0	0	0	0	0	0	15.24	15.24
Inverter	MV4-1	369011	4909397	2	0	0	100.3	100.3	1	1342.35	3.25	0	73.56	0	-0.09	0	0	11.92	0	0	0	0	0	0	14.93	14.93
Inverter	MV3-3	367939	4907927	2	0	0	100.3	100.3	1	1387.61	3.25	0	73.85	0	-0.08	0	0	12.04	0	0	0	0	0	0	14.5	14.5
Inverter	MV3-7	367945	4907754	2	0	0	100.3	100.3	1	1412.55	3.25	0	74	0	-0.07	0	0	12.1	0	0	0	0	0	0	14.28	14.28
Inverter	MV3-13	367963	4907577	2	0	0	100.3	100.3	1	1447.93	3.25	0	74.21	0	-0.05	0	0	12.19	0	0	0	0	0	0	13.96	13.96
Inverter	MV4-15	369176	4908481	2	0	0	89.1	89.1	1	415.65	3.25	0	63.37	0	0.47	0	0	4.81	0	0	0	0	0	0	20.41	20.41
Inverter	MV4-14	369176	4908507	2	0	0	89.1	89.1	1	440.2	3.25	0	63.87	0	0.49	0	0	4.91	0	0	0	0	0	0	19.78	19.78
Inverter	MV6-1	370235	4907364	2	0	0	97.3	97.3	1	1170.39	3.25	0	72.37	0	-0.17	0	0	11.44	0	0	0	0	0	0	13.67	13.67
Inverter	MV3-18	367752	4907412	2	0	0	100.3	100.3	1	1705.55	3.25	0	75.64	0	0.04	0	0	12.82	0	0	0	0	0	0	11.82	11.82
Inverter	MV3-12	367668	4907594	2	0	0	100.3	100.3	1	1721.98	3.25	0	75.72	0	0.04	0	0	12.85	0	0	0	0	0	0	11.69	11.69
Inverter	MV4-13	369051	4908605	2	0	0	89.1	89.1	1	579.64	3.25	0	66.26	0	0.57	0	0	5.39	0	0	0	0	0	0	16.83	16.83
Fixed Reactor Bank 1	FRB1	369378	4908755	6	0	0	89.8	89.8	1	667.79	5.25	0	67.49	0	-0.93	0	0	1.81	0	0	0	0	0	0	21.4	21.4
Fixed Reactor Bank 2	FRB2	369464	4908755	6	0	0	89.8	89.8	1	681.06	5.25	0	67.66	0	-0.93	0	0	1.84	0	0	0	0	0	0	21.2	21.2
Inverter	MV3-2	368671	4907928	2	0	0	89.1	89.1	1	666.01	3.25	0	67.47	0	0.6	0	0	5.62	0	0	0	0	0	0	15.37	15.37
Inverter	MV4-12	369043	4908803	2	0	0	89.1	89.1	1	763.84	3.25	0	68.66	0	0.63	0	0	5.84	0	0	0	0	0	0	13.92	13.92
Inverter	MV5-6	369982	4908507	2	0	0	89.1	89.1	1	784.93	3.25	0	68.9	0	0.64	0	0	5.89	0	0	0	0	0	0	13.64	13.64
Inverter	MV3-4	368502	4907925	2	0	0	89.1	89.1	1	831.54	3.25	0	69.4	0	0.65	0	0	5.99	0	0	0	0	0	0	13.03	13.03
Inverter	MV3-5	368340	4907843	2	0	0	89.1	89.1	1	1007.74	3.25	0	71.07	0	0.69	0	0	6.33	0	0	0	0	0	0	10.97	10.97
Inverter	MV2-3	365820	4906641	2	0	0	100.3	100.3	1	3785.32	3.25	0	82.56	0	0.5	0	0	16.7	0	0	0	0	0	0	0.55	0.55
Inverter	MV2-4	365586	4906624	2	0	0	100.3	100.3	1	4008.68	3.25	0	83.06	0	0.53	0	0	17.06	0	0	0	0	0	0	-0.34	-0.34
Inverter	MV3-22	368656	4907142	2	0	0	89.1	89.1	1	1155.7	3.25	0	72.26	0	0.72	0	0	6.6	0	0	0	0	0	0	9.48	9.48
Inverter	MV3-1	368156	4907976	2	0	0	89.1	89.1	1	1166.59	3.25	0	72.34	0	0.72	0	0	6.62	0	0	0	0	0	0	9.38	9.38
Inverter	MV1-1	364715	4906166	2	0	0	100.3	100.3	1	4988	3.25	0	84.96	0	0.64	0	0	18.56	0	0	0	0	0	0	-3.85	-3.85
Inverter	MV1-2	364753	4906063	2	0	0	100.3	100.3	1	4993.88	3.25	0	84.97	0	0.64	0	0	18.57	0	0	0	0	0	0	-3.87	-3.87
Inverter	MV1-4	364815	4905918	2	0	0	100.3	100.3	1	4998.56	3.25	0	84.98	0	0.64	0	0	18.58	0	0	0	0	0	0	-3.88	-3.88
Inverter	MV1-15	365315	4904994	2	0	0	100.3	100.3	1	5059.77	3.25	0	85.08	0	0.65	0	0	18.67	0	0	0	0	0	0	-4.09	-4.09
Inverter	MV1-12	365038	4905386	2	0	0	100.3	100.3	1	5061.76	3.25	0	85.09	0	0.65	0	0	18.67	0	0	0	0	0	0	-4.09	-4.09
Inverter	MV1-5	364671	4905892	2	0	0	100.3	100.3	1	5139.7	3.25	0	85.22	0	0.65	0	0	18.78	0	0	0	0	0	0	-4.35	-4.35
Inverter	MV1-8	364788	4905647	2	0	0	100.3	100.3	1	5145.88	3.25	0	85.23	0	0.65	0	0	18.79	0	0	0	0	0	0	-4.37	-4.37
Inverter	MV2-1	365842	4906816	2	0	0	97.3	97.3	1	3701.18	3.25	0	82.37	0	0.48	0	0	16.56	0	0	0	0	0	0	-2.1	-2.1
SubstationTransformer	W_ST	369711.17	4906112.3	2.5	0	0	92	92	1	2016.63	3.5	0	77.09	0	-0.16	0	0	4.39	0	0	0	0	0	0	10.65	10.65
Inverter	MV1-6	364477	4905835	2	0	0	100.3	100.3	1	5339.53	3.25	0	85.55	0	0.67	0	0	19.07	0	0	0	0	0	0	-4.98	-4.98
Inverter	MV1-9	364561	4905646	2	0	0	100.3	100.3	1	5347.21	3.25	0	85.56	0	0.67	0	0	19.08	0	0	0	0	0	0	-5	-5
Inverter	MV1-11	364655	4905414	2	0	0	100.3	100.3	1	5375.43	3.25	0	85.61	0	0.67	0	0	19.12	0	0	0	0	0	0	-5.09	-5.09
Westbrook Inverter Enclosur	W_INV5	369719	4906574	2	0	0	89.1	89.1	1	1568.4	3.25	0	74.91	0	0.81	0	0	7.33	0	0	0	0	0	0	6.02	6.02
Westbrook Inverter Enclosur	W_INV6	369875	4906578	2	0	0	89.1	89.1	1	1611.68	3.25	0	75.15	0	0.82	0	0	7.4	0	0	0	0	0	0	5.7	5.7
Westbrook Inverter Enclosur	W_INV2	369374	4906388	2	0	0	89.1	89.1	1	1702.96	3.25	0	75.62	0	0.84	0	0	7.55	0	0	0	0	0	0	5.04	5.04
Westbrook Inverter Enclosur	W_INV7	369780	4906417	2	0	0	89.1	89.1	1	1735.89	3.25	0	75.79	0	0.85	0	0	7.61	0	0	0	0	0	0	4.81	4.81
Inverter	MV1-7	364925	4905782	2	0	0	97.3	97.3	1	4961.51	3.25	0	84.91	0	0.64	0	0	18.52	0	0	0	0	0	0	-6.76	-6.76
Inverter	MV1-10	365004	4905564	2	0	0	97.3	97.3	1	4998.26	3.25	0	84.98	0	0.64	0	0	18.58	0	0	0	0	0	0	-6.88	-6.88
Westbrook Inverter Enclosur	W_INV3	369508	4906164	2	0	0	89.1	89.1	1	1935.45	3.25	0	76.74	0	0.89	0	0	7.94	0	0	0	0	0	0	3.49	3.49
Westbrook Inverter Enclosur	W_INV4	369673	4906164	2	0	0	89.1	89.1	1	1958.63	3.25	0	76.84	0	0.9	0	0	7.98	0	0	0	0	0	0	3.34	3.34
Inverter	MV1-14	365163	4905049	2	0	0	97.3	97.3	1	5148.15	3.25	0	85.23	0	0.65	0	0	18.8	0	0	0	0	0	0	-7.37	-7.37
Inverter	MV6-4	370250	4906966	2	0	0	86.1	86.1	1	1460.78	3.25	0	74.29	0	0.78	0	0	7.14	0	0	0	0	0	0	3.84	3.84
Inverter	MV1-13	364731	4905241	2	0	0	97.3	97.3	1	5398.91	3.25	0	85.65	0	0.67	0	0	19.16	0	0	0	0	0	0	-8.17	-8.17
Westbrook Inverter Enclosur	W_INV1	369409	4906578	2	0	0	86.1	86.1	1	1514.8	3.25	0	74.61	0	0.8	0	0	7.23	0	0	0	0	0	0	3.42	3.42
Inverter	MV2-2	365977	4906654	2	0	0	89.1	89.1	1	3635.62	3.25	0	82.21	0	1.3	0	0	10.56	0	0	0	0	0	0	-5.02	-5.02
Gardiner Substation	G_Sub	366586.3	4903349.9	2.5	0	0	90.8	90.8	1	5470.4	4.25	0	85.76	0	1.76	2.24	0.38	9.16	0	0	0	0	0	0	-8.15	-8.15
Westbrook Inverter Transfor	W_INVTR1	369403	4906578	2	0	0	78.2	78.2	1	1514.45	3.25	0	74.61	0	-2.21	0	0	0.96	0	0	0	0	0	0	4.88	4.88
Inverter	MV1-3	364440	4906039	2	0	0	89.1	89.1	1	5290.72	3.25	0	85.47	0	1.71	0	0	12.85	0	0	0	0	0	0	-10.97	-10.97
Westbrook Inverter Transfor	W_INVTR5	369725	4906574	2	0	0	77.3	77.3	1	1569.94	3.25	0	74.92	0	-2.23	0	0	0.99	0	0	0	0	0	0	3.67	3.67
Westbrook Inverter Transfor	W_INVTR6	369881	4906578	2	0	0	77.3	77.3	1	1613.77	3.25	0	75.16	0	-2.25	0	0	1.01	0	0	0	0	0	0	3.42	3.42
Inverters	G_Inv2	366676.9	4903239.1	2	0	0	87.7	87.7	1	5522.8	3.25	0	85.84	0	2.89	0	0	6.49	0	0	0	0	0	0	-7.56	-7.56
Westbrook Inverter Transfor	W_INVTR2	369368	4906388	2	0	0	77.3	77.3	1	1702.77	3.25	0	75.62	0	-2.29	0	0	1.06	0	0	0	0	0	0	2.95	2.95
Inverters	G_Inv1	366526.4	4903225.8	2	0	0	87.7	87.7	1	5607.84	3.25	0	85.98	0	2.9	0	0	6.57	0	0	0	0	0	0	-7.79	-7.79
Inverters	G_Inv4	366732.8	4903105	2	0	0	87.7	87.7	1	5615.01	3.25	0	85.99	0	2.9	0	0	6.58	0	0	0	0	0	0	-7.81	-7.81
Inverters	G_Inv3	366583.7	4903091.4	2	0	0	87.7	87.7	1	5697.1	3.25	0	86.11	0	2.9	0	0	6.67	0	0	0	0	0	0	-8.02	-8.02
Westbrook Inverter Transfor	W_INVTR7	369786	4906417	2	0	0	77.3	77.3	1	1737.5	3.25	0	75.8	0	-2.3	0	0	1.08	0	0	0	0	0	0	2.77	2.77
Inverters	G_Inv6	366788.5	4902972	2	0	0	87.7	87.7	1	5708.52	3.25	0	86.13	0	2.9	0	0	6.68	0	0	0	0	0	0	-8.05	-8.05
Inverters	G_Inv5	366638.5	4902958.1	2	0	0	87.7	87.7	1	5788.85	3.25	0	86.25	0	2.91	0	0	6.76	0	0	0	0	0	0	-8.26	-8.26
Inverters	G_Inv8	366844.5	4902838.5	2	0	0	87.7	87.7	1	5804.44	3.25	0	86.28	0	2.91	0	0	6.78	0	0	0	0	0	0	-8.3	-8.3
Inverters	G_Inv7	366694.6	4902824.7	2	0	0	87.7	87.7	1	5882.21	3.25	0	86.39	0	2.91	0	0	6.86	0	0	0	0	0	0	-8.5	-8.5
Inverters	G_Inv10	366900.7	4902704.8	2	0	0	87.7	87.7	1	5902.45	3.25	0	86.42	0	2.91	0	0	6.88	0	0	0	0	0	0	-8.55	-8.55
Inverters	G_Inv9	366750.9	4902691.8	2	0	0	87.7	87.7	1	5977.08	3.25	0	86.53	0	2.92	0	0	6.95	0	0	0	0	0	0	-8.74	-8.74
Westbrook Inverter Transfor	W_INVTR3	369514	4906164	2	0	0	77.3	77.3	1	1936.05	3.25	0	76.74	0	-2.38	0	0	1.17	0	0	0	0	0	0	1.81	1.81
Westbrook Inverter Transfor	W_INVTR4	369679	4906164	2	0	0	77.3	77.3	1	1959.73	3.25	0	76.84	0	-2.39	0	0	1.19	0	0	0	0	0	0	1.7	1.7
Inverter Transformer	MV6-1 T	370230	4907364	2	0	0	69.4	69.4	1	1166.47	3.25	0	72.34	0	1.8	0	0	4.03	0	0	0	0	0	0	-8.82	-8.82
Inverter Transformer	MV6-4 T	370244	4906966	2	0	0	69.4	69.4	1	1456.95	3.25	0	74.27	0	1.95	0	0	4.39	0	0	0	0	0	0	-11.26	-11.26
Inverter Transformer	MV4-15 T	369170	4908481	2	0	0	56.1	56.1	1	417.73	3.25	0	63.42	0	-0.12	0	0	3.27	0	0	0	0	0	0	-10.51	-10.51
Inverter Transformer	MV4-14 T	369182	4908507	2	0	0	56.1	56.1	1	438.32	3.25	0	63.84	0	-0.12	0	0	3.35	0	0	0	0	0	0	-11	-11
Inverter Transformer	MV4-13 T	369057	4908605	2	0	0	56.1	56.1	1	576.92	3.25	0	66.22	0	-0.11	0	0	3.79	0	0	0	0	0	0	-13.84	-13.84
Inverter Transformer	MV3-2 T	368677	4907928	2	0	0	56.1	56.1	1	660.19	3.25	0	67.39	0	-0.09	0	0	4.02	0	0	0	0	0	0	-15.27	-15.27

	Inverter Transformer	MV3-8 T	368685	4907712	2	0	0	56.1	56.1	1	736.42	3.25	0	68.34	0	-0.07	0	0	4.23	0	0	0	0	0	0	-16.44	-16.44
	Inverter Transformer	MV4-12 T	369049	4908803	2	0	0	56.1	56.1	1	761.71	3.25	0	68.64	0	-0.06	0	0	4.3	0	0	0	0	0	0	-16.81	-16.81
	Inverter Transformer	MV4-11 T	369269	4908855	2	0	0	56.1	56.1	1	766.51	3.25	0	68.69	0	-0.06	0	0	4.31	0	0	0	0	0	0	-16.88	-16.88
	Inverter Transformer	MV4-10 T	369307	4908858	2	0	0	56.1	56.1	1	768.07	3.25	0	68.71	0	-0.06	0	0	4.31	0	0	0	0	0	0	-16.9	-16.9
	Inverter Transformer	MV5-6 T	369987	4908507	2	0	0	56.1	56.1	1	789.17	3.25	0	68.94	0	-0.06	0	0	4.37	0	0	0	0	0	0	-17.2	-17.2
	Inverter Transformer	MV2-1 T	365836	4906816	2	0	0	69.4	69.4	1	3706.81	3.25	0	82.38	0	2.71	0	0	6.45	0	0	0	0	0	0	-22.19	-22.19
	Inverter Transformer	MV3-4 T	368507	4907925	2	0	0	56.1	56.1	1	826.64	3.25	0	69.35	0	-0.04	0	0	4.46	0	0	0	0	0	0	-17.71	-17.71
	Inverter Transformer	MV3-14 T	368678	4907498	2	0	0	56.1	56.1	1	871.09	3.25	0	69.8	0	-0.03	0	0	4.57	0	0	0	0	0	0	-18.29	-18.29
	Inverter Transformer	MV3-9 T	368517	4907703	2	0	0	56.1	56.1	1	888.69	3.25	0	69.98	0	-0.03	0	0	4.62	0	0	0	0	0	0	-18.51	-18.51
	Inverter Transformer	MV4-9 T	369284	4909001	2	0	0	56.1	56.1	1	911.6	3.25	0	70.2	0	-0.02	0	0	4.67	0	0	0	0	0	0	-18.79	-18.79
	Inverter Transformer	MV4-8 T	369262	4909001	2	0	0	56.1	56.1	1	912.66	3.25	0	70.21	0	-0.02	0	0	4.68	0	0	0	0	0	0	-18.81	-18.81
	Inverter Transformer	MV5-5 T	370021	4908690	2	0	0	56.1	56.1	1	925	3.25	0	70.32	0	-0.01	0	0	4.71	0	0	0	0	0	0	-18.96	-18.96
	Inverter Transformer	MV4-7 T	369040	4909001	2	0	0	56.1	56.1	1	952.18	3.25	0	70.57	0	0	0	0	4.77	0	0	0	0	0	0	-19.29	-19.29
	Inverter Transformer	MV3-20 T	368683	4907317	2	0	0	56.1	56.1	1	999.75	3.25	0	71	0	0.01	0	0	4.89	0	0	0	0	0	0	-19.84	-19.84
	Inverter Transformer	MV3-5 T	368335	4907843	2	0	0	56.1	56.1	1	1012.59	3.25	0	71.11	0	0.02	0	0	4.92	0	0	0	0	0	0	-19.99	-19.99
	Inverter Transformer	MV3-16 T	368509	4907475	2	0	0	56.1	56.1	1	1015.43	3.25	0	71.13	0	0.02	0	0	4.93	0	0	0	0	0	0	-20.02	-20.02
	Inverter Transformer	MV5-2 T	370011	4908853	2	0	0	56.1	56.1	1	1031.41	3.25	0	71.27	0	0.02	0	0	4.96	0	0	0	0	0	0	-20.2	-20.2
	Inverter Transformer	MV3-11 T	368340	4907662	2	0	0	56.1	56.1	1	1066.64	3.25	0	71.56	0	0.04	0	0	5.05	0	0	0	0	0	0	-20.58	-20.58
	Inverter Transformer	MV1-7 T	364919	4905782	2	0	0	69.4	69.4	1	4966.82	3.25	0	84.92	0	3.01	0	0	7.36	0	0	0	0	0	0	-25.94	-25.94
	Inverter Transformer	MV6-2 T	370091	4907339	2	0	0	56.1	56.1	1	1078.46	3.25	0	71.66	0	0.04	0	0	5.07	0	0	0	0	0	0	-20.71	-20.71
	Inverter Transformer	MV1-10 T	365010	4905564	2	0	0	69.4	69.4	1	4993.09	3.25	0	84.97	0	3.01	0	0	7.38	0	0	0	0	0	0	-26.01	-26.01
	Inverter Transformer	MV4-6 T	369249	4909192	2	0	0	56.1	56.1	1	1104.1	3.25	0	71.86	0	0.05	0	0	5.13	0	0	0	0	0	0	-20.98	-20.98
	Inverter Transformer	MV4-5 T	369283	4909199	2	0	0	56.1	56.1	1	1109.52	3.25	0	71.9	0	0.05	0	0	5.15	0	0	0	0	0	0	-21.04	-21.04
	Inverter Transformer	MV1-14 T	365157	4905049	2	0	0	69.4	69.4	1	5152.99	3.25	0	85.24	0	3.04	0	0	7.48	0	0	0	0	0	0	-26.42	-26.42
	Inverter Transformer	MV3-15 T	368351	4907477	2	0	0	56.1	56.1	1	1144.09	3.25	0	72.17	0	0.06	0	0	5.23	0	0	0	0	0	0	-21.4	-21.4
	Inverter Transformer	MV4-4 T	369033	4909199	2	0	0	56.1	56.1	1	1144.79	3.25	0	72.17	0	0.06	0	0	5.23	0	0	0	0	0	0	-21.41	-21.41
	Inverter Transformer	MV3-22 T	368661	4907142	2	0	0	56.1	56.1	1	1152.84	3.25	0	72.24	0	0.07	0	0	5.25	0	0	0	0	0	0	-21.49	-21.49
	Inverter Transformer	MV1-13 T	364725	4905241	2	0	0	69.4	69.4	1	5404.01	3.25	0	85.65	0	3.09	0	0	7.65	0	0	0	0	0	0	-27.04	-27.04
	Inverter Transformer	MV3-1 T	368150	4907976	2	0	0	56.1	56.1	1	1172.56	3.25	0	72.38	0	0.07	0	0	5.29	0	0	0	0	0	0	-21.69	-21.69
	Inverter Transformer	MV5-4 T	370330	4908707	2	0	0	56.1	56.1	1	1186.11	3.25	0	72.48	0	0.08	0	0	5.32	0	0	0	0	0	0	-21.83	-21.83
	Inverter Transformer	MV3-6 T	368156	4907834	2	0	0	56.1	56.1	1	1188.89	3.25	0	72.5	0	0.08	0	0	5.33	0	0	0	0	0	0	-21.85	-21.85
	Inverter Transformer	MV5-3 T	370237	4908851	2	0	0	56.1	56.1	1	1193.95	3.25	0	72.54	0	0.08	0	0	5.34	0	0	0	0	0	0	-21.9	-21.9
	Inverter Transformer	MV3-21 T	368484	4907206	2	0	0	56.1	56.1	1	1214.64	3.25	0	72.69	0	0.09	0	0	5.39	0	0	0	0	0	0	-22.11	-22.11
	Inverter Transformer	MV3-19 T	368352	4907347	2	0	0	56.1	56.1	1	1217.9	3.25	0	72.71	0	0.09	0	0	5.4	0	0	0	0	0	0	-22.14	-22.14
	Inverter Transformer	MV3-10 T	368162	4907669	2	0	0	56.1	56.1	1	1229.34	3.25	0	72.79	0	0.09	0	0	5.42	0	0	0	0	0	0	-22.25	-22.25
	Inverter Transformer	MV5-1 T	370015	4909142	2	0	0	56.1	56.1	1	1262.5	3.25	0	73.02	0	0.11	0	0	5.5	0	0	0	0	0	0	-22.57	-22.57
	Inverter Transformer	MV3-17 T	368183	4907472	2	0	0	56.1	56.1	1	1291.47	3.25	0	73.22	0	0.12	0	0	5.56	0	0	0	0	0	0	-22.84	-22.84
	Inverter Transformer	MV6-3 T	370202	4907140	2	0	0	56.1	56.1	1	1298.36	3.25	0	73.27	0	0.12	0	0	5.58	0	0	0	0	0	0	-22.91	-22.91
	Inverter Transformer	MV4-2 T	369267	4909397	2	0	0	56.1	56.1	1	1307.96	3.25	0	73.33	0	0.12	0	0	5.6	0	0	0	0	0	0	-23	-23
	Inverter Transformer	MV4-3 T	369234	4909397	2	0	0	56.1	56.1	1	1309.64	3.25	0	73.34	0	0.12	0	0	5.6	0	0	0	0	0	0	-23.01	-23.01
	Inverter Transformer	MV4-1 T	369017	4909397	2	0	0	56.1	56.1	1	1340.99	3.25	0	73.55	0	0.14	0	0	5.67	0	0	0	0	0	0	-23.3	-23.3
	Inverter Transformer	MV3-3 T	367944	4907927	2	0	0	56.1	56.1	1	1382.64	3.25	0	73.81	0	0.15	0	0	5.76	0	0	0	0	0	0	-23.67	-23.67
	Inverter Transformer	MV3-7 T	367951	4907754	2	0	0	56.1	56.1	1	1406.72	3.25	0	73.96	0	0.16	0	0	5.82	0	0	0	0	0	0	-23.88	-23.88
	Inverter Transformer	MV3-13 T	367958	4907577	2	0	0	56.1	56.1	1	1452.6	3.25	0	74.24	0	0.18	0	0	5.92	0	0	0	0	0	0	-24.28	-24.28
	Inverter Transformer	MV3-18 T	367757	4907412	2	0	0	56.1	56.1	1	1700.97	3.25	0	75.61	0	0.28	0	0	6.44	0	0	0	0	0	0	-26.28	-26.28
	Inverter Transformer	MV3-12 T	367674	4907594	2	0	0	56.1	56.1	1	1716.24	3.25	0	75.69	0	0.29	0	0	6.47	0	0	0	0	0	0	-26.39	-26.39
	Line Reactor	NGR	369421	4908787.5	5	0	0	45.4	45.4	1	705.21	5.25	0	67.97	0	3.38	1.54	0.12	0.29	0	0	0	0	0	0	-27.82	-27.82
	Inverter Transformer	MV2-2 T	365982	4906654	2	0	0	56.1	56.1	1	3631.02	3.25	0	82.2	0	1.09	0	0	9.89	0	0	0	0	0	0	-37.13	-37.13
	Inverter Transformer	MV2-3 T	365814	4906641	2	0	0	56.1	56.1	1	3790.86	3.25	0	82.57	0	1.16	0	0	10.14	0	0	0	0	0	0	-37.82	-37.82
	Inverter Transformer	MV2-4 T	365590	4906628	2	0	0	56.1	56.1	1	4003.5	3.25	0	83.05	0	1.25	0	0	10.46	0	0	0	0	0	0	-38.7	-38.7
	Inverter Transformer	MV1-1 T	364721	4906166	2	0	0	56.1	56.1	1	4982.47	3.25	0	84.95	0	1.62	0	0	11.83	0	0	0	0	0	0	-42.34	-42.34
	Inverter Transformer	MV1-2 T	364759	4906063	2	0	0	56.1	56.1	1	4988.4	3.25	0	84.96	0	1.62	0	0	11.84	0	0	0	0	0	0	-42.36	-42.36
	Inverter Transformer	MV1-4 T	364821	4905918	2	0	0	56.1	56.1	1	4993.16	3.25	0	84.97	0	1.62	0	0	11.85	0	0	0	0	0	0	-42.38	-42.38
	Inverter Transformer	MV1-12 T	365044	4905386	2	0	0	56.1	56.1	1	5056.69	3.25	0	85.08	0	1.65	0	0	11.93	0	0	0	0	0	0	-42.59	-42.59
	Inverter Transformer	MV1-15 T	365309	4904994	2	0	0	56.1	56.1	1	5064.51	3.25	0	85.09	0	1.65	0	0	11.94	0	0	0	0	0	0	-42.62	-42.62
	Inverter Transformer	MV1-5 T	364676	4905892	2	0	0	56.1	56.1	1	5135.18	3.25	0	85.21	0	1.67	0	0	12.03	0	0	0	0	0	0	-42.86	-42.86
	Inverter Transformer	MV1-8 T	364782	4905647	2	0	0	56.1	56.1	1	5151.16	3.25	0	85.24	0	1.68	0	0	12.05	0	0	0	0	0	0	-42.91	-42.91
	Inverter Transformer	MV1-3 T	364435	4906039	2	0	0	56.1	56.1	1	5295.33	3.25	0	85.48	0	1.73	0	0	12.24	0	0	0	0	0	0	-43.39	-43.39
	Inverter Transformer	MV1-6 T	364482	4905835	2	0	0	56.1	56.1	1	5335	3.25	0	85.54	0	1.74	0	0	12.29	0	0	0	0	0	0	-43.52	-43.52
	Inverter Transformer	MV1-9 T	364555	4905646	2	0	0	56.1	56.1	1	5352.55	3.25	0	85.57	0	1.75	0	0	12.31	0	0	0	0	0	0	-43.57	-43.57
	Inverter Transformer	MV1-11 T	364649	4905414	2	0	0	56.1	56.1	1	5380.63	3.25	0	85.62	0	1.76	0	0	12.35	0	0	0	0	0	0	-43.66	-43.66
Limit. Valu	0	0																								
Level D/N:	38.6948	38.6948																								

Receiver: Vacant Lot Receptor
ID: S-VLR19
X: 369570
Y: 4908240
Z: 4.5
Ground: 0

ISO	Description	ID	X	Y	Z	Ground	ReflOrd	LxT	LxN	L/A	Dist.	hm	Freq	Adiv	K0b	Agr	Abar	z	Aatm	Afol	Ahous	Cmet	CmetN	Dc	RL	LtotT	LtotN
	Sol_Luce Substation	S_Substation	369426	4908792	3.5	0	0	112.1	112.1	1	570.47	5.24	0	66.12	0	0.07	6.86	0.34	1.59	0	0	0	0	0	0	37.43	37.43
	Inverter	MV5-5	370015	4908690	2	0	0	100.3	100.3	1	632.88	3.25	0	67.03	0	-0.46	0	0	9.39	0	0	0	0	0	0	24.35	24.35

Inverter	MV4-10	369312	4908858	2	0	0	100.3	100.3	1	669.7	3.25	0	67.52	0	-0.43	0	0	9.59	0	0	0	0	0	0	23.64	23.64
Inverter	MV4-11	369264	4908855	2	0	0	100.3	100.3	1	686.93	3.25	0	67.74	0	-0.42	0	0	9.67	0	0	0	0	0	0	23.32	23.32
Inverter	MV5-2	370006	4908853	2	0	0	100.3	100.3	1	752.24	3.25	0	68.53	0	-0.38	0	0	9.98	0	0	0	0	0	0	22.19	22.19
Inverter	MV4-9	369289	4909001	2	0	0	100.3	100.3	1	811.23	3.25	0	69.18	0	-0.35	0	0	10.23	0	0	0	0	0	0	21.25	21.25
DSTATCOM - 10 MVAR #1	DSAT1	369437	4908757	2.5	0	0	96.6	96.6	1	533.84	3.5	0	65.55	0	2.25	0	0	0.74	0	0	0	0	0	0	28.09	28.09
Inverter	MV4-8	369256	4909001	2	0	0	100.3	100.3	1	823.24	3.25	0	69.31	0	-0.34	0	0	10.27	0	0	0	0	0	0	21.07	21.07
DSTATCOM - 10 MVAR #2	DSAT2	369403	4908757	2.5	0	0	96.6	96.6	1	543.31	3.5	0	65.7	0	2.27	0	0	0.75	0	0	0	0	0	0	27.91	27.91
Inverter	MV5-4	370324	4908707	2	0	0	100.3	100.3	1	886.91	3.25	0	69.96	0	-0.3	0	0	10.52	0	0	0	0	0	0	20.14	20.14
Inverter	MV5-3	370231	4908851	2	0	0	100.3	100.3	1	900.14	3.25	0	70.09	0	-0.3	0	0	10.57	0	0	0	0	0	0	19.96	19.96
Inverter	MV4-7	369035	4909001	2	0	0	100.3	100.3	1	930.24	3.25	0	70.37	0	-0.28	0	0	10.67	0	0	0	0	0	0	19.55	19.55
Inverter	MV4-5	369289	4909199	2	0	0	100.3	100.3	1	999.32	3.25	0	70.99	0	-0.25	0	0	10.91	0	0	0	0	0	0	18.66	18.66
Inverter	MV4-6	369243	4909192	2	0	0	100.3	100.3	1	1006.6	3.25	0	71.06	0	-0.24	0	0	10.93	0	0	0	0	0	0	18.57	18.57
Inverter	MV5-1	370020	4909142	2	0	0	100.3	100.3	1	1008.02	3.25	0	71.07	0	-0.24	0	0	10.94	0	0	0	0	0	0	18.55	18.55
Inverter	MV3-8	368680	4907712	2	0	0	100.3	100.3	1	1034.84	3.25	0	71.3	0	-0.23	0	0	11.02	0	0	0	0	0	0	18.22	18.22
Inverter	MV6-2	370085	4907339	2	0	0	100.3	100.3	1	1037.8	3.25	0	71.32	0	-0.23	0	0	11.03	0	0	0	0	0	0	18.18	18.18
Inverter	MV4-4	369027	4909199	2	0	0	100.3	100.3	1	1102.06	3.25	0	71.84	0	-0.2	0	0	11.24	0	0	0	0	0	0	17.43	17.43
Inverter	MV3-14	368684	4907498	2	0	0	100.3	100.3	1	1155.67	3.25	0	72.26	0	-0.17	0	0	11.4	0	0	0	0	0	0	16.83	16.83
Inverter	MV3-9	368512	4907703	2	0	0	100.3	100.3	1	1186.48	3.25	0	72.49	0	-0.16	0	0	11.49	0	0	0	0	0	0	16.5	16.5
Inverter	MV4-2	369272	4909397	2	0	0	100.3	100.3	1	1194.76	4.59	0	72.55	0	0.43	3.72	0.01	11.51	0	0	0	0	0	0	12.11	12.11
Inverter	MV4-3	369229	4909397	2	0	0	100.3	100.3	1	1206.21	3.25	0	72.63	0	-0.15	0	0	11.54	0	0	0	0	0	0	16.29	16.29
Inverter	MV6-3	370207	4907140	2	0	0	100.3	100.3	1	1271.13	3.25	0	73.08	0	-0.12	0	0	11.73	0	0	0	0	0	0	15.63	15.63
Inverter	MV3-20	368689	4907317	2	0	0	100.3	100.3	1	1275.97	3.25	0	73.12	0	-0.12	0	0	11.74	0	0	0	0	0	0	15.58	15.58
Inverter	MV4-1	369011	4909397	2	0	0	100.3	100.3	1	1284.97	3.25	0	73.18	0	-0.12	0	0	11.76	0	0	0	0	0	0	15.49	15.49
Inverter	MV3-16	368514	4907475	2	0	0	100.3	100.3	1	1303.98	3.25	0	73.31	0	-0.11	0	0	11.82	0	0	0	0	0	0	15.3	15.3
Inverter	MV3-11	368346	4907662	2	0	0	100.3	100.3	1	1353.61	3.25	0	73.63	0	-0.09	0	0	11.95	0	0	0	0	0	0	14.82	14.82
Inverter	MV3-15	368357	4907477	2	0	0	100.3	100.3	1	1433.02	3.25	0	74.13	0	-0.06	0	0	12.16	0	0	0	0	0	0	14.09	14.09
Inverter	MV3-6	368162	4907834	2	0	0	100.3	100.3	1	1465.37	3.25	0	74.32	0	-0.05	0	0	12.24	0	0	0	0	0	0	13.8	13.8
Inverter	MV3-21	368478	4907206	2	0	0	100.3	100.3	1	1503.87	3.25	0	74.54	0	-0.03	0	0	12.33	0	0	0	0	0	0	13.47	13.47
Inverter	MV3-19	368357	4907347	2	0	0	100.3	100.3	1	1506.26	3.25	0	74.56	0	-0.03	0	0	12.34	0	0	0	0	0	0	13.45	13.45
Inverter	MV3-10	368167	4907669	2	0	0	100.3	100.3	1	1514.75	3.25	0	74.61	0	-0.03	0	0	12.36	0	0	0	0	0	0	13.37	13.37
Inverter	MV6-1	370235	4907364	2	0	0	97.3	97.3	1	1099.82	3.25	0	71.83	0	-0.2	0	0	11.23	0	0	0	0	0	0	14.46	14.46
Inverter	MV3-17	368178	4907472	2	0	0	100.3	100.3	1	1589.81	3.25	0	75.03	0	0	0	0	12.54	0	0	0	0	0	0	12.74	12.74
Inverter	MV3-3	367939	4907927	2	0	0	100.3	100.3	1	1660.76	3.25	0	75.41	0	0.02	0	0	12.71	0	0	0	0	0	0	12.17	12.17
Inverter	MV4-15	369176	4908481	2	0	0	89.1	89.1	1	461.87	3.25	0	64.29	0	0.5	0	0	5	0	0	0	0	0	0	19.26	19.26
Inverter	MV3-7	367945	4907754	2	0	0	100.3	100.3	1	1696.12	3.25	0	75.59	0	0.04	0	0	12.79	0	0	0	0	0	0	11.89	11.89
Inverter	MV3-13	367963	4907577	2	0	0	100.3	100.3	1	1738.4	3.25	0	75.8	0	0.05	0	0	12.89	0	0	0	0	0	0	11.57	11.57
Inverter	MV4-14	369176	4908507	2	0	0	89.1	89.1	1	475.95	3.25	0	64.55	0	0.51	0	0	5.06	0	0	0	0	0	0	18.94	18.94
Fixed Reactor Bank 2	FRB2	369464	4908755	6	0	0	89.8	89.8	1	525.8	5.25	0	65.42	0	-0.84	0	0	1.49	0	0	0	0	0	0	23.71	23.71
Inverter	MV5-6	369982	4908507	2	0	0	89.1	89.1	1	490.96	3.25	0	64.82	0	0.52	0	0	5.11	0	0	0	0	0	0	18.6	18.6
Fixed Reactor Bank 1	FRB1	369378	4908755	6	0	0	89.8	89.8	1	549.63	5.25	0	65.8	0	-0.86	0	0	1.55	0	0	0	0	0	0	23.29	23.29
Inverter	MV3-18	367752	4907412	2	0	0	100.3	100.3	1	1997.68	3.25	0	77.01	0	0.13	0	0	13.46	0	0	0	0	0	0	9.72	9.72
Inverter	MV3-12	367668	4907594	2	0	0	100.3	100.3	1	2008.71	3.25	0	77.06	0	0.13	0	0	13.48	0	0	0	0	0	0	9.64	9.64
Inverter	MV4-13	369051	4908605	2	0	0	89.1	89.1	1	634.5	3.25	0	67.05	0	0.59	0	0	5.54	0	0	0	0	0	0	15.88	15.88
Inverter	MV4-12	369043	4908803	2	0	0	89.1	89.1	1	771.17	3.25	0	68.74	0	0.63	0	0	5.86	0	0	0	0	0	0	13.82	13.82
Inverter	MV3-2	368671	4907928	2	0	0	89.1	89.1	1	951.6	3.25	0	70.57	0	0.67	0	0	6.22	0	0	0	0	0	0	11.59	11.59
Inverter	MV3-4	368502	4907925	2	0	0	89.1	89.1	1	1113.49	3.25	0	71.93	0	0.71	0	0	6.53	0	0	0	0	0	0	9.89	9.89
Inverter	MV2-3	365820	4906641	2	0	0	100.3	100.3	1	4076.68	3.25	0	83.21	0	0.54	0	0	17.17	0	0	0	0	0	0	-0.6	-0.6
Inverter	MV2-4	365586	4906624	2	0	0	100.3	100.3	1	4299.27	3.25	0	83.67	0	0.57	0	0	17.52	0	0	0	0	0	0	-1.44	-1.44
Inverter	MV3-5	368340	4907843	2	0	0	89.1	89.1	1	1292.48	3.25	0	73.23	0	0.75	0	0	6.85	0	0	0	0	0	0	8.24	8.24
Inverter	MV3-22	368656	4907142	2	0	0	89.1	89.1	1	1428.64	3.25	0	74.1	0	0.78	0	0	7.09	0	0	0	0	0	0	7.1	7.1
Inverter	MV3-1	368156	4907976	2	0	0	89.1	89.1	1	1438.44	3.25	0	74.16	0	0.78	0	0	7.1	0	0	0	0	0	0	7.02	7.02
Inverter	MV1-1	364715	4906166	2	0	0	100.3	100.3	1	5279.44	3.25	0	85.45	0	0.67	0	0	18.99	0	0	0	0	0	0	-4.79	-4.79
Inverter	MV1-2	364753	4906063	2	0	0	100.3	100.3	1	5286.1	3.25	0	85.46	0	0.67	0	0	19	0	0	0	0	0	0	-4.81	-4.81
Inverter	MV1-4	364815	4905918	2	0	0	100.3	100.3	1	5291.66	3.25	0	85.47	0	0.67	0	0	19	0	0	0	0	0	0	-4.83	-4.83
Inverter	MV1-15	365315	4904994	2	0	0	100.3	100.3	1	5351.78	3.25	0	85.57	0	0.67	0	0	19.09	0	0	0	0	0	0	-5.02	-5.02
Inverter	MV1-12	365038	4905386	2	0	0	100.3	100.3	1	5355.78	3.25	0	85.58	0	0.67	0	0	19.1	0	0	0	0	0	0	-5.03	-5.03
Inverter	MV1-5	364671	4905892	2	0	0	100.3	100.3	1	5432.62	3.25	0	85.7	0	0.68	0	0	19.21	0	0	0	0	0	0	-5.27	-5.27
Inverter	MV1-8	364788	4905647	2	0	0	100.3	100.3	1	5439.78	3.25	0	85.71	0	0.68	0	0	19.22	0	0	0	0	0	0	-5.29	-5.29
SubstationTransformer	W_ST	369711.17	4906112.3	2.5	0	0	92	92	1	2132.41	3.5	0	77.58	0	-0.13	0	0	4.59	0	0	0	0	0	0	9.94	9.94
Inverter	MV1-6	364477	4905835	2	0	0	100.3	100.3	1	5632.29	3.25	0	86.01	0	0.69	0	0	19.49	0	0	0	0	0	0	-5.88	-5.88
Inverter	MV2-1	365842	4906816	2	0	0	97.3	97.3	1	3990.71	3.25	0	83.02	0	0.53	0	0	17.03	0	0	0	0	0	0	-3.27	-3.27
Inverter	MV1-9	364561	4905646	2	0	0	100.3	100.3	1	5640.83	3.25	0	86.03	0	0.69	0	0	19.5	0	0	0	0	0	0	-5.9	-5.9
Inverter	MV1-11	364655	4905414	2	0	0	100.3	100.3	1	5669.52	3.25	0	86.07	0	0.69	0	0	19.54	0	0	0	0	0	0	-5.99	-5.99
Westbrook Inverter Enclosur	W_INV5	369719	4906574	2	0	0	89.1	89.1	1	1672.65	3.25	0	75.47	0	0.83	0	0	7.5	0	0	0	0	0	0	5.26	5.26
Westbrook Inverter Enclosur	W_INV6	369875	4906578	2	0	0	89.1	89.1	1	1689.76	3.25	0	75.56	0	0.84	0	0	7.53	0	0	0	0	0	0	5.14	5.14
Westbrook Inverter Enclosur	W_INV7	369780	4906417	2	0	0	89.1	89.1	1	1835.06	3.25	0	76.27	0	0.87	0	0	7.77	0	0	0	0	0	0	4.14	4.14
Westbrook Inverter Enclosur	W_INV2	369374	4906388	2	0	0	89.1	89.1	1	1862.34	3.25	0	76.4	0	0.87	0	0	7.82	0	0	0	0	0	0	3.96	3.96
Inverter	MV1-7	364925	4905782	2	0	0	97.3	97.3	1	5255.26	3.25	0	85.41	0	0.66	0	0	18.95	0	0	0	0	0	0	-7.71	-7.71
Inverter	MV6-4	370250	4906966	2	0	0	86.1	86.1	1	1444.12	3.25	0	74.19	0	0.78	0	0	7.11	0	0	0	0	0	0	3.97	3.97
Inverter	MV1-10	365004	4905564	2	0	0	97.3	97.3	1	5292.38	3.25	0	85.47	0	0.67	0	0	19	0	0	0	0	0	0	-7.83	-7.83
Westbrook Inverter Enclosur	W_INV3	369508	4906164	2	0	0	89.1	89.1	1	2076.93	3.25	0	77.35	0	0.93	0	0	8.17	0	0	0	0	0	0	2.61	2.61
Westbrook Inverter Enclosur	W_INV4	369673	4906164	2	0	0	89.1	89.1	1	2078.56	3.25	0	77.36	0	0.93	0	0	8.17	0	0	0	0	0	0	2.6	2.6
Inverter	MV1-14	365163	4905049	2	0	0	97.3	97.3	1	5440.97	3.25	0	85.71	0	0.68	0	0	19.22	0	0	0	0	0	0	-8.3	-8.3
Inverter	MV1-13	364731	4905241	2	0	0	97.3	97.3	1	5692.97	3.25	0	86.11	0	0.69	0	0	19.57	0	0	0	0	0	0	-9.06	-9.06

Westbrook Inverter Enclosur	W_INV1	369409	4906578	2	0	0	86.1	86.1	1	1669.78	3.25	0	75.45	0	0.83	0	0	7.5	0	0	0	0	0	0	2.28	2.28
Inverter	MV2-2	365977	4906654	2	0	0	89.1	89.1	1	3927.47	3.25	0	82.88	0	1.37	0	0	10.98	0	0	0	0	0	0	-6.18	-6.18
Gardiner Substation	G_Sub	366586.3	4903349.9	2.5	0	0	90.8	90.8	1	5728.49	4.25	0	86.16	0	1.82	2.18	0.38	9.45	0	0	0	0	0	0	-8.83	-8.83
Inverter	MV1-3	364440	4906039	2	0	0	89.1	89.1	1	5582.23	3.25	0	85.94	0	1.78	0	0	13.23	0	0	0	0	0	0	-11.89	-11.89
Westbrook Inverter Transfor	W_INVTR1	369403	4906578	2	0	0	78.2	78.2	1	1670.37	3.25	0	75.46	0	-2.28	0	0	1.04	0	0	0	0	0	0	4.02	4.02
Westbrook Inverter Transfor	W_INVTR5	369725	4906574	2	0	0	77.3	77.3	1	1673.2	3.25	0	75.47	0	-2.28	0	0	1.04	0	0	0	0	0	0	3.1	3.1
Westbrook Inverter Transfor	W_INVTR6	369881	4906578	2	0	0	77.3	77.3	1	1690.85	3.25	0	75.56	0	-2.29	0	0	1.05	0	0	0	0	0	0	3.01	3.01
Inverters	G_Inv2	366676.9	4903239.1	2	0	0	87.7	87.7	1	5777.46	3.25	0	86.23	0	2.91	0	0	6.75	0	0	0	0	0	0	-8.23	-8.23
Inverters	G_Inv1	366526.4	4903225.8	2	0	0	87.7	87.7	1	5865.64	3.25	0	86.37	0	2.91	0	0	6.84	0	0	0	0	0	0	-8.46	-8.46
Inverters	G_Inv4	366732.8	4903105	2	0	0	87.7	87.7	1	5866.68	3.25	0	86.37	0	2.91	0	0	6.84	0	0	0	0	0	0	-8.46	-8.46
Inverters	G_Inv3	366583.7	4903091.4	2	0	0	87.7	87.7	1	5951.98	3.25	0	86.49	0	2.92	0	0	6.93	0	0	0	0	0	0	-8.68	-8.68
Inverters	G_Inv6	366788.5	4902972	2	0	0	87.7	87.7	1	5957.23	3.25	0	86.5	0	2.92	0	0	6.93	0	0	0	0	0	0	-8.69	-8.69
Westbrook Inverter Transfor	W_INVTR7	369786	4906417	2	0	0	77.3	77.3	1	1835.75	3.25	0	76.28	0	-2.34	0	0	1.13	0	0	0	0	0	0	2.28	2.28
Inverters	G_Inv5	366638.5	4902958.1	2	0	0	87.7	87.7	1	6040.87	3.25	0	86.62	0	2.92	0	0	7.02	0	0	0	0	0	0	-8.9	-8.9
Inverters	G_Inv8	366844.5	4902838.5	2	0	0	87.7	87.7	1	6050.17	3.25	0	86.64	0	2.92	0	0	7.03	0	0	0	0	0	0	-8.92	-8.92
Westbrook Inverter Transfor	W_INVTR2	369368	4906388	2	0	0	77.3	77.3	1	1862.99	3.25	0	76.4	0	-2.35	0	0	1.14	0	0	0	0	0	0	2.15	2.15
Inverters	G_Inv7	366694.6	4902824.7	2	0	0	87.7	87.7	1	6131.35	3.25	0	86.75	0	2.92	0	0	7.11	0	0	0	0	0	0	-9.13	-9.13
Inverters	G_Inv10	366900.7	4902704.8	2	0	0	87.7	87.7	1	6145.21	3.25	0	86.77	0	2.92	0	0	7.13	0	0	0	0	0	0	-9.16	-9.16
Inverters	G_Inv9	366750.9	4902691.8	2	0	0	87.7	87.7	1	6223.33	3.25	0	86.88	0	2.93	0	0	7.21	0	0	0	0	0	0	-9.35	-9.35
Westbrook Inverter Transfor	W_INVTR3	369514	4906164	2	0	0	77.3	77.3	1	2076.76	3.25	0	77.35	0	-2.43	0	0	1.24	0	0	0	0	0	0	1.18	1.18
Westbrook Inverter Transfor	W_INVTR4	369679	4906164	2	0	0	77.3	77.3	1	2078.86	3.25	0	77.36	0	-2.43	0	0	1.24	0	0	0	0	0	0	1.17	1.17
Inverter Transformer	MV6-1 T	370230	4907364	2	0	0	69.4	69.4	1	1096.81	3.25	0	71.8	0	1.76	0	0	3.94	0	0	0	0	0	0	-8.15	-8.15
Inverter Transformer	MV6-4 T	370244	4906966	2	0	0	69.4	69.4	1	1441.3	3.25	0	74.18	0	1.95	0	0	4.37	0	0	0	0	0	0	-11.14	-11.14
Inverter Transformer	MV4-15 T	369170	4908481	2	0	0	56.1	56.1	1	467	3.25	0	64.39	0	-0.12	0	0	3.44	0	0	0	0	0	0	-11.65	-11.65
Inverter Transformer	MV4-14 T	369182	4908507	2	0	0	56.1	56.1	1	471	3.25	0	64.46	0	-0.12	0	0	3.46	0	0	0	0	0	0	-11.74	-11.74
Inverter Transformer	MV5-6 T	369987	4908507	2	0	0	56.1	56.1	1	495.16	3.25	0	64.89	0	-0.12	0	0	3.54	0	0	0	0	0	0	-12.26	-12.26
Inverter Transformer	MV4-13 T	369057	4908605	2	0	0	56.1	56.1	1	629.6	3.25	0	66.98	0	-0.1	0	0	3.94	0	0	0	0	0	0	-14.77	-14.77
Inverter Transformer	MV5-5 T	370021	4908690	2	0	0	56.1	56.1	1	637.11	3.25	0	67.08	0	-0.1	0	0	3.96	0	0	0	0	0	0	-14.89	-14.89
Inverter Transformer	MV4-10 T	369307	4908858	2	0	0	56.1	56.1	1	671.64	3.25	0	67.54	0	-0.09	0	0	4.06	0	0	0	0	0	0	-15.45	-15.45
Inverter Transformer	MV4-11 T	369269	4908855	2	0	0	56.1	56.1	1	684.71	3.25	0	67.71	0	-0.08	0	0	4.09	0	0	0	0	0	0	-15.66	-15.66
Inverter Transformer	MV5-2 T	370011	4908853	2	0	0	56.1	56.1	1	755.15	3.25	0	68.56	0	-0.07	0	0	4.28	0	0	0	0	0	0	-16.72	-16.72
Inverter Transformer	MV4-12 T	369049	4908803	2	0	0	56.1	56.1	1	767.08	3.25	0	68.7	0	-0.06	0	0	4.31	0	0	0	0	0	0	-16.89	-16.89
Inverter Transformer	MV4-9 T	369284	4909001	2	0	0	56.1	56.1	1	812.97	3.25	0	69.2	0	-0.05	0	0	4.43	0	0	0	0	0	0	-17.52	-17.52
Inverter Transformer	MV4-8 T	369262	4909001	2	0	0	56.1	56.1	1	820.97	3.25	0	69.29	0	-0.05	0	0	4.45	0	0	0	0	0	0	-17.63	-17.63
Inverter Transformer	MV2-1 T	365836	4906816	2	0	0	69.4	69.4	1	3996.32	3.25	0	83.03	0	2.78	0	0	6.67	0	0	0	0	0	0	-23.14	-23.14
Inverter Transformer	MV5-4 T	370330	4908707	2	0	0	56.1	56.1	1	892.02	3.25	0	70.01	0	-0.02	0	0	4.63	0	0	0	0	0	0	-18.55	-18.55
Inverter Transformer	MV5-3 T	370237	4908851	2	0	0	56.1	56.1	1	904.55	3.25	0	70.13	0	-0.02	0	0	4.66	0	0	0	0	0	0	-18.71	-18.71
Inverter Transformer	MV4-7 T	369040	4909001	2	0	0	56.1	56.1	1	927.38	3.25	0	70.35	0	-0.01	0	0	4.71	0	0	0	0	0	0	-18.99	-18.99
Inverter Transformer	MV3-2 T	368677	4907928	2	0	0	56.1	56.1	1	945.94	3.25	0	70.52	0	-0.01	0	0	4.76	0	0	0	0	0	0	-19.21	-19.21
Inverter Transformer	MV4-5 T	369283	4909199	2	0	0	56.1	56.1	1	1001.03	3.25	0	71.01	0	0.01	0	0	4.89	0	0	0	0	0	0	-19.85	-19.85
Inverter Transformer	MV4-6 T	369249	4909192	2	0	0	56.1	56.1	1	1004.66	3.25	0	71.04	0	0.01	0	0	4.9	0	0	0	0	0	0	-19.9	-19.9
Inverter Transformer	MV5-1 T	370015	4909142	2	0	0	56.1	56.1	1	1005.8	3.25	0	71.05	0	0.01	0	0	4.9	0	0	0	0	0	0	-19.91	-19.91
Inverter Transformer	MV3-8 T	368685	4907712	2	0	0	56.1	56.1	1	1030.54	3.25	0	71.26	0	0.02	0	0	4.96	0	0	0	0	0	0	-20.19	-20.19
Inverter Transformer	MV6-2 T	370091	4907339	2	0	0	56.1	56.1	1	1040.79	3.25	0	71.35	0	0.03	0	0	4.99	0	0	0	0	0	0	-20.3	-20.3
Inverter Transformer	MV4-4 T	369033	4909199	2	0	0	56.1	56.1	1	1099.12	3.25	0	71.82	0	0.05	0	0	5.12	0	0	0	0	0	0	-20.93	-20.93
Inverter Transformer	MV3-4 T	368507	4907925	2	0	0	56.1	56.1	1	1108.69	3.25	0	71.9	0	0.05	0	0	5.15	0	0	0	0	0	0	-21.03	-21.03
Inverter Transformer	MV1-7 T	364919	4905782	2	0	0	69.4	69.4	1	5260.57	3.25	0	85.42	0	3.06	0	0	7.55	0	0	0	0	0	0	-26.69	-26.69
Inverter Transformer	MV1-10 T	365010	4905564	2	0	0	69.4	69.4	1	5287.21	3.25	0	85.46	0	3.07	0	0	7.57	0	0	0	0	0	0	-26.75	-26.75
Inverter Transformer	MV3-14 T	368678	4907498	2	0	0	56.1	56.1	1	1160.27	3.25	0	72.29	0	0.07	0	0	5.26	0	0	0	0	0	0	-21.57	-21.57
Inverter Transformer	MV1-14 T	365157	4905049	2	0	0	69.4	69.4	1	5445.83	3.25	0	85.72	0	3.1	0	0	7.67	0	0	0	0	0	0	-27.14	-27.14
Inverter Transformer	MV3-9 T	368517	4907703	2	0	0	56.1	56.1	1	1182.03	3.25	0	72.45	0	0.08	0	0	5.31	0	0	0	0	0	0	-21.79	-21.79
Inverter Transformer	MV4-2 T	369267	4909397	2	0	0	56.1	56.1	1	1196.02	4.59	0	72.55	0	0.88	3.28	0.01	5.35	0	0	0	0	0	0	-26	-26
Inverter Transformer	MV4-3 T	369234	4909397	2	0	0	56.1	56.1	1	1204.8	3.25	0	72.62	0	0.09	0	0	5.37	0	0	0	0	0	0	-22.01	-22.01
Inverter Transformer	MV1-13 T	364725	4905241	2	0	0	69.4	69.4	1	5698.07	3.25	0	86.11	0	3.14	0	0	7.83	0	0	0	0	0	0	-27.74	-27.74
Inverter Transformer	MV6-3 T	370202	4907140	2	0	0	56.1	56.1	1	1268.63	3.25	0	73.07	0	0.11	0	0	5.51	0	0	0	0	0	0	-22.63	-22.63
Inverter Transformer	MV3-20 T	368683	4907317	2	0	0	56.1	56.1	1	1280.12	3.25	0	73.15	0	0.11	0	0	5.54	0	0	0	0	0	0	-22.74	-22.74
Inverter Transformer	MV4-1 T	369017	4909397	2	0	0	56.1	56.1	1	1282.37	3.25	0	73.16	0	0.11	0	0	5.54	0	0	0	0	0	0	-22.76	-22.76
Inverter Transformer	MV3-5 T	368335	4907843	2	0	0	56.1	56.1	1	1297.24	3.25	0	73.26	0	0.12	0	0	5.57	0	0	0	0	0	0	-22.9	-22.9
Inverter Transformer	MV3-16 T	368509	4907475	2	0	0	56.1	56.1	1	1308.03	3.25	0	73.33	0	0.12	0	0	5.6	0	0	0	0	0	0	-23	-23
Inverter Transformer	MV3-11 T	368340	4907662	2	0	0	56.1	56.1	1	1359.04	3.25	0	73.66	0	0.14	0	0	5.71	0	0	0	0	0	0	-23.46	-23.46
Inverter Transformer	MV3-22 T	368661	4907142	2	0	0	56.1	56.1	1	1425.44	3.25	0	74.08	0	0.17	0	0	5.86	0	0	0	0	0	0	-24.05	-24.05
Inverter Transformer	MV3-15 T	368351	4907477	2	0	0	56.1	56.1	1	1438.1	3.25	0	74.16	0	0.17	0	0	5.88	0	0	0	0	0	0	-24.16	-24.16
Inverter Transformer	MV3-1 T	368150	4907976	2	0	0	56.1	56.1	1	1444.33	3.25	0	74.19	0	0.18	0	0	5.9	0	0	0	0	0	0	-24.21	-24.21
Inverter Transformer	MV3-6 T	368156	4907834	2	0	0	56.1	56.1	1	1471.14	3.25	0	74.35	0	0.19	0	0	5.96	0	0	0	0	0	0	-24.44	-24.44
Inverter Transformer	MV3-21 T	368484	4907206	2	0	0	56.1	56.1	1	1499.52	3.25	0	74.52	0	0.2	0	0	6.02	0	0	0	0	0	0	-24.68	-24.68
Inverter Transformer	MV3-19 T	368352	4907347	2	0	0	56.1	56.1	1	1510.29	3.25	0	74.58	0	0.2	0	0	6.04	0	0	0	0	0	0	-24.77	-24.77
Inverter Transformer	MV3-10 T	368162	4907669	2	0	0	56.1	56.1	1	1519.38	3.25	0	74.63	0	0.21	0	0	6.06	0	0	0	0	0	0	-24.84	-24.84
Inverter Transformer	MV3-17 T	368183	4907472	2	0	0	56.1	56.1	1	1585.43	3.25	0	75	0	0.23	0	0	6.2	0	0	0	0	0	0	-25.38	-25.38
Inverter Transformer	MV3-3 T	367944	4907927	2	0	0	56.1	56.1	1	1655.85	3.25	0	75.38	0	0.26	0	0	6.35	0	0	0	0	0	0	-25.93	-25.93
Inverter Transformer	MV3-7 T	367951	4907754	2	0	0	56.1	56.1	1	1690.37	3.25	0	75.56	0	0.28	0	0	6.42	0	0	0	0	0	0	-26.2	-26.2
Inverter Transformer	MV3-13 T	367958	4907577	2	0	0	56.1	56.1	1	1743.02	3.25	0	75.83	0	0.3	0	0	6.53	0	0	0	0	0	0	-26.59	-26.59
Line Reactor	NGR	369421	4908787.5	5	0	0	45.4	45.4	1	567.41	5.25	0	66.08	0	3.31	1.69	0.12	0.23	0	0	0	0	0	0	-25.96	-25.96
Inverter Transformer	MV3-18 T	367757	4907412	2	0	0	56.1	56.1	1	1993.13	3.25	0	76.99	0	0.4	0	0	7.03	0	0	0	0	0	0	-28.36	-28.36
Inverter Transformer	MV3-12 T	367674	4907594	2	0	0	56.1	56.1	1	2003.03	3.25	0	77.03	0	0.41	0	0	7.05	0	0	0	0	0	0	-28.43	-28.43

	Inverter Transformer	MV2-2 T	365982	4906654	2	0	0	56.1	56.1	1	3922.9	3.25	0	82.87	0	1.21	0	0	10.34	0	0	0	0	0	0	-38.37	-38.37
	Inverter Transformer	MV2-3 T	365814	4906641	2	0	0	56.1	56.1	1	4082.2	3.25	0	83.22	0	1.28	0	0	10.58	0	0	0	0	0	0	-39.01	-39.01
	Inverter Transformer	MV2-4 T	365590	4906628	2	0	0	56.1	56.1	1	4294.06	3.25	0	83.66	0	1.36	0	0	10.88	0	0	0	0	0	0	-39.84	-39.84
	Inverter Transformer	MV1-1 T	364721	4906166	2	0	0	56.1	56.1	1	5273.92	3.25	0	85.44	0	1.72	0	0	12.21	0	0	0	0	0	0	-43.32	-43.32
	Inverter Transformer	MV1-2 T	364759	4906063	2	0	0	56.1	56.1	1	5280.63	3.25	0	85.45	0	1.73	0	0	12.22	0	0	0	0	0	0	-43.34	-43.34
	Inverter Transformer	MV1-4 T	364821	4905918	2	0	0	56.1	56.1	1	5286.27	3.25	0	85.46	0	1.73	0	0	12.23	0	0	0	0	0	0	-43.36	-43.36
	Inverter Transformer	MV1-12 T	365044	4905386	2	0	0	56.1	56.1	1	5350.7	3.25	0	85.57	0	1.75	0	0	12.31	0	0	0	0	0	0	-43.57	-43.57
	Inverter Transformer	MV1-15 T	365309	4904994	2	0	0	56.1	56.1	1	5356.55	3.25	0	85.58	0	1.75	0	0	12.31	0	0	0	0	0	0	-43.59	-43.59
	Inverter Transformer	MV1-5 T	364676	4905892	2	0	0	56.1	56.1	1	5428.11	3.25	0	85.69	0	1.78	0	0	12.41	0	0	0	0	0	0	-43.82	-43.82
	Inverter Transformer	MV1-8 T	364782	4905647	2	0	0	56.1	56.1	1	5445.05	3.25	0	85.72	0	1.78	0	0	12.43	0	0	0	0	0	0	-43.87	-43.87
	Inverter Transformer	MV1-3 T	364435	4906039	2	0	0	56.1	56.1	1	5586.83	3.25	0	85.94	0	1.83	0	0	12.6	0	0	0	0	0	0	-44.32	-44.32
	Inverter Transformer	MV1-6 T	364482	4905835	2	0	0	56.1	56.1	1	5627.77	3.25	0	86.01	0	1.84	0	0	12.65	0	0	0	0	0	0	-44.45	-44.45
	Inverter Transformer	MV1-9 T	364555	4905646	2	0	0	56.1	56.1	1	5646.16	3.25	0	86.04	0	1.85	0	0	12.68	0	0	0	0	0	0	-44.5	-44.5
	Inverter Transformer	MV1-11 T	364649	4905414	2	0	0	56.1	56.1	1	5674.73	3.25	0	86.08	0	1.86	0	0	12.71	0	0	0	0	0	0	-44.59	-44.59
Limit. Valu	0	0																								
Level D/N:	40.01	40.01																								

Receiver: Vacant Lot Receptor
ID: S-VLR20
X: 369813
Y: 4908130
Z: 4.5
Ground: 0

ISO	Description	ID	X	Y	Z	Ground	ReflOrd	LxT	LxN	L/A	Dist.	hm	Freq	Adiv	K0b	Agr	Abar	z	Aatm	Afol	Ahous	Cmet	CmetN	Dc	RL	LtotT	LtotN
	Sol_Luce Substation	S_Substation	369426	4908792	3.5	0	0	112.1	112.1	1	766.82	5.24	0	68.69	0	-0.02	5.67	0.31	2.03	0	0	0	0	0	0	35.7	35.7
	Inverter	MV5-5	370015	4908690	2	0	0	100.3	100.3	1	595.32	3.25	0	66.5	0	-0.48	0	0	9.18	0	0	0	0	0	0	25.12	25.12
	Inverter	MV5-2	370006	4908853	2	0	0	100.3	100.3	1	748.32	3.25	0	68.48	0	-0.38	0	0	9.96	0	0	0	0	0	0	22.25	22.25
	Inverter	MV5-4	370324	4908707	2	0	0	100.3	100.3	1	770.75	3.25	0	68.74	0	-0.37	0	0	10.06	0	0	0	0	0	0	21.88	21.88
	Inverter	MV5-3	370231	4908851	2	0	0	100.3	100.3	1	833.41	3.25	0	69.42	0	-0.33	0	0	10.31	0	0	0	0	0	0	20.91	20.91
	Inverter	MV6-2	370085	4907339	2	0	0	100.3	100.3	1	836.46	3.25	0	69.45	0	-0.33	0	0	10.33	0	0	0	0	0	0	20.87	20.87
	Inverter	MV4-10	369312	4908858	2	0	0	100.3	100.3	1	883.74	3.25	0	69.93	0	-0.31	0	0	10.51	0	0	0	0	0	0	20.19	20.19
	Inverter	MV4-11	369264	4908855	2	0	0	100.3	100.3	1	909.41	3.25	0	70.18	0	-0.29	0	0	10.6	0	0	0	0	0	0	19.83	19.83
	Inverter	MV4-9	369289	4909001	2	0	0	100.3	100.3	1	1016.48	4.95	0	71.14	0	0.31	3.8	0.03	10.97	0	0	0	0	0	0	14.09	14.09
	Inverter	MV5-1	370020	4909142	2	0	0	100.3	100.3	1	1032.96	3.25	0	71.28	0	-0.23	0	0	11.02	0	0	0	0	0	0	18.24	18.24
	Inverter	MV4-8	369256	4909001	2	0	0	100.3	100.3	1	1033.87	3.25	0	71.29	0	-0.23	0	0	11.02	0	0	0	0	0	0	18.23	18.23
	Inverter	MV6-3	370207	4907140	2	0	0	100.3	100.3	1	1065.52	3.25	0	71.55	0	-0.21	0	0	11.12	0	0	0	0	0	0	17.85	17.85
	DSTATCOM - 10 MVAR #1	DSAT1	369437	4908757	2.5	0	0	96.6	96.6	1	731.1	3.5	0	68.28	0	2.62	0	0	0.89	0	0	0	0	0	0	24.85	24.85
	DSTATCOM - 10 MVAR #2	DSAT2	369403	4908757	2.5	0	0	96.6	96.6	1	749.15	3.5	0	68.49	0	2.64	0	0	0.9	0	0	0	0	0	0	24.6	24.6
	Inverter	MV4-7	369035	4909001	2	0	0	100.3	100.3	1	1167.87	3.25	0	72.35	0	-0.17	0	0	11.43	0	0	0	0	0	0	16.7	16.7
	Inverter	MV4-5	369289	4909199	2	0	0	100.3	100.3	1	1190.52	3.25	0	72.51	0	-0.16	0	0	11.5	0	0	0	0	0	0	16.46	16.46
	Inverter	MV4-6	369243	4909192	2	0	0	100.3	100.3	1	1205.3	3.25	0	72.62	0	-0.15	0	0	11.54	0	0	0	0	0	0	16.3	16.3
	Inverter	MV3-8	368680	4907712	2	0	0	100.3	100.3	1	1207.65	3.25	0	72.64	0	-0.15	0	0	11.55	0	0	0	0	0	0	16.28	16.28
	Inverter	MV6-1	370235	4907364	2	0	0	97.3	97.3	1	874.55	3.25	0	69.84	0	-0.31	0	0	10.47	0	0	0	0	0	0	17.31	17.31
	Inverter	MV3-14	368684	4907498	2	0	0	100.3	100.3	1	1293.86	3.25	0	73.24	0	-0.11	0	0	11.79	0	0	0	0	0	0	15.4	15.4
	Inverter	MV4-4	369027	4909199	2	0	0	100.3	100.3	1	1326.86	3.25	0	73.46	0	-0.1	0	0	11.88	0	0	0	0	0	0	15.08	15.08
	Inverter	MV3-9	368512	4907703	2	0	0	100.3	100.3	1	1369.28	3.25	0	73.73	0	-0.08	0	0	11.99	0	0	0	0	0	0	14.68	14.68
	Inverter	MV4-2	369272	4909397	2	0	0	100.3	100.3	1	1377.67	3.25	0	73.78	0	-0.08	0	0	12.01	0	0	0	0	0	0	14.6	14.6
	Inverter	MV3-20	368689	4907317	2	0	0	100.3	100.3	1	1387.21	3.25	0	73.84	0	-0.08	0	0	12.04	0	0	0	0	0	0	14.51	14.51
	Inverter	MV4-3	369229	4909397	2	0	0	100.3	100.3	1	1395.12	3.25	0	73.89	0	-0.07	0	0	12.06	0	0	0	0	0	0	14.44	14.44
	Inverter	MV3-16	368514	4907475	2	0	0	100.3	100.3	1	1454.8	3.25	0	74.26	0	-0.05	0	0	12.21	0	0	0	0	0	0	13.9	13.9
	Inverter	MV4-1	369011	4909397	2	0	0	100.3	100.3	1	1499.5	3.25	0	74.52	0	-0.03	0	0	12.32	0	0	0	0	0	0	13.5	13.5
	Inverter	MV5-6	369982	4908507	2	0	0	89.1	89.1	1	413.15	3.25	0	63.32	0	0.47	0	0	4.79	0	0	0	0	0	0	20.48	20.48
	Inverter	MV3-11	368346	4907662	2	0	0	100.3	100.3	1	1539.84	3.25	0	74.75	0	-0.02	0	0	12.42	0	0	0	0	0	0	13.16	13.16
	Inverter	MV3-15	368357	4907477	2	0	0	100.3	100.3	1	1595.73	3.25	0	75.06	0	0	0	0	12.56	0	0	0	0	0	0	12.69	12.69
	Inverter	MV3-21	368478	4907206	2	0	0	100.3	100.3	1	1623.58	3.25	0	75.21	0	0.01	0	0	12.62	0	0	0	0	0	0	12.47	12.47
	Inverter	MV3-19	368357	4907347	2	0	0	100.3	100.3	1	1653.19	3.25	0	75.37	0	0.02	0	0	12.69	0	0	0	0	0	0	12.23	12.23
	Inverter	MV3-6	368162	4907834	2	0	0	100.3	100.3	1	1677.33	3.25	0	75.49	0	0.03	0	0	12.75	0	0	0	0	0	0	12.04	12.04
	Inverter	MV3-10	368167	4907669	2	0	0	100.3	100.3	1	1709.34	3.25	0	75.66	0	0.04	0	0	12.82	0	0	0	0	0	0	11.79	11.79
	Inverter	MV3-17	368178	4907472	2	0	0	100.3	100.3	1	1762.44	3.25	0	75.92	0	0.06	0	0	12.94	0	0	0	0	0	0	11.39	11.39
	Inverter	MV3-3	367939	4907927	2	0	0	100.3	100.3	1	1884.96	3.25	0	76.51	0	0.1	0	0	13.22	0	0	0	0	0	0	10.49	10.49
	Inverter	MV3-7	367945	4907754	2	0	0	100.3	100.3	1	1905.47	3.25	0	76.6	0	0.1	0	0	13.26	0	0	0	0	0	0	10.35	10.35
	Inverter	MV3-13	367963	4907577	2	0	0	100.3	100.3	1	1930.88	3.25	0	76.72	0	0.11	0	0	13.31	0	0	0	0	0	0	10.17	10.17
	Inverter	MV3-18	367752	4907412	2	0	0	100.3	100.3	1	2182.49	3.25	0	77.78	0	0.18	0	0	13.84	0	0	0	0	0	0	8.52	8.52
	Inverter	MV3-12	367668	4907594	2	0	0	100.3	100.3	1	2210.96	3.25	0	77.89	0	0.19	0	0	13.9	0	0	0	0	0	0	8.34	8.34
	Fixed Reactor Bank 2	FRB2	369464	4908755	6	0	0	89.8	89.8	1	715.84	5.25	0	68.1	0	-0.95	0	0	1.92	0	0	0	0	0	0	20.71	20.71
	Fixed Reactor Bank 1	FRB1	369378	4908755	6	0	0	89.8	89.8	1	761.48	5.25	0	68.63	0	-0.96	0	0	2.02	0	0	0	0	0	0	20.09	20.09
	Inverter	MV4-15	369176	4908481	2	0	0	89.1	89.1	1	727.31	3.25	0	68.23	0	0.62	0	0	5.76	0	0	0	0	0	0	14.44	14.44
	Inverter	MV4-14	369176	4908507	2	0	0	89.1	89.1	1	740.21	3.25	0	68.39	0	0.62	0	0	5.79	0	0	0	0	0	0	14.26	14.26
	Inverter	MV4-13	369051	4908605	2	0	0	89.1	89.1	1	897.93	3.25	0	70.06	0	0.66	0	0	6.12	0	0	0	0	0	0	12.21	12.21
	Inverter	MV4-12	369043	4908803	2	0	0	89.1	89.1	1	1022.66	3.25	0	71.19	0	0.69	0	0	6.36	0	0	0	0	0	0	10.82	10.82
	Inverter	MV3-2	368671	4907928	2	0	0	89.1	89.1	1	1159.73	3.25	0	72.29	0	0.72	0	0	6.61	0	0	0	0	0	0	9.44	9.44
	Inverter	MV2-3	365820	4906641	2	0	0	100.3	100.3	1	4261.59	3.25	0	83.59	0	0.56	0	0	17.46	0	0	0	0	0	0	-1.3	-1.3
	Inverter	MV2-4	365586	4906624	2	0	0	100.3	100.3	1	4487.27	3.25	0	84.04	0	0.59	0	0	17.81	0	0	0	0	0	0	-2.13	-2.13

Inverter	MV3-4	368502	4907925	2	0	0	89.1	89.1	1	1326.93	3.25	0	73.46	0	0.75	0	0	6.91	0	0	0	0	0	0	7.94	7.94
SubstationTransformer	W_ST	369711.17	4906112.3	2.5	0	0	92	92	1	2020.3	3.5	0	77.11	0	-0.16	0	0	4.4	0	0	0	0	0	0	10.63	10.63
Inverter	MV1-1	364715	4906166	2	0	0	100.3	100.3	1	5463.23	3.25	0	85.75	0	0.68	0	0	19.25	0	0	0	0	0	0	-5.36	-5.36
Inverter	MV1-4	364815	4905918	2	0	0	100.3	100.3	1	5465.62	3.25	0	85.75	0	0.68	0	0	19.25	0	0	0	0	0	0	-5.37	-5.37
Inverter	MV1-2	364753	4906063	2	0	0	100.3	100.3	1	5465.9	3.25	0	85.75	0	0.68	0	0	19.25	0	0	0	0	0	0	-5.37	-5.37
Inverter	MV3-5	368340	4907843	2	0	0	89.1	89.1	1	1500.7	3.25	0	74.53	0	0.79	0	0	7.21	0	0	0	0	0	0	6.53	6.53
Inverter	MV1-15	365315	4904994	2	0	0	100.3	100.3	1	5483.29	3.25	0	85.78	0	0.68	0	0	19.28	0	0	0	0	0	0	-5.43	-5.43
Inverter	MV1-12	365038	4905386	2	0	0	100.3	100.3	1	5507.28	3.25	0	85.82	0	0.68	0	0	19.31	0	0	0	0	0	0	-5.5	-5.5
Inverter	MV3-22	368656	4907142	2	0	0	89.1	89.1	1	1521.45	3.25	0	74.65	0	0.8	0	0	7.25	0	0	0	0	0	0	6.37	6.37
Inverter	MV1-8	364788	4905647	2	0	0	100.3	100.3	1	5604.99	3.25	0	85.97	0	0.69	0	0	19.45	0	0	0	0	0	0	-5.79	-5.79
Inverter	MV1-5	364671	4905892	2	0	0	100.3	100.3	1	5607.92	3.25	0	85.98	0	0.69	0	0	19.45	0	0	0	0	0	0	-5.8	-5.8
Westbrook Inverter Enclosur	W_INV6	369875	4906578	2	0	0	89.1	89.1	1	1553.24	3.25	0	74.82	0	0.8	0	0	7.3	0	0	0	0	0	0	6.13	6.13
Westbrook Inverter Enclosur	W_INV5	369719	4906574	2	0	0	89.1	89.1	1	1558.84	3.25	0	74.86	0	0.81	0	0	7.31	0	0	0	0	0	0	6.09	6.09
Inverter	MV1-6	364477	4905835	2	0	0	100.3	100.3	1	5808.61	3.25	0	86.28	0	0.7	0	0	19.73	0	0	0	0	0	0	-6.4	-6.4
Inverter	MV1-9	364561	4905646	2	0	0	100.3	100.3	1	5809.8	3.25	0	86.28	0	0.7	0	0	19.73	0	0	0	0	0	0	-6.4	-6.4
Inverter	MV1-11	364655	4905414	2	0	0	100.3	100.3	1	5829.38	3.25	0	86.31	0	0.7	0	0	19.76	0	0	0	0	0	0	-6.46	-6.46
Inverter	MV2-1	365842	4906816	2	0	0	97.3	97.3	1	4182.76	3.25	0	83.43	0	0.55	0	0	17.34	0	0	0	0	0	0	-4.01	-4.01
Inverter	MV3-1	368156	4907976	2	0	0	89.1	89.1	1	1664.14	3.25	0	75.42	0	0.83	0	0	7.49	0	0	0	0	0	0	5.32	5.32
Westbrook Inverter Enclosur	W_INV7	369780	4906417	2	0	0	89.1	89.1	1	1713.32	3.25	0	75.68	0	0.84	0	0	7.57	0	0	0	0	0	0	4.97	4.97
Inverter	MV6-4	370250	4906966	2	0	0	86.1	86.1	1	1243.33	3.25	0	72.89	0	0.74	0	0	6.76	0	0	0	0	0	0	5.67	5.67
Westbrook Inverter Enclosur	W_INV2	369374	4906388	2	0	0	89.1	89.1	1	1796.47	3.25	0	76.09	0	0.86	0	0	7.71	0	0	0	0	0	0	4.4	4.4
Westbrook Inverter Enclosur	W_INV4	369673	4906164	2	0	0	89.1	89.1	1	1970.98	3.25	0	76.89	0	0.9	0	0	8	0	0	0	0	0	0	3.27	3.27
Westbrook Inverter Enclosur	W_INV3	369508	4906164	2	0	0	89.1	89.1	1	1989.52	3.25	0	76.97	0	0.9	0	0	8.03	0	0	0	0	0	0	3.15	3.15
Inverter	MV1-7	364925	4905782	2	0	0	97.3	97.3	1	5422.7	3.25	0	85.68	0	0.68	0	0	19.19	0	0	0	0	0	0	-8.24	-8.24
Inverter	MV1-10	365004	4905564	2	0	0	97.3	97.3	1	5450.77	3.25	0	85.73	0	0.68	0	0	19.23	0	0	0	0	0	0	-8.33	-8.33
Inverter	MV1-14	365163	4905049	2	0	0	97.3	97.3	1	5578.09	3.25	0	85.93	0	0.69	0	0	19.41	0	0	0	0	0	0	-8.71	-8.71
Inverter	MV1-13	364731	4905241	2	0	0	97.3	97.3	1	5845.77	3.25	0	86.34	0	0.7	0	0	19.78	0	0	0	0	0	0	-9.51	-9.51
Westbrook Inverter Enclosur	W_INV1	369409	4906578	2	0	0	86.1	86.1	1	1603.72	3.25	0	75.1	0	0.82	0	0	7.39	0	0	0	0	0	0	2.75	2.75
Inverter	MV2-2	365977	4906654	2	0	0	89.1	89.1	1	4110.17	3.25	0	83.28	0	1.42	0	0	11.24	0	0	0	0	0	0	-6.88	-6.88
Gardiner Substation	G_Sub	366586.3	4903349.9	2.5	0	0	90.8	90.8	1	5767.23	4.25	0	86.22	0	1.83	2.17	0.37	9.49	0	0	0	0	0	0	-8.93	-8.93
Westbrook Inverter Transfor	W_INVTR1	369403	4906578	2	0	0	78.2	78.2	1	1605.24	3.25	0	75.11	0	-2.25	0	0	1.01	0	0	0	0	0	0	4.37	4.37
Inverter	MV1-3	364440	4906039	2	0	0	89.1	89.1	1	5765.54	3.25	0	86.22	0	1.83	0	0	13.46	0	0	0	0	0	0	-12.45	-12.45
Westbrook Inverter Transfor	W_INVTR6	369881	4906578	2	0	0	77.3	77.3	1	1553.49	3.25	0	74.83	0	-2.23	0	0	0.98	0	0	0	0	0	0	3.76	3.76
Westbrook Inverter Transfor	W_INVTR5	369725	4906574	2	0	0	77.3	77.3	1	1558.49	3.25	0	74.85	0	-2.23	0	0	0.98	0	0	0	0	0	0	3.73	3.73
Westbrook Inverter Transfor	W_INVTR7	369786	4906417	2	0	0	77.3	77.3	1	1713.21	3.25	0	75.68	0	-2.29	0	0	1.06	0	0	0	0	0	0	2.9	2.9
Inverters	G_Inv2	366676.9	4903239.1	2	0	0	87.7	87.7	1	5809.99	3.25	0	86.28	0	2.91	0	0	6.78	0	0	0	0	0	0	-8.32	-8.32
Inverters	G_Inv4	366732.8	4903105	2	0	0	87.7	87.7	1	5893.92	3.25	0	86.41	0	2.91	0	0	6.87	0	0	0	0	0	0	-8.53	-8.53
Westbrook Inverter Transfor	W_INVTR2	369368	4906388	2	0	0	77.3	77.3	1	1797.94	3.25	0	76.1	0	-2.33	0	0	1.11	0	0	0	0	0	0	2.47	2.47
Inverters	G_Inv1	366526.4	4903225.8	2	0	0	87.7	87.7	1	5903.64	3.25	0	86.42	0	2.91	0	0	6.88	0	0	0	0	0	0	-8.55	-8.55
Inverters	G_Inv6	366788.5	4902972	2	0	0	87.7	87.7	1	5979.35	3.25	0	86.53	0	2.92	0	0	6.96	0	0	0	0	0	0	-8.75	-8.75
Inverters	G_Inv3	366583.7	4903091.4	2	0	0	87.7	87.7	1	5984.64	3.25	0	86.54	0	2.92	0	0	6.96	0	0	0	0	0	0	-8.76	-8.76
Inverters	G_Inv8	366844.5	4902838.5	2	0	0	87.7	87.7	1	6067.29	3.25	0	86.66	0	2.92	0	0	7.05	0	0	0	0	0	0	-8.97	-8.97
Inverters	G_Inv5	366638.5	4902958.1	2	0	0	87.7	87.7	1	6068.44	3.25	0	86.66	0	2.92	0	0	7.05	0	0	0	0	0	0	-8.97	-8.97
Inverters	G_Inv7	366694.6	4902824.7	2	0	0	87.7	87.7	1	6153.91	3.25	0	86.78	0	2.92	0	0	7.14	0	0	0	0	0	0	-9.18	-9.18
Inverters	G_Inv10	366900.7	4902704.8	2	0	0	87.7	87.7	1	6157.46	3.25	0	86.79	0	2.92	0	0	7.14	0	0	0	0	0	0	-9.19	-9.19
Inverters	G_Inv9	366750.9	4902691.8	2	0	0	87.7	87.7	1	6241.03	3.25	0	86.91	0	2.93	0	0	7.22	0	0	0	0	0	0	-9.4	-9.4
Westbrook Inverter Transfor	W_INVTR4	369679	4906164	2	0	0	77.3	77.3	1	1970.56	3.25	0	76.89	0	-2.39	0	0	1.19	0	0	0	0	0	0	1.65	1.65
Westbrook Inverter Transfor	W_INVTR3	369514	4906164	2	0	0	77.3	77.3	1	1988.61	3.25	0	76.97	0	-2.4	0	0	1.2	0	0	0	0	0	0	1.57	1.57
Inverter Transformer	MV6-1 T	370230	4907364	2	0	0	69.4	69.4	1	872.15	3.25	0	69.81	0	1.57	0	0	3.63	0	0	0	0	0	0	-5.65	-5.65
Inverter Transformer	MV6-4 T	370244	4906966	2	0	0	69.4	69.4	1	1241.23	3.25	0	72.88	0	1.85	0	0	4.13	0	0	0	0	0	0	-9.5	-9.5
Inverter Transformer	MV5-6 T	369987	4908507	2	0	0	56.1	56.1	1	415.22	3.25	0	63.37	0	-0.12	0	0	3.26	0	0	0	0	0	0	-10.45	-10.45
Inverter Transformer	MV5-5 T	370021	4908690	2	0	0	56.1	56.1	1	597.39	3.25	0	66.53	0	-0.1	0	0	3.85	0	0	0	0	0	0	-14.21	-14.21
Inverter Transformer	MV4-15 T	369170	4908481	2	0	0	56.1	56.1	1	732.57	3.25	0	68.3	0	-0.07	0	0	4.22	0	0	0	0	0	0	-16.39	-16.39
Inverter Transformer	MV4-14 T	369182	4908507	2	0	0	56.1	56.1	1	735.05	3.25	0	68.33	0	-0.07	0	0	4.23	0	0	0	0	0	0	-16.42	-16.42
Inverter Transformer	MV5-2 T	370011	4908853	2	0	0	56.1	56.1	1	749.63	3.25	0	68.5	0	-0.07	0	0	4.26	0	0	0	0	0	0	-16.64	-16.64
Inverter Transformer	MV5-4 T	370330	4908707	2	0	0	56.1	56.1	1	774.74	3.25	0	68.78	0	-0.06	0	0	4.33	0	0	0	0	0	0	-16.99	-16.99
Inverter Transformer	MV5-3 T	370237	4908851	2	0	0	56.1	56.1	1	836.43	3.25	0	69.45	0	-0.04	0	0	4.49	0	0	0	0	0	0	-17.84	-17.84
Inverter Transformer	MV6-2 T	370091	4907339	2	0	0	56.1	56.1	1	838.43	3.25	0	69.47	0	-0.04	0	0	4.49	0	0	0	0	0	0	-17.86	-17.86
Inverter Transformer	MV4-10 T	369307	4908858	2	0	0	56.1	56.1	1	886.58	3.25	0	69.95	0	-0.03	0	0	4.61	0	0	0	0	0	0	-18.48	-18.48
Inverter Transformer	MV4-13 T	369057	4908605	2	0	0	56.1	56.1	1	892.84	3.25	0	70.02	0	-0.02	0	0	4.63	0	0	0	0	0	0	-18.56	-18.56
Inverter Transformer	MV4-11 T	369269	4908855	2	0	0	56.1	56.1	1	906.4	3.25	0	70.15	0	-0.02	0	0	4.66	0	0	0	0	0	0	-18.73	-18.73
Inverter Transformer	MV2-1 T	365836	4906816	2	0	0	69.4	69.4	1	4188.45	3.25	0	83.44	0	2.83	0	0	6.82	0	0	0	0	0	0	-23.74	-23.74
Inverter Transformer	MV4-12 T	369049	4908803	2	0	0	56.1	56.1	1	1018.15	3.25	0	71.16	0	0.02	0	0	4.93	0	0	0	0	0	0	-20.05	-20.05
Inverter Transformer	MV4-9 T	369284	4909001	2	0	0	56.1	56.1	1	1019.06	3.25	0	71.16	0	0.02	0	0	4.93	0	0	0	0	0	0	-20.06	-20.06
Inverter Transformer	MV4-8 T	369262	4909001	2	0	0	56.1	56.1	1	1030.65	3.25	0	71.26	0	0.02	0	0	4.96	0	0	0	0	0	0	-20.19	-20.19
Inverter Transformer	MV5-1 T	370015	4909142	2	0	0	56.1	56.1	1	1031.97	3.25	0	71.27	0	0.02	0	0	4.97	0	0	0	0	0	0	-20.2	-20.2
Inverter Transformer	MV6-3 T	370202	4907140	2	0	0	56.1	56.1	1	1063.69	3.25	0	71.54	0	0.03	0	0	5.04	0	0	0	0	0	0	-20.55	-20.55
Inverter Transformer	MV3-2 T	368677	4907928	2	0	0	56.1	56.1	1	1153.82	3.25	0	72.24	0	0.07	0	0	5.25	0	0	0	0	0	0	-21.5	-21.5
Inverter Transformer	MV4-7 T	369040	4909001	2	0	0	56.1	56.1	1	1164.55	3.25	0	72.32	0	0.07	0	0	5.27	0	0	0	0	0	0	-21.61	-21.61
Inverter Transformer	MV1-7 T	364919	4905782	2	0	0	69.4	69.4	1	5428.11	3.25	0	85.69	0	3.09	0	0	7.66	0	0	0	0	0	0	-27.1	-27.1
Inverter Transformer	MV1-10 T	365010	4905564	2	0	0	69.4	69.4	1	5445.47	3.25	0	85.72	0	3.1	0	0	7.67	0	0	0	0	0	0	-27.14	-27.14
Inverter Transformer	MV4-5 T	369283	4909199	2	0	0	56.1	56.1	1	1193.18	3.25	0	72.53	0	0.08	0	0	5.34	0	0	0	0	0	0	-21.9	-21.9
Inverter Transformer	MV4-6 T	369249	4909192	2	0	0	56.1	56.1	1	1202.48	3.25	0	72.6	0	0.08	0	0	5.36	0	0	0	0	0	0	-21.99	-21.99
Inverter Transformer	MV3-8 T	368685	4907712	2	0	0	56.1	56.1	1	1202.96	3.25	0	72.61	0	0.08	0	0	5.36	0	0	0	0	0	0	-21.99	-21.99

	Inverter Transformer	MV1-14 T	365157	4905049	2	0	0	69.4	69.4	1	5583.09	3.25	0	85.94	0	3.12	0	0	7.76	0	0	0	0	0	0	-27.47	-27.47
	Inverter Transformer	MV1-13 T	364725	4905241	2	0	0	69.4	69.4	1	5850.99	3.25	0	86.34	0	3.17	0	0	7.93	0	0	0	0	0	0	-28.09	-28.09
	Inverter Transformer	MV3-14 T	368678	4907498	2	0	0	56.1	56.1	1	1299.1	3.25	0	73.27	0	0.12	0	0	5.58	0	0	0	0	0	0	-22.91	-22.91
	Inverter Transformer	MV3-4 T	368507	4907925	2	0	0	56.1	56.1	1	1321.99	3.25	0	73.42	0	0.13	0	0	5.63	0	0	0	0	0	0	-23.13	-23.13
	Inverter Transformer	MV4-4 T	369033	4909199	2	0	0	56.1	56.1	1	1323.32	3.25	0	73.43	0	0.13	0	0	5.63	0	0	0	0	0	0	-23.14	-23.14
	Inverter Transformer	MV3-9 T	368517	4907703	2	0	0	56.1	56.1	1	1364.53	3.25	0	73.7	0	0.15	0	0	5.72	0	0	0	0	0	0	-23.51	-23.51
	Inverter Transformer	MV4-2 T	369267	4909397	2	0	0	56.1	56.1	1	1379.64	3.25	0	73.8	0	0.15	0	0	5.76	0	0	0	0	0	0	-23.65	-23.65
	Inverter Transformer	MV3-20 T	368683	4907317	2	0	0	56.1	56.1	1	1392.08	3.25	0	73.87	0	0.16	0	0	5.78	0	0	0	0	0	0	-23.76	-23.76
	Inverter Transformer	MV4-3 T	369234	4909397	2	0	0	56.1	56.1	1	1393.03	3.25	0	73.88	0	0.16	0	0	5.79	0	0	0	0	0	0	-23.76	-23.76
	Inverter Transformer	MV3-16 T	368509	4907475	2	0	0	56.1	56.1	1	1459.26	3.25	0	74.28	0	0.18	0	0	5.93	0	0	0	0	0	0	-24.34	-24.34
	Inverter Transformer	MV4-1 T	369017	4909397	2	0	0	56.1	56.1	1	1496.3	3.25	0	74.5	0	0.2	0	0	6.01	0	0	0	0	0	0	-24.65	-24.65
	Inverter Transformer	MV3-5 T	368335	4907843	2	0	0	56.1	56.1	1	1505.61	3.25	0	74.55	0	0.2	0	0	6.03	0	0	0	0	0	0	-24.73	-24.73
	Inverter Transformer	MV3-22 T	368661	4907142	2	0	0	56.1	56.1	1	1517.65	3.25	0	74.62	0	0.21	0	0	6.06	0	0	0	0	0	0	-24.83	-24.83
	Inverter Transformer	MV3-11 T	368340	4907662	2	0	0	56.1	56.1	1	1545.56	3.25	0	74.78	0	0.22	0	0	6.12	0	0	0	0	0	0	-25.06	-25.06
	Inverter Transformer	MV3-15 T	368351	4907477	2	0	0	56.1	56.1	1	1601.21	3.25	0	75.09	0	0.24	0	0	6.23	0	0	0	0	0	0	-25.5	-25.5
	Inverter Transformer	MV3-21 T	368484	4907206	2	0	0	56.1	56.1	1	1618.65	3.25	0	75.18	0	0.25	0	0	6.27	0	0	0	0	0	0	-25.64	-25.64
	Inverter Transformer	MV3-19 T	368352	4907347	2	0	0	56.1	56.1	1	1657.59	3.25	0	75.39	0	0.26	0	0	6.35	0	0	0	0	0	0	-25.94	-25.94
	Inverter Transformer	MV3-1 T	368150	4907976	2	0	0	56.1	56.1	1	1670.12	3.25	0	75.45	0	0.27	0	0	6.38	0	0	0	0	0	0	-26.04	-26.04
	Inverter Transformer	MV3-6 T	368156	4907834	2	0	0	56.1	56.1	1	1683.23	3.25	0	75.52	0	0.27	0	0	6.4	0	0	0	0	0	0	-26.14	-26.14
	Inverter Transformer	MV3-10 T	368162	4907669	2	0	0	56.1	56.1	1	1714.16	3.25	0	75.68	0	0.29	0	0	6.47	0	0	0	0	0	0	-26.38	-26.38
	Inverter Transformer	MV3-17 T	368183	4907472	2	0	0	56.1	56.1	1	1757.8	3.25	0	75.9	0	0.3	0	0	6.56	0	0	0	0	0	0	-26.7	-26.7
	Inverter Transformer	MV3-3 T	367944	4907927	2	0	0	56.1	56.1	1	1879.99	3.25	0	76.48	0	0.35	0	0	6.81	0	0	0	0	0	0	-27.58	-27.58
	Inverter Transformer	MV3-7 T	367951	4907754	2	0	0	56.1	56.1	1	1899.59	3.25	0	76.57	0	0.36	0	0	6.84	0	0	0	0	0	0	-27.72	-27.72
	Inverter Transformer	MV3-13 T	367958	4907577	2	0	0	56.1	56.1	1	1935.68	3.25	0	76.74	0	0.38	0	0	6.92	0	0	0	0	0	0	-27.97	-27.97
	Inverter Transformer	MV3-18 T	367757	4907412	2	0	0	56.1	56.1	1	2177.77	3.25	0	77.76	0	0.48	0	0	7.39	0	0	0	0	0	0	-29.57	-29.57
	Inverter Transformer	MV3-12 T	367674	4907594	2	0	0	56.1	56.1	1	2205.14	3.25	0	77.87	0	0.49	0	0	7.44	0	0	0	0	0	0	-29.74	-29.74
	Line Reactor	NGR	369421	4908787.5	5	0	0	45.4	45.4	1	765.49	5.25	0	68.68	0	3.41	1.41	0.1	0.31	0	0	0	0	0	0	-28.46	-28.46
	Inverter Transformer	MV2-2 T	365982	4906654	2	0	0	56.1	56.1	1	4105.5	3.25	0	83.27	0	1.29	0	0	10.61	0	0	0	0	0	0	-39.11	-39.11
	Inverter Transformer	MV2-3 T	365814	4906641	2	0	0	56.1	56.1	1	4267.22	3.25	0	83.6	0	1.35	0	0	10.85	0	0	0	0	0	0	-39.74	-39.74
	Inverter Transformer	MV2-4 T	365590	4906628	2	0	0	56.1	56.1	1	4482.16	3.25	0	84.03	0	1.43	0	0	11.15	0	0	0	0	0	0	-40.55	-40.55
	Inverter Transformer	MV1-1 T	364721	4906166	2	0	0	56.1	56.1	1	5457.63	3.25	0	85.74	0	1.79	0	0	12.44	0	0	0	0	0	0	-43.91	-43.91
	Inverter Transformer	MV1-4 T	364821	4905918	2	0	0	56.1	56.1	1	5460.13	3.25	0	85.74	0	1.79	0	0	12.45	0	0	0	0	0	0	-43.92	-43.92
	Inverter Transformer	MV1-2 T	364759	4906063	2	0	0	56.1	56.1	1	5460.35	3.25	0	85.74	0	1.79	0	0	12.45	0	0	0	0	0	0	-43.92	-43.92
	Inverter Transformer	MV1-15 T	365309	4904994	2	0	0	56.1	56.1	1	5488.22	3.25	0	85.79	0	1.8	0	0	12.48	0	0	0	0	0	0	-44.01	-44.01
	Inverter Transformer	MV1-12 T	365044	4905386	2	0	0	56.1	56.1	1	5502.08	3.25	0	85.81	0	1.8	0	0	12.5	0	0	0	0	0	0	-44.05	-44.05
	Inverter Transformer	MV1-5 T	364676	4905892	2	0	0	56.1	56.1	1	5603.34	3.25	0	85.97	0	1.84	0	0	12.62	0	0	0	0	0	0	-44.37	-44.37
	Inverter Transformer	MV1-8 T	364782	4905647	2	0	0	56.1	56.1	1	5610.37	3.25	0	85.98	0	1.84	0	0	12.63	0	0	0	0	0	0	-44.39	-44.39
	Inverter Transformer	MV1-3 T	364435	4906039	2	0	0	56.1	56.1	1	5770.2	3.25	0	86.22	0	1.89	0	0	12.83	0	0	0	0	0	0	-44.88	-44.88
	Inverter Transformer	MV1-6 T	364482	4905835	2	0	0	56.1	56.1	1	5804.02	3.25	0	86.27	0	1.9	0	0	12.87	0	0	0	0	0	0	-44.99	-44.99
	Inverter Transformer	MV1-9 T	364555	4905646	2	0	0	56.1	56.1	1	5815.22	3.25	0	86.29	0	1.91	0	0	12.88	0	0	0	0	0	0	-45.02	-45.02
	Inverter Transformer	MV1-11 T	364649	4905414	2	0	0	56.1	56.1	1	5834.69	3.25	0	86.32	0	1.91	0	0	12.91	0	0	0	0	0	0	-45.08	-45.08
Limit. Valu	0	0																								
Level D/N:	38.2895	38.2895																								

Receiver: Vacant Lot Receptor
ID: S-VLR21
X: 369658
Y: 4908124
Z: 4.5
Ground: 0

ISO	Description	ID	X	Y	Z	Ground	ReflOrd	LxT	LxN	L/A	Dist.	hm	Freq	Adiv	K0b	Agr	Abar	z	Aatm	Afol	Ahous	Cmet	CmetN	Dc	RL	LtotT	LtotN
	Sol_Luce Substation	S_Substation	369426	4908792	3.5	0	0	112.1	112.1	1	707.14	5.24	0	67.99	0	0.03	6.2	0.33	1.9	0	0	0	0	0	0	35.95	35.95
	Inverter	MV5-5	370015	4908690	2	0	0	100.3	100.3	1	669.19	3.25	0	67.51	0	-0.43	0	0	9.58	0	0	0	0	0	0	23.65	23.65
	Inverter	MV5-2	370006	4908853	2	0	0	100.3	100.3	1	807.81	3.25	0	69.15	0	-0.35	0	0	10.21	0	0	0	0	0	0	21.3	21.3
	Inverter	MV4-10	369312	4908858	2	0	0	100.3	100.3	1	811.47	3.25	0	69.19	0	-0.34	0	0	10.23	0	0	0	0	0	0	21.24	21.24
	Inverter	MV4-11	369264	4908855	2	0	0	100.3	100.3	1	830.42	3.25	0	69.39	0	-0.33	0	0	10.3	0	0	0	0	0	0	20.96	20.96
	Inverter	MV5-4	370324	4908707	2	0	0	100.3	100.3	1	885.13	3.25	0	69.94	0	-0.3	0	0	10.51	0	0	0	0	0	0	20.17	20.17
	Inverter	MV6-2	370085	4907339	2	0	0	100.3	100.3	1	893.62	3.25	0	70.02	0	-0.3	0	0	10.54	0	0	0	0	0	0	20.05	20.05
	Inverter	MV5-3	370231	4908851	2	0	0	100.3	100.3	1	925.67	3.25	0	70.33	0	-0.28	0	0	10.66	0	0	0	0	0	0	19.61	19.61
	Inverter	MV4-9	369289	4909001	2	0	0	100.3	100.3	1	951.47	3.25	0	70.57	0	-0.27	0	0	10.75	0	0	0	0	0	0	19.27	19.27
	Inverter	MV4-8	369256	4909001	2	0	0	100.3	100.3	1	964.75	3.25	0	70.69	0	-0.26	0	0	10.79	0	0	0	0	0	0	19.09	19.09
	DSTATCOM - 10 MVAR #1	DSAT1	369437	4908757	2.5	0	0	96.6	96.6	1	670.47	3.5	0	67.53	0	2.51	0	0	0.84	0	0	0	0	0	0	25.74	25.74
	DSTATCOM - 10 MVAR #2	DSAT2	369403	4908757	2.5	0	0	96.6	96.6	1	682.44	3.5	0	67.68	0	2.54	0	0	0.85	0	0	0	0	0	0	25.56	25.56
	Inverter	MV3-8	368680	4907712	2	0	0	100.3	100.3	1	1061.24	3.25	0	71.52	0	-0.22	0	0	11.11	0	0	0	0	0	0	17.9	17.9
	Inverter	MV4-7	369035	4909001	2	0	0	100.3	100.3	1	1075.76	3.25	0	71.63	0	-0.21	0	0	11.15	0	0	0	0	0	0	17.73	17.73
	Inverter	MV5-1	370020	4909142	2	0	0	100.3	100.3	1	1080.45	3.25	0	71.67	0	-0.21	0	0	11.17	0	0	0	0	0	0	17.68	17.68
	Inverter	MV6-3	370207	4907140	2	0	0	100.3	100.3	1	1126.79	3.25	0	72.04	0	-0.19	0	0	11.31	0	0	0	0	0	0	17.15	17.15
	Inverter	MV4-5	369289	4909199	2	0	0	100.3	100.3	1	1136.57	4.77	0	72.11	0	0.39	3.75	0.02	11.34	0	0	0	0	0	0	12.72	12.72
	Inverter	MV4-6	369243	4909192	2	0	0	100.3	100.3	1	1145.8	3.25	0	72.18	0	-0.18	0	0	11.37	0	0	0	0	0	0	16.94	16.94
	Inverter	MV3-14	368684	4907498	2	0	0	100.3	100.3	1	1157.82	3.25	0	72.27	0	-0.17	0	0	11.4	0	0	0	0	0	0	16.81	16.81
	Inverter	MV3-9	368512	4907703	2	0	0	100.3	100.3	1	1220.89	3.25	0	72.73	0	-0.15	0	0	11.59	0	0	0	0	0	0	16.14	16.14
	Inverter	MV4-4	369027	4909199	2	0	0	100.3	100.3	1	1246.51	3.25	0	72.91	0	-0.13	0	0	11.66	0	0	0	0	0	0	15.87	15.87
	Inverter	MV3-20	368689	4907317	2	0	0	100.3	100.3	1	1261.04	3.25	0	73.01	0	-0.13	0	0	11.7	0	0	0	0	0	0	15.73	15.73

Inverter	MV3-16	368514	4907475	2	0	0	100.3	100.3	1	1315.27	3.25	0	73.38	0	-0.11	0	0	11.85	0	0	0	0	0	0	15.19	15.19
Inverter	MV4-2	369272	4909397	2	0	0	100.3	100.3	1	1330.24	3.25	0	73.48	0	-0.1	0	0	11.89	0	0	0	0	0	0	15.05	15.05
Inverter	MV4-3	369229	4909397	2	0	0	100.3	100.3	1	1343.35	4.66	0	73.56	0	0.51	3.67	0.01	11.92	0	0	0	0	0	0	10.65	10.65
Inverter	MV6-1	370235	4907364	2	0	0	97.3	97.3	1	954.22	3.25	0	70.59	0	-0.27	0	0	10.76	0	0	0	0	0	0	16.23	16.23
Inverter	MV3-11	368346	4907662	2	0	0	100.3	100.3	1	1390.97	3.25	0	73.87	0	-0.08	0	0	12.05	0	0	0	0	0	0	14.47	14.47
Inverter	MV4-1	369011	4909397	2	0	0	100.3	100.3	1	1427.99	3.25	0	74.09	0	-0.06	0	0	12.14	0	0	0	0	0	0	14.14	14.14
Inverter	MV3-15	368357	4907477	2	0	0	100.3	100.3	1	1453	3.25	0	74.25	0	-0.05	0	0	12.21	0	0	0	0	0	0	13.91	13.91
Inverter	MV3-21	368478	4907206	2	0	0	100.3	100.3	1	1495.04	3.25	0	74.49	0	-0.04	0	0	12.31	0	0	0	0	0	0	13.54	13.54
Inverter	MV3-19	368357	4907347	2	0	0	100.3	100.3	1	1515.37	3.25	0	74.61	0	-0.03	0	0	12.36	0	0	0	0	0	0	13.37	13.37
Inverter	MV3-6	368162	4907834	2	0	0	100.3	100.3	1	1523.85	3.25	0	74.66	0	-0.02	0	0	12.38	0	0	0	0	0	0	13.29	13.29
Inverter	MV3-10	368167	4907669	2	0	0	100.3	100.3	1	1558.88	3.25	0	74.86	0	-0.01	0	0	12.47	0	0	0	0	0	0	13	13
Inverter	MV3-17	368178	4907472	2	0	0	100.3	100.3	1	1617.25	3.25	0	75.18	0	0.01	0	0	12.61	0	0	0	0	0	0	12.52	12.52
Inverter	MV3-3	367939	4907927	2	0	0	100.3	100.3	1	1730.25	3.25	0	75.76	0	0.05	0	0	12.87	0	0	0	0	0	0	11.63	11.63
Inverter	MV3-7	367945	4907754	2	0	0	100.3	100.3	1	1752.51	3.25	0	75.87	0	0.05	0	0	12.92	0	0	0	0	0	0	11.46	11.46
Inverter	MV3-13	367963	4907577	2	0	0	100.3	100.3	1	1781.08	3.25	0	76.01	0	0.06	0	0	12.99	0	0	0	0	0	0	11.25	11.25
Inverter	MV5-6	369982	4908507	2	0	0	89.1	89.1	1	501.67	3.25	0	65.01	0	0.53	0	0	5.15	0	0	0	0	0	0	18.37	18.37
Inverter	MV3-18	367752	4907412	2	0	0	100.3	100.3	1	2034.65	3.25	0	77.17	0	0.14	0	0	13.53	0	0	0	0	0	0	9.47	9.47
Inverter	MV3-12	367668	4907594	2	0	0	100.3	100.3	1	2059.37	3.25	0	77.27	0	0.15	0	0	13.59	0	0	0	0	0	0	9.31	9.31
Inverter	MV4-15	369176	4908481	2	0	0	89.1	89.1	1	599.82	3.25	0	66.56	0	0.58	0	0	5.45	0	0	0	0	0	0	16.47	16.47
Fixed Reactor Bank 2	FRB2	369464	4908755	6	0	0	89.8	89.8	1	660.15	5.25	0	67.39	0	-0.92	0	0	1.8	0	0	0	0	0	0	21.51	21.51
Inverter	MV4-14	369176	4908507	2	0	0	89.1	89.1	1	615.65	3.25	0	66.79	0	0.58	0	0	5.49	0	0	0	0	0	0	16.2	16.2
Fixed Reactor Bank 1	FRB1	369378	4908755	6	0	0	89.8	89.8	1	690.34	5.25	0	67.78	0	-0.94	0	0	1.86	0	0	0	0	0	0	21.07	21.07
Inverter	MV4-13	369051	4908605	2	0	0	89.1	89.1	1	774.48	3.25	0	68.78	0	0.63	0	0	5.87	0	0	0	0	0	0	13.78	13.78
Inverter	MV4-12	369043	4908803	2	0	0	89.1	89.1	1	916.12	3.25	0	70.24	0	0.67	0	0	6.15	0	0	0	0	0	0	12	12
Inverter	MV3-2	368671	4907928	2	0	0	89.1	89.1	1	1006.28	3.25	0	71.05	0	0.69	0	0	6.33	0	0	0	0	0	0	10.99	10.99
Inverter	MV2-3	365820	4906641	2	0	0	100.3	100.3	1	4114.55	3.25	0	83.29	0	0.54	0	0	17.23	0	0	0	0	0	0	-0.75	-0.75
Inverter	MV3-4	368502	4907925	2	0	0	89.1	89.1	1	1173.01	3.25	0	72.39	0	0.72	0	0	6.63	0	0	0	0	0	0	9.32	9.32
Inverter	MV2-4	365586	4906624	2	0	0	100.3	100.3	1	4339.49	3.25	0	83.75	0	0.57	0	0	17.58	0	0	0	0	0	0	-1.59	-1.59
Inverter	MV3-5	368340	4907843	2	0	0	89.1	89.1	1	1347.62	3.25	0	73.59	0	0.76	0	0	6.94	0	0	0	0	0	0	7.76	7.76
Inverter	MV3-22	368656	4907142	2	0	0	89.1	89.1	1	1402.97	3.25	0	73.94	0	0.77	0	0	7.04	0	0	0	0	0	0	7.31	7.31
SubstationTransformer	W_ST	369711.17	4906112.3	2.5	0	0	92	92	1	2012.43	3.5	0	77.07	0	-0.16	0	0	4.39	0	0	0	0	0	0	10.68	10.68
Inverter	MV1-1	364715	4906166	2	0	0	100.3	100.3	1	5316.67	3.25	0	85.51	0	0.67	0	0	19.04	0	0	0	0	0	0	-4.91	-4.91
Inverter	MV1-2	364753	4906063	2	0	0	100.3	100.3	1	5320.41	3.25	0	85.52	0	0.67	0	0	19.05	0	0	0	0	0	0	-4.92	-4.92
Inverter	MV1-4	364815	4905918	2	0	0	100.3	100.3	1	5321.76	3.25	0	85.52	0	0.67	0	0	19.05	0	0	0	0	0	0	-4.92	-4.92
Inverter	MV1-15	365315	4904994	2	0	0	100.3	100.3	1	5353.37	3.25	0	85.57	0	0.67	0	0	19.09	0	0	0	0	0	0	-5.02	-5.02
Inverter	MV1-12	365038	4905386	2	0	0	100.3	100.3	1	5370.39	3.25	0	85.6	0	0.67	0	0	19.12	0	0	0	0	0	0	-5.08	-5.08
Inverter	MV1-5	364671	4905892	2	0	0	100.3	100.3	1	5463.7	3.25	0	85.75	0	0.68	0	0	19.25	0	0	0	0	0	0	-5.36	-5.36
Inverter	MV1-8	364788	4905647	2	0	0	100.3	100.3	1	5463.74	3.25	0	85.75	0	0.68	0	0	19.25	0	0	0	0	0	0	-5.37	-5.37
Inverter	MV3-1	368156	4907976	2	0	0	89.1	89.1	1	1509.28	3.25	0	74.58	0	0.79	0	0	7.22	0	0	0	0	0	0	6.46	6.46
Inverter	MV1-6	364477	4905835	2	0	0	100.3	100.3	1	5664.12	3.25	0	86.06	0	0.69	0	0	19.53	0	0	0	0	0	0	-5.97	-5.97
Westbrook Inverter Enclosur	W_INV5	369719	4906574	2	0	0	89.1	89.1	1	1551.2	3.25	0	74.81	0	0.8	0	0	7.3	0	0	0	0	0	0	6.14	6.14
Inverter	MV1-9	364561	4905646	2	0	0	100.3	100.3	1	5667.44	3.25	0	86.07	0	0.69	0	0	19.54	0	0	0	0	0	0	-5.98	-5.98
Inverter	MV1-11	364655	4905414	2	0	0	100.3	100.3	1	5689.83	3.25	0	86.1	0	0.69	0	0	19.57	0	0	0	0	0	0	-6.05	-6.05
Inverter	MV2-1	365842	4906816	2	0	0	97.3	97.3	1	4033.95	3.25	0	83.11	0	0.53	0	0	17.1	0	0	0	0	0	0	-3.44	-3.44
Westbrook Inverter Enclosur	W_INV6	369875	4906578	2	0	0	89.1	89.1	1	1561.16	3.25	0	74.87	0	0.81	0	0	7.31	0	0	0	0	0	0	6.07	6.07
Westbrook Inverter Enclosur	W_INV7	369780	4906417	2	0	0	89.1	89.1	1	1711.36	3.25	0	75.67	0	0.84	0	0	7.57	0	0	0	0	0	0	4.98	4.98
Westbrook Inverter Enclosur	W_INV2	369374	4906388	2	0	0	89.1	89.1	1	1759.08	3.25	0	75.91	0	0.85	0	0	7.65	0	0	0	0	0	0	4.65	4.65
Inverter	MV6-4	370250	4906966	2	0	0	86.1	86.1	1	1300.55	3.25	0	73.28	0	0.75	0	0	6.86	0	0	0	0	0	0	5.17	5.17
Westbrook Inverter Enclosur	W_INV4	369673	4906164	2	0	0	89.1	89.1	1	1960.06	3.25	0	76.85	0	0.9	0	0	7.98	0	0	0	0	0	0	3.34	3.34
Westbrook Inverter Enclosur	W_INV3	369508	4906164	2	0	0	89.1	89.1	1	1965.73	3.25	0	76.87	0	0.9	0	0	7.99	0	0	0	0	0	0	3.3	3.3
Inverter	MV1-7	364925	4905782	2	0	0	97.3	97.3	1	5280.74	3.25	0	85.45	0	0.67	0	0	18.99	0	0	0	0	0	0	-7.8	-7.8
Inverter	MV1-10	365004	4905564	2	0	0	97.3	97.3	1	5311.62	3.25	0	85.5	0	0.67	0	0	19.03	0	0	0	0	0	0	-7.89	-7.89
Inverter	MV1-14	365163	4905049	2	0	0	97.3	97.3	1	5446.16	3.25	0	85.72	0	0.68	0	0	19.22	0	0	0	0	0	0	-8.31	-8.31
Inverter	MV1-13	364731	4905241	2	0	0	97.3	97.3	1	5708.5	3.25	0	86.13	0	0.69	0	0	19.59	0	0	0	0	0	0	-9.1	-9.1
Westbrook Inverter Enclosur	W_INV1	369409	4906578	2	0	0	86.1	86.1	1	1565.93	3.25	0	74.9	0	0.81	0	0	7.32	0	0	0	0	0	0	3.03	3.03
Inverter	MV2-2	365977	4906654	2	0	0	89.1	89.1	1	3963.67	3.25	0	82.96	0	1.38	0	0	11.03	0	0	0	0	0	0	-6.32	-6.32
Gardiner Substation	G_Sub	366586.3	4903349.9	2.5	0	0	90.8	90.8	1	5676.92	4.25	0	86.08	0	1.81	2.19	0.38	9.39	0	0	0	0	0	0	-8.7	-8.7
Westbrook Inverter Transfor	W_INVTR1	369403	4906578	2	0	0	78.2	78.2	1	1566.89	3.25	0	74.9	0	-2.23	0	0	0.99	0	0	0	0	0	0	4.58	4.58
Inverter	MV1-3	364440	4906039	2	0	0	89.1	89.1	1	5619.14	3.25	0	85.99	0	1.79	0	0	13.28	0	0	0	0	0	0	-12	-12
Westbrook Inverter Transfor	W_INVTR5	369725	4906574	2	0	0	77.3	77.3	1	1551.45	3.25	0	74.81	0	-2.23	0	0	0.98	0	0	0	0	0	0	3.77	3.77
Westbrook Inverter Transfor	W_INVTR6	369881	4906578	2	0	0	77.3	77.3	1	1562	3.25	0	74.87	0	-2.23	0	0	0.99	0	0	0	0	0	0	3.71	3.71
Westbrook Inverter Transfor	W_INVTR7	369786	4906417	2	0	0	77.3	77.3	1	1711.79	3.25	0	75.67	0	-2.29	0	0	1.06	0	0	0	0	0	0	2.9	2.9
Inverters	G_Inv2	366676.9	4903239.1	2	0	0	87.7	87.7	1	5722.69	3.25	0	86.15	0	2.9	0	0	6.69	0	0	0	0	0	0	-8.09	-8.09
Westbrook Inverter Transfor	W_INVTR2	369368	4906388	2	0	0	77.3	77.3	1	1760.06	3.25	0	75.91	0	-2.31	0	0	1.09	0	0	0	0	0	0	2.66	2.66
Inverters	G_Inv4	366732.8	4903105	2	0	0	87.7	87.7	1	5809.23	3.25	0	86.28	0	2.91	0	0	6.78	0	0	0	0	0	0	-8.31	-8.31
Inverters	G_Inv1	366526.4	4903225.8	2	0	0	87.7	87.7	1	5813.72	3.25	0	86.29	0	2.91	0	0	6.79	0	0	0	0	0	0	-8.32	-8.32
Inverters	G_Inv6	366788.5	4902972	2	0	0	87.7	87.7	1	5897.21	3.25	0	86.41	0	2.91	0	0	6.87	0	0	0	0	0	0	-8.54	-8.54
Inverters	G_Inv3	366583.7	4903091.4	2	0	0	87.7	87.7	1	5897.32	3.25	0	86.41	0	2.91	0	0	6.87	0	0	0	0	0	0	-8.54	-8.54
Inverters	G_Inv5	366638.5	4902958.1	2	0	0	87.7	87.7	1	5983.64	3.25	0	86.54	0	2.92	0	0	6.96	0	0	0	0	0	0	-8.76	-8.76
Inverters	G_Inv8	366844.5	4902838.5	2	0	0	87.7	87.7	1	5987.68	3.25	0	86.55	0	2.92	0	0	6.97	0	0	0	0	0	0	-8.77	-8.77
Inverters	G_Inv7	366694.6	4902824.7	2	0	0	87.7	87.7	1	6071.6	3.25	0	86.67	0	2.92	0	0	7.05	0	0	0	0	0	0	-8.98	-8.98
Inverters	G_Inv10	366900.7	4902704.8	2	0	0	87.7	87.7	1	6080.33	3.25	0	86.68	0	2.92	0	0	7.06	0	0	0	0	0	0	-9	-9
Inverters	G_Inv9	366750.9	4902691.8	2	0	0	87.7	87.7	1	6161.17	3.25	0	86.79	0	2.92	0	0	7.14	0	0	0	0	0	0	-9.2	-9.2
Westbrook Inverter Transfor	W_INVTR4	369679	4906164	2	0	0	77.3	77.3	1	1960.11	3.25	0	76.85	0	-2.39	0	0	1.19	0	0	0	0	0	0	1.7	1.7

Westbrook Inverter Transfor	W_INVTR3	369514	4906164	2	0	0	77.3	77.3	1	1965.28	3.25	0	76.87	0	-2.39	0	0	1.19	0	0	0	0	0	0	1.68	1.68
Inverter Transformer	MV6-1 T	370230	4907364	2	0	0	69.4	69.4	1	951.2	3.25	0	70.57	0	1.64	0	0	3.74	0	0	0	0	0	0	-6.6	-6.6
Inverter Transformer	MV6-4 T	370244	4906966	2	0	0	69.4	69.4	1	1297.83	3.25	0	73.26	0	1.88	0	0	4.2	0	0	0	0	0	0	-9.99	-9.99
Inverter Transformer	MV5-6 T	369987	4908507	2	0	0	56.1	56.1	1	504.91	3.25	0	65.06	0	-0.12	0	0	3.57	0	0	0	0	0	0	-12.46	-12.46
Inverter Transformer	MV4-15 T	369170	4908481	2	0	0	56.1	56.1	1	604.65	3.25	0	66.63	0	-0.1	0	0	3.87	0	0	0	0	0	0	-14.34	-14.34
Inverter Transformer	MV4-14 T	369182	4908507	2	0	0	56.1	56.1	1	610.96	3.25	0	66.72	0	-0.1	0	0	3.89	0	0	0	0	0	0	-14.45	-14.45
Inverter Transformer	MV5-5 T	370021	4908690	2	0	0	56.1	56.1	1	672.41	3.25	0	67.55	0	-0.09	0	0	4.06	0	0	0	0	0	0	-15.46	-15.46
Inverter Transformer	MV4-13 T	369057	4908605	2	0	0	56.1	56.1	1	769.78	3.25	0	68.73	0	-0.06	0	0	4.32	0	0	0	0	0	0	-16.92	-16.92
Inverter Transformer	MV5-2 T	370011	4908853	2	0	0	56.1	56.1	1	809.97	3.25	0	69.17	0	-0.05	0	0	4.42	0	0	0	0	0	0	-17.48	-17.48
Inverter Transformer	MV4-10 T	369307	4908858	2	0	0	56.1	56.1	1	813.61	3.25	0	69.21	0	-0.05	0	0	4.43	0	0	0	0	0	0	-17.53	-17.53
Inverter Transformer	MV4-11 T	369269	4908855	2	0	0	56.1	56.1	1	828.06	3.25	0	69.36	0	-0.04	0	0	4.47	0	0	0	0	0	0	-17.73	-17.73
Inverter Transformer	MV2-1 T	365836	4906816	2	0	0	69.4	69.4	1	4039.62	3.25	0	83.13	0	2.8	0	0	6.71	0	0	0	0	0	0	-23.28	-23.28
Inverter Transformer	MV5-4 T	370330	4908707	2	0	0	56.1	56.1	1	889.65	3.25	0	69.98	0	-0.02	0	0	4.62	0	0	0	0	0	0	-18.52	-18.52
Inverter Transformer	MV6-2 T	370091	4907339	2	0	0	56.1	56.1	1	896.5	3.25	0	70.05	0	-0.02	0	0	4.64	0	0	0	0	0	0	-18.61	-18.61
Inverter Transformer	MV4-12 T	369049	4908803	2	0	0	56.1	56.1	1	912.1	3.25	0	70.2	0	-0.02	0	0	4.68	0	0	0	0	0	0	-18.8	-18.8
Inverter Transformer	MV5-3 T	370237	4908851	2	0	0	56.1	56.1	1	929.4	3.25	0	70.36	0	-0.01	0	0	4.72	0	0	0	0	0	0	-19.01	-19.01
Inverter Transformer	MV4-9 T	369284	4909001	2	0	0	56.1	56.1	1	953.42	3.25	0	70.59	0	0	0	0	4.78	0	0	0	0	0	0	-19.3	-19.3
Inverter Transformer	MV4-8 T	369262	4909001	2	0	0	56.1	56.1	1	962.26	3.25	0	70.67	0	0	0	0	4.8	0	0	0	0	0	0	-19.4	-19.4
Inverter Transformer	MV3-2 T	368677	4907928	2	0	0	56.1	56.1	1	1000.39	3.25	0	71	0	0.01	0	0	4.89	0	0	0	0	0	0	-19.85	-19.85
Inverter Transformer	MV3-8 T	368685	4907712	2	0	0	56.1	56.1	1	1056.64	3.25	0	71.48	0	0.03	0	0	5.02	0	0	0	0	0	0	-20.48	-20.48
Inverter Transformer	MV4-7 T	369040	4909001	2	0	0	56.1	56.1	1	1072.87	3.25	0	71.61	0	0.04	0	0	5.06	0	0	0	0	0	0	-20.65	-20.65
Inverter Transformer	MV5-1 T	370015	4909142	2	0	0	56.1	56.1	1	1078.79	3.25	0	71.66	0	0.04	0	0	5.08	0	0	0	0	0	0	-20.72	-20.72
Inverter Transformer	MV6-3 T	370202	4907140	2	0	0	56.1	56.1	1	1124.37	3.25	0	72.02	0	0.06	0	0	5.18	0	0	0	0	0	0	-21.2	-21.2
Inverter Transformer	MV4-5 T	369283	4909199	2	0	0	56.1	56.1	1	1138.53	4.77	0	72.13	0	0.85	3.31	0.02	5.21	0	0	0	0	0	0	-25.44	-25.44
Inverter Transformer	MV4-6 T	369249	4909192	2	0	0	56.1	56.1	1	1143.64	3.25	0	72.17	0	0.06	0	0	5.23	0	0	0	0	0	0	-21.4	-21.4
Inverter Transformer	MV1-7 T	364919	4905782	2	0	0	69.4	69.4	1	5286.12	3.25	0	85.46	0	3.07	0	0	7.57	0	0	0	0	0	0	-26.75	-26.75
Inverter Transformer	MV1-10 T	365010	4905564	2	0	0	69.4	69.4	1	5306.37	3.25	0	85.5	0	3.07	0	0	7.58	0	0	0	0	0	0	-26.8	-26.8
Inverter Transformer	MV3-14 T	368678	4907498	2	0	0	56.1	56.1	1	1162.88	3.25	0	72.31	0	0.07	0	0	5.27	0	0	0	0	0	0	-21.59	-21.59
Inverter Transformer	MV3-4 T	368507	4907925	2	0	0	56.1	56.1	1	1168.08	3.25	0	72.35	0	0.07	0	0	5.28	0	0	0	0	0	0	-21.65	-21.65
Inverter Transformer	MV1-14 T	365157	4905049	2	0	0	69.4	69.4	1	5451.11	3.25	0	85.73	0	3.1	0	0	7.68	0	0	0	0	0	0	-27.15	-27.15
Inverter Transformer	MV3-9 T	368517	4907703	2	0	0	56.1	56.1	1	1216.19	3.25	0	72.7	0	0.09	0	0	5.39	0	0	0	0	0	0	-22.12	-22.12
Inverter Transformer	MV1-13 T	364725	4905241	2	0	0	69.4	69.4	1	5713.68	3.25	0	86.14	0	3.14	0	0	7.84	0	0	0	0	0	0	-27.77	-27.77
Inverter Transformer	MV4-4 T	369033	4909199	2	0	0	56.1	56.1	1	1243.49	3.25	0	72.89	0	0.1	0	0	5.45	0	0	0	0	0	0	-22.39	-22.39
Inverter Transformer	MV3-20 T	368683	4907317	2	0	0	56.1	56.1	1	1265.65	3.25	0	73.05	0	0.11	0	0	5.5	0	0	0	0	0	0	-22.6	-22.6
Inverter Transformer	MV3-16 T	368509	4907475	2	0	0	56.1	56.1	1	1319.62	3.25	0	73.41	0	0.13	0	0	5.62	0	0	0	0	0	0	-23.1	-23.1
Inverter Transformer	MV4-2 T	369267	4909397	2	0	0	56.1	56.1	1	1331.7	3.25	0	73.49	0	0.13	0	0	5.65	0	0	0	0	0	0	-23.21	-23.21
Inverter Transformer	MV4-3 T	369234	4909397	2	0	0	56.1	56.1	1	1341.76	4.67	0	73.55	0	0.95	3.22	0.01	5.67	0	0	0	0	0	0	-27.34	-27.34
Inverter Transformer	MV3-5 T	368335	4907843	2	0	0	56.1	56.1	1	1352.51	3.25	0	73.62	0	0.14	0	0	5.7	0	0	0	0	0	0	-23.4	-23.4
Inverter Transformer	MV3-11 T	368340	4907662	2	0	0	56.1	56.1	1	1396.63	3.25	0	73.9	0	0.16	0	0	5.79	0	0	0	0	0	0	-23.8	-23.8
Inverter Transformer	MV3-22 T	368661	4907142	2	0	0	56.1	56.1	1	1399.41	3.25	0	73.92	0	0.16	0	0	5.8	0	0	0	0	0	0	-23.82	-23.82
Inverter Transformer	MV4-1 T	369017	4909397	2	0	0	56.1	56.1	1	1425.28	3.25	0	74.08	0	0.17	0	0	5.86	0	0	0	0	0	0	-24.05	-24.05
Inverter Transformer	MV3-15 T	368351	4907477	2	0	0	56.1	56.1	1	1458.38	3.25	0	74.28	0	0.18	0	0	5.93	0	0	0	0	0	0	-24.33	-24.33
Inverter Transformer	MV3-21 T	368484	4907206	2	0	0	56.1	56.1	1	1490.3	3.25	0	74.47	0	0.19	0	0	6	0	0	0	0	0	0	-24.6	-24.6
Inverter Transformer	MV3-1 T	368150	4907976	2	0	0	56.1	56.1	1	1515.25	3.25	0	74.61	0	0.2	0	0	6.05	0	0	0	0	0	0	-24.81	-24.81
Inverter Transformer	MV3-19 T	368352	4907347	2	0	0	56.1	56.1	1	1519.66	3.25	0	74.63	0	0.21	0	0	6.06	0	0	0	0	0	0	-24.84	-24.84
Inverter Transformer	MV3-6 T	368156	4907834	2	0	0	56.1	56.1	1	1529.74	3.25	0	74.69	0	0.21	0	0	6.08	0	0	0	0	0	0	-24.93	-24.93
Inverter Transformer	MV3-10 T	368162	4907669	2	0	0	56.1	56.1	1	1563.66	3.25	0	74.88	0	0.22	0	0	6.15	0	0	0	0	0	0	-25.2	-25.2
Inverter Transformer	MV3-17 T	368183	4907472	2	0	0	56.1	56.1	1	1612.68	3.25	0	75.15	0	0.24	0	0	6.26	0	0	0	0	0	0	-25.59	-25.59
Inverter Transformer	MV3-3 T	367944	4907927	2	0	0	56.1	56.1	1	1725.29	3.25	0	75.74	0	0.29	0	0	6.49	0	0	0	0	0	0	-26.46	-26.46
Inverter Transformer	MV3-7 T	367951	4907754	2	0	0	56.1	56.1	1	1746.64	3.25	0	75.84	0	0.3	0	0	6.53	0	0	0	0	0	0	-26.62	-26.62
Inverter Transformer	MV3-13 T	367958	4907577	2	0	0	56.1	56.1	1	1785.84	3.25	0	76.04	0	0.31	0	0	6.61	0	0	0	0	0	0	-26.91	-26.91
Inverter Transformer	MV3-18 T	367757	4907412	2	0	0	56.1	56.1	1	2029.96	3.25	0	77.15	0	0.42	0	0	7.1	0	0	0	0	0	0	-28.61	-28.61
Inverter Transformer	MV3-12 T	367674	4907594	2	0	0	56.1	56.1	1	2053.57	3.25	0	77.25	0	0.43	0	0	7.15	0	0	0	0	0	0	-28.77	-28.77
Line Reactor	NGR	369421	4908787.5	5	0	0	45.4	45.4	1	704.56	5.25	0	67.96	0	3.38	1.51	0.11	0.29	0	0	0	0	0	0	-27.79	-27.79
Inverter Transformer	MV2-2 T	365982	4906654	2	0	0	56.1	56.1	1	3959.03	3.25	0	82.95	0	1.23	0	0	10.39	0	0	0	0	0	0	-38.51	-38.51
Inverter Transformer	MV2-3 T	365814	4906641	2	0	0	56.1	56.1	1	4120.15	3.25	0	83.3	0	1.29	0	0	10.63	0	0	0	0	0	0	-39.16	-39.16
Inverter Transformer	MV2-4 T	365590	4906628	2	0	0	56.1	56.1	1	4334.36	3.25	0	83.74	0	1.38	0	0	10.94	0	0	0	0	0	0	-40	-40
Inverter Transformer	MV1-1 T	364721	4906166	2	0	0	56.1	56.1	1	5311.1	3.25	0	85.5	0	1.74	0	0	12.26	0	0	0	0	0	0	-43.44	-43.44
Inverter Transformer	MV1-2 T	364759	4906063	2	0	0	56.1	56.1	1	5314.88	3.25	0	85.51	0	1.74	0	0	12.26	0	0	0	0	0	0	-43.45	-43.45
Inverter Transformer	MV1-4 T	364821	4905918	2	0	0	56.1	56.1	1	5316.3	3.25	0	85.51	0	1.74	0	0	12.26	0	0	0	0	0	0	-43.46	-43.46
Inverter Transformer	MV1-15 T	365309	4904994	2	0	0	56.1	56.1	1	5358.24	3.25	0	85.58	0	1.75	0	0	12.32	0	0	0	0	0	0	-43.59	-43.59
Inverter Transformer	MV1-12 T	365044	4905386	2	0	0	56.1	56.1	1	5365.23	3.25	0	85.59	0	1.75	0	0	12.33	0	0	0	0	0	0	-43.61	-43.61
Inverter Transformer	MV1-5 T	364676	4905892	2	0	0	56.1	56.1	1	5459.13	3.25	0	85.74	0	1.79	0	0	12.44	0	0	0	0	0	0	-43.92	-43.92
Inverter Transformer	MV1-8 T	364782	4905647	2	0	0	56.1	56.1	1	5469.09	3.25	0	85.76	0	1.79	0	0	12.46	0	0	0	0	0	0	-43.95	-43.95
Inverter Transformer	MV1-3 T	364435	4906039	2	0	0	56.1	56.1	1	5623.79	3.25	0	86	0	1.84	0	0	12.65	0	0	0	0	0	0	-44.43	-44.43
Inverter Transformer	MV1-6 T	364482	4905835	2	0	0	56.1	56.1	1	5659.55	3.25	0	86.06	0	1.85	0	0	12.69	0	0	0	0	0	0	-44.54	-44.54
Inverter Transformer	MV1-9 T	364555	4905646	2	0	0	56.1	56.1	1	5672.84	3.25	0	86.08	0	1.86	0	0	12.71	0	0	0	0	0	0	-44.59	-44.59
Inverter Transformer	MV1-11 T	364649	4905414	2	0	0	56.1	56.1	1	5695.1	3.25	0	86.11	0	1.87	0	0	12.74	0	0	0	0	0	0	-44.65	-44.65
Limit. Valu 0	0																								
Level D/N: 38.5394	38.5394																								

Receiver: Vacant Lot Receptor
ID: S-VLR22
X: 370438

Y: 4909610
Z: 4.5
Ground: 0

ISO	Description	ID	X	Y	Z	Ground	ReflOrd	LxT	LxN	L/A	Dist.	hm	Freq	Adiv	K0b	Agr	Abar	z	Aatm	Afol	Ahous	Cmet	CmetN	Dc	RL	LtotT	LtotN
	Sol_Luce Substation	S_Substation	369426	4908792	3.5	0	0	112.1	112.1	1	1301.26	5.25	0	73.29	0	0.04	4.92	0.37	3.11	0	0	0	0	0	0	30.72	30.72
	Inverter	MV5-1	370020	4909142	2	0	0	100.3	100.3	1	627.5	3.25	0	66.95	0	-0.46	0	0	9.36	0	0	0	0	0	0	24.46	24.46
	Inverter	MV5-3	370231	4908851	2	0	0	100.3	100.3	1	786.73	3.25	0	68.92	0	-0.36	0	0	10.13	0	0	0	0	0	0	21.63	21.63
	Inverter	MV5-2	370006	4908853	2	0	0	100.3	100.3	1	871.6	3.25	0	69.81	0	-0.31	0	0	10.46	0	0	0	0	0	0	20.36	20.36
	Inverter	MV5-4	370324	4908707	2	0	0	100.3	100.3	1	910.17	3.25	0	70.18	0	-0.29	0	0	10.6	0	0	0	0	0	0	19.82	19.82
	Inverter	MV5-5	370015	4908690	2	0	0	100.3	100.3	1	1012.59	3.25	0	71.11	0	-0.24	0	0	10.95	0	0	0	0	0	0	18.49	18.49
	Inverter	MV4-2	369272	4909397	2	0	0	100.3	100.3	1	1185.3	3.25	0	72.48	0	-0.16	0	0	11.48	0	0	0	0	0	0	16.51	16.51
	Inverter	MV4-5	369289	4909199	2	0	0	100.3	100.3	1	1220.3	3.25	0	72.73	0	-0.15	0	0	11.58	0	0	0	0	0	0	16.14	16.14
	Inverter	MV4-3	369229	4909397	2	0	0	100.3	100.3	1	1227.62	3.25	0	72.78	0	-0.14	0	0	11.6	0	0	0	0	0	0	16.07	16.07
	Inverter	MV4-6	369243	4909192	2	0	0	100.3	100.3	1	1266	3.25	0	73.05	0	-0.13	0	0	11.71	0	0	0	0	0	0	15.68	15.68
	Inverter	MV4-9	369289	4909001	2	0	0	100.3	100.3	1	1300.42	3.25	0	73.28	0	-0.11	0	0	11.81	0	0	0	0	0	0	15.34	15.34
	Inverter	MV4-8	369256	4909001	2	0	0	100.3	100.3	1	1329.67	3.25	0	73.47	0	-0.1	0	0	11.89	0	0	0	0	0	0	15.05	15.05
	Inverter	MV4-10	369312	4908858	2	0	0	100.3	100.3	1	1354.03	3.25	0	73.63	0	-0.09	0	0	11.95	0	0	0	0	0	0	14.82	14.82
	Inverter	MV4-11	369264	4908855	2	0	0	100.3	100.3	1	1395.82	3.25	0	73.9	0	-0.07	0	0	12.06	0	0	0	0	0	0	14.43	14.43
	Inverter	MV4-1	369011	4909397	2	0	0	100.3	100.3	1	1442.81	3.25	0	74.18	0	-0.06	0	0	12.18	0	0	0	0	0	0	14	14
	Inverter	MV4-4	369027	4909199	2	0	0	100.3	100.3	1	1469.64	3.25	0	74.34	0	-0.04	0	0	12.25	0	0	0	0	0	0	13.76	13.76
	Inverter	MV4-7	369035	4909001	2	0	0	100.3	100.3	1	1529.48	3.25	0	74.69	0	-0.02	0	0	12.4	0	0	0	0	0	0	13.25	13.25
	DSTATCOM - 10 MVAR #1	DSAT1	369437	4908757	2.5	0	0	96.6	96.6	1	1315.15	3.5	0	73.38	0	3.06	0	0	1.29	0	0	0	0	0	0	18.9	18.9
	DSTATCOM - 10 MVAR #2	DSAT2	369403	4908757	2.5	0	0	96.6	96.6	1	1341.21	3.5	0	73.55	0	3.07	0	0	1.3	0	0	0	0	0	0	18.71	18.71
	Inverter	MV6-2	370085	4907339	2	0	0	100.3	100.3	1	2298.27	3.25	0	78.23	0	0.21	0	0	14.07	0	0	0	0	0	0	7.81	7.81
	Inverter	MV6-3	370207	4907140	2	0	0	100.3	100.3	1	2480.78	3.25	0	78.89	0	0.25	0	0	14.42	0	0	0	0	0	0	6.75	6.75
	Inverter	MV3-8	368680	4907712	2	0	0	100.3	100.3	1	2587.08	3.25	0	79.26	0	0.28	0	0	14.62	0	0	0	0	0	0	6.16	6.16
	Inverter	MV3-9	368512	4907703	2	0	0	100.3	100.3	1	2710.37	3.25	0	79.66	0	0.3	0	0	14.85	0	0	0	0	0	0	5.5	5.5
	Inverter	MV3-14	368684	4907498	2	0	0	100.3	100.3	1	2745.37	3.25	0	79.77	0	0.31	0	0	14.91	0	0	0	0	0	0	5.31	5.31
	Inverter	MV3-11	368346	4907662	2	0	0	100.3	100.3	1	2858.53	3.25	0	80.12	0	0.33	0	0	15.12	0	0	0	0	0	0	4.74	4.74
	Inverter	MV3-16	368514	4907475	2	0	0	100.3	100.3	1	2874.02	3.25	0	80.17	0	0.34	0	0	15.15	0	0	0	0	0	0	4.66	4.66
	Inverter	MV3-20	368689	4907317	2	0	0	100.3	100.3	1	2883.9	3.25	0	80.2	0	0.34	0	0	15.17	0	0	0	0	0	0	4.61	4.61
	Inverter	MV3-6	368162	4907834	2	0	0	100.3	100.3	1	2886.93	3.25	0	80.21	0	0.34	0	0	15.17	0	0	0	0	0	0	4.59	4.59
	Inverter	MV3-15	368357	4907477	2	0	0	100.3	100.3	1	2979.98	3.25	0	80.48	0	0.36	0	0	15.34	0	0	0	0	0	0	4.13	4.13
	Inverter	MV3-10	368167	4907669	2	0	0	100.3	100.3	1	2987.46	3.25	0	80.51	0	0.36	0	0	15.35	0	0	0	0	0	0	4.1	4.1
	Inverter	MV3-3	367939	4907927	2	0	0	100.3	100.3	1	3012.89	3.25	0	80.58	0	0.36	0	0	15.39	0	0	0	0	0	0	3.97	3.97
	Inverter	MV3-19	368357	4907347	2	0	0	100.3	100.3	1	3074.37	3.25	0	80.76	0	0.38	0	0	15.5	0	0	0	0	0	0	3.68	3.68
	Inverter	MV3-21	368478	4907206	2	0	0	100.3	100.3	1	3101.75	3.25	0	80.83	0	0.38	0	0	15.55	0	0	0	0	0	0	3.55	3.55
	Inverter	MV3-7	367945	4907754	2	0	0	100.3	100.3	1	3108.02	3.25	0	80.85	0	0.38	0	0	15.56	0	0	0	0	0	0	3.52	3.52
	Inverter	MV3-17	368178	4907472	2	0	0	100.3	100.3	1	3111.05	3.25	0	80.86	0	0.38	0	0	15.57	0	0	0	0	0	0	3.5	3.5
	Inverter	MV6-1	370235	4907364	2	0	0	97.3	97.3	1	2255.16	3.25	0	78.06	0	0.2	0	0	13.98	0	0	0	0	0	0	5.07	5.07
	Inverter	MV3-13	367963	4907577	2	0	0	100.3	100.3	1	3202.92	4.51	0	81.11	0	1.18	3.14	0	15.73	0	0	0	0	0	0	-0.84	-0.84
	Inverter	MV3-12	367668	4907594	2	0	0	100.3	100.3	1	3425.95	3.25	0	81.7	0	0.44	0	0	16.11	0	0	0	0	0	0	2.07	2.07
	Inverter	MV3-18	367752	4907412	2	0	0	100.3	100.3	1	3470.71	4.47	0	81.81	0	1.25	3.07	0	16.18	0	0	0	0	0	0	-2	-2
	Fixed Reactor Bank 2	FRB2	369464	4908755	6	0	0	89.8	89.8	1	1296.03	5.25	0	73.25	0	-1.03	0	0	3.1	0	0	0	0	0	0	14.45	14.45
	Inverter	MV5-6	369982	4908507	2	0	0	89.1	89.1	1	1193.55	3.25	0	72.54	0	0.73	0	0	6.67	0	0	0	0	0	0	9.12	9.12
	Fixed Reactor Bank 1	FRB1	369378	4908755	6	0	0	89.8	89.8	1	1361.85	5.29	0	73.68	0	-0.69	4.21	0	3.23	0	0	0	0	0	0	9.35	9.35
	Inverter	MV2-3	365820	4906641	2	0	0	100.3	100.3	1	5490.07	3.25	0	85.79	0	0.68	0	0	19.29	0	0	0	0	0	0	-5.45	-5.45
	Inverter	MV2-4	365586	4906624	2	0	0	100.3	100.3	1	5697.2	3.25	0	86.11	0	0.69	0	0	19.58	0	0	0	0	0	0	-6.07	-6.07
	Inverter	MV4-12	369043	4908803	2	0	0	89.1	89.1	1	1611.61	3.25	0	75.15	0	0.82	0	0	7.4	0	0	0	0	0	0	5.7	5.7
	Inverter	MV4-14	369176	4908507	2	0	0	89.1	89.1	1	1676.08	3.25	0	75.49	0	0.83	0	0	7.51	0	0	0	0	0	0	5.23	5.23
	Inverter	MV4-15	369176	4908481	2	0	0	89.1	89.1	1	1693.31	3.25	0	75.57	0	0.84	0	0	7.54	0	0	0	0	0	0	5.11	5.11
	Inverter	MV4-13	369051	4908605	2	0	0	89.1	89.1	1	1712.83	3.25	0	75.67	0	0.84	0	0	7.57	0	0	0	0	0	0	4.97	4.97
	Inverter	MV1-1	364715	4906166	2	0	0	100.3	100.3	1	6679.36	3.25	0	87.49	0	0.71	0	0	20.89	0	0	0	0	0	0	-8.79	-8.79
	Inverter	MV1-2	364753	4906063	2	0	0	100.3	100.3	1	6700.78	3.25	0	87.52	0	0.71	0	0	20.92	0	0	0	0	0	0	-8.84	-8.84
	Inverter	MV1-4	364815	4905918	2	0	0	100.3	100.3	1	6726.74	3.25	0	87.56	0	0.71	0	0	20.95	0	0	0	0	0	0	-8.91	-8.91
	Inverter	MV1-12	365038	4905386	2	0	0	100.3	100.3	1	6855.81	3.25	0	87.72	0	0.71	0	0	21.12	0	0	0	0	0	0	-9.24	-9.24
	Inverter	MV1-5	364671	4905892	2	0	0	100.3	100.3	1	6861.62	3.25	0	87.73	0	0.71	0	0	21.12	0	0	0	0	0	0	-9.25	-9.25
	Inverter	MV1-15	365315	4904994	2	0	0	100.3	100.3	1	6895.84	3.25	0	87.77	0	0.71	0	0	21.17	0	0	0	0	0	0	-9.34	-9.34
	Inverter	MV1-8	364788	4905647	2	0	0	100.3	100.3	1	6901.3	3.25	0	87.78	0	0.71	0	0	21.17	0	0	0	0	0	0	-9.35	-9.35
	Inverter	MV1-6	364477	4905835	2	0	0	100.3	100.3	1	7055.79	3.25	0	87.97	0	0.71	0	0	21.37	0	0	0	0	0	0	-9.74	-9.74
	Inverter	MV1-9	364561	4905646	2	0	0	100.3	100.3	1	7088.89	3.25	0	88.01	0	0.71	0	0	21.41	0	0	0	0	0	0	-9.82	-9.82
	Inverter	MV1-11	364655	4905414	2	0	0	100.3	100.3	1	7144.89	3.25	0	88.08	0	0.71	0	0	21.48	0	0	0	0	0	0	-9.95	-9.95
	Inverter	MV2-1	365842	4906816	2	0	0	97.3	97.3	1	5378.63	3.25	0	85.61	0	0.67	0	0	19.13	0	0	0	0	0	0	-8.1	-8.1
	Inverter	MV3-2	368671	4907928	2	0	0	89.1	89.1	1	2439.55	3.25	0	78.75	0	1.01	0	0	8.75	0	0	0	0	0	0	0.55	0.55
	SubstationTransformer	W_ST	369711.17	4906112.3	2.5	0	0	92	92	1	3572.45	3.5	0	82.06	0	0.23	0	0	6.78	0	0	0	0	0	0	2.91	2.91
	Inverter	MV3-4	368502	4907925	2	0	0	89.1	89.1	1	2566.58	3.25	0	79.19	0	1.04	0	0	8.95	0	0	0	0	0	0	-0.12	-0.12
	Inverter	MV1-7	364925	4905782	2	0	0	97.3	97.3	1	6711.69	3.25	0	87.54	0	0.71	0	0	20.93	0	0	0	0	0	0	-11.87	-11.87
	Inverter	MV1-10	365004	4905564	2	0	0	97.3	97.3	1	6774.84	3.25	0	87.62	0	0.71	0	0	21.01	0	0	0	0	0	0	-12.03	-12.03
	Inverter	MV1-14	365163	4905049	2	0	0	97.3	97.3	1	6973.4	3.25	0	87.87	0	0.71	0	0	21.27	0	0	0	0	0	0	-12.53	-12.53
	Inverter	MV3-5	368340	4907843	2	0	0	89.1	89.1	1	2742.97	3.25	0	79.76	0	1.08	0	0	9.22	0	0	0	0	0	0	-1.01	-1.01
	Inverter	MV1-13	364731	4905241	2	0	0	97.3	97.3	1	7187.35	3.25	0	88.13	0	0.7	0	0	21.53	0	0	0	0	0	0	-13.06	-13.06
	Inverter	MV3-1	368156	4907976	2	0	0	89.1	89.1	1	2806.69	3.25	0	79.96	0	1.1	0	0	9.32	0	0	0	0	0	0	-1.33	-1.33
	Inverter	MV3-22	368656	4907142	2	0	0	89.1	89.1	1	3044.1	3.25	0	80.67	0	1.16	0	0	9.68	0	0	0	0	0	0	-2.45	-2.45

Westbrook Inverter Enclosur	W_INV6	369875	4906578	2	0	0	89.1	89.1	1	3083.83	3.25	0	80.78	0	1.17	0	0	9.74	0	0	0	0	0	0	-2.63	-2.63
Westbrook Inverter Enclosur	W_INV5	369719	4906574	2	0	0	89.1	89.1	1	3119.98	3.25	0	80.88	0	1.18	0	0	9.8	0	0	0	0	0	0	-2.8	-2.8
Westbrook Inverter Enclosur	W_INV7	369780	4906417	2	0	0	89.1	89.1	1	3260.09	3.25	0	81.26	0	1.21	0	0	10.01	0	0	0	0	0	0	-3.42	-3.42
Westbrook Inverter Enclosur	W_INV2	369374	4906388	2	0	0	89.1	89.1	1	3393.14	3.25	0	81.61	0	1.24	0	0	10.21	0	0	0	0	0	0	-4	-4
Westbrook Inverter Enclosur	W_INV4	369673	4906164	2	0	0	89.1	89.1	1	3529.89	3.25	0	81.96	0	1.28	0	0	10.41	0	0	0	0	0	0	-4.58	-4.58
Westbrook Inverter Enclosur	W_INV3	369508	4906164	2	0	0	89.1	89.1	1	3569.29	3.25	0	82.05	0	1.29	0	0	10.46	0	0	0	0	0	0	-4.74	-4.74
Inverter	MV6-4	370250	4906966	2	0	0	86.1	86.1	1	2650.68	3.25	0	79.47	0	1.06	0	0	9.08	0	0	0	0	0	0	-3.55	-3.55
Westbrook Inverter Enclosur	W_INV1	369409	4906578	2	0	0	86.1	86.1	1	3201.85	3.25	0	81.11	0	1.2	0	0	9.92	0	0	0	0	0	0	-6.17	-6.17
Inverter	MV2-2	365977	4906654	2	0	0	89.1	89.1	1	5351.49	3.25	0	85.57	0	1.73	0	0	12.93	0	0	0	0	0	0	-11.17	-11.17
Gardiner Substation	G_Sub	366586.3	4903349.9	2.5	0	0	90.8	90.8	1	7350.13	4.25	0	88.33	0	2.12	1.84	0.38	11.08	0	0	0	0	0	0	-12.58	-12.58
Inverter	MV1-3	364440	4906039	2	0	0	89.1	89.1	1	6980.55	3.25	0	87.88	0	2.12	0	0	14.96	0	0	0	0	0	0	-15.91	-15.91
Inverters	G_Inv2	366676.9	4903239.1	2	0	0	87.7	87.7	1	7398.26	3.25	0	88.38	0	2.96	0	0	8.39	0	0	0	0	0	0	-12.07	-12.07
Inverters	G_Inv4	366732.8	4903105	2	0	0	87.7	87.7	1	7486.22	3.25	0	88.49	0	2.96	0	0	8.47	0	0	0	0	0	0	-12.26	-12.26
Inverters	G_Inv1	366526.4	4903225.8	2	0	0	87.7	87.7	1	7487.23	3.25	0	88.49	0	2.96	0	0	8.47	0	0	0	0	0	0	-12.26	-12.26
Inverters	G_Inv3	366583.7	4903091.4	2	0	0	87.7	87.7	1	7572.83	3.25	0	88.59	0	2.96	0	0	8.56	0	0	0	0	0	0	-12.44	-12.44
Inverters	G_Inv6	366788.5	4902972	2	0	0	87.7	87.7	1	7575.08	3.25	0	88.59	0	2.96	0	0	8.56	0	0	0	0	0	0	-12.45	-12.45
Inverters	G_Inv5	366638.5	4902958.1	2	0	0	87.7	87.7	1	7660.55	3.25	0	88.69	0	2.96	0	0	8.64	0	0	0	0	0	0	-12.63	-12.63
Inverters	G_Inv8	366844.5	4902838.5	2	0	0	87.7	87.7	1	7665.93	3.25	0	88.69	0	2.96	0	0	8.65	0	0	0	0	0	0	-12.64	-12.64
Inverters	G_Inv7	366694.6	4902824.7	2	0	0	87.7	87.7	1	7749.41	3.25	0	88.79	0	2.96	0	0	8.73	0	0	0	0	0	0	-12.82	-12.82
Inverters	G_Inv10	366900.7	4902704.8	2	0	0	87.7	87.7	1	7758.5	3.25	0	88.8	0	2.96	0	0	8.74	0	0	0	0	0	0	-12.84	-12.84
Inverters	G_Inv9	366750.9	4902691.8	2	0	0	87.7	87.7	1	7839.4	3.25	0	88.89	0	2.96	0	0	8.82	0	0	0	0	0	0	-13.01	-13.01
Westbrook Inverter Transfor	W_INVTR1	369403	4906578	2	0	0	78.2	78.2	1	3203.79	3.25	0	81.11	0	-2.77	0	0	1.74	0	0	0	0	0	0	-1.84	-1.84
Westbrook Inverter Transfor	W_INVTR6	369881	4906578	2	0	0	77.3	77.3	1	3082.74	3.25	0	80.78	0	-2.74	0	0	1.69	0	0	0	0	0	0	-2.39	-2.39
Westbrook Inverter Transfor	W_INVTR5	369725	4906574	2	0	0	77.3	77.3	1	3118.6	3.25	0	80.88	0	-2.75	0	0	1.71	0	0	0	0	0	0	-2.5	-2.5
Westbrook Inverter Transfor	W_INVTR7	369786	4906417	2	0	0	77.3	77.3	1	3258.89	3.25	0	81.26	0	-2.78	0	0	1.76	0	0	0	0	0	0	-2.9	-2.9
Westbrook Inverter Transfor	W_INVTR2	369368	4906388	2	0	0	77.3	77.3	1	3395.02	3.25	0	81.62	0	-2.82	0	0	1.82	0	0	0	0	0	0	-3.28	-3.28
Westbrook Inverter Transfor	W_INVTR4	369679	4906164	2	0	0	77.3	77.3	1	3528.6	3.25	0	81.95	0	-2.85	0	0	1.87	0	0	0	0	0	0	-3.63	-3.63
Westbrook Inverter Transfor	W_INVTR3	369514	4906164	2	0	0	77.3	77.3	1	3567.73	3.25	0	82.05	0	-2.86	0	0	1.89	0	0	0	0	0	0	-3.73	-3.73
Inverter Transformer	MV6-1 T	370230	4907364	2	0	0	69.4	69.4	1	2255.61	3.25	0	78.07	0	2.27	0	0	5.22	0	0	0	0	0	0	-16.19	-16.19
Inverter Transformer	MV6-4 T	370244	4906966	2	0	0	69.4	69.4	1	2651.11	3.25	0	79.47	0	2.4	0	0	5.58	0	0	0	0	0	0	-18.1	-18.1
Inverter Transformer	MV5-1 T	370015	4909142	2	0	0	56.1	56.1	1	630.84	3.25	0	67	0	-0.1	0	0	3.94	0	0	0	0	0	0	-14.79	-14.79
Inverter Transformer	MV5-3 T	370237	4908851	2	0	0	56.1	56.1	1	785.17	3.25	0	68.9	0	-0.06	0	0	4.36	0	0	0	0	0	0	-17.14	-17.14
Inverter Transformer	MV5-2 T	370011	4908853	2	0	0	56.1	56.1	1	869.13	3.25	0	69.78	0	-0.03	0	0	4.57	0	0	0	0	0	0	-18.26	-18.26
Inverter Transformer	MV5-4 T	370330	4908707	2	0	0	56.1	56.1	1	909.44	3.25	0	70.18	0	-0.02	0	0	4.67	0	0	0	0	0	0	-18.77	-18.77
Inverter Transformer	MV5-5 T	370021	4908690	2	0	0	56.1	56.1	1	1010.1	3.25	0	71.09	0	0.02	0	0	4.91	0	0	0	0	0	0	-19.96	-19.96
Inverter Transformer	MV2-1 T	365836	4906816	2	0	0	69.4	69.4	1	5383.76	3.25	0	85.62	0	3.09	0	0	7.63	0	0	0	0	0	0	-26.99	-26.99
Inverter Transformer	MV4-2 T	369267	4909397	2	0	0	56.1	56.1	1	1190.22	3.25	0	72.51	0	0.08	0	0	5.33	0	0	0	0	0	0	-21.87	-21.87
Inverter Transformer	MV5-6 T	369987	4908507	2	0	0	56.1	56.1	1	1191.64	3.25	0	72.52	0	0.08	0	0	5.34	0	0	0	0	0	0	-21.88	-21.88
Inverter Transformer	MV4-3 T	369234	4909397	2	0	0	56.1	56.1	1	1222.7	3.25	0	72.75	0	0.09	0	0	5.41	0	0	0	0	0	0	-22.19	-22.19
Inverter Transformer	MV4-5 T	369283	4909199	2	0	0	56.1	56.1	1	1225.95	3.25	0	72.77	0	0.09	0	0	5.41	0	0	0	0	0	0	-22.22	-22.22
Inverter Transformer	MV4-6 T	369249	4909192	2	0	0	56.1	56.1	1	1260.34	3.25	0	73.01	0	0.11	0	0	5.49	0	0	0	0	0	0	-22.55	-22.55
Inverter Transformer	MV4-9 T	369284	4909001	2	0	0	56.1	56.1	1	1304.84	3.25	0	73.31	0	0.12	0	0	5.59	0	0	0	0	0	0	-22.97	-22.97
Inverter Transformer	MV4-8 T	369262	4909001	2	0	0	56.1	56.1	1	1324.34	3.25	0	73.44	0	0.13	0	0	5.63	0	0	0	0	0	0	-23.15	-23.15
Inverter Transformer	MV4-10 T	369307	4908858	2	0	0	56.1	56.1	1	1358.19	3.25	0	73.66	0	0.14	0	0	5.71	0	0	0	0	0	0	-23.45	-23.45
Inverter Transformer	MV4-11 T	369269	4908855	2	0	0	56.1	56.1	1	1391.61	3.25	0	73.87	0	0.16	0	0	5.78	0	0	0	0	0	0	-23.75	-23.75
Inverter Transformer	MV4-1 T	369017	4909397	2	0	0	56.1	56.1	1	1436.88	3.25	0	74.15	0	0.17	0	0	5.88	0	0	0	0	0	0	-24.15	-24.15
Inverter Transformer	MV1-7 T	364919	4905782	2	0	0	69.4	69.4	1	6716.62	3.25	0	87.54	0	3.29	0	0	8.44	0	0	0	0	0	0	-29.92	-29.92
Inverter Transformer	MV4-4 T	369033	4909199	2	0	0	56.1	56.1	1	1463.88	3.25	0	74.31	0	0.18	0	0	5.94	0	0	0	0	0	0	-24.38	-24.38
Inverter Transformer	MV1-10 T	365010	4905564	2	0	0	69.4	69.4	1	6770.03	3.25	0	87.61	0	3.29	0	0	8.47	0	0	0	0	0	0	-30.02	-30.02
Inverter Transformer	MV1-14 T	365157	4905049	2	0	0	69.4	69.4	1	6977.94	3.25	0	87.87	0	3.31	0	0	8.59	0	0	0	0	0	0	-30.43	-30.43
Inverter Transformer	MV4-7 T	369040	4909001	2	0	0	56.1	56.1	1	1524.89	3.25	0	74.66	0	0.21	0	0	6.07	0	0	0	0	0	0	-24.89	-24.89
Inverter Transformer	MV1-13 T	364725	4905241	2	0	0	69.4	69.4	1	7192.12	3.25	0	88.14	0	3.34	0	0	8.71	0	0	0	0	0	0	-30.83	-30.83
Inverter Transformer	MV4-12 T	369049	4908803	2	0	0	56.1	56.1	1	1606.42	3.25	0	75.12	0	0.24	0	0	6.24	0	0	0	0	0	0	-25.54	-25.54
Inverter Transformer	MV4-14 T	369182	4908507	2	0	0	56.1	56.1	1	1671.57	3.25	0	75.46	0	0.27	0	0	6.38	0	0	0	0	0	0	-26.05	-26.05
Inverter Transformer	MV4-15 T	369170	4908481	2	0	0	56.1	56.1	1	1697.78	3.25	0	75.6	0	0.28	0	0	6.43	0	0	0	0	0	0	-26.25	-26.25
Inverter Transformer	MV4-13 T	369057	4908605	2	0	0	56.1	56.1	1	1707.98	3.25	0	75.65	0	0.28	0	0	6.46	0	0	0	0	0	0	-26.33	-26.33
Inverter Transformer	MV6-2 T	370091	4907339	2	0	0	56.1	56.1	1	2297.36	3.25	0	78.22	0	0.53	0	0	7.61	0	0	0	0	0	0	-30.31	-30.31
Inverter Transformer	MV3-2 T	368677	4907928	2	0	0	56.1	56.1	1	2435.21	3.25	0	78.73	0	0.59	0	0	7.87	0	0	0	0	0	0	-31.13	-31.13
Inverter Transformer	MV6-3 T	370202	4907140	2	0	0	56.1	56.1	1	2481.25	3.25	0	78.89	0	0.61	0	0	7.96	0	0	0	0	0	0	-31.4	-31.4
Inverter Transformer	MV3-4 T	368507	4907925	2	0	0	56.1	56.1	1	2562.81	3.25	0	79.17	0	0.64	0	0	8.1	0	0	0	0	0	0	-31.86	-31.86
Inverter Transformer	MV3-8 T	368685	4907712	2	0	0	56.1	56.1	1	2583.68	3.25	0	79.24	0	0.65	0	0	8.14	0	0	0	0	0	0	-31.98	-31.98
Inverter Transformer	MV3-9 T	368517	4907703	2	0	0	56.1	56.1	1	2706.82	3.25	0	79.65	0	0.7	0	0	8.36	0	0	0	0	0	0	-32.66	-32.66
Inverter Transformer	MV3-5 T	368335	4907843	2	0	0	56.1	56.1	1	2746.8	3.25	0	79.78	0	0.72	0	0	8.43	0	0	0	0	0	0	-32.87	-32.87
Inverter Transformer	MV3-14 T	368678	4907498	2	0	0	56.1	56.1	1	2749.21	3.25	0	79.78	0	0.72	0	0	8.44	0	0	0	0	0	0	-32.88	-32.88
Inverter Transformer	MV3-1 T	368150	4907976	2	0	0	56.1	56.1	1	2811.57	3.25	0	79.98	0	0.75	0	0	8.54	0	0	0	0	0	0	-33.21	-33.21
Inverter Transformer	MV3-11 T	368340	4907662	2	0	0	56.1	56.1	1	2862.92	3.25	0	80.14	0	0.77	0	0	8.63	0	0	0	0	0	0	-33.48	-33.48
Inverter Transformer	MV3-16 T	368509	4907475	2	0	0	56.1	56.1	1	2877.37	3.25	0	80.18	0	0.78	0	0	8.66	0	0	0	0	0	0	-33.56	-33.56
Inverter Transformer	MV3-20 T	368683	4907317	2	0	0	56.1	56.1	1	2887.54	3.25	0	80.21	0	0.78	0	0	8.68	0	0	0	0	0	0	-33.61	-33.61
Inverter Transformer	MV3-6 T	368156	4907834	2	0	0	56.1	56.1	1	2891.66	3.25	0	80.22	0	0.78	0	0	8.68	0	0	0	0	0	0	-33.63	-33.63
Inverter Transformer	MV3-15 T	368351	4907477	2	0	0	56.1	56.1	1	2984.17	3.25	0	80.5	0	0.82	0	0	8.84	0	0	0	0	0	0	-34.1	-34.1
Inverter Transformer	MV3-10 T	368162	4907669	2	0	0	56.1	56.1	1	2991.26	3.25	0	80.52	0	0.83	0	0	8.85	0	0	0	0	0	0	-34.14	-34.14
Inverter Transformer	MV3-3 T	367944	4907927	2	0	0	56.1	56.1	1	3008.74	3.25	0	80.57	0	0.83	0	0	8.88	0	0	0	0	0	0	-34.23	-34.23
Inverter Transformer	MV3-22 T	368661	4907142	2	0	0	56.1	56.1	1	3041.18	3.25	0	80.66	0	0.85	0	0	8.94	0	0	0	0	0	0	-34.39	-34.39
Inverter Transformer	MV3-19 T	368352	4907347	2	0	0	56.1	56.1	1	3077.75	3.25	0	80.76	0	0.86	0	0	9	0	0	0	0	0	0	-34.57	-34.57

	Inverter Transformer	MV3-21 T	368484	4907206	2	0	0	56.1	56.1	1	3097.96	3.25	0	80.82	0	0.87	0	0	9.03	0	0	0	0	0	0	-34.67	-34.67
	Inverter Transformer	MV3-7 T	367951	4907754	2	0	0	56.1	56.1	1	3103.21	3.25	0	80.84	0	0.87	0	0	9.04	0	0	0	0	0	0	-34.69	-34.69
	Inverter Transformer	MV3-17 T	368183	4907472	2	0	0	56.1	56.1	1	3107.42	3.25	0	80.85	0	0.88	0	0	9.05	0	0	0	0	0	0	-34.71	-34.71
	Inverter Transformer	MV3-13 T	367958	4907577	2	0	0	56.1	56.1	1	3206.79	4.51	0	81.12	0	1.85	2.56	0	9.21	0	0	0	0	0	0	-38.69	-38.69
	Inverter Transformer	MV3-12 T	367674	4907594	2	0	0	56.1	56.1	1	3421.1	3.25	0	81.68	0	1.01	0	0	9.56	0	0	0	0	0	0	-36.19	-36.19
	Inverter Transformer	MV3-18 T	367757	4907412	2	0	0	56.1	56.1	1	3466.84	4.47	0	81.8	0	1.96	2.48	0	9.64	0	0	0	0	0	0	-39.81	-39.81
	Line Reactor	NGR	369421	4908787.5	5	0	0	45.4	45.4	1	1307.97	5.25	0	73.33	0	3.45	1.21	0.03	0.54	0	0	0	0	0	0	-33.18	-33.18
	Inverter Transformer	MV2-2 T	365982	4906654	2	0	0	56.1	56.1	1	5347.32	3.25	0	85.56	0	1.75	0	0	12.3	0	0	0	0	0	0	-43.56	-43.56
	Inverter Transformer	MV2-3 T	365814	4906641	2	0	0	56.1	56.1	1	5495.12	3.25	0	85.8	0	1.8	0	0	12.49	0	0	0	0	0	0	-44.03	-44.03
	Inverter Transformer	MV2-4 T	365590	4906628	2	0	0	56.1	56.1	1	5691.7	3.25	0	86.1	0	1.86	0	0	12.73	0	0	0	0	0	0	-44.64	-44.64
	Inverter Transformer	MV1-1 T	364721	4906166	2	0	0	56.1	56.1	1	6674.22	3.25	0	87.49	0	2.17	0	0	13.87	0	0	0	0	0	0	-47.47	-47.47
	Inverter Transformer	MV1-2 T	364759	4906063	2	0	0	56.1	56.1	1	6695.69	3.25	0	87.52	0	2.17	0	0	13.9	0	0	0	0	0	0	-47.53	-47.53
	Inverter Transformer	MV1-4 T	364821	4905918	2	0	0	56.1	56.1	1	6721.72	3.25	0	87.55	0	2.18	0	0	13.93	0	0	0	0	0	0	-47.6	-47.6
	Inverter Transformer	MV1-12 T	365044	4905386	2	0	0	56.1	56.1	1	6851.09	3.25	0	87.72	0	2.22	0	0	14.07	0	0	0	0	0	0	-47.94	-47.94
	Inverter Transformer	MV1-5 T	364676	4905892	2	0	0	56.1	56.1	1	6857.42	3.25	0	87.72	0	2.22	0	0	14.08	0	0	0	0	0	0	-47.96	-47.96
	Inverter Transformer	MV1-15 T	365309	4904994	2	0	0	56.1	56.1	1	6900.3	3.25	0	87.78	0	2.23	0	0	14.12	0	0	0	0	0	0	-48.07	-48.07
	Inverter Transformer	MV1-8 T	364782	4905647	2	0	0	56.1	56.1	1	6906.21	3.25	0	87.78	0	2.23	0	0	14.13	0	0	0	0	0	0	-48.09	-48.09
	Inverter Transformer	MV1-3 T	364435	4906039	2	0	0	56.1	56.1	1	6984.84	3.25	0	87.88	0	2.26	0	0	14.21	0	0	0	0	0	0	-48.29	-48.29
	Inverter Transformer	MV1-6 T	364482	4905835	2	0	0	56.1	56.1	1	7051.56	3.25	0	87.97	0	2.27	0	0	14.28	0	0	0	0	0	0	-48.47	-48.47
	Inverter Transformer	MV1-9 T	364555	4905646	2	0	0	56.1	56.1	1	7093.87	3.25	0	88.02	0	2.28	0	0	14.33	0	0	0	0	0	0	-48.57	-48.57
	Inverter Transformer	MV1-11 T	364649	4905414	2	0	0	56.1	56.1	1	7149.75	3.25	0	88.09	0	2.3	0	0	14.39	0	0	0	0	0	0	-48.72	-48.72
Limit. Valu	0	0																								
Level D/N:	34.0131	34.0131																								

Receiver: Vacant Lot Receptor
ID: S-VLR23
X: 370528
Y: 4909703
Z: 4.5
Ground: 0

ISO	Description	ID	X	Y	Z	Ground	ReflOrd	LxT	LxN	L/A	Dist.	hm	Freq	Adiv	K0b	Agr	Abar	z	Aatm	Afol	Ahous	Cmet	CmetN	Dc	RL	LtotT	LtotN
	Sol_Luce Substation	S_Substation	369426	4908792	3.5	0	0	112.1	112.1	1	1429.8	5.25	0	74.11	0	0.03	4.66	0.37	3.35	0	0	0	0	0	0	29.93	29.93
	Inverter	MV5-1	370020	4909142	2	0	0	100.3	100.3	1	756.83	3.25	0	68.58	0	-0.38	0	0	10	0	0	0	0	0	0	22.11	22.11
	Inverter	MV5-3	370231	4908851	2	0	0	100.3	100.3	1	902.29	3.25	0	70.11	0	-0.3	0	0	10.57	0	0	0	0	0	0	19.93	19.93
	Inverter	MV5-2	370006	4908853	2	0	0	100.3	100.3	1	997.49	3.25	0	70.98	0	-0.25	0	0	10.9	0	0	0	0	0	0	18.68	18.68
	Inverter	MV5-4	370324	4908707	2	0	0	100.3	100.3	1	1016.68	3.25	0	71.14	0	-0.24	0	0	10.97	0	0	0	0	0	0	18.44	18.44
	Inverter	MV5-5	370015	4908690	2	0	0	100.3	100.3	1	1135.49	3.25	0	72.1	0	-0.18	0	0	11.34	0	0	0	0	0	0	17.05	17.05
	Inverter	MV4-2	369272	4909397	2	0	0	100.3	100.3	1	1292.74	3.25	0	73.23	0	-0.11	0	0	11.79	0	0	0	0	0	0	15.41	15.41
	Inverter	MV4-3	369229	4909397	2	0	0	100.3	100.3	1	1334.56	3.25	0	73.51	0	-0.1	0	0	11.9	0	0	0	0	0	0	15	15
	Inverter	MV4-5	369289	4909199	2	0	0	100.3	100.3	1	1337.59	3.25	0	73.53	0	-0.1	0	0	11.91	0	0	0	0	0	0	14.98	14.98
	Inverter	MV4-6	369243	4909192	2	0	0	100.3	100.3	1	1382.88	3.25	0	73.82	0	-0.08	0	0	12.03	0	0	0	0	0	0	14.55	14.55
	Inverter	MV4-9	369289	4909001	2	0	0	100.3	100.3	1	1424.05	3.25	0	74.07	0	-0.06	0	0	12.13	0	0	0	0	0	0	14.17	14.17
	Inverter	MV4-8	369256	4909001	2	0	0	100.3	100.3	1	1452.86	3.25	0	74.24	0	-0.05	0	0	12.21	0	0	0	0	0	0	13.91	13.91
	Inverter	MV4-10	369312	4908858	2	0	0	100.3	100.3	1	1480.77	3.25	0	74.41	0	-0.04	0	0	12.28	0	0	0	0	0	0	13.67	13.67
	Inverter	MV4-11	369264	4908855	2	0	0	100.3	100.3	1	1522.11	3.25	0	74.65	0	-0.03	0	0	12.38	0	0	0	0	0	0	13.31	13.31
	Inverter	MV4-1	369011	4909397	2	0	0	100.3	100.3	1	1547.56	3.25	0	74.79	0	-0.02	0	0	12.44	0	0	0	0	0	0	13.09	13.09
	Inverter	MV4-4	369027	4909199	2	0	0	100.3	100.3	1	1583.36	3.25	0	74.99	0	0	0	0	12.53	0	0	0	0	0	0	12.8	12.8
	Inverter	MV4-7	369035	4909001	2	0	0	100.3	100.3	1	1649.81	3.25	0	75.35	0	0.02	0	0	12.69	0	0	0	0	0	0	12.26	12.26
	DSTATCOM - 10 MVAR #1	DSAT1	369437	4908757	2.5	0	0	96.6	96.6	1	1444.02	3.5	0	74.19	0	3.1	0	0	1.37	0	0	0	0	0	0	17.97	17.97
	DSTATCOM - 10 MVAR #2	DSAT2	369403	4908757	2.5	0	0	96.6	96.6	1	1469.88	3.5	0	74.35	0	3.1	0	0	1.39	0	0	0	0	0	0	17.79	17.79
	Inverter	MV6-2	370085	4907339	2	0	0	100.3	100.3	1	2405.15	3.25	0	78.62	0	0.23	0	0	14.28	0	0	0	0	0	0	7.18	7.18
	Inverter	MV6-3	370207	4907140	2	0	0	100.3	100.3	1	2583.02	3.25	0	79.24	0	0.28	0	0	14.61	0	0	0	0	0	0	6.18	6.18
	Inverter	MV3-8	368680	4907712	2	0	0	100.3	100.3	1	2716.47	3.25	0	79.68	0	0.3	0	0	14.86	0	0	0	0	0	0	5.47	5.47
	Inverter	MV3-9	368512	4907703	2	0	0	100.3	100.3	1	2839.76	3.25	0	80.07	0	0.33	0	0	15.09	0	0	0	0	0	0	4.83	4.83
	Inverter	MV3-14	368684	4907498	2	0	0	100.3	100.3	1	2874.43	3.25	0	80.17	0	0.34	0	0	15.15	0	0	0	0	0	0	4.66	4.66
	Inverter	MV3-11	368346	4907662	2	0	0	100.3	100.3	1	2987.78	3.25	0	80.51	0	0.36	0	0	15.35	0	0	0	0	0	0	4.09	4.09
	Inverter	MV3-16	368514	4907475	2	0	0	100.3	100.3	1	3003.36	3.25	0	80.55	0	0.36	0	0	15.38	0	0	0	0	0	0	4.02	4.02
	Inverter	MV3-20	368689	4907317	2	0	0	100.3	100.3	1	3012.46	3.25	0	80.58	0	0.36	0	0	15.39	0	0	0	0	0	0	3.98	3.98
	Inverter	MV3-6	368162	4907834	2	0	0	100.3	100.3	1	3015.15	3.25	0	80.59	0	0.36	0	0	15.4	0	0	0	0	0	0	3.96	3.96
	Inverter	MV3-15	368357	4907477	2	0	0	100.3	100.3	1	3109.39	3.25	0	80.85	0	0.38	0	0	15.56	0	0	0	0	0	0	3.51	3.51
	Inverter	MV3-10	368167	4907669	2	0	0	100.3	100.3	1	3116.33	3.25	0	80.87	0	0.38	0	0	15.58	0	0	0	0	0	0	3.48	3.48
	Inverter	MV3-3	367939	4907927	2	0	0	100.3	100.3	1	3139.6	3.25	0	80.94	0	0.39	0	0	15.62	0	0	0	0	0	0	3.37	3.37
	Inverter	MV3-19	368357	4907347	2	0	0	100.3	100.3	1	3203.75	3.25	0	81.11	0	0.4	0	0	15.73	0	0	0	0	0	0	3.07	3.07
	Inverter	MV3-21	368478	4907206	2	0	0	100.3	100.3	1	3230.71	3.25	0	81.19	0	0.4	0	0	15.77	0	0	0	0	0	0	2.95	2.95
	Inverter	MV3-7	367945	4907754	2	0	0	100.3	100.3	1	3235.81	3.25	0	81.2	0	0.41	0	0	15.78	0	0	0	0	0	0	2.92	2.92
	Inverter	MV3-17	368178	4907472	2	0	0	100.3	100.3	1	3240.35	3.25	0	81.21	0	0.41	0	0	15.79	0	0	0	0	0	0	2.9	2.9
	Inverter	MV6-1	370235	4907364	2	0	0	97.3	97.3	1	2357.28	3.25	0	78.45	0	0.22	0	0	14.18	0	0	0	0	0	0	4.46	4.46
	Inverter	MV3-13	367963	4907577	2	0	0	100.3	100.3	1	3331.53	4.54	0	81.45	0	1.21	3.1	0	15.95	0	0	0	0	0	0	-1.41	-1.41
	Inverter	MV3-12	367668	4907594	2	0	0	100.3	100.3	1	3553.52	3.25	0	82.01	0	0.46	0	0	16.32	0	0	0	0	0	0	1.52	1.52
	Inverter	MV3-18	367752	4907412	2	0	0	100.3	100.3	1	3599.29	4.5	0	82.12	0	1.28	3.04	0	16.4	0	0	0	0	0	0	-2.53	-2.53
	Fixed Reactor Bank 2	FRB2	369464	4908755	6	0	0	89.8	89.8	1	1425.06	5.25	0	74.08	0	-1.03	0	0	3.35	0	0	0	0	0	0	13.38	13.38
	Inverter	MV5-6	369982	4908507	2	0	0	89.1	89.1	1	1314.74	3.25	0	73.38	0	0.75	0	0	6.89	0	0	0	0	0	0	8.04	8.04
	Fixed Reactor Bank 1	FRB1	369378	4908755	6	0	0	89.8	89.8	1	1490.37	5.29	0	74.47	0	-0.68	4.19	0	3.47	0	0	0	0	0	0	8.33	8.33

Inverter	MV2-3	365820	4906641	2	0	0	100.3	100.3	1	5616.15	3.25	0	85.99	0	0.69	0	0	19.46	0	0	0	0	0	0	-5.83	-5.83
Inverter	MV2-4	365586	4906624	2	0	0	100.3	100.3	1	5822.68	3.25	0	86.3	0	0.7	0	0	19.75	0	0	0	0	0	0	-6.44	-6.44
Inverter	MV4-12	369043	4908803	2	0	0	89.1	89.1	1	1736.44	3.25	0	75.79	0	0.85	0	0	7.61	0	0	0	0	0	0	4.81	4.81
Inverter	MV4-14	369176	4908507	2	0	0	89.1	89.1	1	1805.08	3.25	0	76.13	0	0.86	0	0	7.72	0	0	0	0	0	0	4.34	4.34
Inverter	MV4-15	369176	4908481	2	0	0	89.1	89.1	1	1822.41	3.25	0	76.21	0	0.87	0	0	7.75	0	0	0	0	0	0	4.23	4.23
Inverter	MV4-13	369051	4908605	2	0	0	89.1	89.1	1	1840.42	3.25	0	76.3	0	0.87	0	0	7.78	0	0	0	0	0	0	4.11	4.11
Inverter	MV1-1	364715	4906166	2	0	0	100.3	100.3	1	6804.51	3.25	0	87.66	0	0.71	0	0	21.05	0	0	0	0	0	0	-9.11	-9.11
Inverter	MV1-2	364753	4906063	2	0	0	100.3	100.3	1	6826.44	3.25	0	87.68	0	0.71	0	0	21.08	0	0	0	0	0	0	-9.16	-9.16
Inverter	MV1-4	364815	4905918	2	0	0	100.3	100.3	1	6853.07	3.25	0	87.72	0	0.71	0	0	21.11	0	0	0	0	0	0	-9.23	-9.23
Inverter	MV1-12	365038	4905386	2	0	0	100.3	100.3	1	6984.02	3.25	0	87.88	0	0.71	0	0	21.28	0	0	0	0	0	0	-9.56	-9.56
Inverter	MV1-5	364671	4905892	2	0	0	100.3	100.3	1	6987.72	3.25	0	87.89	0	0.71	0	0	21.28	0	0	0	0	0	0	-9.57	-9.57
Inverter	MV1-15	365315	4904994	2	0	0	100.3	100.3	1	7024.96	3.25	0	87.93	0	0.71	0	0	21.33	0	0	0	0	0	0	-9.66	-9.66
Inverter	MV1-8	364788	4905647	2	0	0	100.3	100.3	1	7028.42	3.25	0	87.94	0	0.71	0	0	21.33	0	0	0	0	0	0	-9.67	-9.67
Inverter	MV1-6	364477	4905835	2	0	0	100.3	100.3	1	7181.65	3.25	0	88.12	0	0.7	0	0	21.53	0	0	0	0	0	0	-10.04	-10.04
Inverter	MV1-9	364561	4905646	2	0	0	100.3	100.3	1	7215.56	3.25	0	88.17	0	0.7	0	0	21.57	0	0	0	0	0	0	-10.12	-10.12
Inverter	MV1-11	364655	4905414	2	0	0	100.3	100.3	1	7272.39	3.25	0	88.23	0	0.7	0	0	21.64	0	0	0	0	0	0	-10.26	-10.26
Inverter	MV2-1	365842	4906816	2	0	0	97.3	97.3	1	5503.94	3.25	0	85.81	0	0.68	0	0	19.31	0	0	0	0	0	0	-8.49	-8.49
Inverter	MV3-2	368671	4907928	2	0	0	89.1	89.1	1	2568.87	3.25	0	79.19	0	1.04	0	0	8.95	0	0	0	0	0	0	-0.13	-0.13
SubstationTransformer	W_ST	369711.17	4906112.3	2.5	0	0	92	92	1	3682.47	3.5	0	82.32	0	0.25	0	0	6.94	0	0	0	0	0	0	2.46	2.46
Inverter	MV1-7	364925	4905782	2	0	0	97.3	97.3	1	6838.7	3.25	0	87.7	0	0.71	0	0	21.1	0	0	0	0	0	0	-12.2	-12.2
Inverter	MV1-10	365004	4905564	2	0	0	97.3	97.3	1	6902.6	3.25	0	87.78	0	0.71	0	0	21.18	0	0	0	0	0	0	-12.36	-12.36
Inverter	MV3-4	368502	4907925	2	0	0	89.1	89.1	1	2695.55	3.25	0	79.61	0	1.07	0	0	9.15	0	0	0	0	0	0	-0.78	-0.78
Inverter	MV1-14	365163	4905049	2	0	0	97.3	97.3	1	7102.32	3.25	0	88.03	0	0.71	0	0	21.43	0	0	0	0	0	0	-12.85	-12.85
Inverter	MV1-13	364731	4905241	2	0	0	97.3	97.3	1	7315.37	3.25	0	88.28	0	0.7	0	0	21.69	0	0	0	0	0	0	-13.36	-13.36
Inverter	MV3-5	368340	4907843	2	0	0	89.1	89.1	1	2871.75	3.25	0	80.16	0	1.12	0	0	9.42	0	0	0	0	0	0	-1.64	-1.64
Inverter	MV3-1	368156	4907976	2	0	0	89.1	89.1	1	2934.1	3.25	0	80.35	0	1.13	0	0	9.52	0	0	0	0	0	0	-1.94	-1.94
Inverter	MV3-22	368656	4907142	2	0	0	89.1	89.1	1	3172.24	3.25	0	81.03	0	1.19	0	0	9.88	0	0	0	0	0	0	-3.03	-3.03
Westbrook Inverter Enclosur	W_INV6	369875	4906578	2	0	0	89.1	89.1	1	3192.5	3.25	0	81.08	0	1.19	0	0	9.91	0	0	0	0	0	0	-3.13	-3.13
Westbrook Inverter Enclosur	W_INV5	369719	4906574	2	0	0	89.1	89.1	1	3231.89	3.25	0	81.19	0	1.2	0	0	9.97	0	0	0	0	0	0	-3.3	-3.3
Westbrook Inverter Enclosur	W_INV7	369780	4906417	2	0	0	89.1	89.1	1	3370.06	3.25	0	81.55	0	1.24	0	0	10.17	0	0	0	0	0	0	-3.9	-3.9
Westbrook Inverter Enclosur	W_INV2	369374	4906388	2	0	0	89.1	89.1	1	3510.12	3.25	0	81.91	0	1.27	0	0	10.38	0	0	0	0	0	0	-4.5	-4.5
Westbrook Inverter Enclosur	W_INV4	369673	4906164	2	0	0	89.1	89.1	1	3640.82	3.25	0	82.22	0	1.3	0	0	10.57	0	0	0	0	0	0	-5.04	-5.04
Westbrook Inverter Enclosur	W_INV3	369508	4906164	2	0	0	89.1	89.1	1	3683.06	3.25	0	82.32	0	1.31	0	0	10.63	0	0	0	0	0	0	-5.21	-5.21
Inverter	MV6-4	370250	4906966	2	0	0	86.1	86.1	1	2751.08	3.25	0	79.79	0	1.09	0	0	9.24	0	0	0	0	0	0	-4.05	-4.05
Westbrook Inverter Enclosur	W_INV1	369409	4906578	2	0	0	86.1	86.1	1	3319.31	3.25	0	81.42	0	1.22	0	0	10.1	0	0	0	0	0	0	-6.68	-6.68
Inverter	MV2-2	365977	4906654	2	0	0	89.1	89.1	1	5477.96	3.25	0	85.77	0	1.76	0	0	13.09	0	0	0	0	0	0	-11.57	-11.57
Gardiner Substation	G_Sub	366586.3	4903349.9	2.5	0	0	90.8	90.8	1	7476.56	4.25	0	88.47	0	2.13	1.82	0.38	11.19	0	0	0	0	0	0	-12.84	-12.84
Inverter	MV1-3	364440	4906039	2	0	0	89.1	89.1	1	7105.54	3.25	0	88.03	0	2.15	0	0	15.11	0	0	0	0	0	0	-16.24	-16.24
Inverters	G_Inv2	366676.9	4903239.1	2	0	0	87.7	87.7	1	7524.16	3.25	0	88.53	0	2.96	0	0	8.51	0	0	0	0	0	0	-12.34	-12.34
Inverters	G_Inv4	366732.8	4903105	2	0	0	87.7	87.7	1	7611.65	3.25	0	88.63	0	2.96	0	0	8.6	0	0	0	0	0	0	-12.53	-12.53
Inverters	G_Inv1	366526.4	4903225.8	2	0	0	87.7	87.7	1	7613.6	3.25	0	88.63	0	2.96	0	0	8.6	0	0	0	0	0	0	-12.53	-12.53
Inverters	G_Inv3	366583.7	4903091.4	2	0	0	87.7	87.7	1	7698.75	3.25	0	88.73	0	2.96	0	0	8.68	0	0	0	0	0	0	-12.71	-12.71
Inverters	G_Inv6	366788.5	4902972	2	0	0	87.7	87.7	1	7700.01	3.25	0	88.73	0	2.96	0	0	8.68	0	0	0	0	0	0	-12.71	-12.71
Inverters	G_Inv5	366638.5	4902958.1	2	0	0	87.7	87.7	1	7786.01	3.25	0	88.83	0	2.96	0	0	8.77	0	0	0	0	0	0	-12.9	-12.9
Inverters	G_Inv8	366844.5	4902838.5	2	0	0	87.7	87.7	1	7790.35	3.25	0	88.83	0	2.96	0	0	8.77	0	0	0	0	0	0	-12.91	-12.91
Inverters	G_Inv7	366694.6	4902824.7	2	0	0	87.7	87.7	1	7874.39	3.25	0	88.92	0	2.96	0	0	8.85	0	0	0	0	0	0	-13.08	-13.08
Inverters	G_Inv10	366900.7	4902704.8	2	0	0	87.7	87.7	1	7882.39	3.25	0	88.93	0	2.96	0	0	8.86	0	0	0	0	0	0	-13.1	-13.1
Inverters	G_Inv9	366750.9	4902691.8	2	0	0	87.7	87.7	1	7963.88	3.25	0	89.02	0	2.96	0	0	8.94	0	0	0	0	0	0	-13.27	-13.27
Westbrook Inverter Transfor	W_INVTR1	369403	4906578	2	0	0	78.2	78.2	1	3321.33	3.25	0	81.43	0	-2.8	0	0	1.79	0	0	0	0	0	0	-2.18	-2.18
Westbrook Inverter Transfor	W_INVTR6	369881	4906578	2	0	0	77.3	77.3	1	3191.28	3.25	0	81.08	0	-2.77	0	0	1.74	0	0	0	0	0	0	-2.71	-2.71
Westbrook Inverter Transfor	W_INVTR5	369725	4906574	2	0	0	77.3	77.3	1	3230.4	3.25	0	81.19	0	-2.78	0	0	1.75	0	0	0	0	0	0	-2.82	-2.82
Westbrook Inverter Transfor	W_INVTR7	369786	4906417	2	0	0	77.3	77.3	1	3368.73	3.25	0	81.55	0	-2.81	0	0	1.81	0	0	0	0	0	0	-3.21	-3.21
Westbrook Inverter Transfor	W_INVTR2	369368	4906388	2	0	0	77.3	77.3	1	3512.1	3.25	0	81.91	0	-2.85	0	0	1.87	0	0	0	0	0	0	-3.59	-3.59
Westbrook Inverter Transfor	W_INVTR4	369679	4906164	2	0	0	77.3	77.3	1	3639.41	3.25	0	82.22	0	-2.88	0	0	1.92	0	0	0	0	0	0	-3.92	-3.92
Westbrook Inverter Transfor	W_INVTR3	369514	4906164	2	0	0	77.3	77.3	1	3681.4	3.25	0	82.32	0	-2.89	0	0	1.93	0	0	0	0	0	0	-4.02	-4.02
Inverter Transformer	MV6-1 T	370230	4907364	2	0	0	69.4	69.4	1	2357.91	3.25	0	78.45	0	2.3	0	0	5.31	0	0	0	0	0	0	-16.71	-16.71
Inverter Transformer	MV6-4 T	370244	4906966	2	0	0	69.4	69.4	1	2751.7	3.25	0	79.79	0	2.43	0	0	5.67	0	0	0	0	0	0	-18.54	-18.54
Inverter Transformer	MV5-1 T	370015	4909142	2	0	0	56.1	56.1	1	760.19	3.25	0	68.62	0	-0.06	0	0	4.29	0	0	0	0	0	0	-16.79	-16.79
Inverter Transformer	MV5-3 T	370237	4908851	2	0	0	56.1	56.1	1	900.33	3.25	0	70.09	0	-0.02	0	0	4.65	0	0	0	0	0	0	-18.66	-18.66
Inverter Transformer	MV5-2 T	370011	4908853	2	0	0	56.1	56.1	1	994.88	3.25	0	70.96	0	0.01	0	0	4.88	0	0	0	0	0	0	-19.78	-19.78
Inverter Transformer	MV5-4 T	370330	4908707	2	0	0	56.1	56.1	1	1015.49	3.25	0	71.13	0	0.02	0	0	4.93	0	0	0	0	0	0	-20.02	-20.02
Inverter Transformer	MV5-5 T	370021	4908690	2	0	0	56.1	56.1	1	1132.79	3.25	0	72.08	0	0.06	0	0	5.2	0	0	0	0	0	0	-21.28	-21.28
Inverter Transformer	MV2-1 T	365836	4906816	2	0	0	69.4	69.4	1	5509.05	3.25	0	85.82	0	3.11	0	0	7.71	0	0	0	0	0	0	-27.29	-27.29
Inverter Transformer	MV4-2 T	369267	4909397	2	0	0	56.1	56.1	1	1297.6	3.25	0	73.26	0	0.12	0	0	5.58	0	0	0	0	0	0	-22.9	-22.9
Inverter Transformer	MV5-6 T	369987	4908507	2	0	0	56.1	56.1	1	1312.67	3.25	0	73.36	0	0.13	0	0	5.61	0	0	0	0	0	0	-23.04	-23.04
Inverter Transformer	MV4-3 T	369234	4909397	2	0	0	56.1	56.1	1	1329.69	3.25	0	73.48	0	0.13	0	0	5.65	0	0	0	0	0	0	-23.2	-23.2
Inverter Transformer	MV4-5 T	369283	4909199	2	0	0	56.1	56.1	1	1343.15	3.25	0	73.56	0	0.14	0	0	5.68	0	0	0	0	0	0	-23.32	-23.32
Inverter Transformer	MV4-6 T	369249	4909192	2	0	0	56.1	56.1	1	1377.3	3.25	0	73.78	0	0.15	0	0	5.75	0	0	0	0	0	0	-23.62	-23.62
Inverter Transformer	MV4-9 T	369284	4909001	2	0	0	56.1	56.1	1	1428.41	3.25	0	74.1	0	0.17	0	0	5.86	0	0	0	0	0	0	-24.07	-24.07
Inverter Transformer	MV4-8 T	369262	4909001	2	0	0	56.1	56.1	1	1447.61	3.25	0	74.21	0	0.18	0	0	5.91	0	0	0	0	0	0	-24.24	-24.24
Inverter Transformer	MV1-7 T	364919	4905782	2	0	0	69.4	69.4	1	6843.62	3.25	0	87.71	0	3.3	0	0	8.51	0	0	0	0	0	0	-30.17	-30.17
Inverter Transformer	MV4-10 T	369307	4908858	2	0	0	56.1	56.1	1	1484.88	3.25	0	74.43	0	0.19	0	0	5.99	0	0	0	0	0	0	-24.55	-24.55
Inverter Transformer	MV1-10 T	365010	4905564	2	0	0	69.4	69.4	1	6897.8	3.25	0	87.77	0	3.31	0	0	8.54	0	0	0	0	0	0	-30.27	-30.27
Inverter Transformer	MV4-11 T	369269	4908855	2	0	0	56.1	56.1	1	1517.96	3.25	0	74.63	0	0.21	0	0	6.06	0	0	0	0	0	0	-24.83	-24.83

	Inverter Transformer	MV1-14 T	365157	4905049	2	0	0	69.4	69.4	1	7106.85	3.25	0	88.03	0	3.33	0	0	8.66	0	0	0	0	0	0	-30.67	-30.67
	Inverter Transformer	MV4-1 T	369017	4909397	2	0	0	56.1	56.1	1	1541.68	3.25	0	74.76	0	0.22	0	0	6.11	0	0	0	0	0	0	-25.02	-25.02
	Inverter Transformer	MV4-4 T	369033	4909199	2	0	0	56.1	56.1	1	1577.67	3.25	0	74.96	0	0.23	0	0	6.18	0	0	0	0	0	0	-25.31	-25.31
	Inverter Transformer	MV1-13 T	364725	4905241	2	0	0	69.4	69.4	1	7320.13	3.25	0	88.29	0	3.35	0	0	8.78	0	0	0	0	0	0	-31.07	-31.07
	Inverter Transformer	MV4-7 T	369040	4909001	2	0	0	56.1	56.1	1	1645.28	3.25	0	75.32	0	0.26	0	0	6.33	0	0	0	0	0	0	-25.85	-25.85
	Inverter Transformer	MV4-12 T	369049	4908803	2	0	0	56.1	56.1	1	1731.31	3.25	0	75.77	0	0.29	0	0	6.5	0	0	0	0	0	0	-26.5	-26.5
	Inverter Transformer	MV4-14 T	369182	4908507	2	0	0	56.1	56.1	1	1800.59	3.25	0	76.11	0	0.32	0	0	6.65	0	0	0	0	0	0	-27.02	-27.02
	Inverter Transformer	MV4-15 T	369170	4908481	2	0	0	56.1	56.1	1	1826.87	3.25	0	76.23	0	0.33	0	0	6.7	0	0	0	0	0	0	-27.21	-27.21
	Inverter Transformer	MV4-13 T	369057	4908605	2	0	0	56.1	56.1	1	1835.61	3.25	0	76.28	0	0.34	0	0	6.72	0	0	0	0	0	0	-27.27	-27.27
	Inverter Transformer	MV6-2 T	370091	4907339	2	0	0	56.1	56.1	1	2404.05	3.25	0	78.62	0	0.58	0	0	7.81	0	0	0	0	0	0	-30.95	-30.95
	Inverter Transformer	MV3-2 T	368677	4907928	2	0	0	56.1	56.1	1	2564.53	3.25	0	79.18	0	0.64	0	0	8.11	0	0	0	0	0	0	-31.87	-31.87
	Inverter Transformer	MV6-3 T	370202	4907140	2	0	0	56.1	56.1	1	2583.65	3.25	0	79.24	0	0.65	0	0	8.14	0	0	0	0	0	0	-31.98	-31.98
	Inverter Transformer	MV3-4 T	368507	4907925	2	0	0	56.1	56.1	1	2691.79	3.25	0	79.6	0	0.7	0	0	8.33	0	0	0	0	0	0	-32.57	-32.57
	Inverter Transformer	MV3-8 T	368685	4907712	2	0	0	56.1	56.1	1	2713.07	3.25	0	79.67	0	0.71	0	0	8.37	0	0	0	0	0	0	-32.69	-32.69
	Inverter Transformer	MV3-9 T	368517	4907703	2	0	0	56.1	56.1	1	2836.22	3.25	0	80.05	0	0.76	0	0	8.59	0	0	0	0	0	0	-33.34	-33.34
	Inverter Transformer	MV3-5 T	368335	4907843	2	0	0	56.1	56.1	1	2875.56	3.25	0	80.17	0	0.78	0	0	8.66	0	0	0	0	0	0	-33.55	-33.55
	Inverter Transformer	MV3-14 T	368678	4907498	2	0	0	56.1	56.1	1	2878.29	3.25	0	80.18	0	0.78	0	0	8.66	0	0	0	0	0	0	-33.56	-33.56
	Inverter Transformer	MV3-1 T	368150	4907976	2	0	0	56.1	56.1	1	2938.95	3.25	0	80.36	0	0.8	0	0	8.76	0	0	0	0	0	0	-33.87	-33.87
	Inverter Transformer	MV3-11 T	368340	4907662	2	0	0	56.1	56.1	1	2992.16	3.25	0	80.52	0	0.83	0	0	8.85	0	0	0	0	0	0	-34.14	-34.14
	Inverter Transformer	MV3-16 T	368509	4907475	2	0	0	56.1	56.1	1	3006.72	3.25	0	80.56	0	0.83	0	0	8.88	0	0	0	0	0	0	-34.22	-34.22
	Inverter Transformer	MV3-20 T	368683	4907317	2	0	0	56.1	56.1	1	3016.13	3.25	0	80.59	0	0.84	0	0	8.9	0	0	0	0	0	0	-34.26	-34.26
	Inverter Transformer	MV3-6 T	368156	4907834	2	0	0	56.1	56.1	1	3019.86	3.25	0	80.6	0	0.84	0	0	8.9	0	0	0	0	0	0	-34.28	-34.28
	Inverter Transformer	MV3-15 T	368351	4907477	2	0	0	56.1	56.1	1	3113.58	3.25	0	80.87	0	0.88	0	0	9.06	0	0	0	0	0	0	-34.74	-34.74
	Inverter Transformer	MV3-10 T	368162	4907669	2	0	0	56.1	56.1	1	3120.12	3.25	0	80.88	0	0.88	0	0	9.07	0	0	0	0	0	0	-34.78	-34.78
	Inverter Transformer	MV3-3 T	367944	4907927	2	0	0	56.1	56.1	1	3135.48	3.25	0	80.93	0	0.89	0	0	9.1	0	0	0	0	0	0	-34.85	-34.85
	Inverter Transformer	MV3-22 T	368661	4907142	2	0	0	56.1	56.1	1	3169.29	3.25	0	81.02	0	0.9	0	0	9.15	0	0	0	0	0	0	-35.01	-35.01
	Inverter Transformer	MV3-19 T	368352	4907347	2	0	0	56.1	56.1	1	3207.14	3.25	0	81.12	0	0.92	0	0	9.21	0	0	0	0	0	0	-35.2	-35.2
	Inverter Transformer	MV3-21 T	368484	4907206	2	0	0	56.1	56.1	1	3226.91	3.25	0	81.18	0	0.93	0	0	9.25	0	0	0	0	0	0	-35.29	-35.29
	Inverter Transformer	MV3-7 T	367951	4907754	2	0	0	56.1	56.1	1	3231.03	3.25	0	81.19	0	0.93	0	0	9.25	0	0	0	0	0	0	-35.31	-35.31
	Inverter Transformer	MV3-17 T	368183	4907472	2	0	0	56.1	56.1	1	3236.73	3.25	0	81.2	0	0.93	0	0	9.26	0	0	0	0	0	0	-35.34	-35.34
	Inverter Transformer	MV3-13 T	367958	4907577	2	0	0	56.1	56.1	1	3335.38	4.55	0	81.46	0	1.91	2.52	0	9.42	0	0	0	0	0	0	-39.25	-39.25
	Inverter Transformer	MV3-12 T	367674	4907594	2	0	0	56.1	56.1	1	3548.69	3.25	0	82	0	1.06	0	0	9.76	0	0	0	0	0	0	-36.77	-36.77
	Inverter Transformer	MV3-18 T	367757	4907412	2	0	0	56.1	56.1	1	3595.43	4.51	0	82.12	0	2.02	2.43	0	9.84	0	0	0	0	0	0	-40.35	-40.35
	Line Reactor	NGR	369421	4908787.5	5	0	0	45.4	45.4	1	1436.52	5.25	0	74.15	0	3.44	1.22	0.03	0.59	0	0	0	0	0	0	-34.04	-34.04
	Inverter Transformer	MV2-2 T	365982	4906654	2	0	0	56.1	56.1	1	5473.8	3.25	0	85.77	0	1.79	0	0	12.46	0	0	0	0	0	0	-43.96	-43.96
	Inverter Transformer	MV2-3 T	365814	4906641	2	0	0	56.1	56.1	1	5621.18	3.25	0	86	0	1.84	0	0	12.65	0	0	0	0	0	0	-44.43	-44.43
	Inverter Transformer	MV2-4 T	365590	4906628	2	0	0	56.1	56.1	1	5817.17	3.25	0	86.29	0	1.91	0	0	12.88	0	0	0	0	0	0	-45.03	-45.03
	Inverter Transformer	MV1-1 T	364721	4906166	2	0	0	56.1	56.1	1	6799.38	3.25	0	87.65	0	2.2	0	0	14.01	0	0	0	0	0	0	-47.81	-47.81
	Inverter Transformer	MV1-2 T	364759	4906063	2	0	0	56.1	56.1	1	6821.36	3.25	0	87.68	0	2.21	0	0	14.04	0	0	0	0	0	0	-47.87	-47.87
	Inverter Transformer	MV1-4 T	364821	4905918	2	0	0	56.1	56.1	1	6848.07	3.25	0	87.71	0	2.22	0	0	14.07	0	0	0	0	0	0	-47.94	-47.94
	Inverter Transformer	MV1-12 T	365044	4905386	2	0	0	56.1	56.1	1	6979.31	3.25	0	87.88	0	2.25	0	0	14.21	0	0	0	0	0	0	-48.28	-48.28
	Inverter Transformer	MV1-5 T	364676	4905892	2	0	0	56.1	56.1	1	6983.53	3.25	0	87.88	0	2.25	0	0	14.21	0	0	0	0	0	0	-48.29	-48.29
	Inverter Transformer	MV1-15 T	365309	4904994	2	0	0	56.1	56.1	1	7029.41	3.25	0	87.94	0	2.27	0	0	14.26	0	0	0	0	0	0	-48.41	-48.41
	Inverter Transformer	MV1-8 T	364782	4905647	2	0	0	56.1	56.1	1	7033.32	3.25	0	87.94	0	2.27	0	0	14.27	0	0	0	0	0	0	-48.42	-48.42
	Inverter Transformer	MV1-3 T	364435	4906039	2	0	0	56.1	56.1	1	7109.82	3.25	0	88.04	0	2.29	0	0	14.35	0	0	0	0	0	0	-48.61	-48.61
	Inverter Transformer	MV1-6 T	364482	4905835	2	0	0	56.1	56.1	1	7177.43	3.25	0	88.12	0	2.31	0	0	14.42	0	0	0	0	0	0	-48.79	-48.79
	Inverter Transformer	MV1-9 T	364555	4905646	2	0	0	56.1	56.1	1	7220.53	3.25	0	88.17	0	2.32	0	0	14.46	0	0	0	0	0	0	-48.9	-48.9
	Inverter Transformer	MV1-11 T	364649	4905414	2	0	0	56.1	56.1	1	7277.24	3.25	0	88.24	0	2.33	0	0	14.52	0	0	0	0	0	0	-49.04	-49.04
Limit. Valu	0	0																								
Level D/N:	32.9006	32.9006																								

Receiver: Vacant Lot Receptor
ID: S-VLR24
X: 370679
Y: 4908919
Z: 4.5
Ground: 0

ISO	Description	ID	X	Y	Z	Ground	ReflOrd	LxT	LxN	L/A	Dist.	hm	Freq	Adiv	K0b	Agr	Abar	z	Aatm	Afol	Ahous	Cmet	CmetN	Dc	RL	LtotT	LtotN
	Sol_Luce Substation	S_Substation	369426	4908792	3.5	0	0	112.1	112.1	1	1259.42	5.25	0	73	0	0.2	5.81	0.47	3.03	0	0	0	0	0	0	30.03	30.03
	Inverter	MV5-4	370324	4908707	2	0	0	100.3	100.3	1	413.49	3.25	0	63.33	0	-0.61	0	0	7.76	0	0	0	0	0	0	29.83	29.83
	Inverter	MV5-3	370231	4908851	2	0	0	100.3	100.3	1	453.14	3.25	0	64.12	0	-0.58	0	0	8.14	0	0	0	0	0	0	28.64	28.64
	Inverter	MV5-2	370006	4908853	2	0	0	100.3	100.3	1	676.23	3.25	0	67.6	0	-0.43	0	0	9.62	0	0	0	0	0	0	23.52	23.52
	Inverter	MV5-1	370020	4909142	2	0	0	100.3	100.3	1	695.71	3.25	0	67.85	0	-0.41	0	0	9.72	0	0	0	0	0	0	23.16	23.16
	Inverter	MV5-5	370015	4908690	2	0	0	100.3	100.3	1	702.38	3.25	0	67.93	0	-0.41	0	0	9.75	0	0	0	0	0	0	23.04	23.04
	Inverter	MV4-10	369312	4908858	2	0	0	100.3	100.3	1	1368.36	3.25	0	73.72	0	-0.08	0	0	11.99	0	0	0	0	0	0	14.68	14.68
	Inverter	MV4-9	369289	4909001	2	0	0	100.3	100.3	1	1392.42	3.25	0	73.88	0	-0.07	0	0	12.05	0	0	0	0	0	0	14.46	14.46
	Inverter	MV4-11	369264	4908855	2	0	0	100.3	100.3	1	1416.45	3.25	0	74.02	0	-0.07	0	0	12.11	0	0	0	0	0	0	14.24	14.24
	Inverter	MV4-5	369289	4909199	2	0	0	100.3	100.3	1	1417.92	3.25	0	74.03	0	-0.06	0	0	12.12	0	0	0	0	0	0	14.23	14.23
	Inverter	MV4-8	369256	4909001	2	0	0	100.3	100.3	1	1425.36	3.25	0	74.08	0	-0.06	0	0	12.14	0	0	0	0	0	0	14.16	14.16
	Inverter	MV4-6	369243	4909192	2	0	0	100.3	100.3	1	1461.72	3.25	0	74.3	0	-0.05	0	0	12.23	0	0	0	0	0	0	13.83	13.83
	Inverter	MV4-2	369272	4909397	2	0	0	100.3	100.3	1	1485.98	3.25	0	74.44	0	-0.04	0	0	12.29	0	0	0	0	0	0	13.62	13.62
	Inverter	MV4-3	369229	4909397	2	0	0	100.3	100.3	1	1526.76	3.25	0	74.68	0	-0.02	0	0	12.39	0	0	0	0	0	0	13.27	13.27
	Inverter	MV4-7	369035	4909001	2	0	0	100.3	100.3	1	1646.05	3.25	0	75.33	0	0.02	0	0	12.68	0	0	0	0	0	0	12.29	12.29

Inverter	MV4-4	369027	4909199	2	0	0	100.3	100.3	1	1675.56	3.25	0	75.48	0	0.03	0	0	12.75	0	0	0	0	0	0	12.05	12.05
Inverter	MV6-2	370085	4907339	2	0	0	100.3	100.3	1	1687.97	3.25	0	75.55	0	0.03	0	0	12.77	0	0	0	0	0	0	11.96	11.96
Inverter	MV4-1	369011	4909397	2	0	0	100.3	100.3	1	1735.14	3.25	0	75.79	0	0.05	0	0	12.88	0	0	0	0	0	0	11.59	11.59
Inverter	MV6-3	370207	4907140	2	0	0	100.3	100.3	1	1840.55	3.25	0	76.3	0	0.08	0	0	13.12	0	0	0	0	0	0	10.81	10.81
DSTATCOM - 10 MVAR #1	DSAT1	369437	4908757	2.5	0	0	96.6	96.6	1	1252.52	3.5	0	72.96	0	3.04	0	0	1.25	0	0	0	0	0	0	19.39	19.39
DSTATCOM - 10 MVAR #2	DSAT2	369403	4908757	2.5	0	0	96.6	96.6	1	1286.24	3.5	0	73.19	0	3.05	0	0	1.27	0	0	0	0	0	0	19.12	19.12
Inverter	MV6-1	370235	4907364	2	0	0	97.3	97.3	1	1617.15	3.25	0	75.17	0	0.01	0	0	12.61	0	0	0	0	0	0	9.52	9.52
Inverter	MV3-8	368680	4907712	2	0	0	100.3	100.3	1	2335.14	3.25	0	78.37	0	0.22	0	0	14.14	0	0	0	0	0	0	7.59	7.59
Inverter	MV3-14	368684	4907498	2	0	0	100.3	100.3	1	2449.34	3.25	0	78.78	0	0.25	0	0	14.36	0	0	0	0	0	0	6.92	6.92
Inverter	MV3-9	368512	4907703	2	0	0	100.3	100.3	1	2484.86	3.25	0	78.91	0	0.25	0	0	14.43	0	0	0	0	0	0	6.72	6.72
Inverter	MV3-20	368689	4907317	2	0	0	100.3	100.3	1	2554.7	3.25	0	79.15	0	0.27	0	0	14.56	0	0	0	0	0	0	6.33	6.33
Inverter	MV3-16	368514	4907475	2	0	0	100.3	100.3	1	2602.38	3.25	0	79.31	0	0.28	0	0	14.65	0	0	0	0	0	0	6.07	6.07
Inverter	MV3-11	368346	4907662	2	0	0	100.3	100.3	1	2650.08	3.25	0	79.47	0	0.29	0	0	14.74	0	0	0	0	0	0	5.82	5.82
Inverter	MV3-15	368357	4907477	2	0	0	100.3	100.3	1	2733.32	3.25	0	79.73	0	0.31	0	0	14.89	0	0	0	0	0	0	5.38	5.38
Inverter	MV3-6	368162	4907834	2	0	0	100.3	100.3	1	2740.9	3.25	0	79.76	0	0.31	0	0	14.91	0	0	0	0	0	0	5.34	5.34
Inverter	MV3-21	368478	4907206	2	0	0	100.3	100.3	1	2789.05	3.25	0	79.91	0	0.32	0	0	14.99	0	0	0	0	0	0	5.09	5.09
Inverter	MV3-19	368357	4907347	2	0	0	100.3	100.3	1	2804.08	3.25	0	79.96	0	0.32	0	0	15.02	0	0	0	0	0	0	5.01	5.01
Inverter	MV3-10	368167	4907669	2	0	0	100.3	100.3	1	2805.82	3.25	0	79.96	0	0.32	0	0	15.02	0	0	0	0	0	0	5	5
Inverter	MV3-17	368178	4907472	2	0	0	100.3	100.3	1	2889.43	3.25	0	80.22	0	0.34	0	0	15.18	0	0	0	0	0	0	4.58	4.58
Inverter	MV3-3	367939	4907927	2	0	0	100.3	100.3	1	2914.05	3.25	0	80.29	0	0.35	0	0	15.22	0	0	0	0	0	0	4.46	4.46
Inverter	MV5-6	369982	4908507	2	0	0	89.1	89.1	1	809.67	3.25	0	69.17	0	0.64	0	0	5.94	0	0	0	0	0	0	13.31	13.31
Inverter	MV3-7	367945	4907754	2	0	0	100.3	100.3	1	2971.87	3.25	0	80.46	0	0.36	0	0	15.32	0	0	0	0	0	0	4.17	4.17
Inverter	MV3-13	367963	4907577	2	0	0	100.3	100.3	1	3029.46	3.25	0	80.63	0	0.37	0	0	15.42	0	0	0	0	0	0	3.89	3.89
Inverter	MV3-12	367668	4907594	2	0	0	100.3	100.3	1	3289.64	3.25	0	81.34	0	0.42	0	0	15.88	0	0	0	0	0	0	2.68	2.68
Inverter	MV3-18	367752	4907412	2	0	0	100.3	100.3	1	3292.17	3.25	0	81.35	0	0.42	0	0	15.88	0	0	0	0	0	0	2.67	2.67
Fixed Reactor Bank 2	FRB2	369464	4908755	6	0	0	89.8	89.8	1	1226.02	5.25	0	72.77	0	-1.03	0	0	2.97	0	0	0	0	0	0	15.07	15.07
Fixed Reactor Bank 1	FRB1	369378	4908755	6	0	0	89.8	89.8	1	1311.3	5.25	0	73.35	0	-1.03	0	0	3.13	0	0	0	0	0	0	14.32	14.32
Inverter	MV2-3	365820	4906641	2	0	0	100.3	100.3	1	5366.49	3.25	0	85.59	0	0.67	0	0	19.11	0	0	0	0	0	0	-5.06	-5.06
Inverter	MV2-4	365586	4906624	2	0	0	100.3	100.3	1	5586.2	3.25	0	85.94	0	0.69	0	0	19.42	0	0	0	0	0	0	-5.74	-5.74
Inverter	MV4-14	369176	4908507	2	0	0	89.1	89.1	1	1558.45	3.25	0	74.85	0	0.81	0	0	7.31	0	0	0	0	0	0	6.09	6.09
Inverter	MV4-15	369176	4908481	2	0	0	89.1	89.1	1	1565.52	3.25	0	74.89	0	0.81	0	0	7.32	0	0	0	0	0	0	6.04	6.04
Inverter	MV4-12	369043	4908803	2	0	0	89.1	89.1	1	1640.11	3.25	0	75.3	0	0.82	0	0	7.45	0	0	0	0	0	0	5.49	5.49
Inverter	MV4-13	369051	4908605	2	0	0	89.1	89.1	1	1658.01	3.25	0	75.39	0	0.83	0	0	7.48	0	0	0	0	0	0	5.36	5.36
Inverter	MV1-1	364715	4906166	2	0	0	100.3	100.3	1	6568.74	3.25	0	87.35	0	0.72	0	0	20.75	0	0	0	0	0	0	-8.5	-8.5
Inverter	MV1-2	364753	4906063	2	0	0	100.3	100.3	1	6578.31	3.25	0	87.36	0	0.72	0	0	20.76	0	0	0	0	0	0	-8.53	-8.53
Inverter	MV1-4	364815	4905918	2	0	0	100.3	100.3	1	6587.3	3.25	0	87.37	0	0.72	0	0	20.77	0	0	0	0	0	0	-8.55	-8.55
Inverter	MV1-15	365315	4904994	2	0	0	100.3	100.3	1	6646.66	3.25	0	87.45	0	0.71	0	0	20.85	0	0	0	0	0	0	-8.7	-8.7
Inverter	MV1-12	365038	4905386	2	0	0	100.3	100.3	1	6656.05	3.25	0	87.46	0	0.71	0	0	20.86	0	0	0	0	0	0	-8.73	-8.73
Inverter	MV1-5	364671	4905892	2	0	0	100.3	100.3	1	6727.47	3.25	0	87.56	0	0.71	0	0	20.95	0	0	0	0	0	0	-8.91	-8.91
Inverter	MV1-8	364788	4905647	2	0	0	100.3	100.3	1	6738.68	3.25	0	87.57	0	0.71	0	0	20.97	0	0	0	0	0	0	-8.94	-8.94
Inverter	MV1-6	364477	4905835	2	0	0	100.3	100.3	1	6926.46	3.25	0	87.81	0	0.71	0	0	21.21	0	0	0	0	0	0	-9.42	-9.42
Inverter	MV1-9	364561	4905646	2	0	0	100.3	100.3	1	6938.48	3.25	0	87.83	0	0.71	0	0	21.22	0	0	0	0	0	0	-9.45	-9.45
Inverter	MV1-11	364655	4905414	2	0	0	100.3	100.3	1	6969.48	3.25	0	87.86	0	0.71	0	0	21.26	0	0	0	0	0	0	-9.52	-9.52
Inverter	MV2-1	365842	4906816	2	0	0	97.3	97.3	1	5274.39	3.25	0	85.44	0	0.66	0	0	18.98	0	0	0	0	0	0	-7.78	-7.78
SubstationTransformer	W_ST	369711.17	4906112.3	2.5	0	0	92	92	1	2968.91	3.5	0	80.45	0	0.07	0	0	5.91	0	0	0	0	0	0	5.54	5.54
Inverter	MV3-2	368671	4907928	2	0	0	89.1	89.1	1	2239.23	3.25	0	78	0	0.96	0	0	8.43	0	0	0	0	0	0	1.66	1.66
Inverter	MV3-4	368502	4907925	2	0	0	89.1	89.1	1	2393.19	3.25	0	78.58	0	1	0	0	8.68	0	0	0	0	0	0	0.8	0.8
Westbrook Inverter Enclosur	W_INV6	369875	4906578	2	0	0	89.1	89.1	1	2475.22	3.25	0	78.87	0	1.02	0	0	8.81	0	0	0	0	0	0	0.36	0.36
Inverter	MV1-7	364925	4905782	2	0	0	97.3	97.3	1	6553.57	3.25	0	87.33	0	0.71	0	0	20.73	0	0	0	0	0	0	-11.46	-11.46
Westbrook Inverter Enclosur	W_INV5	369719	4906574	2	0	0	89.1	89.1	1	2533.9	3.25	0	79.08	0	1.03	0	0	8.9	0	0	0	0	0	0	0.05	0.05
Inverter	MV1-10	365004	4905564	2	0	0	97.3	97.3	1	6592.55	3.25	0	87.38	0	0.72	0	0	20.78	0	0	0	0	0	0	-11.56	-11.56
Inverter	MV3-5	368340	4907843	2	0	0	89.1	89.1	1	2574.63	3.25	0	79.21	0	1.04	0	0	8.96	0	0	0	0	0	0	-0.16	-0.16
Inverter	MV1-14	365163	4905049	2	0	0	97.3	97.3	1	6738.19	3.25	0	87.57	0	0.71	0	0	20.97	0	0	0	0	0	0	-11.94	-11.94
Westbrook Inverter Enclosur	W_INV7	369780	4906417	2	0	0	89.1	89.1	1	2658.61	3.25	0	79.49	0	1.06	0	0	9.09	0	0	0	0	0	0	-0.59	-0.59
Inverter	MV3-22	368656	4907142	2	0	0	89.1	89.1	1	2692.63	3.25	0	79.6	0	1.07	0	0	9.15	0	0	0	0	0	0	-0.76	-0.76
Inverter	MV3-1	368156	4907976	2	0	0	89.1	89.1	1	2693.47	3.25	0	79.61	0	1.07	0	0	9.15	0	0	0	0	0	0	-0.77	-0.77
Inverter	MV1-13	364731	4905241	2	0	0	97.3	97.3	1	6993.31	3.25	0	87.89	0	0.71	0	0	21.29	0	0	0	0	0	0	-12.58	-12.58
Inverter	MV6-4	370250	4906966	2	0	0	86.1	86.1	1	1999.56	3.25	0	77.02	0	0.91	0	0	8.04	0	0	0	0	0	0	0.09	0.09
Westbrook Inverter Enclosur	W_INV2	369374	4906388	2	0	0	89.1	89.1	1	2847.63	3.25	0	80.09	0	1.11	0	0	9.38	0	0	0	0	0	0	-1.53	-1.53
Westbrook Inverter Enclosur	W_INV4	369673	4906164	2	0	0	89.1	89.1	1	2932.93	3.25	0	80.35	0	1.13	0	0	9.52	0	0	0	0	0	0	-1.93	-1.93
Westbrook Inverter Enclosur	W_INV3	369508	4906164	2	0	0	89.1	89.1	1	2993.54	3.25	0	80.52	0	1.15	0	0	9.61	0	0	0	0	0	0	-2.22	-2.22
Westbrook Inverter Enclosur	W_INV1	369409	4906578	2	0	0	86.1	86.1	1	2663.3	3.25	0	79.51	0	1.07	0	0	9.1	0	0	0	0	0	0	-3.62	-3.62
Inverter	MV2-2	365977	4906654	2	0	0	89.1	89.1	1	5219.1	3.25	0	85.35	0	1.69	0	0	12.75	0	0	0	0	0	0	-10.74	-10.74
Gardiner Substation	G_Sub	366586.3	4903349.9	2.5	0	0	90.8	90.8	1	6911.23	4.25	0	87.79	0	2.05	1.92	0.37	10.66	0	0	0	0	0	0	-11.65	-11.65
Inverter	MV1-3	364440	4906039	2	0	0	89.1	89.1	1	6871.65	3.25	0	87.74	0	2.1	0	0	14.83	0	0	0	0	0	0	-15.61	-15.61
Inverters	G_Inv2	366676.9	4903239.1	2	0	0	87.7	87.7	1	6948.24	3.25	0	87.84	0	2.95	0	0	7.94	0	0	0	0	0	0	-11.06	-11.06
Inverters	G_Inv4	366732.8	4903105	2	0	0	87.7	87.7	1	7026.74	3.25	0	87.94	0	2.95	0	0	8.02	0	0	0	0	0	0	-11.24	-11.24
Inverters	G_Inv1	366526.4	4903225.8	2	0	0	87.7	87.7	1	7046.75	3.25	0	87.96	0	2.95	0	0	8.04	0	0	0	0	0	0	-11.29	-11.29
Inverters	G_Inv6	366788.5	4902972	2	0	0	87.7	87.7	1	7106.53	3.25	0	88.03	0	2.95	0	0	8.1	0	0	0	0	0	0	-11.42	-11.42
Inverters	G_Inv3	366583.7	4903091.4	2	0	0	87.7	87.7	1	7122.67	3.25	0	88.05	0	2.95	0	0	8.11	0	0	0	0	0	0	-11.46	-11.46
Inverters	G_Inv8	366844.5	4902838.5	2	0	0	87.7	87.7	1	7188.59	3.25	0	88.13	0	2.95	0	0	8.18	0	0	0	0	0	0	-11.6	-11.6
Inverters	G_Inv5	366638.5	4902958.1	2	0	0	87.7	87.7	1	7201.25	3.25	0	88.15	0	2.95	0	0	8.19	0	0	0	0	0	0	-11.63	-11.63
Inverters	G_Inv10	366900.7	4902704.8	2	0	0	87.7	87.7	1	7272.68	3.25	0	88.23	0	2.96	0	0	8.26	0	0	0	0	0	0	-11.79	-11.79
Inverters	G_Inv7	366694.6	4902824.7	2	0	0	87.7	87.7	1	7281.2	3.25	0	88.24	0	2.96	0	0	8.27	0	0	0	0	0	0	-11.81	-11.81

Inverters	G_Inv9	366750.9	4902691.8	2	0	0	87.7	87.7	1	7362.61	3.25	0	88.34	0	2.96	0	0	8.35	0	0	0	0	0	0	-11.99	-11.99
Westbrook Inverter Transfor	W_INVTR1	369403	4906578	2	0	0	78.2	78.2	1	2666.17	3.25	0	79.52	0	-2.62	0	0	1.51	0	0	0	0	0	0	-0.17	-0.17
Westbrook Inverter Transfor	W_INVTR6	369881	4906578	2	0	0	77.3	77.3	1	2473.28	3.25	0	78.87	0	-2.56	0	0	1.43	0	0	0	0	0	0	-0.39	-0.39
Westbrook Inverter Transfor	W_INVTR5	369725	4906574	2	0	0	77.3	77.3	1	2531.63	3.25	0	79.07	0	-2.58	0	0	1.45	0	0	0	0	0	0	-0.6	-0.6
Westbrook Inverter Transfor	W_INVTR7	369786	4906417	2	0	0	77.3	77.3	1	2656.59	3.25	0	79.49	0	-2.62	0	0	1.51	0	0	0	0	0	0	-1.04	-1.04
Westbrook Inverter Transfor	W_INVTR2	369368	4906388	2	0	0	77.3	77.3	1	2850.38	3.25	0	80.1	0	-2.67	0	0	1.59	0	0	0	0	0	0	-1.68	-1.68
Westbrook Inverter Transfor	W_INVTR4	369679	4906164	2	0	0	77.3	77.3	1	2930.88	3.25	0	80.34	0	-2.7	0	0	1.63	0	0	0	0	0	0	-1.93	-1.93
Westbrook Inverter Transfor	W_INVTR3	369514	4906164	2	0	0	77.3	77.3	1	2991.2	3.25	0	80.52	0	-2.71	0	0	1.65	0	0	0	0	0	0	-2.12	-2.12
Inverter Transformer	MV6-1 T	370230	4907364	2	0	0	69.4	69.4	1	1618.53	3.25	0	75.18	0	2.02	0	0	4.57	0	0	0	0	0	0	-12.42	-12.42
Inverter Transformer	MV5-4 T	370330	4908707	2	0	0	56.1	56.1	1	408.35	3.25	0	63.22	0	-0.11	0	0	3.24	0	0	0	0	0	0	-10.28	-10.28
Inverter Transformer	MV6-4 T	370244	4906966	2	0	0	69.4	69.4	1	2000.86	3.25	0	77.02	0	2.17	0	0	4.97	0	0	0	0	0	0	-14.81	-14.81
Inverter Transformer	MV5-3 T	370237	4908851	2	0	0	56.1	56.1	1	447.21	3.25	0	64.01	0	-0.12	0	0	3.38	0	0	0	0	0	0	-11.21	-11.21
Inverter Transformer	MV5-2 T	370011	4908853	2	0	0	56.1	56.1	1	671.26	3.25	0	67.54	0	-0.09	0	0	4.06	0	0	0	0	0	0	-15.45	-15.45
Inverter Transformer	MV5-5 T	370021	4908690	2	0	0	56.1	56.1	1	696.71	3.25	0	67.86	0	-0.08	0	0	4.12	0	0	0	0	0	0	-15.85	-15.85
Inverter Transformer	MV5-1 T	370015	4909142	2	0	0	56.1	56.1	1	700.45	3.25	0	67.91	0	-0.08	0	0	4.13	0	0	0	0	0	0	-15.9	-15.9
Inverter Transformer	MV5-6 T	369987	4908507	2	0	0	56.1	56.1	1	805.37	3.25	0	69.12	0	-0.05	0	0	4.41	0	0	0	0	0	0	-17.42	-17.42
Inverter Transformer	MV2-1 T	365836	4906816	2	0	0	69.4	69.4	1	5279.89	3.25	0	85.45	0	3.07	0	0	7.57	0	0	0	0	0	0	-26.73	-26.73
Inverter Transformer	MV4-10 T	369307	4908858	2	0	0	56.1	56.1	1	1373.36	3.25	0	73.76	0	0.15	0	0	5.74	0	0	0	0	0	0	-23.59	-23.59
Inverter Transformer	MV4-9 T	369284	4909001	2	0	0	56.1	56.1	1	1397.41	3.25	0	73.91	0	0.16	0	0	5.8	0	0	0	0	0	0	-23.8	-23.8
Inverter Transformer	MV4-11 T	369269	4908855	2	0	0	56.1	56.1	1	1411.45	3.25	0	73.99	0	0.16	0	0	5.83	0	0	0	0	0	0	-23.93	-23.93
Inverter Transformer	MV4-8 T	369262	4909001	2	0	0	56.1	56.1	1	1419.37	3.25	0	74.04	0	0.17	0	0	5.84	0	0	0	0	0	0	-23.99	-23.99
Inverter Transformer	MV1-7 T	364919	4905782	2	0	0	69.4	69.4	1	6558.84	3.25	0	87.34	0	3.27	0	0	8.35	0	0	0	0	0	0	-29.6	-29.6
Inverter Transformer	MV4-5 T	369283	4909199	2	0	0	56.1	56.1	1	1423.81	3.25	0	74.07	0	0.17	0	0	5.85	0	0	0	0	0	0	-24.03	-24.03
Inverter Transformer	MV1-10 T	365010	4905564	2	0	0	69.4	69.4	1	6587.38	3.25	0	87.37	0	3.27	0	0	8.37	0	0	0	0	0	0	-29.66	-29.66
Inverter Transformer	MV4-6 T	369249	4909192	2	0	0	56.1	56.1	1	1455.83	3.25	0	74.26	0	0.18	0	0	5.92	0	0	0	0	0	0	-24.31	-24.31
Inverter Transformer	MV1-14 T	365157	4905049	2	0	0	69.4	69.4	1	6743.1	3.25	0	87.58	0	3.29	0	0	8.46	0	0	0	0	0	0	-29.97	-29.97
Inverter Transformer	MV4-2 T	369267	4909397	2	0	0	56.1	56.1	1	1490.72	3.25	0	74.47	0	0.2	0	0	6	0	0	0	0	0	0	-24.6	-24.6
Inverter Transformer	MV1-13 T	364725	4905241	2	0	0	69.4	69.4	1	6998.41	3.25	0	87.9	0	3.32	0	0	8.6	0	0	0	0	0	0	-30.47	-30.47
Inverter Transformer	MV4-3 T	369234	4909397	2	0	0	56.1	56.1	1	1522.01	3.25	0	74.65	0	0.21	0	0	6.06	0	0	0	0	0	0	-24.86	-24.86
Inverter Transformer	MV4-14 T	369182	4908507	2	0	0	56.1	56.1	1	1552.66	3.25	0	74.82	0	0.22	0	0	6.13	0	0	0	0	0	0	-25.11	-25.11
Inverter Transformer	MV4-15 T	369170	4908481	2	0	0	56.1	56.1	1	1571.28	3.25	0	74.93	0	0.23	0	0	6.17	0	0	0	0	0	0	-25.26	-25.26
Inverter Transformer	MV4-12 T	369049	4908803	2	0	0	56.1	56.1	1	1634.12	3.25	0	75.27	0	0.25	0	0	6.3	0	0	0	0	0	0	-25.76	-25.76
Inverter Transformer	MV4-7 T	369040	4909001	2	0	0	56.1	56.1	1	1641.05	3.25	0	75.3	0	0.26	0	0	6.32	0	0	0	0	0	0	-25.82	-25.82
Inverter Transformer	MV4-13 T	369057	4908605	2	0	0	56.1	56.1	1	1652.12	3.25	0	75.36	0	0.26	0	0	6.34	0	0	0	0	0	0	-25.9	-25.9
Inverter Transformer	MV4-4 T	369033	4909199	2	0	0	56.1	56.1	1	1669.65	3.25	0	75.45	0	0.27	0	0	6.38	0	0	0	0	0	0	-26.04	-26.04
Inverter Transformer	MV6-2 T	370091	4907339	2	0	0	56.1	56.1	1	1685.87	3.25	0	75.54	0	0.27	0	0	6.41	0	0	0	0	0	0	-26.16	-26.16
Inverter Transformer	MV4-1 T	369017	4909397	2	0	0	56.1	56.1	1	1729.37	3.25	0	75.76	0	0.29	0	0	6.5	0	0	0	0	0	0	-26.49	-26.49
Inverter Transformer	MV6-3 T	370202	4907140	2	0	0	56.1	56.1	1	1841.84	3.25	0	76.31	0	0.34	0	0	6.73	0	0	0	0	0	0	-27.31	-27.31
Inverter Transformer	MV3-2 T	368677	4907928	2	0	0	56.1	56.1	1	2233.85	3.25	0	77.98	0	0.5	0	0	7.5	0	0	0	0	0	0	-29.92	-29.92
Inverter Transformer	MV3-8 T	368685	4907712	2	0	0	56.1	56.1	1	2330.86	3.25	0	78.35	0	0.54	0	0	7.68	0	0	0	0	0	0	-30.51	-30.51
Inverter Transformer	MV3-4 T	368507	4907925	2	0	0	56.1	56.1	1	2388.65	3.25	0	78.56	0	0.57	0	0	7.79	0	0	0	0	0	0	-30.86	-30.86
Inverter Transformer	MV3-14 T	368678	4907498	2	0	0	56.1	56.1	1	2454.23	3.25	0	78.8	0	0.6	0	0	7.91	0	0	0	0	0	0	-31.24	-31.24
Inverter Transformer	MV3-9 T	368517	4907703	2	0	0	56.1	56.1	1	2480.51	3.25	0	78.89	0	0.61	0	0	7.95	0	0	0	0	0	0	-31.39	-31.39
Inverter Transformer	MV3-20 T	368683	4907317	2	0	0	56.1	56.1	1	2559.38	3.25	0	79.16	0	0.64	0	0	8.1	0	0	0	0	0	0	-31.84	-31.84
Inverter Transformer	MV3-5 T	368335	4907843	2	0	0	56.1	56.1	1	2579.17	3.25	0	79.23	0	0.65	0	0	8.13	0	0	0	0	0	0	-31.95	-31.95
Inverter Transformer	MV3-16 T	368509	4907475	2	0	0	56.1	56.1	1	2606.54	3.25	0	79.32	0	0.66	0	0	8.18	0	0	0	0	0	0	-32.11	-32.11
Inverter Transformer	MV3-11 T	368340	4907662	2	0	0	56.1	56.1	1	2655.37	3.25	0	79.48	0	0.68	0	0	8.27	0	0	0	0	0	0	-32.38	-32.38
Inverter Transformer	MV3-22 T	368661	4907142	2	0	0	56.1	56.1	1	2688.88	3.25	0	79.59	0	0.7	0	0	8.33	0	0	0	0	0	0	-32.56	-32.56
Inverter Transformer	MV3-1 T	368150	4907976	2	0	0	56.1	56.1	1	2699.09	3.25	0	79.62	0	0.7	0	0	8.35	0	0	0	0	0	0	-32.61	-32.61
Inverter Transformer	MV3-15 T	368351	4907477	2	0	0	56.1	56.1	1	2738.42	3.25	0	79.75	0	0.72	0	0	8.42	0	0	0	0	0	0	-32.83	-32.83
Inverter Transformer	MV3-6 T	368156	4907834	2	0	0	56.1	56.1	1	2746.41	3.25	0	79.78	0	0.72	0	0	8.43	0	0	0	0	0	0	-32.87	-32.87
Inverter Transformer	MV3-21 T	368484	4907206	2	0	0	56.1	56.1	1	2784.31	3.25	0	79.89	0	0.74	0	0	8.5	0	0	0	0	0	0	-33.07	-33.07
Inverter Transformer	MV3-19 T	368352	4907347	2	0	0	56.1	56.1	1	2808.22	3.25	0	79.97	0	0.75	0	0	8.54	0	0	0	0	0	0	-33.2	-33.2
Inverter Transformer	MV3-10 T	368162	4907669	2	0	0	56.1	56.1	1	2810.3	3.25	0	79.98	0	0.75	0	0	8.54	0	0	0	0	0	0	-33.21	-33.21
Inverter Transformer	MV3-17 T	368183	4907472	2	0	0	56.1	56.1	1	2885.11	3.25	0	80.2	0	0.78	0	0	8.67	0	0	0	0	0	0	-33.6	-33.6
Inverter Transformer	MV3-3 T	367944	4907927	2	0	0	56.1	56.1	1	2909.35	3.25	0	80.28	0	0.79	0	0	8.71	0	0	0	0	0	0	-33.72	-33.72
Inverter Transformer	MV3-7 T	367951	4907754	2	0	0	56.1	56.1	1	2966.35	3.25	0	80.44	0	0.82	0	0	8.81	0	0	0	0	0	0	-34.01	-34.01
Inverter Transformer	MV3-13 T	367958	4907577	2	0	0	56.1	56.1	1	3033.94	3.25	0	80.64	0	0.84	0	0	8.93	0	0	0	0	0	0	-34.35	-34.35
Inverter Transformer	MV3-12 T	367674	4907594	2	0	0	56.1	56.1	1	3284.15	3.25	0	81.33	0	0.95	0	0	9.34	0	0	0	0	0	0	-35.56	-35.56
Inverter Transformer	MV3-18 T	367757	4907412	2	0	0	56.1	56.1	1	3287.73	3.25	0	81.34	0	0.95	0	0	9.35	0	0	0	0	0	0	-35.58	-35.58
Line Reactor	NGR	369421	4908787.5	5	0	0	45.4	45.4	1	1264.85	5.25	0	73.04	0	3.46	1.21	0.04	0.52	0	0	0	0	0	0	-32.87	-32.87
Inverter Transformer	MV2-2 T	365982	4906654	2	0	0	56.1	56.1	1	5214.6	3.25	0	85.34	0	1.7	0	0	12.13	0	0	0	0	0	0	-43.12	-43.12
Inverter Transformer	MV2-3 T	365814	4906641	2	0	0	56.1	56.1	1	5371.92	3.25	0	85.6	0	1.76	0	0	12.33	0	0	0	0	0	0	-43.64	-43.64
Inverter Transformer	MV2-4 T	365590	4906628	2	0	0	56.1	56.1	1	5580.91	3.25	0	85.93	0	1.83	0	0	12.6	0	0	0	0	0	0	-44.3	-44.3
Inverter Transformer	MV1-1 T	364721	4906166	2	0	0	56.1	56.1	1	6563.29	3.25	0	87.34	0	2.14	0	0	13.75	0	0	0	0	0	0	-47.17	-47.17
Inverter Transformer	MV1-2 T	364759	4906063	2	0	0	56.1	56.1	1	6572.91	3.25	0	87.36	0	2.14	0	0	13.76	0	0	0	0	0	0	-47.2	-47.2
Inverter Transformer	MV1-4 T	364821	4905918	2	0	0	56.1	56.1	1	6581.96	3.25	0	87.37	0	2.14	0	0	13.77	0	0	0	0	0	0	-47.22	-47.22
Inverter Transformer	MV1-12 T	365044	4905386	2	0	0	56.1	56.1	1	6650.96	3.25	0	87.46	0	2.16	0	0	13.85	0	0	0	0	0	0	-47.41	-47.41
Inverter Transformer	MV1-15 T	365309	4904994	2	0	0	56.1	56.1	1	6651.51	3.25	0	87.46	0	2.16	0	0	13.85	0	0	0	0	0	0	-47.41	-47.41
Inverter Transformer	MV1-5 T	364676	4905892	2	0	0	56.1	56.1	1	6723	3.25	0	87.55	0	2.18	0	0	13.93	0	0	0	0	0	0	-47.6	-47.6
Inverter Transformer	MV1-8 T	364782	4905647	2	0	0	56.1	56.1	1	6743.93	3.25	0	87.58	0	2.19	0	0	13.95	0	0	0	0	0	0	-47.66	-47.66
Inverter Transformer	MV1-3 T	364435	4906039	2	0	0	56.1	56.1	1	6876.19	3.25	0	87.75	0	2.23	0	0	14.1	0	0	0	0	0	0	-48.01	-48.01
Inverter Transformer	MV1-6 T	364482	4905835	2	0	0	56.1	56.1	1	6921.98	3.25	0	87.8	0	2.24	0	0	14.15	0	0	0	0	0	0	-48.13	-48.13
Inverter Transformer	MV1-9 T	364555	4905646	2	0	0	56.1	56.1	1	6943.77	3.25	0	87.83	0	2.24	0	0	14.17	0	0	0	0	0	0	-48.19	-48.19

	Inverter Transformer	MV1-11 T	364649	4905414	2	0	0	56.1	56.1	1	6974.66	3.25	0	87.87	0	2.25	0	0	14.2	0	0	0	0	0	0	-48.27	-48.27
Limit. Valu	0	0																								
Level D/N:	35.9871	35.9871																								

Receiver: Vacant Lot Receptor
ID: S-VLR25
X: 371110
Y: 4908533
Z: 4.5
Ground: 0

ISO	Description	ID	X	Y	Z	Ground	ReflOrd	LxT	LxN	L/A	Dist.	hm	Freq	Adiv	K0b	Agr	Abar	z	Aatm	Afol	Ahous	Cmet	CmetN	Dc	RL	LtotT	LtotN
	Sol_Luce Substation	S_Substation	369426	4908792	3.5	0	0	112.1	112.1	1	1703.8	5.25	0	75.63	0	0.16	4.86	0.47	3.85	0	0	0	0	0	0	27.57	27.57
	Inverter	MV5-4	370324	4908707	2	0	0	100.3	100.3	1	805.03	3.25	0	69.12	0	-0.35	0	0	10.2	0	0	0	0	0	0	21.34	21.34
	Inverter	MV5-3	370231	4908851	2	0	0	100.3	100.3	1	934.76	3.25	0	70.41	0	-0.28	0	0	10.69	0	0	0	0	0	0	19.49	19.49
	Inverter	MV5-5	370015	4908690	2	0	0	100.3	100.3	1	1106.2	3.25	0	71.88	0	-0.2	0	0	11.25	0	0	0	0	0	0	17.38	17.38
	Inverter	MV5-2	370006	4908853	2	0	0	100.3	100.3	1	1149.44	3.25	0	72.21	0	-0.18	0	0	11.38	0	0	0	0	0	0	16.9	16.9
	Inverter	MV5-1	370020	4909142	2	0	0	100.3	100.3	1	1248.59	3.25	0	72.93	0	-0.13	0	0	11.66	0	0	0	0	0	0	15.85	15.85
	Inverter	MV6-2	370085	4907339	2	0	0	100.3	100.3	1	1573.62	3.25	0	74.94	0	-0.01	0	0	12.5	0	0	0	0	0	0	12.88	12.88
	Inverter	MV6-3	370207	4907140	2	0	0	100.3	100.3	1	1660.08	3.25	0	75.4	0	0.02	0	0	12.71	0	0	0	0	0	0	12.18	12.18
	Inverter	MV4-10	369312	4908858	2	0	0	100.3	100.3	1	1827.14	3.25	0	76.24	0	0.08	0	0	13.09	0	0	0	0	0	0	10.91	10.91
	Inverter	MV4-11	369264	4908855	2	0	0	100.3	100.3	1	1873.87	3.25	0	76.45	0	0.09	0	0	13.19	0	0	0	0	0	0	10.57	10.57
	Inverter	MV4-9	369289	4909001	2	0	0	100.3	100.3	1	1880.18	3.25	0	76.48	0	0.09	0	0	13.21	0	0	0	0	0	0	10.53	10.53
	Inverter	MV4-8	369256	4909001	2	0	0	100.3	100.3	1	1912.16	3.25	0	76.63	0	0.1	0	0	13.27	0	0	0	0	0	0	10.3	10.3
	Inverter	MV4-5	369289	4909199	2	0	0	100.3	100.3	1	1938.97	3.25	0	76.75	0	0.11	0	0	13.33	0	0	0	0	0	0	10.12	10.12
	Inverter	MV4-6	369243	4909192	2	0	0	100.3	100.3	1	1979.89	3.25	0	76.93	0	0.12	0	0	13.42	0	0	0	0	0	0	9.84	9.84
	Inverter	MV4-2	369272	4909397	2	0	0	100.3	100.3	1	2030.95	3.25	0	77.15	0	0.14	0	0	13.53	0	0	0	0	0	0	9.49	9.49
	Inverter	MV6-1	370235	4907364	2	0	0	97.3	97.3	1	1460.2	3.25	0	74.29	0	-0.05	0	0	12.22	0	0	0	0	0	0	10.85	10.85
	Inverter	MV4-3	369229	4909397	2	0	0	100.3	100.3	1	2069.94	3.25	0	77.32	0	0.15	0	0	13.61	0	0	0	0	0	0	9.24	9.24
	Inverter	MV4-7	369035	4909001	2	0	0	100.3	100.3	1	2127.12	3.25	0	77.56	0	0.16	0	0	13.73	0	0	0	0	0	0	8.87	8.87
	Inverter	MV4-4	369027	4909199	2	0	0	100.3	100.3	1	2186.88	3.25	0	77.8	0	0.18	0	0	13.85	0	0	0	0	0	0	8.49	8.49
	Inverter	MV4-1	369011	4909397	2	0	0	100.3	100.3	1	2269.87	3.25	0	78.12	0	0.2	0	0	14.01	0	0	0	0	0	0	7.98	7.98
	Inverter	MV3-8	368680	4907712	2	0	0	100.3	100.3	1	2564.95	3.25	0	79.18	0	0.27	0	0	14.58	0	0	0	0	0	0	6.28	6.28
	DSTATCOM - 10 MVAR #1	DSAT1	369437	4908757	2.5	0	0	96.6	96.6	1	1687.93	3.5	0	75.55	0	3.15	0	0	1.53	0	0	0	0	0	0	16.4	16.4
	DSTATCOM - 10 MVAR #2	DSAT2	369403	4908757	2.5	0	0	96.6	96.6	1	1721.64	3.5	0	75.72	0	3.16	0	0	1.55	0	0	0	0	0	0	16.2	16.2
	Inverter	MV3-14	368684	4907498	2	0	0	100.3	100.3	1	2637.56	3.25	0	79.42	0	0.29	0	0	14.72	0	0	0	0	0	0	5.88	5.88
	Inverter	MV3-20	368689	4907317	2	0	0	100.3	100.3	1	2709.23	3.25	0	79.66	0	0.3	0	0	14.85	0	0	0	0	0	0	5.5	5.5
	Inverter	MV3-9	368512	4907703	2	0	0	100.3	100.3	1	2727.36	3.25	0	79.71	0	0.31	0	0	14.88	0	0	0	0	0	0	5.41	5.41
	Inverter	MV3-16	368514	4907475	2	0	0	100.3	100.3	1	2803.32	3.25	0	79.95	0	0.32	0	0	15.02	0	0	0	0	0	0	5.02	5.02
	Inverter	MV3-11	368346	4907662	2	0	0	100.3	100.3	1	2897.99	3.25	0	80.24	0	0.34	0	0	15.19	0	0	0	0	0	0	4.54	4.54
	Inverter	MV3-21	368478	4907206	2	0	0	100.3	100.3	1	2947.6	3.25	0	80.39	0	0.35	0	0	15.28	0	0	0	0	0	0	4.29	4.29
	Inverter	MV3-15	368357	4907477	2	0	0	100.3	100.3	1	2948.58	3.25	0	80.39	0	0.35	0	0	15.28	0	0	0	0	0	0	4.29	4.29
	Inverter	MV3-19	368357	4907347	2	0	0	100.3	100.3	1	2997.6	3.25	0	80.54	0	0.36	0	0	15.37	0	0	0	0	0	0	4.05	4.05
	Inverter	MV3-6	368162	4907834	2	0	0	100.3	100.3	1	3029.74	3.25	0	80.63	0	0.37	0	0	15.42	0	0	0	0	0	0	3.89	3.89
	Inverter	MV3-10	368167	4907669	2	0	0	100.3	100.3	1	3067.21	3.25	0	80.73	0	0.37	0	0	15.49	0	0	0	0	0	0	3.71	3.71
	Inverter	MV3-17	368178	4907472	2	0	0	100.3	100.3	1	3118.07	3.25	0	80.88	0	0.38	0	0	15.58	0	0	0	0	0	0	3.47	3.47
	Inverter	MV3-3	367939	4907927	2	0	0	100.3	100.3	1	3228.39	3.25	0	81.18	0	0.4	0	0	15.77	0	0	0	0	0	0	2.96	2.96
	Inverter	MV3-7	367945	4907754	2	0	0	100.3	100.3	1	3259.46	3.25	0	81.26	0	0.41	0	0	15.82	0	0	0	0	0	0	2.82	2.82
	Inverter	MV3-13	367963	4907577	2	0	0	100.3	100.3	1	3289	3.25	0	81.34	0	0.42	0	0	15.87	0	0	0	0	0	0	2.68	2.68
	Inverter	MV3-18	367752	4907412	2	0	0	100.3	100.3	1	3540.17	3.25	0	81.98	0	0.46	0	0	16.3	0	0	0	0	0	0	1.58	1.58
	Inverter	MV3-12	367668	4907594	2	0	0	100.3	100.3	1	3567.79	3.25	0	82.05	0	0.46	0	0	16.34	0	0	0	0	0	0	1.46	1.46
	Inverter	MV5-6	369982	4908507	2	0	0	89.1	89.1	1	1128.3	3.25	0	72.05	0	0.71	0	0	6.55	0	0	0	0	0	0	9.74	9.74
	Fixed Reactor Bank 2	FRB2	369464	4908755	6	0	0	89.8	89.8	1	1660.9	5.25	0	75.41	0	-1.02	0	0	3.78	0	0	0	0	0	0	11.61	11.61
	Inverter	MV2-3	365820	4906641	2	0	0	100.3	100.3	1	5618.16	3.25	0	85.99	0	0.69	0	0	19.47	0	0	0	0	0	0	-5.83	-5.83
	Inverter	MV2-4	365586	4906624	2	0	0	100.3	100.3	1	5844.56	3.25	0	86.34	0	0.7	0	0	19.78	0	0	0	0	0	0	-6.5	-6.5
	Fixed Reactor Bank 1	FRB1	369378	4908755	6	0	0	89.8	89.8	1	1746.17	5.25	0	75.84	0	-1.01	0	0	3.93	0	0	0	0	0	0	11.02	11.02
	Inverter	MV1-15	365315	4904994	2	0	0	100.3	100.3	1	6790.18	3.25	0	87.64	0	0.71	0	0	21.03	0	0	0	0	0	0	-9.07	-9.07
	Inverter	MV1-4	364815	4905918	2	0	0	100.3	100.3	1	6816.54	3.25	0	87.67	0	0.71	0	0	21.07	0	0	0	0	0	0	-9.14	-9.14
	Inverter	MV1-1	364715	4906166	2	0	0	100.3	100.3	1	6819	3.25	0	87.67	0	0.71	0	0	21.07	0	0	0	0	0	0	-9.15	-9.15
	Inverter	MV1-2	364753	4906063	2	0	0	100.3	100.3	1	6820	3.25	0	87.68	0	0.71	0	0	21.07	0	0	0	0	0	0	-9.15	-9.15
	Inverter	MV1-12	365038	4905386	2	0	0	100.3	100.3	1	6839.06	3.25	0	87.7	0	0.71	0	0	21.1	0	0	0	0	0	0	-9.2	-9.2
	Inverter	MV1-8	364788	4905647	2	0	0	100.3	100.3	1	6949.58	3.25	0	87.84	0	0.71	0	0	21.24	0	0	0	0	0	0	-9.47	-9.47
	Inverter	MV1-5	364671	4905892	2	0	0	100.3	100.3	1	6959.57	3.25	0	87.85	0	0.71	0	0	21.25	0	0	0	0	0	0	-9.5	-9.5
	Inverter	MV4-14	369176	4908507	2	0	0	89.1	89.1	1	1934.18	3.25	0	76.73	0	0.89	0	0	7.94	0	0	0	0	0	0	3.5	3.5
	Inverter	MV4-15	369176	4908481	2	0	0	89.1	89.1	1	1934.7	3.25	0	76.73	0	0.89	0	0	7.94	0	0	0	0	0	0	3.5	3.5
	Inverter	MV1-9	364561	4905646	2	0	0	100.3	100.3	1	7157.11	3.25	0	88.09	0	0.7	0	0	21.5	0	0	0	0	0	0	-9.98	-9.98
	Inverter	MV1-6	364477	4905835	2	0	0	100.3	100.3	1	7160.72	3.25	0	88.1	0	0.7	0	0	21.5	0	0	0	0	0	0	-9.99	-9.99
	Inverter	MV1-11	364655	4905414	2	0	0	100.3	100.3	1	7169.04	3.25	0	88.11	0	0.7	0	0	21.51	0	0	0	0	0	0	-10.01	-10.01
	SubstationTransformer	W_ST	369711.17	4906112.3	2.5	0	0	92	92	1	2795.83	3.5	0	79.93	0	0.03	0	0	5.65	0	0	0	0	0	0	6.37	6.37
	Inverter	MV4-13	369051	4908605	2	0	0	89.1	89.1	1	2060.26	3.25	0	77.28	0	0.92	0	0	8.14	0	0	0	0	0	0	2.71	2.71
	Inverter	MV4-12	369043	4908803	2	0	0	89.1	89.1	1	2084.56	3.25	0	77.38	0	0.93	0	0	8.18	0	0	0	0	0	0	2.57	2.57
	Inverter	MV2-1	365842	4906816	2	0	0	97.3	97.3	1	5540.75	3.25	0	85.87	0	0.68	0	0	19.36	0	0	0	0	0	0	-8.6	-8.6
	Westbrook Inverter Enclosur	W_INV6	369875	4906578	2	0	0	89.1	89.1	1	2312.41	3.25	0	78.28	0	0.98	0	0	8.55	0	0	0	0	0	0	1.25	1.25
	Westbrook Inverter Enclosur	W_INV5	369719	4906574	2	0	0	89.1	89.1	1	2402.62	3.25	0	78.61	0	1	0	0	8.69	0	0	0	0	0	0	0.75	0.75

Westbrook Inverter Enclosur	W_INV7	369780	4906417	2	0	0	89.1	89.1	1	2499.27	3.25	0	78.96	0	1.03	0	0	8.84	0	0	0	0	0	0	0.23	0.23
Inverter	MV3-2	368671	4907928	2	0	0	89.1	89.1	1	2512.92	3.25	0	79	0	1.03	0	0	8.87	0	0	0	0	0	0	0.16	0.16
Inverter	MV6-4	370250	4906966	2	0	0	86.1	86.1	1	1787.48	3.25	0	76.04	0	0.86	0	0	7.69	0	0	0	0	0	0	1.46	1.46
Inverter	MV1-7	364925	4905782	2	0	0	97.3	97.3	1	6769.21	3.25	0	87.61	0	0.71	0	0	21.01	0	0	0	0	0	0	-12.02	-12.02
Inverter	MV1-10	365004	4905564	2	0	0	97.3	97.3	1	6789.57	3.25	0	87.64	0	0.71	0	0	21.03	0	0	0	0	0	0	-12.07	-12.07
Inverter	MV1-14	365163	4905049	2	0	0	97.3	97.3	1	6892.39	3.25	0	87.77	0	0.71	0	0	21.16	0	0	0	0	0	0	-12.33	-12.33
Inverter	MV3-4	368502	4907925	2	0	0	89.1	89.1	1	2677.93	3.25	0	79.56	0	1.07	0	0	9.12	0	0	0	0	0	0	-0.69	-0.69
Westbrook Inverter Enclosur	W_INV2	369374	4906388	2	0	0	89.1	89.1	1	2759.48	3.25	0	79.82	0	1.09	0	0	9.25	0	0	0	0	0	0	-1.1	-1.1
Westbrook Inverter Enclosur	W_INV4	369673	4906164	2	0	0	89.1	89.1	1	2770.76	3.25	0	79.85	0	1.09	0	0	9.27	0	0	0	0	0	0	-1.15	-1.15
Inverter	MV1-13	364731	4905241	2	0	0	97.3	97.3	1	7178.36	3.25	0	88.12	0	0.7	0	0	21.52	0	0	0	0	0	0	-13.03	-13.03
Inverter	MV3-22	368656	4907142	2	0	0	89.1	89.1	1	2820.82	3.25	0	80.01	0	1.1	0	0	9.34	0	0	0	0	0	0	-1.4	-1.4
Inverter	MV3-5	368340	4907843	2	0	0	89.1	89.1	1	2854.65	3.25	0	80.11	0	1.11	0	0	9.4	0	0	0	0	0	0	-1.56	-1.56
Westbrook Inverter Enclosur	W_INV3	369508	4906164	2	0	0	89.1	89.1	1	2859.82	3.25	0	80.13	0	1.11	0	0	9.4	0	0	0	0	0	0	-1.59	-1.59
Inverter	MV3-1	368156	4907976	2	0	0	89.1	89.1	1	3006.06	3.25	0	80.56	0	1.15	0	0	9.63	0	0	0	0	0	0	-2.28	-2.28
Westbrook Inverter Enclosur	W_INV1	369409	4906578	2	0	0	86.1	86.1	1	2591.42	3.25	0	79.27	0	1.05	0	0	8.99	0	0	0	0	0	0	-3.25	-3.25
Inverter	MV2-2	365977	4906654	2	0	0	89.1	89.1	1	5466.11	3.25	0	85.75	0	1.75	0	0	13.08	0	0	0	0	0	0	-11.53	-11.53
Gardiner Substation	G_Sub	366586.3	4903349.9	2.5	0	0	90.8	90.8	1	6879.56	4.25	0	87.75	0	2.04	1.93	0.36	10.63	0	0	0	0	0	0	-11.57	-11.57
Inverter	MV1-3	364440	4906039	2	0	0	89.1	89.1	1	7121.02	3.25	0	88.05	0	2.16	0	0	15.13	0	0	0	0	0	0	-16.28	-16.28
Inverters	G_Inv2	366676.9	4903239.1	2	0	0	87.7	87.7	1	6904.91	3.25	0	87.78	0	2.95	0	0	7.89	0	0	0	0	0	0	-10.97	-10.97
Inverters	G_Inv4	366732.8	4903105	2	0	0	87.7	87.7	1	6973.02	3.25	0	87.87	0	2.95	0	0	7.96	0	0	0	0	0	0	-11.12	-11.12
Inverters	G_Inv1	366526.4	4903225.8	2	0	0	87.7	87.7	1	7012.54	3.25	0	87.92	0	2.95	0	0	8	0	0	0	0	0	0	-11.21	-11.21
Inverters	G_Inv6	366788.5	4902972	2	0	0	87.7	87.7	1	7042.73	3.25	0	87.95	0	2.95	0	0	8.03	0	0	0	0	0	0	-11.28	-11.28
Inverters	G_Inv3	366583.7	4903091.4	2	0	0	87.7	87.7	1	7078.02	3.25	0	88	0	2.95	0	0	8.07	0	0	0	0	0	0	-11.36	-11.36
Inverters	G_Inv8	366844.5	4902838.5	2	0	0	87.7	87.7	1	7114.9	3.25	0	88.04	0	2.95	0	0	8.1	0	0	0	0	0	0	-11.44	-11.44
Inverters	G_Inv5	366638.5	4902958.1	2	0	0	87.7	87.7	1	7146.6	3.25	0	88.08	0	2.95	0	0	8.14	0	0	0	0	0	0	-11.51	-11.51
Inverters	G_Inv10	366900.7	4902704.8	2	0	0	87.7	87.7	1	7189.31	3.25	0	88.13	0	2.95	0	0	8.18	0	0	0	0	0	0	-11.61	-11.61
Inverters	G_Inv7	366694.6	4902824.7	2	0	0	87.7	87.7	1	7216.68	3.25	0	88.17	0	2.95	0	0	8.21	0	0	0	0	0	0	-11.67	-11.67
Inverters	G_Inv9	366750.9	4902691.8	2	0	0	87.7	87.7	1	7288.44	3.25	0	88.25	0	2.96	0	0	8.28	0	0	0	0	0	0	-11.83	-11.83
Westbrook Inverter Transfor	W_INVTR6	369881	4906578	2	0	0	77.3	77.3	1	2309.21	3.25	0	78.27	0	-2.51	0	0	1.35	0	0	0	0	0	0	0.23	0.23
Westbrook Inverter Transfor	W_INVTR1	369403	4906578	2	0	0	78.2	78.2	1	2595.36	3.25	0	79.28	0	-2.6	0	0	1.48	0	0	0	0	0	0	0.07	0.07
Westbrook Inverter Transfor	W_INVTR5	369725	4906574	2	0	0	77.3	77.3	1	2399.15	3.25	0	78.6	0	-2.54	0	0	1.39	0	0	0	0	0	0	-0.11	-0.11
Westbrook Inverter Transfor	W_INVTR7	369786	4906417	2	0	0	77.3	77.3	1	2496.08	3.25	0	78.95	0	-2.57	0	0	1.44	0	0	0	0	0	0	-0.47	-0.47
Westbrook Inverter Transfor	W_INVTR2	369368	4906388	2	0	0	77.3	77.3	1	2763.26	3.25	0	79.83	0	-2.65	0	0	1.56	0	0	0	0	0	0	-1.39	-1.39
Westbrook Inverter Transfor	W_INVTR4	369679	4906164	2	0	0	77.3	77.3	1	2767.66	3.25	0	79.84	0	-2.65	0	0	1.56	0	0	0	0	0	0	-1.41	-1.41
Westbrook Inverter Transfor	W_INVTR3	369514	4906164	2	0	0	77.3	77.3	1	2856.46	3.25	0	80.12	0	-2.67	0	0	1.6	0	0	0	0	0	0	-1.7	-1.7
Inverter Transformer	MV6-1 T	370230	4907364	2	0	0	69.4	69.4	1	1463.2	3.25	0	74.31	0	1.96	0	0	4.39	0	0	0	0	0	0	-11.3	-11.3
Inverter Transformer	MV6-4 T	370244	4906966	2	0	0	69.4	69.4	1	1790.38	3.25	0	76.06	0	2.09	0	0	4.75	0	0	0	0	0	0	-13.55	-13.55
Inverter Transformer	MV5-4 T	370330	4908707	2	0	0	56.1	56.1	1	799.18	3.25	0	69.05	0	-0.05	0	0	4.39	0	0	0	0	0	0	-17.33	-17.33
Inverter Transformer	MV5-3 T	370237	4908851	2	0	0	56.1	56.1	1	929.12	3.25	0	70.36	0	-0.01	0	0	4.72	0	0	0	0	0	0	-19.01	-19.01
Inverter Transformer	MV5-5 T	370021	4908690	2	0	0	56.1	56.1	1	1100.26	3.25	0	71.83	0	0.05	0	0	5.13	0	0	0	0	0	0	-20.94	-20.94
Inverter Transformer	MV5-6 T	369987	4908507	2	0	0	56.1	56.1	1	1123.3	3.25	0	72.01	0	0.06	0	0	5.18	0	0	0	0	0	0	-21.19	-21.19
Inverter Transformer	MV5-2 T	370011	4908853	2	0	0	56.1	56.1	1	1144.64	3.25	0	72.17	0	0.06	0	0	5.23	0	0	0	0	0	0	-21.41	-21.41
Inverter Transformer	MV2-1 T	365836	4906816	2	0	0	69.4	69.4	1	5546.46	3.25	0	85.88	0	3.11	0	0	7.74	0	0	0	0	0	0	-27.38	-27.38
Inverter Transformer	MV5-1 T	370015	4909142	2	0	0	56.1	56.1	1	1252.96	3.25	0	72.96	0	0.1	0	0	5.48	0	0	0	0	0	0	-22.48	-22.48
Inverter Transformer	MV1-7 T	364919	4905782	2	0	0	69.4	69.4	1	6774.69	3.25	0	87.62	0	3.29	0	0	8.47	0	0	0	0	0	0	-30.03	-30.03
Inverter Transformer	MV1-10 T	365010	4905564	2	0	0	69.4	69.4	1	6784.17	3.25	0	87.63	0	3.29	0	0	8.48	0	0	0	0	0	0	-30.05	-30.05
Inverter Transformer	MV1-14 T	365157	4905049	2	0	0	69.4	69.4	1	6897.57	3.25	0	87.77	0	3.31	0	0	8.54	0	0	0	0	0	0	-30.27	-30.27
Inverter Transformer	MV1-13 T	364725	4905241	2	0	0	69.4	69.4	1	7183.7	3.25	0	88.13	0	3.34	0	0	8.7	0	0	0	0	0	0	-30.82	-30.82
Inverter Transformer	MV6-2 T	370091	4907339	2	0	0	56.1	56.1	1	1569.71	3.25	0	74.92	0	0.23	0	0	6.17	0	0	0	0	0	0	-25.25	-25.25
Inverter Transformer	MV6-3 T	370202	4907140	2	0	0	56.1	56.1	1	1662.8	3.25	0	75.42	0	0.26	0	0	6.36	0	0	0	0	0	0	-25.98	-25.98
Inverter Transformer	MV4-10 T	369307	4908858	2	0	0	56.1	56.1	1	1832.06	3.25	0	76.26	0	0.33	0	0	6.71	0	0	0	0	0	0	-27.24	-27.24
Inverter Transformer	MV4-11 T	369269	4908855	2	0	0	56.1	56.1	1	1868.95	3.25	0	76.43	0	0.35	0	0	6.78	0	0	0	0	0	0	-27.51	-27.51
Inverter Transformer	MV4-9 T	369284	4909001	2	0	0	56.1	56.1	1	1885.02	3.25	0	76.51	0	0.36	0	0	6.82	0	0	0	0	0	0	-27.62	-27.62
Inverter Transformer	MV4-8 T	369262	4909001	2	0	0	56.1	56.1	1	1906.34	3.25	0	76.6	0	0.36	0	0	6.86	0	0	0	0	0	0	-27.77	-27.77
Inverter Transformer	MV4-14 T	369182	4908507	2	0	0	56.1	56.1	1	1928.18	3.25	0	76.7	0	0.37	0	0	6.9	0	0	0	0	0	0	-27.92	-27.92
Inverter Transformer	MV4-15 T	369170	4908481	2	0	0	56.1	56.1	1	1940.7	3.25	0	76.76	0	0.38	0	0	6.93	0	0	0	0	0	0	-28.01	-28.01
Inverter Transformer	MV4-5 T	369283	4909199	2	0	0	56.1	56.1	1	1944.61	3.25	0	76.78	0	0.38	0	0	6.93	0	0	0	0	0	0	-28.03	-28.03
Inverter Transformer	MV4-6 T	369249	4909192	2	0	0	56.1	56.1	1	1974.24	3.25	0	76.91	0	0.39	0	0	6.99	0	0	0	0	0	0	-28.24	-28.24
Inverter Transformer	MV4-2 T	369267	4909397	2	0	0	56.1	56.1	1	2035.47	3.25	0	77.17	0	0.42	0	0	7.11	0	0	0	0	0	0	-28.65	-28.65
Inverter Transformer	MV4-13 T	369057	4908605	2	0	0	56.1	56.1	1	2054.26	3.25	0	77.25	0	0.43	0	0	7.15	0	0	0	0	0	0	-28.77	-28.77
Inverter Transformer	MV4-3 T	369234	4909397	2	0	0	56.1	56.1	1	2065.4	3.25	0	77.3	0	0.43	0	0	7.17	0	0	0	0	0	0	-28.84	-28.84
Inverter Transformer	MV4-12 T	369049	4908803	2	0	0	56.1	56.1	1	2078.61	3.25	0	77.36	0	0.44	0	0	7.2	0	0	0	0	0	0	-28.93	-28.93
Inverter Transformer	MV4-7 T	369040	4909001	2	0	0	56.1	56.1	1	2122.25	3.25	0	77.54	0	0.46	0	0	7.28	0	0	0	0	0	0	-29.21	-29.21
Inverter Transformer	MV4-4 T	369033	4909199	2	0	0	56.1	56.1	1	2181.17	3.25	0	77.77	0	0.48	0	0	7.39	0	0	0	0	0	0	-29.59	-29.59
Inverter Transformer	MV4-1 T	369017	4909397	2	0	0	56.1	56.1	1	2264.32	3.25	0	78.1	0	0.52	0	0	7.55	0	0	0	0	0	0	-30.11	-30.11
Inverter Transformer	MV3-2 T	368677	4907928	2	0	0	56.1	56.1	1	2507.09	3.25	0	78.98	0	0.62	0	0	8	0	0	0	0	0	0	-31.55	-31.55
Inverter Transformer	MV3-8 T	368685	4907712	2	0	0	56.1	56.1	1	2560.21	3.25	0	79.17	0	0.64	0	0	8.1	0	0	0	0	0	0	-31.85	-31.85
Inverter Transformer	MV3-14 T	368678	4907498	2	0	0	56.1	56.1	1	2643.08	3.25	0	79.44	0	0.68	0	0	8.25	0	0	0	0	0	0	-32.31	-32.31
Inverter Transformer	MV3-4 T	368507	4907925	2	0	0	56.1	56.1	1	2673.07	3.25	0	79.54	0	0.69	0	0	8.3	0	0	0	0	0	0	-32.47	-32.47
Inverter Transformer	MV3-20 T	368683	4907317	2	0	0	56.1	56.1	1	2714.59	3.25	0	79.67	0	0.71	0	0	8.37	0	0	0	0	0	0	-32.7	-32.7
Inverter Transformer	MV3-9 T	368517	4907703	2	0	0	56.1	56.1	1	2722.6	3.25	0	79.7	0	0.71	0	0	8.39	0	0	0	0	0	0	-32.74	-32.74
Inverter Transformer	MV3-16 T	368509	4907475	2	0	0	56.1	56.1	1	2807.95	3.25	0	79.97	0	0.75	0	0	8.54	0	0	0	0	0	0	-33.2	-33.2
Inverter Transformer	MV3-22 T	368661	4907142	2	0	0	56.1	56.1	1	2816.47	3.25	0	79.99	0	0.75	0	0	8.55	0	0	0	0	0	0	-33.24	-33.24
Inverter Transformer	MV3-5 T	368335	4907843	2	0	0	56.1	56.1	1	2859.5	3.25	0	80.13	0	0.77	0	0	8.63	0	0	0	0	0	0	-33.46	-33.46

	Inverter Transformer	MV3-11 T	368340	4907662	2	0	0	56.1	56.1	1	2903.71	3.25	0	80.26	0	0.79	0	0	8.7	0	0	0	0	0	0	-33.69	-33.69
	Inverter Transformer	MV3-21 T	368484	4907206	2	0	0	56.1	56.1	1	2942.25	3.25	0	80.37	0	0.81	0	0	8.77	0	0	0	0	0	0	-33.89	-33.89
	Inverter Transformer	MV3-15 T	368351	4907477	2	0	0	56.1	56.1	1	2954.19	3.25	0	80.41	0	0.81	0	0	8.79	0	0	0	0	0	0	-33.95	-33.95
	Inverter Transformer	MV3-19 T	368352	4907347	2	0	0	56.1	56.1	1	3002.19	3.25	0	80.55	0	0.83	0	0	8.87	0	0	0	0	0	0	-34.19	-34.19
	Inverter Transformer	MV3-1 T	368150	4907976	2	0	0	56.1	56.1	1	3011.95	3.25	0	80.58	0	0.83	0	0	8.89	0	0	0	0	0	0	-34.24	-34.24
	Inverter Transformer	MV3-6 T	368156	4907834	2	0	0	56.1	56.1	1	3035.58	3.25	0	80.64	0	0.84	0	0	8.93	0	0	0	0	0	0	-34.36	-34.36
	Inverter Transformer	MV3-10 T	368162	4907669	2	0	0	56.1	56.1	1	3072	3.25	0	80.75	0	0.86	0	0	8.99	0	0	0	0	0	0	-34.54	-34.54
	Inverter Transformer	MV3-17 T	368183	4907472	2	0	0	56.1	56.1	1	3113.37	3.25	0	80.86	0	0.88	0	0	9.06	0	0	0	0	0	0	-34.74	-34.74
	Inverter Transformer	MV3-3 T	367944	4907927	2	0	0	56.1	56.1	1	3223.48	3.25	0	81.17	0	0.92	0	0	9.24	0	0	0	0	0	0	-35.27	-35.27
	Inverter Transformer	MV3-7 T	367951	4907754	2	0	0	56.1	56.1	1	3253.63	3.25	0	81.25	0	0.94	0	0	9.29	0	0	0	0	0	0	-35.42	-35.42
	Inverter Transformer	MV3-13 T	367958	4907577	2	0	0	56.1	56.1	1	3293.79	3.25	0	81.35	0	0.95	0	0	9.36	0	0	0	0	0	0	-35.61	-35.61
	Inverter Transformer	MV3-18 T	367757	4907412	2	0	0	56.1	56.1	1	3535.43	3.25	0	81.97	0	1.05	0	0	9.74	0	0	0	0	0	0	-36.71	-36.71
	Inverter Transformer	MV3-12 T	367674	4907594	2	0	0	56.1	56.1	1	3562	3.25	0	82.03	0	1.07	0	0	9.79	0	0	0	0	0	0	-36.83	-36.83
	Inverter Transformer	MV2-2 T	365982	4906654	2	0	0	56.1	56.1	1	5461.41	3.25	0	85.75	0	1.79	0	0	12.45	0	0	0	0	0	0	-43.92	-43.92
	Inverter Transformer	MV2-3 T	365814	4906641	2	0	0	56.1	56.1	1	5623.81	3.25	0	86	0	1.84	0	0	12.65	0	0	0	0	0	0	-44.43	-44.43
	Inverter Transformer	MV2-4 T	365590	4906628	2	0	0	56.1	56.1	1	5839.47	3.25	0	86.33	0	1.91	0	0	12.91	0	0	0	0	0	0	-45.09	-45.09
	Line Reactor	NGR	369421	4908787.5	5	0	0	45.4	45.4	1	1708.07	5.25	0	75.65	0	3.41	1.25	0.04	0.7	0	0	0	0	0	0	-35.65	-35.65
	Inverter Transformer	MV1-15 T	365309	4904994	2	0	0	56.1	56.1	1	6795.3	3.25	0	87.64	0	2.2	0	0	14.01	0	0	0	0	0	0	-47.8	-47.8
	Inverter Transformer	MV1-4 T	364821	4905918	2	0	0	56.1	56.1	1	6811	3.25	0	87.66	0	2.21	0	0	14.02	0	0	0	0	0	0	-47.84	-47.84
	Inverter Transformer	MV1-1 T	364721	4906166	2	0	0	56.1	56.1	1	6813.37	3.25	0	87.67	0	2.21	0	0	14.03	0	0	0	0	0	0	-47.84	-47.84
	Inverter Transformer	MV1-2 T	364759	4906063	2	0	0	56.1	56.1	1	6814.4	3.25	0	87.67	0	2.21	0	0	14.03	0	0	0	0	0	0	-47.85	-47.85
	Inverter Transformer	MV1-12 T	365044	4905386	2	0	0	56.1	56.1	1	6833.74	3.25	0	87.69	0	2.21	0	0	14.05	0	0	0	0	0	0	-47.9	-47.9
	Inverter Transformer	MV1-5 T	364676	4905892	2	0	0	56.1	56.1	1	6954.94	3.25	0	87.85	0	2.25	0	0	14.18	0	0	0	0	0	0	-48.22	-48.22
	Inverter Transformer	MV1-8 T	364782	4905647	2	0	0	56.1	56.1	1	6955.04	3.25	0	87.85	0	2.25	0	0	14.18	0	0	0	0	0	0	-48.22	-48.22
	Inverter Transformer	MV1-3 T	364435	4906039	2	0	0	56.1	56.1	1	7125.7	3.25	0	88.06	0	2.29	0	0	14.36	0	0	0	0	0	0	-48.66	-48.66
	Inverter Transformer	MV1-6 T	364482	4905835	2	0	0	56.1	56.1	1	7156.09	3.25	0	88.09	0	2.3	0	0	14.4	0	0	0	0	0	0	-48.73	-48.73
	Inverter Transformer	MV1-9 T	364555	4905646	2	0	0	56.1	56.1	1	7162.6	3.25	0	88.1	0	2.3	0	0	14.4	0	0	0	0	0	0	-48.75	-48.75
	Inverter Transformer	MV1-11 T	364649	4905414	2	0	0	56.1	56.1	1	7174.45	3.25	0	88.12	0	2.31	0	0	14.42	0	0	0	0	0	0	-48.78	-48.78
Limit. Valu	0	0																								
Level D/N:	31.1085	31.1085																								

Receiver: Vacant Lot Receptor
ID: S-VLR26
X: 371059
Y: 4907495
Z: 4.5
Ground: 0

ISO	Description	ID	X	Y	Z	Ground	ReflOrd	LxT	LxN	L/A	Dist.	hm	Freq	Adiv	K0b	Agr	Abar	z	Aatm	Afol	Ahous	Cmet	CmetN	Dc	RL	LtotT	LtotN
	Sol_Luce Substation	S_Substation	369426	4908792	3.5	0	0	112.1	112.1	1	2085.4	5.25	0	77.38	0	0.08	3.91	0.37	4.51	0	0	0	0	0	0	26.19	26.19
	Inverter	MV6-3	370207	4907140	2	0	0	100.3	100.3	1	923	3.25	0	70.3	0	-0.28	0	0	10.65	0	0	0	0	0	0	19.65	19.65
	Inverter	MV6-2	370085	4907339	2	0	0	100.3	100.3	1	986.42	3.25	0	70.88	0	-0.25	0	0	10.87	0	0	0	0	0	0	18.82	18.82
	Inverter	MV6-1	370235	4907364	2	0	0	97.3	97.3	1	834.35	3.25	0	69.43	0	-0.33	0	0	10.32	0	0	0	0	0	0	17.9	17.9
	Inverter	MV5-4	370324	4908707	2	0	0	100.3	100.3	1	1417.45	3.25	0	74.03	0	-0.06	0	0	12.12	0	0	0	0	0	0	14.23	14.23
	Inverter	MV5-5	370015	4908690	2	0	0	100.3	100.3	1	1586.81	3.25	0	75.01	0	0	0	0	12.54	0	0	0	0	0	0	12.77	12.77
	Inverter	MV5-3	370231	4908851	2	0	0	100.3	100.3	1	1588.81	3.25	0	75.02	0	0	0	0	12.54	0	0	0	0	0	0	12.75	12.75
	Inverter	MV5-2	370006	4908853	2	0	0	100.3	100.3	1	1718.42	3.25	0	75.7	0	0.04	0	0	12.84	0	0	0	0	0	0	11.72	11.72
	Inverter	MV5-1	370020	4909142	2	0	0	100.3	100.3	1	1947.34	3.25	0	76.79	0	0.11	0	0	13.35	0	0	0	0	0	0	10.06	10.06
	Inverter	MV4-10	369312	4908858	2	0	0	100.3	100.3	1	2215.8	3.25	0	77.91	0	0.19	0	0	13.9	0	0	0	0	0	0	8.31	8.31
	Inverter	MV4-11	369264	4908855	2	0	0	100.3	100.3	1	2252.03	3.25	0	78.05	0	0.2	0	0	13.98	0	0	0	0	0	0	8.09	8.09
	Inverter	MV4-9	369289	4909001	2	0	0	100.3	100.3	1	2323.99	3.25	0	78.32	0	0.22	0	0	14.12	0	0	0	0	0	0	7.65	7.65
	Inverter	MV4-8	369256	4909001	2	0	0	100.3	100.3	1	2349.22	3.25	0	78.42	0	0.22	0	0	14.17	0	0	0	0	0	0	7.5	7.5
	Inverter	MV3-14	368684	4907498	2	0	0	100.3	100.3	1	2375	3.25	0	78.51	0	0.23	0	0	14.22	0	0	0	0	0	0	7.35	7.35
	Inverter	MV3-20	368689	4907317	2	0	0	100.3	100.3	1	2376.68	3.25	0	78.52	0	0.23	0	0	14.22	0	0	0	0	0	0	7.34	7.34
	Inverter	MV3-8	368680	4907712	2	0	0	100.3	100.3	1	2388.88	3.25	0	78.56	0	0.23	0	0	14.25	0	0	0	0	0	0	7.27	7.27
	Inverter	MV4-5	369289	4909199	2	0	0	100.3	100.3	1	2456.93	3.25	0	78.81	0	0.25	0	0	14.38	0	0	0	0	0	0	6.88	6.88
	Inverter	MV4-6	369243	4909192	2	0	0	100.3	100.3	1	2485.49	3.25	0	78.91	0	0.25	0	0	14.43	0	0	0	0	0	0	6.72	6.72
	Inverter	MV4-7	369035	4909001	2	0	0	100.3	100.3	1	2522.82	3.25	0	79.04	0	0.26	0	0	14.5	0	0	0	0	0	0	6.51	6.51
	Inverter	MV3-16	368514	4907475	2	0	0	100.3	100.3	1	2545.08	3.25	0	79.11	0	0.27	0	0	14.54	0	0	0	0	0	0	6.39	6.39
	Inverter	MV3-9	368512	4907703	2	0	0	100.3	100.3	1	2555.48	3.25	0	79.15	0	0.27	0	0	14.56	0	0	0	0	0	0	6.33	6.33
	Inverter	MV3-21	368478	4907206	2	0	0	100.3	100.3	1	2597.13	3.25	0	79.29	0	0.28	0	0	14.64	0	0	0	0	0	0	6.1	6.1
	Inverter	MV4-2	369272	4909397	2	0	0	100.3	100.3	1	2609.79	3.25	0	79.33	0	0.28	0	0	14.66	0	0	0	0	0	0	6.03	6.03
	Inverter	MV4-3	369229	4909397	2	0	0	100.3	100.3	1	2639.41	3.25	0	79.43	0	0.29	0	0	14.72	0	0	0	0	0	0	5.87	5.87
	Inverter	MV4-4	369027	4909199	2	0	0	100.3	100.3	1	2651.91	3.25	0	79.47	0	0.29	0	0	14.74	0	0	0	0	0	0	5.81	5.81
	Inverter	MV3-15	368357	4907477	2	0	0	100.3	100.3	1	2702.06	3.25	0	79.63	0	0.3	0	0	14.84	0	0	0	0	0	0	5.54	5.54
	Inverter	MV3-19	368357	4907347	2	0	0	100.3	100.3	1	2706.05	3.25	0	79.65	0	0.3	0	0	14.84	0	0	0	0	0	0	5.52	5.52
	Inverter	MV3-11	368346	4907662	2	0	0	100.3	100.3	1	2718.14	3.25	0	79.69	0	0.31	0	0	14.86	0	0	0	0	0	0	5.46	5.46
	Inverter	MV4-1	369011	4909397	2	0	0	100.3	100.3	1	2794.98	3.25	0	79.93	0	0.32	0	0	15.01	0	0	0	0	0	0	5.06	5.06
	Inverter	MV3-17	368178	4907472	2	0	0	100.3	100.3	1	2881.09	3.25	0	80.19	0	0.34	0	0	15.16	0	0	0	0	0	0	4.62	4.62
	Inverter	MV3-10	368167	4907669	2	0	0	100.3	100.3	1	2897.23	3.25	0	80.24	0	0.34	0	0	15.19	0	0	0	0	0	0	4.54	4.54
	Inverter	MV3-6	368162	4907834	2	0	0	100.3	100.3	1	2916.77	3.25	0	80.3	0	0.35	0	0	15.22	0	0	0	0	0	0	4.44	4.44
	Inverter	MV3-13	367963	4907577	2	0	0	100.3	100.3	1	3097.09	3.25	0	80.82	0	0.38	0	0	15.54	0	0	0	0	0	0	3.57	3.57
	Inverter	MV3-7	367945	4907754	2	0	0	100.3	100.3	1	3124.75	3.25	0	80.9	0	0.39	0	0	15.59	0	0	0	0	0	0	3.44	3.44
	DSTATCOM - 10 MVAR #1	DSAT1	369437	4908757	2.5	0	0	96.6	96.6	1	2055.12	3.5	0	77.26	0	3.23	0	0	1.75	0	0	0	0	0	0	14.39	14.39

Inverter	MV3-3	367939	4907927	2	0	0	100.3	100.3	1	3149.77	3.25	0	80.97	0	0.39	0	0	15.63	0	0	0	0	0	0	3.32	3.32
DSTATCOM - 10 MVAR #2	DSAT2	369403	4908757	2.5	0	0	96.6	96.6	1	2082.06	3.5	0	77.37	0	3.24	0	0	1.77	0	0	0	0	0	0	14.25	14.25
Inverter	MV3-18	367752	4907412	2	0	0	100.3	100.3	1	3308.04	3.25	0	81.39	0	0.42	0	0	15.91	0	0	0	0	0	0	2.6	2.6
Inverter	MV3-12	367668	4907594	2	0	0	100.3	100.3	1	3392.45	3.25	0	81.61	0	0.43	0	0	16.05	0	0	0	0	0	0	2.22	2.22
Inverter	MV6-4	370250	4906966	2	0	0	86.1	86.1	1	966.61	3.25	0	70.7	0	0.68	0	0	6.25	0	0	0	0	0	0	8.42	8.42
SubstationTransformer	W_ST	369711.17	4906112.3	2.5	0	0	92	92	1	1930.96	4.25	0	76.72	0	0.7	3.31	0.19	4.25	0	0	0	0	0	0	7	7
Inverter	MV2-3	365820	4906641	2	0	0	100.3	100.3	1	5308.15	3.25	0	85.5	0	0.67	0	0	19.03	0	0	0	0	0	0	-4.88	-4.88
Inverter	MV5-6	369982	4908507	2	0	0	89.1	89.1	1	1477.86	3.25	0	74.39	0	0.79	0	0	7.17	0	0	0	0	0	0	6.71	6.71
Westbrook Inverter Enclosur	W_INV6	369875	4906578	2	0	0	89.1	89.1	1	1497.58	3.25	0	74.51	0	0.79	0	0	7.2	0	0	0	0	0	0	6.55	6.55
Inverter	MV2-4	365586	4906624	2	0	0	100.3	100.3	1	5541.87	3.25	0	85.87	0	0.68	0	0	19.36	0	0	0	0	0	0	-5.6	-5.6
Westbrook Inverter Enclosur	W_INV5	369719	4906574	2	0	0	89.1	89.1	1	1625.99	3.25	0	75.22	0	0.82	0	0	7.42	0	0	0	0	0	0	5.59	5.59
Westbrook Inverter Enclosur	W_INV7	369780	4906417	2	0	0	89.1	89.1	1	1672.7	3.25	0	75.47	0	0.83	0	0	7.5	0	0	0	0	0	0	5.26	5.26
Inverter	MV1-15	365315	4904994	2	0	0	100.3	100.3	1	6264.87	3.25	0	86.94	0	0.71	0	0	20.35	0	0	0	0	0	0	-7.69	-7.69
Inverter	MV1-12	365038	4905386	2	0	0	100.3	100.3	1	6379.68	3.25	0	87.1	0	0.71	0	0	20.5	0	0	0	0	0	0	-8	-8
Inverter	MV1-4	364815	4905918	2	0	0	100.3	100.3	1	6440.07	3.25	0	87.18	0	0.71	0	0	20.58	0	0	0	0	0	0	-8.16	-8.16
Inverter	MV1-2	364753	4906063	2	0	0	100.3	100.3	1	6466.55	3.25	0	87.21	0	0.71	0	0	20.62	0	0	0	0	0	0	-8.23	-8.23
Inverter	MV1-1	364715	4906166	2	0	0	100.3	100.3	1	6481.71	3.25	0	87.23	0	0.71	0	0	20.64	0	0	0	0	0	0	-8.27	-8.27
Inverter	MV1-8	364788	4905647	2	0	0	100.3	100.3	1	6537.63	3.25	0	87.31	0	0.71	0	0	20.71	0	0	0	0	0	0	-8.42	-8.42
Inverter	MV1-5	364671	4905892	2	0	0	100.3	100.3	1	6586.06	3.25	0	87.37	0	0.72	0	0	20.77	0	0	0	0	0	0	-8.55	-8.55
Inverter	MV1-11	364655	4905414	2	0	0	100.3	100.3	1	6733.63	3.25	0	87.56	0	0.71	0	0	20.96	0	0	0	0	0	0	-8.93	-8.93
Inverter	MV1-9	364561	4905646	2	0	0	100.3	100.3	1	6755.95	3.25	0	87.59	0	0.71	0	0	20.99	0	0	0	0	0	0	-8.99	-8.99
Inverter	MV1-6	364477	4905835	2	0	0	100.3	100.3	1	6788.1	3.25	0	87.63	0	0.71	0	0	21.03	0	0	0	0	0	0	-9.07	-9.07
Fixed Reactor Bank 2	FRB2	369464	4908755	6	0	0	89.8	89.8	1	2032.64	5.25	0	77.16	0	-0.99	0	0	4.42	0	0	0	0	0	0	9.18	9.18
Westbrook Inverter Enclosur	W_INV4	369673	4906164	2	0	0	89.1	89.1	1	1921.6	3.25	0	76.67	0	0.89	0	0	7.92	0	0	0	0	0	0	3.58	3.58
Fixed Reactor Bank 1	FRB1	369378	4908755	6	0	0	89.8	89.8	1	2100.8	5.25	0	77.45	0	-0.98	0	0	4.54	0	0	0	0	0	0	8.78	8.78
Westbrook Inverter Enclosur	W_INV2	369374	4906388	2	0	0	89.1	89.1	1	2016.11	3.25	0	77.09	0	0.91	0	0	8.07	0	0	0	0	0	0	2.99	2.99
Inverter	MV2-1	365842	4906816	2	0	0	97.3	97.3	1	5261	3.25	0	85.42	0	0.66	0	0	18.96	0	0	0	0	0	0	-7.73	-7.73
Westbrook Inverter Enclosur	W_INV3	369508	4906164	2	0	0	89.1	89.1	1	2043.81	3.25	0	77.21	0	0.92	0	0	8.12	0	0	0	0	0	0	2.82	2.82
Inverter	MV4-15	369176	4908481	2	0	0	89.1	89.1	1	2125.53	3.25	0	77.55	0	0.94	0	0	8.25	0	0	0	0	0	0	2.32	2.32
Inverter	MV4-14	369176	4908507	2	0	0	89.1	89.1	1	2137.72	3.25	0	77.6	0	0.94	0	0	8.27	0	0	0	0	0	0	2.25	2.25
Inverter	MV4-13	369051	4908605	2	0	0	89.1	89.1	1	2294.38	3.25	0	78.21	0	0.98	0	0	8.52	0	0	0	0	0	0	1.35	1.35
Inverter	MV4-12	369043	4908803	2	0	0	89.1	89.1	1	2403.15	3.25	0	78.62	0	1	0	0	8.69	0	0	0	0	0	0	0.75	0.75
Inverter	MV3-2	368671	4907928	2	0	0	89.1	89.1	1	2426.94	3.25	0	78.7	0	1.01	0	0	8.73	0	0	0	0	0	0	0.62	0.62
Inverter	MV3-22	368656	4907142	2	0	0	89.1	89.1	1	2428.79	3.25	0	78.71	0	1.01	0	0	8.73	0	0	0	0	0	0	0.61	0.61
Inverter	MV1-10	365004	4905564	2	0	0	97.3	97.3	1	6355.45	3.25	0	87.06	0	0.71	0	0	20.47	0	0	0	0	0	0	-10.93	-10.93
Inverter	MV1-7	364925	4905782	2	0	0	97.3	97.3	1	6368.7	3.25	0	87.08	0	0.71	0	0	20.49	0	0	0	0	0	0	-10.97	-10.97
Inverter	MV1-14	365163	4905049	2	0	0	97.3	97.3	1	6383.24	3.25	0	87.1	0	0.71	0	0	20.51	0	0	0	0	0	0	-11.01	-11.01
Inverter	MV3-4	368502	4907925	2	0	0	89.1	89.1	1	2592.9	3.25	0	79.28	0	1.05	0	0	8.99	0	0	0	0	0	0	-0.26	-0.26
Inverter	MV1-13	364731	4905241	2	0	0	97.3	97.3	1	6717.45	3.25	0	87.54	0	0.71	0	0	20.94	0	0	0	0	0	0	-11.89	-11.89
Westbrook Inverter Enclosur	W_INV1	369409	4906578	2	0	0	86.1	86.1	1	1887.7	3.25	0	76.52	0	0.88	0	0	7.86	0	0	0	0	0	0	0.8	0.8
Inverter	MV3-5	368340	4907843	2	0	0	89.1	89.1	1	2741.18	3.25	0	79.76	0	1.08	0	0	9.22	0	0	0	0	0	0	-1.01	-1.01
Inverter	MV3-1	368156	4907976	2	0	0	89.1	89.1	1	2942.58	3.25	0	80.37	0	1.13	0	0	9.53	0	0	0	0	0	0	-1.98	-1.98
Gardiner Substation	G_Sub	366586.3	4903349.9	2.5	0	0	90.8	90.8	1	6098.11	4.25	0	86.7	0	1.9	2.08	0.34	9.85	0	0	0	0	0	0	-9.75	-9.75
Inverter	MV2-2	365977	4906654	2	0	0	89.1	89.1	1	5151.12	3.25	0	85.24	0	1.68	0	0	12.66	0	0	0	0	0	0	-10.52	-10.52
Westbrook Inverter Transfor	W_INVTR6	369881	4906578	2	0	0	77.3	77.3	1	1492.84	3.25	0	74.48	0	-2.2	0	0	0.95	0	0	0	0	0	0	4.11	4.11
Westbrook Inverter Transfor	W_INVTR5	369725	4906574	2	0	0	77.3	77.3	1	1621.05	3.25	0	75.2	0	-2.26	0	0	1.02	0	0	0	0	0	0	3.38	3.38
Westbrook Inverter Transfor	W_INVTR7	369786	4906417	2	0	0	77.3	77.3	1	1668.12	3.25	0	75.44	0	-2.28	0	0	1.04	0	0	0	0	0	0	3.13	3.13
Westbrook Inverter Transfor	W_INVTR1	369403	4906578	2	0	0	78.2	78.2	1	1892.94	3.25	0	76.54	0	-2.37	0	0	1.15	0	0	0	0	0	0	2.91	2.91
Inverter	MV1-3	364440	4906039	2	0	0	89.1	89.1	1	6777.25	3.25	0	87.62	0	2.07	0	0	14.72	0	0	0	0	0	0	-15.36	-15.36
Inverters	G_Inv2	366676.9	4903239.1	2	0	0	87.7	87.7	1	6108.64	3.25	0	86.72	0	2.92	0	0	7.09	0	0	0	0	0	0	-9.07	-9.07
Inverters	G_Inv4	366732.8	4903105	2	0	0	87.7	87.7	1	6163.45	3.25	0	86.8	0	2.92	0	0	7.15	0	0	0	0	0	0	-9.21	-9.21
Inverters	G_Inv6	366788.5	4902972	2	0	0	87.7	87.7	1	6220.51	3.25	0	86.88	0	2.93	0	0	7.2	0	0	0	0	0	0	-9.35	-9.35
Inverters	G_Inv1	366526.4	4903225.8	2	0	0	87.7	87.7	1	6226.6	3.25	0	86.89	0	2.93	0	0	7.21	0	0	0	0	0	0	-9.36	-9.36
Inverters	G_Inv3	366583.7	4903091.4	2	0	0	87.7	87.7	1	6278.54	3.25	0	86.96	0	2.93	0	0	7.26	0	0	0	0	0	0	-9.49	-9.49
Inverters	G_Inv8	366844.5	4902838.5	2	0	0	87.7	87.7	1	6280.53	3.25	0	86.96	0	2.93	0	0	7.26	0	0	0	0	0	0	-9.49	-9.49
Westbrook Inverter Transfor	W_INVTR4	369679	4906164	2	0	0	77.3	77.3	1	1917.28	3.25	0	76.65	0	-2.37	0	0	1.17	0	0	0	0	0	0	1.9	1.9
Inverters	G_Inv5	366638.5	4902958.1	2	0	0	87.7	87.7	1	6334.37	3.38	0	87.03	0	3.27	1.4	0	7.32	0	0	0	0	0	0	-11.36	-11.36
Inverters	G_Inv10	366900.7	4902704.8	2	0	0	87.7	87.7	1	6343.3	3.25	0	87.05	0	2.93	0	0	7.33	0	0	0	0	0	0	-9.65	-9.65
Inverters	G_Inv7	366694.6	4902824.7	2	0	0	87.7	87.7	1	6392.16	3.25	0	87.11	0	2.93	0	0	7.38	0	0	0	0	0	0	-9.76	-9.76
Inverters	G_Inv9	366750.9	4902691.8	2	0	0	87.7	87.7	1	6452.17	3.25	0	87.19	0	2.93	0	0	7.44	0	0	0	0	0	0	-9.91	-9.91
Westbrook Inverter Transfor	W_INVTR2	369368	4906388	2	0	0	77.3	77.3	1	2021.12	3.25	0	77.11	0	-2.41	0	0	1.22	0	0	0	0	0	0	1.43	1.43
Westbrook Inverter Transfor	W_INVTR3	369514	4906164	2	0	0	77.3	77.3	1	2039.26	3.25	0	77.19	0	-2.42	0	0	1.22	0	0	0	0	0	0	1.35	1.35
Inverter Transformer	MV6-1 T	370230	4907364	2	0	0	69.4	69.4	1	839.29	3.25	0	69.48	0	1.53	0	0	3.58	0	0	0	0	0	0	-5.24	-5.24
Inverter Transformer	MV6-4 T	370244	4906966	2	0	0	69.4	69.4	1	971.63	3.25	0	70.75	0	1.66	0	0	3.77	0	0	0	0	0	0	-6.83	-6.83
Inverter Transformer	MV6-3 T	370202	4907140	2	0	0	56.1	56.1	1	927.62	3.25	0	70.35	0	-0.01	0	0	4.71	0	0	0	0	0	0	-18.99	-18.99
Inverter Transformer	MV6-2 T	370091	4907339	2	0	0	56.1	56.1	1	980.49	3.25	0	70.83	0	0.01	0	0	4.84	0	0	0	0	0	0	-19.62	-19.62
Inverter Transformer	MV2-1 T	365836	4906816	2	0	0	69.4	69.4	1	5266.95	3.25	0	85.43	0	3.06	0	0	7.56	0	0	0	0	0	0	-26.7	-26.7
Inverter Transformer	MV1-10 T	365010	4905564	2	0	0	69.4	69.4	1	6349.74	3.25	0	87.06	0	3.24	0	0	8.23	0	0	0	0	0	0	-29.17	-29.17
Inverter Transformer	MV1-7 T	364919	4905782	2	0	0	69.4	69.4	1	6374.48	3.25	0	87.09	0	3.24	0	0	8.24	0	0	0	0	0	0	-29.22	-29.22
Inverter Transformer	MV1-14 T	365157	4905049	2	0	0	69.4	69.4	1	6388.78	3.25	0	87.11	0	3.24	0	0	8.25	0	0	0	0	0	0	-29.25	-29.25
Inverter Transformer	MV5-4 T	370330	4908707	2	0	0	56.1	56.1	1	1414.35	3.25	0	74.01	0	0.17	0	0	5.83	0	0	0	0	0	0	-23.95	-23.95
Inverter Transformer	MV1-13 T	364725	4905241	2	0	0	69.4	69.4	1	6723.1	3.25	0	87.55	0	3.29	0	0	8.44	0	0	0	0	0	0	-29.93	-29.93
Inverter Transformer	MV5-6 T	369987	4908507	2	0	0	56.1	56.1	1	1474.22	3.25	0	74.37	0	0.19	0	0	5.96	0	0	0	0	0	0	-24.46	-24.46
Inverter Transformer	MV5-5 T	370021	4908690	2	0	0	56.1	56.1	1	1582.87	3.25	0	74.99	0	0.23	0	0	6.19	0	0	0	0	0	0	-25.36	-25.36

	Inverter Transformer	MV5-3 T	370237	4908851	2	0	0	56.1	56.1	1	1585.69	3.25	0	75	0	0.23	0	0	6.2	0	0	0	0	0	0	-25.38	-25.38
	Inverter Transformer	MV5-2 T	370011	4908853	2	0	0	56.1	56.1	1	1715.36	3.25	0	75.69	0	0.29	0	0	6.47	0	0	0	0	0	0	-26.38	-26.38
	Inverter Transformer	MV5-1 T	370015	4909142	2	0	0	56.1	56.1	1	1950.01	3.25	0	76.8	0	0.38	0	0	6.94	0	0	0	0	0	0	-28.07	-28.07
	Inverter Transformer	MV4-15 T	369170	4908481	2	0	0	56.1	56.1	1	2130.85	3.25	0	77.57	0	0.46	0	0	7.3	0	0	0	0	0	0	-29.27	-29.27
	Inverter Transformer	MV4-14 T	369182	4908507	2	0	0	56.1	56.1	1	2132.44	3.25	0	77.58	0	0.46	0	0	7.3	0	0	0	0	0	0	-29.28	-29.28
	Inverter Transformer	MV4-10 T	369307	4908858	2	0	0	56.1	56.1	1	2219.75	3.25	0	77.93	0	0.5	0	0	7.47	0	0	0	0	0	0	-29.83	-29.83
	Inverter Transformer	MV4-11 T	369269	4908855	2	0	0	56.1	56.1	1	2248.04	3.25	0	78.04	0	0.51	0	0	7.52	0	0	0	0	0	0	-30.01	-30.01
	Inverter Transformer	MV4-13 T	369057	4908605	2	0	0	56.1	56.1	1	2289.13	3.25	0	78.19	0	0.53	0	0	7.6	0	0	0	0	0	0	-30.26	-30.26
	Inverter Transformer	MV4-9 T	369284	4909001	2	0	0	56.1	56.1	1	2327.8	3.25	0	78.34	0	0.54	0	0	7.67	0	0	0	0	0	0	-30.5	-30.5
	Inverter Transformer	MV4-8 T	369262	4909001	2	0	0	56.1	56.1	1	2344.62	3.25	0	78.4	0	0.55	0	0	7.7	0	0	0	0	0	0	-30.6	-30.6
	Inverter Transformer	MV3-14 T	368678	4907498	2	0	0	56.1	56.1	1	2381	3.25	0	78.54	0	0.57	0	0	7.77	0	0	0	0	0	0	-30.81	-30.81
	Inverter Transformer	MV3-20 T	368683	4907317	2	0	0	56.1	56.1	1	2382.66	3.25	0	78.54	0	0.57	0	0	7.77	0	0	0	0	0	0	-30.82	-30.82
	Inverter Transformer	MV3-8 T	368685	4907712	2	0	0	56.1	56.1	1	2383.9	3.25	0	78.55	0	0.57	0	0	7.78	0	0	0	0	0	0	-30.83	-30.83
	Inverter Transformer	MV4-12 T	369049	4908803	2	0	0	56.1	56.1	1	2398.12	3.25	0	78.6	0	0.57	0	0	7.8	0	0	0	0	0	0	-30.91	-30.91
	Inverter Transformer	MV3-2 T	368677	4907928	2	0	0	56.1	56.1	1	2421.04	3.25	0	78.68	0	0.58	0	0	7.84	0	0	0	0	0	0	-31.05	-31.05
	Inverter Transformer	MV3-22 T	368661	4907142	2	0	0	56.1	56.1	1	2423.84	3.25	0	78.69	0	0.58	0	0	7.85	0	0	0	0	0	0	-31.07	-31.07
	Inverter Transformer	MV4-5 T	369283	4909199	2	0	0	56.1	56.1	1	2461.26	3.25	0	78.82	0	0.6	0	0	7.92	0	0	0	0	0	0	-31.28	-31.28
	Inverter Transformer	MV4-6 T	369249	4909192	2	0	0	56.1	56.1	1	2481.11	3.25	0	78.89	0	0.61	0	0	7.96	0	0	0	0	0	0	-31.4	-31.4
	Inverter Transformer	MV4-7 T	369040	4909001	2	0	0	56.1	56.1	1	2518.81	3.25	0	79.02	0	0.62	0	0	8.02	0	0	0	0	0	0	-31.61	-31.61
	Inverter Transformer	MV3-16 T	368509	4907475	2	0	0	56.1	56.1	1	2550.08	3.25	0	79.13	0	0.64	0	0	8.08	0	0	0	0	0	0	-31.79	-31.79
	Inverter Transformer	MV3-9 T	368517	4907703	2	0	0	56.1	56.1	1	2550.5	3.25	0	79.13	0	0.64	0	0	8.08	0	0	0	0	0	0	-31.79	-31.79
	Inverter Transformer	MV3-4 T	368507	4907925	2	0	0	56.1	56.1	1	2587.97	3.25	0	79.26	0	0.65	0	0	8.15	0	0	0	0	0	0	-32	-32
	Inverter Transformer	MV3-21 T	368484	4907206	2	0	0	56.1	56.1	1	2591.17	3.25	0	79.27	0	0.66	0	0	8.15	0	0	0	0	0	0	-32.02	-32.02
	Inverter Transformer	MV4-2 T	369267	4909397	2	0	0	56.1	56.1	1	2613.21	3.25	0	79.34	0	0.66	0	0	8.19	0	0	0	0	0	0	-32.14	-32.14
	Inverter Transformer	MV4-3 T	369234	4909397	2	0	0	56.1	56.1	1	2635.95	3.25	0	79.42	0	0.67	0	0	8.23	0	0	0	0	0	0	-32.27	-32.27
	Inverter Transformer	MV4-4 T	369033	4909199	2	0	0	56.1	56.1	1	2647.32	3.25	0	79.46	0	0.68	0	0	8.25	0	0	0	0	0	0	-32.33	-32.33
	Inverter Transformer	MV3-15 T	368351	4907477	2	0	0	56.1	56.1	1	2708.06	3.25	0	79.65	0	0.71	0	0	8.36	0	0	0	0	0	0	-32.66	-32.66
	Inverter Transformer	MV3-19 T	368352	4907347	2	0	0	56.1	56.1	1	2711.04	3.25	0	79.66	0	0.71	0	0	8.37	0	0	0	0	0	0	-32.68	-32.68
	Inverter Transformer	MV3-11 T	368340	4907662	2	0	0	56.1	56.1	1	2724.12	3.25	0	79.7	0	0.71	0	0	8.39	0	0	0	0	0	0	-32.75	-32.75
	Inverter Transformer	MV3-5 T	368335	4907843	2	0	0	56.1	56.1	1	2746.14	3.25	0	79.77	0	0.72	0	0	8.43	0	0	0	0	0	0	-32.87	-32.87
	Inverter Transformer	MV4-1 T	369017	4909397	2	0	0	56.1	56.1	1	2790.59	3.25	0	79.91	0	0.74	0	0	8.51	0	0	0	0	0	0	-33.1	-33.1
	Inverter Transformer	MV3-17 T	368183	4907472	2	0	0	56.1	56.1	1	2876.09	3.25	0	80.18	0	0.78	0	0	8.66	0	0	0	0	0	0	-33.55	-33.55
	Inverter Transformer	MV3-10 T	368162	4907669	2	0	0	56.1	56.1	1	2902.22	3.25	0	80.25	0	0.79	0	0	8.7	0	0	0	0	0	0	-33.69	-33.69
	Inverter Transformer	MV3-6 T	368156	4907834	2	0	0	56.1	56.1	1	2922.73	3.25	0	80.32	0	0.8	0	0	8.74	0	0	0	0	0	0	-33.79	-33.79
	Inverter Transformer	MV3-1 T	368150	4907976	2	0	0	56.1	56.1	1	2948.5	3.25	0	80.39	0	0.81	0	0	8.78	0	0	0	0	0	0	-33.92	-33.92
	Inverter Transformer	MV3-13 T	367958	4907577	2	0	0	56.1	56.1	1	3102.08	3.25	0	80.83	0	0.87	0	0	9.04	0	0	0	0	0	0	-34.69	-34.69
	Inverter Transformer	MV3-7 T	367951	4907754	2	0	0	56.1	56.1	1	3118.77	3.25	0	80.88	0	0.88	0	0	9.07	0	0	0	0	0	0	-34.77	-34.77
	Inverter Transformer	MV3-3 T	367944	4907927	2	0	0	56.1	56.1	1	3144.81	3.25	0	80.95	0	0.89	0	0	9.11	0	0	0	0	0	0	-34.9	-34.9
	Inverter Transformer	MV3-18 T	367757	4907412	2	0	0	56.1	56.1	1	3303.04	3.25	0	81.38	0	0.96	0	0	9.37	0	0	0	0	0	0	-35.65	-35.65
	Inverter Transformer	MV3-12 T	367674	4907594	2	0	0	56.1	56.1	1	3386.45	3.25	0	81.59	0	0.99	0	0	9.51	0	0	0	0	0	0	-36.04	-36.04
	Inverter Transformer	MV2-2 T	365982	4906654	2	0	0	56.1	56.1	1	5146.18	3.25	0	85.23	0	1.68	0	0	12.05	0	0	0	0	0	0	-42.89	-42.89
	Inverter Transformer	MV2-3 T	365814	4906641	2	0	0	56.1	56.1	1	5314.07	3.25	0	85.51	0	1.74	0	0	12.26	0	0	0	0	0	0	-43.45	-43.45
	Inverter Transformer	MV2-4 T	365590	4906628	2	0	0	56.1	56.1	1	5537.3	3.25	0	85.87	0	1.81	0	0	12.54	0	0	0	0	0	0	-44.16	-44.16
	Inverter Transformer	MV1-15 T	365309	4904994	2	0	0	56.1	56.1	1	6270.37	3.25	0	86.95	0	2.05	0	0	13.42	0	0	0	0	0	0	-46.35	-46.35
	Inverter Transformer	MV1-12 T	365044	4905386	2	0	0	56.1	56.1	1	6374.02	3.25	0	87.09	0	2.08	0	0	13.54	0	0	0	0	0	0	-46.65	-46.65
	Inverter Transformer	MV1-4 T	364821	4905918	2	0	0	56.1	56.1	1	6434.25	3.25	0	87.17	0	2.1	0	0	13.61	0	0	0	0	0	0	-46.82	-46.82
	Inverter Transformer	MV1-2 T	364759	4906063	2	0	0	56.1	56.1	1	6460.7	3.25	0	87.21	0	2.11	0	0	13.64	0	0	0	0	0	0	-46.89	-46.89
	Inverter Transformer	MV1-1 T	364721	4906166	2	0	0	56.1	56.1	1	6475.84	3.25	0	87.23	0	2.11	0	0	13.65	0	0	0	0	0	0	-46.93	-46.93
	Inverter Transformer	MV1-8 T	364782	4905647	2	0	0	56.1	56.1	1	6543.38	3.25	0	87.32	0	2.13	0	0	13.73	0	0	0	0	0	0	-47.12	-47.12
	Inverter Transformer	MV1-5 T	364676	4905892	2	0	0	56.1	56.1	1	6581.21	3.25	0	87.37	0	2.14	0	0	13.77	0	0	0	0	0	0	-47.22	-47.22
	Inverter Transformer	MV1-11 T	364649	4905414	2	0	0	56.1	56.1	1	6739.34	3.25	0	87.57	0	2.19	0	0	13.95	0	0	0	0	0	0	-47.65	-47.65
	Inverter Transformer	MV1-9 T	364555	4905646	2	0	0	56.1	56.1	1	6761.72	3.25	0	87.6	0	2.19	0	0	13.97	0	0	0	0	0	0	-47.71	-47.71
	Inverter Transformer	MV1-3 T	364435	4906039	2	0	0	56.1	56.1	1	6782.13	3.25	0	87.63	0	2.2	0	0	13.99	0	0	0	0	0	0	-47.76	-47.76
	Inverter Transformer	MV1-6 T	364482	4905835	2	0	0	56.1	56.1	1	6783.25	3.25	0	87.63	0	2.2	0	0	13.99	0	0	0	0	0	0	-47.76	-47.76
	Line Reactor	NGR	369421	4908787.5	5	0	0	45.4	45.4	1	2086.53	5.25	0	77.39	0	3.37	1.28	0.07	0.85	0	0	0	0	0	0	-37.54	-37.54
Limit. Valu	0	0																								
Level D/N:	29.9164	29.9164																								

Receiver: Vacant Lot Receptor
ID: S-VLR27
X: 371062
Y: 4907411
Z: 4.5
Ground: 0

ISO	Description	ID	X	Y	Z	Ground	ReflOrd	LxT	LxN	L/A	Dist.	hm	Freq	Adiv	K0b	Agr	Abar	z	Aatm	Afol	Ahous	Cmet	CmetN	Dc	RL	LtotT	LtotN
	Sol_Luce Substation	S_Substation	369426	4908792	3.5	0	0	112.1	112.1	1	2140.95	5.25	0	77.61	0	0.08	3.83	0.37	4.6	0	0	0	0	0	0	25.94	25.94
	Inverter	MV6-3	370207	4907140	2	0	0	100.3	100.3	1	896.92	3.25	0	70.06	0	-0.3	0	0	10.55	0	0	0	0	0	0	20	20
	Inverter	MV6-2	370085	4907339	2	0	0	100.3	100.3	1	979.65	3.25	0	70.82	0	-0.26	0	0	10.84	0	0	0	0	0	0	18.9	18.9
	Inverter	MV6-1	370235	4907364	2	0	0	97.3	97.3	1	828.34	3.25	0	69.36	0	-0.34	0	0	10.29	0	0	0	0	0	0	17.99	17.99
	Inverter	MV5-4	370324	4908707	2	0	0	100.3	100.3	1	1491.4	3.25	0	74.47	0	-0.04	0	0	12.3	0	0	0	0	0	0	13.57	13.57
	Inverter	MV5-5	370015	4908690	2	0	0	100.3	100.3	1	1652.89	3.25	0	75.36	0	0.02	0	0	12.69	0	0	0	0	0	0	12.23	12.23
	Inverter	MV5-3	370231	4908851	2	0	0	100.3	100.3	1	1662.58	3.25	0	75.42	0	0.02	0	0	12.72	0	0	0	0	0	0	12.16	12.16
	Inverter	MV5-2	370006	4908853	2	0	0	100.3	100.3	1	1787.32	3.25	0	76.04	0	0.07	0	0	13	0	0	0	0	0	0	11.2	11.2

Inverter	MV5-1	370020	4909142	2	0	0	100.3	100.3	1	2020.43	3.25	0	77.11	0	0.14	0	0	13.5	0	0	0	0	0	0	9.56	9.56
Inverter	MV4-10	369312	4908858	2	0	0	100.3	100.3	1	2270.75	3.25	0	78.12	0	0.2	0	0	14.01	0	0	0	0	0	0	7.97	7.97
Inverter	MV4-11	369264	4908855	2	0	0	100.3	100.3	1	2306.07	3.25	0	78.26	0	0.21	0	0	14.08	0	0	0	0	0	0	7.76	7.76
Inverter	MV3-20	368689	4907317	2	0	0	100.3	100.3	1	2374.86	3.25	0	78.51	0	0.23	0	0	14.22	0	0	0	0	0	0	7.35	7.35
Inverter	MV3-14	368684	4907498	2	0	0	100.3	100.3	1	2379.59	3.25	0	78.53	0	0.23	0	0	14.23	0	0	0	0	0	0	7.33	7.33
Inverter	MV4-9	369289	4909001	2	0	0	100.3	100.3	1	2381.52	3.25	0	78.54	0	0.23	0	0	14.23	0	0	0	0	0	0	7.31	7.31
Inverter	MV3-8	368680	4907712	2	0	0	100.3	100.3	1	2400.94	3.25	0	78.61	0	0.23	0	0	14.27	0	0	0	0	0	0	7.2	7.2
Inverter	MV4-8	369256	4909001	2	0	0	100.3	100.3	1	2406.19	3.25	0	78.63	0	0.24	0	0	14.28	0	0	0	0	0	0	7.17	7.17
Inverter	MV4-5	369289	4909199	2	0	0	100.3	100.3	1	2518.03	3.25	0	79.02	0	0.26	0	0	14.49	0	0	0	0	0	0	6.54	6.54
Inverter	MV4-6	369243	4909192	2	0	0	100.3	100.3	1	2545.73	3.25	0	79.12	0	0.27	0	0	14.54	0	0	0	0	0	0	6.38	6.38
Inverter	MV3-16	368514	4907475	2	0	0	100.3	100.3	1	2548.8	3.25	0	79.13	0	0.27	0	0	14.55	0	0	0	0	0	0	6.37	6.37
Inverter	MV3-9	368512	4907703	2	0	0	100.3	100.3	1	2566.67	3.25	0	79.19	0	0.27	0	0	14.58	0	0	0	0	0	0	6.27	6.27
Inverter	MV4-7	369035	4909001	2	0	0	100.3	100.3	1	2576.21	3.25	0	79.22	0	0.27	0	0	14.6	0	0	0	0	0	0	6.22	6.22
Inverter	MV3-21	368478	4907206	2	0	0	100.3	100.3	1	2592.12	3.25	0	79.27	0	0.28	0	0	14.63	0	0	0	0	0	0	6.13	6.13
Inverter	MV4-2	369272	4909397	2	0	0	100.3	100.3	1	2673.63	3.25	0	79.54	0	0.3	0	0	14.78	0	0	0	0	0	0	5.69	5.69
Inverter	MV4-3	369229	4909397	2	0	0	100.3	100.3	1	2702.61	3.25	0	79.64	0	0.3	0	0	14.84	0	0	0	0	0	0	5.54	5.54
Inverter	MV3-19	368357	4907347	2	0	0	100.3	100.3	1	2705.76	3.25	0	79.65	0	0.3	0	0	14.84	0	0	0	0	0	0	5.52	5.52
Inverter	MV3-15	368357	4907477	2	0	0	100.3	100.3	1	2705.81	3.25	0	79.65	0	0.3	0	0	14.84	0	0	0	0	0	0	5.52	5.52
Inverter	MV4-4	369027	4909199	2	0	0	100.3	100.3	1	2708.91	3.25	0	79.66	0	0.3	0	0	14.85	0	0	0	0	0	0	5.5	5.5
Inverter	MV3-11	368346	4907662	2	0	0	100.3	100.3	1	2727.57	3.25	0	79.72	0	0.31	0	0	14.88	0	0	0	0	0	0	5.41	5.41
Inverter	MV4-1	369011	4909397	2	0	0	100.3	100.3	1	2854.96	3.25	0	80.11	0	0.33	0	0	15.11	0	0	0	0	0	0	4.75	4.75
Inverter	MV3-17	368178	4907472	2	0	0	100.3	100.3	1	2884.65	3.25	0	80.2	0	0.34	0	0	15.17	0	0	0	0	0	0	4.6	4.6
Inverter	MV3-10	368167	4907669	2	0	0	100.3	100.3	1	2906.47	3.25	0	80.27	0	0.34	0	0	15.21	0	0	0	0	0	0	4.5	4.5
Inverter	MV3-6	368162	4907834	2	0	0	100.3	100.3	1	2930.69	3.25	0	80.34	0	0.35	0	0	15.25	0	0	0	0	0	0	4.37	4.37
Inverter	MV3-13	367963	4907577	2	0	0	100.3	100.3	1	3103.44	3.25	0	80.84	0	0.38	0	0	15.55	0	0	0	0	0	0	3.54	3.54
Inverter	MV3-7	367945	4907754	2	0	0	100.3	100.3	1	3135.82	3.25	0	80.93	0	0.39	0	0	15.61	0	0	0	0	0	0	3.39	3.39
Inverter	MV3-3	367939	4907927	2	0	0	100.3	100.3	1	3165.34	3.25	0	81.01	0	0.39	0	0	15.66	0	0	0	0	0	0	3.25	3.25
DSTATCOM - 10 MVAR #1	DSAT1	369437	4908757	2.5	0	0	96.6	96.6	1	2110.06	3.5	0	77.49	0	3.24	0	0	1.78	0	0	0	0	0	0	14.12	14.12
DSTATCOM - 10 MVAR #2	DSAT2	369403	4908757	2.5	0	0	96.6	96.6	1	2136.35	3.5	0	77.59	0	3.25	0	0	1.8	0	0	0	0	0	0	13.99	13.99
Inverter	MV3-18	367752	4907412	2	0	0	100.3	100.3	1	3310	3.25	0	81.4	0	0.42	0	0	15.91	0	0	0	0	0	0	2.59	2.59
Inverter	MV3-12	367668	4907594	2	0	0	100.3	100.3	1	3398.93	3.25	0	81.63	0	0.43	0	0	16.06	0	0	0	0	0	0	2.19	2.19
Inverter	MV6-4	370250	4906966	2	0	0	86.1	86.1	1	925.95	3.25	0	70.33	0	0.67	0	0	6.17	0	0	0	0	0	0	8.88	8.88
SubstationTransformer	W_ST	369711.17	4906112.3	2.5	0	0	92	92	1	1873.89	4.25	0	76.45	0	0.69	3.36	0.2	4.15	0	0	0	0	0	0	7.32	7.32
Westbrook Inverter Enclosur	W_INV6	369875	4906578	2	0	0	89.1	89.1	1	1450.13	3.25	0	74.23	0	0.78	0	0	7.12	0	0	0	0	0	0	6.93	6.93
Inverter	MV2-3	365820	4906641	2	0	0	100.3	100.3	1	5298.25	3.25	0	85.48	0	0.67	0	0	19.01	0	0	0	0	0	0	-4.85	-4.85
Inverter	MV2-4	365586	4906624	2	0	0	100.3	100.3	1	5532.26	3.25	0	85.86	0	0.68	0	0	19.35	0	0	0	0	0	0	-5.57	-5.57
Inverter	MV5-6	369982	4908507	2	0	0	89.1	89.1	1	1538.71	3.25	0	74.74	0	0.8	0	0	7.27	0	0	0	0	0	0	6.24	6.24
Westbrook Inverter Enclosur	W_INV5	369719	4906574	2	0	0	89.1	89.1	1	1582.47	3.25	0	74.99	0	0.81	0	0	7.35	0	0	0	0	0	0	5.91	5.91
Westbrook Inverter Enclosur	W_INV7	369780	4906417	2	0	0	89.1	89.1	1	1622.21	3.25	0	75.2	0	0.82	0	0	7.42	0	0	0	0	0	0	5.62	5.62
Inverter	MV1-15	365315	4904994	2	0	0	100.3	100.3	1	6234.57	3.25	0	86.9	0	0.71	0	0	20.31	0	0	0	0	0	0	-7.6	-7.6
Inverter	MV1-12	365038	4905386	2	0	0	100.3	100.3	1	6355.25	3.25	0	87.06	0	0.71	0	0	20.47	0	0	0	0	0	0	-7.93	-7.93
Inverter	MV1-4	364815	4905918	2	0	0	100.3	100.3	1	6422.93	3.25	0	87.15	0	0.71	0	0	20.56	0	0	0	0	0	0	-8.11	-8.11
Inverter	MV1-2	364753	4906063	2	0	0	100.3	100.3	1	6451.4	3.25	0	87.19	0	0.71	0	0	20.6	0	0	0	0	0	0	-8.19	-8.19
Inverter	MV1-1	364715	4906166	2	0	0	100.3	100.3	1	6467.95	3.25	0	87.22	0	0.71	0	0	20.62	0	0	0	0	0	0	-8.24	-8.24
Inverter	MV1-8	364788	4905647	2	0	0	100.3	100.3	1	6517.27	3.25	0	87.28	0	0.71	0	0	20.68	0	0	0	0	0	0	-8.37	-8.37
Inverter	MV1-5	364671	4905892	2	0	0	100.3	100.3	1	6569.04	3.25	0	87.35	0	0.72	0	0	20.75	0	0	0	0	0	0	-8.5	-8.5
Inverter	MV1-11	364655	4905414	2	0	0	100.3	100.3	1	6711.01	3.25	0	87.54	0	0.71	0	0	20.93	0	0	0	0	0	0	-8.87	-8.87
Inverter	MV1-9	364561	4905646	2	0	0	100.3	100.3	1	6736.34	3.25	0	87.57	0	0.71	0	0	20.96	0	0	0	0	0	0	-8.94	-8.94
Inverter	MV1-6	364477	4905835	2	0	0	100.3	100.3	1	6770.97	3.25	0	87.61	0	0.71	0	0	21.01	0	0	0	0	0	0	-9.02	-9.02
Westbrook Inverter Enclosur	W_INV4	369673	4906164	2	0	0	89.1	89.1	1	1866.64	3.25	0	76.42	0	0.88	0	0	7.83	0	0	0	0	0	0	3.93	3.93
Fixed Reactor Bank 2	FRB2	369464	4908755	6	0	0	89.8	89.8	1	2088.05	5.25	0	77.39	0	-0.98	0	0	4.52	0	0	0	0	0	0	8.85	8.85
Westbrook Inverter Enclosur	W_INV2	369374	4906388	2	0	0	89.1	89.1	1	1973.8	3.25	0	76.91	0	0.9	0	0	8	0	0	0	0	0	0	3.25	3.25
Fixed Reactor Bank 1	FRB1	369378	4908755	6	0	0	89.8	89.8	1	2154.58	5.25	0	77.67	0	-0.98	0	0	4.63	0	0	0	0	0	0	8.46	8.46
Westbrook Inverter Enclosur	W_INV3	369508	4906164	2	0	0	89.1	89.1	1	1992.47	3.25	0	76.99	0	0.91	0	0	8.03	0	0	0	0	0	0	3.13	3.13
Inverter	MV2-1	365842	4906816	2	0	0	97.3	97.3	1	5253.8	3.25	0	85.41	0	0.66	0	0	18.95	0	0	0	0	0	0	-7.71	-7.71
Inverter	MV4-15	369176	4908481	2	0	0	89.1	89.1	1	2168.39	3.25	0	77.72	0	0.95	0	0	8.32	0	0	0	0	0	0	2.07	2.07
Inverter	MV4-14	369176	4908507	2	0	0	89.1	89.1	1	2181.33	3.25	0	77.77	0	0.95	0	0	8.34	0	0	0	0	0	0	1.99	1.99
Inverter	MV4-13	369051	4908605	2	0	0	89.1	89.1	1	2338.75	3.25	0	78.38	0	0.99	0	0	8.59	0	0	0	0	0	0	1.1	1.1
Inverter	MV3-22	368656	4907142	2	0	0	89.1	89.1	1	2420.99	3.25	0	78.68	0	1.01	0	0	8.72	0	0	0	0	0	0	0.65	0.65
Inverter	MV3-2	368671	4907928	2	0	0	89.1	89.1	1	2446.26	3.25	0	78.77	0	1.01	0	0	8.76	0	0	0	0	0	0	0.51	0.51
Inverter	MV1-10	365004	4905564	2	0	0	97.3	97.3	1	6333.31	3.25	0	87.03	0	0.71	0	0	20.44	0	0	0	0	0	0	-10.87	-10.87
Inverter	MV4-12	369043	4908803	2	0	0	89.1	89.1	1	2452.35	3.25	0	78.79	0	1.01	0	0	8.77	0	0	0	0	0	0	0.48	0.48
Inverter	MV1-7	364925	4905782	2	0	0	97.3	97.3	1	6349.52	3.25	0	87.05	0	0.71	0	0	20.46	0	0	0	0	0	0	-10.92	-10.92
Inverter	MV1-14	365163	4905049	2	0	0	97.3	97.3	1	6354.31	3.25	0	87.06	0	0.71	0	0	20.47	0	0	0	0	0	0	-10.93	-10.93
Inverter	MV1-13	364731	4905241	2	0	0	97.3	97.3	1	6692.57	3.25	0	87.51	0	0.71	0	0	20.91	0	0	0	0	0	0	-11.82	-11.82
Inverter	MV3-4	368502	4907925	2	0	0	89.1	89.1	1	2611.09	3.25	0	79.34	0	1.05	0	0	9.02	0	0	0	0	0	0	-0.35	-0.35
Westbrook Inverter Enclosur	W_INV1	369409	4906578	2	0	0	86.1	86.1	1	1851.03	3.25	0	76.35	0	0.87	0	0	7.8	0	0	0	0	0	0	1.04	1.04
Inverter	MV3-5	368340	4907843	2	0	0	89.1	89.1	1	2756.07	3.25	0	79.81	0	1.09	0	0	9.24	0	0	0	0	0	0	-1.08	-1.08
Inverter	MV3-1	368156	4907976	2	0	0	89.1	89.1	1	2960.42	3.25	0	80.43	0	1.14	0	0	9.56	0	0	0	0	0	0	-2.06	-2.06
Gardiner Substation	G_Sub	366586.3	4903349.9	2.5	0	0	90.8	90.8	1	6043.54	4.25	0	86.63	0	1.88	2.1	0.34	9.79	0	0	0	0	0	0	-9.62	-9.62
Inverter	MV2-2	365977	4906654	2	0	0	89.1	89.1	1	5141.04	3.25	0	85.22	0	1.67	0	0	12.65	0	0	0	0	0	0	-10.49	-10.49
Westbrook Inverter Transfor	W_INVTR6	369881	4906578	2	0	0	77.3	77.3	1	1445.22	3.25	0	74.2	0	-2.18	0	0	0.93	0	0	0	0	0	0	4.39	4.39
Westbrook Inverter Transfor	W_INVTR5	369725	4906574	2	0	0	77.3	77.3	1	1577.39	3.25	0	74.96	0	-2.24	0	0	0.99	0	0	0	0	0	0	3.63	3.63
Westbrook Inverter Transfor	W_INVTR7	369786	4906417	2	0	0	77.3	77.3	1	1617.47	3.25	0	75.18	0	-2.25	0	0	1.02	0	0	0	0	0	0	3.4	3.4

Westbrook Inverter Transfor	W_INVTR1	369403	4906578	2	0	0	78.2	78.2	1	1856.39	3.25	0	76.37	0	-2.35	0	0	1.14	0	0	0	0	0	0	3.08	3.08
Inverter	MV1-3	364440	4906039	2	0	0	89.1	89.1	1	6762.64	3.25	0	87.6	0	2.07	0	0	14.7	0	0	0	0	0	0	-15.32	-15.32
Inverters	G_Inv2	366676.9	4903239.1	2	0	0	87.7	87.7	1	6052.59	3.25	0	86.64	0	2.92	0	0	7.03	0	0	0	0	0	0	-8.93	-8.93
Inverters	G_Inv4	366732.8	4903105	2	0	0	87.7	87.7	1	6106.03	3.25	0	86.72	0	2.92	0	0	7.09	0	0	0	0	0	0	-9.06	-9.06
Westbrook Inverter Transfor	W_INVTR4	369679	4906164	2	0	0	77.3	77.3	1	1862.18	3.25	0	76.4	0	-2.35	0	0	1.14	0	0	0	0	0	0	2.16	2.16
Inverters	G_Inv6	366788.5	4902972	2	0	0	87.7	87.7	1	6161.78	3.25	0	86.79	0	2.92	0	0	7.14	0	0	0	0	0	0	-9.2	-9.2
Inverters	G_Inv1	366526.4	4903225.8	2	0	0	87.7	87.7	1	6171.51	3.25	0	86.81	0	2.92	0	0	7.15	0	0	0	0	0	0	-9.23	-9.23
Inverters	G_Inv8	366844.5	4902838.5	2	0	0	87.7	87.7	1	6220.54	3.25	0	86.88	0	2.93	0	0	7.2	0	0	0	0	0	0	-9.35	-9.35
Inverters	G_Inv3	366583.7	4903091.4	2	0	0	87.7	87.7	1	6222.07	3.38	0	86.88	0	3.26	1.4	0	7.2	0	0	0	0	0	0	-11.09	-11.09
Inverters	G_Inv5	366638.5	4902958.1	2	0	0	87.7	87.7	1	6276.6	3.25	0	86.95	0	2.93	0	0	7.26	0	0	0	0	0	0	-9.48	-9.48
Inverters	G_Inv10	366900.7	4902704.8	2	0	0	87.7	87.7	1	6282.1	3.25	0	86.96	0	2.93	0	0	7.27	0	0	0	0	0	0	-9.5	-9.5
Inverters	G_Inv7	366694.6	4902824.7	2	0	0	87.7	87.7	1	6333.11	3.25	0	87.03	0	2.93	0	0	7.32	0	0	0	0	0	0	-9.62	-9.62
Inverters	G_Inv9	366750.9	4902691.8	2	0	0	87.7	87.7	1	6391.9	3.25	0	87.11	0	2.93	0	0	7.38	0	0	0	0	0	0	-9.76	-9.76
Westbrook Inverter Transfor	W_INVTR2	369368	4906388	2	0	0	77.3	77.3	1	1978.93	3.25	0	76.93	0	-2.4	0	0	1.2	0	0	0	0	0	0	1.61	1.61
Westbrook Inverter Transfor	W_INVTR3	369514	4906164	2	0	0	77.3	77.3	1	1987.79	3.25	0	76.97	0	-2.4	0	0	1.2	0	0	0	0	0	0	1.57	1.57
Inverter Transformer	MV6-1 T	370230	4907364	2	0	0	69.4	69.4	1	833.33	3.25	0	69.42	0	1.53	0	0	3.57	0	0	0	0	0	0	-5.16	-5.16
Inverter Transformer	MV6-4 T	370244	4906966	2	0	0	69.4	69.4	1	931.21	3.25	0	70.38	0	1.62	0	0	3.71	0	0	0	0	0	0	-6.37	-6.37
Inverter Transformer	MV6-3 T	370202	4907140	2	0	0	56.1	56.1	1	901.69	3.25	0	70.1	0	-0.02	0	0	4.65	0	0	0	0	0	0	-18.67	-18.67
Inverter Transformer	MV6-2 T	370091	4907339	2	0	0	56.1	56.1	1	973.67	3.25	0	70.77	0	0	0	0	4.83	0	0	0	0	0	0	-19.54	-19.54
Inverter Transformer	MV2-1 T	365836	4906816	2	0	0	69.4	69.4	1	5259.76	3.25	0	85.42	0	3.06	0	0	7.55	0	0	0	0	0	0	-26.68	-26.68
Inverter Transformer	MV1-10 T	365010	4905564	2	0	0	69.4	69.4	1	6327.57	3.25	0	87.02	0	3.24	0	0	8.21	0	0	0	0	0	0	-29.12	-29.12
Inverter Transformer	MV1-7 T	364919	4905782	2	0	0	69.4	69.4	1	6355.32	3.25	0	87.06	0	3.24	0	0	8.23	0	0	0	0	0	0	-29.18	-29.18
Inverter Transformer	MV1-14 T	365157	4905049	2	0	0	69.4	69.4	1	6359.88	3.25	0	87.07	0	3.24	0	0	8.23	0	0	0	0	0	0	-29.19	-29.19
Inverter Transformer	MV1-13 T	364725	4905241	2	0	0	69.4	69.4	1	6698.24	3.25	0	87.52	0	3.28	0	0	8.43	0	0	0	0	0	0	-29.88	-29.88
Inverter Transformer	MV5-4 T	370330	4908707	2	0	0	56.1	56.1	1	1488.44	3.25	0	74.45	0	0.19	0	0	5.99	0	0	0	0	0	0	-24.58	-24.58
Inverter Transformer	MV5-6 T	369987	4908507	2	0	0	56.1	56.1	1	1535.2	3.25	0	74.72	0	0.21	0	0	6.09	0	0	0	0	0	0	-24.97	-24.97
Inverter Transformer	MV5-5 T	370021	4908690	2	0	0	56.1	56.1	1	1649.1	3.25	0	75.34	0	0.26	0	0	6.33	0	0	0	0	0	0	-25.88	-25.88
Inverter Transformer	MV5-3 T	370237	4908851	2	0	0	56.1	56.1	1	1659.59	3.25	0	75.4	0	0.26	0	0	6.35	0	0	0	0	0	0	-25.96	-25.96
Inverter Transformer	MV5-2 T	370011	4908853	2	0	0	56.1	56.1	1	1784.37	3.25	0	76.03	0	0.31	0	0	6.61	0	0	0	0	0	0	-26.9	-26.9
Inverter Transformer	MV5-1 T	370015	4909142	2	0	0	56.1	56.1	1	2023.01	3.25	0	77.12	0	0.41	0	0	7.09	0	0	0	0	0	0	-28.56	-28.56
Inverter Transformer	MV4-15 T	369170	4908481	2	0	0	56.1	56.1	1	2173.61	3.25	0	77.74	0	0.48	0	0	7.38	0	0	0	0	0	0	-29.54	-29.54
Inverter Transformer	MV4-14 T	369182	4908507	2	0	0	56.1	56.1	1	2176.15	3.25	0	77.75	0	0.48	0	0	7.39	0	0	0	0	0	0	-29.56	-29.56
Inverter Transformer	MV4-10 T	369307	4908858	2	0	0	56.1	56.1	1	2274.61	3.25	0	78.14	0	0.52	0	0	7.57	0	0	0	0	0	0	-30.17	-30.17
Inverter Transformer	MV4-11 T	369269	4908855	2	0	0	56.1	56.1	1	2302.17	3.25	0	78.24	0	0.53	0	0	7.62	0	0	0	0	0	0	-30.34	-30.34
Inverter Transformer	MV4-13 T	369057	4908605	2	0	0	56.1	56.1	1	2333.6	3.25	0	78.36	0	0.55	0	0	7.68	0	0	0	0	0	0	-30.53	-30.53
Inverter Transformer	MV3-20 T	368683	4907317	2	0	0	56.1	56.1	1	2380.86	3.25	0	78.53	0	0.57	0	0	7.77	0	0	0	0	0	0	-30.81	-30.81
Inverter Transformer	MV4-9 T	369284	4909001	2	0	0	56.1	56.1	1	2385.24	3.25	0	78.55	0	0.57	0	0	7.78	0	0	0	0	0	0	-30.84	-30.84
Inverter Transformer	MV3-14 T	368678	4907498	2	0	0	56.1	56.1	1	2385.59	3.25	0	78.55	0	0.57	0	0	7.78	0	0	0	0	0	0	-30.84	-30.84
Inverter Transformer	MV3-8 T	368685	4907712	2	0	0	56.1	56.1	1	2395.98	3.25	0	78.59	0	0.57	0	0	7.8	0	0	0	0	0	0	-30.9	-30.9
Inverter Transformer	MV4-8 T	369262	4909001	2	0	0	56.1	56.1	1	2401.69	3.25	0	78.61	0	0.57	0	0	7.81	0	0	0	0	0	0	-30.94	-30.94
Inverter Transformer	MV3-22 T	368661	4907142	2	0	0	56.1	56.1	1	2416.02	3.25	0	78.66	0	0.58	0	0	7.84	0	0	0	0	0	0	-31.02	-31.02
Inverter Transformer	MV3-2 T	368677	4907928	2	0	0	56.1	56.1	1	2440.39	3.25	0	78.75	0	0.59	0	0	7.88	0	0	0	0	0	0	-31.16	-31.16
Inverter Transformer	MV4-12 T	369049	4908803	2	0	0	56.1	56.1	1	2447.41	3.25	0	78.77	0	0.59	0	0	7.89	0	0	0	0	0	0	-31.2	-31.2
Inverter Transformer	MV4-5 T	369283	4909199	2	0	0	56.1	56.1	1	2522.26	3.25	0	79.04	0	0.63	0	0	8.03	0	0	0	0	0	0	-31.63	-31.63
Inverter Transformer	MV4-6 T	369249	4909192	2	0	0	56.1	56.1	1	2541.44	3.25	0	79.1	0	0.63	0	0	8.06	0	0	0	0	0	0	-31.74	-31.74
Inverter Transformer	MV3-16 T	368509	4907475	2	0	0	56.1	56.1	1	2553.8	3.25	0	79.14	0	0.64	0	0	8.09	0	0	0	0	0	0	-31.81	-31.81
Inverter Transformer	MV3-9 T	368517	4907703	2	0	0	56.1	56.1	1	2561.7	3.25	0	79.17	0	0.64	0	0	8.1	0	0	0	0	0	0	-31.86	-31.86
Inverter Transformer	MV4-7 T	369040	4909001	2	0	0	56.1	56.1	1	2572.27	3.25	0	79.21	0	0.65	0	0	8.12	0	0	0	0	0	0	-31.92	-31.92
Inverter Transformer	MV3-21 T	368484	4907206	2	0	0	56.1	56.1	1	2586.14	3.25	0	79.25	0	0.65	0	0	8.15	0	0	0	0	0	0	-31.99	-31.99
Inverter Transformer	MV3-4 T	368507	4907925	2	0	0	56.1	56.1	1	2606.19	3.25	0	79.32	0	0.66	0	0	8.18	0	0	0	0	0	0	-32.1	-32.1
Inverter Transformer	MV4-2 T	369267	4909397	2	0	0	56.1	56.1	1	2676.98	3.25	0	79.55	0	0.69	0	0	8.31	0	0	0	0	0	0	-32.49	-32.49
Inverter Transformer	MV4-3 T	369234	4909397	2	0	0	56.1	56.1	1	2699.22	3.25	0	79.62	0	0.7	0	0	8.35	0	0	0	0	0	0	-32.62	-32.62
Inverter Transformer	MV4-4 T	369033	4909199	2	0	0	56.1	56.1	1	2704.4	3.25	0	79.64	0	0.7	0	0	8.36	0	0	0	0	0	0	-32.64	-32.64
Inverter Transformer	MV3-19 T	368352	4907347	2	0	0	56.1	56.1	1	2710.76	3.25	0	79.66	0	0.71	0	0	8.37	0	0	0	0	0	0	-32.68	-32.68
Inverter Transformer	MV3-15 T	368351	4907477	2	0	0	56.1	56.1	1	2711.8	3.25	0	79.67	0	0.71	0	0	8.37	0	0	0	0	0	0	-32.68	-32.68
Inverter Transformer	MV3-11 T	368340	4907662	2	0	0	56.1	56.1	1	2733.55	3.25	0	79.73	0	0.72	0	0	8.41	0	0	0	0	0	0	-32.8	-32.8
Inverter Transformer	MV3-5 T	368335	4907843	2	0	0	56.1	56.1	1	2761.01	3.25	0	79.82	0	0.73	0	0	8.46	0	0	0	0	0	0	-32.95	-32.95
Inverter Transformer	MV4-1 T	369017	4909397	2	0	0	56.1	56.1	1	2850.65	3.25	0	80.1	0	0.77	0	0	8.61	0	0	0	0	0	0	-33.42	-33.42
Inverter Transformer	MV3-17 T	368183	4907472	2	0	0	56.1	56.1	1	2879.65	3.25	0	80.19	0	0.78	0	0	8.66	0	0	0	0	0	0	-33.57	-33.57
Inverter Transformer	MV3-10 T	368162	4907669	2	0	0	56.1	56.1	1	2911.46	3.25	0	80.28	0	0.79	0	0	8.72	0	0	0	0	0	0	-33.73	-33.73
Inverter Transformer	MV3-6 T	368156	4907834	2	0	0	56.1	56.1	1	2936.63	3.25	0	80.36	0	0.8	0	0	8.76	0	0	0	0	0	0	-33.86	-33.86
Inverter Transformer	MV3-1 T	368150	4907976	2	0	0	56.1	56.1	1	2966.31	3.25	0	80.44	0	0.82	0	0	8.81	0	0	0	0	0	0	-34.01	-34.01
Inverter Transformer	MV3-13 T	367958	4907577	2	0	0	56.1	56.1	1	3108.44	3.25	0	80.85	0	0.88	0	0	9.05	0	0	0	0	0	0	-34.72	-34.72
Inverter Transformer	MV3-7 T	367951	4907754	2	0	0	56.1	56.1	1	3129.85	3.25	0	80.91	0	0.88	0	0	9.09	0	0	0	0	0	0	-34.82	-34.82
Inverter Transformer	MV3-3 T	367944	4907927	2	0	0	56.1	56.1	1	3160.41	3.25	0	80.99	0	0.9	0	0	9.14	0	0	0	0	0	0	-34.97	-34.97
Inverter Transformer	MV3-18 T	367757	4907412	2	0	0	56.1	56.1	1	3305	3.25	0	81.38	0	0.96	0	0	9.37	0	0	0	0	0	0	-35.66	-35.66
Inverter Transformer	MV3-12 T	367674	4907594	2	0	0	56.1	56.1	1	3392.94	3.25	0	81.61	0	1	0	0	9.52	0	0	0	0	0	0	-36.07	-36.07
Inverter Transformer	MV2-2 T	365982	4906654	2	0	0	56.1	56.1	1	5136.09	3.25	0	85.21	0	1.67	0	0	12.03	0	0	0	0	0	0	-42.86	-42.86
Inverter Transformer	MV2-3 T	365814	4906641	2	0	0	56.1	56.1	1	5304.19	3.25	0	85.49	0	1.73	0	0	12.25	0	0	0	0	0	0	-43.42	-43.42
Inverter Transformer	MV2-4 T	365590	4906628	2	0	0	56.1	56.1	1	5527.74	3.25	0	85.85	0	1.81	0	0	12.53	0	0	0	0	0	0	-44.13	-44.13
Inverter Transformer	MV1-15 T	365309	4904994	2	0	0	56.1	56.1	1	6240.1	3.25	0	86.9	0	2.04	0	0	13.38	0	0	0	0	0	0	-46.27	-46.27
Inverter Transformer	MV1-12 T	365044	4905386	2	0	0	56.1	56.1	1	6349.56	3.25	0	87.05	0	2.07	0	0	13.51	0	0	0	0	0	0	-46.58	-46.58
Inverter Transformer	MV1-4 T	364821	4905918	2	0	0	56.1	56.1	1	6417.1	3.25	0	87.15	0	2.09	0	0	13.59	0	0	0	0	0	0	-46.77	-46.77
Inverter Transformer	MV1-2 T	364759	4906063	2	0	0	56.1	56.1	1	6445.53	3.25	0	87.19	0	2.1	0	0	13.62	0	0	0	0	0	0	-46.85	-46.85

	Inverter Transformer	MV1-1 T	364721	4906166	2	0	0	56.1	56.1	1	6462.07	3.25	0	87.21	0	2.11	0	0	13.64	0	0	0	0	0	0	-46.89	-46.89
	Inverter Transformer	MV1-8 T	364782	4905647	2	0	0	56.1	56.1	1	6523.04	3.25	0	87.29	0	2.12	0	0	13.71	0	0	0	0	0	0	-47.06	-47.06
	Inverter Transformer	MV1-5 T	364676	4905892	2	0	0	56.1	56.1	1	6564.17	3.25	0	87.34	0	2.14	0	0	13.75	0	0	0	0	0	0	-47.17	-47.17
	Inverter Transformer	MV1-11 T	364649	4905414	2	0	0	56.1	56.1	1	6716.74	3.25	0	87.54	0	2.18	0	0	13.92	0	0	0	0	0	0	-47.59	-47.59
	Inverter Transformer	MV1-9 T	364555	4905646	2	0	0	56.1	56.1	1	6742.13	3.25	0	87.58	0	2.19	0	0	13.95	0	0	0	0	0	0	-47.65	-47.65
	Inverter Transformer	MV1-6 T	364482	4905835	2	0	0	56.1	56.1	1	6766.11	3.25	0	87.61	0	2.19	0	0	13.98	0	0	0	0	0	0	-47.72	-47.72
	Inverter Transformer	MV1-3 T	364435	4906039	2	0	0	56.1	56.1	1	6767.53	3.25	0	87.61	0	2.19	0	0	13.98	0	0	0	0	0	0	-47.72	-47.72
	Line Reactor	NGR	369421	4908787.5	5	0	0	45.4	45.4	1	2141.88	5.25	0	77.62	0	3.37	1.28	0.08	0.88	0	0	0	0	0	0	-37.79	-37.79
Limit. Valu	0	0																								
Level D/N:	29.7816	29.7816																								

Receiver: Vacant Lot Receptor
ID: S-VLR28
X: 371142
Y: 4907495
Z: 4.5
Ground: 0

ISO	Description	ID	X	Y	Z	Ground	ReflOrd	LxT	LxN	L/A	Dist.	hm	Freq	Adiv	K0b	Agr	Abar	z	Aatm	Afol	Ahous	Cmet	CmetN	Dc	RL	LtotT	LtotN
	Sol_Luce Substation	S_Substation	369426	4908792	3.5	0	0	112.1	112.1	1	2151.02	5.25	0	77.65	0	0.1	3.88	0.38	4.62	0	0	0	0	0	0	25.83	25.83
	Inverter	MV6-3	370207	4907140	2	0	0	100.3	100.3	1	1000.13	3.25	0	71	0	-0.25	0	0	10.91	0	0	0	0	0	0	18.65	18.65
	Inverter	MV6-2	370085	4907339	2	0	0	100.3	100.3	1	1068.45	3.25	0	71.58	0	-0.21	0	0	11.13	0	0	0	0	0	0	17.82	17.82
	Inverter	MV6-1	370235	4907364	2	0	0	97.3	97.3	1	916.41	3.25	0	70.24	0	-0.29	0	0	10.62	0	0	0	0	0	0	16.73	16.73
	Inverter	MV5-4	370324	4908707	2	0	0	100.3	100.3	1	1462.22	3.25	0	74.3	0	-0.05	0	0	12.23	0	0	0	0	0	0	13.83	13.83
	Inverter	MV5-3	370231	4908851	2	0	0	100.3	100.3	1	1633.6	3.25	0	75.26	0	0.01	0	0	12.65	0	0	0	0	0	0	12.39	12.39
	Inverter	MV5-5	370015	4908690	2	0	0	100.3	100.3	1	1642.61	3.25	0	75.31	0	0.02	0	0	12.67	0	0	0	0	0	0	12.32	12.32
	Inverter	MV5-2	370006	4908853	2	0	0	100.3	100.3	1	1770.5	3.25	0	75.96	0	0.06	0	0	12.96	0	0	0	0	0	0	11.33	11.33
	Inverter	MV5-1	370020	4909142	2	0	0	100.3	100.3	1	1992.86	3.25	0	76.99	0	0.13	0	0	13.45	0	0	0	0	0	0	9.75	9.75
	Inverter	MV4-10	369312	4908858	2	0	0	100.3	100.3	1	2281.81	3.25	0	78.17	0	0.2	0	0	14.04	0	0	0	0	0	0	7.91	7.91
	Inverter	MV4-11	369264	4908855	2	0	0	100.3	100.3	1	2318.73	3.25	0	78.3	0	0.21	0	0	14.11	0	0	0	0	0	0	7.68	7.68
	Inverter	MV4-9	369289	4909001	2	0	0	100.3	100.3	1	2387.81	3.25	0	78.56	0	0.23	0	0	14.24	0	0	0	0	0	0	7.28	7.28
	Inverter	MV4-8	369256	4909001	2	0	0	100.3	100.3	1	2413.51	3.25	0	78.65	0	0.24	0	0	14.29	0	0	0	0	0	0	7.13	7.13
	Inverter	MV3-14	368684	4907498	2	0	0	100.3	100.3	1	2458	3.25	0	78.81	0	0.25	0	0	14.38	0	0	0	0	0	0	6.87	6.87
	Inverter	MV3-20	368689	4907317	2	0	0	100.3	100.3	1	2459.45	3.25	0	78.82	0	0.25	0	0	14.38	0	0	0	0	0	0	6.87	6.87
	Inverter	MV3-8	368680	4907712	2	0	0	100.3	100.3	1	2471.55	3.25	0	78.86	0	0.25	0	0	14.4	0	0	0	0	0	0	6.8	6.8
	Inverter	MV4-5	369289	4909199	2	0	0	100.3	100.3	1	2517.39	3.25	0	79.02	0	0.26	0	0	14.49	0	0	0	0	0	0	6.54	6.54
	Inverter	MV4-6	369243	4909192	2	0	0	100.3	100.3	1	2546.77	3.25	0	79.12	0	0.27	0	0	14.55	0	0	0	0	0	0	6.38	6.38
	Inverter	MV4-7	369035	4909001	2	0	0	100.3	100.3	1	2589.88	3.25	0	79.27	0	0.28	0	0	14.63	0	0	0	0	0	0	6.14	6.14
	Inverter	MV3-16	368514	4907475	2	0	0	100.3	100.3	1	2628.08	3.25	0	79.39	0	0.29	0	0	14.7	0	0	0	0	0	0	5.93	5.93
	Inverter	MV3-9	368512	4907703	2	0	0	100.3	100.3	1	2638.21	3.25	0	79.43	0	0.29	0	0	14.72	0	0	0	0	0	0	5.88	5.88
	Inverter	MV4-2	369272	4909397	2	0	0	100.3	100.3	1	2667.3	3.25	0	79.52	0	0.29	0	0	14.77	0	0	0	0	0	0	5.72	5.72
	Inverter	MV3-21	368478	4907206	2	0	0	100.3	100.3	1	2679.63	3.25	0	79.56	0	0.3	0	0	14.79	0	0	0	0	0	0	5.66	5.66
	Inverter	MV4-3	369229	4909397	2	0	0	100.3	100.3	1	2697.62	3.25	0	79.62	0	0.3	0	0	14.83	0	0	0	0	0	0	5.56	5.56
	Inverter	MV4-4	369027	4909199	2	0	0	100.3	100.3	1	2716.04	3.25	0	79.68	0	0.3	0	0	14.86	0	0	0	0	0	0	5.47	5.47
	Inverter	MV3-15	368357	4907477	2	0	0	100.3	100.3	1	2785.06	3.25	0	79.9	0	0.32	0	0	14.99	0	0	0	0	0	0	5.11	5.11
	Inverter	MV3-19	368357	4907347	2	0	0	100.3	100.3	1	2788.93	3.25	0	79.91	0	0.32	0	0	14.99	0	0	0	0	0	0	5.09	5.09
	Inverter	MV3-11	368346	4907662	2	0	0	100.3	100.3	1	2800.98	3.25	0	79.95	0	0.32	0	0	15.02	0	0	0	0	0	0	5.03	5.03
	Inverter	MV4-1	369011	4909397	2	0	0	100.3	100.3	1	2856.36	3.25	0	80.12	0	0.33	0	0	15.12	0	0	0	0	0	0	4.75	4.75
	Inverter	MV3-17	368178	4907472	2	0	0	100.3	100.3	1	2964.09	3.25	0	80.44	0	0.36	0	0	15.31	0	0	0	0	0	0	4.21	4.21
	Inverter	MV3-10	368167	4907669	2	0	0	100.3	100.3	1	2980.09	3.25	0	80.48	0	0.36	0	0	15.34	0	0	0	0	0	0	4.13	4.13
	Inverter	MV3-6	368162	4907834	2	0	0	100.3	100.3	1	2999.22	3.25	0	80.54	0	0.36	0	0	15.37	0	0	0	0	0	0	4.04	4.04
	Inverter	MV3-13	367963	4907577	2	0	0	100.3	100.3	1	3180.06	3.25	0	81.05	0	0.4	0	0	15.69	0	0	0	0	0	0	3.18	3.18
	Inverter	MV3-7	367945	4907754	2	0	0	100.3	100.3	1	3207.48	3.25	0	81.12	0	0.4	0	0	15.73	0	0	0	0	0	0	3.05	3.05
	Inverter	MV3-3	367939	4907927	2	0	0	100.3	100.3	1	3232	3.25	0	81.19	0	0.41	0	0	15.78	0	0	0	0	0	0	2.94	2.94
	DSTATCOM - 10 MVAR #1	DSAT1	369437	4908757	2.5	0	0	96.6	96.6	1	2121.24	3.5	0	77.53	0	3.25	0	0	1.79	0	0	0	0	0	0	14.06	14.06
	DSTATCOM - 10 MVAR #2	DSAT2	369403	4908757	2.5	0	0	96.6	96.6	1	2148.67	3.5	0	77.64	0	3.25	0	0	1.81	0	0	0	0	0	0	13.93	13.93
	Inverter	MV3-18	367752	4907412	2	0	0	100.3	100.3	1	3391.02	3.25	0	81.61	0	0.43	0	0	16.05	0	0	0	0	0	0	2.22	2.22
	Inverter	MV3-12	367668	4907594	2	0	0	100.3	100.3	1	3475.41	3.25	0	81.82	0	0.45	0	0	16.19	0	0	0	0	0	0	1.85	1.85
	SubstationTransformer	W_ST	369711.17	4906112.3	2.5	0	0	92	92	1	1989.78	4.25	0	76.98	0	0.72	3.29	0.2	4.35	0	0	0	0	0	0	6.64	6.64
	Inverter	MV6-4	370250	4906966	2	0	0	86.1	86.1	1	1037.07	3.25	0	71.32	0	0.69	0	0	6.38	0	0	0	0	0	0	7.66	7.66
	Inverter	MV2-3	365820	4906641	2	0	0	100.3	100.3	1	5390.08	3.25	0	85.63	0	0.67	0	0	19.14	0	0	0	0	0	0	-5.14	-5.14
	Inverter	MV2-4	365586	4906624	2	0	0	100.3	100.3	1	5623.86	3.25	0	86	0	0.69	0	0	19.47	0	0	0	0	0	0	-5.85	-5.85
	Inverter	MV5-6	369982	4908507	2	0	0	89.1	89.1	1	1539.4	3.25	0	74.75	0	0.8	0	0	7.28	0	0	0	0	0	0	6.23	6.23
	Westbrook Inverter Enclosur	W_INV6	369875	4906578	2	0	0	89.1	89.1	1	1564.03	3.25	0	74.88	0	0.81	0	0	7.32	0	0	0	0	0	0	6.05	6.05
	Westbrook Inverter Enclosur	W_INV5	369719	4906574	2	0	0	89.1	89.1	1	1695.04	3.25	0	75.58	0	0.84	0	0	7.54	0	0	0	0	0	0	5.1	5.1
	Inverter	MV1-15	365315	4904994	2	0	0	100.3	100.3	1	6341.05	3.25	0	87.04	0	0.71	0	0	20.45	0	0	0	0	0	0	-7.89	-7.89
	Westbrook Inverter Enclosur	W_INV7	369780	4906417	2	0	0	89.1	89.1	1	1736.99	3.25	0	75.8	0	0.85	0	0	7.61	0	0	0	0	0	0	4.81	4.81
	Inverter	MV1-12	365038	4905386	2	0	0	100.3	100.3	1	6458.07	3.25	0	87.2	0	0.71	0	0	20.6	0	0	0	0	0	0	-8.21	-8.21
	Inverter	MV1-4	364815	4905918	2	0	0	100.3	100.3	1	6520.57	3.25	0	87.29	0	0.71	0	0	20.69	0	0	0	0	0	0	-8.37	-8.37
	Inverter	MV1-2	364753	4906063	2	0	0	100.3	100.3	1	6547.51	3.25	0	87.32	0	0.71	0	0	20.72	0	0	0	0	0	0	-8.45	-8.45
	Inverter	MV1-1	364715	4906166	2	0	0	100.3	100.3	1	6562.97	3.25	0	87.34	0	0.72	0	0	20.74	0	0	0	0	0	0	-8.49	-8.49
	Inverter	MV1-8	364788	4905647	2	0	0	100.3	100.3	1	6617.28	3.25	0	87.41	0	0.71	0	0	20.81	0	0	0	0	0	0	-8.63	-8.63
	Inverter	MV1-5	364671	4905892	2	0	0	100.3	100.3	1	6666.59	3.25	0	87.48	0	0.71	0	0	20.88	0	0	0	0	0	0	-8.76	-8.76
	Inverter	MV1-11	364655	4905414	2	0	0	100.3	100.3	1	6812.62	3.25	0	87.67	0	0.71	0	0	21.06	0	0	0	0	0	0	-9.13	-9.13

Inverter	MV1-9	364561	4905646	2	0	0	100.3	100.3	1	6835.82	3.25	0	87.7	0	0.71	0	0	21.09	0	0	0	0	0	0	-9.19	-9.19
Inverter	MV1-6	364477	4905835	2	0	0	100.3	100.3	1	6868.61	3.25	0	87.74	0	0.71	0	0	21.13	0	0	0	0	0	0	-9.27	-9.27
Fixed Reactor Bank 2	FRB2	369464	4908755	6	0	0	89.8	89.8	1	2098.4	5.25	0	77.44	0	-0.98	0	0	4.53	0	0	0	0	0	0	8.79	8.79
Westbrook Inverter Enclosur	W_INV4	369673	4906164	2	0	0	89.1	89.1	1	1982.3	3.25	0	76.94	0	0.9	0	0	8.02	0	0	0	0	0	0	3.2	3.2
Fixed Reactor Bank 1	FRB1	369378	4908755	6	0	0	89.8	89.8	1	2167.79	5.25	0	77.72	0	-0.98	0	0	4.65	0	0	0	0	0	0	8.38	8.38
Inverter	MV2-1	365842	4906816	2	0	0	97.3	97.3	1	5343.32	3.25	0	85.56	0	0.67	0	0	19.08	0	0	0	0	0	0	-7.99	-7.99
Westbrook Inverter Enclosur	W_INV2	369374	4906388	2	0	0	89.1	89.1	1	2085.97	3.25	0	77.39	0	0.93	0	0	8.19	0	0	0	0	0	0	2.56	2.56
Westbrook Inverter Enclosur	W_INV3	369508	4906164	2	0	0	89.1	89.1	1	2107.49	3.25	0	77.48	0	0.93	0	0	8.22	0	0	0	0	0	0	2.43	2.43
Inverter	MV4-15	369176	4908481	2	0	0	89.1	89.1	1	2199.4	3.25	0	77.85	0	0.95	0	0	8.37	0	0	0	0	0	0	1.89	1.89
Inverter	MV4-14	369176	4908507	2	0	0	89.1	89.1	1	2211.18	3.25	0	77.89	0	0.96	0	0	8.39	0	0	0	0	0	0	1.82	1.82
Inverter	MV4-13	369051	4908605	2	0	0	89.1	89.1	1	2367.36	3.25	0	78.49	0	0.99	0	0	8.64	0	0	0	0	0	0	0.94	0.94
Inverter	MV4-12	369043	4908803	2	0	0	89.1	89.1	1	2473.19	3.25	0	78.87	0	1.02	0	0	8.8	0	0	0	0	0	0	0.37	0.37
Inverter	MV1-10	365004	4905564	2	0	0	97.3	97.3	1	6434.58	3.25	0	87.17	0	0.71	0	0	20.57	0	0	0	0	0	0	-11.15	-11.15
Inverter	MV1-7	364925	4905782	2	0	0	97.3	97.3	1	6448.68	3.25	0	87.19	0	0.71	0	0	20.59	0	0	0	0	0	0	-11.18	-11.18
Inverter	MV1-14	365163	4905049	2	0	0	97.3	97.3	1	6459.98	3.25	0	87.2	0	0.71	0	0	20.61	0	0	0	0	0	0	-11.21	-11.21
Inverter	MV3-2	368671	4907928	2	0	0	89.1	89.1	1	2508.65	3.25	0	78.99	0	1.03	0	0	8.86	0	0	0	0	0	0	0.18	0.18
Inverter	MV3-22	368656	4907142	2	0	0	89.1	89.1	1	2510.94	3.25	0	79	0	1.03	0	0	8.86	0	0	0	0	0	0	0.17	0.17
Inverter	MV1-13	364731	4905241	2	0	0	97.3	97.3	1	6795.69	3.25	0	87.64	0	0.71	0	0	21.04	0	0	0	0	0	0	-12.09	-12.09
Inverter	MV3-4	368502	4907925	2	0	0	89.1	89.1	1	2674.79	3.25	0	79.55	0	1.07	0	0	9.12	0	0	0	0	0	0	-0.67	-0.67
Westbrook Inverter Enclosur	W_INV1	369409	4906578	2	0	0	86.1	86.1	1	1960.66	3.25	0	76.85	0	0.9	0	0	7.98	0	0	0	0	0	0	0.33	0.33
Inverter	MV3-5	368340	4907843	2	0	0	89.1	89.1	1	2823.53	3.25	0	80.02	0	1.1	0	0	9.35	0	0	0	0	0	0	-1.41	-1.41
Inverter	MV3-1	368156	4907976	2	0	0	89.1	89.1	1	3024.49	3.25	0	80.61	0	1.15	0	0	9.65	0	0	0	0	0	0	-2.36	-2.36
Gardiner Substation	G_Sub	366586.3	4903349.9	2.5	0	0	90.8	90.8	1	6159.24	4.25	0	86.79	0	1.91	2.07	0.34	9.91	0	0	0	0	0	0	-9.9	-9.9
Inverter	MV2-2	365977	4906654	2	0	0	89.1	89.1	1	5233.02	3.25	0	85.38	0	1.7	0	0	12.77	0	0	0	0	0	0	-10.79	-10.79
Westbrook Inverter Transfor	W_INVTR6	369881	4906578	2	0	0	77.3	77.3	1	1559.17	3.25	0	74.86	0	-2.23	0	0	0.99	0	0	0	0	0	0	3.73	3.73
Westbrook Inverter Transfor	W_INVTR5	369725	4906574	2	0	0	77.3	77.3	1	1690.01	3.25	0	75.56	0	-2.29	0	0	1.05	0	0	0	0	0	0	3.02	3.02
Westbrook Inverter Transfor	W_INVTR7	369786	4906417	2	0	0	77.3	77.3	1	1732.29	3.25	0	75.77	0	-2.3	0	0	1.07	0	0	0	0	0	0	2.8	2.8
Westbrook Inverter Transfor	W_INVTR1	369403	4906578	2	0	0	78.2	78.2	1	1965.96	3.25	0	76.87	0	-2.39	0	0	1.19	0	0	0	0	0	0	2.57	2.57
Inverter	MV1-3	364440	4906039	2	0	0	89.1	89.1	1	6858.33	3.25	0	87.72	0	2.09	0	0	14.82	0	0	0	0	0	0	-15.58	-15.58
Inverters	G_Inv2	366676.9	4903239.1	2	0	0	87.7	87.7	1	6168.45	3.25	0	86.8	0	2.92	0	0	7.15	0	0	0	0	0	0	-9.22	-9.22
Inverters	G_Inv4	366732.8	4903105	2	0	0	87.7	87.7	1	6221.99	3.25	0	86.88	0	2.93	0	0	7.2	0	0	0	0	0	0	-9.35	-9.35
Inverters	G_Inv6	366788.5	4902972	2	0	0	87.7	87.7	1	6277.78	3.25	0	86.96	0	2.93	0	0	7.26	0	0	0	0	0	0	-9.49	-9.49
Inverters	G_Inv1	366526.4	4903225.8	2	0	0	87.7	87.7	1	6287.28	3.25	0	86.97	0	2.93	0	0	7.27	0	0	0	0	0	0	-9.51	-9.51
Inverters	G_Inv8	366844.5	4902838.5	2	0	0	87.7	87.7	1	6336.52	3.25	0	87.04	0	2.93	0	0	7.32	0	0	0	0	0	0	-9.63	-9.63
Inverters	G_Inv3	366583.7	4903091.4	2	0	0	87.7	87.7	1	6337.96	3.39	0	87.04	0	3.27	1.4	0	7.32	0	0	0	0	0	0	-11.37	-11.37
Inverters	G_Inv5	366638.5	4902958.1	2	0	0	87.7	87.7	1	6392.57	3.25	0	87.11	0	2.93	0	0	7.38	0	0	0	0	0	0	-9.76	-9.76
Inverters	G_Inv10	366900.7	4902704.8	2	0	0	87.7	87.7	1	6398.02	3.25	0	87.12	0	2.93	0	0	7.38	0	0	0	0	0	0	-9.78	-9.78
Inverters	G_Inv7	366694.6	4902824.7	2	0	0	87.7	87.7	1	6449.11	3.25	0	87.19	0	2.93	0	0	7.44	0	0	0	0	0	0	-9.9	-9.9
Westbrook Inverter Transfor	W_INVTR4	369679	4906164	2	0	0	77.3	77.3	1	1977.86	3.25	0	76.92	0	-2.4	0	0	1.2	0	0	0	0	0	0	1.62	1.62
Inverters	G_Inv9	366750.9	4902691.8	2	0	0	87.7	87.7	1	6507.88	3.25	0	87.27	0	2.94	0	0	7.5	0	0	0	0	0	0	-10.04	-10.04
Westbrook Inverter Transfor	W_INVTR2	369368	4906388	2	0	0	77.3	77.3	1	2091.06	3.25	0	77.41	0	-2.44	0	0	1.25	0	0	0	0	0	0	1.12	1.12
Westbrook Inverter Transfor	W_INVTR3	369514	4906164	2	0	0	77.3	77.3	1	2102.84	3.25	0	77.46	0	-2.44	0	0	1.26	0	0	0	0	0	0	1.07	1.07
Inverter Transformer	MV6-1 T	370230	4907364	2	0	0	69.4	69.4	1	921.36	3.25	0	70.29	0	1.62	0	0	3.7	0	0	0	0	0	0	-6.25	-6.25
Inverter Transformer	MV6-4 T	370244	4906966	2	0	0	69.4	69.4	1	1042.23	3.25	0	71.36	0	1.72	0	0	3.87	0	0	0	0	0	0	-7.59	-7.59
Inverter Transformer	MV6-3 T	370202	4907140	2	0	0	56.1	56.1	1	1004.8	3.25	0	71.04	0	0.01	0	0	4.9	0	0	0	0	0	0	-19.9	-19.9
Inverter Transformer	MV6-2 T	370091	4907339	2	0	0	56.1	56.1	1	1062.52	3.25	0	71.53	0	0.03	0	0	5.04	0	0	0	0	0	0	-20.54	-20.54
Inverter Transformer	MV2-1 T	365836	4906816	2	0	0	69.4	69.4	1	5349.27	3.25	0	85.57	0	3.08	0	0	7.61	0	0	0	0	0	0	-26.91	-26.91
Inverter Transformer	MV1-10 T	365010	4905564	2	0	0	69.4	69.4	1	6428.86	3.25	0	87.16	0	3.25	0	0	8.27	0	0	0	0	0	0	-29.34	-29.34
Inverter Transformer	MV1-7 T	364919	4905782	2	0	0	69.4	69.4	1	6454.46	3.25	0	87.2	0	3.25	0	0	8.29	0	0	0	0	0	0	-29.39	-29.39
Inverter Transformer	MV1-14 T	365157	4905049	2	0	0	69.4	69.4	1	6465.54	3.25	0	87.21	0	3.25	0	0	8.3	0	0	0	0	0	0	-29.41	-29.41
Inverter Transformer	MV5-4 T	370330	4908707	2	0	0	56.1	56.1	1	1458.87	3.25	0	74.28	0	0.18	0	0	5.93	0	0	0	0	0	0	-24.33	-24.33
Inverter Transformer	MV1-13 T	364725	4905241	2	0	0	69.4	69.4	1	6801.35	3.25	0	87.65	0	3.3	0	0	8.49	0	0	0	0	0	0	-30.09	-30.09
Inverter Transformer	MV5-6 T	369987	4908507	2	0	0	56.1	56.1	1	1535.64	3.25	0	74.73	0	0.21	0	0	6.09	0	0	0	0	0	0	-24.97	-24.97
Inverter Transformer	MV5-3 T	370237	4908851	2	0	0	56.1	56.1	1	1630.27	3.25	0	75.25	0	0.25	0	0	6.29	0	0	0	0	0	0	-25.73	-25.73
Inverter Transformer	MV5-5 T	370021	4908690	2	0	0	56.1	56.1	1	1638.5	3.25	0	75.29	0	0.25	0	0	6.31	0	0	0	0	0	0	-25.8	-25.8
Inverter Transformer	MV5-2 T	370011	4908853	2	0	0	56.1	56.1	1	1767.29	3.25	0	75.95	0	0.31	0	0	6.58	0	0	0	0	0	0	-26.77	-26.77
Inverter Transformer	MV5-1 T	370015	4909142	2	0	0	56.1	56.1	1	1995.68	3.25	0	77	0	0.4	0	0	7.04	0	0	0	0	0	0	-28.38	-28.38
Inverter Transformer	MV4-15 T	369170	4908481	2	0	0	56.1	56.1	1	2204.76	3.25	0	77.87	0	0.49	0	0	7.44	0	0	0	0	0	0	-29.74	-29.74
Inverter Transformer	MV4-14 T	369182	4908507	2	0	0	56.1	56.1	1	2205.84	3.25	0	77.87	0	0.49	0	0	7.44	0	0	0	0	0	0	-29.75	-29.75
Inverter Transformer	MV4-10 T	369307	4908858	2	0	0	56.1	56.1	1	2285.83	3.25	0	78.18	0	0.53	0	0	7.59	0	0	0	0	0	0	-30.24	-30.24
Inverter Transformer	MV4-11 T	369269	4908855	2	0	0	56.1	56.1	1	2314.68	3.25	0	78.29	0	0.54	0	0	7.65	0	0	0	0	0	0	-30.42	-30.42
Inverter Transformer	MV4-13 T	369057	4908605	2	0	0	56.1	56.1	1	2362.06	3.25	0	78.47	0	0.56	0	0	7.74	0	0	0	0	0	0	-30.7	-30.7
Inverter Transformer	MV4-9 T	369284	4909001	2	0	0	56.1	56.1	1	2391.7	3.25	0	78.57	0	0.57	0	0	7.79	0	0	0	0	0	0	-30.88	-30.88
Inverter Transformer	MV4-8 T	369262	4909001	2	0	0	56.1	56.1	1	2408.83	3.25	0	78.64	0	0.58	0	0	7.82	0	0	0	0	0	0	-30.98	-30.98
Inverter Transformer	MV3-14 T	368678	4907498	2	0	0	56.1	56.1	1	2464	3.25	0	78.83	0	0.6	0	0	7.92	0	0	0	0	0	0	-31.3	-31.3
Inverter Transformer	MV3-20 T	368683	4907317	2	0	0	56.1	56.1	1	2465.44	3.25	0	78.84	0	0.6	0	0	7.93	0	0	0	0	0	0	-31.31	-31.31
Inverter Transformer	MV3-8 T	368685	4907712	2	0	0	56.1	56.1	1	2466.57	3.25	0	78.84	0	0.6	0	0	7.93	0	0	0	0	0	0	-31.31	-31.31
Inverter Transformer	MV4-12 T	369049	4908803	2	0	0	56.1	56.1	1	2468.1	3.25	0	78.85	0	0.6	0	0	7.93	0	0	0	0	0	0	-31.32	-31.32
Inverter Transformer	MV3-2 T	368677	4907928	2	0	0	56.1	56.1	1	2502.74	3.25	0	78.97	0	0.62	0	0	7.99	0	0	0	0	0	0	-31.52	-31.52
Inverter Transformer	MV3-22 T	368661	4907142	2	0	0	56.1	56.1	1	2505.99	3.25	0	78.98	0	0.62	0	0	8	0	0	0	0	0	0	-31.54	-31.54
Inverter Transformer	MV4-5 T	369283	4909199	2	0	0	56.1	56.1	1	2521.81	3.25	0	79.03	0	0.63	0	0	8.03	0	0	0	0	0	0	-31.63	-31.63
Inverter Transformer	MV4-6 T	369249	4909192	2	0	0	56.1	56.1	1	2542.3	3.25	0	79.1	0	0.63	0	0	8.07	0	0	0	0	0	0	-31.75	-31.75
Inverter Transformer	MV4-7 T	369040	4909001	2	0	0	56.1	56.1	1	2585.82	3.25	0	79.25	0	0.65	0	0	8.14	0	0	0	0	0	0	-31.99	-31.99
Inverter Transformer	MV3-16 T	368509	4907475	2	0	0	56.1	56.1	1	2633.08	3.25	0	79.41	0	0.67	0	0	8.23	0	0	0	0	0	0	-32.25	-32.25

	Inverter Transformer	MV3-9 T	368517	4907703	2	0	0	56.1	56.1	1	2633.23	3.25	0	79.41	0	0.67	0	0	8.23	0	0	0	0	0	0	-32.25	-32.25
	Inverter Transformer	MV3-4 T	368507	4907925	2	0	0	56.1	56.1	1	2669.86	3.25	0	79.53	0	0.69	0	0	8.3	0	0	0	0	0	0	-32.46	-32.46
	Inverter Transformer	MV4-2 T	369267	4909397	2	0	0	56.1	56.1	1	2670.81	3.25	0	79.53	0	0.69	0	0	8.3	0	0	0	0	0	0	-32.46	-32.46
	Inverter Transformer	MV3-21 T	368484	4907206	2	0	0	56.1	56.1	1	2673.67	3.25	0	79.54	0	0.69	0	0	8.3	0	0	0	0	0	0	-32.48	-32.48
	Inverter Transformer	MV4-3 T	369234	4909397	2	0	0	56.1	56.1	1	2694.08	3.25	0	79.61	0	0.7	0	0	8.34	0	0	0	0	0	0	-32.59	-32.59
	Inverter Transformer	MV4-4 T	369033	4909199	2	0	0	56.1	56.1	1	2711.37	3.25	0	79.66	0	0.71	0	0	8.37	0	0	0	0	0	0	-32.68	-32.68
	Inverter Transformer	MV3-15 T	368351	4907477	2	0	0	56.1	56.1	1	2791.06	3.25	0	79.92	0	0.74	0	0	8.51	0	0	0	0	0	0	-33.11	-33.11
	Inverter Transformer	MV3-19 T	368352	4907347	2	0	0	56.1	56.1	1	2793.92	3.25	0	79.92	0	0.74	0	0	8.51	0	0	0	0	0	0	-33.12	-33.12
	Inverter Transformer	MV3-11 T	368340	4907662	2	0	0	56.1	56.1	1	2806.97	3.25	0	79.96	0	0.75	0	0	8.54	0	0	0	0	0	0	-33.19	-33.19
	Inverter Transformer	MV3-5 T	368335	4907843	2	0	0	56.1	56.1	1	2828.49	3.25	0	80.03	0	0.76	0	0	8.57	0	0	0	0	0	0	-33.3	-33.3
	Inverter Transformer	MV4-1 T	369017	4909397	2	0	0	56.1	56.1	1	2851.88	3.25	0	80.1	0	0.77	0	0	8.61	0	0	0	0	0	0	-33.43	-33.43
	Inverter Transformer	MV3-17 T	368183	4907472	2	0	0	56.1	56.1	1	2959.09	3.25	0	80.42	0	0.81	0	0	8.8	0	0	0	0	0	0	-33.98	-33.98
	Inverter Transformer	MV3-10 T	368162	4907669	2	0	0	56.1	56.1	1	2985.08	3.25	0	80.5	0	0.82	0	0	8.84	0	0	0	0	0	0	-34.11	-34.11
	Inverter Transformer	MV3-6 T	368156	4907834	2	0	0	56.1	56.1	1	3005.18	3.25	0	80.56	0	0.83	0	0	8.88	0	0	0	0	0	0	-34.21	-34.21
	Inverter Transformer	MV3-1 T	368150	4907976	2	0	0	56.1	56.1	1	3030.42	3.25	0	80.63	0	0.84	0	0	8.92	0	0	0	0	0	0	-34.33	-34.33
	Inverter Transformer	MV3-13 T	367958	4907577	2	0	0	56.1	56.1	1	3185.06	3.25	0	81.06	0	0.91	0	0	9.18	0	0	0	0	0	0	-35.09	-35.09
	Inverter Transformer	MV3-7 T	367951	4907754	2	0	0	56.1	56.1	1	3201.49	3.25	0	81.11	0	0.92	0	0	9.21	0	0	0	0	0	0	-35.17	-35.17
	Inverter Transformer	MV3-3 T	367944	4907927	2	0	0	56.1	56.1	1	3227.05	3.25	0	81.18	0	0.93	0	0	9.25	0	0	0	0	0	0	-35.29	-35.29
	Inverter Transformer	MV3-18 T	367757	4907412	2	0	0	56.1	56.1	1	3386.02	3.25	0	81.59	0	0.99	0	0	9.51	0	0	0	0	0	0	-36.03	-36.03
	Inverter Transformer	MV3-12 T	367674	4907594	2	0	0	56.1	56.1	1	3469.41	3.25	0	81.81	0	1.03	0	0	9.64	0	0	0	0	0	0	-36.41	-36.41
	Inverter Transformer	MV2-2 T	365982	4906654	2	0	0	56.1	56.1	1	5228.09	3.25	0	85.37	0	1.71	0	0	12.15	0	0	0	0	0	0	-43.17	-43.17
	Inverter Transformer	MV2-3 T	365814	4906641	2	0	0	56.1	56.1	1	5396.01	3.25	0	85.64	0	1.77	0	0	12.36	0	0	0	0	0	0	-43.71	-43.71
	Inverter Transformer	MV2-4 T	365590	4906628	2	0	0	56.1	56.1	1	5619.29	3.25	0	85.99	0	1.84	0	0	12.64	0	0	0	0	0	0	-44.42	-44.42
	Inverter Transformer	MV1-15 T	365309	4904994	2	0	0	56.1	56.1	1	6346.57	3.25	0	87.05	0	2.07	0	0	13.51	0	0	0	0	0	0	-46.57	-46.57
	Inverter Transformer	MV1-12 T	365044	4905386	2	0	0	56.1	56.1	1	6452.4	3.25	0	87.19	0	2.1	0	0	13.63	0	0	0	0	0	0	-46.87	-46.87
	Inverter Transformer	MV1-4 T	364821	4905918	2	0	0	56.1	56.1	1	6514.75	3.25	0	87.28	0	2.12	0	0	13.7	0	0	0	0	0	0	-47.04	-47.04
	Inverter Transformer	MV1-2 T	364759	4906063	2	0	0	56.1	56.1	1	6541.66	3.25	0	87.31	0	2.13	0	0	13.73	0	0	0	0	0	0	-47.11	-47.11
	Inverter Transformer	MV1-1 T	364721	4906166	2	0	0	56.1	56.1	1	6557.09	3.25	0	87.33	0	2.13	0	0	13.74	0	0	0	0	0	0	-47.15	-47.15
	Inverter Transformer	MV1-8 T	364782	4905647	2	0	0	56.1	56.1	1	6623.04	3.25	0	87.42	0	2.15	0	0	13.82	0	0	0	0	0	0	-47.33	-47.33
	Inverter Transformer	MV1-5 T	364676	4905892	2	0	0	56.1	56.1	1	6661.74	3.25	0	87.47	0	2.16	0	0	13.86	0	0	0	0	0	0	-47.44	-47.44
	Inverter Transformer	MV1-11 T	364649	4905414	2	0	0	56.1	56.1	1	6818.33	3.25	0	87.67	0	2.21	0	0	14.03	0	0	0	0	0	0	-47.86	-47.86
	Inverter Transformer	MV1-9 T	364555	4905646	2	0	0	56.1	56.1	1	6841.59	3.25	0	87.7	0	2.22	0	0	14.06	0	0	0	0	0	0	-47.92	-47.92
	Inverter Transformer	MV1-3 T	364435	4906039	2	0	0	56.1	56.1	1	6863.22	3.25	0	87.73	0	2.22	0	0	14.08	0	0	0	0	0	0	-47.98	-47.98
	Inverter Transformer	MV1-6 T	364482	4905835	2	0	0	56.1	56.1	1	6863.76	3.25	0	87.73	0	2.22	0	0	14.08	0	0	0	0	0	0	-47.98	-47.98
	Line Reactor	NGR	369421	4908787.5	5	0	0	45.4	45.4	1	2152.3	5.25	0	77.66	0	3.37	1.28	0.07	0.88	0	0	0	0	0	0	-37.83	-37.83
Limit. Valu	0	0																								
Level D/N:	29.3908	29.3908																								

Receiver: Vacant Lot Receptor
ID: S-VLR29
X: 370958
Y: 4907126
Z: 4.5
Ground: 0

ISO	Description	ID	X	Y	Z	Ground	ReflOrd	LxT	LxN	L/A	Dist.	hm	Freq	Adiv	K0b	Agr	Abar	z	Aatm	Afol	Ahous	Cmet	CmetN	Dc	RL	LtotT	LtotN
	Sol_Luce Substation	S_Substation	369426	4908792	3.5	0	0	112.1	112.1	1	2263.31	5.25	0	78.09	0	0.08	3.66	0.33	4.81	0	0	0	0	0	0	25.43	25.43
	Inverter	MV6-3	370207	4907140	2	0	0	100.3	100.3	1	751.13	3.25	0	68.51	0	-0.38	0	0	9.97	0	0	0	0	0	0	22.2	22.2
	Inverter	MV6-2	370085	4907339	2	0	0	100.3	100.3	1	898.61	3.25	0	70.07	0	-0.3	0	0	10.56	0	0	0	0	0	0	19.98	19.98
	Inverter	MV6-1	370235	4907364	2	0	0	97.3	97.3	1	761.17	3.25	0	68.63	0	-0.37	0	0	10.02	0	0	0	0	0	0	19.04	19.04
	Inverter	MV5-4	370324	4908707	2	0	0	100.3	100.3	1	1703.39	3.25	0	75.63	0	0.04	0	0	12.81	0	0	0	0	0	0	11.84	11.84
	Inverter	MV5-5	370015	4908690	2	0	0	100.3	100.3	1	1826.29	3.25	0	76.23	0	0.08	0	0	13.09	0	0	0	0	0	0	10.92	10.92
	Inverter	MV5-3	370231	4908851	2	0	0	100.3	100.3	1	1871.94	3.25	0	76.45	0	0.09	0	0	13.19	0	0	0	0	0	0	10.59	10.59
	Inverter	MV5-2	370006	4908853	2	0	0	100.3	100.3	1	1972.01	3.25	0	76.9	0	0.12	0	0	13.4	0	0	0	0	0	0	9.89	9.89
	Inverter	MV5-1	370020	4909142	2	0	0	100.3	100.3	1	2223.53	3.25	0	77.94	0	0.19	0	0	13.92	0	0	0	0	0	0	8.26	8.26
	Inverter	MV3-20	368689	4907317	2	0	0	100.3	100.3	1	2277.03	3.25	0	78.15	0	0.2	0	0	14.03	0	0	0	0	0	0	7.93	7.93
	Inverter	MV3-14	368684	4907498	2	0	0	100.3	100.3	1	2304.23	3.25	0	78.25	0	0.21	0	0	14.08	0	0	0	0	0	0	7.77	7.77
	Inverter	MV3-8	368680	4907712	2	0	0	100.3	100.3	1	2352.17	3.25	0	78.43	0	0.22	0	0	14.17	0	0	0	0	0	0	7.49	7.49
	Inverter	MV4-10	369312	4908858	2	0	0	100.3	100.3	1	2389.38	3.25	0	78.57	0	0.23	0	0	14.25	0	0	0	0	0	0	7.27	7.27
	Inverter	MV4-11	369264	4908855	2	0	0	100.3	100.3	1	2420.55	3.25	0	78.68	0	0.24	0	0	14.31	0	0	0	0	0	0	7.09	7.09
	Inverter	MV3-16	368514	4907475	2	0	0	100.3	100.3	1	2468.79	3.25	0	78.85	0	0.25	0	0	14.4	0	0	0	0	0	0	6.81	6.81
	Inverter	MV3-21	368478	4907206	2	0	0	100.3	100.3	1	2481.29	3.25	0	78.89	0	0.25	0	0	14.42	0	0	0	0	0	0	6.74	6.74
	Inverter	MV4-9	369289	4909001	2	0	0	100.3	100.3	1	2510.22	3.25	0	78.99	0	0.26	0	0	14.48	0	0	0	0	0	0	6.58	6.58
	Inverter	MV3-9	368512	4907703	2	0	0	100.3	100.3	1	2513.14	3.25	0	79	0	0.26	0	0	14.48	0	0	0	0	0	0	6.56	6.56
	Inverter	MV4-8	369256	4909001	2	0	0	100.3	100.3	1	2532.28	3.25	0	79.07	0	0.26	0	0	14.52	0	0	0	0	0	0	6.46	6.46
	Inverter	MV3-19	368357	4907347	2	0	0	100.3	100.3	1	2610.37	3.25	0	79.33	0	0.28	0	0	14.67	0	0	0	0	0	0	6.03	6.03
	Inverter	MV3-15	368357	4907477	2	0	0	100.3	100.3	1	2624.58	3.25	0	79.38	0	0.28	0	0	14.69	0	0	0	0	0	0	5.95	5.95
	Inverter	MV4-5	369289	4909199	2	0	0	100.3	100.3	1	2661.37	3.25	0	79.5	0	0.29	0	0	14.76	0	0	0	0	0	0	5.76	5.76
	Inverter	MV3-11	368346	4907662	2	0	0	100.3	100.3	1	2666.43	3.25	0	79.52	0	0.29	0	0	14.77	0	0	0	0	0	0	5.73	5.73
	Inverter	MV4-6	369243	4909192	2	0	0	100.3	100.3	1	2685.07	3.25	0	79.58	0	0.3	0	0	14.8	0	0	0	0	0	0	5.63	5.63
	Inverter	MV4-7	369035	4909001	2	0	0	100.3	100.3	1	2685.81	3.25	0	79.58	0	0.3	0	0	14.81	0	0	0	0	0	0	5.63	5.63
	Inverter	MV3-17	368178	4907472	2	0	0	100.3	100.3	1	2801.45	3.25	0	79.95	0	0.32	0	0	15.02	0	0	0	0	0	0	5.02	5.02
	Inverter	MV4-2	369272	4909397	2	0	0	100.3	100.3	1	2828.43	3.25	0	80.03	0	0.33	0	0	15.07	0	0	0	0	0	0	4.89	4.89
	Inverter	MV4-4	369027	4909199	2	0	0	100.3	100.3	1	2833.04	3.25	0	80.05	0	0.33	0	0	15.07	0	0	0	0	0	0	4.86	4.86

Inverter	MV3-10	368167	4907669	2	0	0	100.3	100.3	1	2843.33	3.25	0	80.08	0	0.33	0	0	15.09	0	0	0	0	0	0	4.81	4.81
Inverter	MV4-3	369229	4909397	2	0	0	100.3	100.3	1	2854.28	3.25	0	80.11	0	0.33	0	0	15.11	0	0	0	0	0	0	4.76	4.76
Inverter	MV3-6	368162	4907834	2	0	0	100.3	100.3	1	2884.25	3.25	0	80.2	0	0.34	0	0	15.17	0	0	0	0	0	0	4.61	4.61
Inverter	MV4-1	369011	4909397	2	0	0	100.3	100.3	1	2991.36	3.25	0	80.52	0	0.36	0	0	15.36	0	0	0	0	0	0	4.08	4.08
Inverter	MV3-13	367963	4907577	2	0	0	100.3	100.3	1	3028.77	3.25	0	80.63	0	0.37	0	0	15.42	0	0	0	0	0	0	3.9	3.9
Inverter	MV3-7	367945	4907754	2	0	0	100.3	100.3	1	3077.75	3.25	0	80.76	0	0.38	0	0	15.51	0	0	0	0	0	0	3.66	3.66
Inverter	MV3-3	367939	4907927	2	0	0	100.3	100.3	1	3123.45	3.25	0	80.89	0	0.39	0	0	15.59	0	0	0	0	0	0	3.45	3.45
Inverter	MV3-18	367752	4907412	2	0	0	100.3	100.3	1	3218.73	3.25	0	81.15	0	0.4	0	0	15.75	0	0	0	0	0	0	3	3
Inverter	MV3-12	367668	4907594	2	0	0	100.3	100.3	1	3323.12	3.25	0	81.43	0	0.42	0	0	15.93	0	0	0	0	0	0	2.53	2.53
DSTATCOM - 10 MVAR #1	DSAT1	369437	4908757	2.5	0	0	96.6	96.6	1	2230.16	3.5	0	77.97	0	3.27	0	0	1.86	0	0	0	0	0	0	13.54	13.54
DSTATCOM - 10 MVAR #2	DSAT2	369403	4908757	2.5	0	0	96.6	96.6	1	2253.48	3.5	0	78.06	0	3.27	0	0	1.87	0	0	0	0	0	0	13.43	13.43
Inverter	MV6-4	370250	4906966	2	0	0	86.1	86.1	1	725.86	3.25	0	68.22	0	0.62	0	0	5.76	0	0	0	0	0	0	11.46	11.46
SubstationTransformer	W_ST	369711.17	4906112.3	2.5	0	0	92	92	1	1606.93	4.25	0	75.12	0	0.66	3.64	0.21	3.68	0	0	0	0	0	0	8.88	8.88
Westbrook Inverter Enclosur	W_INV6	369875	4906578	2	0	0	89.1	89.1	1	1213.75	3.25	0	72.68	0	0.73	0	0	6.71	0	0	0	0	0	0	8.94	8.94
Westbrook Inverter Enclosur	W_INV5	369719	4906574	2	0	0	89.1	89.1	1	1356.4	3.25	0	73.65	0	0.76	0	0	6.96	0	0	0	0	0	0	7.69	7.69
Westbrook Inverter Enclosur	W_INV7	369780	4906417	2	0	0	89.1	89.1	1	1374.91	3.25	0	73.77	0	0.76	0	0	6.99	0	0	0	0	0	0	7.54	7.54
Inverter	MV2-3	365820	4906641	2	0	0	100.3	100.3	1	5160.84	3.25	0	85.25	0	0.66	0	0	18.82	0	0	0	0	0	0	-4.41	-4.41
Inverter	MV2-4	365586	4906624	2	0	0	100.3	100.3	1	5395.4	3.25	0	85.64	0	0.67	0	0	19.15	0	0	0	0	0	0	-5.15	-5.15
Westbrook Inverter Enclosur	W_INV4	369673	4906164	2	0	0	89.1	89.1	1	1605.2	3.25	0	75.11	0	0.82	0	0	7.39	0	0	0	0	0	0	5.74	5.74
Inverter	MV1-15	365315	4904994	2	0	0	100.3	100.3	1	6032.32	3.25	0	86.61	0	0.71	0	0	20.04	0	0	0	0	0	0	-7.04	-7.04
Inverter	MV1-12	365038	4905386	2	0	0	100.3	100.3	1	6170.41	3.25	0	86.81	0	0.71	0	0	20.22	0	0	0	0	0	0	-7.43	-7.43
Inverter	MV5-6	369982	4908507	2	0	0	89.1	89.1	1	1691.08	3.25	0	75.56	0	0.84	0	0	7.53	0	0	0	0	0	0	5.13	5.13
Inverter	MV1-4	364815	4905918	2	0	0	100.3	100.3	1	6260.65	3.25	0	86.93	0	0.71	0	0	20.34	0	0	0	0	0	0	-7.68	-7.68
Inverter	MV1-2	364753	4906063	2	0	0	100.3	100.3	1	6295.4	3.25	0	86.98	0	0.71	0	0	20.39	0	0	0	0	0	0	-7.77	-7.77
Inverter	MV1-1	364715	4906166	2	0	0	100.3	100.3	1	6316.38	3.25	0	87.01	0	0.71	0	0	20.42	0	0	0	0	0	0	-7.83	-7.83
Inverter	MV1-8	364788	4905647	2	0	0	100.3	100.3	1	6344.79	3.25	0	87.05	0	0.71	0	0	20.46	0	0	0	0	0	0	-7.9	-7.9
Westbrook Inverter Enclosur	W_INV3	369508	4906164	2	0	0	89.1	89.1	1	1740.1	3.25	0	75.81	0	0.85	0	0	7.62	0	0	0	0	0	0	4.78	4.78
Westbrook Inverter Enclosur	W_INV2	369374	4906388	2	0	0	89.1	89.1	1	1747.49	3.25	0	75.85	0	0.85	0	0	7.63	0	0	0	0	0	0	4.73	4.73
Inverter	MV1-5	364671	4905892	2	0	0	100.3	100.3	1	6406.96	3.25	0	87.13	0	0.71	0	0	20.54	0	0	0	0	0	0	-8.07	-8.07
Inverter	MV1-11	364655	4905414	2	0	0	100.3	100.3	1	6531.37	3.25	0	87.3	0	0.71	0	0	20.7	0	0	0	0	0	0	-8.4	-8.4
Inverter	MV1-9	364561	4905646	2	0	0	100.3	100.3	1	6565.97	3.25	0	87.35	0	0.72	0	0	20.74	0	0	0	0	0	0	-8.49	-8.49
Inverter	MV1-6	364477	4905835	2	0	0	100.3	100.3	1	6608.33	3.25	0	87.4	0	0.72	0	0	20.8	0	0	0	0	0	0	-8.6	-8.6
Inverter	MV2-1	365842	4906816	2	0	0	97.3	97.3	1	5125.38	3.25	0	85.19	0	0.65	0	0	18.76	0	0	0	0	0	0	-7.3	-7.3
Fixed Reactor Bank 2	FRB2	369464	4908755	6	0	0	89.8	89.8	1	2210.36	5.25	0	77.89	0	-0.97	0	0	4.72	0	0	0	0	0	0	8.14	8.14
Fixed Reactor Bank 1	FRB1	369378	4908755	6	0	0	89.8	89.8	1	2269.37	5.25	0	78.12	0	-0.97	0	0	4.82	0	0	0	0	0	0	7.81	7.81
Inverter	MV4-15	369176	4908481	2	0	0	89.1	89.1	1	2238.65	3.25	0	78	0	0.96	0	0	8.43	0	0	0	0	0	0	1.66	1.66
Inverter	MV4-14	369176	4908507	2	0	0	89.1	89.1	1	2254.48	3.25	0	78.06	0	0.97	0	0	8.46	0	0	0	0	0	0	1.57	1.57
Inverter	MV3-22	368656	4907142	2	0	0	89.1	89.1	1	2302.06	3.25	0	78.24	0	0.98	0	0	8.53	0	0	0	0	0	0	1.3	1.3
Westbrook Inverter Enclosur	W_INV1	369409	4906578	2	0	0	86.1	86.1	1	1643.08	3.25	0	75.31	0	0.82	0	0	7.45	0	0	0	0	0	0	2.47	2.47
Inverter	MV1-10	365004	4905564	2	0	0	97.3	97.3	1	6155.48	3.25	0	86.79	0	0.71	0	0	20.2	0	0	0	0	0	0	-10.39	-10.39
Inverter	MV1-14	365163	4905049	2	0	0	97.3	97.3	1	6155.97	3.25	0	86.79	0	0.71	0	0	20.2	0	0	0	0	0	0	-10.39	-10.39
Inverter	MV1-7	364925	4905782	2	0	0	97.3	97.3	1	6180.89	3.25	0	86.82	0	0.71	0	0	20.24	0	0	0	0	0	0	-10.46	-10.46
Inverter	MV4-13	369051	4908605	2	0	0	89.1	89.1	1	2413.32	3.25	0	78.65	0	1	0	0	8.71	0	0	0	0	0	0	0.69	0.69
Inverter	MV3-2	368671	4907928	2	0	0	89.1	89.1	1	2423.55	3.25	0	78.69	0	1.01	0	0	8.73	0	0	0	0	0	0	0.64	0.64
Inverter	MV1-13	364731	4905241	2	0	0	97.3	97.3	1	6506.06	3.25	0	87.27	0	0.71	0	0	20.67	0	0	0	0	0	0	-11.34	-11.34
Inverter	MV4-12	369043	4908803	2	0	0	89.1	89.1	1	2545.5	3.25	0	79.12	0	1.04	0	0	8.92	0	0	0	0	0	0	-0.01	-0.01
Inverter	MV3-4	368502	4907925	2	0	0	89.1	89.1	1	2582.7	3.25	0	79.24	0	1.05	0	0	8.98	0	0	0	0	0	0	-0.2	-0.2
Inverter	MV3-5	368340	4907843	2	0	0	89.1	89.1	1	2714.41	3.25	0	79.67	0	1.08	0	0	9.18	0	0	0	0	0	0	-0.87	-0.87
Inverter	MV3-1	368156	4907976	2	0	0	89.1	89.1	1	2928.09	3.25	0	80.33	0	1.13	0	0	9.51	0	0	0	0	0	0	-1.91	-1.91
Westbrook Inverter Transfor	W_INVTR6	369881	4906578	2	0	0	77.3	77.3	1	1208.4	3.25	0	72.64	0	-2.06	0	0	0.8	0	0	0	0	0	0	5.96	5.96
Gardiner Substation	G_Sub	366586.3	4903349.9	2.5	0	0	90.8	90.8	1	5776.74	4.25	0	86.23	0	1.83	2.16	0.33	9.5	0	0	0	0	0	0	-8.94	-8.94
Inverter	MV2-2	365977	4906654	2	0	0	89.1	89.1	1	5003.31	3.25	0	84.99	0	1.64	0	0	12.47	0	0	0	0	0	0	-10.04	-10.04
Westbrook Inverter Transfor	W_INVTR5	369725	4906574	2	0	0	77.3	77.3	1	1350.93	3.25	0	73.61	0	-2.13	0	0	0.87	0	0	0	0	0	0	4.98	4.98
Westbrook Inverter Transfor	W_INVTR7	369786	4906417	2	0	0	77.3	77.3	1	1369.77	3.25	0	73.73	0	-2.14	0	0	0.88	0	0	0	0	0	0	4.86	4.86
Westbrook Inverter Transfor	W_INVTR1	369403	4906578	2	0	0	78.2	78.2	1	1648.74	3.25	0	75.34	0	-2.27	0	0	1.03	0	0	0	0	0	0	4.14	4.14
Westbrook Inverter Transfor	W_INVTR4	369679	4906164	2	0	0	77.3	77.3	1	1600.4	3.25	0	75.08	0	-2.25	0	0	1.01	0	0	0	0	0	0	3.5	3.5
Inverter	MV1-3	364440	4906039	2	0	0	89.1	89.1	1	6608.02	3.25	0	87.4	0	2.03	0	0	14.52	0	0	0	0	0	0	-14.89	-14.89
Westbrook Inverter Transfor	W_INVTR3	369514	4906164	2	0	0	77.3	77.3	1	1735.1	3.25	0	75.79	0	-2.3	0	0	1.08	0	0	0	0	0	0	2.78	2.78
Westbrook Inverter Transfor	W_INVTR2	369368	4906388	2	0	0	77.3	77.3	1	1752.93	3.25	0	75.88	0	-2.31	0	0	1.08	0	0	0	0	0	0	2.69	2.69
Inverters	G_Inv2	366676.9	4903239.1	2	0	0	87.7	87.7	1	5782.37	3.25	0	86.24	0	2.91	0	0	6.75	0	0	0	0	0	0	-8.24	-8.24
Inverters	G_Inv4	366732.8	4903105	2	0	0	87.7	87.7	1	5832.73	3.25	0	86.32	0	2.91	0	0	6.81	0	0	0	0	0	0	-8.37	-8.37
Inverters	G_Inv6	366788.5	4902972	2	0	0	87.7	87.7	1	5885.61	3.25	0	86.4	0	2.91	0	0	6.86	0	0	0	0	0	0	-8.51	-8.51
Inverters	G_Inv1	366526.4	4903225.8	2	0	0	87.7	87.7	1	5903.44	3.25	0	86.42	0	2.91	0	0	6.88	0	0	0	0	0	0	-8.55	-8.55
Inverters	G_Inv8	366844.5	4902838.5	2	0	0	87.7	87.7	1	5941.68	3.25	0	86.48	0	2.91	0	0	6.92	0	0	0	0	0	0	-8.65	-8.65
Inverters	G_Inv3	366583.7	4903091.4	2	0	0	87.7	87.7	1	5950.84	3.25	0	86.49	0	2.92	0	0	6.93	0	0	0	0	0	0	-8.67	-8.67
Inverters	G_Inv10	366900.7	4902704.8	2	0	0	87.7	87.7	1	6000.72	3.25	0	86.56	0	2.92	0	0	6.98	0	0	0	0	0	0	-8.8	-8.8
Inverters	G_Inv5	366638.5	4902958.1	2	0	0	87.7	87.7	1	6002.46	3.25	0	86.57	0	2.92	0	0	6.98	0	0	0	0	0	0	-8.8	-8.8
Inverter Transformer	MV6-4 T	370244	4906966	2	0	0	69.4	69.4	1	731.71	3.25	0	68.29	0	1.4	0	0	3.4	0	0	0	0	0	0	-3.74	-3.74
Inverters	G_Inv7	366694.6	4902824.7	2	0	0	87.7	87.7	1	6056.22	3.25	0	86.64	0	2.92	0	0	7.04	0	0	0	0	0	0	-8.94	-8.94
Inverters	G_Inv9	366750.9	4902691.8	2	0	0	87.7	87.7	1	6112.43	3.25	0	86.72	0	2.92	0	0	7.09	0	0	0	0	0	0	-9.08	-9.08
Inverter Transformer	MV6-1 T	370230	4907364	2	0	0	69.4	69.4	1	765.92	3.25	0	68.68	0	1.45	0	0	3.46	0	0	0	0	0	0	-4.24	-4.24
Inverter Transformer	MV6-3 T	370202	4907140	2	0	0	56.1	56.1	1	756.13	3.25	0	68.57	0	-0.07	0	0	4.28	0	0	0	0	0	0	-16.73	-16.73
Inverter Transformer	MV6-2 T	370091	4907339	2	0	0	56.1	56.1	1	892.78	3.25	0	70.01	0	-0.02	0	0	4.63	0	0	0	0	0	0	-18.56	-18.56
Inverter Transformer	MV2-1 T	365836	4906816	2	0	0	69.4	69.4	1	5131.37	3.25	0	85.2	0	3.04	0	0	7.47	0	0	0	0	0	0	-26.36	-26.36

	Inverter Transformer	MV1-10 T	365010	4905564	2	0	0	69.4	69.4	1	6149.68	3.25	0	86.78	0	3.21	0	0	8.11	0	0	0	0	0	0	-28.75	-28.75
	Inverter Transformer	MV1-14 T	365157	4905049	2	0	0	69.4	69.4	1	6161.62	3.25	0	86.79	0	3.21	0	0	8.12	0	0	0	0	0	0	-28.77	-28.77
	Inverter Transformer	MV1-7 T	364919	4905782	2	0	0	69.4	69.4	1	6186.75	3.25	0	86.83	0	3.22	0	0	8.13	0	0	0	0	0	0	-28.83	-28.83
	Inverter Transformer	MV1-13 T	364725	4905241	2	0	0	69.4	69.4	1	6511.8	3.25	0	87.27	0	3.26	0	0	8.32	0	0	0	0	0	0	-29.51	-29.51
	Inverter Transformer	MV5-6 T	369987	4908507	2	0	0	56.1	56.1	1	1688.2	3.25	0	75.55	0	0.27	0	0	6.41	0	0	0	0	0	0	-26.18	-26.18
	Inverter Transformer	MV5-4 T	370330	4908707	2	0	0	56.1	56.1	1	1701.16	3.25	0	75.61	0	0.28	0	0	6.44	0	0	0	0	0	0	-26.28	-26.28
	Inverter Transformer	MV5-5 T	370021	4908690	2	0	0	56.1	56.1	1	1823.2	3.25	0	76.22	0	0.33	0	0	6.69	0	0	0	0	0	0	-27.18	-27.18
	Inverter Transformer	MV5-3 T	370237	4908851	2	0	0	56.1	56.1	1	1869.62	3.25	0	76.44	0	0.35	0	0	6.78	0	0	0	0	0	0	-27.51	-27.51
	Inverter Transformer	MV5-2 T	370011	4908853	2	0	0	56.1	56.1	1	1969.61	3.25	0	76.89	0	0.39	0	0	6.98	0	0	0	0	0	0	-28.2	-28.2
	Inverter Transformer	MV5-1 T	370015	4909142	2	0	0	56.1	56.1	1	2225.65	3.25	0	77.95	0	0.5	0	0	7.48	0	0	0	0	0	0	-29.87	-29.87
	Inverter Transformer	MV4-15 T	369170	4908481	2	0	0	56.1	56.1	1	2243.43	3.25	0	78.02	0	0.51	0	0	7.51	0	0	0	0	0	0	-29.98	-29.98
	Inverter Transformer	MV4-14 T	369182	4908507	2	0	0	56.1	56.1	1	2249.74	3.25	0	78.04	0	0.51	0	0	7.53	0	0	0	0	0	0	-30.02	-30.02
	Inverter Transformer	MV3-20 T	368683	4907317	2	0	0	56.1	56.1	1	2283.01	3.25	0	78.17	0	0.52	0	0	7.59	0	0	0	0	0	0	-30.22	-30.22
	Inverter Transformer	MV3-22 T	368661	4907142	2	0	0	56.1	56.1	1	2297.06	3.25	0	78.22	0	0.53	0	0	7.61	0	0	0	0	0	0	-30.31	-30.31
	Inverter Transformer	MV3-14 T	368678	4907498	2	0	0	56.1	56.1	1	2310.15	3.25	0	78.27	0	0.54	0	0	7.64	0	0	0	0	0	0	-30.39	-30.39
	Inverter Transformer	MV3-8 T	368685	4907712	2	0	0	56.1	56.1	1	2347.32	3.25	0	78.41	0	0.55	0	0	7.71	0	0	0	0	0	0	-30.61	-30.61
	Inverter Transformer	MV4-10 T	369307	4908858	2	0	0	56.1	56.1	1	2392.83	3.25	0	78.58	0	0.57	0	0	7.79	0	0	0	0	0	0	-30.88	-30.88
	Inverter Transformer	MV4-13 T	369057	4908605	2	0	0	56.1	56.1	1	2408.58	3.25	0	78.64	0	0.58	0	0	7.82	0	0	0	0	0	0	-30.98	-30.98
	Inverter Transformer	MV4-11 T	369269	4908855	2	0	0	56.1	56.1	1	2417.06	3.25	0	78.67	0	0.58	0	0	7.84	0	0	0	0	0	0	-31.03	-31.03
	Inverter Transformer	MV3-2 T	368677	4907928	2	0	0	56.1	56.1	1	2417.89	3.25	0	78.67	0	0.58	0	0	7.84	0	0	0	0	0	0	-31.03	-31.03
	Inverter Transformer	MV3-16 T	368509	4907475	2	0	0	56.1	56.1	1	2473.74	3.25	0	78.87	0	0.61	0	0	7.94	0	0	0	0	0	0	-31.36	-31.36
	Inverter Transformer	MV3-21 T	368484	4907206	2	0	0	56.1	56.1	1	2475.29	3.25	0	78.87	0	0.61	0	0	7.94	0	0	0	0	0	0	-31.36	-31.36
	Inverter Transformer	MV3-9 T	368517	4907703	2	0	0	56.1	56.1	1	2508.27	3.25	0	78.99	0	0.62	0	0	8	0	0	0	0	0	0	-31.55	-31.55
	Inverter Transformer	MV4-9 T	369284	4909001	2	0	0	56.1	56.1	1	2513.54	3.25	0	79.01	0	0.62	0	0	8.01	0	0	0	0	0	0	-31.58	-31.58
	Inverter Transformer	MV4-8 T	369262	4909001	2	0	0	56.1	56.1	1	2528.25	3.25	0	79.06	0	0.63	0	0	8.04	0	0	0	0	0	0	-31.67	-31.67
	Inverter Transformer	MV4-12 T	369049	4908803	2	0	0	56.1	56.1	1	2540.99	3.25	0	79.1	0	0.63	0	0	8.06	0	0	0	0	0	0	-31.74	-31.74
	Inverter Transformer	MV3-4 T	368507	4907925	2	0	0	56.1	56.1	1	2577.95	3.25	0	79.23	0	0.65	0	0	8.13	0	0	0	0	0	0	-31.95	-31.95
	Inverter Transformer	MV3-19 T	368352	4907347	2	0	0	56.1	56.1	1	2615.36	3.25	0	79.35	0	0.67	0	0	8.2	0	0	0	0	0	0	-32.16	-32.16
	Inverter Transformer	MV3-15 T	368351	4907477	2	0	0	56.1	56.1	1	2630.52	3.25	0	79.4	0	0.67	0	0	8.22	0	0	0	0	0	0	-32.24	-32.24
	Inverter Transformer	MV4-5 T	369283	4909199	2	0	0	56.1	56.1	1	2665.14	3.25	0	79.51	0	0.69	0	0	8.29	0	0	0	0	0	0	-32.43	-32.43
	Inverter Transformer	MV3-11 T	368340	4907662	2	0	0	56.1	56.1	1	2672.31	3.25	0	79.54	0	0.69	0	0	8.3	0	0	0	0	0	0	-32.47	-32.47
	Inverter Transformer	MV4-6 T	369249	4909192	2	0	0	56.1	56.1	1	2681.24	3.25	0	79.57	0	0.69	0	0	8.32	0	0	0	0	0	0	-32.52	-32.52
	Inverter Transformer	MV4-7 T	369040	4909001	2	0	0	56.1	56.1	1	2682.23	3.25	0	79.57	0	0.69	0	0	8.32	0	0	0	0	0	0	-32.52	-32.52
	Inverter Transformer	MV3-5 T	368335	4907843	2	0	0	56.1	56.1	1	2719.23	3.25	0	79.69	0	0.71	0	0	8.38	0	0	0	0	0	0	-32.72	-32.72
	Inverter Transformer	MV3-17 T	368183	4907472	2	0	0	56.1	56.1	1	2796.49	3.25	0	79.93	0	0.74	0	0	8.52	0	0	0	0	0	0	-33.14	-33.14
	Inverter Transformer	MV4-4 T	369033	4909199	2	0	0	56.1	56.1	1	2828.95	5	0	80.03	0	1.68	2.69	0.01	8.57	0	0	0	0	0	0	-36.92	-36.92
	Inverter Transformer	MV4-2 T	369267	4909397	2	0	0	56.1	56.1	1	2831.42	3.25	0	80.04	0	0.76	0	0	8.58	0	0	0	0	0	0	-33.32	-33.32
	Inverter Transformer	MV3-10 T	368162	4907669	2	0	0	56.1	56.1	1	2848.24	3.25	0	80.09	0	0.77	0	0	8.61	0	0	0	0	0	0	-33.41	-33.41
	Inverter Transformer	MV4-3 T	369234	4909397	2	0	0	56.1	56.1	1	2851.25	3.25	0	80.1	0	0.77	0	0	8.61	0	0	0	0	0	0	-33.42	-33.42
	Inverter Transformer	MV3-6 T	368156	4907834	2	0	0	56.1	56.1	1	2890.06	3.25	0	80.22	0	0.78	0	0	8.68	0	0	0	0	0	0	-33.62	-33.62
	Inverter Transformer	MV3-1 T	368150	4907976	2	0	0	56.1	56.1	1	2933.83	3.25	0	80.35	0	0.8	0	0	8.76	0	0	0	0	0	0	-33.85	-33.85
	Inverter Transformer	MV4-1 T	369017	4909397	2	0	0	56.1	56.1	1	2987.46	3.25	0	80.51	0	0.82	0	0	8.85	0	0	0	0	0	0	-34.12	-34.12
	Inverter Transformer	MV3-13 T	367958	4907577	2	0	0	56.1	56.1	1	3033.71	3.25	0	80.64	0	0.84	0	0	8.93	0	0	0	0	0	0	-34.35	-34.35
	Inverter Transformer	MV3-7 T	367951	4907754	2	0	0	56.1	56.1	1	3071.88	3.25	0	80.75	0	0.86	0	0	8.99	0	0	0	0	0	0	-34.54	-34.54
	Inverter Transformer	MV3-3 T	367944	4907927	2	0	0	56.1	56.1	1	3118.62	3.25	0	80.88	0	0.88	0	0	9.07	0	0	0	0	0	0	-34.77	-34.77
	Inverter Transformer	MV3-18 T	367757	4907412	2	0	0	56.1	56.1	1	3213.75	3.25	0	81.14	0	0.92	0	0	9.23	0	0	0	0	0	0	-35.23	-35.23
	Inverter Transformer	MV3-12 T	367674	4907594	2	0	0	56.1	56.1	1	3317.18	3.25	0	81.42	0	0.96	0	0	9.39	0	0	0	0	0	0	-35.72	-35.72
	Inverter Transformer	MV2-2 T	365982	4906654	2	0	0	56.1	56.1	1	4998.34	3.25	0	84.98	0	1.62	0	0	11.85	0	0	0	0	0	0	-42.39	-42.39
	Inverter Transformer	MV2-3 T	365814	4906641	2	0	0	56.1	56.1	1	5166.81	3.25	0	85.26	0	1.69	0	0	12.07	0	0	0	0	0	0	-42.96	-42.96
	Inverter Transformer	MV2-4 T	365590	4906628	2	0	0	56.1	56.1	1	5391.05	3.25	0	85.63	0	1.76	0	0	12.36	0	0	0	0	0	0	-43.7	-43.7
	Inverter Transformer	MV1-15 T	365309	4904994	2	0	0	56.1	56.1	1	6037.93	3.25	0	86.62	0	1.98	0	0	13.15	0	0	0	0	0	0	-45.68	-45.68
	Inverter Transformer	MV1-12 T	365044	4905386	2	0	0	56.1	56.1	1	6164.66	3.25	0	86.8	0	2.02	0	0	13.3	0	0	0	0	0	0	-46.05	-46.05
	Inverter Transformer	MV1-4 T	364821	4905918	2	0	0	56.1	56.1	1	6254.76	3.25	0	86.92	0	2.04	0	0	13.4	0	0	0	0	0	0	-46.31	-46.31
	Inverter Transformer	MV1-2 T	364759	4906063	2	0	0	56.1	56.1	1	6289.48	3.25	0	86.97	0	2.05	0	0	13.44	0	0	0	0	0	0	-46.41	-46.41
	Inverter Transformer	MV1-1 T	364721	4906166	2	0	0	56.1	56.1	1	6310.45	3.25	0	87	0	2.06	0	0	13.46	0	0	0	0	0	0	-46.47	-46.47
	Inverter Transformer	MV1-8 T	364782	4905647	2	0	0	56.1	56.1	1	6350.62	3.25	0	87.06	0	2.07	0	0	13.51	0	0	0	0	0	0	-46.58	-46.58
	Inverter Transformer	MV1-5 T	364676	4905892	2	0	0	56.1	56.1	1	6402.05	3.25	0	87.13	0	2.09	0	0	13.57	0	0	0	0	0	0	-46.73	-46.73
	Inverter Transformer	MV1-11 T	364649	4905414	2	0	0	56.1	56.1	1	6537.16	3.25	0	87.31	0	2.13	0	0	13.72	0	0	0	0	0	0	-47.1	-47.1
	Inverter Transformer	MV1-9 T	364555	4905646	2	0	0	56.1	56.1	1	6571.82	3.25	0	87.35	0	2.14	0	0	13.76	0	0	0	0	0	0	-47.19	-47.19
	Inverter Transformer	MV1-6 T	364482	4905835	2	0	0	56.1	56.1	1	6603.43	3.25	0	87.4	0	2.15	0	0	13.8	0	0	0	0	0	0	-47.28	-47.28
	Inverter Transformer	MV1-3 T	364435	4906039	2	0	0	56.1	56.1	1	6612.95	3.25	0	87.41	0	2.15	0	0	13.81	0	0	0	0	0	0	-47.31	-47.31
	Line Reactor	NGR	369421	4908787.5	5	0	0	45.4	45.4	1	2263.39	5.25	0	78.1	0	3.36	1.29	0.09	0.93	0	0	0	0	0	0	-38.32	-38.32
Limit. Valu	0	0																								
Level D/N:	30.0143	30.0143																								

Receiver: Vacant Lot Receptor
ID: S-VLR30
X: 370582
Y: 4906966
Z: 4.5
Ground: 0

ISO	Description	ID	X	Y	Z	Ground	ReflOrd	LxT	LxN	L/A	Dist.	hm	Freq	Adiv	K0b	Agr	Abar	z	Aatm	Afol	Ahous	Cmet	CmetN	Dc	RL	LtotT	LtotN
	Inverter	MV6-3	370207	4907140	2	0	0	100.3	100.3	1	413.41	3.25	0	63.33	0	-0.61	0	0	7.76	0	0	0	0	0	0	29.84	29.84

Sol_Luce Substation	S_Substation	369426	4908792	3.5	0	0	112.1	112.1	1	2161.16	5.25	0	77.69	0	0.05	3.66	0.3	4.64	0	0	0	0	0	0	26.04	26.04
Inverter	MV6-2	370085	4907339	2	0	0	100.3	100.3	1	621.41	3.25	0	66.87	0	-0.46	0	0	9.33	0	0	0	0	0	0	24.58	24.58
Inverter	MV6-1	370235	4907364	2	0	0	97.3	97.3	1	528.03	3.25	0	65.45	0	-0.53	0	0	8.73	0	0	0	0	0	0	23.66	23.66
Inverter	MV6-4	370250	4906966	2	0	0	86.1	86.1	1	332.01	3.25	0	61.42	0	0.4	0	0	4.35	0	0	0	0	0	0	19.89	19.89
Inverter	MV5-4	370324	4908707	2	0	0	100.3	100.3	1	1760.01	3.25	0	75.91	0	0.06	0	0	12.94	0	0	0	0	0	0	11.41	11.41
Inverter	MV5-5	370015	4908690	2	0	0	100.3	100.3	1	1814.85	3.25	0	76.18	0	0.07	0	0	13.06	0	0	0	0	0	0	11	11
Inverter	MV5-3	370231	4908851	2	0	0	100.3	100.3	1	1917.4	3.25	0	76.65	0	0.11	0	0	13.29	0	0	0	0	0	0	10.27	10.27
Inverter	MV3-20	368689	4907317	2	0	0	100.3	100.3	1	1925.27	3.25	0	76.69	0	0.11	0	0	13.3	0	0	0	0	0	0	10.21	10.21
Inverter	MV3-14	368684	4907498	2	0	0	100.3	100.3	1	1971.15	3.25	0	76.89	0	0.12	0	0	13.4	0	0	0	0	0	0	9.9	9.9
Inverter	MV5-2	370006	4908853	2	0	0	100.3	100.3	1	1972.95	3.25	0	76.9	0	0.12	0	0	13.4	0	0	0	0	0	0	9.88	9.88
Inverter	MV3-8	368680	4907712	2	0	0	100.3	100.3	1	2043.07	3.25	0	77.21	0	0.14	0	0	13.55	0	0	0	0	0	0	9.41	9.41
Inverter	MV3-21	368478	4907206	2	0	0	100.3	100.3	1	2117.65	3.25	0	77.52	0	0.16	0	0	13.71	0	0	0	0	0	0	8.93	8.93
Inverter	MV3-16	368514	4907475	2	0	0	100.3	100.3	1	2129.72	3.25	0	77.57	0	0.17	0	0	13.73	0	0	0	0	0	0	8.85	8.85
Inverter	MV3-9	368512	4907703	2	0	0	100.3	100.3	1	2197.29	3.25	0	77.84	0	0.18	0	0	13.87	0	0	0	0	0	0	8.42	8.42
Inverter	MV5-1	370020	4909142	2	0	0	100.3	100.3	1	2247.4	3.25	0	78.03	0	0.2	0	0	13.97	0	0	0	0	0	0	8.11	8.11
Inverter	MV3-19	368357	4907347	2	0	0	100.3	100.3	1	2257.39	3.25	0	78.07	0	0.2	0	0	13.99	0	0	0	0	0	0	8.05	8.05
Inverter	MV4-10	369312	4908858	2	0	0	100.3	100.3	1	2278.72	3.25	0	78.15	0	0.2	0	0	14.03	0	0	0	0	0	0	7.92	7.92
Inverter	MV3-15	368357	4907477	2	0	0	100.3	100.3	1	2282.93	3.25	0	78.17	0	0.21	0	0	14.04	0	0	0	0	0	0	7.9	7.9
Inverter	MV4-11	369264	4908855	2	0	0	100.3	100.3	1	2303.36	3.25	0	78.25	0	0.21	0	0	14.08	0	0	0	0	0	0	7.78	7.78
Inverter	MV3-11	368346	4907662	2	0	0	100.3	100.3	1	2341.82	3.25	0	78.39	0	0.22	0	0	14.15	0	0	0	0	0	0	7.55	7.55
Inverter	MV4-9	369289	4909001	2	0	0	100.3	100.3	1	2411.03	5.13	0	78.64	0	0.95	3.34	0.03	14.29	0	0	0	0	0	0	3.08	3.08
Inverter	MV4-8	369256	4909001	2	0	0	100.3	100.3	1	2428.89	3.25	0	78.71	0	0.24	0	0	14.32	0	0	0	0	0	0	7.04	7.04
Inverter	MV3-17	368178	4907472	2	0	0	100.3	100.3	1	2456.68	3.25	0	78.81	0	0.25	0	0	14.38	0	0	0	0	0	0	6.88	6.88
Inverter	MV3-10	368167	4907669	2	0	0	100.3	100.3	1	2515.24	3.25	0	79.01	0	0.26	0	0	14.49	0	0	0	0	0	0	6.55	6.55
Inverter	MV4-7	369035	4909001	2	0	0	100.3	100.3	1	2556.26	3.25	0	79.15	0	0.27	0	0	14.56	0	0	0	0	0	0	6.33	6.33
Inverter	MV3-6	368162	4907834	2	0	0	100.3	100.3	1	2570.96	3.25	0	79.2	0	0.27	0	0	14.59	0	0	0	0	0	0	6.24	6.24
Inverter	MV4-5	369289	4909199	2	0	0	100.3	100.3	1	2580.34	3.25	0	79.23	0	0.28	0	0	14.61	0	0	0	0	0	0	6.19	6.19
Inverter	MV4-6	369243	4909192	2	0	0	100.3	100.3	1	2597.69	3.25	0	79.29	0	0.28	0	0	14.64	0	0	0	0	0	0	6.1	6.1
Inverter	MV3-13	367963	4907577	2	0	0	100.3	100.3	1	2689.33	3.25	0	79.59	0	0.3	0	0	14.81	0	0	0	0	0	0	5.61	5.61
Inverter	MV4-4	369027	4909199	2	0	0	100.3	100.3	1	2721.09	3.25	0	79.69	0	0.31	0	0	14.87	0	0	0	0	0	0	5.44	5.44
Inverter	MV3-7	367945	4907754	2	0	0	100.3	100.3	1	2752.22	3.25	0	79.79	0	0.31	0	0	14.93	0	0	0	0	0	0	5.28	5.28
Inverter	MV4-2	369272	4909397	2	0	0	100.3	100.3	1	2761.5	3.25	0	79.82	0	0.31	0	0	14.94	0	0	0	0	0	0	5.23	5.23
Inverter	MV4-3	369229	4909397	2	0	0	100.3	100.3	1	2782.15	3.25	0	79.89	0	0.32	0	0	14.98	0	0	0	0	0	0	5.12	5.12
Inverter	MV3-3	367939	4907927	2	0	0	100.3	100.3	1	2812.29	3.25	0	79.98	0	0.32	0	0	15.04	0	0	0	0	0	0	4.97	4.97
Inverter	MV3-18	367752	4907412	2	0	0	100.3	100.3	1	2864.93	3.25	0	80.14	0	0.34	0	0	15.13	0	0	0	0	0	0	4.7	4.7
Inverter	MV4-1	369011	4909397	2	0	0	100.3	100.3	1	2894.44	3.25	0	80.23	0	0.34	0	0	15.18	0	0	0	0	0	0	4.55	4.55
Westbrook Inverter Enclosur	W_INV6	369875	4906578	2	0	0	89.1	89.1	1	806.47	3.25	0	69.13	0	0.64	0	0	5.93	0	0	0	0	0	0	13.35	13.35
Inverter	MV3-12	367668	4907594	2	0	0	100.3	100.3	1	2980.9	3.25	0	80.49	0	0.36	0	0	15.34	0	0	0	0	0	0	4.13	4.13
SubstationTransformer	W_ST	369711.17	4906112.3	2.5	0	0	92	92	1	1219.51	4.25	0	72.72	0	0.58	3.97	0.2	2.96	0	0	0	0	0	0	11.75	11.75
DSTATCOM - 10 MVAR #1	DSAT1	369437	4908757	2.5	0	0	96.6	96.6	1	2125.73	3.5	0	77.55	0	3.25	0	0	1.79	0	0	0	0	0	0	14.04	14.04
DSTATCOM - 10 MVAR #2	DSAT2	369403	4908757	2.5	0	0	96.6	96.6	1	2144.23	3.5	0	77.63	0	3.25	0	0	1.81	0	0	0	0	0	0	13.95	13.95
Westbrook Inverter Enclosur	W_INV5	369719	4906574	2	0	0	89.1	89.1	1	947.86	3.25	0	70.53	0	0.67	0	0	6.22	0	0	0	0	0	0	11.63	11.63
Westbrook Inverter Enclosur	W_INV7	369780	4906417	2	0	0	89.1	89.1	1	971.91	3.25	0	70.75	0	0.68	0	0	6.26	0	0	0	0	0	0	11.36	11.36
Westbrook Inverter Enclosur	W_INV4	369673	4906164	2	0	0	89.1	89.1	1	1212.23	3.25	0	72.67	0	0.73	0	0	6.7	0	0	0	0	0	0	8.95	8.95
Inverter	MV2-3	365820	4906641	2	0	0	100.3	100.3	1	4773.08	3.25	0	84.58	0	0.62	0	0	18.24	0	0	0	0	0	0	-3.13	-3.13
Westbrook Inverter Enclosur	W_INV2	369374	4906388	2	0	0	89.1	89.1	1	1339.16	3.25	0	73.54	0	0.76	0	0	6.93	0	0	0	0	0	0	7.84	7.84
Westbrook Inverter Enclosur	W_INV3	369508	4906164	2	0	0	89.1	89.1	1	1340.41	3.25	0	73.54	0	0.76	0	0	6.93	0	0	0	0	0	0	7.82	7.82
Inverter	MV2-4	365586	4906624	2	0	0	100.3	100.3	1	5007.69	3.25	0	84.99	0	0.64	0	0	18.59	0	0	0	0	0	0	-3.92	-3.92
Inverter	MV1-15	365315	4904994	2	0	0	100.3	100.3	1	5624.06	3.25	0	86	0	0.69	0	0	19.47	0	0	0	0	0	0	-5.85	-5.85
Inverter	MV1-12	365038	4905386	2	0	0	100.3	100.3	1	5764.75	3.25	0	86.22	0	0.7	0	0	19.67	0	0	0	0	0	0	-6.27	-6.27
Inverter	MV1-4	364815	4905918	2	0	0	100.3	100.3	1	5861.45	3.25	0	86.36	0	0.7	0	0	19.8	0	0	0	0	0	0	-6.55	-6.55
Inverter	MV1-2	364753	4906063	2	0	0	100.3	100.3	1	5898.53	3.25	0	86.41	0	0.7	0	0	19.85	0	0	0	0	0	0	-6.66	-6.66
Inverter	MV1-1	364715	4906166	2	0	0	100.3	100.3	1	5921.29	3.25	0	86.45	0	0.7	0	0	19.89	0	0	0	0	0	0	-6.72	-6.72
Inverter	MV1-8	364788	4905647	2	0	0	100.3	100.3	1	5942.24	3.25	0	86.48	0	0.7	0	0	19.91	0	0	0	0	0	0	-6.78	-6.78
Inverter	MV1-5	364671	4905892	2	0	0	100.3	100.3	1	6007.78	3.25	0	86.57	0	0.71	0	0	20	0	0	0	0	0	0	-6.97	-6.97
Inverter	MV5-6	369982	4908507	2	0	0	89.1	89.1	1	1653.69	3.25	0	75.37	0	0.83	0	0	7.47	0	0	0	0	0	0	5.39	5.39
Inverter	MV1-11	364655	4905414	2	0	0	100.3	100.3	1	6126.83	3.25	0	86.74	0	0.71	0	0	20.16	0	0	0	0	0	0	-7.31	-7.31
Inverter	MV1-9	364561	4905646	2	0	0	100.3	100.3	1	6164	3.25	0	86.8	0	0.71	0	0	20.21	0	0	0	0	0	0	-7.41	-7.41
Inverter	MV1-6	364477	4905835	2	0	0	100.3	100.3	1	6208.88	3.25	0	86.86	0	0.71	0	0	20.27	0	0	0	0	0	0	-7.53	-7.53
Westbrook Inverter Enclosur	W_INV1	369409	4906578	2	0	0	86.1	86.1	1	1235.51	3.25	0	72.84	0	0.73	0	0	6.75	0	0	0	0	0	0	5.74	5.74
Inverter	MV2-1	365842	4906816	2	0	0	97.3	97.3	1	4742.37	3.25	0	84.52	0	0.62	0	0	18.2	0	0	0	0	0	0	-6.02	-6.02
Inverter	MV3-22	368656	4907142	2	0	0	89.1	89.1	1	1934.03	3.25	0	76.73	0	0.89	0	0	7.94	0	0	0	0	0	0	3.5	3.5
Fixed Reactor Bank 2	FRB2	369464	4908755	6	0	0	89.8	89.8	1	2109.61	5.25	0	77.48	0	-0.98	0	0	4.55	0	0	0	0	0	0	8.72	8.72
Fixed Reactor Bank 1	FRB1	369378	4908755	6	0	0	89.8	89.8	1	2156.42	5.25	0	77.67	0	-0.98	0	0	4.63	0	0	0	0	0	0	8.45	8.45
Inverter	MV4-15	369176	4908481	2	0	0	89.1	89.1	1	2066.9	3.25	0	77.31	0	0.92	0	0	8.15	0	0	0	0	0	0	2.67	2.67
Inverter	MV4-14	369176	4908507	2	0	0	89.1	89.1	1	2086.03	3.25	0	77.39	0	0.93	0	0	8.19	0	0	0	0	0	0	2.56	2.56
Inverter	MV3-2	368671	4907928	2	0	0	89.1	89.1	1	2139.48	3.25	0	77.61	0	0.94	0	0	8.27	0	0	0	0	0	0	2.24	2.24
Inverter	MV1-14	365163	4905049	2	0	0	97.3	97.3	1	5748.08	3.25	0	86.19	0	0.69	0	0	19.65	0	0	0	0	0	0	-9.22	-9.22
Inverter	MV1-10	365004	4905564	2	0	0	97.3	97.3	1	5751.49	3.25	0	86.2	0	0.69	0	0	19.65	0	0	0	0	0	0	-9.23	-9.23
Inverter	MV1-7	364925	4905782	2	0	0	97.3	97.3	1	5779.58	3.25	0	86.24	0	0.7	0	0	19.69	0	0	0	0	0	0	-9.31	-9.31
Inverter	MV4-13	369051	4908605	2	0	0	89.1	89.1	1	2242.83	3.25	0	78.02	0	0.96	0	0	8.44	0	0	0	0	0	0	1.64	1.64
Inverter	MV3-4	368502	4907925	2	0	0	89.1	89.1	1	2290.43	3.25	0	78.2	0	0.98	0	0	8.51	0	0	0	0	0	0	1.37	1.37
Inverter	MV1-13	364731	4905241	2	0	0	97.3	97.3	1	6099.99	3.25	0	86.71	0	0.71	0	0	20.13	0	0	0	0	0	0	-10.23	-10.23
Inverter	MV4-12	369043	4908803	2	0	0	89.1	89.1	1	2396.48	3.25	0	78.59	0	1	0	0	8.68	0	0	0	0	0	0	0.78	0.78

Inverter	MV3-5	368340	4907843	2	0	0	89.1	89.1	1	2407.43	3.25	0	78.63	0	1	0	0	8.7	0	0	0	0	0	0	0.72	0.72
Inverter	MV3-1	368156	4907976	2	0	0	89.1	89.1	1	2627.85	3.25	0	79.39	0	1.06	0	0	9.05	0	0	0	0	0	0	-0.44	-0.44
Westbrook Inverter Transfor	W_INVTR6	369881	4906578	2	0	0	77.3	77.3	1	801.22	3.25	0	69.08	0	-1.8	0	0	0.56	0	0	0	0	0	0	9.5	9.5
Inverter Transformer	MV6-4 T	370244	4906966	2	0	0	69.4	69.4	1	338.01	3.25	0	61.58	0	0.8	0	0	2.51	0	0	0	0	0	0	4.46	4.46
Westbrook Inverter Transfor	W_INVTR5	369725	4906574	2	0	0	77.3	77.3	1	942.4	3.25	0	70.48	0	-1.9	0	0	0.65	0	0	0	0	0	0	8.11	8.11
Westbrook Inverter Transfor	W_INVTR7	369786	4906417	2	0	0	77.3	77.3	1	966.97	3.25	0	70.71	0	-1.91	0	0	0.66	0	0	0	0	0	0	7.89	7.89
Westbrook Inverter Transfor	W_INVTR1	369403	4906578	2	0	0	78.2	78.2	1	1241.21	3.25	0	72.88	0	-2.07	0	0	0.81	0	0	0	0	0	0	6.62	6.62
Gardiner Substation	G_Sub	366586.3	4903349.9	2.5	0	0	90.8	90.8	1	5389.04	4.25	0	85.63	0	1.74	2.25	0.34	9.07	0	0	0	0	0	0	-7.91	-7.91
Inverter	MV2-2	365977	4906654	2	0	0	89.1	89.1	1	4615.56	3.25	0	84.28	0	1.54	0	0	11.94	0	0	0	0	0	0	-8.71	-8.71
Westbrook Inverter Transfor	W_INVTR4	369679	4906164	2	0	0	77.3	77.3	1	1207.73	3.25	0	72.64	0	-2.05	0	0	0.8	0	0	0	0	0	0	5.96	5.96
Inverter Transformer	MV6-1 T	370230	4907364	2	0	0	69.4	69.4	1	531.33	3.25	0	65.51	0	1.1	0	0	3.03	0	0	0	0	0	0	-0.29	-0.29
Westbrook Inverter Transfor	W_INVTR3	369514	4906164	2	0	0	77.3	77.3	1	1335.6	3.25	0	73.51	0	-2.12	0	0	0.87	0	0	0	0	0	0	5.08	5.08
Westbrook Inverter Transfor	W_INVTR2	369368	4906388	2	0	0	77.3	77.3	1	1344.58	3.25	0	73.57	0	-2.13	0	0	0.87	0	0	0	0	0	0	5.03	5.03
Inverter	MV1-3	364440	4906039	2	0	0	89.1	89.1	1	6211.56	3.25	0	86.86	0	1.94	0	0	14.03	0	0	0	0	0	0	-13.77	-13.77
Inverters	G_Inv2	366676.9	4903239.1	2	0	0	87.7	87.7	1	5398.11	3.25	0	85.64	0	2.89	0	0	6.36	0	0	0	0	0	0	-7.23	-7.23
Inverters	G_Inv4	366732.8	4903105	2	0	0	87.7	87.7	1	5451.94	3.25	0	85.73	0	2.89	0	0	6.41	0	0	0	0	0	0	-7.37	-7.37
Inverters	G_Inv6	366788.5	4902972	2	0	0	87.7	87.7	1	5508.42	3.25	0	85.82	0	2.89	0	0	6.47	0	0	0	0	0	0	-7.53	-7.53
Inverters	G_Inv1	366526.4	4903225.8	2	0	0	87.7	87.7	1	5516.97	3.25	0	85.83	0	2.89	0	0	6.48	0	0	0	0	0	0	-7.55	-7.55
Inverters	G_Inv3	366583.7	4903091.4	2	0	0	87.7	87.7	1	5567.67	3.25	0	85.91	0	2.9	0	0	6.53	0	0	0	0	0	0	-7.68	-7.68
Inverters	G_Inv8	366844.5	4902838.5	2	0	0	87.7	87.7	1	5568.23	3.25	0	85.91	0	2.9	0	0	6.53	0	0	0	0	0	0	-7.68	-7.68
Inverters	G_Inv5	366638.5	4902958.1	2	0	0	87.7	87.7	1	5622.67	3.25	0	86	0	2.9	0	0	6.59	0	0	0	0	0	0	-7.83	-7.83
Inverters	G_Inv10	366900.7	4902704.8	2	0	0	87.7	87.7	1	5631.15	3.25	0	86.01	0	2.9	0	0	6.6	0	0	0	0	0	0	-7.85	-7.85
Inverters	G_Inv7	366694.6	4902824.7	2	0	0	87.7	87.7	1	5679.99	3.25	0	86.09	0	2.9	0	0	6.65	0	0	0	0	0	0	-7.98	-7.98
Inverters	G_Inv9	366750.9	4902691.8	2	0	0	87.7	87.7	1	5739.87	3.25	0	86.18	0	2.91	0	0	6.71	0	0	0	0	0	0	-8.13	-8.13
Inverter Transformer	MV6-3 T	370202	4907140	2	0	0	56.1	56.1	1	417.95	3.25	0	63.42	0	-0.12	0	0	3.27	0	0	0	0	0	0	-10.52	-10.52
Inverter Transformer	MV6-2 T	370091	4907339	2	0	0	56.1	56.1	1	616.62	3.25	0	66.8	0	-0.1	0	0	3.9	0	0	0	0	0	0	-14.54	-14.54
Inverter Transformer	MV2-1 T	365836	4906816	2	0	0	69.4	69.4	1	4748.37	3.25	0	84.53	0	2.96	0	0	7.21	0	0	0	0	0	0	-25.35	-25.35
Inverter Transformer	MV1-10 T	365010	4905564	2	0	0	69.4	69.4	1	5745.68	3.25	0	86.19	0	3.15	0	0	7.86	0	0	0	0	0	0	-27.85	-27.85
Inverter Transformer	MV1-14 T	365157	4905049	2	0	0	69.4	69.4	1	5753.74	3.25	0	86.2	0	3.15	0	0	7.87	0	0	0	0	0	0	-27.87	-27.87
Inverter Transformer	MV1-7 T	364919	4905782	2	0	0	69.4	69.4	1	5785.45	3.25	0	86.25	0	3.15	0	0	7.89	0	0	0	0	0	0	-27.94	-27.94
Inverter Transformer	MV1-13 T	364725	4905241	2	0	0	69.4	69.4	1	6105.74	3.25	0	86.71	0	3.2	0	0	8.08	0	0	0	0	0	0	-28.65	-28.65
Inverter Transformer	MV5-6 T	369987	4908507	2	0	0	56.1	56.1	1	1651.88	3.25	0	75.36	0	0.26	0	0	6.34	0	0	0	0	0	0	-25.9	-25.9
Inverter Transformer	MV5-4 T	370330	4908707	2	0	0	56.1	56.1	1	1759.15	3.25	0	75.91	0	0.3	0	0	6.56	0	0	0	0	0	0	-26.71	-26.71
Inverter Transformer	MV5-5 T	370021	4908690	2	0	0	56.1	56.1	1	1812.98	3.25	0	76.17	0	0.33	0	0	6.67	0	0	0	0	0	0	-27.11	-27.11
Inverter Transformer	MV5-3 T	370237	4908851	2	0	0	56.1	56.1	1	1916.31	3.25	0	76.65	0	0.37	0	0	6.88	0	0	0	0	0	0	-27.84	-27.84
Inverter Transformer	MV3-22 T	368661	4907142	2	0	0	56.1	56.1	1	1929.05	3.25	0	76.71	0	0.37	0	0	6.9	0	0	0	0	0	0	-27.93	-27.93
Inverter Transformer	MV3-20 T	368683	4907317	2	0	0	56.1	56.1	1	1931.17	3.25	0	76.72	0	0.38	0	0	6.91	0	0	0	0	0	0	-27.94	-27.94
Inverter Transformer	MV5-2 T	370011	4908853	2	0	0	56.1	56.1	1	1971.5	3.25	0	76.9	0	0.39	0	0	6.99	0	0	0	0	0	0	-28.22	-28.22
Inverter Transformer	MV3-14 T	368678	4907498	2	0	0	56.1	56.1	1	1976.93	3.25	0	76.92	0	0.39	0	0	7	0	0	0	0	0	0	-28.25	-28.25
Inverter Transformer	MV3-8 T	368685	4907712	2	0	0	56.1	56.1	1	2038.41	3.25	0	77.19	0	0.42	0	0	7.12	0	0	0	0	0	0	-28.67	-28.67
Inverter Transformer	MV4-15 T	369170	4908481	2	0	0	56.1	56.1	1	2070.98	3.25	0	77.32	0	0.43	0	0	7.18	0	0	0	0	0	0	-28.88	-28.88
Inverter Transformer	MV4-14 T	369182	4908507	2	0	0	56.1	56.1	1	2081.99	3.25	0	77.37	0	0.44	0	0	7.2	0	0	0	0	0	0	-28.95	-28.95
Inverter Transformer	MV3-21 T	368484	4907206	2	0	0	56.1	56.1	1	2111.68	3.25	0	77.49	0	0.45	0	0	7.26	0	0	0	0	0	0	-29.15	-29.15
Inverter Transformer	MV3-2 T	368677	4907928	2	0	0	56.1	56.1	1	2134.12	3.25	0	77.58	0	0.46	0	0	7.3	0	0	0	0	0	0	-29.29	-29.29
Inverter Transformer	MV3-16 T	368509	4907475	2	0	0	56.1	56.1	1	2134.58	3.25	0	77.59	0	0.46	0	0	7.31	0	0	0	0	0	0	-29.29	-29.29
Inverter Transformer	MV3-9 T	368517	4907703	2	0	0	56.1	56.1	1	2192.58	3.25	0	77.82	0	0.49	0	0	7.42	0	0	0	0	0	0	-29.66	-29.66
Inverter Transformer	MV4-13 T	369057	4908605	2	0	0	56.1	56.1	1	2238.74	3.25	0	78	0	0.5	0	0	7.5	0	0	0	0	0	0	-29.95	-29.95
Inverter Transformer	MV5-1 T	370015	4909142	2	0	0	56.1	56.1	1	2248.66	3.25	0	78.04	0	0.51	0	0	7.52	0	0	0	0	0	0	-30.01	-30.01
Inverter Transformer	MV3-19 T	368352	4907347	2	0	0	56.1	56.1	1	2262.31	3.25	0	78.09	0	0.51	0	0	7.55	0	0	0	0	0	0	-30.1	-30.1
Inverter Transformer	MV4-10 T	369307	4908858	2	0	0	56.1	56.1	1	2281.51	3.25	0	78.16	0	0.52	0	0	7.59	0	0	0	0	0	0	-30.21	-30.21
Inverter Transformer	MV3-4 T	368507	4907925	2	0	0	56.1	56.1	1	2285.89	3.25	0	78.18	0	0.53	0	0	7.59	0	0	0	0	0	0	-30.24	-30.24
Inverter Transformer	MV3-15 T	368351	4907477	2	0	0	56.1	56.1	1	2288.77	3.25	0	78.19	0	0.53	0	0	7.6	0	0	0	0	0	0	-30.26	-30.26
Inverter Transformer	MV4-11 T	369269	4908855	2	0	0	56.1	56.1	1	2300.5	3.25	0	78.24	0	0.53	0	0	7.62	0	0	0	0	0	0	-30.33	-30.33
Inverter Transformer	MV3-11 T	368340	4907662	2	0	0	56.1	56.1	1	2347.55	3.25	0	78.41	0	0.55	0	0	7.71	0	0	0	0	0	0	-30.61	-30.61
Inverter Transformer	MV4-12 T	369049	4908803	2	0	0	56.1	56.1	1	2392.63	3.25	0	78.58	0	0.57	0	0	7.79	0	0	0	0	0	0	-30.88	-30.88
Inverter Transformer	MV3-5 T	368335	4907843	2	0	0	56.1	56.1	1	2412.08	3.25	0	78.65	0	0.58	0	0	7.83	0	0	0	0	0	0	-31	-31
Inverter Transformer	MV4-9 T	369284	4909001	2	0	0	56.1	56.1	1	2413.72	5.13	0	78.65	0	1.49	2.83	0.03	7.83	0	0	0	0	0	0	-34.74	-34.74
Inverter Transformer	MV4-8 T	369262	4909001	2	0	0	56.1	56.1	1	2425.62	3.25	0	78.7	0	0.58	0	0	7.85	0	0	0	0	0	0	-31.08	-31.08
Inverter Transformer	MV3-17 T	368183	4907472	2	0	0	56.1	56.1	1	2451.78	3.25	0	78.79	0	0.6	0	0	7.9	0	0	0	0	0	0	-31.23	-31.23
Inverter Transformer	MV3-10 T	368162	4907669	2	0	0	56.1	56.1	1	2520.04	3.25	0	79.03	0	0.63	0	0	8.03	0	0	0	0	0	0	-31.62	-31.62
Inverter Transformer	MV4-7 T	369040	4909001	2	0	0	56.1	56.1	1	2553.23	3.25	0	79.14	0	0.64	0	0	8.09	0	0	0	0	0	0	-31.81	-31.81
Inverter Transformer	MV3-6 T	368156	4907834	2	0	0	56.1	56.1	1	2576.61	3.25	0	79.22	0	0.65	0	0	8.13	0	0	0	0	0	0	-31.94	-31.94
Inverter Transformer	MV4-5 T	369283	4909199	2	0	0	56.1	56.1	1	2583.35	3.25	0	79.24	0	0.65	0	0	8.14	0	0	0	0	0	0	-31.98	-31.98
Inverter Transformer	MV4-6 T	369249	4909192	2	0	0	56.1	56.1	1	2594.6	3.25	0	79.28	0	0.66	0	0	8.16	0	0	0	0	0	0	-32.04	-32.04
Inverter Transformer	MV3-1 T	368150	4907976	2	0	0	56.1	56.1	1	2633.39	3.25	0	79.41	0	0.67	0	0	8.23	0	0	0	0	0	0	-32.26	-32.26
Inverter Transformer	MV3-13 T	367958	4907577	2	0	0	56.1	56.1	1	2694.2	3.25	0	79.61	0	0.7	0	0	8.34	0	0	0	0	0	0	-32.59	-32.59
Inverter Transformer	MV4-4 T	369033	4909199	2	0	0	56.1	56.1	1	2717.66	3.25	0	79.68	0	0.71	0	0	8.38	0	0	0	0	0	0	-32.71	-32.71
Inverter Transformer	MV3-7 T	367951	4907754	2	0	0	56.1	56.1	1	2746.47	3.25	0	79.78	0	0.72	0	0	8.43	0	0	0	0	0	0	-32.87	-32.87
Inverter Transformer	MV4-2 T	369267	4909397	2	0	0	56.1	56.1	1	2763.87	3.25	0	79.83	0	0.73	0	0	8.46	0	0	0	0	0	0	-32.96	-32.96
Inverter Transformer	MV4-3 T	369234	4909397	2	0	0	56.1	56.1	1	2779.73	3.25	0	79.88	0	0.74	0	0	8.49	0	0	0	0	0	0	-33.05	-33.05
Inverter Transformer	MV3-3 T	367944	4907927	2	0	0	56.1	56.1	1	2807.59	3.25	0	79.97	0	0.75	0	0	8.54	0	0	0	0	0	0	-33.19	-33.19
Inverter Transformer	MV3-18 T	367757	4907412	2	0	0	56.1	56.1	1	2859.99	3.25	0	80.13	0	0.77	0	0	8.63	0	0	0	0	0	0	-33.47	-33.47
Inverter Transformer	MV4-1 T	369017	4909397	2	0	0	56.1	56.1	1	2891.19	3.25	0	80.22	0	0.78	0	0	8.68	0	0	0	0	0	0	-33.63	-33.63
Inverter Transformer	MV3-12 T	367674	4907594	2	0	0	56.1	56.1	1	2975.04	3.25	0	80.47	0	0.82	0	0	8.83	0	0	0	0	0	0	-34.06	-34.06

	Inverter Transformer	MV2-2 T	365982	4906654	2	0	0	56.1	56.1	1	4610.57	3.25	0	84.28	0	1.48	0	0	11.33	0	0	0	0	0	0	-41.03	-41.03
	Inverter Transformer	MV2-3 T	365814	4906641	2	0	0	56.1	56.1	1	4779.06	3.25	0	84.59	0	1.54	0	0	11.56	0	0	0	0	0	0	-41.63	-41.63
	Inverter Transformer	MV2-4 T	365590	4906628	2	0	0	56.1	56.1	1	5003.43	3.25	0	84.99	0	1.63	0	0	11.86	0	0	0	0	0	0	-42.41	-42.41
	Inverter Transformer	MV1-15 T	365309	4904994	2	0	0	56.1	56.1	1	5629.68	3.25	0	86.01	0	1.84	0	0	12.66	0	0	0	0	0	0	-44.45	-44.45
	Inverter Transformer	MV1-12 T	365044	4905386	2	0	0	56.1	56.1	1	5758.98	3.25	0	86.21	0	1.89	0	0	12.81	0	0	0	0	0	0	-44.85	-44.85
	Inverter Transformer	MV1-4 T	364821	4905918	2	0	0	56.1	56.1	1	5855.55	3.25	0	86.35	0	1.92	0	0	12.93	0	0	0	0	0	0	-45.14	-45.14
	Inverter Transformer	MV1-2 T	364759	4906063	2	0	0	56.1	56.1	1	5892.6	3.25	0	86.41	0	1.93	0	0	12.98	0	0	0	0	0	0	-45.25	-45.25
	Inverter Transformer	MV1-1 T	364721	4906166	2	0	0	56.1	56.1	1	5915.35	3.25	0	86.44	0	1.94	0	0	13	0	0	0	0	0	0	-45.32	-45.32
	Inverter Transformer	MV1-8 T	364782	4905647	2	0	0	56.1	56.1	1	5948.09	3.25	0	86.49	0	1.95	0	0	13.04	0	0	0	0	0	0	-45.42	-45.42
	Inverter Transformer	MV1-5 T	364676	4905892	2	0	0	56.1	56.1	1	6002.86	3.25	0	86.57	0	1.97	0	0	13.11	0	0	0	0	0	0	-45.58	-45.58
	Inverter Transformer	MV1-11 T	364649	4905414	2	0	0	56.1	56.1	1	6132.63	3.25	0	86.75	0	2.01	0	0	13.26	0	0	0	0	0	0	-45.96	-45.96
	Inverter Transformer	MV1-9 T	364555	4905646	2	0	0	56.1	56.1	1	6169.86	3.25	0	86.81	0	2.02	0	0	13.3	0	0	0	0	0	0	-46.07	-46.07
	Inverter Transformer	MV1-6 T	364482	4905835	2	0	0	56.1	56.1	1	6203.96	3.25	0	86.85	0	2.03	0	0	13.34	0	0	0	0	0	0	-46.17	-46.17
	Inverter Transformer	MV1-3 T	364435	4906039	2	0	0	56.1	56.1	1	6216.51	3.25	0	86.87	0	2.03	0	0	13.36	0	0	0	0	0	0	-46.2	-46.2
	Line Reactor	NGR	369421	4908787.5	5	0	0	45.4	45.4	1	2160.04	5.25	0	77.69	0	3.37	1.29	0.1	0.88	0	0	0	0	0	0	-37.87	-37.87
Limit. Valu	0	0																								
Level D/N:	33.7922	33.7922																								

Receiver: Vacant Lot Receptor
ID: S-VLR31
X: 370381
Y: 4906879
Z: 4.5
Ground: 0

ISO	Description	ID	X	Y	Z	Ground	ReflOrd	LxT	LxN	L/A	Dist.	hm	Freq	Adiv	K0b	Agr	Abar	z	Aatm	Afol	Ahous	Cmet	CmetN	Dc	RL	LtotT	LtotN
	Inverter	MV6-3	370207	4907140	2	0	0	100.3	100.3	1	313.69	3.25	0	60.93	0	-0.65	0	0	6.58	0	0	0	0	0	0	33.45	33.45
	Inverter	MV6-2	370085	4907339	2	0	0	100.3	100.3	1	547.01	3.25	0	65.76	0	-0.52	0	0	8.87	0	0	0	0	0	0	26.2	26.2
	Sol_Luce Substation	S_Substation	369426	4908792	3.5	0	0	112.1	112.1	1	2138.13	5.25	0	77.6	0	0.05	3.7	0.32	4.6	0	0	0	0	0	0	26.12	26.12
	Inverter	MV6-1	370235	4907364	2	0	0	97.3	97.3	1	506.5	3.25	0	65.09	0	-0.55	0	0	8.58	0	0	0	0	0	0	24.19	24.19
	Inverter	MV6-4	370250	4906966	2	0	0	86.1	86.1	1	157.28	3.25	0	54.93	0	0.2	0	0	2.71	0	0	0	0	0	0	28.22	28.22
	Inverter	MV3-20	368689	4907317	2	0	0	100.3	100.3	1	1747.77	3.25	0	75.85	0	0.05	0	0	12.91	0	0	0	0	0	0	11.5	11.5
	Inverter	MV3-14	368684	4907498	2	0	0	100.3	100.3	1	1806.37	3.25	0	76.14	0	0.07	0	0	13.04	0	0	0	0	0	0	11.06	11.06
	Inverter	MV5-4	370324	4908707	2	0	0	100.3	100.3	1	1828.89	3.25	0	76.24	0	0.08	0	0	13.09	0	0	0	0	0	0	10.9	10.9
	Inverter	MV5-5	370015	4908690	2	0	0	100.3	100.3	1	1847.62	3.25	0	76.33	0	0.08	0	0	13.13	0	0	0	0	0	0	10.76	10.76
	Inverter	MV3-8	368680	4907712	2	0	0	100.3	100.3	1	1894.02	3.25	0	76.55	0	0.1	0	0	13.24	0	0	0	0	0	0	10.43	10.43
	Inverter	MV3-21	368478	4907206	2	0	0	100.3	100.3	1	1930.89	3.25	0	76.72	0	0.11	0	0	13.32	0	0	0	0	0	0	10.17	10.17
	Inverter	MV3-16	368514	4907475	2	0	0	100.3	100.3	1	1959.82	3.25	0	76.84	0	0.12	0	0	13.38	0	0	0	0	0	0	9.97	9.97
	Inverter	MV5-3	370231	4908851	2	0	0	100.3	100.3	1	1977.7	3.25	0	76.92	0	0.12	0	0	13.41	0	0	0	0	0	0	9.85	9.85
	Inverter	MV5-2	370006	4908853	2	0	0	100.3	100.3	1	2009.31	3.25	0	77.06	0	0.13	0	0	13.48	0	0	0	0	0	0	9.64	9.64
	Inverter	MV3-9	368512	4907703	2	0	0	100.3	100.3	1	2042.58	3.25	0	77.2	0	0.14	0	0	13.55	0	0	0	0	0	0	9.42	9.42
	Inverter	MV3-19	368357	4907347	2	0	0	100.3	100.3	1	2077.4	3.25	0	77.35	0	0.15	0	0	13.62	0	0	0	0	0	0	9.19	9.19
	Inverter	MV3-15	368357	4907477	2	0	0	100.3	100.3	1	2110.49	3.25	0	77.49	0	0.16	0	0	13.69	0	0	0	0	0	0	8.97	8.97
	Westbrook Inverter Enclosur	W_INV6	369875	4906578	2	0	0	89.1	89.1	1	588.76	3.25	0	66.4	0	0.57	0	0	5.42	0	0	0	0	0	0	16.67	16.67
	Inverter	MV3-11	368346	4907662	2	0	0	100.3	100.3	1	2180.44	3.25	0	77.77	0	0.18	0	0	13.83	0	0	0	0	0	0	8.53	8.53
	Inverter	MV4-10	369312	4908858	2	0	0	100.3	100.3	1	2249.27	3.25	0	78.04	0	0.2	0	0	13.97	0	0	0	0	0	0	8.1	8.1
	Inverter	MV4-11	369264	4908855	2	0	0	100.3	100.3	1	2269.86	3.25	0	78.12	0	0.2	0	0	14.01	0	0	0	0	0	0	7.98	7.98
	Inverter	MV3-17	368178	4907472	2	0	0	100.3	100.3	1	2281.42	3.25	0	78.16	0	0.2	0	0	14.04	0	0	0	0	0	0	7.91	7.91
	Inverter	MV5-1	370020	4909142	2	0	0	100.3	100.3	1	2291.61	3.25	0	78.2	0	0.21	0	0	14.06	0	0	0	0	0	0	7.85	7.85
	Inverter	MV3-10	368167	4907669	2	0	0	100.3	100.3	1	2350.72	3.25	0	78.42	0	0.22	0	0	14.17	0	0	0	0	0	0	7.5	7.5
	Inverter	MV4-9	369289	4909001	2	0	0	100.3	100.3	1	2386.49	3.25	0	78.56	0	0.23	0	0	14.24	0	0	0	0	0	0	7.29	7.29
	Inverter	MV4-8	369256	4909001	2	0	0	100.3	100.3	1	2401.77	3.25	0	78.61	0	0.23	0	0	14.27	0	0	0	0	0	0	7.2	7.2
	Inverter	MV3-6	368162	4907834	2	0	0	100.3	100.3	1	2415.78	3.25	0	78.66	0	0.24	0	0	14.3	0	0	0	0	0	0	7.12	7.12
	Inverter	MV4-7	369035	4909001	2	0	0	100.3	100.3	1	2512.89	3.25	0	79	0	0.26	0	0	14.48	0	0	0	0	0	0	6.57	6.57
	Inverter	MV3-13	367963	4907577	2	0	0	100.3	100.3	1	2516.73	3.25	0	79.02	0	0.26	0	0	14.49	0	0	0	0	0	0	6.54	6.54
	Inverter	MV4-5	369289	4909199	2	0	0	100.3	100.3	1	2564.15	3.25	0	79.18	0	0.27	0	0	14.58	0	0	0	0	0	0	6.28	6.28
	Inverter	MV4-6	369243	4909192	2	0	0	100.3	100.3	1	2577.79	3.25	0	79.22	0	0.27	0	0	14.6	0	0	0	0	0	0	6.21	6.21
	Inverter	MV3-7	367945	4907754	2	0	0	100.3	100.3	1	2588.38	3.25	0	79.26	0	0.28	0	0	14.62	0	0	0	0	0	0	6.15	6.15
	Inverter	MV3-3	367939	4907927	2	0	0	100.3	100.3	1	2657.38	3.25	0	79.49	0	0.29	0	0	14.75	0	0	0	0	0	0	5.78	5.78
	SubstationTransformer	W_ST	369711.17	4906112.3	2.5	0	0	92	92	1	1018.11	3.5	0	71.16	0	-0.37	0	0	2.56	0	0	0	0	0	0	18.63	18.63
	Westbrook Inverter Enclosur	W_INV5	369719	4906574	2	0	0	89.1	89.1	1	728.89	3.25	0	68.25	0	0.62	0	0	5.77	0	0	0	0	0	0	14.42	14.42
	Inverter	MV3-18	367752	4907412	2	0	0	100.3	100.3	1	2682.49	3.25	0	79.57	0	0.3	0	0	14.8	0	0	0	0	0	0	5.64	5.64
	Inverter	MV4-4	369027	4909199	2	0	0	100.3	100.3	1	2686.21	3.25	0	79.58	0	0.3	0	0	14.81	0	0	0	0	0	0	5.62	5.62
	Inverter	MV4-2	369272	4909397	2	0	0	100.3	100.3	1	2751.4	3.25	0	79.79	0	0.31	0	0	14.93	0	0	0	0	0	0	5.28	5.28
	Inverter	MV4-3	369229	4909397	2	0	0	100.3	100.3	1	2769.01	3.25	0	79.85	0	0.32	0	0	14.96	0	0	0	0	0	0	5.19	5.19
	Westbrook Inverter Enclosur	W_INV7	369780	4906417	2	0	0	89.1	89.1	1	758.06	3.25	0	68.59	0	0.63	0	0	5.83	0	0	0	0	0	0	14	14
	Inverter	MV3-12	367668	4907594	2	0	0	100.3	100.3	1	2805.64	3.25	0	79.96	0	0.32	0	0	15.02	0	0	0	0	0	0	5	5
	Inverter	MV4-1	369011	4909397	2	0	0	100.3	100.3	1	2866.57	3.25	0	80.15	0	0.34	0	0	15.13	0	0	0	0	0	0	4.69	4.69
	DSTATCOM - 10 MVAR #1	DSAT1	369437	4908757	2.5	0	0	96.6	96.6	1	2101.91	3.5	0	77.45	0	3.24	0	0	1.78	0	0	0	0	0	0	14.16	14.16
	DSTATCOM - 10 MVAR #2	DSAT2	369403	4908757	2.5	0	0	96.6	96.6	1	2117.4	3.5	0	77.52	0	3.25	0	0	1.79	0	0	0	0	0	0	14.08	14.08
	Westbrook Inverter Enclosur	W_INV4	369673	4906164	2	0	0	89.1	89.1	1	1006.23	3.25	0	71.05	0	0.69	0	0	6.33	0	0	0	0	0	0	10.99	10.99
	Westbrook Inverter Enclosur	W_INV2	369374	4906388	2	0	0	89.1	89.1	1	1120.33	3.25	0	71.99	0	0.71	0	0	6.54	0	0	0	0	0	0	9.82	9.82
	Westbrook Inverter Enclosur	W_INV3	369508	4906164	2	0	0	89.1	89.1	1	1128.43	3.25	0	72.05	0	0.71	0	0	6.55	0	0	0	0	0	0	9.74	9.74
	Inverter	MV2-3	365820	4906641	2	0	0	100.3	100.3	1	4567.21	3.25	0	84.19	0	0.6	0	0	17.93	0	0	0	0	0	0	-2.41	-2.41

Inverter	MV2-4	365586	4906624	2	0	0	100.3	100.3	1	4801.78	3.25	0	84.63	0	0.62	0	0	18.29	0	0	0	0	0	0	-3.23	-3.23
Westbrook Inverter Enclosur	W_INV1	369409	4906578	2	0	0	86.1	86.1	1	1017.54	3.25	0	71.15	0	0.69	0	0	6.35	0	0	0	0	0	0	7.87	7.87
Inverter	MV1-15	365315	4904994	2	0	0	100.3	100.3	1	5405.33	3.25	0	85.66	0	0.67	0	0	19.17	0	0	0	0	0	0	-5.18	-5.18
Inverter	MV1-12	365038	4905386	2	0	0	100.3	100.3	1	5547.68	3.25	0	85.88	0	0.68	0	0	19.37	0	0	0	0	0	0	-5.62	-5.62
Inverter	MV1-4	364815	4905918	2	0	0	100.3	100.3	1	5648.35	3.25	0	86.04	0	0.69	0	0	19.51	0	0	0	0	0	0	-5.92	-5.92
Inverter	MV1-2	364753	4906063	2	0	0	100.3	100.3	1	5686.85	3.25	0	86.1	0	0.69	0	0	19.56	0	0	0	0	0	0	-6.04	-6.04
Inverter	MV1-1	364715	4906166	2	0	0	100.3	100.3	1	5710.69	3.25	0	86.13	0	0.69	0	0	19.6	0	0	0	0	0	0	-6.11	-6.11
Inverter	MV1-8	364788	4905647	2	0	0	100.3	100.3	1	5727.08	3.25	0	86.16	0	0.69	0	0	19.62	0	0	0	0	0	0	-6.16	-6.16
Inverter Transformer	MV6-4 T	370244	4906966	2	0	0	69.4	69.4	1	162.31	3.25	0	55.21	0	0.63	0	0	1.7	0	0	0	0	0	0	11.82	11.82
Inverter	MV1-5	364671	4905892	2	0	0	100.3	100.3	1	5794.68	3.25	0	86.26	0	0.7	0	0	19.71	0	0	0	0	0	0	-6.36	-6.36
Inverter	MV1-11	364655	4905414	2	0	0	100.3	100.3	1	5910.44	3.25	0	86.43	0	0.7	0	0	19.87	0	0	0	0	0	0	-6.69	-6.69
Inverter	MV1-9	364561	4905646	2	0	0	100.3	100.3	1	5949.18	3.25	0	86.49	0	0.7	0	0	19.92	0	0	0	0	0	0	-6.8	-6.8
Inverter	MV1-6	364477	4905835	2	0	0	100.3	100.3	1	5995.59	3.25	0	86.56	0	0.7	0	0	19.99	0	0	0	0	0	0	-6.94	-6.94
Inverter	MV5-6	369982	4908507	2	0	0	89.1	89.1	1	1676.18	3.25	0	75.49	0	0.83	0	0	7.51	0	0	0	0	0	0	5.23	5.23
Inverter	MV3-22	368656	4907142	2	0	0	89.1	89.1	1	1744.94	3.25	0	75.84	0	0.85	0	0	7.62	0	0	0	0	0	0	4.75	4.75
Inverter	MV2-1	365842	4906816	2	0	0	97.3	97.3	1	4539.44	3.25	0	84.14	0	0.6	0	0	17.89	0	0	0	0	0	0	-5.31	-5.31
Fixed Reactor Bank 2	FRB2	369464	4908755	6	0	0	89.8	89.8	1	2088.13	5.25	0	77.4	0	-0.98	0	0	4.52	0	0	0	0	0	0	8.85	8.85
Fixed Reactor Bank 1	FRB1	369378	4908755	6	0	0	89.8	89.8	1	2127.3	5.25	0	77.56	0	-0.98	0	0	4.58	0	0	0	0	0	0	8.62	8.62
Inverter	MV4-15	369176	4908481	2	0	0	89.1	89.1	1	2004.6	3.25	0	77.04	0	0.91	0	0	8.05	0	0	0	0	0	0	3.06	3.06
Inverter	MV3-2	368671	4907928	2	0	0	89.1	89.1	1	2006.12	3.25	0	77.05	0	0.91	0	0	8.06	0	0	0	0	0	0	3.05	3.05
Inverter	MV4-14	369176	4908507	2	0	0	89.1	89.1	1	2025.44	3.25	0	77.13	0	0.91	0	0	8.09	0	0	0	0	0	0	2.93	2.93
Inverter	MV1-14	365163	4905049	2	0	0	97.3	97.3	1	5529.6	3.25	0	85.85	0	0.68	0	0	19.34	0	0	0	0	0	0	-8.57	-8.57
Inverter	MV1-10	365004	4905564	2	0	0	97.3	97.3	1	5535.46	3.25	0	85.86	0	0.68	0	0	19.35	0	0	0	0	0	0	-8.58	-8.58
Inverter	MV3-4	368502	4907925	2	0	0	89.1	89.1	1	2150.53	3.25	0	77.65	0	0.94	0	0	8.29	0	0	0	0	0	0	2.17	2.17
Inverter	MV1-7	364925	4905782	2	0	0	97.3	97.3	1	5565.19	3.25	0	85.91	0	0.68	0	0	19.39	0	0	0	0	0	0	-8.67	-8.67
Inverter	MV4-13	369051	4908605	2	0	0	89.1	89.1	1	2178.99	3.25	0	77.77	0	0.95	0	0	8.34	0	0	0	0	0	0	2.01	2.01
Westbrook Inverter Transfor	W_INVTR6	369881	4906578	2	0	0	77.3	77.3	1	583.62	3.25	0	66.32	0	-1.61	0	0	0.43	0	0	0	0	0	0	12.21	12.21
Inverter	MV3-5	368340	4907843	2	0	0	89.1	89.1	1	2257.21	3.25	0	78.07	0	0.97	0	0	8.46	0	0	0	0	0	0	1.56	1.56
Inverter	MV1-13	364731	4905241	2	0	0	97.3	97.3	1	5882.65	3.25	0	86.39	0	0.7	0	0	19.83	0	0	0	0	0	0	-9.61	-9.61
Inverter	MV4-12	369043	4908803	2	0	0	89.1	89.1	1	2343.51	3.25	0	78.4	0	0.99	0	0	8.6	0	0	0	0	0	0	1.07	1.07
Inverter	MV3-1	368156	4907976	2	0	0	89.1	89.1	1	2480.73	3.25	0	78.89	0	1.02	0	0	8.82	0	0	0	0	0	0	0.33	0.33
Westbrook Inverter Transfor	W_INVTR5	369725	4906574	2	0	0	77.3	77.3	1	723.44	3.25	0	68.19	0	-1.74	0	0	0.51	0	0	0	0	0	0	10.38	10.38
Westbrook Inverter Transfor	W_INVTR7	369786	4906417	2	0	0	77.3	77.3	1	753.31	3.25	0	68.54	0	-1.76	0	0	0.53	0	0	0	0	0	0	10.03	10.03
Westbrook Inverter Transfor	W_INVTR1	369403	4906578	2	0	0	78.2	78.2	1	1023.27	3.25	0	71.2	0	-1.95	0	0	0.69	0	0	0	0	0	0	8.3	8.3
Westbrook Inverter Transfor	W_INVTR4	369679	4906164	2	0	0	77.3	77.3	1	1002.02	3.25	0	71.02	0	-1.93	0	0	0.68	0	0	0	0	0	0	7.58	7.58
Gardiner Substation	G_Sub	366586.3	4903349.9	2.5	0	0	90.8	90.8	1	5182.11	4.25	0	85.29	0	1.69	2.3	0.34	8.83	0	0	0	0	0	0	-7.34	-7.34
Westbrook Inverter Transfor	W_INVTR3	369514	4906164	2	0	0	77.3	77.3	1	1123.8	3.25	0	72.01	0	-2.01	0	0	0.75	0	0	0	0	0	0	6.59	6.59
Westbrook Inverter Transfor	W_INVTR2	369368	4906388	2	0	0	77.3	77.3	1	1125.72	3.25	0	72.03	0	-2.01	0	0	0.75	0	0	0	0	0	0	6.57	6.57
Inverter	MV2-2	365977	4906654	2	0	0	89.1	89.1	1	4409.74	3.25	0	83.89	0	1.49	0	0	11.66	0	0	0	0	0	0	-7.98	-7.98
Inverter Transformer	MV6-1 T	370230	4907364	2	0	0	69.4	69.4	1	507.97	3.25	0	65.12	0	1.06	0	0	2.98	0	0	0	0	0	0	0.2	0.2
Inverter	MV1-3	364440	4906039	2	0	0	89.1	89.1	1	6000.09	3.25	0	86.56	0	1.89	0	0	13.76	0	0	0	0	0	0	-13.15	-13.15
Inverters	G_Inv2	366676.9	4903239.1	2	0	0	87.7	87.7	1	5193.19	3.25	0	85.31	0	2.88	0	0	6.14	0	0	0	0	0	0	-6.67	-6.67
Inverters	G_Inv4	366732.8	4903105	2	0	0	87.7	87.7	1	5249.04	3.25	0	85.4	0	2.88	0	0	6.2	0	0	0	0	0	0	-6.82	-6.82
Inverters	G_Inv6	366788.5	4902972	2	0	0	87.7	87.7	1	5307.61	3.25	0	85.5	0	2.88	0	0	6.26	0	0	0	0	0	0	-6.98	-6.98
Inverters	G_Inv1	366526.4	4903225.8	2	0	0	87.7	87.7	1	5310.73	3.25	0	85.5	0	2.88	0	0	6.27	0	0	0	0	0	0	-6.99	-6.99
Inverters	G_Inv3	366583.7	4903091.4	2	0	0	87.7	87.7	1	5363.34	3.25	0	85.59	0	2.89	0	0	6.32	0	0	0	0	0	0	-7.14	-7.14
Inverters	G_Inv8	366844.5	4902838.5	2	0	0	87.7	87.7	1	5369.59	3.25	0	85.6	0	2.89	0	0	6.33	0	0	0	0	0	0	-7.15	-7.15
Inverters	G_Inv5	366638.5	4902958.1	2	0	0	87.7	87.7	1	5420.31	3.25	0	85.68	0	2.89	0	0	6.38	0	0	0	0	0	0	-7.29	-7.29
Inverters	G_Inv10	366900.7	4902704.8	2	0	0	87.7	87.7	1	5434.74	3.25	0	85.7	0	2.89	0	0	6.39	0	0	0	0	0	0	-7.33	-7.33
Inverters	G_Inv7	366694.6	4902824.7	2	0	0	87.7	87.7	1	5479.68	3.25	0	85.78	0	2.89	0	0	6.44	0	0	0	0	0	0	-7.45	-7.45
Inverters	G_Inv9	366750.9	4902691.8	2	0	0	87.7	87.7	1	5541.69	3.25	0	85.87	0	2.9	0	0	6.51	0	0	0	0	0	0	-7.61	-7.61
Inverter Transformer	MV6-3 T	370202	4907140	2	0	0	56.1	56.1	1	316.49	3.25	0	61.01	0	-0.08	0	0	2.86	0	0	0	0	0	0	-7.73	-7.73
Inverter Transformer	MV6-2 T	370091	4907339	2	0	0	56.1	56.1	1	543.79	3.25	0	65.71	0	-0.11	0	0	3.69	0	0	0	0	0	0	-13.23	-13.23
Inverter Transformer	MV2-1 T	365836	4906816	2	0	0	69.4	69.4	1	4545.44	3.25	0	84.15	0	2.92	0	0	7.07	0	0	0	0	0	0	-24.79	-24.79
Inverter Transformer	MV1-10 T	365010	4905564	2	0	0	69.4	69.4	1	5529.64	3.25	0	85.85	0	3.11	0	0	7.73	0	0	0	0	0	0	-27.34	-27.34
Inverter Transformer	MV1-14 T	365157	4905049	2	0	0	69.4	69.4	1	5535.26	3.25	0	85.86	0	3.11	0	0	7.73	0	0	0	0	0	0	-27.35	-27.35
Inverter Transformer	MV1-7 T	364919	4905782	2	0	0	69.4	69.4	1	5571.07	3.25	0	85.92	0	3.12	0	0	7.75	0	0	0	0	0	0	-27.44	-27.44
Inverter Transformer	MV1-13 T	364725	4905241	2	0	0	69.4	69.4	1	5888.41	3.25	0	86.4	0	3.17	0	0	7.95	0	0	0	0	0	0	-28.17	-28.17
Inverter Transformer	MV5-6 T	369987	4908507	2	0	0	56.1	56.1	1	1675	3.25	0	75.48	0	0.27	0	0	6.39	0	0	0	0	0	0	-26.08	-26.08
Inverter Transformer	MV3-22 T	368661	4907142	2	0	0	56.1	56.1	1	1739.99	3.25	0	75.81	0	0.3	0	0	6.52	0	0	0	0	0	0	-26.57	-26.57
Inverter Transformer	MV3-20 T	368683	4907317	2	0	0	56.1	56.1	1	1753.58	3.25	0	75.88	0	0.3	0	0	6.55	0	0	0	0	0	0	-26.67	-26.67
Inverter Transformer	MV3-14 T	368678	4907498	2	0	0	56.1	56.1	1	1812.01	3.25	0	76.16	0	0.33	0	0	6.67	0	0	0	0	0	0	-27.1	-27.1
Inverter Transformer	MV5-4 T	370330	4908707	2	0	0	56.1	56.1	1	1828.71	3.25	0	76.24	0	0.33	0	0	6.7	0	0	0	0	0	0	-27.22	-27.22
Inverter Transformer	MV5-5 T	370021	4908690	2	0	0	56.1	56.1	1	1846.44	3.25	0	76.33	0	0.34	0	0	6.74	0	0	0	0	0	0	-27.35	-27.35
Inverter Transformer	MV3-8 T	368685	4907712	2	0	0	56.1	56.1	1	1889.53	3.25	0	76.53	0	0.36	0	0	6.82	0	0	0	0	0	0	-27.65	-27.65
Inverter Transformer	MV3-21 T	368484	4907206	2	0	0	56.1	56.1	1	1924.98	3.25	0	76.69	0	0.37	0	0	6.9	0	0	0	0	0	0	-27.9	-27.9
Inverter Transformer	MV3-16 T	368509	4907475	2	0	0	56.1	56.1	1	1964.59	3.25	0	76.87	0	0.39	0	0	6.97	0	0	0	0	0	0	-28.17	-28.17
Inverter Transformer	MV5-3 T	370237	4908851	2	0	0	56.1	56.1	1	1977.25	3.25	0	76.92	0	0.39	0	0	7	0	0	0	0	0	0	-28.26	-28.26
Inverter Transformer	MV3-2 T	368677	4907928	2	0	0	56.1	56.1	1	2001.01	3.25	0	77.02	0	0.4	0	0	7.05	0	0	0	0	0	0	-28.42	-28.42
Inverter Transformer	MV4-15 T	369170	4908481	2	0	0	56.1	56.1	1	2008.22	3.25	0	77.06	0	0.41	0	0	7.06	0	0	0	0	0	0	-28.46	-28.46
Inverter Transformer	MV5-2 T	370011	4908853	2	0	0	56.1	56.1	1	2008.38	3.25	0	77.06	0	0.41	0	0	7.06	0	0	0	0	0	0	-28.47	-28.47
Inverter Transformer	MV4-14 T	369182	4908507	2	0	0	56.1	56.1	1	2021.88	3.25	0	77.12	0	0.41	0	0	7.09	0	0	0	0	0	0	-28.56	-28.56
Inverter Transformer	MV3-9 T	368517	4907703	2	0	0	56.1	56.1	1	2038.01	3.25	0	77.18	0	0.42	0	0	7.12	0	0	0	0	0	0	-28.66	-28.66
Inverter Transformer	MV3-19 T	368352	4907347	2	0	0	56.1	56.1	1	2082.28	3.25	0	77.37	0	0.44	0	0	7.2	0	0	0	0	0	0	-28.96	-28.96

	Inverter Transformer	MV3-15 T	368351	4907477	2	0	0	56.1	56.1	1	2116.25	3.25	0	77.51	0	0.45	0	0	7.27	0	0	0	0	0	0	-29.18	-29.18
	Inverter Transformer	MV3-4 T	368507	4907925	2	0	0	56.1	56.1	1	2146.16	3.25	0	77.63	0	0.47	0	0	7.33	0	0	0	0	0	0	-29.37	-29.37
	Inverter Transformer	MV4-13 T	369057	4908605	2	0	0	56.1	56.1	1	2175.33	3.25	0	77.75	0	0.48	0	0	7.38	0	0	0	0	0	0	-29.55	-29.55
	Inverter Transformer	MV3-11 T	368340	4907662	2	0	0	56.1	56.1	1	2186.04	3.25	0	77.79	0	0.48	0	0	7.4	0	0	0	0	0	0	-29.62	-29.62
	Inverter Transformer	MV4-10 T	369307	4908858	2	0	0	56.1	56.1	1	2251.65	3.25	0	78.05	0	0.51	0	0	7.53	0	0	0	0	0	0	-30.03	-30.03
	Inverter Transformer	MV3-5 T	368335	4907843	2	0	0	56.1	56.1	1	2261.73	3.25	0	78.09	0	0.51	0	0	7.55	0	0	0	0	0	0	-30.09	-30.09
	Inverter Transformer	MV4-11 T	369269	4908855	2	0	0	56.1	56.1	1	2267.41	3.25	0	78.11	0	0.52	0	0	7.56	0	0	0	0	0	0	-30.13	-30.13
	Inverter Transformer	MV3-17 T	368183	4907472	2	0	0	56.1	56.1	1	2276.59	3.25	0	78.15	0	0.52	0	0	7.58	0	0	0	0	0	0	-30.18	-30.18
	Inverter Transformer	MV5-1 T	370015	4909142	2	0	0	56.1	56.1	1	2292.41	3.25	0	78.21	0	0.53	0	0	7.61	0	0	0	0	0	0	-30.28	-30.28
	Inverter Transformer	MV4-12 T	369049	4908803	2	0	0	56.1	56.1	1	2340.09	3.25	0	78.38	0	0.55	0	0	7.69	0	0	0	0	0	0	-30.57	-30.57
	Inverter Transformer	MV3-10 T	368162	4907669	2	0	0	56.1	56.1	1	2355.43	3.25	0	78.44	0	0.55	0	0	7.72	0	0	0	0	0	0	-30.66	-30.66
	Inverter Transformer	MV4-9 T	369284	4909001	2	0	0	56.1	56.1	1	2388.79	3.25	0	78.56	0	0.57	0	0	7.79	0	0	0	0	0	0	-30.86	-30.86
	Inverter Transformer	MV4-8 T	369262	4909001	2	0	0	56.1	56.1	1	2398.97	3.25	0	78.6	0	0.57	0	0	7.8	0	0	0	0	0	0	-30.92	-30.92
	Inverter Transformer	MV3-6 T	368156	4907834	2	0	0	56.1	56.1	1	2421.29	3.25	0	78.68	0	0.58	0	0	7.85	0	0	0	0	0	0	-31.05	-31.05
	Inverter Transformer	MV3-1 T	368150	4907976	2	0	0	56.1	56.1	1	2486.12	3.25	0	78.91	0	0.61	0	0	7.96	0	0	0	0	0	0	-31.43	-31.43
	Inverter Transformer	MV4-7 T	369040	4909001	2	0	0	56.1	56.1	1	2510.21	3.25	0	78.99	0	0.62	0	0	8.01	0	0	0	0	0	0	-31.56	-31.56
	Inverter Transformer	MV3-13 T	367958	4907577	2	0	0	56.1	56.1	1	2521.54	3.25	0	79.03	0	0.63	0	0	8.03	0	0	0	0	0	0	-31.63	-31.63
	Inverter Transformer	MV4-5 T	369283	4909199	2	0	0	56.1	56.1	1	2566.71	3.25	0	79.19	0	0.64	0	0	8.11	0	0	0	0	0	0	-31.88	-31.88
	Inverter Transformer	MV4-6 T	369249	4909192	2	0	0	56.1	56.1	1	2575.15	3.25	0	79.22	0	0.65	0	0	8.13	0	0	0	0	0	0	-31.93	-31.93
	Inverter Transformer	MV3-7 T	367951	4907754	2	0	0	56.1	56.1	1	2582.74	3.25	0	79.24	0	0.65	0	0	8.14	0	0	0	0	0	0	-31.97	-31.97
	Inverter Transformer	MV3-3 T	367944	4907927	2	0	0	56.1	56.1	1	2652.79	3.25	0	79.47	0	0.68	0	0	8.26	0	0	0	0	0	0	-32.36	-32.36
	Inverter Transformer	MV3-18 T	367757	4907412	2	0	0	56.1	56.1	1	2677.59	3.25	0	79.55	0	0.69	0	0	8.31	0	0	0	0	0	0	-32.5	-32.5
	Inverter Transformer	MV4-4 T	369033	4909199	2	0	0	56.1	56.1	1	2683.19	3.25	0	79.57	0	0.69	0	0	8.32	0	0	0	0	0	0	-32.53	-32.53
	Inverter Transformer	MV4-2 T	369267	4909397	2	0	0	56.1	56.1	1	2753.42	3.25	0	79.8	0	0.72	0	0	8.44	0	0	0	0	0	0	-32.91	-32.91
	Inverter Transformer	MV4-3 T	369234	4909397	2	0	0	56.1	56.1	1	2766.94	3.25	0	79.84	0	0.73	0	0	8.47	0	0	0	0	0	0	-32.98	-32.98
	Inverter Transformer	MV3-12 T	367674	4907594	2	0	0	56.1	56.1	1	2799.84	3.25	0	79.94	0	0.74	0	0	8.52	0	0	0	0	0	0	-33.15	-33.15
	Inverter Transformer	MV4-1 T	369017	4909397	2	0	0	56.1	56.1	1	2863.71	3.25	0	80.14	0	0.77	0	0	8.63	0	0	0	0	0	0	-33.49	-33.49
	Inverter Transformer	MV2-2 T	365982	4906654	2	0	0	56.1	56.1	1	4404.75	3.25	0	83.88	0	1.4	0	0	11.04	0	0	0	0	0	0	-40.26	-40.26
	Inverter Transformer	MV2-3 T	365814	4906641	2	0	0	56.1	56.1	1	4573.2	3.25	0	84.2	0	1.47	0	0	11.28	0	0	0	0	0	0	-40.89	-40.89
	Inverter Transformer	MV2-4 T	365590	4906628	2	0	0	56.1	56.1	1	4797.57	3.25	0	84.62	0	1.55	0	0	11.58	0	0	0	0	0	0	-41.7	-41.7
	Inverter Transformer	MV1-15 T	365309	4904994	2	0	0	56.1	56.1	1	5410.95	3.25	0	85.67	0	1.77	0	0	12.38	0	0	0	0	0	0	-43.76	-43.76
	Inverter Transformer	MV1-12 T	365044	4905386	2	0	0	56.1	56.1	1	5541.9	3.25	0	85.87	0	1.81	0	0	12.55	0	0	0	0	0	0	-44.18	-44.18
	Inverter Transformer	MV1-4 T	364821	4905918	2	0	0	56.1	56.1	1	5642.44	3.25	0	86.03	0	1.85	0	0	12.67	0	0	0	0	0	0	-44.49	-44.49
	Inverter Transformer	MV1-2 T	364759	4906063	2	0	0	56.1	56.1	1	5680.91	3.25	0	86.09	0	1.86	0	0	12.72	0	0	0	0	0	0	-44.61	-44.61
	Inverter Transformer	MV1-1 T	364721	4906166	2	0	0	56.1	56.1	1	5704.73	3.25	0	86.12	0	1.87	0	0	12.75	0	0	0	0	0	0	-44.68	-44.68
	Inverter Transformer	MV1-8 T	364782	4905647	2	0	0	56.1	56.1	1	5732.94	3.25	0	86.17	0	1.88	0	0	12.78	0	0	0	0	0	0	-44.77	-44.77
	Inverter Transformer	MV1-5 T	364676	4905892	2	0	0	56.1	56.1	1	5789.75	3.25	0	86.25	0	1.9	0	0	12.85	0	0	0	0	0	0	-44.94	-44.94
	Inverter Transformer	MV1-11 T	364649	4905414	2	0	0	56.1	56.1	1	5916.25	3.25	0	86.44	0	1.94	0	0	13	0	0	0	0	0	0	-45.32	-45.32
	Inverter Transformer	MV1-9 T	364555	4905646	2	0	0	56.1	56.1	1	5955.05	3.25	0	86.5	0	1.95	0	0	13.05	0	0	0	0	0	0	-45.44	-45.44
	Inverter Transformer	MV1-6 T	364482	4905835	2	0	0	56.1	56.1	1	5990.67	3.25	0	86.55	0	1.96	0	0	13.09	0	0	0	0	0	0	-45.54	-45.54
	Inverter Transformer	MV1-3 T	364435	4906039	2	0	0	56.1	56.1	1	6005.04	3.25	0	86.57	0	1.97	0	0	13.11	0	0	0	0	0	0	-45.59	-45.59
	Line Reactor	NGR	369421	4908787.5	5	0	0	45.4	45.4	1	2136.35	5.25	0	77.59	0	3.37	1.29	0.11	0.88	0	0	0	0	0	0	-37.77	-37.77
Limit. Valu	0	0																								
Level D/N:	36.5965	36.5965																								

Receiver: Vacant Lot Receptor
ID: S-VLR32
X: 370289
Y: 4906806
Z: 4.5
Ground: 0

ISO	Description	ID	X	Y	Z	Ground	ReflOrd	LxT	LxN	L/A	Dist.	hm	Freq	Adiv	K0b	Agr	Abar	z	Aatm	Afol	Ahous	Cmet	CmetN	Dc	RL	LtotT	LtotN
	Inverter	MV6-3	370207	4907140	2	0	0	100.3	100.3	1	343.93	3.25	0	61.73	0	-0.64	0	0	6.98	0	0	0	0	0	0	32.25	32.25
	Sol_Luce Substation	S_Substation	369426	4908792	3.5	0	0	112.1	112.1	1	2165.4	5.25	0	77.71	0	0.06	3.71	0.32	4.64	0	0	0	0	0	0	25.95	25.95
	Inverter	MV6-2	370085	4907339	2	0	0	100.3	100.3	1	570.71	3.25	0	66.13	0	-0.5	0	0	9.02	0	0	0	0	0	0	25.66	25.66
	Inverter	MV6-1	370235	4907364	2	0	0	97.3	97.3	1	560.61	3.25	0	65.97	0	-0.51	0	0	8.96	0	0	0	0	0	0	22.89	22.89
	Inverter	MV6-4	370250	4906966	2	0	0	86.1	86.1	1	164.7	3.25	0	55.33	0	0.23	0	0	2.8	0	0	0	0	0	0	27.69	27.69
	Inverter	MV3-20	368689	4907317	2	0	0	100.3	100.3	1	1679.62	3.25	0	75.5	0	0.03	0	0	12.76	0	0	0	0	0	0	12.02	12.02
	Westbrook Inverter Enclosur	W_INV6	369875	4906578	2	0	0	89.1	89.1	1	472.64	3.25	0	64.49	0	0.51	0	0	5.04	0	0	0	0	0	0	19.01	19.01
	Inverter	MV3-14	368684	4907498	2	0	0	100.3	100.3	1	1747.83	3.25	0	75.85	0	0.05	0	0	12.91	0	0	0	0	0	0	11.5	11.5
	Inverter	MV3-8	368680	4907712	2	0	0	100.3	100.3	1	1846.54	3.25	0	76.33	0	0.08	0	0	13.13	0	0	0	0	0	0	10.77	10.77
	Inverter	MV3-21	368478	4907206	2	0	0	100.3	100.3	1	1854.65	3.25	0	76.37	0	0.09	0	0	13.15	0	0	0	0	0	0	10.71	10.71
	Inverter	MV3-16	368514	4907475	2	0	0	100.3	100.3	1	1896.89	3.25	0	76.56	0	0.1	0	0	13.24	0	0	0	0	0	0	10.41	10.41
	Inverter	MV5-4	370324	4908707	2	0	0	100.3	100.3	1	1901.32	3.25	0	76.58	0	0.1	0	0	13.25	0	0	0	0	0	0	10.38	10.38
	Inverter	MV5-5	370015	4908690	2	0	0	100.3	100.3	1	1903.82	3.25	0	76.59	0	0.1	0	0	13.26	0	0	0	0	0	0	10.36	10.36
	Inverter	MV3-9	368512	4907703	2	0	0	100.3	100.3	1	1990.56	3.25	0	76.98	0	0.13	0	0	13.44	0	0	0	0	0	0	9.76	9.76
	Inverter	MV3-19	368357	4907347	2	0	0	100.3	100.3	1	2006.32	3.25	0	77.05	0	0.13	0	0	13.48	0	0	0	0	0	0	9.66	9.66
	Inverter	MV3-15	368357	4907477	2	0	0	100.3	100.3	1	2045.21	3.25	0	77.21	0	0.14	0	0	13.56	0	0	0	0	0	0	9.4	9.4
	Inverter	MV5-3	370231	4908851	2	0	0	100.3	100.3	1	2045.82	3.25	0	77.22	0	0.14	0	0	13.56	0	0	0	0	0	0	9.39	9.39
	Inverter	MV5-2	370006	4908853	2	0	0	100.3	100.3	1	2066.47	3.25	0	77.3	0	0.15	0	0	13.6	0	0	0	0	0	0	9.26	9.26
	Inverter	MV3-11	368346	4907662	2	0	0	100.3	100.3	1	2123.2	3.25	0	77.54	0	0.16	0	0	13.72	0	0	0	0	0	0	8.89	8.89
	Inverter	MV3-17	368178	4907472	2	0	0	100.3	100.3	1	2213.57	3.25	0	77.9	0	0.19	0	0	13.9	0	0	0	0	0	0	8.32	8.32
	Westbrook Inverter Enclosur	W_INV5	369719	4906574	2	0	0	89.1	89.1	1	615.41	3.25	0	66.78	0	0.58	0	0	5.49	0	0	0	0	0	0	16.2	16.2

Inverter	MV4-10	369312	4908858	2	0	0	100.3	100.3	1	2272.72	3.25	0	78.13	0	0.2	0	0	14.02	0	0	0	0	0	0	7.96	7.96
Inverter	MV3-10	368167	4907669	2	0	0	100.3	100.3	1	2290.78	3.25	0	78.2	0	0.21	0	0	14.05	0	0	0	0	0	0	7.85	7.85
Inverter	MV4-11	369264	4908855	2	0	0	100.3	100.3	1	2291.08	3.25	0	78.2	0	0.21	0	0	14.05	0	0	0	0	0	0	7.85	7.85
Westbrook Inverter Enclosur	W_INV7	369780	4906417	2	0	0	89.1	89.1	1	640.63	3.25	0	67.13	0	0.59	0	0	5.56	0	0	0	0	0	0	15.78	15.78
Inverter	MV5-1	370020	4909142	2	0	0	100.3	100.3	1	2351.44	3.25	0	78.43	0	0.22	0	0	14.17	0	0	0	0	0	0	7.49	7.49
SubstationTransformer	W_ST	369711.17	4906112.3	2.5	0	0	92	92	1	902.86	3.5	0	70.11	0	-0.38	0	0	2.32	0	0	0	0	0	0	19.93	19.93
Inverter	MV3-6	368162	4907834	2	0	0	100.3	100.3	1	2362.4	3.25	0	78.47	0	0.22	0	0	14.19	0	0	0	0	0	0	7.43	7.43
Inverter	MV4-9	369289	4909001	2	0	0	100.3	100.3	1	2412.06	3.25	0	78.65	0	0.24	0	0	14.29	0	0	0	0	0	0	7.14	7.14
Inverter	MV4-8	369256	4909001	2	0	0	100.3	100.3	1	2425.93	3.25	0	78.7	0	0.24	0	0	14.32	0	0	0	0	0	0	7.06	7.06
Inverter	MV3-13	367963	4907577	2	0	0	100.3	100.3	1	2450.45	3.25	0	78.78	0	0.25	0	0	14.36	0	0	0	0	0	0	6.92	6.92
Inverter	MV4-7	369035	4909001	2	0	0	100.3	100.3	1	2527.95	3.25	0	79.06	0	0.26	0	0	14.51	0	0	0	0	0	0	6.48	6.48
Inverter	MV3-7	367945	4907754	2	0	0	100.3	100.3	1	2528.45	3.25	0	79.06	0	0.26	0	0	14.51	0	0	0	0	0	0	6.48	6.48
Inverter	MV4-5	369289	4909199	2	0	0	100.3	100.3	1	2593.54	3.25	0	79.28	0	0.28	0	0	14.63	0	0	0	0	0	0	6.12	6.12
Inverter	MV3-3	367939	4907927	2	0	0	100.3	100.3	1	2603.68	3.25	0	79.31	0	0.28	0	0	14.65	0	0	0	0	0	0	6.07	6.07
Inverter	MV4-6	369243	4909192	2	0	0	100.3	100.3	1	2605.21	5.05	0	79.32	0	1.02	3.29	0.02	14.66	0	0	0	0	0	0	2.03	2.03
Inverter	MV3-18	367752	4907412	2	0	0	100.3	100.3	1	2608.37	3.25	0	79.33	0	0.28	0	0	14.66	0	0	0	0	0	0	6.04	6.04
Inverter	MV4-4	369027	4909199	2	0	0	100.3	100.3	1	2705.38	3.25	0	79.64	0	0.3	0	0	14.84	0	0	0	0	0	0	5.52	5.52
Inverter	MV3-12	367668	4907594	2	0	0	100.3	100.3	1	2736.89	3.25	0	79.75	0	0.31	0	0	14.9	0	0	0	0	0	0	5.36	5.36
Inverter	MV4-2	369272	4909397	2	0	0	100.3	100.3	1	2783.45	3.25	0	79.89	0	0.32	0	0	14.98	0	0	0	0	0	0	5.12	5.12
Inverter	MV4-3	369229	4909397	2	0	0	100.3	100.3	1	2799.44	3.25	0	79.94	0	0.32	0	0	15.01	0	0	0	0	0	0	5.04	5.04
Inverter	MV4-1	369011	4909397	2	0	0	100.3	100.3	1	2889.04	3.25	0	80.22	0	0.34	0	0	15.17	0	0	0	0	0	0	4.58	4.58
Westbrook Inverter Enclosur	W_INV4	369673	4906164	2	0	0	89.1	89.1	1	889.73	3.25	0	69.99	0	0.66	0	0	6.1	0	0	0	0	0	0	12.31	12.31
DSTATCOM - 10 MVAR #1	DSAT1	369437	4908757	2.5	0	0	96.6	96.6	1	2128.92	3.5	0	77.56	0	3.25	0	0	1.8	0	0	0	0	0	0	14.02	14.02
DSTATCOM - 10 MVAR #2	DSAT2	369403	4908757	2.5	0	0	96.6	96.6	1	2142.76	3.5	0	77.62	0	3.25	0	0	1.8	0	0	0	0	0	0	13.96	13.96
Westbrook Inverter Enclosur	W_INV2	369374	4906388	2	0	0	89.1	89.1	1	1005.96	3.25	0	71.05	0	0.69	0	0	6.33	0	0	0	0	0	0	10.99	10.99
Westbrook Inverter Enclosur	W_INV3	369508	4906164	2	0	0	89.1	89.1	1	1011.01	3.25	0	71.1	0	0.69	0	0	6.34	0	0	0	0	0	0	10.94	10.94
Inverter	MV2-3	365820	4906641	2	0	0	100.3	100.3	1	4472.05	3.25	0	84.01	0	0.59	0	0	17.79	0	0	0	0	0	0	-2.07	-2.07
Westbrook Inverter Enclosur	W_INV1	369409	4906578	2	0	0	86.1	86.1	1	909.06	3.25	0	70.17	0	0.67	0	0	6.14	0	0	0	0	0	0	9.08	9.08
Inverter	MV2-4	365586	4906624	2	0	0	100.3	100.3	1	4706.52	3.25	0	84.45	0	0.61	0	0	18.14	0	0	0	0	0	0	-2.9	-2.9
Inverter	MV1-15	365315	4904994	2	0	0	100.3	100.3	1	5293.77	3.25	0	85.48	0	0.67	0	0	19.01	0	0	0	0	0	0	-4.84	-4.84
Inverter	MV1-12	365038	4905386	2	0	0	100.3	100.3	1	5439.61	3.25	0	85.71	0	0.68	0	0	19.22	0	0	0	0	0	0	-5.29	-5.29
Inverter	MV1-4	364815	4905918	2	0	0	100.3	100.3	1	5545.56	3.25	0	85.88	0	0.68	0	0	19.36	0	0	0	0	0	0	-5.61	-5.61
Inverter	MV1-2	364753	4906063	2	0	0	100.3	100.3	1	5585.64	3.25	0	85.94	0	0.69	0	0	19.42	0	0	0	0	0	0	-5.74	-5.74
Inverter	MV1-1	364715	4906166	2	0	0	100.3	100.3	1	5610.62	3.25	0	85.98	0	0.69	0	0	19.46	0	0	0	0	0	0	-5.81	-5.81
Inverter	MV1-8	364788	4905647	2	0	0	100.3	100.3	1	5621.77	3.25	0	86	0	0.69	0	0	19.47	0	0	0	0	0	0	-5.84	-5.84
Inverter	MV1-5	364671	4905892	2	0	0	100.3	100.3	1	5691.86	3.25	0	86.11	0	0.69	0	0	19.57	0	0	0	0	0	0	-6.05	-6.05
Inverter	MV1-11	364655	4905414	2	0	0	100.3	100.3	1	5803.42	3.25	0	86.27	0	0.7	0	0	19.72	0	0	0	0	0	0	-6.38	-6.38
Inverter	MV1-9	364561	4905646	2	0	0	100.3	100.3	1	5844.28	3.25	0	86.33	0	0.7	0	0	19.78	0	0	0	0	0	0	-6.5	-6.5
Inverter Transformer	MV6-4 T	370244	4906966	2	0	0	69.4	69.4	1	166.23	3.25	0	55.41	0	0.64	0	0	1.72	0	0	0	0	0	0	11.57	11.57
Inverter	MV1-6	364477	4905835	2	0	0	100.3	100.3	1	5892.55	3.25	0	86.41	0	0.7	0	0	19.85	0	0	0	0	0	0	-6.64	-6.64
Inverter	MV3-22	368656	4907142	2	0	0	89.1	89.1	1	1667.21	3.25	0	75.44	0	0.83	0	0	7.49	0	0	0	0	0	0	5.3	5.3
Inverter	MV2-1	365842	4906816	2	0	0	97.3	97.3	1	4447.01	3.25	0	83.96	0	0.58	0	0	17.75	0	0	0	0	0	0	-4.98	-4.98
Inverter	MV5-6	369982	4908507	2	0	0	89.1	89.1	1	1728.48	3.25	0	75.75	0	0.84	0	0	7.6	0	0	0	0	0	0	4.86	4.86
Westbrook Inverter Transfor	W_INVTR6	369881	4906578	2	0	0	77.3	77.3	1	467.39	3.25	0	64.39	0	-1.46	0	0	0.35	0	0	0	0	0	0	14.06	14.06
Fixed Reactor Bank 2	FRB2	369464	4908755	6	0	0	89.8	89.8	1	2116.42	5.25	0	77.51	0	-0.98	0	0	4.56	0	0	0	0	0	0	8.68	8.68
Inverter	MV3-2	368671	4907928	2	0	0	89.1	89.1	1	1968.96	3.25	0	76.88	0	0.9	0	0	7.99	0	0	0	0	0	0	3.28	3.28
Fixed Reactor Bank 1	FRB1	369378	4908755	6	0	0	89.8	89.8	1	2151.4	5.25	0	77.65	0	-0.98	0	0	4.62	0	0	0	0	0	0	8.48	8.48
Inverter	MV4-15	369176	4908481	2	0	0	89.1	89.1	1	2011.07	3.25	0	77.07	0	0.91	0	0	8.06	0	0	0	0	0	0	3.02	3.02
Inverter	MV4-14	369176	4908507	2	0	0	89.1	89.1	1	2032.78	3.25	0	77.16	0	0.91	0	0	8.1	0	0	0	0	0	0	2.88	2.88
Inverter	MV1-14	365163	4905049	2	0	0	97.3	97.3	1	5418.76	3.25	0	85.68	0	0.68	0	0	19.19	0	0	0	0	0	0	-8.23	-8.23
Inverter	MV1-10	365004	4905564	2	0	0	97.3	97.3	1	5428.98	3.25	0	85.69	0	0.68	0	0	19.2	0	0	0	0	0	0	-8.26	-8.26
Inverter	MV3-4	368502	4907925	2	0	0	89.1	89.1	1	2108.44	3.25	0	77.48	0	0.93	0	0	8.22	0	0	0	0	0	0	2.42	2.42
Inverter	MV1-7	364925	4905782	2	0	0	97.3	97.3	1	5460.87	3.25	0	85.75	0	0.68	0	0	19.25	0	0	0	0	0	0	-8.36	-8.36
Inverter	MV4-13	369051	4908605	2	0	0	89.1	89.1	1	2183.82	3.25	0	77.78	0	0.95	0	0	8.34	0	0	0	0	0	0	1.98	1.98
Inverter	MV3-5	368340	4907843	2	0	0	89.1	89.1	1	2207.71	3.25	0	77.88	0	0.96	0	0	8.38	0	0	0	0	0	0	1.84	1.84
Inverter	MV1-13	364731	4905241	2	0	0	97.3	97.3	1	5774.13	3.25	0	86.23	0	0.7	0	0	19.68	0	0	0	0	0	0	-9.3	-9.3
Westbrook Inverter Transfor	W_INVTR5	369725	4906574	2	0	0	77.3	77.3	1	609.86	3.25	0	66.7	0	-1.64	0	0	0.44	0	0	0	0	0	0	11.83	11.83
Inverter	MV4-12	369043	4908803	2	0	0	89.1	89.1	1	2353.83	3.25	0	78.44	0	0.99	0	0	8.62	0	0	0	0	0	0	1.02	1.02
Inverter	MV3-1	368156	4907976	2	0	0	89.1	89.1	1	2432.82	3.25	0	78.72	0	1.01	0	0	8.74	0	0	0	0	0	0	0.59	0.59
Westbrook Inverter Transfor	W_INVTR7	369786	4906417	2	0	0	77.3	77.3	1	635.87	3.25	0	67.07	0	-1.66	0	0	0.46	0	0	0	0	0	0	11.48	11.48
Westbrook Inverter Transfor	W_INVTR1	369403	4906578	2	0	0	78.2	78.2	1	914.87	3.25	0	70.23	0	-1.88	0	0	0.63	0	0	0	0	0	0	9.26	9.26
Westbrook Inverter Transfor	W_INVTR4	369679	4906164	2	0	0	77.3	77.3	1	885.59	3.25	0	69.94	0	-1.86	0	0	0.61	0	0	0	0	0	0	8.64	8.64
Westbrook Inverter Transfor	W_INVTR3	369514	4906164	2	0	0	77.3	77.3	1	1006.38	3.25	0	71.06	0	-1.94	0	0	0.68	0	0	0	0	0	0	7.54	7.54
Westbrook Inverter Transfor	W_INVTR2	369368	4906388	2	0	0	77.3	77.3	1	1011.42	3.25	0	71.1	0	-1.94	0	0	0.69	0	0	0	0	0	0	7.5	7.5
Gardiner Substation	G_Sub	366586.3	4903349.9	2.5	0	0	90.8	90.8	1	5065.04	4.25	0	85.09	0	1.66	2.34	0.34	8.7	0	0	0	0	0	0	-7.01	-7.01
Inverter	MV2-2	365977	4906654	2	0	0	89.1	89.1	1	4314.68	3.25	0	83.7	0	1.47	0	0	11.53	0	0	0	0	0	0	-7.64	-7.64
Inverter Transformer	MV6-1 T	370230	4907364	2	0	0	69.4	69.4	1	561.12	3.25	0	65.98	0	1.15	0	0	3.09	0	0	0	0	0	0	-0.87	-0.87
Inverter	MV1-3	364440	4906039	2	0	0	89.1	89.1	1	5899.08	3.25	0	86.42	0	1.86	0	0	13.63	0	0	0	0	0	0	-12.85	-12.85
Inverters	G_Inv2	366676.9	4903239.1	2	0	0	87.7	87.7	1	5076.42	3.25	0	85.11	0	2.87	0	0	6.02	0	0	0	0	0	0	-6.34	-6.34
Inverters	G_Inv4	366732.8	4903105	2	0	0	87.7	87.7	1	5132.64	3.25	0	85.21	0	2.87	0	0	6.08	0	0	0	0	0	0	-6.5	-6.5
Inverters	G_Inv6	366788.5	4902972	2	0	0	87.7	87.7	1	5191.63	3.25	0	85.31	0	2.88	0	0	6.14	0	0	0	0	0	0	-6.66	-6.66
Inverters	G_Inv1	366526.4	4903225.8	2	0	0	87.7	87.7	1	5193.75	3.25	0	85.31	0	2.88	0	0	6.14	0	0	0	0	0	0	-6.67	-6.67
Inverters	G_Inv3	366583.7	4903091.4	2	0	0	87.7	87.7	1	5246.67	3.25	0	85.4	0	2.88	0	0	6.2	0	0	0	0	0	0	-6.82	-6.82
Inverters	G_Inv8	366844.5	4902838.5	2	0	0	87.7	87.7	1	5254.11	3.25	0	85.41	0	2.88	0	0	6.21	0	0	0	0	0	0	-6.84	-6.84

Inverters	G_Inv5	366638.5	4902958.1	2	0	0	87.7	87.7	1	5304.01	3.25	0	85.49	0	2.88	0	0	6.26	0	0	0	0	0	0	-6.97	-6.97
Inverters	G_Inv10	366900.7	4902704.8	2	0	0	87.7	87.7	1	5319.81	3.25	0	85.52	0	2.88	0	0	6.27	0	0	0	0	0	0	-7.02	-7.02
Inverters	G_Inv7	366694.6	4902824.7	2	0	0	87.7	87.7	1	5363.81	3.25	0	85.59	0	2.89	0	0	6.32	0	0	0	0	0	0	-7.14	-7.14
Inverters	G_Inv9	366750.9	4902691.8	2	0	0	87.7	87.7	1	5426.31	3.25	0	85.69	0	2.89	0	0	6.39	0	0	0	0	0	0	-7.31	-7.31
Inverter Transformer	MV6-3 T	370202	4907140	2	0	0	56.1	56.1	1	345.15	3.25	0	61.76	0	-0.1	0	0	2.99	0	0	0	0	0	0	-8.59	-8.59
Inverter Transformer	MV6-2 T	370091	4907339	2	0	0	56.1	56.1	1	568.59	3.25	0	66.1	0	-0.11	0	0	3.76	0	0	0	0	0	0	-13.69	-13.69
Inverter Transformer	MV2-1 T	365836	4906816	2	0	0	69.4	69.4	1	4453.01	3.25	0	83.97	0	2.89	0	0	7.01	0	0	0	0	0	0	-24.52	-24.52
Inverter Transformer	MV1-10 T	365010	4905564	2	0	0	69.4	69.4	1	5423.14	3.25	0	85.69	0	3.09	0	0	7.66	0	0	0	0	0	0	-27.09	-27.09
Inverter Transformer	MV1-14 T	365157	4905049	2	0	0	69.4	69.4	1	5424.43	3.25	0	85.69	0	3.09	0	0	7.66	0	0	0	0	0	0	-27.09	-27.09
Inverter Transformer	MV1-7 T	364919	4905782	2	0	0	69.4	69.4	1	5466.76	3.25	0	85.75	0	3.1	0	0	7.69	0	0	0	0	0	0	-27.19	-27.19
Inverter Transformer	MV1-13 T	364725	4905241	2	0	0	69.4	69.4	1	5779.91	3.25	0	86.24	0	3.15	0	0	7.88	0	0	0	0	0	0	-27.93	-27.93
Inverter Transformer	MV3-22 T	368661	4907142	2	0	0	56.1	56.1	1	1662.31	3.25	0	75.41	0	0.26	0	0	6.36	0	0	0	0	0	0	-25.98	-25.98
Inverter Transformer	MV3-20 T	368683	4907317	2	0	0	56.1	56.1	1	1685.34	3.25	0	75.53	0	0.27	0	0	6.41	0	0	0	0	0	0	-26.16	-26.16
Inverter Transformer	MV5-6 T	369987	4908507	2	0	0	56.1	56.1	1	1727.6	3.25	0	75.75	0	0.29	0	0	6.5	0	0	0	0	0	0	-26.48	-26.48
Inverter Transformer	MV3-14 T	368678	4907498	2	0	0	56.1	56.1	1	1753.34	3.25	0	75.88	0	0.3	0	0	6.55	0	0	0	0	0	0	-26.67	-26.67
Inverter Transformer	MV3-8 T	368685	4907712	2	0	0	56.1	56.1	1	1842.19	3.25	0	76.31	0	0.34	0	0	6.73	0	0	0	0	0	0	-27.32	-27.32
Inverter Transformer	MV3-21 T	368484	4907206	2	0	0	56.1	56.1	1	1848.79	3.25	0	76.34	0	0.34	0	0	6.74	0	0	0	0	0	0	-27.36	-27.36
Inverter Transformer	MV5-4 T	370330	4908707	2	0	0	56.1	56.1	1	1901.44	3.25	0	76.58	0	0.36	0	0	6.85	0	0	0	0	0	0	-27.73	-27.73
Inverter Transformer	MV3-16 T	368509	4907475	2	0	0	56.1	56.1	1	1901.57	3.25	0	76.58	0	0.36	0	0	6.85	0	0	0	0	0	0	-27.74	-27.74
Inverter Transformer	MV5-5 T	370021	4908690	2	0	0	56.1	56.1	1	1902.97	3.25	0	76.59	0	0.36	0	0	6.85	0	0	0	0	0	0	-27.74	-27.74
Inverter Transformer	MV3-2 T	368677	4907928	2	0	0	56.1	56.1	1	1964.04	3.25	0	76.86	0	0.39	0	0	6.97	0	0	0	0	0	0	-28.17	-28.17
Inverter Transformer	MV3-9 T	368517	4907703	2	0	0	56.1	56.1	1	1986.1	3.25	0	76.96	0	0.4	0	0	7.02	0	0	0	0	0	0	-28.32	-28.32
Inverter Transformer	MV3-19 T	368352	4907347	2	0	0	56.1	56.1	1	2011.13	3.25	0	77.07	0	0.41	0	0	7.07	0	0	0	0	0	0	-28.48	-28.48
Inverter Transformer	MV4-15 T	369170	4908481	2	0	0	56.1	56.1	1	2014.4	3.25	0	77.08	0	0.41	0	0	7.07	0	0	0	0	0	0	-28.51	-28.51
Inverter Transformer	MV4-14 T	369182	4908507	2	0	0	56.1	56.1	1	2029.5	3.25	0	77.15	0	0.42	0	0	7.1	0	0	0	0	0	0	-28.61	-28.61
Inverter Transformer	MV5-3 T	370237	4908851	2	0	0	56.1	56.1	1	2045.66	3.25	0	77.22	0	0.42	0	0	7.13	0	0	0	0	0	0	-28.71	-28.71
Inverter Transformer	MV3-15 T	368351	4907477	2	0	0	56.1	56.1	1	2050.88	3.25	0	77.24	0	0.43	0	0	7.14	0	0	0	0	0	0	-28.75	-28.75
Inverter Transformer	MV5-2 T	370011	4908853	2	0	0	56.1	56.1	1	2065.79	3.25	0	77.3	0	0.43	0	0	7.17	0	0	0	0	0	0	-28.85	-28.85
Inverter Transformer	MV3-4 T	368507	4907925	2	0	0	56.1	56.1	1	2104.21	3.25	0	77.46	0	0.45	0	0	7.25	0	0	0	0	0	0	-29.1	-29.1
Inverter Transformer	MV3-11 T	368340	4907662	2	0	0	56.1	56.1	1	2128.7	3.25	0	77.56	0	0.46	0	0	7.29	0	0	0	0	0	0	-29.26	-29.26
Inverter Transformer	MV4-13 T	369057	4908605	2	0	0	56.1	56.1	1	2180.42	3.25	0	77.77	0	0.48	0	0	7.39	0	0	0	0	0	0	-29.59	-29.59
Inverter Transformer	MV3-17 T	368183	4907472	2	0	0	56.1	56.1	1	2208.8	3.25	0	77.88	0	0.49	0	0	7.45	0	0	0	0	0	0	-29.76	-29.76
Inverter Transformer	MV3-5 T	368335	4907843	2	0	0	56.1	56.1	1	2212.12	3.25	0	77.9	0	0.49	0	0	7.45	0	0	0	0	0	0	-29.79	-29.79
Inverter Transformer	MV4-10 T	369307	4908858	2	0	0	56.1	56.1	1	2274.87	3.25	0	78.14	0	0.52	0	0	7.57	0	0	0	0	0	0	-30.17	-30.17
Inverter Transformer	MV4-11 T	369269	4908855	2	0	0	56.1	56.1	1	2288.84	3.25	0	78.19	0	0.53	0	0	7.6	0	0	0	0	0	0	-30.26	-30.26
Inverter Transformer	MV3-10 T	368162	4907669	2	0	0	56.1	56.1	1	2295.41	3.25	0	78.22	0	0.53	0	0	7.61	0	0	0	0	0	0	-30.3	-30.3
Inverter Transformer	MV4-12 T	369049	4908803	2	0	0	56.1	56.1	1	2350.66	3.25	0	78.42	0	0.55	0	0	7.71	0	0	0	0	0	0	-30.63	-30.63
Inverter Transformer	MV5-1 T	370015	4909142	2	0	0	56.1	56.1	1	2352.02	3.25	0	78.43	0	0.55	0	0	7.72	0	0	0	0	0	0	-30.64	-30.64
Inverter Transformer	MV3-6 T	368156	4907834	2	0	0	56.1	56.1	1	2367.8	3.25	0	78.49	0	0.56	0	0	7.75	0	0	0	0	0	0	-30.73	-30.73
Inverter Transformer	MV4-9 T	369284	4909001	2	0	0	56.1	56.1	1	2414.14	3.25	0	78.66	0	0.58	0	0	7.83	0	0	0	0	0	0	-31.01	-31.01
Inverter Transformer	MV4-8 T	369262	4909001	2	0	0	56.1	56.1	1	2423.38	3.25	0	78.69	0	0.58	0	0	7.85	0	0	0	0	0	0	-31.06	-31.06
Inverter Transformer	MV3-1 T	368150	4907976	2	0	0	56.1	56.1	1	2438.08	3.25	0	78.74	0	0.59	0	0	7.88	0	0	0	0	0	0	-31.15	-31.15
Inverter Transformer	MV3-13 T	367958	4907577	2	0	0	56.1	56.1	1	2455.2	3.25	0	78.8	0	0.6	0	0	7.91	0	0	0	0	0	0	-31.25	-31.25
Inverter Transformer	MV3-7 T	367951	4907754	2	0	0	56.1	56.1	1	2522.89	3.25	0	79.04	0	0.63	0	0	8.03	0	0	0	0	0	0	-31.64	-31.64
Inverter Transformer	MV4-7 T	369040	4909001	2	0	0	56.1	56.1	1	2525.48	3.25	0	79.05	0	0.63	0	0	8.04	0	0	0	0	0	0	-31.65	-31.65
Inverter Transformer	MV4-5 T	369283	4909199	2	0	0	56.1	56.1	1	2595.86	3.25	0	79.29	0	0.66	0	0	8.16	0	0	0	0	0	0	-32.05	-32.05
Inverter Transformer	MV3-3 T	367944	4907927	2	0	0	56.1	56.1	1	2599.17	3.25	0	79.3	0	0.66	0	0	8.17	0	0	0	0	0	0	-32.07	-32.07
Inverter Transformer	MV4-6 T	369249	4909192	2	0	0	56.1	56.1	1	2602.81	5.04	0	79.31	0	1.58	2.77	0.02	8.18	0	0	0	0	0	0	-35.77	-35.77
Inverter Transformer	MV3-18 T	367757	4907412	2	0	0	56.1	56.1	1	2603.51	3.25	0	79.31	0	0.66	0	0	8.18	0	0	0	0	0	0	-32.09	-32.09
Inverter Transformer	MV4-4 T	369033	4909199	2	0	0	56.1	56.1	1	2702.59	3.25	0	79.64	0	0.7	0	0	8.35	0	0	0	0	0	0	-32.63	-32.63
Inverter Transformer	MV3-12 T	367674	4907594	2	0	0	56.1	56.1	1	2731.15	3.25	0	79.73	0	0.72	0	0	8.4	0	0	0	0	0	0	-32.79	-32.79
Inverter Transformer	MV4-2 T	369267	4909397	2	0	0	56.1	56.1	1	2785.28	3.25	0	79.9	0	0.74	0	0	8.5	0	0	0	0	0	0	-33.08	-33.08
Inverter Transformer	MV4-3 T	369234	4909397	2	0	0	56.1	56.1	1	2797.55	3.25	0	79.94	0	0.74	0	0	8.52	0	0	0	0	0	0	-33.14	-33.14
Inverter Transformer	MV4-1 T	369017	4909397	2	0	0	56.1	56.1	1	2886.39	3.25	0	80.21	0	0.78	0	0	8.67	0	0	0	0	0	0	-33.6	-33.6
Inverter Transformer	MV2-2 T	365982	4906654	2	0	0	56.1	56.1	1	4309.68	3.25	0	83.69	0	1.37	0	0	10.91	0	0	0	0	0	0	-39.9	-39.9
Inverter Transformer	MV2-3 T	365814	4906641	2	0	0	56.1	56.1	1	4478.04	3.25	0	84.02	0	1.43	0	0	11.14	0	0	0	0	0	0	-40.54	-40.54
Inverter Transformer	MV2-4 T	365590	4906628	2	0	0	56.1	56.1	1	4702.37	3.25	0	84.45	0	1.52	0	0	11.45	0	0	0	0	0	0	-41.36	-41.36
Inverter Transformer	MV1-15 T	365309	4904994	2	0	0	56.1	56.1	1	5299.41	3.25	0	85.48	0	1.73	0	0	12.24	0	0	0	0	0	0	-43.4	-43.4
Inverter Transformer	MV1-12 T	365044	4905386	2	0	0	56.1	56.1	1	5433.82	3.25	0	85.7	0	1.78	0	0	12.41	0	0	0	0	0	0	-43.83	-43.83
Inverter Transformer	MV1-4 T	364821	4905918	2	0	0	56.1	56.1	1	5539.64	3.25	0	85.87	0	1.81	0	0	12.54	0	0	0	0	0	0	-44.17	-44.17
Inverter Transformer	MV1-2 T	364759	4906063	2	0	0	56.1	56.1	1	5579.69	3.25	0	85.93	0	1.83	0	0	12.59	0	0	0	0	0	0	-44.3	-44.3
Inverter Transformer	MV1-1 T	364721	4906166	2	0	0	56.1	56.1	1	5604.66	3.25	0	85.97	0	1.84	0	0	12.63	0	0	0	0	0	0	-44.37	-44.37
Inverter Transformer	MV1-8 T	364782	4905647	2	0	0	56.1	56.1	1	5627.64	3.25	0	86.01	0	1.84	0	0	12.65	0	0	0	0	0	0	-44.45	-44.45
Inverter Transformer	MV1-5 T	364676	4905892	2	0	0	56.1	56.1	1	5686.93	3.25	0	86.1	0	1.86	0	0	12.73	0	0	0	0	0	0	-44.63	-44.63
Inverter Transformer	MV1-11 T	364649	4905414	2	0	0	56.1	56.1	1	5809.24	3.25	0	86.28	0	1.9	0	0	12.87	0	0	0	0	0	0	-45	-45
Inverter Transformer	MV1-9 T	364555	4905646	2	0	0	56.1	56.1	1	5850.16	3.25	0	86.34	0	1.92	0	0	12.92	0	0	0	0	0	0	-45.13	-45.13
Inverter Transformer	MV1-6 T	364482	4905835	2	0	0	56.1	56.1	1	5887.62	3.25	0	86.4	0	1.93	0	0	12.97	0	0	0	0	0	0	-45.24	-45.24
Inverter Transformer	MV1-3 T	364435	4906039	2	0	0	56.1	56.1	1	5904.03	3.25	0	86.42	0	1.93	0	0	12.99	0	0	0	0	0	0	-45.29	-45.29
Line Reactor	NGR	369421	4908787.5	5	0	0	45.4	45.4	1	2163.28	5.25	0	77.7	0	3.37	1.29	0.11	0.89	0	0	0	0	0	0	-37.89	-37.89
Limit. Valu 0	0																								
Level D/N: 35.9634	35.9634																								

Receiver: Vacant Lot Receptor
ID: S-VLR33

X: 369879
Y: 4906085
Z: 4.5
Ground: 0

ISO	Description	ID	X	Y	Z	Ground	ReflOrd	LxT	LxN	L/A	Dist.	hm	Freq	Adiv	K0b	Agr	Abar	z	Aatm	Afol	Ahous	Cmet	CmetN	Dc	RL	LtotT	LtotN
	SubstationTransformer	W_ST	369711.17	4906112.3	2.5	0	0	92	92	1	170.04	4.23	0	55.61	0	0.83	6.8	0.26	0.57	0	0	0	0	0	0	28.16	28.16
	Sol_Luce Substation	S_Substation	369426	4908792	3.5	0	0	112.1	112.1	1	2744.64	5.25	0	79.77	0	0.22	3.49	0.35	5.57	0	0	0	0	0	0	23.03	23.03
	Westbrook Inverter Enclosur	W_INV4	369673	4906164	2	0	0	89.1	89.1	1	220.64	3.25	0	57.87	0	0.33	0	0	3.44	0	0	0	0	0	0	27.41	27.41
	Inverter	MV6-3	370207	4907140	2	0	0	100.3	100.3	1	1104.81	3.25	0	71.87	0	-0.2	0	0	11.24	0	0	0	0	0	0	17.4	17.4
	Westbrook Inverter Enclosur	W_INV7	369780	4906417	2	0	0	89.1	89.1	1	346.46	3.25	0	61.79	0	0.41	0	0	4.44	0	0	0	0	0	0	22.42	22.42
	Inverter	MV6-2	370085	4907339	2	0	0	100.3	100.3	1	1270.81	3.25	0	73.08	0	-0.12	0	0	11.73	0	0	0	0	0	0	15.63	15.63
	Westbrook Inverter Enclosur	W_INV3	369508	4906164	2	0	0	89.1	89.1	1	379.33	3.25	0	62.58	0	0.44	0	0	4.63	0	0	0	0	0	0	21.41	21.41
	Inverter	MV3-20	368689	4907317	2	0	0	100.3	100.3	1	1712.87	3.25	0	75.67	0	0.04	0	0	12.83	0	0	0	0	0	0	11.76	11.76
	Inverter	MV3-21	368478	4907206	2	0	0	100.3	100.3	1	1794.28	3.25	0	76.08	0	0.07	0	0	13.02	0	0	0	0	0	0	11.15	11.15
	Westbrook Inverter Enclosur	W_INV6	369875	4906578	2	0	0	89.1	89.1	1	493.02	3.25	0	64.86	0	0.52	0	0	5.12	0	0	0	0	0	0	18.56	18.56
	Inverter	MV3-14	368684	4907498	2	0	0	100.3	100.3	1	1850.57	3.25	0	76.35	0	0.08	0	0	13.14	0	0	0	0	0	0	10.74	10.74
	Inverter	MV6-1	370235	4907364	2	0	0	97.3	97.3	1	1327.62	3.25	0	73.46	0	-0.1	0	0	11.88	0	0	0	0	0	0	12.07	12.07
	Westbrook Inverter Enclosur	W_INV5	369719	4906574	2	0	0	89.1	89.1	1	514.52	3.25	0	65.23	0	0.53	0	0	5.19	0	0	0	0	0	0	18.1	18.1
	Inverter	MV3-16	368514	4907475	2	0	0	100.3	100.3	1	1948.16	3.25	0	76.79	0	0.11	0	0	13.35	0	0	0	0	0	0	10.05	10.05
	Inverter	MV3-19	368357	4907347	2	0	0	100.3	100.3	1	1977.15	3.25	0	76.92	0	0.12	0	0	13.41	0	0	0	0	0	0	9.85	9.85
	Inverter	MV3-8	368680	4907712	2	0	0	100.3	100.3	1	2021.07	3.25	0	77.11	0	0.14	0	0	13.51	0	0	0	0	0	0	9.56	9.56
	Inverter	MV3-15	368357	4907477	2	0	0	100.3	100.3	1	2062.56	3.25	0	77.29	0	0.15	0	0	13.59	0	0	0	0	0	0	9.28	9.28
	Inverter	MV3-9	368512	4907703	2	0	0	100.3	100.3	1	2118.16	3.25	0	77.52	0	0.16	0	0	13.71	0	0	0	0	0	0	8.92	8.92
	Westbrook Inverter Enclosur	W_INV2	369374	4906388	2	0	0	89.1	89.1	1	588.93	3.25	0	66.4	0	0.57	0	0	5.42	0	0	0	0	0	0	16.66	16.66
	Inverter	MV3-17	368178	4907472	2	0	0	100.3	100.3	1	2194.81	3.25	0	77.83	0	0.18	0	0	13.86	0	0	0	0	0	0	8.44	8.44
	Inverter	MV3-11	368346	4907662	2	0	0	100.3	100.3	1	2199.32	3.25	0	77.85	0	0.18	0	0	13.87	0	0	0	0	0	0	8.41	8.41
	Inverter	MV3-10	368167	4907669	2	0	0	100.3	100.3	1	2332.38	3.25	0	78.36	0	0.22	0	0	14.14	0	0	0	0	0	0	7.6	7.6
	Inverter	MV3-13	367963	4907577	2	0	0	100.3	100.3	1	2428.4	3.25	0	78.71	0	0.24	0	0	14.32	0	0	0	0	0	0	7.04	7.04
	Inverter	MV3-6	368162	4907834	2	0	0	100.3	100.3	1	2450.94	3.25	0	78.79	0	0.25	0	0	14.36	0	0	0	0	0	0	6.92	6.92
	Inverter	MV3-18	367752	4907412	2	0	0	100.3	100.3	1	2507	3.25	0	78.98	0	0.26	0	0	14.47	0	0	0	0	0	0	6.6	6.6
	Inverter	MV3-7	367945	4907754	2	0	0	100.3	100.3	1	2554.59	3.25	0	79.15	0	0.27	0	0	14.56	0	0	0	0	0	0	6.33	6.33
	Inverter	MV5-5	370015	4908690	2	0	0	100.3	100.3	1	2608.55	3.25	0	79.33	0	0.28	0	0	14.66	0	0	0	0	0	0	6.04	6.04
	Inverter	MV5-4	370324	4908707	2	0	0	100.3	100.3	1	2659.5	3.25	0	79.5	0	0.29	0	0	14.76	0	0	0	0	0	0	5.77	5.77
	Inverter	MV3-3	367939	4907927	2	0	0	100.3	100.3	1	2675.18	3.25	0	79.55	0	0.3	0	0	14.79	0	0	0	0	0	0	5.68	5.68
	Inverter	MV3-12	367668	4907594	2	0	0	100.3	100.3	1	2676.87	3.25	0	79.55	0	0.3	0	0	14.79	0	0	0	0	0	0	5.67	5.67
	Inverter	MV5-2	370006	4908853	2	0	0	100.3	100.3	1	2770.91	3.25	0	79.85	0	0.32	0	0	14.96	0	0	0	0	0	0	5.18	5.18
	Inverter	MV5-3	370231	4908851	2	0	0	100.3	100.3	1	2788.31	3.25	0	79.91	0	0.32	0	0	14.99	0	0	0	0	0	0	5.09	5.09
	Inverter	MV4-10	369312	4908858	2	0	0	100.3	100.3	1	2830.38	3.25	0	80.04	0	0.33	0	0	15.07	0	0	0	0	0	0	4.88	4.88
	Inverter	MV4-11	369264	4908855	2	0	0	100.3	100.3	1	2837.45	3.25	0	80.06	0	0.33	0	0	15.08	0	0	0	0	0	0	4.84	4.84
	Inverter	MV4-9	369289	4909001	2	0	0	100.3	100.3	1	2975.09	3.25	0	80.47	0	0.36	0	0	15.33	0	0	0	0	0	0	4.16	4.16
	Inverter	MV4-8	369256	4909001	2	0	0	100.3	100.3	1	2981.81	3.25	0	80.49	0	0.36	0	0	15.34	0	0	0	0	0	0	4.12	4.12
	Westbrook Inverter Transfor	W_INVTR4	369679	4906164	2	0	0	77.3	77.3	1	215.05	3.25	0	57.65	0	-0.51	0	0	0.17	0	0	0	0	0	0	20.03	20.03
	Inverter	MV4-7	369035	4909001	2	0	0	100.3	100.3	1	3035.69	3.25	0	80.65	0	0.37	0	0	15.44	0	0	0	0	0	0	3.86	3.86
	Inverter	MV5-1	370020	4909142	2	0	0	100.3	100.3	1	3060.25	3.25	0	80.72	0	0.37	0	0	15.48	0	0	0	0	0	0	3.75	3.75
	Inverter	MV4-5	369289	4909199	2	0	0	100.3	100.3	1	3169.4	3.25	0	81.02	0	0.39	0	0	15.67	0	0	0	0	0	0	3.23	3.23
	Inverter	MV4-6	369243	4909192	2	0	0	100.3	100.3	1	3171.43	3.25	0	81.03	0	0.39	0	0	15.67	0	0	0	0	0	0	3.22	3.22
	Inverter	MV4-4	369027	4909199	2	0	0	100.3	100.3	1	3228.45	3.25	0	81.18	0	0.4	0	0	15.77	0	0	0	0	0	0	2.96	2.96
	Inverter	MV4-2	369272	4909397	2	0	0	100.3	100.3	1	3367.16	3.25	0	81.55	0	0.43	0	0	16.01	0	0	0	0	0	0	2.33	2.33
	Inverter	MV4-3	369229	4909397	2	0	0	100.3	100.3	1	3375.18	3.25	0	81.57	0	0.43	0	0	16.02	0	0	0	0	0	0	2.29	2.29
	Inverter	MV4-1	369011	4909397	2	0	0	100.3	100.3	1	3423.85	3.25	0	81.69	0	0.44	0	0	16.1	0	0	0	0	0	0	2.08	2.08
	Westbrook Inverter Enclosur	W_INV1	369409	4906578	2	0	0	86.1	86.1	1	681.14	3.25	0	67.66	0	0.61	0	0	5.66	0	0	0	0	0	0	12.13	12.13
	Inverter	MV2-3	365820	4906641	2	0	0	100.3	100.3	1	4096.9	3.25	0	83.25	0	0.54	0	0	17.2	0	0	0	0	0	0	-0.68	-0.68
	DSTATCOM - 10 MVAR #1	DSAT1	369437	4908757	2.5	0	0	96.6	96.6	1	2708.31	3.5	0	79.65	0	3.36	0	0	2.14	0	0	0	0	0	0	11.48	11.48
	DSTATCOM - 10 MVAR #2	DSAT2	369403	4908757	2.5	0	0	96.6	96.6	1	2714.07	3.5	0	79.67	0	3.36	0	0	2.14	0	0	0	0	0	0	11.46	11.46
	Inverter	MV2-4	365586	4906624	2	0	0	100.3	100.3	1	4326.71	3.25	0	83.72	0	0.57	0	0	17.56	0	0	0	0	0	0	-1.54	-1.54
	Inverter	MV1-15	365315	4904994	2	0	0	100.3	100.3	1	4692.59	3.25	0	84.43	0	0.61	0	0	18.12	0	0	0	0	0	0	-2.85	-2.85
	Westbrook Inverter Transfor	W_INVTR7	369786	4906417	2	0	0	77.3	77.3	1	344.79	3.25	0	61.75	0	-1.18	0	0	0.27	0	0	0	0	0	0	16.51	16.51
	Inverter	MV1-12	365038	4905386	2	0	0	100.3	100.3	1	4891.21	3.25	0	84.79	0	0.63	0	0	18.42	0	0	0	0	0	0	-3.53	-3.53
	Inverter	MV6-4	370250	4906966	2	0	0	86.1	86.1	1	955.93	3.25	0	70.61	0	0.68	0	0	6.23	0	0	0	0	0	0	8.54	8.54
	Inverter	MV1-4	364815	4905918	2	0	0	100.3	100.3	1	5066.75	3.25	0	85.09	0	0.65	0	0	18.68	0	0	0	0	0	0	-4.11	-4.11
	Inverter	MV1-8	364788	4905647	2	0	0	100.3	100.3	1	5109.81	3.25	0	85.17	0	0.65	0	0	18.74	0	0	0	0	0	0	-4.25	-4.25
	Inverter	MV1-2	364753	4906063	2	0	0	100.3	100.3	1	5126.05	3.25	0	85.2	0	0.65	0	0	18.76	0	0	0	0	0	0	-4.3	-4.3
	Inverter	MV1-1	364715	4906166	2	0	0	100.3	100.3	1	5164.64	3.25	0	85.26	0	0.66	0	0	18.82	0	0	0	0	0	0	-4.43	-4.43
	Inverter	MV1-5	364671	4905892	2	0	0	100.3	100.3	1	5211.58	3.25	0	85.34	0	0.66	0	0	18.89	0	0	0	0	0	0	-4.58	-4.58
	Westbrook Inverter Transfor	W_INVTR3	369514	4906164	2	0	0	77.3	77.3	1	373.46	3.25	0	62.44	0	-1.27	0	0	0.29	0	0	0	0	0	0	15.88	15.88
	Inverter	MV1-11	364655	4905414	2	0	0	100.3	100.3	1	5266.92	3.25	0	85.43	0	0.66	0	0	18.97	0	0	0	0	0	0	-4.75	-4.75
	Inverter	MV1-9	364561	4905646	2	0	0	100.3	100.3	1	5336.09	3.25	0	85.54	0	0.67	0	0	19.07	0	0	0	0	0	0	-4.97	-4.97
	Inverter	MV1-6	364477	4905835	2	0	0	100.3	100.3	1	5407.78	3.25	0	85.66	0	0.67	0	0	19.17	0	0	0	0	0	0	-5.19	-5.19
	Inverter	MV2-1	365842	4906816	2	0	0	97.3	97.3	1	4102.65	3.25	0	83.26	0	0.54	0	0	17.21	0	0	0	0	0	0	-3.7	-3.7
	Inverter	MV3-22	368656	4907142	2	0	0	89.1	89.1	1	1616.47	3.25	0	75.17	0	0.82	0	0	7.41	0	0	0	0	0	0	5.66	5.66
	Inverter	MV1-14	365163	4905049	2	0	0	97.3	97.3	1	4828.45	3.25	0	84.68	0	0.63	0	0	18.33	0	0	0	0	0	0	-6.32	-6.32
	Inverter	MV1-10	365004	4905564	2	0	0	97.3	97.3	1	4902.76	3.25	0	84.81	0	0.63	0	0	18.44	0	0	0	0	0	0	-6.57	-6.57
	Westbrook Inverter Transfor	W_INVTR6	369881	4906578	2	0	0	77.3	77.3	1	493.01	3.25	0	64.86	0	-1.5	0	0	0.37	0	0	0	0	0	0	13.62	13.62

Inverter	MV1-7	364925	4905782	2	0	0	97.3	97.3	1	4963.26	3.25	0	84.92	0	0.64	0	0	18.53	0	0	0	0	0	0	-6.77	-6.77
Westbrook Inverter Transfor	W_INVTR5	369725	4906574	2	0	0	77.3	77.3	1	512.68	3.25	0	65.2	0	-1.53	0	0	0.38	0	0	0	0	0	0	13.29	13.29
Inverter	MV1-13	364731	4905241	2	0	0	97.3	97.3	1	5216.73	3.25	0	85.35	0	0.66	0	0	18.9	0	0	0	0	0	0	-7.59	-7.59
Inverter	MV3-2	368671	4907928	2	0	0	89.1	89.1	1	2203.62	3.25	0	77.86	0	0.95	0	0	8.38	0	0	0	0	0	0	1.87	1.87
Westbrook Inverter Transfor	W_INVTR2	369368	4906388	2	0	0	77.3	77.3	1	594.08	3.25	0	66.48	0	-1.62	0	0	0.43	0	0	0	0	0	0	12.06	12.06
Inverter	MV3-4	368502	4907925	2	0	0	89.1	89.1	1	2298.2	3.25	0	78.23	0	0.98	0	0	8.53	0	0	0	0	0	0	1.33	1.33
Inverter	MV3-5	368340	4907843	2	0	0	89.1	89.1	1	2336.47	3.25	0	78.37	0	0.99	0	0	8.59	0	0	0	0	0	0	1.11	1.11
Westbrook Inverter Transfor	W_INVTR1	369403	4906578	2	0	0	78.2	78.2	1	685.3	3.25	0	67.72	0	-1.71	0	0	0.49	0	0	0	0	0	0	11.74	11.74
Inverter	MV5-6	369982	4908507	2	0	0	89.1	89.1	1	2424.19	3.25	0	78.69	0	1.01	0	0	8.73	0	0	0	0	0	0	0.63	0.63
Fixed Reactor Bank 2	FRB2	369464	4908755	6	0	0	89.8	89.8	1	2702.06	5.25	0	79.63	0	-0.91	0	0	5.5	0	0	0	0	0	0	5.55	5.55
Inverter	MV4-15	369176	4908481	2	0	0	89.1	89.1	1	2497	3.25	0	78.95	0	1.03	0	0	8.84	0	0	0	0	0	0	0.24	0.24
Fixed Reactor Bank 1	FRB1	369378	4908755	6	0	0	89.8	89.8	1	2716.6	5.25	0	79.68	0	-0.91	0	0	5.53	0	0	0	0	0	0	5.48	5.48
Inverter	MV4-14	369176	4908507	2	0	0	89.1	89.1	1	2521.96	3.25	0	79.03	0	1.03	0	0	8.88	0	0	0	0	0	0	0.11	0.11
Inverter	MV3-1	368156	4907976	2	0	0	89.1	89.1	1	2558.24	3.25	0	79.16	0	1.04	0	0	8.94	0	0	0	0	0	0	-0.08	-0.08
Inverter	MV4-13	369051	4908605	2	0	0	89.1	89.1	1	2652.54	3.25	0	79.47	0	1.06	0	0	9.08	0	0	0	0	0	0	-0.56	-0.56
Inverter	MV4-12	369043	4908803	2	0	0	89.1	89.1	1	2843.66	3.25	0	80.08	0	1.11	0	0	9.38	0	0	0	0	0	0	-1.51	-1.51
Gardiner Substation	G_Sub	366586.3	4903349.9	2.5	0	0	90.8	90.8	1	4280.5	4.25	0	83.63	0	1.45	2.56	0.33	7.73	0	0	0	0	0	0	-4.6	-4.6
Inverter	MV2-2	365977	4906654	2	0	0	89.1	89.1	1	3943.27	3.25	0	82.92	0	1.38	0	0	11	0	0	0	0	0	0	-6.24	-6.24
Inverters	G_Inv2	366676.9	4903239.1	2	0	0	87.7	87.7	1	4283.99	3.25	0	83.64	0	2.81	0	0	5.18	0	0	0	0	0	0	-3.97	-3.97
Inverters	G_Inv4	366732.8	4903105	2	0	0	87.7	87.7	1	4333.47	3.25	0	83.74	0	2.82	0	0	5.23	0	0	0	0	0	0	-4.13	-4.13
Inverters	G_Inv6	366788.5	4902972	2	0	0	87.7	87.7	1	4386.57	3.25	0	83.84	0	2.82	0	0	5.29	0	0	0	0	0	0	-4.29	-4.29
Inverters	G_Inv1	366526.4	4903225.8	2	0	0	87.7	87.7	1	4406.24	3.25	0	83.88	0	2.82	0	0	5.31	0	0	0	0	0	0	-4.36	-4.36
Inverters	G_Inv8	366844.5	4902838.5	2	0	0	87.7	87.7	1	4443.87	3.25	0	83.96	0	2.83	0	0	5.35	0	0	0	0	0	0	-4.47	-4.47
Inverters	G_Inv3	366583.7	4903091.4	2	0	0	87.7	87.7	1	4452.04	3.25	0	83.97	0	2.83	0	0	5.36	0	0	0	0	0	0	-4.5	-4.5
Inverters	G_Inv5	366638.5	4902958.1	2	0	0	87.7	87.7	1	4503.15	3.25	0	84.07	0	2.83	0	0	5.41	0	0	0	0	0	0	-4.66	-4.66
Inverters	G_Inv10	366900.7	4902704.8	2	0	0	87.7	87.7	1	4505.11	3.25	0	84.07	0	2.83	0	0	5.42	0	0	0	0	0	0	-4.66	-4.66
Inverters	G_Inv7	366694.6	4902824.7	2	0	0	87.7	87.7	1	4557.41	3.25	0	84.17	0	2.84	0	0	5.47	0	0	0	0	0	0	-4.82	-4.82
Inverters	G_Inv9	366750.9	4902691.8	2	0	0	87.7	87.7	1	4615.06	3.25	0	84.28	0	2.84	0	0	5.53	0	0	0	0	0	0	-5	-5
Inverter	MV1-3	364440	4906039	2	0	0	89.1	89.1	1	5439.2	3.25	0	85.71	0	1.75	0	0	13.04	0	0	0	0	0	0	-11.44	-11.44
Inverter Transformer	MV6-4 T	370244	4906966	2	0	0	69.4	69.4	1	953.62	3.25	0	70.59	0	1.64	0	0	3.75	0	0	0	0	0	0	-6.63	-6.63
Inverter Transformer	MV6-1 T	370230	4907364	2	0	0	69.4	69.4	1	1326.29	3.25	0	73.45	0	1.89	0	0	4.23	0	0	0	0	0	0	-10.22	-10.22
Inverter Transformer	MV2-1 T	365836	4906816	2	0	0	69.4	69.4	1	4108.55	3.25	0	83.27	0	2.81	0	0	6.76	0	0	0	0	0	0	-23.49	-23.49
Inverter Transformer	MV1-14 T	365157	4905049	2	0	0	69.4	69.4	1	4834.31	3.25	0	84.69	0	2.98	0	0	7.27	0	0	0	0	0	0	-25.58	-25.58
Inverter Transformer	MV1-10 T	365010	4905564	2	0	0	69.4	69.4	1	4896.8	3.25	0	84.8	0	2.99	0	0	7.31	0	0	0	0	0	0	-25.75	-25.75
Inverter Transformer	MV1-7 T	364919	4905782	2	0	0	69.4	69.4	1	4969.25	3.25	0	84.93	0	3.01	0	0	7.36	0	0	0	0	0	0	-25.94	-25.94
Inverter Transformer	MV6-3 T	370202	4907140	2	0	0	56.1	56.1	1	1103.34	3.25	0	71.85	0	0.05	0	0	5.13	0	0	0	0	0	0	-20.98	-20.98
Inverter Transformer	MV1-13 T	364725	4905241	2	0	0	69.4	69.4	1	5222.65	3.25	0	85.36	0	3.06	0	0	7.53	0	0	0	0	0	0	-26.59	-26.59
Inverter Transformer	MV6-2 T	370091	4907339	2	0	0	56.1	56.1	1	1271.8	3.25	0	73.09	0	0.11	0	0	5.52	0	0	0	0	0	0	-22.66	-22.66
Inverter Transformer	MV3-22 T	368661	4907142	2	0	0	56.1	56.1	1	1612.69	3.25	0	75.15	0	0.24	0	0	6.26	0	0	0	0	0	0	-25.59	-25.59
Inverter Transformer	MV3-20 T	368683	4907317	2	0	0	56.1	56.1	1	1717.05	3.25	0	75.7	0	0.29	0	0	6.47	0	0	0	0	0	0	-26.4	-26.4
Inverter Transformer	MV3-21 T	368484	4907206	2	0	0	56.1	56.1	1	1789.6	3.25	0	76.06	0	0.32	0	0	6.62	0	0	0	0	0	0	-26.94	-26.94
Inverter Transformer	MV3-14 T	368678	4907498	2	0	0	56.1	56.1	1	1854.45	3.25	0	76.36	0	0.34	0	0	6.75	0	0	0	0	0	0	-27.4	-27.4
Inverter Transformer	MV3-16 T	368509	4907475	2	0	0	56.1	56.1	1	1951.67	3.25	0	76.81	0	0.38	0	0	6.95	0	0	0	0	0	0	-28.08	-28.08
Inverter Transformer	MV3-19 T	368352	4907347	2	0	0	56.1	56.1	1	1981	3.25	0	76.94	0	0.4	0	0	7.01	0	0	0	0	0	0	-28.28	-28.28
Inverter Transformer	MV3-8 T	368685	4907712	2	0	0	56.1	56.1	1	2018.11	3.25	0	77.1	0	0.41	0	0	7.08	0	0	0	0	0	0	-28.53	-28.53
Inverter Transformer	MV3-15 T	368351	4907477	2	0	0	56.1	56.1	1	2066.99	3.25	0	77.31	0	0.43	0	0	7.17	0	0	0	0	0	0	-28.86	-28.86
Inverter Transformer	MV3-9 T	368517	4907703	2	0	0	56.1	56.1	1	2114.94	3.25	0	77.51	0	0.45	0	0	7.27	0	0	0	0	0	0	-29.17	-29.17
Inverter Transformer	MV3-17 T	368183	4907472	2	0	0	56.1	56.1	1	2190.93	3.25	0	77.81	0	0.48	0	0	7.41	0	0	0	0	0	0	-29.65	-29.65
Inverter Transformer	MV3-2 T	368677	4907928	2	0	0	56.1	56.1	1	2200.33	3.25	0	77.85	0	0.49	0	0	7.43	0	0	0	0	0	0	-29.71	-29.71
Inverter Transformer	MV3-11 T	368340	4907662	2	0	0	56.1	56.1	1	2203.51	3.25	0	77.86	0	0.49	0	0	7.44	0	0	0	0	0	0	-29.73	-29.73
Inverter Transformer	MV3-4 T	368507	4907925	2	0	0	56.1	56.1	1	2295.21	3.25	0	78.22	0	0.53	0	0	7.61	0	0	0	0	0	0	-30.3	-30.3
Inverter Transformer	MV3-10 T	368162	4907669	2	0	0	56.1	56.1	1	2336.05	3.25	0	78.37	0	0.55	0	0	7.69	0	0	0	0	0	0	-30.54	-30.54
Inverter Transformer	MV3-5 T	368335	4907843	2	0	0	56.1	56.1	1	2339.77	3.25	0	78.38	0	0.55	0	0	7.69	0	0	0	0	0	0	-30.57	-30.57
Inverter Transformer	MV5-6 T	369987	4908507	2	0	0	56.1	56.1	1	2424.41	3.25	0	78.69	0	0.58	0	0	7.85	0	0	0	0	0	0	-31.07	-31.07
Inverter Transformer	MV3-13 T	367958	4907577	2	0	0	56.1	56.1	1	2432.35	3.25	0	78.72	0	0.59	0	0	7.87	0	0	0	0	0	0	-31.12	-31.12
Inverter Transformer	MV3-6 T	368156	4907834	2	0	0	56.1	56.1	1	2455.14	3.25	0	78.8	0	0.6	0	0	7.91	0	0	0	0	0	0	-31.25	-31.25
Inverter Transformer	MV4-15 T	369170	4908481	2	0	0	56.1	56.1	1	2498.7	3.25	0	78.95	0	0.62	0	0	7.99	0	0	0	0	0	0	-31.5	-31.5
Inverter Transformer	MV3-18 T	367757	4907412	2	0	0	56.1	56.1	1	2502.76	3.25	0	78.97	0	0.62	0	0	7.99	0	0	0	0	0	0	-31.52	-31.52
Inverter Transformer	MV4-14 T	369182	4908507	2	0	0	56.1	56.1	1	2520.3	3.25	0	79.03	0	0.63	0	0	8.03	0	0	0	0	0	0	-31.62	-31.62
Inverter Transformer	MV3-7 T	367951	4907754	2	0	0	56.1	56.1	1	2550.05	3.25	0	79.13	0	0.64	0	0	8.08	0	0	0	0	0	0	-31.79	-31.79
Inverter Transformer	MV3-1 T	368150	4907976	2	0	0	56.1	56.1	1	2562.29	3.25	0	79.17	0	0.64	0	0	8.1	0	0	0	0	0	0	-31.86	-31.86
Inverter Transformer	MV5-5 T	370021	4908690	2	0	0	56.1	56.1	1	2608.87	3.25	0	79.33	0	0.66	0	0	8.19	0	0	0	0	0	0	-32.12	-32.12
Inverter Transformer	MV4-13 T	369057	4908605	2	0	0	56.1	56.1	1	2650.68	3.25	0	79.47	0	0.68	0	0	8.26	0	0	0	0	0	0	-32.35	-32.35
Inverter Transformer	MV5-4 T	370330	4908707	2	0	0	56.1	56.1	1	2660.51	3.25	0	79.5	0	0.69	0	0	8.28	0	0	0	0	0	0	-32.4	-32.4
Inverter Transformer	MV3-3 T	367944	4907927	2	0	0	56.1	56.1	1	2671.55	3.25	0	79.54	0	0.69	0	0	8.3	0	0	0	0	0	0	-32.46	-32.46
Inverter Transformer	MV3-12 T	367674	4907594	2	0	0	56.1	56.1	1	2671.91	3.25	0	79.54	0	0.69	0	0	8.3	0	0	0	0	0	0	-32.47	-32.47
Inverter Transformer	MV5-2 T	370011	4908853	2	0	0	56.1	56.1	1	2771.15	3.25	0	79.85	0	0.73	0	0	8.47	0	0	0	0	0	0	-33	-33
Inverter Transformer	MV5-3 T	370237	4908851	2	0	0	56.1	56.1	1	2789.07	3.25	0	79.91	0	0.74	0	0	8.51	0	0	0	0	0	0	-33.1	-33.1
Inverter Transformer	MV4-10 T	369307	4908858	2	0	0	56.1	56.1	1	2831.38	3.25	0	80.04	0	0.76	0	0	8.58	0	0	0	0	0	0	-33.32	-33.32
Inverter Transformer	MV4-11 T	369269	4908855	2	0	0	56.1	56.1	1	2836.37	3.25	0	80.06	0	0.76	0	0	8.59	0	0	0	0	0	0	-33.34	-33.34
Inverter Transformer	MV4-12 T	369049	4908803	2	0	0	56.1	56.1	1	2841.91	3.25	0	80.07	0	0.76	0	0	8.6	0	0	0	0	0	0	-33.37	-33.37
Inverter Transformer	MV4-9 T	369284	4909001	2	0	0	56.1	56.1	1	2976.09	3.25	0	80.47	0	0.82	0	0	8.83	0	0	0	0	0	0	-34.06	-34.06
Inverter Transformer	MV4-8 T	369262	4909001	2	0	0	56.1	56.1	1	2980.56	3.25	0	80.49	0	0.82	0	0	8.84	0	0	0	0	0	0	-34.08	-34.08
Inverter Transformer	MV4-7 T	369040	4909001	2	0	0	56.1	56.1	1	3034.3	3.25	0	80.64	0	0.84	0	0	8.93	0	0	0	0	0	0	-34.35	-34.35

	Inverter Transformer	MV5-1 T	370015	4909142	2	0	0	56.1	56.1	1	3060.02	3.25	0	80.71	0	0.86	0	0	8.97	0	0	0	0	0	0	-34.48	-34.48
	Inverter Transformer	MV4-6 T	369249	4909192	2	0	0	56.1	56.1	1	3170.23	3.25	0	81.02	0	0.9	0	0	9.15	0	0	0	0	0	0	-35.02	-35.02
	Inverter Transformer	MV4-5 T	369283	4909199	2	0	0	56.1	56.1	1	3170.52	3.25	0	81.02	0	0.9	0	0	9.15	0	0	0	0	0	0	-35.02	-35.02
	Inverter Transformer	MV4-4 T	369033	4909199	2	0	0	56.1	56.1	1	3226.87	3.25	0	81.18	0	0.93	0	0	9.25	0	0	0	0	0	0	-35.29	-35.29
	Inverter Transformer	MV4-2 T	369267	4909397	2	0	0	56.1	56.1	1	3368.07	3.25	0	81.55	0	0.99	0	0	9.48	0	0	0	0	0	0	-35.95	-35.95
	Inverter Transformer	MV4-3 T	369234	4909397	2	0	0	56.1	56.1	1	3374.22	3.25	0	81.56	0	0.99	0	0	9.49	0	0	0	0	0	0	-35.98	-35.98
	Inverter Transformer	MV4-1 T	369017	4909397	2	0	0	56.1	56.1	1	3422.34	3.25	0	81.69	0	1.01	0	0	9.56	0	0	0	0	0	0	-36.2	-36.2
	Inverter Transformer	MV2-2 T	365982	4906654	2	0	0	56.1	56.1	1	3938.32	3.25	0	82.91	0	1.22	0	0	10.36	0	0	0	0	0	0	-38.43	-38.43
	Inverter Transformer	MV2-3 T	365814	4906641	2	0	0	56.1	56.1	1	4102.85	3.25	0	83.26	0	1.28	0	0	10.61	0	0	0	0	0	0	-39.1	-39.1
	Inverter Transformer	MV2-4 T	365590	4906628	2	0	0	56.1	56.1	1	4323.24	3.25	0	83.72	0	1.37	0	0	10.93	0	0	0	0	0	0	-39.95	-39.95
	Inverter Transformer	MV1-15 T	365309	4904994	2	0	0	56.1	56.1	1	4698.42	3.25	0	84.44	0	1.51	0	0	11.45	0	0	0	0	0	0	-41.34	-41.34
	Inverter Transformer	MV1-12 T	365044	4905386	2	0	0	56.1	56.1	1	4885.27	3.25	0	84.78	0	1.58	0	0	11.7	0	0	0	0	0	0	-42	-42
	Inverter Transformer	MV1-4 T	364821	4905918	2	0	0	56.1	56.1	1	5060.76	3.25	0	85.08	0	1.65	0	0	11.93	0	0	0	0	0	0	-42.61	-42.61
	Inverter Transformer	MV1-8 T	364782	4905647	2	0	0	56.1	56.1	1	5115.79	3.25	0	85.18	0	1.67	0	0	12.01	0	0	0	0	0	0	-42.79	-42.79
	Inverter Transformer	MV1-2 T	364759	4906063	2	0	0	56.1	56.1	1	5120.05	3.25	0	85.19	0	1.67	0	0	12.01	0	0	0	0	0	0	-42.81	-42.81
	Inverter Transformer	MV1-1 T	364721	4906166	2	0	0	56.1	56.1	1	5158.64	3.25	0	85.25	0	1.68	0	0	12.06	0	0	0	0	0	0	-42.94	-42.94
	Inverter Transformer	MV1-5 T	364676	4905892	2	0	0	56.1	56.1	1	5206.58	3.25	0	85.33	0	1.7	0	0	12.12	0	0	0	0	0	0	-43.1	-43.1
	Inverter Transformer	MV1-11 T	364649	4905414	2	0	0	56.1	56.1	1	5272.87	3.25	0	85.44	0	1.72	0	0	12.21	0	0	0	0	0	0	-43.31	-43.31
	Inverter Transformer	MV1-9 T	364555	4905646	2	0	0	56.1	56.1	1	5342.07	3.25	0	85.55	0	1.75	0	0	12.3	0	0	0	0	0	0	-43.54	-43.54
	Inverter Transformer	MV1-6 T	364482	4905835	2	0	0	56.1	56.1	1	5402.79	3.25	0	85.65	0	1.77	0	0	12.37	0	0	0	0	0	0	-43.73	-43.73
	Inverter Transformer	MV1-3 T	364435	4906039	2	0	0	56.1	56.1	1	5444.19	3.25	0	85.72	0	1.78	0	0	12.43	0	0	0	0	0	0	-43.87	-43.87
	Line Reactor	NGR	369421	4908787.5	5	0	0	45.4	45.4	1	2741.03	5.25	0	79.76	0	3.33	1.31	0.12	1.12	0	0	0	0	0	0	-40.17	-40.17
Limit. Valu	0	0																								
Level D/N:	34.0225	34.0225																								

Receiver: Vacant Lot Receptor
ID: S-VLR34
X: 369943
Y: 4905994
Z: 4.5
Ground: 0

ISO	Description	ID	X	Y	Z	Ground	ReflOrd	LxT	LxN	L/A	Dist.	hm	Freq	Adiv	K0b	Agr	Abar	z	Aatm	Afol	Ahous	Cmet	CmetN	Dc	RL	LtotT	LtotN
	SubstationTransformer	W_ST	369711.17	4906112.3	2.5	0	0	92	92	1	260.26	4.23	0	59.31	0	0.56	4.95	0.23	0.83	0	0	0	0	0	0	26.32	26.32
	Sol_Luce Substation	S_Substation	369426	4908792	3.5	0	0	112.1	112.1	1	2845.36	5.25	0	80.08	0	0.25	3.45	0.35	5.72	0	0	0	0	0	0	22.57	22.57
	Westbrook Inverter Enclosur	W_INV4	369673	4906164	2	0	0	89.1	89.1	1	319.07	3.25	0	61.08	0	0.39	0	0	4.27	0	0	0	0	0	0	23.33	23.33
	Inverter	MV6-3	370207	4907140	2	0	0	100.3	100.3	1	1176.02	3.25	0	72.41	0	-0.16	0	0	11.46	0	0	0	0	0	0	16.61	16.61
	Inverter	MV6-2	370085	4907339	2	0	0	100.3	100.3	1	1352.48	3.25	0	73.62	0	-0.09	0	0	11.95	0	0	0	0	0	0	14.83	14.83
	Westbrook Inverter Enclosur	W_INV7	369780	4906417	2	0	0	89.1	89.1	1	453.33	3.25	0	64.13	0	0.5	0	0	4.97	0	0	0	0	0	0	19.47	19.47
	Westbrook Inverter Enclosur	W_INV3	369508	4906164	2	0	0	89.1	89.1	1	467.05	3.25	0	64.39	0	0.51	0	0	5.02	0	0	0	0	0	0	19.14	19.14
	Inverter	MV3-20	368689	4907317	2	0	0	100.3	100.3	1	1822.87	3.25	0	76.22	0	0.08	0	0	13.08	0	0	0	0	0	0	10.94	10.94
	Inverter	MV3-21	368478	4907206	2	0	0	100.3	100.3	1	1901.36	3.25	0	76.58	0	0.1	0	0	13.25	0	0	0	0	0	0	10.38	10.38
	Inverter	MV3-14	368684	4907498	2	0	0	100.3	100.3	1	1961.4	3.25	0	76.85	0	0.12	0	0	13.38	0	0	0	0	0	0	9.96	9.96
	Inverter	MV6-1	370235	4907364	2	0	0	97.3	97.3	1	1400.77	3.25	0	73.93	0	-0.07	0	0	12.07	0	0	0	0	0	0	11.38	11.38
	Inverter	MV3-16	368514	4907475	2	0	0	100.3	100.3	1	2058.01	3.25	0	77.27	0	0.15	0	0	13.58	0	0	0	0	0	0	9.31	9.31
	Inverter	MV3-19	368357	4907347	2	0	0	100.3	100.3	1	2084.71	3.25	0	77.38	0	0.15	0	0	13.64	0	0	0	0	0	0	9.14	9.14
	Inverter	MV3-8	368680	4907712	2	0	0	100.3	100.3	1	2132.3	3.25	0	77.58	0	0.17	0	0	13.74	0	0	0	0	0	0	8.83	8.83
	Westbrook Inverter Enclosur	W_INV6	369875	4906578	2	0	0	89.1	89.1	1	587.95	3.25	0	66.39	0	0.57	0	0	5.42	0	0	0	0	0	0	16.68	16.68
	Inverter	MV3-15	368357	4907477	2	0	0	100.3	100.3	1	2171.33	3.25	0	77.73	0	0.18	0	0	13.82	0	0	0	0	0	0	8.59	8.59
	Inverter	MV3-9	368512	4907703	2	0	0	100.3	100.3	1	2229	3.25	0	77.96	0	0.19	0	0	13.93	0	0	0	0	0	0	8.23	8.23
	Westbrook Inverter Enclosur	W_INV5	369719	4906574	2	0	0	89.1	89.1	1	621.76	3.25	0	66.87	0	0.58	0	0	5.51	0	0	0	0	0	0	16.09	16.09
	Inverter	MV3-17	368178	4907472	2	0	0	100.3	100.3	1	2302.11	3.25	0	78.24	0	0.21	0	0	14.08	0	0	0	0	0	0	7.78	7.78
	Inverter	MV3-11	368346	4907662	2	0	0	100.3	100.3	1	2309.25	3.25	0	78.27	0	0.21	0	0	14.09	0	0	0	0	0	0	7.74	7.74
	Inverter	MV3-10	368167	4907669	2	0	0	100.3	100.3	1	2441.27	3.25	0	78.75	0	0.24	0	0	14.35	0	0	0	0	0	0	6.97	6.97
	Westbrook Inverter Enclosur	W_INV2	369374	4906388	2	0	0	89.1	89.1	1	692.1	3.25	0	67.8	0	0.61	0	0	5.68	0	0	0	0	0	0	14.96	14.96
	Inverter	MV3-13	367963	4907577	2	0	0	100.3	100.3	1	2535.01	3.25	0	79.08	0	0.27	0	0	14.52	0	0	0	0	0	0	6.44	6.44
	Inverter	MV3-6	368162	4907834	2	0	0	100.3	100.3	1	2560.77	3.25	0	79.17	0	0.27	0	0	14.57	0	0	0	0	0	0	6.3	6.3
	Inverter	MV3-18	367752	4907412	2	0	0	100.3	100.3	1	2609.83	3.25	0	79.33	0	0.28	0	0	14.66	0	0	0	0	0	0	6.03	6.03
	Inverter	MV3-7	367945	4907754	2	0	0	100.3	100.3	1	2662.63	3.25	0	79.51	0	0.29	0	0	14.76	0	0	0	0	0	0	5.75	5.75
	Inverter	MV5-5	370015	4908690	2	0	0	100.3	100.3	1	2696.96	3.25	0	79.62	0	0.3	0	0	14.83	0	0	0	0	0	0	5.57	5.57
	Inverter	MV5-4	370324	4908707	2	0	0	100.3	100.3	1	2739.62	3.25	0	79.75	0	0.31	0	0	14.9	0	0	0	0	0	0	5.34	5.34
	Inverter	MV3-12	367668	4907594	2	0	0	100.3	100.3	1	2781.3	3.25	0	79.88	0	0.32	0	0	14.98	0	0	0	0	0	0	5.13	5.13
	Inverter	MV3-3	367939	4907927	2	0	0	100.3	100.3	1	2784.33	3.25	0	79.89	0	0.32	0	0	14.99	0	0	0	0	0	0	5.11	5.11
	Inverter	MV5-2	370006	4908853	2	0	0	100.3	100.3	1	2859.7	3.25	0	80.13	0	0.33	0	0	15.12	0	0	0	0	0	0	4.73	4.73
	Inverter	MV5-3	370231	4908851	2	0	0	100.3	100.3	1	2871.48	3.25	0	80.16	0	0.34	0	0	15.14	0	0	0	0	0	0	4.67	4.67
	Inverter	MV4-10	369312	4908858	2	0	0	100.3	100.3	1	2932.69	3.25	0	80.35	0	0.35	0	0	15.25	0	0	0	0	0	0	4.37	4.37
	Inverter	MV4-11	369264	4908855	2	0	0	100.3	100.3	1	2940.47	3.25	0	80.37	0	0.35	0	0	15.27	0	0	0	0	0	0	4.33	4.33
	Inverter	MV4-9	369289	4909001	2	0	0	100.3	100.3	1	3077.3	3.25	0	80.76	0	0.38	0	0	15.51	0	0	0	0	0	0	3.66	3.66
	Inverter	MV4-8	369256	4909001	2	0	0	100.3	100.3	1	3084.48	3.25	0	80.78	0	0.38	0	0	15.52	0	0	0	0	0	0	3.63	3.63
	Inverter	MV4-7	369035	4909001	2	0	0	100.3	100.3	1	3141.1	3.25	0	80.94	0	0.39	0	0	15.62	0	0	0	0	0	0	3.36	3.36
	Inverter	MV5-1	370020	4909142	2	0	0	100.3	100.3	1	3148.94	3.25	0	80.96	0	0.39	0	0	15.63	0	0	0	0	0	0	3.33	3.33
	Inverter	MV4-5	369289	4909199	2	0	0	100.3	100.3	1	3271.05	3.25	0	81.29	0	0.41	0	0	15.84	0	0	0	0	0	0	2.76	2.76
	Inverter	MV4-6	369243	4909192	2	0	0	100.3	100.3	1	3273.72	3.25	0	81.3	0	0.41	0	0	15.85	0	0	0	0	0	0	2.75	2.75
	Inverter	MV4-4	369027	4909199	2	0	0	100.3	100.3	1	3333.33	3.25	0	81.46	0	0.42	0	0	15.95	0	0	0	0	0	0	2.48	2.48

Inverter	MV4-2	369272	4909397	2	0	0	100.3	100.3	1	3468.52	3.25	0	81.8	0	0.45	0	0	16.18	0	0	0	0	0	0	1.88	1.88
Inverter	MV4-3	369229	4909397	2	0	0	100.3	100.3	1	3477.1	3.25	0	81.82	0	0.45	0	0	16.19	0	0	0	0	0	0	1.85	1.85
Inverter	MV4-1	369011	4909397	2	0	0	100.3	100.3	1	3528.32	3.25	0	81.95	0	0.46	0	0	16.28	0	0	0	0	0	0	1.63	1.63
Westbrook Inverter Enclosur	W_INV1	369409	4906578	2	0	0	86.1	86.1	1	791.34	3.25	0	68.97	0	0.64	0	0	5.9	0	0	0	0	0	0	10.55	10.55
Inverter	MV2-3	365820	4906641	2	0	0	100.3	100.3	1	4173.46	3.25	0	83.41	0	0.55	0	0	17.32	0	0	0	0	0	0	-0.97	-0.97
DSTATCOM - 10 MVAR #1	DSAT1	369437	4908757	2.5	0	0	96.6	96.6	1	2808.95	3.5	0	79.97	0	3.38	0	0	2.19	0	0	0	0	0	0	11.09	11.09
DSTATCOM - 10 MVAR #2	DSAT2	369403	4908757	2.5	0	0	96.6	96.6	1	2815.27	3.5	0	79.99	0	3.38	0	0	2.2	0	0	0	0	0	0	11.06	11.06
Inverter	MV2-4	365586	4906624	2	0	0	100.3	100.3	1	4402.31	3.25	0	83.87	0	0.58	0	0	17.68	0	0	0	0	0	0	-1.82	-1.82
Westbrook Inverter Transfor	W_INVTR4	369679	4906164	2	0	0	77.3	77.3	1	314.01	3.25	0	60.94	0	-1.08	0	0	0.25	0	0	0	0	0	0	17.23	17.23
Inverter	MV1-15	365315	4904994	2	0	0	100.3	100.3	1	4734.81	3.25	0	84.51	0	0.62	0	0	18.19	0	0	0	0	0	0	-3	-3
Inverter	MV1-12	365038	4905386	2	0	0	100.3	100.3	1	4942.54	3.25	0	84.88	0	0.64	0	0	18.5	0	0	0	0	0	0	-3.7	-3.7
Inverter	MV1-4	364815	4905918	2	0	0	100.3	100.3	1	5128.56	3.25	0	85.2	0	0.65	0	0	18.77	0	0	0	0	0	0	-4.31	-4.31
Inverter	MV1-8	364788	4905647	2	0	0	100.3	100.3	1	5166.67	3.25	0	85.26	0	0.66	0	0	18.82	0	0	0	0	0	0	-4.43	-4.43
Inverter	MV1-2	364753	4906063	2	0	0	100.3	100.3	1	5190.46	3.25	0	85.3	0	0.66	0	0	18.86	0	0	0	0	0	0	-4.51	-4.51
Inverter	MV1-1	364715	4906166	2	0	0	100.3	100.3	1	5230.83	3.25	0	85.37	0	0.66	0	0	18.92	0	0	0	0	0	0	-4.64	-4.64
Inverter	MV6-4	370250	4906966	2	0	0	86.1	86.1	1	1019.33	3.25	0	71.17	0	0.69	0	0	6.35	0	0	0	0	0	0	7.85	7.85
Inverter	MV1-5	364671	4905892	2	0	0	100.3	100.3	1	5272.99	3.25	0	85.44	0	0.66	0	0	18.98	0	0	0	0	0	0	-4.77	-4.77
Inverter	MV1-11	364655	4905414	2	0	0	100.3	100.3	1	5319.71	3.25	0	85.52	0	0.67	0	0	19.04	0	0	0	0	0	0	-4.92	-4.92
Inverter	MV1-9	364561	4905646	2	0	0	100.3	100.3	1	5393.24	3.25	0	85.64	0	0.67	0	0	19.15	0	0	0	0	0	0	-5.15	-5.15
Inverter	MV1-6	364477	4905835	2	0	0	100.3	100.3	1	5468.31	3.25	0	85.76	0	0.68	0	0	19.26	0	0	0	0	0	0	-5.38	-5.38
Inverter	MV2-1	365842	4906816	2	0	0	97.3	97.3	1	4182.57	3.25	0	83.43	0	0.55	0	0	17.34	0	0	0	0	0	0	-4.01	-4.01
Inverter	MV3-22	368656	4907142	2	0	0	89.1	89.1	1	1724.61	3.25	0	75.73	0	0.84	0	0	7.59	0	0	0	0	0	0	4.89	4.89
Westbrook Inverter Transfor	W_INVTR7	369786	4906417	2	0	0	77.3	77.3	1	451.2	3.25	0	64.09	0	-1.43	0	0	0.34	0	0	0	0	0	0	14.35	14.35
Westbrook Inverter Transfor	W_INVTR3	369514	4906164	2	0	0	77.3	77.3	1	461.46	3.25	0	64.28	0	-1.45	0	0	0.35	0	0	0	0	0	0	14.16	14.16
Inverter	MV1-14	365163	4905049	2	0	0	97.3	97.3	1	4872.52	3.25	0	84.76	0	0.63	0	0	18.39	0	0	0	0	0	0	-6.47	-6.47
Inverter	MV1-10	365004	4905564	2	0	0	97.3	97.3	1	4957.68	3.25	0	84.91	0	0.64	0	0	18.52	0	0	0	0	0	0	-6.75	-6.75
Inverter	MV1-7	364925	4905782	2	0	0	97.3	97.3	1	5022.48	3.25	0	85.02	0	0.64	0	0	18.61	0	0	0	0	0	0	-6.96	-6.96
Inverter	MV1-13	364731	4905241	2	0	0	97.3	97.3	1	5266.11	3.25	0	85.43	0	0.66	0	0	18.97	0	0	0	0	0	0	-7.75	-7.75
Westbrook Inverter Transfor	W_INVTR6	369881	4906578	2	0	0	77.3	77.3	1	587.29	3.25	0	66.38	0	-1.62	0	0	0.43	0	0	0	0	0	0	12.15	12.15
Inverter	MV3-2	368671	4907928	2	0	0	89.1	89.1	1	2314.81	3.25	0	78.29	0	0.98	0	0	8.55	0	0	0	0	0	0	1.23	1.23
Westbrook Inverter Transfor	W_INVTR5	369725	4906574	2	0	0	77.3	77.3	1	619.62	3.25	0	66.84	0	-1.65	0	0	0.45	0	0	0	0	0	0	11.7	11.7
Inverter	MV3-4	368502	4907925	2	0	0	89.1	89.1	1	2409.41	3.25	0	78.64	0	1	0	0	8.7	0	0	0	0	0	0	0.71	0.71
Inverter	MV3-5	368340	4907843	2	0	0	89.1	89.1	1	2447.12	3.25	0	78.77	0	1.01	0	0	8.76	0	0	0	0	0	0	0.51	0.51
Inverter	MV5-6	369982	4908507	2	0	0	89.1	89.1	1	2513.3	3.25	0	79	0	1.03	0	0	8.87	0	0	0	0	0	0	0.16	0.16
Fixed Reactor Bank 2	FRB2	369464	4908755	6	0	0	89.8	89.8	1	2802.24	5.25	0	79.95	0	-0.9	0	0	5.66	0	0	0	0	0	0	5.07	5.07
Fixed Reactor Bank 1	FRB1	369378	4908755	6	0	0	89.8	89.8	1	2818.22	5.25	0	80	0	-0.9	0	0	5.68	0	0	0	0	0	0	4.99	4.99
Inverter	MV4-15	369176	4908481	2	0	0	89.1	89.1	1	2602.59	3.25	0	79.31	0	1.05	0	0	9.01	0	0	0	0	0	0	-0.31	-0.31
Inverter	MV4-14	369176	4908507	2	0	0	89.1	89.1	1	2627.44	3.25	0	79.39	0	1.06	0	0	9.04	0	0	0	0	0	0	-0.43	-0.43
Inverter	MV3-1	368156	4907976	2	0	0	89.1	89.1	1	2668.65	3.25	0	79.53	0	1.07	0	0	9.11	0	0	0	0	0	0	-0.64	-0.64
Westbrook Inverter Transfor	W_INVTR2	369368	4906388	2	0	0	77.3	77.3	1	697.04	3.25	0	67.87	0	-1.72	0	0	0.5	0	0	0	0	0	0	10.7	10.7
Inverter	MV4-13	369051	4908605	2	0	0	89.1	89.1	1	2759.16	3.25	0	79.82	0	1.09	0	0	9.25	0	0	0	0	0	0	-1.09	-1.09
Westbrook Inverter Transfor	W_INVTR1	369403	4906578	2	0	0	78.2	78.2	1	795.4	3.25	0	69.01	0	-1.8	0	0	0.56	0	0	0	0	0	0	10.47	10.47
Inverter	MV4-12	369043	4908803	2	0	0	89.1	89.1	1	2949.66	3.25	0	80.4	0	1.13	0	0	9.54	0	0	0	0	0	0	-2.01	-2.01
Gardiner Substation	G_Sub	366586.3	4903349.9	2.5	0	0	90.8	90.8	1	4273.02	4.25	0	83.61	0	1.45	2.56	0.32	7.72	0	0	0	0	0	0	-4.57	-4.57
Inverter	MV2-2	365977	4906654	2	0	0	89.1	89.1	1	4020.54	3.25	0	83.09	0	1.4	0	0	11.11	0	0	0	0	0	0	-6.54	-6.54
Inverters	G_Inv2	366676.9	4903239.1	2	0	0	87.7	87.7	1	4272.81	3.25	0	83.61	0	2.81	0	0	5.17	0	0	0	0	0	0	-3.94	-3.94
Inverters	G_Inv4	366732.8	4903105	2	0	0	87.7	87.7	1	4318.76	3.25	0	83.71	0	2.82	0	0	5.22	0	0	0	0	0	0	-4.08	-4.08
Inverters	G_Inv6	366788.5	4902972	2	0	0	87.7	87.7	1	4368.45	3.25	0	83.81	0	2.82	0	0	5.27	0	0	0	0	0	0	-4.24	-4.24
Inverters	G_Inv1	366526.4	4903225.8	2	0	0	87.7	87.7	1	4397.28	3.25	0	83.86	0	2.82	0	0	5.3	0	0	0	0	0	0	-4.33	-4.33
Inverters	G_Inv8	366844.5	4902838.5	2	0	0	87.7	87.7	1	4422.43	3.25	0	83.91	0	2.83	0	0	5.33	0	0	0	0	0	0	-4.41	-4.41
Inverters	G_Inv3	366583.7	4903091.4	2	0	0	87.7	87.7	1	4439.59	3.25	0	83.95	0	2.83	0	0	5.35	0	0	0	0	0	0	-4.46	-4.46
Inverters	G_Inv10	366900.7	4902704.8	2	0	0	87.7	87.7	1	4480.45	3.25	0	84.03	0	2.83	0	0	5.39	0	0	0	0	0	0	-4.59	-4.59
Inverters	G_Inv5	366638.5	4902958.1	2	0	0	87.7	87.7	1	4487.36	3.25	0	84.04	0	2.83	0	0	5.4	0	0	0	0	0	0	-4.61	-4.61
Inverters	G_Inv7	366694.6	4902824.7	2	0	0	87.7	87.7	1	4538.34	3.25	0	84.14	0	2.83	0	0	5.45	0	0	0	0	0	0	-4.76	-4.76
Inverters	G_Inv9	366750.9	4902691.8	2	0	0	87.7	87.7	1	4592.82	3.25	0	84.24	0	2.84	0	0	5.51	0	0	0	0	0	0	-4.93	-4.93
Inverter	MV1-3	364440	4906039	2	0	0	89.1	89.1	1	5503.18	3.25	0	85.81	0	1.76	0	0	13.13	0	0	0	0	0	0	-11.65	-11.65
Inverter Transformer	MV6-4 T	370244	4906966	2	0	0	69.4	69.4	1	1017.54	3.25	0	71.15	0	1.7	0	0	3.84	0	0	0	0	0	0	-7.33	-7.33
Inverter Transformer	MV6-1 T	370230	4907364	2	0	0	69.4	69.4	1	1399.74	3.25	0	73.92	0	1.93	0	0	4.32	0	0	0	0	0	0	-10.82	-10.82
Inverter Transformer	MV2-1 T	365836	4906816	2	0	0	69.4	69.4	1	4188.45	3.25	0	83.44	0	2.83	0	0	6.82	0	0	0	0	0	0	-23.74	-23.74
Inverter Transformer	MV1-14 T	365157	4905049	2	0	0	69.4	69.4	1	4878.4	3.25	0	84.77	0	2.99	0	0	7.3	0	0	0	0	0	0	-25.7	-25.7
Inverter Transformer	MV1-10 T	365010	4905564	2	0	0	69.4	69.4	1	4951.71	3.25	0	84.9	0	3	0	0	7.35	0	0	0	0	0	0	-25.9	-25.9
Inverter Transformer	MV1-7 T	364919	4905782	2	0	0	69.4	69.4	1	5028.47	3.25	0	85.03	0	3.02	0	0	7.4	0	0	0	0	0	0	-26.1	-26.1
Inverter Transformer	MV1-13 T	364725	4905241	2	0	0	69.4	69.4	1	5272.05	3.25	0	85.44	0	3.07	0	0	7.56	0	0	0	0	0	0	-26.72	-26.72
Inverter Transformer	MV6-3 T	370202	4907140	2	0	0	56.1	56.1	1	1174.91	3.25	0	72.4	0	0.07	0	0	5.3	0	0	0	0	0	0	-21.71	-21.71
Inverter Transformer	MV6-2 T	370091	4907339	2	0	0	56.1	56.1	1	1353.12	3.25	0	73.63	0	0.14	0	0	5.7	0	0	0	0	0	0	-23.41	-23.41
Inverter Transformer	MV3-22 T	368661	4907142	2	0	0	56.1	56.1	1	1720.88	3.25	0	75.72	0	0.29	0	0	6.48	0	0	0	0	0	0	-26.43	-26.43
Inverter Transformer	MV3-20 T	368683	4907317	2	0	0	56.1	56.1	1	1827	3.25	0	76.23	0	0.33	0	0	6.7	0	0	0	0	0	0	-27.21	-27.21
Inverter Transformer	MV3-21 T	368484	4907206	2	0	0	56.1	56.1	1	1896.74	3.25	0	76.56	0	0.36	0	0	6.84	0	0	0	0	0	0	-27.7	-27.7
Inverter Transformer	MV3-14 T	368678	4907498	2	0	0	56.1	56.1	1	1965.26	3.25	0	76.87	0	0.39	0	0	6.98	0	0	0	0	0	0	-28.17	-28.17
Inverter Transformer	MV3-16 T	368509	4907475	2	0	0	56.1	56.1	1	2061.49	3.25	0	77.28	0	0.43	0	0	7.16	0	0	0	0	0	0	-28.82	-28.82
Inverter Transformer	MV3-19 T	368352	4907347	2	0	0	56.1	56.1	1	2088.52	3.25	0	77.4	0	0.44	0	0	7.22	0	0	0	0	0	0	-29	-29
Inverter Transformer	MV3-8 T	368685	4907712	2	0	0	56.1	56.1	1	2129.34	3.25	0	77.56	0	0.46	0	0	7.3	0	0	0	0	0	0	-29.26	-29.26
Inverter Transformer	MV3-15 T	368351	4907477	2	0	0	56.1	56.1	1	2175.72	3.25	0	77.75	0	0.48	0	0	7.38	0	0	0	0	0	0	-29.56	-29.56
Inverter Transformer	MV3-9 T	368517	4907703	2	0	0	56.1	56.1	1	2225.79	3.25	0	77.95	0	0.5	0	0	7.48	0	0	0	0	0	0	-29.87	-29.87

	Inverter Transformer	MV3-17 T	368183	4907472	2	0	0	56.1	56.1	1	2298.28	3.25	0	78.23	0	0.53	0	0	7.62	0	0	0	0	0	0	-30.32	-30.32
	Inverter Transformer	MV3-2 T	368677	4907928	2	0	0	56.1	56.1	1	2311.52	3.25	0	78.28	0	0.54	0	0	7.64	0	0	0	0	0	0	-30.4	-30.4
	Inverter Transformer	MV3-11 T	368340	4907662	2	0	0	56.1	56.1	1	2313.4	3.25	0	78.29	0	0.54	0	0	7.64	0	0	0	0	0	0	-30.41	-30.41
	Inverter Transformer	MV3-4 T	368507	4907925	2	0	0	56.1	56.1	1	2406.42	3.25	0	78.63	0	0.58	0	0	7.82	0	0	0	0	0	0	-30.96	-30.96
	Inverter Transformer	MV3-10 T	368162	4907669	2	0	0	56.1	56.1	1	2444.91	3.25	0	78.77	0	0.59	0	0	7.89	0	0	0	0	0	0	-31.19	-31.19
	Inverter Transformer	MV3-5 T	368335	4907843	2	0	0	56.1	56.1	1	2450.4	3.25	0	78.78	0	0.6	0	0	7.9	0	0	0	0	0	0	-31.22	-31.22
	Inverter Transformer	MV5-6 T	369987	4908507	2	0	0	56.1	56.1	1	2513.39	3.25	0	79.01	0	0.62	0	0	8.01	0	0	0	0	0	0	-31.58	-31.58
	Inverter Transformer	MV3-13 T	367958	4907577	2	0	0	56.1	56.1	1	2538.92	3.25	0	79.09	0	0.63	0	0	8.06	0	0	0	0	0	0	-31.73	-31.73
	Inverter Transformer	MV3-6 T	368156	4907834	2	0	0	56.1	56.1	1	2564.95	3.25	0	79.18	0	0.64	0	0	8.11	0	0	0	0	0	0	-31.87	-31.87
	Inverter Transformer	MV4-15 T	369170	4908481	2	0	0	56.1	56.1	1	2604.36	3.25	0	79.31	0	0.66	0	0	8.18	0	0	0	0	0	0	-32.09	-32.09
	Inverter Transformer	MV3-18 T	367757	4907412	2	0	0	56.1	56.1	1	2605.63	3.25	0	79.32	0	0.66	0	0	8.18	0	0	0	0	0	0	-32.1	-32.1
	Inverter Transformer	MV4-14 T	369182	4908507	2	0	0	56.1	56.1	1	2625.7	3.25	0	79.38	0	0.67	0	0	8.22	0	0	0	0	0	0	-32.21	-32.21
	Inverter Transformer	MV3-7 T	367951	4907754	2	0	0	56.1	56.1	1	2658.13	3.25	0	79.49	0	0.68	0	0	8.27	0	0	0	0	0	0	-32.39	-32.39
	Inverter Transformer	MV3-1 T	368150	4907976	2	0	0	56.1	56.1	1	2672.67	3.25	0	79.54	0	0.69	0	0	8.3	0	0	0	0	0	0	-32.47	-32.47
	Inverter Transformer	MV5-5 T	370021	4908690	2	0	0	56.1	56.1	1	2697.13	3.25	0	79.62	0	0.7	0	0	8.34	0	0	0	0	0	0	-32.6	-32.6
	Inverter Transformer	MV5-4 T	370330	4908707	2	0	0	56.1	56.1	1	2740.46	3.25	0	79.76	0	0.72	0	0	8.42	0	0	0	0	0	0	-32.84	-32.84
	Inverter Transformer	MV4-13 T	369057	4908605	2	0	0	56.1	56.1	1	2757.23	3.25	0	79.81	0	0.73	0	0	8.45	0	0	0	0	0	0	-32.93	-32.93
	Inverter Transformer	MV3-12 T	367674	4907594	2	0	0	56.1	56.1	1	2776.39	3.25	0	79.87	0	0.73	0	0	8.48	0	0	0	0	0	0	-33.03	-33.03
	Inverter Transformer	MV3-3 T	367944	4907927	2	0	0	56.1	56.1	1	2780.74	3.25	0	79.88	0	0.74	0	0	8.49	0	0	0	0	0	0	-33.05	-33.05
	Inverter Transformer	MV5-2 T	370011	4908853	2	0	0	56.1	56.1	1	2859.81	3.25	0	80.13	0	0.77	0	0	8.63	0	0	0	0	0	0	-33.47	-33.47
	Inverter Transformer	MV5-3 T	370237	4908851	2	0	0	56.1	56.1	1	2872.09	3.25	0	80.16	0	0.78	0	0	8.65	0	0	0	0	0	0	-33.53	-33.53
	Inverter Transformer	MV4-10 T	369307	4908858	2	0	0	56.1	56.1	1	2933.77	3.25	0	80.35	0	0.8	0	0	8.76	0	0	0	0	0	0	-33.85	-33.85
	Inverter Transformer	MV4-11 T	369269	4908855	2	0	0	56.1	56.1	1	2939.32	3.25	0	80.36	0	0.8	0	0	8.76	0	0	0	0	0	0	-33.88	-33.88
	Inverter Transformer	MV4-12 T	369049	4908803	2	0	0	56.1	56.1	1	2947.83	3.25	0	80.39	0	0.81	0	0	8.78	0	0	0	0	0	0	-33.92	-33.92
	Inverter Transformer	MV4-9 T	369284	4909001	2	0	0	56.1	56.1	1	3078.37	3.25	0	80.77	0	0.86	0	0	9	0	0	0	0	0	0	-34.57	-34.57
	Inverter Transformer	MV4-8 T	369262	4909001	2	0	0	56.1	56.1	1	3083.15	3.25	0	80.78	0	0.87	0	0	9.01	0	0	0	0	0	0	-34.59	-34.59
	Inverter Transformer	MV4-7 T	369040	4909001	2	0	0	56.1	56.1	1	3139.66	3.25	0	80.94	0	0.89	0	0	9.1	0	0	0	0	0	0	-34.87	-34.87
	Inverter Transformer	MV5-1 T	370015	4909142	2	0	0	56.1	56.1	1	3148.82	3.25	0	80.96	0	0.89	0	0	9.12	0	0	0	0	0	0	-34.92	-34.92
	Inverter Transformer	MV4-5 T	369283	4909199	2	0	0	56.1	56.1	1	3272.25	3.25	0	81.3	0	0.94	0	0	9.32	0	0	0	0	0	0	-35.5	-35.5
	Inverter Transformer	MV4-6 T	369249	4909192	2	0	0	56.1	56.1	1	3272.44	3.25	0	81.3	0	0.94	0	0	9.32	0	0	0	0	0	0	-35.51	-35.51
	Inverter Transformer	MV4-4 T	369033	4909199	2	0	0	56.1	56.1	1	3331.69	3.25	0	81.45	0	0.97	0	0	9.42	0	0	0	0	0	0	-35.78	-35.78
	Inverter Transformer	MV4-2 T	369267	4909397	2	0	0	56.1	56.1	1	3469.49	3.25	0	81.81	0	1.03	0	0	9.64	0	0	0	0	0	0	-36.41	-36.41
	Inverter Transformer	MV4-3 T	369234	4909397	2	0	0	56.1	56.1	1	3476.07	3.25	0	81.82	0	1.03	0	0	9.65	0	0	0	0	0	0	-36.44	-36.44
	Inverter Transformer	MV4-1 T	369017	4909397	2	0	0	56.1	56.1	1	3526.74	3.25	0	81.95	0	1.05	0	0	9.73	0	0	0	0	0	0	-36.67	-36.67
	Inverter Transformer	MV2-2 T	365982	4906654	2	0	0	56.1	56.1	1	4015.61	3.25	0	83.08	0	1.25	0	0	10.48	0	0	0	0	0	0	-38.74	-38.74
	Inverter Transformer	MV2-3 T	365814	4906641	2	0	0	56.1	56.1	1	4179.38	3.25	0	83.42	0	1.32	0	0	10.72	0	0	0	0	0	0	-39.4	-39.4
	Inverter Transformer	MV2-4 T	365590	4906628	2	0	0	56.1	56.1	1	4398.93	3.25	0	83.87	0	1.4	0	0	11.03	0	0	0	0	0	0	-40.24	-40.24
	Inverter Transformer	MV1-15 T	365309	4904994	2	0	0	56.1	56.1	1	4740.67	3.25	0	84.52	0	1.53	0	0	11.51	0	0	0	0	0	0	-41.5	-41.5
	Inverter Transformer	MV1-12 T	365044	4905386	2	0	0	56.1	56.1	1	4936.58	3.25	0	84.87	0	1.6	0	0	11.77	0	0	0	0	0	0	-42.18	-42.18
	Inverter Transformer	MV1-4 T	364821	4905918	2	0	0	56.1	56.1	1	5122.56	3.25	0	85.19	0	1.67	0	0	12.01	0	0	0	0	0	0	-42.82	-42.82
	Inverter Transformer	MV1-8 T	364782	4905647	2	0	0	56.1	56.1	1	5172.65	3.25	0	85.27	0	1.69	0	0	12.08	0	0	0	0	0	0	-42.98	-42.98
	Inverter Transformer	MV1-2 T	364759	4906063	2	0	0	56.1	56.1	1	5184.46	3.25	0	85.29	0	1.69	0	0	12.09	0	0	0	0	0	0	-43.02	-43.02
	Inverter Transformer	MV1-1 T	364721	4906166	2	0	0	56.1	56.1	1	5224.83	3.25	0	85.36	0	1.71	0	0	12.15	0	0	0	0	0	0	-43.16	-43.16
	Inverter Transformer	MV1-5 T	364676	4905892	2	0	0	56.1	56.1	1	5267.99	3.25	0	85.43	0	1.72	0	0	12.2	0	0	0	0	0	0	-43.3	-43.3
	Inverter Transformer	MV1-11 T	364649	4905414	2	0	0	56.1	56.1	1	5325.68	3.25	0	85.53	0	1.74	0	0	12.28	0	0	0	0	0	0	-43.49	-43.49
	Inverter Transformer	MV1-9 T	364555	4905646	2	0	0	56.1	56.1	1	5399.23	3.25	0	85.65	0	1.77	0	0	12.37	0	0	0	0	0	0	-43.72	-43.72
	Inverter Transformer	MV1-6 T	364482	4905835	2	0	0	56.1	56.1	1	5463.31	3.25	0	85.75	0	1.79	0	0	12.45	0	0	0	0	0	0	-43.93	-43.93
	Inverter Transformer	MV1-3 T	364435	4906039	2	0	0	56.1	56.1	1	5508.18	3.25	0	85.82	0	1.8	0	0	12.51	0	0	0	0	0	0	-44.07	-44.07
	Line Reactor	NGR	369421	4908787.5	5	0	0	45.4	45.4	1	2841.85	5.25	0	80.07	0	3.33	1.31	0.12	1.16	0	0	0	0	0	0	-40.52	-40.52
Limit. Valu	0	0																								
Level D/N:	32.0009	32.0009																								

Receiver: Vacant Lot Receptor
ID: S-VLR35
X: 368755
Y: 4906999
Z: 4.5
Ground: 0

ISO	Description	ID	X	Y	Z	Ground	ReflOrd	LxT	LxN	L/A	Dist.	hm	Freq	Adiv	K0b	Agr	Abar	z	Aatm	Afol	Ahous	Cmet	CmetN	Dc	RL	LtotT	LtotN
	Inverter	MV3-20	368689	4907317	2	0	0	100.3	100.3	1	324.79	3.25	0	61.23	0	-0.65	0	0	6.73	0	0	0	0	0	0	32.99	32.99
	Inverter	MV3-21	368478	4907206	2	0	0	100.3	100.3	1	345.81	3.25	0	61.78	0	-0.64	0	0	7	0	0	0	0	0	0	32.18	32.18
	Sol_Luce Substation	S_Substation	369426	4908792	3.5	0	0	112.1	112.1	1	1914.44	5.25	0	76.64	0	0.01	3.89	0.33	4.22	0	0	0	0	0	0	27.31	27.31
	Inverter	MV3-14	368684	4907498	2	0	0	100.3	100.3	1	504.03	3.25	0	65.05	0	-0.55	0	0	8.56	0	0	0	0	0	0	27.25	27.25
	Inverter	MV3-19	368357	4907347	2	0	0	100.3	100.3	1	528.69	3.25	0	65.46	0	-0.53	0	0	8.74	0	0	0	0	0	0	26.64	26.64
	Inverter	MV3-16	368514	4907475	2	0	0	100.3	100.3	1	533.54	3.25	0	65.54	0	-0.53	0	0	8.77	0	0	0	0	0	0	26.52	26.52
	Inverter	MV3-15	368357	4907477	2	0	0	100.3	100.3	1	622.01	3.25	0	66.88	0	-0.46	0	0	9.33	0	0	0	0	0	0	24.57	24.57
	Inverter	MV3-22	368656	4907142	2	0	0	89.1	89.1	1	173.94	3.25	0	55.81	0	0.27	0	0	2.92	0	0	0	0	0	0	30.07	30.07
	Inverter	MV3-8	368680	4907712	2	0	0	100.3	100.3	1	716.94	3.25	0	68.11	0	-0.4	0	0	9.82	0	0	0	0	0	0	22.79	22.79
	Inverter	MV3-9	368512	4907703	2	0	0	100.3	100.3	1	744.76	3.25	0	68.44	0	-0.38	0	0	9.94	0	0	0	0	0	0	22.31	22.31
	Inverter	MV3-17	368178	4907472	2	0	0	100.3	100.3	1	746.1	3.25	0	68.46	0	-0.38	0	0	9.95	0	0	0	0	0	0	22.29	22.29
	Inverter	MV3-11	368346	4907662	2	0	0	100.3	100.3	1	779.01	3.25	0	68.83	0	-0.36	0	0	10.09	0	0	0	0	0	0	21.75	21.75
	Inverter	MV3-10	368167	4907669	2	0	0	100.3	100.3	1	891.43	3.25	0	70	0	-0.3	0	0	10.53	0	0	0	0	0	0	20.08	20.08
	Inverter	MV3-13	367963	4907577	2	0	0	100.3	100.3	1	980.49	3.25	0	70.83	0	-0.26	0	0	10.85	0	0	0	0	0	0	18.89	18.89

Inverter	MV3-6	368162	4907834	2	0	0	100.3	100.3	1	1024.15	3.25	0	71.21	0	-0.23	0	0	10.99	0	0	0	0	0	0	18.35	18.35
Inverter	MV3-18	367752	4907412	2	0	0	100.3	100.3	1	1084.7	3.25	0	71.71	0	-0.21	0	0	11.18	0	0	0	0	0	0	17.63	17.63
Inverter	MV3-7	367945	4907754	2	0	0	100.3	100.3	1	1107.31	3.25	0	71.89	0	-0.2	0	0	11.25	0	0	0	0	0	0	17.37	17.37
Inverter	MV3-3	367939	4907927	2	0	0	100.3	100.3	1	1235.74	3.25	0	72.84	0	-0.14	0	0	11.63	0	0	0	0	0	0	15.98	15.98
Inverter	MV3-12	367668	4907594	2	0	0	100.3	100.3	1	1239.19	3.25	0	72.86	0	-0.14	0	0	11.64	0	0	0	0	0	0	15.95	15.95
Inverter	MV6-2	370085	4907339	2	0	0	100.3	100.3	1	1372.77	3.25	0	73.75	0	-0.08	0	0	12	0	0	0	0	0	0	14.64	14.64
Inverter	MV6-3	370207	4907140	2	0	0	100.3	100.3	1	1458.83	3.25	0	74.28	0	-0.05	0	0	12.22	0	0	0	0	0	0	13.86	13.86
Inverter	MV4-11	369264	4908855	2	0	0	100.3	100.3	1	1924.53	3.25	0	76.69	0	0.11	0	0	13.3	0	0	0	0	0	0	10.22	10.22
Inverter	MV4-10	369312	4908858	2	0	0	100.3	100.3	1	1940.65	3.25	0	76.76	0	0.11	0	0	13.34	0	0	0	0	0	0	10.11	10.11
Inverter	MV4-7	369035	4909001	2	0	0	100.3	100.3	1	2021.49	3.25	0	77.11	0	0.14	0	0	13.51	0	0	0	0	0	0	9.56	9.56
Inverter	MV4-8	369256	4909001	2	0	0	100.3	100.3	1	2063.74	3.25	0	77.29	0	0.15	0	0	13.6	0	0	0	0	0	0	9.28	9.28
Inverter	MV4-9	369289	4909001	2	0	0	100.3	100.3	1	2072	3.25	0	77.33	0	0.15	0	0	13.61	0	0	0	0	0	0	9.22	9.22
Inverter	MV5-5	370015	4908690	2	0	0	100.3	100.3	1	2108.81	3.25	0	77.48	0	0.16	0	0	13.69	0	0	0	0	0	0	8.98	8.98
Inverter	MV6-1	370235	4907364	2	0	0	97.3	97.3	1	1524.35	3.25	0	74.66	0	-0.02	0	0	12.38	0	0	0	0	0	0	10.29	10.29
Inverter	MV4-4	369027	4909199	2	0	0	100.3	100.3	1	2216.75	3.25	0	77.91	0	0.19	0	0	13.91	0	0	0	0	0	0	8.3	8.3
Inverter	MV5-2	370006	4908853	2	0	0	100.3	100.3	1	2236.59	3.25	0	77.99	0	0.19	0	0	13.95	0	0	0	0	0	0	8.18	8.18
Inverter	MV4-6	369243	4909192	2	0	0	100.3	100.3	1	2246.64	3.25	0	78.03	0	0.2	0	0	13.97	0	0	0	0	0	0	8.12	8.12
Inverter	MV4-5	369289	4909199	2	0	0	100.3	100.3	1	2263.88	3.25	0	78.1	0	0.2	0	0	14	0	0	0	0	0	0	8.01	8.01
Inverter	MV5-4	370324	4908707	2	0	0	100.3	100.3	1	2319.27	3.25	0	78.31	0	0.21	0	0	14.11	0	0	0	0	0	0	7.68	7.68
Inverter	MV5-3	370231	4908851	2	0	0	100.3	100.3	1	2368.22	3.25	0	78.49	0	0.23	0	0	14.21	0	0	0	0	0	0	7.39	7.39
Inverter	MV4-1	369011	4909397	2	0	0	100.3	100.3	1	2411.63	3.25	0	78.65	0	0.24	0	0	14.29	0	0	0	0	0	0	7.14	7.14
Inverter	MV4-3	369229	4909397	2	0	0	100.3	100.3	1	2444.4	3.25	0	78.76	0	0.24	0	0	14.35	0	0	0	0	0	0	6.95	6.95
Inverter	MV4-2	369272	4909397	2	0	0	100.3	100.3	1	2453.1	3.25	0	78.79	0	0.25	0	0	14.37	0	0	0	0	0	0	6.9	6.9
Inverter	MV5-1	370020	4909142	2	0	0	100.3	100.3	1	2488.51	3.25	0	78.92	0	0.25	0	0	14.44	0	0	0	0	0	0	6.7	6.7
DSTATCOM - 10 MVAR #2	DSAT2	369403	4908757	2.5	0	0	96.6	96.6	1	1873.63	3.5	0	76.45	0	3.19	0	0	1.64	0	0	0	0	0	0	15.34	15.34
DSTATCOM - 10 MVAR #1	DSAT1	369437	4908757	2.5	0	0	96.6	96.6	1	1885.65	3.5	0	76.51	0	3.2	0	0	1.65	0	0	0	0	0	0	15.28	15.28
Inverter	MV2-3	365820	4906641	2	0	0	100.3	100.3	1	2956.75	3.25	0	80.42	0	0.35	0	0	15.3	0	0	0	0	0	0	4.25	4.25
Westbrook Inverter Enclosur	W_INV2	369374	4906388	2	0	0	89.1	89.1	1	869.76	3.25	0	69.79	0	0.66	0	0	6.06	0	0	0	0	0	0	12.55	12.55
Inverter	MV2-4	365586	4906624	2	0	0	100.3	100.3	1	3191.11	3.25	0	81.08	0	0.4	0	0	15.71	0	0	0	0	0	0	3.13	3.13
SubstationTransformer	W_ST	369711.17	4906112.3	2.5	0	0	92	92	1	1304.05	4.25	0	73.31	0	0.63	4	0.21	3.12	0	0	0	0	0	0	10.93	10.93
Inverter	MV3-2	368671	4907928	2	0	0	89.1	89.1	1	932.79	3.25	0	70.4	0	0.67	0	0	6.19	0	0	0	0	0	0	11.81	11.81
Inverter	MV3-5	368340	4907843	2	0	0	89.1	89.1	1	940.51	3.25	0	70.47	0	0.67	0	0	6.2	0	0	0	0	0	0	11.72	11.72
Inverter	MV3-4	368502	4907925	2	0	0	89.1	89.1	1	959.94	3.25	0	70.64	0	0.68	0	0	6.24	0	0	0	0	0	0	11.5	11.5
Westbrook Inverter Enclosur	W_INV5	369719	4906574	2	0	0	89.1	89.1	1	1053.53	3.25	0	71.45	0	0.7	0	0	6.42	0	0	0	0	0	0	10.49	10.49
Inverter	MV1-15	365315	4904994	2	0	0	100.3	100.3	1	3981.66	3.25	0	83	0	0.52	0	0	17.02	0	0	0	0	0	0	-0.23	-0.23
Westbrook Inverter Enclosur	W_INV1	369409	4906578	2	0	0	86.1	86.1	1	777.79	3.25	0	68.82	0	0.63	0	0	5.87	0	0	0	0	0	0	10.73	10.73
Inverter	MV1-12	365038	4905386	2	0	0	100.3	100.3	1	4051.9	3.25	0	83.15	0	0.53	0	0	17.13	0	0	0	0	0	0	-0.51	-0.51
Inverter	MV1-4	364815	4905918	2	0	0	100.3	100.3	1	4085.6	3.25	0	83.23	0	0.54	0	0	17.18	0	0	0	0	0	0	-0.64	-0.64
Westbrook Inverter Enclosur	W_INV3	369508	4906164	2	0	0	89.1	89.1	1	1124.38	3.25	0	72.02	0	0.71	0	0	6.55	0	0	0	0	0	0	9.78	9.78
Inverter	MV1-2	364753	4906063	2	0	0	100.3	100.3	1	4110	3.25	0	83.28	0	0.54	0	0	17.22	0	0	0	0	0	0	-0.73	-0.73
Inverter	MV2-1	365842	4906816	2	0	0	97.3	97.3	1	2918.74	3.25	0	80.3	0	0.35	0	0	15.23	0	0	0	0	0	0	1.43	1.43
Inverter	MV1-1	364715	4906166	2	0	0	100.3	100.3	1	4124.98	3.25	0	83.31	0	0.54	0	0	17.25	0	0	0	0	0	0	-0.79	-0.79
Inverter	MV3-1	368156	4907976	2	0	0	89.1	89.1	1	1146.01	3.25	0	72.18	0	0.72	0	0	6.58	0	0	0	0	0	0	9.57	9.57
Inverter	MV1-8	364788	4905647	2	0	0	100.3	100.3	1	4191.06	3.25	0	83.45	0	0.55	0	0	17.35	0	0	0	0	0	0	-1.04	-1.04
Inverter	MV1-5	364671	4905892	2	0	0	100.3	100.3	1	4231.37	3.25	0	83.53	0	0.56	0	0	17.41	0	0	0	0	0	0	-1.19	-1.19
Westbrook Inverter Enclosur	W_INV7	369780	4906417	2	0	0	89.1	89.1	1	1178.71	3.25	0	72.43	0	0.72	0	0	6.64	0	0	0	0	0	0	9.26	9.26
Westbrook Inverter Enclosur	W_INV6	369875	4906578	2	0	0	89.1	89.1	1	1196.51	3.25	0	72.56	0	0.73	0	0	6.68	0	0	0	0	0	0	9.1	9.1
Inverter	MV1-11	364655	4905414	2	0	0	100.3	100.3	1	4395.71	3.25	0	83.86	0	0.58	0	0	17.67	0	0	0	0	0	0	-1.8	-1.8
Inverter	MV1-9	364561	4905646	2	0	0	100.3	100.3	1	4406.84	3.25	0	83.88	0	0.58	0	0	17.69	0	0	0	0	0	0	-1.84	-1.84
Inverter	MV1-6	364477	4905835	2	0	0	100.3	100.3	1	4433.53	3.25	0	83.93	0	0.58	0	0	17.73	0	0	0	0	0	0	-1.93	-1.93
Westbrook Inverter Enclosur	W_INV4	369673	4906164	2	0	0	89.1	89.1	1	1240.95	3.25	0	72.88	0	0.74	0	0	6.76	0	0	0	0	0	0	8.69	8.69
Inverter	MV4-15	369176	4908481	2	0	0	89.1	89.1	1	1540.64	3.25	0	74.75	0	0.8	0	0	7.28	0	0	0	0	0	0	6.22	6.22
Inverter	MV1-10	365004	4905564	2	0	0	97.3	97.3	1	4016.12	3.25	0	83.08	0	0.53	0	0	17.07	0	0	0	0	0	0	-3.37	-3.37
Inverter	MV1-7	364925	4905782	2	0	0	97.3	97.3	1	4018.71	3.25	0	83.08	0	0.53	0	0	17.08	0	0	0	0	0	0	-3.38	-3.38
Inverter	MV4-14	369176	4908507	2	0	0	89.1	89.1	1	1565.67	3.25	0	74.89	0	0.81	0	0	7.32	0	0	0	0	0	0	6.04	6.04
Inverter	MV1-14	365163	4905049	2	0	0	97.3	97.3	1	4087.17	3.25	0	83.23	0	0.54	0	0	17.19	0	0	0	0	0	0	-3.64	-3.64
Inverter	MV4-13	369051	4908605	2	0	0	89.1	89.1	1	1633.05	3.25	0	75.26	0	0.82	0	0	7.44	0	0	0	0	0	0	5.54	5.54
Inverter	MV1-13	364731	4905241	2	0	0	97.3	97.3	1	4391.26	3.25	0	83.85	0	0.58	0	0	17.66	0	0	0	0	0	0	-4.78	-4.78
Fixed Reactor Bank 1	FRB1	369378	4908755	6	0	0	89.8	89.8	1	1863.24	5.25	0	76.41	0	-1	0	0	4.13	0	0	0	0	0	0	10.24	10.24
Fixed Reactor Bank 2	FRB2	369464	4908755	6	0	0	89.8	89.8	1	1893.73	5.25	0	76.55	0	-1	0	0	4.18	0	0	0	0	0	0	10.05	10.05
Inverter	MV4-12	369043	4908803	2	0	0	89.1	89.1	1	1826.85	3.25	0	76.23	0	0.87	0	0	7.76	0	0	0	0	0	0	4.2	4.2
Inverter	MV5-6	369982	4908507	2	0	0	89.1	89.1	1	1944.12	3.25	0	76.77	0	0.89	0	0	7.95	0	0	0	0	0	0	3.44	3.44
Inverter	MV6-4	370250	4906966	2	0	0	86.1	86.1	1	1495.37	3.25	0	74.49	0	0.79	0	0	7.2	0	0	0	0	0	0	3.57	3.57
Westbrook Inverter Transfor	W_INVTR1	369403	4906578	2	0	0	78.2	78.2	1	772.76	3.25	0	68.76	0	-1.78	0	0	0.54	0	0	0	0	0	0	10.72	10.72
Inverter	MV2-2	365977	4906654	2	0	0	89.1	89.1	1	2799.34	3.25	0	79.94	0	1.1	0	0	9.31	0	0	0	0	0	0	-1.29	-1.29
Westbrook Inverter Transfor	W_INVTR2	369368	4906388	2	0	0	77.3	77.3	1	865.5	3.25	0	69.75	0	-1.84	0	0	0.6	0	0	0	0	0	0	8.84	8.84
Gardiner Substation	G_Sub	366586.3	4903349.9	2.5	0	0	90.8	90.8	1	4244.9	4.25	0	83.56	0	1.46	2.63	0.38	7.69	0	0	0	0	0	0	-4.56	-4.56
Westbrook Inverter Transfor	W_INVTR5	369725	4906574	2	0	0	77.3	77.3	1	1059.02	3.25	0	71.5	0	-1.97	0	0	0.71	0	0	0	0	0	0	7.1	7.1
Westbrook Inverter Transfor	W_INVTR3	369514	4906164	2	0	0	77.3	77.3	1	1128.41	3.25	0	72.05	0	-2.01	0	0	0.75	0	0	0	0	0	0	6.55	6.55
Inverter	MV1-3	364440	4906039	2	0	0	89.1	89.1	1	4420.5	3.25	0	83.91	0	1.5	0	0	11.67	0	0	0	0	0	0	-8.02	-8.02
Westbrook Inverter Transfor	W_INVTR7	369786	4906417	2	0	0	77.3	77.3	1	1183.93	3.25	0	72.47	0	-2.04	0	0	0.78	0	0	0	0	0	0	6.13	6.13
Westbrook Inverter Transfor	W_INVTR6	369881	4906578	2	0	0	77.3	77.3	1	1202.13	3.25	0	72.6	0	-2.05	0	0	0.79	0	0	0	0	0	0	6	6
Westbrook Inverter Transfor	W_INVTR4	369679	4906164	2	0	0	77.3	77.3	1	1245.39	3.25	0	72.91	0	-2.08	0	0	0.82	0	0	0	0	0	0	5.69	5.69
Inverters	G_Inv2	366676.9	4903239.1	2	0	0	87.7	87.7	1	4295.97	3.25	0	83.66	0	2.82	0	0	5.19	0	0	0	0	0	0	-4.01	-4.01

Inverters	G_Inv1	366526.4	4903225.8	2	0	0	87.7	87.7	1	4382.2	3.25	0	83.83	0	2.82	0	0	5.28	0	0	0	0	0	0	-4.28	-4.28
Inverters	G_Inv4	366732.8	4903105	2	0	0	87.7	87.7	1	4387.77	3.25	0	83.84	0	2.82	0	0	5.29	0	0	0	0	0	0	-4.3	-4.3
Inverters	G_Inv3	366583.7	4903091.4	2	0	0	87.7	87.7	1	4470.33	3.25	0	84.01	0	2.83	0	0	5.38	0	0	0	0	0	0	-4.55	-4.55
Inverters	G_Inv6	366788.5	4902972	2	0	0	87.7	87.7	1	4481.5	3.25	0	84.03	0	2.83	0	0	5.39	0	0	0	0	0	0	-4.59	-4.59
Inverters	G_Inv5	366638.5	4902958.1	2	0	0	87.7	87.7	1	4561.63	3.25	0	84.18	0	2.84	0	0	5.48	0	0	0	0	0	0	-4.83	-4.83
Inverters	G_Inv8	366844.5	4902838.5	2	0	0	87.7	87.7	1	4578.18	3.25	0	84.21	0	2.84	0	0	5.49	0	0	0	0	0	0	-4.88	-4.88
Inverters	G_Inv7	366694.6	4902824.7	2	0	0	87.7	87.7	1	4655.11	3.25	0	84.36	0	2.84	0	0	5.58	0	0	0	0	0	0	-5.12	-5.12
Inverters	G_Inv10	366900.7	4902704.8	2	0	0	87.7	87.7	1	4677.46	3.25	0	84.4	0	2.84	0	0	5.6	0	0	0	0	0	0	-5.18	-5.18
Inverters	G_Inv9	366750.9	4902691.8	2	0	0	87.7	87.7	1	4750.62	3.25	0	84.54	0	2.85	0	0	5.68	0	0	0	0	0	0	-5.4	-5.4
Inverter Transformer	MV3-22 T	368661	4907142	2	0	0	56.1	56.1	1	171.15	3.25	0	55.67	0	0.05	0	0	2.03	0	0	0	0	0	0	-1.69	-1.69
Inverter Transformer	MV6-4 T	370244	4906966	2	0	0	69.4	69.4	1	1489.37	3.25	0	74.46	0	1.97	0	0	4.42	0	0	0	0	0	0	-11.5	-11.5
Inverter Transformer	MV3-20 T	368683	4907317	2	0	0	56.1	56.1	1	326.06	3.25	0	61.27	0	-0.09	0	0	2.9	0	0	0	0	0	0	-8.02	-8.02
Inverter Transformer	MV6-1 T	370230	4907364	2	0	0	69.4	69.4	1	1519.49	3.25	0	74.63	0	1.98	0	0	4.46	0	0	0	0	0	0	-11.72	-11.72
Inverter Transformer	MV3-21 T	368484	4907206	2	0	0	56.1	56.1	1	341.02	3.25	0	61.66	0	-0.1	0	0	2.97	0	0	0	0	0	0	-8.47	-8.47
Inverter Transformer	MV3-14 T	368678	4907498	2	0	0	56.1	56.1	1	504.91	3.25	0	65.06	0	-0.12	0	0	3.57	0	0	0	0	0	0	-12.46	-12.46
Inverter Transformer	MV3-19 T	368352	4907347	2	0	0	56.1	56.1	1	532.47	3.25	0	65.53	0	-0.11	0	0	3.65	0	0	0	0	0	0	-13.01	-13.01
Inverter Transformer	MV3-16 T	368509	4907475	2	0	0	56.1	56.1	1	535.82	3.25	0	65.58	0	-0.11	0	0	3.66	0	0	0	0	0	0	-13.07	-13.07
Inverter Transformer	MV3-15 T	368351	4907477	2	0	0	56.1	56.1	1	625.86	3.25	0	66.93	0	-0.1	0	0	3.93	0	0	0	0	0	0	-14.7	-14.7
Inverter Transformer	MV2-1 T	365836	4906816	2	0	0	69.4	69.4	1	2924.73	3.25	0	80.32	0	2.48	0	0	5.82	0	0	0	0	0	0	-19.27	-19.27
Inverter Transformer	MV3-8 T	368685	4907712	2	0	0	56.1	56.1	1	716.43	3.25	0	68.1	0	-0.08	0	0	4.18	0	0	0	0	0	0	-16.15	-16.15
Inverter Transformer	MV3-17 T	368183	4907472	2	0	0	56.1	56.1	1	742.24	3.25	0	68.41	0	-0.07	0	0	4.25	0	0	0	0	0	0	-16.53	-16.53
Inverter Transformer	MV3-9 T	368517	4907703	2	0	0	56.1	56.1	1	743.15	3.25	0	68.42	0	-0.07	0	0	4.25	0	0	0	0	0	0	-16.54	-16.54
Inverter Transformer	MV3-11 T	368340	4907662	2	0	0	56.1	56.1	1	782.18	3.25	0	68.87	0	-0.06	0	0	4.35	0	0	0	0	0	0	-17.1	-17.1
Inverter Transformer	MV1-10 T	365010	4905564	2	0	0	69.4	69.4	1	4010.52	3.25	0	83.06	0	2.79	0	0	6.68	0	0	0	0	0	0	-23.19	-23.19
Inverter Transformer	MV1-7 T	364919	4905782	2	0	0	69.4	69.4	1	4024.42	3.25	0	83.09	0	2.79	0	0	6.69	0	0	0	0	0	0	-23.23	-23.23
Inverter Transformer	MV1-14 T	365157	4905049	2	0	0	69.4	69.4	1	4092.45	3.25	0	83.24	0	2.81	0	0	6.75	0	0	0	0	0	0	-23.44	-23.44
Inverter Transformer	MV3-10 T	368162	4907669	2	0	0	56.1	56.1	1	894.74	3.25	0	70.03	0	-0.02	0	0	4.63	0	0	0	0	0	0	-18.59	-18.59
Inverter Transformer	MV3-2 T	368677	4907928	2	0	0	56.1	56.1	1	932.27	3.25	0	70.39	0	-0.01	0	0	4.73	0	0	0	0	0	0	-19.05	-19.05
Inverter Transformer	MV3-5 T	368335	4907843	2	0	0	56.1	56.1	1	942.73	3.25	0	70.49	0	-0.01	0	0	4.75	0	0	0	0	0	0	-19.17	-19.17
Inverter Transformer	MV1-13 T	364725	4905241	2	0	0	69.4	69.4	1	4396.76	3.25	0	83.86	0	2.88	0	0	6.97	0	0	0	0	0	0	-24.36	-24.36
Inverter Transformer	MV3-4 T	368507	4907925	2	0	0	56.1	56.1	1	958.64	3.25	0	70.63	0	0	0	0	4.79	0	0	0	0	0	0	-19.36	-19.36
Inverter Transformer	MV3-13 T	367958	4907577	2	0	0	56.1	56.1	1	984.53	3.25	0	70.86	0	0.01	0	0	4.85	0	0	0	0	0	0	-19.66	-19.66
Inverter Transformer	MV3-6 T	368156	4907834	2	0	0	56.1	56.1	1	1027.63	3.25	0	71.24	0	0.02	0	0	4.95	0	0	0	0	0	0	-20.15	-20.15
Inverter Transformer	MV3-18 T	367757	4907412	2	0	0	56.1	56.1	1	1080.08	3.25	0	71.67	0	0.04	0	0	5.08	0	0	0	0	0	0	-20.73	-20.73
Inverter Transformer	MV3-7 T	367951	4907754	2	0	0	56.1	56.1	1	1102.93	3.25	0	71.85	0	0.05	0	0	5.13	0	0	0	0	0	0	-20.97	-20.97
Inverter Transformer	MV3-1 T	368150	4907976	2	0	0	56.1	56.1	1	1149.16	3.25	0	72.21	0	0.06	0	0	5.24	0	0	0	0	0	0	-21.45	-21.45
Inverter Transformer	MV3-3 T	367944	4907927	2	0	0	56.1	56.1	1	1232.44	3.25	0	72.82	0	0.1	0	0	5.43	0	0	0	0	0	0	-22.28	-22.28
Inverter Transformer	MV3-12 T	367674	4907594	2	0	0	56.1	56.1	1	1233.93	3.25	0	72.83	0	0.1	0	0	5.43	0	0	0	0	0	0	-22.3	-22.3
Inverter Transformer	MV6-2 T	370091	4907339	2	0	0	56.1	56.1	1	1378.59	3.25	0	73.79	0	0.15	0	0	5.75	0	0	0	0	0	0	-23.64	-23.64
Inverter Transformer	MV6-3 T	370202	4907140	2	0	0	56.1	56.1	1	1453.86	3.25	0	74.25	0	0.18	0	0	5.92	0	0	0	0	0	0	-24.29	-24.29
Inverter Transformer	MV4-15 T	369170	4908481	2	0	0	56.1	56.1	1	1539.01	3.25	0	74.74	0	0.21	0	0	6.1	0	0	0	0	0	0	-25	-25
Inverter Transformer	MV4-14 T	369182	4908507	2	0	0	56.1	56.1	1	1567.29	3.25	0	74.9	0	0.23	0	0	6.16	0	0	0	0	0	0	-25.23	-25.23
Inverter Transformer	MV4-13 T	369057	4908605	2	0	0	56.1	56.1	1	1634.15	3.25	0	75.27	0	0.25	0	0	6.3	0	0	0	0	0	0	-25.76	-25.76
Inverter Transformer	MV4-12 T	369049	4908803	2	0	0	56.1	56.1	1	1827.8	3.25	0	76.24	0	0.33	0	0	6.7	0	0	0	0	0	0	-27.21	-27.21
Inverter Transformer	MV4-11 T	369269	4908855	2	0	0	56.1	56.1	1	1925.86	3.25	0	76.69	0	0.37	0	0	6.9	0	0	0	0	0	0	-27.9	-27.9
Inverter Transformer	MV4-10 T	369307	4908858	2	0	0	56.1	56.1	1	1939.22	3.25	0	76.75	0	0.38	0	0	6.92	0	0	0	0	0	0	-28	-28
Inverter Transformer	MV5-6 T	369987	4908507	2	0	0	56.1	56.1	1	1947.28	3.25	0	76.79	0	0.38	0	0	6.94	0	0	0	0	0	0	-28.05	-28.05
Inverter Transformer	MV4-7 T	369040	4909001	2	0	0	56.1	56.1	1	2022.19	3.25	0	77.12	0	0.41	0	0	7.09	0	0	0	0	0	0	-28.56	-28.56
Inverter Transformer	MV4-8 T	369262	4909001	2	0	0	56.1	56.1	1	2065.2	3.25	0	77.3	0	0.43	0	0	7.17	0	0	0	0	0	0	-28.84	-28.84
Inverter Transformer	MV4-9 T	369284	4909001	2	0	0	56.1	56.1	1	2070.71	3.25	0	77.32	0	0.43	0	0	7.18	0	0	0	0	0	0	-28.88	-28.88
Inverter Transformer	MV5-5 T	370021	4908690	2	0	0	56.1	56.1	1	2112.4	3.25	0	77.5	0	0.45	0	0	7.26	0	0	0	0	0	0	-29.15	-29.15
Inverter Transformer	MV4-4 T	369033	4909199	2	0	0	56.1	56.1	1	2217.5	3.25	0	77.92	0	0.5	0	0	7.46	0	0	0	0	0	0	-29.82	-29.82
Inverter Transformer	MV5-2 T	370011	4908853	2	0	0	56.1	56.1	1	2239.39	3.25	0	78	0	0.51	0	0	7.51	0	0	0	0	0	0	-29.95	-29.95
Inverter Transformer	MV4-6 T	369249	4909192	2	0	0	56.1	56.1	1	2247.95	3.25	0	78.04	0	0.51	0	0	7.52	0	0	0	0	0	0	-30.01	-30.01
Inverter Transformer	MV4-5 T	369283	4909199	2	0	0	56.1	56.1	1	2262.47	3.25	0	78.09	0	0.52	0	0	7.55	0	0	0	0	0	0	-30.1	-30.1
Inverter Transformer	MV5-4 T	370330	4908707	2	0	0	56.1	56.1	1	2323.34	3.25	0	78.32	0	0.54	0	0	7.66	0	0	0	0	0	0	-30.47	-30.47
Inverter Transformer	MV5-3 T	370237	4908851	2	0	0	56.1	56.1	1	2371.97	3.25	0	78.5	0	0.56	0	0	7.75	0	0	0	0	0	0	-30.76	-30.76
Inverter Transformer	MV4-1 T	369017	4909397	2	0	0	56.1	56.1	1	2412.27	3.25	0	78.65	0	0.58	0	0	7.83	0	0	0	0	0	0	-31	-31
Inverter Transformer	MV4-3 T	369234	4909397	2	0	0	56.1	56.1	1	2445.37	3.25	0	78.77	0	0.59	0	0	7.89	0	0	0	0	0	0	-31.19	-31.19
Inverter Transformer	MV4-2 T	369267	4909397	2	0	0	56.1	56.1	1	2452.05	3.25	0	78.79	0	0.6	0	0	7.9	0	0	0	0	0	0	-31.23	-31.23
Inverter Transformer	MV5-1 T	370015	4909142	2	0	0	56.1	56.1	1	2485.97	3.25	0	78.91	0	0.61	0	0	7.96	0	0	0	0	0	0	-31.43	-31.43
Inverter Transformer	MV2-2 T	365982	4906654	2	0	0	56.1	56.1	1	2794.38	3.25	0	79.93	0	0.74	0	0	8.51	0	0	0	0	0	0	-33.12	-33.12
Inverter Transformer	MV2-3 T	365814	4906641	2	0	0	56.1	56.1	1	2962.71	3.25	0	80.43	0	0.81	0	0	8.8	0	0	0	0	0	0	-33.99	-33.99
Inverter Transformer	MV2-4 T	365590	4906628	2	0	0	56.1	56.1	1	3186.67	3.25	0	81.07	0	0.91	0	0	9.18	0	0	0	0	0	0	-35.1	-35.1
Inverter Transformer	MV1-15 T	365309	4904994	2	0	0	56.1	56.1	1	3986.85	3.25	0	83.01	0	1.24	0	0	10.44	0	0	0	0	0	0	-38.63	-38.63
Inverter Transformer	MV1-12 T	365044	4905386	2	0	0	56.1	56.1	1	4046.39	3.25	0	83.14	0	1.26	0	0	10.52	0	0	0	0	0	0	-38.87	-38.87
Inverter Transformer	MV1-4 T	364821	4905918	2	0	0	56.1	56.1	1	4079.82	3.25	0	83.21	0	1.28	0	0	10.57	0	0	0	0	0	0	-39	-39
Inverter Transformer	MV1-2 T	364759	4906063	2	0	0	56.1	56.1	1	4104.16	3.25	0	83.26	0	1.29	0	0	10.61	0	0	0	0	0	0	-39.1	-39.1
Inverter Transformer	MV1-1 T	364721	4906166	2	0	0	56.1	56.1	1	4119.11	3.25	0	83.3	0	1.29	0	0	10.63	0	0	0	0	0	0	-39.16	-39.16
Inverter Transformer	MV1-8 T	364782	4905647	2	0	0	56.1	56.1	1	4196.74	3.25	0	83.46	0	1.32	0	0	10.74	0	0	0	0	0	0	-39.47	-39.47
Inverter Transformer	MV1-5 T	364676	4905892	2	0	0	56.1	56.1	1	4226.55	3.25	0	83.52	0	1.33	0	0	10.79	0	0	0	0	0	0	-39.58	-39.58
Inverter Transformer	MV1-11 T	364649	4905414	2	0	0	56.1	56.1	1	4401.3	3.25	0	83.87	0	1.4	0	0	11.04	0	0	0	0	0	0	-40.25	-40.25
Inverter Transformer	MV1-9 T	364555	4905646	2	0	0	56.1	56.1	1	4412.55	3.25	0	83.89	0	1.41	0	0	11.05	0	0	0	0	0	0	-40.29	-40.29
Inverter Transformer	MV1-3 T	364435	4906039	2	0	0	56.1	56.1	1	4425.38	3.25	0	83.92	0	1.41	0	0	11.07	0	0	0	0	0	0	-40.34	-40.34

	Inverter Transformer	MV1-6 T	364482	4905835	2	0	0	56.1	56.1	1	4428.71	3.25	0	83.93	0	1.41	0	0	11.08	0	0	0	0	0	0	-40.35	-40.35
	Line Reactor	NGR	369421	4908787.5	5	0	0	45.4	45.4	1	1908.48	5.25	0	76.61	0	3.39	1.28	0.11	0.78	0	0	0	0	0	0	-36.71	-36.71
Limit. Valu	0		0																							
Level D/N:	39.3093		39.3093																							

Receiver: Vacant Lot Receptor
ID: S-VLR36
X: 368858
Y: 4907009
Z: 4.5
Ground: 0

ISO	Description	ID	X	Y	Z	Ground	ReflOrd	LxT	LxN	L/A	Dist.	hm	Freq	Adiv	K0b	Agr	Abar	z	Aatm	Afol	Ahous	Cmet	CmetN	Dc	RL	LtotT	LtotN
	Inverter	MV3-20	368689	4907317	2	0	0	100.3	100.3	1	351.33	3.25	0	61.91	0	-0.64	0	0	7.07	0	0	0	0	0	0	31.97	31.97
	Inverter	MV3-21	368478	4907206	2	0	0	100.3	100.3	1	428.04	3.25	0	63.63	0	-0.6	0	0	7.9	0	0	0	0	0	0	29.38	29.38
	Sol_Luce Substation	S_Substation	369426	4908792	3.5	0	0	112.1	112.1	1	1871.29	5.25	0	76.44	0	0.01	3.94	0.34	4.15	0	0	0	0	0	0	27.53	27.53
	Inverter	MV3-14	368684	4907498	2	0	0	100.3	100.3	1	519.04	3.25	0	65.3	0	-0.54	0	0	8.67	0	0	0	0	0	0	26.88	26.88
	Inverter	MV3-16	368514	4907475	2	0	0	100.3	100.3	1	579.22	3.25	0	66.26	0	-0.49	0	0	9.08	0	0	0	0	0	0	25.47	25.47
	Inverter	MV3-19	368357	4907347	2	0	0	100.3	100.3	1	604.36	3.25	0	66.63	0	-0.48	0	0	9.23	0	0	0	0	0	0	24.93	24.93
	Inverter	MV3-15	368357	4907477	2	0	0	100.3	100.3	1	685.59	3.25	0	67.72	0	-0.42	0	0	9.67	0	0	0	0	0	0	23.34	23.34
	Inverter	MV3-8	368680	4907712	2	0	0	100.3	100.3	1	725.19	3.25	0	68.21	0	-0.4	0	0	9.86	0	0	0	0	0	0	22.64	22.64
	Inverter	MV3-9	368512	4907703	2	0	0	100.3	100.3	1	775.47	3.25	0	68.79	0	-0.37	0	0	10.08	0	0	0	0	0	0	21.81	21.81
	Inverter	MV3-17	368178	4907472	2	0	0	100.3	100.3	1	822.66	3.25	0	69.3	0	-0.34	0	0	10.27	0	0	0	0	0	0	21.07	21.07
	Inverter	MV3-11	368346	4907662	2	0	0	100.3	100.3	1	829.79	3.25	0	69.38	0	-0.33	0	0	10.3	0	0	0	0	0	0	20.97	20.97
	Inverter	MV3-22	368656	4907142	2	0	0	89.1	89.1	1	241.87	3.25	0	58.67	0	0.34	0	0	3.65	0	0	0	0	0	0	26.4	26.4
	Inverter	MV3-10	368167	4907669	2	0	0	100.3	100.3	1	955.56	3.25	0	70.61	0	-0.27	0	0	10.76	0	0	0	0	0	0	19.21	19.21
	Inverter	MV3-13	367963	4907577	2	0	0	100.3	100.3	1	1060.03	3.25	0	71.51	0	-0.22	0	0	11.1	0	0	0	0	0	0	17.92	17.92
	Inverter	MV3-6	368162	4907834	2	0	0	100.3	100.3	1	1079.37	3.25	0	71.66	0	-0.21	0	0	11.17	0	0	0	0	0	0	17.69	17.69
	Inverter	MV3-18	367752	4907412	2	0	0	100.3	100.3	1	1177.14	3.25	0	72.42	0	-0.16	0	0	11.46	0	0	0	0	0	0	16.6	16.6
	Inverter	MV3-7	367945	4907754	2	0	0	100.3	100.3	1	1178.39	3.25	0	72.43	0	-0.16	0	0	11.46	0	0	0	0	0	0	16.59	16.59
	Inverter	MV6-2	370085	4907339	2	0	0	100.3	100.3	1	1270.6	3.25	0	73.08	0	-0.12	0	0	11.72	0	0	0	0	0	0	15.63	15.63
	Inverter	MV3-3	367939	4907927	2	0	0	100.3	100.3	1	1298.96	3.25	0	73.27	0	-0.11	0	0	11.8	0	0	0	0	0	0	15.35	15.35
	Inverter	MV3-12	367668	4907594	2	0	0	100.3	100.3	1	1326.02	3.25	0	73.45	0	-0.1	0	0	11.88	0	0	0	0	0	0	15.09	15.09
	Inverter	MV6-3	370207	4907140	2	0	0	100.3	100.3	1	1355.35	3.25	0	73.64	0	-0.09	0	0	11.95	0	0	0	0	0	0	14.81	14.81
	Inverter	MV4-11	369264	4908855	2	0	0	100.3	100.3	1	1890.12	3.25	0	76.53	0	0.1	0	0	13.23	0	0	0	0	0	0	10.46	10.46
	Inverter	MV4-10	369312	4908858	2	0	0	100.3	100.3	1	1903.92	3.25	0	76.59	0	0.1	0	0	13.26	0	0	0	0	0	0	10.36	10.36
	Inverter	MV4-7	369035	4909001	2	0	0	100.3	100.3	1	1999.85	3.25	0	77.02	0	0.13	0	0	13.46	0	0	0	0	0	0	9.7	9.7
	Inverter	MV6-1	370235	4907364	2	0	0	97.3	97.3	1	1422.03	3.25	0	74.06	0	-0.06	0	0	12.13	0	0	0	0	0	0	11.19	11.19
	Inverter	MV4-8	369256	4909001	2	0	0	100.3	100.3	1	2031.37	3.25	0	77.16	0	0.14	0	0	13.53	0	0	0	0	0	0	9.49	9.49
	Inverter	MV4-9	369289	4909001	2	0	0	100.3	100.3	1	2038.1	3.25	0	77.18	0	0.14	0	0	13.54	0	0	0	0	0	0	9.45	9.45
	Inverter	MV5-5	370015	4908690	2	0	0	100.3	100.3	1	2040.69	3.25	0	77.2	0	0.14	0	0	13.55	0	0	0	0	0	0	9.43	9.43
	Inverter	MV5-2	370006	4908853	2	0	0	100.3	100.3	1	2172.15	3.25	0	77.74	0	0.18	0	0	13.82	0	0	0	0	0	0	8.58	8.58
	Inverter	MV4-4	369027	4909199	2	0	0	100.3	100.3	1	2196.51	3.25	0	77.83	0	0.18	0	0	13.87	0	0	0	0	0	0	8.43	8.43
	Inverter	MV4-6	369243	4909192	2	0	0	100.3	100.3	1	2216.69	3.25	0	77.91	0	0.19	0	0	13.91	0	0	0	0	0	0	8.3	8.3
	Inverter	MV4-5	369289	4909199	2	0	0	100.3	100.3	1	2232.01	3.25	0	77.97	0	0.19	0	0	13.94	0	0	0	0	0	0	8.21	8.21
	Inverter	MV5-4	370324	4908707	2	0	0	100.3	100.3	1	2243.29	3.25	0	78.02	0	0.19	0	0	13.96	0	0	0	0	0	0	8.14	8.14
	Inverter	MV5-3	370231	4908851	2	0	0	100.3	100.3	1	2297.41	3.25	0	78.22	0	0.21	0	0	14.07	0	0	0	0	0	0	7.81	7.81
	Inverter	MV4-1	369011	4909397	2	0	0	100.3	100.3	1	2392.9	3.25	0	78.58	0	0.23	0	0	14.25	0	0	0	0	0	0	7.25	7.25
	Inverter	MV4-3	369229	4909397	2	0	0	100.3	100.3	1	2416.65	3.25	0	78.66	0	0.24	0	0	14.3	0	0	0	0	0	0	7.11	7.11
	Inverter	MV4-2	369272	4909397	2	0	0	100.3	100.3	1	2423.62	3.25	0	78.69	0	0.24	0	0	14.31	0	0	0	0	0	0	7.07	7.07
	Inverter	MV5-1	370020	4909142	2	0	0	100.3	100.3	1	2428.98	3.25	0	78.71	0	0.24	0	0	14.32	0	0	0	0	0	0	7.04	7.04
	DSTATCOM - 10 MVAR #2	DSAT2	369403	4908757	2.5	0	0	96.6	96.6	1	1830.99	3.5	0	76.25	0	3.19	0	0	1.61	0	0	0	0	0	0	15.58	15.58
	DSTATCOM - 10 MVAR #1	DSAT1	369437	4908757	2.5	0	0	96.6	96.6	1	1841.4	3.5	0	76.3	0	3.19	0	0	1.62	0	0	0	0	0	0	15.52	15.52
	Westbrook Inverter Enclosur	W_INV2	369374	4906388	2	0	0	89.1	89.1	1	807.41	3.25	0	69.14	0	0.64	0	0	5.94	0	0	0	0	0	0	13.34	13.34
	Inverter	MV2-3	365820	4906641	2	0	0	100.3	100.3	1	3060.21	3.25	0	80.72	0	0.37	0	0	15.48	0	0	0	0	0	0	3.75	3.75
	SubstationTransformer	W_ST	369711.17	4906112.3	2.5	0	0	92	92	1	1237.75	4.25	0	72.85	0	0.59	3.98	0.2	2.99	0	0	0	0	0	0	11.56	11.56
	Inverter	MV2-4	365586	4906624	2	0	0	100.3	100.3	1	3294.57	3.25	0	81.36	0	0.42	0	0	15.88	0	0	0	0	0	0	2.66	2.66
	Inverter	MV3-2	368671	4907928	2	0	0	89.1	89.1	1	937.84	3.25	0	70.44	0	0.67	0	0	6.2	0	0	0	0	0	0	11.75	11.75
	Westbrook Inverter Enclosur	W_INV5	369719	4906574	2	0	0	89.1	89.1	1	964.65	3.25	0	70.69	0	0.68	0	0	6.25	0	0	0	0	0	0	11.45	11.45
	Inverter	MV3-5	368340	4907843	2	0	0	89.1	89.1	1	981.78	3.25	0	70.84	0	0.68	0	0	6.28	0	0	0	0	0	0	11.26	11.26
	Inverter	MV3-4	368502	4907925	2	0	0	89.1	89.1	1	982.75	3.25	0	70.85	0	0.68	0	0	6.28	0	0	0	0	0	0	11.25	11.25
	Westbrook Inverter Enclosur	W_INV1	369409	4906578	2	0	0	86.1	86.1	1	699.55	3.25	0	67.9	0	0.61	0	0	5.7	0	0	0	0	0	0	11.85	11.85
	Westbrook Inverter Enclosur	W_INV3	369508	4906164	2	0	0	89.1	89.1	1	1066.08	3.25	0	71.56	0	0.7	0	0	6.44	0	0	0	0	0	0	10.36	10.36
	Westbrook Inverter Enclosur	W_INV7	369780	4906417	2	0	0	89.1	89.1	1	1095.7	3.25	0	71.79	0	0.71	0	0	6.49	0	0	0	0	0	0	10.07	10.07
	Westbrook Inverter Enclosur	W_INV6	369875	4906578	2	0	0	89.1	89.1	1	1104.56	3.25	0	71.86	0	0.71	0	0	6.51	0	0	0	0	0	0	9.98	9.98
	Inverter	MV1-15	365315	4904994	2	0	0	100.3	100.3	1	4075.91	3.25	0	83.2	0	0.54	0	0	17.17	0	0	0	0	0	0	-0.6	-0.6
	Inverter	MV1-12	365038	4905386	2	0	0	100.3	100.3	1	4150.49	3.25	0	83.36	0	0.55	0	0	17.29	0	0	0	0	0	0	-0.88	-0.88
	Inverter	MV1-4	364815	4905918	2	0	0	100.3	100.3	1	4187.62	3.25	0	83.44	0	0.55	0	0	17.35	0	0	0	0	0	0	-1.03	-1.03
	Inverter	MV1-2	364753	4906063	2	0	0	100.3	100.3	1	4212.59	3.25	0	83.49	0	0.56	0	0	17.38	0	0	0	0	0	0	-1.12	-1.12
	Inverter	MV1-1	364715	4906166	2	0	0	100.3	100.3	1	4227.9	3.25	0	83.52	0	0.56	0	0	17.41	0	0	0	0	0	0	-1.18	-1.18
	Inverter	MV2-1	365842	4906816	2	0	0	97.3	97.3	1	3022.17	3.25	0	80.61	0	0.37	0	0	15.41	0	0	0	0	0	0	0.93	0.93
	Westbrook Inverter Enclosur	W_INV4	369673	4906164	2	0	0	89.1	89.1	1	1173.99	3.25	0	72.39	0	0.72	0	0	6.64	0	0	0	0	0	0	9.31	9.31
	Inverter	MV1-8	364788	4905647	2	0	0	100.3	100.3	1	4291.85	3.25	0	83.65	0	0.57	0	0	17.51	0	0	0	0	0	0	-1.42	-1.42
	Inverter	MV1-5	364671	4905892	2	0	0	100.3	100.3	1	4333.44	3.25	0	83.74	0	0.57	0	0	17.57	0	0	0	0	0	0	-1.57	-1.57

Inverter	MV3-1	368156	4907976	2	0	0	89.1	89.1	1	1194.95	3.25	0	72.55	0	0.73	0	0	6.67	0	0	0	0	0	0	9.11	9.11
Inverter	MV1-11	364655	4905414	2	0	0	100.3	100.3	1	4495.47	3.25	0	84.06	0	0.59	0	0	17.82	0	0	0	0	0	0	-2.16	-2.16
Inverter	MV1-9	364561	4905646	2	0	0	100.3	100.3	1	4507.99	3.25	0	84.08	0	0.59	0	0	17.84	0	0	0	0	0	0	-2.2	-2.2
Inverter	MV1-6	364477	4905835	2	0	0	100.3	100.3	1	4535.58	3.25	0	84.13	0	0.59	0	0	17.88	0	0	0	0	0	0	-2.3	-2.3
Inverter	MV4-15	369176	4908481	2	0	0	89.1	89.1	1	1505.96	3.25	0	74.56	0	0.79	0	0	7.22	0	0	0	0	0	0	6.49	6.49
Inverter	MV4-14	369176	4908507	2	0	0	89.1	89.1	1	1531.38	3.25	0	74.7	0	0.8	0	0	7.26	0	0	0	0	0	0	6.29	6.29
Inverter	MV1-10	365004	4905564	2	0	0	97.3	97.3	1	4115.99	3.25	0	83.29	0	0.54	0	0	17.23	0	0	0	0	0	0	-3.75	-3.75
Inverter	MV1-7	364925	4905782	2	0	0	97.3	97.3	1	4119.95	3.25	0	83.3	0	0.54	0	0	17.24	0	0	0	0	0	0	-3.77	-3.77
Inverter	MV4-13	369051	4908605	2	0	0	89.1	89.1	1	1607.63	3.25	0	75.12	0	0.82	0	0	7.39	0	0	0	0	0	0	5.73	5.73
Inverter	MV1-14	365163	4905049	2	0	0	97.3	97.3	1	4182.66	3.25	0	83.43	0	0.55	0	0	17.34	0	0	0	0	0	0	-4.01	-4.01
Fixed Reactor Bank 1	FRB1	369378	4908755	6	0	0	89.8	89.8	1	1821.79	5.25	0	76.21	0	-1.01	0	0	4.06	0	0	0	0	0	0	10.51	10.51
Fixed Reactor Bank 2	FRB2	369464	4908755	6	0	0	89.8	89.8	1	1848.18	5.25	0	76.33	0	-1.01	0	0	4.11	0	0	0	0	0	0	10.34	10.34
Inverter	MV1-13	364731	4905241	2	0	0	97.3	97.3	1	4489.76	3.25	0	84.04	0	0.59	0	0	17.81	0	0	0	0	0	0	-5.14	-5.14
Inverter	MV4-12	369043	4908803	2	0	0	89.1	89.1	1	1803.52	3.25	0	76.12	0	0.86	0	0	7.72	0	0	0	0	0	0	4.35	4.35
Inverter	MV5-6	369982	4908507	2	0	0	89.1	89.1	1	1872.8	3.25	0	76.45	0	0.88	0	0	7.84	0	0	0	0	0	0	3.89	3.89
Inverter	MV6-4	370250	4906966	2	0	0	86.1	86.1	1	1392.67	3.25	0	73.88	0	0.77	0	0	7.02	0	0	0	0	0	0	4.39	4.39
Westbrook Inverter Transfor	W_INVTR1	369403	4906578	2	0	0	78.2	78.2	1	694.83	3.25	0	67.84	0	-1.72	0	0	0.5	0	0	0	0	0	0	11.62	11.62
Inverter	MV2-2	365977	4906654	2	0	0	89.1	89.1	1	2902.79	3.25	0	80.26	0	1.12	0	0	9.47	0	0	0	0	0	0	-1.79	-1.79
Westbrook Inverter Transfor	W_INVTR2	369368	4906388	2	0	0	77.3	77.3	1	803.58	3.25	0	69.1	0	-1.8	0	0	0.56	0	0	0	0	0	0	9.48	9.48
Gardiner Substation	G_Sub	366586.3	4903349.9	2.5	0	0	90.8	90.8	1	4306.93	4.25	0	83.68	0	1.47	2.6	0.38	7.77	0	0	0	0	0	0	-4.75	-4.75
Westbrook Inverter Transfor	W_INVTR5	369725	4906574	2	0	0	77.3	77.3	1	970.01	3.25	0	70.74	0	-1.91	0	0	0.66	0	0	0	0	0	0	7.86	7.86
Westbrook Inverter Transfor	W_INVTR3	369514	4906164	2	0	0	77.3	77.3	1	1069.75	3.25	0	71.59	0	-1.98	0	0	0.72	0	0	0	0	0	0	7.01	7.01
Westbrook Inverter Transfor	W_INVTR7	369786	4906417	2	0	0	77.3	77.3	1	1100.75	3.25	0	71.83	0	-1.99	0	0	0.74	0	0	0	0	0	0	6.77	6.77
Westbrook Inverter Transfor	W_INVTR6	369881	4906578	2	0	0	77.3	77.3	1	1110.09	3.25	0	71.91	0	-2	0	0	0.74	0	0	0	0	0	0	6.69	6.69
Inverter	MV1-3	364440	4906039	2	0	0	89.1	89.1	1	4523.23	3.25	0	84.11	0	1.52	0	0	11.82	0	0	0	0	0	0	-8.39	-8.39
Westbrook Inverter Transfor	W_INVTR4	369679	4906164	2	0	0	77.3	77.3	1	1178.16	3.25	0	72.42	0	-2.04	0	0	0.78	0	0	0	0	0	0	6.18	6.18
Inverters	G_Inv2	366676.9	4903239.1	2	0	0	87.7	87.7	1	4355.38	3.25	0	83.78	0	2.82	0	0	5.26	0	0	0	0	0	0	-4.2	-4.2
Inverters	G_Inv1	366526.4	4903225.8	2	0	0	87.7	87.7	1	4443.98	3.25	0	83.96	0	2.83	0	0	5.35	0	0	0	0	0	0	-4.47	-4.47
Inverters	G_Inv4	366732.8	4903105	2	0	0	87.7	87.7	1	4444.96	3.25	0	83.96	0	2.83	0	0	5.35	0	0	0	0	0	0	-4.48	-4.48
Inverters	G_Inv3	366583.7	4903091.4	2	0	0	87.7	87.7	1	4529.9	3.25	0	84.12	0	2.83	0	0	5.44	0	0	0	0	0	0	-4.74	-4.74
Inverters	G_Inv6	366788.5	4902972	2	0	0	87.7	87.7	1	4536.54	3.25	0	84.13	0	2.83	0	0	5.45	0	0	0	0	0	0	-4.76	-4.76
Inverters	G_Inv5	366638.5	4902958.1	2	0	0	87.7	87.7	1	4619.09	3.25	0	84.29	0	2.84	0	0	5.54	0	0	0	0	0	0	-5.01	-5.01
Inverters	G_Inv8	366844.5	4902838.5	2	0	0	87.7	87.7	1	4631.12	3.25	0	84.31	0	2.84	0	0	5.55	0	0	0	0	0	0	-5.04	-5.04
Inverters	G_Inv7	366694.6	4902824.7	2	0	0	87.7	87.7	1	4710.49	3.25	0	84.46	0	2.85	0	0	5.63	0	0	0	0	0	0	-5.28	-5.28
Inverters	G_Inv10	366900.7	4902704.8	2	0	0	87.7	87.7	1	4728.34	3.25	0	84.49	0	2.85	0	0	5.65	0	0	0	0	0	0	-5.33	-5.33
Inverters	G_Inv9	366750.9	4902691.8	2	0	0	87.7	87.7	1	4803.97	3.25	0	84.63	0	2.85	0	0	5.73	0	0	0	0	0	0	-5.56	-5.56
Inverter Transformer	MV3-22 T	368661	4907142	2	0	0	56.1	56.1	1	237.71	3.25	0	58.52	0	0	0	0	2.46	0	0	0	0	0	0	-4.93	-4.93
Inverter Transformer	MV6-4 T	370244	4906966	2	0	0	69.4	69.4	1	1386.67	3.25	0	73.84	0	1.92	0	0	4.3	0	0	0	0	0	0	-10.71	-10.71
Inverter Transformer	MV6-1 T	370230	4907364	2	0	0	69.4	69.4	1	1417.19	3.25	0	74.03	0	1.94	0	0	4.34	0	0	0	0	0	0	-10.95	-10.95
Inverter Transformer	MV3-20 T	368683	4907317	2	0	0	56.1	56.1	1	354.25	3.25	0	61.99	0	-0.1	0	0	3.03	0	0	0	0	0	0	-8.85	-8.85
Inverter Transformer	MV3-21 T	368484	4907206	2	0	0	56.1	56.1	1	422.72	3.25	0	63.52	0	-0.12	0	0	3.29	0	0	0	0	0	0	-10.64	-10.64
Inverter Transformer	MV3-14 T	368678	4907498	2	0	0	56.1	56.1	1	521.08	3.25	0	65.34	0	-0.12	0	0	3.62	0	0	0	0	0	0	-12.78	-12.78
Inverter Transformer	MV3-16 T	368509	4907475	2	0	0	56.1	56.1	1	582.21	3.25	0	66.3	0	-0.11	0	0	3.8	0	0	0	0	0	0	-13.94	-13.94
Inverter Transformer	MV3-19 T	368352	4907347	2	0	0	56.1	56.1	1	608.51	3.25	0	66.69	0	-0.1	0	0	3.88	0	0	0	0	0	0	-14.4	-14.4
Inverter Transformer	MV2-1 T	365836	4906816	2	0	0	69.4	69.4	1	3028.16	3.25	0	80.62	0	2.52	0	0	5.91	0	0	0	0	0	0	-19.7	-19.7
Inverter Transformer	MV3-15 T	368351	4907477	2	0	0	56.1	56.1	1	689.98	3.25	0	67.78	0	-0.08	0	0	4.11	0	0	0	0	0	0	-15.74	-15.74
Inverter Transformer	MV3-8 T	368685	4907712	2	0	0	56.1	56.1	1	723.98	3.25	0	68.19	0	-0.07	0	0	4.2	0	0	0	0	0	0	-16.26	-16.26
Inverter Transformer	MV3-9 T	368517	4907703	2	0	0	56.1	56.1	1	773.25	3.25	0	68.77	0	-0.06	0	0	4.33	0	0	0	0	0	0	-16.97	-16.97
Inverter Transformer	MV3-17 T	368183	4907472	2	0	0	56.1	56.1	1	818.54	3.25	0	69.26	0	-0.05	0	0	4.44	0	0	0	0	0	0	-17.6	-17.6
Inverter Transformer	MV3-11 T	368340	4907662	2	0	0	56.1	56.1	1	833.51	3.25	0	69.42	0	-0.04	0	0	4.48	0	0	0	0	0	0	-17.8	-17.8
Inverter Transformer	MV1-10 T	365010	4905564	2	0	0	69.4	69.4	1	4110.37	3.25	0	83.28	0	2.81	0	0	6.76	0	0	0	0	0	0	-23.5	-23.5
Inverter Transformer	MV1-7 T	364919	4905782	2	0	0	69.4	69.4	1	4125.68	3.25	0	83.31	0	2.82	0	0	6.77	0	0	0	0	0	0	-23.55	-23.55
Inverter Transformer	MV1-14 T	365157	4905049	2	0	0	69.4	69.4	1	4187.96	3.25	0	83.44	0	2.83	0	0	6.82	0	0	0	0	0	0	-23.74	-23.74
Inverter Transformer	MV3-2 T	368677	4907928	2	0	0	56.1	56.1	1	936.66	3.25	0	70.43	0	-0.01	0	0	4.74	0	0	0	0	0	0	-19.1	-19.1
Inverter Transformer	MV3-10 T	368162	4907669	2	0	0	56.1	56.1	1	959.18	3.25	0	70.64	0	0	0	0	4.79	0	0	0	0	0	0	-19.37	-19.37
Inverter Transformer	MV1-13 T	364725	4905241	2	0	0	69.4	69.4	1	4495.28	3.25	0	84.06	0	2.9	0	0	7.04	0	0	0	0	0	0	-24.64	-24.64
Inverter Transformer	MV3-4 T	368507	4907925	2	0	0	56.1	56.1	1	980.95	3.25	0	70.83	0	0.01	0	0	4.84	0	0	0	0	0	0	-19.62	-19.62
Inverter Transformer	MV3-5 T	368335	4907843	2	0	0	56.1	56.1	1	984.42	3.25	0	70.86	0	0.01	0	0	4.85	0	0	0	0	0	0	-19.66	-19.66
Inverter Transformer	MV3-13 T	367958	4907577	2	0	0	56.1	56.1	1	1064.25	3.25	0	71.54	0	0.03	0	0	5.04	0	0	0	0	0	0	-20.56	-20.56
Inverter Transformer	MV3-6 T	368156	4907834	2	0	0	56.1	56.1	1	1083.25	3.25	0	71.69	0	0.04	0	0	5.09	0	0	0	0	0	0	-20.76	-20.76
Inverter Transformer	MV3-18 T	367757	4907412	2	0	0	56.1	56.1	1	1172.44	3.25	0	72.38	0	0.07	0	0	5.29	0	0	0	0	0	0	-21.69	-21.69
Inverter Transformer	MV3-7 T	367951	4907754	2	0	0	56.1	56.1	1	1173.75	3.25	0	72.39	0	0.07	0	0	5.3	0	0	0	0	0	0	-21.7	-21.7
Inverter Transformer	MV3-1 T	368150	4907976	2	0	0	56.1	56.1	1	1198.48	3.25	0	72.57	0	0.08	0	0	5.35	0	0	0	0	0	0	-21.95	-21.95
Inverter Transformer	MV6-2 T	370091	4907339	2	0	0	56.1	56.1	1	1276.4	3.25	0	73.12	0	0.11	0	0	5.53	0	0	0	0	0	0	-22.7	-22.7
Inverter Transformer	MV3-3 T	367944	4907927	2	0	0	56.1	56.1	1	1295.43	3.25	0	73.25	0	0.12	0	0	5.57	0	0	0	0	0	0	-22.88	-22.88
Inverter Transformer	MV3-12 T	367674	4907594	2	0	0	56.1	56.1	1	1320.64	3.25	0	73.42	0	0.13	0	0	5.63	0	0	0	0	0	0	-23.11	-23.11
Inverter Transformer	MV6-3 T	370202	4907140	2	0	0	56.1	56.1	1	1350.37	3.25	0	73.61	0	0.14	0	0	5.69	0	0	0	0	0	0	-23.38	-23.38
Inverter Transformer	MV4-15 T	369170	4908481	2	0	0	56.1	56.1	1	1504.7	3.25	0	74.55	0	0.2	0	0	6.03	0	0	0	0	0	0	-24.72	-24.72
Inverter Transformer	MV4-14 T	369182	4908507	2	0	0	56.1	56.1	1	1532.64	3.25	0	74.71	0	0.21	0	0	6.09	0	0	0	0	0	0	-24.95	-24.95
Inverter Transformer	MV4-13 T	369057	4908605	2	0	0	56.1	56.1	1	1608.36	3.25	0	75.13	0	0.24	0	0	6.25	0	0	0	0	0	0	-25.56	-25.56
Inverter Transformer	MV4-12 T	369049	4908803	2	0	0	56.1	56.1	1	1804.14	3.25	0	76.13	0	0.32	0	0	6.65	0	0	0	0	0	0	-27.04	-27.04
Inverter Transformer	MV5-6 T	369987	4908507	2	0	0	56.1	56.1	1	1875.81	3.25	0	76.46	0	0.35	0	0	6.8	0	0	0	0	0	0	-27.55	-27.55
Inverter Transformer	MV4-11 T	369269	4908855	2	0	0	56.1	56.1	1	1891.2	3.25	0	76.53	0	0.36	0	0	6.83	0	0	0	0	0	0	-27.66	-27.66
Inverter Transformer	MV4-10 T	369307	4908858	2	0	0	56.1	56.1	1	1902.74	3.25	0	76.59	0	0.36	0	0	6.85	0	0	0	0	0	0	-27.74	-27.74

	Inverter Transformer	MV4-7 T	369040	4909001	2	0	0	56.1	56.1	1	2000.3	3.25	0	77.02	0	0.4	0	0	7.04	0	0	0	0	0	0	-28.41	-28.41
	Inverter Transformer	MV4-8 T	369262	4909001	2	0	0	56.1	56.1	1	2032.56	3.25	0	77.16	0	0.42	0	0	7.11	0	0	0	0	0	0	-28.63	-28.63
	Inverter Transformer	MV4-9 T	369284	4909001	2	0	0	56.1	56.1	1	2037.04	3.25	0	77.18	0	0.42	0	0	7.12	0	0	0	0	0	0	-28.66	-28.66
	Inverter Transformer	MV5-5 T	370021	4908690	2	0	0	56.1	56.1	1	2044.1	3.25	0	77.21	0	0.42	0	0	7.13	0	0	0	0	0	0	-28.7	-28.7
	Inverter Transformer	MV5-2 T	370011	4908853	2	0	0	56.1	56.1	1	2174.8	3.25	0	77.75	0	0.48	0	0	7.38	0	0	0	0	0	0	-29.55	-29.55
	Inverter Transformer	MV4-4 T	369033	4909199	2	0	0	56.1	56.1	1	2196.98	3.25	0	77.84	0	0.49	0	0	7.42	0	0	0	0	0	0	-29.69	-29.69
	Inverter Transformer	MV4-6 T	369249	4909192	2	0	0	56.1	56.1	1	2217.74	3.25	0	77.92	0	0.5	0	0	7.46	0	0	0	0	0	0	-29.82	-29.82
	Inverter Transformer	MV4-5 T	369283	4909199	2	0	0	56.1	56.1	1	2230.86	3.25	0	77.97	0	0.5	0	0	7.49	0	0	0	0	0	0	-29.9	-29.9
	Inverter Transformer	MV5-4 T	370330	4908707	2	0	0	56.1	56.1	1	2247.22	3.25	0	78.03	0	0.51	0	0	7.52	0	0	0	0	0	0	-30	-30
	Inverter Transformer	MV5-3 T	370237	4908851	2	0	0	56.1	56.1	1	2301	3.25	0	78.24	0	0.53	0	0	7.62	0	0	0	0	0	0	-30.33	-30.33
	Inverter Transformer	MV4-1 T	369017	4909397	2	0	0	56.1	56.1	1	2393.29	3.25	0	78.58	0	0.57	0	0	7.79	0	0	0	0	0	0	-30.89	-30.89
	Inverter Transformer	MV4-3 T	369234	4909397	2	0	0	56.1	56.1	1	2417.42	3.25	0	78.67	0	0.58	0	0	7.84	0	0	0	0	0	0	-31.03	-31.03
	Inverter Transformer	MV4-2 T	369267	4909397	2	0	0	56.1	56.1	1	2422.77	3.25	0	78.69	0	0.58	0	0	7.85	0	0	0	0	0	0	-31.06	-31.06
	Inverter Transformer	MV5-1 T	370015	4909142	2	0	0	56.1	56.1	1	2426.59	3.25	0	78.7	0	0.59	0	0	7.86	0	0	0	0	0	0	-31.08	-31.08
	Inverter Transformer	MV2-2 T	365982	4906654	2	0	0	56.1	56.1	1	2897.83	3.25	0	80.24	0	0.79	0	0	8.69	0	0	0	0	0	0	-33.66	-33.66
	Inverter Transformer	MV2-3 T	365814	4906641	2	0	0	56.1	56.1	1	3066.16	3.25	0	80.73	0	0.86	0	0	8.98	0	0	0	0	0	0	-34.51	-34.51
	Inverter Transformer	MV2-4 T	365590	4906628	2	0	0	56.1	56.1	1	3290.14	3.25	0	81.34	0	0.95	0	0	9.35	0	0	0	0	0	0	-35.59	-35.59
	Inverter Transformer	MV1-15 T	365309	4904994	2	0	0	56.1	56.1	1	4081.13	3.25	0	83.22	0	1.28	0	0	10.57	0	0	0	0	0	0	-39.01	-39.01
	Inverter Transformer	MV1-12 T	365044	4905386	2	0	0	56.1	56.1	1	4144.96	3.25	0	83.35	0	1.3	0	0	10.67	0	0	0	0	0	0	-39.26	-39.26
	Inverter Transformer	MV1-4 T	364821	4905918	2	0	0	56.1	56.1	1	4181.82	3.25	0	83.43	0	1.32	0	0	10.72	0	0	0	0	0	0	-39.41	-39.41
	Inverter Transformer	MV1-2 T	364759	4906063	2	0	0	56.1	56.1	1	4206.75	3.25	0	83.48	0	1.33	0	0	10.76	0	0	0	0	0	0	-39.5	-39.5
	Inverter Transformer	MV1-1 T	364721	4906166	2	0	0	56.1	56.1	1	4222.02	3.25	0	83.51	0	1.33	0	0	10.78	0	0	0	0	0	0	-39.56	-39.56
	Inverter Transformer	MV1-8 T	364782	4905647	2	0	0	56.1	56.1	1	4297.54	3.25	0	83.66	0	1.36	0	0	10.89	0	0	0	0	0	0	-39.86	-39.86
	Inverter Transformer	MV1-5 T	364676	4905892	2	0	0	56.1	56.1	1	4328.6	3.25	0	83.73	0	1.37	0	0	10.93	0	0	0	0	0	0	-39.98	-39.98
	Inverter Transformer	MV1-11 T	364649	4905414	2	0	0	56.1	56.1	1	4501.08	3.25	0	84.07	0	1.44	0	0	11.18	0	0	0	0	0	0	-40.62	-40.62
	Inverter Transformer	MV1-9 T	364555	4905646	2	0	0	56.1	56.1	1	4513.71	3.25	0	84.09	0	1.44	0	0	11.19	0	0	0	0	0	0	-40.67	-40.67
	Inverter Transformer	MV1-3 T	364435	4906039	2	0	0	56.1	56.1	1	4528.12	3.25	0	84.12	0	1.45	0	0	11.21	0	0	0	0	0	0	-40.72	-40.72
	Inverter Transformer	MV1-6 T	364482	4905835	2	0	0	56.1	56.1	1	4530.75	3.25	0	84.12	0	1.45	0	0	11.22	0	0	0	0	0	0	-40.73	-40.73
	Line Reactor	NGR	369421	4908787.5	5	0	0	45.4	45.4	1	1865.48	5.25	0	76.42	0	3.39	1.28	0.11	0.76	0	0	0	0	0	0	-36.5	-36.5
Limit. Valu	0	0																								
Level D/N:	37.9908	37.9908																								

Receiver: Vacant Lot Receptor
ID: S-VLR37
X: 366530
Y: 4905901
Z: 4.5
Ground: 0

ISO	Description	ID	X	Y	Z	Ground	ReflOrd	LxT	LxN	L/A	Dist.	hm	Freq	Adiv	K0b	Agr	Abar	z	Aatm	Afol	Ahous	Cmet	CmetN	Dc	RL	LtotT	LtotN
	Inverter	MV2-3	365820	4906641	2	0	0	100.3	100.3	1	1025.53	3.25	0	71.22	0	-0.23	0	0	10.99	0	0	0	0	0	0	18.33	18.33
	Sol_Luce Substation	S_Substation	369426	4908792	3.5	0	0	112.1	112.1	1	4092.03	5.25	0	83.24	0	0.63	3.08	0.25	7.49	0	0	0	0	0	0	17.64	17.64
	Inverter	MV2-4	365586	4906624	2	0	0	100.3	100.3	1	1189.06	3.25	0	72.5	0	-0.16	0	0	11.49	0	0	0	0	0	0	16.47	16.47
	Inverter	MV1-15	365315	4904994	2	0	0	100.3	100.3	1	1516.21	3.25	0	74.62	0	-0.03	0	0	12.36	0	0	0	0	0	0	13.36	13.36
	Inverter	MV1-12	365038	4905386	2	0	0	100.3	100.3	1	1578.38	3.25	0	74.96	0	-0.01	0	0	12.52	0	0	0	0	0	0	12.84	12.84
	Inverter	MV2-1	365842	4906816	2	0	0	97.3	97.3	1	1144.8	3.25	0	72.17	0	-0.18	0	0	11.36	0	0	0	0	0	0	13.95	13.95
	Inverter	MV1-4	364815	4905918	2	0	0	100.3	100.3	1	1715.09	3.25	0	75.69	0	0.04	0	0	12.84	0	0	0	0	0	0	11.75	11.75
	Inverter	MV1-8	364788	4905647	2	0	0	100.3	100.3	1	1760.42	3.25	0	75.91	0	0.06	0	0	12.94	0	0	0	0	0	0	11.4	11.4
	Inverter	MV1-2	364753	4906063	2	0	0	100.3	100.3	1	1784.37	3.25	0	76.03	0	0.06	0	0	12.99	0	0	0	0	0	0	11.22	11.22
	Inverter	MV1-1	364715	4906166	2	0	0	100.3	100.3	1	1834.25	3.25	0	76.27	0	0.08	0	0	13.1	0	0	0	0	0	0	10.86	10.86
	Inverter	MV1-5	364671	4905892	2	0	0	100.3	100.3	1	1859.02	3.25	0	76.39	0	0.09	0	0	13.16	0	0	0	0	0	0	10.68	10.68
	Inverter	MV1-11	364655	4905414	2	0	0	100.3	100.3	1	1937.21	3.25	0	76.74	0	0.11	0	0	13.33	0	0	0	0	0	0	10.13	10.13
	Inverter	MV3-18	367752	4907412	2	0	0	100.3	100.3	1	1943.3	3.25	0	76.77	0	0.11	0	0	13.34	0	0	0	0	0	0	10.09	10.09
	Inverter	MV1-9	364561	4905646	2	0	0	100.3	100.3	1	1985.45	3.25	0	76.96	0	0.13	0	0	13.43	0	0	0	0	0	0	9.8	9.8
	Inverter	MV3-12	367668	4907594	2	0	0	100.3	100.3	1	2039.93	3.25	0	77.19	0	0.14	0	0	13.55	0	0	0	0	0	0	9.43	9.43
	Inverter	MV1-6	364477	4905835	2	0	0	100.3	100.3	1	2054.06	3.25	0	77.25	0	0.14	0	0	13.57	0	0	0	0	0	0	9.34	9.34
	Inverter	MV3-13	367963	4907577	2	0	0	100.3	100.3	1	2205.1	3.25	0	77.87	0	0.19	0	0	13.88	0	0	0	0	0	0	8.38	8.38
	Inverter	MV1-10	365004	4905564	2	0	0	97.3	97.3	1	1562.77	3.25	0	74.88	0	-0.01	0	0	12.48	0	0	0	0	0	0	9.97	9.97
	Inverter	MV1-7	364925	4905782	2	0	0	97.3	97.3	1	1609.41	3.25	0	75.13	0	0.01	0	0	12.59	0	0	0	0	0	0	9.58	9.58
	Inverter	MV1-14	365163	4905049	2	0	0	97.3	97.3	1	1610.78	3.25	0	75.14	0	0.01	0	0	12.59	0	0	0	0	0	0	9.57	9.57
	Inverter	MV3-17	368178	4907472	2	0	0	100.3	100.3	1	2276.83	3.25	0	78.15	0	0.2	0	0	14.03	0	0	0	0	0	0	7.94	7.94
	Inverter	MV3-19	368357	4907347	2	0	0	100.3	100.3	1	2329.99	3.25	0	78.35	0	0.22	0	0	14.13	0	0	0	0	0	0	7.62	7.62
	Inverter	MV3-7	367945	4907754	2	0	0	100.3	100.3	1	2331.49	3.25	0	78.35	0	0.22	0	0	14.13	0	0	0	0	0	0	7.61	7.61
	Inverter	MV3-21	368478	4907206	2	0	0	100.3	100.3	1	2344.72	3.25	0	78.4	0	0.22	0	0	14.16	0	0	0	0	0	0	7.53	7.53
	Inverter	MV3-10	368167	4907669	2	0	0	100.3	100.3	1	2409.48	3.25	0	78.64	0	0.24	0	0	14.29	0	0	0	0	0	0	7.15	7.15
	Inverter	MV3-15	368357	4907477	2	0	0	100.3	100.3	1	2412.82	3.25	0	78.65	0	0.24	0	0	14.29	0	0	0	0	0	0	7.13	7.13
	Inverter	MV3-3	367939	4907927	2	0	0	100.3	100.3	1	2467.79	3.25	0	78.85	0	0.25	0	0	14.4	0	0	0	0	0	0	6.82	6.82
	Inverter	MV3-11	368346	4907662	2	0	0	100.3	100.3	1	2529.62	3.25	0	79.06	0	0.26	0	0	14.51	0	0	0	0	0	0	6.47	6.47
	Inverter	MV3-6	368162	4907834	2	0	0	100.3	100.3	1	2529.81	3.25	0	79.06	0	0.26	0	0	14.51	0	0	0	0	0	0	6.47	6.47
	Inverter	MV3-16	368514	4907475	2	0	0	100.3	100.3	1	2532.54	3.25	0	79.07	0	0.26	0	0	14.52	0	0	0	0	0	0	6.46	6.46
	Inverter	MV3-20	368689	4907317	2	0	0	100.3	100.3	1	2581.93	3.25	0	79.24	0	0.28	0	0	14.61	0	0	0	0	0	0	6.19	6.19
	Inverter	MV3-9	368512	4907703	2	0	0	100.3	100.3	1	2678.72	3.25	0	79.56	0	0.3	0	0	14.79	0	0	0	0	0	0	5.66	5.66
	Inverter	MV3-14	368684	4907498	2	0	0	100.3	100.3	1	2681.44	3.25	0	79.57	0	0.3	0	0	14.8	0	0	0	0	0	0	5.65	5.65
	Inverter	MV1-13	364731	4905241	2	0	0	97.3	97.3	1	1916.25	3.25	0	76.65	0	0.1	0	0	13.28	0	0	0	0	0	0	7.27	7.27

Inverter	MV3-8	368680	4907712	2	0	0	100.3	100.3	1	2811.09	3.25	0	79.98	0	0.32	0	0	15.03	0	0	0	0	0	0	4.98	4.98
Inverter	MV2-2	365977	4906654	2	0	0	89.1	89.1	1	934.25	3.25	0	70.41	0	0.67	0	0	6.19	0	0	0	0	0	0	11.79	11.79
Inverter	MV6-2	370085	4907339	2	0	0	100.3	100.3	1	3834.82	3.25	0	82.67	0	0.5	0	0	16.78	0	0	0	0	0	0	0.35	0.35
Inverter	MV6-3	370207	4907140	2	0	0	100.3	100.3	1	3880.14	3.25	0	82.78	0	0.51	0	0	16.86	0	0	0	0	0	0	0.17	0.17
Inverter	MV4-7	369035	4909001	2	0	0	100.3	100.3	1	3985.6	3.25	0	83.01	0	0.53	0	0	17.03	0	0	0	0	0	0	-0.25	-0.25
Inverter	MV4-11	369264	4908855	2	0	0	100.3	100.3	1	4025.03	3.25	0	83.1	0	0.53	0	0	17.09	0	0	0	0	0	0	-0.4	-0.4
Inverter	MV4-10	369312	4908858	2	0	0	100.3	100.3	1	4059.97	3.25	0	83.17	0	0.54	0	0	17.14	0	0	0	0	0	0	-0.54	-0.54
Inverter	MV4-8	369256	4909001	2	0	0	100.3	100.3	1	4128.08	3.25	0	83.31	0	0.54	0	0	17.25	0	0	0	0	0	0	-0.8	-0.8
Inverter	MV4-4	369027	4909199	2	0	0	100.3	100.3	1	4136.64	3.25	0	83.33	0	0.55	0	0	17.27	0	0	0	0	0	0	-0.83	-0.83
Inverter	MV4-9	369289	4909001	2	0	0	100.3	100.3	1	4149.95	3.25	0	83.36	0	0.55	0	0	17.29	0	0	0	0	0	0	-0.88	-0.88
Inverter	MV4-6	369243	4909192	2	0	0	100.3	100.3	1	4265.1	3.25	0	83.6	0	0.56	0	0	17.47	0	0	0	0	0	0	-1.32	-1.32
Inverter	MV4-1	369011	4909397	2	0	0	100.3	100.3	1	4286.89	3.25	0	83.64	0	0.57	0	0	17.5	0	0	0	0	0	0	-1.4	-1.4
Inverter	MV4-5	369289	4909199	2	0	0	100.3	100.3	1	4299.87	3.25	0	83.67	0	0.57	0	0	17.52	0	0	0	0	0	0	-1.45	-1.45
Inverter	MV4-3	369229	4909397	2	0	0	100.3	100.3	1	4416.63	3.25	0	83.9	0	0.58	0	0	17.7	0	0	0	0	0	0	-1.87	-1.87
Inverter	MV4-2	369272	4909397	2	0	0	100.3	100.3	1	4443.04	3.25	0	83.95	0	0.58	0	0	17.74	0	0	0	0	0	0	-1.97	-1.97
Inverter	MV5-5	370015	4908690	2	0	0	100.3	100.3	1	4463.6	3.25	0	83.99	0	0.59	0	0	17.77	0	0	0	0	0	0	-2.04	-2.04
Inverter	MV5-2	370006	4908853	2	0	0	100.3	100.3	1	4560.36	3.25	0	84.18	0	0.6	0	0	17.92	0	0	0	0	0	0	-2.39	-2.39
Inverter	MV5-4	370324	4908707	2	0	0	100.3	100.3	1	4718.91	3.25	0	84.48	0	0.61	0	0	18.16	0	0	0	0	0	0	-2.94	-2.94
Inverter	MV5-3	370231	4908851	2	0	0	100.3	100.3	1	4732.85	3.25	0	84.5	0	0.62	0	0	18.18	0	0	0	0	0	0	-2.99	-2.99
Inverter	MV5-1	370020	4909142	2	0	0	100.3	100.3	1	4762.79	3.25	0	84.56	0	0.62	0	0	18.23	0	0	0	0	0	0	-3.09	-3.09
Inverter	MV6-1	370235	4907364	2	0	0	97.3	97.3	1	3983.39	3.25	0	83.01	0	0.52	0	0	17.02	0	0	0	0	0	0	-3.24	-3.24
DSTATCOM - 10 MVAR #2	DSAT2	369403	4908757	2.5	0	0	96.6	96.6	1	4051.03	3.5	0	83.15	0	3.58	0	0	2.87	0	0	0	0	0	0	7.04	7.04
DSTATCOM - 10 MVAR #1	DSAT1	369437	4908757	2.5	0	0	96.6	96.6	1	4075.22	3.5	0	83.2	0	3.58	0	0	2.88	0	0	0	0	0	0	6.97	6.97
Gardiner Substation	G_Sub	366586.3	4903349.9	2.5	0	0	90.8	90.8	1	2551.72	4.25	0	79.14	0	1.06	3.65	0.37	5.27	0	0	0	0	0	0	1.66	1.66
Inverter	MV1-3	364440	4906039	2	0	0	89.1	89.1	1	2094.55	3.25	0	77.42	0	0.93	0	0	8.2	0	0	0	0	0	0	2.51	2.51
SubstationTransformer	W_ST	369711.17	4906112.3	2.5	0	0	92	92	1	3188.18	4.25	0	81.07	0	1.13	2.92	0.29	6.24	0	0	0	0	0	0	0.63	0.63
Inverter	MV3-22	368656	4907142	2	0	0	89.1	89.1	1	2461.7	3.25	0	78.82	0	1.02	0	0	8.79	0	0	0	0	0	0	0.43	0.43
Inverter	MV3-1	368156	4907976	2	0	0	89.1	89.1	1	2636.19	3.25	0	79.42	0	1.06	0	0	9.06	0	0	0	0	0	0	-0.48	-0.48
Inverter	MV3-5	368340	4907843	2	0	0	89.1	89.1	1	2654.71	3.25	0	79.48	0	1.06	0	0	9.09	0	0	0	0	0	0	-0.57	-0.57
Inverter	MV3-4	368502	4907925	2	0	0	89.1	89.1	1	2825.84	3.25	0	80.02	0	1.1	0	0	9.35	0	0	0	0	0	0	-1.42	-1.42
Westbrook Inverter Enclosur	W_INV2	369374	4906388	2	0	0	89.1	89.1	1	2885.4	3.25	0	80.2	0	1.12	0	0	9.44	0	0	0	0	0	0	-1.71	-1.71
Inverter	MV3-2	368671	4907928	2	0	0	89.1	89.1	1	2948.32	3.25	0	80.39	0	1.13	0	0	9.54	0	0	0	0	0	0	-2.01	-2.01
Westbrook Inverter Enclosur	W_INV3	369508	4906164	2	0	0	89.1	89.1	1	2989.59	3.25	0	80.51	0	1.14	0	0	9.6	0	0	0	0	0	0	-2.2	-2.2
Inverters	G_Inv2	366676.9	4903239.1	2	0	0	87.7	87.7	1	2665.95	3.25	0	79.52	0	2.66	0	0	3.4	0	0	0	0	0	0	2.08	2.08
Inverters	G_Inv1	366526.4	4903225.8	2	0	0	87.7	87.7	1	2675.2	3.25	0	79.55	0	2.66	0	0	3.41	0	0	0	0	0	0	2.04	2.04
Westbrook Inverter Enclosur	W_INV4	369673	4906164	2	0	0	89.1	89.1	1	3153.99	3.25	0	80.98	0	1.18	0	0	9.85	0	0	0	0	0	0	-2.95	-2.95
Westbrook Inverter Enclosur	W_INV5	369719	4906574	2	0	0	89.1	89.1	1	3259.24	3.25	0	81.26	0	1.21	0	0	10.01	0	0	0	0	0	0	-3.42	-3.42
Westbrook Inverter Enclosur	W_INV7	369780	4906417	2	0	0	89.1	89.1	1	3290.71	3.25	0	81.35	0	1.22	0	0	10.05	0	0	0	0	0	0	-3.56	-3.56
Inverters	G_Inv4	366732.8	4903105	2	0	0	87.7	87.7	1	2803.35	3.25	0	79.95	0	2.68	0	0	3.55	0	0	0	0	0	0	1.48	1.48
Inverters	G_Inv3	366583.7	4903091.4	2	0	0	87.7	87.7	1	2810.11	3.25	0	79.97	0	2.68	0	0	3.56	0	0	0	0	0	0	1.45	1.45
Westbrook Inverter Enclosur	W_INV6	369875	4906578	2	0	0	89.1	89.1	1	3412.82	3.25	0	81.66	0	1.25	0	0	10.23	0	0	0	0	0	0	-4.09	-4.09
Inverters	G_Inv6	366788.5	4902972	2	0	0	87.7	87.7	1	2940.39	3.25	0	80.37	0	2.69	0	0	3.71	0	0	0	0	0	0	0.89	0.89
Inverters	G_Inv5	366638.5	4902958.1	2	0	0	87.7	87.7	1	2944.9	3.25	0	80.38	0	2.69	0	0	3.71	0	0	0	0	0	0	0.87	0.87
Inverters	G_Inv8	366844.5	4902838.5	2	0	0	87.7	87.7	1	3078.61	3.25	0	80.77	0	2.71	0	0	3.86	0	0	0	0	0	0	0.32	0.32
Inverters	G_Inv7	366694.6	4902824.7	2	0	0	87.7	87.7	1	3080.7	3.25	0	80.77	0	2.71	0	0	3.86	0	0	0	0	0	0	0.32	0.32
Inverter	MV4-15	369176	4908481	2	0	0	89.1	89.1	1	3695.64	3.25	0	82.35	0	1.32	0	0	10.65	0	0	0	0	0	0	-5.26	-5.26
Inverter	MV4-13	369051	4908605	2	0	0	89.1	89.1	1	3696.9	3.25	0	82.36	0	1.32	0	0	10.65	0	0	0	0	0	0	-5.27	-5.27
Fixed Reactor Bank 1	FRB1	369378	4908755	6	0	0	89.8	89.8	1	4031.93	5.25	0	83.11	0	-0.72	0	0	7.41	0	0	0	0	0	0	-0.02	-0.02
Inverter	MV4-14	369176	4908507	2	0	0	89.1	89.1	1	3713.83	3.25	0	82.4	0	1.32	0	0	10.67	0	0	0	0	0	0	-5.33	-5.33
Fixed Reactor Bank 2	FRB2	369464	4908755	6	0	0	89.8	89.8	1	4093.13	5.25	0	83.24	0	-0.71	0	0	7.49	0	0	0	0	0	0	-0.24	-0.24
Inverters	G_Inv9	366750.9	4902691.8	2	0	0	87.7	87.7	1	3216.79	3.25	0	81.15	0	2.72	0	0	4.02	0	0	0	0	0	0	-0.22	-0.22
Inverters	G_Inv10	366900.7	4902704.8	2	0	0	87.7	87.7	1	3217.63	3.25	0	81.15	0	2.72	0	0	4.02	0	0	0	0	0	0	-0.23	-0.23
Inverter	MV4-12	369043	4908803	2	0	0	89.1	89.1	1	3838.85	3.25	0	82.68	0	1.35	0	0	10.85	0	0	0	0	0	0	-5.83	-5.83
Westbrook Inverter Enclosur	W_INV1	369409	4906578	2	0	0	86.1	86.1	1	2957.53	3.25	0	80.42	0	1.14	0	0	9.55	0	0	0	0	0	0	-5.05	-5.05
Inverter	MV5-6	369982	4908507	2	0	0	89.1	89.1	1	4325.22	3.25	0	83.72	0	1.47	0	0	11.54	0	0	0	0	0	0	-7.68	-7.68
Inverter	MV6-4	370250	4906966	2	0	0	86.1	86.1	1	3869.45	3.25	0	82.75	0	1.36	0	0	10.9	0	0	0	0	0	0	-8.95	-8.95
Westbrook Inverter Transfor	W_INVTR1	369403	4906578	2	0	0	78.2	78.2	1	2951.69	3.25	0	80.4	0	-2.7	0	0	1.64	0	0	0	0	0	0	-1.1	-1.1
Westbrook Inverter Transfor	W_INVTR2	369368	4906388	2	0	0	77.3	77.3	1	2879.48	3.25	0	80.19	0	-2.68	0	0	1.61	0	0	0	0	0	0	-1.77	-1.77
Inverter Transformer	MV2-1 T	365836	4906816	2	0	0	69.4	69.4	1	1148.42	3.25	0	72.2	0	1.79	0	0	4.01	0	0	0	0	0	0	-8.65	-8.65
Westbrook Inverter Transfor	W_INVTR3	369514	4906164	2	0	0	77.3	77.3	1	2995.57	3.25	0	80.53	0	-2.71	0	0	1.65	0	0	0	0	0	0	-2.13	-2.13
Westbrook Inverter Transfor	W_INVTR4	369679	4906164	2	0	0	77.3	77.3	1	3159.96	3.25	0	80.99	0	-2.76	0	0	1.72	0	0	0	0	0	0	-2.62	-2.62
Westbrook Inverter Transfor	W_INVTR5	369725	4906574	2	0	0	77.3	77.3	1	3265.11	3.25	0	81.28	0	-2.78	0	0	1.77	0	0	0	0	0	0	-2.92	-2.92
Westbrook Inverter Transfor	W_INVTR7	369786	4906417	2	0	0	77.3	77.3	1	3296.63	3.25	0	81.36	0	-2.79	0	0	1.78	0	0	0	0	0	0	-3.01	-3.01
Westbrook Inverter Transfor	W_INVTR6	369881	4906578	2	0	0	77.3	77.3	1	3418.7	3.25	0	81.68	0	-2.82	0	0	1.83	0	0	0	0	0	0	-3.34	-3.34
Inverter Transformer	MV1-10 T	365010	4905564	2	0	0	69.4	69.4	1	1556.91	3.25	0	74.85	0	2	0	0	4.5	0	0	0	0	0	0	-11.99	-11.99
Inverter Transformer	MV1-7 T	364919	4905782	2	0	0	69.4	69.4	1	1615.39	3.25	0	75.17	0	2.02	0	0	4.56	0	0	0	0	0	0	-12.4	-12.4
Inverter Transformer	MV1-14 T	365157	4905049	2	0	0	69.4	69.4	1	1615.87	3.25	0	75.17	0	2.02	0	0	4.56	0	0	0	0	0	0	-12.4	-12.4
Inverter Transformer	MV1-13 T	364725	4905241	2	0	0	69.4	69.4	1	1921.88	3.25	0	76.67	0	2.14	0	0	4.89	0	0	0	0	0	0	-14.35	-14.35
Inverter Transformer	MV6-4 T	370244	4906966	2	0	0	69.4	69.4	1	3863.68	3.25	0	82.74	0	2.75	0	0	6.57	0	0	0	0	0	0	-22.71	-22.71
Inverter Transformer	MV6-1 T	370230	4907364	2	0	0	69.4	69.4	1	3978.74	3.25	0	82.99	0	2.78	0	0	6.66	0	0	0	0	0	0	-23.09	-23.09
Inverter Transformer	MV2-2 T	365982	4906654	2	0	0	56.1	56.1	1	931.3	3.25	0	70.38	0	-0.01	0	0	4.72	0	0	0	0	0	0	-19.04	-19.04
Inverter Transformer	MV2-3 T	365814	4906641	2	0	0	56.1	56.1	1	1029.69	3.25	0	71.25	0	0.02	0	0	4.96	0	0	0	0	0	0	-20.18	-20.18
Inverter Transformer	MV2-4 T	365590	4906628	2	0	0	56.1	56.1	1	1188.33	3.25	0	72.5	0	0.08	0	0	5.33	0	0	0	0	0	0	-21.85	-21.85
Inverter Transformer	MV1-15 T	365309	4904994	2	0	0	56.1	56.1	1	1521.02	3.25	0	74.64	0	0.21	0	0	6.06	0	0	0	0	0	0	-24.85	-24.85

	Inverter Transformer	MV1-12 T	365044	4905386	2	0	0	56.1	56.1	1	1572.71	3.25	0	74.93	0	0.23	0	0	6.17	0	0	0	0	0	0	-25.28	-25.28
	Inverter Transformer	MV1-4 T	364821	4905918	2	0	0	56.1	56.1	1	1709.09	3.25	0	75.66	0	0.28	0	0	6.46	0	0	0	0	0	0	-26.34	-26.34
	Inverter Transformer	MV1-8 T	364782	4905647	2	0	0	56.1	56.1	1	1766.36	3.25	0	75.94	0	0.31	0	0	6.58	0	0	0	0	0	0	-26.77	-26.77
	Inverter Transformer	MV1-2 T	364759	4906063	2	0	0	56.1	56.1	1	1778.4	3.25	0	76	0	0.31	0	0	6.6	0	0	0	0	0	0	-26.85	-26.85
	Inverter Transformer	MV1-1 T	364721	4906166	2	0	0	56.1	56.1	1	1828.31	3.25	0	76.24	0	0.33	0	0	6.7	0	0	0	0	0	0	-27.22	-27.22
	Inverter Transformer	MV1-5 T	364676	4905892	2	0	0	56.1	56.1	1	1854.02	3.25	0	76.36	0	0.34	0	0	6.75	0	0	0	0	0	0	-27.4	-27.4
	Inverter Transformer	MV1-11 T	364649	4905414	2	0	0	56.1	56.1	1	1943.02	3.25	0	76.77	0	0.38	0	0	6.93	0	0	0	0	0	0	-28.02	-28.02
	Inverter Transformer	MV3-18 T	367757	4907412	2	0	0	56.1	56.1	1	1946.45	3.25	0	76.78	0	0.38	0	0	6.94	0	0	0	0	0	0	-28.05	-28.05
	Inverter Transformer	MV1-9 T	364555	4905646	2	0	0	56.1	56.1	1	1991.4	3.25	0	76.98	0	0.4	0	0	7.03	0	0	0	0	0	0	-28.35	-28.35
	Inverter Transformer	MV3-12 T	367674	4907594	2	0	0	56.1	56.1	1	2043.28	3.25	0	77.21	0	0.42	0	0	7.13	0	0	0	0	0	0	-28.7	-28.7
	Inverter Transformer	MV1-6 T	364482	4905835	2	0	0	56.1	56.1	1	2049.06	3.25	0	77.23	0	0.42	0	0	7.14	0	0	0	0	0	0	-28.74	-28.74
	Inverter Transformer	MV1-3 T	364435	4906039	2	0	0	56.1	56.1	1	2099.54	3.25	0	77.44	0	0.45	0	0	7.24	0	0	0	0	0	0	-29.07	-29.07
	Inverter Transformer	MV3-13 T	367958	4907577	2	0	0	56.1	56.1	1	2201.86	3.25	0	77.86	0	0.49	0	0	7.43	0	0	0	0	0	0	-29.72	-29.72
	Inverter Transformer	MV3-17 T	368183	4907472	2	0	0	56.1	56.1	1	2280.45	3.25	0	78.16	0	0.52	0	0	7.58	0	0	0	0	0	0	-30.21	-30.21
	Inverter Transformer	MV3-19 T	368352	4907347	2	0	0	56.1	56.1	1	2326.07	3.25	0	78.33	0	0.54	0	0	7.67	0	0	0	0	0	0	-30.48	-30.48
	Inverter Transformer	MV3-7 T	367951	4907754	2	0	0	56.1	56.1	1	2335.14	3.25	0	78.37	0	0.55	0	0	7.69	0	0	0	0	0	0	-30.54	-30.54
	Inverter Transformer	MV3-21 T	368484	4907206	2	0	0	56.1	56.1	1	2349.71	3.25	0	78.42	0	0.55	0	0	7.71	0	0	0	0	0	0	-30.63	-30.63
	Inverter Transformer	MV3-10 T	368162	4907669	2	0	0	56.1	56.1	1	2406.09	3.25	0	78.63	0	0.58	0	0	7.82	0	0	0	0	0	0	-30.96	-30.96
	Inverter Transformer	MV3-15 T	368351	4907477	2	0	0	56.1	56.1	1	2408.28	3.25	0	78.63	0	0.58	0	0	7.82	0	0	0	0	0	0	-30.97	-30.97
	Inverter Transformer	MV3-22 T	368661	4907142	2	0	0	56.1	56.1	1	2466.02	3.25	0	78.84	0	0.6	0	0	7.93	0	0	0	0	0	0	-31.31	-31.31
	Inverter Transformer	MV3-3 T	367944	4907927	2	0	0	56.1	56.1	1	2470.64	3.25	0	78.86	0	0.6	0	0	7.94	0	0	0	0	0	0	-31.34	-31.34
	Inverter Transformer	MV3-11 T	368340	4907662	2	0	0	56.1	56.1	1	2525.32	3.25	0	79.05	0	0.63	0	0	8.04	0	0	0	0	0	0	-31.65	-31.65
	Inverter Transformer	MV3-6 T	368156	4907834	2	0	0	56.1	56.1	1	2525.94	3.25	0	79.05	0	0.63	0	0	8.04	0	0	0	0	0	0	-31.65	-31.65
	Inverter Transformer	MV3-16 T	368509	4907475	2	0	0	56.1	56.1	1	2528.62	3.25	0	79.06	0	0.63	0	0	8.04	0	0	0	0	0	0	-31.67	-31.67
	Inverter Transformer	MV3-20 T	368683	4907317	2	0	0	56.1	56.1	1	2576.91	3.25	0	79.22	0	0.65	0	0	8.13	0	0	0	0	0	0	-31.94	-31.94
	Inverter Transformer	MV3-1 T	368150	4907976	2	0	0	56.1	56.1	1	2632.5	3.25	0	79.41	0	0.67	0	0	8.23	0	0	0	0	0	0	-32.25	-32.25
	Inverter Transformer	MV3-5 T	368335	4907843	2	0	0	56.1	56.1	1	2651.3	3.25	0	79.47	0	0.68	0	0	8.26	0	0	0	0	0	0	-32.35	-32.35
	Inverter Transformer	MV3-14 T	368678	4907498	2	0	0	56.1	56.1	1	2676.62	3.25	0	79.55	0	0.69	0	0	8.31	0	0	0	0	0	0	-32.49	-32.49
	Inverter Transformer	MV3-9 T	368517	4907703	2	0	0	56.1	56.1	1	2682.42	3.25	0	79.57	0	0.69	0	0	8.32	0	0	0	0	0	0	-32.52	-32.52
	Inverter Transformer	MV3-8 T	368685	4907712	2	0	0	56.1	56.1	1	2814.92	3.25	0	79.99	0	0.75	0	0	8.55	0	0	0	0	0	0	-33.23	-33.23
	Inverter Transformer	MV3-4 T	368507	4907925	2	0	0	56.1	56.1	1	2829.33	3.25	0	80.03	0	0.76	0	0	8.58	0	0	0	0	0	0	-33.31	-33.31
	Inverter Transformer	MV3-2 T	368677	4907928	2	0	0	56.1	56.1	1	2952.68	3.25	0	80.4	0	0.81	0	0	8.79	0	0	0	0	0	0	-33.94	-33.94
	Inverter Transformer	MV4-15 T	369170	4908481	2	0	0	56.1	56.1	1	3691.34	3.25	0	82.34	0	1.12	0	0	9.99	0	0	0	0	0	0	-37.39	-37.39
	Inverter Transformer	MV4-13 T	369057	4908605	2	0	0	56.1	56.1	1	3700.99	3.25	0	82.37	0	1.12	0	0	10	0	0	0	0	0	0	-37.43	-37.43
	Inverter Transformer	MV4-14 T	369182	4908507	2	0	0	56.1	56.1	1	3718.11	3.25	0	82.41	0	1.13	0	0	10.03	0	0	0	0	0	0	-37.51	-37.51
	Inverter Transformer	MV6-2 T	370091	4907339	2	0	0	56.1	56.1	1	3840.39	3.25	0	82.69	0	1.18	0	0	10.22	0	0	0	0	0	0	-38.02	-38.02
	Inverter Transformer	MV4-12 T	369049	4908803	2	0	0	56.1	56.1	1	3842.78	3.25	0	82.69	0	1.18	0	0	10.22	0	0	0	0	0	0	-38.03	-38.03
	Inverter Transformer	MV6-3 T	370202	4907140	2	0	0	56.1	56.1	1	3875.4	3.25	0	82.77	0	1.19	0	0	10.27	0	0	0	0	0	0	-38.17	-38.17
	Inverter Transformer	MV4-7 T	369040	4909001	2	0	0	56.1	56.1	1	3988.75	3.25	0	83.02	0	1.24	0	0	10.44	0	0	0	0	0	0	-38.64	-38.64
	Inverter Transformer	MV4-11 T	369269	4908855	2	0	0	56.1	56.1	1	4028.43	3.25	0	83.1	0	1.26	0	0	10.5	0	0	0	0	0	0	-38.8	-38.8
	Inverter Transformer	MV4-10 T	369307	4908858	2	0	0	56.1	56.1	1	4056.55	3.25	0	83.16	0	1.27	0	0	10.54	0	0	0	0	0	0	-38.91	-38.91
	Inverter Transformer	MV4-8 T	369262	4909001	2	0	0	56.1	56.1	1	4132.05	3.25	0	83.32	0	1.3	0	0	10.65	0	0	0	0	0	0	-39.21	-39.21
	Inverter Transformer	MV4-4 T	369033	4909199	2	0	0	56.1	56.1	1	4140.27	3.25	0	83.34	0	1.3	0	0	10.66	0	0	0	0	0	0	-39.24	-39.24
	Inverter Transformer	MV4-9 T	369284	4909001	2	0	0	56.1	56.1	1	4146.63	3.25	0	83.35	0	1.3	0	0	10.67	0	0	0	0	0	0	-39.27	-39.27
	Inverter Transformer	MV4-6 T	369249	4909192	2	0	0	56.1	56.1	1	4268.92	3.25	0	83.61	0	1.35	0	0	10.85	0	0	0	0	0	0	-39.75	-39.75
	Inverter Transformer	MV4-1 T	369017	4909397	2	0	0	56.1	56.1	1	4290.36	3.25	0	83.65	0	1.36	0	0	10.88	0	0	0	0	0	0	-39.83	-39.83
	Inverter Transformer	MV4-5 T	369283	4909199	2	0	0	56.1	56.1	1	4296.02	3.25	0	83.66	0	1.36	0	0	10.89	0	0	0	0	0	0	-39.85	-39.85
	Inverter Transformer	MV5-6 T	369987	4908507	2	0	0	56.1	56.1	1	4329.21	3.25	0	83.73	0	1.37	0	0	10.93	0	0	0	0	0	0	-39.98	-39.98
	Inverter Transformer	MV4-3 T	369234	4909397	2	0	0	56.1	56.1	1	4419.69	3.25	0	83.91	0	1.41	0	0	11.06	0	0	0	0	0	0	-40.32	-40.32
	Inverter Transformer	MV4-2 T	369267	4909397	2	0	0	56.1	56.1	1	4439.95	3.25	0	83.95	0	1.42	0	0	11.09	0	0	0	0	0	0	-40.4	-40.4
	Inverter Transformer	MV5-5 T	370021	4908690	2	0	0	56.1	56.1	1	4468.29	3.25	0	84	0	1.43	0	0	11.13	0	0	0	0	0	0	-40.5	-40.5
	Inverter Transformer	MV5-2 T	370011	4908853	2	0	0	56.1	56.1	1	4564.17	3.25	0	84.19	0	1.46	0	0	11.26	0	0	0	0	0	0	-40.86	-40.86
	Inverter Transformer	MV5-4 T	370330	4908707	2	0	0	56.1	56.1	1	4723.73	3.25	0	84.49	0	1.52	0	0	11.48	0	0	0	0	0	0	-41.44	-41.44
	Inverter Transformer	MV5-3 T	370237	4908851	2	0	0	56.1	56.1	1	4737.55	3.25	0	84.51	0	1.53	0	0	11.5	0	0	0	0	0	0	-41.48	-41.48
	Inverter Transformer	MV5-1 T	370015	4909142	2	0	0	56.1	56.1	1	4759.13	3.25	0	84.55	0	1.54	0	0	11.53	0	0	0	0	0	0	-41.56	-41.56
	Line Reactor	NGR	369421	4908787.5	5	0	0	45.4	45.4	1	4085.31	5.25	0	83.22	0	3.29	1.34	0.08	1.67	0	0	0	0	0	0	-44.17	-44.17
Limit. Valu	0	0																								
Level D/N:	27.2262	27.2262																								

Receiver: Vacant Lot Receptor
ID: S-VLR38
X: 365559
Y: 4905690
Z: 4.5
Ground: 0

ISO	Description	ID	X	Y	Z	Ground	ReflOrd	LxT	LxN	L/A	Dist.	hm	Freq	Adiv	K0b	Agr	Abar	z	Aatm	Afol	Ahous	Cmet	CmetN	Dc	RL	LtotT	LtotN
	Inverter	MV1-12	365038	4905386	2	0	0	100.3	100.3	1	603.21	3.25	0	66.61	0	-0.48	0	0	9.22	0	0	0	0	0	0	24.96	24.96
	Inverter	MV1-15	365315	4904994	2	0	0	100.3	100.3	1	737.54	3.25	0	68.36	0	-0.39	0	0	9.91	0	0	0	0	0	0	22.43	22.43
	Inverter	MV1-8	364788	4905647	2	0	0	100.3	100.3	1	772.2	3.25	0	68.75	0	-0.37	0	0	10.06	0	0	0	0	0	0	21.86	21.86
	Inverter	MV1-4	364815	4905918	2	0	0	100.3	100.3	1	778.16	3.25	0	68.82	0	-0.36	0	0	10.09	0	0	0	0	0	0	21.77	21.77
	Inverter	MV1-10	365004	4905564	2	0	0	97.3	97.3	1	569.13	3.25	0	66.1	0	-0.5	0	0	9.01	0	0	0	0	0	0	22.7	22.7
	Inverter	MV1-2	364753	4906063	2	0	0	100.3	100.3	1	888.13	3.25	0	69.97	0	-0.3	0	0	10.52	0	0	0	0	0	0	20.12	20.12
	Inverter	MV1-7	364925	4905782	2	0	0	97.3	97.3	1	640.65	3.25	0	67.13	0	-0.45	0	0	9.43	0	0	0	0	0	0	21.2	21.2

Inverter	MV1-5	364671	4905892	2	0	0	100.3	100.3	1	910.69	3.25	0	70.19	0	-0.29	0	0	10.6	0	0	0	0	0	0	19.81	19.81
Inverter	MV2-4	365586	4906624	2	0	0	100.3	100.3	1	934.39	3.25	0	70.41	0	-0.28	0	0	10.69	0	0	0	0	0	0	19.49	19.49
Inverter	MV1-11	364655	4905414	2	0	0	100.3	100.3	1	945.2	3.25	0	70.51	0	-0.27	0	0	10.73	0	0	0	0	0	0	19.35	19.35
Inverter	MV1-1	364715	4906166	2	0	0	100.3	100.3	1	968.98	3.25	0	70.73	0	-0.26	0	0	10.81	0	0	0	0	0	0	19.04	19.04
Inverter	MV2-3	365820	4906641	2	0	0	100.3	100.3	1	986.17	3.25	0	70.88	0	-0.25	0	0	10.87	0	0	0	0	0	0	18.82	18.82
Inverter	MV1-9	364561	4905646	2	0	0	100.3	100.3	1	998.97	3.25	0	70.99	0	-0.25	0	0	10.91	0	0	0	0	0	0	18.66	18.66
Inverter	MV1-14	365163	4905049	2	0	0	97.3	97.3	1	753.46	3.25	0	68.54	0	-0.38	0	0	9.98	0	0	0	0	0	0	19.17	19.17
Inverter	MV1-6	364477	4905835	2	0	0	100.3	100.3	1	1091.68	3.25	0	71.76	0	-0.2	0	0	11.2	0	0	0	0	0	0	17.55	17.55
Sol_Luce Substation	S_Substation	369426	4908792	3.5	0	0	112.1	112.1	1	4957.43	5.25	0	84.91	0	0.88	2.88	0.26	8.57	0	0	0	0	0	0	14.84	14.84
Inverter	MV1-13	364731	4905241	2	0	0	97.3	97.3	1	941.91	3.25	0	70.48	0	-0.28	0	0	10.71	0	0	0	0	0	0	16.39	16.39
Inverter	MV2-1	365842	4906816	2	0	0	97.3	97.3	1	1161.02	3.25	0	72.3	0	-0.17	0	0	11.41	0	0	0	0	0	0	13.77	13.77
Inverter	MV3-18	367752	4907412	2	0	0	100.3	100.3	1	2788.29	3.25	0	79.91	0	0.32	0	0	14.99	0	0	0	0	0	0	5.09	5.09
Inverter	MV3-12	367668	4907594	2	0	0	100.3	100.3	1	2841.32	3.25	0	80.07	0	0.33	0	0	15.09	0	0	0	0	0	0	4.82	4.82
Inverter	MV3-13	367963	4907577	2	0	0	100.3	100.3	1	3056.14	3.25	0	80.7	0	0.37	0	0	15.47	0	0	0	0	0	0	3.76	3.76
Inverter	MV3-7	367945	4907754	2	0	0	100.3	100.3	1	3154.85	3.25	0	80.98	0	0.39	0	0	15.64	0	0	0	0	0	0	3.3	3.3
Inverter	MV3-17	368178	4907472	2	0	0	100.3	100.3	1	3167.76	3.25	0	81.02	0	0.39	0	0	15.67	0	0	0	0	0	0	3.24	3.24
Inverter	MV3-19	368357	4907347	2	0	0	100.3	100.3	1	3251.84	3.25	0	81.24	0	0.41	0	0	15.81	0	0	0	0	0	0	2.85	2.85
Inverter	MV3-3	367939	4907927	2	0	0	100.3	100.3	1	3266.28	3.25	0	81.28	0	0.41	0	0	15.84	0	0	0	0	0	0	2.78	2.78
Inverter	MV3-10	368167	4907669	2	0	0	100.3	100.3	1	3273.85	3.25	0	81.3	0	0.41	0	0	15.85	0	0	0	0	0	0	2.75	2.75
Inverter	MV3-21	368478	4907206	2	0	0	100.3	100.3	1	3289.2	3.25	0	81.34	0	0.42	0	0	15.87	0	0	0	0	0	0	2.68	2.68
Inverter	MV3-15	368357	4907477	2	0	0	100.3	100.3	1	3319.97	3.25	0	81.42	0	0.42	0	0	15.93	0	0	0	0	0	0	2.54	2.54
Inverter	MV3-6	368162	4907834	2	0	0	100.3	100.3	1	3372.29	3.25	0	81.56	0	0.43	0	0	16.02	0	0	0	0	0	0	2.31	2.31
Inverter	MV3-11	368346	4907662	2	0	0	100.3	100.3	1	3414.11	3.25	0	81.67	0	0.44	0	0	16.09	0	0	0	0	0	0	2.12	2.12
Inverter	MV3-16	368514	4907475	2	0	0	100.3	100.3	1	3452.28	3.25	0	81.76	0	0.44	0	0	16.15	0	0	0	0	0	0	1.96	1.96
Inverter	MV3-20	368689	4907317	2	0	0	100.3	100.3	1	3527.61	3.25	0	81.95	0	0.46	0	0	16.28	0	0	0	0	0	0	1.63	1.63
Inverter	MV3-9	368512	4907703	2	0	0	100.3	100.3	1	3573.85	3.25	0	82.06	0	0.46	0	0	16.35	0	0	0	0	0	0	1.43	1.43
Inverter	MV3-14	368684	4907498	2	0	0	100.3	100.3	1	3610.33	3.25	0	82.15	0	0.47	0	0	16.41	0	0	0	0	0	0	1.28	1.28
Inverter	MV3-8	368680	4907712	2	0	0	100.3	100.3	1	3718.75	3.25	0	82.41	0	0.49	0	0	16.59	0	0	0	0	0	0	0.82	0.82
Inverter	MV2-2	365977	4906654	2	0	0	89.1	89.1	1	1050.73	3.25	0	71.43	0	0.7	0	0	6.41	0	0	0	0	0	0	10.52	10.52
Inverter	MV1-3	364440	4906039	2	0	0	89.1	89.1	1	1172.16	3.25	0	72.38	0	0.72	0	0	6.63	0	0	0	0	0	0	9.32	9.32
Inverter	MV4-7	369035	4909001	2	0	0	100.3	100.3	1	4800.55	3.25	0	84.63	0	0.62	0	0	18.28	0	0	0	0	0	0	-3.22	-3.22
Inverter	MV6-2	370085	4907339	2	0	0	100.3	100.3	1	4817.04	3.25	0	84.66	0	0.62	0	0	18.31	0	0	0	0	0	0	-3.28	-3.28
Inverter	MV6-3	370207	4907140	2	0	0	100.3	100.3	1	4868.92	3.25	0	84.75	0	0.63	0	0	18.39	0	0	0	0	0	0	-3.45	-3.45
Inverter	MV4-11	369264	4908855	2	0	0	100.3	100.3	1	4872.81	3.25	0	84.76	0	0.63	0	0	18.39	0	0	0	0	0	0	-3.47	-3.47
Inverter	MV4-10	369312	4908858	2	0	0	100.3	100.3	1	4911.34	3.25	0	84.82	0	0.63	0	0	18.45	0	0	0	0	0	0	-3.6	-3.6
Inverter	MV4-4	369027	4909199	2	0	0	100.3	100.3	1	4933.57	3.25	0	84.86	0	0.64	0	0	18.48	0	0	0	0	0	0	-3.67	-3.67
Inverter	MV4-8	369256	4909001	2	0	0	100.3	100.3	1	4962.92	3.25	0	84.91	0	0.64	0	0	18.53	0	0	0	0	0	0	-3.77	-3.77
Inverter	MV4-9	369289	4909001	2	0	0	100.3	100.3	1	4987.55	3.25	0	84.96	0	0.64	0	0	18.56	0	0	0	0	0	0	-3.85	-3.85
Inverter	MV4-1	369011	4909397	2	0	0	100.3	100.3	1	5065.39	3.25	0	85.09	0	0.65	0	0	18.68	0	0	0	0	0	0	-4.1	-4.1
Inverter	MV4-6	369243	4909192	2	0	0	100.3	100.3	1	5082.9	3.25	0	85.12	0	0.65	0	0	18.7	0	0	0	0	0	0	-4.16	-4.16
Inverter	MV4-5	369289	4909199	2	0	0	100.3	100.3	1	5121.13	3.25	0	85.19	0	0.65	0	0	18.76	0	0	0	0	0	0	-4.29	-4.29
Inverter	MV4-3	369229	4909397	2	0	0	100.3	100.3	1	5216.39	3.25	0	85.35	0	0.66	0	0	18.9	0	0	0	0	0	0	-4.59	-4.59
Inverter	MV4-2	369272	4909397	2	0	0	100.3	100.3	1	5246.73	3.25	0	85.4	0	0.66	0	0	18.94	0	0	0	0	0	0	-4.69	-4.69
Inverter	MV5-5	370015	4908690	2	0	0	100.3	100.3	1	5371.77	3.25	0	85.6	0	0.67	0	0	19.12	0	0	0	0	0	0	-5.08	-5.08
Inverter	MV5-2	370006	4908853	2	0	0	100.3	100.3	1	5457.14	3.25	0	85.74	0	0.68	0	0	19.24	0	0	0	0	0	0	-5.34	-5.34
Inverter	MV5-4	370324	4908707	2	0	0	100.3	100.3	1	5639.82	3.25	0	86.03	0	0.69	0	0	19.5	0	0	0	0	0	0	-5.9	-5.9
Inverter	MV5-1	370020	4909142	2	0	0	100.3	100.3	1	5640.64	3.25	0	86.03	0	0.69	0	0	19.5	0	0	0	0	0	0	-5.9	-5.9
Inverter	MV5-3	370231	4908851	2	0	0	100.3	100.3	1	5640.88	3.25	0	86.03	0	0.69	0	0	19.5	0	0	0	0	0	0	-5.9	-5.9
Inverter	MV6-1	370235	4907364	2	0	0	97.3	97.3	1	4966.61	3.25	0	84.92	0	0.64	0	0	18.53	0	0	0	0	0	0	-6.78	-6.78
DSTATCOM - 10 MVAR #2	DSAT2	369403	4908757	2.5	0	0	96.6	96.6	1	4917.6	3.5	0	84.84	0	3.68	0	0	3.31	0	0	0	0	0	0	4.81	4.81
DSTATCOM - 10 MVAR #1	DSAT1	369437	4908757	2.5	0	0	96.6	96.6	1	4944.23	3.5	0	84.88	0	3.68	0	0	3.32	0	0	0	0	0	0	4.75	4.75
Gardiner Substation	G_Sub	366586.3	4903349.9	2.5	0	0	90.8	90.8	1	2555.66	4.25	0	79.15	0	0.98	3.32	0.31	5.28	0	0	0	0	0	0	2.05	2.05
SubstationTransformer	W_ST	369711.17	4906112.3	2.5	0	0	92	92	1	4173.59	4.25	0	83.41	0	1.41	2.56	0.29	7.59	0	0	0	0	0	0	-3	-3
Inverters	G_Inv1	366526.4	4903225.8	2	0	0	87.7	87.7	1	2647.29	3.25	0	79.46	0	2.66	0	0	3.38	0	0	0	0	0	0	2.17	2.17
Inverters	G_Inv2	366676.9	4903239.1	2	0	0	87.7	87.7	1	2693.81	3.25	0	79.61	0	2.67	0	0	3.43	0	0	0	0	0	0	1.96	1.96
Inverters	G_Inv3	366583.7	4903091.4	2	0	0	87.7	87.7	1	2793.34	3.25	0	79.92	0	2.68	0	0	3.54	0	0	0	0	0	0	1.52	1.52
Inverters	G_Inv4	366732.8	4903105	2	0	0	87.7	87.7	1	2839.02	3.25	0	80.06	0	2.68	0	0	3.59	0	0	0	0	0	0	1.32	1.32
Inverter	MV3-22	368656	4907142	2	0	0	89.1	89.1	1	3420.49	3.25	0	81.68	0	1.25	0	0	10.25	0	0	0	0	0	0	-4.12	-4.12
Inverters	G_Inv5	366638.5	4902958.1	2	0	0	87.7	87.7	1	2937.45	3.25	0	80.36	0	2.69	0	0	3.71	0	0	0	0	0	0	0.9	0.9
Inverter	MV3-1	368156	4907976	2	0	0	89.1	89.1	1	3459.8	3.25	0	81.78	0	1.26	0	0	10.3	0	0	0	0	0	0	-4.29	-4.29
Inverters	G_Inv6	366788.5	4902972	2	0	0	87.7	87.7	1	2983.15	3.25	0	80.49	0	2.7	0	0	3.76	0	0	0	0	0	0	0.71	0.71
Inverter	MV3-5	368340	4907843	2	0	0	89.1	89.1	1	3517.01	3.25	0	81.92	0	1.27	0	0	10.39	0	0	0	0	0	0	-4.53	-4.53
Inverters	G_Inv7	366694.6	4902824.7	2	0	0	87.7	87.7	1	3082.13	3.25	0	80.78	0	2.71	0	0	3.87	0	0	0	0	0	0	0.31	0.31
Inverters	G_Inv8	366844.5	4902838.5	2	0	0	87.7	87.7	1	3127.87	3.25	0	80.9	0	2.71	0	0	3.92	0	0	0	0	0	0	0.13	0.13
Inverter	MV3-4	368502	4907925	2	0	0	89.1	89.1	1	3695.47	3.25	0	82.35	0	1.32	0	0	10.65	0	0	0	0	0	0	-5.26	-5.26
Inverters	G_Inv9	366750.9	4902691.8	2	0	0	87.7	87.7	1	3226.43	3.25	0	81.17	0	2.72	0	0	4.03	0	0	0	0	0	0	-0.26	-0.26
Inverter	MV3-2	368671	4907928	2	0	0	89.1	89.1	1	3833.17	3.25	0	82.67	0	1.35	0	0	10.85	0	0	0	0	0	0	-5.81	-5.81
Inverters	G_Inv10	366900.7	4902704.8	2	0	0	87.7	87.7	1	3272.86	3.25	0	81.3	0	2.73	0	0	4.08	0	0	0	0	0	0	-0.44	-0.44
Westbrook Inverter Enclosur	W_INV2	369374	4906388	2	0	0	89.1	89.1	1	3878.33	3.25	0	82.77	0	1.36	0	0	10.91	0	0	0	0	0	0	-5.99	-5.99
Westbrook Inverter Enclosur	W_INV3	369508	4906164	2	0	0	89.1	89.1	1	3977.35	3.25	0	82.99	0	1.39	0	0	11.05	0	0	0	0	0	0	-6.37	-6.37
Westbrook Inverter Enclosur	W_INV4	369673	4906164	2	0	0	89.1	89.1	1	4141.22	3.25	0	83.34	0	1.43	0	0	11.28	0	0	0	0	0	0	-7	-7
Westbrook Inverter Enclosur	W_INV5	369719	4906574	2	0	0	89.1	89.1	1	4252.89	3.25	0	83.57	0	1.45	0	0	11.44	0	0	0	0	0	0	-7.41	-7.41
Westbrook Inverter Enclosur	W_INV7	369780	4906417	2	0	0	89.1	89.1	1	4283.15	3.25	0	83.64	0	1.46	0	0	11.48	0	0	0	0	0	0	-7.52	-7.52
Westbrook Inverter Enclosur	W_INV6	369875	4906578	2	0	0	89.1	89.1	1	4406.41	3.25	0	83.88	0	1.49	0	0	11.66	0	0	0	0	0	0	-7.97	-7.97

Fixed Reactor Bank 1	FRB1	369378	4908755	6	0	0	89.8	89.8	1	4896.83	5.25	0	84.8	0	-0.58	0	0	8.5	0	0	0	0	0	0	-2.94	-2.94
Inverter	MV4-13	369051	4908605	2	0	0	89.1	89.1	1	4548.77	3.25	0	84.16	0	1.53	0	0	11.85	0	0	0	0	0	0	-8.48	-8.48
Inverter	MV4-15	369176	4908481	2	0	0	89.1	89.1	1	4568.63	3.25	0	84.2	0	1.53	0	0	11.88	0	0	0	0	0	0	-8.55	-8.55
Fixed Reactor Bank 2	FRB2	369464	4908755	6	0	0	89.8	89.8	1	4964.2	5.25	0	84.92	0	-0.57	0	0	8.58	0	0	0	0	0	0	-3.15	-3.15
Inverter	MV4-14	369176	4908507	2	0	0	89.1	89.1	1	4584.56	3.25	0	84.23	0	1.54	0	0	11.9	0	0	0	0	0	0	-8.61	-8.61
Inverter	MV4-12	369043	4908803	2	0	0	89.1	89.1	1	4672.15	3.25	0	84.39	0	1.56	0	0	12.02	0	0	0	0	0	0	-8.91	-8.91
Inverter	MV5-6	369982	4908507	2	0	0	89.1	89.1	1	5243.89	3.25	0	85.39	0	1.7	0	0	12.79	0	0	0	0	0	0	-10.82	-10.82
Inverter Transformer	MV1-10 T	365010	4905564	2	0	0	69.4	69.4	1	563.28	3.25	0	66.01	0	1.15	0	0	3.09	0	0	0	0	0	0	-0.91	-0.91
Westbrook Inverter Enclosur	W_INV1	369409	4906578	2	0	0	86.1	86.1	1	3951.08	3.25	0	82.93	0	1.38	0	0	11.01	0	0	0	0	0	0	-9.27	-9.27
Inverter Transformer	MV1-7 T	364919	4905782	2	0	0	69.4	69.4	1	646.58	3.25	0	67.21	0	1.28	0	0	3.25	0	0	0	0	0	0	-2.4	-2.4
Inverter	MV6-4	370250	4906966	2	0	0	86.1	86.1	1	4861.45	3.25	0	84.74	0	1.61	0	0	12.28	0	0	0	0	0	0	-12.56	-12.56
Inverter Transformer	MV1-14 T	365157	4905049	2	0	0	69.4	69.4	1	756.63	3.25	0	68.58	0	1.43	0	0	3.45	0	0	0	0	0	0	-4.11	-4.11
Inverter Transformer	MV1-13 T	364725	4905241	2	0	0	69.4	69.4	1	947.19	3.25	0	70.53	0	1.64	0	0	3.74	0	0	0	0	0	0	-6.55	-6.55
Inverter Transformer	MV2-1 T	365836	4906816	2	0	0	69.4	69.4	1	1159.57	3.25	0	72.29	0	1.8	0	0	4.02	0	0	0	0	0	0	-8.76	-8.76
Westbrook Inverter Transfor	W_INVTR1	369403	4906578	2	0	0	78.2	78.2	1	3945.24	3.25	0	82.92	0	-2.95	0	0	2.03	0	0	0	0	0	0	-3.76	-3.76
Westbrook Inverter Transfor	W_INVTR2	369368	4906388	2	0	0	77.3	77.3	1	3872.43	3.25	0	82.76	0	-2.93	0	0	2.01	0	0	0	0	0	0	-4.49	-4.49
Westbrook Inverter Transfor	W_INVTR3	369514	4906164	2	0	0	77.3	77.3	1	3983.3	3.25	0	83	0	-2.96	0	0	2.05	0	0	0	0	0	0	-4.75	-4.75
Westbrook Inverter Transfor	W_INVTR4	369679	4906164	2	0	0	77.3	77.3	1	4147.18	3.25	0	83.36	0	-3	0	0	2.11	0	0	0	0	0	0	-5.13	-5.13
Westbrook Inverter Transfor	W_INVTR5	369725	4906574	2	0	0	77.3	77.3	1	4258.76	3.25	0	83.59	0	-3.02	0	0	2.15	0	0	0	0	0	0	-5.37	-5.37
Westbrook Inverter Transfor	W_INVTR7	369786	4906417	2	0	0	77.3	77.3	1	4289.06	3.25	0	83.65	0	-3.03	0	0	2.16	0	0	0	0	0	0	-5.44	-5.44
Westbrook Inverter Transfor	W_INVTR6	369881	4906578	2	0	0	77.3	77.3	1	4412.28	3.25	0	83.89	0	-3.05	0	0	2.21	0	0	0	0	0	0	-5.7	-5.7
Inverter Transformer	MV1-12 T	365044	4905386	2	0	0	56.1	56.1	1	598.04	3.25	0	66.53	0	-0.1	0	0	3.85	0	0	0	0	0	0	-14.22	-14.22
Inverter Transformer	MV1-15 T	365309	4904994	2	0	0	56.1	56.1	1	739.54	3.25	0	68.38	0	-0.07	0	0	4.24	0	0	0	0	0	0	-16.49	-16.49
Inverter Transformer	MV1-4 T	364821	4905918	2	0	0	56.1	56.1	1	772.42	3.25	0	68.76	0	-0.06	0	0	4.32	0	0	0	0	0	0	-16.96	-16.96
Inverter Transformer	MV1-8 T	364782	4905647	2	0	0	56.1	56.1	1	778.19	3.25	0	68.82	0	-0.06	0	0	4.34	0	0	0	0	0	0	-17.04	-17.04
Inverter Transformer	MV1-2 T	364759	4906063	2	0	0	56.1	56.1	1	882.69	3.25	0	69.92	0	-0.03	0	0	4.6	0	0	0	0	0	0	-18.43	-18.43
Inverter Transformer	MV1-5 T	364676	4905892	2	0	0	56.1	56.1	1	905.81	3.25	0	70.14	0	-0.02	0	0	4.66	0	0	0	0	0	0	-18.72	-18.72
Inverter Transformer	MV2-4 T	365590	4906628	2	0	0	56.1	56.1	1	938.52	3.25	0	70.45	0	-0.01	0	0	4.74	0	0	0	0	0	0	-19.12	-19.12
Inverter Transformer	MV1-11 T	364649	4905414	2	0	0	56.1	56.1	1	950.94	3.25	0	70.56	0	0	0	0	4.77	0	0	0	0	0	0	-19.27	-19.27
Inverter Transformer	MV1-1 T	364721	4906166	2	0	0	56.1	56.1	1	963.76	3.25	0	70.68	0	0	0	0	4.8	0	0	0	0	0	0	-19.42	-19.42
Inverter Transformer	MV2-3 T	365814	4906641	2	0	0	56.1	56.1	1	984.6	3.25	0	70.87	0	0.01	0	0	4.85	0	0	0	0	0	0	-19.67	-19.67
Inverter Transformer	MV1-9 T	364555	4905646	2	0	0	56.1	56.1	1	1004.97	3.25	0	71.04	0	0.01	0	0	4.9	0	0	0	0	0	0	-19.9	-19.9
Inverter Transformer	MV6-4 T	370244	4906966	2	0	0	69.4	69.4	1	4855.66	3.25	0	84.72	0	2.98	0	0	7.28	0	0	0	0	0	0	-25.64	-25.64
Inverter Transformer	MV2-2 T	365982	4906654	2	0	0	56.1	56.1	1	1052.73	3.25	0	71.45	0	0.03	0	0	5.01	0	0	0	0	0	0	-20.43	-20.43
Inverter Transformer	MV6-1 T	370230	4907364	2	0	0	69.4	69.4	1	4961.91	3.25	0	84.91	0	3	0	0	7.36	0	0	0	0	0	0	-25.92	-25.92
Inverter Transformer	MV1-6 T	364482	4905835	2	0	0	56.1	56.1	1	1086.72	3.25	0	71.72	0	0.04	0	0	5.09	0	0	0	0	0	0	-20.8	-20.8
Inverter Transformer	MV1-3 T	364435	4906039	2	0	0	56.1	56.1	1	1176.94	3.25	0	72.42	0	0.08	0	0	5.3	0	0	0	0	0	0	-21.73	-21.73
Inverter Transformer	MV3-18 T	367757	4907412	2	0	0	56.1	56.1	1	2792.22	3.25	0	79.92	0	0.74	0	0	8.51	0	0	0	0	0	0	-33.11	-33.11
Inverter Transformer	MV3-12 T	367674	4907594	2	0	0	56.1	56.1	1	2845.78	3.25	0	80.08	0	0.76	0	0	8.6	0	0	0	0	0	0	-33.39	-33.39
Inverter Transformer	MV3-13 T	367958	4907577	2	0	0	56.1	56.1	1	3052.21	3.25	0	80.69	0	0.85	0	0	8.96	0	0	0	0	0	0	-34.44	-34.44
Inverter Transformer	MV3-7 T	367951	4907754	2	0	0	56.1	56.1	1	3159.39	3.25	0	80.99	0	0.9	0	0	9.14	0	0	0	0	0	0	-34.97	-34.97
Inverter Transformer	MV3-17 T	368183	4907472	2	0	0	56.1	56.1	1	3171.89	3.25	0	81.03	0	0.9	0	0	9.16	0	0	0	0	0	0	-35.03	-35.03
Inverter Transformer	MV3-19 T	368352	4907347	2	0	0	56.1	56.1	1	3247.54	3.25	0	81.23	0	0.93	0	0	9.28	0	0	0	0	0	0	-35.39	-35.39
Inverter Transformer	MV3-10 T	368162	4907669	2	0	0	56.1	56.1	1	3269.87	3.25	0	81.29	0	0.94	0	0	9.32	0	0	0	0	0	0	-35.49	-35.49
Inverter Transformer	MV3-3 T	367944	4907927	2	0	0	56.1	56.1	1	3269.92	3.25	0	81.29	0	0.94	0	0	9.32	0	0	0	0	0	0	-35.49	-35.49
Inverter Transformer	MV3-21 T	368484	4907206	2	0	0	56.1	56.1	1	3294.52	3.25	0	81.36	0	0.95	0	0	9.36	0	0	0	0	0	0	-35.61	-35.61
Inverter Transformer	MV3-15 T	368351	4907477	2	0	0	56.1	56.1	1	3314.91	3.25	0	81.41	0	0.96	0	0	9.39	0	0	0	0	0	0	-35.7	-35.7
Inverter Transformer	MV3-6 T	368156	4907834	2	0	0	56.1	56.1	1	3367.66	3.25	0	81.55	0	0.98	0	0	9.48	0	0	0	0	0	0	-35.95	-35.95
Inverter Transformer	MV3-11 T	368340	4907662	2	0	0	56.1	56.1	1	3409.22	3.25	0	81.65	0	1	0	0	9.54	0	0	0	0	0	0	-36.14	-36.14
Inverter Transformer	MV3-22 T	368661	4907142	2	0	0	56.1	56.1	1	3425.01	3.25	0	81.69	0	1.01	0	0	9.57	0	0	0	0	0	0	-36.21	-36.21
Inverter Transformer	MV3-16 T	368509	4907475	2	0	0	56.1	56.1	1	3448	3.25	0	81.75	0	1.02	0	0	9.61	0	0	0	0	0	0	-36.32	-36.32
Inverter Transformer	MV3-1 T	368150	4907976	2	0	0	56.1	56.1	1	3455.3	3.25	0	81.77	0	1.02	0	0	9.62	0	0	0	0	0	0	-36.35	-36.35
Inverter Transformer	MV3-5 T	368335	4907843	2	0	0	56.1	56.1	1	3513.06	3.25	0	81.91	0	1.05	0	0	9.71	0	0	0	0	0	0	-36.61	-36.61
Inverter Transformer	MV3-20 T	368683	4907317	2	0	0	56.1	56.1	1	3522.29	3.25	0	81.94	0	1.05	0	0	9.72	0	0	0	0	0	0	-36.65	-36.65
Inverter Transformer	MV3-9 T	368517	4907703	2	0	0	56.1	56.1	1	3577.98	3.25	0	82.07	0	1.07	0	0	9.81	0	0	0	0	0	0	-36.9	-36.9
Inverter Transformer	MV3-14 T	368678	4907498	2	0	0	56.1	56.1	1	3605.14	3.25	0	82.14	0	1.08	0	0	9.85	0	0	0	0	0	0	-37.02	-37.02
Inverter Transformer	MV3-4 T	368507	4907925	2	0	0	56.1	56.1	1	3699.45	3.25	0	82.36	0	1.12	0	0	10	0	0	0	0	0	0	-37.43	-37.43
Inverter Transformer	MV3-8 T	368685	4907712	2	0	0	56.1	56.1	1	3722.95	3.25	0	82.42	0	1.13	0	0	10.04	0	0	0	0	0	0	-37.53	-37.53
Inverter Transformer	MV3-2 T	368677	4907928	2	0	0	56.1	56.1	1	3838.04	3.25	0	82.68	0	1.18	0	0	10.21	0	0	0	0	0	0	-38.01	-38.01
Inverter Transformer	MV4-13 T	369057	4908605	2	0	0	56.1	56.1	1	4553.38	3.25	0	84.17	0	1.46	0	0	11.25	0	0	0	0	0	0	-40.82	-40.82
Inverter Transformer	MV4-15 T	369170	4908481	2	0	0	56.1	56.1	1	4563.88	3.25	0	84.19	0	1.46	0	0	11.26	0	0	0	0	0	0	-40.86	-40.86
Inverter Transformer	MV4-14 T	369182	4908507	2	0	0	56.1	56.1	1	4589.29	3.25	0	84.23	0	1.47	0	0	11.3	0	0	0	0	0	0	-40.95	-40.95
Inverter Transformer	MV4-12 T	369049	4908803	2	0	0	56.1	56.1	1	4676.63	3.25	0	84.4	0	1.51	0	0	11.42	0	0	0	0	0	0	-41.27	-41.27
Inverter Transformer	MV4-7 T	369040	4909001	2	0	0	56.1	56.1	1	4804.17	3.25	0	84.63	0	1.55	0	0	11.59	0	0	0	0	0	0	-41.72	-41.72
Inverter Transformer	MV6-2 T	370091	4907339	2	0	0	56.1	56.1	1	4822.68	3.25	0	84.67	0	1.56	0	0	11.62	0	0	0	0	0	0	-41.79	-41.79
Inverter Transformer	MV6-3 T	370202	4907140	2	0	0	56.1	56.1	1	4864.15	3.25	0	84.74	0	1.58	0	0	11.67	0	0	0	0	0	0	-41.93	-41.93
Inverter Transformer	MV4-11 T	369269	4908855	2	0	0	56.1	56.1	1	4876.61	3.25	0	84.76	0	1.58	0	0	11.69	0	0	0	0	0	0	-41.97	-41.97
Inverter Transformer	MV4-10 T	369307	4908858	2	0	0	56.1	56.1	1	4907.52	3.25	0	84.82	0	1.59	0	0	11.73	0	0	0	0	0	0	-42.08	-42.08
Inverter Transformer	MV4-4 T	369033	4909199	2	0	0	56.1	56.1	1	4937.79	3.25	0	84.87	0	1.6	0	0	11.77	0	0	0	0	0	0	-42.19	-42.19
Inverter Transformer	MV4-8 T	369262	4909001	2	0	0	56.1	56.1	1	4967.39	3.25	0	84.92	0	1.61	0	0	11.81	0	0	0	0	0	0	-42.29	-42.29
Inverter Transformer	MV4-9 T	369284	4909001	2	0	0	56.1	56.1	1	4983.81	3.25	0	84.95	0	1.62	0	0	11.83	0	0	0	0	0	0	-42.35	-42.35
Inverter Transformer	MV4-1 T	369017	4909397	2	0	0	56.1	56.1	1	5069.48	3.25	0	85.1	0	1.65	0	0	11.95	0	0	0	0	0	0	-42.64	-42.64
Inverter Transformer	MV4-6 T	369249	4909192	2	0	0	56.1	56.1	1	5087.25	3.25	0	85.13	0	1.66	0	0	11.97	0	0	0	0	0	0	-42.7	-42.7
Inverter Transformer	MV4-5 T	369283	4909199	2	0	0	56.1	56.1	1	5116.76	3.25	0	85.18	0	1.67	0	0	12.01	0	0	0	0	0	0	-42.8	-42.8

	Inverter Transformer	MV4-3 T	369234	4909397	2	0	0	56.1	56.1	1	5219.91	3.25	0	85.35	0	1.7	0	0	12.14	0	0	0	0	0	0	-43.14	-43.14
	Inverter Transformer	MV4-2 T	369267	4909397	2	0	0	56.1	56.1	1	5243.2	3.25	0	85.39	0	1.71	0	0	12.17	0	0	0	0	0	0	-43.22	-43.22
	Inverter Transformer	MV5-6 T	369987	4908507	2	0	0	56.1	56.1	1	5248.11	3.25	0	85.4	0	1.71	0	0	12.18	0	0	0	0	0	0	-43.23	-43.23
	Inverter Transformer	MV5-5 T	370021	4908690	2	0	0	56.1	56.1	1	5376.75	3.25	0	85.61	0	1.76	0	0	12.34	0	0	0	0	0	0	-43.65	-43.65
	Inverter Transformer	MV5-2 T	370011	4908853	2	0	0	56.1	56.1	1	5461.22	3.25	0	85.75	0	1.79	0	0	12.45	0	0	0	0	0	0	-43.92	-43.92
	Inverter Transformer	MV5-1 T	370015	4909142	2	0	0	56.1	56.1	1	5636.69	3.25	0	86.02	0	1.85	0	0	12.66	0	0	0	0	0	0	-44.47	-44.47
	Inverter Transformer	MV5-4 T	370330	4908707	2	0	0	56.1	56.1	1	5644.89	3.25	0	86.03	0	1.85	0	0	12.67	0	0	0	0	0	0	-44.5	-44.5
	Inverter Transformer	MV5-3 T	370237	4908851	2	0	0	56.1	56.1	1	5645.85	3.25	0	86.03	0	1.85	0	0	12.68	0	0	0	0	0	0	-44.5	-44.5
	Line Reactor	NGR	369421	4908787.5	5	0	0	45.4	45.4	1	4950.71	5.25	0	84.89	0	3.26	1.35	0.09	2.02	0	0	0	0	0	0	-46.18	-46.18
Limit. Valu	0	0																								
Level D/N:	33.0952	33.0952																								

Receiver: Vacant Lot Receptor
ID: S-VLR39
X: 365607
Y: 4905722
Z: 4.5
Ground: 0

ISO	Description	ID	X	Y	Z	Ground	ReflOrd	LxT	LxN	L/A	Dist.	hm	Freq	Adiv	K0b	Agr	Abar	z	Aatm	Afol	Ahous	Cmet	CmetN	Dc	RL	LtotT	LtotN
	Inverter	MV1-12	365038	4905386	2	0	0	100.3	100.3	1	660.81	3.25	0	67.4	0	-0.44	0	0	9.54	0	0	0	0	0	0	23.81	23.81
	Inverter	MV1-15	365315	4904994	2	0	0	100.3	100.3	1	784.38	3.25	0	68.89	0	-0.36	0	0	10.12	0	0	0	0	0	0	21.67	21.67
	Inverter	MV1-4	364815	4905918	2	0	0	100.3	100.3	1	815.9	3.25	0	69.23	0	-0.34	0	0	10.24	0	0	0	0	0	0	21.18	21.18
	Inverter	MV1-8	364788	4905647	2	0	0	100.3	100.3	1	822.43	3.25	0	69.3	0	-0.34	0	0	10.27	0	0	0	0	0	0	21.08	21.08
	Inverter	MV1-10	365004	4905564	2	0	0	97.3	97.3	1	623.36	3.25	0	66.89	0	-0.46	0	0	9.34	0	0	0	0	0	0	21.54	21.54
	Inverter	MV2-4	365586	4906624	2	0	0	100.3	100.3	1	902.25	3.25	0	70.11	0	-0.3	0	0	10.57	0	0	0	0	0	0	19.93	19.93
	Inverter	MV1-2	364753	4906063	2	0	0	100.3	100.3	1	919.57	3.25	0	70.27	0	-0.29	0	0	10.64	0	0	0	0	0	0	19.69	19.69
	Inverter	MV2-3	365820	4906641	2	0	0	100.3	100.3	1	943.36	3.25	0	70.49	0	-0.27	0	0	10.72	0	0	0	0	0	0	19.37	19.37
	Inverter	MV1-5	364671	4905892	2	0	0	100.3	100.3	1	951.32	3.25	0	70.57	0	-0.27	0	0	10.75	0	0	0	0	0	0	19.27	19.27
	Inverter	MV1-7	364925	4905782	2	0	0	97.3	97.3	1	684.64	3.25	0	67.71	0	-0.42	0	0	9.66	0	0	0	0	0	0	20.36	20.36
	Inverter	MV1-1	364715	4906166	2	0	0	100.3	100.3	1	996.4	3.25	0	70.97	0	-0.25	0	0	10.9	0	0	0	0	0	0	18.69	18.69
	Inverter	MV1-11	364655	4905414	2	0	0	100.3	100.3	1	1000.59	3.25	0	71.01	0	-0.25	0	0	10.91	0	0	0	0	0	0	18.64	18.64
	Inverter	MV1-9	364561	4905646	2	0	0	100.3	100.3	1	1048.76	3.25	0	71.41	0	-0.22	0	0	11.07	0	0	0	0	0	0	18.05	18.05
	Inverter	MV1-6	364477	4905835	2	0	0	100.3	100.3	1	1135.64	3.25	0	72.1	0	-0.18	0	0	11.34	0	0	0	0	0	0	17.05	17.05
	Inverter	MV1-14	365163	4905049	2	0	0	97.3	97.3	1	806.27	3.25	0	69.13	0	-0.35	0	0	10.21	0	0	0	0	0	0	18.32	18.32
	Sol_Luce Substation	S_Substation	369426	4908792	3.5	0	0	112.1	112.1	1	4899.97	5.25	0	84.8	0	0.87	2.89	0.26	8.5	0	0	0	0	0	0	15.01	15.01
	Inverter	MV1-13	364731	4905241	2	0	0	97.3	97.3	1	999.37	3.25	0	70.99	0	-0.25	0	0	10.91	0	0	0	0	0	0	15.66	15.66
	Inverter	MV2-1	365842	4906816	2	0	0	97.3	97.3	1	1118.96	3.25	0	71.98	0	-0.19	0	0	11.29	0	0	0	0	0	0	14.24	14.24
	Inverter	MV3-18	367752	4907412	2	0	0	100.3	100.3	1	2730.77	3.25	0	79.73	0	0.31	0	0	14.89	0	0	0	0	0	0	5.39	5.39
	Inverter	MV3-12	367668	4907594	2	0	0	100.3	100.3	1	2784.26	3.25	0	79.89	0	0.32	0	0	14.99	0	0	0	0	0	0	5.11	5.11
	Inverter	MV3-13	367963	4907577	2	0	0	100.3	100.3	1	2998.63	3.25	0	80.54	0	0.36	0	0	15.37	0	0	0	0	0	0	4.04	4.04
	Inverter	MV3-7	367945	4907754	2	0	0	100.3	100.3	1	3097.62	3.25	0	80.82	0	0.38	0	0	15.54	0	0	0	0	0	0	3.57	3.57
	Inverter	MV3-17	368178	4907472	2	0	0	100.3	100.3	1	3110.07	3.25	0	80.86	0	0.38	0	0	15.57	0	0	0	0	0	0	3.51	3.51
	Inverter	MV3-19	368357	4907347	2	0	0	100.3	100.3	1	3194.23	3.25	0	81.09	0	0.4	0	0	15.71	0	0	0	0	0	0	3.11	3.11
	Inverter	MV3-3	367939	4907927	2	0	0	100.3	100.3	1	3209.4	3.25	0	81.13	0	0.4	0	0	15.74	0	0	0	0	0	0	3.04	3.04
	Inverter	MV3-10	368167	4907669	2	0	0	100.3	100.3	1	3216.27	3.25	0	81.15	0	0.4	0	0	15.75	0	0	0	0	0	0	3.01	3.01
	Inverter	MV3-21	368478	4907206	2	0	0	100.3	100.3	1	3231.86	3.25	0	81.19	0	0.41	0	0	15.78	0	0	0	0	0	0	2.94	2.94
	Inverter	MV3-15	368357	4907477	2	0	0	100.3	100.3	1	3262.29	3.25	0	81.27	0	0.41	0	0	15.83	0	0	0	0	0	0	2.8	2.8
	Inverter	MV3-6	368162	4907834	2	0	0	100.3	100.3	1	3314.9	3.25	0	81.41	0	0.42	0	0	15.92	0	0	0	0	0	0	2.56	2.56
	Inverter	MV3-11	368346	4907662	2	0	0	100.3	100.3	1	3356.45	3.25	0	81.52	0	0.43	0	0	15.99	0	0	0	0	0	0	2.38	2.38
	Inverter	MV3-16	368514	4907475	2	0	0	100.3	100.3	1	3394.65	3.25	0	81.62	0	0.43	0	0	16.05	0	0	0	0	0	0	2.21	2.21
	Inverter	MV3-20	368689	4907317	2	0	0	100.3	100.3	1	3470.27	3.25	0	81.81	0	0.45	0	0	16.18	0	0	0	0	0	0	1.88	1.88
	Inverter	MV3-9	368512	4907703	2	0	0	100.3	100.3	1	3516.16	3.25	0	81.92	0	0.45	0	0	16.26	0	0	0	0	0	0	1.68	1.68
	Inverter	MV3-14	368684	4907498	2	0	0	100.3	100.3	1	3552.76	3.25	0	82.01	0	0.46	0	0	16.32	0	0	0	0	0	0	1.52	1.52
	Inverter	MV3-8	368680	4907712	2	0	0	100.3	100.3	1	3661.07	3.25	0	82.27	0	0.48	0	0	16.5	0	0	0	0	0	0	1.06	1.06
	Inverter	MV2-2	365977	4906654	2	0	0	89.1	89.1	1	1002.76	3.25	0	71.02	0	0.69	0	0	6.32	0	0	0	0	0	0	11.03	11.03
	Inverter	MV1-3	364440	4906039	2	0	0	89.1	89.1	1	1209.29	3.25	0	72.65	0	0.73	0	0	6.7	0	0	0	0	0	0	8.98	8.98
	Inverter	MV4-7	369035	4909001	2	0	0	100.3	100.3	1	4743.74	3.25	0	84.52	0	0.62	0	0	18.2	0	0	0	0	0	0	-3.03	-3.03
	Inverter	MV6-2	370085	4907339	2	0	0	100.3	100.3	1	4761.01	3.25	0	84.55	0	0.62	0	0	18.23	0	0	0	0	0	0	-3.09	-3.09
	Inverter	MV6-3	370207	4907140	2	0	0	100.3	100.3	1	4813.6	3.25	0	84.65	0	0.62	0	0	18.3	0	0	0	0	0	0	-3.27	-3.27
	Inverter	MV4-11	369264	4908855	2	0	0	100.3	100.3	1	4815.53	3.25	0	84.65	0	0.62	0	0	18.31	0	0	0	0	0	0	-3.27	-3.27
	Inverter	MV4-10	369312	4908858	2	0	0	100.3	100.3	1	4854.02	3.25	0	84.72	0	0.63	0	0	18.36	0	0	0	0	0	0	-3.4	-3.4
	Inverter	MV4-4	369027	4909199	2	0	0	100.3	100.3	1	4877.08	3.25	0	84.76	0	0.63	0	0	18.4	0	0	0	0	0	0	-3.48	-3.48
	Inverter	MV4-8	369256	4909001	2	0	0	100.3	100.3	1	4905.82	3.25	0	84.81	0	0.63	0	0	18.44	0	0	0	0	0	0	-3.58	-3.58
	Inverter	MV4-9	369289	4909001	2	0	0	100.3	100.3	1	4930.41	3.25	0	84.86	0	0.64	0	0	18.48	0	0	0	0	0	0	-3.66	-3.66
	Inverter	MV4-1	369011	4909397	2	0	0	100.3	100.3	1	5009.28	3.25	0	85	0	0.64	0	0	18.59	0	0	0	0	0	0	-3.92	-3.92
	Inverter	MV4-6	369243	4909192	2	0	0	100.3	100.3	1	5026.07	3.25	0	85.02	0	0.64	0	0	18.62	0	0	0	0	0	0	-3.98	-3.98
	Inverter	MV4-5	369289	4909199	2	0	0	100.3	100.3	1	5064.25	3.25	0	85.09	0	0.65	0	0	18.67	0	0	0	0	0	0	-4.1	-4.1
	Inverter	MV4-3	369229	4909397	2	0	0	100.3	100.3	1	5159.89	3.25	0	85.25	0	0.66	0	0	18.81	0	0	0	0	0	0	-4.41	-4.41
	Inverter	MV4-2	369272	4909397	2	0	0	100.3	100.3	1	5190.17	3.25	0	85.3	0	0.66	0	0	18.86	0	0	0	0	0	0	-4.51	-4.51
	Inverter	MV5-5	370015	4908690	2	0	0	100.3	100.3	1	5314.08	3.25	0	85.51	0	0.67	0	0	19.04	0	0	0	0	0	0	-4.9	-4.9
	Inverter	MV5-2	370006	4908853	2	0	0	100.3	100.3	1	5399.48	3.25	0	85.65	0	0.67	0	0	19.16	0	0	0	0	0	0	-5.17	-5.17
	Inverter	MV5-4	370324	4908707	2	0	0	100.3	100.3	1	5582.14	3.25	0	85.94	0	0.69	0	0	19.42	0	0	0	0	0	0	-5.73	-5.73
	Inverter	MV5-1	370020	4909142	2	0	0	100.3	100.3	1	5583.1	3.25	0	85.94	0	0.69	0	0	19.42	0	0	0	0	0	0	-5.73	-5.73

Inverter	MV5-3	370231	4908851	2	0	0	100.3	100.3	1	5583.19	3.25	0	85.94	0	0.69	0	0	19.42	0	0	0	0	0	0	-5.73	-5.73
Inverter	MV6-1	370235	4907364	2	0	0	97.3	97.3	1	4910.66	3.25	0	84.82	0	0.63	0	0	18.45	0	0	0	0	0	0	-6.59	-6.59
DSTATCOM - 10 MVAR #2	DSAT2	369403	4908757	2.5	0	0	96.6	96.6	1	4860.13	3.5	0	84.73	0	3.67	0	0	3.28	0	0	0	0	0	0	4.95	4.95
DSTATCOM - 10 MVAR #1	DSAT1	369437	4908757	2.5	0	0	96.6	96.6	1	4886.73	3.5	0	84.78	0	3.67	0	0	3.29	0	0	0	0	0	0	4.88	4.88
Gardiner Substation	G_Sub	366586.3	4903349.9	2.5	0	0	90.8	90.8	1	2566.3	4.25	0	79.19	0	0.99	3.34	0.31	5.29	0	0	0	0	0	0	1.97	1.97
SubstationTransformer	W_ST	369711.17	4906112.3	2.5	0	0	92	92	1	4122.68	4.25	0	83.3	0	1.4	2.58	0.29	7.53	0	0	0	0	0	0	-2.83	-2.83
Inverters	G_Inv1	366526.4	4903225.8	2	0	0	87.7	87.7	1	2660.13	3.25	0	79.5	0	2.66	0	0	3.39	0	0	0	0	0	0	2.11	2.11
Inverters	G_Inv2	366676.9	4903239.1	2	0	0	87.7	87.7	1	2703.61	3.25	0	79.64	0	2.67	0	0	3.44	0	0	0	0	0	0	1.91	1.91
Inverters	G_Inv3	366583.7	4903091.4	2	0	0	87.7	87.7	1	2806.07	3.25	0	79.96	0	2.68	0	0	3.56	0	0	0	0	0	0	1.46	1.46
Inverters	G_Inv4	366732.8	4903105	2	0	0	87.7	87.7	1	2848.88	3.25	0	80.09	0	2.68	0	0	3.61	0	0	0	0	0	0	1.28	1.28
Inverter	MV3-22	368656	4907142	2	0	0	89.1	89.1	1	3363.45	3.25	0	81.54	0	1.24	0	0	10.16	0	0	0	0	0	0	-3.87	-3.87
Inverter	MV3-1	368156	4907976	2	0	0	89.1	89.1	1	3402.63	3.25	0	81.64	0	1.25	0	0	10.22	0	0	0	0	0	0	-4.04	-4.04
Inverter	MV3-5	368340	4907843	2	0	0	89.1	89.1	1	3459.47	3.25	0	81.78	0	1.26	0	0	10.3	0	0	0	0	0	0	-4.28	-4.28
Inverters	G_Inv5	366638.5	4902958.1	2	0	0	87.7	87.7	1	2950.11	3.25	0	80.4	0	2.69	0	0	3.72	0	0	0	0	0	0	0.85	0.85
Inverters	G_Inv6	366788.5	4902972	2	0	0	87.7	87.7	1	2993.07	3.25	0	80.52	0	2.7	0	0	3.77	0	0	0	0	0	0	0.67	0.67
Inverters	G_Inv7	366694.6	4902824.7	2	0	0	87.7	87.7	1	3094.71	3.25	0	80.81	0	2.71	0	0	3.88	0	0	0	0	0	0	0.26	0.26
Inverter	MV3-4	368502	4907925	2	0	0	89.1	89.1	1	3637.89	3.25	0	82.22	0	1.3	0	0	10.56	0	0	0	0	0	0	-5.03	-5.03
Inverters	G_Inv8	366844.5	4902838.5	2	0	0	87.7	87.7	1	3137.83	3.25	0	80.93	0	2.71	0	0	3.93	0	0	0	0	0	0	0.09	0.09
Inverter	MV3-2	368671	4907928	2	0	0	89.1	89.1	1	3775.52	3.25	0	82.54	0	1.34	0	0	10.76	0	0	0	0	0	0	-5.58	-5.58
Inverters	G_Inv9	366750.9	4902691.8	2	0	0	87.7	87.7	1	3238.92	3.25	0	81.21	0	2.72	0	0	4.04	0	0	0	0	0	0	-0.31	-0.31
Westbrook Inverter Enclosur	W_INV2	369374	4906388	2	0	0	89.1	89.1	1	3825.42	3.25	0	82.65	0	1.35	0	0	10.84	0	0	0	0	0	0	-5.78	-5.78
Inverters	G_Inv10	366900.7	4902704.8	2	0	0	87.7	87.7	1	3282.86	3.25	0	81.33	0	2.73	0	0	4.09	0	0	0	0	0	0	-0.48	-0.48
Westbrook Inverter Enclosur	W_INV3	369508	4906164	2	0	0	89.1	89.1	1	3925.96	3.25	0	82.88	0	1.37	0	0	10.98	0	0	0	0	0	0	-6.17	-6.17
Westbrook Inverter Enclosur	W_INV4	369673	4906164	2	0	0	89.1	89.1	1	4089.95	3.25	0	83.23	0	1.41	0	0	11.21	0	0	0	0	0	0	-6.8	-6.8
Westbrook Inverter Enclosur	W_INV5	369719	4906574	2	0	0	89.1	89.1	1	4199.34	3.25	0	83.46	0	1.44	0	0	11.37	0	0	0	0	0	0	-7.21	-7.21
Westbrook Inverter Enclosur	W_INV7	369780	4906417	2	0	0	89.1	89.1	1	4230.48	3.25	0	83.53	0	1.45	0	0	11.41	0	0	0	0	0	0	-7.33	-7.33
Westbrook Inverter Enclosur	W_INV6	369875	4906578	2	0	0	89.1	89.1	1	4353	3.25	0	83.78	0	1.48	0	0	11.58	0	0	0	0	0	0	-7.78	-7.78
Fixed Reactor Bank 1	FRB1	369378	4908755	6	0	0	89.8	89.8	1	4839.37	5.25	0	84.7	0	-0.59	0	0	8.43	0	0	0	0	0	0	-2.76	-2.76
Inverter	MV4-13	369051	4908605	2	0	0	89.1	89.1	1	4491.42	3.25	0	84.05	0	1.51	0	0	11.77	0	0	0	0	0	0	-8.28	-8.28
Inverter	MV4-15	369176	4908481	2	0	0	89.1	89.1	1	4511.08	3.25	0	84.09	0	1.52	0	0	11.8	0	0	0	0	0	0	-8.35	-8.35
Fixed Reactor Bank 2	FRB2	369464	4908755	6	0	0	89.8	89.8	1	4906.68	5.25	0	84.82	0	-0.58	0	0	8.51	0	0	0	0	0	0	-2.97	-2.97
Inverter	MV4-14	369176	4908507	2	0	0	89.1	89.1	1	4527.03	3.25	0	84.12	0	1.52	0	0	11.82	0	0	0	0	0	0	-8.4	-8.4
Inverter	MV4-12	369043	4908803	2	0	0	89.1	89.1	1	4615.05	3.25	0	84.28	0	1.54	0	0	11.94	0	0	0	0	0	0	-8.71	-8.71
Inverter	MV5-6	369982	4908507	2	0	0	89.1	89.1	1	5186.22	3.25	0	85.3	0	1.69	0	0	12.71	0	0	0	0	0	0	-10.64	-10.64
Westbrook Inverter Enclosur	W_INV1	369409	4906578	2	0	0	86.1	86.1	1	3897.17	3.25	0	82.81	0	1.37	0	0	10.94	0	0	0	0	0	0	-9.06	-9.06
Inverter Transformer	MV1-10 T	365010	4905564	2	0	0	69.4	69.4	1	617.56	3.25	0	66.81	0	1.24	0	0	3.2	0	0	0	0	0	0	-1.9	-1.9
Inverter Transformer	MV1-7 T	364919	4905782	2	0	0	69.4	69.4	1	690.62	3.25	0	67.78	0	1.35	0	0	3.33	0	0	0	0	0	0	-3.11	-3.11
Inverter	MV6-4	370250	4906966	2	0	0	86.1	86.1	1	4806.77	3.25	0	84.64	0	1.59	0	0	12.2	0	0	0	0	0	0	-12.37	-12.37
Inverter Transformer	MV1-14 T	365157	4905049	2	0	0	69.4	69.4	1	809.59	3.25	0	69.17	0	1.5	0	0	3.53	0	0	0	0	0	0	-4.84	-4.84
Inverter Transformer	MV1-13 T	364725	4905241	2	0	0	69.4	69.4	1	1004.63	3.25	0	71.04	0	1.69	0	0	3.82	0	0	0	0	0	0	-7.19	-7.19
Inverter Transformer	MV2-1 T	365836	4906816	2	0	0	69.4	69.4	1	1117.71	3.25	0	71.97	0	1.77	0	0	3.97	0	0	0	0	0	0	-8.36	-8.36
Westbrook Inverter Transfor	W_INVTR1	369403	4906578	2	0	0	78.2	78.2	1	3891.32	3.25	0	82.8	0	-2.94	0	0	2.01	0	0	0	0	0	0	-3.64	-3.64
Westbrook Inverter Transfor	W_INVTR2	369368	4906388	2	0	0	77.3	77.3	1	3819.51	3.25	0	82.64	0	-2.92	0	0	1.99	0	0	0	0	0	0	-4.36	-4.36
Westbrook Inverter Transfor	W_INVTR3	369514	4906164	2	0	0	77.3	77.3	1	3931.92	3.25	0	82.89	0	-2.95	0	0	2.03	0	0	0	0	0	0	-4.63	-4.63
Westbrook Inverter Transfor	W_INVTR4	369679	4906164	2	0	0	77.3	77.3	1	4095.92	3.25	0	83.25	0	-2.98	0	0	2.09	0	0	0	0	0	0	-5.01	-5.01
Westbrook Inverter Transfor	W_INVTR5	369725	4906574	2	0	0	77.3	77.3	1	4205.22	3.25	0	83.48	0	-3.01	0	0	2.13	0	0	0	0	0	0	-5.26	-5.26
Westbrook Inverter Transfor	W_INVTR7	369786	4906417	2	0	0	77.3	77.3	1	4236.4	3.25	0	83.54	0	-3.02	0	0	2.14	0	0	0	0	0	0	-5.32	-5.32
Westbrook Inverter Transfor	W_INVTR6	369881	4906578	2	0	0	77.3	77.3	1	4358.88	3.25	0	83.79	0	-3.04	0	0	2.19	0	0	0	0	0	0	-5.59	-5.59
Inverter Transformer	MV1-12 T	365044	4905386	2	0	0	56.1	56.1	1	655.65	3.25	0	67.33	0	-0.09	0	0	4.01	0	0	0	0	0	0	-15.2	-15.2
Inverter Transformer	MV1-15 T	365309	4904994	2	0	0	56.1	56.1	1	786.63	3.25	0	68.92	0	-0.06	0	0	4.36	0	0	0	0	0	0	-17.16	-17.16
Inverter Transformer	MV1-4 T	364821	4905918	2	0	0	56.1	56.1	1	810.07	3.25	0	69.17	0	-0.05	0	0	4.42	0	0	0	0	0	0	-17.48	-17.48
Inverter Transformer	MV1-8 T	364782	4905647	2	0	0	56.1	56.1	1	828.41	3.25	0	69.36	0	-0.04	0	0	4.47	0	0	0	0	0	0	-17.73	-17.73
Inverter Transformer	MV2-4 T	365590	4906628	2	0	0	56.1	56.1	1	906.16	3.25	0	70.14	0	-0.02	0	0	4.66	0	0	0	0	0	0	-18.73	-18.73
Inverter Transformer	MV1-2 T	364759	4906063	2	0	0	56.1	56.1	1	914	3.25	0	70.22	0	-0.02	0	0	4.68	0	0	0	0	0	0	-18.82	-18.82
Inverter Transformer	MV2-3 T	365814	4906641	2	0	0	56.1	56.1	1	942.03	3.25	0	70.48	0	-0.01	0	0	4.75	0	0	0	0	0	0	-19.16	-19.16
Inverter Transformer	MV1-5 T	364676	4905892	2	0	0	56.1	56.1	1	946.4	3.25	0	70.52	0	-0.01	0	0	4.76	0	0	0	0	0	0	-19.22	-19.22
Inverter Transformer	MV1-1 T	364721	4906166	2	0	0	56.1	56.1	1	991.03	3.25	0	70.92	0	0.01	0	0	4.87	0	0	0	0	0	0	-19.74	-19.74
Inverter Transformer	MV2-2 T	365982	4906654	2	0	0	56.1	56.1	1	1004.62	3.25	0	71.04	0	0.01	0	0	4.9	0	0	0	0	0	0	-19.9	-19.9
Inverter Transformer	MV1-11 T	364649	4905414	2	0	0	56.1	56.1	1	1006.3	3.25	0	71.05	0	0.01	0	0	4.9	0	0	0	0	0	0	-19.91	-19.91
Inverter Transformer	MV6-4 T	370244	4906966	2	0	0	69.4	69.4	1	4800.97	3.25	0	84.63	0	2.97	0	0	7.25	0	0	0	0	0	0	-25.49	-25.49
Inverter Transformer	MV1-9 T	364555	4905646	2	0	0	56.1	56.1	1	1054.74	3.25	0	71.46	0	0.03	0	0	5.02	0	0	0	0	0	0	-20.45	-20.45
Inverter Transformer	MV6-1 T	370230	4907364	2	0	0	69.4	69.4	1	4905.95	3.25	0	84.81	0	2.99	0	0	7.32	0	0	0	0	0	0	-25.78	-25.78
Inverter Transformer	MV1-6 T	364482	4905835	2	0	0	56.1	56.1	1	1130.66	3.25	0	72.07	0	0.06	0	0	5.2	0	0	0	0	0	0	-21.26	-21.26
Inverter Transformer	MV1-3 T	364435	4906039	2	0	0	56.1	56.1	1	1214.12	3.25	0	72.69	0	0.09	0	0	5.39	0	0	0	0	0	0	-22.1	-22.1
Inverter Transformer	MV3-18 T	367757	4907412	2	0	0	56.1	56.1	1	2734.7	3.25	0	79.74	0	0.72	0	0	8.41	0	0	0	0	0	0	-32.81	-32.81
Inverter Transformer	MV3-12 T	367674	4907594	2	0	0	56.1	56.1	1	2788.71	3.25	0	79.91	0	0.74	0	0	8.5	0	0	0	0	0	0	-33.09	-33.09
Inverter Transformer	MV3-13 T	367958	4907577	2	0	0	56.1	56.1	1	2994.7	3.25	0	80.53	0	0.83	0	0	8.86	0	0	0	0	0	0	-34.16	-34.16
Inverter Transformer	MV3-7 T	367951	4907754	2	0	0	56.1	56.1	1	3102.16	3.25	0	80.83	0	0.87	0	0	9.04	0	0	0	0	0	0	-34.69	-34.69
Inverter Transformer	MV3-17 T	368183	4907472	2	0	0	56.1	56.1	1	3114.21	3.25	0	80.87	0	0.88	0	0	9.06	0	0	0	0	0	0	-34.75	-34.75
Inverter Transformer	MV3-19 T	368352	4907347	2	0	0	56.1	56.1	1	3189.93	3.25	0	81.08	0	0.91	0	0	9.19	0	0	0	0	0	0	-35.11	-35.11
Inverter Transformer	MV3-10 T	368162	4907669	2	0	0	56.1	56.1	1	3212.3	3.25	0	81.14	0	0.92	0	0	9.22	0	0	0	0	0	0	-35.22	-35.22
Inverter Transformer	MV3-3 T	367944	4907927	2	0	0	56.1	56.1	1	3213.04	3.25	0	81.14	0	0.92	0	0	9.22	0	0	0	0	0	0	-35.22	-35.22
Inverter Transformer	MV3-21 T	368484	4907206	2	0	0	56.1	56.1	1	3237.19	3.25	0	81.2	0	0.93	0	0	9.26	0	0	0	0	0	0	-35.34	-35.34
Inverter Transformer	MV3-15 T	368351	4907477	2	0	0	56.1	56.1	1	3257.23	3.25	0	81.26	0	0.94	0	0	9.3	0	0	0	0	0	0	-35.43	-35.43

	Inverter Transformer	MV3-6 T	368156	4907834	2	0	0	56.1	56.1	1	3310.28	3.25	0	81.4	0	0.96	0	0	9.38	0	0	0	0	0	0	-35.68	-35.68
	Inverter Transformer	MV3-11 T	368340	4907662	2	0	0	56.1	56.1	1	3351.55	3.25	0	81.5	0	0.98	0	0	9.45	0	0	0	0	0	0	-35.87	-35.87
	Inverter Transformer	MV3-22 T	368661	4907142	2	0	0	56.1	56.1	1	3367.98	3.25	0	81.55	0	0.99	0	0	9.48	0	0	0	0	0	0	-35.95	-35.95
	Inverter Transformer	MV3-16 T	368509	4907475	2	0	0	56.1	56.1	1	3390.37	3.25	0	81.6	0	0.99	0	0	9.51	0	0	0	0	0	0	-36.05	-36.05
	Inverter Transformer	MV3-1 T	368150	4907976	2	0	0	56.1	56.1	1	3398.14	3.25	0	81.62	0	1	0	0	9.53	0	0	0	0	0	0	-36.09	-36.09
	Inverter Transformer	MV3-5 T	368335	4907843	2	0	0	56.1	56.1	1	3455.52	3.25	0	81.77	0	1.02	0	0	9.62	0	0	0	0	0	0	-36.35	-36.35
	Inverter Transformer	MV3-20 T	368683	4907317	2	0	0	56.1	56.1	1	3464.94	3.25	0	81.79	0	1.03	0	0	9.63	0	0	0	0	0	0	-36.39	-36.39
	Inverter Transformer	MV3-9 T	368517	4907703	2	0	0	56.1	56.1	1	3520.29	3.25	0	81.93	0	1.05	0	0	9.72	0	0	0	0	0	0	-36.64	-36.64
	Inverter Transformer	MV3-14 T	368678	4907498	2	0	0	56.1	56.1	1	3547.57	3.25	0	82	0	1.06	0	0	9.76	0	0	0	0	0	0	-36.76	-36.76
	Inverter Transformer	MV3-4 T	368507	4907925	2	0	0	56.1	56.1	1	3641.87	3.25	0	82.23	0	1.1	0	0	9.91	0	0	0	0	0	0	-37.18	-37.18
	Inverter Transformer	MV3-8 T	368685	4907712	2	0	0	56.1	56.1	1	3665.27	3.25	0	82.28	0	1.11	0	0	9.95	0	0	0	0	0	0	-37.28	-37.28
	Inverter Transformer	MV3-2 T	368677	4907928	2	0	0	56.1	56.1	1	3780.39	3.25	0	82.55	0	1.16	0	0	10.12	0	0	0	0	0	0	-37.77	-37.77
	Inverter Transformer	MV4-13 T	369057	4908605	2	0	0	56.1	56.1	1	4496.02	3.25	0	84.06	0	1.44	0	0	11.17	0	0	0	0	0	0	-40.61	-40.61
	Inverter Transformer	MV4-15 T	369170	4908481	2	0	0	56.1	56.1	1	4506.34	3.25	0	84.08	0	1.44	0	0	11.18	0	0	0	0	0	0	-40.64	-40.64
	Inverter Transformer	MV4-14 T	369182	4908507	2	0	0	56.1	56.1	1	4531.76	3.25	0	84.13	0	1.45	0	0	11.22	0	0	0	0	0	0	-40.74	-40.74
	Inverter Transformer	MV4-12 T	369049	4908803	2	0	0	56.1	56.1	1	4619.52	3.25	0	84.29	0	1.48	0	0	11.34	0	0	0	0	0	0	-41.06	-41.06
	Inverter Transformer	MV4-7 T	369040	4909001	2	0	0	56.1	56.1	1	4747.35	3.25	0	84.53	0	1.53	0	0	11.52	0	0	0	0	0	0	-41.52	-41.52
	Inverter Transformer	MV6-2 T	370091	4907339	2	0	0	56.1	56.1	1	4766.65	3.25	0	84.56	0	1.54	0	0	11.54	0	0	0	0	0	0	-41.59	-41.59
	Inverter Transformer	MV6-3 T	370202	4907140	2	0	0	56.1	56.1	1	4808.82	3.25	0	84.64	0	1.56	0	0	11.6	0	0	0	0	0	0	-41.74	-41.74
	Inverter Transformer	MV4-11 T	369269	4908855	2	0	0	56.1	56.1	1	4819.33	3.25	0	84.66	0	1.56	0	0	11.61	0	0	0	0	0	0	-41.77	-41.77
	Inverter Transformer	MV4-10 T	369307	4908858	2	0	0	56.1	56.1	1	4850.21	3.25	0	84.72	0	1.57	0	0	11.65	0	0	0	0	0	0	-41.88	-41.88
	Inverter Transformer	MV4-4 T	369033	4909199	2	0	0	56.1	56.1	1	4881.29	3.25	0	84.77	0	1.58	0	0	11.7	0	0	0	0	0	0	-41.99	-41.99
	Inverter Transformer	MV4-8 T	369262	4909001	2	0	0	56.1	56.1	1	4910.28	3.25	0	84.82	0	1.59	0	0	11.74	0	0	0	0	0	0	-42.09	-42.09
	Inverter Transformer	MV4-9 T	369284	4909001	2	0	0	56.1	56.1	1	4926.68	3.25	0	84.85	0	1.6	0	0	11.76	0	0	0	0	0	0	-42.15	-42.15
	Inverter Transformer	MV4-1 T	369017	4909397	2	0	0	56.1	56.1	1	5013.36	3.25	0	85	0	1.63	0	0	11.87	0	0	0	0	0	0	-42.45	-42.45
	Inverter Transformer	MV4-6 T	369249	4909192	2	0	0	56.1	56.1	1	5030.41	3.25	0	85.03	0	1.64	0	0	11.89	0	0	0	0	0	0	-42.5	-42.5
	Inverter Transformer	MV4-5 T	369283	4909199	2	0	0	56.1	56.1	1	5059.89	3.25	0	85.08	0	1.65	0	0	11.93	0	0	0	0	0	0	-42.6	-42.6
	Inverter Transformer	MV4-3 T	369234	4909397	2	0	0	56.1	56.1	1	5163.41	3.25	0	85.26	0	1.68	0	0	12.07	0	0	0	0	0	0	-42.95	-42.95
	Inverter Transformer	MV4-2 T	369267	4909397	2	0	0	56.1	56.1	1	5186.64	3.25	0	85.3	0	1.69	0	0	12.1	0	0	0	0	0	0	-43.03	-43.03
	Inverter Transformer	MV5-6 T	369987	4908507	2	0	0	56.1	56.1	1	5190.44	3.25	0	85.3	0	1.69	0	0	12.1	0	0	0	0	0	0	-43.04	-43.04
	Inverter Transformer	MV5-5 T	370021	4908690	2	0	0	56.1	56.1	1	5319.06	3.25	0	85.52	0	1.74	0	0	12.27	0	0	0	0	0	0	-43.46	-43.46
	Inverter Transformer	MV5-2 T	370011	4908853	2	0	0	56.1	56.1	1	5403.55	3.25	0	85.65	0	1.77	0	0	12.37	0	0	0	0	0	0	-43.74	-43.74
	Inverter Transformer	MV5-1 T	370015	4909142	2	0	0	56.1	56.1	1	5579.15	3.25	0	85.93	0	1.83	0	0	12.59	0	0	0	0	0	0	-44.29	-44.29
	Inverter Transformer	MV5-4 T	370330	4908707	2	0	0	56.1	56.1	1	5587.21	3.25	0	85.94	0	1.83	0	0	12.6	0	0	0	0	0	0	-44.32	-44.32
	Inverter Transformer	MV5-3 T	370237	4908851	2	0	0	56.1	56.1	1	5588.16	3.25	0	85.95	0	1.83	0	0	12.6	0	0	0	0	0	0	-44.32	-44.32
	Line Reactor	NGR	369421	4908787.5	5	0	0	45.4	45.4	1	4893.25	5.25	0	84.79	0	3.26	1.35	0.09	2	0	0	0	0	0	0	-46.05	-46.05
Limit. Valu	0	0																								
Level D/N:	32.497	32.497																								

Receiver: Vacant Lot Receptor
ID: S-VLR40
X: 365602
Y: 4905590
Z: 4.5
Ground: 0

ISO	Description	ID	X	Y	Z	Ground	ReflOrd	LxT	LxN	L/A	Dist.	hm	Freq	Adiv	K0b	Agr	Abar	z	Aatm	Afol	Ahous	Cmet	CmetN	Dc	RL	LtotT	LtotN
	Inverter	MV1-12	365038	4905386	2	0	0	100.3	100.3	1	599.77	3.25	0	66.56	0	-0.48	0	0	9.2	0	0	0	0	0	0	25.03	25.03
	Inverter	MV1-15	365315	4904994	2	0	0	100.3	100.3	1	661.51	3.25	0	67.41	0	-0.44	0	0	9.55	0	0	0	0	0	0	23.79	23.79
	Inverter	MV1-8	364788	4905647	2	0	0	100.3	100.3	1	816	3.25	0	69.23	0	-0.34	0	0	10.25	0	0	0	0	0	0	21.18	21.18
	Inverter	MV1-10	365004	4905564	2	0	0	97.3	97.3	1	598.57	3.25	0	66.54	0	-0.48	0	0	9.2	0	0	0	0	0	0	22.05	22.05
	Inverter	MV1-4	364815	4905918	2	0	0	100.3	100.3	1	852.62	3.25	0	69.62	0	-0.32	0	0	10.39	0	0	0	0	0	0	20.63	20.63
	Inverter	MV1-11	364655	4905414	2	0	0	100.3	100.3	1	963.22	3.25	0	70.67	0	-0.26	0	0	10.79	0	0	0	0	0	0	19.11	19.11
	Inverter	MV1-2	364753	4906063	2	0	0	100.3	100.3	1	971.87	3.25	0	70.75	0	-0.26	0	0	10.82	0	0	0	0	0	0	19	19
	Inverter	MV1-5	364671	4905892	2	0	0	100.3	100.3	1	978.76	3.25	0	70.81	0	-0.26	0	0	10.84	0	0	0	0	0	0	18.92	18.92
	Inverter	MV1-14	365163	4905049	2	0	0	97.3	97.3	1	696.71	3.25	0	67.86	0	-0.41	0	0	9.72	0	0	0	0	0	0	20.14	20.14
	Inverter	MV1-7	364925	4905782	2	0	0	97.3	97.3	1	703.7	3.25	0	67.95	0	-0.41	0	0	9.76	0	0	0	0	0	0	20.02	20.02
	Inverter	MV2-4	365586	4906624	2	0	0	100.3	100.3	1	1034.13	3.25	0	71.29	0	-0.23	0	0	11.02	0	0	0	0	0	0	18.23	18.23
	Inverter	MV1-9	364561	4905646	2	0	0	100.3	100.3	1	1042.51	3.25	0	71.36	0	-0.23	0	0	11.05	0	0	0	0	0	0	18.13	18.13
	Inverter	MV1-1	364715	4906166	2	0	0	100.3	100.3	1	1057.62	3.25	0	71.49	0	-0.22	0	0	11.1	0	0	0	0	0	0	17.95	17.95
	Inverter	MV2-3	365820	4906641	2	0	0	100.3	100.3	1	1073.37	3.25	0	71.62	0	-0.21	0	0	11.15	0	0	0	0	0	0	17.76	17.76
	Inverter	MV1-6	364477	4905835	2	0	0	100.3	100.3	1	1151.37	3.25	0	72.22	0	-0.18	0	0	11.38	0	0	0	0	0	0	16.88	16.88
	Sol_Luce Substation	S_Substation	369426	4908792	3.5	0	0	112.1	112.1	1	4987.56	5.25	0	84.96	0	0.89	2.87	0.25	8.61	0	0	0	0	0	0	14.75	14.75
	Inverter	MV1-13	364731	4905241	2	0	0	97.3	97.3	1	938.32	3.25	0	70.45	0	-0.28	0	0	10.7	0	0	0	0	0	0	16.44	16.44
	Inverter	MV2-1	365842	4906816	2	0	0	97.3	97.3	1	1249.27	3.25	0	72.93	0	-0.13	0	0	11.67	0	0	0	0	0	0	12.85	12.85
	Inverter	MV3-18	367752	4907412	2	0	0	100.3	100.3	1	2818.19	3.25	0	80	0	0.33	0	0	15.05	0	0	0	0	0	0	4.94	4.94
	Inverter	MV3-12	367668	4907594	2	0	0	100.3	100.3	1	2878.26	3.25	0	80.18	0	0.34	0	0	15.16	0	0	0	0	0	0	4.64	4.64
	Inverter	MV3-13	367963	4907577	2	0	0	100.3	100.3	1	3085.85	3.25	0	80.79	0	0.38	0	0	15.52	0	0	0	0	0	0	3.62	3.62
	Inverter	MV3-7	367945	4907754	2	0	0	100.3	100.3	1	3189.44	3.25	0	81.07	0	0.4	0	0	15.7	0	0	0	0	0	0	3.14	3.14
	Inverter	MV3-17	368178	4907472	2	0	0	100.3	100.3	1	3190.25	3.25	0	81.08	0	0.4	0	0	15.7	0	0	0	0	0	0	3.13	3.13
	Inverter	MV3-19	368357	4907347	2	0	0	100.3	100.3	1	3267.58	3.25	0	81.28	0	0.41	0	0	15.84	0	0	0	0	0	0	2.78	2.78
	Inverter	MV3-21	368478	4907206	2	0	0	100.3	100.3	1	3298.91	3.25	0	81.37	0	0.42	0	0	15.89	0	0	0	0	0	0	2.64	2.64
	Inverter	MV3-10	368167	4907669	2	0	0	100.3	100.3	1	3301.74	3.25	0	81.37	0	0.42	0	0	15.9	0	0	0	0	0	0	2.62	2.62
	Inverter	MV3-3	367939	4907927	2	0	0	100.3	100.3	1	3305.02	3.25	0	81.38	0	0.42	0	0	15.9	0	0	0	0	0	0	2.61	2.61

Inverter	MV3-15	368357	4907477	2	0	0	100.3	100.3	1	3339.28	3.25	0	81.47	0	0.42	0	0	15.96	0	0	0	0	0	0	2.45	2.45
Inverter	MV3-6	368162	4907834	2	0	0	100.3	100.3	1	3404.28	3.25	0	81.64	0	0.44	0	0	16.07	0	0	0	0	0	0	2.17	2.17
Inverter	MV3-11	368346	4907662	2	0	0	100.3	100.3	1	3438.42	3.25	0	81.73	0	0.44	0	0	16.13	0	0	0	0	0	0	2.02	2.02
Inverter	MV3-16	368514	4907475	2	0	0	100.3	100.3	1	3468.86	3.25	0	81.8	0	0.45	0	0	16.18	0	0	0	0	0	0	1.88	1.88
Inverter	MV3-20	368689	4907317	2	0	0	100.3	100.3	1	3537.25	3.25	0	81.97	0	0.46	0	0	16.29	0	0	0	0	0	0	1.59	1.59
Inverter	MV3-9	368512	4907703	2	0	0	100.3	100.3	1	3596.23	3.25	0	82.12	0	0.47	0	0	16.39	0	0	0	0	0	0	1.34	1.34
Inverter	MV3-14	368684	4907498	2	0	0	100.3	100.3	1	3624.8	3.25	0	82.19	0	0.47	0	0	16.44	0	0	0	0	0	0	1.22	1.22
Inverter	MV3-8	368680	4907712	2	0	0	100.3	100.3	1	3738.58	3.25	0	82.45	0	0.49	0	0	16.63	0	0	0	0	0	0	0.74	0.74
Inverter	MV2-2	365977	4906654	2	0	0	89.1	89.1	1	1128.15	3.25	0	72.05	0	0.71	0	0	6.55	0	0	0	0	0	0	9.75	9.75
Inverter	MV1-3	364440	4906039	2	0	0	89.1	89.1	1	1245.73	3.25	0	72.91	0	0.74	0	0	6.76	0	0	0	0	0	0	8.65	8.65
Inverter	MV6-2	370085	4907339	2	0	0	100.3	100.3	1	4812.1	3.25	0	84.65	0	0.62	0	0	18.3	0	0	0	0	0	0	-3.26	-3.26
Inverter	MV4-7	369035	4909001	2	0	0	100.3	100.3	1	4839.46	3.25	0	84.7	0	0.63	0	0	18.34	0	0	0	0	0	0	-3.35	-3.35
Inverter	MV6-3	370207	4907140	2	0	0	100.3	100.3	1	4858.86	3.25	0	84.73	0	0.63	0	0	18.37	0	0	0	0	0	0	-3.42	-3.42
Inverter	MV4-11	369264	4908855	2	0	0	100.3	100.3	1	4906.17	3.25	0	84.81	0	0.63	0	0	18.44	0	0	0	0	0	0	-3.58	-3.58
Inverter	MV4-10	369312	4908858	2	0	0	100.3	100.3	1	4944.08	3.25	0	84.88	0	0.64	0	0	18.5	0	0	0	0	0	0	-3.7	-3.7
Inverter	MV4-4	369027	4909199	2	0	0	100.3	100.3	1	4975.49	3.25	0	84.94	0	0.64	0	0	18.54	0	0	0	0	0	0	-3.81	-3.81
Inverter	MV4-8	369256	4909001	2	0	0	100.3	100.3	1	4998.66	3.25	0	84.98	0	0.64	0	0	18.58	0	0	0	0	0	0	-3.89	-3.89
Inverter	MV4-9	369289	4909001	2	0	0	100.3	100.3	1	5022.84	3.25	0	85.02	0	0.64	0	0	18.61	0	0	0	0	0	0	-3.96	-3.96
Inverter	MV4-1	369011	4909397	2	0	0	100.3	100.3	1	5110.24	3.25	0	85.17	0	0.65	0	0	18.74	0	0	0	0	0	0	-4.25	-4.25
Inverter	MV4-6	369243	4909192	2	0	0	100.3	100.3	1	5121.65	3.25	0	85.19	0	0.65	0	0	18.76	0	0	0	0	0	0	-4.29	-4.29
Inverter	MV4-5	369289	4909199	2	0	0	100.3	100.3	1	5159.35	3.25	0	85.25	0	0.66	0	0	18.81	0	0	0	0	0	0	-4.41	-4.41
Inverter	MV4-3	369229	4909397	2	0	0	100.3	100.3	1	5258.17	3.25	0	85.42	0	0.66	0	0	18.96	0	0	0	0	0	0	-4.72	-4.72
Inverter	MV4-2	369272	4909397	2	0	0	100.3	100.3	1	5287.93	3.25	0	85.47	0	0.67	0	0	19	0	0	0	0	0	0	-4.82	-4.82
Inverter	MV5-5	370015	4908690	2	0	0	100.3	100.3	1	5393.01	3.25	0	85.64	0	0.67	0	0	19.15	0	0	0	0	0	0	-5.15	-5.15
Inverter	MV5-2	370006	4908853	2	0	0	100.3	100.3	1	5481.09	3.25	0	85.78	0	0.68	0	0	19.27	0	0	0	0	0	0	-5.42	-5.42
Inverter	MV5-4	370324	4908707	2	0	0	100.3	100.3	1	5658	3.25	0	86.05	0	0.69	0	0	19.52	0	0	0	0	0	0	-5.95	-5.95
Inverter	MV5-3	370231	4908851	2	0	0	100.3	100.3	1	5662.31	3.25	0	86.06	0	0.69	0	0	19.53	0	0	0	0	0	0	-5.97	-5.97
Inverter	MV5-1	370020	4909142	2	0	0	100.3	100.3	1	5668.81	3.25	0	86.07	0	0.69	0	0	19.54	0	0	0	0	0	0	-5.99	-5.99
Inverter	MV6-1	370235	4907364	2	0	0	97.3	97.3	1	4961.03	3.25	0	84.91	0	0.64	0	0	18.52	0	0	0	0	0	0	-6.76	-6.76
Gardiner Substation	G_Sub	366586.3	4903349.9	2.5	0	0	90.8	90.8	1	2446.81	4.25	0	78.77	0	0.95	3.41	0.31	5.1	0	0	0	0	0	0	2.54	2.54
DSTATCOM - 10 MVAR #2	DSAT2	369403	4908757	2.5	0	0	96.6	96.6	1	4947.47	3.5	0	84.89	0	3.68	0	0	3.32	0	0	0	0	0	0	4.74	4.74
DSTATCOM - 10 MVAR #1	DSAT1	369437	4908757	2.5	0	0	96.6	96.6	1	4973.64	3.5	0	84.93	0	3.68	0	0	3.34	0	0	0	0	0	0	4.68	4.68
SubstationTransformer	W_ST	369711.17	4906112.3	2.5	0	0	92	92	1	4142.23	4.25	0	83.34	0	1.4	2.57	0.29	7.55	0	0	0	0	0	0	-2.9	-2.9
Inverters	G_Inv1	366526.4	4903225.8	2	0	0	87.7	87.7	1	2538.5	3.25	0	79.09	0	2.65	0	0	3.26	0	0	0	0	0	0	2.67	2.67
Inverters	G_Inv2	366676.9	4903239.1	2	0	0	87.7	87.7	1	2584.98	3.25	0	79.25	0	2.65	0	0	3.31	0	0	0	0	0	0	2.45	2.45
Inverters	G_Inv3	366583.7	4903091.4	2	0	0	87.7	87.7	1	2684.54	3.25	0	79.58	0	2.66	0	0	3.42	0	0	0	0	0	0	2	2
Inverters	G_Inv4	366732.8	4903105	2	0	0	87.7	87.7	1	2730.19	3.25	0	79.72	0	2.67	0	0	3.47	0	0	0	0	0	0	1.8	1.8
Inverters	G_Inv5	366638.5	4902958.1	2	0	0	87.7	87.7	1	2828.65	3.25	0	80.03	0	2.68	0	0	3.58	0	0	0	0	0	0	1.37	1.37
Inverters	G_Inv6	366788.5	4902972	2	0	0	87.7	87.7	1	2874.32	3.25	0	80.17	0	2.68	0	0	3.63	0	0	0	0	0	0	1.17	1.17
Inverter	MV3-22	368656	4907142	2	0	0	89.1	89.1	1	3425.73	3.25	0	81.7	0	1.25	0	0	10.25	0	0	0	0	0	0	-4.14	-4.14
Inverters	G_Inv7	366694.6	4902824.7	2	0	0	87.7	87.7	1	2973.33	3.25	0	80.46	0	2.7	0	0	3.75	0	0	0	0	0	0	0.75	0.75
Inverter	MV3-1	368156	4907976	2	0	0	89.1	89.1	1	3495.13	3.25	0	81.87	0	1.27	0	0	10.36	0	0	0	0	0	0	-4.43	-4.43
Inverter	MV3-5	368340	4907843	2	0	0	89.1	89.1	1	3545.79	3.25	0	81.99	0	1.28	0	0	10.43	0	0	0	0	0	0	-4.65	-4.65
Inverters	G_Inv8	366844.5	4902838.5	2	0	0	87.7	87.7	1	3019.03	3.25	0	80.6	0	2.7	0	0	3.8	0	0	0	0	0	0	0.57	0.57
Inverters	G_Inv9	366750.9	4902691.8	2	0	0	87.7	87.7	1	3117.62	3.25	0	80.88	0	2.71	0	0	3.91	0	0	0	0	0	0	0.17	0.17
Inverters	G_Inv10	366900.7	4902704.8	2	0	0	87.7	87.7	1	3164.02	3.25	0	81	0	2.71	0	0	3.96	0	0	0	0	0	0	-0.02	-0.02
Inverter	MV3-4	368502	4907925	2	0	0	89.1	89.1	1	3723.2	3.25	0	82.42	0	1.32	0	0	10.69	0	0	0	0	0	0	-5.37	-5.37
Westbrook Inverter Enclosur	W_INV2	369374	4906388	2	0	0	89.1	89.1	1	3855.49	3.25	0	82.72	0	1.36	0	0	10.88	0	0	0	0	0	0	-5.9	-5.9
Inverter	MV3-2	368671	4907928	2	0	0	89.1	89.1	1	3858.11	3.25	0	82.73	0	1.36	0	0	10.88	0	0	0	0	0	0	-5.91	-5.91
Westbrook Inverter Enclosur	W_INV3	369508	4906164	2	0	0	89.1	89.1	1	3947.95	3.25	0	82.93	0	1.38	0	0	11.01	0	0	0	0	0	0	-6.26	-6.26
Westbrook Inverter Enclosur	W_INV4	369673	4906164	2	0	0	89.1	89.1	1	4111.27	3.25	0	83.28	0	1.42	0	0	11.24	0	0	0	0	0	0	-6.88	-6.88
Westbrook Inverter Enclosur	W_INV5	369719	4906574	2	0	0	89.1	89.1	1	4232.96	3.25	0	83.53	0	1.45	0	0	11.41	0	0	0	0	0	0	-7.34	-7.34
Westbrook Inverter Enclosur	W_INV7	369780	4906417	2	0	0	89.1	89.1	1	4259.06	3.25	0	83.59	0	1.46	0	0	11.45	0	0	0	0	0	0	-7.43	-7.43
Westbrook Inverter Enclosur	W_INV6	369875	4906578	2	0	0	89.1	89.1	1	4385.74	3.25	0	83.84	0	1.49	0	0	11.63	0	0	0	0	0	0	-7.9	-7.9
Fixed Reactor Bank 1	FRB1	369378	4908755	6	0	0	89.8	89.8	1	4927.01	5.25	0	84.85	0	-0.58	0	0	8.53	0	0	0	0	0	0	-3.03	-3.03
Inverter	MV4-13	369051	4908605	2	0	0	89.1	89.1	1	4581.03	3.25	0	84.22	0	1.54	0	0	11.9	0	0	0	0	0	0	-8.59	-8.59
Fixed Reactor Bank 2	FRB2	369464	4908755	6	0	0	89.8	89.8	1	4993.22	5.25	0	84.97	0	-0.57	0	0	8.61	0	0	0	0	0	0	-3.23	-3.23
Inverter	MV4-15	369176	4908481	2	0	0	89.1	89.1	1	4596.89	3.25	0	84.25	0	1.54	0	0	11.92	0	0	0	0	0	0	-8.65	-8.65
Inverter	MV4-14	369176	4908507	2	0	0	89.1	89.1	1	4613.28	3.25	0	84.28	0	1.54	0	0	11.94	0	0	0	0	0	0	-8.71	-8.71
Inverter	MV4-12	369043	4908803	2	0	0	89.1	89.1	1	4707.85	3.25	0	84.46	0	1.57	0	0	12.07	0	0	0	0	0	0	-9.04	-9.04
Inverter	MV5-6	369982	4908507	2	0	0	89.1	89.1	1	5262.44	3.25	0	85.42	0	1.7	0	0	12.81	0	0	0	0	0	0	-10.88	-10.88
Westbrook Inverter Enclosur	W_INV1	369409	4906578	2	0	0	86.1	86.1	1	3933.12	3.25	0	82.89	0	1.38	0	0	10.99	0	0	0	0	0	0	-9.2	-9.2
Inverter Transformer	MV1-10 T	365010	4905564	2	0	0	69.4	69.4	1	592.58	3.25	0	66.45	0	1.2	0	0	3.15	0	0	0	0	0	0	-1.46	-1.46
Inverter Transformer	MV1-14 T	365157	4905049	2	0	0	69.4	69.4	1	700.51	3.25	0	67.91	0	1.36	0	0	3.35	0	0	0	0	0	0	-3.27	-3.27
Inverter	MV6-4	370250	4906966	2	0	0	86.1	86.1	1	4847.4	3.25	0	84.71	0	1.6	0	0	12.26	0	0	0	0	0	0	-12.51	-12.51
Inverter Transformer	MV1-7 T	364919	4905782	2	0	0	69.4	69.4	1	709.48	3.25	0	68.02	0	1.37	0	0	3.37	0	0	0	0	0	0	-3.41	-3.41
Inverter Transformer	MV1-13 T	364725	4905241	2	0	0	69.4	69.4	1	943.89	3.25	0	70.5	0	1.64	0	0	3.73	0	0	0	0	0	0	-6.52	-6.52
Inverter Transformer	MV2-1 T	365836	4906816	2	0	0	69.4	69.4	1	1248.13	3.25	0	72.93	0	1.85	0	0	4.14	0	0	0	0	0	0	-9.56	-9.56
Westbrook Inverter Transfor	W_INVTR1	369403	4906578	2	0	0	78.2	78.2	1	3927.31	3.25	0	82.88	0	-2.95	0	0	2.03	0	0	0	0	0	0	-3.72	-3.72
Westbrook Inverter Transfor	W_INVTR2	369368	4906388	2	0	0	77.3	77.3	1	3849.62	3.25	0	82.71	0	-2.93	0	0	2	0	0	0	0	0	0	-4.44	-4.44
Westbrook Inverter Transfor	W_INVTR3	369514	4906164	2	0	0	77.3	77.3	1	3953.89	3.25	0	82.94	0	-2.95	0	0	2.04	0	0	0	0	0	0	-4.68	-4.68
Westbrook Inverter Transfor	W_INVTR4	369679	4906164	2	0	0	77.3	77.3	1	4117.21	3.25	0	83.29	0	-2.99	0	0	2.1	0	0	0	0	0	0	-5.06	-5.06
Westbrook Inverter Transfor	W_INVTR5	369725	4906574	2	0	0	77.3	77.3	1	4238.8	3.25	0	83.54	0	-3.02	0	0	2.14	0	0	0	0	0	0	-5.33	-5.33
Westbrook Inverter Transfor	W_INVTR7	369786	4906417	2	0	0	77.3	77.3	1	4264.95	3.25	0	83.6	0	-3.02	0	0	2.15	0	0	0	0	0	0	-5.39	-5.39

Westbrook Inverter Transfor	W_INVTR6	369881	4906578	2	0	0	77.3	77.3	1	4391.58	3.25	0	83.85	0	-3.05	0	0	2.2	0	0	0	0	0	0	-5.66	-5.66
Inverter Transformer	MV1-12 T	365044	4905386	2	0	0	56.1	56.1	1	594.13	3.25	0	66.48	0	-0.1	0	0	3.84	0	0	0	0	0	0	-14.15	-14.15
Inverter Transformer	MV1-15 T	365309	4904994	2	0	0	56.1	56.1	1	664.13	3.25	0	67.45	0	-0.09	0	0	4.04	0	0	0	0	0	0	-15.33	-15.33
Inverter Transformer	MV1-8 T	364782	4905647	2	0	0	56.1	56.1	1	821.98	3.25	0	69.3	0	-0.05	0	0	4.45	0	0	0	0	0	0	-17.64	-17.64
Inverter Transformer	MV1-4 T	364821	4905918	2	0	0	56.1	56.1	1	847.08	3.25	0	69.56	0	-0.04	0	0	4.51	0	0	0	0	0	0	-17.98	-17.98
Inverter Transformer	MV1-2 T	364759	4906063	2	0	0	56.1	56.1	1	966.64	3.25	0	70.71	0	0	0	0	4.81	0	0	0	0	0	0	-19.46	-19.46
Inverter Transformer	MV1-11 T	364649	4905414	2	0	0	56.1	56.1	1	969.12	3.25	0	70.73	0	0	0	0	4.81	0	0	0	0	0	0	-19.49	-19.49
Inverter Transformer	MV1-5 T	364676	4905892	2	0	0	56.1	56.1	1	974.01	3.25	0	70.77	0	0	0	0	4.83	0	0	0	0	0	0	-19.54	-19.54
Inverter Transformer	MV2-4 T	365590	4906628	2	0	0	56.1	56.1	1	1038.07	3.25	0	71.32	0	0.03	0	0	4.98	0	0	0	0	0	0	-20.27	-20.27
Inverter Transformer	MV6-4 T	370244	4906966	2	0	0	69.4	69.4	1	4841.65	3.25	0	84.7	0	2.98	0	0	7.28	0	0	0	0	0	0	-25.6	-25.6
Inverter Transformer	MV1-9 T	364555	4905646	2	0	0	56.1	56.1	1	1048.5	3.25	0	71.41	0	0.03	0	0	5	0	0	0	0	0	0	-20.39	-20.39
Inverter Transformer	MV1-1 T	364721	4906166	2	0	0	56.1	56.1	1	1052.59	3.25	0	71.45	0	0.03	0	0	5.01	0	0	0	0	0	0	-20.43	-20.43
Inverter Transformer	MV2-3 T	365814	4906641	2	0	0	56.1	56.1	1	1072.17	3.25	0	71.61	0	0.04	0	0	5.06	0	0	0	0	0	0	-20.64	-20.64
Inverter Transformer	MV6-1 T	370230	4907364	2	0	0	69.4	69.4	1	4956.36	3.25	0	84.9	0	3	0	0	7.35	0	0	0	0	0	0	-25.91	-25.91
Inverter Transformer	MV2-2 T	365982	4906654	2	0	0	56.1	56.1	1	1129.82	3.25	0	72.06	0	0.06	0	0	5.19	0	0	0	0	0	0	-21.25	-21.25
Inverter Transformer	MV1-6 T	364482	4905835	2	0	0	56.1	56.1	1	1146.49	3.25	0	72.19	0	0.06	0	0	5.23	0	0	0	0	0	0	-21.43	-21.43
Inverter Transformer	MV1-3 T	364435	4906039	2	0	0	56.1	56.1	1	1250.4	3.25	0	72.94	0	0.1	0	0	5.47	0	0	0	0	0	0	-22.45	-22.45
Inverter Transformer	MV3-18 T	367757	4907412	2	0	0	56.1	56.1	1	2822.01	3.25	0	80.01	0	0.75	0	0	8.56	0	0	0	0	0	0	-33.27	-33.27
Inverter Transformer	MV3-12 T	367674	4907594	2	0	0	56.1	56.1	1	2882.57	3.25	0	80.2	0	0.78	0	0	8.67	0	0	0	0	0	0	-33.58	-33.58
Inverter Transformer	MV3-13 T	367958	4907577	2	0	0	56.1	56.1	1	3082.03	3.25	0	80.78	0	0.86	0	0	9.01	0	0	0	0	0	0	-34.59	-34.59
Inverter Transformer	MV3-7 T	367951	4907754	2	0	0	56.1	56.1	1	3193.85	3.25	0	81.09	0	0.91	0	0	9.19	0	0	0	0	0	0	-35.13	-35.13
Inverter Transformer	MV3-17 T	368183	4907472	2	0	0	56.1	56.1	1	3194.29	3.25	0	81.09	0	0.91	0	0	9.19	0	0	0	0	0	0	-35.13	-35.13
Inverter Transformer	MV3-19 T	368352	4907347	2	0	0	56.1	56.1	1	3263.37	3.25	0	81.27	0	0.94	0	0	9.31	0	0	0	0	0	0	-35.46	-35.46
Inverter Transformer	MV3-10 T	368162	4907669	2	0	0	56.1	56.1	1	3297.85	3.25	0	81.36	0	0.96	0	0	9.36	0	0	0	0	0	0	-35.62	-35.62
Inverter Transformer	MV3-21 T	368484	4907206	2	0	0	56.1	56.1	1	3304.15	3.25	0	81.38	0	0.96	0	0	9.37	0	0	0	0	0	0	-35.65	-35.65
Inverter Transformer	MV3-3 T	367944	4907927	2	0	0	56.1	56.1	1	3308.56	3.25	0	81.39	0	0.96	0	0	9.38	0	0	0	0	0	0	-35.67	-35.67
Inverter Transformer	MV3-15 T	368351	4907477	2	0	0	56.1	56.1	1	3334.33	3.25	0	81.46	0	0.97	0	0	9.42	0	0	0	0	0	0	-35.79	-35.79
Inverter Transformer	MV3-6 T	368156	4907834	2	0	0	56.1	56.1	1	3399.77	3.25	0	81.63	0	1	0	0	9.53	0	0	0	0	0	0	-36.1	-36.1
Inverter Transformer	MV3-22 T	368661	4907142	2	0	0	56.1	56.1	1	3430.19	3.25	0	81.71	0	1.01	0	0	9.58	0	0	0	0	0	0	-36.24	-36.24
Inverter Transformer	MV3-11 T	368340	4907662	2	0	0	56.1	56.1	1	3433.63	3.25	0	81.72	0	1.01	0	0	9.58	0	0	0	0	0	0	-36.25	-36.25
Inverter Transformer	MV3-16 T	368509	4907475	2	0	0	56.1	56.1	1	3464.66	3.25	0	81.79	0	1.03	0	0	9.63	0	0	0	0	0	0	-36.39	-36.39
Inverter Transformer	MV3-1 T	368150	4907976	2	0	0	56.1	56.1	1	3490.75	3.25	0	81.86	0	1.04	0	0	9.67	0	0	0	0	0	0	-36.51	-36.51
Inverter Transformer	MV3-20 T	368683	4907317	2	0	0	56.1	56.1	1	3532.01	3.25	0	81.96	0	1.05	0	0	9.74	0	0	0	0	0	0	-36.69	-36.69
Inverter Transformer	MV3-5 T	368335	4907843	2	0	0	56.1	56.1	1	3541.94	3.25	0	81.98	0	1.06	0	0	9.75	0	0	0	0	0	0	-36.74	-36.74
Inverter Transformer	MV3-9 T	368517	4907703	2	0	0	56.1	56.1	1	3600.28	3.25	0	82.13	0	1.08	0	0	9.85	0	0	0	0	0	0	-37	-37
Inverter Transformer	MV3-14 T	368678	4907498	2	0	0	56.1	56.1	1	3619.7	3.25	0	82.17	0	1.09	0	0	9.88	0	0	0	0	0	0	-37.08	-37.08
Inverter Transformer	MV3-4 T	368507	4907925	2	0	0	56.1	56.1	1	3727.1	3.25	0	82.43	0	1.13	0	0	10.04	0	0	0	0	0	0	-37.54	-37.54
Inverter Transformer	MV3-8 T	368685	4907712	2	0	0	56.1	56.1	1	3742.7	3.25	0	82.46	0	1.14	0	0	10.07	0	0	0	0	0	0	-37.61	-37.61
Inverter Transformer	MV3-2 T	368677	4907928	2	0	0	56.1	56.1	1	3862.88	3.25	0	82.74	0	1.19	0	0	10.25	0	0	0	0	0	0	-38.12	-38.12
Inverter Transformer	MV4-13 T	369057	4908605	2	0	0	56.1	56.1	1	4585.55	3.25	0	84.23	0	1.47	0	0	11.29	0	0	0	0	0	0	-40.94	-40.94
Inverter Transformer	MV4-15 T	369170	4908481	2	0	0	56.1	56.1	1	4592.22	3.25	0	84.24	0	1.47	0	0	11.3	0	0	0	0	0	0	-40.96	-40.96
Inverter Transformer	MV4-14 T	369182	4908507	2	0	0	56.1	56.1	1	4617.93	3.25	0	84.29	0	1.48	0	0	11.34	0	0	0	0	0	0	-41.05	-41.05
Inverter Transformer	MV4-12 T	369049	4908803	2	0	0	56.1	56.1	1	4712.24	3.25	0	84.46	0	1.52	0	0	11.47	0	0	0	0	0	0	-41.39	-41.39
Inverter Transformer	MV6-2 T	370091	4907339	2	0	0	56.1	56.1	1	4817.69	3.25	0	84.66	0	1.56	0	0	11.61	0	0	0	0	0	0	-41.77	-41.77
Inverter Transformer	MV4-7 T	369040	4909001	2	0	0	56.1	56.1	1	4843.01	3.25	0	84.7	0	1.57	0	0	11.65	0	0	0	0	0	0	-41.86	-41.86
Inverter Transformer	MV6-3 T	370202	4907140	2	0	0	56.1	56.1	1	4854.12	3.25	0	84.72	0	1.57	0	0	11.66	0	0	0	0	0	0	-41.9	-41.9
Inverter Transformer	MV4-11 T	369269	4908855	2	0	0	56.1	56.1	1	4909.9	3.25	0	84.82	0	1.59	0	0	11.73	0	0	0	0	0	0	-42.09	-42.09
Inverter Transformer	MV4-10 T	369307	4908858	2	0	0	56.1	56.1	1	4940.33	3.25	0	84.88	0	1.6	0	0	11.78	0	0	0	0	0	0	-42.2	-42.2
Inverter Transformer	MV4-4 T	369033	4909199	2	0	0	56.1	56.1	1	4979.62	3.25	0	84.94	0	1.62	0	0	11.83	0	0	0	0	0	0	-42.33	-42.33
Inverter Transformer	MV4-8 T	369262	4909001	2	0	0	56.1	56.1	1	5003.05	3.25	0	84.98	0	1.63	0	0	11.86	0	0	0	0	0	0	-42.41	-42.41
Inverter Transformer	MV4-9 T	369284	4909001	2	0	0	56.1	56.1	1	5019.17	3.25	0	85.01	0	1.63	0	0	11.88	0	0	0	0	0	0	-42.47	-42.47
Inverter Transformer	MV4-1 T	369017	4909397	2	0	0	56.1	56.1	1	5114.24	3.25	0	85.18	0	1.67	0	0	12	0	0	0	0	0	0	-42.79	-42.79
Inverter Transformer	MV4-6 T	369249	4909192	2	0	0	56.1	56.1	1	5125.92	3.25	0	85.2	0	1.67	0	0	12.02	0	0	0	0	0	0	-42.83	-42.83
Inverter Transformer	MV4-5 T	369283	4909199	2	0	0	56.1	56.1	1	5155.06	3.25	0	85.24	0	1.68	0	0	12.06	0	0	0	0	0	0	-42.92	-42.92
Inverter Transformer	MV4-3 T	369234	4909397	2	0	0	56.1	56.1	1	5261.62	3.25	0	85.42	0	1.72	0	0	12.19	0	0	0	0	0	0	-43.28	-43.28
Inverter Transformer	MV5-6 T	369987	4908507	2	0	0	56.1	56.1	1	5266.6	3.25	0	85.43	0	1.72	0	0	12.2	0	0	0	0	0	0	-43.29	-43.29
Inverter Transformer	MV4-2 T	369267	4909397	2	0	0	56.1	56.1	1	5284.46	3.25	0	85.46	0	1.73	0	0	12.22	0	0	0	0	0	0	-43.35	-43.35
Inverter Transformer	MV5-5 T	370021	4908690	2	0	0	56.1	56.1	1	5397.92	3.25	0	85.64	0	1.77	0	0	12.37	0	0	0	0	0	0	-43.72	-43.72
Inverter Transformer	MV5-2 T	370011	4908853	2	0	0	56.1	56.1	1	5485.11	3.25	0	85.78	0	1.8	0	0	12.48	0	0	0	0	0	0	-44	-44
Inverter Transformer	MV5-4 T	370330	4908707	2	0	0	56.1	56.1	1	5663.01	3.25	0	86.06	0	1.86	0	0	12.7	0	0	0	0	0	0	-44.55	-44.55
Inverter Transformer	MV5-1 T	370015	4909142	2	0	0	56.1	56.1	1	5664.92	3.25	0	86.06	0	1.86	0	0	12.7	0	0	0	0	0	0	-44.56	-44.56
Inverter Transformer	MV5-3 T	370237	4908851	2	0	0	56.1	56.1	1	5667.22	3.25	0	86.07	0	1.86	0	0	12.7	0	0	0	0	0	0	-44.57	-44.57
Line Reactor	NGR	369421	4908787.5	5	0	0	45.4	45.4	1	4980.84	5.25	0	84.95	0	3.26	1.35	0.09	2.04	0	0	0	0	0	0	-46.24	-46.24
Limit. Valu 0	0																									
Level D/N: 32.7634	32.7634																									

Receiver: Vacant Lot Receptor
ID: S-VLR41
X: 365651
Y: 4905622
Z: 4.5
Ground: 0

ISO	Description	ID	X	Y	Z	Ground	ReflOrd	LxT	LxN	L/A	Dist.	hm	Freq	Adiv	K0b	Agr	Abar	z	Aatm	Afol	Ahous	Cmet	CmetN	Dc	RL	LtotT	LtotN

Inverter	MV1-12	365038	4905386	2	0	0	100.3	100.3	1	656.86	3.25	0	67.35	0	-0.44	0	0	9.52	0	0	0	0	0	0	23.88	23.88
Inverter	MV1-15	365315	4904994	2	0	0	100.3	100.3	1	712.24	3.25	0	68.05	0	-0.4	0	0	9.8	0	0	0	0	0	0	22.87	22.87
Inverter	MV1-8	364788	4905647	2	0	0	100.3	100.3	1	863.37	3.25	0	69.72	0	-0.32	0	0	10.43	0	0	0	0	0	0	20.47	20.47
Inverter	MV1-4	364815	4905918	2	0	0	100.3	100.3	1	886.86	3.25	0	69.96	0	-0.3	0	0	10.52	0	0	0	0	0	0	20.14	20.14
Inverter	MV1-10	365004	4905564	2	0	0	97.3	97.3	1	649.6	3.25	0	67.25	0	-0.44	0	0	9.48	0	0	0	0	0	0	21.02	21.02
Inverter	MV1-2	364753	4906063	2	0	0	100.3	100.3	1	1000.45	3.25	0	71	0	-0.25	0	0	10.91	0	0	0	0	0	0	18.64	18.64
Inverter	MV2-4	365586	4906624	2	0	0	100.3	100.3	1	1004.11	3.25	0	71.04	0	-0.24	0	0	10.92	0	0	0	0	0	0	18.6	18.6
Inverter	MV1-5	364671	4905892	2	0	0	100.3	100.3	1	1016.52	3.25	0	71.14	0	-0.24	0	0	10.97	0	0	0	0	0	0	18.44	18.44
Inverter	MV1-11	364655	4905414	2	0	0	100.3	100.3	1	1017.49	3.25	0	71.15	0	-0.24	0	0	10.97	0	0	0	0	0	0	18.43	18.43
Inverter	MV2-3	365820	4906641	2	0	0	100.3	100.3	1	1032.92	3.25	0	71.28	0	-0.23	0	0	11.02	0	0	0	0	0	0	18.24	18.24
Inverter	MV1-7	364925	4905782	2	0	0	97.3	97.3	1	743.43	3.25	0	68.42	0	-0.38	0	0	9.94	0	0	0	0	0	0	19.33	19.33
Inverter	MV1-14	365163	4905049	2	0	0	97.3	97.3	1	752.65	3.25	0	68.53	0	-0.38	0	0	9.98	0	0	0	0	0	0	19.18	19.18
Inverter	MV1-1	364715	4906166	2	0	0	100.3	100.3	1	1082.61	3.25	0	71.69	0	-0.21	0	0	11.18	0	0	0	0	0	0	17.65	17.65
Inverter	MV1-9	364561	4905646	2	0	0	100.3	100.3	1	1090.27	3.25	0	71.75	0	-0.2	0	0	11.2	0	0	0	0	0	0	17.57	17.57
Inverter	MV1-6	364477	4905835	2	0	0	100.3	100.3	1	1193.17	3.25	0	72.53	0	-0.16	0	0	11.51	0	0	0	0	0	0	16.43	16.43
Sol_Luce Substation	S_Substation	369426	4908792	3.5	0	0	112.1	112.1	1	4929.45	5.25	0	84.86	0	0.88	2.88	0.25	8.54	0	0	0	0	0	0	14.93	14.93
Inverter	MV1-13	364731	4905241	2	0	0	97.3	97.3	1	995.77	3.25	0	70.96	0	-0.25	0	0	10.9	0	0	0	0	0	0	15.7	15.7
Inverter	MV2-1	365842	4906816	2	0	0	97.3	97.3	1	1209.18	3.25	0	72.65	0	-0.15	0	0	11.55	0	0	0	0	0	0	13.26	13.26
Inverter	MV3-18	367752	4907412	2	0	0	100.3	100.3	1	2760.13	3.25	0	79.82	0	0.31	0	0	14.94	0	0	0	0	0	0	5.24	5.24
Inverter	MV3-12	367668	4907594	2	0	0	100.3	100.3	1	2820.83	3.25	0	80.01	0	0.33	0	0	15.05	0	0	0	0	0	0	4.93	4.93
Inverter	MV3-13	367963	4907577	2	0	0	100.3	100.3	1	3027.77	3.25	0	80.62	0	0.37	0	0	15.42	0	0	0	0	0	0	3.9	3.9
Inverter	MV3-7	367945	4907754	2	0	0	100.3	100.3	1	3131.75	3.25	0	80.92	0	0.39	0	0	15.6	0	0	0	0	0	0	3.41	3.41
Inverter	MV3-17	368178	4907472	2	0	0	100.3	100.3	1	3131.81	3.25	0	80.92	0	0.39	0	0	15.6	0	0	0	0	0	0	3.41	3.41
Inverter	MV3-19	368357	4907347	2	0	0	100.3	100.3	1	3209.06	3.25	0	81.13	0	0.4	0	0	15.74	0	0	0	0	0	0	3.05	3.05
Inverter	MV3-21	368478	4907206	2	0	0	100.3	100.3	1	3240.52	3.25	0	81.21	0	0.41	0	0	15.79	0	0	0	0	0	0	2.9	2.9
Inverter	MV3-10	368167	4907669	2	0	0	100.3	100.3	1	3243.53	3.25	0	81.22	0	0.41	0	0	15.8	0	0	0	0	0	0	2.89	2.89
Inverter	MV3-3	367939	4907927	2	0	0	100.3	100.3	1	3247.76	3.25	0	81.23	0	0.41	0	0	15.8	0	0	0	0	0	0	2.87	2.87
Inverter	MV3-15	368357	4907477	2	0	0	100.3	100.3	1	3280.77	3.25	0	81.32	0	0.41	0	0	15.86	0	0	0	0	0	0	2.72	2.72
Inverter	MV3-6	368162	4907834	2	0	0	100.3	100.3	1	3346.35	3.25	0	81.49	0	0.43	0	0	15.97	0	0	0	0	0	0	2.42	2.42
Inverter	MV3-11	368346	4907662	2	0	0	100.3	100.3	1	3380.03	3.25	0	81.58	0	0.43	0	0	16.03	0	0	0	0	0	0	2.27	2.27
Inverter	MV3-16	368514	4907475	2	0	0	100.3	100.3	1	3410.33	3.25	0	81.66	0	0.44	0	0	16.08	0	0	0	0	0	0	2.14	2.14
Inverter	MV3-20	368689	4907317	2	0	0	100.3	100.3	1	3478.86	3.25	0	81.83	0	0.45	0	0	16.2	0	0	0	0	0	0	1.84	1.84
Inverter	MV3-9	368512	4907703	2	0	0	100.3	100.3	1	3537.78	3.25	0	81.97	0	0.46	0	0	16.29	0	0	0	0	0	0	1.59	1.59
Inverter	MV3-14	368684	4907498	2	0	0	100.3	100.3	1	3566.3	3.25	0	82.04	0	0.46	0	0	16.34	0	0	0	0	0	0	1.46	1.46
Inverter	MV3-8	368680	4907712	2	0	0	100.3	100.3	1	3680.07	3.25	0	82.32	0	0.48	0	0	16.53	0	0	0	0	0	0	0.99	0.99
Inverter	MV2-2	365977	4906654	2	0	0	89.1	89.1	1	1082.27	3.25	0	71.69	0	0.7	0	0	6.47	0	0	0	0	0	0	10.2	10.2
Inverter	MV1-3	364440	4906039	2	0	0	89.1	89.1	1	1280.79	3.25	0	73.15	0	0.74	0	0	6.83	0	0	0	0	0	0	8.34	8.34
Inverter	MV6-2	370085	4907339	2	0	0	100.3	100.3	1	4754.83	3.25	0	84.54	0	0.62	0	0	18.22	0	0	0	0	0	0	-3.07	-3.07
Inverter	MV4-7	369035	4909001	2	0	0	100.3	100.3	1	4782.17	3.25	0	84.59	0	0.62	0	0	18.26	0	0	0	0	0	0	-3.16	-3.16
Inverter	MV6-3	370207	4907140	2	0	0	100.3	100.3	1	4802.24	3.25	0	84.63	0	0.62	0	0	18.29	0	0	0	0	0	0	-3.23	-3.23
Inverter	MV4-11	369264	4908855	2	0	0	100.3	100.3	1	4848.31	3.25	0	84.71	0	0.63	0	0	18.36	0	0	0	0	0	0	-3.38	-3.38
Inverter	MV4-10	369312	4908858	2	0	0	100.3	100.3	1	4886.17	3.25	0	84.78	0	0.63	0	0	18.41	0	0	0	0	0	0	-3.51	-3.51
Inverter	MV4-4	369027	4909199	2	0	0	100.3	100.3	1	4918.57	3.25	0	84.84	0	0.63	0	0	18.46	0	0	0	0	0	0	-3.62	-3.62
Inverter	MV4-8	369256	4909001	2	0	0	100.3	100.3	1	4941.02	3.25	0	84.88	0	0.64	0	0	18.49	0	0	0	0	0	0	-3.69	-3.69
Inverter	MV4-9	369289	4909001	2	0	0	100.3	100.3	1	4965.15	3.25	0	84.92	0	0.64	0	0	18.53	0	0	0	0	0	0	-3.77	-3.77
Inverter	MV4-1	369011	4909397	2	0	0	100.3	100.3	1	5053.73	3.25	0	85.07	0	0.65	0	0	18.66	0	0	0	0	0	0	-4.07	-4.07
Inverter	MV4-6	369243	4909192	2	0	0	100.3	100.3	1	5064.32	3.25	0	85.09	0	0.65	0	0	18.67	0	0	0	0	0	0	-4.1	-4.1
Inverter	MV4-5	369289	4909199	2	0	0	100.3	100.3	1	5101.96	3.25	0	85.15	0	0.65	0	0	18.73	0	0	0	0	0	0	-4.22	-4.22
Inverter	MV4-3	369229	4909397	2	0	0	100.3	100.3	1	5201.22	3.25	0	85.32	0	0.66	0	0	18.87	0	0	0	0	0	0	-4.54	-4.54
Inverter	MV4-2	369272	4909397	2	0	0	100.3	100.3	1	5230.9	3.25	0	85.37	0	0.66	0	0	18.92	0	0	0	0	0	0	-4.64	-4.64
Inverter	MV5-5	370015	4908690	2	0	0	100.3	100.3	1	5334.52	3.25	0	85.54	0	0.67	0	0	19.07	0	0	0	0	0	0	-4.96	-4.96
Inverter	MV5-2	370006	4908853	2	0	0	100.3	100.3	1	5422.67	3.25	0	85.68	0	0.68	0	0	19.19	0	0	0	0	0	0	-5.24	-5.24
Inverter	MV5-4	370324	4908707	2	0	0	100.3	100.3	1	5599.48	3.25	0	85.96	0	0.69	0	0	19.44	0	0	0	0	0	0	-5.78	-5.78
Inverter	MV5-3	370231	4908851	2	0	0	100.3	100.3	1	5603.82	3.25	0	85.97	0	0.69	0	0	19.45	0	0	0	0	0	0	-5.79	-5.79
Inverter	MV5-1	370020	4909142	2	0	0	100.3	100.3	1	5610.58	3.25	0	85.98	0	0.69	0	0	19.46	0	0	0	0	0	0	-5.81	-5.81
Inverter	MV6-1	370235	4907364	2	0	0	97.3	97.3	1	4903.84	3.25	0	84.81	0	0.63	0	0	18.44	0	0	0	0	0	0	-6.57	-6.57
Gardiner Substation	G_Sub	366586.3	4903349.9	2.5	0	0	90.8	90.8	1	2457.08	4.25	0	78.81	0	0.96	3.42	0.31	5.12	0	0	0	0	0	0	2.46	2.46
DSTATCOM - 10 MVAR #2	DSAT2	369403	4908757	2.5	0	0	96.6	96.6	1	4889.35	3.5	0	84.79	0	3.67	0	0	3.3	0	0	0	0	0	0	4.88	4.88
DSTATCOM - 10 MVAR #1	DSAT1	369437	4908757	2.5	0	0	96.6	96.6	1	4915.49	3.5	0	84.83	0	3.68	0	0	3.31	0	0	0	0	0	0	4.81	4.81
SubstationTransformer	W_ST	369711.17	4906112.3	2.5	0	0	92	92	1	4089.66	4.25	0	83.23	0	1.39	2.59	0.29	7.48	0	0	0	0	0	0	-2.72	-2.72
Inverters	G_Inv1	366526.4	4903225.8	2	0	0	87.7	87.7	1	2551.1	3.25	0	79.13	0	2.65	0	0	3.27	0	0	0	0	0	0	2.61	2.61
Inverters	G_Inv2	366676.9	4903239.1	2	0	0	87.7	87.7	1	2594.36	3.25	0	79.28	0	2.65	0	0	3.32	0	0	0	0	0	0	2.41	2.41
Inverters	G_Inv3	366583.7	4903091.4	2	0	0	87.7	87.7	1	2697.01	3.25	0	79.62	0	2.67	0	0	3.43	0	0	0	0	0	0	1.94	1.94
Inverters	G_Inv4	366732.8	4903105	2	0	0	87.7	87.7	1	2739.63	3.25	0	79.75	0	2.67	0	0	3.48	0	0	0	0	0	0	1.75	1.75
Inverters	G_Inv5	366638.5	4902958.1	2	0	0	87.7	87.7	1	2841.04	3.25	0	80.07	0	2.68	0	0	3.6	0	0	0	0	0	0	1.31	1.31
Inverter	MV3-22	368656	4907142	2	0	0	89.1	89.1	1	3367.56	3.25	0	81.55	0	1.24	0	0	10.17	0	0	0	0	0	0	-3.89	-3.89
Inverters	G_Inv6	366788.5	4902972	2	0	0	87.7	87.7	1	2883.82	3.25	0	80.2	0	2.69	0	0	3.64	0	0	0	0	0	0	1.13	1.13
Inverter	MV3-1	368156	4907976	2	0	0	89.1	89.1	1	3437.49	3.25	0	81.72	0	1.25	0	0	10.27	0	0	0	0	0	0	-4.19	-4.19
Inverter	MV3-5	368340	4907843	2	0	0	89.1	89.1	1	3487.63	3.25	0	81.85	0	1.27	0	0	10.34	0	0	0	0	0	0	-4.4	-4.4
Inverters	G_Inv7	366694.6	4902824.7	2	0	0	87.7	87.7	1	2985.63	3.25	0	80.5	0	2.7	0	0	3.76	0	0	0	0	0	0	0.7	0.7
Inverters	G_Inv8	366844.5	4902838.5	2	0	0	87.7	87.7	1	3028.58	3.25	0	80.62	0	2.7	0	0	3.81	0	0	0	0	0	0	0.53	0.53
Inverter	MV3-4	368502	4907925	2	0	0	89.1	89.1	1	3664.97	3.25	0	82.28	0	1.31	0	0	10.6	0	0	0	0	0	0	-5.14	-5.14
Inverters	G_Inv9	366750.9	4902691.8	2	0	0	87.7	87.7	1	3129.83	3.25	0	80.91	0	2.71	0	0	3.92	0	0	0	0	0	0	0.12	0.12
Inverters	G_Inv10	366900.7	4902704.8	2	0	0	87.7	87.7	1	3173.61	3.25	0	81.03	0	2.72	0	0	3.97	0	0	0	0	0	0	-0.05	-0.05

Inverter	MV3-2	368671	4907928	2	0	0	89.1	89.1	1	3799.74	3.25	0	82.6	0	1.34	0	0	10.8	0	0	0	0	0	0	-5.68	-5.68
Westbrook Inverter Enclosur	W_INV2	369374	4906388	2	0	0	89.1	89.1	1	3800.99	3.25	0	82.6	0	1.34	0	0	10.8	0	0	0	0	0	0	-5.68	-5.68
Westbrook Inverter Enclosur	W_INV3	369508	4906164	2	0	0	89.1	89.1	1	3894.9	3.25	0	82.81	0	1.37	0	0	10.93	0	0	0	0	0	0	-6.05	-6.05
Westbrook Inverter Enclosur	W_INV4	369673	4906164	2	0	0	89.1	89.1	1	4058.36	3.25	0	83.17	0	1.41	0	0	11.17	0	0	0	0	0	0	-6.68	-6.68
Westbrook Inverter Enclosur	W_INV5	369719	4906574	2	0	0	89.1	89.1	1	4177.91	3.25	0	83.42	0	1.44	0	0	11.34	0	0	0	0	0	0	-7.13	-7.13
Westbrook Inverter Enclosur	W_INV7	369780	4906417	2	0	0	89.1	89.1	1	4204.84	3.25	0	83.47	0	1.44	0	0	11.37	0	0	0	0	0	0	-7.23	-7.23
Westbrook Inverter Enclosur	W_INV6	369875	4906578	2	0	0	89.1	89.1	1	4330.83	3.25	0	83.73	0	1.47	0	0	11.55	0	0	0	0	0	0	-7.7	-7.7
Fixed Reactor Bank 1	FRB1	369378	4908755	6	0	0	89.8	89.8	1	4868.9	5.25	0	84.75	0	-0.59	0	0	8.46	0	0	0	0	0	0	-2.85	-2.85
Inverter	MV4-13	369051	4908605	2	0	0	89.1	89.1	1	4523.08	3.25	0	84.11	0	1.52	0	0	11.82	0	0	0	0	0	0	-8.39	-8.39
Inverter	MV4-15	369176	4908481	2	0	0	89.1	89.1	1	4538.67	3.25	0	84.14	0	1.53	0	0	11.84	0	0	0	0	0	0	-8.44	-8.44
Fixed Reactor Bank 2	FRB2	369464	4908755	6	0	0	89.8	89.8	1	4935.04	5.25	0	84.87	0	-0.58	0	0	8.54	0	0	0	0	0	0	-3.05	-3.05
Inverter	MV4-14	369176	4908507	2	0	0	89.1	89.1	1	4555.09	3.25	0	84.17	0	1.53	0	0	11.86	0	0	0	0	0	0	-8.5	-8.5
Inverter	MV4-12	369043	4908803	2	0	0	89.1	89.1	1	4650.21	3.25	0	84.35	0	1.55	0	0	11.99	0	0	0	0	0	0	-8.84	-8.84
Inverter	MV5-6	369982	4908507	2	0	0	89.1	89.1	1	5203.92	3.25	0	85.33	0	1.69	0	0	12.73	0	0	0	0	0	0	-10.69	-10.69
Westbrook Inverter Enclosur	W_INV1	369409	4906578	2	0	0	86.1	86.1	1	3877.69	3.25	0	82.77	0	1.36	0	0	10.91	0	0	0	0	0	0	-8.99	-8.99
Inverter Transformer	MV1-10 T	365010	4905564	2	0	0	69.4	69.4	1	643.62	3.25	0	67.17	0	1.28	0	0	3.25	0	0	0	0	0	0	-2.35	-2.35
Inverter	MV6-4	370250	4906966	2	0	0	86.1	86.1	1	4791.36	3.25	0	84.61	0	1.59	0	0	12.18	0	0	0	0	0	0	-12.32	-12.32
Inverter Transformer	MV1-7 T	364919	4905782	2	0	0	69.4	69.4	1	749.29	3.25	0	68.49	0	1.43	0	0	3.43	0	0	0	0	0	0	-4	-4
Inverter Transformer	MV1-14 T	365157	4905049	2	0	0	69.4	69.4	1	756.55	3.25	0	68.58	0	1.43	0	0	3.45	0	0	0	0	0	0	-4.11	-4.11
Inverter Transformer	MV1-13 T	364725	4905241	2	0	0	69.4	69.4	1	1001.32	3.25	0	71.01	0	1.69	0	0	3.81	0	0	0	0	0	0	-7.16	-7.16
Inverter Transformer	MV2-1 T	365836	4906816	2	0	0	69.4	69.4	1	1208.25	3.25	0	72.64	0	1.83	0	0	4.09	0	0	0	0	0	0	-9.21	-9.21
Westbrook Inverter Transfor	W_INVTR1	369403	4906578	2	0	0	78.2	78.2	1	3871.88	3.25	0	82.76	0	-2.93	0	0	2.01	0	0	0	0	0	0	-3.59	-3.59
Westbrook Inverter Transfor	W_INVTR2	369368	4906388	2	0	0	77.3	77.3	1	3795.11	3.25	0	82.58	0	-2.92	0	0	1.98	0	0	0	0	0	0	-4.3	-4.3
Westbrook Inverter Transfor	W_INVTR3	369514	4906164	2	0	0	77.3	77.3	1	3900.84	3.25	0	82.82	0	-2.94	0	0	2.02	0	0	0	0	0	0	-4.56	-4.56
Westbrook Inverter Transfor	W_INVTR4	369679	4906164	2	0	0	77.3	77.3	1	4064.3	3.25	0	83.18	0	-2.98	0	0	2.08	0	0	0	0	0	0	-4.94	-4.94
Westbrook Inverter Transfor	W_INVTR5	369725	4906574	2	0	0	77.3	77.3	1	4183.75	3.25	0	83.43	0	-3	0	0	2.12	0	0	0	0	0	0	-5.21	-5.21
Westbrook Inverter Transfor	W_INVTR7	369786	4906417	2	0	0	77.3	77.3	1	4210.73	3.25	0	83.49	0	-3.01	0	0	2.13	0	0	0	0	0	0	-5.27	-5.27
Westbrook Inverter Transfor	W_INVTR6	369881	4906578	2	0	0	77.3	77.3	1	4336.69	3.25	0	83.74	0	-3.04	0	0	2.18	0	0	0	0	0	0	-5.54	-5.54
Inverter Transformer	MV1-12 T	365044	4905386	2	0	0	56.1	56.1	1	651.27	3.25	0	67.28	0	-0.09	0	0	4	0	0	0	0	0	0	-15.12	-15.12
Inverter Transformer	MV1-15 T	365309	4904994	2	0	0	56.1	56.1	1	715.09	3.25	0	68.09	0	-0.08	0	0	4.17	0	0	0	0	0	0	-16.13	-16.13
Inverter Transformer	MV1-8 T	364782	4905647	2	0	0	56.1	56.1	1	869.36	3.25	0	69.78	0	-0.03	0	0	4.57	0	0	0	0	0	0	-18.26	-18.26
Inverter Transformer	MV1-4 T	364821	4905918	2	0	0	56.1	56.1	1	881.2	3.25	0	69.9	0	-0.03	0	0	4.6	0	0	0	0	0	0	-18.42	-18.42
Inverter Transformer	MV1-2 T	364759	4906063	2	0	0	56.1	56.1	1	995.06	3.25	0	70.96	0	0.01	0	0	4.88	0	0	0	0	0	0	-19.79	-19.79
Inverter Transformer	MV2-4 T	365590	4906628	2	0	0	56.1	56.1	1	1007.85	3.25	0	71.07	0	0.01	0	0	4.91	0	0	0	0	0	0	-19.93	-19.93
Inverter Transformer	MV1-5 T	364676	4905892	2	0	0	56.1	56.1	1	1011.7	3.25	0	71.1	0	0.02	0	0	4.92	0	0	0	0	0	0	-19.98	-19.98
Inverter Transformer	MV1-11 T	364649	4905414	2	0	0	56.1	56.1	1	1023.36	3.25	0	71.2	0	0.02	0	0	4.94	0	0	0	0	0	0	-20.11	-20.11
Inverter Transformer	MV2-3 T	365814	4906641	2	0	0	56.1	56.1	1	1031.96	3.25	0	71.27	0	0.02	0	0	4.97	0	0	0	0	0	0	-20.2	-20.2
Inverter Transformer	MV6-4 T	370244	4906966	2	0	0	69.4	69.4	1	4785.6	3.25	0	84.6	0	2.97	0	0	7.24	0	0	0	0	0	0	-25.45	-25.45
Inverter Transformer	MV6-1 T	370230	4907364	2	0	0	69.4	69.4	1	4899.16	3.25	0	84.8	0	2.99	0	0	7.31	0	0	0	0	0	0	-25.76	-25.76
Inverter Transformer	MV1-1 T	364721	4906166	2	0	0	56.1	56.1	1	1077.42	3.25	0	71.65	0	0.04	0	0	5.07	0	0	0	0	0	0	-20.7	-20.7
Inverter Transformer	MV2-2 T	365982	4906654	2	0	0	56.1	56.1	1	1083.79	3.25	0	71.7	0	0.04	0	0	5.09	0	0	0	0	0	0	-20.77	-20.77
Inverter Transformer	MV1-9 T	364555	4905646	2	0	0	56.1	56.1	1	1096.27	3.25	0	71.8	0	0.05	0	0	5.12	0	0	0	0	0	0	-20.9	-20.9
Inverter Transformer	MV1-6 T	364482	4905835	2	0	0	56.1	56.1	1	1188.25	3.25	0	72.5	0	0.08	0	0	5.33	0	0	0	0	0	0	-21.85	-21.85
Inverter Transformer	MV1-3 T	364435	4906039	2	0	0	56.1	56.1	1	1285.52	3.25	0	73.18	0	0.12	0	0	5.55	0	0	0	0	0	0	-22.79	-22.79
Inverter Transformer	MV3-18 T	367757	4907412	2	0	0	56.1	56.1	1	2763.94	3.25	0	79.83	0	0.73	0	0	8.46	0	0	0	0	0	0	-32.96	-32.96
Inverter Transformer	MV3-12 T	367674	4907594	2	0	0	56.1	56.1	1	2825.12	3.25	0	80.02	0	0.76	0	0	8.57	0	0	0	0	0	0	-33.29	-33.29
Inverter Transformer	MV3-13 T	367958	4907577	2	0	0	56.1	56.1	1	3023.95	3.25	0	80.61	0	0.84	0	0	8.91	0	0	0	0	0	0	-34.3	-34.3
Inverter Transformer	MV3-17 T	368183	4907472	2	0	0	56.1	56.1	1	3135.85	3.25	0	80.93	0	0.89	0	0	9.1	0	0	0	0	0	0	-34.85	-34.85
Inverter Transformer	MV3-7 T	367951	4907754	2	0	0	56.1	56.1	1	3136.15	3.25	0	80.93	0	0.89	0	0	9.1	0	0	0	0	0	0	-34.85	-34.85
Inverter Transformer	MV3-19 T	368352	4907347	2	0	0	56.1	56.1	1	3204.85	3.25	0	81.12	0	0.92	0	0	9.21	0	0	0	0	0	0	-35.18	-35.18
Inverter Transformer	MV3-10 T	368162	4907669	2	0	0	56.1	56.1	1	3239.65	3.25	0	81.21	0	0.93	0	0	9.27	0	0	0	0	0	0	-35.35	-35.35
Inverter Transformer	MV3-21 T	368484	4907206	2	0	0	56.1	56.1	1	3245.76	3.25	0	81.23	0	0.93	0	0	9.28	0	0	0	0	0	0	-35.38	-35.38
Inverter Transformer	MV3-3 T	367944	4907927	2	0	0	56.1	56.1	1	3251.29	3.25	0	81.24	0	0.94	0	0	9.29	0	0	0	0	0	0	-35.41	-35.41
Inverter Transformer	MV3-15 T	368351	4907477	2	0	0	56.1	56.1	1	3275.83	3.25	0	81.31	0	0.95	0	0	9.33	0	0	0	0	0	0	-35.52	-35.52
Inverter Transformer	MV3-6 T	368156	4907834	2	0	0	56.1	56.1	1	3341.85	3.25	0	81.48	0	0.97	0	0	9.43	0	0	0	0	0	0	-35.83	-35.83
Inverter Transformer	MV3-22 T	368661	4907142	2	0	0	56.1	56.1	1	3372.02	3.25	0	81.56	0	0.99	0	0	9.48	0	0	0	0	0	0	-35.97	-35.97
Inverter Transformer	MV3-11 T	368340	4907662	2	0	0	56.1	56.1	1	3375.25	3.25	0	81.57	0	0.99	0	0	9.49	0	0	0	0	0	0	-35.98	-35.98
Inverter Transformer	MV3-16 T	368509	4907475	2	0	0	56.1	56.1	1	3406.14	3.25	0	81.65	0	1	0	0	9.54	0	0	0	0	0	0	-36.13	-36.13
Inverter Transformer	MV3-1 T	368150	4907976	2	0	0	56.1	56.1	1	3433.12	3.25	0	81.71	0	1.01	0	0	9.58	0	0	0	0	0	0	-36.25	-36.25
Inverter Transformer	MV3-20 T	368683	4907317	2	0	0	56.1	56.1	1	3473.62	3.25	0	81.82	0	1.03	0	0	9.65	0	0	0	0	0	0	-36.43	-36.43
Inverter Transformer	MV3-5 T	368335	4907843	2	0	0	56.1	56.1	1	3483.78	3.25	0	81.84	0	1.03	0	0	9.66	0	0	0	0	0	0	-36.48	-36.48
Inverter Transformer	MV3-9 T	368517	4907703	2	0	0	56.1	56.1	1	3541.82	3.25	0	81.98	0	1.06	0	0	9.75	0	0	0	0	0	0	-36.74	-36.74
Inverter Transformer	MV3-14 T	368678	4907498	2	0	0	56.1	56.1	1	3561.2	3.25	0	82.03	0	1.07	0	0	9.78	0	0	0	0	0	0	-36.82	-36.82
Inverter Transformer	MV3-4 T	368507	4907925	2	0	0	56.1	56.1	1	3668.86	3.25	0	82.29	0	1.11	0	0	9.95	0	0	0	0	0	0	-37.29	-37.29
Inverter Transformer	MV3-8 T	368685	4907712	2	0	0	56.1	56.1	1	3684.19	3.25	0	82.33	0	1.12	0	0	9.98	0	0	0	0	0	0	-37.36	-37.36
Inverter Transformer	MV3-2 T	368677	4907928	2	0	0	56.1	56.1	1	3804.51	3.25	0	82.61	0	1.17	0	0	10.16	0	0	0	0	0	0	-37.87	-37.87
Inverter Transformer	MV4-13 T	369057	4908605	2	0	0	56.1	56.1	1	4527.6	3.25	0	84.12	0	1.45	0	0	11.21	0	0	0	0	0	0	-40.72	-40.72
Inverter Transformer	MV4-15 T	369170	4908481	2	0	0	56.1	56.1	1	4534.01	3.25	0	84.13	0	1.45	0	0	11.22	0	0	0	0	0	0	-40.75	-40.75
Inverter Transformer	MV4-14 T	369182	4908507	2	0	0	56.1	56.1	1	4559.74	3.25	0	84.18	0	1.46	0	0	11.26	0	0	0	0	0	0	-40.84	-40.84
Inverter Transformer	MV4-12 T	369049	4908803	2	0	0	56.1	56.1	1	4654.59	3.25	0	84.36	0	1.5	0	0	11.39	0	0	0	0	0	0	-41.19	-41.19
Inverter Transformer	MV6-2 T	370091	4907339	2	0	0	56.1	56.1	1	4760.43	3.25	0	84.55	0	1.54	0	0	11.53	0	0	0	0	0	0	-41.57	-41.57
Inverter Transformer	MV4-7 T	369040	4909001	2	0	0	56.1	56.1	1	4785.7	3.25	0	84.6	0	1.55	0	0	11.57	0	0	0	0	0	0	-41.66	-41.66
Inverter Transformer	MV6-3 T	370202	4907140	2	0	0	56.1	56.1	1	4797.49	3.25	0	84.62	0	1.55	0	0	11.58	0	0	0	0	0	0	-41.7	-41.7
Inverter Transformer	MV4-11 T	369269	4908855	2	0	0	56.1	56.1	1	4852.03	3.25	0	84.72	0	1.57	0	0	11.66	0	0	0	0	0	0	-41.89	-41.89

	Inverter Transformer	MV4-10 T	369307	4908858	2	0	0	56.1	56.1	1	4882.42	3.25	0	84.77	0	1.58	0	0	11.7	0	0	0	0	0	0	-41.99	-41.99
	Inverter Transformer	MV4-4 T	369033	4909199	2	0	0	56.1	56.1	1	4922.69	3.25	0	84.84	0	1.6	0	0	11.75	0	0	0	0	0	0	-42.13	-42.13
	Inverter Transformer	MV4-8 T	369262	4909001	2	0	0	56.1	56.1	1	4945.4	3.25	0	84.88	0	1.61	0	0	11.78	0	0	0	0	0	0	-42.21	-42.21
	Inverter Transformer	MV4-9 T	369284	4909001	2	0	0	56.1	56.1	1	4961.49	3.25	0	84.91	0	1.61	0	0	11.8	0	0	0	0	0	0	-42.27	-42.27
	Inverter Transformer	MV4-1 T	369017	4909397	2	0	0	56.1	56.1	1	5057.73	3.25	0	85.08	0	1.65	0	0	11.93	0	0	0	0	0	0	-42.6	-42.6
	Inverter Transformer	MV4-6 T	369249	4909192	2	0	0	56.1	56.1	1	5068.58	3.25	0	85.1	0	1.65	0	0	11.94	0	0	0	0	0	0	-42.63	-42.63
	Inverter Transformer	MV4-5 T	369283	4909199	2	0	0	56.1	56.1	1	5097.68	3.25	0	85.15	0	1.66	0	0	11.98	0	0	0	0	0	0	-42.73	-42.73
	Inverter Transformer	MV4-3 T	369234	4909397	2	0	0	56.1	56.1	1	5204.66	3.25	0	85.33	0	1.7	0	0	12.12	0	0	0	0	0	0	-43.09	-43.09
	Inverter Transformer	MV5-6 T	369987	4908507	2	0	0	56.1	56.1	1	5208.08	3.25	0	85.33	0	1.7	0	0	12.13	0	0	0	0	0	0	-43.1	-43.1
	Inverter Transformer	MV4-2 T	369267	4909397	2	0	0	56.1	56.1	1	5227.44	3.25	0	85.37	0	1.71	0	0	12.15	0	0	0	0	0	0	-43.16	-43.16
	Inverter Transformer	MV5-5 T	370021	4908690	2	0	0	56.1	56.1	1	5339.43	3.25	0	85.55	0	1.75	0	0	12.29	0	0	0	0	0	0	-43.53	-43.53
	Inverter Transformer	MV5-2 T	370011	4908853	2	0	0	56.1	56.1	1	5426.69	3.25	0	85.69	0	1.78	0	0	12.4	0	0	0	0	0	0	-43.81	-43.81
	Inverter Transformer	MV5-4 T	370330	4908707	2	0	0	56.1	56.1	1	5604.49	3.25	0	85.97	0	1.84	0	0	12.62	0	0	0	0	0	0	-44.37	-44.37
	Inverter Transformer	MV5-1 T	370015	4909142	2	0	0	56.1	56.1	1	5606.68	3.25	0	85.97	0	1.84	0	0	12.63	0	0	0	0	0	0	-44.38	-44.38
	Inverter Transformer	MV5-3 T	370237	4908851	2	0	0	56.1	56.1	1	5608.73	3.25	0	85.98	0	1.84	0	0	12.63	0	0	0	0	0	0	-44.39	-44.39
	Line Reactor	NGR	369421	4908787.5	5	0	0	45.4	45.4	1	4922.73	5.25	0	84.84	0	3.26	1.35	0.09	2.01	0	0	0	0	0	0	-46.12	-46.12
Limit. Valu	0	0																								
Level D/N:	32.142	32.142																								

Receiver: Vacant Lot Receptor
ID: S-VLR42
X: 365664
Y: 4905767
Z: 4.5
Ground: 0

ISO	Description	ID	X	Y	Z	Ground	ReflOrd	LxT	LxN	L/A	Dist.	hm	Freq	Adiv	K0b	Agr	Abar	z	Aatm	Afol	Ahous	Cmet	CmetN	Dc	RL	LtotT	LtotN
	Inverter	MV1-12	365038	4905386	2	0	0	100.3	100.3	1	732.83	3.25	0	68.3	0	-0.39	0	0	9.89	0	0	0	0	0	0	22.51	22.51
	Inverter	MV1-15	365315	4904994	2	0	0	100.3	100.3	1	848.14	3.25	0	69.57	0	-0.32	0	0	10.37	0	0	0	0	0	0	20.7	20.7
	Inverter	MV2-4	365586	4906624	2	0	0	100.3	100.3	1	860.55	3.25	0	69.7	0	-0.32	0	0	10.42	0	0	0	0	0	0	20.52	20.52
	Inverter	MV1-4	364815	4905918	2	0	0	100.3	100.3	1	862.33	3.25	0	69.71	0	-0.32	0	0	10.43	0	0	0	0	0	0	20.49	20.49
	Inverter	MV1-8	364788	4905647	2	0	0	100.3	100.3	1	884.18	3.25	0	69.93	0	-0.31	0	0	10.51	0	0	0	0	0	0	20.18	20.18
	Inverter	MV2-3	365820	4906641	2	0	0	100.3	100.3	1	887.82	3.25	0	69.97	0	-0.3	0	0	10.52	0	0	0	0	0	0	20.13	20.13
	Inverter	MV1-2	364753	4906063	2	0	0	100.3	100.3	1	957.88	3.25	0	70.63	0	-0.27	0	0	10.77	0	0	0	0	0	0	19.18	19.18
	Inverter	MV1-10	365004	4905564	2	0	0	97.3	97.3	1	690.52	3.25	0	67.78	0	-0.42	0	0	9.69	0	0	0	0	0	0	20.25	20.25
	Inverter	MV1-5	364671	4905892	2	0	0	100.3	100.3	1	1000.84	3.25	0	71.01	0	-0.25	0	0	10.91	0	0	0	0	0	0	18.64	18.64
	Inverter	MV1-1	364715	4906166	2	0	0	100.3	100.3	1	1029.47	3.25	0	71.25	0	-0.23	0	0	11.01	0	0	0	0	0	0	18.28	18.28
	Inverter	MV1-7	364925	4905782	2	0	0	97.3	97.3	1	739.16	3.25	0	68.37	0	-0.39	0	0	9.92	0	0	0	0	0	0	19.41	19.41
	Inverter	MV1-11	364655	4905414	2	0	0	100.3	100.3	1	1068.97	3.25	0	71.58	0	-0.21	0	0	11.13	0	0	0	0	0	0	17.81	17.81
	Inverter	MV1-9	364561	4905646	2	0	0	100.3	100.3	1	1109.62	3.25	0	71.9	0	-0.19	0	0	11.26	0	0	0	0	0	0	17.34	17.34
	Inverter	MV1-6	364477	4905835	2	0	0	100.3	100.3	1	1188.95	3.25	0	72.5	0	-0.16	0	0	11.49	0	0	0	0	0	0	16.47	16.47
	Inverter	MV1-14	365163	4905049	2	0	0	97.3	97.3	1	875.52	3.25	0	69.85	0	-0.31	0	0	10.48	0	0	0	0	0	0	17.3	17.3
	Sol_Luce Substation	S_Substation	369426	4908792	3.5	0	0	112.1	112.1	1	4827.35	5.25	0	84.67	0	0.85	2.91	0.26	8.41	0	0	0	0	0	0	15.23	15.23
	Inverter	MV2-1	365842	4906816	2	0	0	97.3	97.3	1	1064	3.25	0	71.54	0	-0.22	0	0	11.12	0	0	0	0	0	0	14.87	14.87
	Inverter	MV1-13	364731	4905241	2	0	0	97.3	97.3	1	1071.06	3.25	0	71.6	0	-0.21	0	0	11.14	0	0	0	0	0	0	14.79	14.79
	Inverter	MV3-18	367752	4907412	2	0	0	100.3	100.3	1	2658.15	3.25	0	79.49	0	0.29	0	0	14.75	0	0	0	0	0	0	5.77	5.77
	Inverter	MV3-12	367668	4907594	2	0	0	100.3	100.3	1	2711.82	3.25	0	79.67	0	0.3	0	0	14.85	0	0	0	0	0	0	5.49	5.49
	Inverter	MV3-13	367963	4907577	2	0	0	100.3	100.3	1	2926.01	3.25	0	80.33	0	0.35	0	0	15.24	0	0	0	0	0	0	4.4	4.4
	Inverter	MV3-7	367945	4907754	2	0	0	100.3	100.3	1	3025.08	3.25	0	80.61	0	0.37	0	0	15.42	0	0	0	0	0	0	3.91	3.91
	Inverter	MV3-17	368178	4907472	2	0	0	100.3	100.3	1	3037.64	3.25	0	80.65	0	0.37	0	0	15.44	0	0	0	0	0	0	3.85	3.85
	Inverter	MV3-19	368357	4907347	2	0	0	100.3	100.3	1	3122.28	3.25	0	80.89	0	0.39	0	0	15.59	0	0	0	0	0	0	3.45	3.45
	Inverter	MV3-3	367939	4907927	2	0	0	100.3	100.3	1	3137.07	3.25	0	80.93	0	0.39	0	0	15.61	0	0	0	0	0	0	3.38	3.38
	Inverter	MV3-10	368167	4907669	2	0	0	100.3	100.3	1	3143.66	3.25	0	80.95	0	0.39	0	0	15.62	0	0	0	0	0	0	3.35	3.35
	Inverter	MV3-21	368478	4907206	2	0	0	100.3	100.3	1	3160.59	3.25	0	81	0	0.39	0	0	15.65	0	0	0	0	0	0	3.27	3.27
	Inverter	MV3-15	368357	4907477	2	0	0	100.3	100.3	1	3190.04	3.25	0	81.08	0	0.4	0	0	15.7	0	0	0	0	0	0	3.13	3.13
	Inverter	MV3-6	368162	4907834	2	0	0	100.3	100.3	1	3242.3	3.25	0	81.22	0	0.41	0	0	15.79	0	0	0	0	0	0	2.89	2.89
	Inverter	MV3-11	368346	4907662	2	0	0	100.3	100.3	1	3283.92	3.25	0	81.33	0	0.41	0	0	15.87	0	0	0	0	0	0	2.7	2.7
	Inverter	MV3-16	368514	4907475	2	0	0	100.3	100.3	1	3322.61	3.25	0	81.43	0	0.42	0	0	15.93	0	0	0	0	0	0	2.53	2.53
	Inverter	MV3-20	368689	4907317	2	0	0	100.3	100.3	1	3398.99	3.25	0	81.63	0	0.43	0	0	16.06	0	0	0	0	0	0	2.19	2.19
	Inverter	MV2-2	365977	4906654	2	0	0	89.1	89.1	1	940.61	3.25	0	70.47	0	0.67	0	0	6.2	0	0	0	0	0	0	11.72	11.72
	Inverter	MV3-9	368512	4907703	2	0	0	100.3	100.3	1	3443.72	3.25	0	81.74	0	0.44	0	0	16.14	0	0	0	0	0	0	1.99	1.99
	Inverter	MV3-14	368684	4907498	2	0	0	100.3	100.3	1	3480.91	3.25	0	81.83	0	0.45	0	0	16.2	0	0	0	0	0	0	1.83	1.83
	Inverter	MV3-8	368680	4907712	2	0	0	100.3	100.3	1	3588.77	3.25	0	82.1	0	0.47	0	0	16.38	0	0	0	0	0	0	1.37	1.37
	Inverter	MV1-3	364440	4906039	2	0	0	89.1	89.1	1	1253.86	3.25	0	72.96	0	0.74	0	0	6.78	0	0	0	0	0	0	8.58	8.58
	Inverter	MV4-7	369035	4909001	2	0	0	100.3	100.3	1	4671.45	3.25	0	84.39	0	0.61	0	0	18.09	0	0	0	0	0	0	-2.78	-2.78
	Inverter	MV6-2	370085	4907339	2	0	0	100.3	100.3	1	4692.17	3.25	0	84.43	0	0.61	0	0	18.12	0	0	0	0	0	0	-2.85	-2.85
	Inverter	MV4-11	369264	4908855	2	0	0	100.3	100.3	1	4742.97	3.25	0	84.52	0	0.62	0	0	18.2	0	0	0	0	0	0	-3.02	-3.02
	Inverter	MV6-3	370207	4907140	2	0	0	100.3	100.3	1	4745.94	3.25	0	84.53	0	0.62	0	0	18.2	0	0	0	0	0	0	-3.03	-3.03
	Inverter	MV4-10	369312	4908858	2	0	0	100.3	100.3	1	4781.44	3.25	0	84.59	0	0.62	0	0	18.26	0	0	0	0	0	0	-3.16	-3.16
	Inverter	MV4-4	369027	4909199	2	0	0	100.3	100.3	1	4805.04	3.25	0	84.63	0	0.62	0	0	18.29	0	0	0	0	0	0	-3.24	-3.24
	Inverter	MV4-8	369256	4909001	2	0	0	100.3	100.3	1	4833.35	3.25	0	84.68	0	0.63	0	0	18.33	0	0	0	0	0	0	-3.33	-3.33
	Inverter	MV4-9	369289	4909001	2	0	0	100.3	100.3	1	4857.92	3.25	0	84.73	0	0.63	0	0	18.37	0	0	0	0	0	0	-3.42	-3.42
	Inverter	MV4-1	369011	4909397	2	0	0	100.3	100.3	1	4937.54	3.25	0	84.87	0	0.64	0	0	18.49	0	0	0	0	0	0	-3.68	-3.68
	Inverter	MV4-6	369243	4909192	2	0	0	100.3	100.3	1	4953.77	3.25	0	84.9	0	0.64	0	0	18.51	0	0	0	0	0	0	-3.74	-3.74

Inverter	MV4-5	369289	4909199	2	0	0	100.3	100.3	1	4991.92	3.25	0	84.97	0	0.64	0	0	18.57	0	0	0	0	0	0	-3.86	-3.86
Inverter	MV4-3	369229	4909397	2	0	0	100.3	100.3	1	5087.84	3.25	0	85.13	0	0.65	0	0	18.71	0	0	0	0	0	0	-4.18	-4.18
Inverter	MV4-2	369272	4909397	2	0	0	100.3	100.3	1	5118.06	3.25	0	85.18	0	0.65	0	0	18.75	0	0	0	0	0	0	-4.28	-4.28
Inverter	MV5-5	370015	4908690	2	0	0	100.3	100.3	1	5241.67	3.25	0	85.39	0	0.66	0	0	18.93	0	0	0	0	0	0	-4.67	-4.67
Inverter	MV5-2	370006	4908853	2	0	0	100.3	100.3	1	5326.95	3.25	0	85.53	0	0.67	0	0	19.05	0	0	0	0	0	0	-4.94	-4.94
Inverter	MV5-4	370324	4908707	2	0	0	100.3	100.3	1	5509.92	3.25	0	85.82	0	0.68	0	0	19.31	0	0	0	0	0	0	-5.51	-5.51
Inverter	MV5-1	370020	4909142	2	0	0	100.3	100.3	1	5510.48	3.25	0	85.82	0	0.68	0	0	19.32	0	0	0	0	0	0	-5.51	-5.51
Inverter	MV5-3	370231	4908851	2	0	0	100.3	100.3	1	5510.77	3.25	0	85.82	0	0.68	0	0	19.32	0	0	0	0	0	0	-5.51	-5.51
Inverter	MV6-1	370235	4907364	2	0	0	97.3	97.3	1	4841.95	3.25	0	84.7	0	0.63	0	0	18.35	0	0	0	0	0	0	-6.36	-6.36
DSTATCOM - 10 MVAR #2	DSAT2	369403	4908757	2.5	0	0	96.6	96.6	1	4787.51	3.5	0	84.6	0	3.66	0	0	3.24	0	0	0	0	0	0	5.12	5.12
DSTATCOM - 10 MVAR #1	DSAT1	369437	4908757	2.5	0	0	96.6	96.6	1	4814.11	3.5	0	84.65	0	3.67	0	0	3.26	0	0	0	0	0	0	5.06	5.06
Gardiner Substation	G_Sub	366586.3	4903349.9	2.5	0	0	90.8	90.8	1	2587.09	4.25	0	79.26	0	1	3.35	0.32	5.33	0	0	0	0	0	0	1.85	1.85
SubstationTransformer	W_ST	369711.17	4906112.3	2.5	0	0	92	92	1	4061.87	4.25	0	83.17	0	1.38	2.6	0.29	7.45	0	0	0	0	0	0	-2.62	-2.62
Inverters	G_Inv1	366526.4	4903225.8	2	0	0	87.7	87.7	1	2683.55	3.25	0	79.57	0	2.66	0	0	3.42	0	0	0	0	0	0	2	2
Inverters	G_Inv2	366676.9	4903239.1	2	0	0	87.7	87.7	1	2723.28	3.25	0	79.7	0	2.67	0	0	3.46	0	0	0	0	0	0	1.83	1.83
Inverter	MV3-22	368656	4907142	2	0	0	89.1	89.1	1	3292.82	3.25	0	81.35	0	1.22	0	0	10.06	0	0	0	0	0	0	-3.57	-3.57
Inverters	G_Inv3	366583.7	4903091.4	2	0	0	87.7	87.7	1	2829.26	3.25	0	80.03	0	2.68	0	0	3.58	0	0	0	0	0	0	1.36	1.36
Inverter	MV3-1	368156	4907976	2	0	0	89.1	89.1	1	3330.13	3.25	0	81.45	0	1.23	0	0	10.11	0	0	0	0	0	0	-3.73	-3.73
Inverters	G_Inv4	366732.8	4903105	2	0	0	87.7	87.7	1	2868.55	3.25	0	80.15	0	2.68	0	0	3.63	0	0	0	0	0	0	1.2	1.2
Inverter	MV3-5	368340	4907843	2	0	0	89.1	89.1	1	3386.85	3.25	0	81.6	0	1.24	0	0	10.2	0	0	0	0	0	0	-3.98	-3.98
Inverters	G_Inv5	366638.5	4902958.1	2	0	0	87.7	87.7	1	2973.14	3.25	0	80.46	0	2.7	0	0	3.74	0	0	0	0	0	0	0.76	0.76
Inverters	G_Inv6	366788.5	4902972	2	0	0	87.7	87.7	1	3012.73	3.25	0	80.58	0	2.7	0	0	3.79	0	0	0	0	0	0	0.59	0.59
Inverter	MV3-4	368502	4907925	2	0	0	89.1	89.1	1	3565.28	3.25	0	82.04	0	1.29	0	0	10.46	0	0	0	0	0	0	-4.73	-4.73
Inverters	G_Inv7	366694.6	4902824.7	2	0	0	87.7	87.7	1	3117.57	3.25	0	80.88	0	2.71	0	0	3.91	0	0	0	0	0	0	0.17	0.17
Inverter	MV3-2	368671	4907928	2	0	0	89.1	89.1	1	3702.97	3.25	0	82.37	0	1.32	0	0	10.66	0	0	0	0	0	0	-5.29	-5.29
Inverters	G_Inv8	366844.5	4902838.5	2	0	0	87.7	87.7	1	3157.48	3.25	0	80.99	0	2.71	0	0	3.95	0	0	0	0	0	0	0.01	0.01
Westbrook Inverter Enclosur	W_INV2	369374	4906388	2	0	0	89.1	89.1	1	3761.61	3.25	0	82.51	0	1.33	0	0	10.74	0	0	0	0	0	0	-5.53	-5.53
Inverters	G_Inv9	366750.9	4902691.8	2	0	0	87.7	87.7	1	3261.63	3.25	0	81.27	0	2.72	0	0	4.07	0	0	0	0	0	0	-0.4	-0.4
Westbrook Inverter Enclosur	W_INV3	369508	4906164	2	0	0	89.1	89.1	1	3864.45	3.25	0	82.74	0	1.36	0	0	10.89	0	0	0	0	0	0	-5.93	-5.93
Inverters	G_Inv10	366900.7	4902704.8	2	0	0	87.7	87.7	1	3302.5	3.25	0	81.38	0	2.73	0	0	4.11	0	0	0	0	0	0	-0.56	-0.56
Westbrook Inverter Enclosur	W_INV4	369673	4906164	2	0	0	89.1	89.1	1	4028.61	3.25	0	83.1	0	1.4	0	0	11.13	0	0	0	0	0	0	-6.57	-6.57
Westbrook Inverter Enclosur	W_INV5	369719	4906574	2	0	0	89.1	89.1	1	4134.52	3.25	0	83.33	0	1.43	0	0	11.28	0	0	0	0	0	0	-6.97	-6.97
Westbrook Inverter Enclosur	W_INV7	369780	4906417	2	0	0	89.1	89.1	1	4167.01	3.25	0	83.4	0	1.43	0	0	11.32	0	0	0	0	0	0	-7.09	-7.09
Westbrook Inverter Enclosur	W_INV6	369875	4906578	2	0	0	89.1	89.1	1	4288.39	3.25	0	83.65	0	1.46	0	0	11.49	0	0	0	0	0	0	-7.54	-7.54
Fixed Reactor Bank 1	FRB1	369378	4908755	6	0	0	89.8	89.8	1	4766.75	5.25	0	84.56	0	-0.6	0	0	8.34	0	0	0	0	0	0	-2.52	-2.52
Inverter	MV4-13	369051	4908605	2	0	0	89.1	89.1	1	4418.83	3.25	0	83.91	0	1.5	0	0	11.67	0	0	0	0	0	0	-8.02	-8.02
Inverter	MV4-15	369176	4908481	2	0	0	89.1	89.1	1	4438.46	3.25	0	83.94	0	1.5	0	0	11.7	0	0	0	0	0	0	-8.09	-8.09
Fixed Reactor Bank 2	FRB2	369464	4908755	6	0	0	89.8	89.8	1	4834.06	5.25	0	84.69	0	-0.59	0	0	8.42	0	0	0	0	0	0	-2.74	-2.74
Inverter	MV4-14	369176	4908507	2	0	0	89.1	89.1	1	4454.41	3.25	0	83.98	0	1.5	0	0	11.72	0	0	0	0	0	0	-8.14	-8.14
Inverter	MV4-12	369043	4908803	2	0	0	89.1	89.1	1	4542.57	3.25	0	84.15	0	1.53	0	0	11.84	0	0	0	0	0	0	-8.46	-8.46
Inverter	MV5-6	369982	4908507	2	0	0	89.1	89.1	1	5113.97	3.25	0	85.18	0	1.67	0	0	12.62	0	0	0	0	0	0	-10.4	-10.4
Westbrook Inverter Enclosur	W_INV1	369409	4906578	2	0	0	86.1	86.1	1	3831.81	3.25	0	82.67	0	1.35	0	0	10.84	0	0	0	0	0	0	-8.81	-8.81
Inverter Transformer	MV1-10 T	365010	4905564	2	0	0	69.4	69.4	1	684.79	3.25	0	67.71	0	1.34	0	0	3.32	0	0	0	0	0	0	-3.02	-3.02
Inverter	MV6-4	370250	4906966	2	0	0	86.1	86.1	1	4740.15	3.25	0	84.52	0	1.58	0	0	12.11	0	0	0	0	0	0	-12.15	-12.15
Inverter Transformer	MV1-7 T	364919	4905782	2	0	0	69.4	69.4	1	745.16	3.25	0	68.44	0	1.42	0	0	3.43	0	0	0	0	0	0	-3.94	-3.94
Inverter Transformer	MV1-14 T	365157	4905049	2	0	0	69.4	69.4	1	878.96	3.25	0	69.88	0	1.57	0	0	3.64	0	0	0	0	0	0	-5.74	-5.74
Inverter Transformer	MV2-1 T	365836	4906816	2	0	0	69.4	69.4	1	1063.01	3.25	0	71.53	0	1.73	0	0	3.9	0	0	0	0	0	0	-7.81	-7.81
Inverter Transformer	MV1-13 T	364725	4905241	2	0	0	69.4	69.4	1	1076.29	3.25	0	71.64	0	1.74	0	0	3.91	0	0	0	0	0	0	-7.94	-7.94
Westbrook Inverter Transfor	W_INVTR1	369403	4906578	2	0	0	78.2	78.2	1	3825.94	3.5	0	82.65	0	-2.92	0	0	1.99	0	0	0	0	0	0	-3.48	-3.48
Westbrook Inverter Transfor	W_INVTR2	369368	4906388	2	0	0	77.3	77.3	1	3755.7	3.25	0	82.49	0	-2.91	0	0	1.96	0	0	0	0	0	0	-4.21	-4.21
Westbrook Inverter Transfor	W_INVTR3	369514	4906164	2	0	0	77.3	77.3	1	3870.42	3.25	0	82.76	0	-2.93	0	0	2.01	0	0	0	0	0	0	-4.49	-4.49
Westbrook Inverter Transfor	W_INVTR4	369679	4906164	2	0	0	77.3	77.3	1	4034.58	3.25	0	83.12	0	-2.97	0	0	2.07	0	0	0	0	0	0	-4.87	-4.87
Westbrook Inverter Transfor	W_INVTR5	369725	4906574	2	0	0	77.3	77.3	1	4140.41	3.25	0	83.34	0	-2.99	0	0	2.11	0	0	0	0	0	0	-5.11	-5.11
Westbrook Inverter Transfor	W_INVTR7	369786	4906417	2	0	0	77.3	77.3	1	4172.94	3.25	0	83.41	0	-3	0	0	2.12	0	0	0	0	0	0	-5.18	-5.18
Westbrook Inverter Transfor	W_INVTR6	369881	4906578	2	0	0	77.3	77.3	1	4294.28	3.25	0	83.66	0	-3.03	0	0	2.16	0	0	0	0	0	0	-5.45	-5.45
Inverter Transformer	MV1-12 T	365044	4905386	2	0	0	56.1	56.1	1	727.71	3.25	0	68.24	0	-0.07	0	0	4.21	0	0	0	0	0	0	-16.31	-16.31
Inverter Transformer	MV1-15 T	365309	4904994	2	0	0	56.1	56.1	1	850.62	3.25	0	69.59	0	-0.04	0	0	4.52	0	0	0	0	0	0	-18.02	-18.02
Inverter Transformer	MV1-4 T	364821	4905918	2	0	0	56.1	56.1	1	856.42	3.25	0	69.65	0	-0.04	0	0	4.54	0	0	0	0	0	0	-18.1	-18.1
Inverter Transformer	MV2-4 T	365590	4906628	2	0	0	56.1	56.1	1	864.18	3.25	0	69.73	0	-0.03	0	0	4.56	0	0	0	0	0	0	-18.2	-18.2
Inverter Transformer	MV2-3 T	365814	4906641	2	0	0	56.1	56.1	1	886.78	3.25	0	69.96	0	-0.03	0	0	4.61	0	0	0	0	0	0	-18.49	-18.49
Inverter Transformer	MV1-8 T	364782	4905647	2	0	0	56.1	56.1	1	890.13	3.25	0	69.99	0	-0.02	0	0	4.62	0	0	0	0	0	0	-18.53	-18.53
Inverter Transformer	MV2-2 T	365982	4906654	2	0	0	56.1	56.1	1	942.28	3.25	0	70.48	0	-0.01	0	0	4.75	0	0	0	0	0	0	-19.17	-19.17
Inverter Transformer	MV1-2 T	364759	4906063	2	0	0	56.1	56.1	1	952.18	3.25	0	70.57	0	0	0	0	4.77	0	0	0	0	0	0	-19.29	-19.29
Inverter Transformer	MV1-5 T	364676	4905892	2	0	0	56.1	56.1	1	995.88	3.25	0	70.96	0	0.01	0	0	4.88	0	0	0	0	0	0	-19.8	-19.8
Inverter Transformer	MV1-1 T	364721	4906166	2	0	0	56.1	56.1	1	1023.94	3.25	0	71.21	0	0.02	0	0	4.95	0	0	0	0	0	0	-20.11	-20.11
Inverter Transformer	MV6-4 T	370244	4906966	2	0	0	69.4	69.4	1	4734.34	3.25	0	84.51	0	2.96	0	0	7.2	0	0	0	0	0	0	-25.31	-25.31
Inverter Transformer	MV6-1 T	370230	4907364	2	0	0	69.4	69.4	1	4837.23	3.25	0	84.69	0	2.98	0	0	7.27	0	0	0	0	0	0	-25.59	-25.59
Inverter Transformer	MV1-11 T	364649	4905414	2	0	0	56.1	56.1	1	1074.63	3.25	0	71.63	0	0.04	0	0	5.07	0	0	0	0	0	0	-20.67	-20.67
Inverter Transformer	MV1-9 T	364555	4905646	2	0	0	56.1	56.1	1	1115.58	3.25	0	71.95	0	0.05	0	0	5.16	0	0	0	0	0	0	-21.11	-21.11
Inverter Transformer	MV1-6 T	364482	4905835	2	0	0	56.1	56.1	1	1183.96	3.25	0	72.47	0	0.08	0	0	5.32	0	0	0	0	0	0	-21.8	-21.8
Inverter Transformer	MV1-3 T	364435	4906039	2	0	0	56.1	56.1	1	1258.74	3.25	0	73	0	0.11	0	0	5.49	0	0	0	0	0	0	-22.53	-22.53
Inverter Transformer	MV3-18 T	367757	4907412	2	0	0	56.1	56.1	1	2662.08	3.25	0	79.5	0	0.69	0	0	8.28	0	0	0	0	0	0	-32.41	-32.41
Inverter Transformer	MV3-12 T	367674	4907594	2	0	0	56.1	56.1	1	2716.25	3.25	0	79.68	0	0.71	0	0	8.38	0	0	0	0	0	0	-32.71	-32.71
Inverter Transformer	MV3-13 T	367958	4907577	2	0	0	56.1	56.1	1	2922.08	3.25	0	80.31	0	0.8	0	0	8.74	0	0	0	0	0	0	-33.79	-33.79

	Inverter Transformer	MV3-7 T	367951	4907754	2	0	0	56.1	56.1	1	3029.61	3.25	0	80.63	0	0.84	0	0	8.92	0	0	0	0	0	0	-34.33	-34.33
	Inverter Transformer	MV3-17 T	368183	4907472	2	0	0	56.1	56.1	1	3041.77	3.25	0	80.66	0	0.85	0	0	8.94	0	0	0	0	0	0	-34.39	-34.39
	Inverter Transformer	MV3-19 T	368352	4907347	2	0	0	56.1	56.1	1	3117.97	3.25	0	80.88	0	0.88	0	0	9.07	0	0	0	0	0	0	-34.77	-34.77
	Inverter Transformer	MV3-10 T	368162	4907669	2	0	0	56.1	56.1	1	3139.68	3.25	0	80.94	0	0.89	0	0	9.1	0	0	0	0	0	0	-34.87	-34.87
	Inverter Transformer	MV3-3 T	367944	4907927	2	0	0	56.1	56.1	1	3140.7	3.25	0	80.94	0	0.89	0	0	9.1	0	0	0	0	0	0	-34.88	-34.88
	Inverter Transformer	MV3-21 T	368484	4907206	2	0	0	56.1	56.1	1	3165.93	3.25	0	81.01	0	0.9	0	0	9.15	0	0	0	0	0	0	-35	-35
	Inverter Transformer	MV3-15 T	368351	4907477	2	0	0	56.1	56.1	1	3184.98	3.25	0	81.06	0	0.91	0	0	9.18	0	0	0	0	0	0	-35.09	-35.09
	Inverter Transformer	MV3-6 T	368156	4907834	2	0	0	56.1	56.1	1	3237.68	3.25	0	81.2	0	0.93	0	0	9.26	0	0	0	0	0	0	-35.34	-35.34
	Inverter Transformer	MV3-11 T	368340	4907662	2	0	0	56.1	56.1	1	3279.03	3.25	0	81.31	0	0.95	0	0	9.33	0	0	0	0	0	0	-35.54	-35.54
	Inverter Transformer	MV3-22 T	368661	4907142	2	0	0	56.1	56.1	1	3297.37	3.25	0	81.36	0	0.96	0	0	9.36	0	0	0	0	0	0	-35.62	-35.62
	Inverter Transformer	MV3-16 T	368509	4907475	2	0	0	56.1	56.1	1	3318.33	3.25	0	81.42	0	0.96	0	0	9.4	0	0	0	0	0	0	-35.72	-35.72
	Inverter Transformer	MV3-1 T	368150	4907976	2	0	0	56.1	56.1	1	3325.64	3.25	0	81.44	0	0.97	0	0	9.41	0	0	0	0	0	0	-35.75	-35.75
	Inverter Transformer	MV3-5 T	368335	4907843	2	0	0	56.1	56.1	1	3382.9	3.25	0	81.59	0	0.99	0	0	9.5	0	0	0	0	0	0	-36.02	-36.02
	Inverter Transformer	MV3-20 T	368683	4907317	2	0	0	56.1	56.1	1	3393.65	3.25	0	81.61	0	1	0	0	9.52	0	0	0	0	0	0	-36.07	-36.07
	Inverter Transformer	MV3-9 T	368517	4907703	2	0	0	56.1	56.1	1	3447.86	3.25	0	81.75	0	1.02	0	0	9.6	0	0	0	0	0	0	-36.32	-36.32
	Inverter Transformer	MV3-14 T	368678	4907498	2	0	0	56.1	56.1	1	3475.71	3.25	0	81.82	0	1.03	0	0	9.65	0	0	0	0	0	0	-36.44	-36.44
	Inverter Transformer	MV3-4 T	368507	4907925	2	0	0	56.1	56.1	1	3569.26	3.25	0	82.05	0	1.07	0	0	9.8	0	0	0	0	0	0	-36.86	-36.86
	Inverter Transformer	MV3-8 T	368685	4907712	2	0	0	56.1	56.1	1	3592.98	3.25	0	82.11	0	1.08	0	0	9.83	0	0	0	0	0	0	-36.96	-36.96
	Inverter Transformer	MV3-2 T	368677	4907928	2	0	0	56.1	56.1	1	3707.84	3.25	0	82.38	0	1.13	0	0	10.01	0	0	0	0	0	0	-37.46	-37.46
	Inverter Transformer	MV4-13 T	369057	4908605	2	0	0	56.1	56.1	1	4423.43	3.25	0	83.92	0	1.41	0	0	11.07	0	0	0	0	0	0	-40.33	-40.33
	Inverter Transformer	MV4-15 T	369170	4908481	2	0	0	56.1	56.1	1	4433.72	3.25	0	83.94	0	1.41	0	0	11.08	0	0	0	0	0	0	-40.37	-40.37
	Inverter Transformer	MV4-14 T	369182	4908507	2	0	0	56.1	56.1	1	4459.14	3.25	0	83.99	0	1.42	0	0	11.12	0	0	0	0	0	0	-40.47	-40.47
	Inverter Transformer	MV4-12 T	369049	4908803	2	0	0	56.1	56.1	1	4547.03	3.25	0	84.15	0	1.46	0	0	11.24	0	0	0	0	0	0	-40.79	-40.79
	Inverter Transformer	MV4-7 T	369040	4909001	2	0	0	56.1	56.1	1	4675.05	3.25	0	84.4	0	1.51	0	0	11.42	0	0	0	0	0	0	-41.26	-41.26
	Inverter Transformer	MV6-2 T	370091	4907339	2	0	0	56.1	56.1	1	4697.82	3.25	0	84.44	0	1.51	0	0	11.45	0	0	0	0	0	0	-41.34	-41.34
	Inverter Transformer	MV6-3 T	370202	4907140	2	0	0	56.1	56.1	1	4741.16	3.25	0	84.52	0	1.53	0	0	11.51	0	0	0	0	0	0	-41.5	-41.5
	Inverter Transformer	MV4-11 T	369269	4908855	2	0	0	56.1	56.1	1	4746.76	3.25	0	84.53	0	1.53	0	0	11.52	0	0	0	0	0	0	-41.52	-41.52
	Inverter Transformer	MV4-10 T	369307	4908858	2	0	0	56.1	56.1	1	4777.63	3.25	0	84.58	0	1.54	0	0	11.56	0	0	0	0	0	0	-41.63	-41.63
	Inverter Transformer	MV4-4 T	369033	4909199	2	0	0	56.1	56.1	1	4809.24	3.25	0	84.64	0	1.56	0	0	11.6	0	0	0	0	0	0	-41.74	-41.74
	Inverter Transformer	MV4-8 T	369262	4909001	2	0	0	56.1	56.1	1	4837.81	3.25	0	84.69	0	1.57	0	0	11.64	0	0	0	0	0	0	-41.84	-41.84
	Inverter Transformer	MV4-9 T	369284	4909001	2	0	0	56.1	56.1	1	4854.19	3.25	0	84.72	0	1.57	0	0	11.66	0	0	0	0	0	0	-41.9	-41.9
	Inverter Transformer	MV4-1 T	369017	4909397	2	0	0	56.1	56.1	1	4941.61	3.25	0	84.88	0	1.6	0	0	11.78	0	0	0	0	0	0	-42.2	-42.2
	Inverter Transformer	MV4-6 T	369249	4909192	2	0	0	56.1	56.1	1	4958.11	3.25	0	84.91	0	1.61	0	0	11.8	0	0	0	0	0	0	-42.26	-42.26
	Inverter Transformer	MV4-5 T	369283	4909199	2	0	0	56.1	56.1	1	4987.56	3.25	0	84.96	0	1.62	0	0	11.84	0	0	0	0	0	0	-42.36	-42.36
	Inverter Transformer	MV4-3 T	369234	4909397	2	0	0	56.1	56.1	1	5091.35	3.25	0	85.14	0	1.66	0	0	11.97	0	0	0	0	0	0	-42.71	-42.71
	Inverter Transformer	MV4-2 T	369267	4909397	2	0	0	56.1	56.1	1	5114.54	3.25	0	85.18	0	1.67	0	0	12	0	0	0	0	0	0	-42.79	-42.79
	Inverter Transformer	MV5-6 T	369987	4908507	2	0	0	56.1	56.1	1	5118.2	3.25	0	85.18	0	1.67	0	0	12.01	0	0	0	0	0	0	-42.8	-42.8
	Inverter Transformer	MV5-5 T	370021	4908690	2	0	0	56.1	56.1	1	5246.65	3.25	0	85.4	0	1.71	0	0	12.17	0	0	0	0	0	0	-43.23	-43.23
	Inverter Transformer	MV5-2 T	370011	4908853	2	0	0	56.1	56.1	1	5331.02	3.25	0	85.54	0	1.74	0	0	12.28	0	0	0	0	0	0	-43.5	-43.5
	Inverter Transformer	MV5-1 T	370015	4909142	2	0	0	56.1	56.1	1	5506.53	3.25	0	85.82	0	1.8	0	0	12.5	0	0	0	0	0	0	-44.07	-44.07
	Inverter Transformer	MV5-4 T	370330	4908707	2	0	0	56.1	56.1	1	5514.99	3.25	0	85.83	0	1.81	0	0	12.51	0	0	0	0	0	0	-44.09	-44.09
	Inverter Transformer	MV5-3 T	370237	4908851	2	0	0	56.1	56.1	1	5515.74	3.25	0	85.83	0	1.81	0	0	12.51	0	0	0	0	0	0	-44.09	-44.09
	Line Reactor	NGR	369421	4908787.5	5	0	0	45.4	45.4	1	4820.63	5.25	0	84.66	0	3.27	1.35	0.09	1.97	0	0	0	0	0	0	-45.89	-45.89
Limit. Valu	0	0																								
Level D/N:	31.8976	31.8976																								

Receiver: Vacant Lot Receptor
ID: S-VLR43
X: 365711
Y: 4905674
Z: 4.5
Ground: 0

ISO	Description	ID	X	Y	Z	Ground	ReflOrd	LxT	LxN	L/A	Dist.	hm	Freq	Adiv	K0b	Agr	Abar	z	Aatm	Afol	Ahous	Cmet	CmetN	Dc	RL	LtotT	LtotN
	Inverter	MV1-12	365038	4905386	2	0	0	100.3	100.3	1	732.04	3.25	0	68.29	0	-0.39	0	0	9.89	0	0	0	0	0	0	22.53	22.53
	Inverter	MV1-15	365315	4904994	2	0	0	100.3	100.3	1	786.91	3.25	0	68.92	0	-0.36	0	0	10.13	0	0	0	0	0	0	21.63	21.63
	Inverter	MV1-8	364788	4905647	2	0	0	100.3	100.3	1	923.4	3.25	0	70.31	0	-0.28	0	0	10.65	0	0	0	0	0	0	19.64	19.64
	Inverter	MV1-4	364815	4905918	2	0	0	100.3	100.3	1	928.63	3.25	0	70.36	0	-0.28	0	0	10.67	0	0	0	0	0	0	19.57	19.57
	Inverter	MV2-4	365586	4906624	2	0	0	100.3	100.3	1	958.19	3.25	0	70.63	0	-0.27	0	0	10.77	0	0	0	0	0	0	19.18	19.18
	Inverter	MV2-3	365820	4906641	2	0	0	100.3	100.3	1	973.13	3.25	0	70.76	0	-0.26	0	0	10.82	0	0	0	0	0	0	18.99	18.99
	Inverter	MV1-10	365004	4905564	2	0	0	97.3	97.3	1	715.51	3.25	0	68.09	0	-0.4	0	0	9.81	0	0	0	0	0	0	19.81	19.81
	Inverter	MV1-2	364753	4906063	2	0	0	100.3	100.3	1	1033.97	3.25	0	71.29	0	-0.23	0	0	11.02	0	0	0	0	0	0	18.23	18.23
	Inverter	MV1-5	364671	4905892	2	0	0	100.3	100.3	1	1062.61	3.25	0	71.53	0	-0.22	0	0	11.11	0	0	0	0	0	0	17.89	17.89
	Inverter	MV1-11	364655	4905414	2	0	0	100.3	100.3	1	1087.54	3.25	0	71.73	0	-0.2	0	0	11.19	0	0	0	0	0	0	17.6	17.6
	Inverter	MV1-1	364715	4906166	2	0	0	100.3	100.3	1	1110.89	3.25	0	71.91	0	-0.19	0	0	11.26	0	0	0	0	0	0	17.33	17.33
	Inverter	MV1-7	364925	4905782	2	0	0	97.3	97.3	1	793.39	3.25	0	68.99	0	-0.36	0	0	10.15	0	0	0	0	0	0	18.52	18.52
	Inverter	MV1-9	364561	4905646	2	0	0	100.3	100.3	1	1150.34	3.25	0	72.22	0	-0.18	0	0	11.38	0	0	0	0	0	0	16.89	16.89
	Inverter	MV1-14	365163	4905049	2	0	0	97.3	97.3	1	831.23	3.25	0	69.39	0	-0.33	0	0	10.31	0	0	0	0	0	0	17.95	17.95
	Inverter	MV1-6	364477	4905835	2	0	0	100.3	100.3	1	1244.46	3.25	0	72.9	0	-0.13	0	0	11.65	0	0	0	0	0	0	15.9	15.9
	Sol_Luce Substation	S_Substation	369426	4908792	3.5	0	0	112.1	112.1	1	4850.07	5.25	0	84.71	0	0.85	2.9	0.25	8.44	0	0	0	0	0	0	15.17	15.17
	Inverter	MV1-13	364731	4905241	2	0	0	97.3	97.3	1	1071.4	3.25	0	71.6	0	-0.21	0	0	11.14	0	0	0	0	0	0	14.78	14.78
	Inverter	MV2-1	365842	4906816	2	0	0	97.3	97.3	1	1149.49	3.25	0	72.21	0	-0.18	0	0	11.38	0	0	0	0	0	0	13.9	13.9
	Inverter	MV3-18	367752	4907412	2	0	0	100.3	100.3	1	2680.73	3.25	0	79.57	0	0.3	0	0	14.8	0	0	0	0	0	0	5.65	5.65
	Inverter	MV3-12	367668	4907594	2	0	0	100.3	100.3	1	2741.58	3.25	0	79.76	0	0.31	0	0	14.91	0	0	0	0	0	0	5.33	5.33

Inverter	MV3-13	367963	4907577	2	0	0	100.3	100.3	1	2948.38	3.25	0	80.39	0	0.35	0	0	15.28	0	0	0	0	0	0	4.29	4.29
Inverter	MV3-7	367945	4907754	2	0	0	100.3	100.3	1	3052.4	3.25	0	80.69	0	0.37	0	0	15.46	0	0	0	0	0	0	3.78	3.78
Inverter	MV3-17	368178	4907472	2	0	0	100.3	100.3	1	3052.69	3.25	0	80.69	0	0.37	0	0	15.47	0	0	0	0	0	0	3.78	3.78
Inverter	MV3-19	368357	4907347	2	0	0	100.3	100.3	1	3130.54	3.25	0	80.91	0	0.39	0	0	15.6	0	0	0	0	0	0	3.41	3.41
Inverter	MV3-21	368478	4907206	2	0	0	100.3	100.3	1	3162.8	3.25	0	81	0	0.39	0	0	15.66	0	0	0	0	0	0	3.26	3.26
Inverter	MV3-10	368167	4907669	2	0	0	100.3	100.3	1	3164.17	3.25	0	81.01	0	0.39	0	0	15.66	0	0	0	0	0	0	3.25	3.25
Inverter	MV3-3	367939	4907927	2	0	0	100.3	100.3	1	3168.6	3.25	0	81.02	0	0.39	0	0	15.67	0	0	0	0	0	0	3.23	3.23
Inverter	MV3-15	368357	4907477	2	0	0	100.3	100.3	1	3201.89	3.25	0	81.11	0	0.4	0	0	15.72	0	0	0	0	0	0	3.08	3.08
Inverter	MV3-6	368162	4907834	2	0	0	100.3	100.3	1	3266.96	3.25	0	81.28	0	0.41	0	0	15.84	0	0	0	0	0	0	2.78	2.78
Inverter	MV3-11	368346	4907662	2	0	0	100.3	100.3	1	3300.81	3.25	0	81.37	0	0.42	0	0	15.89	0	0	0	0	0	0	2.63	2.63
Inverter	MV3-16	368514	4907475	2	0	0	100.3	100.3	1	3331.73	3.25	0	81.45	0	0.42	0	0	15.95	0	0	0	0	0	0	2.49	2.49
Inverter	MV3-20	368689	4907317	2	0	0	100.3	100.3	1	3401.17	3.25	0	81.63	0	0.43	0	0	16.07	0	0	0	0	0	0	2.18	2.18
Inverter	MV3-9	368512	4907703	2	0	0	100.3	100.3	1	3458.68	3.25	0	81.78	0	0.44	0	0	16.16	0	0	0	0	0	0	1.93	1.93
Inverter	MV3-14	368684	4907498	2	0	0	100.3	100.3	1	3487.94	3.25	0	81.85	0	0.45	0	0	16.21	0	0	0	0	0	0	1.8	1.8
Inverter	MV3-8	368680	4907712	2	0	0	100.3	100.3	1	3601.17	3.25	0	82.13	0	0.47	0	0	16.4	0	0	0	0	0	0	1.32	1.32
Inverter	MV2-2	365977	4906654	2	0	0	89.1	89.1	1	1015.46	3.25	0	71.13	0	0.69	0	0	6.34	0	0	0	0	0	0	10.89	10.89
Inverter	MV6-2	370085	4907339	2	0	0	100.3	100.3	1	4680.18	3.25	0	84.41	0	0.61	0	0	18.1	0	0	0	0	0	0	-2.81	-2.81
Inverter	MV4-7	369035	4909001	2	0	0	100.3	100.3	1	4702.97	3.25	0	84.45	0	0.61	0	0	18.14	0	0	0	0	0	0	-2.89	-2.89
Inverter	MV6-3	370207	4907140	2	0	0	100.3	100.3	1	4728.97	3.25	0	84.5	0	0.62	0	0	18.18	0	0	0	0	0	0	-2.98	-2.98
Inverter	MV4-11	369264	4908855	2	0	0	100.3	100.3	1	4768.92	3.25	0	84.57	0	0.62	0	0	18.24	0	0	0	0	0	0	-3.11	-3.11
Inverter	MV4-10	369312	4908858	2	0	0	100.3	100.3	1	4806.77	3.25	0	84.64	0	0.62	0	0	18.29	0	0	0	0	0	0	-3.24	-3.24
Inverter	MV1-3	364440	4906039	2	0	0	89.1	89.1	1	1322.37	3.25	0	73.43	0	0.75	0	0	6.9	0	0	0	0	0	0	7.98	7.98
Inverter	MV4-4	369027	4909199	2	0	0	100.3	100.3	1	4839.58	3.25	0	84.7	0	0.63	0	0	18.34	0	0	0	0	0	0	-3.35	-3.35
Inverter	MV4-8	369256	4909001	2	0	0	100.3	100.3	1	4861.68	3.25	0	84.74	0	0.63	0	0	18.38	0	0	0	0	0	0	-3.43	-3.43
Inverter	MV4-9	369289	4909001	2	0	0	100.3	100.3	1	4885.8	3.25	0	84.78	0	0.63	0	0	18.41	0	0	0	0	0	0	-3.51	-3.51
Inverter	MV4-1	369011	4909397	2	0	0	100.3	100.3	1	4975.01	3.25	0	84.94	0	0.64	0	0	18.54	0	0	0	0	0	0	-3.81	-3.81
Inverter	MV4-6	369243	4909192	2	0	0	100.3	100.3	1	4985.11	3.25	0	84.95	0	0.64	0	0	18.56	0	0	0	0	0	0	-3.84	-3.84
Inverter	MV4-5	369289	4909199	2	0	0	100.3	100.3	1	5022.72	3.25	0	85.02	0	0.64	0	0	18.61	0	0	0	0	0	0	-3.96	-3.96
Inverter	MV4-3	369229	4909397	2	0	0	100.3	100.3	1	5122.21	3.25	0	85.19	0	0.65	0	0	18.76	0	0	0	0	0	0	-4.29	-4.29
Inverter	MV4-2	369272	4909397	2	0	0	100.3	100.3	1	5151.84	3.25	0	85.24	0	0.66	0	0	18.8	0	0	0	0	0	0	-4.38	-4.38
Inverter	MV5-5	370015	4908690	2	0	0	100.3	100.3	1	5255.54	3.25	0	85.41	0	0.66	0	0	18.95	0	0	0	0	0	0	-4.72	-4.72
Inverter	MV5-2	370006	4908853	2	0	0	100.3	100.3	1	5343.51	3.25	0	85.56	0	0.67	0	0	19.08	0	0	0	0	0	0	-4.99	-4.99
Inverter	MV5-4	370324	4908707	2	0	0	100.3	100.3	1	5520.77	3.25	0	85.84	0	0.68	0	0	19.33	0	0	0	0	0	0	-5.54	-5.54
Inverter	MV5-3	370231	4908851	2	0	0	100.3	100.3	1	5524.83	3.25	0	85.85	0	0.68	0	0	19.34	0	0	0	0	0	0	-5.55	-5.55
Inverter	MV5-1	370020	4909142	2	0	0	100.3	100.3	1	5531.23	3.25	0	85.86	0	0.68	0	0	19.34	0	0	0	0	0	0	-5.57	-5.57
Inverter	MV6-1	370235	4907364	2	0	0	97.3	97.3	1	4829.36	3.25	0	84.68	0	0.63	0	0	18.33	0	0	0	0	0	0	-6.32	-6.32
DSTATCOM - 10 MVAR #2	DSAT2	369403	4908757	2.5	0	0	96.6	96.6	1	4809.96	3.5	0	84.64	0	3.67	0	0	3.26	0	0	0	0	0	0	5.07	5.07
DSTATCOM - 10 MVAR #1	DSAT1	369437	4908757	2.5	0	0	96.6	96.6	1	4836.11	3.5	0	84.69	0	3.67	0	0	3.27	0	0	0	0	0	0	5	5
Gardiner Substation	G_Sub	366586.3	4903349.9	2.5	0	0	90.8	90.8	1	2483.46	4.25	0	78.9	0	0.98	3.43	0.32	5.16	0	0	0	0	0	0	2.3	2.3
SubstationTransformer	W_ST	369711.17	4906112.3	2.5	0	0	92	92	1	4024.11	4.25	0	83.09	0	1.37	2.61	0.29	7.4	0	0	0	0	0	0	-2.49	-2.49
Inverters	G_Inv1	366526.4	4903225.8	2	0	0	87.7	87.7	1	2580.42	3.25	0	79.23	0	2.65	0	0	3.3	0	0	0	0	0	0	2.47	2.47
Inverters	G_Inv2	366676.9	4903239.1	2	0	0	87.7	87.7	1	2619.49	3.25	0	79.36	0	2.66	0	0	3.35	0	0	0	0	0	0	2.29	2.29
Inverters	G_Inv3	366583.7	4903091.4	2	0	0	87.7	87.7	1	2726.07	3.25	0	79.71	0	2.67	0	0	3.47	0	0	0	0	0	0	1.81	1.81
Inverters	G_Inv4	366732.8	4903105	2	0	0	87.7	87.7	1	2764.75	3.25	0	79.83	0	2.67	0	0	3.51	0	0	0	0	0	0	1.64	1.64
Inverter	MV3-22	368656	4907142	2	0	0	89.1	89.1	1	3290.6	3.25	0	81.35	0	1.22	0	0	10.05	0	0	0	0	0	0	-3.56	-3.56
Inverter	MV3-1	368156	4907976	2	0	0	89.1	89.1	1	3358.16	3.25	0	81.52	0	1.23	0	0	10.15	0	0	0	0	0	0	-3.85	-3.85
Inverters	G_Inv5	366638.5	4902958.1	2	0	0	87.7	87.7	1	2869.91	3.25	0	80.16	0	2.68	0	0	3.63	0	0	0	0	0	0	1.19	1.19
Inverter	MV3-5	368340	4907843	2	0	0	89.1	89.1	1	3408.26	3.25	0	81.65	0	1.25	0	0	10.23	0	0	0	0	0	0	-4.07	-4.07
Inverters	G_Inv6	366788.5	4902972	2	0	0	87.7	87.7	1	2908.92	3.25	0	80.27	0	2.69	0	0	3.67	0	0	0	0	0	0	1.02	1.02
Inverters	G_Inv7	366694.6	4902824.7	2	0	0	87.7	87.7	1	3014.3	3.25	0	80.58	0	2.7	0	0	3.79	0	0	0	0	0	0	0.59	0.59
Inverter	MV3-4	368502	4907925	2	0	0	89.1	89.1	1	3585.62	3.25	0	82.09	0	1.29	0	0	10.49	0	0	0	0	0	0	-4.81	-4.81
Inverters	G_Inv8	366844.5	4902838.5	2	0	0	87.7	87.7	1	3053.67	3.25	0	80.7	0	2.7	0	0	3.83	0	0	0	0	0	0	0.43	0.43
Inverters	G_Inv9	366750.9	4902691.8	2	0	0	87.7	87.7	1	3158.31	3.25	0	80.99	0	2.71	0	0	3.95	0	0	0	0	0	0	0.01	0.01
Inverter	MV3-2	368671	4907928	2	0	0	89.1	89.1	1	3720.5	3.25	0	82.41	0	1.32	0	0	10.68	0	0	0	0	0	0	-5.36	-5.36
Westbrook Inverter Enclosur	W_INV2	369374	4906388	2	0	0	89.1	89.1	1	3731.94	3.25	0	82.44	0	1.33	0	0	10.7	0	0	0	0	0	0	-5.41	-5.41
Inverters	G_Inv10	366900.7	4902704.8	2	0	0	87.7	87.7	1	3198.68	3.25	0	81.1	0	2.72	0	0	4	0	0	0	0	0	0	-0.15	-0.15
Westbrook Inverter Enclosur	W_INV3	369508	4906164	2	0	0	89.1	89.1	1	3828.49	3.25	0	82.66	0	1.35	0	0	10.84	0	0	0	0	0	0	-5.79	-5.79
Westbrook Inverter Enclosur	W_INV4	369673	4906164	2	0	0	89.1	89.1	1	3992.19	3.25	0	83.02	0	1.39	0	0	11.07	0	0	0	0	0	0	-6.43	-6.43
Westbrook Inverter Enclosur	W_INV5	369719	4906574	2	0	0	89.1	89.1	1	4107.81	3.25	0	83.27	0	1.42	0	0	11.24	0	0	0	0	0	0	-6.87	-6.87
Westbrook Inverter Enclosur	W_INV7	369780	4906417	2	0	0	89.1	89.1	1	4136.28	3.25	0	83.33	0	1.43	0	0	11.28	0	0	0	0	0	0	-6.98	-6.98
Westbrook Inverter Enclosur	W_INV6	369875	4906578	2	0	0	89.1	89.1	1	4261	3.25	0	83.59	0	1.46	0	0	11.45	0	0	0	0	0	0	-7.44	-7.44
Fixed Reactor Bank 1	FRB1	369378	4908755	6	0	0	89.8	89.8	1	4789.51	5.25	0	84.61	0	-0.6	0	0	8.37	0	0	0	0	0	0	-2.6	-2.6
Inverter	MV4-13	369051	4908605	2	0	0	89.1	89.1	1	4443.69	3.25	0	83.95	0	1.5	0	0	11.71	0	0	0	0	0	0	-8.11	-8.11
Inverter	MV4-15	369176	4908481	2	0	0	89.1	89.1	1	4459.31	3.25	0	83.99	0	1.51	0	0	11.73	0	0	0	0	0	0	-8.16	-8.16
Fixed Reactor Bank 2	FRB2	369464	4908755	6	0	0	89.8	89.8	1	4855.67	5.25	0	84.72	0	-0.59	0	0	8.45	0	0	0	0	0	0	-2.81	-2.81
Inverter	MV4-14	369176	4908507	2	0	0	89.1	89.1	1	4475.73	3.25	0	84.02	0	1.51	0	0	11.75	0	0	0	0	0	0	-8.22	-8.22
Inverter	MV4-12	369043	4908803	2	0	0	89.1	89.1	1	4570.87	3.25	0	84.2	0	1.53	0	0	11.88	0	0	0	0	0	0	-8.56	-8.56
Inverter	MV5-6	369982	4908507	2	0	0	89.1	89.1	1	5125.17	3.25	0	85.19	0	1.67	0	0	12.63	0	0	0	0	0	0	-10.44	-10.44
Westbrook Inverter Enclosur	W_INV1	369409	4906578	2	0	0	86.1	86.1	1	3806.89	3.25	0	82.61	0	1.34	0	0	10.81	0	0	0	0	0	0	-8.71	-8.71
Inverter	MV6-4	370250	4906966	2	0	0	86.1	86.1	1	4719.3	3.25	0	84.48	0	1.57	0	0	12.08	0	0	0	0	0	0	-12.07	-12.07
Inverter Transformer	MV1-10 T	365010	4905564	2	0	0	69.4	69.4	1	709.58	3.25	0	68.02	0	1.37	0	0	3.37	0	0	0	0	0	0	-3.41	-3.41
Inverter Transformer	MV1-7 T	364919	4905782	2	0	0	69.4	69.4	1	799.33	3.25	0	69.05	0	1.49	0	0	3.51	0	0	0	0	0	0	-4.7	-4.7
Inverter Transformer	MV1-14 T	365157	4905049	2	0	0	69.4	69.4	1	835.19	3.25	0	69.44	0	1.53	0	0	3.57	0	0	0	0	0	0	-5.18	-5.18
Inverter Transformer	MV1-13 T	364725	4905241	2	0	0	69.4	69.4	1	1076.89	3.25	0	71.64	0	1.74	0	0	3.92	0	0	0	0	0	0	-7.95	-7.95

Inverter Transformer	MV2-1 T	365836	4906816	2	0	0	69.4	69.4	1	1148.82	3.25	0	72.21	0	1.79	0	0	4.01	0	0	0	0	0	0	-8.66	-8.66
Westbrook Inverter Transfor	W_INVTR1	369403	4906578	2	0	0	78.2	78.2	1	3801.06	3.25	0	82.6	0	-2.92	0	0	1.98	0	0	0	0	0	0	-3.42	-3.42
Westbrook Inverter Transfor	W_INVTR2	369368	4906388	2	0	0	77.3	77.3	1	3726.05	3.25	0	82.42	0	-2.9	0	0	1.95	0	0	0	0	0	0	-4.13	-4.13
Westbrook Inverter Transfor	W_INVTR3	369514	4906164	2	0	0	77.3	77.3	1	3834.44	3.25	0	82.67	0	-2.92	0	0	1.99	0	0	0	0	0	0	-4.4	-4.4
Westbrook Inverter Transfor	W_INVTR4	369679	4906164	2	0	0	77.3	77.3	1	3998.14	3.25	0	83.04	0	-2.96	0	0	2.05	0	0	0	0	0	0	-4.79	-4.79
Westbrook Inverter Transfor	W_INVTR5	369725	4906574	2	0	0	77.3	77.3	1	4113.66	3.25	0	83.28	0	-2.99	0	0	2.1	0	0	0	0	0	0	-5.05	-5.05
Westbrook Inverter Transfor	W_INVTR7	369786	4906417	2	0	0	77.3	77.3	1	4142.18	3.25	0	83.34	0	-3	0	0	2.11	0	0	0	0	0	0	-5.12	-5.12
Westbrook Inverter Transfor	W_INVTR6	369881	4906578	2	0	0	77.3	77.3	1	4266.86	3.25	0	83.6	0	-3.02	0	0	2.15	0	0	0	0	0	0	-5.39	-5.39
Inverter Transformer	MV1-12 T	365044	4905386	2	0	0	56.1	56.1	1	726.53	3.25	0	68.23	0	-0.07	0	0	4.2	0	0	0	0	0	0	-16.3	-16.3
Inverter Transformer	MV1-15 T	365309	4904994	2	0	0	56.1	56.1	1	789.94	3.25	0	68.95	0	-0.06	0	0	4.37	0	0	0	0	0	0	-17.21	-17.21
Inverter Transformer	MV1-4 T	364821	4905918	2	0	0	56.1	56.1	1	922.84	3.25	0	70.3	0	-0.01	0	0	4.7	0	0	0	0	0	0	-18.93	-18.93
Inverter Transformer	MV1-8 T	364782	4905647	2	0	0	56.1	56.1	1	929.4	3.25	0	70.36	0	-0.01	0	0	4.72	0	0	0	0	0	0	-19.01	-19.01
Inverter Transformer	MV2-4 T	365590	4906628	2	0	0	56.1	56.1	1	961.65	3.25	0	70.66	0	0	0	0	4.8	0	0	0	0	0	0	-19.4	-19.4
Inverter Transformer	MV2-3 T	365814	4906641	2	0	0	56.1	56.1	1	972.47	3.25	0	70.76	0	0	0	0	4.82	0	0	0	0	0	0	-19.52	-19.52
Inverter Transformer	MV2-2 T	365982	4906654	2	0	0	56.1	56.1	1	1016.78	3.25	0	71.14	0	0.02	0	0	4.93	0	0	0	0	0	0	-20.03	-20.03
Inverter Transformer	MV6-4 T	370244	4906966	2	0	0	69.4	69.4	1	4713.53	3.25	0	84.47	0	2.95	0	0	7.19	0	0	0	0	0	0	-25.26	-25.26
Inverter Transformer	MV1-2 T	364759	4906063	2	0	0	56.1	56.1	1	1028.41	3.25	0	71.24	0	0.02	0	0	4.96	0	0	0	0	0	0	-20.16	-20.16
Inverter Transformer	MV6-1 T	370230	4907364	2	0	0	69.4	69.4	1	4824.67	3.25	0	84.67	0	2.98	0	0	7.26	0	0	0	0	0	0	-25.56	-25.56
Inverter Transformer	MV1-5 T	364676	4905892	2	0	0	56.1	56.1	1	1057.71	3.25	0	71.49	0	0.03	0	0	5.03	0	0	0	0	0	0	-20.49	-20.49
Inverter Transformer	MV1-11 T	364649	4905414	2	0	0	56.1	56.1	1	1093.37	3.25	0	71.78	0	0.04	0	0	5.11	0	0	0	0	0	0	-20.87	-20.87
Inverter Transformer	MV1-1 T	364721	4906166	2	0	0	56.1	56.1	1	1105.52	3.25	0	71.87	0	0.05	0	0	5.14	0	0	0	0	0	0	-21	-21
Inverter Transformer	MV1-9 T	364555	4905646	2	0	0	56.1	56.1	1	1156.34	3.25	0	72.26	0	0.07	0	0	5.26	0	0	0	0	0	0	-21.53	-21.53
Inverter Transformer	MV1-6 T	364482	4905835	2	0	0	56.1	56.1	1	1239.5	3.25	0	72.86	0	0.1	0	0	5.45	0	0	0	0	0	0	-22.35	-22.35
Inverter Transformer	MV1-3 T	364435	4906039	2	0	0	56.1	56.1	1	1327.18	3.25	0	73.46	0	0.13	0	0	5.64	0	0	0	0	0	0	-23.17	-23.17
Inverter Transformer	MV3-18 T	367757	4907412	2	0	0	56.1	56.1	1	2684.54	3.25	0	79.58	0	0.7	0	0	8.32	0	0	0	0	0	0	-32.54	-32.54
Inverter Transformer	MV3-12 T	367674	4907594	2	0	0	56.1	56.1	1	2745.87	3.25	0	79.77	0	0.72	0	0	8.43	0	0	0	0	0	0	-32.87	-32.87
Inverter Transformer	MV3-13 T	367958	4907577	2	0	0	56.1	56.1	1	2944.56	3.25	0	80.38	0	0.81	0	0	8.77	0	0	0	0	0	0	-33.9	-33.9
Inverter Transformer	MV3-17 T	368183	4907472	2	0	0	56.1	56.1	1	3056.73	3.25	0	80.71	0	0.85	0	0	8.96	0	0	0	0	0	0	-34.46	-34.46
Inverter Transformer	MV3-7 T	367951	4907754	2	0	0	56.1	56.1	1	3056.8	3.25	0	80.71	0	0.85	0	0	8.96	0	0	0	0	0	0	-34.46	-34.46
Inverter Transformer	MV3-19 T	368352	4907347	2	0	0	56.1	56.1	1	3126.31	3.25	0	80.9	0	0.88	0	0	9.08	0	0	0	0	0	0	-34.81	-34.81
Inverter Transformer	MV3-10 T	368162	4907669	2	0	0	56.1	56.1	1	3160.29	3.25	0	80.99	0	0.9	0	0	9.14	0	0	0	0	0	0	-34.97	-34.97
Inverter Transformer	MV3-21 T	368484	4907206	2	0	0	56.1	56.1	1	3168.05	3.25	0	81.02	0	0.9	0	0	9.15	0	0	0	0	0	0	-35.01	-35.01
Inverter Transformer	MV3-3 T	367944	4907927	2	0	0	56.1	56.1	1	3172.11	3.25	0	81.03	0	0.9	0	0	9.16	0	0	0	0	0	0	-35.03	-35.03
Inverter Transformer	MV3-15 T	368351	4907477	2	0	0	56.1	56.1	1	3196.94	3.25	0	81.09	0	0.91	0	0	9.2	0	0	0	0	0	0	-35.15	-35.15
Inverter Transformer	MV3-6 T	368156	4907834	2	0	0	56.1	56.1	1	3262.46	3.25	0	81.27	0	0.94	0	0	9.31	0	0	0	0	0	0	-35.46	-35.46
Inverter Transformer	MV3-22 T	368661	4907142	2	0	0	56.1	56.1	1	3295.08	3.25	0	81.36	0	0.95	0	0	9.36	0	0	0	0	0	0	-35.61	-35.61
Inverter Transformer	MV3-11 T	368340	4907662	2	0	0	56.1	56.1	1	3296.03	3.25	0	81.36	0	0.95	0	0	9.36	0	0	0	0	0	0	-35.62	-35.62
Inverter Transformer	MV3-16 T	368509	4907475	2	0	0	56.1	56.1	1	3327.52	3.25	0	81.44	0	0.97	0	0	9.41	0	0	0	0	0	0	-35.76	-35.76
Inverter Transformer	MV3-1 T	368150	4907976	2	0	0	56.1	56.1	1	3353.79	3.25	0	81.51	0	0.98	0	0	9.45	0	0	0	0	0	0	-35.89	-35.89
Inverter Transformer	MV3-20 T	368683	4907317	2	0	0	56.1	56.1	1	3395.92	3.25	0	81.62	0	1	0	0	9.52	0	0	0	0	0	0	-36.08	-36.08
Inverter Transformer	MV3-5 T	368335	4907843	2	0	0	56.1	56.1	1	3404.4	3.25	0	81.64	0	1	0	0	9.54	0	0	0	0	0	0	-36.12	-36.12
Inverter Transformer	MV3-9 T	368517	4907703	2	0	0	56.1	56.1	1	3462.73	3.25	0	81.79	0	1.02	0	0	9.63	0	0	0	0	0	0	-36.38	-36.38
Inverter Transformer	MV3-14 T	368678	4907498	2	0	0	56.1	56.1	1	3482.83	3.25	0	81.84	0	1.03	0	0	9.66	0	0	0	0	0	0	-36.47	-36.47
Inverter Transformer	MV3-4 T	368507	4907925	2	0	0	56.1	56.1	1	3589.52	3.25	0	82.1	0	1.08	0	0	9.83	0	0	0	0	0	0	-36.95	-36.95
Inverter Transformer	MV3-8 T	368685	4907712	2	0	0	56.1	56.1	1	3605.29	3.25	0	82.14	0	1.08	0	0	9.85	0	0	0	0	0	0	-37.02	-37.02
Inverter Transformer	MV3-2 T	368677	4907928	2	0	0	56.1	56.1	1	3725.28	3.25	0	82.42	0	1.13	0	0	10.04	0	0	0	0	0	0	-37.54	-37.54
Inverter Transformer	MV4-13 T	369057	4908605	2	0	0	56.1	56.1	1	4448.2	3.25	0	83.96	0	1.42	0	0	11.1	0	0	0	0	0	0	-40.43	-40.43
Inverter Transformer	MV4-15 T	369170	4908481	2	0	0	56.1	56.1	1	4454.65	3.25	0	83.98	0	1.42	0	0	11.11	0	0	0	0	0	0	-40.45	-40.45
Inverter Transformer	MV4-14 T	369182	4908507	2	0	0	56.1	56.1	1	4480.37	3.25	0	84.03	0	1.43	0	0	11.15	0	0	0	0	0	0	-40.55	-40.55
Inverter Transformer	MV4-12 T	369049	4908803	2	0	0	56.1	56.1	1	4575.25	3.25	0	84.21	0	1.47	0	0	11.28	0	0	0	0	0	0	-40.9	-40.9
Inverter Transformer	MV6-2 T	370091	4907339	2	0	0	56.1	56.1	1	4685.79	3.25	0	84.42	0	1.51	0	0	11.43	0	0	0	0	0	0	-41.3	-41.3
Inverter Transformer	MV4-7 T	369040	4909001	2	0	0	56.1	56.1	1	4706.5	3.25	0	84.45	0	1.52	0	0	11.46	0	0	0	0	0	0	-41.37	-41.37
Inverter Transformer	MV6-3 T	370202	4907140	2	0	0	56.1	56.1	1	4724.22	3.25	0	84.49	0	1.52	0	0	11.48	0	0	0	0	0	0	-41.44	-41.44
Inverter Transformer	MV4-11 T	369269	4908855	2	0	0	56.1	56.1	1	4772.64	3.25	0	84.58	0	1.54	0	0	11.55	0	0	0	0	0	0	-41.61	-41.61
Inverter Transformer	MV4-10 T	369307	4908858	2	0	0	56.1	56.1	1	4803.03	3.25	0	84.63	0	1.55	0	0	11.59	0	0	0	0	0	0	-41.72	-41.72
Inverter Transformer	MV4-4 T	369033	4909199	2	0	0	56.1	56.1	1	4843.69	3.25	0	84.7	0	1.57	0	0	11.65	0	0	0	0	0	0	-41.86	-41.86
Inverter Transformer	MV4-8 T	369262	4909001	2	0	0	56.1	56.1	1	4866.06	3.25	0	84.74	0	1.58	0	0	11.68	0	0	0	0	0	0	-41.94	-41.94
Inverter Transformer	MV4-9 T	369284	4909001	2	0	0	56.1	56.1	1	4882.14	3.25	0	84.77	0	1.58	0	0	11.7	0	0	0	0	0	0	-41.99	-41.99
Inverter Transformer	MV4-1 T	369017	4909397	2	0	0	56.1	56.1	1	4978.99	3.25	0	84.94	0	1.62	0	0	11.83	0	0	0	0	0	0	-42.33	-42.33
Inverter Transformer	MV4-6 T	369249	4909192	2	0	0	56.1	56.1	1	4989.37	3.25	0	84.96	0	1.62	0	0	11.84	0	0	0	0	0	0	-42.36	-42.36
Inverter Transformer	MV4-5 T	369283	4909199	2	0	0	56.1	56.1	1	5018.45	3.25	0	85.01	0	1.63	0	0	11.88	0	0	0	0	0	0	-42.46	-42.46
Inverter Transformer	MV4-3 T	369234	4909397	2	0	0	56.1	56.1	1	5125.65	3.25	0	85.19	0	1.67	0	0	12.02	0	0	0	0	0	0	-42.83	-42.83
Inverter Transformer	MV5-6 T	369987	4908507	2	0	0	56.1	56.1	1	5129.33	3.25	0	85.2	0	1.67	0	0	12.02	0	0	0	0	0	0	-42.84	-42.84
Inverter Transformer	MV4-2 T	369267	4909397	2	0	0	56.1	56.1	1	5148.39	3.25	0	85.23	0	1.68	0	0	12.05	0	0	0	0	0	0	-42.9	-42.9
Inverter Transformer	MV5-5 T	370021	4908690	2	0	0	56.1	56.1	1	5260.45	3.25	0	85.42	0	1.72	0	0	12.19	0	0	0	0	0	0	-43.27	-43.27
Inverter Transformer	MV5-2 T	370011	4908853	2	0	0	56.1	56.1	1	5347.53	3.25	0	85.56	0	1.75	0	0	12.3	0	0	0	0	0	0	-43.56	-43.56
Inverter Transformer	MV5-4 T	370330	4908707	2	0	0	56.1	56.1	1	5525.78	3.25	0	85.85	0	1.81	0	0	12.53	0	0	0	0	0	0	-44.13	-44.13
Inverter Transformer	MV5-1 T	370015	4909142	2	0	0	56.1	56.1	1	5527.34	3.25	0	85.85	0	1.81	0	0	12.53	0	0	0	0	0	0	-44.13	-44.13
Inverter Transformer	MV5-3 T	370237	4908851	2	0	0	56.1	56.1	1	5529.74	3.25	0	85.85	0	1.81	0	0	12.53	0	0	0	0	0	0	-44.14	-44.14
Line Reactor	NGR	369421	4908787.5	5	0	0	45.4	45.4	1	4843.34	5.25	0	84.7	0	3.27	1.35	0.09	1.98	0	0	0	0	0	0	-45.94	-45.94
Limit. Valu 0	0																									
Level D/N: 31.4825	31.4825																									

Receiver: Vacant Lot Receptor

ID: S-VLR44
X: 365488
Y: 4904656
Z: 4.5
Ground: 0

ISO	Description	ID	X	Y	Z	Ground	ReflOrd	LxT	LxN	L/A	Dist.	hm	Freq	Adiv	K0b	Agr	Abar	z	Aatm	Afol	Ahous	Cmet	CmetN	Dc	RL	LtotT	LtotN
	Inverter	MV1-15	365315	4904994	2	0	0	100.3	100.3	1	379.71	3.25	0	62.59	0	-0.63	0	0	7.4	0	0	0	0	0	0	30.95	30.95
	Inverter	MV1-14	365163	4905049	2	0	0	97.3	97.3	1	509.98	3.25	0	65.15	0	-0.54	0	0	8.6	0	0	0	0	0	0	24.1	24.1
	Inverter	MV1-12	365038	4905386	2	0	0	100.3	100.3	1	857.56	3.25	0	69.67	0	-0.32	0	0	10.41	0	0	0	0	0	0	20.56	20.56
	Inverter	MV1-11	364655	4905414	2	0	0	100.3	100.3	1	1126.26	3.25	0	72.03	0	-0.19	0	0	11.31	0	0	0	0	0	0	17.16	17.16
	Inverter	MV1-8	364788	4905647	2	0	0	100.3	100.3	1	1213.3	3.25	0	72.68	0	-0.15	0	0	11.56	0	0	0	0	0	0	16.22	16.22
	Inverter	MV1-13	364731	4905241	2	0	0	97.3	97.3	1	956.7	3.25	0	70.62	0	-0.27	0	0	10.77	0	0	0	0	0	0	16.2	16.2
	Inverter	MV1-9	364561	4905646	2	0	0	100.3	100.3	1	1356.26	3.25	0	73.65	0	-0.09	0	0	11.96	0	0	0	0	0	0	14.8	14.8
	Inverter	MV1-4	364815	4905918	2	0	0	100.3	100.3	1	1430.24	3.25	0	74.11	0	-0.06	0	0	12.15	0	0	0	0	0	0	14.11	14.11
	Inverter	MV1-10	365004	4905564	2	0	0	97.3	97.3	1	1028.94	3.25	0	71.25	0	-0.23	0	0	11.01	0	0	0	0	0	0	15.29	15.29
	Sol_Luce Substation	S_Substation	369426	4908792	3.5	0	0	112.1	112.1	1	5710.9	5.25	0	86.13	0	1.09	2.71	0.26	9.43	0	0	0	0	0	0	12.72	12.72
	Inverter	MV1-5	364671	4905892	2	0	0	100.3	100.3	1	1481.62	3.25	0	74.41	0	-0.04	0	0	12.28	0	0	0	0	0	0	13.66	13.66
	Inverter	MV1-6	364477	4905835	2	0	0	100.3	100.3	1	1553.12	3.25	0	74.82	0	-0.01	0	0	12.46	0	0	0	0	0	0	13.05	13.05
	Inverter	MV1-2	364753	4906063	2	0	0	100.3	100.3	1	1587.41	3.25	0	75.01	0	0	0	0	12.54	0	0	0	0	0	0	12.76	12.76
	Inverter	MV1-1	364715	4906166	2	0	0	100.3	100.3	1	1696.36	3.25	0	75.59	0	0.04	0	0	12.79	0	0	0	0	0	0	11.89	11.89
	Inverter	MV1-7	364925	4905782	2	0	0	97.3	97.3	1	1258.91	3.25	0	73	0	-0.13	0	0	11.69	0	0	0	0	0	0	12.75	12.75
	Inverter	MV2-4	365586	4906624	2	0	0	100.3	100.3	1	1970.44	3.25	0	76.89	0	0.12	0	0	13.4	0	0	0	0	0	0	9.9	9.9
	Inverter	MV2-3	365820	4906641	2	0	0	100.3	100.3	1	2012.57	3.25	0	77.08	0	0.13	0	0	13.49	0	0	0	0	0	0	9.62	9.62
	Inverter	MV2-1	365842	4906816	2	0	0	97.3	97.3	1	2188.82	3.25	0	77.8	0	0.18	0	0	13.85	0	0	0	0	0	0	5.48	5.48
	Inverter	MV3-18	367752	4907412	2	0	0	100.3	100.3	1	3566.68	3.25	0	82.05	0	0.46	0	0	16.34	0	0	0	0	0	0	1.46	1.46
	Inverter	MV3-12	367668	4907594	2	0	0	100.3	100.3	1	3658.45	3.25	0	82.27	0	0.48	0	0	16.49	0	0	0	0	0	0	1.08	1.08
	Inverter	MV3-13	367963	4907577	2	0	0	100.3	100.3	1	3828.56	3.25	0	82.66	0	0.5	0	0	16.77	0	0	0	0	0	0	0.38	0.38
	Inverter	MV3-17	368178	4907472	2	0	0	100.3	100.3	1	3894.35	3.25	0	82.81	0	0.51	0	0	16.88	0	0	0	0	0	0	0.11	0.11
	Inverter	MV3-21	368478	4907206	2	0	0	100.3	100.3	1	3929.71	3.25	0	82.89	0	0.52	0	0	16.94	0	0	0	0	0	0	-0.03	-0.03
	Inverter	MV3-19	368357	4907347	2	0	0	100.3	100.3	1	3933.53	3.25	0	82.9	0	0.52	0	0	16.94	0	0	0	0	0	0	-0.04	-0.04
	Inverter	MV3-7	367945	4907754	2	0	0	100.3	100.3	1	3954.04	3.25	0	82.94	0	0.52	0	0	16.97	0	0	0	0	0	0	-0.12	-0.12
	Inverter	MV3-15	368357	4907477	2	0	0	100.3	100.3	1	4023.58	3.25	0	83.09	0	0.53	0	0	17.09	0	0	0	0	0	0	-0.4	-0.4
	Inverter	MV3-10	368167	4907669	2	0	0	100.3	100.3	1	4031.78	3.25	0	83.11	0	0.53	0	0	17.1	0	0	0	0	0	0	-0.43	-0.43
	Inverter	MV3-3	367939	4907927	2	0	0	100.3	100.3	1	4087.4	3.25	0	83.23	0	0.54	0	0	17.19	0	0	0	0	0	0	-0.64	-0.64
	Inverter	MV3-16	368514	4907475	2	0	0	100.3	100.3	1	4135.63	3.25	0	83.33	0	0.55	0	0	17.26	0	0	0	0	0	0	-0.83	-0.83
	Inverter	MV3-11	368346	4907662	2	0	0	100.3	100.3	1	4147.8	3.25	0	83.36	0	0.55	0	0	17.28	0	0	0	0	0	0	-0.87	-0.87
	Inverter	MV3-6	368162	4907834	2	0	0	100.3	100.3	1	4153.31	3.25	0	83.37	0	0.55	0	0	17.29	0	0	0	0	0	0	-0.9	-0.9
	Inverter	MV3-20	368689	4907317	2	0	0	100.3	100.3	1	4162.61	3.25	0	83.39	0	0.55	0	0	17.31	0	0	0	0	0	0	-0.93	-0.93
	Inverter	MV3-14	368684	4907498	2	0	0	100.3	100.3	1	4276.84	3.25	0	83.62	0	0.56	0	0	17.49	0	0	0	0	0	0	-1.36	-1.36
	Inverter	MV3-9	368512	4907703	2	0	0	100.3	100.3	1	4292.88	3.25	0	83.65	0	0.57	0	0	17.51	0	0	0	0	0	0	-1.42	-1.42
	Inverter	MV3-8	368680	4907712	2	0	0	100.3	100.3	1	4419.05	3.25	0	83.91	0	0.58	0	0	17.71	0	0	0	0	0	0	-1.88	-1.88
	Gardiner Substation	G_Sub	366586.3	4903349.9	2.5	0	0	90.8	90.8	1	1706.51	4.25	0	75.64	0	0.76	3.84	0.26	3.86	0	0	0	0	0	0	6.68	6.68
	Inverter	MV6-2	370085	4907339	2	0	0	100.3	100.3	1	5322.68	3.25	0	85.52	0	0.67	0	0	19.05	0	0	0	0	0	0	-4.93	-4.93
	Inverter	MV6-3	370207	4907140	2	0	0	100.3	100.3	1	5332.84	3.25	0	85.54	0	0.67	0	0	19.06	0	0	0	0	0	0	-4.96	-4.96
	Inverter	MV4-7	369035	4909001	2	0	0	100.3	100.3	1	5608.94	3.25	0	85.98	0	0.69	0	0	19.45	0	0	0	0	0	0	-5.81	-5.81
	Inverter	MV4-11	369264	4908855	2	0	0	100.3	100.3	1	5647.1	3.25	0	86.04	0	0.69	0	0	19.51	0	0	0	0	0	0	-5.92	-5.92
	Inverter	MV4-10	369312	4908858	2	0	0	100.3	100.3	1	5681.53	3.25	0	86.09	0	0.69	0	0	19.56	0	0	0	0	0	0	-6.02	-6.02
	Inverter	MV4-8	369256	4909001	2	0	0	100.3	100.3	1	5751.25	3.25	0	86.2	0	0.69	0	0	19.65	0	0	0	0	0	0	-6.23	-6.23
	Inverter	MV4-4	369027	4909199	2	0	0	100.3	100.3	1	5758.77	3.25	0	86.21	0	0.69	0	0	19.66	0	0	0	0	0	0	-6.25	-6.25
	Inverter	MV4-9	369289	4909001	2	0	0	100.3	100.3	1	5772.92	3.25	0	86.23	0	0.7	0	0	19.68	0	0	0	0	0	0	-6.29	-6.29
	Inverter	MV4-6	369243	4909192	2	0	0	100.3	100.3	1	5888.58	3.25	0	86.4	0	0.7	0	0	19.84	0	0	0	0	0	0	-6.63	-6.63
	Inverter	MV4-1	369011	4909397	2	0	0	100.3	100.3	1	5906.66	3.25	0	86.43	0	0.7	0	0	19.87	0	0	0	0	0	0	-6.68	-6.68
	Inverter	MV4-5	369289	4909199	2	0	0	100.3	100.3	1	5923.38	3.25	0	86.45	0	0.7	0	0	19.89	0	0	0	0	0	0	-6.73	-6.73
	Inverter	MV4-3	369229	4909397	2	0	0	100.3	100.3	1	6039.22	3.25	0	86.62	0	0.71	0	0	20.05	0	0	0	0	0	0	-7.06	-7.06
	Inverter	MV5-5	370015	4908690	2	0	0	100.3	100.3	1	6063.57	3.25	0	86.65	0	0.71	0	0	20.08	0	0	0	0	0	0	-7.13	-7.13
	Inverter	MV4-2	369272	4909397	2	0	0	100.3	100.3	1	6065.95	3.25	0	86.66	0	0.71	0	0	20.08	0	0	0	0	0	0	-7.14	-7.14
	Inverter	MV5-2	370006	4908853	2	0	0	100.3	100.3	1	6166.61	3.25	0	86.8	0	0.71	0	0	20.22	0	0	0	0	0	0	-7.42	-7.42
	Inverter	MV5-4	370324	4908707	2	0	0	100.3	100.3	1	6308.53	3.25	0	87	0	0.71	0	0	20.41	0	0	0	0	0	0	-7.81	-7.81
	Inverter	MV5-3	370231	4908851	2	0	0	100.3	100.3	1	6331.99	3.25	0	87.03	0	0.71	0	0	20.44	0	0	0	0	0	0	-7.87	-7.87
	Inverter	MV1-3	364440	4906039	2	0	0	89.1	89.1	1	1735.22	3.25	0	75.79	0	0.85	0	0	7.61	0	0	0	0	0	0	4.82	4.82
	Inverter	MV5-1	370020	4909142	2	0	0	100.3	100.3	1	6376.77	3.25	0	87.09	0	0.71	0	0	20.5	0	0	0	0	0	0	-7.99	-7.99
	Inverter	MV2-2	365977	4906654	2	0	0	89.1	89.1	1	2056.97	3.25	0	77.26	0	0.92	0	0	8.14	0	0	0	0	0	0	2.73	2.73
	Inverters	G_Inv1	366526.4	4903225.8	2	0	0	87.7	87.7	1	1767.41	3.25	0	75.95	0	2.55	0	0	2.36	0	0	0	0	0	0	6.8	6.8
	Inverter	MV6-1	370235	4907364	2	0	0	97.3	97.3	1	5465.1	3.25	0	85.75	0	0.68	0	0	19.25	0	0	0	0	0	0	-8.37	-8.37
	Inverters	G_Inv2	366676.9	4903239.1	2	0	0	87.7	87.7	1	1849.62	4.15	0	76.34	0	3.05	1.64	0.01	2.46	0	0	0	0	0	0	4.17	4.17
	Inverters	G_Inv3	366583.7	4903091.4	2	0	0	87.7	87.7	1	1910.11	3.25	0	76.62	0	2.57	0	0	2.53	0	0	0	0	0	0	5.94	5.94
	Inverters	G_Inv4	366732.8	4903105	2	0	0	87.7	87.7	1	1988.75	3.25	0	76.97	0	2.58	0	0	2.62	0	0	0	0	0	0	5.48	5.48
	DSTATCOM - 10 MVAR #2	DSAT2	369403	4908757	2.5	0	0	96.6	96.6	1	5669.69	3.5	0	86.07	0	3.75	0	0	3.68	0	0	0	0	0	0	3.13	3.13
	DSTATCOM - 10 MVAR #1	DSAT1	369437	4908757	2.5	0	0	96.6	96.6	1	5693.22	3.5	0	86.11	0	3.75	0	0	3.69	0	0	0	0	0	0	3.08	3.08
	Inverters	G_Inv5	366638.5	4902958.1	2	0	0	87.7	87.7	1	2050.98	3.25	0	77.24	0	2.59	0	0	2.69	0	0	0	0	0	0	5.14	5.14
	Inverters	G_Inv6	366788.5	4902972	2	0	0	87.7	87.7	1	2127.71	3.25	0	77.56	0	2.6	0	0	2.78	0	0	0	0	0	0	4.72	4.72
	Inverters	G_Inv7	366694.6	4902824.7	2	0	0	87.7	87.7	1	2193.07	3.25	0	77.82	0	2.61	0	0	2.86	0	0	0	0	0	0	4.37	4.37
	Inverters	G_Inv8	366844.5	4902838.5	2	0	0	87.7	87.7	1	2267.91	3.25	0	78.11	0	2.62	0	0	2.95	0	0	0	0	0	0	3.99	3.99

Inverters	G_Inv9	366750.9	4902691.8	2	0	0	87.7	87.7	1	2335.17	3.25	0	78.37	0	2.62	0	0	3.02	0	0	0	0	0	0	3.65	3.65
Inverters	G_Inv10	366900.7	4902704.8	2	0	0	87.7	87.7	1	2408.92	3.25	0	78.64	0	2.63	0	0	3.11	0	0	0	0	0	0	3.28	3.28
SubstationTransformer	W_ST	369711.17	4906112.3	2.5	0	0	92	92	1	4467.2	4.25	0	84	0	1.49	2.47	0.27	7.97	0	0	0	0	0	0	-3.96	-3.96
Inverter	MV3-22	368656	4907142	2	0	0	89.1	89.1	1	4026.96	3.25	0	83.1	0	1.4	0	0	11.12	0	0	0	0	0	0	-6.56	-6.56
Westbrook Inverter Enclosur	W_INV2	369374	4906388	2	0	0	89.1	89.1	1	4254.51	3.25	0	83.58	0	1.46	0	0	11.44	0	0	0	0	0	0	-7.42	-7.42
Inverter	MV3-1	368156	4907976	2	0	0	89.1	89.1	1	4259.18	3.25	0	83.59	0	1.46	0	0	11.45	0	0	0	0	0	0	-7.44	-7.44
Inverter	MV3-5	368340	4907843	2	0	0	89.1	89.1	1	4276.78	3.25	0	83.62	0	1.46	0	0	11.47	0	0	0	0	0	0	-7.5	-7.5
Westbrook Inverter Enclosur	W_INV3	369508	4906164	2	0	0	89.1	89.1	1	4293.54	3.25	0	83.66	0	1.46	0	0	11.5	0	0	0	0	0	0	-7.56	-7.56
Inverter	MV3-4	368502	4907925	2	0	0	89.1	89.1	1	4446.41	3.25	0	83.96	0	1.5	0	0	11.71	0	0	0	0	0	0	-8.12	-8.12
Westbrook Inverter Enclosur	W_INV4	369673	4906164	2	0	0	89.1	89.1	1	4448.4	3.25	0	83.96	0	1.5	0	0	11.71	0	0	0	0	0	0	-8.12	-8.12
Inverter	MV3-2	368671	4907928	2	0	0	89.1	89.1	1	4564.81	3.25	0	84.19	0	1.53	0	0	11.87	0	0	0	0	0	0	-8.54	-8.54
Westbrook Inverter Enclosur	W_INV7	369780	4906417	2	0	0	89.1	89.1	1	4639.22	3.25	0	84.33	0	1.55	0	0	11.98	0	0	0	0	0	0	-8.8	-8.8
Westbrook Inverter Enclosur	W_INV5	369719	4906574	2	0	0	89.1	89.1	1	4645.44	3.25	0	84.34	0	1.55	0	0	11.98	0	0	0	0	0	0	-8.82	-8.82
Westbrook Inverter Enclosur	W_INV6	369875	4906578	2	0	0	89.1	89.1	1	4789.56	3.25	0	84.61	0	1.59	0	0	12.18	0	0	0	0	0	0	-9.32	-9.32
Inverter Transformer	MV1-14 T	365157	4905049	2	0	0	69.4	69.4	1	513.83	3.25	0	65.22	0	1.07	0	0	2.99	0	0	0	0	0	0	0.07	0.07
Fixed Reactor Bank 1	FRB1	369378	4908755	6	0	0	89.8	89.8	1	5651.01	5.25	0	86.04	0	-0.47	0	0	9.36	0	0	0	0	0	0	-5.16	-5.16
Fixed Reactor Bank 2	FRB2	369464	4908755	6	0	0	89.8	89.8	1	5710.55	5.25	0	86.13	0	-0.46	0	0	9.43	0	0	0	0	0	0	-5.33	-5.33
Inverter	MV4-15	369176	4908481	2	0	0	89.1	89.1	1	5313.38	3.25	0	85.51	0	1.72	0	0	12.88	0	0	0	0	0	0	-11.05	-11.05
Inverter	MV4-13	369051	4908605	2	0	0	89.1	89.1	1	5318.79	3.25	0	85.52	0	1.72	0	0	12.89	0	0	0	0	0	0	-11.06	-11.06
Inverter	MV4-14	369176	4908507	2	0	0	89.1	89.1	1	5332.12	3.25	0	85.54	0	1.72	0	0	12.9	0	0	0	0	0	0	-11.11	-11.11
Inverter	MV4-12	369043	4908803	2	0	0	89.1	89.1	1	5462.2	3.25	0	85.75	0	1.75	0	0	13.07	0	0	0	0	0	0	-11.52	-11.52
Inverter	MV5-6	369982	4908507	2	0	0	89.1	89.1	1	5918.3	3.25	0	86.44	0	1.87	0	0	13.66	0	0	0	0	0	0	-12.91	-12.91
Westbrook Inverter Enclosur	W_INV1	369409	4906578	2	0	0	86.1	86.1	1	4366.73	3.25	0	83.8	0	1.48	0	0	11.6	0	0	0	0	0	0	-10.83	-10.83
Inverter	MV6-4	370250	4906966	2	0	0	86.1	86.1	1	5292.71	3.25	0	85.47	0	1.71	0	0	12.85	0	0	0	0	0	0	-13.98	-13.98
Inverter Transformer	MV1-13 T	364725	4905241	2	0	0	69.4	69.4	1	961.46	3.25	0	70.66	0	1.65	0	0	3.76	0	0	0	0	0	0	-6.72	-6.72
Inverter Transformer	MV1-10 T	365010	4905564	2	0	0	69.4	69.4	1	1026.14	3.25	0	71.22	0	1.7	0	0	3.85	0	0	0	0	0	0	-7.43	-7.43
Inverter Transformer	MV1-7 T	364919	4905782	2	0	0	69.4	69.4	1	1261.6	3.25	0	73.02	0	1.86	0	0	4.15	0	0	0	0	0	0	-9.68	-9.68
Westbrook Inverter Transfor	W_INVTR1	369403	4906578	2	0	0	78.2	78.2	1	4361.34	3.25	0	83.79	0	-3.04	0	0	2.19	0	0	0	0	0	0	-4.7	-4.7
Westbrook Inverter Transfor	W_INVTR2	369368	4906388	2	0	0	77.3	77.3	1	4249.03	3.25	0	83.57	0	-3.02	0	0	2.15	0	0	0	0	0	0	-5.35	-5.35
Westbrook Inverter Transfor	W_INVTR3	369514	4906164	2	0	0	77.3	77.3	1	4299.16	3.25	0	83.67	0	-3.03	0	0	2.17	0	0	0	0	0	0	-5.46	-5.46
Inverter Transformer	MV1-15 T	365309	4904994	2	0	0	56.1	56.1	1	382.48	3.25	0	62.65	0	-0.11	0	0	3.14	0	0	0	0	0	0	-9.62	-9.62
Westbrook Inverter Transfor	W_INVTR4	369679	4906164	2	0	0	77.3	77.3	1	4454.05	3.25	0	83.98	0	-3.06	0	0	2.22	0	0	0	0	0	0	-5.79	-5.79
Westbrook Inverter Transfor	W_INVTR7	369786	4906417	2	0	0	77.3	77.3	1	4644.77	3.25	0	84.34	0	-3.1	0	0	2.29	0	0	0	0	0	0	-6.18	-6.18
Westbrook Inverter Transfor	W_INVTR5	369725	4906574	2	0	0	77.3	77.3	1	4650.9	3.25	0	84.35	0	-3.11	0	0	2.29	0	0	0	0	0	0	-6.2	-6.2
Westbrook Inverter Transfor	W_INVTR6	369881	4906578	2	0	0	77.3	77.3	1	4795.05	3.25	0	84.62	0	-3.14	0	0	2.34	0	0	0	0	0	0	-6.48	-6.48
Inverter Transformer	MV2-1 T	365836	4906816	2	0	0	69.4	69.4	1	2187.86	3.25	0	77.8	0	2.24	0	0	5.15	0	0	0	0	0	0	-15.84	-15.84
Inverter Transformer	MV1-12 T	365044	4905386	2	0	0	56.1	56.1	1	854.43	3.25	0	69.63	0	-0.04	0	0	4.53	0	0	0	0	0	0	-18.07	-18.07
Inverter Transformer	MV1-11 T	364649	4905414	2	0	0	56.1	56.1	1	1130.7	3.25	0	72.07	0	0.06	0	0	5.2	0	0	0	0	0	0	-21.26	-21.26
Inverter Transformer	MV6-4 T	370244	4906966	2	0	0	69.4	69.4	1	5287.31	3.25	0	85.46	0	3.07	0	0	7.57	0	0	0	0	0	0	-26.75	-26.75
Inverter Transformer	MV6-1 T	370230	4907364	2	0	0	69.4	69.4	1	5460.75	3.25	0	85.75	0	3.1	0	0	7.68	0	0	0	0	0	0	-27.18	-27.18
Inverter Transformer	MV1-8 T	364782	4905647	2	0	0	56.1	56.1	1	1216.77	3.25	0	72.7	0	0.09	0	0	5.39	0	0	0	0	0	0	-22.13	-22.13
Inverter Transformer	MV1-9 T	364555	4905646	2	0	0	56.1	56.1	1	1360.37	3.25	0	73.67	0	0.14	0	0	5.71	0	0	0	0	0	0	-23.47	-23.47
Inverter Transformer	MV1-4 T	364821	4905918	2	0	0	56.1	56.1	1	1427.42	3.25	0	74.09	0	0.17	0	0	5.86	0	0	0	0	0	0	-24.06	-24.06
Inverter Transformer	MV1-5 T	364676	4905892	2	0	0	56.1	56.1	1	1478.87	3.25	0	74.4	0	0.19	0	0	5.97	0	0	0	0	0	0	-24.5	-24.5
Inverter Transformer	MV1-6 T	364482	4905835	2	0	0	56.1	56.1	1	1549.87	3.25	0	74.81	0	0.22	0	0	6.12	0	0	0	0	0	0	-25.09	-25.09
Inverter Transformer	MV1-2 T	364759	4906063	2	0	0	56.1	56.1	1	1584.64	3.25	0	75	0	0.23	0	0	6.2	0	0	0	0	0	0	-25.37	-25.37
Inverter Transformer	MV1-1 T	364721	4906166	2	0	0	56.1	56.1	1	1693.63	3.25	0	75.58	0	0.28	0	0	6.43	0	0	0	0	0	0	-26.22	-26.22
Inverter Transformer	MV1-3 T	364435	4906039	2	0	0	56.1	56.1	1	1738.25	3.25	0	75.8	0	0.3	0	0	6.52	0	0	0	0	0	0	-26.56	-26.56
Inverter Transformer	MV2-4 T	365590	4906628	2	0	0	56.1	56.1	1	1974.64	3.25	0	76.91	0	0.39	0	0	6.99	0	0	0	0	0	0	-28.24	-28.24
Inverter Transformer	MV2-3 T	365814	4906641	2	0	0	56.1	56.1	1	2011.59	3.25	0	77.07	0	0.41	0	0	7.07	0	0	0	0	0	0	-28.49	-28.49
Inverter Transformer	MV2-2 T	365982	4906654	2	0	0	56.1	56.1	1	2058.17	3.25	0	77.27	0	0.43	0	0	7.16	0	0	0	0	0	0	-28.8	-28.8
Inverter Transformer	MV3-18 T	367757	4907412	2	0	0	56.1	56.1	1	3569.86	3.25	0	82.05	0	1.07	0	0	9.8	0	0	0	0	0	0	-36.86	-36.86
Inverter Transformer	MV3-12 T	367674	4907594	2	0	0	56.1	56.1	1	3662.03	3.25	0	82.27	0	1.11	0	0	9.94	0	0	0	0	0	0	-37.26	-37.26
Inverter Transformer	MV3-13 T	367958	4907577	2	0	0	56.1	56.1	1	3825.33	3.25	0	82.65	0	1.17	0	0	10.19	0	0	0	0	0	0	-37.96	-37.96
Inverter Transformer	MV3-17 T	368183	4907472	2	0	0	56.1	56.1	1	3897.81	3.25	0	82.82	0	1.2	0	0	10.3	0	0	0	0	0	0	-38.26	-38.26
Inverter Transformer	MV3-19 T	368352	4907347	2	0	0	56.1	56.1	1	3929.88	3.25	0	82.89	0	1.22	0	0	10.35	0	0	0	0	0	0	-38.4	-38.4
Inverter Transformer	MV3-21 T	368484	4907206	2	0	0	56.1	56.1	1	3934.28	3.25	0	82.9	0	1.22	0	0	10.36	0	0	0	0	0	0	-38.41	-38.41
Inverter Transformer	MV3-7 T	367951	4907754	2	0	0	56.1	56.1	1	3957.77	3.25	0	82.95	0	1.23	0	0	10.39	0	0	0	0	0	0	-38.51	-38.51
Inverter Transformer	MV3-15 T	368351	4907477	2	0	0	56.1	56.1	1	4019.31	3.25	0	83.08	0	1.25	0	0	10.48	0	0	0	0	0	0	-38.76	-38.76
Inverter Transformer	MV3-10 T	368162	4907669	2	0	0	56.1	56.1	1	4028.46	3.25	0	83.1	0	1.26	0	0	10.5	0	0	0	0	0	0	-38.8	-38.8
Inverter Transformer	MV3-22 T	368661	4907142	2	0	0	56.1	56.1	1	4030.9	3.25	0	83.11	0	1.26	0	0	10.5	0	0	0	0	0	0	-38.81	-38.81
Inverter Transformer	MV3-3 T	367944	4907927	2	0	0	56.1	56.1	1	4090.4	3.25	0	83.24	0	1.28	0	0	10.59	0	0	0	0	0	0	-39.05	-39.05
Inverter Transformer	MV3-16 T	368509	4907475	2	0	0	56.1	56.1	1	4131.97	3.25	0	83.32	0	1.3	0	0	10.65	0	0	0	0	0	0	-39.21	-39.21
Inverter Transformer	MV3-11 T	368340	4907662	2	0	0	56.1	56.1	1	4143.66	3.25	0	83.35	0	1.3	0	0	10.67	0	0	0	0	0	0	-39.26	-39.26
Inverter Transformer	MV3-6 T	368156	4907834	2	0	0	56.1	56.1	1	4149.45	3.25	0	83.36	0	1.3	0	0	10.67	0	0	0	0	0	0	-39.28	-39.28
Inverter Transformer	MV3-20 T	368683	4907317	2	0	0	56.1	56.1	1	4158	3.25	0	83.38	0	1.31	0	0	10.69	0	0	0	0	0	0	-39.31	-39.31
Inverter Transformer	MV3-1 T	368150	4907976	2	0	0	56.1	56.1	1	4255.43	3.25	0	83.58	0	1.35	0	0	10.83	0	0	0	0	0	0	-39.69	-39.69
Inverter Transformer	MV3-14 T	368678	4907498	2	0	0	56.1	56.1	1	4272.36	3.25	0	83.61	0	1.35	0	0	10.85	0	0	0	0	0	0	-39.76	-39.76
Inverter Transformer	MV3-5 T	368335	4907843	2	0	0	56.1	56.1	1	4273.45	3.25	0	83.62	0	1.35	0	0	10.85	0	0	0	0	0	0	-39.76	-39.76
Inverter Transformer	MV3-9 T	368517	4907703	2	0	0	56.1	56.1	1	4296.4	3.25	0	83.66	0	1.36	0	0	10.89	0	0	0	0	0	0	-39.85	-39.85
Inverter Transformer	MV3-8 T	368685	4907712	2	0	0	56.1	56.1	1	4422.66	3.25	0	83.91	0	1.41	0	0	11.07	0	0	0	0	0	0	-40.33	-40.33
Inverter Transformer	MV3-4 T	368507	4907925	2	0	0	56.1	56.1	1	4449.8	3.25	0	83.97	0	1.42	0	0	11.11	0	0	0	0	0	0	-40.43	-40.43
Inverter Transformer	MV3-2 T	368677	4907928	2	0	0	56.1	56.1	1	4568.99	3.25	0	84.2	0	1.47	0	0	11.27	0	0	0	0	0	0	-40.88	-40.88
Inverter Transformer	MV4-15 T	369170	4908481	2	0	0	56.1	56.1	1	5309.21	3.25	0	85.5	0	1.74	0	0	12.25	0	0	0	0	0	0	-43.43	-43.43

	Inverter Transformer	MV4-13 T	369057	4908605	2	0	0	56.1	56.1	1	5322.82	3.25	0	85.52	0	1.74	0	0	12.27	0	0	0	0	0	0	-43.48	-43.48
	Inverter Transformer	MV6-2 T	370091	4907339	2	0	0	56.1	56.1	1	5327.86	3.25	0	85.53	0	1.74	0	0	12.28	0	0	0	0	0	0	-43.49	-43.49
	Inverter Transformer	MV6-3 T	370202	4907140	2	0	0	56.1	56.1	1	5328.42	3.25	0	85.53	0	1.74	0	0	12.28	0	0	0	0	0	0	-43.49	-43.49
	Inverter Transformer	MV4-14 T	369182	4908507	2	0	0	56.1	56.1	1	5336.28	3.25	0	85.54	0	1.74	0	0	12.29	0	0	0	0	0	0	-43.52	-43.52
	Inverter Transformer	MV4-12 T	369049	4908803	2	0	0	56.1	56.1	1	5466.11	3.25	0	85.75	0	1.79	0	0	12.45	0	0	0	0	0	0	-43.94	-43.94
	Inverter Transformer	MV4-7 T	369040	4909001	2	0	0	56.1	56.1	1	5612.11	3.25	0	85.98	0	1.84	0	0	12.63	0	0	0	0	0	0	-44.4	-44.4
	Inverter Transformer	MV4-11 T	369269	4908855	2	0	0	56.1	56.1	1	5650.45	3.25	0	86.04	0	1.85	0	0	12.68	0	0	0	0	0	0	-44.52	-44.52
	Inverter Transformer	MV4-10 T	369307	4908858	2	0	0	56.1	56.1	1	5678.17	3.25	0	86.08	0	1.86	0	0	12.72	0	0	0	0	0	0	-44.6	-44.6
	Inverter Transformer	MV4-8 T	369262	4909001	2	0	0	56.1	56.1	1	5755.18	3.25	0	86.2	0	1.89	0	0	12.81	0	0	0	0	0	0	-44.84	-44.84
	Inverter Transformer	MV4-4 T	369033	4909199	2	0	0	56.1	56.1	1	5762.45	3.25	0	86.21	0	1.89	0	0	12.82	0	0	0	0	0	0	-44.86	-44.86
	Inverter Transformer	MV4-9 T	369284	4909001	2	0	0	56.1	56.1	1	5769.63	3.25	0	86.22	0	1.89	0	0	12.83	0	0	0	0	0	0	-44.88	-44.88
	Inverter Transformer	MV4-6 T	369249	4909192	2	0	0	56.1	56.1	1	5892.4	3.25	0	86.41	0	1.93	0	0	12.97	0	0	0	0	0	0	-45.25	-45.25
	Inverter Transformer	MV4-1 T	369017	4909397	2	0	0	56.1	56.1	1	5910.24	3.25	0	86.43	0	1.94	0	0	13	0	0	0	0	0	0	-45.31	-45.31
	Inverter Transformer	MV4-5 T	369283	4909199	2	0	0	56.1	56.1	1	5919.53	3.25	0	86.45	0	1.94	0	0	13.01	0	0	0	0	0	0	-45.33	-45.33
	Inverter Transformer	MV5-6 T	369987	4908507	2	0	0	56.1	56.1	1	5922.09	3.25	0	86.45	0	1.94	0	0	13.01	0	0	0	0	0	0	-45.34	-45.34
	Inverter Transformer	MV4-3 T	369234	4909397	2	0	0	56.1	56.1	1	6042.32	3.25	0	86.62	0	1.98	0	0	13.15	0	0	0	0	0	0	-45.7	-45.7
	Inverter Transformer	MV4-2 T	369267	4909397	2	0	0	56.1	56.1	1	6062.83	3.25	0	86.65	0	1.98	0	0	13.18	0	0	0	0	0	0	-45.76	-45.76
	Inverter Transformer	MV5-5 T	370021	4908690	2	0	0	56.1	56.1	1	6068.05	3.25	0	86.66	0	1.99	0	0	13.18	0	0	0	0	0	0	-45.77	-45.77
	Inverter Transformer	MV5-2 T	370011	4908853	2	0	0	56.1	56.1	1	6170.28	3.25	0	86.81	0	2.02	0	0	13.3	0	0	0	0	0	0	-46.07	-46.07
	Inverter Transformer	MV5-4 T	370330	4908707	2	0	0	56.1	56.1	1	6313.13	3.25	0	87	0	2.06	0	0	13.47	0	0	0	0	0	0	-46.48	-46.48
	Inverter Transformer	MV5-3 T	370237	4908851	2	0	0	56.1	56.1	1	6336.48	3.25	0	87.04	0	2.07	0	0	13.49	0	0	0	0	0	0	-46.54	-46.54
	Inverter Transformer	MV5-1 T	370015	4909142	2	0	0	56.1	56.1	1	6373.22	3.25	0	87.09	0	2.08	0	0	13.54	0	0	0	0	0	0	-46.65	-46.65
	Line Reactor	NGR	369421	4908787.5	5	0	0	45.4	45.4	1	5704.19	5.25	0	86.12	0	3.25	1.36	0.09	2.33	0	0	0	0	0	0	-47.71	-47.71
Limit. Valu	0	0																								
Level D/N:	33.1174	33.1174																								

Receiver: Vacant Lot Receptor
ID: S-VLR45
X: 371003
Y: 4908159
Z: 4.5
Ground: 0

ISO	Description	ID	X	Y	Z	Ground	ReflOrd	LxT	LxN	L/A	Dist.	hm	Freq	Adiv	K0b	Agr	Abar	z	Aatm	Afol	Ahous	Cmet	CmetN	Dc	RL	LtotT	LtotN
	Sol_Luce Substation	S_Substation	369426	4908792	3.5	0	0	112.1	112.1	1	1699.3	5.25	0	75.61	0	0.12	4.7	0.44	3.84	0	0	0	0	0	0	27.81	27.81
	Inverter	MV5-4	370324	4908707	2	0	0	100.3	100.3	1	872.55	3.25	0	69.82	0	-0.31	0	0	10.46	0	0	0	0	0	0	20.34	20.34
	Inverter	MV5-3	370231	4908851	2	0	0	100.3	100.3	1	1036.75	3.25	0	71.31	0	-0.23	0	0	11.03	0	0	0	0	0	0	18.2	18.2
	Inverter	MV5-5	370015	4908690	2	0	0	100.3	100.3	1	1121.66	3.25	0	72	0	-0.19	0	0	11.29	0	0	0	0	0	0	17.21	17.21
	Inverter	MV5-2	370006	4908853	2	0	0	100.3	100.3	1	1214.76	3.25	0	72.69	0	-0.15	0	0	11.57	0	0	0	0	0	0	16.2	16.2
	Inverter	MV6-2	370085	4907339	2	0	0	100.3	100.3	1	1230.91	3.25	0	72.8	0	-0.14	0	0	11.61	0	0	0	0	0	0	16.03	16.03
	Inverter	MV6-3	370207	4907140	2	0	0	100.3	100.3	1	1293.05	3.25	0	73.23	0	-0.11	0	0	11.79	0	0	0	0	0	0	15.41	15.41
	Inverter	MV5-1	370020	4909142	2	0	0	100.3	100.3	1	1390.17	3.25	0	73.86	0	-0.08	0	0	12.05	0	0	0	0	0	0	14.48	14.48
	Inverter	MV6-1	370235	4907364	2	0	0	97.3	97.3	1	1105.38	3.25	0	71.87	0	-0.2	0	0	11.25	0	0	0	0	0	0	14.39	14.39
	Inverter	MV4-10	369312	4908858	2	0	0	100.3	100.3	1	1829.78	3.25	0	76.25	0	0.08	0	0	13.09	0	0	0	0	0	0	10.89	10.89
	Inverter	MV4-11	369264	4908855	2	0	0	100.3	100.3	1	1873.11	5.15	0	76.45	0	0.76	3.49	0.05	13.19	0	0	0	0	0	0	6.42	6.42
	Inverter	MV4-9	369289	4909001	2	0	0	100.3	100.3	1	1909.65	3.25	0	76.62	0	0.1	0	0	13.27	0	0	0	0	0	0	10.32	10.32
	Inverter	MV4-8	369256	4909001	2	0	0	100.3	100.3	1	1939.32	3.25	0	76.75	0	0.11	0	0	13.33	0	0	0	0	0	0	10.11	10.11
	Inverter	MV4-5	369289	4909199	2	0	0	100.3	100.3	1	2004.84	3.25	0	77.04	0	0.13	0	0	13.47	0	0	0	0	0	0	9.67	9.67
	Inverter	MV4-6	369243	4909192	2	0	0	100.3	100.3	1	2040.76	3.25	0	77.2	0	0.14	0	0	13.55	0	0	0	0	0	0	9.43	9.43
	Inverter	MV4-2	369272	4909397	2	0	0	100.3	100.3	1	2128.15	3.25	0	77.56	0	0.16	0	0	13.73	0	0	0	0	0	0	8.86	8.86
	Inverter	MV4-7	369035	4909001	2	0	0	100.3	100.3	1	2140.56	3.25	0	77.61	0	0.17	0	0	13.75	0	0	0	0	0	0	8.78	8.78
	Inverter	MV4-3	369229	4909397	2	0	0	100.3	100.3	1	2163.27	3.25	0	77.7	0	0.17	0	0	13.8	0	0	0	0	0	0	8.64	8.64
	Inverter	MV4-4	369027	4909199	2	0	0	100.3	100.3	1	2232.98	3.25	0	77.98	0	0.19	0	0	13.94	0	0	0	0	0	0	8.2	8.2
	Inverter	MV4-1	369011	4909397	2	0	0	100.3	100.3	1	2345.36	3.25	0	78.4	0	0.22	0	0	14.16	0	0	0	0	0	0	7.53	7.53
	Inverter	MV3-8	368680	4907712	2	0	0	100.3	100.3	1	2365.62	3.25	0	78.48	0	0.23	0	0	14.2	0	0	0	0	0	0	7.41	7.41
	Inverter	MV3-14	368684	4907498	2	0	0	100.3	100.3	1	2411.37	3.25	0	78.65	0	0.24	0	0	14.29	0	0	0	0	0	0	7.14	7.14
	Inverter	MV3-20	368689	4907317	2	0	0	100.3	100.3	1	2462.43	3.25	0	78.83	0	0.25	0	0	14.39	0	0	0	0	0	0	6.85	6.85
	Inverter	MV3-9	368512	4907703	2	0	0	100.3	100.3	1	2532.39	3.25	0	79.07	0	0.26	0	0	14.52	0	0	0	0	0	0	6.46	6.46
	DSTATCOM - 10 MVAR #1	DSAT1	369437	4908757	2.5	0	0	96.6	96.6	1	1676.29	3.5	0	75.49	0	3.15	0	0	1.52	0	0	0	0	0	0	16.47	16.47
	Inverter	MV3-16	368514	4907475	2	0	0	100.3	100.3	1	2581.28	3.25	0	79.24	0	0.28	0	0	14.61	0	0	0	0	0	0	6.19	6.19
	DSTATCOM - 10 MVAR #2	DSAT2	369403	4908757	2.5	0	0	96.6	96.6	1	1708.1	3.5	0	75.65	0	3.16	0	0	1.54	0	0	0	0	0	0	16.28	16.28
	Inverter	MV3-21	368478	4907206	2	0	0	100.3	100.3	1	2698.86	3.25	0	79.62	0	0.3	0	0	14.83	0	0	0	0	0	0	5.56	5.56
	Inverter	MV3-11	368346	4907662	2	0	0	100.3	100.3	1	2703.08	3.25	0	79.64	0	0.3	0	0	14.84	0	0	0	0	0	0	5.54	5.54
	Inverter	MV3-15	368357	4907477	2	0	0	100.3	100.3	1	2732.48	3.25	0	79.73	0	0.31	0	0	14.89	0	0	0	0	0	0	5.38	5.38
	Inverter	MV3-19	368357	4907347	2	0	0	100.3	100.3	1	2767.79	3.25	0	79.84	0	0.32	0	0	14.96	0	0	0	0	0	0	5.2	5.2
	Inverter	MV3-6	368162	4907834	2	0	0	100.3	100.3	1	2859.53	3.25	0	80.13	0	0.33	0	0	15.12	0	0	0	0	0	0	4.73	4.73
	Inverter	MV3-10	368167	4907669	2	0	0	100.3	100.3	1	2878.02	3.25	0	80.18	0	0.34	0	0	15.15	0	0	0	0	0	0	4.64	4.64
	Inverter	MV3-17	368178	4907472	2	0	0	100.3	100.3	1	2907.34	3.25	0	80.27	0	0.34	0	0	15.21	0	0	0	0	0	0	4.49	4.49
	Inverter	MV3-3	367939	4907927	2	0	0	100.3	100.3	1	3072.77	3.25	0	80.75	0	0.38	0	0	15.5	0	0	0	0	0	0	3.69	3.69
	Inverter	MV3-7	367945	4907754	2	0	0	100.3	100.3	1	3084.7	3.25	0	80.78	0	0.38	0	0	15.52	0	0	0	0	0	0	3.63	3.63
	Inverter	MV3-13	367963	4907577	2	0	0	100.3	100.3	1	3095.21	3.25	0	80.81	0	0.38	0	0	15.54	0	0	0	0	0	0	3.58	3.58
	Inverter	MV3-18	367752	4907412	2	0	0	100.3	100.3	1	3335.72	3.25	0	81.46	0	0.42	0	0	15.95	0	0	0	0	0	0	2.47	2.47
	Inverter	MV3-12	367668	4907594	2	0	0	100.3	100.3	1	3382.52	3.25	0	81.58	0	0.43	0	0	16.03	0	0	0	0	0	0	2.26	2.26
	Inverter	MV5-6	369982	4908507	2	0	0	89.1	89.1	1	1078.68	3.25	0	71.66	0	0.7	0	0	6.46	0	0	0	0	0	0	10.24	10.24

Inverter	MV2-3	365820	4906641	2	0	0	100.3	100.3	1	5400.72	3.25	0	85.65	0	0.67	0	0	19.16	0	0	0	0	0	0	-5.17	-5.17
Fixed Reactor Bank 2	FRB2	369464	4908755	6	0	0	89.8	89.8	1	1650.38	5.25	0	75.35	0	-1.02	0	0	3.76	0	0	0	0	0	0	11.69	11.69
Inverter	MV2-4	365586	4906624	2	0	0	100.3	100.3	1	5630.29	3.25	0	86.01	0	0.69	0	0	19.48	0	0	0	0	0	0	-5.87	-5.87
Fixed Reactor Bank 1	FRB1	369378	4908755	6	0	0	89.8	89.8	1	1730.85	5.25	0	75.77	0	-1.01	0	0	3.9	0	0	0	0	0	0	11.13	11.13
SubstationTransformer	W_ST	369711.17	4906112.3	2.5	0	0	92	92	1	2420.32	3.5	0	78.68	0	-0.06	0	0	5.06	0	0	0	0	0	0	8.3	8.3
Inverter	MV1-15	365315	4904994	2	0	0	100.3	100.3	1	6509.27	3.25	0	87.27	0	0.71	0	0	20.67	0	0	0	0	0	0	-8.34	-8.34
Inverter	MV1-12	365038	4905386	2	0	0	100.3	100.3	1	6578.05	3.25	0	87.36	0	0.72	0	0	20.76	0	0	0	0	0	0	-8.53	-8.53
Inverter	MV1-4	364815	4905918	2	0	0	100.3	100.3	1	6581.29	3.25	0	87.37	0	0.72	0	0	20.76	0	0	0	0	0	0	-8.53	-8.53
Inverter	MV1-2	364753	4906063	2	0	0	100.3	100.3	1	6592.1	3.25	0	87.38	0	0.72	0	0	20.78	0	0	0	0	0	0	-8.56	-8.56
Inverter	MV1-1	364715	4906166	2	0	0	100.3	100.3	1	6596.29	3.25	0	87.39	0	0.72	0	0	20.78	0	0	0	0	0	0	-8.57	-8.57
Inverter	MV1-8	364788	4905647	2	0	0	100.3	100.3	1	6703.46	3.25	0	87.53	0	0.71	0	0	20.92	0	0	0	0	0	0	-8.85	-8.85
Inverter	MV1-5	364671	4905892	2	0	0	100.3	100.3	1	6725.59	3.25	0	87.55	0	0.71	0	0	20.95	0	0	0	0	0	0	-8.91	-8.91
Inverter	MV4-15	369176	4908481	2	0	0	89.1	89.1	1	1855.16	3.25	0	76.37	0	0.87	0	0	7.81	0	0	0	0	0	0	4.01	4.01
Inverter	MV4-14	369176	4908507	2	0	0	89.1	89.1	1	1859.85	3.25	0	76.39	0	0.87	0	0	7.81	0	0	0	0	0	0	3.98	3.98
Inverter	MV1-9	364561	4905646	2	0	0	100.3	100.3	1	6914.81	3.25	0	87.8	0	0.71	0	0	21.19	0	0	0	0	0	0	-9.39	-9.39
Inverter	MV1-11	364655	4905414	2	0	0	100.3	100.3	1	6916.08	3.25	0	87.8	0	0.71	0	0	21.19	0	0	0	0	0	0	-9.39	-9.39
Inverter	MV1-6	364477	4905835	2	0	0	100.3	100.3	1	6927.46	3.25	0	87.81	0	0.71	0	0	21.21	0	0	0	0	0	0	-9.42	-9.42
Westbrook Inverter Enclosur	W_INV6	369875	4906578	2	0	0	89.1	89.1	1	1942.15	3.25	0	76.77	0	0.89	0	0	7.95	0	0	0	0	0	0	3.45	3.45
Inverter	MV6-4	370250	4906966	2	0	0	86.1	86.1	1	1410.77	3.25	0	73.99	0	0.77	0	0	7.05	0	0	0	0	0	0	4.24	4.24
Inverter	MV4-13	369051	4908605	2	0	0	89.1	89.1	1	2002.31	3.25	0	77.03	0	0.91	0	0	8.05	0	0	0	0	0	0	3.07	3.07
Westbrook Inverter Enclosur	W_INV5	369719	4906574	2	0	0	89.1	89.1	1	2039.83	3.25	0	77.19	0	0.92	0	0	8.11	0	0	0	0	0	0	2.84	2.84
Inverter	MV2-1	365842	4906816	2	0	0	97.3	97.3	1	5332.88	3.25	0	85.54	0	0.67	0	0	19.06	0	0	0	0	0	0	-7.96	-7.96
Inverter	MV4-12	369043	4908803	2	0	0	89.1	89.1	1	2063.09	3.25	0	77.29	0	0.92	0	0	8.15	0	0	0	0	0	0	2.7	2.7
Westbrook Inverter Enclosur	W_INV7	369780	4906417	2	0	0	89.1	89.1	1	2128.45	3.25	0	77.56	0	0.94	0	0	8.25	0	0	0	0	0	0	2.31	2.31
Inverter	MV3-2	368671	4907928	2	0	0	89.1	89.1	1	2343.41	3.25	0	78.4	0	0.99	0	0	8.6	0	0	0	0	0	0	1.07	1.07
Westbrook Inverter Enclosur	W_INV4	369673	4906164	2	0	0	89.1	89.1	1	2397.69	3.25	0	78.6	0	1	0	0	8.68	0	0	0	0	0	0	0.78	0.78
Westbrook Inverter Enclosur	W_INV2	369374	4906388	2	0	0	89.1	89.1	1	2406.26	3.25	0	78.63	0	1	0	0	8.7	0	0	0	0	0	0	0.73	0.73
Westbrook Inverter Enclosur	W_INV3	369508	4906164	2	0	0	89.1	89.1	1	2493	3.25	0	78.93	0	1.02	0	0	8.83	0	0	0	0	0	0	0.26	0.26
Inverter	MV3-4	368502	4907925	2	0	0	89.1	89.1	1	2511.92	3.25	0	79	0	1.03	0	0	8.86	0	0	0	0	0	0	0.16	0.16
Inverter	MV1-7	364925	4905782	2	0	0	97.3	97.3	1	6526.27	3.25	0	87.29	0	0.71	0	0	20.69	0	0	0	0	0	0	-11.39	-11.39
Inverter	MV1-10	365004	4905564	2	0	0	97.3	97.3	1	6536.21	3.25	0	87.31	0	0.71	0	0	20.71	0	0	0	0	0	0	-11.42	-11.42
Inverter	MV3-22	368656	4907142	2	0	0	89.1	89.1	1	2557.87	3.25	0	79.16	0	1.04	0	0	8.94	0	0	0	0	0	0	-0.08	-0.08
Inverter	MV1-14	365163	4905049	2	0	0	97.3	97.3	1	6616.47	3.25	0	87.41	0	0.71	0	0	20.81	0	0	0	0	0	0	-11.63	-11.63
Inverter	MV1-13	364731	4905241	2	0	0	97.3	97.3	1	6917.57	3.25	0	87.8	0	0.71	0	0	21.2	0	0	0	0	0	0	-12.39	-12.39
Inverter	MV3-5	368340	4907843	2	0	0	89.1	89.1	1	2681.68	3.25	0	79.57	0	1.07	0	0	9.13	0	0	0	0	0	0	-0.71	-0.71
Inverter	MV3-1	368156	4907976	2	0	0	89.1	89.1	1	2852.88	3.25	0	80.11	0	1.11	0	0	9.39	0	0	0	0	0	0	-1.55	-1.55
Westbrook Inverter Enclosur	W_INV1	369409	4906578	2	0	0	86.1	86.1	1	2245.08	3.25	0	78.02	0	0.96	0	0	8.44	0	0	0	0	0	0	-1.37	-1.37
Inverter	MV2-2	365977	4906654	2	0	0	89.1	89.1	1	5246.49	3.25	0	85.4	0	1.7	0	0	12.79	0	0	0	0	0	0	-10.83	-10.83
Gardiner Substation	G_Sub	366586.3	4903349.9	2.5	0	0	90.8	90.8	1	6529.52	4.25	0	87.3	0	1.98	1.99	0.35	10.29	0	0	0	0	0	0	-10.78	-10.78
Inverter	MV1-3	364440	4906039	2	0	0	89.1	89.1	1	6896.91	3.25	0	87.77	0	2.1	0	0	14.86	0	0	0	0	0	0	-15.68	-15.68
Westbrook Inverter Transfor	W_INVTR6	369881	4906578	2	0	0	77.3	77.3	1	1938.67	3.25	0	76.75	0	-2.38	0	0	1.18	0	0	0	0	0	0	1.8	1.8
Inverters	G_Inv2	366676.9	4903239.1	2	0	0	87.7	87.7	1	6551.38	3.25	0	87.33	0	2.94	0	0	7.54	0	0	0	0	0	0	-10.14	-10.14
Inverters	G_Inv4	366732.8	4903105	2	0	0	87.7	87.7	1	6616.46	3.25	0	87.41	0	2.94	0	0	7.6	0	0	0	0	0	0	-10.3	-10.3
Westbrook Inverter Transfor	W_INVTR1	369403	4906578	2	0	0	78.2	78.2	1	2249.35	3.25	0	78.04	0	-2.49	0	0	1.32	0	0	0	0	0	0	1.37	1.37
Inverters	G_Inv1	366526.4	4903225.8	2	0	0	87.7	87.7	1	6661.56	3.25	0	87.47	0	2.94	0	0	7.65	0	0	0	0	0	0	-10.4	-10.4
Westbrook Inverter Transfor	W_INVTR5	369725	4906574	2	0	0	77.3	77.3	1	2036.05	3.25	0	77.18	0	-2.42	0	0	1.22	0	0	0	0	0	0	1.36	1.36
Inverters	G_Inv6	366788.5	4902972	2	0	0	87.7	87.7	1	6683.34	3.25	0	87.5	0	2.94	0	0	7.67	0	0	0	0	0	0	-10.45	-10.45
Inverters	G_Inv3	366583.7	4903091.4	2	0	0	87.7	87.7	1	6723.9	3.25	0	87.55	0	2.94	0	0	7.71	0	0	0	0	0	0	-10.55	-10.55
Inverters	G_Inv8	366844.5	4902838.5	2	0	0	87.7	87.7	1	6752.84	3.25	0	87.59	0	2.94	0	0	7.74	0	0	0	0	0	0	-10.62	-10.62
Inverters	G_Inv5	366638.5	4902958.1	2	0	0	87.7	87.7	1	6789.57	3.25	0	87.64	0	2.94	0	0	7.78	0	0	0	0	0	0	-10.7	-10.7
Inverters	G_Inv10	366900.7	4902704.8	2	0	0	87.7	87.7	1	6824.75	3.25	0	87.68	0	2.95	0	0	7.81	0	0	0	0	0	0	-10.78	-10.78
Inverters	G_Inv7	366694.6	4902824.7	2	0	0	87.7	87.7	1	6856.9	3.25	0	87.72	0	2.95	0	0	7.85	0	0	0	0	0	0	-10.86	-10.86
Inverters	G_Inv9	366750.9	4902691.8	2	0	0	87.7	87.7	1	6926.08	3.25	0	87.81	0	2.95	0	0	7.92	0	0	0	0	0	0	-11.01	-11.01
Westbrook Inverter Transfor	W_INVTR7	369786	4906417	2	0	0	77.3	77.3	1	2125.01	3.25	0	77.55	0	-2.45	0	0	1.27	0	0	0	0	0	0	0.98	0.98
Westbrook Inverter Transfor	W_INVTR4	369679	4906164	2	0	0	77.3	77.3	1	2394.37	3.25	0	78.58	0	-2.54	0	0	1.39	0	0	0	0	0	0	-0.1	-0.1
Westbrook Inverter Transfor	W_INVTR2	369368	4906388	2	0	0	77.3	77.3	1	2410.33	3.25	0	78.64	0	-2.54	0	0	1.4	0	0	0	0	0	0	-0.16	-0.16
Westbrook Inverter Transfor	W_INVTR3	369514	4906164	2	0	0	77.3	77.3	1	2489.41	3.25	0	78.92	0	-2.57	0	0	1.43	0	0	0	0	0	0	-0.45	-0.45
Inverter Transformer	MV6-1 T	370230	4907364	2	0	0	69.4	69.4	1	1108.86	3.25	0	71.9	0	1.76	0	0	3.96	0	0	0	0	0	0	-8.27	-8.27
Inverter Transformer	MV6-4 T	370244	4906966	2	0	0	69.4	69.4	1	1413.98	3.25	0	74.01	0	1.93	0	0	4.34	0	0	0	0	0	0	-10.93	-10.93
Inverter Transformer	MV5-4 T	370330	4908707	2	0	0	56.1	56.1	1	867.89	3.25	0	69.77	0	-0.03	0	0	4.57	0	0	0	0	0	0	-18.25	-18.25
Inverter Transformer	MV5-3 T	370237	4908851	2	0	0	56.1	56.1	1	1032.29	3.25	0	71.28	0	0.02	0	0	4.97	0	0	0	0	0	0	-20.21	-20.21
Inverter Transformer	MV5-6 T	369987	4908507	2	0	0	56.1	56.1	1	1073.95	3.25	0	71.62	0	0.04	0	0	5.06	0	0	0	0	0	0	-20.66	-20.66
Inverter Transformer	MV5-5 T	370021	4908690	2	0	0	56.1	56.1	1	1116.37	3.25	0	71.96	0	0.05	0	0	5.16	0	0	0	0	0	0	-21.11	-21.11
Inverter Transformer	MV2-1 T	365836	4906816	2	0	0	69.4	69.4	1	5338.68	3.25	0	85.55	0	3.08	0	0	7.6	0	0	0	0	0	0	-26.88	-26.88
Inverter Transformer	MV5-2 T	370011	4908853	2	0	0	56.1	56.1	1	1210.66	3.25	0	72.66	0	0.09	0	0	5.38	0	0	0	0	0	0	-22.07	-22.07
Inverter Transformer	MV6-2 T	370091	4907339	2	0	0	56.1	56.1	1	1226.44	3.25	0	72.77	0	0.09	0	0	5.42	0	0	0	0	0	0	-22.22	-22.22
Inverter Transformer	MV6-3 T	370202	4907140	2	0	0	56.1	56.1	1	1296.14	3.25	0	73.25	0	0.12	0	0	5.57	0	0	0	0	0	0	-22.89	-22.89
Inverter Transformer	MV5-1 T	370015	4909142	2	0	0	56.1	56.1	1	1393.71	3.25	0	73.88	0	0.16	0	0	5.79	0	0	0	0	0	0	-23.77	-23.77
Inverter Transformer	MV1-10 T	365010	4905564	2	0	0	69.4	69.4	1	6530.7	3.25	0	87.3	0	3.26	0	0	8.33	0	0	0	0	0	0	-29.54	-29.54
Inverter Transformer	MV1-7 T	364919	4905782	2	0	0	69.4	69.4	1	6531.86	3.25	0	87.3	0	3.26	0	0	8.33	0	0	0	0	0	0	-29.55	-29.55
Inverter Transformer	MV1-14 T	365157	4905049	2	0	0	69.4	69.4	1	6621.77	3.25	0	87.42	0	3.27	0	0	8.39	0	0	0	0	0	0	-29.73	-29.73
Inverter Transformer	MV1-13 T	364725	4905241	2	0	0	69.4	69.4	1	6923.01	3.25	0	87.81	0	3.31	0	0	8.56	0	0	0	0	0	0	-30.32	-30.32
Inverter Transformer	MV4-10 T	369307	4908858	2	0	0	56.1	56.1	1	1834.4	3.25	0	76.27	0	0.33	0	0	6.71	0	0	0	0	0	0	-27.26	-27.26
Inverter Transformer	MV4-14 T	369182	4908507	2	0	0	56.1	56.1	1	1853.96	3.25	0	76.36	0	0.34	0	0	6.75	0	0	0	0	0	0	-27.4	-27.4

	Inverter Transformer	MV4-15 T	369170	4908481	2	0	0	56.1	56.1	1	1861.07	3.25	0	76.4	0	0.35	0	0	6.77	0	0	0	0	0	0	-27.45	-27.45
	Inverter Transformer	MV4-11 T	369269	4908855	2	0	0	56.1	56.1	1	1868.47	5.15	0	76.43	0	1.22	3.03	0.05	6.78	0	0	0	0	0	0	-31.4	-31.4
	Inverter Transformer	MV4-9 T	369284	4909001	2	0	0	56.1	56.1	1	1914.14	3.25	0	76.64	0	0.37	0	0	6.87	0	0	0	0	0	0	-27.82	-27.82
	Inverter Transformer	MV4-8 T	369262	4909001	2	0	0	56.1	56.1	1	1933.92	3.25	0	76.73	0	0.38	0	0	6.91	0	0	0	0	0	0	-27.96	-27.96
	Inverter Transformer	MV4-13 T	369057	4908605	2	0	0	56.1	56.1	1	1996.46	3.25	0	77.01	0	0.4	0	0	7.04	0	0	0	0	0	0	-28.39	-28.39
	Inverter Transformer	MV4-5 T	369283	4909199	2	0	0	56.1	56.1	1	2009.98	3.25	0	77.06	0	0.41	0	0	7.06	0	0	0	0	0	0	-28.48	-28.48
	Inverter Transformer	MV4-6 T	369249	4909192	2	0	0	56.1	56.1	1	2035.59	3.25	0	77.17	0	0.42	0	0	7.11	0	0	0	0	0	0	-28.65	-28.65
	Inverter Transformer	MV4-12 T	369049	4908803	2	0	0	56.1	56.1	1	2057.39	3.25	0	77.27	0	0.43	0	0	7.16	0	0	0	0	0	0	-28.79	-28.79
	Inverter Transformer	MV4-2 T	369267	4909397	2	0	0	56.1	56.1	1	2132.22	3.25	0	77.58	0	0.46	0	0	7.3	0	0	0	0	0	0	-29.28	-29.28
	Inverter Transformer	MV4-7 T	369040	4909001	2	0	0	56.1	56.1	1	2135.96	3.25	0	77.59	0	0.46	0	0	7.31	0	0	0	0	0	0	-29.3	-29.3
	Inverter Transformer	MV4-3 T	369234	4909397	2	0	0	56.1	56.1	1	2159.17	3.25	0	77.69	0	0.47	0	0	7.35	0	0	0	0	0	0	-29.45	-29.45
	Inverter Transformer	MV4-4 T	369033	4909199	2	0	0	56.1	56.1	1	2227.67	3.25	0	77.96	0	0.5	0	0	7.48	0	0	0	0	0	0	-29.88	-29.88
	Inverter Transformer	MV3-2 T	368677	4907928	2	0	0	56.1	56.1	1	2337.44	3.25	0	78.37	0	0.55	0	0	7.69	0	0	0	0	0	0	-30.55	-30.55
	Inverter Transformer	MV4-1 T	369017	4909397	2	0	0	56.1	56.1	1	2340.27	3.25	0	78.39	0	0.55	0	0	7.7	0	0	0	0	0	0	-30.57	-30.57
	Inverter Transformer	MV3-8 T	368685	4907712	2	0	0	56.1	56.1	1	2360.71	3.25	0	78.46	0	0.56	0	0	7.73	0	0	0	0	0	0	-30.69	-30.69
	Inverter Transformer	MV3-14 T	368678	4907498	2	0	0	56.1	56.1	1	2417.14	3.25	0	78.67	0	0.58	0	0	7.84	0	0	0	0	0	0	-31.03	-31.03
	Inverter Transformer	MV3-20 T	368683	4907317	2	0	0	56.1	56.1	1	2468.07	3.25	0	78.85	0	0.6	0	0	7.93	0	0	0	0	0	0	-31.32	-31.32
	Inverter Transformer	MV3-4 T	368507	4907925	2	0	0	56.1	56.1	1	2506.95	3.25	0	78.98	0	0.62	0	0	8	0	0	0	0	0	0	-31.55	-31.55
	Inverter Transformer	MV3-9 T	368517	4907703	2	0	0	56.1	56.1	1	2527.48	3.25	0	79.05	0	0.63	0	0	8.04	0	0	0	0	0	0	-31.66	-31.66
	Inverter Transformer	MV3-22 T	368661	4907142	2	0	0	56.1	56.1	1	2553.28	3.25	0	79.14	0	0.64	0	0	8.09	0	0	0	0	0	0	-31.81	-31.81
	Inverter Transformer	MV3-16 T	368509	4907475	2	0	0	56.1	56.1	1	2586.1	3.25	0	79.25	0	0.65	0	0	8.15	0	0	0	0	0	0	-31.99	-31.99
	Inverter Transformer	MV3-5 T	368335	4907843	2	0	0	56.1	56.1	1	2686.65	3.25	0	79.58	0	0.7	0	0	8.32	0	0	0	0	0	0	-32.55	-32.55
	Inverter Transformer	MV3-21 T	368484	4907206	2	0	0	56.1	56.1	1	2693.25	3.25	0	79.61	0	0.7	0	0	8.34	0	0	0	0	0	0	-32.58	-32.58
	Inverter Transformer	MV3-11 T	368340	4907662	2	0	0	56.1	56.1	1	2708.98	3.25	0	79.66	0	0.71	0	0	8.36	0	0	0	0	0	0	-32.67	-32.67
	Inverter Transformer	MV3-15 T	368351	4907477	2	0	0	56.1	56.1	1	2738.29	3.25	0	79.75	0	0.72	0	0	8.42	0	0	0	0	0	0	-32.83	-32.83
	Inverter Transformer	MV3-19 T	368352	4907347	2	0	0	56.1	56.1	1	2772.57	3.25	0	79.86	0	0.73	0	0	8.48	0	0	0	0	0	0	-33.01	-33.01
	Inverter Transformer	MV3-1 T	368150	4907976	2	0	0	56.1	56.1	1	2858.86	3.25	0	80.12	0	0.77	0	0	8.63	0	0	0	0	0	0	-33.46	-33.46
	Inverter Transformer	MV3-6 T	368156	4907834	2	0	0	56.1	56.1	1	2865.49	3.25	0	80.14	0	0.77	0	0	8.64	0	0	0	0	0	0	-33.5	-33.5
	Inverter Transformer	MV3-10 T	368162	4907669	2	0	0	56.1	56.1	1	2882.95	3.25	0	80.2	0	0.78	0	0	8.67	0	0	0	0	0	0	-33.59	-33.59
	Inverter Transformer	MV3-17 T	368183	4907472	2	0	0	56.1	56.1	1	2902.48	3.25	0	80.26	0	0.79	0	0	8.7	0	0	0	0	0	0	-33.69	-33.69
	Inverter Transformer	MV3-3 T	367944	4907927	2	0	0	56.1	56.1	1	3067.79	3.25	0	80.74	0	0.86	0	0	8.98	0	0	0	0	0	0	-34.52	-34.52
	Inverter Transformer	MV3-7 T	367951	4907754	2	0	0	56.1	56.1	1	3078.76	3.25	0	80.77	0	0.86	0	0	9	0	0	0	0	0	0	-34.57	-34.57
	Inverter Transformer	MV3-13 T	367958	4907577	2	0	0	56.1	56.1	1	3100.12	3.25	0	80.83	0	0.87	0	0	9.04	0	0	0	0	0	0	-34.68	-34.68
	Inverter Transformer	MV3-18 T	367757	4907412	2	0	0	56.1	56.1	1	3330.85	3.25	0	81.45	0	0.97	0	0	9.42	0	0	0	0	0	0	-35.78	-35.78
	Inverter Transformer	MV3-12 T	367674	4907594	2	0	0	56.1	56.1	1	3376.61	3.25	0	81.57	0	0.99	0	0	9.49	0	0	0	0	0	0	-35.99	-35.99
	Inverter Transformer	MV2-2 T	365982	4906654	2	0	0	56.1	56.1	1	5241.71	3.25	0	85.39	0	1.71	0	0	12.17	0	0	0	0	0	0	-43.21	-43.21
	Inverter Transformer	MV2-3 T	365814	4906641	2	0	0	56.1	56.1	1	5406.48	3.25	0	85.66	0	1.77	0	0	12.38	0	0	0	0	0	0	-43.75	-43.75
	Inverter Transformer	MV2-4 T	365590	4906628	2	0	0	56.1	56.1	1	5625.35	3.25	0	86	0	1.84	0	0	12.65	0	0	0	0	0	0	-44.44	-44.44
	Line Reactor	NGR	369421	4908787.5	5	0	0	45.4	45.4	1	1702.27	5.25	0	75.62	0	3.41	1.25	0.04	0.7	0	0	0	0	0	0	-35.62	-35.62
	Inverter Transformer	MV1-15 T	365309	4904994	2	0	0	56.1	56.1	1	6514.51	3.25	0	87.28	0	2.12	0	0	13.7	0	0	0	0	0	0	-47.04	-47.04
	Inverter Transformer	MV1-12 T	365044	4905386	2	0	0	56.1	56.1	1	6572.61	3.25	0	87.35	0	2.14	0	0	13.76	0	0	0	0	0	0	-47.2	-47.2
	Inverter Transformer	MV1-4 T	364821	4905918	2	0	0	56.1	56.1	1	6575.65	3.25	0	87.36	0	2.14	0	0	13.76	0	0	0	0	0	0	-47.21	-47.21
	Inverter Transformer	MV1-2 T	364759	4906063	2	0	0	56.1	56.1	1	6586.41	3.25	0	87.37	0	2.14	0	0	13.78	0	0	0	0	0	0	-47.23	-47.23
	Inverter Transformer	MV1-1 T	364721	4906166	2	0	0	56.1	56.1	1	6590.57	3.25	0	87.38	0	2.14	0	0	13.78	0	0	0	0	0	0	-47.25	-47.25
	Inverter Transformer	MV1-8 T	364782	4905647	2	0	0	56.1	56.1	1	6709.02	3.25	0	87.53	0	2.18	0	0	13.91	0	0	0	0	0	0	-47.57	-47.57
	Inverter Transformer	MV1-5 T	364676	4905892	2	0	0	56.1	56.1	1	6720.88	3.25	0	87.55	0	2.18	0	0	13.93	0	0	0	0	0	0	-47.6	-47.6
	Inverter Transformer	MV1-3 T	364435	4906039	2	0	0	56.1	56.1	1	6901.67	3.25	0	87.78	0	2.23	0	0	14.12	0	0	0	0	0	0	-48.08	-48.08
	Inverter Transformer	MV1-9 T	364555	4905646	2	0	0	56.1	56.1	1	6920.4	3.25	0	87.8	0	2.24	0	0	14.14	0	0	0	0	0	0	-48.13	-48.13
	Inverter Transformer	MV1-11 T	364649	4905414	2	0	0	56.1	56.1	1	6921.59	3.25	0	87.8	0	2.24	0	0	14.15	0	0	0	0	0	0	-48.13	-48.13
	Inverter Transformer	MV1-6 T	364482	4905835	2	0	0	56.1	56.1	1	6922.75	3.25	0	87.81	0	2.24	0	0	14.15	0	0	0	0	0	0	-48.13	-48.13
Limit. Valu	0	0																								
Level D/N:	31.2074	31.2074																								

Receiver: Existing Noise Receptor
ID: G-1
X: 366773.2
Y: 4903320.1
Z: 4.5
Ground: 0

ISO	Description	ID	X	Y	Z	Ground	ReflOrd	LxT	LxN	L/A	Dist.	hm	Freq	Adiv	K0b	Agr	Abar	z	Aatm	Afol	Ahous	Cmet	CmetN	Dc	RL	LtotT	LtotN
	Inverters	G_Inv2	366676.9	4903239.1	2	0	0	87.7	87.7	1	125.86	3.25	0	53	0	2.44	0	0	0.21	0	0	0	0	0	0	32.02	32.02
	Gardiner Substation	G_Sub	366586.3	4903349.9	2.5	0	0	90.8	90.8	1	189.27	4.23	0	56.54	0	0.66	5.39	0.29	0.63	0	0	0	0	0	0	27.56	27.56
	Inverters	G_Inv4	366732.8	4903105	2	0	0	87.7	87.7	1	218.88	3.25	0	57.8	0	2.62	0	0	0.35	0	0	0	0	0	0	26.88	26.88
	Inverters	G_Inv1	366526.4	4903225.8	2	0	0	87.7	87.7	1	264.21	3.25	0	59.44	0	2.54	0	0	0.42	0	0	0	0	0	0	25.26	25.26
	Inverters	G_Inv3	366583.7	4903091.4	2	0	0	87.7	87.7	1	297.02	3.25	0	60.46	0	2.5	0	0	0.47	0	0	0	0	0	0	24.24	24.24
	Inverters	G_Inv6	366788.5	4902972	2	0	0	87.7	87.7	1	348.45	3.25	0	61.84	0	2.45	0	0	0.55	0	0	0	0	0	0	22.82	22.82
	Sol_Luce Substation	S_Substation	369426	4908792	3.5	0	0	112.1	112.1	1	6081.04	5.25	0	86.68	0	1.18	2.63	0.32	9.83	0	0	0	0	0	0	11.76	11.76
	Inverters	G_Inv5	366638.5	4902958.1	2	0	0	87.7	87.7	1	386.26	3.25	0	62.74	0	2.43	0	0	0.6	0	0	0	0	0	0	21.89	21.89
	Inverters	G_Inv8	366844.5	4902838.5	2	0	0	87.7	87.7	1	486.86	3.25	0	64.75	0	2.4	0	0	0.74	0	0	0	0	0	0	19.77	19.77
	Inverters	G_Inv7	366694.6	4902824.7	2	0	0	87.7	87.7	1	501.6	3.25	0	65.01	0	2.4	0	0	0.77	0	0	0	0	0	0	19.49	19.49
	Inverter	MV1-15	365315	4904994	2	0	0	100.3	100.3	1	2219.98	3.25	0	77.93	0	0.19	0	0	13.91	0	0	0	0	0	0	8.28	8.28
	Inverters	G_Inv10	366900.7	4902704.8	2	0	0	87.7	87.7	1	628.38	3.25	0	66.96	0	2.4	0	0	0.94	0	0	0	0	0	0	17.36	17.36
	Inverters	G_Inv9	366750.9	4902691.8	2	0	0	87.7	87.7	1	628.7	3.25	0	66.97	0	2.4	0	0	0.94	0	0	0	0	0	0	17.35	17.35

Inverter	MV1-12	365038	4905386	2	0	0	100.3	100.3	1	2697.94	3.25	0	79.62	0	0.3	0	0	14.83	0	0	0	0	0	0	5.56	5.56
Inverter	MV1-11	364655	4905414	2	0	0	100.3	100.3	1	2978.46	3.25	0	80.48	0	0.36	0	0	15.33	0	0	0	0	0	0	4.14	4.14
Inverter	MV1-8	364788	4905647	2	0	0	100.3	100.3	1	3058.67	3.25	0	80.71	0	0.37	0	0	15.48	0	0	0	0	0	0	3.75	3.75
Inverter	MV1-9	364561	4905646	2	0	0	100.3	100.3	1	3209.93	3.25	0	81.13	0	0.4	0	0	15.74	0	0	0	0	0	0	3.04	3.04
Inverter	MV1-4	364815	4905918	2	0	0	100.3	100.3	1	3253.25	3.25	0	81.25	0	0.41	0	0	15.81	0	0	0	0	0	0	2.84	2.84
Inverter	MV1-5	364671	4905892	2	0	0	100.3	100.3	1	3321.73	3.25	0	81.43	0	0.42	0	0	15.93	0	0	0	0	0	0	2.53	2.53
Inverter	MV1-14	365163	4905049	2	0	0	97.3	97.3	1	2362.59	3.25	0	78.47	0	0.22	0	0	14.19	0	0	0	0	0	0	4.43	4.43
Inverter	MV1-6	364477	4905835	2	0	0	100.3	100.3	1	3405.48	3.25	0	81.64	0	0.44	0	0	16.07	0	0	0	0	0	0	2.16	2.16
Inverter	MV1-2	364753	4906063	2	0	0	100.3	100.3	1	3406.57	3.25	0	81.65	0	0.44	0	0	16.07	0	0	0	0	0	0	2.16	2.16
Inverter	MV2-3	365820	4906641	2	0	0	100.3	100.3	1	3454.99	3.25	0	81.77	0	0.44	0	0	16.16	0	0	0	0	0	0	1.94	1.94
Inverter	MV2-4	365586	4906624	2	0	0	100.3	100.3	1	3510.73	3.25	0	81.91	0	0.45	0	0	16.25	0	0	0	0	0	0	1.7	1.7
Inverter	MV1-1	364715	4906166	2	0	0	100.3	100.3	1	3512.17	3.25	0	81.91	0	0.45	0	0	16.25	0	0	0	0	0	0	1.7	1.7
Inverter	MV1-13	364731	4905241	2	0	0	97.3	97.3	1	2803.65	3.25	0	79.95	0	0.32	0	0	15.02	0	0	0	0	0	0	2.01	2.01
Inverter	MV1-10	365004	4905564	2	0	0	97.3	97.3	1	2857.47	3.25	0	80.12	0	0.33	0	0	15.12	0	0	0	0	0	0	1.74	1.74
Inverter	MV3-18	367752	4907412	2	0	0	100.3	100.3	1	4207.34	3.25	0	83.48	0	0.55	0	0	17.38	0	0	0	0	0	0	-1.1	-1.1
Inverter	MV3-21	368478	4907206	2	0	0	100.3	100.3	1	4243.41	3.25	0	83.55	0	0.56	0	0	17.43	0	0	0	0	0	0	-1.24	-1.24
Inverter	MV3-19	368357	4907347	2	0	0	100.3	100.3	1	4327.16	3.25	0	83.72	0	0.57	0	0	17.56	0	0	0	0	0	0	-1.55	-1.55
Inverter	MV1-7	364925	4905782	2	0	0	97.3	97.3	1	3078.44	3.25	0	80.77	0	0.38	0	0	15.51	0	0	0	0	0	0	0.66	0.66
Inverter	MV3-12	367668	4907594	2	0	0	100.3	100.3	1	4366.57	3.25	0	83.8	0	0.57	0	0	17.62	0	0	0	0	0	0	-1.69	-1.69
Inverter	MV3-17	368178	4907472	2	0	0	100.3	100.3	1	4383.12	3.25	0	83.84	0	0.58	0	0	17.65	0	0	0	0	0	0	-1.75	-1.75
Inverter	MV3-13	367963	4907577	2	0	0	100.3	100.3	1	4420.05	3.25	0	83.91	0	0.58	0	0	17.71	0	0	0	0	0	0	-1.89	-1.89
Inverter	MV3-20	368689	4907317	2	0	0	100.3	100.3	1	4432.33	3.25	0	83.93	0	0.58	0	0	17.73	0	0	0	0	0	0	-1.93	-1.93
Inverter	MV3-15	368357	4907477	2	0	0	100.3	100.3	1	4448.4	3.25	0	83.96	0	0.58	0	0	17.75	0	0	0	0	0	0	-1.99	-1.99
Inverter	MV3-16	368514	4907475	2	0	0	100.3	100.3	1	4504.84	3.25	0	84.07	0	0.59	0	0	17.84	0	0	0	0	0	0	-2.19	-2.19
Inverter	MV3-10	368167	4907669	2	0	0	100.3	100.3	1	4566.79	3.25	0	84.19	0	0.6	0	0	17.93	0	0	0	0	0	0	-2.41	-2.41
Inverter	MV3-7	367945	4907754	2	0	0	100.3	100.3	1	4586.13	3.25	0	84.23	0	0.6	0	0	17.96	0	0	0	0	0	0	-2.48	-2.48
Inverter	MV3-14	368684	4907498	2	0	0	100.3	100.3	1	4594.13	3.25	0	84.24	0	0.6	0	0	17.97	0	0	0	0	0	0	-2.51	-2.51
Inverter	MV3-11	368346	4907662	2	0	0	100.3	100.3	1	4617.99	3.25	0	84.29	0	0.6	0	0	18.01	0	0	0	0	0	0	-2.59	-2.59
Inverter	MV3-9	368512	4907703	2	0	0	100.3	100.3	1	4715.21	3.25	0	84.47	0	0.61	0	0	18.16	0	0	0	0	0	0	-2.93	-2.93
Inverter	MV3-6	368162	4907834	2	0	0	100.3	100.3	1	4722.72	3.25	0	84.48	0	0.62	0	0	18.17	0	0	0	0	0	0	-2.96	-2.96
Inverter	MV3-3	367939	4907927	2	0	0	100.3	100.3	1	4752.12	3.25	0	84.54	0	0.62	0	0	18.21	0	0	0	0	0	0	-3.06	-3.06
Inverter	MV3-8	368680	4907712	2	0	0	100.3	100.3	1	4787.97	3.25	0	84.6	0	0.62	0	0	18.27	0	0	0	0	0	0	-3.18	-3.18
Inverter	MV2-1	365842	4906816	2	0	0	97.3	97.3	1	3617.8	3.25	0	82.17	0	0.47	0	0	16.43	0	0	0	0	0	0	-1.75	-1.75
Inverter	MV6-3	370207	4907140	2	0	0	100.3	100.3	1	5136.4	3.25	0	85.21	0	0.65	0	0	18.78	0	0	0	0	0	0	-4.33	-4.33
Inverter	MV6-2	370085	4907339	2	0	0	100.3	100.3	1	5207.65	3.25	0	85.33	0	0.66	0	0	18.88	0	0	0	0	0	0	-4.56	-4.56
Inverter	MV4-11	369264	4908855	2	0	0	100.3	100.3	1	6069.53	3.25	0	86.66	0	0.71	0	0	20.09	0	0	0	0	0	0	-7.15	-7.15
Inverter	MV4-10	369312	4908858	2	0	0	100.3	100.3	1	6092.11	3.25	0	86.7	0	0.71	0	0	20.12	0	0	0	0	0	0	-7.21	-7.21
Inverter	MV4-7	369035	4909001	2	0	0	100.3	100.3	1	6114.6	3.25	0	86.73	0	0.71	0	0	20.15	0	0	0	0	0	0	-7.27	-7.27
Inverter	MV4-8	369256	4909001	2	0	0	100.3	100.3	1	6199.75	3.25	0	86.85	0	0.71	0	0	20.26	0	0	0	0	0	0	-7.51	-7.51
Inverter	MV4-9	369289	4909001	2	0	0	100.3	100.3	1	6213.04	3.25	0	86.87	0	0.71	0	0	20.28	0	0	0	0	0	0	-7.54	-7.54
Inverter	MV5-5	370015	4908690	2	0	0	100.3	100.3	1	6272.57	3.25	0	86.95	0	0.71	0	0	20.36	0	0	0	0	0	0	-7.71	-7.71
Inverter	MV4-4	369027	4909199	2	0	0	100.3	100.3	1	6296.12	3.25	0	86.98	0	0.71	0	0	20.39	0	0	0	0	0	0	-7.77	-7.77
Inverter	MV4-6	369243	4909192	2	0	0	100.3	100.3	1	6370.17	3.25	0	87.08	0	0.71	0	0	20.49	0	0	0	0	0	0	-7.97	-7.97
Inverter	MV4-5	369289	4909199	2	0	0	100.3	100.3	1	6394.59	3.25	0	87.12	0	0.71	0	0	20.52	0	0	0	0	0	0	-8.04	-8.04
Inverter	MV5-2	370006	4908853	2	0	0	100.3	100.3	1	6408.12	3.25	0	87.13	0	0.71	0	0	20.54	0	0	0	0	0	0	-8.08	-8.08
Inverter	MV5-4	370324	4908707	2	0	0	100.3	100.3	1	6451.89	3.25	0	87.19	0	0.71	0	0	20.6	0	0	0	0	0	0	-8.19	-8.19
Inverter	MV4-1	369011	4909397	2	0	0	100.3	100.3	1	6475.84	3.25	0	87.23	0	0.71	0	0	20.63	0	0	0	0	0	0	-8.26	-8.26
Inverter	MV5-3	370231	4908851	2	0	0	100.3	100.3	1	6522.82	3.25	0	87.29	0	0.71	0	0	20.69	0	0	0	0	0	0	-8.38	-8.38
Inverter	MV4-3	369229	4909397	2	0	0	100.3	100.3	1	6554.36	3.25	0	87.33	0	0.71	0	0	20.73	0	0	0	0	0	0	-8.46	-8.46
Inverter	MV4-2	369272	4909397	2	0	0	100.3	100.3	1	6570.6	3.25	0	87.35	0	0.72	0	0	20.75	0	0	0	0	0	0	-8.51	-8.51
Inverter	MV5-1	370020	4909142	2	0	0	100.3	100.3	1	6666.05	3.25	0	87.48	0	0.71	0	0	20.87	0	0	0	0	0	0	-8.75	-8.75
Inverter	MV6-1	370235	4907364	2	0	0	97.3	97.3	1	5323.27	3.25	0	85.52	0	0.67	0	0	19.05	0	0	0	0	0	0	-7.93	-7.93
DSTATCOM - 10 MVAR #2	DSAT2	369403	4908757	2.5	0	0	96.6	96.6	1	6039.51	3.5	0	86.62	0	3.78	0	0	3.86	0	0	0	0	0	0	2.38	2.38
DSTATCOM - 10 MVAR #1	DSAT1	369437	4908757	2.5	0	0	96.6	96.6	1	6054.4	3.5	0	86.64	0	3.78	0	0	3.87	0	0	0	0	0	0	2.35	2.35
SubstationTransformer	W_ST	369711.17	4906112.3	2.5	0	0	92	92	1	4053.13	3.5	0	83.16	0	0.34	0	-0.1	7.44	0	0	0	0	0	0	1.04	1.04
Inverter	MV2-2	365977	4906654	2	0	0	89.1	89.1	1	3427.66	3.25	0	81.7	0	1.25	0	0	10.26	0	0	0	0	0	0	-4.15	-4.15
Inverter	MV1-3	364440	4906039	2	0	0	89.1	89.1	1	3582.77	3.25	0	82.08	0	1.29	0	0	10.48	0	0	0	0	0	0	-4.8	-4.8
Westbrook Inverter Enclosur	W_INV3	369508	4906164	2	0	0	89.1	89.1	1	3945.49	3.25	0	82.92	0	1.38	0	0	11.01	0	0	0	0	0	0	-6.25	-6.25
Westbrook Inverter Enclosur	W_INV2	369374	4906388	2	0	0	89.1	89.1	1	4021.96	3.25	0	83.09	0	1.4	0	0	11.12	0	0	0	0	0	0	-6.54	-6.54
Westbrook Inverter Enclosur	W_INV4	369673	4906164	2	0	0	89.1	89.1	1	4061.6	3.25	0	83.17	0	1.41	0	0	11.17	0	0	0	0	0	0	-6.7	-6.7
Inverter	MV3-22	368656	4907142	2	0	0	89.1	89.1	1	4260.5	3.25	0	83.59	0	1.46	0	0	11.45	0	0	0	0	0	0	-7.44	-7.44
Westbrook Inverter Enclosur	W_INV7	369780	4906417	2	0	0	89.1	89.1	1	4316.44	3.25	0	83.7	0	1.47	0	0	11.53	0	0	0	0	0	0	-7.65	-7.65
Westbrook Inverter Enclosur	W_INV5	369719	4906574	2	0	0	89.1	89.1	1	4389.26	3.25	0	83.85	0	1.49	0	0	11.63	0	0	0	0	0	0	-7.91	-7.91
Westbrook Inverter Enclosur	W_INV6	369875	4906578	2	0	0	89.1	89.1	1	4498.34	3.25	0	84.06	0	1.52	0	0	11.78	0	0	0	0	0	0	-8.3	-8.3
Inverter	MV3-5	368340	4907843	2	0	0	89.1	89.1	1	4786.6	3.25	0	84.6	0	1.59	0	0	12.18	0	0	0	0	0	0	-9.31	-9.31
Inverter	MV3-1	368156	4907976	2	0	0	89.1	89.1	1	4856.91	3.25	0	84.73	0	1.6	0	0	12.27	0	0	0	0	0	0	-9.54	-9.54
Inverter	MV3-4	368502	4907925	2	0	0	89.1	89.1	1	4918.73	3.25	0	84.84	0	1.62	0	0	12.35	0	0	0	0	0	0	-9.75	-9.75
Inverter	MV3-2	368671	4907928	2	0	0	89.1	89.1	1	4983.41	3.25	0	84.95	0	1.64	0	0	12.44	0	0	0	0	0	0	-9.97	-9.97
Fixed Reactor Bank 1	FRB1	369378	4908755	6	0	0	89.8	89.8	1	6026.87	5.25	0	86.6	0	-0.41	0	0	9.77	0	0	0	0	0	0	-6.18	-6.18
Fixed Reactor Bank 2	FRB2	369464	4908755	6	0	0	89.8	89.8	1	6064.53	5.25	0	86.66	0	-0.41	0	0	9.81	0	0	0	0	0	0	-6.28	-6.28
Inverter	MV4-15	369176	4908481	2	0	0	89.1	89.1	1	5692.83	3.25	0	86.11	0	1.81	0	0	13.37	0	0	0	0	0	0	-12.23	-12.23
Inverter	MV4-14	369176	4908507	2	0	0	89.1	89.1	1	5716.41	3.25	0	86.14	0	1.82	0	0	13.4	0	0	0	0	0	0	-12.3	-12.3
Inverter	MV4-13	369051	4908605	2	0	0	89.1	89.1	1	5754.87	3.25	0	86.2	0	1.83	0	0	13.45	0	0	0	0	0	0	-12.42	-12.42
Westbrook Inverter Enclosur	W_INV1	369409	4906578	2	0	0	86.1	86.1	1	4190.63	3.25	0	83.45	0	1.44	0	0	11.35	0	0	0	0	0	0	-10.18	-10.18

Inverter	MV4-12	369043	4908803	2	0	0	89.1	89.1	1	5934.15	3.25	0	86.47	0	1.87	0	0	13.68	0	0	0	0	0	0	-12.96	-12.96
Inverter	MV5-6	369982	4908507	2	0	0	89.1	89.1	1	6099.21	3.25	0	86.71	0	1.91	0	0	13.89	0	0	0	0	0	0	-13.44	-13.44
Inverter	MV6-4	370250	4906966	2	0	0	86.1	86.1	1	5037.93	3.25	0	85.05	0	1.65	0	0	12.51	0	0	0	0	0	0	-13.15	-13.15
Westbrook Inverter Transfor	W_INVTR1	369403	4906578	2	0	0	78.2	78.2	1	4186.86	3.25	0	83.44	0	-3.01	0	0	2.12	0	0	0	0	0	0	-4.32	-4.32
Westbrook Inverter Transfor	W_INVTR3	369514	4906164	2	0	0	77.3	77.3	1	3949.65	3.25	0	82.93	0	-2.95	0	0	2.04	0	0	0	0	0	0	-4.67	-4.67
Westbrook Inverter Transfor	W_INVTR2	369368	4906388	2	0	0	77.3	77.3	1	4018.08	3.25	0	83.08	0	-2.97	0	0	2.06	0	0	0	0	0	0	-4.83	-4.83
Westbrook Inverter Transfor	W_INVTR4	369679	4906164	2	0	0	77.3	77.3	1	4065.89	3.25	0	83.18	0	-2.98	0	0	2.08	0	0	0	0	0	0	-4.94	-4.94
Westbrook Inverter Transfor	W_INVTR7	369786	4906417	2	0	0	77.3	77.3	1	4320.62	3.25	0	83.71	0	-3.03	0	0	2.17	0	0	0	0	0	0	-5.51	-5.51
Westbrook Inverter Transfor	W_INVTR5	369725	4906574	2	0	0	77.3	77.3	1	4393.29	3.25	0	83.86	0	-3.05	0	0	2.2	0	0	0	0	0	0	-5.66	-5.66
Westbrook Inverter Transfor	W_INVTR6	369881	4906578	2	0	0	77.3	77.3	1	4502.48	3.25	0	84.07	0	-3.07	0	0	2.24	0	0	0	0	0	0	-5.89	-5.89
Inverter Transformer	MV1-14 T	365157	4905049	2	0	0	69.4	69.4	1	2366.69	3.25	0	78.48	0	2.3	0	0	5.32	0	0	0	0	0	0	-16.76	-16.76
Inverter Transformer	MV1-13 T	364725	4905241	2	0	0	69.4	69.4	1	2808.02	3.25	0	79.97	0	2.45	0	0	5.72	0	0	0	0	0	0	-18.78	-18.78
Inverter Transformer	MV1-10 T	365010	4905564	2	0	0	69.4	69.4	1	2853.76	3.25	0	80.11	0	2.46	0	0	5.76	0	0	0	0	0	0	-18.98	-18.98
Inverter Transformer	MV1-7 T	364919	4905782	2	0	0	69.4	69.4	1	3082.05	3.25	0	80.78	0	2.53	0	0	5.95	0	0	0	0	0	0	-19.91	-19.91
Inverter Transformer	MV2-1 T	365836	4906816	2	0	0	69.4	69.4	1	3619.35	3.25	0	82.17	0	2.69	0	0	6.39	0	0	0	0	0	0	-21.89	-21.89
Inverter Transformer	MV6-4 T	370244	4906966	2	0	0	69.4	69.4	1	5033.79	3.25	0	85.04	0	3.02	0	0	7.4	0	0	0	0	0	0	-26.11	-26.11
Inverter Transformer	MV6-1 T	370230	4907364	2	0	0	69.4	69.4	1	5320.02	3.25	0	85.52	0	3.07	0	0	7.59	0	0	0	0	0	0	-26.83	-26.83
Inverter Transformer	MV1-15 T	365309	4904994	2	0	0	56.1	56.1	1	2223.92	3.25	0	77.94	0	0.5	0	0	7.48	0	0	0	0	0	0	-29.86	-29.86
Inverter Transformer	MV1-12 T	365044	4905386	2	0	0	56.1	56.1	1	2694.08	3.25	0	79.61	0	0.7	0	0	8.34	0	0	0	0	0	0	-32.59	-32.59
Inverter Transformer	MV1-11 T	364649	4905414	2	0	0	56.1	56.1	1	2982.73	3.25	0	80.49	0	0.82	0	0	8.84	0	0	0	0	0	0	-34.1	-34.1
Inverter Transformer	MV1-8 T	364782	4905647	2	0	0	56.1	56.1	1	3062.57	3.25	0	80.72	0	0.86	0	0	8.97	0	0	0	0	0	0	-34.49	-34.49
Inverter Transformer	MV1-9 T	364555	4905646	2	0	0	56.1	56.1	1	3214.07	3.25	0	81.14	0	0.92	0	0	9.23	0	0	0	0	0	0	-35.23	-35.23
Inverter Transformer	MV1-4 T	364821	4905918	2	0	0	56.1	56.1	1	3249.64	3.25	0	81.24	0	0.94	0	0	9.28	0	0	0	0	0	0	-35.4	-35.4
Inverter Transformer	MV1-5 T	364676	4905892	2	0	0	56.1	56.1	1	3318.57	3.25	0	81.42	0	0.96	0	0	9.4	0	0	0	0	0	0	-35.72	-35.72
Inverter Transformer	MV1-6 T	364482	4905835	2	0	0	56.1	56.1	1	3402.11	3.25	0	81.63	0	1	0	0	9.53	0	0	0	0	0	0	-36.11	-36.11
Inverter Transformer	MV1-2 T	364759	4906063	2	0	0	56.1	56.1	1	3403.01	3.25	0	81.64	0	1	0	0	9.53	0	0	0	0	0	0	-36.11	-36.11
Inverter Transformer	MV2-2 T	365982	4906654	2	0	0	56.1	56.1	1	3426.5	3.25	0	81.7	0	1.01	0	0	9.57	0	0	0	0	0	0	-36.22	-36.22
Inverter Transformer	MV2-3 T	365814	4906641	2	0	0	56.1	56.1	1	3456.65	3.25	0	81.77	0	1.02	0	0	9.62	0	0	0	0	0	0	-36.36	-36.36
Inverter Transformer	MV1-1 T	364721	4906166	2	0	0	56.1	56.1	1	3508.66	3.25	0	81.9	0	1.04	0	0	9.7	0	0	0	0	0	0	-36.59	-36.59
Inverter Transformer	MV2-4 T	365590	4906628	2	0	0	56.1	56.1	1	3513.14	3.25	0	81.91	0	1.05	0	0	9.71	0	0	0	0	0	0	-36.61	-36.61
Inverter Transformer	MV1-3 T	364435	4906039	2	0	0	56.1	56.1	1	3586.03	3.25	0	82.09	0	1.08	0	0	9.82	0	0	0	0	0	0	-36.93	-36.93
Inverter Transformer	MV3-18 T	367757	4907412	2	0	0	56.1	56.1	1	4208.5	3.25	0	83.48	0	1.33	0	0	10.76	0	0	0	0	0	0	-39.51	-39.51
Inverter Transformer	MV3-21 T	368484	4907206	2	0	0	56.1	56.1	1	4245.83	3.25	0	83.56	0	1.34	0	0	10.81	0	0	0	0	0	0	-39.66	-39.66
Inverter Transformer	MV3-22 T	368661	4907142	2	0	0	56.1	56.1	1	4262.71	3.25	0	83.59	0	1.35	0	0	10.84	0	0	0	0	0	0	-39.72	-39.72
Inverter Transformer	MV3-19 T	368352	4907347	2	0	0	56.1	56.1	1	4325.34	3.25	0	83.72	0	1.37	0	0	10.93	0	0	0	0	0	0	-39.96	-39.96
Inverter Transformer	MV3-12 T	367674	4907594	2	0	0	56.1	56.1	1	4367.8	3.25	0	83.81	0	1.39	0	0	10.99	0	0	0	0	0	0	-40.12	-40.12
Inverter Transformer	MV3-17 T	368183	4907472	2	0	0	56.1	56.1	1	4384.73	3.25	0	83.84	0	1.4	0	0	11.01	0	0	0	0	0	0	-40.19	-40.19
Inverter Transformer	MV3-13 T	367958	4907577	2	0	0	56.1	56.1	1	4418.71	3.25	0	83.91	0	1.41	0	0	11.06	0	0	0	0	0	0	-40.32	-40.32
Inverter Transformer	MV3-20 T	368683	4907317	2	0	0	56.1	56.1	1	4429.73	3.25	0	83.93	0	1.41	0	0	11.08	0	0	0	0	0	0	-40.36	-40.36
Inverter Transformer	MV3-15 T	368351	4907477	2	0	0	56.1	56.1	1	4446.27	3.25	0	83.96	0	1.42	0	0	11.1	0	0	0	0	0	0	-40.42	-40.42
Inverter Transformer	MV3-16 T	368509	4907475	2	0	0	56.1	56.1	1	4502.91	3.25	0	84.07	0	1.44	0	0	11.18	0	0	0	0	0	0	-40.63	-40.63
Inverter Transformer	MV3-10 T	368162	4907669	2	0	0	56.1	56.1	1	4565.27	3.25	0	84.19	0	1.46	0	0	11.27	0	0	0	0	0	0	-40.86	-40.86
Inverter Transformer	MV3-7 T	367951	4907754	2	0	0	56.1	56.1	1	4587.67	3.25	0	84.23	0	1.47	0	0	11.3	0	0	0	0	0	0	-40.94	-40.94
Inverter Transformer	MV3-14 T	368678	4907498	2	0	0	56.1	56.1	1	4591.64	3.25	0	84.24	0	1.47	0	0	11.3	0	0	0	0	0	0	-40.96	-40.96
Inverter Transformer	MV3-11 T	368340	4907662	2	0	0	56.1	56.1	1	4615.95	3.25	0	84.29	0	1.48	0	0	11.34	0	0	0	0	0	0	-41.05	-41.05
Inverter Transformer	MV3-9 T	368517	4907703	2	0	0	56.1	56.1	1	4717.06	3.25	0	84.47	0	1.52	0	0	11.47	0	0	0	0	0	0	-41.41	-41.41
Inverter Transformer	MV3-6 T	368156	4907834	2	0	0	56.1	56.1	1	4720.96	3.25	0	84.48	0	1.52	0	0	11.48	0	0	0	0	0	0	-41.43	-41.43
Inverter Transformer	MV3-3 T	367944	4907927	2	0	0	56.1	56.1	1	4753.35	3.25	0	84.54	0	1.54	0	0	11.52	0	0	0	0	0	0	-41.54	-41.54
Inverter Transformer	MV3-5 T	368335	4907843	2	0	0	56.1	56.1	1	4784.96	3.25	0	84.6	0	1.55	0	0	11.57	0	0	0	0	0	0	-41.65	-41.65
Inverter Transformer	MV3-8 T	368685	4907712	2	0	0	56.1	56.1	1	4789.97	3.25	0	84.61	0	1.55	0	0	11.57	0	0	0	0	0	0	-41.67	-41.67
Inverter Transformer	MV3-1 T	368150	4907976	2	0	0	56.1	56.1	1	4855.2	3.25	0	84.72	0	1.57	0	0	11.66	0	0	0	0	0	0	-41.9	-41.9
Inverter Transformer	MV3-4 T	368507	4907925	2	0	0	56.1	56.1	1	4920.49	3.25	0	84.84	0	1.6	0	0	11.75	0	0	0	0	0	0	-42.13	-42.13
Inverter Transformer	MV3-2 T	368677	4907928	2	0	0	56.1	56.1	1	4985.7	3.25	0	84.95	0	1.62	0	0	11.84	0	0	0	0	0	0	-42.35	-42.35
Inverter Transformer	MV6-3 T	370202	4907140	2	0	0	56.1	56.1	1	5133.06	3.25	0	85.21	0	1.67	0	0	12.03	0	0	0	0	0	0	-42.85	-42.85
Inverter Transformer	MV6-2 T	370091	4907339	2	0	0	56.1	56.1	1	5211.46	3.25	0	85.34	0	1.7	0	0	12.13	0	0	0	0	0	0	-43.11	-43.11
Inverter Transformer	MV4-15 T	369170	4908481	2	0	0	56.1	56.1	1	5690.3	3.25	0	86.1	0	1.86	0	0	12.73	0	0	0	0	0	0	-44.64	-44.64
Inverter Transformer	MV4-14 T	369182	4908507	2	0	0	56.1	56.1	1	5718.94	3.25	0	86.15	0	1.87	0	0	12.77	0	0	0	0	0	0	-44.73	-44.73
Inverter Transformer	MV4-13 T	369057	4908605	2	0	0	56.1	56.1	1	5757.25	3.25	0	86.2	0	1.89	0	0	12.81	0	0	0	0	0	0	-44.84	-44.84
Inverter Transformer	MV4-12 T	369049	4908803	2	0	0	56.1	56.1	1	5936.45	3.25	0	86.47	0	1.94	0	0	13.03	0	0	0	0	0	0	-45.38	-45.38
Inverter Transformer	MV4-11 T	369269	4908855	2	0	0	56.1	56.1	1	6071.58	3.25	0	86.67	0	1.99	0	0	13.19	0	0	0	0	0	0	-45.78	-45.78
Inverter Transformer	MV4-10 T	369307	4908858	2	0	0	56.1	56.1	1	6090.03	3.25	0	86.69	0	1.99	0	0	13.21	0	0	0	0	0	0	-45.84	-45.84
Inverter Transformer	MV5-6 T	369987	4908507	2	0	0	56.1	56.1	1	6101.84	3.25	0	86.71	0	2	0	0	13.22	0	0	0	0	0	0	-45.87	-45.87
Inverter Transformer	MV4-7 T	369040	4909001	2	0	0	56.1	56.1	1	6116.45	3.25	0	86.73	0	2	0	0	13.24	0	0	0	0	0	0	-45.91	-45.91
Inverter Transformer	MV4-8 T	369262	4909001	2	0	0	56.1	56.1	1	6202.16	3.25	0	86.85	0	2.03	0	0	13.34	0	0	0	0	0	0	-46.16	-46.16
Inverter Transformer	MV4-9 T	369284	4909001	2	0	0	56.1	56.1	1	6211.02	3.25	0	86.86	0	2.03	0	0	13.35	0	0	0	0	0	0	-46.19	-46.19
Inverter Transformer	MV5-5 T	370021	4908690	2	0	0	56.1	56.1	1	6275.67	3.25	0	86.95	0	2.05	0	0	13.42	0	0	0	0	0	0	-46.37	-46.37
Inverter Transformer	MV4-4 T	369033	4909199	2	0	0	56.1	56.1	1	6298.27	3.25	0	86.98	0	2.06	0	0	13.45	0	0	0	0	0	0	-46.43	-46.43
Inverter Transformer	MV4-6 T	369249	4909192	2	0	0	56.1	56.1	1	6372.5	3.25	0	87.09	0	2.08	0	0	13.54	0	0	0	0	0	0	-46.64	-46.64
Inverter Transformer	MV4-5 T	369283	4909199	2	0	0	56.1	56.1	1	6392.23	3.25	0	87.11	0	2.09	0	0	13.56	0	0	0	0	0	0	-46.7	-46.7
Inverter Transformer	MV5-2 T	370011	4908853	2	0	0	56.1	56.1	1	6410.64	3.25	0	87.14	0	2.09	0	0	13.58	0	0	0	0	0	0	-46.75	-46.75
Inverter Transformer	MV5-4 T	370330	4908707	2	0	0	56.1	56.1	1	6455.19	3.25	0	87.2	0	2.1	0	0	13.63	0	0	0	0	0	0	-46.87	-46.87
Inverter Transformer	MV4-1 T	369017	4909397	2	0	0	56.1	56.1	1	6477.91	3.25	0	87.23	0	2.11	0	0	13.66	0	0	0	0	0	0	-46.94	-46.94
Inverter Transformer	MV5-3 T	370237	4908851	2	0	0	56.1	56.1	1	6526.01	3.25	0	87.29	0	2.13	0	0	13.71	0	0	0	0	0	0	-47.07	-47.07
Inverter Transformer	MV4-3 T	369234	4909397	2	0	0	56.1	56.1	1	6556.24	3.25	0	87.33	0	2.13	0	0	13.74	0	0	0	0	0	0	-47.15	-47.15

	Inverter Transformer	MV4-2 T	369267	4909397	2	0	0	56.1	56.1	1	6568.7	3.25	0	87.35	0	2.14	0	0	13.76	0	0	0	0	0	0	-47.19	-47.19
	Inverter Transformer	MV5-1 T	370015	4909142	2	0	0	56.1	56.1	1	6663.62	3.25	0	87.47	0	2.17	0	0	13.86	0	0	0	0	0	0	-47.44	-47.44
	Line Reactor	NGR	369421	4908787.5	5	0	0	45.4	45.4	1	6074.81	5.25	0	86.67	0	3.24	1.36	0.11	2.48	0	0	0	0	0	0	-48.4	-48.4
Limit. Valu	0		0																							
Level D/N:	35.9833		35.9833																							

Receiver: Existing Noise Receptor
ID: G-2
X: 366859.2
Y: 4903323.1
Z: 4.5
Ground: 0

ISO	Description	ID	X	Y	Z	Ground	ReflOrd	LxT	LxN	L/A	Dist.	hm	Freq	Adiv	K0b	Agr	Abar	z	Aatm	Afol	Ahous	Cmet	CmetN	Dc	RL	LtotT	LtotN
	Gardiner Substation	G_Sub	366586.3	4903349.9	2.5	0	0	90.8	90.8	1	274.22	4.24	0	59.76	0	0.58	5.6	0.29	0.86	0	0	0	0	0	0	23.97	23.97
	Inverters	G_Inv2	366676.9	4903239.1	2	0	0	87.7	87.7	1	200.74	3.25	0	57.05	0	2.66	0	0	0.32	0	0	0	0	0	0	27.62	27.62
	Inverters	G_Inv4	366732.8	4903105	2	0	0	87.7	87.7	1	252.09	3.25	0	59.03	0	2.56	0	0	0.4	0	0	0	0	0	0	25.67	25.67
	Inverters	G_Inv1	366526.4	4903225.8	2	0	0	87.7	87.7	1	346.74	3.25	0	61.8	0	2.45	0	0	0.54	0	0	0	0	0	0	22.87	22.87
	Inverters	G_Inv6	366788.5	4902972	2	0	0	87.7	87.7	1	358.16	3.25	0	62.08	0	2.44	0	0	0.56	0	0	0	0	0	0	22.58	22.58
	Inverters	G_Inv3	366583.7	4903091.4	2	0	0	87.7	87.7	1	359.99	3.25	0	62.13	0	2.44	0	0	0.56	0	0	0	0	0	0	22.53	22.53
	Sol_Luce Substation	S_Substation	369426	4908792	3.5	0	0	112.1	112.1	1	6041.3	5.25	0	86.62	0	1.17	2.63	0.32	9.79	0	0	0	0	0	0	11.86	11.86
	Inverters	G_Inv5	366638.5	4902958.1	2	0	0	87.7	87.7	1	426.54	3.25	0	63.6	0	2.41	0	0	0.66	0	0	0	0	0	0	20.99	20.99
	Inverters	G_Inv8	366844.5	4902838.5	2	0	0	87.7	87.7	1	484.83	3.25	0	64.71	0	2.4	0	0	0.74	0	0	0	0	0	0	19.81	19.81
	Inverters	G_Inv7	366694.6	4902824.7	2	0	0	87.7	87.7	1	524.88	3.25	0	65.4	0	2.4	0	0	0.8	0	0	0	0	0	0	19.06	19.06
	Inverter	MV1-15	365315	4904994	2	0	0	100.3	100.3	1	2275.18	3.25	0	78.14	0	0.2	0	0	14.02	0	0	0	0	0	0	7.95	7.95
	Inverters	G_Inv10	366900.7	4902704.8	2	0	0	87.7	87.7	1	619.7	3.25	0	66.84	0	2.4	0	0	0.93	0	0	0	0	0	0	17.49	17.49
	Inverters	G_Inv9	366750.9	4902691.8	2	0	0	87.7	87.7	1	640.53	3.25	0	67.13	0	2.4	0	0	0.96	0	0	0	0	0	0	17.17	17.17
	Inverter	MV1-12	365038	4905386	2	0	0	100.3	100.3	1	2751.79	3.25	0	79.79	0	0.31	0	0	14.93	0	0	0	0	0	0	5.28	5.28
	Inverter	MV1-11	364655	4905414	2	0	0	100.3	100.3	1	3038.15	3.25	0	80.65	0	0.37	0	0	15.44	0	0	0	0	0	0	3.85	3.85
	Inverter	MV1-8	364788	4905647	2	0	0	100.3	100.3	1	3112.94	3.25	0	80.86	0	0.38	0	0	15.57	0	0	0	0	0	0	3.49	3.49
	Inverter	MV1-9	364561	4905646	2	0	0	100.3	100.3	1	3267.66	3.25	0	81.28	0	0.41	0	0	15.84	0	0	0	0	0	0	2.78	2.78
	Inverter	MV1-4	364815	4905918	2	0	0	100.3	100.3	1	3303.37	3.25	0	81.38	0	0.42	0	0	15.9	0	0	0	0	0	0	2.62	2.62
	Inverter	MV1-5	364671	4905892	2	0	0	100.3	100.3	1	3374.53	3.25	0	81.56	0	0.43	0	0	16.02	0	0	0	0	0	0	2.3	2.3
	Inverter	MV1-14	365163	4905049	2	0	0	97.3	97.3	1	2419.88	3.25	0	78.68	0	0.24	0	0	14.31	0	0	0	0	0	0	4.09	4.09
	Inverter	MV1-2	364753	4906063	2	0	0	100.3	100.3	1	3455.88	3.25	0	81.77	0	0.44	0	0	16.16	0	0	0	0	0	0	1.94	1.94
	Inverter	MV1-6	364477	4905835	2	0	0	100.3	100.3	1	3461.87	3.25	0	81.79	0	0.44	0	0	16.17	0	0	0	0	0	0	1.91	1.91
	Inverter	MV2-3	365820	4906641	2	0	0	100.3	100.3	1	3476.84	3.25	0	81.82	0	0.45	0	0	16.19	0	0	0	0	0	0	1.85	1.85
	Inverter	MV2-4	365586	4906624	2	0	0	100.3	100.3	1	3537.94	3.25	0	81.97	0	0.46	0	0	16.29	0	0	0	0	0	0	1.59	1.59
	Inverter	MV1-1	364715	4906166	2	0	0	100.3	100.3	1	3560.85	3.25	0	82.03	0	0.46	0	0	16.33	0	0	0	0	0	0	1.49	1.49
	Inverter	MV1-13	364731	4905241	2	0	0	97.3	97.3	1	2864.89	3.25	0	80.14	0	0.34	0	0	15.13	0	0	0	0	0	0	1.7	1.7
	Inverter	MV1-10	365004	4905564	2	0	0	97.3	97.3	1	2909.19	3.25	0	80.28	0	0.34	0	0	15.21	0	0	0	0	0	0	1.48	1.48
	Inverter	MV3-18	367752	4907412	2	0	0	100.3	100.3	1	4185.24	3.25	0	83.43	0	0.55	0	0	17.34	0	0	0	0	0	0	-1.02	-1.02
	Inverter	MV3-21	368478	4907206	2	0	0	100.3	100.3	1	4206.83	3.25	0	83.48	0	0.55	0	0	17.38	0	0	0	0	0	0	-1.1	-1.1
	Inverter	MV3-19	368357	4907347	2	0	0	100.3	100.3	1	4293.62	3.25	0	83.66	0	0.57	0	0	17.51	0	0	0	0	0	0	-1.42	-1.42
	Inverter	MV3-12	367668	4907594	2	0	0	100.3	100.3	1	4346.81	3.25	0	83.76	0	0.57	0	0	17.59	0	0	0	0	0	0	-1.62	-1.62
	Inverter	MV3-17	368178	4907472	2	0	0	100.3	100.3	1	4353.46	3.25	0	83.78	0	0.57	0	0	17.6	0	0	0	0	0	0	-1.64	-1.64
	Inverter	MV3-20	368689	4907317	2	0	0	100.3	100.3	1	4393.11	3.25	0	83.86	0	0.58	0	0	17.67	0	0	0	0	0	0	-1.79	-1.79
	Inverter	MV3-13	367963	4907577	2	0	0	100.3	100.3	1	4394.77	3.25	0	83.86	0	0.58	0	0	17.67	0	0	0	0	0	0	-1.79	-1.79
	Inverter	MV3-15	368357	4907477	2	0	0	100.3	100.3	1	4415.69	3.25	0	83.9	0	0.58	0	0	17.7	0	0	0	0	0	0	-1.87	-1.87
	Inverter	MV1-7	364925	4905782	2	0	0	97.3	97.3	1	3128.47	3.25	0	80.91	0	0.39	0	0	15.6	0	0	0	0	0	0	0.42	0.42
	Inverter	MV3-16	368514	4907475	2	0	0	100.3	100.3	1	4469.52	3.25	0	84.01	0	0.59	0	0	17.78	0	0	0	0	0	0	-2.06	-2.06
	Inverter	MV3-10	368167	4907669	2	0	0	100.3	100.3	1	4538.41	3.25	0	84.14	0	0.6	0	0	17.89	0	0	0	0	0	0	-2.31	-2.31
	Inverter	MV3-14	368684	4907498	2	0	0	100.3	100.3	1	4556.28	3.25	0	84.17	0	0.6	0	0	17.92	0	0	0	0	0	0	-2.37	-2.37
	Inverter	MV3-7	367945	4907754	2	0	0	100.3	100.3	1	4562	3.25	0	84.18	0	0.6	0	0	17.92	0	0	0	0	0	0	-2.39	-2.39
	Inverter	MV3-11	368346	4907662	2	0	0	100.3	100.3	1	4586.57	3.25	0	84.23	0	0.6	0	0	17.96	0	0	0	0	0	0	-2.48	-2.48
	Inverter	MV3-9	368512	4907703	2	0	0	100.3	100.3	1	4681.38	3.25	0	84.41	0	0.61	0	0	18.11	0	0	0	0	0	0	-2.81	-2.81
	Inverter	MV3-6	368162	4907834	2	0	0	100.3	100.3	1	4695.26	3.25	0	84.43	0	0.61	0	0	18.13	0	0	0	0	0	0	-2.86	-2.86
	Inverter	MV3-3	367939	4907927	2	0	0	100.3	100.3	1	4728.83	3.25	0	84.5	0	0.62	0	0	18.18	0	0	0	0	0	0	-2.98	-2.98
	Inverter	MV3-8	368680	4907712	2	0	0	100.3	100.3	1	4751.61	3.25	0	84.54	0	0.62	0	0	18.21	0	0	0	0	0	0	-3.05	-3.05
	Inverter	MV6-3	370207	4907140	2	0	0	100.3	100.3	1	5077.06	3.25	0	85.11	0	0.65	0	0	18.69	0	0	0	0	0	0	-4.14	-4.14
	Inverter	MV2-1	365842	4906816	2	0	0	97.3	97.3	1	3638	3.25	0	82.22	0	0.47	0	0	16.46	0	0	0	0	0	0	-1.84	-1.84
	Inverter	MV6-2	370085	4907339	2	0	0	100.3	100.3	1	5151.04	3.25	0	85.24	0	0.66	0	0	18.8	0	0	0	0	0	0	-4.38	-4.38
	Inverter	MV4-11	369264	4908855	2	0	0	100.3	100.3	1	6032	3.25	0	86.61	0	0.71	0	0	20.04	0	0	0	0	0	0	-7.04	-7.04
	Inverter	MV4-10	369312	4908858	2	0	0	100.3	100.3	1	6054.04	3.25	0	86.64	0	0.71	0	0	20.07	0	0	0	0	0	0	-7.1	-7.1
	Inverter	MV4-7	369035	4909001	2	0	0	100.3	100.3	1	6080.51	3.25	0	86.68	0	0.71	0	0	20.1	0	0	0	0	0	0	-7.18	-7.18
	Inverter	MV4-8	369256	4909001	2	0	0	100.3	100.3	1	6163.05	3.25	0	86.8	0	0.71	0	0	20.21	0	0	0	0	0	0	-7.41	-7.41
	Inverter	MV4-9	369289	4909001	2	0	0	100.3	100.3	1	6175.96	3.25	0	86.81	0	0.71	0	0	20.23	0	0	0	0	0	0	-7.44	-7.44
	Inverter	MV5-5	370015	4908690	2	0	0	100.3	100.3	1	6225.97	3.25	0	86.88	0	0.71	0	0	20.3	0	0	0	0	0	0	-7.58	-7.58
	Inverter	MV4-4	369027	4909199	2	0	0	100.3	100.3	1	6263.03	3.25	0	86.94	0	0.71	0	0	20.35	0	0	0	0	0	0	-7.68	-7.68
	Inverter	MV4-6	369243	4909192	2	0	0	100.3	100.3	1	6334.55	3.25	0	87.03	0	0.71	0	0	20.44	0	0	0	0	0	0	-7.88	-7.88
	Inverter	MV4-5	369289	4909199	2	0	0	100.3	100.3	1	6358.47	3.25	0	87.07	0	0.71	0	0	20.47	0	0	0	0	0	0	-7.94	-7.94
	Inverter	MV5-2	370006	4908853	2	0	0	100.3	100.3	1	6362.56	3.25	0	87.07	0	0.71	0	0	20.48	0	0	0	0	0	0	-7.95	-7.95
	Inverter	MV5-4	370324	4908707	2	0	0	100.3	100.3	1	6402.44	3.25	0	87.13	0	0.71	0	0	20.53	0	0	0	0	0	0	-8.06	-8.06
	Inverter	MV4-1	369011	4909397	2	0	0	100.3	100.3	1	6443.8	3.25	0	87.18	0	0.71	0	0	20.59	0	0	0	0	0	0	-8.17	-8.17

Inverter	MV5-3	370231	4908851	2	0	0	100.3	100.3	1	6475.08	3.25	0	87.22	0	0.71	0	0	20.63	0	0	0	0	0	0	-8.25	-8.25
Inverter	MV4-3	369229	4909397	2	0	0	100.3	100.3	1	6519.83	3.25	0	87.28	0	0.71	0	0	20.68	0	0	0	0	0	0	-8.37	-8.37
Inverter	MV4-2	369272	4909397	2	0	0	100.3	100.3	1	6535.59	3.25	0	87.31	0	0.71	0	0	20.71	0	0	0	0	0	0	-8.41	-8.41
Inverter	MV5-1	370020	4909142	2	0	0	100.3	100.3	1	6621.95	3.25	0	87.42	0	0.71	0	0	20.82	0	0	0	0	0	0	-8.64	-8.64
Inverter	MV6-1	370235	4907364	2	0	0	97.3	97.3	1	5265.44	3.25	0	85.43	0	0.66	0	0	18.97	0	0	0	0	0	0	-7.75	-7.75
DSTATCOM - 10 MVAR #2	DSAT2	369403	4908757	2.5	0	0	96.6	96.6	1	5999.85	3.5	0	86.56	0	3.77	0	0	3.84	0	0	0	0	0	0	2.46	2.46
DSTATCOM - 10 MVAR #1	DSAT1	369437	4908757	2.5	0	0	96.6	96.6	1	6014.34	3.5	0	86.58	0	3.77	0	0	3.85	0	0	0	0	0	0	2.43	2.43
SubstationTransformer	W_ST	369711.17	4906112.3	2.5	0	0	92	92	1	3989.14	3.5	0	83.02	0	0.33	0	-0.1	7.35	0	0	0	0	0	0	1.28	1.28
Inverter	MV2-2	365977	4906654	2	0	0	89.1	89.1	1	3445.75	3.25	0	81.75	0	1.26	0	0	10.28	0	0	0	0	0	0	-4.23	-4.23
Inverter	MV1-3	364440	4906039	2	0	0	89.1	89.1	1	3637.12	3.25	0	82.22	0	1.3	0	0	10.56	0	0	0	0	0	0	-5.02	-5.02
Westbrook Inverter Enclosur	W_INV3	369508	4906164	2	0	0	89.1	89.1	1	3884.18	3.25	0	82.79	0	1.36	0	0	10.92	0	0	0	0	0	0	-6.01	-6.01
Westbrook Inverter Enclosur	W_INV2	369374	4906388	2	0	0	89.1	89.1	1	3964.57	3.25	0	82.96	0	1.38	0	0	11.03	0	0	0	0	0	0	-6.32	-6.32
Westbrook Inverter Enclosur	W_INV4	369673	4906164	2	0	0	89.1	89.1	1	3998.52	3.25	0	83.04	0	1.39	0	0	11.08	0	0	0	0	0	0	-6.45	-6.45
Inverter	MV3-22	368656	4907142	2	0	0	89.1	89.1	1	4220.49	3.25	0	83.51	0	1.45	0	0	11.4	0	0	0	0	0	0	-7.29	-7.29
Westbrook Inverter Enclosur	W_INV7	369780	4906417	2	0	0	89.1	89.1	1	4254.8	3.25	0	83.58	0	1.46	0	0	11.44	0	0	0	0	0	0	-7.42	-7.42
Westbrook Inverter Enclosur	W_INV5	369719	4906574	2	0	0	89.1	89.1	1	4329.76	3.25	0	83.73	0	1.47	0	0	11.55	0	0	0	0	0	0	-7.69	-7.69
Westbrook Inverter Enclosur	W_INV6	369875	4906578	2	0	0	89.1	89.1	1	4437.28	3.25	0	83.94	0	1.5	0	0	11.7	0	0	0	0	0	0	-8.08	-8.08
Inverter	MV3-5	368340	4907843	2	0	0	89.1	89.1	1	4756.29	3.25	0	84.55	0	1.58	0	0	12.14	0	0	0	0	0	0	-9.2	-9.2
Inverter	MV3-1	368156	4907976	2	0	0	89.1	89.1	1	4830.24	3.25	0	84.68	0	1.6	0	0	12.24	0	0	0	0	0	0	-9.45	-9.45
Inverter	MV3-4	368502	4907925	2	0	0	89.1	89.1	1	4886.34	3.25	0	84.78	0	1.61	0	0	12.31	0	0	0	0	0	0	-9.64	-9.64
Inverter	MV3-2	368671	4907928	2	0	0	89.1	89.1	1	4948.51	3.25	0	84.89	0	1.63	0	0	12.39	0	0	0	0	0	0	-9.85	-9.85
Fixed Reactor Bank 1	FRB1	369378	4908755	6	0	0	89.8	89.8	1	5987.48	5.25	0	86.54	0	-0.42	0	0	9.73	0	0	0	0	0	0	-6.08	-6.08
Fixed Reactor Bank 2	FRB2	369464	4908755	6	0	0	89.8	89.8	1	6024.16	5.25	0	86.6	0	-0.41	0	0	9.77	0	0	0	0	0	0	-6.17	-6.17
Inverter	MV4-15	369176	4908481	2	0	0	89.1	89.1	1	5654.33	3.25	0	86.05	0	1.8	0	0	13.32	0	0	0	0	0	0	-12.11	-12.11
Inverter	MV4-14	369176	4908507	2	0	0	89.1	89.1	1	5678.06	3.25	0	86.08	0	1.81	0	0	13.35	0	0	0	0	0	0	-12.19	-12.19
Inverter	MV4-13	369051	4908605	2	0	0	89.1	89.1	1	5718.61	3.25	0	86.15	0	1.82	0	0	13.4	0	0	0	0	0	0	-12.31	-12.31
Westbrook Inverter Enclosur	W_INV1	369409	4906578	2	0	0	86.1	86.1	1	4134.71	3.25	0	83.33	0	1.43	0	0	11.28	0	0	0	0	0	0	-9.97	-9.97
Inverter	MV4-12	369043	4908803	2	0	0	89.1	89.1	1	5899.01	3.25	0	86.42	0	1.86	0	0	13.63	0	0	0	0	0	0	-12.85	-12.85
Inverter	MV5-6	369982	4908507	2	0	0	89.1	89.1	1	6051.83	3.25	0	86.64	0	1.9	0	0	13.83	0	0	0	0	0	0	-13.31	-13.31
Inverter	MV6-4	370250	4906966	2	0	0	86.1	86.1	1	4976.77	3.25	0	84.94	0	1.63	0	0	12.43	0	0	0	0	0	0	-12.95	-12.95
Westbrook Inverter Transfor	W_INVTR1	369403	4906578	2	0	0	78.2	78.2	1	4131.02	3.25	0	83.32	0	-2.99	0	0	2.1	0	0	0	0	0	0	-4.19	-4.19
Westbrook Inverter Transfor	W_INVTR3	369514	4906164	2	0	0	77.3	77.3	1	3888.27	3.25	0	82.8	0	-2.94	0	0	2.01	0	0	0	0	0	0	-4.53	-4.53
Westbrook Inverter Transfor	W_INVTR2	369368	4906388	2	0	0	77.3	77.3	1	3960.77	3.25	0	82.96	0	-2.95	0	0	2.04	0	0	0	0	0	0	-4.7	-4.7
Westbrook Inverter Transfor	W_INVTR4	369679	4906164	2	0	0	77.3	77.3	1	4002.75	3.25	0	83.05	0	-2.96	0	0	2.06	0	0	0	0	0	0	-4.8	-4.8
Westbrook Inverter Transfor	W_INVTR7	369786	4906417	2	0	0	77.3	77.3	1	4258.92	3.25	0	83.59	0	-3.02	0	0	2.15	0	0	0	0	0	0	-5.37	-5.37
Westbrook Inverter Transfor	W_INVTR5	369725	4906574	2	0	0	77.3	77.3	1	4333.72	3.25	0	83.74	0	-3.04	0	0	2.18	0	0	0	0	0	0	-5.54	-5.54
Westbrook Inverter Transfor	W_INVTR6	369881	4906578	2	0	0	77.3	77.3	1	4441.36	3.25	0	83.95	0	-3.06	0	0	2.22	0	0	0	0	0	0	-5.76	-5.76
Inverter Transformer	MV1-14 T	365157	4905049	2	0	0	69.4	69.4	1	2424.09	3.25	0	78.69	0	2.32	0	0	5.37	0	0	0	0	0	0	-17.04	-17.04
Inverter Transformer	MV1-13 T	364725	4905241	2	0	0	69.4	69.4	1	2869.35	3.25	0	80.16	0	2.47	0	0	5.77	0	0	0	0	0	0	-19.04	-19.04
Inverter Transformer	MV1-10 T	365010	4905564	2	0	0	69.4	69.4	1	2905.37	3.25	0	80.26	0	2.48	0	0	5.8	0	0	0	0	0	0	-19.19	-19.19
Inverter Transformer	MV1-7 T	364919	4905782	2	0	0	69.4	69.4	1	3132.18	3.25	0	80.92	0	2.55	0	0	5.99	0	0	0	0	0	0	-20.11	-20.11
Inverter Transformer	MV2-1 T	365836	4906816	2	0	0	69.4	69.4	1	3639.68	3.25	0	82.22	0	2.69	0	0	6.4	0	0	0	0	0	0	-21.96	-21.96
Inverter Transformer	MV6-4 T	370244	4906966	2	0	0	69.4	69.4	1	4972.69	3.25	0	84.93	0	3.01	0	0	7.36	0	0	0	0	0	0	-25.95	-25.95
Inverter Transformer	MV6-1 T	370230	4907364	2	0	0	69.4	69.4	1	5262.24	3.25	0	85.42	0	3.06	0	0	7.55	0	0	0	0	0	0	-26.69	-26.69
Inverter Transformer	MV1-15 T	365309	4904994	2	0	0	56.1	56.1	1	2279.26	3.25	0	78.16	0	0.52	0	0	7.58	0	0	0	0	0	0	-30.2	-30.2
Inverter Transformer	MV1-12 T	365044	4905386	2	0	0	56.1	56.1	1	2747.82	3.25	0	79.78	0	0.72	0	0	8.43	0	0	0	0	0	0	-32.88	-32.88
Inverter Transformer	MV1-11 T	364649	4905414	2	0	0	56.1	56.1	1	3042.51	3.25	0	80.66	0	0.85	0	0	8.94	0	0	0	0	0	0	-34.39	-34.39
Inverter Transformer	MV1-8 T	364782	4905647	2	0	0	56.1	56.1	1	3116.93	3.25	0	80.87	0	0.88	0	0	9.06	0	0	0	0	0	0	-34.76	-34.76
Inverter Transformer	MV1-9 T	364555	4905646	2	0	0	56.1	56.1	1	3271.88	3.25	0	81.3	0	0.94	0	0	9.32	0	0	0	0	0	0	-35.5	-35.5
Inverter Transformer	MV1-4 T	364821	4905918	2	0	0	56.1	56.1	1	3299.66	3.25	0	81.37	0	0.96	0	0	9.37	0	0	0	0	0	0	-35.63	-35.63
Inverter Transformer	MV1-5 T	364676	4905892	2	0	0	56.1	56.1	1	3371.29	3.25	0	81.56	0	0.99	0	0	9.48	0	0	0	0	0	0	-35.97	-35.97
Inverter Transformer	MV2-2 T	365982	4906654	2	0	0	56.1	56.1	1	3444.47	3.25	0	81.74	0	1.02	0	0	9.6	0	0	0	0	0	0	-36.3	-36.3
Inverter Transformer	MV1-2 T	364759	4906063	2	0	0	56.1	56.1	1	3452.23	3.25	0	81.76	0	1.02	0	0	9.61	0	0	0	0	0	0	-36.34	-36.34
Inverter Transformer	MV1-6 T	364482	4905835	2	0	0	56.1	56.1	1	3458.43	3.25	0	81.78	0	1.02	0	0	9.62	0	0	0	0	0	0	-36.36	-36.36
Inverter Transformer	MV2-3 T	365814	4906641	2	0	0	56.1	56.1	1	3478.64	3.25	0	81.83	0	1.03	0	0	9.65	0	0	0	0	0	0	-36.45	-36.45
Inverter Transformer	MV2-4 T	365590	4906628	2	0	0	56.1	56.1	1	3540.23	3.25	0	81.98	0	1.06	0	0	9.75	0	0	0	0	0	0	-36.73	-36.73
Inverter Transformer	MV1-1 T	364721	4906166	2	0	0	56.1	56.1	1	3557.24	3.25	0	82.02	0	1.06	0	0	9.78	0	0	0	0	0	0	-36.81	-36.81
Inverter Transformer	MV1-3 T	364435	4906039	2	0	0	56.1	56.1	1	3640.45	3.25	0	82.22	0	1.1	0	0	9.91	0	0	0	0	0	0	-37.17	-37.17
Inverter Transformer	MV3-18 T	367757	4907412	2	0	0	56.1	56.1	1	4186.31	3.25	0	83.44	0	1.32	0	0	10.73	0	0	0	0	0	0	-39.42	-39.42
Inverter Transformer	MV3-21 T	368484	4907206	2	0	0	56.1	56.1	1	4209.14	3.25	0	83.48	0	1.33	0	0	10.76	0	0	0	0	0	0	-39.51	-39.51
Inverter Transformer	MV3-22 T	368661	4907142	2	0	0	56.1	56.1	1	4222.62	3.25	0	83.51	0	1.33	0	0	10.78	0	0	0	0	0	0	-39.57	-39.57
Inverter Transformer	MV3-19 T	368352	4907347	2	0	0	56.1	56.1	1	4291.88	3.25	0	83.65	0	1.36	0	0	10.88	0	0	0	0	0	0	-39.83	-39.83
Inverter Transformer	MV3-12 T	367674	4907594	2	0	0	56.1	56.1	1	4347.93	3.25	0	83.77	0	1.38	0	0	10.96	0	0	0	0	0	0	-40.05	-40.05
Inverter Transformer	MV3-17 T	368183	4907472	2	0	0	56.1	56.1	1	4354.98	3.25	0	83.78	0	1.38	0	0	10.97	0	0	0	0	0	0	-40.08	-40.08
Inverter Transformer	MV3-20 T	368683	4907317	2	0	0	56.1	56.1	1	4390.61	3.25	0	83.85	0	1.4	0	0	11.02	0	0	0	0	0	0	-40.21	-40.21
Inverter Transformer	MV3-13 T	367958	4907577	2	0	0	56.1	56.1	1	4393.52	3.25	0	83.86	0	1.4	0	0	11.03	0	0	0	0	0	0	-40.22	-40.22
Inverter Transformer	MV3-15 T	368351	4907477	2	0	0	56.1	56.1	1	4413.66	3.25	0	83.9	0	1.41	0	0	11.05	0	0	0	0	0	0	-40.3	-40.3
Inverter Transformer	MV3-16 T	368509	4907475	2	0	0	56.1	56.1	1	4467.67	3.25	0	84	0	1.43	0	0	11.13	0	0	0	0	0	0	-40.5	-40.5
Inverter Transformer	MV3-10 T	368162	4907669	2	0	0	56.1	56.1	1	4536.97	3.25	0	84.14	0	1.45	0	0	11.23	0	0	0	0	0	0	-40.76	-40.76
Inverter Transformer	MV3-14 T	368678	4907498	2	0	0	56.1	56.1	1	4553.88	3.25	0	84.17	0	1.46	0	0	11.25	0	0	0	0	0	0	-40.82	-40.82
Inverter Transformer	MV3-7 T	367951	4907754	2	0	0	56.1	56.1	1	4563.43	3.25	0	84.19	0	1.46	0	0	11.26	0	0	0	0	0	0	-40.85	-40.85
Inverter Transformer	MV3-11 T	368340	4907662	2	0	0	56.1	56.1	1	4584.63	3.25	0	84.23	0	1.47	0	0	11.29	0	0	0	0	0	0	-40.93	-40.93
Inverter Transformer	MV3-9 T	368517	4907703	2	0	0	56.1	56.1	1	4683.14	3.25	0	84.41	0	1.51	0	0	11.43	0	0	0	0	0	0	-41.29	-41.29
Inverter Transformer	MV3-6 T	368156	4907834	2	0	0	56.1	56.1	1	4693.6	3.25	0	84.43	0	1.51	0	0	11.44	0	0	0	0	0	0	-41.33	-41.33

	Inverter Transformer	MV3-3 T	367944	4907927	2	0	0	56.1	56.1	1	4729.98	3.25	0	84.5	0	1.53	0	0	11.49	0	0	0	0	0	0	-41.46	-41.46
	Inverter Transformer	MV3-8 T	368685	4907712	2	0	0	56.1	56.1	1	4753.52	3.25	0	84.54	0	1.54	0	0	11.52	0	0	0	0	0	0	-41.54	-41.54
	Inverter Transformer	MV3-5 T	368335	4907843	2	0	0	56.1	56.1	1	4754.73	3.25	0	84.54	0	1.54	0	0	11.53	0	0	0	0	0	0	-41.55	-41.55
	Inverter Transformer	MV3-1 T	368150	4907976	2	0	0	56.1	56.1	1	4828.63	3.25	0	84.68	0	1.56	0	0	11.63	0	0	0	0	0	0	-41.81	-41.81
	Inverter Transformer	MV3-4 T	368507	4907925	2	0	0	56.1	56.1	1	4888.02	3.25	0	84.78	0	1.58	0	0	11.71	0	0	0	0	0	0	-42.01	-42.01
	Inverter Transformer	MV3-2 T	368677	4907928	2	0	0	56.1	56.1	1	4950.71	3.25	0	84.89	0	1.61	0	0	11.79	0	0	0	0	0	0	-42.23	-42.23
	Inverter Transformer	MV6-3 T	370202	4907140	2	0	0	56.1	56.1	1	5073.76	3.25	0	85.11	0	1.65	0	0	11.95	0	0	0	0	0	0	-42.65	-42.65
	Inverter Transformer	MV6-2 T	370091	4907339	2	0	0	56.1	56.1	1	5154.8	3.25	0	85.24	0	1.68	0	0	12.06	0	0	0	0	0	0	-42.92	-42.92
	Inverter Transformer	MV4-15 T	369170	4908481	2	0	0	56.1	56.1	1	5651.88	3.25	0	86.04	0	1.85	0	0	12.68	0	0	0	0	0	0	-44.52	-44.52
	Inverter Transformer	MV4-14 T	369182	4908507	2	0	0	56.1	56.1	1	5680.51	3.25	0	86.09	0	1.86	0	0	12.72	0	0	0	0	0	0	-44.61	-44.61
	Inverter Transformer	MV4-13 T	369057	4908605	2	0	0	56.1	56.1	1	5720.91	3.25	0	86.15	0	1.87	0	0	12.77	0	0	0	0	0	0	-44.73	-44.73
	Inverter Transformer	MV4-12 T	369049	4908803	2	0	0	56.1	56.1	1	5901.23	3.25	0	86.42	0	1.93	0	0	12.99	0	0	0	0	0	0	-45.28	-45.28
	Inverter Transformer	MV4-11 T	369269	4908855	2	0	0	56.1	56.1	1	6033.99	3.25	0	86.61	0	1.98	0	0	13.14	0	0	0	0	0	0	-45.67	-45.67
	Inverter Transformer	MV4-10 T	369307	4908858	2	0	0	56.1	56.1	1	6052.01	3.25	0	86.64	0	1.98	0	0	13.16	0	0	0	0	0	0	-45.73	-45.73
	Inverter Transformer	MV5-6 T	369987	4908507	2	0	0	56.1	56.1	1	6054.42	3.25	0	86.64	0	1.98	0	0	13.17	0	0	0	0	0	0	-45.73	-45.73
	Inverter Transformer	MV4-7 T	369040	4909001	2	0	0	56.1	56.1	1	6082.31	3.25	0	86.68	0	1.99	0	0	13.2	0	0	0	0	0	0	-45.81	-45.81
	Inverter Transformer	MV4-8 T	369262	4909001	2	0	0	56.1	56.1	1	6165.39	3.25	0	86.8	0	2.02	0	0	13.3	0	0	0	0	0	0	-46.05	-46.05
	Inverter Transformer	MV4-9 T	369284	4909001	2	0	0	56.1	56.1	1	6173.99	3.25	0	86.81	0	2.02	0	0	13.31	0	0	0	0	0	0	-46.08	-46.08
	Inverter Transformer	MV5-5 T	370021	4908690	2	0	0	56.1	56.1	1	6229.01	3.25	0	86.89	0	2.04	0	0	13.37	0	0	0	0	0	0	-46.24	-46.24
	Inverter Transformer	MV4-4 T	369033	4909199	2	0	0	56.1	56.1	1	6265.11	3.25	0	86.94	0	2.05	0	0	13.41	0	0	0	0	0	0	-46.34	-46.34
	Inverter Transformer	MV4-6 T	369249	4909192	2	0	0	56.1	56.1	1	6336.81	3.25	0	87.04	0	2.07	0	0	13.49	0	0	0	0	0	0	-46.54	-46.54
	Inverter Transformer	MV4-5 T	369283	4909199	2	0	0	56.1	56.1	1	6356.18	3.25	0	87.06	0	2.07	0	0	13.52	0	0	0	0	0	0	-46.6	-46.6
	Inverter Transformer	MV5-2 T	370011	4908853	2	0	0	56.1	56.1	1	6365.03	3.25	0	87.08	0	2.08	0	0	13.53	0	0	0	0	0	0	-46.62	-46.62
	Inverter Transformer	MV5-4 T	370330	4908707	2	0	0	56.1	56.1	1	6405.69	3.25	0	87.13	0	2.09	0	0	13.57	0	0	0	0	0	0	-46.74	-46.74
	Inverter Transformer	MV4-1 T	369017	4909397	2	0	0	56.1	56.1	1	6445.8	3.25	0	87.19	0	2.1	0	0	13.62	0	0	0	0	0	0	-46.85	-46.85
	Inverter Transformer	MV5-3 T	370237	4908851	2	0	0	56.1	56.1	1	6478.21	3.25	0	87.23	0	2.11	0	0	13.66	0	0	0	0	0	0	-46.94	-46.94
	Inverter Transformer	MV4-3 T	369234	4909397	2	0	0	56.1	56.1	1	6521.65	3.25	0	87.29	0	2.12	0	0	13.7	0	0	0	0	0	0	-47.06	-47.06
	Inverter Transformer	MV4-2 T	369267	4909397	2	0	0	56.1	56.1	1	6533.74	3.25	0	87.3	0	2.13	0	0	13.72	0	0	0	0	0	0	-47.09	-47.09
	Inverter Transformer	MV5-1 T	370015	4909142	2	0	0	56.1	56.1	1	6619.57	3.25	0	87.42	0	2.15	0	0	13.81	0	0	0	0	0	0	-47.32	-47.32
	Line Reactor	NGR	369421	4908787.5	5	0	0	45.4	45.4	1	6035.1	5.25	0	86.61	0	3.24	1.36	0.11	2.47	0	0	0	0	0	0	-48.33	-48.33
Limit. Valu	0	0																								
Level D/N:	33.4923	33.4923																								

Receiver: Existing Noise Receptor
ID: G-3
X: 366876.2
Y: 4903397.1
Z: 4.5
Ground: 0

ISO	Description	ID	X	Y	Z	Ground	ReflOrd	LxT	LxN	L/A	Dist.	hm	Freq	Adiv	K0b	Agr	Abar	z	Aatm	Afol	Ahous	Cmet	CmetN	Dc	RL	LtotT	LtotN
	Gardiner Substation	G_Sub	366586.3	4903349.9	2.5	0	0	90.8	90.8	1	293.72	4.24	0	60.36	0	0.67	6.47	0.27	0.92	0	0	0	0	0	0	22.35	22.35
	Inverters	G_Inv2	366676.9	4903239.1	2	0	0	87.7	87.7	1	254.34	3.25	0	59.11	0	2.55	0	0	0.41	0	0	0	0	0	0	25.59	25.59
	Inverters	G_Inv4	366732.8	4903105	2	0	0	87.7	87.7	1	325.41	3.25	0	61.25	0	2.47	0	0	0.51	0	0	0	0	0	0	23.43	23.43
	Sol_Luce Substation	S_Substation	369426	4908792	3.5	0	0	112.1	112.1	1	5967.11	5.25	0	86.52	0	1.15	2.65	0.32	9.71	0	0	0	0	0	0	12.05	12.05
	Inverters	G_Inv1	366526.4	4903225.8	2	0	0	87.7	87.7	1	389.5	3.25	0	62.81	0	2.43	0	0	0.61	0	0	0	0	0	0	21.82	21.82
	Inverters	G_Inv3	366583.7	4903091.4	2	0	0	87.7	87.7	1	423.1	3.25	0	63.53	0	2.41	0	0	0.65	0	0	0	0	0	0	21.06	21.06
	Inverters	G_Inv6	366788.5	4902972	2	0	0	87.7	87.7	1	434.06	3.25	0	63.75	0	2.41	0	0	0.67	0	0	0	0	0	0	20.83	20.83
	Inverters	G_Inv5	366638.5	4902958.1	2	0	0	87.7	87.7	1	499.23	3.25	0	64.97	0	2.4	0	0	0.76	0	0	0	0	0	0	19.53	19.53
	Inverter	MV1-15	365315	4904994	2	0	0	100.3	100.3	1	2233.26	3.25	0	77.98	0	0.19	0	0	13.94	0	0	0	0	0	0	8.2	8.2
	Inverters	G_Inv8	366844.5	4902838.5	2	0	0	87.7	87.7	1	559.5	3.25	0	65.96	0	2.4	0	0	0.85	0	0	0	0	0	0	18.46	18.46
	Inverters	G_Inv7	366694.6	4902824.7	2	0	0	87.7	87.7	1	600.52	3.25	0	66.57	0	2.4	0	0	0.9	0	0	0	0	0	0	17.79	17.79
	Inverter	MV1-12	365038	4905386	2	0	0	100.3	100.3	1	2708.27	3.25	0	79.65	0	0.3	0	0	14.85	0	0	0	0	0	0	5.51	5.51
	Inverters	G_Inv10	366900.7	4902704.8	2	0	0	87.7	87.7	1	692.74	3.25	0	67.81	0	2.41	0	0	1.03	0	0	0	0	0	0	16.42	16.42
	Inverter	MV1-11	364655	4905414	2	0	0	100.3	100.3	1	3000.27	3.25	0	80.54	0	0.36	0	0	15.37	0	0	0	0	0	0	4.03	4.03
	Inverter	MV1-8	364788	4905647	2	0	0	100.3	100.3	1	3069.63	3.25	0	80.74	0	0.38	0	0	15.49	0	0	0	0	0	0	3.7	3.7
	Inverters	G_Inv9	366750.9	4902691.8	2	0	0	87.7	87.7	1	716.35	3.25	0	68.1	0	2.41	0	0	1.06	0	0	0	0	0	0	16.09	16.09
	Inverter	MV1-9	364561	4905646	2	0	0	100.3	100.3	1	3227.65	3.25	0	81.18	0	0.4	0	0	15.77	0	0	0	0	0	0	2.96	2.96
	Inverter	MV1-4	364815	4905918	2	0	0	100.3	100.3	1	3256.3	3.25	0	81.25	0	0.41	0	0	15.82	0	0	0	0	0	0	2.83	2.83
	Inverter	MV1-5	364671	4905892	2	0	0	100.3	100.3	1	3329.78	3.25	0	81.45	0	0.42	0	0	15.94	0	0	0	0	0	0	2.5	2.5
	Inverter	MV1-14	365163	4905049	2	0	0	97.3	97.3	1	2379.88	3.25	0	78.53	0	0.23	0	0	14.23	0	0	0	0	0	0	4.32	4.32
	Inverter	MV1-2	364753	4906063	2	0	0	100.3	100.3	1	3408.08	3.25	0	81.65	0	0.44	0	0	16.08	0	0	0	0	0	0	2.15	2.15
	Inverter	MV2-3	365820	4906641	2	0	0	100.3	100.3	1	3411.52	3.25	0	81.66	0	0.44	0	0	16.08	0	0	0	0	0	0	2.13	2.13
	Inverter	MV1-6	364477	4905835	2	0	0	100.3	100.3	1	3420.46	3.25	0	81.68	0	0.44	0	0	16.1	0	0	0	0	0	0	2.09	2.09
	Inverter	MV2-4	365586	4906624	2	0	0	100.3	100.3	1	3475.27	3.25	0	81.82	0	0.45	0	0	16.19	0	0	0	0	0	0	1.86	1.86
	Inverter	MV1-1	364715	4906166	2	0	0	100.3	100.3	1	3512.49	3.25	0	81.91	0	0.45	0	0	16.25	0	0	0	0	0	0	1.69	1.69
	Inverter	MV1-13	364731	4905241	2	0	0	97.3	97.3	1	2828.76	3.25	0	80.03	0	0.33	0	0	15.07	0	0	0	0	0	0	1.89	1.89
	Inverter	MV1-10	365004	4905564	2	0	0	97.3	97.3	1	2863.67	3.25	0	80.14	0	0.34	0	0	15.13	0	0	0	0	0	0	1.71	1.71
	Inverter	MV3-18	367752	4907412	2	0	0	100.3	100.3	1	4109.31	3.25	0	83.28	0	0.54	0	0	17.22	0	0	0	0	0	0	-0.73	-0.73
	Inverter	MV3-21	368478	4907206	2	0	0	100.3	100.3	1	4132.01	3.25	0	83.32	0	0.55	0	0	17.26	0	0	0	0	0	0	-0.81	-0.81
	Inverter	MV3-19	368357	4907347	2	0	0	100.3	100.3	1	4218.35	3.25	0	83.5	0	0.56	0	0	17.39	0	0	0	0	0	0	-1.14	-1.14
	Inverter	MV3-12	367668	4907594	2	0	0	100.3	100.3	1	4270.94	3.25	0	83.61	0	0.56	0	0	17.48	0	0	0	0	0	0	-1.34	-1.34
	Inverter	MV3-17	368178	4907472	2	0	0	100.3	100.3	1	4277.79	3.25	0	83.62	0	0.56	0	0	17.49	0	0	0	0	0	0	-1.36	-1.36
	Inverter	MV3-20	368689	4907317	2	0	0	100.3	100.3	1	4318.78	3.25	0	83.71	0	0.57	0	0	17.55	0	0	0	0	0	0	-1.52	-1.52

Inverter	MV3-13	367963	4907577	2	0	0	100.3	100.3	1	4318.88	3.25	0	83.71	0	0.57	0	0	17.55	0	0	0	0	0	0	-1.52	-1.52
Inverter	MV3-15	368357	4907477	2	0	0	100.3	100.3	1	4340.32	3.25	0	83.75	0	0.57	0	0	17.58	0	0	0	0	0	0	-1.59	-1.59
Inverter	MV1-7	364925	4905782	2	0	0	97.3	97.3	1	3081.39	3.25	0	80.77	0	0.38	0	0	15.52	0	0	0	0	0	0	0.64	0.64
Inverter	MV3-16	368514	4907475	2	0	0	100.3	100.3	1	4394.5	3.25	0	83.86	0	0.58	0	0	17.67	0	0	0	0	0	0	-1.79	-1.79
Inverter	MV3-10	368167	4907669	2	0	0	100.3	100.3	1	4462.66	3.25	0	83.99	0	0.59	0	0	17.77	0	0	0	0	0	0	-2.04	-2.04
Inverter	MV3-14	368684	4907498	2	0	0	100.3	100.3	1	4481.69	3.25	0	84.03	0	0.59	0	0	17.8	0	0	0	0	0	0	-2.11	-2.11
Inverter	MV3-7	367945	4907754	2	0	0	100.3	100.3	1	4486.08	3.25	0	84.04	0	0.59	0	0	17.81	0	0	0	0	0	0	-2.12	-2.12
Inverter	MV3-11	368346	4907662	2	0	0	100.3	100.3	1	4511.06	3.25	0	84.09	0	0.59	0	0	17.85	0	0	0	0	0	0	-2.21	-2.21
Inverter	MV3-9	368512	4907703	2	0	0	100.3	100.3	1	4606.15	3.25	0	84.27	0	0.6	0	0	17.99	0	0	0	0	0	0	-2.55	-2.55
Inverter	MV3-6	368162	4907834	2	0	0	100.3	100.3	1	4619.46	3.25	0	84.29	0	0.6	0	0	18.01	0	0	0	0	0	0	-2.6	-2.6
Inverter	MV3-3	367939	4907927	2	0	0	100.3	100.3	1	4652.91	3.25	0	84.35	0	0.61	0	0	18.06	0	0	0	0	0	0	-2.71	-2.71
Inverter	MV3-8	368680	4907712	2	0	0	100.3	100.3	1	4676.76	3.25	0	84.4	0	0.61	0	0	18.1	0	0	0	0	0	0	-2.8	-2.8
Inverter	MV6-3	370207	4907140	2	0	0	100.3	100.3	1	5010.34	3.25	0	85	0	0.64	0	0	18.6	0	0	0	0	0	0	-3.92	-3.92
Inverter	MV2-1	365842	4906816	2	0	0	97.3	97.3	1	3571.9	3.25	0	82.06	0	0.46	0	0	16.35	0	0	0	0	0	0	-1.56	-1.56
Inverter	MV6-2	370085	4907339	2	0	0	100.3	100.3	1	5082.81	3.25	0	85.12	0	0.65	0	0	18.7	0	0	0	0	0	0	-4.16	-4.16
Inverter	MV4-11	369264	4908855	2	0	0	100.3	100.3	1	5957.37	3.25	0	86.5	0	0.7	0	0	19.94	0	0	0	0	0	0	-6.83	-6.83
Inverter	MV4-10	369312	4908858	2	0	0	100.3	100.3	1	5979.51	3.25	0	86.53	0	0.7	0	0	19.97	0	0	0	0	0	0	-6.89	-6.89
Inverter	MV4-7	369035	4909001	2	0	0	100.3	100.3	1	6005.34	3.25	0	86.57	0	0.71	0	0	20	0	0	0	0	0	0	-6.96	-6.96
Inverter	MV4-8	369256	4909001	2	0	0	100.3	100.3	1	6088.28	3.25	0	86.69	0	0.71	0	0	20.11	0	0	0	0	0	0	-7.2	-7.2
Inverter	MV4-9	369289	4909001	2	0	0	100.3	100.3	1	6101.25	3.25	0	86.71	0	0.71	0	0	20.13	0	0	0	0	0	0	-7.23	-7.23
Inverter	MV5-5	370015	4908690	2	0	0	100.3	100.3	1	6153.61	3.25	0	86.78	0	0.71	0	0	20.2	0	0	0	0	0	0	-7.38	-7.38
Inverter	MV4-4	369027	4909199	2	0	0	100.3	100.3	1	6187.73	3.25	0	86.83	0	0.71	0	0	20.25	0	0	0	0	0	0	-7.48	-7.48
Inverter	MV4-6	369243	4909192	2	0	0	100.3	100.3	1	6259.6	3.25	0	86.93	0	0.71	0	0	20.34	0	0	0	0	0	0	-7.67	-7.67
Inverter	MV4-5	369289	4909199	2	0	0	100.3	100.3	1	6283.6	3.25	0	86.96	0	0.71	0	0	20.37	0	0	0	0	0	0	-7.74	-7.74
Inverter	MV5-2	370006	4908853	2	0	0	100.3	100.3	1	6289.87	3.25	0	86.97	0	0.71	0	0	20.38	0	0	0	0	0	0	-7.76	-7.76
Inverter	MV5-4	370324	4908707	2	0	0	100.3	100.3	1	6331.06	3.25	0	87.03	0	0.71	0	0	20.44	0	0	0	0	0	0	-7.87	-7.87
Inverter	MV4-1	369011	4909397	2	0	0	100.3	100.3	1	6368.37	3.25	0	87.08	0	0.71	0	0	20.49	0	0	0	0	0	0	-7.97	-7.97
Inverter	MV5-3	370231	4908851	2	0	0	100.3	100.3	1	6403.1	3.25	0	87.13	0	0.71	0	0	20.53	0	0	0	0	0	0	-8.06	-8.06
Inverter	MV4-3	369229	4909397	2	0	0	100.3	100.3	1	6444.72	3.25	0	87.18	0	0.71	0	0	20.59	0	0	0	0	0	0	-8.17	-8.17
Inverter	MV4-2	369272	4909397	2	0	0	100.3	100.3	1	6460.55	3.25	0	87.21	0	0.71	0	0	20.61	0	0	0	0	0	0	-8.22	-8.22
Inverter	MV5-1	370020	4909142	2	0	0	100.3	100.3	1	6548.84	3.25	0	87.32	0	0.71	0	0	20.72	0	0	0	0	0	0	-8.45	-8.45
Inverter	MV6-1	370235	4907364	2	0	0	97.3	97.3	1	5197.87	3.25	0	85.32	0	0.66	0	0	18.87	0	0	0	0	0	0	-7.53	-7.53
DSTATCOM - 10 MVAR #2	DSAT2	369403	4908757	2.5	0	0	96.6	96.6	1	5925.64	3.5	0	86.45	0	3.77	0	0	3.8	0	0	0	0	0	0	2.6	2.6
DSTATCOM - 10 MVAR #1	DSAT1	369437	4908757	2.5	0	0	96.6	96.6	1	5940.22	3.5	0	86.48	0	3.77	0	0	3.81	0	0	0	0	0	0	2.57	2.57
SubstationTransformer	W_ST	369711.17	4906112.3	2.5	0	0	92	92	1	3925.46	3.5	0	82.88	0	0.31	0	-0.1	7.27	0	0	0	0	0	0	1.52	1.52
Inverter	MV2-2	365977	4906654	2	0	0	89.1	89.1	1	3378.75	3.25	0	81.58	0	1.24	0	0	10.18	0	0	0	0	0	0	-3.94	-3.94
Inverter	MV1-3	364440	4906039	2	0	0	89.1	89.1	1	3593.7	3.25	0	82.11	0	1.29	0	0	10.5	0	0	0	0	0	0	-4.84	-4.84
Westbrook Inverter Enclosur	W_INV3	369508	4906164	2	0	0	89.1	89.1	1	3818.65	3.25	0	82.64	0	1.35	0	0	10.83	0	0	0	0	0	0	-5.75	-5.75
Westbrook Inverter Enclosur	W_INV2	369374	4906388	2	0	0	89.1	89.1	1	3896.73	3.25	0	82.81	0	1.37	0	0	10.94	0	0	0	0	0	0	-6.06	-6.06
Westbrook Inverter Enclosur	W_INV4	369673	4906164	2	0	0	89.1	89.1	1	3934.19	3.25	0	82.9	0	1.38	0	0	10.99	0	0	0	0	0	0	-6.21	-6.21
Inverter	MV3-22	368656	4907142	2	0	0	89.1	89.1	1	4146.32	3.25	0	83.35	0	1.43	0	0	11.29	0	0	0	0	0	0	-7.02	-7.02
Westbrook Inverter Enclosur	W_INV7	369780	4906417	2	0	0	89.1	89.1	1	4189.49	3.25	0	83.44	0	1.44	0	0	11.35	0	0	0	0	0	0	-7.18	-7.18
Westbrook Inverter Enclosur	W_INV5	369719	4906574	2	0	0	89.1	89.1	1	4263.12	3.25	0	83.59	0	1.46	0	0	11.46	0	0	0	0	0	0	-7.45	-7.45
Westbrook Inverter Enclosur	W_INV6	369875	4906578	2	0	0	89.1	89.1	1	4371.61	3.25	0	83.81	0	1.48	0	0	11.61	0	0	0	0	0	0	-7.85	-7.85
Inverter	MV3-5	368340	4907843	2	0	0	89.1	89.1	1	4680.68	3.25	0	84.41	0	1.56	0	0	12.03	0	0	0	0	0	0	-8.94	-8.94
Inverter	MV3-1	368156	4907976	2	0	0	89.1	89.1	1	4754.39	3.25	0	84.54	0	1.58	0	0	12.13	0	0	0	0	0	0	-9.2	-9.2
Inverter	MV3-4	368502	4907925	2	0	0	89.1	89.1	1	4810.94	3.25	0	84.64	0	1.59	0	0	12.21	0	0	0	0	0	0	-9.39	-9.39
Inverter	MV3-2	368671	4907928	2	0	0	89.1	89.1	1	4873.43	3.25	0	84.76	0	1.61	0	0	12.29	0	0	0	0	0	0	-9.6	-9.6
Fixed Reactor Bank 1	FRB1	369378	4908755	6	0	0	89.8	89.8	1	5913.21	5.25	0	86.44	0	-0.43	0	0	9.65	0	0	0	0	0	0	-5.88	-5.88
Fixed Reactor Bank 2	FRB2	369464	4908755	6	0	0	89.8	89.8	1	5950.11	5.25	0	86.49	0	-0.43	0	0	9.69	0	0	0	0	0	0	-5.98	-5.98
Inverter	MV4-15	369176	4908481	2	0	0	89.1	89.1	1	5579.89	3.25	0	85.93	0	1.78	0	0	13.23	0	0	0	0	0	0	-11.88	-11.88
Inverter	MV4-14	369176	4908507	2	0	0	89.1	89.1	1	5603.58	3.25	0	85.97	0	1.79	0	0	13.26	0	0	0	0	0	0	-11.96	-11.96
Inverter	MV4-13	369051	4908605	2	0	0	89.1	89.1	1	5643.76	3.25	0	86.03	0	1.8	0	0	13.31	0	0	0	0	0	0	-12.08	-12.08
Westbrook Inverter Enclosur	W_INV1	369409	4906578	2	0	0	86.1	86.1	1	4066.1	3.25	0	83.18	0	1.41	0	0	11.18	0	0	0	0	0	0	-9.71	-9.71
Inverter	MV4-12	369043	4908803	2	0	0	89.1	89.1	1	5823.98	3.25	0	86.3	0	1.84	0	0	13.54	0	0	0	0	0	0	-12.63	-12.63
Inverter	MV5-6	369982	4908507	2	0	0	89.1	89.1	1	5979.72	3.25	0	86.53	0	1.88	0	0	13.74	0	0	0	0	0	0	-13.09	-13.09
Inverter	MV6-4	370250	4906966	2	0	0	86.1	86.1	1	4911.17	3.25	0	84.82	0	1.62	0	0	12.34	0	0	0	0	0	0	-12.73	-12.73
Westbrook Inverter Transfor	W_INVTR1	369403	4906578	2	0	0	78.2	78.2	1	4062.37	3.25	0	83.18	0	-2.98	0	0	2.08	0	0	0	0	0	0	-4.03	-4.03
Westbrook Inverter Transfor	W_INVTR3	369514	4906164	2	0	0	77.3	77.3	1	3822.79	3.25	0	82.65	0	-2.92	0	0	1.99	0	0	0	0	0	0	-4.37	-4.37
Westbrook Inverter Transfor	W_INVTR2	369368	4906388	2	0	0	77.3	77.3	1	3892.89	3.25	0	82.81	0	-2.94	0	0	2.01	0	0	0	0	0	0	-4.54	-4.54
Westbrook Inverter Transfor	W_INVTR4	369679	4906164	2	0	0	77.3	77.3	1	3938.46	3.25	0	82.91	0	-2.95	0	0	2.03	0	0	0	0	0	0	-4.65	-4.65
Westbrook Inverter Transfor	W_INVTR7	369786	4906417	2	0	0	77.3	77.3	1	4193.65	3.25	0	83.45	0	-3.01	0	0	2.13	0	0	0	0	0	0	-5.23	-5.23
Westbrook Inverter Transfor	W_INVTR5	369725	4906574	2	0	0	77.3	77.3	1	4267.13	3.25	0	83.6	0	-3.02	0	0	2.15	0	0	0	0	0	0	-5.39	-5.39
Westbrook Inverter Transfor	W_INVTR6	369881	4906578	2	0	0	77.3	77.3	1	4375.72	3.25	0	83.82	0	-3.05	0	0	2.19	0	0	0	0	0	0	-5.63	-5.63
Inverter Transformer	MV1-14 T	365157	4905049	2	0	0	69.4	69.4	1	2384.2	3.25	0	78.55	0	2.31	0	0	5.34	0	0	0	0	0	0	-16.84	-16.84
Inverter Transformer	MV1-13 T	364725	4905241	2	0	0	69.4	69.4	1	2833.31	3.25	0	80.05	0	2.46	0	0	5.74	0	0	0	0	0	0	-18.89	-18.89
Inverter Transformer	MV1-10 T	365010	4905564	2	0	0	69.4	69.4	1	2859.75	3.25	0	80.13	0	2.46	0	0	5.76	0	0	0	0	0	0	-19	-19
Inverter Transformer	MV1-7 T	364919	4905782	2	0	0	69.4	69.4	1	3085.19	3.25	0	80.79	0	2.53	0	0	5.95	0	0	0	0	0	0	-19.92	-19.92
Inverter Transformer	MV2-1 T	365836	4906816	2	0	0	69.4	69.4	1	3573.64	3.25	0	82.06	0	2.67	0	0	6.35	0	0	0	0	0	0	-21.74	-21.74
Inverter Transformer	MV6-4 T	370244	4906966	2	0	0	69.4	69.4	1	4907.05	3.25	0	84.82	0	2.99	0	0	7.32	0	0	0	0	0	0	-25.78	-25.78
Inverter Transformer	MV6-1 T	370230	4907364	2	0	0	69.4	69.4	1	5194.64	3.25	0	85.31	0	3.05	0	0	7.51	0	0	0	0	0	0	-26.52	-26.52
Inverter Transformer	MV1-15 T	365309	4904994	2	0	0	56.1	56.1	1	2237.46	3.25	0	78	0	0.5	0	0	7.5	0	0	0	0	0	0	-29.94	-29.94
Inverter Transformer	MV1-12 T	365044	4905386	2	0	0	56.1	56.1	1	2704.2	3.25	0	79.64	0	0.7	0	0	8.36	0	0	0	0	0	0	-32.64	-32.64
Inverter Transformer	MV1-11 T	364649	4905414	2	0	0	56.1	56.1	1	3004.71	3.25	0	80.56	0	0.83	0	0	8.88	0	0	0	0	0	0	-34.21	-34.21

	Inverter Transformer	MV1-8 T	364782	4905647	2	0	0	56.1	56.1	1	3073.72	3.25	0	80.75	0	0.86	0	0	8.99	0	0	0	0	0	0	-34.55	-34.55
	Inverter Transformer	MV1-9 T	364555	4905646	2	0	0	56.1	56.1	1	3231.95	3.25	0	81.19	0	0.93	0	0	9.26	0	0	0	0	0	0	-35.31	-35.31
	Inverter Transformer	MV1-4 T	364821	4905918	2	0	0	56.1	56.1	1	3252.51	3.25	0	81.24	0	0.94	0	0	9.29	0	0	0	0	0	0	-35.41	-35.41
	Inverter Transformer	MV1-5 T	364676	4905892	2	0	0	56.1	56.1	1	3326.47	3.25	0	81.44	0	0.97	0	0	9.41	0	0	0	0	0	0	-35.76	-35.76
	Inverter Transformer	MV2-2 T	365982	4906654	2	0	0	56.1	56.1	1	3377.42	3.25	0	81.57	0	0.99	0	0	9.49	0	0	0	0	0	0	-35.99	-35.99
	Inverter Transformer	MV1-2 T	364759	4906063	2	0	0	56.1	56.1	1	3404.35	3.25	0	81.64	0	1	0	0	9.54	0	0	0	0	0	0	-36.12	-36.12
	Inverter Transformer	MV2-3 T	365814	4906641	2	0	0	56.1	56.1	1	3413.38	3.25	0	81.66	0	1	0	0	9.55	0	0	0	0	0	0	-36.16	-36.16
	Inverter Transformer	MV1-6 T	364482	4905835	2	0	0	56.1	56.1	1	3416.95	3.25	0	81.67	0	1.01	0	0	9.56	0	0	0	0	0	0	-36.18	-36.18
	Inverter Transformer	MV2-4 T	365590	4906628	2	0	0	56.1	56.1	1	3477.5	3.25	0	81.83	0	1.03	0	0	9.65	0	0	0	0	0	0	-36.45	-36.45
	Inverter Transformer	MV1-1 T	364721	4906166	2	0	0	56.1	56.1	1	3508.8	3.25	0	81.9	0	1.04	0	0	9.7	0	0	0	0	0	0	-36.59	-36.59
	Inverter Transformer	MV1-3 T	364435	4906039	2	0	0	56.1	56.1	1	3597.1	3.25	0	82.12	0	1.08	0	0	9.84	0	0	0	0	0	0	-36.98	-36.98
	Inverter Transformer	MV3-18 T	367757	4907412	2	0	0	56.1	56.1	1	4110.38	3.25	0	83.28	0	1.29	0	0	10.62	0	0	0	0	0	0	-39.12	-39.12
	Inverter Transformer	MV3-21 T	368484	4907206	2	0	0	56.1	56.1	1	4134.34	3.25	0	83.33	0	1.3	0	0	10.65	0	0	0	0	0	0	-39.22	-39.22
	Inverter Transformer	MV3-22 T	368661	4907142	2	0	0	56.1	56.1	1	4148.47	3.25	0	83.36	0	1.3	0	0	10.67	0	0	0	0	0	0	-39.28	-39.28
	Inverter Transformer	MV3-19 T	368352	4907347	2	0	0	56.1	56.1	1	4216.6	3.25	0	83.5	0	1.33	0	0	10.77	0	0	0	0	0	0	-39.54	-39.54
	Inverter Transformer	MV3-12 T	367674	4907594	2	0	0	56.1	56.1	1	4272.06	3.25	0	83.61	0	1.35	0	0	10.85	0	0	0	0	0	0	-39.76	-39.76
	Inverter Transformer	MV3-17 T	368183	4907472	2	0	0	56.1	56.1	1	4279.32	3.25	0	83.63	0	1.35	0	0	10.86	0	0	0	0	0	0	-39.79	-39.79
	Inverter Transformer	MV3-20 T	368683	4907317	2	0	0	56.1	56.1	1	4316.27	3.25	0	83.7	0	1.37	0	0	10.92	0	0	0	0	0	0	-39.93	-39.93
	Inverter Transformer	MV3-13 T	367958	4907577	2	0	0	56.1	56.1	1	4317.62	3.25	0	83.7	0	1.37	0	0	10.92	0	0	0	0	0	0	-39.93	-39.93
	Inverter Transformer	MV3-15 T	368351	4907477	2	0	0	56.1	56.1	1	4338.27	3.25	0	83.75	0	1.38	0	0	10.95	0	0	0	0	0	0	-40.01	-40.01
	Inverter Transformer	MV3-16 T	368509	4907475	2	0	0	56.1	56.1	1	4392.64	3.25	0	83.85	0	1.4	0	0	11.02	0	0	0	0	0	0	-40.22	-40.22
	Inverter Transformer	MV3-10 T	368162	4907669	2	0	0	56.1	56.1	1	4461.21	3.25	0	83.99	0	1.42	0	0	11.12	0	0	0	0	0	0	-40.48	-40.48
	Inverter Transformer	MV3-14 T	368678	4907498	2	0	0	56.1	56.1	1	4479.27	3.25	0	84.02	0	1.43	0	0	11.15	0	0	0	0	0	0	-40.54	-40.54
	Inverter Transformer	MV3-7 T	367951	4907754	2	0	0	56.1	56.1	1	4487.51	3.25	0	84.04	0	1.43	0	0	11.16	0	0	0	0	0	0	-40.57	-40.57
	Inverter Transformer	MV3-11 T	368340	4907662	2	0	0	56.1	56.1	1	4509.11	3.25	0	84.08	0	1.44	0	0	11.19	0	0	0	0	0	0	-40.65	-40.65
	Inverter Transformer	MV3-9 T	368517	4907703	2	0	0	56.1	56.1	1	4607.93	3.25	0	84.27	0	1.48	0	0	11.33	0	0	0	0	0	0	-41.02	-41.02
	Inverter Transformer	MV3-6 T	368156	4907834	2	0	0	56.1	56.1	1	4617.79	3.25	0	84.29	0	1.48	0	0	11.34	0	0	0	0	0	0	-41.05	-41.05
	Inverter Transformer	MV3-3 T	367944	4907927	2	0	0	56.1	56.1	1	4654.05	3.25	0	84.36	0	1.5	0	0	11.39	0	0	0	0	0	0	-41.18	-41.18
	Inverter Transformer	MV3-8 T	368685	4907712	2	0	0	56.1	56.1	1	4678.69	3.25	0	84.4	0	1.51	0	0	11.42	0	0	0	0	0	0	-41.27	-41.27
	Inverter Transformer	MV3-5 T	368335	4907843	2	0	0	56.1	56.1	1	4679.12	3.25	0	84.4	0	1.51	0	0	11.42	0	0	0	0	0	0	-41.28	-41.28
	Inverter Transformer	MV3-1 T	368150	4907976	2	0	0	56.1	56.1	1	4752.78	3.25	0	84.54	0	1.53	0	0	11.52	0	0	0	0	0	0	-41.54	-41.54
	Inverter Transformer	MV3-4 T	368507	4907925	2	0	0	56.1	56.1	1	4812.63	3.25	0	84.65	0	1.56	0	0	11.6	0	0	0	0	0	0	-41.75	-41.75
	Inverter Transformer	MV3-2 T	368677	4907928	2	0	0	56.1	56.1	1	4875.65	3.25	0	84.76	0	1.58	0	0	11.69	0	0	0	0	0	0	-41.97	-41.97
	Inverter Transformer	MV6-3 T	370202	4907140	2	0	0	56.1	56.1	1	5007.02	3.25	0	84.99	0	1.63	0	0	11.86	0	0	0	0	0	0	-42.42	-42.42
	Inverter Transformer	MV6-2 T	370091	4907339	2	0	0	56.1	56.1	1	5086.6	3.25	0	85.13	0	1.66	0	0	11.97	0	0	0	0	0	0	-42.69	-42.69
	Inverter Transformer	MV4-15 T	369170	4908481	2	0	0	56.1	56.1	1	5577.42	3.25	0	85.93	0	1.83	0	0	12.59	0	0	0	0	0	0	-44.29	-44.29
	Inverter Transformer	MV4-14 T	369182	4908507	2	0	0	56.1	56.1	1	5606.05	3.25	0	85.97	0	1.84	0	0	12.63	0	0	0	0	0	0	-44.38	-44.38
	Inverter Transformer	MV4-13 T	369057	4908605	2	0	0	56.1	56.1	1	5646.07	3.25	0	86.03	0	1.85	0	0	12.68	0	0	0	0	0	0	-44.5	-44.5
	Inverter Transformer	MV4-12 T	369049	4908803	2	0	0	56.1	56.1	1	5826.22	3.25	0	86.31	0	1.91	0	0	12.9	0	0	0	0	0	0	-45.05	-45.05
	Inverter Transformer	MV4-11 T	369269	4908855	2	0	0	56.1	56.1	1	5959.38	3.25	0	86.5	0	1.95	0	0	13.05	0	0	0	0	0	0	-45.45	-45.45
	Inverter Transformer	MV4-10 T	369307	4908858	2	0	0	56.1	56.1	1	5977.48	3.25	0	86.53	0	1.96	0	0	13.08	0	0	0	0	0	0	-45.51	-45.51
	Inverter Transformer	MV5-6 T	369987	4908507	2	0	0	56.1	56.1	1	5982.32	3.25	0	86.54	0	1.96	0	0	13.08	0	0	0	0	0	0	-45.52	-45.52
	Inverter Transformer	MV4-7 T	369040	4909001	2	0	0	56.1	56.1	1	6007.14	3.25	0	86.57	0	1.97	0	0	13.11	0	0	0	0	0	0	-45.59	-45.59
	Inverter Transformer	MV4-8 T	369262	4909001	2	0	0	56.1	56.1	1	6090.63	3.25	0	86.69	0	1.99	0	0	13.21	0	0	0	0	0	0	-45.84	-45.84
	Inverter Transformer	MV4-9 T	369284	4909001	2	0	0	56.1	56.1	1	6099.28	3.25	0	86.71	0	2	0	0	13.22	0	0	0	0	0	0	-45.86	-45.86
	Inverter Transformer	MV5-5 T	370021	4908690	2	0	0	56.1	56.1	1	6156.67	3.25	0	86.79	0	2.01	0	0	13.29	0	0	0	0	0	0	-46.03	-46.03
	Inverter Transformer	MV4-4 T	369033	4909199	2	0	0	56.1	56.1	1	6189.82	3.25	0	86.83	0	2.02	0	0	13.33	0	0	0	0	0	0	-46.12	-46.12
	Inverter Transformer	MV4-6 T	369249	4909192	2	0	0	56.1	56.1	1	6261.87	3.25	0	86.93	0	2.05	0	0	13.41	0	0	0	0	0	0	-46.33	-46.33
	Inverter Transformer	MV4-5 T	369283	4909199	2	0	0	56.1	56.1	1	6281.3	3.25	0	86.96	0	2.05	0	0	13.43	0	0	0	0	0	0	-46.39	-46.39
	Inverter Transformer	MV5-2 T	370011	4908853	2	0	0	56.1	56.1	1	6292.36	3.25	0	86.98	0	2.06	0	0	13.44	0	0	0	0	0	0	-46.42	-46.42
	Inverter Transformer	MV5-4 T	370330	4908707	2	0	0	56.1	56.1	1	6334.33	3.25	0	87.03	0	2.07	0	0	13.49	0	0	0	0	0	0	-46.54	-46.54
	Inverter Transformer	MV4-1 T	369017	4909397	2	0	0	56.1	56.1	1	6370.39	3.25	0	87.08	0	2.08	0	0	13.53	0	0	0	0	0	0	-46.64	-46.64
	Inverter Transformer	MV5-3 T	370237	4908851	2	0	0	56.1	56.1	1	6406.25	3.25	0	87.13	0	2.09	0	0	13.57	0	0	0	0	0	0	-46.74	-46.74
	Inverter Transformer	MV4-3 T	369234	4909397	2	0	0	56.1	56.1	1	6446.55	3.25	0	87.19	0	2.1	0	0	13.62	0	0	0	0	0	0	-46.85	-46.85
	Inverter Transformer	MV4-2 T	369267	4909397	2	0	0	56.1	56.1	1	6458.69	3.25	0	87.2	0	2.11	0	0	13.63	0	0	0	0	0	0	-46.88	-46.88
	Inverter Transformer	MV5-1 T	370015	4909142	2	0	0	56.1	56.1	1	6546.45	3.25	0	87.32	0	2.13	0	0	13.73	0	0	0	0	0	0	-47.13	-47.13
	Line Reactor	NGR	369421	4908787.5	5	0	0	45.4	45.4	1	5960.91	5.25	0	86.51	0	3.24	1.36	0.11	2.44	0	0	0	0	0	0	-48.19	-48.19
Limit. Valu	0	0																								
Level D/N:	31.8709	31.8709																								

Receiver: Existing Noise Receptor
ID: G-4
X: 366782
Y: 4903432
Z: 4.5
Ground: 0

ISO	Description	ID	X	Y	Z	Ground	ReflOrd	LxT	LxN	L/A	Dist.	hm	Freq	Adiv	K0b	Agr	Abar	z	Aatm	Afol	Ahous	Cmet	CmetN	Dc	RL	LtotT	LtotN
	Gardiner Substation	G_Sub	366586.3	4903349.9	2.5	0	0	90.8	90.8	1	212.23	4.23	0	57.54	0	0.91	6.94	0.25	0.69	0	0	0	0	0	0	24.69	24.69
	Inverters	G_Inv2	366676.9	4903239.1	2	0	0	87.7	87.7	1	219.69	3.25	0	57.84	0	2.62	0	0	0.35	0	0	0	0	0	0	26.85	26.85
	Inverters	G_Inv1	366526.4	4903225.8	2	0	0	87.7	87.7	1	328.41	3.25	0	61.33	0	2.47	0	0	0.52	0	0	0	0	0	0	23.35	23.35
	Inverters	G_Inv4	366732.8	4903105	2	0	0	87.7	87.7	1	330.69	3.25	0	61.39	0	2.46	0	0	0.52	0	0	0	0	0	0	23.29	23.29
	Sol_Luce Substation	S_Substation	369426	4908792	3.5	0	0	112.1	112.1	1	5976.65	5.25	0	86.53	0	1.15	2.65	0.32	9.72	0	0	0	0	0	0	12.03	12.03
	Inverters	G_Inv3	366583.7	4903091.4	2	0	0	87.7	87.7	1	394.13	3.25	0	62.91	0	2.42	0	0	0.61	0	0	0	0	0	0	21.71	21.71

Inverters	G_Inv6	366788.5	4902972	2	0	0	87.7	87.7	1	460.05	3.25	0	64.26	0	2.4	0	0	0.71	0	0	0	0	0	0	20.29	20.29
Inverters	G_Inv5	366638.5	4902958.1	2	0	0	87.7	87.7	1	495.16	3.25	0	64.89	0	2.4	0	0	0.76	0	0	0	0	0	0	19.61	19.61
Inverter	MV1-15	365315	4904994	2	0	0	100.3	100.3	1	2142.88	3.25	0	77.62	0	0.17	0	0	13.76	0	0	0	0	0	0	8.77	8.77
Inverters	G_Inv8	366844.5	4902838.5	2	0	0	87.7	87.7	1	596.79	3.25	0	66.52	0	2.4	0	0	0.9	0	0	0	0	0	0	17.85	17.85
Inverter	MV1-12	365038	4905386	2	0	0	100.3	100.3	1	2619.09	3.25	0	79.36	0	0.28	0	0	14.68	0	0	0	0	0	0	5.98	5.98
Inverters	G_Inv7	366694.6	4902824.7	2	0	0	87.7	87.7	1	613.56	3.25	0	66.76	0	2.4	0	0	0.92	0	0	0	0	0	0	17.58	17.58
Inverter	MV1-11	364655	4905414	2	0	0	100.3	100.3	1	2907.31	3.25	0	80.27	0	0.34	0	0	15.21	0	0	0	0	0	0	4.49	4.49
Inverter	MV1-8	364788	4905647	2	0	0	100.3	100.3	1	2980.31	3.25	0	80.49	0	0.36	0	0	15.34	0	0	0	0	0	0	4.13	4.13
Inverter	MV1-9	364561	4905646	2	0	0	100.3	100.3	1	3136.02	3.25	0	80.93	0	0.39	0	0	15.61	0	0	0	0	0	0	3.39	3.39
Inverters	G_Inv10	366900.7	4902704.8	2	0	0	87.7	87.7	1	736.83	3.25	0	68.35	0	2.41	0	0	1.09	0	0	0	0	0	0	15.82	15.82
Inverter	MV1-4	364815	4905918	2	0	0	100.3	100.3	1	3170.06	3.25	0	81.02	0	0.39	0	0	15.67	0	0	0	0	0	0	3.23	3.23
Inverters	G_Inv9	366750.9	4902691.8	2	0	0	87.7	87.7	1	740.86	3.25	0	68.39	0	2.41	0	0	1.09	0	0	0	0	0	0	15.76	15.76
Inverter	MV1-14	365163	4905049	2	0	0	97.3	97.3	1	2288.2	3.25	0	78.19	0	0.21	0	0	14.05	0	0	0	0	0	0	4.87	4.87
Inverter	MV1-5	364671	4905892	2	0	0	100.3	100.3	1	3241.59	3.25	0	81.22	0	0.41	0	0	15.79	0	0	0	0	0	0	2.9	2.9
Inverter	MV1-2	364753	4906063	2	0	0	100.3	100.3	1	3322.5	3.25	0	81.43	0	0.42	0	0	15.93	0	0	0	0	0	0	2.53	2.53
Inverter	MV1-6	364477	4905835	2	0	0	100.3	100.3	1	3329.78	3.25	0	81.45	0	0.42	0	0	15.94	0	0	0	0	0	0	2.5	2.5
Inverter	MV2-3	365820	4906641	2	0	0	100.3	100.3	1	3350.09	3.25	0	81.5	0	0.43	0	0	15.98	0	0	0	0	0	0	2.41	2.41
Inverter	MV2-4	365586	4906624	2	0	0	100.3	100.3	1	3408.71	3.25	0	81.65	0	0.44	0	0	16.08	0	0	0	0	0	0	2.15	2.15
Inverter	MV1-1	364715	4906166	2	0	0	100.3	100.3	1	3427.43	3.25	0	81.7	0	0.44	0	0	16.11	0	0	0	0	0	0	2.06	2.06
Inverter	MV1-13	364731	4905241	2	0	0	97.3	97.3	1	2734.79	3.25	0	79.74	0	0.31	0	0	14.9	0	0	0	0	0	0	2.37	2.37
Inverter	MV1-10	365004	4905564	2	0	0	97.3	97.3	1	2776.1	3.25	0	79.87	0	0.32	0	0	14.97	0	0	0	0	0	0	2.16	2.16
Inverter	MV3-18	367752	4907412	2	0	0	100.3	100.3	1	4096.5	3.25	0	83.25	0	0.54	0	0	17.2	0	0	0	0	0	0	-0.68	-0.68
Inverter	MV3-21	368478	4907206	2	0	0	100.3	100.3	1	4137.57	3.25	0	83.33	0	0.55	0	0	17.27	0	0	0	0	0	0	-0.84	-0.84
Inverter	MV3-19	368357	4907347	2	0	0	100.3	100.3	1	4219.94	3.25	0	83.51	0	0.56	0	0	17.4	0	0	0	0	0	0	-1.15	-1.15
Inverter	MV1-7	364925	4905782	2	0	0	97.3	97.3	1	2995.16	3.25	0	80.53	0	0.36	0	0	15.36	0	0	0	0	0	0	1.06	1.06
Inverter	MV3-12	367668	4907594	2	0	0	100.3	100.3	1	4255.26	3.25	0	83.58	0	0.56	0	0	17.45	0	0	0	0	0	0	-1.28	-1.28
Inverter	MV3-17	368178	4907472	2	0	0	100.3	100.3	1	4274.39	3.25	0	83.62	0	0.56	0	0	17.48	0	0	0	0	0	0	-1.35	-1.35
Inverter	MV3-13	367963	4907577	2	0	0	100.3	100.3	1	4309.96	3.25	0	83.69	0	0.57	0	0	17.54	0	0	0	0	0	0	-1.48	-1.48
Inverter	MV3-20	368689	4907317	2	0	0	100.3	100.3	1	4327.8	3.25	0	83.73	0	0.57	0	0	17.56	0	0	0	0	0	0	-1.55	-1.55
Inverter	MV3-15	368357	4907477	2	0	0	100.3	100.3	1	4340.81	3.25	0	83.75	0	0.57	0	0	17.58	0	0	0	0	0	0	-1.6	-1.6
Inverter	MV3-16	368514	4907475	2	0	0	100.3	100.3	1	4398.37	3.25	0	83.87	0	0.58	0	0	17.67	0	0	0	0	0	0	-1.81	-1.81
Inverter	MV3-10	368167	4907669	2	0	0	100.3	100.3	1	4457.62	3.25	0	83.98	0	0.59	0	0	17.77	0	0	0	0	0	0	-2.02	-2.02
Inverter	MV3-7	367945	4907754	2	0	0	100.3	100.3	1	4475.74	3.25	0	84.02	0	0.59	0	0	17.79	0	0	0	0	0	0	-2.09	-2.09
Inverter	MV3-14	368684	4907498	2	0	0	100.3	100.3	1	4488.87	3.25	0	84.04	0	0.59	0	0	17.81	0	0	0	0	0	0	-2.13	-2.13
Inverter	MV3-11	368346	4907662	2	0	0	100.3	100.3	1	4509.88	3.25	0	84.08	0	0.59	0	0	17.85	0	0	0	0	0	0	-2.21	-2.21
Inverter	MV3-9	368512	4907703	2	0	0	100.3	100.3	1	4608.07	3.25	0	84.27	0	0.6	0	0	17.99	0	0	0	0	0	0	-2.56	-2.56
Inverter	MV3-6	368162	4907834	2	0	0	100.3	100.3	1	4613.24	3.25	0	84.28	0	0.6	0	0	18	0	0	0	0	0	0	-2.57	-2.57
Inverter	MV3-3	367939	4907927	2	0	0	100.3	100.3	1	4641.52	3.25	0	84.33	0	0.61	0	0	18.05	0	0	0	0	0	0	-2.67	-2.67
Inverter	MV3-8	368680	4907712	2	0	0	100.3	100.3	1	4681.97	3.25	0	84.41	0	0.61	0	0	18.11	0	0	0	0	0	0	-2.81	-2.81
Inverter	MV2-1	365842	4906816	2	0	0	97.3	97.3	1	3512.13	3.25	0	81.91	0	0.45	0	0	16.25	0	0	0	0	0	0	-1.3	-1.3
Inverter	MV6-3	370207	4907140	2	0	0	100.3	100.3	1	5047.76	3.25	0	85.06	0	0.65	0	0	18.65	0	0	0	0	0	0	-4.05	-4.05
Inverter	MV6-2	370085	4907339	2	0	0	100.3	100.3	1	5116.1	3.25	0	85.18	0	0.65	0	0	18.75	0	0	0	0	0	0	-4.27	-4.27
Inverter	MV4-11	369264	4908855	2	0	0	100.3	100.3	1	5964	3.25	0	86.51	0	0.7	0	0	19.94	0	0	0	0	0	0	-6.85	-6.85
Inverter	MV4-10	369312	4908858	2	0	0	100.3	100.3	1	5986.85	3.25	0	86.54	0	0.7	0	0	19.98	0	0	0	0	0	0	-6.91	-6.91
Inverter	MV4-7	369035	4909001	2	0	0	100.3	100.3	1	6007.48	3.25	0	86.57	0	0.71	0	0	20	0	0	0	0	0	0	-6.97	-6.97
Inverter	MV4-8	369256	4909001	2	0	0	100.3	100.3	1	6093.8	3.25	0	86.7	0	0.71	0	0	20.12	0	0	0	0	0	0	-7.21	-7.21
Inverter	MV4-9	369289	4909001	2	0	0	100.3	100.3	1	6107.28	3.25	0	86.72	0	0.71	0	0	20.14	0	0	0	0	0	0	-7.25	-7.25
Inverter	MV5-5	370015	4908690	2	0	0	100.3	100.3	1	6172.43	3.25	0	86.81	0	0.71	0	0	20.23	0	0	0	0	0	0	-7.43	-7.43
Inverter	MV4-4	369027	4909199	2	0	0	100.3	100.3	1	6188.56	3.25	0	86.83	0	0.71	0	0	20.25	0	0	0	0	0	0	-7.48	-7.48
Inverter	MV4-6	369243	4909192	2	0	0	100.3	100.3	1	6263.72	3.25	0	86.94	0	0.71	0	0	20.35	0	0	0	0	0	0	-7.68	-7.68
Inverter	MV4-5	369289	4909199	2	0	0	100.3	100.3	1	6288.35	3.25	0	86.97	0	0.71	0	0	20.38	0	0	0	0	0	0	-7.75	-7.75
Inverter	MV5-2	370006	4908853	2	0	0	100.3	100.3	1	6307.25	3.25	0	87	0	0.71	0	0	20.41	0	0	0	0	0	0	-7.8	-7.8
Inverter	MV5-4	370324	4908707	2	0	0	100.3	100.3	1	6353.85	3.25	0	87.06	0	0.71	0	0	20.47	0	0	0	0	0	0	-7.93	-7.93
Inverter	MV4-1	369011	4909397	2	0	0	100.3	100.3	1	6367.86	3.25	0	87.08	0	0.71	0	0	20.49	0	0	0	0	0	0	-7.97	-7.97
Inverter	MV5-3	370231	4908851	2	0	0	100.3	100.3	1	6423.49	3.25	0	87.16	0	0.71	0	0	20.56	0	0	0	0	0	0	-8.12	-8.12
Inverter	MV4-3	369229	4909397	2	0	0	100.3	100.3	1	6447.41	3.25	0	87.19	0	0.71	0	0	20.59	0	0	0	0	0	0	-8.18	-8.18
Inverter	MV4-2	369272	4909397	2	0	0	100.3	100.3	1	6463.85	3.25	0	87.21	0	0.71	0	0	20.61	0	0	0	0	0	0	-8.22	-8.22
Inverter	MV5-1	370020	4909142	2	0	0	100.3	100.3	1	6564.2	3.25	0	87.34	0	0.72	0	0	20.74	0	0	0	0	0	0	-8.49	-8.49
Inverter	MV6-1	370235	4907364	2	0	0	97.3	97.3	1	5232.96	3.25	0	85.37	0	0.66	0	0	18.92	0	0	0	0	0	0	-7.64	-7.64
DSTATCOM - 10 MVAR #2	DSAT2	369403	4908757	2.5	0	0	96.6	96.6	1	5935.09	3.5	0	86.47	0	3.77	0	0	3.81	0	0	0	0	0	0	2.59	2.59
DSTATCOM - 10 MVAR #1	DSAT1	369437	4908757	2.5	0	0	96.6	96.6	1	5950.18	3.5	0	86.49	0	3.77	0	0	3.82	0	0	0	0	0	0	2.55	2.55
SubstationTransformer	W_ST	369711.17	4906112.3	2.5	0	0	92	92	1	3970.38	4.25	0	82.98	0	1.35	2.6	0.22	7.33	0	0	0	0	0	0	-2.27	-2.27
Inverter	MV2-2	365977	4906654	2	0	0	89.1	89.1	1	3321.04	3.25	0	81.43	0	1.23	0	0	10.1	0	0	0	0	0	0	-3.69	-3.69
Inverter	MV1-3	364440	4906039	2	0	0	89.1	89.1	1	3504.49	3.25	0	81.89	0	1.27	0	0	10.37	0	0	0	0	0	0	-4.47	-4.47
Westbrook Inverter Enclosur	W_INV3	369508	4906164	2	0	0	89.1	89.1	1	3859.39	3.25	0	82.73	0	1.36	0	0	10.88	0	0	0	0	0	0	-5.91	-5.91
Westbrook Inverter Enclosur	W_INV2	369374	4906388	2	0	0	89.1	89.1	1	3931.46	3.25	0	82.89	0	1.38	0	0	10.99	0	0	0	0	0	0	-6.2	-6.2
Westbrook Inverter Enclosur	W_INV4	369673	4906164	2	0	0	89.1	89.1	1	3977.65	3.25	0	82.99	0	1.39	0	0	11.05	0	0	0	0	0	0	-6.37	-6.37
Inverter	MV3-22	368656	4907142	2	0	0	89.1	89.1	1	4156.44	3.25	0	83.37	0	1.43	0	0	11.31	0	0	0	0	0	0	-7.05	-7.05
Westbrook Inverter Enclosur	W_INV7	369780	4906417	2	0	0	89.1	89.1	1	4230.63	3.25	0	83.53	0	1.45	0	0	11.41	0	0	0	0	0	0	-7.33	-7.33
Westbrook Inverter Enclosur	W_INV5	369719	4906574	2	0	0	89.1	89.1	1	4300.95	3.25	0	83.67	0	1.47	0	0	11.51	0	0	0	0	0	0	-7.59	-7.59
Westbrook Inverter Enclosur	W_INV6	369875	4906578	2	0	0	89.1	89.1	1	4411.8	3.25	0	83.89	0	1.49	0	0	11.66	0	0	0	0	0	0	-7.99	-7.99
Inverter	MV3-5	368340	4907843	2	0	0	89.1	89.1	1	4678.06	3.25	0	84.4	0	1.56	0	0	12.03	0	0	0	0	0	0	-8.93	-8.93
Inverter	MV3-1	368156	4907976	2	0	0	89.1	89.1	1	4747.19	3.25	0	84.53	0	1.58	0	0	12.12	0	0	0	0	0	0	-9.17	-9.17
Inverter	MV3-4	368502	4907925	2	0	0	89.1	89.1	1	4810.97	3.25	0	84.64	0	1.59	0	0	12.21	0	0	0	0	0	0	-9.39	-9.39

Inverter	MV3-2	368671	4907928	2	0	0	89.1	89.1	1	4876.71	3.25	0	84.76	0	1.61	0	0	12.3	0	0	0	0	0	0	-9.61	-9.61
Fixed Reactor Bank 1	FRB1	369378	4908755	6	0	0	89.8	89.8	1	5922.29	5.25	0	86.45	0	-0.43	0	0	9.66	0	0	0	0	0	0	-5.9	-5.9
Fixed Reactor Bank 2	FRB2	369464	4908755	6	0	0	89.8	89.8	1	5960.49	5.25	0	86.51	0	-0.42	0	0	9.7	0	0	0	0	0	0	-6.01	-6.01
Inverter	MV4-15	369176	4908481	2	0	0	89.1	89.1	1	5587.81	3.25	0	85.94	0	1.78	0	0	13.24	0	0	0	0	0	0	-11.91	-11.91
Inverter	MV4-14	369176	4908507	2	0	0	89.1	89.1	1	5611.32	3.25	0	85.98	0	1.79	0	0	13.27	0	0	0	0	0	0	-11.98	-11.98
Inverter	MV4-13	369051	4908605	2	0	0	89.1	89.1	1	5648.74	3.25	0	86.04	0	1.8	0	0	13.31	0	0	0	0	0	0	-12.1	-12.1
Westbrook Inverter Enclosur	W_INV1	369409	4906578	2	0	0	86.1	86.1	1	4098.59	3.25	0	83.25	0	1.42	0	0	11.22	0	0	0	0	0	0	-9.84	-9.84
Inverter	MV4-12	369043	4908803	2	0	0	89.1	89.1	1	5827.5	3.25	0	86.31	0	1.84	0	0	13.54	0	0	0	0	0	0	-12.64	-12.64
Inverter	MV5-6	369982	4908507	2	0	0	89.1	89.1	1	5999.64	3.25	0	86.56	0	1.89	0	0	13.76	0	0	0	0	0	0	-13.15	-13.15
Inverter	MV6-4	370250	4906966	2	0	0	86.1	86.1	1	4951.38	3.25	0	84.89	0	1.63	0	0	12.4	0	0	0	0	0	0	-12.86	-12.86
Westbrook Inverter Transfor	W_INVTR1	369403	4906578	2	0	0	78.2	78.2	1	4094.75	3.25	0	83.24	0	-2.98	0	0	2.09	0	0	0	0	0	0	-4.11	-4.11
Westbrook Inverter Transfor	W_INVTR3	369514	4906164	2	0	0	77.3	77.3	1	3863.63	3.25	0	82.74	0	-2.93	0	0	2	0	0	0	0	0	0	-4.47	-4.47
Westbrook Inverter Transfor	W_INVTR2	369368	4906388	2	0	0	77.3	77.3	1	3927.51	3.25	0	82.88	0	-2.95	0	0	2.03	0	0	0	0	0	0	-4.62	-4.62
Westbrook Inverter Transfor	W_INVTR4	369679	4906164	2	0	0	77.3	77.3	1	3982.01	3.25	0	83	0	-2.96	0	0	2.05	0	0	0	0	0	0	-4.75	-4.75
Westbrook Inverter Transfor	W_INVTR7	369786	4906417	2	0	0	77.3	77.3	1	4234.88	3.25	0	83.54	0	-3.02	0	0	2.14	0	0	0	0	0	0	-5.32	-5.32
Westbrook Inverter Transfor	W_INVTR5	369725	4906574	2	0	0	77.3	77.3	1	4305.05	3.25	0	83.68	0	-3.03	0	0	2.17	0	0	0	0	0	0	-5.47	-5.47
Westbrook Inverter Transfor	W_INVTR6	369881	4906578	2	0	0	77.3	77.3	1	4416.01	3.25	0	83.9	0	-3.06	0	0	2.21	0	0	0	0	0	0	-5.71	-5.71
Inverter Transformer	MV1-14 T	365157	4905049	2	0	0	69.4	69.4	1	2292.45	3.25	0	78.21	0	2.28	0	0	5.25	0	0	0	0	0	0	-16.38	-16.38
Inverter Transformer	MV1-13 T	364725	4905241	2	0	0	69.4	69.4	1	2739.29	3.25	0	79.75	0	2.43	0	0	5.66	0	0	0	0	0	0	-18.49	-18.49
Inverter Transformer	MV1-10 T	365010	4905564	2	0	0	69.4	69.4	1	2772.26	3.25	0	79.86	0	2.44	0	0	5.69	0	0	0	0	0	0	-18.63	-18.63
Inverter Transformer	MV1-7 T	364919	4905782	2	0	0	69.4	69.4	1	2998.88	3.25	0	80.54	0	2.51	0	0	5.88	0	0	0	0	0	0	-19.58	-19.58
Inverter Transformer	MV2-1 T	365836	4906816	2	0	0	69.4	69.4	1	3513.74	3.25	0	81.92	0	2.66	0	0	6.3	0	0	0	0	0	0	-21.52	-21.52
Inverter Transformer	MV6-4 T	370244	4906966	2	0	0	69.4	69.4	1	4947.18	3.25	0	84.89	0	3	0	0	7.35	0	0	0	0	0	0	-25.88	-25.88
Inverter Transformer	MV6-1 T	370230	4907364	2	0	0	69.4	69.4	1	5229.66	3.25	0	85.37	0	3.06	0	0	7.53	0	0	0	0	0	0	-26.61	-26.61
Inverter Transformer	MV1-15 T	365309	4904994	2	0	0	56.1	56.1	1	2146.99	3.25	0	77.64	0	0.47	0	0	7.33	0	0	0	0	0	0	-29.37	-29.37
Inverter Transformer	MV1-12 T	365044	4905386	2	0	0	56.1	56.1	1	2615.1	3.25	0	79.35	0	0.67	0	0	8.2	0	0	0	0	0	0	-32.15	-32.15
Inverter Transformer	MV1-11 T	364649	4905414	2	0	0	56.1	56.1	1	2911.7	3.25	0	80.28	0	0.79	0	0	8.72	0	0	0	0	0	0	-33.73	-33.73
Inverter Transformer	MV1-8 T	364782	4905647	2	0	0	56.1	56.1	1	2984.33	3.25	0	80.5	0	0.82	0	0	8.84	0	0	0	0	0	0	-34.1	-34.1
Inverter Transformer	MV1-9 T	364555	4905646	2	0	0	56.1	56.1	1	3140.28	3.25	0	80.94	0	0.89	0	0	9.1	0	0	0	0	0	0	-34.87	-34.87
Inverter Transformer	MV1-4 T	364821	4905918	2	0	0	56.1	56.1	1	3166.34	3.25	0	81.01	0	0.9	0	0	9.15	0	0	0	0	0	0	-35	-35
Inverter Transformer	MV1-5 T	364676	4905892	2	0	0	56.1	56.1	1	3238.34	3.25	0	81.21	0	0.93	0	0	9.27	0	0	0	0	0	0	-35.34	-35.34
Inverter Transformer	MV1-2 T	364759	4906063	2	0	0	56.1	56.1	1	3318.84	3.25	0	81.42	0	0.96	0	0	9.4	0	0	0	0	0	0	-35.72	-35.72
Inverter Transformer	MV2-2 T	365982	4906654	2	0	0	56.1	56.1	1	3319.83	3.25	0	81.42	0	0.96	0	0	9.4	0	0	0	0	0	0	-35.73	-35.73
Inverter Transformer	MV1-6 T	364482	4905835	2	0	0	56.1	56.1	1	3326.32	3.25	0	81.44	0	0.97	0	0	9.41	0	0	0	0	0	0	-35.76	-35.76
Inverter Transformer	MV2-3 T	365814	4906641	2	0	0	56.1	56.1	1	3351.82	3.25	0	81.51	0	0.98	0	0	9.45	0	0	0	0	0	0	-35.88	-35.88
Inverter Transformer	MV2-4 T	365590	4906628	2	0	0	56.1	56.1	1	3411.05	3.25	0	81.66	0	1	0	0	9.55	0	0	0	0	0	0	-36.15	-36.15
Inverter Transformer	MV1-1 T	364721	4906166	2	0	0	56.1	56.1	1	3423.81	3.25	0	81.69	0	1.01	0	0	9.57	0	0	0	0	0	0	-36.21	-36.21
Inverter Transformer	MV1-3 T	364435	4906039	2	0	0	56.1	56.1	1	3507.83	3.25	0	81.9	0	1.04	0	0	9.7	0	0	0	0	0	0	-36.59	-36.59
Inverter Transformer	MV3-18 T	367757	4907412	2	0	0	56.1	56.1	1	4097.69	3.25	0	83.25	0	1.28	0	0	10.6	0	0	0	0	0	0	-39.07	-39.07
Inverter Transformer	MV3-21 T	368484	4907206	2	0	0	56.1	56.1	1	4140.03	3.25	0	83.34	0	1.3	0	0	10.66	0	0	0	0	0	0	-39.24	-39.24
Inverter Transformer	MV3-22 T	368661	4907142	2	0	0	56.1	56.1	1	4158.7	3.25	0	83.38	0	1.31	0	0	10.69	0	0	0	0	0	0	-39.32	-39.32
Inverter Transformer	MV3-19 T	368352	4907347	2	0	0	56.1	56.1	1	4218.07	3.25	0	83.5	0	1.33	0	0	10.77	0	0	0	0	0	0	-39.55	-39.55
Inverter Transformer	MV3-12 T	367674	4907594	2	0	0	56.1	56.1	1	4256.51	3.25	0	83.58	0	1.35	0	0	10.83	0	0	0	0	0	0	-39.7	-39.7
Inverter Transformer	MV3-17 T	368183	4907472	2	0	0	56.1	56.1	1	4276.03	3.25	0	83.62	0	1.35	0	0	10.86	0	0	0	0	0	0	-39.77	-39.77
Inverter Transformer	MV3-13 T	367958	4907577	2	0	0	56.1	56.1	1	4308.6	3.25	0	83.69	0	1.37	0	0	10.9	0	0	0	0	0	0	-39.9	-39.9
Inverter Transformer	MV3-20 T	368683	4907317	2	0	0	56.1	56.1	1	4325.16	3.25	0	83.72	0	1.37	0	0	10.93	0	0	0	0	0	0	-39.96	-39.96
Inverter Transformer	MV3-15 T	368351	4907477	2	0	0	56.1	56.1	1	4338.64	3.25	0	83.75	0	1.38	0	0	10.95	0	0	0	0	0	0	-40.01	-40.01
Inverter Transformer	MV3-16 T	368509	4907475	2	0	0	56.1	56.1	1	4396.41	3.25	0	83.86	0	1.4	0	0	11.03	0	0	0	0	0	0	-40.23	-40.23
Inverter Transformer	MV3-10 T	368162	4907669	2	0	0	56.1	56.1	1	4456.07	3.25	0	83.98	0	1.42	0	0	11.11	0	0	0	0	0	0	-40.46	-40.46
Inverter Transformer	MV3-7 T	367951	4907754	2	0	0	56.1	56.1	1	4477.3	3.25	0	84.02	0	1.43	0	0	11.14	0	0	0	0	0	0	-40.54	-40.54
Inverter Transformer	MV3-14 T	368678	4907498	2	0	0	56.1	56.1	1	4486.33	3.25	0	84.04	0	1.43	0	0	11.16	0	0	0	0	0	0	-40.57	-40.57
Inverter Transformer	MV3-11 T	368340	4907662	2	0	0	56.1	56.1	1	4507.8	3.25	0	84.08	0	1.44	0	0	11.19	0	0	0	0	0	0	-40.65	-40.65
Inverter Transformer	MV3-9 T	368517	4907703	2	0	0	56.1	56.1	1	4609.95	3.25	0	84.27	0	1.48	0	0	11.33	0	0	0	0	0	0	-41.02	-41.02
Inverter Transformer	MV3-6 T	368156	4907834	2	0	0	56.1	56.1	1	4611.45	3.25	0	84.28	0	1.48	0	0	11.33	0	0	0	0	0	0	-41.03	-41.03
Inverter Transformer	MV3-3 T	367944	4907927	2	0	0	56.1	56.1	1	4642.77	3.25	0	84.34	0	1.49	0	0	11.37	0	0	0	0	0	0	-41.14	-41.14
Inverter Transformer	MV3-5 T	368335	4907843	2	0	0	56.1	56.1	1	4676.4	3.25	0	84.4	0	1.51	0	0	11.42	0	0	0	0	0	0	-41.27	-41.27
Inverter Transformer	MV3-8 T	368685	4907712	2	0	0	56.1	56.1	1	4684	3.25	0	84.41	0	1.51	0	0	11.43	0	0	0	0	0	0	-41.29	-41.29
Inverter Transformer	MV3-1 T	368150	4907976	2	0	0	56.1	56.1	1	4745.46	3.25	0	84.53	0	1.53	0	0	11.51	0	0	0	0	0	0	-41.51	-41.51
Inverter Transformer	MV3-4 T	368507	4907925	2	0	0	56.1	56.1	1	4812.76	3.25	0	84.65	0	1.56	0	0	11.6	0	0	0	0	0	0	-41.75	-41.75
Inverter Transformer	MV3-2 T	368677	4907928	2	0	0	56.1	56.1	1	4879.04	3.25	0	84.77	0	1.58	0	0	11.69	0	0	0	0	0	0	-41.98	-41.98
Inverter Transformer	MV6-3 T	370202	4907140	2	0	0	56.1	56.1	1	5044.37	3.25	0	85.06	0	1.64	0	0	11.91	0	0	0	0	0	0	-42.55	-42.55
Inverter Transformer	MV6-2 T	370091	4907339	2	0	0	56.1	56.1	1	5119.97	3.25	0	85.19	0	1.67	0	0	12.01	0	0	0	0	0	0	-42.81	-42.81
Inverter Transformer	MV4-15 T	369170	4908481	2	0	0	56.1	56.1	1	5585.24	3.25	0	85.94	0	1.83	0	0	12.6	0	0	0	0	0	0	-44.31	-44.31
Inverter Transformer	MV4-14 T	369182	4908507	2	0	0	56.1	56.1	1	5613.88	3.25	0	85.99	0	1.84	0	0	12.64	0	0	0	0	0	0	-44.4	-44.4
Inverter Transformer	MV4-13 T	369057	4908605	2	0	0	56.1	56.1	1	5651.16	3.25	0	86.04	0	1.85	0	0	12.68	0	0	0	0	0	0	-44.52	-44.52
Inverter Transformer	MV4-12 T	369049	4908803	2	0	0	56.1	56.1	1	5829.83	3.25	0	86.31	0	1.91	0	0	12.9	0	0	0	0	0	0	-45.06	-45.06
Inverter Transformer	MV4-11 T	369269	4908855	2	0	0	56.1	56.1	1	5966.08	3.25	0	86.51	0	1.95	0	0	13.06	0	0	0	0	0	0	-45.47	-45.47
Inverter Transformer	MV4-10 T	369307	4908858	2	0	0	56.1	56.1	1	5984.74	3.25	0	86.54	0	1.96	0	0	13.08	0	0	0	0	0	0	-45.53	-45.53
Inverter Transformer	MV5-6 T	369987	4908507	2	0	0	56.1	56.1	1	6002.3	3.25	0	86.57	0	1.97	0	0	13.11	0	0	0	0	0	0	-45.58	-45.58
Inverter Transformer	MV4-7 T	369040	4909001	2	0	0	56.1	56.1	1	6009.35	3.25	0	86.58	0	1.97	0	0	13.11	0	0	0	0	0	0	-45.6	-45.6
Inverter Transformer	MV4-8 T	369262	4909001	2	0	0	56.1	56.1	1	6096.24	3.25	0	86.7	0	2	0	0	13.22	0	0	0	0	0	0	-45.85	-45.85
Inverter Transformer	MV4-9 T	369284	4909001	2	0	0	56.1	56.1	1	6105.22	3.25	0	86.71	0	2	0	0	13.23	0	0	0	0	0	0	-45.88	-45.88
Inverter Transformer	MV5-5 T	370021	4908690	2	0	0	56.1	56.1	1	6175.57	3.25	0	86.81	0	2.02	0	0	13.31	0	0	0	0	0	0	-46.08	-46.08
Inverter Transformer	MV4-4 T	369033	4909199	2	0	0	56.1	56.1	1	6190.74	3.25	0	86.83	0	2.02	0	0	13.33	0	0	0	0	0	0	-46.13	-46.13

	Inverter Transformer	MV4-6 T	369249	4909192	2	0	0	56.1	56.1	1	6266.07	3.25	0	86.94	0	2.05	0	0	13.41	0	0	0	0	0	0	-46.34	-46.34
	Inverter Transformer	MV4-5 T	369283	4909199	2	0	0	56.1	56.1	1	6285.96	3.25	0	86.97	0	2.05	0	0	13.44	0	0	0	0	0	0	-46.4	-46.4
	Inverter Transformer	MV5-2 T	370011	4908853	2	0	0	56.1	56.1	1	6309.81	3.25	0	87	0	2.06	0	0	13.46	0	0	0	0	0	0	-46.47	-46.47
	Inverter Transformer	MV5-4 T	370330	4908707	2	0	0	56.1	56.1	1	6357.2	3.25	0	87.07	0	2.08	0	0	13.52	0	0	0	0	0	0	-46.6	-46.6
	Inverter Transformer	MV4-1 T	369017	4909397	2	0	0	56.1	56.1	1	6369.97	3.25	0	87.08	0	2.08	0	0	13.53	0	0	0	0	0	0	-46.64	-46.64
	Inverter Transformer	MV5-3 T	370237	4908851	2	0	0	56.1	56.1	1	6426.71	3.25	0	87.16	0	2.1	0	0	13.6	0	0	0	0	0	0	-46.79	-46.79
	Inverter Transformer	MV4-3 T	369234	4909397	2	0	0	56.1	56.1	1	6449.31	3.25	0	87.19	0	2.1	0	0	13.62	0	0	0	0	0	0	-46.86	-46.86
	Inverter Transformer	MV4-2 T	369267	4909397	2	0	0	56.1	56.1	1	6461.92	3.25	0	87.21	0	2.11	0	0	13.64	0	0	0	0	0	0	-46.89	-46.89
	Inverter Transformer	MV5-1 T	370015	4909142	2	0	0	56.1	56.1	1	6561.74	3.25	0	87.34	0	2.14	0	0	13.75	0	0	0	0	0	0	-47.17	-47.17
	Line Reactor	NGR	369421	4908787.5	5	0	0	45.4	45.4	1	5970.4	5.25	0	86.52	0	3.24	1.36	0.11	2.44	0	0	0	0	0	0	-48.21	-48.21
Limit. Valu	0	0																								
Level D/N:	32.6256	32.6256																								

Receiver: Existing Noise Receptor
ID: G-5
X: 367019.2
Y: 4903279.1
Z: 4.5
Ground: 0

ISO	Description	ID	X	Y	Z	Ground	ReflOrd	LxT	LxN	L/A	Dist.	hm	Freq	Adiv	K0b	Agr	Abar	z	Aatm	Afol	Ahous	Cmet	CmetN	Dc	RL	LtotT	LtotN
	Gardiner Substation	G_Sub	366586.3	4903349.9	2.5	0	0	90.8	90.8	1	438.66	4.24	0	63.84	0	0.36	4.77	0.3	1.28	0	0	0	0	0	0	20.51	20.51
	Inverters	G_Inv4	366732.8	4903105	2	0	0	87.7	87.7	1	335.17	3.25	0	61.51	0	2.46	0	0	0.53	0	0	0	0	0	0	23.17	23.17
	Inverters	G_Inv2	366676.9	4903239.1	2	0	0	87.7	87.7	1	344.64	3.25	0	61.75	0	2.45	0	0	0.54	0	0	0	0	0	0	22.92	22.92
	Sol_Luce Substation	S_Substation	369426	4908792	3.5	0	0	112.1	112.1	1	6015.38	5.25	0	86.59	0	1.16	2.64	0.32	9.76	0	0	0	0	0	0	11.93	11.93
	Inverters	G_Inv6	366788.5	4902972	2	0	0	87.7	87.7	1	384.11	3.25	0	62.69	0	2.43	0	0	0.6	0	0	0	0	0	0	21.94	21.94
	Inverters	G_Inv8	366844.5	4902838.5	2	0	0	87.7	87.7	1	473.98	3.25	0	64.52	0	2.4	0	0	0.73	0	0	0	0	0	0	20.02	20.02
	Inverters	G_Inv3	366583.7	4903091.4	2	0	0	87.7	87.7	1	474.23	3.25	0	64.52	0	2.4	0	0	0.73	0	0	0	0	0	0	20.01	20.01
	Inverters	G_Inv1	366526.4	4903225.8	2	0	0	87.7	87.7	1	495.68	3.25	0	64.9	0	2.4	0	0	0.76	0	0	0	0	0	0	19.6	19.6
	Inverters	G_Inv5	366638.5	4902958.1	2	0	0	87.7	87.7	1	497.98	3.25	0	64.94	0	2.4	0	0	0.76	0	0	0	0	0	0	19.56	19.56
	Inverters	G_Inv7	366694.6	4902824.7	2	0	0	87.7	87.7	1	558.44	3.25	0	65.94	0	2.4	0	0	0.84	0	0	0	0	0	0	18.48	18.48
	Inverter	MV1-15	365315	4904994	2	0	0	100.3	100.3	1	2417.68	3.25	0	78.67	0	0.24	0	0	14.3	0	0	0	0	0	0	7.11	7.11
	Inverters	G_Inv10	366900.7	4902704.8	2	0	0	87.7	87.7	1	586.4	3.25	0	66.36	0	2.4	0	0	0.88	0	0	0	0	0	0	18.02	18.02
	Inverters	G_Inv9	366750.9	4902691.8	2	0	0	87.7	87.7	1	645.69	3.25	0	67.2	0	2.4	0	0	0.96	0	0	0	0	0	0	17.1	17.1
	Inverter	MV1-12	365038	4905386	2	0	0	100.3	100.3	1	2892.09	3.25	0	80.22	0	0.34	0	0	15.18	0	0	0	0	0	0	4.57	4.57
	Inverter	MV1-11	364655	4905414	2	0	0	100.3	100.3	1	3185.47	3.25	0	81.06	0	0.4	0	0	15.7	0	0	0	0	0	0	3.16	3.16
	Inverter	MV1-8	364788	4905647	2	0	0	100.3	100.3	1	3253.49	3.25	0	81.25	0	0.41	0	0	15.81	0	0	0	0	0	0	2.84	2.84
	Inverter	MV1-9	364561	4905646	2	0	0	100.3	100.3	1	3412.47	3.25	0	81.66	0	0.44	0	0	16.08	0	0	0	0	0	0	2.13	2.13
	Inverter	MV1-4	364815	4905918	2	0	0	100.3	100.3	1	3438.36	3.25	0	81.73	0	0.44	0	0	16.13	0	0	0	0	0	0	2.02	2.02
	Inverter	MV1-5	364671	4905892	2	0	0	100.3	100.3	1	3513.02	3.25	0	81.91	0	0.45	0	0	16.25	0	0	0	0	0	0	1.69	1.69
	Inverter	MV2-3	365820	4906641	2	0	0	100.3	100.3	1	3569.38	3.25	0	82.05	0	0.46	0	0	16.35	0	0	0	0	0	0	1.45	1.45
	Inverter	MV1-2	364753	4906063	2	0	0	100.3	100.3	1	3589.68	3.25	0	82.1	0	0.47	0	0	16.38	0	0	0	0	0	0	1.36	1.36
	Inverter	MV1-6	364477	4905835	2	0	0	100.3	100.3	1	3604.91	3.25	0	82.14	0	0.47	0	0	16.41	0	0	0	0	0	0	1.3	1.3
	Inverter	MV1-14	365163	4905049	2	0	0	97.3	97.3	1	2564.77	3.25	0	79.18	0	0.27	0	0	14.58	0	0	0	0	0	0	3.28	3.28
	Inverter	MV2-4	365586	4906624	2	0	0	100.3	100.3	1	3639.01	3.25	0	82.22	0	0.47	0	0	16.46	0	0	0	0	0	0	1.16	1.16
	Inverter	MV1-1	364715	4906166	2	0	0	100.3	100.3	1	3693.72	3.25	0	82.35	0	0.48	0	0	16.55	0	0	0	0	0	0	0.93	0.93
	Inverter	MV3-21	368478	4907206	2	0	0	100.3	100.3	1	4189.11	3.25	0	83.44	0	0.55	0	0	17.35	0	0	0	0	0	0	-1.03	-1.03
	Inverter	MV3-18	367752	4907412	2	0	0	100.3	100.3	1	4197.36	3.25	0	83.46	0	0.55	0	0	17.36	0	0	0	0	0	0	-1.06	-1.06
	Inverter	MV1-13	364731	4905241	2	0	0	97.3	97.3	1	3014.12	3.25	0	80.58	0	0.36	0	0	15.4	0	0	0	0	0	0	0.97	0.97
	Inverter	MV3-19	368357	4907347	2	0	0	100.3	100.3	1	4282.23	3.25	0	83.63	0	0.56	0	0	17.49	0	0	0	0	0	0	-1.38	-1.38
	Inverter	MV1-10	365004	4905564	2	0	0	97.3	97.3	1	3046.61	3.25	0	80.68	0	0.37	0	0	15.45	0	0	0	0	0	0	0.81	0.81
	Inverter	MV3-17	368178	4907472	2	0	0	100.3	100.3	1	4350.08	3.25	0	83.77	0	0.57	0	0	17.6	0	0	0	0	0	0	-1.63	-1.63
	Inverter	MV3-12	367668	4907594	2	0	0	100.3	100.3	1	4363.41	3.25	0	83.8	0	0.57	0	0	17.62	0	0	0	0	0	0	-1.68	-1.68
	Inverter	MV3-20	368689	4907317	2	0	0	100.3	100.3	1	4369.54	3.25	0	83.81	0	0.58	0	0	17.63	0	0	0	0	0	0	-1.7	-1.7
	Inverter	MV3-13	367963	4907577	2	0	0	100.3	100.3	1	4400.31	3.25	0	83.87	0	0.58	0	0	17.68	0	0	0	0	0	0	-1.81	-1.81
	Inverter	MV3-15	368357	4907477	2	0	0	100.3	100.3	1	4405.91	3.25	0	83.88	0	0.58	0	0	17.69	0	0	0	0	0	0	-1.83	-1.83
	Inverter	MV3-16	368514	4907475	2	0	0	100.3	100.3	1	4454.21	3.25	0	83.98	0	0.59	0	0	17.76	0	0	0	0	0	0	-2.01	-2.01
	Inverter	MV3-14	368684	4907498	2	0	0	100.3	100.3	1	4535.49	3.25	0	84.13	0	0.59	0	0	17.88	0	0	0	0	0	0	-2.3	-2.3
	Inverter	MV3-10	368167	4907669	2	0	0	100.3	100.3	1	4537.47	3.25	0	84.14	0	0.6	0	0	17.89	0	0	0	0	0	0	-2.31	-2.31
	Inverter	MV3-7	367945	4907754	2	0	0	100.3	100.3	1	4569.67	3.25	0	84.2	0	0.6	0	0	17.94	0	0	0	0	0	0	-2.42	-2.42
	Inverter	MV3-11	368346	4907662	2	0	0	100.3	100.3	1	4579.32	3.25	0	84.22	0	0.6	0	0	17.95	0	0	0	0	0	0	-2.46	-2.46
	Inverter	MV1-7	364925	4905782	2	0	0	97.3	97.3	1	3263.46	3.25	0	81.27	0	0.41	0	0	15.83	0	0	0	0	0	0	-0.2	-0.2
	Inverter	MV3-9	368512	4907703	2	0	0	100.3	100.3	1	4668.98	3.25	0	84.38	0	0.61	0	0	18.09	0	0	0	0	0	0	-2.77	-2.77
	Inverter	MV3-6	368162	4907834	2	0	0	100.3	100.3	1	4696.07	3.25	0	84.43	0	0.61	0	0	18.13	0	0	0	0	0	0	-2.86	-2.86
	Inverter	MV3-8	368680	4907712	2	0	0	100.3	100.3	1	4733.8	3.25	0	84.5	0	0.62	0	0	18.18	0	0	0	0	0	0	-2.99	-2.99
	Inverter	MV3-3	367939	4907927	2	0	0	100.3	100.3	1	4738.04	3.25	0	84.51	0	0.62	0	0	18.19	0	0	0	0	0	0	-3.01	-3.01
	Inverter	MV6-3	370207	4907140	2	0	0	100.3	100.3	1	5006.86	3.25	0	84.99	0	0.64	0	0	18.59	0	0	0	0	0	0	-3.91	-3.91
	Inverter	MV6-2	370085	4907339	2	0	0	100.3	100.3	1	5087.43	3.25	0	85.13	0	0.65	0	0	18.71	0	0	0	0	0	0	-4.18	-4.18
	Inverter	MV2-1	365842	4906816	2	0	0	97.3	97.3	1	3727.66	3.25	0	82.43	0	0.49	0	0	16.61	0	0	0	0	0	0	-2.21	-2.21
	Inverter	MV4-11	369264	4908855	2	0	0	100.3	100.3	1	6010.81	3.25	0	86.58	0	0.71	0	0	20.01	0	0	0	0	0	0	-6.98	-6.98
	Inverter	MV4-10	369312	4908858	2	0	0	100.3	100.3	1	6031.67	3.25	0	86.61	0	0.71	0	0	20.04	0	0	0	0	0	0	-7.04	-7.04
	Inverter	MV4-7	369035	4909001	2	0	0	100.3	100.3	1	6066.6	3.25	0	86.66	0	0.71	0	0	20.08	0	0	0	0	0	0	-7.14	-7.14
	Inverter	MV4-8	369256	4909001	2	0	0	100.3	100.3	1	6143.57	3.25	0	86.77	0	0.71	0	0	20.19	0	0	0	0	0	0	-7.35	-7.35
	Inverter	MV4-9	369289	4909001	2	0	0	100.3	100.3	1	6155.66	3.25	0	86.79	0	0.71	0	0	20.2	0	0	0	0	0	0	-7.39	-7.39

Inverter	MV5-5	370015	4908690	2	0	0	100.3	100.3	1	6184.87	3.25	0	86.83	0	0.71	0	0	20.24	0	0	0	0	0	0	-7.47	-7.47
Inverter	MV4-4	369027	4909199	2	0	0	100.3	100.3	1	6251.12	3.25	0	86.92	0	0.71	0	0	20.33	0	0	0	0	0	0	-7.65	-7.65
Inverter	MV4-6	369243	4909192	2	0	0	100.3	100.3	1	6317.25	3.25	0	87.01	0	0.71	0	0	20.42	0	0	0	0	0	0	-7.83	-7.83
Inverter	MV5-2	370006	4908853	2	0	0	100.3	100.3	1	6323.71	3.25	0	87.02	0	0.71	0	0	20.43	0	0	0	0	0	0	-7.85	-7.85
Inverter	MV4-5	369289	4909199	2	0	0	100.3	100.3	1	6340.13	3.25	0	87.04	0	0.71	0	0	20.45	0	0	0	0	0	0	-7.89	-7.89
Inverter	MV5-4	370324	4908707	2	0	0	100.3	100.3	1	6354.83	3.25	0	87.06	0	0.71	0	0	20.47	0	0	0	0	0	0	-7.93	-7.93
Inverter	MV5-3	370231	4908851	2	0	0	100.3	100.3	1	6431.31	3.25	0	87.17	0	0.71	0	0	20.57	0	0	0	0	0	0	-8.14	-8.14
Inverter	MV4-1	369011	4909397	2	0	0	100.3	100.3	1	6433.97	3.25	0	87.17	0	0.71	0	0	20.57	0	0	0	0	0	0	-8.14	-8.14
Inverter	MV4-3	369229	4909397	2	0	0	100.3	100.3	1	6504.76	3.25	0	87.26	0	0.71	0	0	20.67	0	0	0	0	0	0	-8.33	-8.33
Inverter	MV4-2	369272	4909397	2	0	0	100.3	100.3	1	6519.49	3.25	0	87.28	0	0.71	0	0	20.68	0	0	0	0	0	0	-8.37	-8.37
Inverter	MV5-1	370020	4909142	2	0	0	100.3	100.3	1	6586.23	3.25	0	87.37	0	0.72	0	0	20.77	0	0	0	0	0	0	-8.55	-8.55
Inverter	MV6-1	370235	4907364	2	0	0	97.3	97.3	1	5198.83	3.25	0	85.32	0	0.66	0	0	18.87	0	0	0	0	0	0	-7.54	-7.54
DSTATCOM - 10 MVAR #2	DSAT2	369403	4908757	2.5	0	0	96.6	96.6	1	5974.1	3.5	0	86.53	0	3.77	0	0	3.83	0	0	0	0	0	0	2.51	2.51
DSTATCOM - 10 MVAR #1	DSAT1	369437	4908757	2.5	0	0	96.6	96.6	1	5987.75	3.5	0	86.55	0	3.77	0	0	3.83	0	0	0	0	0	0	2.48	2.48
SubstationTransformer	W_ST	369711.17	4906112.3	2.5	0	0	92	92	1	3908.14	3.5	0	82.84	0	0.31	0	-0.1	7.24	0	0	0	0	0	0	1.59	1.59
Inverter	MV2-2	365977	4906654	2	0	0	89.1	89.1	1	3532.16	3.25	0	81.96	0	1.28	0	0	10.41	0	0	0	0	0	0	-4.59	-4.59
Inverter	MV1-3	364440	4906039	2	0	0	89.1	89.1	1	3777.48	3.25	0	82.54	0	1.34	0	0	10.77	0	0	0	0	0	0	-5.59	-5.59
Westbrook Inverter Enclosur	W_INV3	369508	4906164	2	0	0	89.1	89.1	1	3810.09	3.25	0	82.62	0	1.35	0	0	10.81	0	0	0	0	0	0	-5.72	-5.72
Westbrook Inverter Enclosur	W_INV2	369374	4906388	2	0	0	89.1	89.1	1	3900.04	3.25	0	82.82	0	1.37	0	0	10.94	0	0	0	0	0	0	-6.07	-6.07
Westbrook Inverter Enclosur	W_INV4	369673	4906164	2	0	0	89.1	89.1	1	3919.86	3.25	0	82.87	0	1.37	0	0	10.97	0	0	0	0	0	0	-6.15	-6.15
Westbrook Inverter Enclosur	W_INV7	369780	4906417	2	0	0	89.1	89.1	1	4179.53	3.25	0	83.42	0	1.44	0	0	11.34	0	0	0	0	0	0	-7.14	-7.14
Inverter	MV3-22	368656	4907142	2	0	0	89.1	89.1	1	4195.37	3.25	0	83.46	0	1.44	0	0	11.36	0	0	0	0	0	0	-7.2	-7.2
Westbrook Inverter Enclosur	W_INV5	369719	4906574	2	0	0	89.1	89.1	1	4259.73	3.25	0	83.59	0	1.46	0	0	11.45	0	0	0	0	0	0	-7.44	-7.44
Westbrook Inverter Enclosur	W_INV6	369875	4906578	2	0	0	89.1	89.1	1	4363.29	3.25	0	83.8	0	1.48	0	0	11.6	0	0	0	0	0	0	-7.82	-7.82
Inverter	MV3-5	368340	4907843	2	0	0	89.1	89.1	1	4751.18	3.25	0	84.54	0	1.58	0	0	12.13	0	0	0	0	0	0	-9.18	-9.18
Inverter	MV3-1	368156	4907976	2	0	0	89.1	89.1	1	4832.51	3.25	0	84.68	0	1.6	0	0	12.24	0	0	0	0	0	0	-9.46	-9.46
Inverter	MV3-4	368502	4907925	2	0	0	89.1	89.1	1	4876.79	3.25	0	84.76	0	1.61	0	0	12.3	0	0	0	0	0	0	-9.61	-9.61
Inverter	MV3-2	368671	4907928	2	0	0	89.1	89.1	1	4933.63	3.25	0	84.86	0	1.62	0	0	12.37	0	0	0	0	0	0	-9.8	-9.8
Fixed Reactor Bank 1	FRB1	369378	4908755	6	0	0	89.8	89.8	1	5962.33	5.25	0	86.51	0	-0.42	0	0	9.7	0	0	0	0	0	0	-6.01	-6.01
Fixed Reactor Bank 2	FRB2	369464	4908755	6	0	0	89.8	89.8	1	5996.88	5.25	0	86.56	0	-0.42	0	0	9.74	0	0	0	0	0	0	-6.1	-6.1
Inverter	MV4-15	369176	4908481	2	0	0	89.1	89.1	1	5631.3	3.25	0	86.01	0	1.8	0	0	13.29	0	0	0	0	0	0	-12.04	-12.04
Inverter	MV4-14	369176	4908507	2	0	0	89.1	89.1	1	5655.33	3.25	0	86.05	0	1.8	0	0	13.32	0	0	0	0	0	0	-12.12	-12.12
Inverter	MV4-13	369051	4908605	2	0	0	89.1	89.1	1	5700.3	3.25	0	86.12	0	1.81	0	0	13.38	0	0	0	0	0	0	-12.25	-12.25
Westbrook Inverter Enclosur	W_INV1	369409	4906578	2	0	0	86.1	86.1	1	4073.56	3.25	0	83.2	0	1.41	0	0	11.19	0	0	0	0	0	0	-9.74	-9.74
Inverter	MV4-12	369043	4908803	2	0	0	89.1	89.1	1	5882.96	3.25	0	86.39	0	1.86	0	0	13.61	0	0	0	0	0	0	-12.81	-12.81
Inverter	MV5-6	369982	4908507	2	0	0	89.1	89.1	1	6009.09	3.25	0	86.58	0	1.89	0	0	13.77	0	0	0	0	0	0	-13.18	-13.18
Inverter	MV6-4	370250	4906966	2	0	0	86.1	86.1	1	4902.17	3.25	0	84.81	0	1.62	0	0	12.33	0	0	0	0	0	0	-12.7	-12.7
Westbrook Inverter Transfor	W_INVTR1	369403	4906578	2	0	0	78.2	78.2	1	4070.04	3.25	0	83.19	0	-2.98	0	0	2.08	0	0	0	0	0	0	-4.05	-4.05
Westbrook Inverter Transfor	W_INVTR3	369514	4906164	2	0	0	77.3	77.3	1	3814.01	3.25	0	82.63	0	-2.92	0	0	1.98	0	0	0	0	0	0	-4.35	-4.35
Westbrook Inverter Transfor	W_INVTR2	369368	4906388	2	0	0	77.3	77.3	1	3896.42	3.25	0	82.81	0	-2.94	0	0	2.02	0	0	0	0	0	0	-4.55	-4.55
Westbrook Inverter Transfor	W_INVTR4	369679	4906164	2	0	0	77.3	77.3	1	3923.93	3.25	0	82.87	0	-2.95	0	0	2.03	0	0	0	0	0	0	-4.61	-4.61
Westbrook Inverter Transfor	W_INVTR7	369786	4906417	2	0	0	77.3	77.3	1	4183.49	3.25	0	83.43	0	-3	0	0	2.12	0	0	0	0	0	0	-5.21	-5.21
Westbrook Inverter Transfor	W_INVTR5	369725	4906574	2	0	0	77.3	77.3	1	4263.53	3.25	0	83.6	0	-3.02	0	0	2.15	0	0	0	0	0	0	-5.38	-5.38
Westbrook Inverter Transfor	W_INVTR6	369881	4906578	2	0	0	77.3	77.3	1	4367.22	3.25	0	83.8	0	-3.05	0	0	2.19	0	0	0	0	0	0	-5.61	-5.61
Inverter Transformer	MV1-14 T	365157	4905049	2	0	0	69.4	69.4	1	2569.11	3.25	0	79.2	0	2.37	0	0	5.51	0	0	0	0	0	0	-17.72	-17.72
Inverter Transformer	MV1-13 T	364725	4905241	2	0	0	69.4	69.4	1	3018.68	3.25	0	80.6	0	2.51	0	0	5.9	0	0	0	0	0	0	-19.66	-19.66
Inverter Transformer	MV1-10 T	365010	4905564	2	0	0	69.4	69.4	1	3042.64	3.25	0	80.67	0	2.52	0	0	5.92	0	0	0	0	0	0	-19.75	-19.75
Inverter Transformer	MV1-7 T	364919	4905782	2	0	0	69.4	69.4	1	3267.32	3.25	0	81.28	0	2.59	0	0	6.1	0	0	0	0	0	0	-20.63	-20.63
Inverter Transformer	MV2-1 T	365836	4906816	2	0	0	69.4	69.4	1	3729.56	3.25	0	82.43	0	2.72	0	0	6.47	0	0	0	0	0	0	-22.27	-22.27
Inverter Transformer	MV6-4 T	370244	4906966	2	0	0	69.4	69.4	1	4898.22	3.25	0	84.8	0	2.99	0	0	7.31	0	0	0	0	0	0	-25.76	-25.76
Inverter Transformer	MV6-1 T	370230	4907364	2	0	0	69.4	69.4	1	5195.73	3.25	0	85.31	0	3.05	0	0	7.51	0	0	0	0	0	0	-26.52	-26.52
Inverter Transformer	MV1-15 T	365309	4904994	2	0	0	56.1	56.1	1	2421.92	3.25	0	78.68	0	0.58	0	0	7.85	0	0	0	0	0	0	-31.05	-31.05
Inverter Transformer	MV1-12 T	365044	4905386	2	0	0	56.1	56.1	1	2887.98	3.25	0	80.21	0	0.78	0	0	8.68	0	0	0	0	0	0	-33.61	-33.61
Inverter Transformer	MV1-11 T	364649	4905414	2	0	0	56.1	56.1	1	3189.93	3.25	0	81.08	0	0.91	0	0	9.19	0	0	0	0	0	0	-35.11	-35.11
Inverter Transformer	MV1-8 T	364782	4905647	2	0	0	56.1	56.1	1	3257.61	3.25	0	81.26	0	0.94	0	0	9.3	0	0	0	0	0	0	-35.44	-35.44
Inverter Transformer	MV1-9 T	364555	4905646	2	0	0	56.1	56.1	1	3416.8	3.25	0	81.67	0	1.01	0	0	9.56	0	0	0	0	0	0	-36.17	-36.17
Inverter Transformer	MV1-4 T	364821	4905918	2	0	0	56.1	56.1	1	3434.51	3.25	0	81.72	0	1.01	0	0	9.58	0	0	0	0	0	0	-36.26	-36.26
Inverter Transformer	MV1-5 T	364676	4905892	2	0	0	56.1	56.1	1	3509.68	3.25	0	81.91	0	1.04	0	0	9.7	0	0	0	0	0	0	-36.59	-36.59
Inverter Transformer	MV2-2 T	365982	4906654	2	0	0	56.1	56.1	1	3530.69	3.25	0	81.96	0	1.05	0	0	9.74	0	0	0	0	0	0	-36.69	-36.69
Inverter Transformer	MV2-3 T	365814	4906641	2	0	0	56.1	56.1	1	3571.4	3.25	0	82.06	0	1.07	0	0	9.8	0	0	0	0	0	0	-36.87	-36.87
Inverter Transformer	MV1-2 T	364759	4906063	2	0	0	56.1	56.1	1	3585.89	3.25	0	82.09	0	1.08	0	0	9.82	0	0	0	0	0	0	-36.93	-36.93
Inverter Transformer	MV1-6 T	364482	4905835	2	0	0	56.1	56.1	1	3601.39	3.25	0	82.13	0	1.08	0	0	9.85	0	0	0	0	0	0	-37	-37
Inverter Transformer	MV2-4 T	365590	4906628	2	0	0	56.1	56.1	1	3641.12	3.25	0	82.22	0	1.1	0	0	9.91	0	0	0	0	0	0	-37.17	-37.17
Inverter Transformer	MV1-1 T	364721	4906166	2	0	0	56.1	56.1	1	3689.98	3.25	0	82.34	0	1.12	0	0	9.99	0	0	0	0	0	0	-37.39	-37.39
Inverter Transformer	MV1-3 T	364435	4906039	2	0	0	56.1	56.1	1	3780.89	3.25	0	82.55	0	1.16	0	0	10.12	0	0	0	0	0	0	-37.77	-37.77
Inverter Transformer	MV3-21 T	368484	4907206	2	0	0	56.1	56.1	1	4191.2	3.25	0	83.45	0	1.32	0	0	10.74	0	0	0	0	0	0	-39.44	-39.44
Inverter Transformer	MV3-22 T	368661	4907142	2	0	0	56.1	56.1	1	4197.32	3.25	0	83.46	0	1.32	0	0	10.74	0	0	0	0	0	0	-39.47	-39.47
Inverter Transformer	MV3-18 T	367757	4907412	2	0	0	56.1	56.1	1	4198.24	3.25	0	83.46	0	1.32	0	0	10.75	0	0	0	0	0	0	-39.47	-39.47
Inverter Transformer	MV3-19 T	368352	4907347	2	0	0	56.1	56.1	1	4280.67	3.25	0	83.63	0	1.35	0	0	10.86	0	0	0	0	0	0	-39.79	-39.79
Inverter Transformer	MV3-17 T	368183	4907472	2	0	0	56.1	56.1	1	4351.42	3.25	0	83.77	0	1.38	0	0	10.97	0	0	0	0	0	0	-40.06	-40.06
Inverter Transformer	MV3-12 T	367674	4907594	2	0	0	56.1	56.1	1	4364.3	3.25	0	83.8	0	1.39	0	0	10.98	0	0	0	0	0	0	-40.11	-40.11
Inverter Transformer	MV3-20 T	368683	4907317	2	0	0	56.1	56.1	1	4367.25	3.25	0	83.8	0	1.39	0	0	10.99	0	0	0	0	0	0	-40.12	-40.12
Inverter Transformer	MV3-13 T	367958	4907577	2	0	0	56.1	56.1	1	4399.24	3.25	0	83.87	0	1.4	0	0	11.03	0	0	0	0	0	0	-40.24	-40.24
Inverter Transformer	MV3-15 T	368351	4907477	2	0	0	56.1	56.1	1	4404.1	3.25	0	83.88	0	1.4	0	0	11.04	0	0	0	0	0	0	-40.26	-40.26

Inverter Transformer	MV3-16 T	368509	4907475	2	0	0	56.1	56.1	1	4452.54	3.25	0	83.97	0	1.42	0	0	11.11	0	0	0	0	0	0	-40.44	-40.44
Inverter Transformer	MV3-14 T	368678	4907498	2	0	0	56.1	56.1	1	4533.29	3.25	0	84.13	0	1.45	0	0	11.22	0	0	0	0	0	0	-40.74	-40.74
Inverter Transformer	MV3-10 T	368162	4907669	2	0	0	56.1	56.1	1	4536.21	3.25	0	84.13	0	1.45	0	0	11.23	0	0	0	0	0	0	-40.75	-40.75
Inverter Transformer	MV3-7 T	367951	4907754	2	0	0	56.1	56.1	1	4570.88	3.25	0	84.2	0	1.47	0	0	11.27	0	0	0	0	0	0	-40.88	-40.88
Inverter Transformer	MV3-11 T	368340	4907662	2	0	0	56.1	56.1	1	4577.59	3.25	0	84.21	0	1.47	0	0	11.28	0	0	0	0	0	0	-40.91	-40.91
Inverter Transformer	MV3-9 T	368517	4907703	2	0	0	56.1	56.1	1	4670.58	3.25	0	84.39	0	1.5	0	0	11.41	0	0	0	0	0	0	-41.24	-41.24
Inverter Transformer	MV3-6 T	368156	4907834	2	0	0	56.1	56.1	1	4694.62	3.25	0	84.43	0	1.51	0	0	11.44	0	0	0	0	0	0	-41.33	-41.33
Inverter Transformer	MV3-8 T	368685	4907712	2	0	0	56.1	56.1	1	4735.56	3.25	0	84.51	0	1.53	0	0	11.5	0	0	0	0	0	0	-41.48	-41.48
Inverter Transformer	MV3-3 T	367944	4907927	2	0	0	56.1	56.1	1	4739.01	3.25	0	84.51	0	1.53	0	0	11.5	0	0	0	0	0	0	-41.49	-41.49
Inverter Transformer	MV3-5 T	368335	4907843	2	0	0	56.1	56.1	1	4749.79	3.25	0	84.53	0	1.53	0	0	11.52	0	0	0	0	0	0	-41.53	-41.53
Inverter Transformer	MV3-1 T	368150	4907976	2	0	0	56.1	56.1	1	4831.11	3.25	0	84.68	0	1.56	0	0	11.63	0	0	0	0	0	0	-41.82	-41.82
Inverter Transformer	MV3-4 T	368507	4907925	2	0	0	56.1	56.1	1	4878.31	3.25	0	84.77	0	1.58	0	0	11.69	0	0	0	0	0	0	-41.98	-41.98
Inverter Transformer	MV3-2 T	368677	4907928	2	0	0	56.1	56.1	1	4935.64	3.25	0	84.87	0	1.6	0	0	11.77	0	0	0	0	0	0	-42.18	-42.18
Inverter Transformer	MV6-3 T	370202	4907140	2	0	0	56.1	56.1	1	5003.68	3.25	0	84.99	0	1.63	0	0	11.86	0	0	0	0	0	0	-42.41	-42.41
Inverter Transformer	MV6-2 T	370091	4907339	2	0	0	56.1	56.1	1	5091.05	3.25	0	85.14	0	1.66	0	0	11.97	0	0	0	0	0	0	-42.71	-42.71
Inverter Transformer	MV4-15 T	369170	4908481	2	0	0	56.1	56.1	1	5629.01	3.25	0	86.01	0	1.84	0	0	12.66	0	0	0	0	0	0	-44.45	-44.45
Inverter Transformer	MV4-14 T	369182	4908507	2	0	0	56.1	56.1	1	5657.62	3.25	0	86.05	0	1.85	0	0	12.69	0	0	0	0	0	0	-44.54	-44.54
Inverter Transformer	MV4-13 T	369057	4908605	2	0	0	56.1	56.1	1	5702.44	3.25	0	86.12	0	1.87	0	0	12.75	0	0	0	0	0	0	-44.68	-44.68
Inverter Transformer	MV4-12 T	369049	4908803	2	0	0	56.1	56.1	1	5885.03	3.25	0	86.39	0	1.93	0	0	12.97	0	0	0	0	0	0	-45.23	-45.23
Inverter Transformer	MV5-6 T	369987	4908507	2	0	0	56.1	56.1	1	6011.55	3.25	0	86.58	0	1.97	0	0	13.12	0	0	0	0	0	0	-45.61	-45.61
Inverter Transformer	MV4-11 T	369269	4908855	2	0	0	56.1	56.1	1	6012.68	3.25	0	86.58	0	1.97	0	0	13.12	0	0	0	0	0	0	-45.61	-45.61
Inverter Transformer	MV4-10 T	369307	4908858	2	0	0	56.1	56.1	1	6029.77	3.25	0	86.61	0	1.97	0	0	13.14	0	0	0	0	0	0	-45.66	-45.66
Inverter Transformer	MV4-7 T	369040	4909001	2	0	0	56.1	56.1	1	6068.26	3.25	0	86.66	0	1.99	0	0	13.18	0	0	0	0	0	0	-45.77	-45.77
Inverter Transformer	MV4-8 T	369262	4909001	2	0	0	56.1	56.1	1	6145.75	3.25	0	86.77	0	2.01	0	0	13.27	0	0	0	0	0	0	-46	-46
Inverter Transformer	MV4-9 T	369284	4909001	2	0	0	56.1	56.1	1	6153.82	3.25	0	86.78	0	2.01	0	0	13.28	0	0	0	0	0	0	-46.02	-46.02
Inverter Transformer	MV5-5 T	370021	4908690	2	0	0	56.1	56.1	1	6187.78	3.25	0	86.83	0	2.02	0	0	13.32	0	0	0	0	0	0	-46.12	-46.12
Inverter Transformer	MV4-4 T	369033	4909199	2	0	0	56.1	56.1	1	6253.05	3.25	0	86.92	0	2.04	0	0	13.4	0	0	0	0	0	0	-46.31	-46.31
Inverter Transformer	MV4-6 T	369249	4909192	2	0	0	56.1	56.1	1	6319.37	3.25	0	87.01	0	2.06	0	0	13.47	0	0	0	0	0	0	-46.49	-46.49
Inverter Transformer	MV5-2 T	370011	4908853	2	0	0	56.1	56.1	1	6326.08	3.25	0	87.02	0	2.07	0	0	13.48	0	0	0	0	0	0	-46.51	-46.51
Inverter Transformer	MV4-5 T	369283	4909199	2	0	0	56.1	56.1	1	6337.98	3.25	0	87.04	0	2.07	0	0	13.5	0	0	0	0	0	0	-46.55	-46.55
Inverter Transformer	MV5-4 T	370330	4908707	2	0	0	56.1	56.1	1	6357.95	3.25	0	87.07	0	2.08	0	0	13.52	0	0	0	0	0	0	-46.6	-46.6
Inverter Transformer	MV5-3 T	370237	4908851	2	0	0	56.1	56.1	1	6434.31	3.25	0	87.17	0	2.1	0	0	13.61	0	0	0	0	0	0	-46.82	-46.82
Inverter Transformer	MV4-1 T	369017	4909397	2	0	0	56.1	56.1	1	6435.83	3.25	0	87.17	0	2.1	0	0	13.61	0	0	0	0	0	0	-46.82	-46.82
Inverter Transformer	MV4-3 T	369234	4909397	2	0	0	56.1	56.1	1	6506.46	3.25	0	87.27	0	2.12	0	0	13.69	0	0	0	0	0	0	-47.02	-47.02
Inverter Transformer	MV4-2 T	369267	4909397	2	0	0	56.1	56.1	1	6517.77	3.25	0	87.28	0	2.12	0	0	13.7	0	0	0	0	0	0	-47.05	-47.05
Inverter Transformer	MV5-1 T	370015	4909142	2	0	0	56.1	56.1	1	6583.95	3.25	0	87.37	0	2.14	0	0	13.77	0	0	0	0	0	0	-47.23	-47.23
Line Reactor	NGR	369421	4908787.5	5	0	0	45.4	45.4	1	6009.25	5.25	0	86.58	0	3.24	1.36	0.11	2.46	0	0	0	0	0	0	-48.28	-48.28
Limit. Valu 0	0																									
Level D/N: 31.1724	31.1724																									

Receiver: Existing Noise Receptor
ID: G-6
X: 366950.2
Y: 4903384.1
Z: 4.5
Ground: 0

ISO	Description	ID	X	Y	Z	Ground	ReflOrd	LxT	LxN	L/A	Dist.	hm	Freq	Adiv	K0b	Agr	Abar	z	Aatm	Afol	Ahous	Cmet	CmetN	Dc	RL	LtotT	LtotN
	Gardiner Substation	G_Sub	366586.3	4903349.9	2.5	0	0	90.8	90.8	1	365.51	4.24	0	62.26	0	0.57	6.12	0.28	1.1	0	0	0	0	0	0	20.72	20.72
	Inverters	G_Inv2	366676.9	4903239.1	2	0	0	87.7	87.7	1	309.39	3.25	0	60.81	0	2.48	0	0	0.49	0	0	0	0	0	0	23.88	23.88
	Inverters	G_Inv4	366732.8	4903105	2	0	0	87.7	87.7	1	353.79	3.25	0	61.97	0	2.45	0	0	0.55	0	0	0	0	0	0	22.69	22.69
	Sol_Luce Substation	S_Substation	369426	4908792	3.5	0	0	112.1	112.1	1	5947.69	5.25	0	86.49	0	1.15	2.65	0.32	9.69	0	0	0	0	0	0	12.1	12.1
	Inverters	G_Inv6	366788.5	4902972	2	0	0	87.7	87.7	1	442.7	3.25	0	63.92	0	2.41	0	0	0.68	0	0	0	0	0	0	20.65	20.65
	Inverters	G_Inv1	366526.4	4903225.8	2	0	0	87.7	87.7	1	452.41	3.25	0	64.11	0	2.41	0	0	0.7	0	0	0	0	0	0	20.45	20.45
	Inverters	G_Inv3	366583.7	4903091.4	2	0	0	87.7	87.7	1	469.04	3.25	0	64.42	0	2.4	0	0	0.72	0	0	0	0	0	0	20.11	20.11
	Inverters	G_Inv5	366638.5	4902958.1	2	0	0	87.7	87.7	1	527.86	3.25	0	65.45	0	2.4	0	0	0.8	0	0	0	0	0	0	19.01	19.01
	Inverter	MV1-15	365315	4904994	2	0	0	100.3	100.3	1	2294.7	3.25	0	78.21	0	0.21	0	0	14.06	0	0	0	0	0	0	7.83	7.83
	Inverters	G_Inv8	366844.5	4902838.5	2	0	0	87.7	87.7	1	555.75	3.25	0	65.9	0	2.4	0	0	0.84	0	0	0	0	0	0	18.53	18.53
	Inverters	G_Inv7	366694.6	4902824.7	2	0	0	87.7	87.7	1	615.03	3.25	0	66.78	0	2.4	0	0	0.92	0	0	0	0	0	0	17.56	17.56
	Inverter	MV1-12	365038	4905386	2	0	0	100.3	100.3	1	2768.41	3.25	0	79.84	0	0.32	0	0	14.96	0	0	0	0	0	0	5.19	5.19
	Inverters	G_Inv10	366900.7	4902704.8	2	0	0	87.7	87.7	1	681.11	3.25	0	67.66	0	2.4	0	0	1.01	0	0	0	0	0	0	16.58	16.58
	Inverter	MV1-11	364655	4905414	2	0	0	100.3	100.3	1	3064.06	3.25	0	80.73	0	0.37	0	0	15.48	0	0	0	0	0	0	3.73	3.73
	Inverters	G_Inv9	366750.9	4902691.8	2	0	0	87.7	87.7	1	720.42	3.25	0	68.15	0	2.41	0	0	1.06	0	0	0	0	0	0	16.04	16.04
	Inverter	MV1-8	364788	4905647	2	0	0	100.3	100.3	1	3129.83	3.25	0	80.91	0	0.39	0	0	15.6	0	0	0	0	0	0	3.42	3.42
	Inverter	MV1-9	364561	4905646	2	0	0	100.3	100.3	1	3290.06	3.25	0	81.34	0	0.42	0	0	15.88	0	0	0	0	0	0	2.68	2.68
	Inverter	MV1-4	364815	4905918	2	0	0	100.3	100.3	1	3313.57	3.25	0	81.41	0	0.42	0	0	15.92	0	0	0	0	0	0	2.57	2.57
	Inverter	MV1-5	364671	4905892	2	0	0	100.3	100.3	1	3388.85	3.25	0	81.6	0	0.43	0	0	16.04	0	0	0	0	0	0	2.23	2.23
	Inverter	MV2-3	365820	4906641	2	0	0	100.3	100.3	1	3447.43	3.25	0	81.75	0	0.44	0	0	16.14	0	0	0	0	0	0	1.98	1.98
	Inverter	MV1-14	365163	4905049	2	0	0	97.3	97.3	1	2442.54	3.25	0	78.76	0	0.24	0	0	14.35	0	0	0	0	0	0	3.96	3.96
	Inverter	MV1-2	364753	4906063	2	0	0	100.3	100.3	1	3464.71	3.25	0	81.79	0	0.45	0	0	16.17	0	0	0	0	0	0	1.9	1.9
	Inverter	MV1-6	364477	4905835	2	0	0	100.3	100.3	1	3481.9	3.25	0	81.84	0	0.45	0	0	16.2	0	0	0	0	0	0	1.83	1.83
	Inverter	MV2-4	365586	4906624	2	0	0	100.3	100.3	1	3515.39	3.25	0	81.92	0	0.45	0	0	16.26	0	0	0	0	0	0	1.68	1.68
	Inverter	MV1-1	364715	4906166	2	0	0	100.3	100.3	1	3568.63	3.25	0	82.05	0	0.46	0	0	16.35	0	0	0	0	0	0	1.45	1.45
	Inverter	MV1-13	364731	4905241	2	0	0	97.3	97.3	1	2893.6	3.25	0	80.23	0	0.34	0	0	15.18	0	0	0	0	0	0	1.56	1.56

Inverter	MV3-18	367752	4907412	2	0	0	100.3	100.3	1	4106.93	3.25	0	83.27	0	0.54	0	0	17.22	0	0	0	0	0	0	-0.72	-0.72
Inverter	MV3-21	368478	4907206	2	0	0	100.3	100.3	1	4115.96	3.25	0	83.29	0	0.54	0	0	17.23	0	0	0	0	0	0	-0.75	-0.75
Inverter	MV1-10	365004	4905564	2	0	0	97.3	97.3	1	2922.27	3.25	0	80.31	0	0.35	0	0	15.23	0	0	0	0	0	0	1.42	1.42
Inverter	MV3-19	368357	4907347	2	0	0	100.3	100.3	1	4205.2	3.25	0	83.48	0	0.55	0	0	17.37	0	0	0	0	0	0	-1.09	-1.09
Inverter	MV3-17	368178	4907472	2	0	0	100.3	100.3	1	4268.3	3.25	0	83.61	0	0.56	0	0	17.47	0	0	0	0	0	0	-1.33	-1.33
Inverter	MV3-12	367668	4907594	2	0	0	100.3	100.3	1	4270.66	3.25	0	83.61	0	0.56	0	0	17.48	0	0	0	0	0	0	-1.34	-1.34
Inverter	MV3-20	368689	4907317	2	0	0	100.3	100.3	1	4300.13	3.25	0	83.67	0	0.57	0	0	17.52	0	0	0	0	0	0	-1.45	-1.45
Inverter	MV3-13	367963	4907577	2	0	0	100.3	100.3	1	4313.49	3.25	0	83.7	0	0.57	0	0	17.54	0	0	0	0	0	0	-1.5	-1.5
Inverter	MV3-15	368357	4907477	2	0	0	100.3	100.3	1	4327.92	3.25	0	83.73	0	0.57	0	0	17.56	0	0	0	0	0	0	-1.55	-1.55
Inverter	MV3-16	368514	4907475	2	0	0	100.3	100.3	1	4379.6	3.25	0	83.83	0	0.58	0	0	17.65	0	0	0	0	0	0	-1.74	-1.74
Inverter	MV1-7	364925	4905782	2	0	0	97.3	97.3	1	3138.69	3.25	0	80.93	0	0.39	0	0	15.62	0	0	0	0	0	0	0.37	0.37
Inverter	MV3-10	368167	4907669	2	0	0	100.3	100.3	1	4454.32	3.25	0	83.98	0	0.59	0	0	17.76	0	0	0	0	0	0	-2.01	-2.01
Inverter	MV3-14	368684	4907498	2	0	0	100.3	100.3	1	4464.33	3.25	0	84	0	0.59	0	0	17.78	0	0	0	0	0	0	-2.05	-2.05
Inverter	MV3-7	367945	4907754	2	0	0	100.3	100.3	1	4481.7	3.25	0	84.03	0	0.59	0	0	17.8	0	0	0	0	0	0	-2.11	-2.11
Inverter	MV3-11	368346	4907662	2	0	0	100.3	100.3	1	4499.85	3.25	0	84.06	0	0.59	0	0	17.83	0	0	0	0	0	0	-2.17	-2.17
Inverter	MV3-9	368512	4907703	2	0	0	100.3	100.3	1	4592.62	3.25	0	84.24	0	0.6	0	0	17.97	0	0	0	0	0	0	-2.5	-2.5
Inverter	MV3-6	368162	4907834	2	0	0	100.3	100.3	1	4611.95	3.25	0	84.28	0	0.6	0	0	18	0	0	0	0	0	0	-2.57	-2.57
Inverter	MV3-3	367939	4907927	2	0	0	100.3	100.3	1	4649.27	3.25	0	84.35	0	0.61	0	0	18.06	0	0	0	0	0	0	-2.7	-2.7
Inverter	MV3-8	368680	4907712	2	0	0	100.3	100.3	1	4660.79	3.25	0	84.37	0	0.61	0	0	18.07	0	0	0	0	0	0	-2.74	-2.74
Inverter	MV6-3	370207	4907140	2	0	0	100.3	100.3	1	4971.27	3.25	0	84.93	0	0.64	0	0	18.54	0	0	0	0	0	0	-3.79	-3.79
Inverter	MV6-2	370085	4907339	2	0	0	100.3	100.3	1	5046.6	3.25	0	85.06	0	0.65	0	0	18.65	0	0	0	0	0	0	-4.04	-4.04
Inverter	MV2-1	365842	4906816	2	0	0	97.3	97.3	1	3606.39	3.25	0	82.14	0	0.47	0	0	16.41	0	0	0	0	0	0	-1.71	-1.71
Inverter	MV4-11	369264	4908855	2	0	0	100.3	100.3	1	5940.07	3.25	0	86.48	0	0.7	0	0	19.91	0	0	0	0	0	0	-6.78	-6.78
Inverter	MV4-10	369312	4908858	2	0	0	100.3	100.3	1	5961.68	3.25	0	86.51	0	0.7	0	0	19.94	0	0	0	0	0	0	-6.84	-6.84
Inverter	MV4-7	369035	4909001	2	0	0	100.3	100.3	1	5991.32	3.25	0	86.55	0	0.7	0	0	19.98	0	0	0	0	0	0	-6.92	-6.92
Inverter	MV4-8	369256	4909001	2	0	0	100.3	100.3	1	6071.76	3.25	0	86.67	0	0.71	0	0	20.09	0	0	0	0	0	0	-7.15	-7.15
Inverter	MV4-9	369289	4909001	2	0	0	100.3	100.3	1	6084.37	3.25	0	86.68	0	0.71	0	0	20.11	0	0	0	0	0	0	-7.19	-7.19
Inverter	MV5-5	370015	4908690	2	0	0	100.3	100.3	1	6127.44	3.25	0	86.75	0	0.71	0	0	20.17	0	0	0	0	0	0	-7.31	-7.31
Inverter	MV4-4	369027	4909199	2	0	0	100.3	100.3	1	6174.64	3.25	0	86.81	0	0.71	0	0	20.23	0	0	0	0	0	0	-7.44	-7.44
Inverter	MV4-6	369243	4909192	2	0	0	100.3	100.3	1	6244.09	3.25	0	86.91	0	0.71	0	0	20.32	0	0	0	0	0	0	-7.63	-7.63
Inverter	MV5-2	370006	4908853	2	0	0	100.3	100.3	1	6264.73	3.25	0	86.94	0	0.71	0	0	20.35	0	0	0	0	0	0	-7.69	-7.69
Inverter	MV4-5	369289	4909199	2	0	0	100.3	100.3	1	6267.62	3.25	0	86.94	0	0.71	0	0	20.35	0	0	0	0	0	0	-7.69	-7.69
Inverter	MV5-4	370324	4908707	2	0	0	100.3	100.3	1	6302.05	3.25	0	86.99	0	0.71	0	0	20.4	0	0	0	0	0	0	-7.79	-7.79
Inverter	MV4-1	369011	4909397	2	0	0	100.3	100.3	1	6356.25	3.25	0	87.06	0	0.71	0	0	20.47	0	0	0	0	0	0	-7.94	-7.94
Inverter	MV5-3	370231	4908851	2	0	0	100.3	100.3	1	6375.79	3.25	0	87.09	0	0.71	0	0	20.5	0	0	0	0	0	0	-7.99	-7.99
Inverter	MV4-3	369229	4909397	2	0	0	100.3	100.3	1	6430.23	3.25	0	87.16	0	0.71	0	0	20.57	0	0	0	0	0	0	-8.13	-8.13
Inverter	MV4-2	369272	4909397	2	0	0	100.3	100.3	1	6445.6	3.25	0	87.19	0	0.71	0	0	20.59	0	0	0	0	0	0	-8.18	-8.18
Inverter	MV5-1	370020	4909142	2	0	0	100.3	100.3	1	6525.11	3.25	0	87.29	0	0.71	0	0	20.69	0	0	0	0	0	0	-8.39	-8.39
Inverter	MV6-1	370235	4907364	2	0	0	97.3	97.3	1	5160.38	3.25	0	85.25	0	0.66	0	0	18.81	0	0	0	0	0	0	-7.41	-7.41
DSTATCOM - 10 MVAR #2	DSAT2	369403	4908757	2.5	0	0	96.6	96.6	1	5906.29	3.5	0	86.43	0	3.77	0	0	3.79	0	0	0	0	0	0	2.64	2.64
DSTATCOM - 10 MVAR #1	DSAT1	369437	4908757	2.5	0	0	96.6	96.6	1	5920.49	3.5	0	86.45	0	3.77	0	0	3.8	0	0	0	0	0	0	2.61	2.61
SubstationTransformer	W_ST	369711.17	4906112.3	2.5	0	0	92	92	1	3881.48	3.5	0	82.78	0	0.3	0	-0.1	7.21	0	0	0	0	0	0	1.69	1.69
Inverter	MV2-2	365977	4906654	2	0	0	89.1	89.1	1	3411.65	3.25	0	81.66	0	1.25	0	0	10.23	0	0	0	0	0	0	-4.08	-4.08
Inverter	MV1-3	364440	4906039	2	0	0	89.1	89.1	1	3653.71	3.25	0	82.25	0	1.31	0	0	10.59	0	0	0	0	0	0	-5.09	-5.09
Westbrook Inverter Enclosur	W_INV3	369508	4906164	2	0	0	89.1	89.1	1	3777.59	3.25	0	82.54	0	1.34	0	0	10.77	0	0	0	0	0	0	-5.59	-5.59
Westbrook Inverter Enclosur	W_INV2	369374	4906388	2	0	0	89.1	89.1	1	3859.82	3.25	0	82.73	0	1.36	0	0	10.88	0	0	0	0	0	0	-5.92	-5.92
Westbrook Inverter Enclosur	W_INV4	369673	4906164	2	0	0	89.1	89.1	1	3891.21	3.25	0	82.8	0	1.37	0	0	10.93	0	0	0	0	0	0	-6.04	-6.04
Inverter	MV3-22	368656	4907142	2	0	0	89.1	89.1	1	4126.93	3.25	0	83.31	0	1.42	0	0	11.26	0	0	0	0	0	0	-6.94	-6.94
Westbrook Inverter Enclosur	W_INV7	369780	4906417	2	0	0	89.1	89.1	1	4148.04	3.25	0	83.36	0	1.43	0	0	11.29	0	0	0	0	0	0	-7.02	-7.02
Westbrook Inverter Enclosur	W_INV5	369719	4906574	2	0	0	89.1	89.1	1	4223.95	3.25	0	83.51	0	1.45	0	0	11.4	0	0	0	0	0	0	-7.3	-7.3
Westbrook Inverter Enclosur	W_INV6	369875	4906578	2	0	0	89.1	89.1	1	4330.76	3.25	0	83.73	0	1.47	0	0	11.55	0	0	0	0	0	0	-7.7	-7.7
Inverter	MV3-5	368340	4907843	2	0	0	89.1	89.1	1	4670.48	3.25	0	84.39	0	1.56	0	0	12.02	0	0	0	0	0	0	-8.91	-8.91
Inverter	MV3-1	368156	4907976	2	0	0	89.1	89.1	1	4747.58	3.25	0	84.53	0	1.58	0	0	12.12	0	0	0	0	0	0	-9.17	-9.17
Inverter	MV3-4	368502	4907925	2	0	0	89.1	89.1	1	4798.74	3.25	0	84.62	0	1.59	0	0	12.19	0	0	0	0	0	0	-9.35	-9.35
Inverter	MV3-2	368671	4907928	2	0	0	89.1	89.1	1	4858.83	3.25	0	84.73	0	1.6	0	0	12.27	0	0	0	0	0	0	-9.55	-9.55
Fixed Reactor Bank 1	FRB1	369378	4908755	6	0	0	89.8	89.8	1	5894.13	5.25	0	86.41	0	-0.43	0	0	9.63	0	0	0	0	0	0	-5.83	-5.83
Fixed Reactor Bank 2	FRB2	369464	4908755	6	0	0	89.8	89.8	1	5930.07	5.25	0	86.46	0	-0.43	0	0	9.67	0	0	0	0	0	0	-5.92	-5.92
Inverter	MV4-15	369176	4908481	2	0	0	89.1	89.1	1	5561.71	3.25	0	85.9	0	1.78	0	0	13.2	0	0	0	0	0	0	-11.83	-11.83
Inverter	MV4-14	369176	4908507	2	0	0	89.1	89.1	1	5585.54	3.25	0	85.94	0	1.78	0	0	13.23	0	0	0	0	0	0	-11.9	-11.9
Inverter	MV4-13	369051	4908605	2	0	0	89.1	89.1	1	5627.71	3.25	0	86.01	0	1.79	0	0	13.29	0	0	0	0	0	0	-12.03	-12.03
Westbrook Inverter Enclosur	W_INV1	369409	4906578	2	0	0	86.1	86.1	1	4030.72	3.25	0	83.11	0	1.4	0	0	11.13	0	0	0	0	0	0	-9.58	-9.58
Inverter	MV4-12	369043	4908803	2	0	0	89.1	89.1	1	5808.98	3.25	0	86.28	0	1.84	0	0	13.52	0	0	0	0	0	0	-12.58	-12.58
Inverter	MV5-6	369982	4908507	2	0	0	89.1	89.1	1	5952.81	3.25	0	86.49	0	1.87	0	0	13.7	0	0	0	0	0	0	-13.01	-13.01
Inverter	MV6-4	370250	4906966	2	0	0	86.1	86.1	1	4870.18	3.25	0	84.75	0	1.61	0	0	12.29	0	0	0	0	0	0	-12.59	-12.59
Westbrook Inverter Transfor	W_INVTR1	369403	4906578	2	0	0	78.2	78.2	1	4027.06	3.25	0	83.1	0	-2.97	0	0	2.06	0	0	0	0	0	0	-3.95	-3.95
Westbrook Inverter Transfor	W_INVTR3	369514	4906164	2	0	0	77.3	77.3	1	3781.66	3.25	0	82.55	0	-2.91	0	0	1.97	0	0	0	0	0	0	-4.27	-4.27
Westbrook Inverter Transfor	W_INVTR2	369368	4906388	2	0	0	77.3	77.3	1	3856.06	3.25	0	82.72	0	-2.93	0	0	2	0	0	0	0	0	0	-4.45	-4.45
Westbrook Inverter Transfor	W_INVTR4	369679	4906164	2	0	0	77.3	77.3	1	3895.41	3.25	0	82.81	0	-2.94	0	0	2.02	0	0	0	0	0	0	-4.55	-4.55
Westbrook Inverter Transfor	W_INVTR7	369786	4906417	2	0	0	77.3	77.3	1	4152.14	3.25	0	83.37	0	-3	0	0	2.11	0	0	0	0	0	0	-5.14	-5.14
Westbrook Inverter Transfor	W_INVTR5	369725	4906574	2	0	0	77.3	77.3	1	4227.88	3.25	0	83.52	0	-3.01	0	0	2.14	0	0	0	0	0	0	-5.31	-5.31
Westbrook Inverter Transfor	W_INVTR6	369881	4906578	2	0	0	77.3	77.3	1	4334.81	3.25	0	83.74	0	-3.04	0	0	2.18	0	0	0	0	0	0	-5.54	-5.54
Inverter Transformer	MV1-14 T	365157	4905049	2	0	0	69.4	69.4	1	2446.93	3.25	0	78.77	0	2.33	0	0	5.39	0	0	0	0	0	0	-17.15	-17.15
Inverter Transformer	MV1-13 T	364725	4905241	2	0	0	69.4	69.4	1	2898.21	3.25	0	80.24	0	2.48	0	0	5.8	0	0	0	0	0	0	-19.16	-19.16
Inverter Transformer	MV1-10 T	365010	4905564	2	0	0	69.4	69.4	1	2918.28	3.25	0	80.3	0	2.48	0	0	5.81	0	0	0	0	0	0	-19.25	-19.25

Inverter Transformer	MV1-7 T	364919	4905782	2	0	0	69.4	69.4	1	3142.56	3.25	0	80.95	0	2.55	0	0	6	0	0	0	0	0	0	-20.15	-20.15
Inverter Transformer	MV2-1 T	365836	4906816	2	0	0	69.4	69.4	1	3608.24	3.25	0	82.15	0	2.68	0	0	6.38	0	0	0	0	0	0	-21.86	-21.86
Inverter Transformer	MV6-4 T	370244	4906966	2	0	0	69.4	69.4	1	4866.12	3.25	0	84.74	0	2.99	0	0	7.29	0	0	0	0	0	0	-25.67	-25.67
Inverter Transformer	MV6-1 T	370230	4907364	2	0	0	69.4	69.4	1	5157.2	3.25	0	85.25	0	3.04	0	0	7.49	0	0	0	0	0	0	-26.43	-26.43
Inverter Transformer	MV1-15 T	365309	4904994	2	0	0	56.1	56.1	1	2298.98	3.25	0	78.23	0	0.53	0	0	7.62	0	0	0	0	0	0	-30.32	-30.32
Inverter Transformer	MV1-12 T	365044	4905386	2	0	0	56.1	56.1	1	2764.27	3.25	0	79.83	0	0.73	0	0	8.46	0	0	0	0	0	0	-32.96	-32.96
Inverter Transformer	MV1-11 T	364649	4905414	2	0	0	56.1	56.1	1	3068.55	3.25	0	80.74	0	0.86	0	0	8.98	0	0	0	0	0	0	-34.52	-34.52
Inverter Transformer	MV1-8 T	364782	4905647	2	0	0	56.1	56.1	1	3133.98	3.25	0	80.92	0	0.89	0	0	9.09	0	0	0	0	0	0	-34.84	-34.84
Inverter Transformer	MV1-9 T	364555	4905646	2	0	0	56.1	56.1	1	3294.42	3.25	0	81.36	0	0.95	0	0	9.36	0	0	0	0	0	0	-35.61	-35.61
Inverter Transformer	MV1-4 T	364821	4905918	2	0	0	56.1	56.1	1	3309.71	3.25	0	81.4	0	0.96	0	0	9.38	0	0	0	0	0	0	-35.68	-35.68
Inverter Transformer	MV1-5 T	364676	4905892	2	0	0	56.1	56.1	1	3385.49	3.25	0	81.59	0	0.99	0	0	9.5	0	0	0	0	0	0	-36.03	-36.03
Inverter Transformer	MV2-2 T	365982	4906654	2	0	0	56.1	56.1	1	3410.23	3.25	0	81.66	0	1	0	0	9.54	0	0	0	0	0	0	-36.14	-36.14
Inverter Transformer	MV2-3 T	365814	4906641	2	0	0	56.1	56.1	1	3449.4	3.25	0	81.75	0	1.02	0	0	9.61	0	0	0	0	0	0	-36.32	-36.32
Inverter Transformer	MV1-2 T	364759	4906063	2	0	0	56.1	56.1	1	3460.91	3.25	0	81.78	0	1.02	0	0	9.63	0	0	0	0	0	0	-36.37	-36.37
Inverter Transformer	MV1-6 T	364482	4905835	2	0	0	56.1	56.1	1	3478.35	3.25	0	81.83	0	1.03	0	0	9.65	0	0	0	0	0	0	-36.45	-36.45
Inverter Transformer	MV2-4 T	365590	4906628	2	0	0	56.1	56.1	1	3517.53	3.25	0	81.92	0	1.05	0	0	9.72	0	0	0	0	0	0	-36.63	-36.63
Inverter Transformer	MV1-1 T	364721	4906166	2	0	0	56.1	56.1	1	3564.87	3.25	0	82.04	0	1.07	0	0	9.79	0	0	0	0	0	0	-36.84	-36.84
Inverter Transformer	MV1-3 T	364435	4906039	2	0	0	56.1	56.1	1	3657.15	3.25	0	82.26	0	1.1	0	0	9.93	0	0	0	0	0	0	-37.24	-37.24
Inverter Transformer	MV3-18 T	367757	4907412	2	0	0	56.1	56.1	1	4107.91	3.25	0	83.27	0	1.29	0	0	10.61	0	0	0	0	0	0	-39.12	-39.12
Inverter Transformer	MV3-21 T	368484	4907206	2	0	0	56.1	56.1	1	4118.19	3.25	0	83.29	0	1.29	0	0	10.63	0	0	0	0	0	0	-39.16	-39.16
Inverter Transformer	MV3-22 T	368661	4907142	2	0	0	56.1	56.1	1	4129	3.25	0	83.32	0	1.3	0	0	10.65	0	0	0	0	0	0	-39.2	-39.2
Inverter Transformer	MV3-19 T	368352	4907347	2	0	0	56.1	56.1	1	4203.53	3.25	0	83.47	0	1.32	0	0	10.75	0	0	0	0	0	0	-39.49	-39.49
Inverter Transformer	MV3-17 T	368183	4907472	2	0	0	56.1	56.1	1	4269.75	3.25	0	83.61	0	1.35	0	0	10.85	0	0	0	0	0	0	-39.75	-39.75
Inverter Transformer	MV3-12 T	367674	4907594	2	0	0	56.1	56.1	1	4271.67	3.25	0	83.61	0	1.35	0	0	10.85	0	0	0	0	0	0	-39.76	-39.76
Inverter Transformer	MV3-20 T	368683	4907317	2	0	0	56.1	56.1	1	4297.71	3.25	0	83.66	0	1.36	0	0	10.89	0	0	0	0	0	0	-39.86	-39.86
Inverter Transformer	MV3-13 T	367958	4907577	2	0	0	56.1	56.1	1	4312.32	3.25	0	83.69	0	1.37	0	0	10.91	0	0	0	0	0	0	-39.91	-39.91
Inverter Transformer	MV3-15 T	368351	4907477	2	0	0	56.1	56.1	1	4325.98	3.25	0	83.72	0	1.37	0	0	10.93	0	0	0	0	0	0	-39.97	-39.97
Inverter Transformer	MV3-16 T	368509	4907475	2	0	0	56.1	56.1	1	4377.82	3.25	0	83.83	0	1.39	0	0	11	0	0	0	0	0	0	-40.16	-40.16
Inverter Transformer	MV3-10 T	368162	4907669	2	0	0	56.1	56.1	1	4452.96	3.25	0	83.97	0	1.42	0	0	11.11	0	0	0	0	0	0	-40.45	-40.45
Inverter Transformer	MV3-14 T	368678	4907498	2	0	0	56.1	56.1	1	4462	3.25	0	83.99	0	1.43	0	0	11.12	0	0	0	0	0	0	-40.48	-40.48
Inverter Transformer	MV3-7 T	367951	4907754	2	0	0	56.1	56.1	1	4483.04	3.25	0	84.03	0	1.43	0	0	11.15	0	0	0	0	0	0	-40.56	-40.56
Inverter Transformer	MV3-11 T	368340	4907662	2	0	0	56.1	56.1	1	4498	3.25	0	84.06	0	1.44	0	0	11.17	0	0	0	0	0	0	-40.61	-40.61
Inverter Transformer	MV3-9 T	368517	4907703	2	0	0	56.1	56.1	1	4594.32	3.25	0	84.24	0	1.48	0	0	11.31	0	0	0	0	0	0	-40.97	-40.97
Inverter Transformer	MV3-6 T	368156	4907834	2	0	0	56.1	56.1	1	4610.38	3.25	0	84.27	0	1.48	0	0	11.33	0	0	0	0	0	0	-41.03	-41.03
Inverter Transformer	MV3-3 T	367944	4907927	2	0	0	56.1	56.1	1	4650.33	3.25	0	84.35	0	1.5	0	0	11.38	0	0	0	0	0	0	-41.17	-41.17
Inverter Transformer	MV3-8 T	368685	4907712	2	0	0	56.1	56.1	1	4662.64	3.25	0	84.37	0	1.5	0	0	11.4	0	0	0	0	0	0	-41.22	-41.22
Inverter Transformer	MV3-5 T	368335	4907843	2	0	0	56.1	56.1	1	4668.99	3.25	0	84.38	0	1.5	0	0	11.41	0	0	0	0	0	0	-41.24	-41.24
Inverter Transformer	MV3-1 T	368150	4907976	2	0	0	56.1	56.1	1	4746.06	3.25	0	84.53	0	1.53	0	0	11.51	0	0	0	0	0	0	-41.51	-41.51
Inverter Transformer	MV3-4 T	368507	4907925	2	0	0	56.1	56.1	1	4800.35	3.25	0	84.63	0	1.55	0	0	11.59	0	0	0	0	0	0	-41.71	-41.71
Inverter Transformer	MV3-2 T	368677	4907928	2	0	0	56.1	56.1	1	4860.95	3.25	0	84.73	0	1.57	0	0	11.67	0	0	0	0	0	0	-41.92	-41.92
Inverter Transformer	MV6-3 T	370202	4907140	2	0	0	56.1	56.1	1	4968	3.25	0	84.92	0	1.61	0	0	11.81	0	0	0	0	0	0	-42.29	-42.29
Inverter Transformer	MV6-2 T	370091	4907339	2	0	0	56.1	56.1	1	5050.33	3.25	0	85.07	0	1.64	0	0	11.92	0	0	0	0	0	0	-42.57	-42.57
Inverter Transformer	MV4-15 T	369170	4908481	2	0	0	56.1	56.1	1	5559.31	3.25	0	85.9	0	1.82	0	0	12.57	0	0	0	0	0	0	-44.23	-44.23
Inverter Transformer	MV4-14 T	369182	4908507	2	0	0	56.1	56.1	1	5587.94	3.25	0	85.95	0	1.83	0	0	12.6	0	0	0	0	0	0	-44.32	-44.32
Inverter Transformer	MV4-13 T	369057	4908605	2	0	0	56.1	56.1	1	5629.96	3.25	0	86.01	0	1.84	0	0	12.66	0	0	0	0	0	0	-44.45	-44.45
Inverter Transformer	MV4-12 T	369049	4908803	2	0	0	56.1	56.1	1	5811.15	3.25	0	86.29	0	1.9	0	0	12.88	0	0	0	0	0	0	-45.01	-45.01
Inverter Transformer	MV4-11 T	369269	4908855	2	0	0	56.1	56.1	1	5942.02	3.25	0	86.48	0	1.95	0	0	13.03	0	0	0	0	0	0	-45.4	-45.4
Inverter Transformer	MV5-6 T	369987	4908507	2	0	0	56.1	56.1	1	5955.36	3.25	0	86.5	0	1.95	0	0	13.05	0	0	0	0	0	0	-45.44	-45.44
Inverter Transformer	MV4-10 T	369307	4908858	2	0	0	56.1	56.1	1	5959.71	3.25	0	86.5	0	1.95	0	0	13.06	0	0	0	0	0	0	-45.45	-45.45
Inverter Transformer	MV4-7 T	369040	4909001	2	0	0	56.1	56.1	1	5993.07	3.25	0	86.55	0	1.96	0	0	13.09	0	0	0	0	0	0	-45.55	-45.55
Inverter Transformer	MV4-8 T	369262	4909001	2	0	0	56.1	56.1	1	6074.04	3.25	0	86.67	0	1.99	0	0	13.19	0	0	0	0	0	0	-45.79	-45.79
Inverter Transformer	MV4-9 T	369284	4909001	2	0	0	56.1	56.1	1	6082.45	3.25	0	86.68	0	1.99	0	0	13.2	0	0	0	0	0	0	-45.81	-45.81
Inverter Transformer	MV5-5 T	370021	4908690	2	0	0	56.1	56.1	1	6130.45	3.25	0	86.75	0	2.01	0	0	13.26	0	0	0	0	0	0	-45.95	-45.95
Inverter Transformer	MV4-4 T	369033	4909199	2	0	0	56.1	56.1	1	6176.66	3.25	0	86.82	0	2.02	0	0	13.31	0	0	0	0	0	0	-46.09	-46.09
Inverter Transformer	MV4-6 T	369249	4909192	2	0	0	56.1	56.1	1	6246.29	3.25	0	86.91	0	2.04	0	0	13.39	0	0	0	0	0	0	-46.29	-46.29
Inverter Transformer	MV4-5 T	369283	4909199	2	0	0	56.1	56.1	1	6265.38	3.25	0	86.94	0	2.05	0	0	13.41	0	0	0	0	0	0	-46.34	-46.34
Inverter Transformer	MV5-2 T	370011	4908853	2	0	0	56.1	56.1	1	6267.17	3.25	0	86.94	0	2.05	0	0	13.41	0	0	0	0	0	0	-46.35	-46.35
Inverter Transformer	MV5-4 T	370330	4908707	2	0	0	56.1	56.1	1	6305.26	3.25	0	86.99	0	2.06	0	0	13.46	0	0	0	0	0	0	-46.45	-46.45
Inverter Transformer	MV4-1 T	369017	4909397	2	0	0	56.1	56.1	1	6358.19	3.25	0	87.07	0	2.08	0	0	13.52	0	0	0	0	0	0	-46.6	-46.6
Inverter Transformer	MV5-3 T	370237	4908851	2	0	0	56.1	56.1	1	6378.88	3.25	0	87.09	0	2.08	0	0	13.54	0	0	0	0	0	0	-46.66	-46.66
Inverter Transformer	MV4-3 T	369234	4909397	2	0	0	56.1	56.1	1	6432.01	3.25	0	87.17	0	2.1	0	0	13.6	0	0	0	0	0	0	-46.81	-46.81
Inverter Transformer	MV4-2 T	369267	4909397	2	0	0	56.1	56.1	1	6443.8	3.25	0	87.18	0	2.1	0	0	13.62	0	0	0	0	0	0	-46.84	-46.84
Inverter Transformer	MV5-1 T	370015	4909142	2	0	0	56.1	56.1	1	6522.76	3.25	0	87.29	0	2.12	0	0	13.71	0	0	0	0	0	0	-47.06	-47.06
Line Reactor	NGR	369421	4908787.5	5	0	0	45.4	45.4	1	5941.51	5.25	0	86.48	0	3.24	1.36	0.11	2.43	0	0	0	0	0	0	-48.15	-48.15
Limit. Valu 0	0																									
Level D/N: 30.9609	30.9609																									

Receiver: Existing Noise Receptor
ID: G-7
X: 366476.2
Y: 4903421.1
Z: 4.5
Ground: 0

ISO	Description	ID	X	Y	Z	Ground	ReflOrd	LxT	LxN	L/A	Dist.	hm	Freq	Adiv	K0b	Agr	Abar	z	Aatm	Afol	Ahous	Cmet	CmetN	Dc	RL	LtotT	LtotN
	Gardiner Substation	G_Sub	366586.3	4903349.9	2.5	0	0	90.8	90.8	1	131.13	4.22	0	53.35	0	0.66	6.63	0.28	0.46	0	0	0	0	0	0	29.67	29.67
	Inverters	G_Inv1	366526.4	4903225.8	2	0	0	87.7	87.7	1	201.66	3.25	0	57.09	0	2.66	0	0	0.33	0	0	0	0	0	0	27.58	27.58
	Inverters	G_Inv2	366676.9	4903239.1	2	0	0	87.7	87.7	1	270.94	3.25	0	59.66	0	2.53	0	0	0.43	0	0	0	0	0	0	25.04	25.04
	Inverters	G_Inv3	366583.7	4903091.4	2	0	0	87.7	87.7	1	346.79	3.25	0	61.8	0	2.45	0	0	0.54	0	0	0	0	0	0	22.86	22.86
	Sol_Luce Substation	S_Substation	369426	4908792	3.5	0	0	112.1	112.1	1	6127.63	5.25	0	86.75	0	1.19	2.62	0.31	9.88	0	0	0	0	0	0	11.65	11.65
	Inverters	G_Inv4	366732.8	4903105	2	0	0	87.7	87.7	1	407.15	3.25	0	63.2	0	2.42	0	0	0.63	0	0	0	0	0	0	21.42	21.42
	Inverter	MV1-15	365315	4904994	2	0	0	100.3	100.3	1	1955.1	3.25	0	76.82	0	0.12	0	0	13.37	0	0	0	0	0	0	10.01	10.01
	Inverters	G_Inv5	366638.5	4902958.1	2	0	0	87.7	87.7	1	490.63	3.25	0	64.82	0	2.4	0	0	0.75	0	0	0	0	0	0	19.7	19.7
	Inverters	G_Inv6	366788.5	4902972	2	0	0	87.7	87.7	1	547.02	3.25	0	65.76	0	2.4	0	0	0.83	0	0	0	0	0	0	18.68	18.68
	Inverter	MV1-12	365038	4905386	2	0	0	100.3	100.3	1	2435.01	3.25	0	78.73	0	0.24	0	0	14.33	0	0	0	0	0	0	7.01	7.01
	Inverter	MV1-11	364655	4905414	2	0	0	100.3	100.3	1	2699.71	3.25	0	79.63	0	0.3	0	0	14.83	0	0	0	0	0	0	5.55	5.55
	Inverters	G_Inv7	366694.6	4902824.7	2	0	0	87.7	87.7	1	635.14	3.25	0	67.06	0	2.4	0	0	0.95	0	0	0	0	0	0	17.25	17.25
	Inverter	MV1-8	364788	4905647	2	0	0	100.3	100.3	1	2793.68	3.25	0	79.92	0	0.32	0	0	15	0	0	0	0	0	0	5.06	5.06
	Inverter	MV1-9	364561	4905646	2	0	0	100.3	100.3	1	2935.67	3.25	0	80.35	0	0.35	0	0	15.26	0	0	0	0	0	0	4.35	4.35
	Inverter	MV1-14	365163	4905049	2	0	0	97.3	97.3	1	2091.54	3.25	0	77.41	0	0.15	0	0	13.65	0	0	0	0	0	0	6.1	6.1
	Inverters	G_Inv8	366844.5	4902838.5	2	0	0	87.7	87.7	1	689.26	3.25	0	67.77	0	2.41	0	0	1.02	0	0	0	0	0	0	16.47	16.47
	Inverter	MV1-4	364815	4905918	2	0	0	100.3	100.3	1	2999.02	3.25	0	80.54	0	0.36	0	0	15.37	0	0	0	0	0	0	4.04	4.04
	Inverter	MV1-5	364671	4905892	2	0	0	100.3	100.3	1	3060.08	3.25	0	80.71	0	0.37	0	0	15.48	0	0	0	0	0	0	3.75	3.75
	Inverter	MV1-6	364477	4905835	2	0	0	100.3	100.3	1	3134.28	3.25	0	80.92	0	0.39	0	0	15.61	0	0	0	0	0	0	3.39	3.39
	Inverter	MV1-2	364753	4906063	2	0	0	100.3	100.3	1	3154.21	3.25	0	80.98	0	0.39	0	0	15.64	0	0	0	0	0	0	3.3	3.3
	Inverter	MV1-1	364715	4906166	2	0	0	100.3	100.3	1	3261.34	3.25	0	81.27	0	0.41	0	0	15.83	0	0	0	0	0	0	2.81	2.81
	Inverter	MV2-3	365820	4906641	2	0	0	100.3	100.3	1	3286.09	3.25	0	81.33	0	0.41	0	0	15.87	0	0	0	0	0	0	2.69	2.69
	Inverter	MV2-4	365586	4906624	2	0	0	100.3	100.3	1	3324.31	3.25	0	81.43	0	0.42	0	0	15.93	0	0	0	0	0	0	2.52	2.52
	Inverters	G_Inv9	366750.9	4902691.8	2	0	0	87.7	87.7	1	779.32	3.25	0	68.83	0	2.42	0	0	1.14	0	0	0	0	0	0	15.27	15.27
	Inverter	MV1-13	364731	4905241	2	0	0	97.3	97.3	1	2521.46	3.25	0	79.03	0	0.26	0	0	14.5	0	0	0	0	0	0	3.52	3.52
	Inverters	G_Inv10	366900.7	4902704.8	2	0	0	87.7	87.7	1	832.64	3.25	0	69.41	0	2.42	0	0	1.21	0	0	0	0	0	0	14.61	14.61
	Inverter	MV1-10	365004	4905564	2	0	0	97.3	97.3	1	2599.88	3.25	0	79.3	0	0.28	0	0	14.65	0	0	0	0	0	0	3.09	3.09
	Inverter	MV1-7	364925	4905782	2	0	0	97.3	97.3	1	2824.9	3.25	0	80.02	0	0.33	0	0	15.06	0	0	0	0	0	0	1.91	1.91
	Inverter	MV3-18	367752	4907412	2	0	0	100.3	100.3	1	4189.86	3.25	0	83.44	0	0.55	0	0	17.35	0	0	0	0	0	0	-1.03	-1.03
	Inverter	MV3-21	368478	4907206	2	0	0	100.3	100.3	1	4281.67	3.25	0	83.63	0	0.56	0	0	17.49	0	0	0	0	0	0	-1.38	-1.38
	Inverter	MV3-12	367668	4907594	2	0	0	100.3	100.3	1	4339.76	3.25	0	83.75	0	0.57	0	0	17.58	0	0	0	0	0	0	-1.59	-1.59
	Inverter	MV3-19	368357	4907347	2	0	0	100.3	100.3	1	4353.17	3.25	0	83.78	0	0.57	0	0	17.6	0	0	0	0	0	0	-1.64	-1.64
	Inverter	MV3-17	368178	4907472	2	0	0	100.3	100.3	1	4393.85	3.25	0	83.86	0	0.58	0	0	17.67	0	0	0	0	0	0	-1.79	-1.79
	Inverter	MV3-13	367963	4907577	2	0	0	100.3	100.3	1	4413.85	3.25	0	83.9	0	0.58	0	0	17.7	0	0	0	0	0	0	-1.86	-1.86
	Inverter	MV3-15	368357	4907477	2	0	0	100.3	100.3	1	4470.77	3.25	0	84.01	0	0.59	0	0	17.79	0	0	0	0	0	0	-2.07	-2.07
	Inverter	MV3-20	368689	4907317	2	0	0	100.3	100.3	1	4480.46	3.25	0	84.03	0	0.59	0	0	17.8	0	0	0	0	0	0	-2.1	-2.1
	Inverter	MV3-16	368514	4907475	2	0	0	100.3	100.3	1	4537.26	3.25	0	84.14	0	0.6	0	0	17.89	0	0	0	0	0	0	-2.31	-2.31
	Inverter	MV3-10	368167	4907669	2	0	0	100.3	100.3	1	4572.03	3.25	0	84.2	0	0.6	0	0	17.94	0	0	0	0	0	0	-2.43	-2.43
	Inverter	MV3-7	367945	4907754	2	0	0	100.3	100.3	1	4575.08	3.25	0	84.21	0	0.6	0	0	17.94	0	0	0	0	0	0	-2.44	-2.44
	Inverter	MV3-11	368346	4907662	2	0	0	100.3	100.3	1	4634.8	3.25	0	84.32	0	0.61	0	0	18.04	0	0	0	0	0	0	-2.65	-2.65
	Inverter	MV3-14	368684	4907498	2	0	0	100.3	100.3	1	4636.32	3.25	0	84.32	0	0.61	0	0	18.04	0	0	0	0	0	0	-2.66	-2.66
	Inverter	MV3-6	368162	4907834	2	0	0	100.3	100.3	1	4723.94	3.25	0	84.49	0	0.62	0	0	18.17	0	0	0	0	0	0	-2.96	-2.96
	Inverter	MV3-3	367939	4907927	2	0	0	100.3	100.3	1	4737.4	3.25	0	84.51	0	0.62	0	0	18.19	0	0	0	0	0	0	-3.01	-3.01
	Inverter	MV3-9	368512	4907703	2	0	0	100.3	100.3	1	4741.22	3.25	0	84.52	0	0.62	0	0	18.2	0	0	0	0	0	0	-3.02	-3.02
	Inverter	MV3-8	368680	4907712	2	0	0	100.3	100.3	1	4823.75	3.25	0	84.67	0	0.63	0	0	18.32	0	0	0	0	0	0	-3.3	-3.3
	Inverter	MV2-1	365842	4906816	2	0	0	97.3	97.3	1	3453.63	3.25	0	81.77	0	0.44	0	0	16.15	0	0	0	0	0	0	-1.05	-1.05
	Inverter	MV6-3	370207	4907140	2	0	0	100.3	100.3	1	5267.74	3.25	0	85.43	0	0.66	0	0	18.97	0	0	0	0	0	0	-4.75	-4.75
	Inverter	MV6-2	370085	4907339	2	0	0	100.3	100.3	1	5326.67	3.25	0	85.53	0	0.67	0	0	19.05	0	0	0	0	0	0	-4.94	-4.94
	Inverter	MV4-11	369264	4908855	2	0	0	100.3	100.3	1	6107.3	3.25	0	86.72	0	0.71	0	0	20.14	0	0	0	0	0	0	-7.25	-7.25
	Inverter	MV4-10	369312	4908858	2	0	0	100.3	100.3	1	6132.02	3.25	0	86.75	0	0.71	0	0	20.17	0	0	0	0	0	0	-7.32	-7.32
	Inverter	MV4-7	369035	4909001	2	0	0	100.3	100.3	1	6138.63	3.25	0	86.76	0	0.71	0	0	20.18	0	0	0	0	0	0	-7.34	-7.34
	Inverter	MV4-8	369256	4909001	2	0	0	100.3	100.3	1	6233.99	3.25	0	86.9	0	0.71	0	0	20.31	0	0	0	0	0	0	-7.6	-7.6
	Inverter	MV4-9	369289	4909001	2	0	0	100.3	100.3	1	6248.77	3.25	0	86.92	0	0.71	0	0	20.33	0	0	0	0	0	0	-7.64	-7.64
	Inverter	MV4-4	369027	4909199	2	0	0	100.3	100.3	1	6315.91	3.25	0	87.01	0	0.71	0	0	20.42	0	0	0	0	0	0	-7.83	-7.83
	Inverter	MV5-5	370015	4908690	2	0	0	100.3	100.3	1	6347	3.25	0	87.05	0	0.71	0	0	20.46	0	0	0	0	0	0	-7.91	-7.91
	Inverter	MV4-6	369243	4909192	2	0	0	100.3	100.3	1	6399.88	3.25	0	87.12	0	0.71	0	0	20.53	0	0	0	0	0	0	-8.05	-8.05
	Inverter	MV4-5	369289	4909199	2	0	0	100.3	100.3	1	6426.19	3.25	0	87.16	0	0.71	0	0	20.56	0	0	0	0	0	0	-8.12	-8.12
	Inverter	MV5-2	370006	4908853	2	0	0	100.3	100.3	1	6478.04	3.25	0	87.23	0	0.71	0	0	20.63	0	0	0	0	0	0	-8.26	-8.26
	Inverter	MV4-1	369011	4909397	2	0	0	100.3	100.3	1	6491.27	3.25	0	87.25	0	0.71	0	0	20.65	0	0	0	0	0	0	-8.3	-8.3
	Inverter	MV5-4	370324	4908707	2	0	0	100.3	100.3	1	6538.07	3.25	0	87.31	0	0.71	0	0	20.71	0	0	0	0	0	0	-8.42	-8.42
	Inverter	MV4-3	369229	4909397	2	0	0	100.3	100.3	1	6579.46	3.25	0	87.36	0	0.72	0	0	20.76	0	0	0	0	0	0	-8.53	-8.53
	Inverter	MV4-2	369272	4909397	2	0	0	100.3	100.3	1	6597.57	3.25	0	87.39	0	0.72	0	0	20.79	0	0	0	0	0	0	-8.58	-8.58
	Inverter	MV5-3	370231	4908851	2	0	0	100.3	100.3	1	6601.69	3.25	0	87.39	0	0.72	0	0	20.79	0	0	0	0	0	0	-8.59	-8.59
	Inverter	MV5-1	370020	4909142	2	0	0	100.3	100.3	1	6729.58	3.25	0	87.56	0	0.71	0	0	20.96	0	0	0	0	0	0	-8.92	-8.92
	Inverter	MV6-1	370235	4907364	2	0	0	97.3	97.3	1	5447.48	3.25	0	85.72	0	0.68	0	0	19.23	0	0	0	0	0	0	-8.32	-8.32
	DSTATCOM - 10 MVAR #2	DSAT2	369403	4908757	2.5	0	0	96.6	96.6	1	6085.88	3.5	0	86.69	0	3.78	0	0	3.88	0	0	0	0	0	0	2.28	2.28
	DSTATCOM - 10 MVAR #1	DSAT1	369437	4908757	2.5	0	0	96.6	96.6	1	6102.31	3.5	0	86.71	0	3.78	0	0	3.89	0	0	0	0	0	0	2.25	2.25
	SubstationTransformer	W_ST	369711.17	4906112.3	2.5	0	0	92	92	1	4208.02	4.25	0	83.48	0	1.42	2.53	0.23	7.64	0	0	0	0	0	0	-3.09	-3.09
	Inverter	MV2-2	365977	4906654	2	0	0	89.1	89.1	1	3271.22	3.25	0	81.29	0	1.21	0	0	10.02	0	0	0	0	0	0	-3.47	-3.47
	Inverter	MV1-3	364440	4906039	2	0	0	89.1	89.1	1	3316.55	3.25	0	81.41	0	1.22	0	0	10.09	0	0	0	0	0	0	-3.67	-3.67
	Westbrook Inverter Enclosur	W_INV3	369508	4906164	2	0	0	89.1	89.1	1	4088.44	3.25	0	83.23	0	1.41	0	0	11.21	0	0	0	0	0	0	-6.8	-6.8
	Westbrook Inverter Enclosur	W_INV2	369374	4906388	2	0	0	89.1	89.1	1	4147.26	3.25	0	83.36	0	1.43	0	0	11.29	0	0	0	0	0	0	-7.02	-7.02
	Westbrook Inverter Enclosur	W_INV4	369673	4906164	2	0	0	89.1	89.1	1	4212.25	3.25	0	83.49	0	1.44	0	0	11.38	0	0	0	0	0	0	-7.26	-7.26

Inverter	MV3-22	368656	4907142	2	0	0	89.1	89.1	1	4312.38	3.25	0	83.69	0	1.47	0	0	11.52	0	0	0	0	0	0	-7.63	-7.63
Westbrook Inverter Enclosur	W_INV7	369780	4906417	2	0	0	89.1	89.1	1	4459.88	3.25	0	83.99	0	1.51	0	0	11.73	0	0	0	0	0	0	-8.16	-8.16
Westbrook Inverter Enclosur	W_INV5	369719	4906574	2	0	0	89.1	89.1	1	4522.89	3.25	0	84.11	0	1.52	0	0	11.82	0	0	0	0	0	0	-8.39	-8.39
Westbrook Inverter Enclosur	W_INV6	369875	4906578	2	0	0	89.1	89.1	1	4638.74	3.25	0	84.33	0	1.55	0	0	11.98	0	0	0	0	0	0	-8.8	-8.8
Inverter	MV3-5	368340	4907843	2	0	0	89.1	89.1	1	4798.64	3.25	0	84.62	0	1.59	0	0	12.19	0	0	0	0	0	0	-9.35	-9.35
Inverter	MV3-1	368156	4907976	2	0	0	89.1	89.1	1	4854.78	3.25	0	84.72	0	1.6	0	0	12.27	0	0	0	0	0	0	-9.54	-9.54
Inverter	MV3-4	368502	4907925	2	0	0	89.1	89.1	1	4938.52	3.25	0	84.87	0	1.62	0	0	12.38	0	0	0	0	0	0	-9.82	-9.82
Inverter	MV3-2	368671	4907928	2	0	0	89.1	89.1	1	5012.91	3.25	0	85	0	1.64	0	0	12.48	0	0	0	0	0	0	-10.07	-10.07
Fixed Reactor Bank 1	FRB1	369378	4908755	6	0	0	89.8	89.8	1	6072.14	5.25	0	86.67	0	-0.41	0	0	9.82	0	0	0	0	0	0	-6.3	-6.3
Fixed Reactor Bank 2	FRB2	369464	4908755	6	0	0	89.8	89.8	1	6113.71	5.25	0	86.73	0	-0.4	0	0	9.86	0	0	0	0	0	0	-6.41	-6.41
Inverter	MV4-15	369176	4908481	2	0	0	89.1	89.1	1	5735.11	3.25	0	86.17	0	1.82	0	0	13.43	0	0	0	0	0	0	-12.36	-12.36
Inverter	MV4-14	369176	4908507	2	0	0	89.1	89.1	1	5758.06	3.25	0	86.21	0	1.83	0	0	13.46	0	0	0	0	0	0	-12.43	-12.43
Inverter	MV4-13	369051	4908605	2	0	0	89.1	89.1	1	5788.13	3.25	0	86.25	0	1.83	0	0	13.49	0	0	0	0	0	0	-12.52	-12.52
Inverter	MV4-12	369043	4908803	2	0	0	89.1	89.1	1	5962.66	3.25	0	86.51	0	1.88	0	0	13.72	0	0	0	0	0	0	-13.04	-13.04
Westbrook Inverter Enclosur	W_INV1	369409	4906578	2	0	0	86.1	86.1	1	4308.98	3.25	0	83.69	0	1.47	0	0	11.52	0	0	0	0	0	0	-10.62	-10.62
Inverter	MV5-6	369982	4908507	2	0	0	89.1	89.1	1	6177.14	3.25	0	86.82	0	1.93	0	0	13.98	0	0	0	0	0	0	-13.67	-13.67
Inverter	MV6-4	370250	4906966	2	0	0	86.1	86.1	1	5177.63	3.25	0	85.28	0	1.68	0	0	12.7	0	0	0	0	0	0	-13.61	-13.61
Westbrook Inverter Transfor	W_INVTR1	369403	4906578	2	0	0	78.2	78.2	1	4304.9	3.25	0	83.68	0	-3.03	0	0	2.17	0	0	0	0	0	0	-4.57	-4.57
Westbrook Inverter Transfor	W_INVTR3	369514	4906164	2	0	0	77.3	77.3	1	4092.89	3.25	0	83.24	0	-2.98	0	0	2.09	0	0	0	0	0	0	-5	-5
Westbrook Inverter Transfor	W_INVTR2	369368	4906388	2	0	0	77.3	77.3	1	4143.07	3.25	0	83.35	0	-3	0	0	2.11	0	0	0	0	0	0	-5.12	-5.12
Westbrook Inverter Transfor	W_INVTR4	369679	4906164	2	0	0	77.3	77.3	1	4216.8	3.25	0	83.5	0	-3.01	0	0	2.14	0	0	0	0	0	0	-5.28	-5.28
Westbrook Inverter Transfor	W_INVTR7	369786	4906417	2	0	0	77.3	77.3	1	4464.33	3.25	0	84	0	-3.07	0	0	2.23	0	0	0	0	0	0	-5.81	-5.81
Westbrook Inverter Transfor	W_INVTR5	369725	4906574	2	0	0	77.3	77.3	1	4527.19	3.25	0	84.12	0	-3.08	0	0	2.25	0	0	0	0	0	0	-5.94	-5.94
Westbrook Inverter Transfor	W_INVTR6	369881	4906578	2	0	0	77.3	77.3	1	4643.13	3.25	0	84.34	0	-3.1	0	0	2.29	0	0	0	0	0	0	-6.18	-6.18
Inverter Transformer	MV1-14 T	365157	4905049	2	0	0	69.4	69.4	1	2095.32	3.25	0	77.42	0	2.21	0	0	5.06	0	0	0	0	0	0	-15.34	-15.34
Inverter Transformer	MV1-13 T	364725	4905241	2	0	0	69.4	69.4	1	2525.62	3.25	0	79.05	0	2.36	0	0	5.47	0	0	0	0	0	0	-17.52	-17.52
Inverter Transformer	MV1-10 T	365010	4905564	2	0	0	69.4	69.4	1	2596.49	3.25	0	79.29	0	2.38	0	0	5.53	0	0	0	0	0	0	-17.85	-17.85
Inverter Transformer	MV1-7 T	364919	4905782	2	0	0	69.4	69.4	1	2828.2	3.25	0	80.03	0	2.45	0	0	5.74	0	0	0	0	0	0	-18.87	-18.87
Inverter Transformer	MV2-1 T	365836	4906816	2	0	0	69.4	69.4	1	3454.74	3.25	0	81.77	0	2.64	0	0	6.26	0	0	0	0	0	0	-21.31	-21.31
Inverter Transformer	MV6-4 T	370244	4906966	2	0	0	69.4	69.4	1	5173.26	3.25	0	85.28	0	3.05	0	0	7.5	0	0	0	0	0	0	-26.47	-26.47
Inverter Transformer	MV6-1 T	370230	4907364	2	0	0	69.4	69.4	1	5444.03	3.25	0	85.72	0	3.1	0	0	7.67	0	0	0	0	0	0	-27.14	-27.14
Inverter Transformer	MV1-15 T	365309	4904994	2	0	0	56.1	56.1	1	1958.67	3.25	0	76.84	0	0.39	0	0	6.96	0	0	0	0	0	0	-28.13	-28.13
Inverter Transformer	MV1-12 T	365044	4905386	2	0	0	56.1	56.1	1	2431.47	3.25	0	78.72	0	0.59	0	0	7.86	0	0	0	0	0	0	-31.11	-31.11
Inverter Transformer	MV1-11 T	364649	4905414	2	0	0	56.1	56.1	1	2703.76	3.25	0	79.64	0	0.7	0	0	8.36	0	0	0	0	0	0	-32.64	-32.64
Inverter Transformer	MV1-8 T	364782	4905647	2	0	0	56.1	56.1	1	2797.31	3.25	0	79.93	0	0.74	0	0	8.52	0	0	0	0	0	0	-33.14	-33.14
Inverter Transformer	MV1-9 T	364555	4905646	2	0	0	56.1	56.1	1	2939.59	3.25	0	80.37	0	0.8	0	0	8.77	0	0	0	0	0	0	-33.88	-33.88
Inverter Transformer	MV1-4 T	364821	4905918	2	0	0	56.1	56.1	1	2995.7	3.25	0	80.53	0	0.83	0	0	8.86	0	0	0	0	0	0	-34.16	-34.16
Inverter Transformer	MV1-5 T	364676	4905892	2	0	0	56.1	56.1	1	3057.13	3.25	0	80.71	0	0.85	0	0	8.96	0	0	0	0	0	0	-34.47	-34.47
Inverter Transformer	MV1-6 T	364482	4905835	2	0	0	56.1	56.1	1	3131.09	3.25	0	80.91	0	0.89	0	0	9.09	0	0	0	0	0	0	-34.83	-34.83
Inverter Transformer	MV1-2 T	364759	4906063	2	0	0	56.1	56.1	1	3150.94	3.25	0	80.97	0	0.89	0	0	9.12	0	0	0	0	0	0	-34.93	-34.93
Inverter Transformer	MV1-1 T	364721	4906166	2	0	0	56.1	56.1	1	3258.1	3.25	0	81.26	0	0.94	0	0	9.3	0	0	0	0	0	0	-35.44	-35.44
Inverter Transformer	MV2-2 T	365982	4906654	2	0	0	56.1	56.1	1	3270.46	3.25	0	81.29	0	0.94	0	0	9.32	0	0	0	0	0	0	-35.5	-35.5
Inverter Transformer	MV2-3 T	365814	4906641	2	0	0	56.1	56.1	1	3287.29	3.25	0	81.34	0	0.95	0	0	9.35	0	0	0	0	0	0	-35.58	-35.58
Inverter Transformer	MV1-3 T	364435	4906039	2	0	0	56.1	56.1	1	3319.62	3.25	0	81.42	0	0.96	0	0	9.4	0	0	0	0	0	0	-35.73	-35.73
Inverter Transformer	MV2-4 T	365590	4906628	2	0	0	56.1	56.1	1	3327.1	3.25	0	81.44	0	0.97	0	0	9.41	0	0	0	0	0	0	-35.76	-35.76
Inverter Transformer	MV3-18 T	367757	4907412	2	0	0	56.1	56.1	1	4191.39	3.25	0	83.45	0	1.32	0	0	10.74	0	0	0	0	0	0	-39.44	-39.44
Inverter Transformer	MV3-21 T	368484	4907206	2	0	0	56.1	56.1	1	4284.48	3.25	0	83.64	0	1.36	0	0	10.87	0	0	0	0	0	0	-39.81	-39.81
Inverter Transformer	MV3-22 T	368661	4907142	2	0	0	56.1	56.1	1	4314.91	3.25	0	83.7	0	1.37	0	0	10.91	0	0	0	0	0	0	-39.92	-39.92
Inverter Transformer	MV3-12 T	367674	4907594	2	0	0	56.1	56.1	1	4341.41	3.25	0	83.75	0	1.38	0	0	10.95	0	0	0	0	0	0	-40.02	-40.02
Inverter Transformer	MV3-19 T	368352	4907347	2	0	0	56.1	56.1	1	4351.01	3.25	0	83.77	0	1.38	0	0	10.97	0	0	0	0	0	0	-40.06	-40.06
Inverter Transformer	MV3-17 T	368183	4907472	2	0	0	56.1	56.1	1	4395.79	3.25	0	83.86	0	1.4	0	0	11.03	0	0	0	0	0	0	-40.23	-40.23
Inverter Transformer	MV3-13 T	367958	4907577	2	0	0	56.1	56.1	1	4412.17	3.25	0	83.89	0	1.41	0	0	11.05	0	0	0	0	0	0	-40.29	-40.29
Inverter Transformer	MV3-15 T	368351	4907477	2	0	0	56.1	56.1	1	4468.24	3.25	0	84	0	1.43	0	0	11.13	0	0	0	0	0	0	-40.5	-40.5
Inverter Transformer	MV3-20 T	368683	4907317	2	0	0	56.1	56.1	1	4477.5	3.25	0	84.02	0	1.43	0	0	11.14	0	0	0	0	0	0	-40.54	-40.54
Inverter Transformer	MV3-16 T	368509	4907475	2	0	0	56.1	56.1	1	4535.02	3.25	0	84.13	0	1.45	0	0	11.22	0	0	0	0	0	0	-40.75	-40.75
Inverter Transformer	MV3-10 T	368162	4907669	2	0	0	56.1	56.1	1	4570.18	3.25	0	84.2	0	1.47	0	0	11.27	0	0	0	0	0	0	-40.88	-40.88
Inverter Transformer	MV3-7 T	367951	4907754	2	0	0	56.1	56.1	1	4577.01	3.25	0	84.21	0	1.47	0	0	11.28	0	0	0	0	0	0	-40.9	-40.9
Inverter Transformer	MV3-11 T	368340	4907662	2	0	0	56.1	56.1	1	4632.38	3.25	0	84.32	0	1.49	0	0	11.36	0	0	0	0	0	0	-41.11	-41.11
Inverter Transformer	MV3-14 T	368678	4907498	2	0	0	56.1	56.1	1	4633.47	3.25	0	84.32	0	1.49	0	0	11.36	0	0	0	0	0	0	-41.11	-41.11
Inverter Transformer	MV3-6 T	368156	4907834	2	0	0	56.1	56.1	1	4721.8	3.25	0	84.48	0	1.52	0	0	11.48	0	0	0	0	0	0	-41.43	-41.43
Inverter Transformer	MV3-3 T	367944	4907927	2	0	0	56.1	56.1	1	4738.94	3.25	0	84.51	0	1.53	0	0	11.5	0	0	0	0	0	0	-41.49	-41.49
Inverter Transformer	MV3-9 T	368517	4907703	2	0	0	56.1	56.1	1	4743.37	3.25	0	84.52	0	1.53	0	0	11.51	0	0	0	0	0	0	-41.51	-41.51
Inverter Transformer	MV3-5 T	368335	4907843	2	0	0	56.1	56.1	1	4796.7	3.25	0	84.62	0	1.55	0	0	11.58	0	0	0	0	0	0	-41.69	-41.69
Inverter Transformer	MV3-8 T	368685	4907712	2	0	0	56.1	56.1	1	4826.04	3.25	0	84.67	0	1.56	0	0	11.62	0	0	0	0	0	0	-41.8	-41.8
Inverter Transformer	MV3-1 T	368150	4907976	2	0	0	56.1	56.1	1	4852.7	3.25	0	84.72	0	1.57	0	0	11.66	0	0	0	0	0	0	-41.89	-41.89
Inverter Transformer	MV3-4 T	368507	4907925	2	0	0	56.1	56.1	1	4940.57	3.25	0	84.88	0	1.6	0	0	11.78	0	0	0	0	0	0	-42.2	-42.2
Inverter Transformer	MV3-2 T	368677	4907928	2	0	0	56.1	56.1	1	5015.54	3.25	0	85.01	0	1.63	0	0	11.87	0	0	0	0	0	0	-42.45	-42.45
Inverter Transformer	MV6-3 T	370202	4907140	2	0	0	56.1	56.1	1	5264.2	3.25	0	85.43	0	1.72	0	0	12.2	0	0	0	0	0	0	-43.28	-43.28
Inverter Transformer	MV6-2 T	370091	4907339	2	0	0	56.1	56.1	1	5330.73	3.25	0	85.54	0	1.74	0	0	12.28	0	0	0	0	0	0	-43.5	-43.5
Inverter Transformer	MV4-15 T	369170	4908481	2	0	0	56.1	56.1	1	5732.29	3.25	0	86.17	0	1.88	0	0	12.78	0	0	0	0	0	0	-44.77	-44.77
Inverter Transformer	MV4-14 T	369182	4908507	2	0	0	56.1	56.1	1	5760.88	3.25	0	86.21	0	1.89	0	0	12.82	0	0	0	0	0	0	-44.86	-44.86
Inverter Transformer	MV4-13 T	369057	4908605	2	0	0	56.1	56.1	1	5790.8	3.25	0	86.25	0	1.9	0	0	12.85	0	0	0	0	0	0	-44.95	-44.95
Inverter Transformer	MV4-12 T	369049	4908803	2	0	0	56.1	56.1	1	5965.25	3.25	0	86.51	0	1.95	0	0	13.06	0	0	0	0	0	0	-45.47	-45.47
Inverter Transformer	MV4-11 T	369269	4908855	2	0	0	56.1	56.1	1	6109.58	3.25	0	86.72	0	2	0	0	13.23	0	0	0	0	0	0	-45.89	-45.89

	Inverter Transformer	MV4-10 T	369307	4908858	2	0	0	56.1	56.1	1	6129.71	3.25	0	86.75	0	2.01	0	0	13.26	0	0	0	0	0	0	-45.95	-45.95
	Inverter Transformer	MV4-7 T	369040	4909001	2	0	0	56.1	56.1	1	6140.71	3.25	0	86.76	0	2.01	0	0	13.27	0	0	0	0	0	0	-45.98	-45.98
	Inverter Transformer	MV5-6 T	369987	4908507	2	0	0	56.1	56.1	1	6179.98	3.25	0	86.82	0	2.02	0	0	13.31	0	0	0	0	0	0	-46.1	-46.1
	Inverter Transformer	MV4-8 T	369262	4909001	2	0	0	56.1	56.1	1	6236.66	3.25	0	86.9	0	2.04	0	0	13.38	0	0	0	0	0	0	-46.26	-46.26
	Inverter Transformer	MV4-9 T	369284	4909001	2	0	0	56.1	56.1	1	6246.52	3.25	0	86.91	0	2.04	0	0	13.39	0	0	0	0	0	0	-46.29	-46.29
	Inverter Transformer	MV4-4 T	369033	4909199	2	0	0	56.1	56.1	1	6318.34	3.25	0	87.01	0	2.06	0	0	13.47	0	0	0	0	0	0	-46.49	-46.49
	Inverter Transformer	MV5-5 T	370021	4908690	2	0	0	56.1	56.1	1	6350.35	3.25	0	87.06	0	2.07	0	0	13.51	0	0	0	0	0	0	-46.58	-46.58
	Inverter Transformer	MV4-6 T	369249	4909192	2	0	0	56.1	56.1	1	6402.48	3.25	0	87.13	0	2.09	0	0	13.57	0	0	0	0	0	0	-46.73	-46.73
	Inverter Transformer	MV4-5 T	369283	4909199	2	0	0	56.1	56.1	1	6423.57	3.25	0	87.16	0	2.1	0	0	13.59	0	0	0	0	0	0	-46.79	-46.79
	Inverter Transformer	MV5-2 T	370011	4908853	2	0	0	56.1	56.1	1	6480.77	3.25	0	87.23	0	2.11	0	0	13.66	0	0	0	0	0	0	-46.94	-46.94
	Inverter Transformer	MV4-1 T	369017	4909397	2	0	0	56.1	56.1	1	6493.62	3.25	0	87.25	0	2.12	0	0	13.67	0	0	0	0	0	0	-46.98	-46.98
	Inverter Transformer	MV5-4 T	370330	4908707	2	0	0	56.1	56.1	1	6541.6	3.25	0	87.31	0	2.13	0	0	13.73	0	0	0	0	0	0	-47.11	-47.11
	Inverter Transformer	MV4-3 T	369234	4909397	2	0	0	56.1	56.1	1	6581.55	3.25	0	87.37	0	2.14	0	0	13.77	0	0	0	0	0	0	-47.22	-47.22
	Inverter Transformer	MV4-2 T	369267	4909397	2	0	0	56.1	56.1	1	6595.45	3.25	0	87.38	0	2.15	0	0	13.79	0	0	0	0	0	0	-47.26	-47.26
	Inverter Transformer	MV5-3 T	370237	4908851	2	0	0	56.1	56.1	1	6605.11	3.25	0	87.4	0	2.15	0	0	13.8	0	0	0	0	0	0	-47.29	-47.29
	Inverter Transformer	MV5-1 T	370015	4909142	2	0	0	56.1	56.1	1	6726.95	3.25	0	87.56	0	2.18	0	0	13.93	0	0	0	0	0	0	-47.61	-47.61
	Line Reactor	NGR	369421	4908787.5	5	0	0	45.4	45.4	1	6121.28	5.25	0	86.74	0	3.24	1.36	0.1	2.5	0	0	0	0	0	0	-48.48	-48.48
Limit. Valu	0	0																								
Level D/N:	34.0921	34.0921																								

Receiver: Existing Noise Receptor
ID: G-8
X: 366973.2
Y: 4903383.1
Z: 4.5
Ground: 0

ISO	Description	ID	X	Y	Z	Ground	ReflOrd	LxT	LxN	L/A	Dist.	hm	Freq	Adiv	K0b	Agr	Abar	z	Aatm	Afol	Ahous	Cmet	CmetN	Dc	RL	LtotT	LtotN
	Gardiner Substation	G_Sub	366586.3	4903349.9	2.5	0	0	90.8	90.8	1	388.33	4.24	0	62.78	0	0.56	6.03	0.28	1.16	0	0	0	0	0	0	20.24	20.24
	Inverters	G_Inv2	366676.9	4903239.1	2	0	0	87.7	87.7	1	329.45	3.25	0	61.36	0	2.46	0	0	0.52	0	0	0	0	0	0	23.32	23.32
	Sol_Luce Substation	S_Substation	369426	4908792	3.5	0	0	112.1	112.1	1	5939.06	5.25	0	86.47	0	1.14	2.66	0.32	9.68	0	0	0	0	0	0	12.12	12.12
	Inverters	G_Inv4	366732.8	4903105	2	0	0	87.7	87.7	1	367.61	3.25	0	62.31	0	2.44	0	0	0.57	0	0	0	0	0	0	22.34	22.34
	Inverters	G_Inv6	366788.5	4902972	2	0	0	87.7	87.7	1	450.69	3.25	0	64.08	0	2.41	0	0	0.69	0	0	0	0	0	0	20.48	20.48
	Inverters	G_Inv1	366526.4	4903225.8	2	0	0	87.7	87.7	1	473.69	3.25	0	64.51	0	2.4	0	0	0.73	0	0	0	0	0	0	20.02	20.02
	Inverters	G_Inv3	366583.7	4903091.4	2	0	0	87.7	87.7	1	486.63	3.25	0	64.74	0	2.4	0	0	0.74	0	0	0	0	0	0	19.77	19.77
	Inverter	MV1-15	365315	4904994	2	0	0	100.3	100.3	1	2311.85	3.25	0	78.28	0	0.21	0	0	14.1	0	0	0	0	0	0	7.73	7.73
	Inverters	G_Inv5	366638.5	4902958.1	2	0	0	87.7	87.7	1	540.98	3.25	0	65.66	0	2.4	0	0	0.82	0	0	0	0	0	0	18.78	18.78
	Inverters	G_Inv8	366844.5	4902838.5	2	0	0	87.7	87.7	1	559.61	3.25	0	65.96	0	2.4	0	0	0.85	0	0	0	0	0	0	18.46	18.46
	Inverters	G_Inv7	366694.6	4902824.7	2	0	0	87.7	87.7	1	624.05	3.25	0	66.9	0	2.4	0	0	0.93	0	0	0	0	0	0	17.42	17.42
	Inverter	MV1-12	365038	4905386	2	0	0	100.3	100.3	1	2785.07	3.25	0	79.9	0	0.32	0	0	14.99	0	0	0	0	0	0	5.11	5.11
	Inverters	G_Inv10	366900.7	4902704.8	2	0	0	87.7	87.7	1	682.17	3.25	0	67.68	0	2.4	0	0	1.01	0	0	0	0	0	0	16.57	16.57
	Inverter	MV1-11	364655	4905414	2	0	0	100.3	100.3	1	3081.98	3.25	0	80.78	0	0.38	0	0	15.52	0	0	0	0	0	0	3.64	3.64
	Inverters	G_Inv9	366750.9	4902691.8	2	0	0	87.7	87.7	1	726.17	3.25	0	68.22	0	2.41	0	0	1.07	0	0	0	0	0	0	15.96	15.96
	Inverter	MV1-8	364788	4905647	2	0	0	100.3	100.3	1	3146.48	3.25	0	80.96	0	0.39	0	0	15.63	0	0	0	0	0	0	3.34	3.34
	Inverter	MV1-9	364561	4905646	2	0	0	100.3	100.3	1	3307.48	3.25	0	81.39	0	0.42	0	0	15.91	0	0	0	0	0	0	2.6	2.6
	Inverter	MV1-4	364815	4905918	2	0	0	100.3	100.3	1	3329.2	3.25	0	81.45	0	0.42	0	0	15.94	0	0	0	0	0	0	2.5	2.5
	Inverter	MV1-5	364671	4905892	2	0	0	100.3	100.3	1	3405.1	3.25	0	81.64	0	0.44	0	0	16.07	0	0	0	0	0	0	2.16	2.16
	Inverter	MV2-3	365820	4906641	2	0	0	100.3	100.3	1	3455.98	3.25	0	81.77	0	0.44	0	0	16.16	0	0	0	0	0	0	1.94	1.94
	Inverter	MV1-14	365163	4905049	2	0	0	97.3	97.3	1	2460.09	3.25	0	78.82	0	0.25	0	0	14.38	0	0	0	0	0	0	3.86	3.86
	Inverter	MV1-2	364753	4906063	2	0	0	100.3	100.3	1	3480.11	3.25	0	81.83	0	0.45	0	0	16.2	0	0	0	0	0	0	1.83	1.83
	Inverter	MV1-6	364477	4905835	2	0	0	100.3	100.3	1	3498.98	3.25	0	81.88	0	0.45	0	0	16.23	0	0	0	0	0	0	1.75	1.75
	Inverter	MV2-4	365586	4906624	2	0	0	100.3	100.3	1	3525.3	3.25	0	81.94	0	0.46	0	0	16.27	0	0	0	0	0	0	1.64	1.64
	Inverter	MV1-1	364715	4906166	2	0	0	100.3	100.3	1	3583.85	3.25	0	82.09	0	0.46	0	0	16.37	0	0	0	0	0	0	1.39	1.39
	Inverter	MV3-18	367752	4907412	2	0	0	100.3	100.3	1	4103.48	3.25	0	83.26	0	0.54	0	0	17.21	0	0	0	0	0	0	-0.71	-0.71
	Inverter	MV3-21	368478	4907206	2	0	0	100.3	100.3	1	4108.41	3.25	0	83.27	0	0.54	0	0	17.22	0	0	0	0	0	0	-0.72	-0.72
	Inverter	MV1-13	364731	4905241	2	0	0	97.3	97.3	1	2911.92	3.25	0	80.28	0	0.34	0	0	15.22	0	0	0	0	0	0	1.47	1.47
	Inverter	MV1-10	365004	4905564	2	0	0	97.3	97.3	1	2938.38	3.25	0	80.36	0	0.35	0	0	15.26	0	0	0	0	0	0	1.34	1.34
	Inverter	MV3-19	368357	4907347	2	0	0	100.3	100.3	1	4198.5	3.25	0	83.46	0	0.55	0	0	17.36	0	0	0	0	0	0	-1.07	-1.07
	Inverter	MV3-17	368178	4907472	2	0	0	100.3	100.3	1	4262.7	3.25	0	83.59	0	0.56	0	0	17.46	0	0	0	0	0	0	-1.31	-1.31
	Inverter	MV3-12	367668	4907594	2	0	0	100.3	100.3	1	4267.84	3.25	0	83.6	0	0.56	0	0	17.47	0	0	0	0	0	0	-1.33	-1.33
	Inverter	MV3-20	368689	4907317	2	0	0	100.3	100.3	1	4291.8	3.25	0	83.65	0	0.57	0	0	17.51	0	0	0	0	0	0	-1.42	-1.42
	Inverter	MV3-13	367963	4907577	2	0	0	100.3	100.3	1	4309.12	3.25	0	83.69	0	0.57	0	0	17.54	0	0	0	0	0	0	-1.48	-1.48
	Inverter	MV3-15	368357	4907477	2	0	0	100.3	100.3	1	4321.45	3.25	0	83.71	0	0.57	0	0	17.55	0	0	0	0	0	0	-1.52	-1.52
	Inverter	MV3-16	368514	4907475	2	0	0	100.3	100.3	1	4372.38	3.25	0	83.81	0	0.58	0	0	17.63	0	0	0	0	0	0	-1.71	-1.71
	Inverter	MV3-10	368167	4907669	2	0	0	100.3	100.3	1	4449.06	3.25	0	83.97	0	0.58	0	0	17.75	0	0	0	0	0	0	-1.99	-1.99
	Inverter	MV1-7	364925	4905782	2	0	0	97.3	97.3	1	3154.34	3.25	0	80.98	0	0.39	0	0	15.64	0	0	0	0	0	0	0.3	0.3
	Inverter	MV3-14	368684	4907498	2	0	0	100.3	100.3	1	4456.37	3.25	0	83.98	0	0.59	0	0	17.76	0	0	0	0	0	0	-2.02	-2.02
	Inverter	MV3-7	367945	4907754	2	0	0	100.3	100.3	1	4477.63	3.25	0	84.02	0	0.59	0	0	17.8	0	0	0	0	0	0	-2.09	-2.09
	Inverter	MV3-11	368346	4907662	2	0	0	100.3	100.3	1	4493.73	3.25	0	84.05	0	0.59	0	0	17.82	0	0	0	0	0	0	-2.15	-2.15
	Inverter	MV3-9	368512	4907703	2	0	0	100.3	100.3	1	4585.79	3.25	0	84.23	0	0.6	0	0	17.96	0	0	0	0	0	0	-2.48	-2.48
	Inverter	MV3-6	368162	4907834	2	0	0	100.3	100.3	1	4606.93	3.25	0	84.27	0	0.6	0	0	17.99	0	0	0	0	0	0	-2.55	-2.55
	Inverter	MV3-3	367939	4907927	2	0	0	100.3	100.3	1	4645.41	3.25	0	84.34	0	0.61	0	0	18.05	0	0	0	0	0	0	-2.69	-2.69
	Inverter	MV3-8	368680	4907712	2	0	0	100.3	100.3	1	4653.23	3.25	0	84.36	0	0.61	0	0	18.06	0	0	0	0	0	0	-2.71	-2.71
	Inverter	MV6-3	370207	4907140	2	0	0	100.3	100.3	1	4956.99	3.25	0	84.9	0	0.64	0	0	18.52	0	0	0	0	0	0	-3.75	-3.75

Inverter	MV6-2	370085	4907339	2	0	0	100.3	100.3	1	5033.14	3.25	0	85.04	0	0.65	0	0	18.63	0	0	0	0	0	0	-4	-4
Inverter	MV2-1	365842	4906816	2	0	0	97.3	97.3	1	3614.47	3.25	0	82.16	0	0.47	0	0	16.42	0	0	0	0	0	0	-1.74	-1.74
Inverter	MV4-11	369264	4908855	2	0	0	100.3	100.3	1	5932.07	3.25	0	86.46	0	0.7	0	0	19.9	0	0	0	0	0	0	-6.76	-6.76
Inverter	MV4-10	369312	4908858	2	0	0	100.3	100.3	1	5953.53	3.25	0	86.5	0	0.7	0	0	19.93	0	0	0	0	0	0	-6.82	-6.82
Inverter	MV4-7	369035	4909001	2	0	0	100.3	100.3	1	5984.3	3.25	0	86.54	0	0.7	0	0	19.97	0	0	0	0	0	0	-6.9	-6.9
Inverter	MV4-8	369256	4909001	2	0	0	100.3	100.3	1	6063.99	3.25	0	86.66	0	0.71	0	0	20.08	0	0	0	0	0	0	-7.13	-7.13
Inverter	MV4-9	369289	4909001	2	0	0	100.3	100.3	1	6076.49	3.25	0	86.67	0	0.71	0	0	20.1	0	0	0	0	0	0	-7.17	-7.17
Inverter	MV5-5	370015	4908690	2	0	0	100.3	100.3	1	6116.84	3.25	0	86.73	0	0.71	0	0	20.15	0	0	0	0	0	0	-7.28	-7.28
Inverter	MV4-4	369027	4909199	2	0	0	100.3	100.3	1	6167.88	3.25	0	86.8	0	0.71	0	0	20.22	0	0	0	0	0	0	-7.42	-7.42
Inverter	MV4-6	369243	4909192	2	0	0	100.3	100.3	1	6236.61	3.25	0	86.9	0	0.71	0	0	20.31	0	0	0	0	0	0	-7.61	-7.61
Inverter	MV5-2	370006	4908853	2	0	0	100.3	100.3	1	6254.41	3.25	0	86.92	0	0.71	0	0	20.34	0	0	0	0	0	0	-7.66	-7.66
Inverter	MV4-5	369289	4909199	2	0	0	100.3	100.3	1	6260	3.25	0	86.93	0	0.71	0	0	20.34	0	0	0	0	0	0	-7.67	-7.67
Inverter	MV5-4	370324	4908707	2	0	0	100.3	100.3	1	6290.61	3.25	0	86.97	0	0.71	0	0	20.38	0	0	0	0	0	0	-7.76	-7.76
Inverter	MV4-1	369011	4909397	2	0	0	100.3	100.3	1	6349.77	3.25	0	87.06	0	0.71	0	0	20.46	0	0	0	0	0	0	-7.92	-7.92
Inverter	MV5-3	370231	4908851	2	0	0	100.3	100.3	1	6364.84	3.25	0	87.08	0	0.71	0	0	20.48	0	0	0	0	0	0	-7.96	-7.96
Inverter	MV4-3	369229	4909397	2	0	0	100.3	100.3	1	6423.05	3.25	0	87.15	0	0.71	0	0	20.56	0	0	0	0	0	0	-8.12	-8.12
Inverter	MV4-2	369272	4909397	2	0	0	100.3	100.3	1	6438.28	3.25	0	87.18	0	0.71	0	0	20.58	0	0	0	0	0	0	-8.16	-8.16
Inverter	MV5-1	370020	4909142	2	0	0	100.3	100.3	1	6515.21	3.25	0	87.28	0	0.71	0	0	20.68	0	0	0	0	0	0	-8.36	-8.36
Inverter	MV6-1	370235	4907364	2	0	0	97.3	97.3	1	5146.54	3.25	0	85.23	0	0.65	0	0	18.79	0	0	0	0	0	0	-7.37	-7.37
DSTATCOM - 10 MVAR #2	DSAT2	369403	4908757	2.5	0	0	96.6	96.6	1	5897.69	3.5	0	86.41	0	3.77	0	0	3.79	0	0	0	0	0	0	2.66	2.66
DSTATCOM - 10 MVAR #1	DSAT1	369437	4908757	2.5	0	0	96.6	96.6	1	5911.78	3.5	0	86.43	0	3.77	0	0	3.8	0	0	0	0	0	0	2.63	2.63
SubstationTransformer	W_ST	369711.17	4906112.3	2.5	0	0	92	92	1	3865.86	3.5	0	82.74	0	0.3	0	-0.1	7.19	0	0	0	0	0	0	1.75	1.75
Inverter	MV2-2	365977	4906654	2	0	0	89.1	89.1	1	3419.24	3.25	0	81.68	0	1.25	0	0	10.24	0	0	0	0	0	0	-4.11	-4.11
Inverter	MV1-3	364440	4906039	2	0	0	89.1	89.1	1	3670.27	3.25	0	82.29	0	1.31	0	0	10.61	0	0	0	0	0	0	-5.16	-5.16
Westbrook Inverter Enclosur	W_INV3	369508	4906164	2	0	0	89.1	89.1	1	3762.79	3.25	0	82.51	0	1.33	0	0	10.74	0	0	0	0	0	0	-5.53	-5.53
Westbrook Inverter Enclosur	W_INV2	369374	4906388	2	0	0	89.1	89.1	1	3846.2	3.25	0	82.7	0	1.35	0	0	10.86	0	0	0	0	0	0	-5.86	-5.86
Westbrook Inverter Enclosur	W_INV4	369673	4906164	2	0	0	89.1	89.1	1	3875.87	3.25	0	82.77	0	1.36	0	0	10.91	0	0	0	0	0	0	-5.98	-5.98
Inverter	MV3-22	368656	4907142	2	0	0	89.1	89.1	1	4118.39	3.25	0	83.29	0	1.42	0	0	11.25	0	0	0	0	0	0	-6.91	-6.91
Westbrook Inverter Enclosur	W_INV7	369780	4906417	2	0	0	89.1	89.1	1	4133.12	3.25	0	83.33	0	1.43	0	0	11.27	0	0	0	0	0	0	-6.97	-6.97
Westbrook Inverter Enclosur	W_INV5	369719	4906574	2	0	0	89.1	89.1	1	4209.66	3.25	0	83.48	0	1.44	0	0	11.38	0	0	0	0	0	0	-7.25	-7.25
Westbrook Inverter Enclosur	W_INV6	369875	4906578	2	0	0	89.1	89.1	1	4316	3.25	0	83.7	0	1.47	0	0	11.53	0	0	0	0	0	0	-7.64	-7.64
Inverter	MV3-5	368340	4907843	2	0	0	89.1	89.1	1	4664.64	3.25	0	84.38	0	1.56	0	0	12.01	0	0	0	0	0	0	-8.89	-8.89
Inverter	MV3-1	368156	4907976	2	0	0	89.1	89.1	1	4742.76	3.25	0	84.52	0	1.58	0	0	12.12	0	0	0	0	0	0	-9.16	-9.16
Inverter	MV3-4	368502	4907925	2	0	0	89.1	89.1	1	4792.29	3.25	0	84.61	0	1.59	0	0	12.18	0	0	0	0	0	0	-9.33	-9.33
Inverter	MV3-2	368671	4907928	2	0	0	89.1	89.1	1	4851.66	3.25	0	84.72	0	1.6	0	0	12.26	0	0	0	0	0	0	-9.53	-9.53
Fixed Reactor Bank 1	FRB1	369378	4908755	6	0	0	89.8	89.8	1	5885.61	5.25	0	86.4	0	-0.43	0	0	9.62	0	0	0	0	0	0	-5.8	-5.8
Fixed Reactor Bank 2	FRB2	369464	4908755	6	0	0	89.8	89.8	1	5921.27	5.25	0	86.45	0	-0.43	0	0	9.66	0	0	0	0	0	0	-5.9	-5.9
Inverter	MV4-15	369176	4908481	2	0	0	89.1	89.1	1	5553.46	3.25	0	85.89	0	1.78	0	0	13.19	0	0	0	0	0	0	-11.8	-11.8
Inverter	MV4-14	369176	4908507	2	0	0	89.1	89.1	1	5577.34	3.25	0	85.93	0	1.78	0	0	13.22	0	0	0	0	0	0	-11.88	-11.88
Inverter	MV4-13	369051	4908605	2	0	0	89.1	89.1	1	5620.1	3.25	0	85.99	0	1.79	0	0	13.28	0	0	0	0	0	0	-12.01	-12.01
Westbrook Inverter Enclosur	W_INV1	369409	4906578	2	0	0	86.1	86.1	1	4017.53	3.25	0	83.08	0	1.4	0	0	11.11	0	0	0	0	0	0	-9.53	-9.53
Inverter	MV4-12	369043	4908803	2	0	0	89.1	89.1	1	5801.67	3.25	0	86.27	0	1.84	0	0	13.51	0	0	0	0	0	0	-12.56	-12.56
Inverter	MV5-6	369982	4908507	2	0	0	89.1	89.1	1	5941.99	3.25	0	86.48	0	1.87	0	0	13.69	0	0	0	0	0	0	-12.98	-12.98
Inverter	MV6-4	370250	4906966	2	0	0	86.1	86.1	1	4855.37	3.25	0	84.72	0	1.6	0	0	12.27	0	0	0	0	0	0	-12.54	-12.54
Westbrook Inverter Transfor	W_INVTR1	369403	4906578	2	0	0	78.2	78.2	1	4013.89	3.25	0	83.07	0	-2.97	0	0	2.06	0	0	0	0	0	0	-3.92	-3.92
Westbrook Inverter Transfor	W_INVTR3	369514	4906164	2	0	0	77.3	77.3	1	3766.84	3.25	0	82.52	0	-2.91	0	0	1.97	0	0	0	0	0	0	-4.24	-4.24
Westbrook Inverter Transfor	W_INVTR2	369368	4906388	2	0	0	77.3	77.3	1	3842.46	3.25	0	82.69	0	-2.93	0	0	1.99	0	0	0	0	0	0	-4.42	-4.42
Westbrook Inverter Transfor	W_INVTR4	369679	4906164	2	0	0	77.3	77.3	1	3880.05	3.25	0	82.78	0	-2.94	0	0	2.01	0	0	0	0	0	0	-4.51	-4.51
Westbrook Inverter Transfor	W_INVTR7	369786	4906417	2	0	0	77.3	77.3	1	4137.2	3.25	0	83.33	0	-2.99	0	0	2.11	0	0	0	0	0	0	-5.1	-5.1
Westbrook Inverter Transfor	W_INVTR5	369725	4906574	2	0	0	77.3	77.3	1	4213.58	3.25	0	83.49	0	-3.01	0	0	2.13	0	0	0	0	0	0	-5.27	-5.27
Westbrook Inverter Transfor	W_INVTR6	369881	4906578	2	0	0	77.3	77.3	1	4320.03	3.25	0	83.71	0	-3.03	0	0	2.17	0	0	0	0	0	0	-5.51	-5.51
Inverter Transformer	MV1-14 T	365157	4905049	2	0	0	69.4	69.4	1	2464.51	3.25	0	78.83	0	2.34	0	0	5.41	0	0	0	0	0	0	-17.23	-17.23
Inverter Transformer	MV1-13 T	364725	4905241	2	0	0	69.4	69.4	1	2916.54	3.25	0	80.3	0	2.48	0	0	5.81	0	0	0	0	0	0	-19.24	-19.24
Inverter Transformer	MV1-10 T	365010	4905564	2	0	0	69.4	69.4	1	2934.36	3.25	0	80.35	0	2.49	0	0	5.83	0	0	0	0	0	0	-19.31	-19.31
Inverter Transformer	MV1-7 T	364919	4905782	2	0	0	69.4	69.4	1	3158.24	3.25	0	80.99	0	2.55	0	0	6.02	0	0	0	0	0	0	-20.21	-20.21
Inverter Transformer	MV2-1 T	365836	4906816	2	0	0	69.4	69.4	1	3616.36	3.25	0	82.17	0	2.69	0	0	6.38	0	0	0	0	0	0	-21.88	-21.88
Inverter Transformer	MV6-4 T	370244	4906966	2	0	0	69.4	69.4	1	4851.32	3.25	0	84.72	0	2.98	0	0	7.28	0	0	0	0	0	0	-25.63	-25.63
Inverter Transformer	MV6-1 T	370230	4907364	2	0	0	69.4	69.4	1	5143.38	3.25	0	85.22	0	3.04	0	0	7.48	0	0	0	0	0	0	-26.39	-26.39
Inverter Transformer	MV1-15 T	365309	4904994	2	0	0	56.1	56.1	1	2316.15	3.25	0	78.3	0	0.54	0	0	7.65	0	0	0	0	0	0	-30.42	-30.42
Inverter Transformer	MV1-12 T	365044	4905386	2	0	0	56.1	56.1	1	2780.9	3.25	0	79.88	0	0.74	0	0	8.49	0	0	0	0	0	0	-33.05	-33.05
Inverter Transformer	MV1-11 T	364649	4905414	2	0	0	56.1	56.1	1	3086.5	3.25	0	80.79	0	0.87	0	0	9.01	0	0	0	0	0	0	-34.61	-34.61
Inverter Transformer	MV1-8 T	364782	4905647	2	0	0	56.1	56.1	1	3150.65	3.25	0	80.97	0	0.89	0	0	9.12	0	0	0	0	0	0	-34.92	-34.92
Inverter Transformer	MV1-9 T	364555	4905646	2	0	0	56.1	56.1	1	3311.86	3.25	0	81.4	0	0.96	0	0	9.39	0	0	0	0	0	0	-35.69	-35.69
Inverter Transformer	MV1-4 T	364821	4905918	2	0	0	56.1	56.1	1	3325.31	3.25	0	81.44	0	0.97	0	0	9.41	0	0	0	0	0	0	-35.75	-35.75
Inverter Transformer	MV1-5 T	364676	4905892	2	0	0	56.1	56.1	1	3401.72	3.25	0	81.63	0	1	0	0	9.53	0	0	0	0	0	0	-36.11	-36.11
Inverter Transformer	MV2-2 T	365982	4906654	2	0	0	56.1	56.1	1	3417.79	3.25	0	81.67	0	1.01	0	0	9.56	0	0	0	0	0	0	-36.18	-36.18
Inverter Transformer	MV2-3 T	365814	4906641	2	0	0	56.1	56.1	1	3457.99	3.25	0	81.78	0	1.02	0	0	9.62	0	0	0	0	0	0	-36.36	-36.36
Inverter Transformer	MV1-2 T	364759	4906063	2	0	0	56.1	56.1	1	3476.28	3.25	0	81.82	0	1.03	0	0	9.65	0	0	0	0	0	0	-36.44	-36.44
Inverter Transformer	MV1-6 T	364482	4905835	2	0	0	56.1	56.1	1	3495.41	3.25	0	81.87	0	1.04	0	0	9.68	0	0	0	0	0	0	-36.53	-36.53
Inverter Transformer	MV2-4 T	365590	4906628	2	0	0	56.1	56.1	1	3527.41	3.25	0	81.95	0	1.05	0	0	9.73	0	0	0	0	0	0	-36.67	-36.67
Inverter Transformer	MV1-1 T	364721	4906166	2	0	0	56.1	56.1	1	3580.08	3.25	0	82.08	0	1.07	0	0	9.81	0	0	0	0	0	0	-36.91	-36.91
Inverter Transformer	MV1-3 T	364435	4906039	2	0	0	56.1	56.1	1	3673.73	3.25	0	82.3	0	1.11	0	0	9.96	0	0	0	0	0	0	-37.32	-37.32
Inverter Transformer	MV3-18 T	367757	4907412	2	0	0	56.1	56.1	1	4104.43	3.25	0	83.27	0	1.29	0	0	10.61	0	0	0	0	0	0	-39.1	-39.1
Inverter Transformer	MV3-21 T	368484	4907206	2	0	0	56.1	56.1	1	4110.61	3.25	0	83.28	0	1.29	0	0	10.62	0	0	0	0	0	0	-39.13	-39.13

	Inverter Transformer	MV3-22 T	368661	4907142	2	0	0	56.1	56.1	1	4120.44	3.25	0	83.3	0	1.29	0	0	10.63	0	0	0	0	0	0	-39.16	-39.16
	Inverter Transformer	MV3-19 T	368352	4907347	2	0	0	56.1	56.1	1	4196.86	3.25	0	83.46	0	1.32	0	0	10.74	0	0	0	0	0	0	-39.47	-39.47
	Inverter Transformer	MV3-17 T	368183	4907472	2	0	0	56.1	56.1	1	4264.12	3.25	0	83.6	0	1.35	0	0	10.84	0	0	0	0	0	0	-39.73	-39.73
	Inverter Transformer	MV3-12 T	367674	4907594	2	0	0	56.1	56.1	1	4268.82	3.25	0	83.61	0	1.35	0	0	10.85	0	0	0	0	0	0	-39.75	-39.75
	Inverter Transformer	MV3-20 T	368683	4907317	2	0	0	56.1	56.1	1	4289.4	3.25	0	83.65	0	1.36	0	0	10.88	0	0	0	0	0	0	-39.83	-39.83
	Inverter Transformer	MV3-13 T	367958	4907577	2	0	0	56.1	56.1	1	4307.97	3.25	0	83.69	0	1.37	0	0	10.9	0	0	0	0	0	0	-39.9	-39.9
	Inverter Transformer	MV3-15 T	368351	4907477	2	0	0	56.1	56.1	1	4319.53	3.25	0	83.71	0	1.37	0	0	10.92	0	0	0	0	0	0	-39.94	-39.94
	Inverter Transformer	MV3-16 T	368509	4907475	2	0	0	56.1	56.1	1	4370.62	3.25	0	83.81	0	1.39	0	0	10.99	0	0	0	0	0	0	-40.14	-40.14
	Inverter Transformer	MV3-10 T	368162	4907669	2	0	0	56.1	56.1	1	4447.72	3.25	0	83.96	0	1.42	0	0	11.1	0	0	0	0	0	0	-40.43	-40.43
	Inverter Transformer	MV3-14 T	368678	4907498	2	0	0	56.1	56.1	1	4454.07	3.25	0	83.98	0	1.42	0	0	11.11	0	0	0	0	0	0	-40.45	-40.45
	Inverter Transformer	MV3-7 T	367951	4907754	2	0	0	56.1	56.1	1	4478.94	3.25	0	84.02	0	1.43	0	0	11.15	0	0	0	0	0	0	-40.54	-40.54
	Inverter Transformer	MV3-11 T	368340	4907662	2	0	0	56.1	56.1	1	4491.9	3.25	0	84.05	0	1.44	0	0	11.16	0	0	0	0	0	0	-40.59	-40.59
	Inverter Transformer	MV3-9 T	368517	4907703	2	0	0	56.1	56.1	1	4587.47	3.25	0	84.23	0	1.47	0	0	11.3	0	0	0	0	0	0	-40.94	-40.94
	Inverter Transformer	MV3-6 T	368156	4907834	2	0	0	56.1	56.1	1	4605.38	3.25	0	84.27	0	1.48	0	0	11.32	0	0	0	0	0	0	-41.01	-41.01
	Inverter Transformer	MV3-3 T	367944	4907927	2	0	0	56.1	56.1	1	4646.45	3.25	0	84.34	0	1.5	0	0	11.38	0	0	0	0	0	0	-41.16	-41.16
	Inverter Transformer	MV3-8 T	368685	4907712	2	0	0	56.1	56.1	1	4655.07	3.25	0	84.36	0	1.5	0	0	11.39	0	0	0	0	0	0	-41.19	-41.19
	Inverter Transformer	MV3-5 T	368335	4907843	2	0	0	56.1	56.1	1	4663.18	3.25	0	84.37	0	1.5	0	0	11.4	0	0	0	0	0	0	-41.22	-41.22
	Inverter Transformer	MV3-1 T	368150	4907976	2	0	0	56.1	56.1	1	4741.27	3.25	0	84.52	0	1.53	0	0	11.51	0	0	0	0	0	0	-41.5	-41.5
	Inverter Transformer	MV3-4 T	368507	4907925	2	0	0	56.1	56.1	1	4793.89	3.25	0	84.61	0	1.55	0	0	11.58	0	0	0	0	0	0	-41.68	-41.68
	Inverter Transformer	MV3-2 T	368677	4907928	2	0	0	56.1	56.1	1	4853.77	3.25	0	84.72	0	1.57	0	0	11.66	0	0	0	0	0	0	-41.89	-41.89
	Inverter Transformer	MV6-3 T	370202	4907140	2	0	0	56.1	56.1	1	4953.73	3.25	0	84.9	0	1.61	0	0	11.79	0	0	0	0	0	0	-42.24	-42.24
	Inverter Transformer	MV6-2 T	370091	4907339	2	0	0	56.1	56.1	1	5036.85	3.25	0	85.04	0	1.64	0	0	11.9	0	0	0	0	0	0	-42.53	-42.53
	Inverter Transformer	MV4-15 T	369170	4908481	2	0	0	56.1	56.1	1	5551.08	3.25	0	85.89	0	1.82	0	0	12.56	0	0	0	0	0	0	-44.21	-44.21
	Inverter Transformer	MV4-14 T	369182	4908507	2	0	0	56.1	56.1	1	5579.71	3.25	0	85.93	0	1.83	0	0	12.59	0	0	0	0	0	0	-44.3	-44.3
	Inverter Transformer	MV4-13 T	369057	4908605	2	0	0	56.1	56.1	1	5622.32	3.25	0	86	0	1.84	0	0	12.65	0	0	0	0	0	0	-44.43	-44.43
	Inverter Transformer	MV4-12 T	369049	4908803	2	0	0	56.1	56.1	1	5803.81	3.25	0	86.27	0	1.9	0	0	12.87	0	0	0	0	0	0	-44.99	-44.99
	Inverter Transformer	MV4-11 T	369269	4908855	2	0	0	56.1	56.1	1	5934	3.25	0	86.47	0	1.94	0	0	13.02	0	0	0	0	0	0	-45.38	-45.38
	Inverter Transformer	MV5-6 T	369987	4908507	2	0	0	56.1	56.1	1	5944.52	3.25	0	86.48	0	1.95	0	0	13.04	0	0	0	0	0	0	-45.41	-45.41
	Inverter Transformer	MV4-10 T	369307	4908858	2	0	0	56.1	56.1	1	5951.57	3.25	0	86.49	0	1.95	0	0	13.05	0	0	0	0	0	0	-45.43	-45.43
	Inverter Transformer	MV4-7 T	369040	4909001	2	0	0	56.1	56.1	1	5986.02	3.25	0	86.54	0	1.96	0	0	13.09	0	0	0	0	0	0	-45.53	-45.53
	Inverter Transformer	MV4-8 T	369262	4909001	2	0	0	56.1	56.1	1	6066.25	3.25	0	86.66	0	1.99	0	0	13.18	0	0	0	0	0	0	-45.77	-45.77
	Inverter Transformer	MV4-9 T	369284	4909001	2	0	0	56.1	56.1	1	6074.59	3.25	0	86.67	0	1.99	0	0	13.19	0	0	0	0	0	0	-45.79	-45.79
	Inverter Transformer	MV5-5 T	370021	4908690	2	0	0	56.1	56.1	1	6119.83	3.25	0	86.73	0	2	0	0	13.24	0	0	0	0	0	0	-45.92	-45.92
	Inverter Transformer	MV4-4 T	369033	4909199	2	0	0	56.1	56.1	1	6169.88	3.25	0	86.81	0	2.02	0	0	13.3	0	0	0	0	0	0	-46.07	-46.07
	Inverter Transformer	MV4-6 T	369249	4909192	2	0	0	56.1	56.1	1	6238.8	3.25	0	86.9	0	2.04	0	0	13.38	0	0	0	0	0	0	-46.26	-46.26
	Inverter Transformer	MV5-2 T	370011	4908853	2	0	0	56.1	56.1	1	6256.84	3.25	0	86.93	0	2.04	0	0	13.4	0	0	0	0	0	0	-46.32	-46.32
	Inverter Transformer	MV4-5 T	369283	4909199	2	0	0	56.1	56.1	1	6257.79	3.25	0	86.93	0	2.05	0	0	13.4	0	0	0	0	0	0	-46.32	-46.32
	Inverter Transformer	MV5-4 T	370330	4908707	2	0	0	56.1	56.1	1	6293.81	3.25	0	86.98	0	2.06	0	0	13.45	0	0	0	0	0	0	-46.42	-46.42
	Inverter Transformer	MV4-1 T	369017	4909397	2	0	0	56.1	56.1	1	6351.7	3.25	0	87.06	0	2.07	0	0	13.51	0	0	0	0	0	0	-46.58	-46.58
	Inverter Transformer	MV5-3 T	370237	4908851	2	0	0	56.1	56.1	1	6367.91	3.25	0	87.08	0	2.08	0	0	13.53	0	0	0	0	0	0	-46.63	-46.63
	Inverter Transformer	MV4-3 T	369234	4909397	2	0	0	56.1	56.1	1	6424.81	3.25	0	87.16	0	2.1	0	0	13.6	0	0	0	0	0	0	-46.79	-46.79
	Inverter Transformer	MV4-2 T	369267	4909397	2	0	0	56.1	56.1	1	6436.5	3.25	0	87.17	0	2.1	0	0	13.61	0	0	0	0	0	0	-46.82	-46.82
	Inverter Transformer	MV5-1 T	370015	4909142	2	0	0	56.1	56.1	1	6512.87	3.25	0	87.28	0	2.12	0	0	13.69	0	0	0	0	0	0	-47.03	-47.03
	Line Reactor	NGR	369421	4908787.5	5	0	0	45.4	45.4	1	5932.9	5.25	0	86.47	0	3.24	1.36	0.11	2.43	0	0	0	0	0	0	-48.14	-48.14
Limit. Valu	0	0																								
Level D/N:	30.6489	30.6489																								

Receiver: Existing Noise Receptor
ID: G-9
X: 367088.2
Y: 4903275.1
Z: 4.5
Ground: 0

ISO	Description	ID	X	Y	Z	Ground	ReflOrd	LxT	LxN	L/A	Dist.	hm	Freq	Adiv	K0b	Agr	Abar	z	Aatm	Afol	Ahous	Cmet	CmetN	Dc	RL	LtotT	LtotN
	Gardiner Substation	G_Sub	366586.3	4903349.9	2.5	0	0	90.8	90.8	1	507.45	4.24	0	65.11	0	0.38	4.7	0.3	1.45	0	0	0	0	0	0	19.14	19.14
	Sol_Luce Substation	S_Substation	369426	4908792	3.5	0	0	112.1	112.1	1	5991.79	5.25	0	86.55	0	1.16	2.65	0.33	9.73	0	0	0	0	0	0	11.99	11.99
	Inverters	G_Inv4	366732.8	4903105	2	0	0	87.7	87.7	1	394.02	3.25	0	62.91	0	2.42	0	0	0.61	0	0	0	0	0	0	21.71	21.71
	Inverters	G_Inv2	366676.9	4903239.1	2	0	0	87.7	87.7	1	412.88	3.25	0	63.32	0	2.42	0	0	0.64	0	0	0	0	0	0	21.29	21.29
	Inverters	G_Inv6	366788.5	4902972	2	0	0	87.7	87.7	1	426.26	3.25	0	63.59	0	2.41	0	0	0.66	0	0	0	0	0	0	21	21
	Inverters	G_Inv8	366844.5	4902838.5	2	0	0	87.7	87.7	1	500.02	3.25	0	64.98	0	2.4	0	0	0.76	0	0	0	0	0	0	19.52	19.52
	Inverters	G_Inv3	366583.7	4903091.4	2	0	0	87.7	87.7	1	536.91	3.25	0	65.6	0	2.4	0	0	0.81	0	0	0	0	0	0	18.85	18.85
	Inverters	G_Inv5	366638.5	4902958.1	2	0	0	87.7	87.7	1	550.2	3.25	0	65.81	0	2.4	0	0	0.83	0	0	0	0	0	0	18.62	18.62
	Inverters	G_Inv1	366526.4	4903225.8	2	0	0	87.7	87.7	1	563.96	3.25	0	66.03	0	2.4	0	0	0.85	0	0	0	0	0	0	18.39	18.39
	Inverter	MV1-15	365315	4904994	2	0	0	100.3	100.3	1	2469.59	3.25	0	78.85	0	0.25	0	0	14.4	0	0	0	0	0	0	6.81	6.81
	Inverters	G_Inv7	366694.6	4902824.7	2	0	0	87.7	87.7	1	598.15	3.25	0	66.54	0	2.4	0	0	0.9	0	0	0	0	0	0	17.83	17.83
	Inverters	G_Inv10	366900.7	4902704.8	2	0	0	87.7	87.7	1	600.34	3.25	0	66.57	0	2.4	0	0	0.9	0	0	0	0	0	0	17.79	17.79
	Inverters	G_Inv9	366750.9	4902691.8	2	0	0	87.7	87.7	1	673.81	3.25	0	67.57	0	2.4	0	0	1	0	0	0	0	0	0	16.68	16.68
	Inverter	MV1-12	365038	4905386	2	0	0	100.3	100.3	1	2942.66	3.25	0	80.37	0	0.35	0	0	15.27	0	0	0	0	0	0	4.32	4.32
	Inverter	MV1-11	364655	4905414	2	0	0	100.3	100.3	1	3239.65	3.25	0	81.21	0	0.41	0	0	15.79	0	0	0	0	0	0	2.91	2.91
	Inverter	MV1-8	364788	4905647	2	0	0	100.3	100.3	1	3304.06	3.25	0	81.38	0	0.42	0	0	15.9	0	0	0	0	0	0	2.61	2.61
	Inverter	MV1-9	364561	4905646	2	0	0	100.3	100.3	1	3465.24	3.25	0	81.79	0	0.45	0	0	16.17	0	0	0	0	0	0	1.9	1.9
	Inverter	MV1-4	364815	4905918	2	0	0	100.3	100.3	1	3486.02	3.25	0	81.85	0	0.45	0	0	16.21	0	0	0	0	0	0	1.81	1.81
	Inverter	MV1-5	364671	4905892	2	0	0	100.3	100.3	1	3562.45	3.25	0	82.03	0	0.46	0	0	16.34	0	0	0	0	0	0	1.48	1.48

Inverter	MV2-3	365820	4906641	2	0	0	100.3	100.3	1	3596.89	3.25	0	82.12	0	0.47	0	0	16.39	0	0	0	0	0	0	1.33	1.33
Inverter	MV1-2	364753	4906063	2	0	0	100.3	100.3	1	3636.7	3.25	0	82.21	0	0.47	0	0	16.46	0	0	0	0	0	0	1.17	1.17
Inverter	MV1-6	364477	4905835	2	0	0	100.3	100.3	1	3656.7	3.25	0	82.26	0	0.48	0	0	16.49	0	0	0	0	0	0	1.08	1.08
Inverter	MV2-4	365586	4906624	2	0	0	100.3	100.3	1	3670.39	3.25	0	82.29	0	0.48	0	0	16.51	0	0	0	0	0	0	1.03	1.03
Inverter	MV1-14	365163	4905049	2	0	0	97.3	97.3	1	2617.85	3.25	0	79.36	0	0.28	0	0	14.68	0	0	0	0	0	0	2.99	2.99
Inverter	MV1-1	364715	4906166	2	0	0	100.3	100.3	1	3740.24	3.25	0	82.46	0	0.49	0	0	16.63	0	0	0	0	0	0	0.74	0.74
Inverter	MV3-21	368478	4907206	2	0	0	100.3	100.3	1	4169.36	3.25	0	83.4	0	0.55	0	0	17.32	0	0	0	0	0	0	-0.96	-0.96
Inverter	MV3-18	367752	4907412	2	0	0	100.3	100.3	1	4189.82	3.25	0	83.44	0	0.55	0	0	17.35	0	0	0	0	0	0	-1.03	-1.03
Inverter	MV3-19	368357	4907347	2	0	0	100.3	100.3	1	4265	3.25	0	83.6	0	0.56	0	0	17.47	0	0	0	0	0	0	-1.32	-1.32
Inverter	MV1-13	364731	4905241	2	0	0	97.3	97.3	1	3069.39	3.25	0	80.74	0	0.38	0	0	15.49	0	0	0	0	0	0	0.7	0.7
Inverter	MV3-17	368178	4907472	2	0	0	100.3	100.3	1	4336.09	3.25	0	83.74	0	0.57	0	0	17.58	0	0	0	0	0	0	-1.58	-1.58
Inverter	MV3-20	368689	4907317	2	0	0	100.3	100.3	1	4347.36	3.25	0	83.76	0	0.57	0	0	17.6	0	0	0	0	0	0	-1.62	-1.62
Inverter	MV3-12	367668	4907594	2	0	0	100.3	100.3	1	4357.65	3.25	0	83.79	0	0.57	0	0	17.61	0	0	0	0	0	0	-1.66	-1.66
Inverter	MV1-10	365004	4905564	2	0	0	97.3	97.3	1	3095.64	3.25	0	80.81	0	0.38	0	0	15.54	0	0	0	0	0	0	0.58	0.58
Inverter	MV3-15	368357	4907477	2	0	0	100.3	100.3	1	4389.29	3.25	0	83.85	0	0.58	0	0	17.66	0	0	0	0	0	0	-1.77	-1.77
Inverter	MV3-13	367963	4907577	2	0	0	100.3	100.3	1	4389.95	3.25	0	83.85	0	0.58	0	0	17.66	0	0	0	0	0	0	-1.78	-1.78
Inverter	MV3-16	368514	4907475	2	0	0	100.3	100.3	1	4435.32	3.25	0	83.94	0	0.58	0	0	17.73	0	0	0	0	0	0	-1.94	-1.94
Inverter	MV3-14	368684	4907498	2	0	0	100.3	100.3	1	4514.36	3.25	0	84.09	0	0.59	0	0	17.85	0	0	0	0	0	0	-2.22	-2.22
Inverter	MV3-10	368167	4907669	2	0	0	100.3	100.3	1	4524.4	3.25	0	84.11	0	0.59	0	0	17.87	0	0	0	0	0	0	-2.26	-2.26
Inverter	MV3-7	367945	4907754	2	0	0	100.3	100.3	1	4560.12	3.25	0	84.18	0	0.6	0	0	17.92	0	0	0	0	0	0	-2.39	-2.39
Inverter	MV3-11	368346	4907662	2	0	0	100.3	100.3	1	4563.66	3.25	0	84.19	0	0.6	0	0	17.93	0	0	0	0	0	0	-2.4	-2.4
Inverter	MV3-9	368512	4907703	2	0	0	100.3	100.3	1	4651.18	3.25	0	84.35	0	0.61	0	0	18.06	0	0	0	0	0	0	-2.71	-2.71
Inverter	MV1-7	364925	4905782	2	0	0	97.3	97.3	1	3311.19	3.25	0	81.4	0	0.42	0	0	15.91	0	0	0	0	0	0	-0.42	-0.42
Inverter	MV3-6	368162	4907834	2	0	0	100.3	100.3	1	4683.65	3.25	0	84.41	0	0.61	0	0	18.11	0	0	0	0	0	0	-2.82	-2.82
Inverter	MV3-8	368680	4907712	2	0	0	100.3	100.3	1	4713.8	3.25	0	84.47	0	0.61	0	0	18.15	0	0	0	0	0	0	-2.92	-2.92
Inverter	MV3-3	367939	4907927	2	0	0	100.3	100.3	1	4729.06	3.25	0	84.5	0	0.62	0	0	18.18	0	0	0	0	0	0	-2.98	-2.98
Inverter	MV6-3	370207	4907140	2	0	0	100.3	100.3	1	4966.32	3.25	0	84.92	0	0.64	0	0	18.53	0	0	0	0	0	0	-3.78	-3.78
Inverter	MV6-2	370085	4907339	2	0	0	100.3	100.3	1	5049.37	3.25	0	85.06	0	0.65	0	0	18.65	0	0	0	0	0	0	-4.05	-4.05
Inverter	MV2-1	365842	4906816	2	0	0	97.3	97.3	1	3753.8	3.25	0	82.49	0	0.49	0	0	16.65	0	0	0	0	0	0	-2.32	-2.32
Inverter	MV4-11	369264	4908855	2	0	0	100.3	100.3	1	5989.11	3.25	0	86.55	0	0.7	0	0	19.98	0	0	0	0	0	0	-6.92	-6.92
Inverter	MV4-10	369312	4908858	2	0	0	100.3	100.3	1	6009.5	3.25	0	86.58	0	0.71	0	0	20.01	0	0	0	0	0	0	-6.98	-6.98
Inverter	MV4-7	369035	4909001	2	0	0	100.3	100.3	1	6047.81	3.25	0	86.63	0	0.71	0	0	20.06	0	0	0	0	0	0	-7.08	-7.08
Inverter	MV4-8	369256	4909001	2	0	0	100.3	100.3	1	6122.52	3.25	0	86.74	0	0.71	0	0	20.16	0	0	0	0	0	0	-7.29	-7.29
Inverter	MV4-9	369289	4909001	2	0	0	100.3	100.3	1	6134.29	3.25	0	86.76	0	0.71	0	0	20.17	0	0	0	0	0	0	-7.33	-7.33
Inverter	MV5-5	370015	4908690	2	0	0	100.3	100.3	1	6155.27	3.25	0	86.78	0	0.71	0	0	20.2	0	0	0	0	0	0	-7.39	-7.39
Inverter	MV4-4	369027	4909199	2	0	0	100.3	100.3	1	6233.1	3.25	0	86.89	0	0.71	0	0	20.31	0	0	0	0	0	0	-7.6	-7.6
Inverter	MV5-2	370006	4908853	2	0	0	100.3	100.3	1	6294.96	3.25	0	86.98	0	0.71	0	0	20.39	0	0	0	0	0	0	-7.77	-7.77
Inverter	MV4-6	369243	4909192	2	0	0	100.3	100.3	1	6297.05	3.25	0	86.98	0	0.71	0	0	20.39	0	0	0	0	0	0	-7.78	-7.78
Inverter	MV4-5	369289	4909199	2	0	0	100.3	100.3	1	6319.5	3.25	0	87.01	0	0.71	0	0	20.42	0	0	0	0	0	0	-7.84	-7.84
Inverter	MV5-4	370324	4908707	2	0	0	100.3	100.3	1	6322.65	3.25	0	87.02	0	0.71	0	0	20.43	0	0	0	0	0	0	-7.84	-7.84
Inverter	MV5-3	370231	4908851	2	0	0	100.3	100.3	1	6400.61	3.25	0	87.12	0	0.71	0	0	20.53	0	0	0	0	0	0	-8.06	-8.06
Inverter	MV4-1	369011	4909397	2	0	0	100.3	100.3	1	6416.76	3.25	0	87.15	0	0.71	0	0	20.55	0	0	0	0	0	0	-8.1	-8.1
Inverter	MV4-3	369229	4909397	2	0	0	100.3	100.3	1	6485.42	3.25	0	87.24	0	0.71	0	0	20.64	0	0	0	0	0	0	-8.28	-8.28
Inverter	MV4-2	369272	4909397	2	0	0	100.3	100.3	1	6499.74	3.25	0	87.26	0	0.71	0	0	20.66	0	0	0	0	0	0	-8.32	-8.32
Inverter	MV5-1	370020	4909142	2	0	0	100.3	100.3	1	6558.66	3.25	0	87.34	0	0.72	0	0	20.74	0	0	0	0	0	0	-8.47	-8.47
Inverter	MV6-1	370235	4907364	2	0	0	97.3	97.3	1	5159.6	3.25	0	85.25	0	0.66	0	0	18.81	0	0	0	0	0	0	-7.41	-7.41
DSTATCOM - 10 MVAR #2	DSAT2	369403	4908757	2.5	0	0	96.6	96.6	1	5950.59	3.5	0	86.49	0	3.77	0	0	3.82	0	0	0	0	0	0	2.55	2.55
DSTATCOM - 10 MVAR #1	DSAT1	369437	4908757	2.5	0	0	96.6	96.6	1	5963.9	3.5	0	86.51	0	3.77	0	0	3.82	0	0	0	0	0	0	2.53	2.53
SubstationTransformer	W_ST	369711.17	4906112.3	2.5	0	0	92	92	1	3863.87	3.5	0	82.74	0	0.3	0	-0.1	7.18	0	0	0	0	0	0	1.75	1.75
Inverter	MV2-2	365977	4906654	2	0	0	89.1	89.1	1	3556.93	3.25	0	82.02	0	1.28	0	0	10.45	0	0	0	0	0	0	-4.69	-4.69
Westbrook Inverter Enclosur	W_INV3	369508	4906164	2	0	0	89.1	89.1	1	3768.45	3.25	0	82.52	0	1.34	0	0	10.75	0	0	0	0	0	0	-5.55	-5.55
Inverter	MV1-3	364440	4906039	2	0	0	89.1	89.1	1	3827.81	3.25	0	82.66	0	1.35	0	0	10.84	0	0	0	0	0	0	-5.79	-5.79
Westbrook Inverter Enclosur	W_INV2	369374	4906388	2	0	0	89.1	89.1	1	3862	3.25	0	82.74	0	1.36	0	0	10.89	0	0	0	0	0	0	-5.92	-5.92
Westbrook Inverter Enclosur	W_INV4	369673	4906164	2	0	0	89.1	89.1	1	3876.46	3.25	0	82.77	0	1.36	0	0	10.91	0	0	0	0	0	0	-5.98	-5.98
Westbrook Inverter Enclosur	W_INV7	369780	4906417	2	0	0	89.1	89.1	1	4137.31	3.25	0	83.33	0	1.43	0	0	11.28	0	0	0	0	0	0	-6.98	-6.98
Inverter	MV3-22	368656	4907142	2	0	0	89.1	89.1	1	4172.64	3.25	0	83.41	0	1.43	0	0	11.33	0	0	0	0	0	0	-7.11	-7.11
Westbrook Inverter Enclosur	W_INV5	369719	4906574	2	0	0	89.1	89.1	1	4219.46	3.25	0	83.51	0	1.45	0	0	11.39	0	0	0	0	0	0	-7.29	-7.29
Westbrook Inverter Enclosur	W_INV6	369875	4906578	2	0	0	89.1	89.1	1	4321.51	3.25	0	83.71	0	1.47	0	0	11.54	0	0	0	0	0	0	-7.66	-7.66
Inverter	MV3-5	368340	4907843	2	0	0	89.1	89.1	1	4736.32	3.25	0	84.51	0	1.57	0	0	12.11	0	0	0	0	0	0	-9.13	-9.13
Inverter	MV3-1	368156	4907976	2	0	0	89.1	89.1	1	4820.65	3.25	0	84.66	0	1.6	0	0	12.22	0	0	0	0	0	0	-9.42	-9.42
Inverter	MV3-4	368502	4907925	2	0	0	89.1	89.1	1	4860.08	3.25	0	84.73	0	1.61	0	0	12.28	0	0	0	0	0	0	-9.56	-9.56
Inverter	MV3-2	368671	4907928	2	0	0	89.1	89.1	1	4914.75	3.25	0	84.83	0	1.62	0	0	12.35	0	0	0	0	0	0	-9.74	-9.74
Fixed Reactor Bank 1	FRB1	369378	4908755	6	0	0	89.8	89.8	1	5939.06	5.25	0	86.47	0	-0.43	0	0	9.68	0	0	0	0	0	0	-5.95	-5.95
Fixed Reactor Bank 2	FRB2	369464	4908755	6	0	0	89.8	89.8	1	5972.75	5.25	0	86.52	0	-0.42	0	0	9.71	0	0	0	0	0	0	-6.04	-6.04
Inverter	MV4-15	369176	4908481	2	0	0	89.1	89.1	1	5608.95	3.25	0	85.98	0	1.79	0	0	13.26	0	0	0	0	0	0	-11.97	-11.97
Inverter	MV4-14	369176	4908507	2	0	0	89.1	89.1	1	5633.09	3.25	0	86.01	0	1.8	0	0	13.29	0	0	0	0	0	0	-12.05	-12.05
Inverter	MV4-13	369051	4908605	2	0	0	89.1	89.1	1	5679.83	3.25	0	86.09	0	1.81	0	0	13.35	0	0	0	0	0	0	-12.19	-12.19
Westbrook Inverter Enclosur	W_INV1	369409	4906578	2	0	0	86.1	86.1	1	4036.74	3.25	0	83.12	0	1.4	0	0	11.14	0	0	0	0	0	0	-9.6	-9.6
Inverter	MV4-12	369043	4908803	2	0	0	89.1	89.1	1	5863.35	3.25	0	86.36	0	1.85	0	0	13.59	0	0	0	0	0	0	-12.75	-12.75
Inverter	MV5-6	369982	4908507	2	0	0	89.1	89.1	1	5978.87	3.25	0	86.53	0	1.88	0	0	13.74	0	0	0	0	0	0	-13.09	-13.09
Inverter	MV6-4	370250	4906966	2	0	0	86.1	86.1	1	4860.01	3.25	0	84.73	0	1.61	0	0	12.28	0	0	0	0	0	0	-12.56	-12.56
Westbrook Inverter Transfor	W_INVTR1	369403	4906578	2	0	0	78.2	78.2	1	4033.29	3.25	0	83.11	0	-2.97	0	0	2.07	0	0	0	0	0	0	-3.97	-3.97
Westbrook Inverter Transfor	W_INVTR3	369514	4906164	2	0	0	77.3	77.3	1	3772.3	3.25	0	82.53	0	-2.91	0	0	1.97	0	0	0	0	0	0	-4.25	-4.25
Westbrook Inverter Transfor	W_INVTR2	369368	4906388	2	0	0	77.3	77.3	1	3858.45	3.25	0	82.73	0	-2.93	0	0	2	0	0	0	0	0	0	-4.46	-4.46

Westbrook Inverter Transfor	W_INVTR4	369679	4906164	2	0	0	77.3	77.3	1	3880.46	3.25	0	82.78	0	-2.94	0	0	2.01	0	0	0	0	0	0	-4.51	-4.51
Westbrook Inverter Transfor	W_INVTR7	369786	4906417	2	0	0	77.3	77.3	1	4141.22	3.25	0	83.34	0	-3	0	0	2.11	0	0	0	0	0	0	-5.11	-5.11
Westbrook Inverter Transfor	W_INVTR5	369725	4906574	2	0	0	77.3	77.3	1	4223.21	3.25	0	83.51	0	-3.01	0	0	2.14	0	0	0	0	0	0	-5.3	-5.3
Westbrook Inverter Transfor	W_INVTR6	369881	4906578	2	0	0	77.3	77.3	1	4325.38	3.25	0	83.72	0	-3.04	0	0	2.18	0	0	0	0	0	0	-5.52	-5.52
Inverter Transformer	MV1-14 T	365157	4905049	2	0	0	69.4	69.4	1	2622.26	3.25	0	79.37	0	2.39	0	0	5.55	0	0	0	0	0	0	-17.97	-17.97
Inverter Transformer	MV1-13 T	364725	4905241	2	0	0	69.4	69.4	1	3074	3.25	0	80.75	0	2.53	0	0	5.94	0	0	0	0	0	0	-19.88	-19.88
Inverter Transformer	MV1-10 T	365010	4905564	2	0	0	69.4	69.4	1	3091.6	3.25	0	80.8	0	2.54	0	0	5.96	0	0	0	0	0	0	-19.95	-19.95
Inverter Transformer	MV1-7 T	364919	4905782	2	0	0	69.4	69.4	1	3315.11	3.25	0	81.41	0	2.6	0	0	6.14	0	0	0	0	0	0	-20.8	-20.8
Inverter Transformer	MV2-1 T	365836	4906816	2	0	0	69.4	69.4	1	3755.79	3.25	0	82.49	0	2.72	0	0	6.49	0	0	0	0	0	0	-22.36	-22.36
Inverter Transformer	MV6-4 T	370244	4906966	2	0	0	69.4	69.4	1	4856.11	3.25	0	84.73	0	2.98	0	0	7.28	0	0	0	0	0	0	-25.64	-25.64
Inverter Transformer	MV6-1 T	370230	4907364	2	0	0	69.4	69.4	1	5156.55	3.25	0	85.25	0	3.04	0	0	7.49	0	0	0	0	0	0	-26.43	-26.43
Inverter Transformer	MV1-15 T	365309	4904994	2	0	0	56.1	56.1	1	2473.9	3.25	0	78.87	0	0.61	0	0	7.94	0	0	0	0	0	0	-31.36	-31.36
Inverter Transformer	MV1-12 T	365044	4905386	2	0	0	56.1	56.1	1	2938.48	3.25	0	80.36	0	0.8	0	0	8.76	0	0	0	0	0	0	-33.87	-33.87
Inverter Transformer	MV1-11 T	364649	4905414	2	0	0	56.1	56.1	1	3244.16	3.25	0	81.22	0	0.93	0	0	9.28	0	0	0	0	0	0	-35.37	-35.37
Inverter Transformer	MV1-8 T	364782	4905647	2	0	0	56.1	56.1	1	3308.24	3.25	0	81.39	0	0.96	0	0	9.38	0	0	0	0	0	0	-35.67	-35.67
Inverter Transformer	MV1-9 T	364555	4905646	2	0	0	56.1	56.1	1	3469.62	3.25	0	81.81	0	1.03	0	0	9.64	0	0	0	0	0	0	-36.41	-36.41
Inverter Transformer	MV1-4 T	364821	4905918	2	0	0	56.1	56.1	1	3482.11	3.25	0	81.84	0	1.03	0	0	9.66	0	0	0	0	0	0	-36.47	-36.47
Inverter Transformer	MV2-2 T	365982	4906654	2	0	0	56.1	56.1	1	3555.37	3.25	0	82.02	0	1.06	0	0	9.78	0	0	0	0	0	0	-36.8	-36.8
Inverter Transformer	MV1-5 T	364676	4905892	2	0	0	56.1	56.1	1	3559.06	3.25	0	82.03	0	1.06	0	0	9.78	0	0	0	0	0	0	-36.81	-36.81
Inverter Transformer	MV2-3 T	365814	4906641	2	0	0	56.1	56.1	1	3599.01	3.25	0	82.12	0	1.08	0	0	9.84	0	0	0	0	0	0	-36.99	-36.99
Inverter Transformer	MV1-2 T	364759	4906063	2	0	0	56.1	56.1	1	3632.85	3.25	0	82.2	0	1.09	0	0	9.9	0	0	0	0	0	0	-37.14	-37.14
Inverter Transformer	MV1-6 T	364482	4905835	2	0	0	56.1	56.1	1	3653.13	3.25	0	82.25	0	1.1	0	0	9.93	0	0	0	0	0	0	-37.23	-37.23
Inverter Transformer	MV2-4 T	365590	4906628	2	0	0	56.1	56.1	1	3672.4	3.25	0	82.3	0	1.11	0	0	9.96	0	0	0	0	0	0	-37.31	-37.31
Inverter Transformer	MV1-1 T	364721	4906166	2	0	0	56.1	56.1	1	3736.43	3.25	0	82.45	0	1.14	0	0	10.06	0	0	0	0	0	0	-37.58	-37.58
Inverter Transformer	MV1-3 T	364435	4906039	2	0	0	56.1	56.1	1	3831.27	3.25	0	82.67	0	1.18	0	0	10.2	0	0	0	0	0	0	-37.99	-37.99
Inverter Transformer	MV3-21 T	368484	4907206	2	0	0	56.1	56.1	1	4171.36	3.25	0	83.41	0	1.31	0	0	10.71	0	0	0	0	0	0	-39.37	-39.37
Inverter Transformer	MV3-22 T	368661	4907142	2	0	0	56.1	56.1	1	4174.52	3.25	0	83.41	0	1.31	0	0	10.71	0	0	0	0	0	0	-39.38	-39.38
Inverter Transformer	MV3-18 T	367757	4907412	2	0	0	56.1	56.1	1	4190.61	3.25	0	83.45	0	1.32	0	0	10.73	0	0	0	0	0	0	-39.44	-39.44
Inverter Transformer	MV3-19 T	368352	4907347	2	0	0	56.1	56.1	1	4263.52	3.25	0	83.6	0	1.35	0	0	10.84	0	0	0	0	0	0	-39.73	-39.73
Inverter Transformer	MV3-17 T	368183	4907472	2	0	0	56.1	56.1	1	4337.35	3.25	0	83.74	0	1.38	0	0	10.95	0	0	0	0	0	0	-40.01	-40.01
Inverter Transformer	MV3-20 T	368683	4907317	2	0	0	56.1	56.1	1	4345.15	3.25	0	83.76	0	1.38	0	0	10.96	0	0	0	0	0	0	-40.04	-40.04
Inverter Transformer	MV3-12 T	367674	4907594	2	0	0	56.1	56.1	1	4358.45	3.25	0	83.79	0	1.39	0	0	10.98	0	0	0	0	0	0	-40.09	-40.09
Inverter Transformer	MV3-15 T	368351	4907477	2	0	0	56.1	56.1	1	4387.55	3.25	0	83.84	0	1.4	0	0	11.02	0	0	0	0	0	0	-40.2	-40.2
Inverter Transformer	MV3-13 T	367958	4907577	2	0	0	56.1	56.1	1	4388.95	3.25	0	83.85	0	1.4	0	0	11.02	0	0	0	0	0	0	-40.2	-40.2
Inverter Transformer	MV3-16 T	368509	4907475	2	0	0	56.1	56.1	1	4433.72	3.25	0	83.94	0	1.41	0	0	11.08	0	0	0	0	0	0	-40.37	-40.37
Inverter Transformer	MV3-14 T	368678	4907498	2	0	0	56.1	56.1	1	4512.24	3.25	0	84.09	0	1.44	0	0	11.19	0	0	0	0	0	0	-40.67	-40.67
Inverter Transformer	MV3-10 T	368162	4907669	2	0	0	56.1	56.1	1	4523.21	3.25	0	84.11	0	1.45	0	0	11.21	0	0	0	0	0	0	-40.71	-40.71
Inverter Transformer	MV3-7 T	367951	4907754	2	0	0	56.1	56.1	1	4561.25	3.25	0	84.18	0	1.46	0	0	11.26	0	0	0	0	0	0	-40.85	-40.85
Inverter Transformer	MV3-11 T	368340	4907662	2	0	0	56.1	56.1	1	4562.01	3.25	0	84.18	0	1.46	0	0	11.26	0	0	0	0	0	0	-40.85	-40.85
Inverter Transformer	MV3-9 T	368517	4907703	2	0	0	56.1	56.1	1	4652.72	3.25	0	84.35	0	1.5	0	0	11.39	0	0	0	0	0	0	-41.18	-41.18
Inverter Transformer	MV3-6 T	368156	4907834	2	0	0	56.1	56.1	1	4682.28	3.25	0	84.41	0	1.51	0	0	11.43	0	0	0	0	0	0	-41.29	-41.29
Inverter Transformer	MV3-8 T	368685	4907712	2	0	0	56.1	56.1	1	4715.49	3.25	0	84.47	0	1.52	0	0	11.47	0	0	0	0	0	0	-41.41	-41.41
Inverter Transformer	MV3-3 T	367944	4907927	2	0	0	56.1	56.1	1	4729.97	3.25	0	84.5	0	1.53	0	0	11.49	0	0	0	0	0	0	-41.46	-41.46
Inverter Transformer	MV3-5 T	368335	4907843	2	0	0	56.1	56.1	1	4735	3.25	0	84.51	0	1.53	0	0	11.5	0	0	0	0	0	0	-41.48	-41.48
Inverter Transformer	MV3-1 T	368150	4907976	2	0	0	56.1	56.1	1	4819.32	3.25	0	84.66	0	1.56	0	0	11.61	0	0	0	0	0	0	-41.77	-41.77
Inverter Transformer	MV3-4 T	368507	4907925	2	0	0	56.1	56.1	1	4861.54	3.25	0	84.74	0	1.57	0	0	11.67	0	0	0	0	0	0	-41.92	-41.92
Inverter Transformer	MV3-2 T	368677	4907928	2	0	0	56.1	56.1	1	4916.68	3.25	0	84.83	0	1.6	0	0	11.74	0	0	0	0	0	0	-42.11	-42.11
Inverter Transformer	MV6-3 T	370202	4907140	2	0	0	56.1	56.1	1	4963.19	3.25	0	84.92	0	1.61	0	0	11.81	0	0	0	0	0	0	-42.27	-42.27
Inverter Transformer	MV6-2 T	370091	4907339	2	0	0	56.1	56.1	1	5052.93	3.25	0	85.07	0	1.64	0	0	11.92	0	0	0	0	0	0	-42.58	-42.58
Inverter Transformer	MV4-15 T	369170	4908481	2	0	0	56.1	56.1	1	5606.72	3.25	0	85.97	0	1.84	0	0	12.63	0	0	0	0	0	0	-44.38	-44.38
Inverter Transformer	MV4-14 T	369182	4908507	2	0	0	56.1	56.1	1	5635.32	3.25	0	86.02	0	1.85	0	0	12.66	0	0	0	0	0	0	-44.47	-44.47
Inverter Transformer	MV4-13 T	369057	4908605	2	0	0	56.1	56.1	1	5681.9	3.25	0	86.09	0	1.86	0	0	12.72	0	0	0	0	0	0	-44.61	-44.61
Inverter Transformer	MV4-12 T	369049	4908803	2	0	0	56.1	56.1	1	5865.36	3.25	0	86.37	0	1.92	0	0	12.94	0	0	0	0	0	0	-45.17	-45.17
Inverter Transformer	MV5-6 T	369987	4908507	2	0	0	56.1	56.1	1	5981.29	3.25	0	86.54	0	1.96	0	0	13.08	0	0	0	0	0	0	-45.52	-45.52
Inverter Transformer	MV4-11 T	369269	4908855	2	0	0	56.1	56.1	1	5990.92	3.25	0	86.55	0	1.96	0	0	13.09	0	0	0	0	0	0	-45.55	-45.55
Inverter Transformer	MV4-10 T	369307	4908858	2	0	0	56.1	56.1	1	6007.65	3.25	0	86.57	0	1.97	0	0	13.11	0	0	0	0	0	0	-45.59	-45.59
Inverter Transformer	MV4-7 T	369040	4909001	2	0	0	56.1	56.1	1	6049.42	3.25	0	86.63	0	1.98	0	0	13.16	0	0	0	0	0	0	-45.72	-45.72
Inverter Transformer	MV4-8 T	369262	4909001	2	0	0	56.1	56.1	1	6124.65	3.25	0	86.74	0	2	0	0	13.25	0	0	0	0	0	0	-45.94	-45.94
Inverter Transformer	MV4-9 T	369284	4909001	2	0	0	56.1	56.1	1	6132.49	3.25	0	86.75	0	2.01	0	0	13.26	0	0	0	0	0	0	-45.96	-45.96
Inverter Transformer	MV5-5 T	370021	4908690	2	0	0	56.1	56.1	1	6158.12	3.25	0	86.79	0	2.01	0	0	13.29	0	0	0	0	0	0	-46.03	-46.03
Inverter Transformer	MV4-4 T	369033	4909199	2	0	0	56.1	56.1	1	6234.97	3.25	0	86.9	0	2.04	0	0	13.38	0	0	0	0	0	0	-46.25	-46.25
Inverter Transformer	MV5-2 T	370011	4908853	2	0	0	56.1	56.1	1	6297.28	3.25	0	86.98	0	2.06	0	0	13.45	0	0	0	0	0	0	-46.43	-46.43
Inverter Transformer	MV4-6 T	369249	4909192	2	0	0	56.1	56.1	1	6299.11	3.25	0	86.99	0	2.06	0	0	13.45	0	0	0	0	0	0	-46.44	-46.44
Inverter Transformer	MV4-5 T	369283	4909199	2	0	0	56.1	56.1	1	6317.42	3.25	0	87.01	0	2.06	0	0	13.47	0	0	0	0	0	0	-46.49	-46.49
Inverter Transformer	MV5-4 T	370330	4908707	2	0	0	56.1	56.1	1	6325.73	3.25	0	87.02	0	2.07	0	0	13.48	0	0	0	0	0	0	-46.51	-46.51
Inverter Transformer	MV5-3 T	370237	4908851	2	0	0	56.1	56.1	1	6403.56	3.25	0	87.13	0	2.09	0	0	13.57	0	0	0	0	0	0	-46.73	-46.73
Inverter Transformer	MV4-1 T	369017	4909397	2	0	0	56.1	56.1	1	6418.56	3.25	0	87.15	0	2.09	0	0	13.59	0	0	0	0	0	0	-46.77	-46.77
Inverter Transformer	MV4-3 T	369234	4909397	2	0	0	56.1	56.1	1	6487.07	3.25	0	87.24	0	2.11	0	0	13.67	0	0	0	0	0	0	-46.96	-46.96
Inverter Transformer	MV4-2 T	369267	4909397	2	0	0	56.1	56.1	1	6498.06	3.25	0	87.26	0	2.12	0	0	13.68	0	0	0	0	0	0	-46.99	-46.99
Inverter Transformer	MV5-1 T	370015	4909142	2	0	0	56.1	56.1	1	6556.42	3.25	0	87.33	0	2.13	0	0	13.74	0	0	0	0	0	0	-47.15	-47.15
Line Reactor	NGR	369421	4908787.5	5	0	0	45.4	45.4	1	5985.69	5.25	0	86.54	0	3.24	1.36	0.11	2.45	0	0	0	0	0	0	-48.24	-48.24
Limit. Valu 0	0																								
Level D/N: 30.1519	30.1519																								

Receiver: Existing Noise Receptor
ID: G-10
X: 366439.2
Y: 4903427.1
Z: 4.5
Ground: 0

ISO	Description	ID	X	Y	Z	Ground	ReflOrd	LxT	LxN	L/A	Dist.	hm	Freq	Adiv	K0b	Agr	Abar	z	Aatm	Afol	Ahous	Cmet	CmetN	Dc	RL	LtotT	LtotN
	Gardiner Substation	G_Sub	366586.3	4903349.9	2.5	0	0	90.8	90.8	1	166.14	4.23	0	55.41	0	0.69	6	0.29	0.56	0	0	0	0	0	0	28.11	28.11
	Inverters	G_Inv1	366526.4	4903225.8	2	0	0	87.7	87.7	1	219.39	3.25	0	57.82	0	2.62	0	0	0.35	0	0	0	0	0	0	26.86	26.86
	Inverters	G_Inv2	366676.9	4903239.1	2	0	0	87.7	87.7	1	303.07	3.25	0	60.63	0	2.49	0	0	0.48	0	0	0	0	0	0	24.06	24.06
	Inverters	G_Inv3	366583.7	4903091.4	2	0	0	87.7	87.7	1	365.49	3.25	0	62.26	0	2.44	0	0	0.57	0	0	0	0	0	0	22.39	22.39
	Sol_Luce Substation	S_Substation	369426	4908792	3.5	0	0	112.1	112.1	1	6140.29	5.25	0	86.76	0	1.19	2.61	0.31	9.89	0	0	0	0	0	0	11.62	11.62
	Inverters	G_Inv4	366732.8	4903105	2	0	0	87.7	87.7	1	435.84	3.25	0	63.79	0	2.41	0	0	0.67	0	0	0	0	0	0	20.79	20.79
	Inverter	MV1-15	365315	4904994	2	0	0	100.3	100.3	1	1928.47	3.25	0	76.7	0	0.11	0	0	13.31	0	0	0	0	0	0	10.19	10.19
	Inverters	G_Inv5	366638.5	4902958.1	2	0	0	87.7	87.7	1	509.6	3.25	0	65.14	0	2.4	0	0	0.78	0	0	0	0	0	0	19.34	19.34
	Inverter	MV1-12	365038	4905386	2	0	0	100.3	100.3	1	2408.46	3.25	0	78.63	0	0.24	0	0	14.28	0	0	0	0	0	0	7.16	7.16
	Inverters	G_Inv6	366788.5	4902972	2	0	0	87.7	87.7	1	573.7	3.25	0	66.17	0	2.4	0	0	0.87	0	0	0	0	0	0	18.22	18.22
	Inverter	MV1-11	364655	4905414	2	0	0	100.3	100.3	1	2670.42	3.25	0	79.53	0	0.29	0	0	14.78	0	0	0	0	0	0	5.71	5.71
	Inverter	MV1-8	364788	4905647	2	0	0	100.3	100.3	1	2766.66	3.25	0	79.84	0	0.32	0	0	14.95	0	0	0	0	0	0	5.2	5.2
	Inverters	G_Inv7	366694.6	4902824.7	2	0	0	87.7	87.7	1	654.31	3.25	0	67.32	0	2.4	0	0	0.97	0	0	0	0	0	0	16.97	16.97
	Inverter	MV1-9	364561	4905646	2	0	0	100.3	100.3	1	2907.09	3.25	0	80.27	0	0.34	0	0	15.21	0	0	0	0	0	0	4.49	4.49
	Inverter	MV1-14	365163	4905049	2	0	0	97.3	97.3	1	2063.8	3.25	0	77.29	0	0.15	0	0	13.6	0	0	0	0	0	0	6.28	6.28
	Inverter	MV1-4	364815	4905918	2	0	0	100.3	100.3	1	2973.65	3.25	0	80.47	0	0.36	0	0	15.33	0	0	0	0	0	0	4.16	4.16
	Inverter	MV1-5	364671	4905892	2	0	0	100.3	100.3	1	3033.52	3.25	0	80.64	0	0.37	0	0	15.43	0	0	0	0	0	0	3.87	3.87
	Inverters	G_Inv8	366844.5	4902838.5	2	0	0	87.7	87.7	1	714.65	3.25	0	68.08	0	2.41	0	0	1.06	0	0	0	0	0	0	16.11	16.11
	Inverter	MV1-6	364477	4905835	2	0	0	100.3	100.3	1	3106.16	3.25	0	80.84	0	0.38	0	0	15.56	0	0	0	0	0	0	3.53	3.53
	Inverter	MV1-2	364753	4906063	2	0	0	100.3	100.3	1	3129.1	3.25	0	80.91	0	0.39	0	0	15.6	0	0	0	0	0	0	3.42	3.42
	Inverter	MV1-1	364715	4906166	2	0	0	100.3	100.3	1	3236.42	3.25	0	81.2	0	0.41	0	0	15.78	0	0	0	0	0	0	2.92	2.92
	Inverter	MV2-3	365820	4906641	2	0	0	100.3	100.3	1	3273.01	3.25	0	81.3	0	0.41	0	0	15.85	0	0	0	0	0	0	2.75	2.75
	Inverter	MV2-4	365586	4906624	2	0	0	100.3	100.3	1	3308.8	3.25	0	81.39	0	0.42	0	0	15.91	0	0	0	0	0	0	2.59	2.59
	Inverters	G_Inv9	366750.9	4902691.8	2	0	0	87.7	87.7	1	798.64	3.25	0	69.05	0	2.42	0	0	1.17	0	0	0	0	0	0	15.03	15.03
	Inverter	MV1-13	364731	4905241	2	0	0	97.3	97.3	1	2491.62	3.25	0	78.93	0	0.26	0	0	14.44	0	0	0	0	0	0	3.68	3.68
	Inverter	MV1-10	365004	4905564	2	0	0	97.3	97.3	1	2574.13	3.25	0	79.21	0	0.27	0	0	14.6	0	0	0	0	0	0	3.23	3.23
	Inverters	G_Inv10	366900.7	4902704.8	2	0	0	87.7	87.7	1	857.15	3.25	0	69.66	0	2.43	0	0	1.24	0	0	0	0	0	0	14.33	14.33
	Inverter	MV1-7	364925	4905782	2	0	0	97.3	97.3	1	2799.71	3.25	0	79.94	0	0.32	0	0	15.01	0	0	0	0	0	0	2.03	2.03
	Inverter	MV3-18	367752	4907412	2	0	0	100.3	100.3	1	4195.58	3.25	0	83.46	0	0.55	0	0	17.36	0	0	0	0	0	0	-1.06	-1.06
	Inverter	MV3-21	368478	4907206	2	0	0	100.3	100.3	1	4293.81	3.25	0	83.66	0	0.57	0	0	17.51	0	0	0	0	0	0	-1.42	-1.42
	Inverter	MV3-12	367668	4907594	2	0	0	100.3	100.3	1	4344.31	3.25	0	83.76	0	0.57	0	0	17.59	0	0	0	0	0	0	-1.61	-1.61
	Inverter	MV3-19	368357	4907347	2	0	0	100.3	100.3	1	4363.89	3.25	0	83.8	0	0.57	0	0	17.62	0	0	0	0	0	0	-1.68	-1.68
	Inverter	MV3-17	368178	4907472	2	0	0	100.3	100.3	1	4402.8	3.25	0	83.87	0	0.58	0	0	17.68	0	0	0	0	0	0	-1.82	-1.82
	Inverter	MV3-13	367963	4907577	2	0	0	100.3	100.3	1	4420.82	3.25	0	83.91	0	0.58	0	0	17.71	0	0	0	0	0	0	-1.89	-1.89
	Inverter	MV3-15	368357	4907477	2	0	0	100.3	100.3	1	4481.03	3.25	0	84.03	0	0.59	0	0	17.8	0	0	0	0	0	0	-2.11	-2.11
	Inverter	MV3-20	368689	4907317	2	0	0	100.3	100.3	1	4493.65	3.25	0	84.05	0	0.59	0	0	17.82	0	0	0	0	0	0	-2.15	-2.15
	Inverter	MV3-16	368514	4907475	2	0	0	100.3	100.3	1	4548.66	3.25	0	84.16	0	0.6	0	0	17.9	0	0	0	0	0	0	-2.35	-2.35
	Inverter	MV3-10	368167	4907669	2	0	0	100.3	100.3	1	4580.29	3.25	0	84.22	0	0.6	0	0	17.95	0	0	0	0	0	0	-2.46	-2.46
	Inverter	MV3-7	367945	4907754	2	0	0	100.3	100.3	1	4581.43	3.25	0	84.22	0	0.6	0	0	17.95	0	0	0	0	0	0	-2.46	-2.46
	Inverter	MV3-11	368346	4907662	2	0	0	100.3	100.3	1	4644.38	3.25	0	84.34	0	0.61	0	0	18.05	0	0	0	0	0	0	-2.68	-2.68
	Inverter	MV3-14	368684	4907498	2	0	0	100.3	100.3	1	4648.8	3.25	0	84.35	0	0.61	0	0	18.06	0	0	0	0	0	0	-2.7	-2.7
	Inverter	MV3-6	368162	4907834	2	0	0	100.3	100.3	1	4731.68	3.25	0	84.5	0	0.62	0	0	18.18	0	0	0	0	0	0	-2.99	-2.99
	Inverter	MV3-3	367939	4907927	2	0	0	100.3	100.3	1	4743.26	3.25	0	84.52	0	0.62	0	0	18.2	0	0	0	0	0	0	-3.03	-3.03
	Inverter	MV3-9	368512	4907703	2	0	0	100.3	100.3	1	4751.82	3.25	0	84.54	0	0.62	0	0	18.21	0	0	0	0	0	0	-3.06	-3.06
	Inverter	MV3-8	368680	4907712	2	0	0	100.3	100.3	1	4835.45	3.25	0	84.69	0	0.63	0	0	18.34	0	0	0	0	0	0	-3.34	-3.34
	Inverter	MV2-1	365842	4906816	2	0	0	97.3	97.3	1	3441.12	3.25	0	81.73	0	0.44	0	0	16.13	0	0	0	0	0	0	-1	-1
	Inverter	MV6-3	370207	4907140	2	0	0	100.3	100.3	1	5289.8	3.25	0	85.47	0	0.67	0	0	19	0	0	0	0	0	0	-4.82	-4.82
	Inverter	MV6-2	370085	4907339	2	0	0	100.3	100.3	1	5347.41	3.25	0	85.56	0	0.67	0	0	19.08	0	0	0	0	0	0	-5	-5
	Inverter	MV4-11	369264	4908855	2	0	0	100.3	100.3	1	6118.95	3.25	0	86.73	0	0.71	0	0	20.15	0	0	0	0	0	0	-7.28	-7.28
	Inverter	MV4-10	369312	4908858	2	0	0	100.3	100.3	1	6143.91	3.25	0	86.77	0	0.71	0	0	20.19	0	0	0	0	0	0	-7.35	-7.35
	Inverter	MV4-7	369035	4909001	2	0	0	100.3	100.3	1	6148.7	3.25	0	86.78	0	0.71	0	0	20.19	0	0	0	0	0	0	-7.37	-7.37
	Inverter	MV4-8	369256	4909001	2	0	0	100.3	100.3	1	6245.22	3.25	0	86.91	0	0.71	0	0	20.32	0	0	0	0	0	0	-7.63	-7.63
	Inverter	MV4-9	369289	4909001	2	0	0	100.3	100.3	1	6260.17	3.25	0	86.93	0	0.71	0	0	20.34	0	0	0	0	0	0	-7.67	-7.67
	Inverter	MV4-4	369027	4909199	2	0	0	100.3	100.3	1	6325.47	3.25	0	87.02	0	0.71	0	0	20.43	0	0	0	0	0	0	-7.85	-7.85
	Inverter	MV5-5	370015	4908690	2	0	0	100.3	100.3	1	6362.74	3.25	0	87.07	0	0.71	0	0	20.48	0	0	0	0	0	0	-7.95	-7.95
	Inverter	MV4-6	369243	4909192	2	0	0	100.3	100.3	1	6410.57	3.25	0	87.14	0	0.71	0	0	20.54	0	0	0	0	0	0	-8.08	-8.08
	Inverter	MV4-5	369289	4909199	2	0	0	100.3	100.3	1	6437.1	3.25	0	87.17	0	0.71	0	0	20.58	0	0	0	0	0	0	-8.15	-8.15
	Inverter	MV5-2	370006	4908853	2	0	0	100.3	100.3	1	6493.26	3.25	0	87.25	0	0.71	0	0	20.65	0	0	0	0	0	0	-8.3	-8.3
	Inverter	MV4-1	369011	4909397	2	0	0	100.3	100.3	1	6500.3	3.25	0	87.26	0	0.71	0	0	20.66	0	0	0	0	0	0	-8.32	-8.32
	Inverter	MV5-4	370324	4908707	2	0	0	100.3	100.3	1	6555.08	3.25	0	87.33	0	0.71	0	0	20.73	0	0	0	0	0	0	-8.47	-8.47
	Inverter	MV4-3	369229	4909397	2	0	0	100.3	100.3	1	6589.59	3.25	0	87.38	0	0.72	0	0	20.78	0	0	0	0	0	0	-8.56	-8.56
	Inverter	MV4-2	369272	4909397	2	0	0	100.3	100.3	1	6607.91	3.25	0	87.4	0	0.72	0	0	20.8	0	0	0	0	0	0	-8.6	-8.6
	Inverter	MV5-3	370231	4908851	2	0	0	100.3	100.3	1	6617.89	3.25	0	87.41	0	0.71	0	0	20.81	0	0	0	0	0	0	-8.63	-8.63
	Inverter	MV5-1	370020	4909142	2	0	0	100.3	100.3	1	6744.05	3.25	0	87.58	0	0.71	0	0	20.97	0	0	0	0	0	0	-8.96	-8.96
	Inverter	MV6-1	370235	4907364	2	0	0	97.3	97.3	1	5468.76	3.25	0	85.76	0	0.68	0	0	19.26	0	0	0	0	0	0	-8.38	-8.38
	DSTATCOM - 10 MVAR #2	DSAT2	369403	4908757	2.5	0	0	96.6	96.6	1	6098.52	3.5	0	86.7	0	3.78	0	0	3.89	0	0	0	0	0	0	2.26	2.26

DSTATCOM - 10 MVAR #1	DSAT1	369437	4908757	2.5	0	0	96.6	96.6	1	6115.12	3.5	0	86.73	0	3.78	0	0	3.89	0	0	0	0	0	0	2.23	2.23
SubstationTransformer	W_ST	369711.17	4906112.3	2.5	0	0	92	92	1	4232.72	4.25	0	83.53	0	1.42	2.53	0.23	7.67	0	0	0	0	0	0	-3.18	-3.18
Inverter	MV2-2	365977	4906654	2	0	0	89.1	89.1	1	3259.83	3.25	0	81.26	0	1.21	0	0	10.01	0	0	0	0	0	0	-3.42	-3.42
Inverter	MV1-3	364440	4906039	2	0	0	89.1	89.1	1	3289.2	3.25	0	81.34	0	1.22	0	0	10.05	0	0	0	0	0	0	-3.55	-3.55
Westbrook Inverter Enclosur	W_INV3	369508	4906164	2	0	0	89.1	89.1	1	4111.95	3.25	0	83.28	0	1.42	0	0	11.24	0	0	0	0	0	0	-6.89	-6.89
Westbrook Inverter Enclosur	W_INV2	369374	4906388	2	0	0	89.1	89.1	1	4168.93	3.25	0	83.4	0	1.43	0	0	11.32	0	0	0	0	0	0	-7.1	-7.1
Westbrook Inverter Enclosur	W_INV4	369673	4906164	2	0	0	89.1	89.1	1	4236.52	3.25	0	83.54	0	1.45	0	0	11.42	0	0	0	0	0	0	-7.35	-7.35
Inverter	MV3-22	368656	4907142	2	0	0	89.1	89.1	1	4326.05	3.25	0	83.72	0	1.47	0	0	11.54	0	0	0	0	0	0	-7.68	-7.68
Westbrook Inverter Enclosur	W_INV7	369780	4906417	2	0	0	89.1	89.1	1	4483.35	3.25	0	84.03	0	1.51	0	0	11.76	0	0	0	0	0	0	-8.25	-8.25
Westbrook Inverter Enclosur	W_INV5	369719	4906574	2	0	0	89.1	89.1	1	4545.34	3.25	0	84.15	0	1.53	0	0	11.85	0	0	0	0	0	0	-8.47	-8.47
Westbrook Inverter Enclosur	W_INV6	369875	4906578	2	0	0	89.1	89.1	1	4661.86	3.25	0	84.37	0	1.56	0	0	12.01	0	0	0	0	0	0	-8.88	-8.88
Inverter	MV3-5	368340	4907843	2	0	0	89.1	89.1	1	4807.62	3.25	0	84.64	0	1.59	0	0	12.2	0	0	0	0	0	0	-9.38	-9.38
Inverter	MV3-1	368156	4907976	2	0	0	89.1	89.1	1	4862.09	3.25	0	84.74	0	1.61	0	0	12.28	0	0	0	0	0	0	-9.56	-9.56
Inverter	MV3-4	368502	4907925	2	0	0	89.1	89.1	1	4948.36	3.25	0	84.89	0	1.63	0	0	12.39	0	0	0	0	0	0	-9.85	-9.85
Inverter	MV3-2	368671	4907928	2	0	0	89.1	89.1	1	5023.85	3.25	0	85.02	0	1.65	0	0	12.5	0	0	0	0	0	0	-10.1	-10.1
Fixed Reactor Bank 1	FRB1	369378	4908755	6	0	0	89.8	89.8	1	6084.66	5.25	0	86.68	0	-0.41	0	0	9.83	0	0	0	0	0	0	-6.33	-6.33
Fixed Reactor Bank 2	FRB2	369464	4908755	6	0	0	89.8	89.8	1	6126.66	5.25	0	86.74	0	-0.4	0	0	9.88	0	0	0	0	0	0	-6.44	-6.44
Inverter	MV4-15	369176	4908481	2	0	0	89.1	89.1	1	5747.35	3.25	0	86.19	0	1.82	0	0	13.44	0	0	0	0	0	0	-12.4	-12.4
Inverter	MV4-14	369176	4908507	2	0	0	89.1	89.1	1	5770.22	3.25	0	86.22	0	1.83	0	0	13.47	0	0	0	0	0	0	-12.47	-12.47
Inverter	MV4-13	369051	4908605	2	0	0	89.1	89.1	1	5799.32	3.25	0	86.27	0	1.84	0	0	13.51	0	0	0	0	0	0	-12.55	-12.55
Inverter	MV4-12	369043	4908803	2	0	0	89.1	89.1	1	5973.28	3.25	0	86.52	0	1.88	0	0	13.73	0	0	0	0	0	0	-13.07	-13.07
Westbrook Inverter Enclosur	W_INV1	369409	4906578	2	0	0	86.1	86.1	1	4329.88	3.25	0	83.73	0	1.47	0	0	11.55	0	0	0	0	0	0	-10.69	-10.69
Inverter	MV5-6	369982	4908507	2	0	0	89.1	89.1	1	6193.29	3.25	0	86.84	0	1.93	0	0	14	0	0	0	0	0	0	-13.72	-13.72
Inverter	MV6-4	370250	4906966	2	0	0	86.1	86.1	1	5200.58	3.25	0	85.32	0	1.69	0	0	12.73	0	0	0	0	0	0	-13.68	-13.68
Westbrook Inverter Transfor	W_INVTR1	369403	4906578	2	0	0	78.2	78.2	1	4325.77	3.25	0	83.72	0	-3.04	0	0	2.18	0	0	0	0	0	0	-4.62	-4.62
Westbrook Inverter Transfor	W_INVTR3	369514	4906164	2	0	0	77.3	77.3	1	4116.43	3.25	0	83.29	0	-2.99	0	0	2.1	0	0	0	0	0	0	-5.06	-5.06
Westbrook Inverter Transfor	W_INVTR2	369368	4906388	2	0	0	77.3	77.3	1	4164.71	3.25	0	83.39	0	-3	0	0	2.12	0	0	0	0	0	0	-5.17	-5.17
Westbrook Inverter Transfor	W_INVTR4	369679	4906164	2	0	0	77.3	77.3	1	4241.1	3.25	0	83.55	0	-3.02	0	0	2.14	0	0	0	0	0	0	-5.34	-5.34
Westbrook Inverter Transfor	W_INVTR7	369786	4906417	2	0	0	77.3	77.3	1	4487.83	3.25	0	84.04	0	-3.07	0	0	2.23	0	0	0	0	0	0	-5.86	-5.86
Westbrook Inverter Transfor	W_INVTR5	369725	4906574	2	0	0	77.3	77.3	1	4549.67	3.25	0	84.16	0	-3.08	0	0	2.26	0	0	0	0	0	0	-5.99	-5.99
Westbrook Inverter Transfor	W_INVTR6	369881	4906578	2	0	0	77.3	77.3	1	4666.28	3.25	0	84.38	0	-3.11	0	0	2.3	0	0	0	0	0	0	-6.23	-6.23
Inverter Transformer	MV1-14 T	365157	4905049	2	0	0	69.4	69.4	1	2067.51	3.25	0	77.31	0	2.2	0	0	5.03	0	0	0	0	0	0	-15.19	-15.19
Inverter Transformer	MV1-13 T	364725	4905241	2	0	0	69.4	69.4	1	2495.74	3.25	0	78.94	0	2.35	0	0	5.44	0	0	0	0	0	0	-17.38	-17.38
Inverter Transformer	MV1-10 T	365010	4905564	2	0	0	69.4	69.4	1	2570.79	3.25	0	79.2	0	2.37	0	0	5.51	0	0	0	0	0	0	-17.73	-17.73
Inverter Transformer	MV1-7 T	364919	4905782	2	0	0	69.4	69.4	1	2802.96	3.25	0	79.95	0	2.45	0	0	5.71	0	0	0	0	0	0	-18.76	-18.76
Inverter Transformer	MV2-1 T	365836	4906816	2	0	0	69.4	69.4	1	3442.16	3.25	0	81.74	0	2.64	0	0	6.25	0	0	0	0	0	0	-21.27	-21.27
Inverter Transformer	MV6-4 T	370244	4906966	2	0	0	69.4	69.4	1	5196.18	3.25	0	85.31	0	3.05	0	0	7.51	0	0	0	0	0	0	-26.53	-26.53
Inverter Transformer	MV6-1 T	370230	4907364	2	0	0	69.4	69.4	1	5465.29	3.25	0	85.75	0	3.1	0	0	7.69	0	0	0	0	0	0	-27.19	-27.19
Inverter Transformer	MV1-15 T	365309	4904994	2	0	0	56.1	56.1	1	1931.98	3.25	0	76.72	0	0.38	0	0	6.91	0	0	0	0	0	0	-27.95	-27.95
Inverter Transformer	MV1-12 T	365044	4905386	2	0	0	56.1	56.1	1	2404.97	3.25	0	78.62	0	0.58	0	0	7.82	0	0	0	0	0	0	-30.95	-30.95
Inverter Transformer	MV1-11 T	364649	4905414	2	0	0	56.1	56.1	1	2674.43	3.25	0	79.54	0	0.69	0	0	8.3	0	0	0	0	0	0	-32.48	-32.48
Inverter Transformer	MV1-8 T	364782	4905647	2	0	0	56.1	56.1	1	2770.25	3.25	0	79.85	0	0.73	0	0	8.47	0	0	0	0	0	0	-33	-33
Inverter Transformer	MV1-9 T	364555	4905646	2	0	0	56.1	56.1	1	2910.97	3.25	0	80.28	0	0.79	0	0	8.72	0	0	0	0	0	0	-33.73	-33.73
Inverter Transformer	MV1-4 T	364821	4905918	2	0	0	56.1	56.1	1	2970.38	3.25	0	80.46	0	0.82	0	0	8.82	0	0	0	0	0	0	-34.03	-34.03
Inverter Transformer	MV1-5 T	364676	4905892	2	0	0	56.1	56.1	1	3030.61	3.25	0	80.63	0	0.84	0	0	8.92	0	0	0	0	0	0	-34.33	-34.33
Inverter Transformer	MV1-6 T	364482	4905835	2	0	0	56.1	56.1	1	3103	3.25	0	80.84	0	0.87	0	0	9.04	0	0	0	0	0	0	-34.69	-34.69
Inverter Transformer	MV1-2 T	364759	4906063	2	0	0	56.1	56.1	1	3125.87	3.25	0	80.9	0	0.88	0	0	9.08	0	0	0	0	0	0	-34.8	-34.8
Inverter Transformer	MV1-1 T	364721	4906166	2	0	0	56.1	56.1	1	3233.23	3.25	0	81.19	0	0.93	0	0	9.26	0	0	0	0	0	0	-35.32	-35.32
Inverter Transformer	MV2-2 T	365982	4906654	2	0	0	56.1	56.1	1	3259.13	3.25	0	81.26	0	0.94	0	0	9.3	0	0	0	0	0	0	-35.44	-35.44
Inverter Transformer	MV2-3 T	365814	4906641	2	0	0	56.1	56.1	1	3274.15	3.25	0	81.3	0	0.95	0	0	9.32	0	0	0	0	0	0	-35.51	-35.51
Inverter Transformer	MV1-3 T	364435	4906039	2	0	0	56.1	56.1	1	3292.24	3.25	0	81.35	0	0.95	0	0	9.35	0	0	0	0	0	0	-35.6	-35.6
Inverter Transformer	MV2-4 T	365590	4906628	2	0	0	56.1	56.1	1	3311.63	3.25	0	81.4	0	0.96	0	0	9.39	0	0	0	0	0	0	-35.69	-35.69
Inverter Transformer	MV3-18 T	367757	4907412	2	0	0	56.1	56.1	1	4197.15	3.25	0	83.46	0	1.32	0	0	10.74	0	0	0	0	0	0	-39.47	-39.47
Inverter Transformer	MV3-21 T	368484	4907206	2	0	0	56.1	56.1	1	4296.66	3.25	0	83.66	0	1.36	0	0	10.89	0	0	0	0	0	0	-39.85	-39.85
Inverter Transformer	MV3-22 T	368661	4907142	2	0	0	56.1	56.1	1	4328.61	3.25	0	83.73	0	1.37	0	0	10.93	0	0	0	0	0	0	-39.98	-39.98
Inverter Transformer	MV3-12 T	367674	4907594	2	0	0	56.1	56.1	1	4346.01	3.25	0	83.76	0	1.38	0	0	10.96	0	0	0	0	0	0	-40.04	-40.04
Inverter Transformer	MV3-19 T	368352	4907347	2	0	0	56.1	56.1	1	4361.7	3.25	0	83.79	0	1.39	0	0	10.98	0	0	0	0	0	0	-40.1	-40.1
Inverter Transformer	MV3-17 T	368183	4907472	2	0	0	56.1	56.1	1	4404.78	3.25	0	83.88	0	1.4	0	0	11.04	0	0	0	0	0	0	-40.26	-40.26
Inverter Transformer	MV3-13 T	367958	4907577	2	0	0	56.1	56.1	1	4419.1	3.25	0	83.91	0	1.41	0	0	11.06	0	0	0	0	0	0	-40.32	-40.32
Inverter Transformer	MV3-15 T	368351	4907477	2	0	0	56.1	56.1	1	4478.47	3.25	0	84.02	0	1.43	0	0	11.15	0	0	0	0	0	0	-40.54	-40.54
Inverter Transformer	MV3-20 T	368683	4907317	2	0	0	56.1	56.1	1	4490.65	3.25	0	84.05	0	1.44	0	0	11.16	0	0	0	0	0	0	-40.59	-40.59
Inverter Transformer	MV3-16 T	368509	4907475	2	0	0	56.1	56.1	1	4546.38	3.25	0	84.15	0	1.46	0	0	11.24	0	0	0	0	0	0	-40.79	-40.79
Inverter Transformer	MV3-10 T	368162	4907669	2	0	0	56.1	56.1	1	4578.4	3.25	0	84.21	0	1.47	0	0	11.28	0	0	0	0	0	0	-40.91	-40.91
Inverter Transformer	MV3-7 T	367951	4907754	2	0	0	56.1	56.1	1	4583.41	3.25	0	84.22	0	1.47	0	0	11.29	0	0	0	0	0	0	-40.93	-40.93
Inverter Transformer	MV3-11 T	368340	4907662	2	0	0	56.1	56.1	1	4641.92	3.25	0	84.33	0	1.49	0	0	11.37	0	0	0	0	0	0	-41.14	-41.14
Inverter Transformer	MV3-14 T	368678	4907498	2	0	0	56.1	56.1	1	4645.91	3.25	0	84.34	0	1.49	0	0	11.38	0	0	0	0	0	0	-41.16	-41.16
Inverter Transformer	MV3-6 T	368156	4907834	2	0	0	56.1	56.1	1	4729.5	3.25	0	84.5	0	1.53	0	0	11.49	0	0	0	0	0	0	-41.46	-41.46
Inverter Transformer	MV3-3 T	367944	4907927	2	0	0	56.1	56.1	1	4744.84	3.25	0	84.52	0	1.53	0	0	11.51	0	0	0	0	0	0	-41.51	-41.51
Inverter Transformer	MV3-9 T	368517	4907703	2	0	0	56.1	56.1	1	4754.01	3.25	0	84.54	0	1.54	0	0	11.53	0	0	0	0	0	0	-41.54	-41.54
Inverter Transformer	MV3-5 T	368335	4907843	2	0	0	56.1	56.1	1	4805.65	3.25	0	84.64	0	1.55	0	0	11.6	0	0	0	0	0	0	-41.73	-41.73
Inverter Transformer	MV3-8 T	368685	4907712	2	0	0	56.1	56.1	1	4837.77	3.25	0	84.69	0	1.57	0	0	11.64	0	0	0	0	0	0	-41.84	-41.84
Inverter Transformer	MV3-1 T	368150	4907976	2	0	0	56.1	56.1	1	4859.97	3.25	0	84.73	0	1.57	0	0	11.67	0	0	0	0	0	0	-41.92	-41.92
Inverter Transformer	MV3-4 T	368507	4907925	2	0	0	56.1	56.1	1	4950.45	3.25	0	84.89	0	1.61	0	0	11.79	0	0	0	0	0	0	-42.23	-42.23
Inverter Transformer	MV3-2 T	368677	4907928	2	0	0	56.1	56.1	1	5026.52	3.25	0	85.03	0	1.63	0	0	11.89	0	0	0	0	0	0	-42.49	-42.49

	Inverter Transformer	MV6-3 T	370202	4907140	2	0	0	56.1	56.1	1	5286.24	3.25	0	85.46	0	1.73	0	0	12.23	0	0	0	0	0	0	-43.36	-43.36
	Inverter Transformer	MV6-2 T	370091	4907339	2	0	0	56.1	56.1	1	5351.51	3.25	0	85.57	0	1.75	0	0	12.31	0	0	0	0	0	0	-43.57	-43.57
	Inverter Transformer	MV4-15 T	369170	4908481	2	0	0	56.1	56.1	1	5744.49	3.25	0	86.19	0	1.88	0	0	12.8	0	0	0	0	0	0	-44.81	-44.81
	Inverter Transformer	MV4-14 T	369182	4908507	2	0	0	56.1	56.1	1	5773.07	3.25	0	86.23	0	1.89	0	0	12.83	0	0	0	0	0	0	-44.89	-44.89
	Inverter Transformer	MV4-13 T	369057	4908605	2	0	0	56.1	56.1	1	5802.03	3.25	0	86.27	0	1.9	0	0	12.87	0	0	0	0	0	0	-44.98	-44.98
	Inverter Transformer	MV4-12 T	369049	4908803	2	0	0	56.1	56.1	1	5975.9	3.25	0	86.53	0	1.96	0	0	13.07	0	0	0	0	0	0	-45.5	-45.5
	Inverter Transformer	MV4-11 T	369269	4908855	2	0	0	56.1	56.1	1	6121.26	3.25	0	86.74	0	2	0	0	13.25	0	0	0	0	0	0	-45.93	-45.93
	Inverter Transformer	MV4-10 T	369307	4908858	2	0	0	56.1	56.1	1	6141.58	3.25	0	86.77	0	2.01	0	0	13.27	0	0	0	0	0	0	-45.99	-45.99
	Inverter Transformer	MV4-7 T	369040	4909001	2	0	0	56.1	56.1	1	6150.82	3.25	0	86.78	0	2.01	0	0	13.28	0	0	0	0	0	0	-46.01	-46.01
	Inverter Transformer	MV5-6 T	369987	4908507	2	0	0	56.1	56.1	1	6196.15	3.25	0	86.84	0	2.03	0	0	13.33	0	0	0	0	0	0	-46.14	-46.14
	Inverter Transformer	MV4-8 T	369262	4909001	2	0	0	56.1	56.1	1	6247.93	3.25	0	86.91	0	2.04	0	0	13.39	0	0	0	0	0	0	-46.29	-46.29
	Inverter Transformer	MV4-9 T	369284	4909001	2	0	0	56.1	56.1	1	6257.9	3.25	0	86.93	0	2.05	0	0	13.4	0	0	0	0	0	0	-46.32	-46.32
	Inverter Transformer	MV4-4 T	369033	4909199	2	0	0	56.1	56.1	1	6327.92	3.25	0	87.03	0	2.07	0	0	13.48	0	0	0	0	0	0	-46.52	-46.52
	Inverter Transformer	MV5-5 T	370021	4908690	2	0	0	56.1	56.1	1	6366.11	3.25	0	87.08	0	2.08	0	0	13.53	0	0	0	0	0	0	-46.63	-46.63
	Inverter Transformer	MV4-6 T	369249	4909192	2	0	0	56.1	56.1	1	6413.19	3.25	0	87.14	0	2.09	0	0	13.58	0	0	0	0	0	0	-46.76	-46.76
	Inverter Transformer	MV4-5 T	369283	4909199	2	0	0	56.1	56.1	1	6434.44	3.25	0	87.17	0	2.1	0	0	13.61	0	0	0	0	0	0	-46.82	-46.82
	Inverter Transformer	MV5-2 T	370011	4908853	2	0	0	56.1	56.1	1	6496.01	3.25	0	87.25	0	2.12	0	0	13.68	0	0	0	0	0	0	-46.99	-46.99
	Inverter Transformer	MV4-1 T	369017	4909397	2	0	0	56.1	56.1	1	6502.67	3.25	0	87.26	0	2.12	0	0	13.68	0	0	0	0	0	0	-47	-47
	Inverter Transformer	MV5-4 T	370330	4908707	2	0	0	56.1	56.1	1	6558.63	3.25	0	87.34	0	2.13	0	0	13.75	0	0	0	0	0	0	-47.16	-47.16
	Inverter Transformer	MV4-3 T	369234	4909397	2	0	0	56.1	56.1	1	6591.71	3.25	0	87.38	0	2.14	0	0	13.78	0	0	0	0	0	0	-47.25	-47.25
	Inverter Transformer	MV4-2 T	369267	4909397	2	0	0	56.1	56.1	1	6605.77	3.25	0	87.4	0	2.15	0	0	13.8	0	0	0	0	0	0	-47.29	-47.29
	Inverter Transformer	MV5-3 T	370237	4908851	2	0	0	56.1	56.1	1	6621.33	3.25	0	87.42	0	2.15	0	0	13.82	0	0	0	0	0	0	-47.33	-47.33
	Inverter Transformer	MV5-1 T	370015	4909142	2	0	0	56.1	56.1	1	6741.4	3.25	0	87.57	0	2.19	0	0	13.95	0	0	0	0	0	0	-47.65	-47.65
	Line Reactor	NGR	369421	4908787.5	5	0	0	45.4	45.4	1	6133.92	5.25	0	86.75	0	3.24	1.36	0.1	2.51	0	0	0	0	0	0	-48.51	-48.51
Limit. Valu	0	0																								
Level D/N:	33.1645	33.1645																								

Receiver: Existing Noise Receptor
ID: G-11
X: 367172.2
Y: 4903163.1
Z: 4.5
Ground: 0

ISO	Description	ID	X	Y	Z	Ground	ReflOrd	LxT	LxN	L/A	Dist.	hm	Freq	Adiv	K0b	Agr	Abar	z	Aatm	Afol	Ahous	Cmet	CmetN	Dc	RL	LtotT	LtotN
	Sol_Luce Substation	S_Substation	369426	4908792	3.5	0	0	112.1	112.1	1	6063.34	5.25	0	86.65	0	1.18	2.63	0.33	9.81	0	0	0	0	0	0	11.81	11.81
	Inverters	G_Inv6	366788.5	4902972	2	0	0	87.7	87.7	1	428.66	3.25	0	63.64	0	2.41	0	0	0.66	0	0	0	0	0	0	20.94	20.94
	Gardiner Substation	G_Sub	366586.3	4903349.9	2.5	0	0	90.8	90.8	1	614.96	4.24	0	66.78	0	0.14	3.24	0.3	1.7	0	0	0	0	0	0	18.92	18.92
	Inverters	G_Inv4	366732.8	4903105	2	0	0	87.7	87.7	1	443.23	3.25	0	63.93	0	2.41	0	0	0.68	0	0	0	0	0	0	20.64	20.64
	Inverters	G_Inv8	366844.5	4902838.5	2	0	0	87.7	87.7	1	461.26	3.25	0	64.28	0	2.4	0	0	0.71	0	0	0	0	0	0	20.27	20.27
	Inverters	G_Inv2	366676.9	4903239.1	2	0	0	87.7	87.7	1	501.1	3.25	0	65	0	2.4	0	0	0.76	0	0	0	0	0	0	19.5	19.5
	Inverters	G_Inv10	366900.7	4902704.8	2	0	0	87.7	87.7	1	532.69	3.25	0	65.53	0	2.4	0	0	0.81	0	0	0	0	0	0	18.93	18.93
	Inverters	G_Inv5	366638.5	4902958.1	2	0	0	87.7	87.7	1	571.72	3.25	0	66.14	0	2.4	0	0	0.86	0	0	0	0	0	0	18.26	18.26
	Inverters	G_Inv7	366694.6	4902824.7	2	0	0	87.7	87.7	1	585.34	3.25	0	66.35	0	2.4	0	0	0.88	0	0	0	0	0	0	18.03	18.03
	Inverters	G_Inv3	366583.7	4903091.4	2	0	0	87.7	87.7	1	592.86	3.25	0	66.46	0	2.4	0	0	0.89	0	0	0	0	0	0	17.91	17.91
	Inverter	MV1-15	365315	4904994	2	0	0	100.3	100.3	1	2607.95	3.25	0	79.33	0	0.28	0	0	14.66	0	0	0	0	0	0	6.04	6.04
	Inverters	G_Inv9	366750.9	4902691.8	2	0	0	87.7	87.7	1	632.16	3.25	0	67.02	0	2.4	0	0	0.95	0	0	0	0	0	0	17.3	17.3
	Inverters	G_Inv1	366526.4	4903225.8	2	0	0	87.7	87.7	1	648.84	3.25	0	67.24	0	2.4	0	0	0.97	0	0	0	0	0	0	17.05	17.05
	Inverter	MV1-12	365038	4905386	2	0	0	100.3	100.3	1	3081.57	3.25	0	80.78	0	0.38	0	0	15.52	0	0	0	0	0	0	3.64	3.64
	Inverter	MV1-11	364655	4905414	2	0	0	100.3	100.3	1	3376.81	3.25	0	81.57	0	0.43	0	0	16.02	0	0	0	0	0	0	2.29	2.29
	Inverter	MV1-8	364788	4905647	2	0	0	100.3	100.3	1	3442.99	3.25	0	81.74	0	0.44	0	0	16.14	0	0	0	0	0	0	2	2
	Inverter	MV1-9	364561	4905646	2	0	0	100.3	100.3	1	3603.22	3.25	0	82.13	0	0.47	0	0	16.4	0	0	0	0	0	0	1.31	1.31
	Inverter	MV1-4	364815	4905918	2	0	0	100.3	100.3	1	3625.72	3.25	0	82.19	0	0.47	0	0	16.44	0	0	0	0	0	0	1.21	1.21
	Inverter	MV1-5	364671	4905892	2	0	0	100.3	100.3	1	3701.74	3.25	0	82.37	0	0.48	0	0	16.57	0	0	0	0	0	0	0.9	0.9
	Inverter	MV2-3	365820	4906641	2	0	0	100.3	100.3	1	3731.52	3.25	0	82.44	0	0.49	0	0	16.61	0	0	0	0	0	0	0.77	0.77
	Inverter	MV1-2	364753	4906063	2	0	0	100.3	100.3	1	3776.5	3.25	0	82.54	0	0.49	0	0	16.69	0	0	0	0	0	0	0.59	0.59
	Inverter	MV1-6	364477	4905835	2	0	0	100.3	100.3	1	3795.15	3.25	0	82.58	0	0.5	0	0	16.72	0	0	0	0	0	0	0.51	0.51
	Inverter	MV2-4	365586	4906624	2	0	0	100.3	100.3	1	3807.08	3.25	0	82.61	0	0.5	0	0	16.74	0	0	0	0	0	0	0.46	0.46
	Inverter	MV1-1	364715	4906166	2	0	0	100.3	100.3	1	3880.11	3.25	0	82.78	0	0.51	0	0	16.86	0	0	0	0	0	0	0.17	0.17
	Inverter	MV1-14	365163	4905049	2	0	0	97.3	97.3	1	2755.63	3.25	0	79.8	0	0.31	0	0	14.93	0	0	0	0	0	0	2.26	2.26
	Inverter	MV3-21	368478	4907206	2	0	0	100.3	100.3	1	4248.55	3.25	0	83.56	0	0.56	0	0	17.44	0	0	0	0	0	0	-1.25	-1.25
	Inverter	MV3-18	367752	4907412	2	0	0	100.3	100.3	1	4288.28	3.25	0	83.65	0	0.57	0	0	17.5	0	0	0	0	0	0	-1.4	-1.4
	Inverter	MV3-19	368357	4907347	2	0	0	100.3	100.3	1	4348.42	3.25	0	83.77	0	0.57	0	0	17.6	0	0	0	0	0	0	-1.62	-1.62
	Inverter	MV3-20	368689	4907317	2	0	0	100.3	100.3	1	4422.17	3.25	0	83.91	0	0.58	0	0	17.71	0	0	0	0	0	0	-1.89	-1.89
	Inverter	MV3-17	368178	4907472	2	0	0	100.3	100.3	1	4424.73	3.25	0	83.92	0	0.58	0	0	17.71	0	0	0	0	0	0	-1.9	-1.9
	Inverter	MV3-12	367668	4907594	2	0	0	100.3	100.3	1	4458.55	3.25	0	83.98	0	0.59	0	0	17.77	0	0	0	0	0	0	-2.02	-2.02
	Inverter	MV3-15	368357	4907477	2	0	0	100.3	100.3	1	4473.64	3.25	0	84.01	0	0.59	0	0	17.79	0	0	0	0	0	0	-2.08	-2.08
	Inverter	MV3-13	367963	4907577	2	0	0	100.3	100.3	1	4484.18	3.25	0	84.03	0	0.59	0	0	17.81	0	0	0	0	0	0	-2.12	-2.12
	Inverter	MV3-16	368514	4907475	2	0	0	100.3	100.3	1	4515.85	3.25	0	84.09	0	0.59	0	0	17.85	0	0	0	0	0	0	-2.23	-2.23
	Inverter	MV1-13	364731	4905241	2	0	0	97.3	97.3	1	3205.8	3.25	0	81.12	0	0.4	0	0	15.73	0	0	0	0	0	0	0.06	0.06
	Inverter	MV1-10	365004	4905564	2	0	0	97.3	97.3	1	3235.03	3.25	0	81.2	0	0.41	0	0	15.78	0	0	0	0	0	0	-0.07	-0.07
	Inverter	MV3-14	368684	4907498	2	0	0	100.3	100.3	1	4590.96	3.25	0	84.24	0	0.6	0	0	17.97	0	0	0	0	0	0	-2.5	-2.5
	Inverter	MV3-10	368167	4907669	2	0	0	100.3	100.3	1	4614.41	3.25	0	84.28	0	0.6	0	0	18	0	0	0	0	0	0	-2.58	-2.58
	Inverter	MV3-11	368346	4907662	2	0	0	100.3	100.3	1	4649.51	3.25	0	84.35	0	0.61	0	0	18.06	0	0	0	0	0	0	-2.7	-2.7

Inverter	MV3-7	367945	4907754	2	0	0	100.3	100.3	1	4655.49	3.25	0	84.36	0	0.61	0	0	18.07	0	0	0	0	0	0	-2.72	-2.72
Inverter	MV3-9	368512	4907703	2	0	0	100.3	100.3	1	4733.47	3.25	0	84.5	0	0.62	0	0	18.18	0	0	0	0	0	0	-2.99	-2.99
Inverter	MV3-6	368162	4907834	2	0	0	100.3	100.3	1	4774.62	3.25	0	84.58	0	0.62	0	0	18.25	0	0	0	0	0	0	-3.13	-3.13
Inverter	MV3-8	368680	4907712	2	0	0	100.3	100.3	1	4792.28	3.25	0	84.61	0	0.62	0	0	18.27	0	0	0	0	0	0	-3.19	-3.19
Inverter	MV3-3	367939	4907927	2	0	0	100.3	100.3	1	4825.22	3.25	0	84.67	0	0.63	0	0	18.32	0	0	0	0	0	0	-3.31	-3.31
Inverter	MV1-7	364925	4905782	2	0	0	97.3	97.3	1	3450.88	3.25	0	81.76	0	0.44	0	0	16.15	0	0	0	0	0	0	-1.04	-1.04
Inverter	MV6-3	370207	4907140	2	0	0	100.3	100.3	1	5002.57	3.25	0	84.98	0	0.64	0	0	18.58	0	0	0	0	0	0	-3.9	-3.9
Inverter	MV6-2	370085	4907339	2	0	0	100.3	100.3	1	5091.42	3.25	0	85.14	0	0.65	0	0	18.71	0	0	0	0	0	0	-4.19	-4.19
Inverter	MV2-1	365842	4906816	2	0	0	97.3	97.3	1	3887.56	3.25	0	82.79	0	0.51	0	0	16.87	0	0	0	0	0	0	-2.86	-2.86
Inverter	MV4-11	369264	4908855	2	0	0	100.3	100.3	1	6064.1	3.25	0	86.66	0	0.71	0	0	20.08	0	0	0	0	0	0	-7.13	-7.13
Inverter	MV4-10	369312	4908858	2	0	0	100.3	100.3	1	6083.64	3.25	0	86.68	0	0.71	0	0	20.11	0	0	0	0	0	0	-7.19	-7.19
Inverter	MV4-7	369035	4909001	2	0	0	100.3	100.3	1	6127.9	3.25	0	86.75	0	0.71	0	0	20.17	0	0	0	0	0	0	-7.31	-7.31
Inverter	MV4-8	369256	4909001	2	0	0	100.3	100.3	1	6198.65	3.25	0	86.85	0	0.71	0	0	20.26	0	0	0	0	0	0	-7.51	-7.51
Inverter	MV4-9	369289	4909001	2	0	0	100.3	100.3	1	6209.82	3.25	0	86.86	0	0.71	0	0	20.28	0	0	0	0	0	0	-7.54	-7.54
Inverter	MV5-5	370015	4908690	2	0	0	100.3	100.3	1	6215.15	3.25	0	86.87	0	0.71	0	0	20.28	0	0	0	0	0	0	-7.55	-7.55
Inverter	MV4-4	369027	4909199	2	0	0	100.3	100.3	1	6314.46	3.25	0	87.01	0	0.71	0	0	20.41	0	0	0	0	0	0	-7.82	-7.82
Inverter	MV5-2	370006	4908853	2	0	0	100.3	100.3	1	6356.52	3.25	0	87.06	0	0.71	0	0	20.47	0	0	0	0	0	0	-7.94	-7.94
Inverter	MV4-6	369243	4909192	2	0	0	100.3	100.3	1	6374.63	3.25	0	87.09	0	0.71	0	0	20.49	0	0	0	0	0	0	-7.99	-7.99
Inverter	MV5-4	370324	4908707	2	0	0	100.3	100.3	1	6377.2	3.25	0	87.09	0	0.71	0	0	20.5	0	0	0	0	0	0	-7.99	-7.99
Inverter	MV4-5	369289	4909199	2	0	0	100.3	100.3	1	6396.32	3.25	0	87.12	0	0.71	0	0	20.52	0	0	0	0	0	0	-8.04	-8.04
Inverter	MV5-3	370231	4908851	2	0	0	100.3	100.3	1	6458.21	3.25	0	87.2	0	0.71	0	0	20.6	0	0	0	0	0	0	-8.21	-8.21
Inverter	MV4-1	369011	4909397	2	0	0	100.3	100.3	1	6499.44	3.25	0	87.26	0	0.71	0	0	20.66	0	0	0	0	0	0	-8.32	-8.32
Inverter	MV4-3	369229	4909397	2	0	0	100.3	100.3	1	6564.45	3.25	0	87.34	0	0.72	0	0	20.74	0	0	0	0	0	0	-8.49	-8.49
Inverter	MV4-2	369272	4909397	2	0	0	100.3	100.3	1	6578.04	3.25	0	87.36	0	0.72	0	0	20.76	0	0	0	0	0	0	-8.53	-8.53
Inverter	MV5-1	370020	4909142	2	0	0	100.3	100.3	1	6622.48	3.25	0	87.42	0	0.71	0	0	20.82	0	0	0	0	0	0	-8.64	-8.64
Inverter	MV6-1	370235	4907364	2	0	0	97.3	97.3	1	5198.88	3.25	0	85.32	0	0.66	0	0	18.87	0	0	0	0	0	0	-7.54	-7.54
DSTATCOM - 10 MVAR #2	DSAT2	369403	4908757	2.5	0	0	96.6	96.6	1	6022.31	3.5	0	86.6	0	3.77	0	0	3.85	0	0	0	0	0	0	2.41	2.41
DSTATCOM - 10 MVAR #1	DSAT1	369437	4908757	2.5	0	0	96.6	96.6	1	6034.98	3.5	0	86.61	0	3.78	0	0	3.86	0	0	0	0	0	0	2.38	2.38
SubstationTransformer	W_ST	369711.17	4906112.3	2.5	0	0	92	92	1	3891.53	3.5	0	82.8	0	0.31	0	-0.11	7.22	0	0	0	0	0	0	1.65	1.65
Inverter	MV2-2	365977	4906654	2	0	0	89.1	89.1	1	3689.84	3.25	0	82.34	0	1.32	0	0	10.64	0	0	0	0	0	0	-5.24	-5.24
Westbrook Inverter Enclosur	W_INV3	369508	4906164	2	0	0	89.1	89.1	1	3802.81	3.25	0	82.6	0	1.34	0	0	10.8	0	0	0	0	0	0	-5.69	-5.69
Westbrook Inverter Enclosur	W_INV2	369374	4906388	2	0	0	89.1	89.1	1	3904.86	3.25	0	82.83	0	1.37	0	0	10.95	0	0	0	0	0	0	-6.09	-6.09
Westbrook Inverter Enclosur	W_INV4	369673	4906164	2	0	0	89.1	89.1	1	3906.33	3.25	0	82.84	0	1.37	0	0	10.95	0	0	0	0	0	0	-6.1	-6.1
Inverter	MV1-3	364440	4906039	2	0	0	89.1	89.1	1	3966.83	3.25	0	82.97	0	1.38	0	0	11.04	0	0	0	0	0	0	-6.33	-6.33
Westbrook Inverter Enclosur	W_INV7	369780	4906417	2	0	0	89.1	89.1	1	4169.95	3.25	0	83.4	0	1.43	0	0	11.32	0	0	0	0	0	0	-7.1	-7.1
Inverter	MV3-22	368656	4907142	2	0	0	89.1	89.1	1	4246.56	3.25	0	83.56	0	1.45	0	0	11.43	0	0	0	0	0	0	-7.39	-7.39
Westbrook Inverter Enclosur	W_INV5	369719	4906574	2	0	0	89.1	89.1	1	4256.81	3.25	0	83.58	0	1.46	0	0	11.45	0	0	0	0	0	0	-7.43	-7.43
Westbrook Inverter Enclosur	W_INV6	369875	4906578	2	0	0	89.1	89.1	1	4355.07	3.25	0	83.78	0	1.48	0	0	11.58	0	0	0	0	0	0	-7.79	-7.79
Inverter	MV3-5	368340	4907843	2	0	0	89.1	89.1	1	4823.4	3.25	0	84.67	0	1.6	0	0	12.23	0	0	0	0	0	0	-9.43	-9.43
Inverter	MV3-1	368156	4907976	2	0	0	89.1	89.1	1	4912.42	3.25	0	84.83	0	1.62	0	0	12.35	0	0	0	0	0	0	-9.73	-9.73
Inverter	MV3-4	368502	4907925	2	0	0	89.1	89.1	1	4944.09	3.25	0	84.88	0	1.63	0	0	12.39	0	0	0	0	0	0	-9.84	-9.84
Inverter	MV3-2	368671	4907928	2	0	0	89.1	89.1	1	4995.07	3.25	0	84.97	0	1.64	0	0	12.46	0	0	0	0	0	0	-10.01	-10.01
Fixed Reactor Bank 1	FRB1	369378	4908755	6	0	0	89.8	89.8	1	6011.23	5.25	0	86.58	0	-0.42	0	0	9.75	0	0	0	0	0	0	-6.14	-6.14
Fixed Reactor Bank 2	FRB2	369464	4908755	6	0	0	89.8	89.8	1	6043.32	5.25	0	86.63	0	-0.41	0	0	9.79	0	0	0	0	0	0	-6.23	-6.23
Inverter	MV4-15	369176	4908481	2	0	0	89.1	89.1	1	5682.89	3.25	0	86.09	0	1.81	0	0	13.36	0	0	0	0	0	0	-12.2	-12.2
Inverter	MV4-14	369176	4908507	2	0	0	89.1	89.1	1	5707.23	3.25	0	86.13	0	1.81	0	0	13.39	0	0	0	0	0	0	-12.27	-12.27
Inverter	MV4-13	369051	4908605	2	0	0	89.1	89.1	1	5757.1	3.25	0	86.2	0	1.83	0	0	13.45	0	0	0	0	0	0	-12.43	-12.43
Westbrook Inverter Enclosur	W_INV1	369409	4906578	2	0	0	86.1	86.1	1	4082.26	3.25	0	83.22	0	1.41	0	0	11.2	0	0	0	0	0	0	-9.77	-9.77
Inverter	MV4-12	369043	4908803	2	0	0	89.1	89.1	1	5942.08	3.25	0	86.48	0	1.87	0	0	13.69	0	0	0	0	0	0	-12.98	-12.98
Inverter	MV5-6	369982	4908507	2	0	0	89.1	89.1	1	6037.57	3.25	0	86.62	0	1.9	0	0	13.81	0	0	0	0	0	0	-13.26	-13.26
Inverter	MV6-4	370250	4906966	2	0	0	86.1	86.1	1	4892.33	3.25	0	84.79	0	1.61	0	0	12.32	0	0	0	0	0	0	-12.66	-12.66
Westbrook Inverter Transfor	W_INVTR1	369403	4906578	2	0	0	78.2	78.2	1	4078.97	3.25	0	83.21	0	-2.98	0	0	2.08	0	0	0	0	0	0	-4.07	-4.07
Westbrook Inverter Transfor	W_INVTR3	369514	4906164	2	0	0	77.3	77.3	1	3806.5	3.25	0	82.61	0	-2.92	0	0	1.98	0	0	0	0	0	0	-4.33	-4.33
Westbrook Inverter Transfor	W_INVTR2	369368	4906388	2	0	0	77.3	77.3	1	3901.48	3.25	0	82.82	0	-2.94	0	0	2.02	0	0	0	0	0	0	-4.56	-4.56
Westbrook Inverter Transfor	W_INVTR4	369679	4906164	2	0	0	77.3	77.3	1	3910.17	3.25	0	82.84	0	-2.94	0	0	2.02	0	0	0	0	0	0	-4.58	-4.58
Westbrook Inverter Transfor	W_INVTR7	369786	4906417	2	0	0	77.3	77.3	1	4173.71	3.25	0	83.41	0	-3	0	0	2.12	0	0	0	0	0	0	-5.19	-5.19
Westbrook Inverter Transfor	W_INVTR5	369725	4906574	2	0	0	77.3	77.3	1	4260.4	3.25	0	83.59	0	-3.02	0	0	2.15	0	0	0	0	0	0	-5.38	-5.38
Westbrook Inverter Transfor	W_INVTR6	369881	4906578	2	0	0	77.3	77.3	1	4358.8	3.25	0	83.79	0	-3.04	0	0	2.19	0	0	0	0	0	0	-5.59	-5.59
Inverter Transformer	MV1-14 T	365157	4905049	2	0	0	69.4	69.4	1	2760.01	3.25	0	79.82	0	2.43	0	0	5.68	0	0	0	0	0	0	-18.58	-18.58
Inverter Transformer	MV1-13 T	364725	4905241	2	0	0	69.4	69.4	1	3210.37	3.25	0	81.13	0	2.57	0	0	6.06	0	0	0	0	0	0	-20.41	-20.41
Inverter Transformer	MV1-10 T	365010	4905564	2	0	0	69.4	69.4	1	3231.01	3.25	0	81.19	0	2.58	0	0	6.08	0	0	0	0	0	0	-20.49	-20.49
Inverter Transformer	MV1-7 T	364919	4905782	2	0	0	69.4	69.4	1	3454.79	3.25	0	81.77	0	2.64	0	0	6.26	0	0	0	0	0	0	-21.31	-21.31
Inverter Transformer	MV2-1 T	365836	4906816	2	0	0	69.4	69.4	1	3889.62	3.25	0	82.8	0	2.76	0	0	6.59	0	0	0	0	0	0	-22.8	-22.8
Inverter Transformer	MV6-4 T	370244	4906966	2	0	0	69.4	69.4	1	4888.56	3.25	0	84.78	0	2.99	0	0	7.31	0	0	0	0	0	0	-25.73	-25.73
Inverter Transformer	MV6-1 T	370230	4907364	2	0	0	69.4	69.4	1	5195.93	3.25	0	85.31	0	3.05	0	0	7.51	0	0	0	0	0	0	-26.52	-26.52
Inverter Transformer	MV1-15 T	365309	4904994	2	0	0	56.1	56.1	1	2612.22	3.25	0	79.34	0	0.66	0	0	8.19	0	0	0	0	0	0	-32.14	-32.14
Inverter Transformer	MV1-12 T	365044	4905386	2	0	0	56.1	56.1	1	3077.42	3.25	0	80.76	0	0.86	0	0	9	0	0	0	0	0	0	-34.57	-34.57
Inverter Transformer	MV1-11 T	364649	4905414	2	0	0	56.1	56.1	1	3381.29	3.25	0	81.58	0	0.99	0	0	9.5	0	0	0	0	0	0	-36.01	-36.01
Inverter Transformer	MV1-8 T	364782	4905647	2	0	0	56.1	56.1	1	3447.15	3.25	0	81.75	0	1.02	0	0	9.6	0	0	0	0	0	0	-36.31	-36.31
Inverter Transformer	MV1-9 T	364555	4905646	2	0	0	56.1	56.1	1	3607.57	3.25	0	82.14	0	1.08	0	0	9.86	0	0	0	0	0	0	-37.03	-37.03
Inverter Transformer	MV1-4 T	364821	4905918	2	0	0	56.1	56.1	1	3621.83	3.25	0	82.18	0	1.09	0	0	9.88	0	0	0	0	0	0	-37.09	-37.09
Inverter Transformer	MV2-2 T	365982	4906654	2	0	0	56.1	56.1	1	3688.22	3.25	0	82.34	0	1.12	0	0	9.98	0	0	0	0	0	0	-37.38	-37.38
Inverter Transformer	MV1-5 T	364676	4905892	2	0	0	56.1	56.1	1	3698.37	3.25	0	82.36	0	1.12	0	0	10	0	0	0	0	0	0	-37.42	-37.42
Inverter Transformer	MV2-3 T	365814	4906641	2	0	0	56.1	56.1	1	3733.7	3.25	0	82.44	0	1.14	0	0	10.05	0	0	0	0	0	0	-37.57	-37.57

	Inverter Transformer	MV1-2 T	364759	4906063	2	0	0	56.1	56.1	1	3772.66	3.25	0	82.53	0	1.15	0	0	10.11	0	0	0	0	0	0	-37.74	-37.74
	Inverter Transformer	MV1-6 T	364482	4905835	2	0	0	56.1	56.1	1	3791.6	3.25	0	82.58	0	1.16	0	0	10.14	0	0	0	0	0	0	-37.82	-37.82
	Inverter Transformer	MV2-4 T	365590	4906628	2	0	0	56.1	56.1	1	3809.05	3.25	0	82.62	0	1.17	0	0	10.17	0	0	0	0	0	0	-37.89	-37.89
	Inverter Transformer	MV1-1 T	364721	4906166	2	0	0	56.1	56.1	1	3876.31	3.25	0	82.77	0	1.19	0	0	10.27	0	0	0	0	0	0	-38.17	-38.17
	Inverter Transformer	MV1-3 T	364435	4906039	2	0	0	56.1	56.1	1	3970.27	3.25	0	82.98	0	1.23	0	0	10.41	0	0	0	0	0	0	-38.56	-38.56
	Inverter Transformer	MV3-22 T	368661	4907142	2	0	0	56.1	56.1	1	4248.31	3.25	0	83.56	0	1.34	0	0	10.82	0	0	0	0	0	0	-39.67	-39.67
	Inverter Transformer	MV3-21 T	368484	4907206	2	0	0	56.1	56.1	1	4250.4	3.25	0	83.57	0	1.34	0	0	10.82	0	0	0	0	0	0	-39.67	-39.67
	Inverter Transformer	MV3-18 T	367757	4907412	2	0	0	56.1	56.1	1	4288.96	3.25	0	83.65	0	1.36	0	0	10.88	0	0	0	0	0	0	-39.82	-39.82
	Inverter Transformer	MV3-19 T	368352	4907347	2	0	0	56.1	56.1	1	4347.06	3.25	0	83.76	0	1.38	0	0	10.96	0	0	0	0	0	0	-40.05	-40.05
	Inverter Transformer	MV3-20 T	368683	4907317	2	0	0	56.1	56.1	1	4420.11	3.25	0	83.91	0	1.41	0	0	11.06	0	0	0	0	0	0	-40.32	-40.32
	Inverter Transformer	MV3-17 T	368183	4907472	2	0	0	56.1	56.1	1	4425.87	3.25	0	83.92	0	1.41	0	0	11.07	0	0	0	0	0	0	-40.34	-40.34
	Inverter Transformer	MV3-12 T	367674	4907594	2	0	0	56.1	56.1	1	4459.22	3.25	0	83.99	0	1.42	0	0	11.12	0	0	0	0	0	0	-40.47	-40.47
	Inverter Transformer	MV3-15 T	368351	4907477	2	0	0	56.1	56.1	1	4472.06	3.25	0	84.01	0	1.43	0	0	11.14	0	0	0	0	0	0	-40.52	-40.52
	Inverter Transformer	MV3-13 T	367958	4907577	2	0	0	56.1	56.1	1	4483.3	3.25	0	84.03	0	1.43	0	0	11.15	0	0	0	0	0	0	-40.56	-40.56
	Inverter Transformer	MV3-16 T	368509	4907475	2	0	0	56.1	56.1	1	4514.37	3.25	0	84.09	0	1.45	0	0	11.2	0	0	0	0	0	0	-40.67	-40.67
	Inverter Transformer	MV3-14 T	368678	4907498	2	0	0	56.1	56.1	1	4588.99	3.25	0	84.23	0	1.47	0	0	11.3	0	0	0	0	0	0	-40.95	-40.95
	Inverter Transformer	MV3-10 T	368162	4907669	2	0	0	56.1	56.1	1	4613.33	3.25	0	84.28	0	1.48	0	0	11.33	0	0	0	0	0	0	-41.04	-41.04
	Inverter Transformer	MV3-11 T	368340	4907662	2	0	0	56.1	56.1	1	4648	3.25	0	84.35	0	1.5	0	0	11.38	0	0	0	0	0	0	-41.16	-41.16
	Inverter Transformer	MV3-7 T	367951	4907754	2	0	0	56.1	56.1	1	4656.49	3.25	0	84.36	0	1.5	0	0	11.39	0	0	0	0	0	0	-41.19	-41.19
	Inverter Transformer	MV3-9 T	368517	4907703	2	0	0	56.1	56.1	1	4734.89	3.25	0	84.51	0	1.53	0	0	11.5	0	0	0	0	0	0	-41.48	-41.48
	Inverter Transformer	MV3-6 T	368156	4907834	2	0	0	56.1	56.1	1	4773.38	3.25	0	84.58	0	1.54	0	0	11.55	0	0	0	0	0	0	-41.61	-41.61
	Inverter Transformer	MV3-8 T	368685	4907712	2	0	0	56.1	56.1	1	4793.86	3.25	0	84.61	0	1.55	0	0	11.58	0	0	0	0	0	0	-41.68	-41.68
	Inverter Transformer	MV3-5 T	368335	4907843	2	0	0	56.1	56.1	1	4822.2	3.25	0	84.66	0	1.56	0	0	11.62	0	0	0	0	0	0	-41.78	-41.78
	Inverter Transformer	MV3-3 T	367944	4907927	2	0	0	56.1	56.1	1	4826.02	3.25	0	84.67	0	1.56	0	0	11.62	0	0	0	0	0	0	-41.8	-41.8
	Inverter Transformer	MV3-1 T	368150	4907976	2	0	0	56.1	56.1	1	4911.22	3.25	0	84.82	0	1.59	0	0	11.74	0	0	0	0	0	0	-42.1	-42.1
	Inverter Transformer	MV3-4 T	368507	4907925	2	0	0	56.1	56.1	1	4945.44	3.25	0	84.88	0	1.61	0	0	11.78	0	0	0	0	0	0	-42.21	-42.21
	Inverter Transformer	MV3-2 T	368677	4907928	2	0	0	56.1	56.1	1	4996.87	3.25	0	84.97	0	1.62	0	0	11.85	0	0	0	0	0	0	-42.39	-42.39
	Inverter Transformer	MV6-3 T	370202	4907140	2	0	0	56.1	56.1	1	4999.54	3.25	0	84.98	0	1.63	0	0	11.85	0	0	0	0	0	0	-42.4	-42.4
	Inverter Transformer	MV6-2 T	370091	4907339	2	0	0	56.1	56.1	1	5094.85	3.25	0	85.14	0	1.66	0	0	11.98	0	0	0	0	0	0	-42.72	-42.72
	Inverter Transformer	MV4-15 T	369170	4908481	2	0	0	56.1	56.1	1	5680.78	3.25	0	86.09	0	1.86	0	0	12.72	0	0	0	0	0	0	-44.61	-44.61
	Inverter Transformer	MV4-14 T	369182	4908507	2	0	0	56.1	56.1	1	5709.34	3.25	0	86.13	0	1.87	0	0	12.75	0	0	0	0	0	0	-44.7	-44.7
	Inverter Transformer	MV4-13 T	369057	4908605	2	0	0	56.1	56.1	1	5759.06	3.25	0	86.21	0	1.89	0	0	12.81	0	0	0	0	0	0	-44.85	-44.85
	Inverter Transformer	MV4-12 T	369049	4908803	2	0	0	56.1	56.1	1	5943.98	3.25	0	86.48	0	1.95	0	0	13.04	0	0	0	0	0	0	-45.41	-45.41
	Inverter Transformer	MV5-6 T	369987	4908507	2	0	0	56.1	56.1	1	6039.9	3.25	0	86.62	0	1.98	0	0	13.15	0	0	0	0	0	0	-45.69	-45.69
	Inverter Transformer	MV4-11 T	369269	4908855	2	0	0	56.1	56.1	1	6065.83	3.25	0	86.66	0	1.99	0	0	13.18	0	0	0	0	0	0	-45.77	-45.77
	Inverter Transformer	MV4-10 T	369307	4908858	2	0	0	56.1	56.1	1	6081.88	3.25	0	86.68	0	1.99	0	0	13.2	0	0	0	0	0	0	-45.81	-45.81
	Inverter Transformer	MV4-7 T	369040	4909001	2	0	0	56.1	56.1	1	6129.42	3.25	0	86.75	0	2.01	0	0	13.26	0	0	0	0	0	0	-45.95	-45.95
	Inverter Transformer	MV4-8 T	369262	4909001	2	0	0	56.1	56.1	1	6200.67	3.25	0	86.85	0	2.03	0	0	13.34	0	0	0	0	0	0	-46.16	-46.16
	Inverter Transformer	MV4-9 T	369284	4909001	2	0	0	56.1	56.1	1	6208.12	3.25	0	86.86	0	2.03	0	0	13.35	0	0	0	0	0	0	-46.18	-46.18
	Inverter Transformer	MV5-5 T	370021	4908690	2	0	0	56.1	56.1	1	6217.9	3.25	0	86.87	0	2.03	0	0	13.36	0	0	0	0	0	0	-46.21	-46.21
	Inverter Transformer	MV4-4 T	369033	4909199	2	0	0	56.1	56.1	1	6316.22	3.25	0	87.01	0	2.06	0	0	13.47	0	0	0	0	0	0	-46.48	-46.48
	Inverter Transformer	MV5-2 T	370011	4908853	2	0	0	56.1	56.1	1	6358.75	3.25	0	87.07	0	2.08	0	0	13.52	0	0	0	0	0	0	-46.6	-46.6
	Inverter Transformer	MV4-6 T	369249	4909192	2	0	0	56.1	56.1	1	6376.58	3.25	0	87.09	0	2.08	0	0	13.54	0	0	0	0	0	0	-46.65	-46.65
	Inverter Transformer	MV5-4 T	370330	4908707	2	0	0	56.1	56.1	1	6380.17	3.25	0	87.1	0	2.08	0	0	13.54	0	0	0	0	0	0	-46.66	-46.66
	Inverter Transformer	MV4-5 T	369283	4909199	2	0	0	56.1	56.1	1	6394.34	3.25	0	87.12	0	2.09	0	0	13.56	0	0	0	0	0	0	-46.7	-46.7
	Inverter Transformer	MV5-3 T	370237	4908851	2	0	0	56.1	56.1	1	6461.05	3.25	0	87.21	0	2.11	0	0	13.64	0	0	0	0	0	0	-46.89	-46.89
	Inverter Transformer	MV4-1 T	369017	4909397	2	0	0	56.1	56.1	1	6501.14	3.25	0	87.26	0	2.12	0	0	13.68	0	0	0	0	0	0	-47	-47
	Inverter Transformer	MV4-3 T	369234	4909397	2	0	0	56.1	56.1	1	6566.01	3.25	0	87.35	0	2.14	0	0	13.75	0	0	0	0	0	0	-47.18	-47.18
	Inverter Transformer	MV4-2 T	369267	4909397	2	0	0	56.1	56.1	1	6576.45	3.25	0	87.36	0	2.14	0	0	13.77	0	0	0	0	0	0	-47.21	-47.21
	Inverter Transformer	MV5-1 T	370015	4909142	2	0	0	56.1	56.1	1	6620.33	3.25	0	87.42	0	2.15	0	0	13.81	0	0	0	0	0	0	-47.33	-47.33
	Line Reactor	NGR	369421	4908787.5	5	0	0	45.4	45.4	1	6057.31	5.25	0	86.65	0	3.24	1.36	0.11	2.48	0	0	0	0	0	0	-48.37	-48.37
Limit. Valu	0	0																								
Level D/N:	29.7865	29.7865																								

Receiver: Existing Noise Receptor
ID: G-12
X: 366391.2
Y: 4903443.1
Z: 4.5
Ground: 0

ISO	Description	ID	X	Y	Z	Ground	ReflOrd	LxT	LxN	L/A	Dist.	hm	Freq	Adiv	K0b	Agr	Abar	z	Aatm	Afol	Ahous	Cmet	CmetN	Dc	RL	LtotT	LtotN
	Gardiner Substation	G_Sub	366586.3	4903349.9	2.5	0	0	90.8	90.8	1	216.23	4.23	0	57.7	0	0.71	5.59	0.3	0.71	0	0	0	0	0	0	26.08	26.08
	Inverters	G_Inv1	366526.4	4903225.8	2	0	0	87.7	87.7	1	255.94	3.25	0	59.16	0	2.55	0	0	0.41	0	0	0	0	0	0	25.54	25.54
	Inverters	G_Inv2	366676.9	4903239.1	2	0	0	87.7	87.7	1	351.07	3.25	0	61.91	0	2.45	0	0	0.55	0	0	0	0	0	0	22.75	22.75
	Sol_Luce Substation	S_Substation	369426	4908792	3.5	0	0	112.1	112.1	1	6149.86	5.25	0	86.78	0	1.2	2.61	0.31	9.9	0	0	0	0	0	0	11.59	11.59
	Inverters	G_Inv3	366583.7	4903091.4	2	0	0	87.7	87.7	1	400.94	3.25	0	63.06	0	2.42	0	0	0.62	0	0	0	0	0	0	21.56	21.56
	Inverter	MV1-15	365315	4904994	2	0	0	100.3	100.3	1	1887.72	3.25	0	76.52	0	0.1	0	0	13.22	0	0	0	0	0	0	10.48	10.48
	Inverters	G_Inv4	366732.8	4903105	2	0	0	87.7	87.7	1	480.63	3.25	0	64.64	0	2.4	0	0	0.74	0	0	0	0	0	0	19.89	19.89
	Inverters	G_Inv5	366638.5	4902958.1	2	0	0	87.7	87.7	1	544.42	3.25	0	65.72	0	2.4	0	0	0.82	0	0	0	0	0	0	18.72	18.72
	Inverter	MV1-12	365038	4905386	2	0	0	100.3	100.3	1	2367.7	3.25	0	78.49	0	0.23	0	0	14.2	0	0	0	0	0	0	7.4	7.4
	Inverter	MV1-11	364655	4905414	2	0	0	100.3	100.3	1	2626.56	3.25	0	79.39	0	0.29	0	0	14.7	0	0	0	0	0	0	5.94	5.94
	Inverters	G_Inv6	366788.5	4902972	2	0	0	87.7	87.7	1	616.27	3.25	0	66.8	0	2.4	0	0	0.92	0	0	0	0	0	0	17.54	17.54
	Inverter	MV1-8	364788	4905647	2	0	0	100.3	100.3	1	2725.33	3.25	0	79.71	0	0.31	0	0	14.88	0	0	0	0	0	0	5.42	5.42

Inverter	MV1-14	365163	4905049	2	0	0	97.3	97.3	1	2021.73	3.25	0	77.11	0	0.14	0	0	13.51	0	0	0	0	0	0	6.55	6.55
Inverter	MV1-9	364561	4905646	2	0	0	100.3	100.3	1	2863.98	3.25	0	80.14	0	0.34	0	0	15.13	0	0	0	0	0	0	4.71	4.71
Inverter	MV1-4	364815	4905918	2	0	0	100.3	100.3	1	2934.2	3.25	0	80.35	0	0.35	0	0	15.26	0	0	0	0	0	0	4.36	4.36
Inverters	G_Inv7	366694.6	4902824.7	2	0	0	87.7	87.7	1	688.82	3.25	0	67.76	0	2.41	0	0	1.02	0	0	0	0	0	0	16.47	16.47
Inverter	MV1-5	364671	4905892	2	0	0	100.3	100.3	1	2992.69	3.25	0	80.52	0	0.36	0	0	15.36	0	0	0	0	0	0	4.07	4.07
Inverter	MV1-6	364477	4905835	2	0	0	100.3	100.3	1	3063.55	3.25	0	80.72	0	0.37	0	0	15.48	0	0	0	0	0	0	3.73	3.73
Inverter	MV1-2	364753	4906063	2	0	0	100.3	100.3	1	3089.92	3.25	0	80.8	0	0.38	0	0	15.53	0	0	0	0	0	0	3.6	3.6
Inverter	MV1-1	364715	4906166	2	0	0	100.3	100.3	1	3197.47	3.25	0	81.1	0	0.4	0	0	15.72	0	0	0	0	0	0	3.1	3.1
Inverters	G_Inv8	366844.5	4902838.5	2	0	0	87.7	87.7	1	755.66	3.25	0	68.57	0	2.41	0	0	1.11	0	0	0	0	0	0	15.57	15.57
Inverter	MV2-3	365820	4906641	2	0	0	100.3	100.3	1	3248.51	3.25	0	81.23	0	0.41	0	0	15.81	0	0	0	0	0	0	2.87	2.87
Inverter	MV2-4	365586	4906624	2	0	0	100.3	100.3	1	3281.23	3.25	0	81.32	0	0.41	0	0	15.86	0	0	0	0	0	0	2.72	2.72
Inverter	MV1-13	364731	4905241	2	0	0	97.3	97.3	1	2447.19	3.25	0	78.77	0	0.24	0	0	14.36	0	0	0	0	0	0	3.94	3.94
Inverters	G_Inv9	366750.9	4902691.8	2	0	0	87.7	87.7	1	832.97	3.25	0	69.41	0	2.42	0	0	1.21	0	0	0	0	0	0	14.61	14.61
Inverter	MV1-10	365004	4905564	2	0	0	97.3	97.3	1	2534.27	3.25	0	79.08	0	0.26	0	0	14.52	0	0	0	0	0	0	3.45	3.45
Inverters	G_Inv10	366900.7	4902704.8	2	0	0	87.7	87.7	1	897.04	3.25	0	70.06	0	2.43	0	0	1.29	0	0	0	0	0	0	13.87	13.87
Inverter	MV1-7	364925	4905782	2	0	0	97.3	97.3	1	2760.47	3.25	0	79.82	0	0.31	0	0	14.94	0	0	0	0	0	0	2.24	2.24
Inverter	MV3-18	367752	4907412	2	0	0	100.3	100.3	1	4195.71	3.25	0	83.46	0	0.55	0	0	17.36	0	0	0	0	0	0	-1.06	-1.06
Inverter	MV3-21	368478	4907206	2	0	0	100.3	100.3	1	4302.81	3.25	0	83.68	0	0.57	0	0	17.53	0	0	0	0	0	0	-1.46	-1.46
Inverter	MV3-12	367668	4907594	2	0	0	100.3	100.3	1	4342.83	3.25	0	83.76	0	0.57	0	0	17.59	0	0	0	0	0	0	-1.6	-1.6
Inverter	MV3-19	368357	4907347	2	0	0	100.3	100.3	1	4370.91	3.25	0	83.81	0	0.58	0	0	17.63	0	0	0	0	0	0	-1.71	-1.71
Inverter	MV3-17	368178	4907472	2	0	0	100.3	100.3	1	4407.35	3.25	0	83.88	0	0.58	0	0	17.69	0	0	0	0	0	0	-1.84	-1.84
Inverter	MV3-13	367963	4907577	2	0	0	100.3	100.3	1	4422.63	3.25	0	83.91	0	0.58	0	0	17.71	0	0	0	0	0	0	-1.89	-1.89
Inverter	MV3-15	368357	4907477	2	0	0	100.3	100.3	1	4487.4	3.25	0	84.04	0	0.59	0	0	17.81	0	0	0	0	0	0	-2.13	-2.13
Inverter	MV3-20	368689	4907317	2	0	0	100.3	100.3	1	4504.11	3.25	0	84.07	0	0.59	0	0	17.84	0	0	0	0	0	0	-2.19	-2.19
Inverter	MV3-16	368514	4907475	2	0	0	100.3	100.3	1	4556.59	3.25	0	84.17	0	0.6	0	0	17.92	0	0	0	0	0	0	-2.37	-2.37
Inverter	MV3-7	367945	4907754	2	0	0	100.3	100.3	1	4582.37	3.25	0	84.22	0	0.6	0	0	17.96	0	0	0	0	0	0	-2.47	-2.47
Inverter	MV3-10	368167	4907669	2	0	0	100.3	100.3	1	4583.85	3.25	0	84.22	0	0.6	0	0	17.96	0	0	0	0	0	0	-2.47	-2.47
Inverter	MV3-11	368346	4907662	2	0	0	100.3	100.3	1	4649.77	3.25	0	84.35	0	0.61	0	0	18.06	0	0	0	0	0	0	-2.7	-2.7
Inverter	MV3-14	368684	4907498	2	0	0	100.3	100.3	1	4658.23	3.25	0	84.36	0	0.61	0	0	18.07	0	0	0	0	0	0	-2.73	-2.73
Inverter	MV3-6	368162	4907834	2	0	0	100.3	100.3	1	4734.53	3.25	0	84.51	0	0.62	0	0	18.19	0	0	0	0	0	0	-3	-3
Inverter	MV3-3	367939	4907927	2	0	0	100.3	100.3	1	4743.53	3.25	0	84.52	0	0.62	0	0	18.2	0	0	0	0	0	0	-3.03	-3.03
Inverter	MV3-9	368512	4907703	2	0	0	100.3	100.3	1	4758.63	3.25	0	84.55	0	0.62	0	0	18.22	0	0	0	0	0	0	-3.08	-3.08
Inverter	MV2-1	365842	4906816	2	0	0	97.3	97.3	1	3417.32	3.25	0	81.67	0	0.44	0	0	16.09	0	0	0	0	0	0	-0.89	-0.89
Inverter	MV3-8	368680	4907712	2	0	0	100.3	100.3	1	4843.77	3.25	0	84.7	0	0.63	0	0	18.35	0	0	0	0	0	0	-3.37	-3.37
Inverter	MV6-3	370207	4907140	2	0	0	100.3	100.3	1	5312.95	3.25	0	85.51	0	0.67	0	0	19.03	0	0	0	0	0	0	-4.9	-4.9
Inverter	MV6-2	370085	4907339	2	0	0	100.3	100.3	1	5368.63	3.25	0	85.6	0	0.67	0	0	19.11	0	0	0	0	0	0	-5.07	-5.07
Inverter	MV4-11	369264	4908855	2	0	0	100.3	100.3	1	6127.12	3.25	0	86.75	0	0.71	0	0	20.16	0	0	0	0	0	0	-7.31	-7.31
Inverter	MV4-10	369312	4908858	2	0	0	100.3	100.3	1	6152.42	3.25	0	86.78	0	0.71	0	0	20.2	0	0	0	0	0	0	-7.38	-7.38
Inverter	MV4-7	369035	4909001	2	0	0	100.3	100.3	1	6154.67	3.25	0	86.78	0	0.71	0	0	20.2	0	0	0	0	0	0	-7.38	-7.38
Inverter	MV4-8	369256	4909001	2	0	0	100.3	100.3	1	6252.79	3.25	0	86.92	0	0.71	0	0	20.33	0	0	0	0	0	0	-7.65	-7.65
Inverter	MV4-9	369289	4909001	2	0	0	100.3	100.3	1	6267.97	3.25	0	86.94	0	0.71	0	0	20.35	0	0	0	0	0	0	-7.7	-7.7
Inverter	MV4-4	369027	4909199	2	0	0	100.3	100.3	1	6330.71	3.25	0	87.03	0	0.71	0	0	20.44	0	0	0	0	0	0	-7.87	-7.87
Inverter	MV5-5	370015	4908690	2	0	0	100.3	100.3	1	6376.67	3.25	0	87.09	0	0.71	0	0	20.5	0	0	0	0	0	0	-7.99	-7.99
Inverter	MV4-6	369243	4909192	2	0	0	100.3	100.3	1	6417.37	3.25	0	87.15	0	0.71	0	0	20.55	0	0	0	0	0	0	-8.1	-8.1
Inverter	MV4-5	369289	4909199	2	0	0	100.3	100.3	1	6444.19	3.25	0	87.18	0	0.71	0	0	20.59	0	0	0	0	0	0	-8.17	-8.17
Inverter	MV4-1	369011	4909397	2	0	0	100.3	100.3	1	6504.79	3.25	0	87.26	0	0.71	0	0	20.67	0	0	0	0	0	0	-8.33	-8.33
Inverter	MV5-2	370006	4908853	2	0	0	100.3	100.3	1	6506.44	3.25	0	87.27	0	0.71	0	0	20.67	0	0	0	0	0	0	-8.34	-8.34
Inverter	MV5-4	370324	4908707	2	0	0	100.3	100.3	1	6570.81	3.25	0	87.35	0	0.72	0	0	20.75	0	0	0	0	0	0	-8.51	-8.51
Inverter	MV4-3	369229	4909397	2	0	0	100.3	100.3	1	6595.61	3.25	0	87.39	0	0.72	0	0	20.78	0	0	0	0	0	0	-8.57	-8.57
Inverter	MV4-2	369272	4909397	2	0	0	100.3	100.3	1	6614.22	3.25	0	87.41	0	0.71	0	0	20.81	0	0	0	0	0	0	-8.62	-8.62
Inverter	MV5-3	370231	4908851	2	0	0	100.3	100.3	1	6632.45	3.25	0	87.43	0	0.71	0	0	20.83	0	0	0	0	0	0	-8.67	-8.67
Inverter	MV5-1	370020	4909142	2	0	0	100.3	100.3	1	6756.16	3.25	0	87.59	0	0.71	0	0	20.99	0	0	0	0	0	0	-8.99	-8.99
Inverter	MV6-1	370235	4907364	2	0	0	97.3	97.3	1	5490.74	3.25	0	85.79	0	0.68	0	0	19.29	0	0	0	0	0	0	-8.45	-8.45
DSTATCOM - 10 MVAR #2	DSAT2	369403	4908757	2.5	0	0	96.6	96.6	1	6108.07	3.5	0	86.72	0	3.78	0	0	3.89	0	0	0	0	0	0	2.24	2.24
DSTATCOM - 10 MVAR #1	DSAT1	369437	4908757	2.5	0	0	96.6	96.6	1	6124.9	3.5	0	86.74	0	3.78	0	0	3.9	0	0	0	0	0	0	2.21	2.21
SubstationTransformer	W_ST	369711.17	4906112.3	2.5	0	0	92	92	1	4259.89	4.25	0	83.59	0	1.43	2.52	0.23	7.71	0	0	0	0	0	0	-3.27	-3.27
Inverter	MV2-2	365977	4906654	2	0	0	89.1	89.1	1	3237.51	3.25	0	81.2	0	1.2	0	0	9.97	0	0	0	0	0	0	-3.33	-3.33
Inverter	MV1-3	364440	4906039	2	0	0	89.1	89.1	1	3247.44	3.25	0	81.23	0	1.21	0	0	9.99	0	0	0	0	0	0	-3.37	-3.37
Westbrook Inverter Enclosur	W_INV3	369508	4906164	2	0	0	89.1	89.1	1	4137.36	3.25	0	83.33	0	1.43	0	0	11.28	0	0	0	0	0	0	-6.98	-6.98
Westbrook Inverter Enclosur	W_INV2	369374	4906388	2	0	0	89.1	89.1	1	4191.6	3.25	0	83.45	0	1.44	0	0	11.36	0	0	0	0	0	0	-7.18	-7.18
Westbrook Inverter Enclosur	W_INV4	369673	4906164	2	0	0	89.1	89.1	1	4263.04	3.25	0	83.59	0	1.46	0	0	11.46	0	0	0	0	0	0	-7.45	-7.45
Inverter	MV3-22	368656	4907142	2	0	0	89.1	89.1	1	4337.19	3.25	0	83.74	0	1.48	0	0	11.56	0	0	0	0	0	0	-7.72	-7.72
Westbrook Inverter Enclosur	W_INV7	369780	4906417	2	0	0	89.1	89.1	1	4508.66	3.25	0	84.08	0	1.52	0	0	11.8	0	0	0	0	0	0	-8.34	-8.34
Westbrook Inverter Enclosur	W_INV5	369719	4906574	2	0	0	89.1	89.1	1	4569.11	3.25	0	84.2	0	1.53	0	0	11.88	0	0	0	0	0	0	-8.55	-8.55
Westbrook Inverter Enclosur	W_INV6	369875	4906578	2	0	0	89.1	89.1	1	4686.63	3.25	0	84.42	0	1.56	0	0	12.04	0	0	0	0	0	0	-8.96	-8.96
Inverter	MV3-5	368340	4907843	2	0	0	89.1	89.1	1	4812.17	3.25	0	84.65	0	1.59	0	0	12.21	0	0	0	0	0	0	-9.39	-9.39
Inverter	MV3-1	368156	4907976	2	0	0	89.1	89.1	1	4864.33	3.25	0	84.74	0	1.61	0	0	12.28	0	0	0	0	0	0	-9.57	-9.57
Inverter	MV3-4	368502	4907925	2	0	0	89.1	89.1	1	4954.08	3.25	0	84.9	0	1.63	0	0	12.4	0	0	0	0	0	0	-9.87	-9.87
Inverter	MV3-2	368671	4907928	2	0	0	89.1	89.1	1	5031.09	3.25	0	85.03	0	1.65	0	0	12.51	0	0	0	0	0	0	-10.13	-10.13
Fixed Reactor Bank 1	FRB1	369378	4908755	6	0	0	89.8	89.8	1	6094.03	5.25	0	86.7	0	-0.4	0	0	9.84	0	0	0	0	0	0	-6.36	-6.36
Fixed Reactor Bank 2	FRB2	369464	4908755	6	0	0	89.8	89.8	1	6136.64	5.25	0	86.76	0	-0.4	0	0	9.89	0	0	0	0	0	0	-6.47	-6.47
Inverter	MV4-15	369176	4908481	2	0	0	89.1	89.1	1	5756.35	3.25	0	86.2	0	1.83	0	0	13.45	0	0	0	0	0	0	-12.42	-12.42
Inverter	MV4-14	369176	4908507	2	0	0	89.1	89.1	1	5779.12	3.25	0	86.24	0	1.83	0	0	13.48	0	0	0	0	0	0	-12.49	-12.49
Inverter	MV4-13	369051	4908605	2	0	0	89.1	89.1	1	5806.87	3.25	0	86.28	0	1.84	0	0	13.52	0	0	0	0	0	0	-12.58	-12.58

Inverter	MV4-12	369043	4908803	2	0	0	89.1	89.1	1	5980.01	3.25	0	86.53	0	1.88	0	0	13.74	0	0	0	0	0	0	-13.09	-13.09
Westbrook Inverter Enclosur	W_INV1	369409	4906578	2	0	0	86.1	86.1	1	4351.4	3.25	0	83.77	0	1.48	0	0	11.58	0	0	0	0	0	0	-10.77	-10.77
Inverter	MV5-6	369982	4908507	2	0	0	89.1	89.1	1	6207.81	3.25	0	86.86	0	1.94	0	0	14.02	0	0	0	0	0	0	-13.76	-13.76
Inverter	MV6-4	370250	4906966	2	0	0	86.1	86.1	1	5225.05	3.25	0	85.36	0	1.7	0	0	12.76	0	0	0	0	0	0	-13.76	-13.76
Westbrook Inverter Transfor	W_INVTR1	369403	4906578	2	0	0	78.2	78.2	1	4347.25	3.25	0	83.76	0	-3.04	0	0	2.18	0	0	0	0	0	0	-4.67	-4.67
Westbrook Inverter Transfor	W_INVTR3	369514	4906164	2	0	0	77.3	77.3	1	4141.88	3.25	0	83.34	0	-3	0	0	2.11	0	0	0	0	0	0	-5.11	-5.11
Westbrook Inverter Transfor	W_INVTR2	369368	4906388	2	0	0	77.3	77.3	1	4187.34	3.25	0	83.44	0	-3.01	0	0	2.12	0	0	0	0	0	0	-5.22	-5.22
Westbrook Inverter Transfor	W_INVTR4	369679	4906164	2	0	0	77.3	77.3	1	4267.66	3.25	0	83.6	0	-3.02	0	0	2.15	0	0	0	0	0	0	-5.39	-5.39
Westbrook Inverter Transfor	W_INVTR7	369786	4906417	2	0	0	77.3	77.3	1	4513.18	3.25	0	84.09	0	-3.08	0	0	2.24	0	0	0	0	0	0	-5.91	-5.91
Westbrook Inverter Transfor	W_INVTR5	369725	4906574	2	0	0	77.3	77.3	1	4573.48	3.25	0	84.2	0	-3.09	0	0	2.26	0	0	0	0	0	0	-6.04	-6.04
Westbrook Inverter Transfor	W_INVTR6	369881	4906578	2	0	0	77.3	77.3	1	4691.09	3.25	0	84.43	0	-3.11	0	0	2.31	0	0	0	0	0	0	-6.28	-6.28
Inverter Transformer	MV1-14 T	365157	4905049	2	0	0	69.4	69.4	1	2025.38	3.25	0	77.13	0	2.18	0	0	4.99	0	0	0	0	0	0	-14.95	-14.95
Inverter Transformer	MV1-13 T	364725	4905241	2	0	0	69.4	69.4	1	2451.26	3.25	0	78.79	0	2.33	0	0	5.4	0	0	0	0	0	0	-17.17	-17.17
Inverter Transformer	MV1-10 T	365010	4905564	2	0	0	69.4	69.4	1	2531	3.25	0	79.07	0	2.36	0	0	5.47	0	0	0	0	0	0	-17.55	-17.55
Inverter Transformer	MV1-7 T	364919	4905782	2	0	0	69.4	69.4	1	2763.66	3.25	0	79.83	0	2.43	0	0	5.68	0	0	0	0	0	0	-18.59	-18.59
Inverter Transformer	MV2-1 T	365836	4906816	2	0	0	69.4	69.4	1	3418.29	3.25	0	81.68	0	2.63	0	0	6.23	0	0	0	0	0	0	-21.18	-21.18
Inverter Transformer	MV6-4 T	370244	4906966	2	0	0	69.4	69.4	1	5220.62	3.25	0	85.35	0	3.06	0	0	7.53	0	0	0	0	0	0	-26.59	-26.59
Inverter Transformer	MV6-1 T	370230	4907364	2	0	0	69.4	69.4	1	5487.24	3.25	0	85.79	0	3.1	0	0	7.7	0	0	0	0	0	0	-27.24	-27.24
Inverter Transformer	MV1-15 T	365309	4904994	2	0	0	56.1	56.1	1	1891.15	3.25	0	76.53	0	0.36	0	0	6.83	0	0	0	0	0	0	-27.66	-27.66
Inverter Transformer	MV1-12 T	365044	4905386	2	0	0	56.1	56.1	1	2364.28	3.25	0	78.47	0	0.56	0	0	7.74	0	0	0	0	0	0	-30.71	-30.71
Inverter Transformer	MV1-11 T	364649	4905414	2	0	0	56.1	56.1	1	2630.53	3.25	0	79.4	0	0.67	0	0	8.22	0	0	0	0	0	0	-32.24	-32.24
Inverter Transformer	MV1-8 T	364782	4905647	2	0	0	56.1	56.1	1	2728.87	3.25	0	79.72	0	0.71	0	0	8.4	0	0	0	0	0	0	-32.77	-32.77
Inverter Transformer	MV1-9 T	364555	4905646	2	0	0	56.1	56.1	1	2867.82	3.25	0	80.15	0	0.77	0	0	8.64	0	0	0	0	0	0	-33.51	-33.51
Inverter Transformer	MV1-4 T	364821	4905918	2	0	0	56.1	56.1	1	2930.98	3.25	0	80.34	0	0.8	0	0	8.75	0	0	0	0	0	0	-33.83	-33.83
Inverter Transformer	MV1-5 T	364676	4905892	2	0	0	56.1	56.1	1	2989.82	3.25	0	80.51	0	0.83	0	0	8.85	0	0	0	0	0	0	-34.13	-34.13
Inverter Transformer	MV1-6 T	364482	4905835	2	0	0	56.1	56.1	1	3060.43	3.25	0	80.72	0	0.86	0	0	8.97	0	0	0	0	0	0	-34.48	-34.48
Inverter Transformer	MV1-2 T	364759	4906063	2	0	0	56.1	56.1	1	3086.74	3.25	0	80.79	0	0.87	0	0	9.01	0	0	0	0	0	0	-34.61	-34.61
Inverter Transformer	MV1-1 T	364721	4906166	2	0	0	56.1	56.1	1	3194.33	3.25	0	81.09	0	0.91	0	0	9.19	0	0	0	0	0	0	-35.13	-35.13
Inverter Transformer	MV2-2 T	365982	4906654	2	0	0	56.1	56.1	1	3236.87	3.25	0	81.2	0	0.93	0	0	9.26	0	0	0	0	0	0	-35.34	-35.34
Inverter Transformer	MV2-3 T	365814	4906641	2	0	0	56.1	56.1	1	3249.57	3.25	0	81.24	0	0.94	0	0	9.28	0	0	0	0	0	0	-35.4	-35.4
Inverter Transformer	MV1-3 T	364435	4906039	2	0	0	56.1	56.1	1	3250.45	3.25	0	81.24	0	0.94	0	0	9.29	0	0	0	0	0	0	-35.4	-35.4
Inverter Transformer	MV2-4 T	365590	4906628	2	0	0	56.1	56.1	1	3284.13	3.25	0	81.33	0	0.95	0	0	9.34	0	0	0	0	0	0	-35.56	-35.56
Inverter Transformer	MV3-18 T	367757	4907412	2	0	0	56.1	56.1	1	4197.33	3.25	0	83.46	0	1.32	0	0	10.74	0	0	0	0	0	0	-39.47	-39.47
Inverter Transformer	MV3-21 T	368484	4907206	2	0	0	56.1	56.1	1	4305.72	3.25	0	83.68	0	1.36	0	0	10.9	0	0	0	0	0	0	-39.89	-39.89
Inverter Transformer	MV3-22 T	368661	4907142	2	0	0	56.1	56.1	1	4339.8	3.25	0	83.75	0	1.38	0	0	10.95	0	0	0	0	0	0	-40.02	-40.02
Inverter Transformer	MV3-12 T	367674	4907594	2	0	0	56.1	56.1	1	4344.6	3.25	0	83.76	0	1.38	0	0	10.96	0	0	0	0	0	0	-40.04	-40.04
Inverter Transformer	MV3-19 T	368352	4907347	2	0	0	56.1	56.1	1	4368.66	3.25	0	83.81	0	1.39	0	0	10.99	0	0	0	0	0	0	-40.13	-40.13
Inverter Transformer	MV3-17 T	368183	4907472	2	0	0	56.1	56.1	1	4409.38	3.25	0	83.89	0	1.4	0	0	11.05	0	0	0	0	0	0	-40.28	-40.28
Inverter Transformer	MV3-13 T	367958	4907577	2	0	0	56.1	56.1	1	4420.86	3.25	0	83.91	0	1.41	0	0	11.06	0	0	0	0	0	0	-40.33	-40.33
Inverter Transformer	MV3-15 T	368351	4907477	2	0	0	56.1	56.1	1	4484.77	3.25	0	84.03	0	1.43	0	0	11.15	0	0	0	0	0	0	-40.56	-40.56
Inverter Transformer	MV3-20 T	368683	4907317	2	0	0	56.1	56.1	1	4501.05	3.25	0	84.07	0	1.44	0	0	11.18	0	0	0	0	0	0	-40.62	-40.62
Inverter Transformer	MV3-16 T	368509	4907475	2	0	0	56.1	56.1	1	4554.26	3.25	0	84.17	0	1.46	0	0	11.25	0	0	0	0	0	0	-40.82	-40.82
Inverter Transformer	MV3-10 T	368162	4907669	2	0	0	56.1	56.1	1	4581.92	3.25	0	84.22	0	1.47	0	0	11.29	0	0	0	0	0	0	-40.92	-40.92
Inverter Transformer	MV3-7 T	367951	4907754	2	0	0	56.1	56.1	1	4584.41	3.25	0	84.23	0	1.47	0	0	11.29	0	0	0	0	0	0	-40.93	-40.93
Inverter Transformer	MV3-11 T	368340	4907662	2	0	0	56.1	56.1	1	4647.25	3.25	0	84.34	0	1.5	0	0	11.38	0	0	0	0	0	0	-41.16	-41.16
Inverter Transformer	MV3-14 T	368678	4907498	2	0	0	56.1	56.1	1	4655.28	3.25	0	84.36	0	1.5	0	0	11.39	0	0	0	0	0	0	-41.19	-41.19
Inverter Transformer	MV3-6 T	368156	4907834	2	0	0	56.1	56.1	1	4732.29	3.25	0	84.5	0	1.53	0	0	11.5	0	0	0	0	0	0	-41.47	-41.47
Inverter Transformer	MV3-3 T	367944	4907927	2	0	0	56.1	56.1	1	4745.16	3.25	0	84.53	0	1.53	0	0	11.51	0	0	0	0	0	0	-41.51	-41.51
Inverter Transformer	MV3-9 T	368517	4907703	2	0	0	56.1	56.1	1	4760.86	3.25	0	84.55	0	1.54	0	0	11.53	0	0	0	0	0	0	-41.57	-41.57
Inverter Transformer	MV3-5 T	368335	4907843	2	0	0	56.1	56.1	1	4810.14	3.25	0	84.64	0	1.56	0	0	11.6	0	0	0	0	0	0	-41.74	-41.74
Inverter Transformer	MV3-8 T	368685	4907712	2	0	0	56.1	56.1	1	4846.14	3.25	0	84.71	0	1.57	0	0	11.65	0	0	0	0	0	0	-41.87	-41.87
Inverter Transformer	MV3-1 T	368150	4907976	2	0	0	56.1	56.1	1	4862.16	3.25	0	84.74	0	1.58	0	0	11.67	0	0	0	0	0	0	-41.92	-41.92
Inverter Transformer	MV3-4 T	368507	4907925	2	0	0	56.1	56.1	1	4956.21	3.25	0	84.9	0	1.61	0	0	11.8	0	0	0	0	0	0	-42.25	-42.25
Inverter Transformer	MV3-2 T	368677	4907928	2	0	0	56.1	56.1	1	5033.81	3.25	0	85.04	0	1.64	0	0	11.9	0	0	0	0	0	0	-42.52	-42.52
Inverter Transformer	MV6-3 T	370202	4907140	2	0	0	56.1	56.1	1	5309.36	3.25	0	85.5	0	1.74	0	0	12.26	0	0	0	0	0	0	-43.43	-43.43
Inverter Transformer	MV6-2 T	370091	4907339	2	0	0	56.1	56.1	1	5372.76	3.25	0	85.6	0	1.76	0	0	12.34	0	0	0	0	0	0	-43.64	-43.64
Inverter Transformer	MV4-15 T	369170	4908481	2	0	0	56.1	56.1	1	5753.45	3.25	0	86.2	0	1.89	0	0	12.81	0	0	0	0	0	0	-44.83	-44.83
Inverter Transformer	MV4-14 T	369182	4908507	2	0	0	56.1	56.1	1	5782.01	3.25	0	86.24	0	1.89	0	0	12.84	0	0	0	0	0	0	-44.92	-44.92
Inverter Transformer	MV4-13 T	369057	4908605	2	0	0	56.1	56.1	1	5809.62	3.25	0	86.28	0	1.9	0	0	12.88	0	0	0	0	0	0	-45	-45
Inverter Transformer	MV4-12 T	369049	4908803	2	0	0	56.1	56.1	1	5982.68	3.25	0	86.54	0	1.96	0	0	13.08	0	0	0	0	0	0	-45.52	-45.52
Inverter Transformer	MV4-11 T	369269	4908855	2	0	0	56.1	56.1	1	6129.47	3.25	0	86.75	0	2.01	0	0	13.26	0	0	0	0	0	0	-45.95	-45.95
Inverter Transformer	MV4-10 T	369307	4908858	2	0	0	56.1	56.1	1	6150.04	3.25	0	86.78	0	2.01	0	0	13.28	0	0	0	0	0	0	-46.01	-46.01
Inverter Transformer	MV4-7 T	369040	4909001	2	0	0	56.1	56.1	1	6156.82	3.25	0	86.79	0	2.01	0	0	13.29	0	0	0	0	0	0	-46.03	-46.03
Inverter Transformer	MV5-6 T	369987	4908507	2	0	0	56.1	56.1	1	6210.71	3.25	0	86.86	0	2.03	0	0	13.35	0	0	0	0	0	0	-46.18	-46.18
Inverter Transformer	MV4-8 T	369262	4909001	2	0	0	56.1	56.1	1	6255.54	3.25	0	86.93	0	2.04	0	0	13.4	0	0	0	0	0	0	-46.31	-46.31
Inverter Transformer	MV4-9 T	369284	4909001	2	0	0	56.1	56.1	1	6265.66	3.25	0	86.94	0	2.05	0	0	13.41	0	0	0	0	0	0	-46.34	-46.34
Inverter Transformer	MV4-4 T	369033	4909199	2	0	0	56.1	56.1	1	6333.21	3.25	0	87.03	0	2.07	0	0	13.49	0	0	0	0	0	0	-46.53	-46.53
Inverter Transformer	MV5-5 T	370021	4908690	2	0	0	56.1	56.1	1	6380.08	3.25	0	87.1	0	2.08	0	0	13.54	0	0	0	0	0	0	-46.66	-46.66
Inverter Transformer	MV4-6 T	369249	4909192	2	0	0	56.1	56.1	1	6420.04	3.25	0	87.15	0	2.09	0	0	13.59	0	0	0	0	0	0	-46.78	-46.78
Inverter Transformer	MV4-5 T	369283	4909199	2	0	0	56.1	56.1	1	6441.5	3.25	0	87.18	0	2.1	0	0	13.61	0	0	0	0	0	0	-46.84	-46.84
Inverter Transformer	MV4-1 T	369017	4909397	2	0	0	56.1	56.1	1	6507.21	3.25	0	87.27	0	2.12	0	0	13.69	0	0	0	0	0	0	-47.02	-47.02
Inverter Transformer	MV5-2 T	370011	4908853	2	0	0	56.1	56.1	1	6509.22	3.25	0	87.27	0	2.12	0	0	13.69	0	0	0	0	0	0	-47.02	-47.02
Inverter Transformer	MV5-4 T	370330	4908707	2	0	0	56.1	56.1	1	6574.4	3.25	0	87.36	0	2.14	0	0	13.76	0	0	0	0	0	0	-47.2	-47.2
Inverter Transformer	MV4-3 T	369234	4909397	2	0	0	56.1	56.1	1	6597.76	3.25	0	87.39	0	2.15	0	0	13.79	0	0	0	0	0	0	-47.27	-47.27

	Inverter Transformer	MV4-2 T	369267	4909397	2	0	0	56.1	56.1	1	6612.05	3.25	0	87.41	0	2.15	0	0	13.81	0	0	0	0	0	0	-47.3	-47.3
	Inverter Transformer	MV5-3 T	370237	4908851	2	0	0	56.1	56.1	1	6635.93	3.25	0	87.44	0	2.16	0	0	13.83	0	0	0	0	0	0	-47.37	-47.37
	Inverter Transformer	MV5-1 T	370015	4909142	2	0	0	56.1	56.1	1	6753.47	3.25	0	87.59	0	2.19	0	0	13.96	0	0	0	0	0	0	-47.69	-47.69
	Line Reactor	NGR	369421	4908787.5	5	0	0	45.4	45.4	1	6143.48	5.25	0	86.77	0	3.24	1.36	0.1	2.51	0	0	0	0	0	0	-48.52	-48.52
Limit. Valu	0	0																								
Level D/N:	31.9008	31.9008																								

Receiver: Existing Noise Receptor
ID: G-13
X: 367092.2
Y: 4903373.1
Z: 4.5
Ground: 0

ISO	Description	ID	X	Y	Z	Ground	ReflOrd	LxT	LxN	L/A	Dist.	hm	Freq	Adiv	K0b	Agr	Abar	z	Aatm	Afol	Ahous	Cmet	CmetN	Dc	RL	LtotT	LtotN
	Gardiner Substation	G_Sub	366586.3	4903349.9	2.5	0	0	90.8	90.8	1	506.44	4.24	0	65.09	0	0.52	5.56	0.29	1.45	0	0	0	0	0	0	18.15	18.15
	Sol_Luce Substation	S_Substation	369426	4908792	3.5	0	0	112.1	112.1	1	5900.09	5.25	0	86.42	0	1.14	2.66	0.32	9.64	0	0	0	0	0	0	12.22	12.22
	Inverters	G_Inv2	366676.9	4903239.1	2	0	0	87.7	87.7	1	436.39	3.25	0	63.8	0	2.41	0	0	0.67	0	0	0	0	0	0	20.78	20.78
	Inverters	G_Inv4	366732.8	4903105	2	0	0	87.7	87.7	1	448.39	3.25	0	64.03	0	2.41	0	0	0.69	0	0	0	0	0	0	20.53	20.53
	Inverters	G_Inv6	366788.5	4902972	2	0	0	87.7	87.7	1	503.11	3.25	0	65.03	0	2.4	0	0	0.77	0	0	0	0	0	0	19.46	19.46
	Inverter	MV1-15	365315	4904994	2	0	0	100.3	100.3	1	2405.36	3.25	0	78.62	0	0.23	0	0	14.28	0	0	0	0	0	0	7.18	7.18
	Inverters	G_Inv3	366583.7	4903091.4	2	0	0	87.7	87.7	1	581.32	3.25	0	66.29	0	2.4	0	0	0.88	0	0	0	0	0	0	18.1	18.1
	Inverters	G_Inv1	366526.4	4903225.8	2	0	0	87.7	87.7	1	584.67	3.25	0	66.34	0	2.4	0	0	0.88	0	0	0	0	0	0	18.04	18.04
	Inverters	G_Inv8	366844.5	4902838.5	2	0	0	87.7	87.7	1	589.2	3.25	0	66.41	0	2.4	0	0	0.89	0	0	0	0	0	0	17.97	17.97
	Inverters	G_Inv5	366638.5	4902958.1	2	0	0	87.7	87.7	1	614.88	3.25	0	66.78	0	2.4	0	0	0.92	0	0	0	0	0	0	17.56	17.56
	Inverter	MV1-12	365038	4905386	2	0	0	100.3	100.3	1	2876.02	3.25	0	80.18	0	0.34	0	0	15.15	0	0	0	0	0	0	4.65	4.65
	Inverters	G_Inv7	366694.6	4902824.7	2	0	0	87.7	87.7	1	677.37	3.25	0	67.62	0	2.4	0	0	1.01	0	0	0	0	0	0	16.63	16.63
	Inverters	G_Inv10	366900.7	4902704.8	2	0	0	87.7	87.7	1	695.2	3.25	0	67.84	0	2.41	0	0	1.03	0	0	0	0	0	0	16.38	16.38
	Inverter	MV1-11	364655	4905414	2	0	0	100.3	100.3	1	3178.87	3.25	0	81.05	0	0.4	0	0	15.68	0	0	0	0	0	0	3.19	3.19
	Inverter	MV1-8	364788	4905647	2	0	0	100.3	100.3	1	3237.28	3.25	0	81.2	0	0.41	0	0	15.79	0	0	0	0	0	0	2.92	2.92
	Inverters	G_Inv9	366750.9	4902691.8	2	0	0	87.7	87.7	1	762.01	3.25	0	68.64	0	2.41	0	0	1.12	0	0	0	0	0	0	15.49	15.49
	Inverter	MV1-9	364561	4905646	2	0	0	100.3	100.3	1	3401.92	3.25	0	81.63	0	0.43	0	0	16.07	0	0	0	0	0	0	2.18	2.18
	Inverter	MV1-4	364815	4905918	2	0	0	100.3	100.3	1	3414.99	3.25	0	81.67	0	0.44	0	0	16.09	0	0	0	0	0	0	2.12	2.12
	Inverter	MV1-5	364671	4905892	2	0	0	100.3	100.3	1	3493.86	3.25	0	81.87	0	0.45	0	0	16.22	0	0	0	0	0	0	1.77	1.77
	Inverter	MV2-3	365820	4906641	2	0	0	100.3	100.3	1	3506.8	3.25	0	81.9	0	0.45	0	0	16.24	0	0	0	0	0	0	1.72	1.72
	Inverter	MV1-2	364753	4906063	2	0	0	100.3	100.3	1	3564.75	3.25	0	82.04	0	0.46	0	0	16.34	0	0	0	0	0	0	1.47	1.47
	Inverter	MV2-4	365586	4906624	2	0	0	100.3	100.3	1	3582.88	3.25	0	82.08	0	0.46	0	0	16.37	0	0	0	0	0	0	1.39	1.39
	Inverter	MV1-6	364477	4905835	2	0	0	100.3	100.3	1	3591.69	3.25	0	82.11	0	0.47	0	0	16.38	0	0	0	0	0	0	1.36	1.36
	Inverter	MV1-14	365163	4905049	2	0	0	97.3	97.3	1	2555.48	3.25	0	79.15	0	0.27	0	0	14.56	0	0	0	0	0	0	3.33	3.33
	Inverter	MV1-1	364715	4906166	2	0	0	100.3	100.3	1	3667.61	3.25	0	82.29	0	0.48	0	0	16.51	0	0	0	0	0	0	1.04	1.04
	Inverter	MV3-21	368478	4907206	2	0	0	100.3	100.3	1	4075.73	3.25	0	83.2	0	0.54	0	0	17.17	0	0	0	0	0	0	-0.6	-0.6
	Inverter	MV3-18	367752	4907412	2	0	0	100.3	100.3	1	4092.44	3.25	0	83.24	0	0.54	0	0	17.2	0	0	0	0	0	0	-0.66	-0.66
	Inverter	MV3-19	368357	4907347	2	0	0	100.3	100.3	1	4170.32	3.25	0	83.4	0	0.55	0	0	17.32	0	0	0	0	0	0	-0.96	-0.96
	Inverter	MV3-17	368178	4907472	2	0	0	100.3	100.3	1	4240.28	3.25	0	83.55	0	0.56	0	0	17.43	0	0	0	0	0	0	-1.22	-1.22
	Inverter	MV1-13	364731	4905241	2	0	0	97.3	97.3	1	3010.7	3.25	0	80.57	0	0.36	0	0	15.39	0	0	0	0	0	0	0.98	0.98
	Inverter	MV3-20	368689	4907317	2	0	0	100.3	100.3	1	4254.89	3.25	0	83.58	0	0.56	0	0	17.45	0	0	0	0	0	0	-1.28	-1.28
	Inverter	MV3-12	367668	4907594	2	0	0	100.3	100.3	1	4259.99	3.25	0	83.59	0	0.56	0	0	17.46	0	0	0	0	0	0	-1.3	-1.3
	Inverter	MV1-10	365004	4905564	2	0	0	97.3	97.3	1	3026.65	3.25	0	80.62	0	0.37	0	0	15.42	0	0	0	0	0	0	0.91	0.91
	Inverter	MV3-13	367963	4907577	2	0	0	100.3	100.3	1	4293.14	3.25	0	83.66	0	0.57	0	0	17.51	0	0	0	0	0	0	-1.42	-1.42
	Inverter	MV3-15	368357	4907477	2	0	0	100.3	100.3	1	4294.38	3.25	0	83.66	0	0.57	0	0	17.51	0	0	0	0	0	0	-1.42	-1.42
	Inverter	MV3-16	368514	4907475	2	0	0	100.3	100.3	1	4341.33	3.25	0	83.75	0	0.57	0	0	17.59	0	0	0	0	0	0	-1.6	-1.6
	Inverter	MV3-14	368684	4907498	2	0	0	100.3	100.3	1	4421.38	3.25	0	83.91	0	0.58	0	0	17.71	0	0	0	0	0	0	-1.89	-1.89
	Inverter	MV3-10	368167	4907669	2	0	0	100.3	100.3	1	4428.31	3.25	0	83.92	0	0.58	0	0	17.72	0	0	0	0	0	0	-1.92	-1.92
	Inverter	MV3-7	367945	4907754	2	0	0	100.3	100.3	1	4463.13	3.25	0	83.99	0	0.59	0	0	17.77	0	0	0	0	0	0	-2.04	-2.04
	Inverter	MV3-11	368346	4907662	2	0	0	100.3	100.3	1	4468.41	3.25	0	84	0	0.59	0	0	17.78	0	0	0	0	0	0	-2.06	-2.06
	Inverter	MV3-9	368512	4907703	2	0	0	100.3	100.3	1	4556.74	3.25	0	84.17	0	0.6	0	0	17.92	0	0	0	0	0	0	-2.38	-2.38
	Inverter	MV1-7	364925	4905782	2	0	0	97.3	97.3	1	3240.3	3.25	0	81.21	0	0.41	0	0	15.79	0	0	0	0	0	0	-0.1	-0.1
	Inverter	MV3-6	368162	4907834	2	0	0	100.3	100.3	1	4587.39	3.25	0	84.23	0	0.6	0	0	17.96	0	0	0	0	0	0	-2.48	-2.48
	Inverter	MV3-8	368680	4907712	2	0	0	100.3	100.3	1	4620.3	3.25	0	84.29	0	0.6	0	0	18.01	0	0	0	0	0	0	-2.6	-2.6
	Inverter	MV3-3	367939	4907927	2	0	0	100.3	100.3	1	4631.96	3.25	0	84.32	0	0.61	0	0	18.03	0	0	0	0	0	0	-2.64	-2.64
	Inverter	MV6-3	370207	4907140	2	0	0	100.3	100.3	1	4887.9	3.25	0	84.78	0	0.63	0	0	18.41	0	0	0	0	0	0	-3.52	-3.52
	Inverter	MV6-2	370085	4907339	2	0	0	100.3	100.3	1	4968.42	3.25	0	84.92	0	0.64	0	0	18.53	0	0	0	0	0	0	-3.79	-3.79
	Inverter	MV2-1	365842	4906816	2	0	0	97.3	97.3	1	3662.86	3.25	0	82.28	0	0.48	0	0	16.5	0	0	0	0	0	0	-1.94	-1.94
	Inverter	MV4-11	369264	4908855	2	0	0	100.3	100.3	1	5896.44	3.25	0	86.41	0	0.7	0	0	19.85	0	0	0	0	0	0	-6.65	-6.65
	Inverter	MV4-10	369312	4908858	2	0	0	100.3	100.3	1	5917.06	3.25	0	86.44	0	0.7	0	0	19.88	0	0	0	0	0	0	-6.71	-6.71
	Inverter	MV4-7	369035	4909001	2	0	0	100.3	100.3	1	5953.8	3.25	0	86.5	0	0.7	0	0	19.93	0	0	0	0	0	0	-6.82	-6.82
	Inverter	MV4-8	369256	4909001	2	0	0	100.3	100.3	1	6029.54	3.25	0	86.61	0	0.71	0	0	20.03	0	0	0	0	0	0	-7.03	-7.03
	Inverter	MV4-9	369289	4909001	2	0	0	100.3	100.3	1	6041.46	3.25	0	86.62	0	0.71	0	0	20.05	0	0	0	0	0	0	-7.07	-7.07
	Inverter	MV5-5	370015	4908690	2	0	0	100.3	100.3	1	6067.31	3.25	0	86.66	0	0.71	0	0	20.08	0	0	0	0	0	0	-7.14	-7.14
	Inverter	MV4-4	369027	4909199	2	0	0	100.3	100.3	1	6138.78	3.25	0	86.76	0	0.71	0	0	20.18	0	0	0	0	0	0	-7.34	-7.34
	Inverter	MV4-6	369243	4909192	2	0	0	100.3	100.3	1	6203.67	3.25	0	86.85	0	0.71	0	0	20.27	0	0	0	0	0	0	-7.52	-7.52
	Inverter	MV5-2	370006	4908853	2	0	0	100.3	100.3	1	6206.41	3.25	0	86.86	0	0.71	0	0	20.27	0	0	0	0	0	0	-7.53	-7.53
	Inverter	MV4-5	369289	4909199	2	0	0	100.3	100.3	1	6226.32	3.25	0	86.88	0	0.71	0	0	20.3	0	0	0	0	0	0	-7.58	-7.58
	Inverter	MV5-4	370324	4908707	2	0	0	100.3	100.3	1	6236.59	3.25	0	86.9	0	0.71	0	0	20.31	0	0	0	0	0	0	-7.61	-7.61

Inverter	MV5-3	370231	4908851	2	0	0	100.3	100.3	1	6313.43	3.25	0	87.01	0	0.71	0	0	20.41	0	0	0	0	0	0	-7.82	-7.82
Inverter	MV4-1	369011	4909397	2	0	0	100.3	100.3	1	6322.12	3.25	0	87.02	0	0.71	0	0	20.43	0	0	0	0	0	0	-7.84	-7.84
Inverter	MV4-3	369229	4909397	2	0	0	100.3	100.3	1	6391.66	3.25	0	87.11	0	0.71	0	0	20.52	0	0	0	0	0	0	-8.03	-8.03
Inverter	MV4-2	369272	4909397	2	0	0	100.3	100.3	1	6406.16	3.25	0	87.13	0	0.71	0	0	20.54	0	0	0	0	0	0	-8.07	-8.07
Inverter	MV5-1	370020	4909142	2	0	0	100.3	100.3	1	6469.33	3.25	0	87.22	0	0.71	0	0	20.62	0	0	0	0	0	0	-8.24	-8.24
Inverter	MV6-1	370235	4907364	2	0	0	97.3	97.3	1	5079.81	3.25	0	85.12	0	0.65	0	0	18.7	0	0	0	0	0	0	-7.15	-7.15
DSTATCOM - 10 MVAR #2	DSAT2	369403	4908757	2.5	0	0	96.6	96.6	1	5858.85	3.5	0	86.36	0	3.76	0	0	3.77	0	0	0	0	0	0	2.74	2.74
DSTATCOM - 10 MVAR #1	DSAT1	369437	4908757	2.5	0	0	96.6	96.6	1	5872.35	3.5	0	86.38	0	3.76	0	0	3.78	0	0	0	0	0	0	2.71	2.71
SubstationTransformer	W_ST	369711.17	4906112.3	2.5	0	0	92	92	1	3789.73	3.5	0	82.57	0	0.28	0	-0.1	7.08	0	0	0	0	0	0	2.04	2.04
Inverter	MV2-2	365977	4906654	2	0	0	89.1	89.1	1	3465.25	3.25	0	81.79	0	1.26	0	0	10.31	0	0	0	0	0	0	-4.31	-4.31
Westbrook Inverter Enclosur	W_INV3	369508	4906164	2	0	0	89.1	89.1	1	3691.24	3.25	0	82.34	0	1.32	0	0	10.64	0	0	0	0	0	0	-5.24	-5.24
Inverter	MV1-3	364440	4906039	2	0	0	89.1	89.1	1	3760.48	3.25	0	82.5	0	1.33	0	0	10.74	0	0	0	0	0	0	-5.52	-5.52
Westbrook Inverter Enclosur	W_INV2	369374	4906388	2	0	0	89.1	89.1	1	3781.04	3.25	0	82.55	0	1.34	0	0	10.77	0	0	0	0	0	0	-5.6	-5.6
Westbrook Inverter Enclosur	W_INV4	369673	4906164	2	0	0	89.1	89.1	1	3801.27	3.25	0	82.6	0	1.34	0	0	10.8	0	0	0	0	0	0	-5.68	-5.68
Westbrook Inverter Enclosur	W_INV7	369780	4906417	2	0	0	89.1	89.1	1	4060.74	3.25	0	83.17	0	1.41	0	0	11.17	0	0	0	0	0	0	-6.69	-6.69
Inverter	MV3-22	368656	4907142	2	0	0	89.1	89.1	1	4080.45	3.25	0	83.21	0	1.41	0	0	11.2	0	0	0	0	0	0	-6.77	-6.77
Westbrook Inverter Enclosur	W_INV5	369719	4906574	2	0	0	89.1	89.1	1	4140.75	3.25	0	83.34	0	1.43	0	0	11.28	0	0	0	0	0	0	-6.99	-6.99
Westbrook Inverter Enclosur	W_INV6	369875	4906578	2	0	0	89.1	89.1	1	4244.45	3.25	0	83.56	0	1.45	0	0	11.43	0	0	0	0	0	0	-7.38	-7.38
Inverter	MV3-5	368340	4907843	2	0	0	89.1	89.1	1	4640.8	3.25	0	84.33	0	1.55	0	0	11.98	0	0	0	0	0	0	-8.8	-8.8
Inverter	MV3-1	368156	4907976	2	0	0	89.1	89.1	1	4724.23	3.25	0	84.49	0	1.57	0	0	12.09	0	0	0	0	0	0	-9.09	-9.09
Inverter	MV3-4	368502	4907925	2	0	0	89.1	89.1	1	4765.22	3.25	0	84.56	0	1.58	0	0	12.15	0	0	0	0	0	0	-9.23	-9.23
Inverter	MV3-2	368671	4907928	2	0	0	89.1	89.1	1	4820.76	3.25	0	84.66	0	1.6	0	0	12.22	0	0	0	0	0	0	-9.42	-9.42
Fixed Reactor Bank 1	FRB1	369378	4908755	6	0	0	89.8	89.8	1	5847.2	5.25	0	86.34	0	-0.44	0	0	9.58	0	0	0	0	0	0	-5.7	-5.7
Fixed Reactor Bank 2	FRB2	369464	4908755	6	0	0	89.8	89.8	1	5881.35	5.25	0	86.39	0	-0.44	0	0	9.62	0	0	0	0	0	0	-5.79	-5.79
Inverter	MV4-15	369176	4908481	2	0	0	89.1	89.1	1	5516.6	3.25	0	85.83	0	1.77	0	0	13.14	0	0	0	0	0	0	-11.69	-11.69
Inverter	MV4-14	369176	4908507	2	0	0	89.1	89.1	1	5540.68	3.25	0	85.87	0	1.77	0	0	13.18	0	0	0	0	0	0	-11.76	-11.76
Westbrook Inverter Enclosur	W_INV1	369409	4906578	2	0	0	86.1	86.1	1	3954.61	3.25	0	82.94	0	1.38	0	0	11.02	0	0	0	0	0	0	-9.29	-9.29
Inverter	MV4-13	369051	4908605	2	0	0	89.1	89.1	1	5586.56	3.25	0	85.94	0	1.78	0	0	13.23	0	0	0	0	0	0	-11.9	-11.9
Inverter	MV4-12	369043	4908803	2	0	0	89.1	89.1	1	5769.7	3.25	0	86.22	0	1.83	0	0	13.47	0	0	0	0	0	0	-12.46	-12.46
Inverter	MV5-6	369982	4908507	2	0	0	89.1	89.1	1	5891.34	3.25	0	86.4	0	1.86	0	0	13.62	0	0	0	0	0	0	-12.83	-12.83
Inverter	MV6-4	370250	4906966	2	0	0	86.1	86.1	1	4783.37	3.25	0	84.59	0	1.59	0	0	12.17	0	0	0	0	0	0	-12.29	-12.29
Westbrook Inverter Transfor	W_INVTR1	369403	4906578	2	0	0	78.2	78.2	1	3951.1	3.25	0	82.93	0	-2.95	0	0	2.04	0	0	0	0	0	0	-3.78	-3.78
Westbrook Inverter Transfor	W_INVTR3	369514	4906164	2	0	0	77.3	77.3	1	3695.16	3.25	0	82.35	0	-2.89	0	0	1.94	0	0	0	0	0	0	-4.06	-4.06
Westbrook Inverter Transfor	W_INVTR2	369368	4906388	2	0	0	77.3	77.3	1	3777.42	3.25	0	82.54	0	-2.91	0	0	1.97	0	0	0	0	0	0	-4.26	-4.26
Westbrook Inverter Transfor	W_INVTR4	369679	4906164	2	0	0	77.3	77.3	1	3805.35	3.25	0	82.61	0	-2.92	0	0	1.98	0	0	0	0	0	0	-4.33	-4.33
Westbrook Inverter Transfor	W_INVTR7	369786	4906417	2	0	0	77.3	77.3	1	4064.71	3.25	0	83.18	0	-2.98	0	0	2.08	0	0	0	0	0	0	-4.94	-4.94
Westbrook Inverter Transfor	W_INVTR5	369725	4906574	2	0	0	77.3	77.3	1	4144.56	3.25	0	83.35	0	-3	0	0	2.11	0	0	0	0	0	0	-5.12	-5.12
Westbrook Inverter Transfor	W_INVTR6	369881	4906578	2	0	0	77.3	77.3	1	4248.39	3.25	0	83.56	0	-3.02	0	0	2.15	0	0	0	0	0	0	-5.35	-5.35
Inverter Transformer	MV1-14 T	365157	4905049	2	0	0	69.4	69.4	1	2560.01	3.25	0	79.16	0	2.37	0	0	5.5	0	0	0	0	0	0	-17.68	-17.68
Inverter Transformer	MV1-13 T	364725	4905241	2	0	0	69.4	69.4	1	3015.41	3.25	0	80.59	0	2.51	0	0	5.9	0	0	0	0	0	0	-19.64	-19.64
Inverter Transformer	MV1-10 T	365010	4905564	2	0	0	69.4	69.4	1	3022.52	3.25	0	80.61	0	2.51	0	0	5.9	0	0	0	0	0	0	-19.67	-19.67
Inverter Transformer	MV1-7 T	364919	4905782	2	0	0	69.4	69.4	1	3244.32	3.25	0	81.22	0	2.58	0	0	6.09	0	0	0	0	0	0	-20.54	-20.54
Inverter Transformer	MV2-1 T	365836	4906816	2	0	0	69.4	69.4	1	3664.92	3.25	0	82.28	0	2.7	0	0	6.42	0	0	0	0	0	0	-22.05	-22.05
Inverter Transformer	MV6-4 T	370244	4906966	2	0	0	69.4	69.4	1	4779.41	3.25	0	84.59	0	2.97	0	0	7.23	0	0	0	0	0	0	-25.44	-25.44
Inverter Transformer	MV6-1 T	370230	4907364	2	0	0	69.4	69.4	1	5076.72	3.25	0	85.11	0	3.03	0	0	7.43	0	0	0	0	0	0	-26.22	-26.22
Inverter Transformer	MV1-15 T	365309	4904994	2	0	0	56.1	56.1	1	2409.8	3.25	0	78.64	0	0.58	0	0	7.82	0	0	0	0	0	0	-30.98	-30.98
Inverter Transformer	MV1-12 T	365044	4905386	2	0	0	56.1	56.1	1	2871.74	3.25	0	80.16	0	0.78	0	0	8.65	0	0	0	0	0	0	-33.53	-33.53
Inverter Transformer	MV1-11 T	364649	4905414	2	0	0	56.1	56.1	1	3183.47	3.25	0	81.06	0	0.91	0	0	9.18	0	0	0	0	0	0	-35.08	-35.08
Inverter Transformer	MV1-8 T	364782	4905647	2	0	0	56.1	56.1	1	3241.55	3.25	0	81.22	0	0.93	0	0	9.27	0	0	0	0	0	0	-35.36	-35.36
Inverter Transformer	MV1-9 T	364555	4905646	2	0	0	56.1	56.1	1	3406.39	3.25	0	81.65	0	1	0	0	9.54	0	0	0	0	0	0	-36.13	-36.13
Inverter Transformer	MV1-4 T	364821	4905918	2	0	0	56.1	56.1	1	3410.99	3.25	0	81.66	0	1	0	0	9.55	0	0	0	0	0	0	-36.15	-36.15
Inverter Transformer	MV2-2 T	365982	4906654	2	0	0	56.1	56.1	1	3463.65	3.25	0	81.79	0	1.02	0	0	9.63	0	0	0	0	0	0	-36.39	-36.39
Inverter Transformer	MV1-5 T	364676	4905892	2	0	0	56.1	56.1	1	3490.4	3.25	0	81.86	0	1.04	0	0	9.67	0	0	0	0	0	0	-36.51	-36.51
Inverter Transformer	MV2-3 T	365814	4906641	2	0	0	56.1	56.1	1	3508.98	3.25	0	81.9	0	1.04	0	0	9.7	0	0	0	0	0	0	-36.59	-36.59
Inverter Transformer	MV1-2 T	364759	4906063	2	0	0	56.1	56.1	1	3560.81	3.25	0	82.03	0	1.07	0	0	9.78	0	0	0	0	0	0	-36.82	-36.82
Inverter Transformer	MV2-4 T	365590	4906628	2	0	0	56.1	56.1	1	3584.83	3.25	0	82.09	0	1.08	0	0	9.82	0	0	0	0	0	0	-36.93	-36.93
Inverter Transformer	MV1-6 T	364482	4905835	2	0	0	56.1	56.1	1	3588.05	3.25	0	82.1	0	1.08	0	0	9.83	0	0	0	0	0	0	-36.94	-36.94
Inverter Transformer	MV1-1 T	364721	4906166	2	0	0	56.1	56.1	1	3663.73	3.25	0	82.28	0	1.11	0	0	9.94	0	0	0	0	0	0	-37.27	-37.27
Inverter Transformer	MV1-3 T	364435	4906039	2	0	0	56.1	56.1	1	3764.01	3.25	0	82.51	0	1.15	0	0	10.1	0	0	0	0	0	0	-37.7	-37.7
Inverter Transformer	MV3-21 T	368484	4907206	2	0	0	56.1	56.1	1	4077.77	3.25	0	83.21	0	1.27	0	0	10.57	0	0	0	0	0	0	-38.99	-38.99
Inverter Transformer	MV3-22 T	368661	4907142	2	0	0	56.1	56.1	1	4082.37	3.25	0	83.22	0	1.28	0	0	10.58	0	0	0	0	0	0	-39.01	-39.01
Inverter Transformer	MV3-18 T	367757	4907412	2	0	0	56.1	56.1	1	4093.25	3.25	0	83.24	0	1.28	0	0	10.59	0	0	0	0	0	0	-39.06	-39.06
Inverter Transformer	MV3-19 T	368352	4907347	2	0	0	56.1	56.1	1	4168.81	3.25	0	83.4	0	1.31	0	0	10.7	0	0	0	0	0	0	-39.36	-39.36
Inverter Transformer	MV3-17 T	368183	4907472	2	0	0	56.1	56.1	1	4241.56	3.25	0	83.55	0	1.34	0	0	10.81	0	0	0	0	0	0	-39.64	-39.64
Inverter Transformer	MV3-20 T	368683	4907317	2	0	0	56.1	56.1	1	4252.65	3.25	0	83.57	0	1.34	0	0	10.82	0	0	0	0	0	0	-39.68	-39.68
Inverter Transformer	MV3-12 T	367674	4907594	2	0	0	56.1	56.1	1	4260.81	3.25	0	83.59	0	1.35	0	0	10.84	0	0	0	0	0	0	-39.71	-39.71
Inverter Transformer	MV3-13 T	367958	4907577	2	0	0	56.1	56.1	1	4292.13	3.25	0	83.65	0	1.36	0	0	10.88	0	0	0	0	0	0	-39.84	-39.84
Inverter Transformer	MV3-15 T	368351	4907477	2	0	0	56.1	56.1	1	4292.62	3.25	0	83.65	0	1.36	0	0	10.88	0	0	0	0	0	0	-39.84	-39.84
Inverter Transformer	MV3-16 T	368509	4907475	2	0	0	56.1	56.1	1	4339.69	3.25	0	83.75	0	1.38	0	0	10.95	0	0	0	0	0	0	-40.02	-40.02
Inverter Transformer	MV3-14 T	368678	4907498	2	0	0	56.1	56.1	1	4419.23	3.25	0	83.91	0	1.41	0	0	11.06	0	0	0	0	0	0	-40.32	-40.32
Inverter Transformer	MV3-10 T	368162	4907669	2	0	0	56.1	56.1	1	4427.1	3.25	0	83.92	0	1.41	0	0	11.07	0	0	0	0	0	0	-40.35	-40.35
Inverter Transformer	MV3-7 T	367951	4907754	2	0	0	56.1	56.1	1	4464.28	3.25	0	84	0	1.43	0	0	11.13	0	0	0	0	0	0	-40.49	-40.49
Inverter Transformer	MV3-11 T	368340	4907662	2	0	0	56.1	56.1	1	4466.73	3.25	0	84	0	1.43	0	0	11.13	0	0	0	0	0	0	-40.5	-40.5
Inverter Transformer	MV3-9 T	368517	4907703	2	0	0	56.1	56.1	1	4558.3	3.25	0	84.18	0	1.46	0	0	11.26	0	0	0	0	0	0	-40.84	-40.84

	Inverter Transformer	MV3-6 T	368156	4907834	2	0	0	56.1	56.1	1	4585.99	3.25	0	84.23	0	1.47	0	0	11.3	0	0	0	0	0	0	-40.94	-40.94
	Inverter Transformer	MV3-8 T	368685	4907712	2	0	0	56.1	56.1	1	4622.02	3.25	0	84.3	0	1.49	0	0	11.34	0	0	0	0	0	0	-41.07	-41.07
	Inverter Transformer	MV3-3 T	367944	4907927	2	0	0	56.1	56.1	1	4632.88	3.25	0	84.32	0	1.49	0	0	11.36	0	0	0	0	0	0	-41.11	-41.11
	Inverter Transformer	MV3-5 T	368335	4907843	2	0	0	56.1	56.1	1	4639.46	3.25	0	84.33	0	1.49	0	0	11.37	0	0	0	0	0	0	-41.13	-41.13
	Inverter Transformer	MV3-1 T	368150	4907976	2	0	0	56.1	56.1	1	4722.88	3.25	0	84.48	0	1.52	0	0	11.48	0	0	0	0	0	0	-41.43	-41.43
	Inverter Transformer	MV3-4 T	368507	4907925	2	0	0	56.1	56.1	1	4766.7	3.25	0	84.56	0	1.54	0	0	11.54	0	0	0	0	0	0	-41.59	-41.59
	Inverter Transformer	MV3-2 T	368677	4907928	2	0	0	56.1	56.1	1	4822.73	3.25	0	84.67	0	1.56	0	0	11.62	0	0	0	0	0	0	-41.79	-41.79
	Inverter Transformer	MV6-3 T	370202	4907140	2	0	0	56.1	56.1	1	4884.71	3.25	0	84.78	0	1.58	0	0	11.7	0	0	0	0	0	0	-42	-42
	Inverter Transformer	MV6-2 T	370091	4907339	2	0	0	56.1	56.1	1	4972.04	3.25	0	84.93	0	1.62	0	0	11.82	0	0	0	0	0	0	-42.3	-42.3
	Inverter Transformer	MV4-15 T	369170	4908481	2	0	0	56.1	56.1	1	5514.34	3.25	0	85.83	0	1.81	0	0	12.51	0	0	0	0	0	0	-44.09	-44.09
	Inverter Transformer	MV4-14 T	369182	4908507	2	0	0	56.1	56.1	1	5542.94	3.25	0	85.87	0	1.82	0	0	12.55	0	0	0	0	0	0	-44.18	-44.18
	Inverter Transformer	MV4-13 T	369057	4908605	2	0	0	56.1	56.1	1	5588.67	3.25	0	85.95	0	1.83	0	0	12.61	0	0	0	0	0	0	-44.32	-44.32
	Inverter Transformer	MV4-12 T	369049	4908803	2	0	0	56.1	56.1	1	5771.73	3.25	0	86.23	0	1.89	0	0	12.83	0	0	0	0	0	0	-44.89	-44.89
	Inverter Transformer	MV5-6 T	369987	4908507	2	0	0	56.1	56.1	1	5893.79	3.25	0	86.41	0	1.93	0	0	12.98	0	0	0	0	0	0	-45.26	-45.26
	Inverter Transformer	MV4-11 T	369269	4908855	2	0	0	56.1	56.1	1	5898.28	3.25	0	86.41	0	1.93	0	0	12.98	0	0	0	0	0	0	-45.27	-45.27
	Inverter Transformer	MV4-10 T	369307	4908858	2	0	0	56.1	56.1	1	5915.19	3.25	0	86.44	0	1.94	0	0	13	0	0	0	0	0	0	-45.32	-45.32
	Inverter Transformer	MV4-7 T	369040	4909001	2	0	0	56.1	56.1	1	5955.43	3.25	0	86.5	0	1.95	0	0	13.05	0	0	0	0	0	0	-45.44	-45.44
	Inverter Transformer	MV4-8 T	369262	4909001	2	0	0	56.1	56.1	1	6031.69	3.25	0	86.61	0	1.97	0	0	13.14	0	0	0	0	0	0	-45.67	-45.67
	Inverter Transformer	MV4-9 T	369284	4909001	2	0	0	56.1	56.1	1	6039.64	3.25	0	86.62	0	1.98	0	0	13.15	0	0	0	0	0	0	-45.69	-45.69
	Inverter Transformer	MV5-5 T	370021	4908690	2	0	0	56.1	56.1	1	6070.2	3.25	0	86.66	0	1.99	0	0	13.19	0	0	0	0	0	0	-45.78	-45.78
	Inverter Transformer	MV4-4 T	369033	4909199	2	0	0	56.1	56.1	1	6140.67	3.25	0	86.76	0	2.01	0	0	13.27	0	0	0	0	0	0	-45.98	-45.98
	Inverter Transformer	MV4-6 T	369249	4909192	2	0	0	56.1	56.1	1	6205.75	3.25	0	86.86	0	2.03	0	0	13.34	0	0	0	0	0	0	-46.17	-46.17
	Inverter Transformer	MV5-2 T	370011	4908853	2	0	0	56.1	56.1	1	6208.76	3.25	0	86.86	0	2.03	0	0	13.35	0	0	0	0	0	0	-46.18	-46.18
	Inverter Transformer	MV4-5 T	369283	4909199	2	0	0	56.1	56.1	1	6224.2	3.25	0	86.88	0	2.03	0	0	13.37	0	0	0	0	0	0	-46.22	-46.22
	Inverter Transformer	MV5-4 T	370330	4908707	2	0	0	56.1	56.1	1	6239.7	3.25	0	86.9	0	2.04	0	0	13.38	0	0	0	0	0	0	-46.27	-46.27
	Inverter Transformer	MV5-3 T	370237	4908851	2	0	0	56.1	56.1	1	6316.42	3.25	0	87.01	0	2.06	0	0	13.47	0	0	0	0	0	0	-46.49	-46.49
	Inverter Transformer	MV4-1 T	369017	4909397	2	0	0	56.1	56.1	1	6323.94	3.25	0	87.02	0	2.07	0	0	13.48	0	0	0	0	0	0	-46.51	-46.51
	Inverter Transformer	MV4-3 T	369234	4909397	2	0	0	56.1	56.1	1	6393.33	3.25	0	87.11	0	2.09	0	0	13.56	0	0	0	0	0	0	-46.7	-46.7
	Inverter Transformer	MV4-2 T	369267	4909397	2	0	0	56.1	56.1	1	6404.46	3.25	0	87.13	0	2.09	0	0	13.57	0	0	0	0	0	0	-46.73	-46.73
	Inverter Transformer	MV5-1 T	370015	4909142	2	0	0	56.1	56.1	1	6467.07	3.25	0	87.21	0	2.11	0	0	13.64	0	0	0	0	0	0	-46.91	-46.91
	Line Reactor	NGR	369421	4908787.5	5	0	0	45.4	45.4	1	5893.98	5.25	0	86.41	0	3.24	1.36	0.11	2.41	0	0	0	0	0	0	-48.07	-48.07
Limit. Valu	0	0																								
Level D/N:	29.2091	29.2091																								

Receiver: Existing Noise Receptor
ID: G-14
X: 366449.2
Y: 4903496.1
Z: 4.5
Ground: 0

ISO	Description	ID	X	Y	Z	Ground	ReflOrd	LxT	LxN	L/A	Dist.	hm	Freq	Adiv	K0b	Agr	Abar	z	Aatm	Afol	Ahous	Cmet	CmetN	Dc	RL	LtotT	LtotN
	Gardiner Substation	G_Sub	366586.3	4903349.9	2.5	0	0	90.8	90.8	1	200.44	4.23	0	57.04	0	0.89	6.88	0.26	0.66	0	0	0	0	0	0	25.31	25.31
	Inverters	G_Inv1	366526.4	4903225.8	2	0	0	87.7	87.7	1	281.12	3.25	0	59.98	0	2.52	0	0	0.45	0	0	0	0	0	0	24.72	24.72
	Inverters	G_Inv2	366676.9	4903239.1	2	0	0	87.7	87.7	1	343.37	3.25	0	61.72	0	2.45	0	0	0.54	0	0	0	0	0	0	22.95	22.95
	Sol_Luce Substation	S_Substation	369426	4908792	3.5	0	0	112.1	112.1	1	6075.19	5.25	0	86.67	0	1.18	2.63	0.31	9.82	0	0	0	0	0	0	11.78	11.78
	Inverters	G_Inv3	366583.7	4903091.4	2	0	0	87.7	87.7	1	426.47	3.25	0	63.6	0	2.41	0	0	0.66	0	0	0	0	0	0	20.99	20.99
	Inverter	MV1-15	365315	4904994	2	0	0	100.3	100.3	1	1878.86	3.25	0	76.48	0	0.09	0	0	13.2	0	0	0	0	0	0	10.54	10.54
	Inverters	G_Inv4	366732.8	4903105	2	0	0	87.7	87.7	1	483.11	3.25	0	64.68	0	2.4	0	0	0.74	0	0	0	0	0	0	19.84	19.84
	Inverter	MV1-12	365038	4905386	2	0	0	100.3	100.3	1	2358.65	3.25	0	78.45	0	0.22	0	0	14.19	0	0	0	0	0	0	7.45	7.45
	Inverters	G_Inv5	366638.5	4902958.1	2	0	0	87.7	87.7	1	570.34	3.25	0	66.12	0	2.4	0	0	0.86	0	0	0	0	0	0	18.28	18.28
	Inverter	MV1-11	364655	4905414	2	0	0	100.3	100.3	1	2626.31	3.25	0	79.39	0	0.29	0	0	14.7	0	0	0	0	0	0	5.94	5.94
	Inverters	G_Inv6	366788.5	4902972	2	0	0	87.7	87.7	1	624.35	3.25	0	66.91	0	2.4	0	0	0.93	0	0	0	0	0	0	17.42	17.42
	Inverter	MV1-8	364788	4905647	2	0	0	100.3	100.3	1	2717.71	3.25	0	79.68	0	0.31	0	0	14.86	0	0	0	0	0	0	5.46	5.46
	Inverter	MV1-14	365163	4905049	2	0	0	97.3	97.3	1	2016.39	3.25	0	77.09	0	0.13	0	0	13.5	0	0	0	0	0	0	6.59	6.59
	Inverter	MV1-9	364561	4905646	2	0	0	100.3	100.3	1	2861.36	3.25	0	80.13	0	0.33	0	0	15.13	0	0	0	0	0	0	4.72	4.72
	Inverter	MV1-4	364815	4905918	2	0	0	100.3	100.3	1	2921.68	3.25	0	80.31	0	0.35	0	0	15.23	0	0	0	0	0	0	4.42	4.42
	Inverter	MV1-5	364671	4905892	2	0	0	100.3	100.3	1	2983.68	3.25	0	80.5	0	0.36	0	0	15.34	0	0	0	0	0	0	4.11	4.11
	Inverter	MV1-6	364477	4905835	2	0	0	100.3	100.3	1	3059.42	3.25	0	80.71	0	0.37	0	0	15.48	0	0	0	0	0	0	3.75	3.75
	Inverters	G_Inv7	366694.6	4902824.7	2	0	0	87.7	87.7	1	714.85	3.25	0	68.08	0	2.41	0	0	1.06	0	0	0	0	0	0	16.11	16.11
	Inverter	MV1-2	364753	4906063	2	0	0	100.3	100.3	1	3076.7	3.25	0	80.76	0	0.38	0	0	15.51	0	0	0	0	0	0	3.67	3.67
	Inverter	MV1-1	364715	4906166	2	0	0	100.3	100.3	1	3183.68	3.25	0	81.06	0	0.4	0	0	15.69	0	0	0	0	0	0	3.16	3.16
	Inverter	MV2-3	365820	4906641	2	0	0	100.3	100.3	1	3207.23	3.25	0	81.12	0	0.4	0	0	15.73	0	0	0	0	0	0	3.05	3.05
	Inverter	MV2-4	365586	4906624	2	0	0	100.3	100.3	1	3244.82	3.25	0	81.22	0	0.41	0	0	15.8	0	0	0	0	0	0	2.88	2.88
	Inverters	G_Inv8	366844.5	4902838.5	2	0	0	87.7	87.7	1	767.27	3.25	0	68.7	0	2.42	0	0	1.13	0	0	0	0	0	0	15.42	15.42
	Inverter	MV1-13	364731	4905241	2	0	0	97.3	97.3	1	2448.86	3.25	0	78.78	0	0.25	0	0	14.36	0	0	0	0	0	0	3.93	3.93
	Inverter	MV1-10	365004	4905564	2	0	0	97.3	97.3	1	2522.86	3.25	0	79.04	0	0.26	0	0	14.5	0	0	0	0	0	0	3.51	3.51
	Inverters	G_Inv9	366750.9	4902691.8	2	0	0	87.7	87.7	1	859.03	3.25	0	69.68	0	2.43	0	0	1.25	0	0	0	0	0	0	14.31	14.31
	Inverter	MV1-7	364925	4905782	2	0	0	97.3	97.3	1	2747.46	3.25	0	79.78	0	0.31	0	0	14.92	0	0	0	0	0	0	2.3	2.3
	Inverters	G_Inv10	366900.7	4902704.8	2	0	0	87.7	87.7	1	911.05	3.25	0	70.19	0	2.44	0	0	1.31	0	0	0	0	0	0	13.72	13.72
	Inverter	MV3-18	367752	4907412	2	0	0	100.3	100.3	1	4126.93	3.25	0	83.31	0	0.54	0	0	17.25	0	0	0	0	0	0	-0.8	-0.8
	Inverter	MV3-21	368478	4907206	2	0	0	100.3	100.3	1	4228.4	3.25	0	83.52	0	0.56	0	0	17.41	0	0	0	0	0	0	-1.18	-1.18
	Inverter	MV3-12	367668	4907594	2	0	0	100.3	100.3	1	4275.31	3.25	0	83.62	0	0.56	0	0	17.48	0	0	0	0	0	0	-1.35	-1.35
	Inverter	MV3-19	368357	4907347	2	0	0	100.3	100.3	1	4297.57	3.25	0	83.66	0	0.57	0	0	17.52	0	0	0	0	0	0	-1.44	-1.44

Inverter	MV3-17	368178	4907472	2	0	0	100.3	100.3	1	4335.5	3.25	0	83.74	0	0.57	0	0	17.58	0	0	0	0	0	0	-1.58	-1.58
Inverter	MV3-13	367963	4907577	2	0	0	100.3	100.3	1	4352.62	3.25	0	83.78	0	0.57	0	0	17.6	0	0	0	0	0	0	-1.64	-1.64
Inverter	MV3-15	368357	4907477	2	0	0	100.3	100.3	1	4414.44	3.25	0	83.9	0	0.58	0	0	17.7	0	0	0	0	0	0	-1.87	-1.87
Inverter	MV3-20	368689	4907317	2	0	0	100.3	100.3	1	4428.99	3.25	0	83.93	0	0.58	0	0	17.72	0	0	0	0	0	0	-1.92	-1.92
Inverter	MV3-16	368514	4907475	2	0	0	100.3	100.3	1	4482.75	3.25	0	84.03	0	0.59	0	0	17.8	0	0	0	0	0	0	-2.11	-2.11
Inverter	MV3-10	368167	4907669	2	0	0	100.3	100.3	1	4512.64	3.25	0	84.09	0	0.59	0	0	17.85	0	0	0	0	0	0	-2.22	-2.22
Inverter	MV3-7	367945	4907754	2	0	0	100.3	100.3	1	4513	3.25	0	84.09	0	0.59	0	0	17.85	0	0	0	0	0	0	-2.22	-2.22
Inverter	MV3-11	368346	4907662	2	0	0	100.3	100.3	1	4577.4	3.25	0	84.21	0	0.6	0	0	17.95	0	0	0	0	0	0	-2.45	-2.45
Inverter	MV3-14	368684	4907498	2	0	0	100.3	100.3	1	4583.62	3.25	0	84.22	0	0.6	0	0	17.96	0	0	0	0	0	0	-2.47	-2.47
Inverter	MV3-6	368162	4907834	2	0	0	100.3	100.3	1	4663.8	3.25	0	84.37	0	0.61	0	0	18.08	0	0	0	0	0	0	-2.75	-2.75
Inverter	MV3-3	367939	4907927	2	0	0	100.3	100.3	1	4674.65	3.25	0	84.39	0	0.61	0	0	18.1	0	0	0	0	0	0	-2.79	-2.79
Inverter	MV3-9	368512	4907703	2	0	0	100.3	100.3	1	4685.42	3.25	0	84.41	0	0.61	0	0	18.11	0	0	0	0	0	0	-2.83	-2.83
Inverter	MV2-1	365842	4906816	2	0	0	97.3	97.3	1	3374.97	3.25	0	81.57	0	0.43	0	0	16.02	0	0	0	0	0	0	-0.7	-0.7
Inverter	MV3-8	368680	4907712	2	0	0	100.3	100.3	1	4769.73	3.25	0	84.57	0	0.62	0	0	18.24	0	0	0	0	0	0	-3.12	-3.12
Inverter	MV6-3	370207	4907140	2	0	0	100.3	100.3	1	5234.41	3.25	0	85.38	0	0.66	0	0	18.92	0	0	0	0	0	0	-4.65	-4.65
Inverter	MV6-2	370085	4907339	2	0	0	100.3	100.3	1	5290.27	3.25	0	85.47	0	0.67	0	0	19	0	0	0	0	0	0	-4.83	-4.83
Inverter	MV4-11	369264	4908855	2	0	0	100.3	100.3	1	6053.17	3.25	0	86.64	0	0.71	0	0	20.07	0	0	0	0	0	0	-7.1	-7.1
Inverter	MV4-10	369312	4908858	2	0	0	100.3	100.3	1	6078.29	3.25	0	86.68	0	0.71	0	0	20.1	0	0	0	0	0	0	-7.17	-7.17
Inverter	MV4-7	369035	4909001	2	0	0	100.3	100.3	1	6081.96	3.25	0	86.68	0	0.71	0	0	20.1	0	0	0	0	0	0	-7.18	-7.18
Inverter	MV4-8	369256	4909001	2	0	0	100.3	100.3	1	6179.16	3.25	0	86.82	0	0.71	0	0	20.23	0	0	0	0	0	0	-7.45	-7.45
Inverter	MV4-9	369289	4909001	2	0	0	100.3	100.3	1	6194.22	3.25	0	86.84	0	0.71	0	0	20.25	0	0	0	0	0	0	-7.49	-7.49
Inverter	MV4-4	369027	4909199	2	0	0	100.3	100.3	1	6258.44	3.25	0	86.93	0	0.71	0	0	20.34	0	0	0	0	0	0	-7.67	-7.67
Inverter	MV5-5	370015	4908690	2	0	0	100.3	100.3	1	6300.12	3.25	0	86.99	0	0.71	0	0	20.4	0	0	0	0	0	0	-7.78	-7.78
Inverter	MV4-6	369243	4909192	2	0	0	100.3	100.3	1	6344.18	3.25	0	87.05	0	0.71	0	0	20.45	0	0	0	0	0	0	-7.9	-7.9
Inverter	MV4-5	369289	4909199	2	0	0	100.3	100.3	1	6370.84	3.25	0	87.08	0	0.71	0	0	20.49	0	0	0	0	0	0	-7.98	-7.98
Inverter	MV5-2	370006	4908853	2	0	0	100.3	100.3	1	6430.18	3.25	0	87.16	0	0.71	0	0	20.57	0	0	0	0	0	0	-8.13	-8.13
Inverter	MV4-1	369011	4909397	2	0	0	100.3	100.3	1	6433	3.25	0	87.17	0	0.71	0	0	20.57	0	0	0	0	0	0	-8.14	-8.14
Inverter	MV5-4	370324	4908707	2	0	0	100.3	100.3	1	6493.66	3.25	0	87.25	0	0.71	0	0	20.65	0	0	0	0	0	0	-8.3	-8.3
Inverter	MV4-3	369229	4909397	2	0	0	100.3	100.3	1	6522.88	3.25	0	87.29	0	0.71	0	0	20.69	0	0	0	0	0	0	-8.38	-8.38
Inverter	MV4-2	369272	4909397	2	0	0	100.3	100.3	1	6541.32	3.25	0	87.31	0	0.71	0	0	20.71	0	0	0	0	0	0	-8.43	-8.43
Inverter	MV5-3	370231	4908851	2	0	0	100.3	100.3	1	6555.68	3.25	0	87.33	0	0.71	0	0	20.73	0	0	0	0	0	0	-8.47	-8.47
Inverter	MV5-1	370020	4909142	2	0	0	100.3	100.3	1	6680.33	3.25	0	87.5	0	0.71	0	0	20.89	0	0	0	0	0	0	-8.79	-8.79
Inverter	MV6-1	370235	4907364	2	0	0	97.3	97.3	1	5412.3	3.25	0	85.67	0	0.67	0	0	19.18	0	0	0	0	0	0	-8.21	-8.21
DSTATCOM - 10 MVAR #2	DSAT2	369403	4908757	2.5	0	0	96.6	96.6	1	6033.41	3.5	0	86.61	0	3.78	0	0	3.86	0	0	0	0	0	0	2.39	2.39
DSTATCOM - 10 MVAR #1	DSAT1	369437	4908757	2.5	0	0	96.6	96.6	1	6050.13	3.5	0	86.64	0	3.78	0	0	3.86	0	0	0	0	0	0	2.35	2.35
SubstationTransformer	W_ST	369711.17	4906112.3	2.5	0	0	92	92	1	4181.48	4.25	0	83.43	0	1.41	2.54	0.23	7.6	0	0	0	0	0	0	-3	-3
Inverter	MV2-2	365977	4906654	2	0	0	89.1	89.1	1	3193.01	3.25	0	81.08	0	1.19	0	0	9.91	0	0	0	0	0	0	-3.13	-3.13
Inverter	MV1-3	364440	4906039	2	0	0	89.1	89.1	1	3240.87	3.25	0	81.21	0	1.21	0	0	9.98	0	0	0	0	0	0	-3.34	-3.34
Westbrook Inverter Enclosur	W_INV3	369508	4906164	2	0	0	89.1	89.1	1	4058.81	3.25	0	83.17	0	1.41	0	0	11.17	0	0	0	0	0	0	-6.68	-6.68
Westbrook Inverter Enclosur	W_INV2	369374	4906388	2	0	0	89.1	89.1	1	4113.09	3.25	0	83.28	0	1.42	0	0	11.24	0	0	0	0	0	0	-6.89	-6.89
Westbrook Inverter Enclosur	W_INV4	369673	4906164	2	0	0	89.1	89.1	1	4184.56	3.25	0	83.43	0	1.44	0	0	11.35	0	0	0	0	0	0	-7.16	-7.16
Inverter	MV3-22	368656	4907142	2	0	0	89.1	89.1	1	4261.76	3.25	0	83.59	0	1.46	0	0	11.45	0	0	0	0	0	0	-7.44	-7.44
Westbrook Inverter Enclosur	W_INV7	369780	4906417	2	0	0	89.1	89.1	1	4430.11	3.25	0	83.93	0	1.5	0	0	11.69	0	0	0	0	0	0	-8.06	-8.06
Westbrook Inverter Enclosur	W_INV5	369719	4906574	2	0	0	89.1	89.1	1	4490.55	3.25	0	84.05	0	1.51	0	0	11.77	0	0	0	0	0	0	-8.27	-8.27
Westbrook Inverter Enclosur	W_INV6	369875	4906578	2	0	0	89.1	89.1	1	4608.06	3.25	0	84.27	0	1.54	0	0	11.93	0	0	0	0	0	0	-8.69	-8.69
Inverter	MV3-5	368340	4907843	2	0	0	89.1	89.1	1	4740.32	3.25	0	84.52	0	1.58	0	0	12.11	0	0	0	0	0	0	-9.15	-9.15
Inverter	MV3-1	368156	4907976	2	0	0	89.1	89.1	1	4794.03	3.25	0	84.61	0	1.59	0	0	12.19	0	0	0	0	0	0	-9.33	-9.33
Inverter	MV3-4	368502	4907925	2	0	0	89.1	89.1	1	4881.51	3.25	0	84.77	0	1.61	0	0	12.3	0	0	0	0	0	0	-9.63	-9.63
Inverter	MV3-2	368671	4907928	2	0	0	89.1	89.1	1	4957.63	3.25	0	84.91	0	1.63	0	0	12.41	0	0	0	0	0	0	-9.88	-9.88
Fixed Reactor Bank 1	FRB1	369378	4908755	6	0	0	89.8	89.8	1	6019.46	5.25	0	86.59	0	-0.42	0	0	9.76	0	0	0	0	0	0	-6.16	-6.16
Fixed Reactor Bank 2	FRB2	369464	4908755	6	0	0	89.8	89.8	1	6061.77	5.25	0	86.65	0	-0.41	0	0	9.81	0	0	0	0	0	0	-6.27	-6.27
Inverter	MV4-15	369176	4908481	2	0	0	89.1	89.1	1	5681.96	3.25	0	86.09	0	1.81	0	0	13.36	0	0	0	0	0	0	-12.2	-12.2
Inverter	MV4-14	369176	4908507	2	0	0	89.1	89.1	1	5704.78	3.25	0	86.12	0	1.81	0	0	13.39	0	0	0	0	0	0	-12.27	-12.27
Inverter	MV4-13	369051	4908605	2	0	0	89.1	89.1	1	5733.26	3.25	0	86.17	0	1.82	0	0	13.42	0	0	0	0	0	0	-12.35	-12.35
Inverter	MV4-12	369043	4908803	2	0	0	89.1	89.1	1	5906.86	3.25	0	86.43	0	1.86	0	0	13.64	0	0	0	0	0	0	-12.88	-12.88
Westbrook Inverter Enclosur	W_INV1	369409	4906578	2	0	0	86.1	86.1	1	4273	3.25	0	83.61	0	1.46	0	0	11.47	0	0	0	0	0	0	-10.49	-10.49
Inverter	MV5-6	369982	4908507	2	0	0	89.1	89.1	1	6131.05	3.25	0	86.75	0	1.92	0	0	13.93	0	0	0	0	0	0	-13.54	-13.54
Inverter	MV6-4	370250	4906966	2	0	0	86.1	86.1	1	5146.48	3.25	0	85.23	0	1.68	0	0	12.66	0	0	0	0	0	0	-13.51	-13.51
Westbrook Inverter Transfor	W_INVTR1	369403	4906578	2	0	0	78.2	78.2	1	4268.85	3.25	0	83.61	0	-3.02	0	0	2.15	0	0	0	0	0	0	-4.5	-4.5
Westbrook Inverter Transfor	W_INVTR3	369514	4906164	2	0	0	77.3	77.3	1	4063.34	3.25	0	83.18	0	-2.98	0	0	2.08	0	0	0	0	0	0	-4.94	-4.94
Westbrook Inverter Transfor	W_INVTR2	369368	4906388	2	0	0	77.3	77.3	1	4108.83	3.25	0	83.27	0	-2.99	0	0	2.1	0	0	0	0	0	0	-5.04	-5.04
Westbrook Inverter Transfor	W_INVTR4	369679	4906164	2	0	0	77.3	77.3	1	4189.19	3.25	0	83.44	0	-3.01	0	0	2.13	0	0	0	0	0	0	-5.22	-5.22
Westbrook Inverter Transfor	W_INVTR7	369786	4906417	2	0	0	77.3	77.3	1	4434.62	3.25	0	83.94	0	-3.06	0	0	2.21	0	0	0	0	0	0	-5.75	-5.75
Westbrook Inverter Transfor	W_INVTR5	369725	4906574	2	0	0	77.3	77.3	1	4494.92	3.25	0	84.05	0	-3.07	0	0	2.24	0	0	0	0	0	0	-5.88	-5.88
Westbrook Inverter Transfor	W_INVTR6	369881	4906578	2	0	0	77.3	77.3	1	4612.52	3.25	0	84.28	0	-3.1	0	0	2.28	0	0	0	0	0	0	-6.12	-6.12
Inverter Transformer	MV1-14 T	365157	4905049	2	0	0	69.4	69.4	1	2020.22	3.25	0	77.11	0	2.18	0	0	4.99	0	0	0	0	0	0	-14.92	-14.92
Inverter Transformer	MV1-13 T	364725	4905241	2	0	0	69.4	69.4	1	2453.07	3.25	0	78.79	0	2.33	0	0	5.4	0	0	0	0	0	0	-17.18	-17.18
Inverter Transformer	MV1-10 T	365010	4905564	2	0	0	69.4	69.4	1	2519.43	3.25	0	79.03	0	2.35	0	0	5.46	0	0	0	0	0	0	-17.49	-17.49
Inverter Transformer	MV1-7 T	364919	4905782	2	0	0	69.4	69.4	1	2750.79	3.25	0	79.79	0	2.43	0	0	5.67	0	0	0	0	0	0	-18.54	-18.54
Inverter Transformer	MV2-1 T	365836	4906816	2	0	0	69.4	69.4	1	3376.06	3.25	0	81.57	0	2.62	0	0	6.19	0	0	0	0	0	0	-21.03	-21.03
Inverter Transformer	MV6-4 T	370244	4906966	2	0	0	69.4	69.4	1	5142.05	3.25	0	85.22	0	3.04	0	0	7.48	0	0	0	0	0	0	-26.39	-26.39
Inverter Transformer	MV6-1 T	370230	4907364	2	0	0	69.4	69.4	1	5408.8	3.25	0	85.66	0	3.09	0	0	7.65	0	0	0	0	0	0	-27.05	-27.05
Inverter Transformer	MV1-15 T	365309	4904994	2	0	0	56.1	56.1	1	1882.49	3.25	0	76.49	0	0.35	0	0	6.81	0	0	0	0	0	0	-27.6	-27.6
Inverter Transformer	MV1-12 T	365044	4905386	2	0	0	56.1	56.1	1	2355.06	3.25	0	78.44	0	0.55	0	0	7.72	0	0	0	0	0	0	-30.66	-30.66

	Inverter Transformer	MV1-11 T	364649	4905414	2	0	0	56.1	56.1	1	2630.41	3.25	0	79.4	0	0.67	0	0	8.22	0	0	0	0	0	0	-32.24	-32.24
	Inverter Transformer	MV1-8 T	364782	4905647	2	0	0	56.1	56.1	1	2721.38	3.25	0	79.7	0	0.71	0	0	8.39	0	0	0	0	0	0	-32.73	-32.73
	Inverter Transformer	MV1-9 T	364555	4905646	2	0	0	56.1	56.1	1	2865.32	3.25	0	80.14	0	0.77	0	0	8.64	0	0	0	0	0	0	-33.5	-33.5
	Inverter Transformer	MV1-4 T	364821	4905918	2	0	0	56.1	56.1	1	2918.33	3.25	0	80.3	0	0.8	0	0	8.73	0	0	0	0	0	0	-33.77	-33.77
	Inverter Transformer	MV1-5 T	364676	4905892	2	0	0	56.1	56.1	1	2980.7	3.25	0	80.49	0	0.82	0	0	8.84	0	0	0	0	0	0	-34.08	-34.08
	Inverter Transformer	MV1-6 T	364482	4905835	2	0	0	56.1	56.1	1	3056.2	3.25	0	80.7	0	0.85	0	0	8.96	0	0	0	0	0	0	-34.46	-34.46
	Inverter Transformer	MV1-2 T	364759	4906063	2	0	0	56.1	56.1	1	3073.4	3.25	0	80.75	0	0.86	0	0	8.99	0	0	0	0	0	0	-34.55	-34.55
	Inverter Transformer	MV1-1 T	364721	4906166	2	0	0	56.1	56.1	1	3180.42	3.25	0	81.05	0	0.91	0	0	9.17	0	0	0	0	0	0	-35.07	-35.07
	Inverter Transformer	MV2-2 T	365982	4906654	2	0	0	56.1	56.1	1	3192.27	3.25	0	81.08	0	0.91	0	0	9.19	0	0	0	0	0	0	-35.12	-35.12
	Inverter Transformer	MV2-3 T	365814	4906641	2	0	0	56.1	56.1	1	3208.41	3.25	0	81.13	0	0.92	0	0	9.22	0	0	0	0	0	0	-35.2	-35.2
	Inverter Transformer	MV1-3 T	364435	4906039	2	0	0	56.1	56.1	1	3243.97	3.25	0	81.22	0	0.93	0	0	9.27	0	0	0	0	0	0	-35.37	-35.37
	Inverter Transformer	MV2-4 T	365590	4906628	2	0	0	56.1	56.1	1	3247.62	3.25	0	81.23	0	0.93	0	0	9.28	0	0	0	0	0	0	-35.39	-35.39
	Inverter Transformer	MV3-18 T	367757	4907412	2	0	0	56.1	56.1	1	4128.51	3.25	0	83.32	0	1.3	0	0	10.64	0	0	0	0	0	0	-39.2	-39.2
	Inverter Transformer	MV3-21 T	368484	4907206	2	0	0	56.1	56.1	1	4231.29	3.25	0	83.53	0	1.34	0	0	10.79	0	0	0	0	0	0	-39.6	-39.6
	Inverter Transformer	MV3-22 T	368661	4907142	2	0	0	56.1	56.1	1	4264.35	3.25	0	83.6	0	1.35	0	0	10.84	0	0	0	0	0	0	-39.73	-39.73
	Inverter Transformer	MV3-12 T	367674	4907594	2	0	0	56.1	56.1	1	4277.02	3.25	0	83.62	0	1.35	0	0	10.86	0	0	0	0	0	0	-39.78	-39.78
	Inverter Transformer	MV3-19 T	368352	4907347	2	0	0	56.1	56.1	1	4295.36	3.25	0	83.66	0	1.36	0	0	10.89	0	0	0	0	0	0	-39.85	-39.85
	Inverter Transformer	MV3-17 T	368183	4907472	2	0	0	56.1	56.1	1	4337.49	3.25	0	83.74	0	1.38	0	0	10.95	0	0	0	0	0	0	-40.01	-40.01
	Inverter Transformer	MV3-13 T	367958	4907577	2	0	0	56.1	56.1	1	4350.89	3.25	0	83.77	0	1.38	0	0	10.97	0	0	0	0	0	0	-40.06	-40.06
	Inverter Transformer	MV3-15 T	368351	4907477	2	0	0	56.1	56.1	1	4411.85	3.25	0	83.89	0	1.41	0	0	11.05	0	0	0	0	0	0	-40.29	-40.29
	Inverter Transformer	MV3-20 T	368683	4907317	2	0	0	56.1	56.1	1	4425.96	3.25	0	83.92	0	1.41	0	0	11.07	0	0	0	0	0	0	-40.34	-40.34
	Inverter Transformer	MV3-16 T	368509	4907475	2	0	0	56.1	56.1	1	4480.45	3.25	0	84.03	0	1.43	0	0	11.15	0	0	0	0	0	0	-40.55	-40.55
	Inverter Transformer	MV3-10 T	368162	4907669	2	0	0	56.1	56.1	1	4510.74	3.25	0	84.08	0	1.44	0	0	11.19	0	0	0	0	0	0	-40.66	-40.66
	Inverter Transformer	MV3-7 T	367951	4907754	2	0	0	56.1	56.1	1	4514.99	3.25	0	84.09	0	1.45	0	0	11.2	0	0	0	0	0	0	-40.68	-40.68
	Inverter Transformer	MV3-11 T	368340	4907662	2	0	0	56.1	56.1	1	4574.92	3.25	0	84.21	0	1.47	0	0	11.28	0	0	0	0	0	0	-40.9	-40.9
	Inverter Transformer	MV3-14 T	368678	4907498	2	0	0	56.1	56.1	1	4580.69	3.25	0	84.22	0	1.47	0	0	11.29	0	0	0	0	0	0	-40.92	-40.92
	Inverter Transformer	MV3-6 T	368156	4907834	2	0	0	56.1	56.1	1	4661.6	3.25	0	84.37	0	1.5	0	0	11.4	0	0	0	0	0	0	-41.21	-41.21
	Inverter Transformer	MV3-3 T	367944	4907927	2	0	0	56.1	56.1	1	4676.25	3.25	0	84.4	0	1.51	0	0	11.42	0	0	0	0	0	0	-41.27	-41.27
	Inverter Transformer	MV3-9 T	368517	4907703	2	0	0	56.1	56.1	1	4687.62	3.25	0	84.42	0	1.51	0	0	11.43	0	0	0	0	0	0	-41.31	-41.31
	Inverter Transformer	MV3-5 T	368335	4907843	2	0	0	56.1	56.1	1	4738.33	3.25	0	84.51	0	1.53	0	0	11.5	0	0	0	0	0	0	-41.49	-41.49
	Inverter Transformer	MV3-8 T	368685	4907712	2	0	0	56.1	56.1	1	4772.07	3.25	0	84.57	0	1.54	0	0	11.55	0	0	0	0	0	0	-41.61	-41.61
	Inverter Transformer	MV3-1 T	368150	4907976	2	0	0	56.1	56.1	1	4791.89	3.25	0	84.61	0	1.55	0	0	11.58	0	0	0	0	0	0	-41.68	-41.68
	Inverter Transformer	MV3-4 T	368507	4907925	2	0	0	56.1	56.1	1	4883.62	3.25	0	84.77	0	1.58	0	0	11.7	0	0	0	0	0	0	-42	-42
	Inverter Transformer	MV3-2 T	368677	4907928	2	0	0	56.1	56.1	1	4960.33	3.25	0	84.91	0	1.61	0	0	11.8	0	0	0	0	0	0	-42.26	-42.26
	Inverter Transformer	MV6-3 T	370202	4907140	2	0	0	56.1	56.1	1	5230.82	3.25	0	85.37	0	1.71	0	0	12.15	0	0	0	0	0	0	-43.18	-43.18
	Inverter Transformer	MV6-2 T	370091	4907339	2	0	0	56.1	56.1	1	5294.39	3.25	0	85.48	0	1.73	0	0	12.24	0	0	0	0	0	0	-43.38	-43.38
	Inverter Transformer	MV4-15 T	369170	4908481	2	0	0	56.1	56.1	1	5679.08	3.25	0	86.09	0	1.86	0	0	12.72	0	0	0	0	0	0	-44.6	-44.6
	Inverter Transformer	MV4-14 T	369182	4908507	2	0	0	56.1	56.1	1	5707.65	3.25	0	86.13	0	1.87	0	0	12.75	0	0	0	0	0	0	-44.69	-44.69
	Inverter Transformer	MV4-13 T	369057	4908605	2	0	0	56.1	56.1	1	5735.98	3.25	0	86.17	0	1.88	0	0	12.79	0	0	0	0	0	0	-44.78	-44.78
	Inverter Transformer	MV4-12 T	369049	4908803	2	0	0	56.1	56.1	1	5909.5	3.25	0	86.43	0	1.94	0	0	13	0	0	0	0	0	0	-45.3	-45.3
	Inverter Transformer	MV4-11 T	369269	4908855	2	0	0	56.1	56.1	1	6055.5	3.25	0	86.64	0	1.98	0	0	13.17	0	0	0	0	0	0	-45.74	-45.74
	Inverter Transformer	MV4-10 T	369307	4908858	2	0	0	56.1	56.1	1	6075.94	3.25	0	86.67	0	1.99	0	0	13.19	0	0	0	0	0	0	-45.79	-45.79
	Inverter Transformer	MV4-7 T	369040	4909001	2	0	0	56.1	56.1	1	6084.09	3.25	0	86.68	0	1.99	0	0	13.2	0	0	0	0	0	0	-45.82	-45.82
	Inverter Transformer	MV5-6 T	369987	4908507	2	0	0	56.1	56.1	1	6133.93	3.25	0	86.75	0	2.01	0	0	13.26	0	0	0	0	0	0	-45.96	-45.96
	Inverter Transformer	MV4-8 T	369262	4909001	2	0	0	56.1	56.1	1	6181.89	3.25	0	86.82	0	2.02	0	0	13.32	0	0	0	0	0	0	-46.1	-46.1
	Inverter Transformer	MV4-9 T	369284	4909001	2	0	0	56.1	56.1	1	6191.93	3.25	0	86.84	0	2.02	0	0	13.33	0	0	0	0	0	0	-46.13	-46.13
	Inverter Transformer	MV4-4 T	369033	4909199	2	0	0	56.1	56.1	1	6260.92	3.25	0	86.93	0	2.05	0	0	13.41	0	0	0	0	0	0	-46.33	-46.33
	Inverter Transformer	MV5-5 T	370021	4908690	2	0	0	56.1	56.1	1	6303.52	3.25	0	86.99	0	2.06	0	0	13.46	0	0	0	0	0	0	-46.45	-46.45
	Inverter Transformer	MV4-6 T	369249	4909192	2	0	0	56.1	56.1	1	6346.82	3.25	0	87.05	0	2.07	0	0	13.51	0	0	0	0	0	0	-46.57	-46.57
	Inverter Transformer	MV4-5 T	369283	4909199	2	0	0	56.1	56.1	1	6368.16	3.25	0	87.08	0	2.08	0	0	13.53	0	0	0	0	0	0	-46.63	-46.63
	Inverter Transformer	MV5-2 T	370011	4908853	2	0	0	56.1	56.1	1	6432.95	3.25	0	87.17	0	2.1	0	0	13.6	0	0	0	0	0	0	-46.81	-46.81
	Inverter Transformer	MV4-1 T	369017	4909397	2	0	0	56.1	56.1	1	6435.39	3.25	0	87.17	0	2.1	0	0	13.61	0	0	0	0	0	0	-46.82	-46.82
	Inverter Transformer	MV5-4 T	370330	4908707	2	0	0	56.1	56.1	1	6497.24	3.25	0	87.25	0	2.12	0	0	13.68	0	0	0	0	0	0	-46.99	-46.99
	Inverter Transformer	MV4-3 T	369234	4909397	2	0	0	56.1	56.1	1	6525.01	3.25	0	87.29	0	2.13	0	0	13.71	0	0	0	0	0	0	-47.07	-47.07
	Inverter Transformer	MV4-2 T	369267	4909397	2	0	0	56.1	56.1	1	6539.16	3.25	0	87.31	0	2.13	0	0	13.72	0	0	0	0	0	0	-47.11	-47.11
	Inverter Transformer	MV5-3 T	370237	4908851	2	0	0	56.1	56.1	1	6559.15	3.25	0	87.34	0	2.14	0	0	13.75	0	0	0	0	0	0	-47.16	-47.16
	Inverter Transformer	MV5-1 T	370015	4909142	2	0	0	56.1	56.1	1	6677.66	3.25	0	87.49	0	2.17	0	0	13.88	0	0	0	0	0	0	-47.48	-47.48
	Line Reactor	NGR	369421	4908787.5	5	0	0	45.4	45.4	1	6068.81	5.25	0	86.66	0	3.24	1.36	0.1	2.48	0	0	0	0	0	0	-48.39	-48.39
Limit. Valu	0	0																								
Level D/N:	31.4551	31.4551																								

Receiver: Existing Noise Receptor
ID: G-15
X: 367239.6
Y: 4903233.1
Z: 4.5
Ground: 0

ISO	Description	ID	X	Y	Z	Ground	ReflOrd	LxT	LxN	L/A	Dist.	hm	Freq	Adiv	K0b	Agr	Abar	z	Aatm	Afol	Ahous	Cmet	CmetN	Dc	RL	LtotT	LtotN
	Sol_Luce Substation	S_Substation	369426	4908792	3.5	0	0	112.1	112.1	1	5973.42	5.25	0	86.52	0	1.15	2.65	0.33	9.71	0	0	0	0	0	0	12.04	12.04
	Gardiner Substation	G_Sub	366586.3	4903349.9	2.5	0	0	90.8	90.8	1	663.66	4.24	0	67.44	0	0.38	4.13	0.3	1.81	0	0	0	0	0	0	17.02	17.02
	Inverters	G_Inv6	366788.5	4902972	2	0	0	87.7	87.7	1	521.22	3.25	0	65.34	0	2.4	0	0	0.79	0	0	0	0	0	0	19.13	19.13
	Inverters	G_Inv4	366732.8	4903105	2	0	0	87.7	87.7	1	522.74	3.25	0	65.37	0	2.4	0	0	0.79	0	0	0	0	0	0	19.1	19.1
	Inverters	G_Inv8	366844.5	4902838.5	2	0	0	87.7	87.7	1	558.41	3.25	0	65.94	0	2.4	0	0	0.84	0	0	0	0	0	0	18.48	18.48

Inverters	G_Inv2	366676.9	4903239.1	2	0	0	87.7	87.7	1	562.74	3.25	0	66.01	0	2.4	0	0	0.85	0	0	0	0	0	0	18.41	18.41
Inverter	MV1-15	365315	4904994	2	0	0	100.3	100.3	1	2608.61	3.25	0	79.33	0	0.28	0	0	14.66	0	0	0	0	0	0	6.04	6.04
Inverters	G_Inv10	366900.7	4902704.8	2	0	0	87.7	87.7	1	627.66	3.25	0	66.95	0	2.4	0	0	0.94	0	0	0	0	0	0	17.37	17.37
Inverters	G_Inv5	366638.5	4902958.1	2	0	0	87.7	87.7	1	661.02	3.25	0	67.4	0	2.4	0	0	0.98	0	0	0	0	0	0	16.87	16.87
Inverters	G_Inv3	366583.7	4903091.4	2	0	0	87.7	87.7	1	671.04	3.25	0	67.53	0	2.4	0	0	1	0	0	0	0	0	0	16.72	16.72
Inverters	G_Inv7	366694.6	4902824.7	2	0	0	87.7	87.7	1	681.04	3.25	0	67.66	0	2.4	0	0	1.01	0	0	0	0	0	0	16.58	16.58
Inverters	G_Inv1	366526.4	4903225.8	2	0	0	87.7	87.7	1	713.24	3.25	0	68.06	0	2.41	0	0	1.05	0	0	0	0	0	0	16.13	16.13
Inverter	MV1-12	365038	4905386	2	0	0	100.3	100.3	1	3079.29	3.25	0	80.77	0	0.38	0	0	15.51	0	0	0	0	0	0	3.65	3.65
Inverters	G_Inv9	366750.9	4902691.8	2	0	0	87.7	87.7	1	729.27	3.25	0	68.26	0	2.41	0	0	1.08	0	0	0	0	0	0	15.92	15.92
Inverter	MV1-11	364655	4905414	2	0	0	100.3	100.3	1	3381.79	3.25	0	81.58	0	0.43	0	0	16.03	0	0	0	0	0	0	2.27	2.27
Inverter	MV1-8	364788	4905647	2	0	0	100.3	100.3	1	3440.53	3.25	0	81.73	0	0.44	0	0	16.13	0	0	0	0	0	0	2.01	2.01
Inverter	MV1-9	364561	4905646	2	0	0	100.3	100.3	1	3605.13	3.25	0	82.14	0	0.47	0	0	16.41	0	0	0	0	0	0	1.3	1.3
Inverter	MV1-4	364815	4905918	2	0	0	100.3	100.3	1	3617.65	3.25	0	82.17	0	0.47	0	0	16.43	0	0	0	0	0	0	1.25	1.25
Inverter	MV2-3	365820	4906641	2	0	0	100.3	100.3	1	3691.75	3.25	0	82.34	0	0.48	0	0	16.55	0	0	0	0	0	0	0.94	0.94
Inverter	MV1-5	364671	4905892	2	0	0	100.3	100.3	1	3696.95	3.25	0	82.36	0	0.48	0	0	16.56	0	0	0	0	0	0	0.91	0.91
Inverter	MV1-2	364753	4906063	2	0	0	100.3	100.3	1	3767.16	3.25	0	82.52	0	0.49	0	0	16.67	0	0	0	0	0	0	0.63	0.63
Inverter	MV2-4	365586	4906624	2	0	0	100.3	100.3	1	3772.61	3.25	0	82.53	0	0.49	0	0	16.68	0	0	0	0	0	0	0.6	0.6
Inverter	MV1-6	364477	4905835	2	0	0	100.3	100.3	1	3794.98	3.25	0	82.58	0	0.5	0	0	16.72	0	0	0	0	0	0	0.51	0.51
Inverter	MV1-1	364715	4906166	2	0	0	100.3	100.3	1	3869.82	3.25	0	82.75	0	0.51	0	0	16.84	0	0	0	0	0	0	0.21	0.21
Inverter	MV1-14	365163	4905049	2	0	0	97.3	97.3	1	2758.58	3.25	0	79.81	0	0.31	0	0	14.94	0	0	0	0	0	0	2.25	2.25
Inverter	MV3-21	368478	4907206	2	0	0	100.3	100.3	1	4161.44	3.25	0	83.38	0	0.55	0	0	17.3	0	0	0	0	0	0	-0.93	-0.93
Inverter	MV3-18	367752	4907412	2	0	0	100.3	100.3	1	4210.2	3.25	0	83.49	0	0.56	0	0	17.38	0	0	0	0	0	0	-1.11	-1.11
Inverter	MV3-19	368357	4907347	2	0	0	100.3	100.3	1	4262.95	3.25	0	83.59	0	0.56	0	0	17.46	0	0	0	0	0	0	-1.31	-1.31
Inverter	MV3-20	368689	4907317	2	0	0	100.3	100.3	1	4333.48	3.25	0	83.74	0	0.57	0	0	17.57	0	0	0	0	0	0	-1.57	-1.57
Inverter	MV3-17	368178	4907472	2	0	0	100.3	100.3	1	4341.53	3.25	0	83.75	0	0.57	0	0	17.59	0	0	0	0	0	0	-1.6	-1.6
Inverter	MV3-12	367668	4907594	2	0	0	100.3	100.3	1	4381.89	3.25	0	83.83	0	0.58	0	0	17.65	0	0	0	0	0	0	-1.75	-1.75
Inverter	MV3-15	368357	4907477	2	0	0	100.3	100.3	1	4388.54	3.25	0	83.85	0	0.58	0	0	17.66	0	0	0	0	0	0	-1.77	-1.77
Inverter	MV3-13	367963	4907577	2	0	0	100.3	100.3	1	4403.72	3.25	0	83.88	0	0.58	0	0	17.68	0	0	0	0	0	0	-1.83	-1.83
Inverter	MV3-16	368514	4907475	2	0	0	100.3	100.3	1	4429.2	3.25	0	83.93	0	0.58	0	0	17.72	0	0	0	0	0	0	-1.92	-1.92
Inverter	MV3-14	368684	4907498	2	0	0	100.3	100.3	1	4502.85	3.25	0	84.07	0	0.59	0	0	17.83	0	0	0	0	0	0	-2.18	-2.18
Inverter	MV3-10	368167	4907669	2	0	0	100.3	100.3	1	4531.81	3.25	0	84.13	0	0.59	0	0	17.88	0	0	0	0	0	0	-2.29	-2.29
Inverter	MV1-13	364731	4905241	2	0	0	97.3	97.3	1	3213.21	3.25	0	81.14	0	0.4	0	0	15.74	0	0	0	0	0	0	0.03	0.03
Inverter	MV1-10	365004	4905564	2	0	0	97.3	97.3	1	3229.71	3.25	0	81.18	0	0.4	0	0	15.77	0	0	0	0	0	0	-0.05	-0.05
Inverter	MV3-11	368346	4907662	2	0	0	100.3	100.3	1	4565.01	3.25	0	84.19	0	0.6	0	0	17.93	0	0	0	0	0	0	-2.4	-2.4
Inverter	MV3-7	367945	4907754	2	0	0	100.3	100.3	1	4575.6	3.25	0	84.21	0	0.6	0	0	17.95	0	0	0	0	0	0	-2.44	-2.44
Inverter	MV3-9	368512	4907703	2	0	0	100.3	100.3	1	4647.47	3.25	0	84.34	0	0.61	0	0	18.05	0	0	0	0	0	0	-2.69	-2.69
Inverter	MV3-6	368162	4907834	2	0	0	100.3	100.3	1	4692.45	3.25	0	84.43	0	0.61	0	0	18.12	0	0	0	0	0	0	-2.85	-2.85
Inverter	MV3-8	368680	4907712	2	0	0	100.3	100.3	1	4704.82	3.25	0	84.45	0	0.61	0	0	18.14	0	0	0	0	0	0	-2.89	-2.89
Inverter	MV3-3	367939	4907927	2	0	0	100.3	100.3	1	4745.72	3.25	0	84.53	0	0.62	0	0	18.2	0	0	0	0	0	0	-3.03	-3.03
Inverter	MV1-7	364925	4905782	2	0	0	97.3	97.3	1	3443	3.25	0	81.74	0	0.44	0	0	16.14	0	0	0	0	0	0	-1	-1
Inverter	MV6-3	370207	4907140	2	0	0	100.3	100.3	1	4906.05	3.25	0	84.81	0	0.63	0	0	18.44	0	0	0	0	0	0	-3.58	-3.58
Inverter	MV6-2	370085	4907339	2	0	0	100.3	100.3	1	4995.47	3.25	0	84.97	0	0.64	0	0	18.57	0	0	0	0	0	0	-3.87	-3.87
Inverter	MV2-1	365842	4906816	2	0	0	97.3	97.3	1	3845.84	3.25	0	82.7	0	0.5	0	0	16.8	0	0	0	0	0	0	-2.69	-2.69
Inverter	MV4-11	369264	4908855	2	0	0	100.3	100.3	1	5975.28	3.25	0	86.53	0	0.7	0	0	19.96	0	0	0	0	0	0	-6.88	-6.88
Inverter	MV4-10	369312	4908858	2	0	0	100.3	100.3	1	5994.53	3.25	0	86.56	0	0.7	0	0	19.99	0	0	0	0	0	0	-6.93	-6.93
Inverter	MV4-7	369035	4909001	2	0	0	100.3	100.3	1	6040.87	3.25	0	86.62	0	0.71	0	0	20.05	0	0	0	0	0	0	-7.06	-7.06
Inverter	MV4-8	369256	4909001	2	0	0	100.3	100.3	1	6110.2	3.25	0	86.72	0	0.71	0	0	20.14	0	0	0	0	0	0	-7.26	-7.26
Inverter	MV4-9	369289	4909001	2	0	0	100.3	100.3	1	6121.17	3.25	0	86.74	0	0.71	0	0	20.16	0	0	0	0	0	0	-7.29	-7.29
Inverter	MV5-5	370015	4908690	2	0	0	100.3	100.3	1	6122.14	3.25	0	86.74	0	0.71	0	0	20.16	0	0	0	0	0	0	-7.29	-7.29
Inverter	MV4-4	369027	4909199	2	0	0	100.3	100.3	1	6227.9	3.25	0	86.89	0	0.71	0	0	20.3	0	0	0	0	0	0	-7.59	-7.59
Inverter	MV5-2	370006	4908853	2	0	0	100.3	100.3	1	6263.88	3.25	0	86.94	0	0.71	0	0	20.35	0	0	0	0	0	0	-7.68	-7.68
Inverter	MV5-4	370324	4908707	2	0	0	100.3	100.3	1	6283.08	3.25	0	86.96	0	0.71	0	0	20.37	0	0	0	0	0	0	-7.74	-7.74
Inverter	MV4-6	369243	4909192	2	0	0	100.3	100.3	1	6286.66	3.25	0	86.97	0	0.71	0	0	20.38	0	0	0	0	0	0	-7.75	-7.75
Inverter	MV4-5	369289	4909199	2	0	0	100.3	100.3	1	6308.09	3.25	0	87	0	0.71	0	0	20.41	0	0	0	0	0	0	-7.81	-7.81
Inverter	MV5-3	370231	4908851	2	0	0	100.3	100.3	1	6364.69	3.25	0	87.08	0	0.71	0	0	20.48	0	0	0	0	0	0	-7.96	-7.96
Inverter	MV4-1	369011	4909397	2	0	0	100.3	100.3	1	6413.39	3.25	0	87.14	0	0.71	0	0	20.55	0	0	0	0	0	0	-8.09	-8.09
Inverter	MV4-3	369229	4909397	2	0	0	100.3	100.3	1	6476.99	3.25	0	87.23	0	0.71	0	0	20.63	0	0	0	0	0	0	-8.26	-8.26
Inverter	MV4-2	369272	4909397	2	0	0	100.3	100.3	1	6490.33	3.25	0	87.25	0	0.71	0	0	20.65	0	0	0	0	0	0	-8.29	-8.29
Inverter	MV5-1	370020	4909142	2	0	0	100.3	100.3	1	6530.37	3.25	0	87.3	0	0.71	0	0	20.7	0	0	0	0	0	0	-8.4	-8.4
Inverter	MV6-1	370235	4907364	2	0	0	97.3	97.3	1	5102.62	3.25	0	85.16	0	0.65	0	0	18.73	0	0	0	0	0	0	-7.23	-7.23
DSTATCOM - 10 MVAR #2	DSAT2	369403	4908757	2.5	0	0	96.6	96.6	1	5932.43	3.5	0	86.46	0	3.77	0	0	3.81	0	0	0	0	0	0	2.59	2.59
DSTATCOM - 10 MVAR #1	DSAT1	369437	4908757	2.5	0	0	96.6	96.6	1	5944.92	3.5	0	86.48	0	3.77	0	0	3.81	0	0	0	0	0	0	2.57	2.57
SubstationTransformer	W_ST	369711.17	4906112.3	2.5	0	0	92	92	1	3794.51	3.5	0	82.58	0	0.28	0	-0.11	7.09	0	0	0	0	0	0	2.02	2.02
Inverter	MV2-2	365977	4906654	2	0	0	89.1	89.1	1	3646.47	3.25	0	82.24	0	1.31	0	0	10.58	0	0	0	0	0	0	-5.06	-5.06
Westbrook Inverter Enclosur	W_INV3	369508	4906164	2	0	0	89.1	89.1	1	3706.19	3.25	0	82.38	0	1.32	0	0	10.66	0	0	0	0	0	0	-5.3	-5.3
Westbrook Inverter Enclosur	W_INV2	369374	4906388	2	0	0	89.1	89.1	1	3809.08	3.25	0	82.62	0	1.35	0	0	10.81	0	0	0	0	0	0	-5.72	-5.72
Westbrook Inverter Enclosur	W_INV4	369673	4906164	2	0	0	89.1	89.1	1	3809.41	3.25	0	82.62	0	1.35	0	0	10.81	0	0	0	0	0	0	-5.72	-5.72
Inverter	MV1-3	364440	4906039	2	0	0	89.1	89.1	1	3963.69	3.25	0	82.96	0	1.38	0	0	11.03	0	0	0	0	0	0	-6.32	-6.32
Westbrook Inverter Enclosur	W_INV7	369780	4906417	2	0	0	89.1	89.1	1	4073.19	3.25	0	83.2	0	1.41	0	0	11.19	0	0	0	0	0	0	-6.74	-6.74
Inverter	MV3-22	368656	4907142	2	0	0	89.1	89.1	1	4157.61	3.25	0	83.38	0	1.43	0	0	11.31	0	0	0	0	0	0	-7.06	-7.06
Westbrook Inverter Enclosur	W_INV5	369719	4906574	2	0	0	89.1	89.1	1	4160.41	3.25	0	83.38	0	1.43	0	0	11.31	0	0	0	0	0	0	-7.07	-7.07
Westbrook Inverter Enclosur	W_INV6	369875	4906578	2	0	0	89.1	89.1	1	4258.37	3.25	0	83.58	0	1.46	0	0	11.45	0	0	0	0	0	0	-7.43	-7.43
Inverter	MV3-5	368340	4907843	2	0	0	89.1	89.1	1	4739.42	3.25	0	84.51	0	1.58	0	0	12.11	0	0	0	0	0	0	-9.14	-9.14
Inverter	MV3-1	368156	4907976	2	0	0	89.1	89.1	1	4830.62	3.25	0	84.68	0	1.6	0	0	12.24	0	0	0	0	0	0	-9.46	-9.46

Inverter	MV3-4	368502	4907925	2	0	0	89.1	89.1	1	4858.76	3.25	0	84.73	0	1.6	0	0	12.27	0	0	0	0	0	0	-9.55	-9.55
Inverter	MV3-2	368671	4907928	2	0	0	89.1	89.1	1	4908.26	3.25	0	84.82	0	1.62	0	0	12.34	0	0	0	0	0	0	-9.72	-9.72
Fixed Reactor Bank 1	FRB1	369378	4908755	6	0	0	89.8	89.8	1	5921.5	5.25	0	86.45	0	-0.43	0	0	9.66	0	0	0	0	0	0	-5.9	-5.9
Fixed Reactor Bank 2	FRB2	369464	4908755	6	0	0	89.8	89.8	1	5953.09	5.25	0	86.49	0	-0.42	0	0	9.69	0	0	0	0	0	0	-5.99	-5.99
Inverter	MV4-15	369176	4908481	2	0	0	89.1	89.1	1	5593.76	3.25	0	85.95	0	1.79	0	0	13.24	0	0	0	0	0	0	-11.93	-11.93
Inverter	MV4-14	369176	4908507	2	0	0	89.1	89.1	1	5618.16	3.25	0	85.99	0	1.79	0	0	13.28	0	0	0	0	0	0	-12	-12
Westbrook Inverter Enclosur	W_INV1	369409	4906578	2	0	0	86.1	86.1	1	3986.81	3.25	0	83.01	0	1.39	0	0	11.07	0	0	0	0	0	0	-9.41	-9.41
Inverter	MV4-13	369051	4908605	2	0	0	89.1	89.1	1	5669.08	3.25	0	86.07	0	1.8	0	0	13.34	0	0	0	0	0	0	-12.16	-12.16
Inverter	MV4-12	369043	4908803	2	0	0	89.1	89.1	1	5854.57	3.25	0	86.35	0	1.85	0	0	13.58	0	0	0	0	0	0	-12.72	-12.72
Inverter	MV5-6	369982	4908507	2	0	0	89.1	89.1	1	5944.31	3.25	0	86.48	0	1.87	0	0	13.69	0	0	0	0	0	0	-12.99	-12.99
Inverter	MV6-4	370250	4906966	2	0	0	86.1	86.1	1	4795.52	3.25	0	84.62	0	1.59	0	0	12.19	0	0	0	0	0	0	-12.34	-12.34
Westbrook Inverter Transfor	W_INVTR1	369403	4906578	2	0	0	78.2	78.2	1	3983.55	3.25	0	83.01	0	-2.96	0	0	2.05	0	0	0	0	0	0	-3.85	-3.85
Westbrook Inverter Transfor	W_INVTR3	369514	4906164	2	0	0	77.3	77.3	1	3709.86	3.25	0	82.39	0	-2.9	0	0	1.94	0	0	0	0	0	0	-4.09	-4.09
Westbrook Inverter Transfor	W_INVTR2	369368	4906388	2	0	0	77.3	77.3	1	3805.72	3.25	0	82.61	0	-2.92	0	0	1.98	0	0	0	0	0	0	-4.33	-4.33
Westbrook Inverter Transfor	W_INVTR4	369679	4906164	2	0	0	77.3	77.3	1	3813.25	3.25	0	82.63	0	-2.92	0	0	1.98	0	0	0	0	0	0	-4.35	-4.35
Westbrook Inverter Transfor	W_INVTR7	369786	4906417	2	0	0	77.3	77.3	1	4076.93	3.25	0	83.21	0	-2.98	0	0	2.08	0	0	0	0	0	0	-4.97	-4.97
Westbrook Inverter Transfor	W_INVTR5	369725	4906574	2	0	0	77.3	77.3	1	4163.99	3.25	0	83.39	0	-3	0	0	2.12	0	0	0	0	0	0	-5.16	-5.16
Westbrook Inverter Transfor	W_INVTR6	369881	4906578	2	0	0	77.3	77.3	1	4262.08	3.25	0	83.59	0	-3.02	0	0	2.15	0	0	0	0	0	0	-5.38	-5.38
Inverter Transformer	MV1-14 T	365157	4905049	2	0	0	69.4	69.4	1	2763.1	3.25	0	79.83	0	2.43	0	0	5.68	0	0	0	0	0	0	-18.59	-18.59
Inverter Transformer	MV1-13 T	364725	4905241	2	0	0	69.4	69.4	1	3217.9	3.25	0	81.15	0	2.57	0	0	6.06	0	0	0	0	0	0	-20.44	-20.44
Inverter Transformer	MV1-10 T	365010	4905564	2	0	0	69.4	69.4	1	3225.56	3.25	0	81.17	0	2.57	0	0	6.07	0	0	0	0	0	0	-20.47	-20.47
Inverter Transformer	MV1-7 T	364919	4905782	2	0	0	69.4	69.4	1	3447.04	3.25	0	81.75	0	2.64	0	0	6.25	0	0	0	0	0	0	-21.29	-21.29
Inverter Transformer	MV2-1 T	365836	4906816	2	0	0	69.4	69.4	1	3848.02	3.25	0	82.7	0	2.75	0	0	6.56	0	0	0	0	0	0	-22.66	-22.66
Inverter Transformer	MV6-4 T	370244	4906966	2	0	0	69.4	69.4	1	4791.76	3.25	0	84.61	0	2.97	0	0	7.24	0	0	0	0	0	0	-25.47	-25.47
Inverter Transformer	MV6-1 T	370230	4907364	2	0	0	69.4	69.4	1	5099.69	3.25	0	85.15	0	3.03	0	0	7.45	0	0	0	0	0	0	-26.28	-26.28
Inverter Transformer	MV1-15 T	365309	4904994	2	0	0	56.1	56.1	1	2613.04	3.25	0	79.34	0	0.66	0	0	8.19	0	0	0	0	0	0	-32.14	-32.14
Inverter Transformer	MV1-12 T	365044	4905386	2	0	0	56.1	56.1	1	3075	3.25	0	80.76	0	0.86	0	0	8.99	0	0	0	0	0	0	-34.55	-34.55
Inverter Transformer	MV1-11 T	364649	4905414	2	0	0	56.1	56.1	1	3386.38	3.25	0	81.59	0	0.99	0	0	9.51	0	0	0	0	0	0	-36.04	-36.04
Inverter Transformer	MV1-8 T	364782	4905647	2	0	0	56.1	56.1	1	3444.81	3.25	0	81.74	0	1.02	0	0	9.6	0	0	0	0	0	0	-36.3	-36.3
Inverter Transformer	MV1-9 T	364555	4905646	2	0	0	56.1	56.1	1	3609.59	3.25	0	82.15	0	1.09	0	0	9.86	0	0	0	0	0	0	-37.04	-37.04
Inverter Transformer	MV1-4 T	364821	4905918	2	0	0	56.1	56.1	1	3613.63	3.25	0	82.16	0	1.09	0	0	9.87	0	0	0	0	0	0	-37.05	-37.05
Inverter Transformer	MV2-2 T	365982	4906654	2	0	0	56.1	56.1	1	3644.74	3.25	0	82.23	0	1.1	0	0	9.91	0	0	0	0	0	0	-37.19	-37.19
Inverter Transformer	MV1-5 T	364676	4905892	2	0	0	56.1	56.1	1	3693.48	3.25	0	82.35	0	1.12	0	0	9.99	0	0	0	0	0	0	-37.4	-37.4
Inverter Transformer	MV2-3 T	365814	4906641	2	0	0	56.1	56.1	1	3694.07	3.25	0	82.35	0	1.12	0	0	9.99	0	0	0	0	0	0	-37.4	-37.4
Inverter Transformer	MV1-2 T	364759	4906063	2	0	0	56.1	56.1	1	3763.21	3.25	0	82.51	0	1.15	0	0	10.1	0	0	0	0	0	0	-37.7	-37.7
Inverter Transformer	MV2-4 T	365590	4906628	2	0	0	56.1	56.1	1	3774.46	3.25	0	82.54	0	1.15	0	0	10.11	0	0	0	0	0	0	-37.75	-37.75
Inverter Transformer	MV1-6 T	364482	4905835	2	0	0	56.1	56.1	1	3791.34	3.25	0	82.58	0	1.16	0	0	10.14	0	0	0	0	0	0	-37.82	-37.82
Inverter Transformer	MV1-1 T	364721	4906166	2	0	0	56.1	56.1	1	3865.91	3.25	0	82.75	0	1.19	0	0	10.25	0	0	0	0	0	0	-38.13	-38.13
Inverter Transformer	MV1-3 T	364435	4906039	2	0	0	56.1	56.1	1	3967.22	3.25	0	82.97	0	1.23	0	0	10.41	0	0	0	0	0	0	-38.55	-38.55
Inverter Transformer	MV3-22 T	368661	4907142	2	0	0	56.1	56.1	1	4159.31	3.25	0	83.38	0	1.31	0	0	10.69	0	0	0	0	0	0	-39.32	-39.32
Inverter Transformer	MV3-21 T	368484	4907206	2	0	0	56.1	56.1	1	4163.23	3.25	0	83.39	0	1.31	0	0	10.7	0	0	0	0	0	0	-39.33	-39.33
Inverter Transformer	MV3-18 T	367757	4907412	2	0	0	56.1	56.1	1	4210.81	3.25	0	83.49	0	1.33	0	0	10.76	0	0	0	0	0	0	-39.52	-39.52
Inverter Transformer	MV3-19 T	368352	4907347	2	0	0	56.1	56.1	1	4261.64	3.25	0	83.59	0	1.35	0	0	10.84	0	0	0	0	0	0	-39.72	-39.72
Inverter Transformer	MV3-20 T	368683	4907317	2	0	0	56.1	56.1	1	4331.47	3.25	0	83.73	0	1.37	0	0	10.94	0	0	0	0	0	0	-39.99	-39.99
Inverter Transformer	MV3-17 T	368183	4907472	2	0	0	56.1	56.1	1	4342.61	3.25	0	83.76	0	1.38	0	0	10.95	0	0	0	0	0	0	-40.03	-40.03
Inverter Transformer	MV3-12 T	367674	4907594	2	0	0	56.1	56.1	1	4382.48	3.25	0	83.83	0	1.39	0	0	11.01	0	0	0	0	0	0	-40.18	-40.18
Inverter Transformer	MV3-15 T	368351	4907477	2	0	0	56.1	56.1	1	4387.02	3.25	0	83.84	0	1.4	0	0	11.02	0	0	0	0	0	0	-40.2	-40.2
Inverter Transformer	MV3-13 T	367958	4907577	2	0	0	56.1	56.1	1	4402.9	3.25	0	83.87	0	1.4	0	0	11.04	0	0	0	0	0	0	-40.26	-40.26
Inverter Transformer	MV3-16 T	368509	4907475	2	0	0	56.1	56.1	1	4427.76	3.25	0	83.92	0	1.41	0	0	11.07	0	0	0	0	0	0	-40.35	-40.35
Inverter Transformer	MV3-14 T	368678	4907498	2	0	0	56.1	56.1	1	4500.93	3.25	0	84.07	0	1.44	0	0	11.18	0	0	0	0	0	0	-40.62	-40.62
Inverter Transformer	MV3-10 T	368162	4907669	2	0	0	56.1	56.1	1	4530.79	3.25	0	84.12	0	1.45	0	0	11.22	0	0	0	0	0	0	-40.73	-40.73
Inverter Transformer	MV3-11 T	368340	4907662	2	0	0	56.1	56.1	1	4563.56	3.25	0	84.19	0	1.46	0	0	11.26	0	0	0	0	0	0	-40.86	-40.86
Inverter Transformer	MV3-7 T	367951	4907754	2	0	0	56.1	56.1	1	4576.53	3.25	0	84.21	0	1.47	0	0	11.28	0	0	0	0	0	0	-40.9	-40.9
Inverter Transformer	MV3-9 T	368517	4907703	2	0	0	56.1	56.1	1	4648.85	3.25	0	84.35	0	1.5	0	0	11.38	0	0	0	0	0	0	-41.17	-41.17
Inverter Transformer	MV3-6 T	368156	4907834	2	0	0	56.1	56.1	1	4691.28	3.25	0	84.43	0	1.51	0	0	11.44	0	0	0	0	0	0	-41.32	-41.32
Inverter Transformer	MV3-8 T	368685	4907712	2	0	0	56.1	56.1	1	4706.35	3.25	0	84.45	0	1.52	0	0	11.46	0	0	0	0	0	0	-41.37	-41.37
Inverter Transformer	MV3-5 T	368335	4907843	2	0	0	56.1	56.1	1	4738.26	3.25	0	84.51	0	1.53	0	0	11.5	0	0	0	0	0	0	-41.49	-41.49
Inverter Transformer	MV3-3 T	367944	4907927	2	0	0	56.1	56.1	1	4746.46	3.25	0	84.53	0	1.53	0	0	11.51	0	0	0	0	0	0	-41.52	-41.52
Inverter Transformer	MV3-1 T	368150	4907976	2	0	0	56.1	56.1	1	4829.49	3.25	0	84.68	0	1.56	0	0	11.63	0	0	0	0	0	0	-41.81	-41.81
Inverter Transformer	MV3-4 T	368507	4907925	2	0	0	56.1	56.1	1	4860.07	3.25	0	84.73	0	1.57	0	0	11.67	0	0	0	0	0	0	-41.92	-41.92
Inverter Transformer	MV6-3 T	370202	4907140	2	0	0	56.1	56.1	1	4903.03	3.25	0	84.81	0	1.59	0	0	11.73	0	0	0	0	0	0	-42.07	-42.07
Inverter Transformer	MV3-2 T	368677	4907928	2	0	0	56.1	56.1	1	4910.01	3.25	0	84.82	0	1.59	0	0	11.73	0	0	0	0	0	0	-42.09	-42.09
Inverter Transformer	MV6-2 T	370091	4907339	2	0	0	56.1	56.1	1	4998.89	3.25	0	84.98	0	1.62	0	0	11.85	0	0	0	0	0	0	-42.4	-42.4
Inverter Transformer	MV4-15 T	369170	4908481	2	0	0	56.1	56.1	1	5591.68	3.25	0	85.95	0	1.83	0	0	12.61	0	0	0	0	0	0	-44.33	-44.33
Inverter Transformer	MV4-14 T	369182	4908507	2	0	0	56.1	56.1	1	5620.23	3.25	0	86	0	1.84	0	0	12.64	0	0	0	0	0	0	-44.42	-44.42
Inverter Transformer	MV4-13 T	369057	4908605	2	0	0	56.1	56.1	1	5671	3.25	0	86.07	0	1.86	0	0	12.71	0	0	0	0	0	0	-44.58	-44.58
Inverter Transformer	MV4-12 T	369049	4908803	2	0	0	56.1	56.1	1	5856.43	3.25	0	86.35	0	1.92	0	0	12.93	0	0	0	0	0	0	-45.14	-45.14
Inverter Transformer	MV5-6 T	369987	4908507	2	0	0	56.1	56.1	1	5946.62	3.25	0	86.49	0	1.95	0	0	13.04	0	0	0	0	0	0	-45.41	-45.41
Inverter Transformer	MV4-11 T	369269	4908855	2	0	0	56.1	56.1	1	5976.98	3.25	0	86.53	0	1.96	0	0	13.08	0	0	0	0	0	0	-45.5	-45.5
Inverter Transformer	MV4-10 T	369307	4908858	2	0	0	56.1	56.1	1	5992.8	3.25	0	86.55	0	1.96	0	0	13.09	0	0	0	0	0	0	-45.55	-45.55
Inverter Transformer	MV4-7 T	369040	4909001	2	0	0	56.1	56.1	1	6042.36	3.25	0	86.62	0	1.98	0	0	13.15	0	0	0	0	0	0	-45.7	-45.7
Inverter Transformer	MV4-8 T	369262	4909001	2	0	0	56.1	56.1	1	6112.18	3.25	0	86.72	0	2	0	0	13.23	0	0	0	0	0	0	-45.9	-45.9
Inverter Transformer	MV4-9 T	369284	4909001	2	0	0	56.1	56.1	1	6119.5	3.25	0	86.73	0	2	0	0	13.24	0	0	0	0	0	0	-45.92	-45.92
Inverter Transformer	MV5-5 T	370021	4908690	2	0	0	56.1	56.1	1	6124.86	3.25	0	86.74	0	2	0	0	13.25	0	0	0	0	0	0	-45.94	-45.94

	Inverter Transformer	MV4-4 T	369033	4909199	2	0	0	56.1	56.1	1	6229.63	3.25	0	86.89	0	2.04	0	0	13.37	0	0	0	0	0	0	-46.24	-46.24
	Inverter Transformer	MV5-2 T	370011	4908853	2	0	0	56.1	56.1	1	6266.09	3.25	0	86.94	0	2.05	0	0	13.41	0	0	0	0	0	0	-46.34	-46.34
	Inverter Transformer	MV5-4 T	370330	4908707	2	0	0	56.1	56.1	1	6286.03	3.25	0	86.97	0	2.05	0	0	13.44	0	0	0	0	0	0	-46.4	-46.4
	Inverter Transformer	MV4-6 T	369249	4909192	2	0	0	56.1	56.1	1	6288.58	3.25	0	86.97	0	2.05	0	0	13.44	0	0	0	0	0	0	-46.41	-46.41
	Inverter Transformer	MV4-5 T	369283	4909199	2	0	0	56.1	56.1	1	6306.14	3.25	0	87	0	2.06	0	0	13.46	0	0	0	0	0	0	-46.46	-46.46
	Inverter Transformer	MV5-3 T	370237	4908851	2	0	0	56.1	56.1	1	6367.51	3.25	0	87.08	0	2.08	0	0	13.53	0	0	0	0	0	0	-46.63	-46.63
	Inverter Transformer	MV4-1 T	369017	4909397	2	0	0	56.1	56.1	1	6415.05	3.25	0	87.14	0	2.09	0	0	13.58	0	0	0	0	0	0	-46.76	-46.76
	Inverter Transformer	MV4-3 T	369234	4909397	2	0	0	56.1	56.1	1	6478.53	3.25	0	87.23	0	2.11	0	0	13.66	0	0	0	0	0	0	-46.94	-46.94
	Inverter Transformer	MV4-2 T	369267	4909397	2	0	0	56.1	56.1	1	6488.76	3.25	0	87.24	0	2.11	0	0	13.67	0	0	0	0	0	0	-46.97	-46.97
	Inverter Transformer	MV5-1 T	370015	4909142	2	0	0	56.1	56.1	1	6528.24	3.25	0	87.3	0	2.13	0	0	13.71	0	0	0	0	0	0	-47.08	-47.08
	Line Reactor	NGR	369421	4908787.5	5	0	0	45.4	45.4	1	5967.4	5.25	0	86.52	0	3.24	1.36	0.11	2.44	0	0	0	0	0	0	-48.2	-48.2
Limit. Valu	0	0																								
Level D/N:	28.4212	28.4212																								

Receiver: Existing Noise Receptor
ID: G-16
X: 366166.2
Y: 4902770.1
Z: 4.5
Ground: 0

ISO	Description	ID	X	Y	Z	Ground	ReflOrd	LxT	LxN	L/A	Dist.	hm	Freq	Adiv	K0b	Agr	Abar	z	Aatm	Afol	Ahous	Cmet	CmetN	Dc	RL	LtotT	LtotN
	Sol_Luce Substation	S_Substation	369426	4908792	3.5	0	0	112.1	112.1	1	6847.6	5.25	0	87.71	0	1.35	2.47	0.31	10.6	0	0	0	0	0	0	9.94	9.94
	Gardiner Substation	G_Sub	366586.3	4903349.9	2.5	0	0	90.8	90.8	1	716	3.5	0	68.1	0	-0.4	0	0	1.92	0	0	0	0	0	0	21.16	21.16
	Inverters	G_Inv5	366638.5	4902958.1	2	0	0	87.7	87.7	1	508.35	3.25	0	65.12	0	2.4	0	0	0.77	0	0	0	0	0	0	19.36	19.36
	Inverters	G_Inv3	366583.7	4903091.4	2	0	0	87.7	87.7	1	526.83	3.25	0	65.43	0	2.4	0	0	0.8	0	0	0	0	0	0	19.03	19.03
	Inverters	G_Inv7	366694.6	4902824.7	2	0	0	87.7	87.7	1	531.22	3.25	0	65.51	0	2.4	0	0	0.81	0	0	0	0	0	0	18.95	18.95
	Inverter	MV1-15	365315	4904994	2	0	0	100.3	100.3	1	2381.23	3.25	0	78.54	0	0.23	0	0	14.23	0	0	0	0	0	0	7.32	7.32
	Inverters	G_Inv1	366526.4	4903225.8	2	0	0	87.7	87.7	1	580.87	3.25	0	66.28	0	2.4	0	0	0.88	0	0	0	0	0	0	18.11	18.11
	Inverters	G_Inv9	366750.9	4902691.8	2	0	0	87.7	87.7	1	589.92	3.25	0	66.42	0	2.4	0	0	0.89	0	0	0	0	0	0	17.96	17.96
	Inverters	G_Inv6	366788.5	4902972	2	0	0	87.7	87.7	1	654.24	3.25	0	67.31	0	2.4	0	0	0.97	0	0	0	0	0	0	16.97	16.97
	Inverters	G_Inv4	366732.8	4903105	2	0	0	87.7	87.7	1	658.18	3.25	0	67.37	0	2.4	0	0	0.98	0	0	0	0	0	0	16.91	16.91
	Inverter	MV1-12	365038	4905386	2	0	0	100.3	100.3	1	2848.82	3.25	0	80.09	0	0.33	0	0	15.1	0	0	0	0	0	0	4.78	4.78
	Inverters	G_Inv8	366844.5	4902838.5	2	0	0	87.7	87.7	1	681.74	3.25	0	67.67	0	2.4	0	0	1.01	0	0	0	0	0	0	16.57	16.57
	Inverters	G_Inv2	366676.9	4903239.1	2	0	0	87.7	87.7	1	693.38	3.25	0	67.82	0	2.41	0	0	1.03	0	0	0	0	0	0	16.41	16.41
	Inverter	MV1-11	364655	4905414	2	0	0	100.3	100.3	1	3045.31	3.25	0	80.67	0	0.37	0	0	15.45	0	0	0	0	0	0	3.82	3.82
	Inverters	G_Inv10	366900.7	4902704.8	2	0	0	87.7	87.7	1	737.4	3.25	0	68.35	0	2.41	0	0	1.09	0	0	0	0	0	0	15.81	15.81
	Inverter	MV1-8	364788	4905647	2	0	0	100.3	100.3	1	3189.98	3.25	0	81.08	0	0.4	0	0	15.7	0	0	0	0	0	0	3.13	3.13
	Inverter	MV1-9	364561	4905646	2	0	0	100.3	100.3	1	3293.55	3.25	0	81.35	0	0.42	0	0	15.88	0	0	0	0	0	0	2.66	2.66
	Inverter	MV1-4	364815	4905918	2	0	0	100.3	100.3	1	3425.64	3.25	0	81.69	0	0.44	0	0	16.11	0	0	0	0	0	0	2.07	2.07
	Inverter	MV1-5	364671	4905892	2	0	0	100.3	100.3	1	3461.49	3.25	0	81.79	0	0.44	0	0	16.17	0	0	0	0	0	0	1.92	1.92
	Inverter	MV1-6	364477	4905835	2	0	0	100.3	100.3	1	3499.57	3.25	0	81.88	0	0.45	0	0	16.23	0	0	0	0	0	0	1.75	1.75
	Inverter	MV1-14	365163	4905049	2	0	0	97.3	97.3	1	2489.94	3.25	0	78.92	0	0.25	0	0	14.44	0	0	0	0	0	0	3.69	3.69
	Inverter	MV1-2	364753	4906063	2	0	0	100.3	100.3	1	3583.34	3.25	0	82.09	0	0.46	0	0	16.37	0	0	0	0	0	0	1.39	1.39
	Inverter	MV1-1	364715	4906166	2	0	0	100.3	100.3	1	3692.98	3.25	0	82.35	0	0.48	0	0	16.55	0	0	0	0	0	0	0.93	0.93
	Inverter	MV2-3	365820	4906641	2	0	0	100.3	100.3	1	3886.35	3.25	0	82.79	0	0.51	0	0	16.87	0	0	0	0	0	0	0.14	0.14
	Inverter	MV2-4	365586	4906624	2	0	0	100.3	100.3	1	3897.33	3.25	0	82.82	0	0.51	0	0	16.88	0	0	0	0	0	0	0.1	0.1
	Inverter	MV1-13	364731	4905241	2	0	0	97.3	97.3	1	2857.47	3.25	0	80.12	0	0.33	0	0	15.12	0	0	0	0	0	0	1.74	1.74
	Inverter	MV1-10	365004	4905564	2	0	0	97.3	97.3	1	3025.99	3.25	0	80.62	0	0.37	0	0	15.42	0	0	0	0	0	0	0.91	0.91
	Inverter	MV1-7	364925	4905782	2	0	0	97.3	97.3	1	3257.63	3.25	0	81.26	0	0.41	0	0	15.82	0	0	0	0	0	0	-0.18	-0.18
	Inverter	MV3-18	367752	4907412	2	0	0	100.3	100.3	1	4905.3	3.25	0	84.81	0	0.63	0	0	18.44	0	0	0	0	0	0	-3.58	-3.58
	Inverter	MV3-21	368478	4907206	2	0	0	100.3	100.3	1	5002.16	3.25	0	84.98	0	0.64	0	0	18.58	0	0	0	0	0	0	-3.9	-3.9
	Inverter	MV3-12	367668	4907594	2	0	0	100.3	100.3	1	5052.27	3.25	0	85.07	0	0.65	0	0	18.66	0	0	0	0	0	0	-4.06	-4.06
	Inverter	MV3-19	368357	4907347	2	0	0	100.3	100.3	1	5074.21	3.25	0	85.11	0	0.65	0	0	18.69	0	0	0	0	0	0	-4.13	-4.13
	Inverter	MV3-17	368178	4907472	2	0	0	100.3	100.3	1	5114.22	3.25	0	85.18	0	0.65	0	0	18.75	0	0	0	0	0	0	-4.26	-4.26
	Inverter	MV3-13	367963	4907577	2	0	0	100.3	100.3	1	5131.74	3.25	0	85.21	0	0.65	0	0	18.77	0	0	0	0	0	0	-4.32	-4.32
	Inverter	MV3-15	368357	4907477	2	0	0	100.3	100.3	1	5191.77	3.25	0	85.31	0	0.66	0	0	18.86	0	0	0	0	0	0	-4.51	-4.51
	Inverter	MV3-20	368689	4907317	2	0	0	100.3	100.3	1	5199.89	3.25	0	85.32	0	0.66	0	0	18.87	0	0	0	0	0	0	-4.54	-4.54
	Inverter	MV3-16	368514	4907475	2	0	0	100.3	100.3	1	5258.16	3.25	0	85.42	0	0.66	0	0	18.96	0	0	0	0	0	0	-4.72	-4.72
	Inverter	MV3-10	368167	4907669	2	0	0	100.3	100.3	1	5291.73	3.25	0	85.47	0	0.67	0	0	19	0	0	0	0	0	0	-4.83	-4.83
	Inverter	MV3-7	367945	4907754	2	0	0	100.3	100.3	1	5291.82	3.25	0	85.47	0	0.67	0	0	19	0	0	0	0	0	0	-4.83	-4.83
	Inverter	MV3-11	368346	4907662	2	0	0	100.3	100.3	1	5355.58	3.25	0	85.58	0	0.67	0	0	19.1	0	0	0	0	0	0	-5.03	-5.03
	Inverter	MV3-14	368684	4907498	2	0	0	100.3	100.3	1	5356.53	3.25	0	85.58	0	0.67	0	0	19.1	0	0	0	0	0	0	-5.03	-5.03
	Inverter	MV3-6	368162	4907834	2	0	0	100.3	100.3	1	5443.01	3.25	0	85.72	0	0.68	0	0	19.22	0	0	0	0	0	0	-5.3	-5.3
	Inverter	MV3-3	367939	4907927	2	0	0	100.3	100.3	1	5453.11	3.25	0	85.73	0	0.68	0	0	19.23	0	0	0	0	0	0	-5.33	-5.33
	Inverter	MV3-9	368512	4907703	2	0	0	100.3	100.3	1	5462.26	3.25	0	85.75	0	0.68	0	0	19.25	0	0	0	0	0	0	-5.36	-5.36
	Inverter	MV3-8	368680	4907712	2	0	0	100.3	100.3	1	5544.51	3.25	0	85.88	0	0.68	0	0	19.36	0	0	0	0	0	0	-5.61	-5.61
	Inverter	MV2-1	365842	4906816	2	0	0	97.3	97.3	1	4058.87	3.25	0	83.17	0	0.54	0	0	17.14	0	0	0	0	0	0	-3.53	-3.53
	Inverter	MV6-3	370207	4907140	2	0	0	100.3	100.3	1	5951.81	3.25	0	86.49	0	0.7	0	0	19.93	0	0	0	0	0	0	-6.81	-6.81
	Inverter	MV6-2	370085	4907339	2	0	0	100.3	100.3	1	6019.29	3.25	0	86.59	0	0.71	0	0	20.02	0	0	0	0	0	0	-7	-7
	Inverter	MV4-11	369264	4908855	2	0	0	100.3	100.3	1	6828.06	3.25	0	87.69	0	0.71	0	0	21.08	0	0	0	0	0	0	-9.17	-9.17
	Inverter	MV4-10	369312	4908858	2	0	0	100.3	100.3	1	6852.63	3.25	0	87.72	0	0.71	0	0	21.11	0	0	0	0	0	0	-9.23	-9.23
	Inverter	MV4-7	369035	4909001	2	0	0	100.3	100.3	1	6859.6	3.25	0	87.73	0	0.71	0	0	21.12	0	0	0	0	0	0	-9.25	-9.25
	Inverter	MV4-8	369256	4909001	2	0	0	100.3	100.3	1	6954.93	3.25	0	87.85	0	0.71	0	0	21.24	0	0	0	0	0	0	-9.49	-9.49

Inverter	MV4-9	369289	4909001	2	0	0	100.3	100.3	1	6969.65	3.25	0	87.86	0	0.71	0	0	21.26	0	0	0	0	0	0	-9.52	-9.52
Inverter	MV4-4	369027	4909199	2	0	0	100.3	100.3	1	7036.69	3.25	0	87.95	0	0.71	0	0	21.35	0	0	0	0	0	0	-9.69	-9.69
Inverter	MV5-5	370015	4908690	2	0	0	100.3	100.3	1	7061.05	3.25	0	87.98	0	0.71	0	0	21.38	0	0	0	0	0	0	-9.75	-9.75
Inverter	MV4-6	369243	4909192	2	0	0	100.3	100.3	1	7120.92	3.25	0	88.05	0	0.71	0	0	21.45	0	0	0	0	0	0	-9.9	-9.9
Inverter	MV4-5	369289	4909199	2	0	0	100.3	100.3	1	7147.21	3.25	0	88.08	0	0.71	0	0	21.48	0	0	0	0	0	0	-9.96	-9.96
Inverter	MV5-2	370006	4908853	2	0	0	100.3	100.3	1	7193.45	3.25	0	88.14	0	0.7	0	0	21.54	0	0	0	0	0	0	-10.07	-10.07
Inverter	MV4-1	369011	4909397	2	0	0	100.3	100.3	1	7211.71	3.25	0	88.16	0	0.7	0	0	21.56	0	0	0	0	0	0	-10.11	-10.11
Inverter	MV5-4	370324	4908707	2	0	0	100.3	100.3	1	7248.04	3.25	0	88.2	0	0.7	0	0	21.61	0	0	0	0	0	0	-10.2	-10.2
Inverter	MV4-3	369229	4909397	2	0	0	100.3	100.3	1	7300.45	3.25	0	88.27	0	0.7	0	0	21.67	0	0	0	0	0	0	-10.33	-10.33
Inverter	MV5-3	370231	4908851	2	0	0	100.3	100.3	1	7314.37	3.25	0	88.28	0	0.7	0	0	21.69	0	0	0	0	0	0	-10.36	-10.36
Inverter	MV4-2	369272	4909397	2	0	0	100.3	100.3	1	7318.59	3.25	0	88.29	0	0.7	0	0	21.69	0	0	0	0	0	0	-10.37	-10.37
Inverter	MV5-1	370020	4909142	2	0	0	100.3	100.3	1	7446.67	3.25	0	88.44	0	0.69	0	0	21.85	0	0	0	0	0	0	-10.67	-10.67
Inverter	MV6-1	370235	4907364	2	0	0	97.3	97.3	1	6136.7	3.25	0	86.76	0	0.71	0	0	20.18	0	0	0	0	0	0	-10.33	-10.33
DSTATCOM - 10 MVAR #2	DSAT2	369403	4908757	2.5	0	0	96.6	96.6	1	6805.87	3.5	0	87.66	0	3.83	0	0	4.22	0	0	0	0	0	0	0.93	0.93
DSTATCOM - 10 MVAR #1	DSAT1	369437	4908757	2.5	0	0	96.6	96.6	1	6822.1	3.5	0	87.68	0	3.83	0	0	4.23	0	0	0	0	0	0	0.9	0.9
SubstationTransformer	W_ST	369711.17	4906112.3	2.5	0	0	92	92	1	4872.05	3.5	0	84.75	0	0.53	0	-0.1	8.47	0	0	0	0	0	0	-1.78	-1.78
Inverter	MV1-3	364440	4906039	2	0	0	89.1	89.1	1	3696.68	3.25	0	82.36	0	1.32	0	0	10.65	0	0	0	0	0	0	-5.27	-5.27
Inverter	MV2-2	365977	4906654	2	0	0	89.1	89.1	1	3888.51	3.25	0	82.8	0	1.36	0	0	10.93	0	0	0	0	0	0	-6.03	-6.03
Westbrook Inverter Enclosur	W_INV3	369508	4906164	2	0	0	89.1	89.1	1	4763	3.25	0	84.56	0	1.58	0	0	12.14	0	0	0	0	0	0	-9.23	-9.23
Westbrook Inverter Enclosur	W_INV2	369374	4906388	2	0	0	89.1	89.1	1	4835.2	3.25	0	84.69	0	1.6	0	0	12.24	0	0	0	0	0	0	-9.47	-9.47
Westbrook Inverter Enclosur	W_INV4	369673	4906164	2	0	0	89.1	89.1	1	4880.19	3.25	0	84.77	0	1.61	0	0	12.3	0	0	0	0	0	0	-9.62	-9.62
Inverter	MV3-22	368656	4907142	2	0	0	89.1	89.1	1	5031.16	3.25	0	85.03	0	1.65	0	0	12.51	0	0	0	0	0	0	-10.13	-10.13
Westbrook Inverter Enclosur	W_INV7	369780	4906417	2	0	0	89.1	89.1	1	5134.14	3.25	0	85.21	0	1.67	0	0	12.64	0	0	0	0	0	0	-10.47	-10.47
Westbrook Inverter Enclosur	W_INV5	369719	4906574	2	0	0	89.1	89.1	1	5205	3.25	0	85.33	0	1.69	0	0	12.74	0	0	0	0	0	0	-10.7	-10.7
Westbrook Inverter Enclosur	W_INV6	369875	4906578	2	0	0	89.1	89.1	1	5315.57	3.25	0	85.51	0	1.72	0	0	12.88	0	0	0	0	0	0	-11.05	-11.05
Inverter	MV3-5	368340	4907843	2	0	0	89.1	89.1	1	5519.03	3.25	0	85.84	0	1.77	0	0	13.15	0	0	0	0	0	0	-11.69	-11.69
Inverter	MV3-1	368156	4907976	2	0	0	89.1	89.1	1	5573.21	3.25	0	85.92	0	1.78	0	0	13.22	0	0	0	0	0	0	-11.86	-11.86
Inverter	MV3-4	368502	4907925	2	0	0	89.1	89.1	1	5659.41	3.25	0	86.06	0	1.8	0	0	13.33	0	0	0	0	0	0	-12.13	-12.13
Inverter	MV3-2	368671	4907928	2	0	0	89.1	89.1	1	5733.93	3.25	0	86.17	0	1.82	0	0	13.42	0	0	0	0	0	0	-12.36	-12.36
Fixed Reactor Bank 1	FRB1	369378	4908755	6	0	0	89.8	89.8	1	6792.25	5.25	0	87.64	0	-0.31	0	0	10.55	0	0	0	0	0	0	-8.1	-8.1
Fixed Reactor Bank 2	FRB2	369464	4908755	6	0	0	89.8	89.8	1	6833.34	5.25	0	87.69	0	-0.31	0	0	10.59	0	0	0	0	0	0	-8.2	-8.2
Inverter	MV4-15	369176	4908481	2	0	0	89.1	89.1	1	6455.48	3.25	0	87.2	0	2	0	0	14.33	0	0	0	0	0	0	-14.47	-14.47
Inverter	MV4-14	369176	4908507	2	0	0	89.1	89.1	1	6478.5	3.25	0	87.23	0	2	0	0	14.36	0	0	0	0	0	0	-14.53	-14.53
Inverter	MV4-13	369051	4908605	2	0	0	89.1	89.1	1	6509.08	3.25	0	87.27	0	2.01	0	0	14.39	0	0	0	0	0	0	-14.62	-14.62
Inverter	MV4-12	369043	4908803	2	0	0	89.1	89.1	1	6683.7	3.25	0	87.5	0	2.05	0	0	14.61	0	0	0	0	0	0	-15.1	-15.1
Inverter	MV5-6	369982	4908507	2	0	0	89.1	89.1	1	6890.02	3.25	0	87.76	0	2.1	0	0	14.86	0	0	0	0	0	0	-15.66	-15.66
Westbrook Inverter Enclosur	W_INV1	369409	4906578	2	0	0	86.1	86.1	1	5001.59	3.25	0	84.98	0	1.64	0	0	12.47	0	0	0	0	0	0	-13.03	-13.03
Inverter	MV6-4	370250	4906966	2	0	0	86.1	86.1	1	5855.17	3.25	0	86.35	0	1.85	0	0	13.58	0	0	0	0	0	0	-15.72	-15.72
Westbrook Inverter Transfor	W_INVTR1	369403	4906578	2	0	0	78.2	78.2	1	4997.7	3.25	0	84.98	0	-3.18	0	0	2.41	0	0	0	0	0	0	-5.97	-5.97
Westbrook Inverter Transfor	W_INVTR3	369514	4906164	2	0	0	77.3	77.3	1	4767.21	3.25	0	84.57	0	-3.13	0	0	2.33	0	0	0	0	0	0	-6.43	-6.43
Westbrook Inverter Transfor	W_INVTR2	369368	4906388	2	0	0	77.3	77.3	1	4831.22	3.25	0	84.68	0	-3.14	0	0	2.35	0	0	0	0	0	0	-6.55	-6.55
Westbrook Inverter Transfor	W_INVTR4	369679	4906164	2	0	0	77.3	77.3	1	4884.5	3.25	0	84.78	0	-3.15	0	0	2.37	0	0	0	0	0	0	-6.65	-6.65
Westbrook Inverter Transfor	W_INVTR7	369786	4906417	2	0	0	77.3	77.3	1	5138.37	3.25	0	85.22	0	-3.2	0	0	2.46	0	0	0	0	0	0	-7.13	-7.13
Westbrook Inverter Transfor	W_INVTR5	369725	4906574	2	0	0	77.3	77.3	1	5209.1	3.25	0	85.34	0	-3.22	0	0	2.48	0	0	0	0	0	0	-7.26	-7.26
Westbrook Inverter Transfor	W_INVTR6	369881	4906578	2	0	0	77.3	77.3	1	5319.76	3.25	0	85.52	0	-3.24	0	0	2.52	0	0	0	0	0	0	-7.46	-7.46
Inverter Transformer	MV1-14 T	365157	4905049	2	0	0	69.4	69.4	1	2492.36	3.25	0	78.93	0	2.35	0	0	5.44	0	0	0	0	0	0	-17.36	-17.36
Inverter Transformer	MV1-13 T	364725	4905241	2	0	0	69.4	69.4	1	2860.49	3.25	0	80.13	0	2.46	0	0	5.76	0	0	0	0	0	0	-19.01	-19.01
Inverter Transformer	MV1-10 T	365010	4905564	2	0	0	69.4	69.4	1	3023.69	3.25	0	80.61	0	2.51	0	0	5.9	0	0	0	0	0	0	-19.68	-19.68
Inverter Transformer	MV1-7 T	364919	4905782	2	0	0	69.4	69.4	1	3259.92	3.25	0	81.26	0	2.58	0	0	6.1	0	0	0	0	0	0	-20.6	-20.6
Inverter Transformer	MV2-1 T	365836	4906816	2	0	0	69.4	69.4	1	4059.35	3.25	0	83.17	0	2.8	0	0	6.72	0	0	0	0	0	0	-23.34	-23.34
Inverter Transformer	MV6-4 T	370244	4906966	2	0	0	69.4	69.4	1	5850.99	3.25	0	86.34	0	3.17	0	0	7.93	0	0	0	0	0	0	-28.09	-28.09
Inverter Transformer	MV6-1 T	370230	4907364	2	0	0	69.4	69.4	1	6133.38	3.25	0	86.75	0	3.21	0	0	8.1	0	0	0	0	0	0	-28.71	-28.71
Inverter Transformer	MV1-15 T	365309	4904994	2	0	0	56.1	56.1	1	2383.39	3.25	0	78.54	0	0.57	0	0	7.78	0	0	0	0	0	0	-30.83	-30.83
Inverter Transformer	MV1-12 T	365044	4905386	2	0	0	56.1	56.1	1	2846.45	3.25	0	80.09	0	0.76	0	0	8.6	0	0	0	0	0	0	-33.4	-33.4
Inverter Transformer	MV1-11 T	364649	4905414	2	0	0	56.1	56.1	1	3048.3	3.25	0	80.68	0	0.85	0	0	8.95	0	0	0	0	0	0	-34.42	-34.42
Inverter Transformer	MV1-8 T	364782	4905647	2	0	0	56.1	56.1	1	3192.58	3.25	0	81.08	0	0.91	0	0	9.19	0	0	0	0	0	0	-35.13	-35.13
Inverter Transformer	MV1-9 T	364555	4905646	2	0	0	56.1	56.1	1	3296.48	3.25	0	81.36	0	0.96	0	0	9.36	0	0	0	0	0	0	-35.62	-35.62
Inverter Transformer	MV1-4 T	364821	4905918	2	0	0	56.1	56.1	1	3423.28	3.25	0	81.69	0	1.01	0	0	9.57	0	0	0	0	0	0	-36.2	-36.2
Inverter Transformer	MV1-5 T	364676	4905892	2	0	0	56.1	56.1	1	3459.33	3.25	0	81.78	0	1.02	0	0	9.62	0	0	0	0	0	0	-36.37	-36.37
Inverter Transformer	MV1-6 T	364482	4905835	2	0	0	56.1	56.1	1	3497.16	3.25	0	81.87	0	1.04	0	0	9.68	0	0	0	0	0	0	-36.54	-36.54
Inverter Transformer	MV1-2 T	364759	4906063	2	0	0	56.1	56.1	1	3580.98	3.25	0	82.08	0	1.07	0	0	9.82	0	0	0	0	0	0	-36.91	-36.91
Inverter Transformer	MV1-1 T	364721	4906166	2	0	0	56.1	56.1	1	3690.63	3.25	0	82.34	0	1.12	0	0	9.99	0	0	0	0	0	0	-37.39	-37.39
Inverter Transformer	MV1-3 T	364435	4906039	2	0	0	56.1	56.1	1	3699.02	3.25	0	82.36	0	1.12	0	0	10	0	0	0	0	0	0	-37.42	-37.42
Inverter Transformer	MV2-3 T	365814	4906641	2	0	0	56.1	56.1	1	3886.89	3.25	0	82.79	0	1.2	0	0	10.29	0	0	0	0	0	0	-38.22	-38.22
Inverter Transformer	MV2-2 T	365982	4906654	2	0	0	56.1	56.1	1	3888.27	3.25	0	82.8	0	1.2	0	0	10.29	0	0	0	0	0	0	-38.22	-38.22
Inverter Transformer	MV2-4 T	365590	4906628	2	0	0	56.1	56.1	1	3900.69	3.25	0	82.82	0	1.2	0	0	10.31	0	0	0	0	0	0	-38.27	-38.27
Inverter Transformer	MV3-18 T	367757	4907412	2	0	0	56.1	56.1	1	4906.92	3.25	0	84.82	0	1.59	0	0	11.73	0	0	0	0	0	0	-42.08	-42.08
Inverter Transformer	MV3-21 T	368484	4907206	2	0	0	56.1	56.1	1	5004.94	3.25	0	84.99	0	1.63	0	0	11.86	0	0	0	0	0	0	-42.42	-42.42
Inverter Transformer	MV3-22 T	368661	4907142	2	0	0	56.1	56.1	1	5033.64	3.25	0	85.04	0	1.64	0	0	11.9	0	0	0	0	0	0	-42.52	-42.52
Inverter Transformer	MV3-12 T	367674	4907594	2	0	0	56.1	56.1	1	5054.06	3.25	0	85.07	0	1.64	0	0	11.93	0	0	0	0	0	0	-42.58	-42.58
Inverter Transformer	MV3-19 T	368352	4907347	2	0	0	56.1	56.1	1	5072.05	3.25	0	85.1	0	1.65	0	0	11.95	0	0	0	0	0	0	-42.65	-42.65
Inverter Transformer	MV3-17 T	368183	4907472	2	0	0	56.1	56.1	1	5116.19	3.25	0	85.18	0	1.67	0	0	12.01	0	0	0	0	0	0	-42.79	-42.79
Inverter Transformer	MV3-13 T	367958	4907577	2	0	0	56.1	56.1	1	5129.99	3.25	0	85.2	0	1.67	0	0	12.02	0	0	0	0	0	0	-42.84	-42.84
Inverter Transformer	MV3-15 T	368351	4907477	2	0	0	56.1	56.1	1	5189.25	3.25	0	85.3	0	1.69	0	0	12.1	0	0	0	0	0	0	-43.04	-43.04

	Inverter Transformer	MV3-20 T	368683	4907317	2	0	0	56.1	56.1	1	5196.98	3.25	0	85.32	0	1.7	0	0	12.11	0	0	0	0	0	0	-43.06	-43.06
	Inverter Transformer	MV3-16 T	368509	4907475	2	0	0	56.1	56.1	1	5255.93	3.25	0	85.41	0	1.72	0	0	12.19	0	0	0	0	0	0	-43.26	-43.26
	Inverter Transformer	MV3-10 T	368162	4907669	2	0	0	56.1	56.1	1	5289.84	3.25	0	85.47	0	1.73	0	0	12.23	0	0	0	0	0	0	-43.37	-43.37
	Inverter Transformer	MV3-7 T	367951	4907754	2	0	0	56.1	56.1	1	5293.84	3.25	0	85.48	0	1.73	0	0	12.24	0	0	0	0	0	0	-43.38	-43.38
	Inverter Transformer	MV3-11 T	368340	4907662	2	0	0	56.1	56.1	1	5353.14	3.25	0	85.57	0	1.75	0	0	12.31	0	0	0	0	0	0	-43.57	-43.57
	Inverter Transformer	MV3-14 T	368678	4907498	2	0	0	56.1	56.1	1	5353.71	3.25	0	85.57	0	1.75	0	0	12.31	0	0	0	0	0	0	-43.58	-43.58
	Inverter Transformer	MV3-6 T	368156	4907834	2	0	0	56.1	56.1	1	5440.81	3.25	0	85.71	0	1.78	0	0	12.42	0	0	0	0	0	0	-43.86	-43.86
	Inverter Transformer	MV3-3 T	367944	4907927	2	0	0	56.1	56.1	1	5454.74	3.25	0	85.74	0	1.79	0	0	12.44	0	0	0	0	0	0	-43.9	-43.9
	Inverter Transformer	MV3-9 T	368517	4907703	2	0	0	56.1	56.1	1	5464.41	3.25	0	85.75	0	1.79	0	0	12.45	0	0	0	0	0	0	-43.93	-43.93
	Inverter Transformer	MV3-5 T	368335	4907843	2	0	0	56.1	56.1	1	5517.07	3.25	0	85.83	0	1.81	0	0	12.52	0	0	0	0	0	0	-44.1	-44.1
	Inverter Transformer	MV3-8 T	368685	4907712	2	0	0	56.1	56.1	1	5546.78	3.25	0	85.88	0	1.82	0	0	12.55	0	0	0	0	0	0	-44.19	-44.19
	Inverter Transformer	MV3-1 T	368150	4907976	2	0	0	56.1	56.1	1	5571.07	3.25	0	85.92	0	1.82	0	0	12.58	0	0	0	0	0	0	-44.27	-44.27
	Inverter Transformer	MV3-4 T	368507	4907925	2	0	0	56.1	56.1	1	5661.48	3.25	0	86.06	0	1.85	0	0	12.7	0	0	0	0	0	0	-44.55	-44.55
	Inverter Transformer	MV3-2 T	368677	4907928	2	0	0	56.1	56.1	1	5736.55	3.25	0	86.17	0	1.88	0	0	12.79	0	0	0	0	0	0	-44.78	-44.78
	Inverter Transformer	MV6-3 T	370202	4907140	2	0	0	56.1	56.1	1	5948.42	3.25	0	86.49	0	1.95	0	0	13.04	0	0	0	0	0	0	-45.42	-45.42
	Inverter Transformer	MV6-2 T	370091	4907339	2	0	0	56.1	56.1	1	6023.2	3.25	0	86.6	0	1.97	0	0	13.13	0	0	0	0	0	0	-45.64	-45.64
	Inverter Transformer	MV4-15 T	369170	4908481	2	0	0	56.1	56.1	1	6452.69	3.25	0	87.19	0	2.1	0	0	13.63	0	0	0	0	0	0	-46.87	-46.87
	Inverter Transformer	MV4-14 T	369182	4908507	2	0	0	56.1	56.1	1	6481.29	3.25	0	87.23	0	2.11	0	0	13.66	0	0	0	0	0	0	-46.95	-46.95
	Inverter Transformer	MV4-13 T	369057	4908605	2	0	0	56.1	56.1	1	6511.74	3.25	0	87.27	0	2.12	0	0	13.69	0	0	0	0	0	0	-47.03	-47.03
	Inverter Transformer	MV4-12 T	369049	4908803	2	0	0	56.1	56.1	1	6686.29	3.25	0	87.5	0	2.17	0	0	13.89	0	0	0	0	0	0	-47.5	-47.5
	Inverter Transformer	MV4-11 T	369269	4908855	2	0	0	56.1	56.1	1	6830.33	3.25	0	87.69	0	2.21	0	0	14.05	0	0	0	0	0	0	-47.89	-47.89
	Inverter Transformer	MV4-10 T	369307	4908858	2	0	0	56.1	56.1	1	6850.34	3.25	0	87.71	0	2.22	0	0	14.07	0	0	0	0	0	0	-47.94	-47.94
	Inverter Transformer	MV4-7 T	369040	4909001	2	0	0	56.1	56.1	1	6861.69	3.25	0	87.73	0	2.22	0	0	14.08	0	0	0	0	0	0	-47.97	-47.97
	Inverter Transformer	MV5-6 T	369987	4908507	2	0	0	56.1	56.1	1	6892.79	3.25	0	87.77	0	2.23	0	0	14.11	0	0	0	0	0	0	-48.05	-48.05
	Inverter Transformer	MV4-8 T	369262	4909001	2	0	0	56.1	56.1	1	6957.59	3.25	0	87.85	0	2.25	0	0	14.18	0	0	0	0	0	0	-48.22	-48.22
	Inverter Transformer	MV4-9 T	369284	4909001	2	0	0	56.1	56.1	1	6967.41	3.25	0	87.86	0	2.25	0	0	14.19	0	0	0	0	0	0	-48.25	-48.25
	Inverter Transformer	MV4-4 T	369033	4909199	2	0	0	56.1	56.1	1	7039.13	3.25	0	87.95	0	2.27	0	0	14.27	0	0	0	0	0	0	-48.43	-48.43
	Inverter Transformer	MV5-5 T	370021	4908690	2	0	0	56.1	56.1	1	7064.33	3.25	0	87.98	0	2.28	0	0	14.3	0	0	0	0	0	0	-48.5	-48.5
	Inverter Transformer	MV4-6 T	369249	4909192	2	0	0	56.1	56.1	1	7123.51	3.25	0	88.05	0	2.29	0	0	14.36	0	0	0	0	0	0	-48.65	-48.65
	Inverter Transformer	MV4-5 T	369283	4909199	2	0	0	56.1	56.1	1	7144.59	3.25	0	88.08	0	2.3	0	0	14.38	0	0	0	0	0	0	-48.7	-48.7
	Inverter Transformer	MV5-2 T	370011	4908853	2	0	0	56.1	56.1	1	7196.12	3.25	0	88.14	0	2.31	0	0	14.44	0	0	0	0	0	0	-48.83	-48.83
	Inverter Transformer	MV4-1 T	369017	4909397	2	0	0	56.1	56.1	1	7214.07	3.25	0	88.16	0	2.32	0	0	14.46	0	0	0	0	0	0	-48.88	-48.88
	Inverter Transformer	MV5-4 T	370330	4908707	2	0	0	56.1	56.1	1	7251.48	3.25	0	88.21	0	2.33	0	0	14.5	0	0	0	0	0	0	-48.97	-48.97
	Inverter Transformer	MV4-3 T	369234	4909397	2	0	0	56.1	56.1	1	7302.55	3.25	0	88.27	0	2.34	0	0	14.55	0	0	0	0	0	0	-49.1	-49.1
	Inverter Transformer	MV4-2 T	369267	4909397	2	0	0	56.1	56.1	1	7316.47	3.25	0	88.29	0	2.34	0	0	14.56	0	0	0	0	0	0	-49.14	-49.14
	Inverter Transformer	MV5-3 T	370237	4908851	2	0	0	56.1	56.1	1	7317.7	3.25	0	88.29	0	2.34	0	0	14.57	0	0	0	0	0	0	-49.14	-49.14
	Inverter Transformer	MV5-1 T	370015	4909142	2	0	0	56.1	56.1	1	7444.08	3.25	0	88.44	0	2.38	0	0	14.7	0	0	0	0	0	0	-49.45	-49.45
	Line Reactor	NGR	369421	4908787.5	5	0	0	45.4	45.4	1	6841.26	5.25	0	87.7	0	3.22	1.37	0.1	2.8	0	0	0	0	0	0	-49.73	-49.73
Limit. Valu	0	0																								
Level D/N:	28.9426	28.9426																								

Receiver: Existing Noise Receptor
ID: G-17
X: 366157.2
Y: 4902750.1
Z: 4.5
Ground: 0

ISO	Description	ID	X	Y	Z	Ground	ReflOrd	LxT	LxN	L/A	Dist.	hm	Freq	Adiv	K0b	Agr	Abar	z	Aatm	Afol	Ahous	Cmet	CmetN	Dc	RL	LtotT	LtotN
	Sol_Luce Substation	S_Substation	369426	4908792	3.5	0	0	112.1	112.1	1	6869.47	5.25	0	87.74	0	1.35	2.47	0.31	10.62	0	0	0	0	0	0	9.89	9.89
	Gardiner Substation	G_Sub	366586.3	4903349.9	2.5	0	0	90.8	90.8	1	737.49	3.5	0	68.36	0	-0.4	0	0	1.97	0	0	0	0	0	0	20.85	20.85
	Inverters	G_Inv5	366638.5	4902958.1	2	0	0	87.7	87.7	1	524.33	3.25	0	65.39	0	2.4	0	0	0.8	0	0	0	0	0	0	19.07	19.07
	Inverters	G_Inv7	366694.6	4902824.7	2	0	0	87.7	87.7	1	542.56	3.25	0	65.69	0	2.4	0	0	0.82	0	0	0	0	0	0	18.75	18.75
	Inverters	G_Inv3	366583.7	4903091.4	2	0	0	87.7	87.7	1	546.25	3.25	0	65.75	0	2.4	0	0	0.83	0	0	0	0	0	0	18.69	18.69
	Inverter	MV1-15	365315	4904994	2	0	0	100.3	100.3	1	2396.75	3.25	0	78.59	0	0.23	0	0	14.26	0	0	0	0	0	0	7.23	7.23
	Inverters	G_Inv9	366750.9	4902691.8	2	0	0	87.7	87.7	1	596.56	3.25	0	66.51	0	2.4	0	0	0.9	0	0	0	0	0	0	17.85	17.85
	Inverters	G_Inv1	366526.4	4903225.8	2	0	0	87.7	87.7	1	602.17	3.25	0	66.59	0	2.4	0	0	0.9	0	0	0	0	0	0	17.76	17.76
	Inverter	MV1-12	365038	4905386	2	0	0	100.3	100.3	1	2863.67	3.25	0	80.14	0	0.34	0	0	15.13	0	0	0	0	0	0	4.71	4.71
	Inverters	G_Inv6	366788.5	4902972	2	0	0	87.7	87.7	1	669.17	3.25	0	67.51	0	2.4	0	0	1	0	0	0	0	0	0	16.75	16.75
	Inverters	G_Inv4	366732.8	4903105	2	0	0	87.7	87.7	1	676.22	3.25	0	67.6	0	2.4	0	0	1	0	0	0	0	0	0	16.65	16.65
	Inverters	G_Inv8	366844.5	4902838.5	2	0	0	87.7	87.7	1	692.97	3.25	0	67.81	0	2.41	0	0	1.03	0	0	0	0	0	0	16.41	16.41
	Inverter	MV1-11	364655	4905414	2	0	0	100.3	100.3	1	3058.26	3.25	0	80.71	0	0.37	0	0	15.47	0	0	0	0	0	0	3.75	3.75
	Inverters	G_Inv2	366676.9	4903239.1	2	0	0	87.7	87.7	1	713.59	3.25	0	68.07	0	2.41	0	0	1.05	0	0	0	0	0	0	16.13	16.13
	Inverters	G_Inv10	366900.7	4902704.8	2	0	0	87.7	87.7	1	744.88	3.25	0	68.44	0	2.41	0	0	1.1	0	0	0	0	0	0	15.71	15.71
	Inverter	MV1-8	364788	4905647	2	0	0	100.3	100.3	1	3204.18	3.25	0	81.11	0	0.4	0	0	15.73	0	0	0	0	0	0	3.07	3.07
	Inverter	MV1-9	364561	4905646	2	0	0	100.3	100.3	1	3306.67	3.25	0	81.39	0	0.42	0	0	15.9	0	0	0	0	0	0	2.6	2.6
	Inverter	MV1-4	364815	4905918	2	0	0	100.3	100.3	1	3440.51	3.25	0	81.73	0	0.44	0	0	16.13	0	0	0	0	0	0	2.01	2.01
	Inverter	MV1-5	364671	4905892	2	0	0	100.3	100.3	1	3475.68	3.25	0	81.82	0	0.45	0	0	16.19	0	0	0	0	0	0	1.85	1.85
	Inverter	MV1-6	364477	4905835	2	0	0	100.3	100.3	1	3512.79	3.25	0	81.91	0	0.45	0	0	16.25	0	0	0	0	0	0	1.69	1.69
	Inverter	MV1-14	365163	4905049	2	0	0	97.3	97.3	1	2504.67	3.25	0	78.98	0	0.26	0	0	14.47	0	0	0	0	0	0	3.61	3.61
	Inverter	MV1-2	364753	4906063	2	0	0	100.3	100.3	1	3598.21	3.25	0	82.12	0	0.47	0	0	16.39	0	0	0	0	0	0	1.33	1.33
	Inverter	MV1-1	364715	4906166	2	0	0	100.3	100.3	1	3707.87	3.25	0	82.38	0	0.48	0	0	16.58	0	0	0	0	0	0	0.87	0.87
	Inverter	MV2-3	365820	4906641	2	0	0	100.3	100.3	1	3905.48	3.25	0	82.83	0	0.51	0	0	16.9	0	0	0	0	0	0	0.07	0.07
	Inverter	MV2-4	365586	4906624	2	0	0	100.3	100.3	1	3915.79	3.25	0	82.86	0	0.52	0	0	16.91	0	0	0	0	0	0	0.03	0.03

Inverter	MV1-13	364731	4905241	2	0	0	97.3	97.3	1	2870.3	3.25	0	80.16	0	0.34	0	0	15.14	0	0	0	0	0	0	1.68	1.68
Inverter	MV1-10	365004	4905564	2	0	0	97.3	97.3	1	3041.04	3.25	0	80.66	0	0.37	0	0	15.44	0	0	0	0	0	0	0.84	0.84
Inverter	MV1-7	364925	4905782	2	0	0	97.3	97.3	1	3272.73	3.25	0	81.3	0	0.41	0	0	15.85	0	0	0	0	0	0	-0.25	-0.25
Inverter	MV3-18	367752	4907412	2	0	0	100.3	100.3	1	4927.14	3.25	0	84.85	0	0.64	0	0	18.47	0	0	0	0	0	0	-3.65	-3.65
Inverter	MV3-21	368478	4907206	2	0	0	100.3	100.3	1	5024.06	3.25	0	85.02	0	0.64	0	0	18.62	0	0	0	0	0	0	-3.97	-3.97
Inverter	MV3-12	367668	4907594	2	0	0	100.3	100.3	1	5074.04	3.25	0	85.11	0	0.65	0	0	18.69	0	0	0	0	0	0	-4.13	-4.13
Inverter	MV3-19	368357	4907347	2	0	0	100.3	100.3	1	5096.14	3.25	0	85.14	0	0.65	0	0	18.72	0	0	0	0	0	0	-4.2	-4.2
Inverter	MV3-17	368178	4907472	2	0	0	100.3	100.3	1	5136.14	3.25	0	85.21	0	0.65	0	0	18.78	0	0	0	0	0	0	-4.33	-4.33
Inverter	MV3-13	367963	4907577	2	0	0	100.3	100.3	1	5153.63	3.25	0	85.24	0	0.66	0	0	18.8	0	0	0	0	0	0	-4.39	-4.39
Inverter	MV3-15	368357	4907477	2	0	0	100.3	100.3	1	5213.7	3.25	0	85.34	0	0.66	0	0	18.89	0	0	0	0	0	0	-4.58	-4.58
Inverter	MV3-20	368689	4907317	2	0	0	100.3	100.3	1	5221.74	3.25	0	85.36	0	0.66	0	0	18.9	0	0	0	0	0	0	-4.61	-4.61
Inverter	MV3-16	368514	4907475	2	0	0	100.3	100.3	1	5280.08	3.25	0	85.45	0	0.67	0	0	18.99	0	0	0	0	0	0	-4.79	-4.79
Inverter	MV3-10	368167	4907669	2	0	0	100.3	100.3	1	5313.65	3.25	0	85.51	0	0.67	0	0	19.04	0	0	0	0	0	0	-4.9	-4.9
Inverter	MV3-7	367945	4907754	2	0	0	100.3	100.3	1	5313.69	3.25	0	85.51	0	0.67	0	0	19.04	0	0	0	0	0	0	-4.9	-4.9
Inverter	MV3-11	368346	4907662	2	0	0	100.3	100.3	1	5377.51	3.25	0	85.61	0	0.67	0	0	19.13	0	0	0	0	0	0	-5.1	-5.1
Inverter	MV3-14	368684	4907498	2	0	0	100.3	100.3	1	5378.41	3.25	0	85.61	0	0.67	0	0	19.13	0	0	0	0	0	0	-5.1	-5.1
Inverter	MV3-6	368162	4907834	2	0	0	100.3	100.3	1	5464.91	3.25	0	85.75	0	0.68	0	0	19.25	0	0	0	0	0	0	-5.37	-5.37
Inverter	MV3-3	367939	4907927	2	0	0	100.3	100.3	1	5474.95	3.25	0	85.77	0	0.68	0	0	19.27	0	0	0	0	0	0	-5.4	-5.4
Inverter	MV3-9	368512	4907703	2	0	0	100.3	100.3	1	5484.19	3.25	0	85.78	0	0.68	0	0	19.28	0	0	0	0	0	0	-5.43	-5.43
Inverter	MV3-8	368680	4907712	2	0	0	100.3	100.3	1	5566.42	3.25	0	85.91	0	0.68	0	0	19.39	0	0	0	0	0	0	-5.68	-5.68
Inverter	MV2-1	365842	4906816	2	0	0	97.3	97.3	1	4078.1	3.25	0	83.21	0	0.54	0	0	17.17	0	0	0	0	0	0	-3.61	-3.61
Inverter	MV6-3	370207	4907140	2	0	0	100.3	100.3	1	5972.61	3.25	0	86.52	0	0.7	0	0	19.96	0	0	0	0	0	0	-6.87	-6.87
Inverter	MV6-2	370085	4907339	2	0	0	100.3	100.3	1	6040.33	3.25	0	86.62	0	0.71	0	0	20.05	0	0	0	0	0	0	-7.06	-7.06
Inverter	MV4-11	369264	4908855	2	0	0	100.3	100.3	1	6849.96	3.25	0	87.71	0	0.71	0	0	21.11	0	0	0	0	0	0	-9.22	-9.22
Inverter	MV4-10	369312	4908858	2	0	0	100.3	100.3	1	6874.53	3.25	0	87.74	0	0.71	0	0	21.14	0	0	0	0	0	0	-9.29	-9.29
Inverter	MV4-7	369035	4909001	2	0	0	100.3	100.3	1	6881.53	3.25	0	87.75	0	0.71	0	0	21.15	0	0	0	0	0	0	-9.3	-9.3
Inverter	MV4-8	369256	4909001	2	0	0	100.3	100.3	1	6976.84	3.25	0	87.87	0	0.71	0	0	21.27	0	0	0	0	0	0	-9.54	-9.54
Inverter	MV4-9	369289	4909001	2	0	0	100.3	100.3	1	6991.56	3.25	0	87.89	0	0.71	0	0	21.29	0	0	0	0	0	0	-9.58	-9.58
Inverter	MV4-4	369027	4909199	2	0	0	100.3	100.3	1	7058.62	3.25	0	87.97	0	0.71	0	0	21.37	0	0	0	0	0	0	-9.74	-9.74
Inverter	MV5-5	370015	4908690	2	0	0	100.3	100.3	1	7082.73	3.25	0	88	0	0.71	0	0	21.4	0	0	0	0	0	0	-9.8	-9.8
Inverter	MV4-6	369243	4909192	2	0	0	100.3	100.3	1	7142.85	3.25	0	88.08	0	0.71	0	0	21.48	0	0	0	0	0	0	-9.95	-9.95
Inverter	MV4-5	369289	4909199	2	0	0	100.3	100.3	1	7169.13	3.25	0	88.11	0	0.7	0	0	21.51	0	0	0	0	0	0	-10.01	-10.01
Inverter	MV5-2	370006	4908853	2	0	0	100.3	100.3	1	7215.17	3.25	0	88.16	0	0.7	0	0	21.57	0	0	0	0	0	0	-10.12	-10.12
Inverter	MV4-1	369011	4909397	2	0	0	100.3	100.3	1	7233.63	3.25	0	88.19	0	0.7	0	0	21.59	0	0	0	0	0	0	-10.17	-10.17
Inverter	MV5-4	370324	4908707	2	0	0	100.3	100.3	1	7269.59	3.25	0	88.23	0	0.7	0	0	21.63	0	0	0	0	0	0	-10.25	-10.25
Inverter	MV4-3	369229	4909397	2	0	0	100.3	100.3	1	7322.38	3.25	0	88.29	0	0.7	0	0	21.7	0	0	0	0	0	0	-10.38	-10.38
Inverter	MV5-3	370231	4908851	2	0	0	100.3	100.3	1	7336	3.25	0	88.31	0	0.7	0	0	21.72	0	0	0	0	0	0	-10.41	-10.41
Inverter	MV4-2	369272	4909397	2	0	0	100.3	100.3	1	7340.52	3.25	0	88.31	0	0.7	0	0	21.72	0	0	0	0	0	0	-10.42	-10.42
Inverter	MV5-1	370020	4909142	2	0	0	100.3	100.3	1	7468.44	3.25	0	88.46	0	0.69	0	0	21.88	0	0	0	0	0	0	-10.72	-10.72
Inverter	MV6-1	370235	4907364	2	0	0	97.3	97.3	1	6157.64	3.25	0	86.79	0	0.71	0	0	20.21	0	0	0	0	0	0	-10.39	-10.39
DSTATCOM - 10 MVAR #2	DSAT2	369403	4908757	2.5	0	0	96.6	96.6	1	6827.74	3.5	0	87.69	0	3.83	0	0	4.23	0	0	0	0	0	0	0.89	0.89
DSTATCOM - 10 MVAR #1	DSAT1	369437	4908757	2.5	0	0	96.6	96.6	1	6843.97	3.5	0	87.71	0	3.83	0	0	4.24	0	0	0	0	0	0	0.86	0.86
SubstationTransformer	W_ST	369711.17	4906112.3	2.5	0	0	92	92	1	4892.33	3.5	0	84.79	0	0.54	0	-0.1	8.49	0	0	0	0	0	0	-1.84	-1.84
Inverter	MV1-3	364440	4906039	2	0	0	89.1	89.1	1	3710.21	3.25	0	82.39	0	1.32	0	0	10.67	0	0	0	0	0	0	-5.32	-5.32
Inverter	MV2-2	365977	4906654	2	0	0	89.1	89.1	1	3908.06	3.25	0	82.84	0	1.37	0	0	10.95	0	0	0	0	0	0	-6.1	-6.1
Westbrook Inverter Enclosur	W_INV3	369508	4906164	2	0	0	89.1	89.1	1	4783.57	3.25	0	84.6	0	1.59	0	0	12.17	0	0	0	0	0	0	-9.3	-9.3
Westbrook Inverter Enclosur	W_INV2	369374	4906388	2	0	0	89.1	89.1	1	4856.14	3.25	0	84.73	0	1.6	0	0	12.27	0	0	0	0	0	0	-9.54	-9.54
Westbrook Inverter Enclosur	W_INV4	369673	4906164	2	0	0	89.1	89.1	1	4900.57	3.25	0	84.8	0	1.62	0	0	12.33	0	0	0	0	0	0	-9.69	-9.69
Inverter	MV3-22	368656	4907142	2	0	0	89.1	89.1	1	5053	3.25	0	85.07	0	1.65	0	0	12.53	0	0	0	0	0	0	-10.2	-10.2
Westbrook Inverter Enclosur	W_INV7	369780	4906417	2	0	0	89.1	89.1	1	5154.69	3.25	0	85.24	0	1.68	0	0	12.67	0	0	0	0	0	0	-10.53	-10.53
Westbrook Inverter Enclosur	W_INV5	369719	4906574	2	0	0	89.1	89.1	1	5225.77	3.25	0	85.36	0	1.7	0	0	12.76	0	0	0	0	0	0	-10.76	-10.76
Westbrook Inverter Enclosur	W_INV6	369875	4906578	2	0	0	89.1	89.1	1	5336.18	3.25	0	85.54	0	1.72	0	0	12.91	0	0	0	0	0	0	-11.12	-11.12
Inverter	MV3-5	368340	4907843	2	0	0	89.1	89.1	1	5540.96	3.25	0	85.87	0	1.77	0	0	13.18	0	0	0	0	0	0	-11.76	-11.76
Inverter	MV3-1	368156	4907976	2	0	0	89.1	89.1	1	5595.11	3.25	0	85.96	0	1.79	0	0	13.25	0	0	0	0	0	0	-11.93	-11.93
Inverter	MV3-4	368502	4907925	2	0	0	89.1	89.1	1	5681.35	3.25	0	86.09	0	1.81	0	0	13.36	0	0	0	0	0	0	-12.2	-12.2
Inverter	MV3-2	368671	4907928	2	0	0	89.1	89.1	1	5755.85	3.25	0	86.2	0	1.83	0	0	13.45	0	0	0	0	0	0	-12.42	-12.42
Fixed Reactor Bank 1	FRB1	369378	4908755	6	0	0	89.8	89.8	1	6814.13	5.25	0	87.67	0	-0.31	0	0	10.57	0	0	0	0	0	0	-8.15	-8.15
Fixed Reactor Bank 2	FRB2	369464	4908755	6	0	0	89.8	89.8	1	6855.2	5.25	0	87.72	0	-0.3	0	0	10.61	0	0	0	0	0	0	-8.25	-8.25
Inverter	MV4-15	369176	4908481	2	0	0	89.1	89.1	1	6477.37	3.25	0	87.23	0	2	0	0	14.36	0	0	0	0	0	0	-14.53	-14.53
Inverter	MV4-14	369176	4908507	2	0	0	89.1	89.1	1	6500.39	3.25	0	87.26	0	2.01	0	0	14.38	0	0	0	0	0	0	-14.59	-14.59
Inverter	MV4-13	369051	4908605	2	0	0	89.1	89.1	1	6531	3.25	0	87.3	0	2.02	0	0	14.42	0	0	0	0	0	0	-14.68	-14.68
Inverter	MV4-12	369043	4908803	2	0	0	89.1	89.1	1	6705.63	3.25	0	87.53	0	2.06	0	0	14.63	0	0	0	0	0	0	-15.16	-15.16
Inverter	MV5-6	369982	4908507	2	0	0	89.1	89.1	1	6911.66	3.25	0	87.79	0	2.11	0	0	14.88	0	0	0	0	0	0	-15.72	-15.72
Westbrook Inverter Enclosur	W_INV1	369409	4906578	2	0	0	86.1	86.1	1	5022.65	3.25	0	85.02	0	1.65	0	0	12.49	0	0	0	0	0	0	-13.1	-13.1
Inverter	MV6-4	370250	4906966	2	0	0	86.1	86.1	1	5875.78	3.25	0	86.38	0	1.86	0	0	13.61	0	0	0	0	0	0	-15.78	-15.78
Westbrook Inverter Transfor	W_INVTR1	369403	4906578	2	0	0	78.2	78.2	1	5018.77	3.25	0	85.01	0	-3.18	0	0	2.42	0	0	0	0	0	0	-6.01	-6.01
Westbrook Inverter Transfor	W_INVTR3	369514	4906164	2	0	0	77.3	77.3	1	4787.78	3.25	0	84.6	0	-3.13	0	0	2.34	0	0	0	0	0	0	-6.47	-6.47
Westbrook Inverter Transfor	W_INVTR2	369368	4906388	2	0	0	77.3	77.3	1	4852.17	3.25	0	84.72	0	-3.15	0	0	2.36	0	0	0	0	0	0	-6.59	-6.59
Westbrook Inverter Transfor	W_INVTR4	369679	4906164	2	0	0	77.3	77.3	1	4904.87	3.25	0	84.81	0	-3.16	0	0	2.38	0	0	0	0	0	0	-6.69	-6.69
Westbrook Inverter Transfor	W_INVTR7	369786	4906417	2	0	0	77.3	77.3	1	5158.91	3.25	0	85.25	0	-3.21	0	0	2.47	0	0	0	0	0	0	-7.17	-7.17
Westbrook Inverter Transfor	W_INVTR5	369725	4906574	2	0	0	77.3	77.3	1	5229.86	3.25	0	85.37	0	-3.22	0	0	2.49	0	0	0	0	0	0	-7.3	-7.3
Westbrook Inverter Transfor	W_INVTR6	369881	4906578	2	0	0	77.3	77.3	1	5340.37	3.25	0	85.55	0	-3.24	0	0	2.53	0	0	0	0	0	0	-7.49	-7.49
Inverter Transformer	MV1-14 T	365157	4905049	2	0	0	69.4	69.4	1	2507.06	3.25	0	78.98	0	2.35	0	0	5.45	0	0	0	0	0	0	-17.43	-17.43
Inverter Transformer	MV1-13 T	364725	4905241	2	0	0	69.4	69.4	1	2873.29	3.25	0	80.17	0	2.47	0	0	5.77	0	0	0	0	0	0	-19.06	-19.06

Inverter Transformer	MV1-10 T	365010	4905564	2	0	0	69.4	69.4	1	3038.77	3.25	0	80.65	0	2.52	0	0	5.92	0	0	0	0	0	0	-19.74	-19.74
Inverter Transformer	MV1-7 T	364919	4905782	2	0	0	69.4	69.4	1	3274.99	3.25	0	81.3	0	2.59	0	0	6.11	0	0	0	0	0	0	-20.65	-20.65
Inverter Transformer	MV2-1 T	365836	4906816	2	0	0	69.4	69.4	1	4078.57	3.25	0	83.21	0	2.81	0	0	6.73	0	0	0	0	0	0	-23.4	-23.4
Inverter Transformer	MV6-4 T	370244	4906966	2	0	0	69.4	69.4	1	5871.61	3.25	0	86.38	0	3.17	0	0	7.94	0	0	0	0	0	0	-28.13	-28.13
Inverter Transformer	MV6-1 T	370230	4907364	2	0	0	69.4	69.4	1	6154.33	3.25	0	86.78	0	3.21	0	0	8.11	0	0	0	0	0	0	-28.76	-28.76
Inverter Transformer	MV1-15 T	365309	4904994	2	0	0	56.1	56.1	1	2398.86	3.25	0	78.6	0	0.57	0	0	7.8	0	0	0	0	0	0	-30.92	-30.92
Inverter Transformer	MV1-12 T	365044	4905386	2	0	0	56.1	56.1	1	2861.33	3.25	0	80.13	0	0.77	0	0	8.63	0	0	0	0	0	0	-33.47	-33.47
Inverter Transformer	MV1-11 T	364649	4905414	2	0	0	56.1	56.1	1	3061.21	3.25	0	80.72	0	0.86	0	0	8.97	0	0	0	0	0	0	-34.49	-34.49
Inverter Transformer	MV1-8 T	364782	4905647	2	0	0	56.1	56.1	1	3206.74	3.25	0	81.12	0	0.92	0	0	9.21	0	0	0	0	0	0	-35.19	-35.19
Inverter Transformer	MV1-9 T	364555	4905646	2	0	0	56.1	56.1	1	3309.58	3.25	0	81.4	0	0.96	0	0	9.38	0	0	0	0	0	0	-35.68	-35.68
Inverter Transformer	MV1-4 T	364821	4905918	2	0	0	56.1	56.1	1	3438.17	3.25	0	81.73	0	1.01	0	0	9.59	0	0	0	0	0	0	-36.27	-36.27
Inverter Transformer	MV1-5 T	364676	4905892	2	0	0	56.1	56.1	1	3473.54	3.25	0	81.82	0	1.03	0	0	9.65	0	0	0	0	0	0	-36.43	-36.43
Inverter Transformer	MV1-6 T	364482	4905835	2	0	0	56.1	56.1	1	3510.4	3.25	0	81.91	0	1.04	0	0	9.7	0	0	0	0	0	0	-36.6	-36.6
Inverter Transformer	MV1-2 T	364759	4906063	2	0	0	56.1	56.1	1	3595.87	3.25	0	82.12	0	1.08	0	0	9.84	0	0	0	0	0	0	-36.98	-36.98
Inverter Transformer	MV1-1 T	364721	4906166	2	0	0	56.1	56.1	1	3705.54	3.25	0	82.38	0	1.12	0	0	10.01	0	0	0	0	0	0	-37.45	-37.45
Inverter Transformer	MV1-3 T	364435	4906039	2	0	0	56.1	56.1	1	3712.53	3.25	0	82.39	0	1.13	0	0	10.02	0	0	0	0	0	0	-37.48	-37.48
Inverter Transformer	MV2-3 T	365814	4906641	2	0	0	56.1	56.1	1	3906.01	3.25	0	82.83	0	1.21	0	0	10.31	0	0	0	0	0	0	-38.3	-38.3
Inverter Transformer	MV2-2 T	365982	4906654	2	0	0	56.1	56.1	1	3907.83	3.25	0	82.84	0	1.21	0	0	10.32	0	0	0	0	0	0	-38.3	-38.3
Inverter Transformer	MV2-4 T	365590	4906628	2	0	0	56.1	56.1	1	3919.16	3.25	0	82.86	0	1.21	0	0	10.33	0	0	0	0	0	0	-38.35	-38.35
Inverter Transformer	MV3-18 T	367757	4907412	2	0	0	56.1	56.1	1	4928.76	3.25	0	84.85	0	1.6	0	0	11.76	0	0	0	0	0	0	-42.16	-42.16
Inverter Transformer	MV3-21 T	368484	4907206	2	0	0	56.1	56.1	1	5026.83	3.25	0	85.03	0	1.64	0	0	11.89	0	0	0	0	0	0	-42.49	-42.49
Inverter Transformer	MV3-22 T	368661	4907142	2	0	0	56.1	56.1	1	5055.47	3.25	0	85.08	0	1.65	0	0	11.93	0	0	0	0	0	0	-42.59	-42.59
Inverter Transformer	MV3-12 T	367674	4907594	2	0	0	56.1	56.1	1	5075.83	3.25	0	85.11	0	1.65	0	0	11.95	0	0	0	0	0	0	-42.66	-42.66
Inverter Transformer	MV3-19 T	368352	4907347	2	0	0	56.1	56.1	1	5093.98	3.25	0	85.14	0	1.66	0	0	11.98	0	0	0	0	0	0	-42.72	-42.72
Inverter Transformer	MV3-17 T	368183	4907472	2	0	0	56.1	56.1	1	5138.11	3.25	0	85.22	0	1.67	0	0	12.03	0	0	0	0	0	0	-42.87	-42.87
Inverter Transformer	MV3-13 T	367958	4907577	2	0	0	56.1	56.1	1	5151.88	3.25	0	85.24	0	1.68	0	0	12.05	0	0	0	0	0	0	-42.91	-42.91
Inverter Transformer	MV3-15 T	368351	4907477	2	0	0	56.1	56.1	1	5211.18	3.25	0	85.34	0	1.7	0	0	12.13	0	0	0	0	0	0	-43.11	-43.11
Inverter Transformer	MV3-20 T	368683	4907317	2	0	0	56.1	56.1	1	5218.84	3.25	0	85.35	0	1.7	0	0	12.14	0	0	0	0	0	0	-43.14	-43.14
Inverter Transformer	MV3-16 T	368509	4907475	2	0	0	56.1	56.1	1	5277.85	3.25	0	85.45	0	1.72	0	0	12.21	0	0	0	0	0	0	-43.33	-43.33
Inverter Transformer	MV3-10 T	368162	4907669	2	0	0	56.1	56.1	1	5311.76	3.25	0	85.5	0	1.74	0	0	12.26	0	0	0	0	0	0	-43.44	-43.44
Inverter Transformer	MV3-7 T	367951	4907754	2	0	0	56.1	56.1	1	5315.71	3.25	0	85.51	0	1.74	0	0	12.26	0	0	0	0	0	0	-43.45	-43.45
Inverter Transformer	MV3-11 T	368340	4907662	2	0	0	56.1	56.1	1	5375.07	3.25	0	85.61	0	1.76	0	0	12.34	0	0	0	0	0	0	-43.65	-43.65
Inverter Transformer	MV3-14 T	368678	4907498	2	0	0	56.1	56.1	1	5375.59	3.25	0	85.61	0	1.76	0	0	12.34	0	0	0	0	0	0	-43.65	-43.65
Inverter Transformer	MV3-6 T	368156	4907834	2	0	0	56.1	56.1	1	5462.71	3.25	0	85.75	0	1.79	0	0	12.45	0	0	0	0	0	0	-43.93	-43.93
Inverter Transformer	MV3-3 T	367944	4907927	2	0	0	56.1	56.1	1	5476.58	3.25	0	85.77	0	1.79	0	0	12.47	0	0	0	0	0	0	-43.97	-43.97
Inverter Transformer	MV3-9 T	368517	4907703	2	0	0	56.1	56.1	1	5486.34	3.25	0	85.79	0	1.8	0	0	12.48	0	0	0	0	0	0	-44	-44
Inverter Transformer	MV3-5 T	368335	4907843	2	0	0	56.1	56.1	1	5538.99	3.25	0	85.87	0	1.81	0	0	12.54	0	0	0	0	0	0	-44.17	-44.17
Inverter Transformer	MV3-8 T	368685	4907712	2	0	0	56.1	56.1	1	5568.68	3.25	0	85.92	0	1.82	0	0	12.58	0	0	0	0	0	0	-44.26	-44.26
Inverter Transformer	MV3-1 T	368150	4907976	2	0	0	56.1	56.1	1	5592.97	3.25	0	85.95	0	1.83	0	0	12.61	0	0	0	0	0	0	-44.34	-44.34
Inverter Transformer	MV3-4 T	368507	4907925	2	0	0	56.1	56.1	1	5683.41	3.25	0	86.09	0	1.86	0	0	12.72	0	0	0	0	0	0	-44.62	-44.62
Inverter Transformer	MV3-2 T	368677	4907928	2	0	0	56.1	56.1	1	5758.48	3.25	0	86.21	0	1.89	0	0	12.81	0	0	0	0	0	0	-44.85	-44.85
Inverter Transformer	MV6-3 T	370202	4907140	2	0	0	56.1	56.1	1	5969.22	3.25	0	86.52	0	1.96	0	0	13.07	0	0	0	0	0	0	-45.48	-45.48
Inverter Transformer	MV6-2 T	370091	4907339	2	0	0	56.1	56.1	1	6044.24	3.25	0	86.63	0	1.98	0	0	13.16	0	0	0	0	0	0	-45.7	-45.7
Inverter Transformer	MV4-15 T	369170	4908481	2	0	0	56.1	56.1	1	6474.58	3.25	0	87.22	0	2.11	0	0	13.65	0	0	0	0	0	0	-46.93	-46.93
Inverter Transformer	MV4-14 T	369182	4908507	2	0	0	56.1	56.1	1	6503.18	3.25	0	87.26	0	2.12	0	0	13.68	0	0	0	0	0	0	-47.01	-47.01
Inverter Transformer	MV4-13 T	369057	4908605	2	0	0	56.1	56.1	1	6533.66	3.25	0	87.3	0	2.13	0	0	13.72	0	0	0	0	0	0	-47.09	-47.09
Inverter Transformer	MV4-12 T	369049	4908803	2	0	0	56.1	56.1	1	6708.21	3.25	0	87.53	0	2.18	0	0	13.91	0	0	0	0	0	0	-47.56	-47.56
Inverter Transformer	MV4-11 T	369269	4908855	2	0	0	56.1	56.1	1	6852.23	3.25	0	87.72	0	2.22	0	0	14.07	0	0	0	0	0	0	-47.95	-47.95
Inverter Transformer	MV4-10 T	369307	4908858	2	0	0	56.1	56.1	1	6872.24	3.25	0	87.74	0	2.22	0	0	14.09	0	0	0	0	0	0	-48	-48
Inverter Transformer	MV4-7 T	369040	4909001	2	0	0	56.1	56.1	1	6883.62	3.25	0	87.76	0	2.23	0	0	14.1	0	0	0	0	0	0	-48.03	-48.03
Inverter Transformer	MV5-6 T	369987	4908507	2	0	0	56.1	56.1	1	6914.42	3.25	0	87.8	0	2.24	0	0	14.14	0	0	0	0	0	0	-48.11	-48.11
Inverter Transformer	MV4-8 T	369262	4909001	2	0	0	56.1	56.1	1	6979.51	3.25	0	87.88	0	2.25	0	0	14.21	0	0	0	0	0	0	-48.28	-48.28
Inverter Transformer	MV4-9 T	369284	4909001	2	0	0	56.1	56.1	1	6989.32	3.25	0	87.89	0	2.26	0	0	14.22	0	0	0	0	0	0	-48.31	-48.31
Inverter Transformer	MV4-4 T	369033	4909199	2	0	0	56.1	56.1	1	7061.06	3.25	0	87.98	0	2.28	0	0	14.3	0	0	0	0	0	0	-48.49	-48.49
Inverter Transformer	MV5-5 T	370021	4908690	2	0	0	56.1	56.1	1	7086	3.25	0	88.01	0	2.28	0	0	14.32	0	0	0	0	0	0	-48.55	-48.55
Inverter Transformer	MV4-6 T	369249	4909192	2	0	0	56.1	56.1	1	7145.44	3.25	0	88.08	0	2.3	0	0	14.38	0	0	0	0	0	0	-48.71	-48.71
Inverter Transformer	MV4-5 T	369283	4909199	2	0	0	56.1	56.1	1	7166.52	3.25	0	88.11	0	2.3	0	0	14.41	0	0	0	0	0	0	-48.76	-48.76
Inverter Transformer	MV5-2 T	370011	4908853	2	0	0	56.1	56.1	1	7217.84	3.25	0	88.17	0	2.32	0	0	14.46	0	0	0	0	0	0	-48.89	-48.89
Inverter Transformer	MV4-1 T	369017	4909397	2	0	0	56.1	56.1	1	7236	3.25	0	88.19	0	2.32	0	0	14.48	0	0	0	0	0	0	-48.93	-48.93
Inverter Transformer	MV5-4 T	370330	4908707	2	0	0	56.1	56.1	1	7273.03	3.25	0	88.23	0	2.33	0	0	14.52	0	0	0	0	0	0	-49.03	-49.03
Inverter Transformer	MV4-3 T	369234	4909397	2	0	0	56.1	56.1	1	7324.48	3.25	0	88.3	0	2.35	0	0	14.57	0	0	0	0	0	0	-49.16	-49.16
Inverter Transformer	MV4-2 T	369267	4909397	2	0	0	56.1	56.1	1	7338.4	3.25	0	88.31	0	2.35	0	0	14.59	0	0	0	0	0	0	-49.19	-49.19
Inverter Transformer	MV5-3 T	370237	4908851	2	0	0	56.1	56.1	1	7339.33	3.25	0	88.31	0	2.35	0	0	14.59	0	0	0	0	0	0	-49.19	-49.19
Inverter Transformer	MV5-1 T	370015	4909142	2	0	0	56.1	56.1	1	7465.86	3.25	0	88.46	0	2.38	0	0	14.72	0	0	0	0	0	0	-49.5	-49.5
Line Reactor	NGR	369421	4908787.5	5	0	0	45.4	45.4	1	6863.13	5.25	0	87.73	0	3.22	1.37	0.1	2.8	0	0	0	0	0	0	-49.77	-49.77
Limit. Valu 0	0																									
Level D/N: 28.7051	28.7051																									

Receiver: Existing Noise Receptor
ID: G-18
X: 366180.2
Y: 4902639.1
Z: 4.5
Ground: 0

ISO	Description	ID	X	Y	Z	Ground	ReflOrd	LxT	LxN	L/A	Dist.	hm	Freq	Adiv	K0b	Agr	Abar	z	Aatm	Afol	Ahous	Cmet	CmetN	Dc	RL	LtotT	LtotN
	Sol_Luce Substation	S_Substation	369426	4908792	3.5	0	0	112.1	112.1	1	6956.54	5.25	0	87.85	0	1.37	2.45	0.31	10.71	0	0	0	0	0	0	9.7	9.7
	Inverters	G_Inv7	366694.6	4902824.7	2	0	0	87.7	87.7	1	546.86	3.25	0	65.76	0	2.4	0	0	0.83	0	0	0	0	0	0	18.68	18.68
	Inverters	G_Inv5	366638.5	4902958.1	2	0	0	87.7	87.7	1	558.4	3.25	0	65.94	0	2.4	0	0	0.84	0	0	0	0	0	0	18.48	18.48
	Gardiner Substation	G_Sub	366586.3	4903349.9	2.5	0	0	90.8	90.8	1	818.63	3.5	0	69.26	0	-0.39	0	0	2.14	0	0	0	0	0	0	19.77	19.77
	Inverters	G_Inv9	366750.9	4902691.8	2	0	0	87.7	87.7	1	573.13	3.25	0	66.17	0	2.4	0	0	0.86	0	0	0	0	0	0	18.23	18.23
	Inverter	MV1-15	365315	4904994	2	0	0	100.3	100.3	1	2508.81	3.25	0	78.99	0	0.26	0	0	14.47	0	0	0	0	0	0	6.59	6.59
	Inverters	G_Inv3	366583.7	4903091.4	2	0	0	87.7	87.7	1	606.13	3.25	0	66.65	0	2.4	0	0	0.91	0	0	0	0	0	0	17.7	17.7
	Inverters	G_Inv1	366526.4	4903225.8	2	0	0	87.7	87.7	1	681.23	3.25	0	67.67	0	2.4	0	0	1.01	0	0	0	0	0	0	16.58	16.58
	Inverter	MV1-12	365038	4905386	2	0	0	100.3	100.3	1	2974.91	3.25	0	80.47	0	0.36	0	0	15.33	0	0	0	0	0	0	4.16	4.16
	Inverters	G_Inv6	366788.5	4902972	2	0	0	87.7	87.7	1	693.44	3.25	0	67.82	0	2.41	0	0	1.03	0	0	0	0	0	0	16.41	16.41
	Inverters	G_Inv8	366844.5	4902838.5	2	0	0	87.7	87.7	1	693.59	3.25	0	67.82	0	2.41	0	0	1.03	0	0	0	0	0	0	16.4	16.4
	Inverters	G_Inv4	366732.8	4903105	2	0	0	87.7	87.7	1	722.8	3.25	0	68.18	0	2.41	0	0	1.07	0	0	0	0	0	0	16	16
	Inverters	G_Inv10	366900.7	4902704.8	2	0	0	87.7	87.7	1	723.49	3.25	0	68.19	0	2.41	0	0	1.07	0	0	0	0	0	0	15.99	15.99
	Inverter	MV1-11	364655	4905414	2	0	0	100.3	100.3	1	3166.44	3.25	0	81.01	0	0.39	0	0	15.66	0	0	0	0	0	0	3.24	3.24
	Inverter	MV1-8	364788	4905647	2	0	0	100.3	100.3	1	3314.47	3.25	0	81.41	0	0.42	0	0	15.92	0	0	0	0	0	0	2.57	2.57
	Inverters	G_Inv2	366676.9	4903239.1	2	0	0	87.7	87.7	1	778.92	3.25	0	68.83	0	2.42	0	0	1.14	0	0	0	0	0	0	15.27	15.27
	Inverter	MV1-9	364561	4905646	2	0	0	100.3	100.3	1	3415.15	3.25	0	81.67	0	0.44	0	0	16.09	0	0	0	0	0	0	2.12	2.12
	Inverter	MV1-4	364815	4905918	2	0	0	100.3	100.3	1	3551.75	3.25	0	82.01	0	0.46	0	0	16.32	0	0	0	0	0	0	1.53	1.53
	Inverter	MV1-5	364671	4905892	2	0	0	100.3	100.3	1	3585.95	3.25	0	82.09	0	0.46	0	0	16.37	0	0	0	0	0	0	1.38	1.38
	Inverter	MV1-6	364477	4905835	2	0	0	100.3	100.3	1	3621.42	3.25	0	82.18	0	0.47	0	0	16.43	0	0	0	0	0	0	1.23	1.23
	Inverter	MV1-14	365163	4905049	2	0	0	97.3	97.3	1	2615.78	3.25	0	79.35	0	0.28	0	0	14.68	0	0	0	0	0	0	3	3
	Inverter	MV1-2	364753	4906063	2	0	0	100.3	100.3	1	3709.45	3.25	0	82.39	0	0.48	0	0	16.58	0	0	0	0	0	0	0.86	0.86
	Inverter	MV1-1	364715	4906166	2	0	0	100.3	100.3	1	3819.14	3.25	0	82.64	0	0.5	0	0	16.76	0	0	0	0	0	0	0.41	0.41
	Inverter	MV2-3	365820	4906641	2	0	0	100.3	100.3	1	4018.08	3.25	0	83.08	0	0.53	0	0	17.08	0	0	0	0	0	0	-0.38	-0.38
	Inverter	MV2-4	365586	4906624	2	0	0	100.3	100.3	1	4028.96	3.25	0	83.1	0	0.53	0	0	17.09	0	0	0	0	0	0	-0.42	-0.42
	Inverter	MV1-13	364731	4905241	2	0	0	97.3	97.3	1	2978.27	3.25	0	80.48	0	0.36	0	0	15.33	0	0	0	0	0	0	1.14	1.14
	Inverter	MV1-10	365004	4905564	2	0	0	97.3	97.3	1	3152.54	3.25	0	80.97	0	0.39	0	0	15.64	0	0	0	0	0	0	0.31	0.31
	Inverter	MV1-7	364925	4905782	2	0	0	97.3	97.3	1	3384.28	3.25	0	81.59	0	0.43	0	0	16.04	0	0	0	0	0	0	-0.75	-0.75
	Inverter	MV3-18	367752	4907412	2	0	0	100.3	100.3	1	5025.05	3.25	0	85.02	0	0.64	0	0	18.62	0	0	0	0	0	0	-3.97	-3.97
	Inverter	MV3-21	368478	4907206	2	0	0	100.3	100.3	1	5112.38	3.25	0	85.17	0	0.65	0	0	18.74	0	0	0	0	0	0	-4.26	-4.26
	Inverter	MV3-12	367668	4907594	2	0	0	100.3	100.3	1	5173.45	3.25	0	85.28	0	0.66	0	0	18.83	0	0	0	0	0	0	-4.45	-4.45
	Inverter	MV3-19	368357	4907347	2	0	0	100.3	100.3	1	5186.79	3.25	0	85.3	0	0.66	0	0	18.85	0	0	0	0	0	0	-4.5	-4.5
	Inverter	MV3-17	368178	4907472	2	0	0	100.3	100.3	1	5229.54	3.25	0	85.37	0	0.66	0	0	18.91	0	0	0	0	0	0	-4.63	-4.63
	Inverter	MV3-13	367963	4907577	2	0	0	100.3	100.3	1	5249.88	3.25	0	85.4	0	0.66	0	0	18.94	0	0	0	0	0	0	-4.7	-4.7
	Inverter	MV3-15	368357	4907477	2	0	0	100.3	100.3	1	5305.07	3.25	0	85.49	0	0.67	0	0	19.02	0	0	0	0	0	0	-4.87	-4.87
	Inverter	MV3-20	368689	4907317	2	0	0	100.3	100.3	1	5308.19	3.25	0	85.5	0	0.67	0	0	19.03	0	0	0	0	0	0	-4.88	-4.88
	Inverter	MV3-16	368514	4907475	2	0	0	100.3	100.3	1	5369.6	3.25	0	85.6	0	0.67	0	0	19.12	0	0	0	0	0	0	-5.07	-5.07
	Inverter	MV3-10	368167	4907669	2	0	0	100.3	100.3	1	5408.07	3.25	0	85.66	0	0.67	0	0	19.17	0	0	0	0	0	0	-5.19	-5.19
	Inverter	MV3-7	367945	4907754	2	0	0	100.3	100.3	1	5410.8	3.25	0	85.67	0	0.67	0	0	19.17	0	0	0	0	0	0	-5.2	-5.2
	Inverter	MV3-14	368684	4907498	2	0	0	100.3	100.3	1	5466.07	3.25	0	85.75	0	0.68	0	0	19.25	0	0	0	0	0	0	-5.37	-5.37
	Inverter	MV3-11	368346	4907662	2	0	0	100.3	100.3	1	5469.94	3.25	0	85.76	0	0.68	0	0	19.26	0	0	0	0	0	0	-5.38	-5.38
	Inverter	MV3-6	368162	4907834	2	0	0	100.3	100.3	1	5560.08	3.25	0	85.9	0	0.68	0	0	19.39	0	0	0	0	0	0	-5.66	-5.66
	Inverter	MV3-3	367939	4907927	2	0	0	100.3	100.3	1	5572.73	3.25	0	85.92	0	0.68	0	0	19.4	0	0	0	0	0	0	-5.7	-5.7
	Inverter	MV3-9	368512	4907703	2	0	0	100.3	100.3	1	5574.98	3.25	0	85.92	0	0.68	0	0	19.41	0	0	0	0	0	0	-5.7	-5.7
	Inverter	MV3-8	368680	4907712	2	0	0	100.3	100.3	1	5655.38	3.25	0	86.05	0	0.69	0	0	19.52	0	0	0	0	0	0	-5.95	-5.95
	Inverter	MV2-1	365842	4906816	2	0	0	97.3	97.3	1	4190.57	3.25	0	83.45	0	0.55	0	0	17.35	0	0	0	0	0	0	-4.04	-4.04
	Inverter	MV6-3	370207	4907140	2	0	0	100.3	100.3	1	6039.31	3.25	0	86.62	0	0.71	0	0	20.05	0	0	0	0	0	0	-7.06	-7.06
	Inverter	MV6-2	370085	4907339	2	0	0	100.3	100.3	1	6110.36	3.25	0	86.72	0	0.71	0	0	20.14	0	0	0	0	0	0	-7.26	-7.26
	Inverter	MV4-11	369264	4908855	2	0	0	100.3	100.3	1	6938.82	3.25	0	87.83	0	0.71	0	0	21.22	0	0	0	0	0	0	-9.45	-9.45
	Inverter	MV4-10	369312	4908858	2	0	0	100.3	100.3	1	6962.97	3.25	0	87.86	0	0.71	0	0	21.25	0	0	0	0	0	0	-9.51	-9.51
	Inverter	MV4-7	369035	4909001	2	0	0	100.3	100.3	1	6973.07	3.25	0	87.87	0	0.71	0	0	21.27	0	0	0	0	0	0	-9.53	-9.53
	Inverter	MV4-8	369256	4909001	2	0	0	100.3	100.3	1	7066.42	3.25	0	87.98	0	0.71	0	0	21.38	0	0	0	0	0	0	-9.76	-9.76
	Inverter	MV4-9	369289	4909001	2	0	0	100.3	100.3	1	7080.85	3.25	0	88	0	0.71	0	0	21.4	0	0	0	0	0	0	-9.8	-9.8
	Inverter	MV4-4	369027	4909199	2	0	0	100.3	100.3	1	7150.98	3.25	0	88.09	0	0.71	0	0	21.49	0	0	0	0	0	0	-9.97	-9.97
	Inverter	MV5-5	370015	4908690	2	0	0	100.3	100.3	1	7163.73	3.25	0	88.1	0	0.7	0	0	21.5	0	0	0	0	0	0	-10	-10
	Inverter	MV4-6	369243	4909192	2	0	0	100.3	100.3	1	7233.34	3.25	0	88.19	0	0.7	0	0	21.59	0	0	0	0	0	0	-10.17	-10.17
	Inverter	MV4-5	369289	4909199	2	0	0	100.3	100.3	1	7259.27	3.25	0	88.22	0	0.7	0	0	21.62	0	0	0	0	0	0	-10.23	-10.23
	Inverter	MV5-2	370006	4908853	2	0	0	100.3	100.3	1	7297.21	3.25	0	88.26	0	0.7	0	0	21.67	0	0	0	0	0	0	-10.32	-10.32
	Inverter	MV4-1	369011	4909397	2	0	0	100.3	100.3	1	7326.84	3.25	0	88.3	0	0.7	0	0	21.7	0	0	0	0	0	0	-10.39	-10.39
	Inverter	MV5-4	370324	4908707	2	0	0	100.3	100.3	1	7347.82	3.25	0	88.32	0	0.7	0	0	21.73	0	0	0	0	0	0	-10.44	-10.44
	Inverter	MV4-3	369229	4909397	2	0	0	100.3	100.3	1	7413.8	3.25	0	88.4	0	0.69	0	0	21.81	0	0	0	0	0	0	-10.59	-10.59
	Inverter	MV5-3	370231	4908851	2	0	0	100.3	100.3	1	7415.98	3.25	0	88.4	0	0.69	0	0	21.81	0	0	0	0	0	0	-10.6	-10.6
	Inverter	MV4-2	369272	4909397	2	0	0	100.3	100.3	1	7431.58	3.25	0	88.42	0	0.69	0	0	21.83	0	0	0	0	0	0	-10.63	-10.63
	Inverter	MV5-1	370020	4909142	2	0	0	100.3	100.3	1	7551.94	3.25	0	88.56	0	0.69	0	0	21.98	0	0	0	0	0	0	-10.91	-10.91
	Inverter	MV6-1	370235	4907364	2	0	0	97.3	97.3	1	6226.24	3.25	0	86.88	0	0.71	0	0	20.3	0	0	0	0	0	0	-10.58	-10.58
	DSTATCOM - 10 MVAR #2	DSAT2	369403	4908757	2.5	0	0	96.6	96.6	1	6914.85	3.5	0	87.8	0	3.83	0	0	4.27	0	0	0	0	0	0	0.73	0.73
	DSTATCOM - 10 MVAR #1	DSAT1	369437	4908757	2.5	0	0	96.6	96.6	1	6930.76	3.5	0	87.82	0	3.83	0	0	4.28	0	0	0	0	0	0	0.7	0.7
	SubstationTransformer	W_ST	369711.17	4906112.3	2.5	0	0	92	92	1	4952.84	3.5	0	84.9	0	0.55	0	-0.1	8.56	0	0	0	0	0	0	-2.04	-2.04
	Inverter	MV1-3	364440	4906039	2	0	0	89.1	89.1	1	3819.37	3.25	0	82.64	0	1.35	0	0	10.83	0	0	0	0	0	0	-5.76	-5.76
	Inverter	MV2-2	365977	4906654	2	0	0	89.1	89.1	1	4020.04	3.25	0	83.08	0	1.4	0	0	11.11	0	0	0	0	0	0	-6.54	-6.54
	Westbrook Inverter Enclosur	W_INV3	369508	4906164	2	0	0	89.1	89.1	1	4847.6	3.25	0	84.71	0	1.6	0	0	12.26	0	0	0	0	0	0	-9.51	-9.51
	Westbrook Inverter Enclosur	W_INV2	369374	4906388	2	0	0	89.1	89.1	1	4924.9	3.25	0	84.85	0	1.62	0	0	12.36	0	0	0	0	0	0	-9.77	-9.77

Westbrook Inverter Enclosur	W_INV4	369673	4906164	2	0	0	89.1	89.1	1	4962.32	3.25	0	84.91	0	1.63	0	0	12.41	0	0	0	0	0	0	-9.9	-9.9
Inverter	MV3-22	368656	4907142	2	0	0	89.1	89.1	1	5138.65	3.25	0	85.22	0	1.67	0	0	12.65	0	0	0	0	0	0	-10.48	-10.48
Westbrook Inverter Enclosur	W_INV7	369780	4906417	2	0	0	89.1	89.1	1	5218.34	3.25	0	85.35	0	1.69	0	0	12.75	0	0	0	0	0	0	-10.74	-10.74
Westbrook Inverter Enclosur	W_INV5	369719	4906574	2	0	0	89.1	89.1	1	5292.12	3.25	0	85.47	0	1.71	0	0	12.85	0	0	0	0	0	0	-10.98	-10.98
Westbrook Inverter Enclosur	W_INV6	369875	4906578	2	0	0	89.1	89.1	1	5400.6	3.25	0	85.65	0	1.74	0	0	12.99	0	0	0	0	0	0	-11.32	-11.32
Inverter	MV3-5	368340	4907843	2	0	0	89.1	89.1	1	5634.3	3.25	0	86.02	0	1.8	0	0	13.3	0	0	0	0	0	0	-12.05	-12.05
Inverter	MV3-1	368156	4907976	2	0	0	89.1	89.1	1	5690.9	3.25	0	86.1	0	1.81	0	0	13.37	0	0	0	0	0	0	-12.22	-12.22
Inverter	MV3-4	368502	4907925	2	0	0	89.1	89.1	1	5773.34	3.25	0	86.23	0	1.83	0	0	13.47	0	0	0	0	0	0	-12.48	-12.48
Inverter	MV3-2	368671	4907928	2	0	0	89.1	89.1	1	5846.07	3.25	0	86.34	0	1.85	0	0	13.57	0	0	0	0	0	0	-12.69	-12.69
Fixed Reactor Bank 1	FRB1	369378	4908755	6	0	0	89.8	89.8	1	6901.46	5.25	0	87.78	0	-0.3	0	0	10.65	0	0	0	0	0	0	-8.36	-8.36
Fixed Reactor Bank 2	FRB2	369464	4908755	6	0	0	89.8	89.8	1	6941.73	5.25	0	87.83	0	-0.29	0	0	10.69	0	0	0	0	0	0	-8.45	-8.45
Inverter	MV4-15	369176	4908481	2	0	0	89.1	89.1	1	6565.26	3.25	0	87.35	0	2.02	0	0	14.46	0	0	0	0	0	0	-14.77	-14.77
Inverter	MV4-14	369176	4908507	2	0	0	89.1	89.1	1	6588.4	3.25	0	87.38	0	2.03	0	0	14.49	0	0	0	0	0	0	-14.84	-14.84
Inverter	MV4-13	369051	4908605	2	0	0	89.1	89.1	1	6620.68	3.25	0	87.42	0	2.04	0	0	14.53	0	0	0	0	0	0	-14.93	-14.93
Inverter	MV4-12	369043	4908803	2	0	0	89.1	89.1	1	6796.27	3.25	0	87.65	0	2.08	0	0	14.74	0	0	0	0	0	0	-15.41	-15.41
Inverter	MV5-6	369982	4908507	2	0	0	89.1	89.1	1	6991.85	3.25	0	87.89	0	2.13	0	0	14.98	0	0	0	0	0	0	-15.94	-15.94
Westbrook Inverter Enclosur	W_INV1	369409	4906578	2	0	0	86.1	86.1	1	5093.14	3.25	0	85.14	0	1.66	0	0	12.59	0	0	0	0	0	0	-13.33	-13.33
Inverter	MV6-4	370250	4906966	2	0	0	86.1	86.1	1	5940.15	3.25	0	86.48	0	1.87	0	0	13.69	0	0	0	0	0	0	-15.98	-15.98
Westbrook Inverter Transfor	W_INVTR1	369403	4906578	2	0	0	78.2	78.2	1	5089.34	3.25	0	85.13	0	-3.2	0	0	2.44	0	0	0	0	0	0	-6.14	-6.14
Westbrook Inverter Transfor	W_INVTR3	369514	4906164	2	0	0	77.3	77.3	1	4851.72	3.25	0	84.72	0	-3.15	0	0	2.36	0	0	0	0	0	0	-6.59	-6.59
Westbrook Inverter Transfor	W_INVTR2	369368	4906388	2	0	0	77.3	77.3	1	4921.01	3.25	0	84.84	0	-3.16	0	0	2.39	0	0	0	0	0	0	-6.72	-6.72
Westbrook Inverter Transfor	W_INVTR4	369679	4906164	2	0	0	77.3	77.3	1	4966.54	3.25	0	84.92	0	-3.17	0	0	2.4	0	0	0	0	0	0	-6.81	-6.81
Westbrook Inverter Transfor	W_INVTR7	369786	4906417	2	0	0	77.3	77.3	1	5222.48	3.25	0	85.36	0	-3.22	0	0	2.49	0	0	0	0	0	0	-7.28	-7.28
Westbrook Inverter Transfor	W_INVTR5	369725	4906574	2	0	0	77.3	77.3	1	5296.14	3.25	0	85.48	0	-3.24	0	0	2.51	0	0	0	0	0	0	-7.41	-7.41
Westbrook Inverter Transfor	W_INVTR6	369881	4906578	2	0	0	77.3	77.3	1	5404.71	3.25	0	85.66	0	-3.26	0	0	2.55	0	0	0	0	0	0	-7.61	-7.61
Inverter Transformer	MV1-14 T	365157	4905049	2	0	0	69.4	69.4	1	2618.12	3.25	0	79.36	0	2.39	0	0	5.55	0	0	0	0	0	0	-17.95	-17.95
Inverter Transformer	MV1-13 T	364725	4905241	2	0	0	69.4	69.4	1	2981.19	3.25	0	80.49	0	2.5	0	0	5.87	0	0	0	0	0	0	-19.51	-19.51
Inverter Transformer	MV1-10 T	365010	4905564	2	0	0	69.4	69.4	1	3150.3	3.25	0	80.97	0	2.55	0	0	6.01	0	0	0	0	0	0	-20.18	-20.18
Inverter Transformer	MV1-7 T	364919	4905782	2	0	0	69.4	69.4	1	3386.51	3.25	0	81.6	0	2.62	0	0	6.2	0	0	0	0	0	0	-21.07	-21.07
Inverter Transformer	MV2-1 T	365836	4906816	2	0	0	69.4	69.4	1	4191.06	3.25	0	83.45	0	2.83	0	0	6.82	0	0	0	0	0	0	-23.75	-23.75
Inverter Transformer	MV6-4 T	370244	4906966	2	0	0	69.4	69.4	1	5936.04	3.25	0	86.47	0	3.18	0	0	7.98	0	0	0	0	0	0	-28.28	-28.28
Inverter Transformer	MV6-1 T	370230	4907364	2	0	0	69.4	69.4	1	6222.99	3.25	0	86.88	0	3.22	0	0	8.15	0	0	0	0	0	0	-28.9	-28.9
Inverter Transformer	MV1-15 T	365309	4904994	2	0	0	56.1	56.1	1	2510.89	3.25	0	79	0	0.62	0	0	8.01	0	0	0	0	0	0	-31.57	-31.57
Inverter Transformer	MV1-12 T	365044	4905386	2	0	0	56.1	56.1	1	2972.61	3.25	0	80.46	0	0.82	0	0	8.82	0	0	0	0	0	0	-34.04	-34.04
Inverter Transformer	MV1-11 T	364649	4905414	2	0	0	56.1	56.1	1	3169.33	3.25	0	81.02	0	0.9	0	0	9.15	0	0	0	0	0	0	-35.01	-35.01
Inverter Transformer	MV1-8 T	364782	4905647	2	0	0	56.1	56.1	1	3316.99	3.25	0	81.41	0	0.96	0	0	9.39	0	0	0	0	0	0	-35.71	-35.71
Inverter Transformer	MV1-9 T	364555	4905646	2	0	0	56.1	56.1	1	3418	3.25	0	81.68	0	1.01	0	0	9.56	0	0	0	0	0	0	-36.18	-36.18
Inverter Transformer	MV1-4 T	364821	4905918	2	0	0	56.1	56.1	1	3549.45	3.25	0	82	0	1.06	0	0	9.77	0	0	0	0	0	0	-36.77	-36.77
Inverter Transformer	MV1-5 T	364676	4905892	2	0	0	56.1	56.1	1	3583.85	3.25	0	82.09	0	1.07	0	0	9.82	0	0	0	0	0	0	-36.92	-36.92
Inverter Transformer	MV1-6 T	364482	4905835	2	0	0	56.1	56.1	1	3619.07	3.25	0	82.17	0	1.09	0	0	9.87	0	0	0	0	0	0	-37.08	-37.08
Inverter Transformer	MV1-2 T	364759	4906063	2	0	0	56.1	56.1	1	3707.14	3.25	0	82.38	0	1.13	0	0	10.01	0	0	0	0	0	0	-37.46	-37.46
Inverter Transformer	MV1-1 T	364721	4906166	2	0	0	56.1	56.1	1	3816.84	3.25	0	82.63	0	1.17	0	0	10.18	0	0	0	0	0	0	-37.93	-37.93
Inverter Transformer	MV1-3 T	364435	4906039	2	0	0	56.1	56.1	1	3821.66	3.25	0	82.65	0	1.17	0	0	10.19	0	0	0	0	0	0	-37.95	-37.95
Inverter Transformer	MV2-3 T	365814	4906641	2	0	0	56.1	56.1	1	4018.62	3.25	0	83.08	0	1.25	0	0	10.48	0	0	0	0	0	0	-38.76	-38.76
Inverter Transformer	MV2-2 T	365982	4906654	2	0	0	56.1	56.1	1	4019.79	3.25	0	83.08	0	1.25	0	0	10.48	0	0	0	0	0	0	-38.76	-38.76
Inverter Transformer	MV2-4 T	365590	4906628	2	0	0	56.1	56.1	1	4032.33	3.25	0	83.11	0	1.26	0	0	10.5	0	0	0	0	0	0	-38.81	-38.81
Inverter Transformer	MV3-18 T	367757	4907412	2	0	0	56.1	56.1	1	5026.62	3.25	0	85.03	0	1.63	0	0	11.89	0	0	0	0	0	0	-42.49	-42.49
Inverter Transformer	MV3-21 T	368484	4907206	2	0	0	56.1	56.1	1	5115.08	3.25	0	85.18	0	1.67	0	0	12	0	0	0	0	0	0	-42.79	-42.79
Inverter Transformer	MV3-22 T	368661	4907142	2	0	0	56.1	56.1	1	5141.06	3.25	0	85.22	0	1.68	0	0	12.04	0	0	0	0	0	0	-42.88	-42.88
Inverter Transformer	MV3-12 T	367674	4907594	2	0	0	56.1	56.1	1	5175.18	3.25	0	85.28	0	1.69	0	0	12.08	0	0	0	0	0	0	-42.99	-42.99
Inverter Transformer	MV3-19 T	368352	4907347	2	0	0	56.1	56.1	1	5184.69	3.25	0	85.29	0	1.69	0	0	12.1	0	0	0	0	0	0	-43.02	-43.02
Inverter Transformer	MV3-17 T	368183	4907472	2	0	0	56.1	56.1	1	5231.46	3.25	0	85.37	0	1.71	0	0	12.16	0	0	0	0	0	0	-43.18	-43.18
Inverter Transformer	MV3-13 T	367958	4907577	2	0	0	56.1	56.1	1	5248.18	3.25	0	85.4	0	1.71	0	0	12.18	0	0	0	0	0	0	-43.23	-43.23
Inverter Transformer	MV3-15 T	368351	4907477	2	0	0	56.1	56.1	1	5302.61	3.25	0	85.49	0	1.73	0	0	12.25	0	0	0	0	0	0	-43.41	-43.41
Inverter Transformer	MV3-20 T	368683	4907317	2	0	0	56.1	56.1	1	5305.35	3.25	0	85.49	0	1.73	0	0	12.25	0	0	0	0	0	0	-43.42	-43.42
Inverter Transformer	MV3-16 T	368509	4907475	2	0	0	56.1	56.1	1	5367.42	3.25	0	85.6	0	1.76	0	0	12.33	0	0	0	0	0	0	-43.62	-43.62
Inverter Transformer	MV3-10 T	368162	4907669	2	0	0	56.1	56.1	1	5406.24	3.25	0	85.66	0	1.77	0	0	12.38	0	0	0	0	0	0	-43.75	-43.75
Inverter Transformer	MV3-7 T	367951	4907754	2	0	0	56.1	56.1	1	5412.76	3.25	0	85.67	0	1.77	0	0	12.39	0	0	0	0	0	0	-43.77	-43.77
Inverter Transformer	MV3-14 T	368678	4907498	2	0	0	56.1	56.1	1	5463.33	3.25	0	85.75	0	1.79	0	0	12.45	0	0	0	0	0	0	-43.93	-43.93
Inverter Transformer	MV3-11 T	368340	4907662	2	0	0	56.1	56.1	1	5467.56	3.25	0	85.76	0	1.79	0	0	12.45	0	0	0	0	0	0	-43.94	-43.94
Inverter Transformer	MV3-6 T	368156	4907834	2	0	0	56.1	56.1	1	5557.95	3.25	0	85.9	0	1.82	0	0	12.57	0	0	0	0	0	0	-44.23	-44.23
Inverter Transformer	MV3-3 T	367944	4907927	2	0	0	56.1	56.1	1	5574.31	3.25	0	85.92	0	1.83	0	0	12.59	0	0	0	0	0	0	-44.28	-44.28
Inverter Transformer	MV3-9 T	368517	4907703	2	0	0	56.1	56.1	1	5577.07	3.25	0	85.93	0	1.83	0	0	12.59	0	0	0	0	0	0	-44.29	-44.29
Inverter Transformer	MV3-5 T	368335	4907843	2	0	0	56.1	56.1	1	5632.38	3.25	0	86.01	0	1.85	0	0	12.66	0	0	0	0	0	0	-44.46	-44.46
Inverter Transformer	MV3-8 T	368685	4907712	2	0	0	56.1	56.1	1	5657.59	3.25	0	86.05	0	1.85	0	0	12.69	0	0	0	0	0	0	-44.54	-44.54
Inverter Transformer	MV3-1 T	368150	4907976	2	0	0	56.1	56.1	1	5688.82	3.25	0	86.1	0	1.86	0	0	12.73	0	0	0	0	0	0	-44.63	-44.63
Inverter Transformer	MV3-4 T	368507	4907925	2	0	0	56.1	56.1	1	5775.36	3.25	0	86.23	0	1.89	0	0	12.83	0	0	0	0	0	0	-44.9	-44.9
Inverter Transformer	MV3-2 T	368677	4907928	2	0	0	56.1	56.1	1	5848.63	3.25	0	86.34	0	1.92	0	0	12.92	0	0	0	0	0	0	-45.12	-45.12
Inverter Transformer	MV6-3 T	370202	4907140	2	0	0	56.1	56.1	1	6035.97	3.25	0	86.61	0	1.98	0	0	13.15	0	0	0	0	0	0	-45.68	-45.68
Inverter Transformer	MV6-2 T	370091	4907339	2	0	0	56.1	56.1	1	6114.2	3.25	0	86.73	0	2	0	0	13.24	0	0	0	0	0	0	-45.91	-45.91
Inverter Transformer	MV4-15 T	369170	4908481	2	0	0	56.1	56.1	1	6562.52	3.25	0	87.34	0	2.14	0	0	13.75	0	0	0	0	0	0	-47.17	-47.17
Inverter Transformer	MV4-14 T	369182	4908507	2	0	0	56.1	56.1	1	6591.13	3.25	0	87.38	0	2.14	0	0	13.78	0	0	0	0	0	0	-47.25	-47.25
Inverter Transformer	MV4-13 T	369057	4908605	2	0	0	56.1	56.1	1	6623.29	3.25	0	87.42	0	2.15	0	0	13.82	0	0	0	0	0	0	-47.33	-47.33
Inverter Transformer	MV4-12 T	369049	4908803	2	0	0	56.1	56.1	1	6798.8	3.25	0	87.65	0	2.2	0	0	14.01	0	0	0	0	0	0	-47.81	-47.81

	Inverter Transformer	MV4-11 T	369269	4908855	2	0	0	56.1	56.1	1	6941.04	3.25	0	87.83	0	2.24	0	0	14.17	0	0	0	0	0	0	-48.18	-48.18
	Inverter Transformer	MV4-10 T	369307	4908858	2	0	0	56.1	56.1	1	6960.72	3.25	0	87.85	0	2.25	0	0	14.19	0	0	0	0	0	0	-48.23	-48.23
	Inverter Transformer	MV4-7 T	369040	4909001	2	0	0	56.1	56.1	1	6975.12	3.25	0	87.87	0	2.25	0	0	14.2	0	0	0	0	0	0	-48.27	-48.27
	Inverter Transformer	MV5-6 T	369987	4908507	2	0	0	56.1	56.1	1	6994.57	3.25	0	87.9	0	2.26	0	0	14.22	0	0	0	0	0	0	-48.32	-48.32
	Inverter Transformer	MV4-8 T	369262	4909001	2	0	0	56.1	56.1	1	7069.04	3.25	0	87.99	0	2.28	0	0	14.3	0	0	0	0	0	0	-48.51	-48.51
	Inverter Transformer	MV4-9 T	369284	4909001	2	0	0	56.1	56.1	1	7078.65	3.25	0	88	0	2.28	0	0	14.31	0	0	0	0	0	0	-48.54	-48.54
	Inverter Transformer	MV4-4 T	369033	4909199	2	0	0	56.1	56.1	1	7153.37	3.25	0	88.09	0	2.3	0	0	14.39	0	0	0	0	0	0	-48.73	-48.73
	Inverter Transformer	MV5-5 T	370021	4908690	2	0	0	56.1	56.1	1	7166.95	3.25	0	88.11	0	2.3	0	0	14.41	0	0	0	0	0	0	-48.76	-48.76
	Inverter Transformer	MV4-6 T	369249	4909192	2	0	0	56.1	56.1	1	7235.89	3.25	0	88.19	0	2.32	0	0	14.48	0	0	0	0	0	0	-48.93	-48.93
	Inverter Transformer	MV4-5 T	369283	4909199	2	0	0	56.1	56.1	1	7256.7	3.25	0	88.21	0	2.33	0	0	14.5	0	0	0	0	0	0	-48.99	-48.99
	Inverter Transformer	MV5-2 T	370011	4908853	2	0	0	56.1	56.1	1	7299.83	3.25	0	88.27	0	2.34	0	0	14.55	0	0	0	0	0	0	-49.09	-49.09
	Inverter Transformer	MV4-1 T	369017	4909397	2	0	0	56.1	56.1	1	7329.16	3.25	0	88.3	0	2.35	0	0	14.58	0	0	0	0	0	0	-49.17	-49.17
	Inverter Transformer	MV5-4 T	370330	4908707	2	0	0	56.1	56.1	1	7351.21	3.25	0	88.33	0	2.35	0	0	14.6	0	0	0	0	0	0	-49.22	-49.22
	Inverter Transformer	MV4-3 T	369234	4909397	2	0	0	56.1	56.1	1	7415.86	3.25	0	88.4	0	2.37	0	0	14.67	0	0	0	0	0	0	-49.38	-49.38
	Inverter Transformer	MV5-3 T	370237	4908851	2	0	0	56.1	56.1	1	7419.25	3.25	0	88.41	0	2.37	0	0	14.67	0	0	0	0	0	0	-49.39	-49.39
	Inverter Transformer	MV4-2 T	369267	4909397	2	0	0	56.1	56.1	1	7429.51	3.25	0	88.42	0	2.37	0	0	14.68	0	0	0	0	0	0	-49.41	-49.41
	Inverter Transformer	MV5-1 T	370015	4909142	2	0	0	56.1	56.1	1	7549.4	3.25	0	88.56	0	2.4	0	0	14.8	0	0	0	0	0	0	-49.71	-49.71
	Line Reactor	NGR	369421	4908787.5	5	0	0	45.4	45.4	1	6950.22	5.25	0	87.84	0	3.22	1.37	0.1	2.84	0	0	0	0	0	0	-49.91	-49.91
Limit. Valu	0	0																								
Level D/N:	28.1977	28.1977																								

Receiver: Existing Noise Receptor
ID: G-19
X: 366041.2
Y: 4902939.1
Z: 4.5
Ground: 0

ISO	Description	ID	X	Y	Z	Ground	ReflOrd	LxT	LxN	L/A	Dist.	hm	Freq	Adiv	K0b	Agr	Abar	z	Aatm	Afol	Ahous	Cmet	CmetN	Dc	RL	LtotT	LtotN
	Sol_Luce Substation	S_Substation	369426	4908792	3.5	0	0	112.1	112.1	1	6761.16	5.25	0	87.6	0	1.33	2.49	0.31	10.52	0	0	0	0	0	0	10.14	10.14
	Gardiner Substation	G_Sub	366586.3	4903349.9	2.5	0	0	90.8	90.8	1	682.56	3.5	0	67.68	0	-0.4	0	0	1.85	0	0	0	0	0	0	21.65	21.65
	Inverter	MV1-15	365315	4904994	2	0	0	100.3	100.3	1	2179.45	3.25	0	77.77	0	0.18	0	0	13.83	0	0	0	0	0	0	8.54	8.54
	Inverters	G_Inv3	366583.7	4903091.4	2	0	0	87.7	87.7	1	563.48	3.25	0	66.02	0	2.4	0	0	0.85	0	0	0	0	0	0	18.4	18.4
	Inverters	G_Inv1	366526.4	4903225.8	2	0	0	87.7	87.7	1	563.58	3.25	0	66.02	0	2.4	0	0	0.85	0	0	0	0	0	0	18.39	18.39
	Inverters	G_Inv5	366638.5	4902958.1	2	0	0	87.7	87.7	1	597.61	3.25	0	66.53	0	2.4	0	0	0.9	0	0	0	0	0	0	17.84	17.84
	Inverter	MV1-12	365038	4905386	2	0	0	100.3	100.3	1	2644.57	3.25	0	79.45	0	0.29	0	0	14.73	0	0	0	0	0	0	5.85	5.85
	Inverter	MV1-11	364655	4905414	2	0	0	100.3	100.3	1	2836.67	3.25	0	80.06	0	0.33	0	0	15.08	0	0	0	0	0	0	4.85	4.85
	Inverters	G_Inv7	366694.6	4902824.7	2	0	0	87.7	87.7	1	663.34	3.25	0	67.43	0	2.4	0	0	0.99	0	0	0	0	0	0	16.84	16.84
	Inverter	MV1-8	364788	4905647	2	0	0	100.3	100.3	1	2983.83	3.25	0	80.5	0	0.36	0	0	15.34	0	0	0	0	0	0	4.11	4.11
	Inverters	G_Inv2	366676.9	4903239.1	2	0	0	87.7	87.7	1	702.94	3.25	0	67.94	0	2.41	0	0	1.04	0	0	0	0	0	0	16.27	16.27
	Inverters	G_Inv4	366732.8	4903105	2	0	0	87.7	87.7	1	711.22	3.25	0	68.04	0	2.41	0	0	1.05	0	0	0	0	0	0	16.16	16.16
	Inverter	MV1-9	364561	4905646	2	0	0	100.3	100.3	1	3085.18	3.25	0	80.79	0	0.38	0	0	15.52	0	0	0	0	0	0	3.63	3.63
	Inverters	G_Inv6	366788.5	4902972	2	0	0	87.7	87.7	1	748.03	3.25	0	68.48	0	2.41	0	0	1.1	0	0	0	0	0	0	15.67	15.67
	Inverter	MV1-4	364815	4905918	2	0	0	100.3	100.3	1	3221.4	3.25	0	81.16	0	0.4	0	0	15.76	0	0	0	0	0	0	2.99	2.99
	Inverters	G_Inv9	366750.9	4902691.8	2	0	0	87.7	87.7	1	751.56	3.25	0	68.52	0	2.41	0	0	1.1	0	0	0	0	0	0	15.62	15.62
	Inverter	MV1-14	365163	4905049	2	0	0	97.3	97.3	1	2285.37	3.25	0	78.18	0	0.21	0	0	14.04	0	0	0	0	0	0	4.88	4.88
	Inverter	MV1-5	364671	4905892	2	0	0	100.3	100.3	1	3255.31	3.25	0	81.25	0	0.41	0	0	15.82	0	0	0	0	0	0	2.83	2.83
	Inverter	MV1-6	364477	4905835	2	0	0	100.3	100.3	1	3291.35	3.25	0	81.35	0	0.42	0	0	15.88	0	0	0	0	0	0	2.67	2.67
	Inverter	MV1-2	364753	4906063	2	0	0	100.3	100.3	1	3379.09	3.25	0	81.58	0	0.43	0	0	16.03	0	0	0	0	0	0	2.28	2.28
	Inverters	G_Inv8	366844.5	4902838.5	2	0	0	87.7	87.7	1	809.58	3.25	0	69.17	0	2.42	0	0	1.18	0	0	0	0	0	0	14.89	14.89
	Inverter	MV1-1	364715	4906166	2	0	0	100.3	100.3	1	3488.8	3.25	0	81.85	0	0.45	0	0	16.21	0	0	0	0	0	0	1.8	1.8
	Inverter	MV2-3	365820	4906641	2	0	0	100.3	100.3	1	3708.5	3.25	0	82.38	0	0.48	0	0	16.58	0	0	0	0	0	0	0.87	0.87
	Inverter	MV2-4	365586	4906624	2	0	0	100.3	100.3	1	3712.91	3.25	0	82.39	0	0.48	0	0	16.58	0	0	0	0	0	0	0.85	0.85
	Inverter	MV1-13	364731	4905241	2	0	0	97.3	97.3	1	2648.66	3.25	0	79.46	0	0.29	0	0	14.74	0	0	0	0	0	0	2.82	2.82
	Inverters	G_Inv10	366900.7	4902704.8	2	0	0	87.7	87.7	1	890.87	3.25	0	70	0	2.43	0	0	1.29	0	0	0	0	0	0	13.94	13.94
	Inverter	MV1-10	365004	4905564	2	0	0	97.3	97.3	1	2822.39	3.25	0	80.01	0	0.33	0	0	15.05	0	0	0	0	0	0	1.92	1.92
	Inverter	MV1-7	364925	4905782	2	0	0	97.3	97.3	1	3054.18	3.25	0	80.7	0	0.37	0	0	15.47	0	0	0	0	0	0	0.77	0.77
	Inverter	MV3-18	367752	4907412	2	0	0	100.3	100.3	1	4788.91	3.25	0	84.6	0	0.62	0	0	18.27	0	0	0	0	0	0	-3.18	-3.18
	Inverter	MV3-21	368478	4907206	2	0	0	100.3	100.3	1	4913.7	3.25	0	84.83	0	0.63	0	0	18.45	0	0	0	0	0	0	-3.6	-3.6
	Inverter	MV3-12	367668	4907594	2	0	0	100.3	100.3	1	4930.98	3.25	0	84.86	0	0.64	0	0	18.48	0	0	0	0	0	0	-3.66	-3.66
	Inverter	MV3-19	368357	4907347	2	0	0	100.3	100.3	1	4979.21	3.25	0	84.94	0	0.64	0	0	18.55	0	0	0	0	0	0	-3.82	-3.82
	Inverter	MV3-17	368178	4907472	2	0	0	100.3	100.3	1	5011.3	3.25	0	85	0	0.64	0	0	18.6	0	0	0	0	0	0	-3.93	-3.93
	Inverter	MV3-13	367963	4907577	2	0	0	100.3	100.3	1	5020.3	3.25	0	85.01	0	0.64	0	0	18.61	0	0	0	0	0	0	-3.96	-3.96
	Inverter	MV3-15	368357	4907477	2	0	0	100.3	100.3	1	5094.65	3.25	0	85.14	0	0.65	0	0	18.72	0	0	0	0	0	0	-4.2	-4.2
	Inverter	MV3-20	368689	4907317	2	0	0	100.3	100.3	1	5116.33	3.25	0	85.18	0	0.65	0	0	18.75	0	0	0	0	0	0	-4.27	-4.27
	Inverter	MV3-16	368514	4907475	2	0	0	100.3	100.3	1	5166.15	3.25	0	85.26	0	0.66	0	0	18.82	0	0	0	0	0	0	-4.43	-4.43
	Inverter	MV3-7	367945	4907754	2	0	0	100.3	100.3	1	5177.62	3.25	0	85.28	0	0.66	0	0	18.84	0	0	0	0	0	0	-4.47	-4.47
	Inverter	MV3-10	368167	4907669	2	0	0	100.3	100.3	1	5185.65	3.25	0	85.3	0	0.66	0	0	18.85	0	0	0	0	0	0	-4.49	-4.49
	Inverter	MV3-11	368346	4907662	2	0	0	100.3	100.3	1	5255.27	3.25	0	85.41	0	0.66	0	0	18.95	0	0	0	0	0	0	-4.71	-4.71
	Inverter	MV3-14	368684	4907498	2	0	0	100.3	100.3	1	5269.53	3.25	0	85.44	0	0.66	0	0	18.97	0	0	0	0	0	0	-4.76	-4.76
	Inverter	MV3-6	368162	4907834	2	0	0	100.3	100.3	1	5334.59	3.25	0	85.54	0	0.67	0	0	19.07	0	0	0	0	0	0	-4.96	-4.96
	Inverter	MV3-3	367939	4907927	2	0	0	100.3	100.3	1	5336.74	3.25	0	85.55	0	0.67	0	0	19.07	0	0	0	0	0	0	-4.97	-4.97
	Inverter	MV3-9	368512	4907703	2	0	0	100.3	100.3	1	5366.53	3.25	0	85.59	0	0.67	0	0	19.11	0	0	0	0	0	0	-5.06	-5.06
	Inverter	MV3-8	368680	4907712	2	0	0	100.3	100.3	1	5453.79	3.25	0	85.73	0	0.68	0	0	19.24	0	0	0	0	0	0	-5.33	-5.33

Inverter	MV2-1	365842	4906816	2	0	0	97.3	97.3	1	3882.02	3.25	0	82.78	0	0.51	0	0	16.86	0	0	0	0	0	0	-2.84	-2.84
Inverter	MV6-3	370207	4907140	2	0	0	100.3	100.3	1	5916.2	3.25	0	86.44	0	0.7	0	0	19.88	0	0	0	0	0	0	-6.71	-6.71
Inverter	MV6-2	370085	4907339	2	0	0	100.3	100.3	1	5975.91	3.25	0	86.53	0	0.7	0	0	19.96	0	0	0	0	0	0	-6.88	-6.88
Inverter	MV4-11	369264	4908855	2	0	0	100.3	100.3	1	6736.79	3.25	0	87.57	0	0.71	0	0	20.97	0	0	0	0	0	0	-8.94	-8.94
Inverter	MV4-7	369035	4909001	2	0	0	100.3	100.3	1	6760.88	3.25	0	87.6	0	0.71	0	0	21	0	0	0	0	0	0	-9	-9
Inverter	MV4-10	369312	4908858	2	0	0	100.3	100.3	1	6762.51	3.25	0	87.6	0	0.71	0	0	21	0	0	0	0	0	0	-9	-9
Inverter	MV4-8	369256	4909001	2	0	0	100.3	100.3	1	6861.6	3.25	0	87.73	0	0.71	0	0	21.12	0	0	0	0	0	0	-9.25	-9.25
Inverter	MV4-9	369289	4909001	2	0	0	100.3	100.3	1	6877.12	3.25	0	87.75	0	0.71	0	0	21.14	0	0	0	0	0	0	-9.29	-9.29
Inverter	MV4-4	369027	4909199	2	0	0	100.3	100.3	1	6935.51	3.25	0	87.82	0	0.71	0	0	21.22	0	0	0	0	0	0	-9.44	-9.44
Inverter	MV5-5	370015	4908690	2	0	0	100.3	100.3	1	6990.27	3.25	0	87.89	0	0.71	0	0	21.29	0	0	0	0	0	0	-9.57	-9.57
Inverter	MV4-6	369243	4909192	2	0	0	100.3	100.3	1	7024.98	3.25	0	87.93	0	0.71	0	0	21.33	0	0	0	0	0	0	-9.66	-9.66
Inverter	MV4-5	369289	4909199	2	0	0	100.3	100.3	1	7052.27	3.25	0	87.97	0	0.71	0	0	21.36	0	0	0	0	0	0	-9.73	-9.73
Inverter	MV4-1	369011	4909397	2	0	0	100.3	100.3	1	7108.04	3.25	0	88.03	0	0.71	0	0	21.43	0	0	0	0	0	0	-9.86	-9.86
Inverter	MV5-2	370006	4908853	2	0	0	100.3	100.3	1	7119.96	3.25	0	88.05	0	0.71	0	0	21.45	0	0	0	0	0	0	-9.89	-9.89
Inverter	MV5-4	370324	4908707	2	0	0	100.3	100.3	1	7184.08	3.25	0	88.13	0	0.7	0	0	21.53	0	0	0	0	0	0	-10.05	-10.05
Inverter	MV4-3	369229	4909397	2	0	0	100.3	100.3	1	7201.84	3.25	0	88.15	0	0.7	0	0	21.55	0	0	0	0	0	0	-10.09	-10.09
Inverter	MV4-2	369272	4909397	2	0	0	100.3	100.3	1	7220.98	3.25	0	88.17	0	0.7	0	0	21.57	0	0	0	0	0	0	-10.14	-10.14
Inverter	MV5-3	370231	4908851	2	0	0	100.3	100.3	1	7246.03	3.25	0	88.2	0	0.7	0	0	21.6	0	0	0	0	0	0	-10.2	-10.2
Inverter	MV5-1	370020	4909142	2	0	0	100.3	100.3	1	7369.32	3.25	0	88.35	0	0.7	0	0	21.76	0	0	0	0	0	0	-10.49	-10.49
Inverter	MV6-1	370235	4907364	2	0	0	97.3	97.3	1	6096.53	3.25	0	86.7	0	0.71	0	0	20.12	0	0	0	0	0	0	-10.22	-10.22
DSTATCOM - 10 MVAR #2	DSAT2	369403	4908757	2.5	0	0	96.6	96.6	1	6719.35	3.5	0	87.55	0	3.82	0	0	4.18	0	0	0	0	0	0	1.08	1.08
DSTATCOM - 10 MVAR #1	DSAT1	369437	4908757	2.5	0	0	96.6	96.6	1	6736.43	3.5	0	87.57	0	3.82	0	0	4.19	0	0	0	0	0	0	1.05	1.05
SubstationTransformer	W_ST	369711.17	4906112.3	2.5	0	0	92	92	1	4851.57	4.25	0	84.72	0	1.6	2.37	0.22	8.44	0	0	0	0	0	0	-5.15	-5.15
Inverter	MV1-3	364440	4906039	2	0	0	89.1	89.1	1	3489.02	3.25	0	81.85	0	1.27	0	0	10.35	0	0	0	0	0	0	-4.41	-4.41
Inverter	MV2-2	365977	4906654	2	0	0	89.1	89.1	1	3715.46	3.25	0	82.4	0	1.32	0	0	10.68	0	0	0	0	0	0	-5.34	-5.34
Westbrook Inverter Enclosur	W_INV3	369508	4906164	2	0	0	89.1	89.1	1	4734.84	3.25	0	84.51	0	1.57	0	0	12.11	0	0	0	0	0	0	-9.13	-9.13
Westbrook Inverter Enclosur	W_INV2	369374	4906388	2	0	0	89.1	89.1	1	4796.09	3.25	0	84.62	0	1.59	0	0	12.19	0	0	0	0	0	0	-9.34	-9.34
Westbrook Inverter Enclosur	W_INV4	369673	4906164	2	0	0	89.1	89.1	1	4856.95	3.25	0	84.73	0	1.6	0	0	12.27	0	0	0	0	0	0	-9.55	-9.55
Inverter	MV3-22	368656	4907142	2	0	0	89.1	89.1	1	4949.9	3.25	0	84.89	0	1.63	0	0	12.4	0	0	0	0	0	0	-9.86	-9.86
Westbrook Inverter Enclosur	W_INV7	369780	4906417	2	0	0	89.1	89.1	1	5106.31	3.25	0	85.16	0	1.67	0	0	12.61	0	0	0	0	0	0	-10.38	-10.38
Westbrook Inverter Enclosur	W_INV5	369719	4906574	2	0	0	89.1	89.1	1	5170.95	3.25	0	85.27	0	1.68	0	0	12.69	0	0	0	0	0	0	-10.59	-10.59
Westbrook Inverter Enclosur	W_INV6	369875	4906578	2	0	0	89.1	89.1	1	5285.79	3.25	0	85.46	0	1.71	0	0	12.84	0	0	0	0	0	0	-10.96	-10.96
Inverter	MV3-5	368340	4907843	2	0	0	89.1	89.1	1	5415.97	3.25	0	85.67	0	1.74	0	0	13.01	0	0	0	0	0	0	-11.37	-11.37
Inverter	MV3-1	368156	4907976	2	0	0	89.1	89.1	1	5462.85	3.25	0	85.75	0	1.75	0	0	13.07	0	0	0	0	0	0	-11.52	-11.52
Inverter	MV3-4	368502	4907925	2	0	0	89.1	89.1	1	5560.1	3.25	0	85.9	0	1.78	0	0	13.2	0	0	0	0	0	0	-11.82	-11.82
Inverter	MV3-2	368671	4907928	2	0	0	89.1	89.1	1	5639.59	3.25	0	86.02	0	1.8	0	0	13.3	0	0	0	0	0	0	-12.07	-12.07
Fixed Reactor Bank 1	FRB1	369378	4908755	6	0	0	89.8	89.8	1	6705.14	5.25	0	87.53	0	-0.32	0	0	10.46	0	0	0	0	0	0	-7.89	-7.89
Fixed Reactor Bank 2	FRB2	369464	4908755	6	0	0	89.8	89.8	1	6748.35	5.25	0	87.58	0	-0.32	0	0	10.51	0	0	0	0	0	0	-8	-8
Inverter	MV4-15	369176	4908481	2	0	0	89.1	89.1	1	6367.07	3.25	0	87.08	0	1.98	0	0	14.22	0	0	0	0	0	0	-14.22	-14.22
Inverter	MV4-14	369176	4908507	2	0	0	89.1	89.1	1	6389.72	3.25	0	87.11	0	1.98	0	0	14.25	0	0	0	0	0	0	-14.28	-14.28
Inverter	MV4-13	369051	4908605	2	0	0	89.1	89.1	1	6415.71	3.25	0	87.14	0	1.99	0	0	14.28	0	0	0	0	0	0	-14.35	-14.35
Inverter	MV4-12	369043	4908803	2	0	0	89.1	89.1	1	6587.57	3.25	0	87.37	0	2.03	0	0	14.49	0	0	0	0	0	0	-14.84	-14.84
Inverter	MV5-6	369982	4908507	2	0	0	89.1	89.1	1	6821.39	3.25	0	87.68	0	2.09	0	0	14.77	0	0	0	0	0	0	-15.48	-15.48
Westbrook Inverter Enclosur	W_INV1	369409	4906578	2	0	0	86.1	86.1	1	4958.19	3.25	0	84.91	0	1.63	0	0	12.41	0	0	0	0	0	0	-12.89	-12.89
Inverter	MV6-4	370250	4906966	2	0	0	86.1	86.1	1	5824.94	3.25	0	86.31	0	1.84	0	0	13.54	0	0	0	0	0	0	-15.63	-15.63
Westbrook Inverter Transfor	W_INVTR1	369403	4906578	2	0	0	78.2	78.2	1	4954.12	3.25	0	84.9	0	-3.17	0	0	2.4	0	0	0	0	0	0	-5.89	-5.89
Westbrook Inverter Transfor	W_INVTR3	369514	4906164	2	0	0	77.3	77.3	1	4739.23	3.25	0	84.51	0	-3.12	0	0	2.32	0	0	0	0	0	0	-6.37	-6.37
Westbrook Inverter Transfor	W_INVTR2	369368	4906388	2	0	0	77.3	77.3	1	4791.92	3.25	0	84.61	0	-3.13	0	0	2.34	0	0	0	0	0	0	-6.47	-6.47
Westbrook Inverter Transfor	W_INVTR4	369679	4906164	2	0	0	77.3	77.3	1	4861.44	3.25	0	84.74	0	-3.15	0	0	2.37	0	0	0	0	0	0	-6.61	-6.61
Westbrook Inverter Transfor	W_INVTR7	369786	4906417	2	0	0	77.3	77.3	1	5110.71	3.25	0	85.17	0	-3.2	0	0	2.45	0	0	0	0	0	0	-7.08	-7.08
Westbrook Inverter Transfor	W_INVTR5	369725	4906574	2	0	0	77.3	77.3	1	5175.22	3.25	0	85.28	0	-3.21	0	0	2.47	0	0	0	0	0	0	-7.2	-7.2
Westbrook Inverter Transfor	W_INVTR6	369881	4906578	2	0	0	77.3	77.3	1	5290.15	3.25	0	85.47	0	-3.23	0	0	2.51	0	0	0	0	0	0	-7.4	-7.4
Inverter Transformer	MV1-14 T	365157	4905049	2	0	0	69.4	69.4	1	2287.68	3.25	0	78.19	0	2.28	0	0	5.25	0	0	0	0	0	0	-16.36	-16.36
Inverter Transformer	MV1-13 T	364725	4905241	2	0	0	69.4	69.4	1	2651.63	3.25	0	79.47	0	2.4	0	0	5.58	0	0	0	0	0	0	-18.1	-18.1
Inverter Transformer	MV1-10 T	365010	4905564	2	0	0	69.4	69.4	1	2820.19	3.25	0	80.01	0	2.45	0	0	5.73	0	0	0	0	0	0	-18.84	-18.84
Inverter Transformer	MV1-7 T	364919	4905782	2	0	0	69.4	69.4	1	3056.37	3.25	0	80.7	0	2.52	0	0	5.93	0	0	0	0	0	0	-19.81	-19.81
Inverter Transformer	MV2-1 T	365836	4906816	2	0	0	69.4	69.4	1	3882.33	3.25	0	82.78	0	2.76	0	0	6.59	0	0	0	0	0	0	-22.78	-22.78
Inverter Transformer	MV6-4 T	370244	4906966	2	0	0	69.4	69.4	1	5820.61	3.25	0	86.3	0	3.16	0	0	7.91	0	0	0	0	0	0	-28.02	-28.02
Inverter Transformer	MV6-1 T	370230	4907364	2	0	0	69.4	69.4	1	6093.09	3.25	0	86.7	0	3.2	0	0	8.07	0	0	0	0	0	0	-28.62	-28.62
Inverter Transformer	MV1-15 T	365309	4904994	2	0	0	56.1	56.1	1	2181.45	3.25	0	77.77	0	0.48	0	0	7.4	0	0	0	0	0	0	-29.59	-29.59
Inverter Transformer	MV1-12 T	365044	4905386	2	0	0	56.1	56.1	1	2642.3	3.25	0	79.44	0	0.68	0	0	8.25	0	0	0	0	0	0	-32.3	-32.3
Inverter Transformer	MV1-11 T	364649	4905414	2	0	0	56.1	56.1	1	2839.61	3.25	0	80.07	0	0.76	0	0	8.59	0	0	0	0	0	0	-33.36	-33.36
Inverter Transformer	MV1-8 T	364782	4905647	2	0	0	56.1	56.1	1	2986.35	3.25	0	80.5	0	0.82	0	0	8.84	0	0	0	0	0	0	-34.11	-34.11
Inverter Transformer	MV1-9 T	364555	4905646	2	0	0	56.1	56.1	1	3088.06	3.25	0	80.79	0	0.87	0	0	9.02	0	0	0	0	0	0	-34.62	-34.62
Inverter Transformer	MV1-4 T	364821	4905918	2	0	0	56.1	56.1	1	3219.12	3.25	0	81.15	0	0.92	0	0	9.23	0	0	0	0	0	0	-35.25	-35.25
Inverter Transformer	MV1-5 T	364676	4905892	2	0	0	56.1	56.1	1	3253.21	3.25	0	81.25	0	0.94	0	0	9.29	0	0	0	0	0	0	-35.41	-35.41
Inverter Transformer	MV1-6 T	364482	4905835	2	0	0	56.1	56.1	1	3288.97	3.25	0	81.34	0	0.95	0	0	9.35	0	0	0	0	0	0	-35.58	-35.58
Inverter Transformer	MV1-2 T	364759	4906063	2	0	0	56.1	56.1	1	3376.8	3.25	0	81.57	0	0.99	0	0	9.49	0	0	0	0	0	0	-35.99	-35.99
Inverter Transformer	MV1-1 T	364721	4906166	2	0	0	56.1	56.1	1	3486.52	3.25	0	81.85	0	1.03	0	0	9.67	0	0	0	0	0	0	-36.49	-36.49
Inverter Transformer	MV1-3 T	364435	4906039	2	0	0	56.1	56.1	1	3491.31	3.25	0	81.86	0	1.04	0	0	9.67	0	0	0	0	0	0	-36.51	-36.51
Inverter Transformer	MV2-3 T	365814	4906641	2	0	0	56.1	56.1	1	3708.87	3.25	0	82.38	0	1.13	0	0	10.01	0	0	0	0	0	0	-37.47	-37.47
Inverter Transformer	MV2-2 T	365982	4906654	2	0	0	56.1	56.1	1	3715.37	3.25	0	82.4	0	1.13	0	0	10.02	0	0	0	0	0	0	-37.49	-37.49
Inverter Transformer	MV2-4 T	365590	4906628	2	0	0	56.1	56.1	1	3716.39	3.25	0	82.4	0	1.13	0	0	10.03	0	0	0	0	0	0	-37.5	-37.5
Inverter Transformer	MV3-18 T	367757	4907412	2	0	0	56.1	56.1	1	4790.7	3.25	0	84.61	0	1.55	0	0	11.57	0	0	0	0	0	0	-41.67	-41.67

	Inverter Transformer	MV3-21 T	368484	4907206	2	0	0	56.1	56.1	1	4916.68	3.25	0	84.83	0	1.6	0	0	11.74	0	0	0	0	0	0	-42.11	-42.11
	Inverter Transformer	MV3-12 T	367674	4907594	2	0	0	56.1	56.1	1	4932.96	3.25	0	84.86	0	1.6	0	0	11.77	0	0	0	0	0	0	-42.17	-42.17
	Inverter Transformer	MV3-22 T	368661	4907142	2	0	0	56.1	56.1	1	4952.55	3.25	0	84.9	0	1.61	0	0	11.79	0	0	0	0	0	0	-42.24	-42.24
	Inverter Transformer	MV3-19 T	368352	4907347	2	0	0	56.1	56.1	1	4976.89	3.25	0	84.94	0	1.62	0	0	11.82	0	0	0	0	0	0	-42.32	-42.32
	Inverter Transformer	MV3-17 T	368183	4907472	2	0	0	56.1	56.1	1	5013.43	3.25	0	85	0	1.63	0	0	11.87	0	0	0	0	0	0	-42.45	-42.45
	Inverter Transformer	MV3-13 T	367958	4907577	2	0	0	56.1	56.1	1	5018.39	3.25	0	85.01	0	1.63	0	0	11.88	0	0	0	0	0	0	-42.46	-42.46
	Inverter Transformer	MV3-15 T	368351	4907477	2	0	0	56.1	56.1	1	5091.93	3.25	0	85.14	0	1.66	0	0	11.97	0	0	0	0	0	0	-42.71	-42.71
	Inverter Transformer	MV3-20 T	368683	4907317	2	0	0	56.1	56.1	1	5113.23	3.25	0	85.17	0	1.67	0	0	12	0	0	0	0	0	0	-42.78	-42.78
	Inverter Transformer	MV3-16 T	368509	4907475	2	0	0	56.1	56.1	1	5163.76	3.25	0	85.26	0	1.68	0	0	12.07	0	0	0	0	0	0	-42.95	-42.95
	Inverter Transformer	MV3-7 T	367951	4907754	2	0	0	56.1	56.1	1	5179.83	3.25	0	85.29	0	1.69	0	0	12.09	0	0	0	0	0	0	-43.01	-43.01
	Inverter Transformer	MV3-10 T	368162	4907669	2	0	0	56.1	56.1	1	5183.6	3.25	0	85.29	0	1.69	0	0	12.09	0	0	0	0	0	0	-43.02	-43.02
	Inverter Transformer	MV3-11 T	368340	4907662	2	0	0	56.1	56.1	1	5252.64	3.25	0	85.41	0	1.72	0	0	12.18	0	0	0	0	0	0	-43.25	-43.25
	Inverter Transformer	MV3-14 T	368678	4907498	2	0	0	56.1	56.1	1	5266.53	3.25	0	85.43	0	1.72	0	0	12.2	0	0	0	0	0	0	-43.29	-43.29
	Inverter Transformer	MV3-6 T	368156	4907834	2	0	0	56.1	56.1	1	5332.21	3.25	0	85.54	0	1.74	0	0	12.28	0	0	0	0	0	0	-43.51	-43.51
	Inverter Transformer	MV3-3 T	367944	4907927	2	0	0	56.1	56.1	1	5338.52	3.25	0	85.55	0	1.75	0	0	12.29	0	0	0	0	0	0	-43.53	-43.53
	Inverter Transformer	MV3-9 T	368517	4907703	2	0	0	56.1	56.1	1	5368.83	3.25	0	85.6	0	1.76	0	0	12.33	0	0	0	0	0	0	-43.63	-43.63
	Inverter Transformer	MV3-5 T	368335	4907843	2	0	0	56.1	56.1	1	5413.85	3.25	0	85.67	0	1.77	0	0	12.39	0	0	0	0	0	0	-43.77	-43.77
	Inverter Transformer	MV3-8 T	368685	4907712	2	0	0	56.1	56.1	1	5456.21	3.25	0	85.74	0	1.79	0	0	12.44	0	0	0	0	0	0	-43.91	-43.91
	Inverter Transformer	MV3-1 T	368150	4907976	2	0	0	56.1	56.1	1	5460.53	3.25	0	85.74	0	1.79	0	0	12.45	0	0	0	0	0	0	-43.92	-43.92
	Inverter Transformer	MV3-4 T	368507	4907925	2	0	0	56.1	56.1	1	5562.32	3.25	0	85.91	0	1.82	0	0	12.57	0	0	0	0	0	0	-44.24	-44.24
	Inverter Transformer	MV3-2 T	368677	4907928	2	0	0	56.1	56.1	1	5642.39	3.25	0	86.03	0	1.85	0	0	12.67	0	0	0	0	0	0	-44.49	-44.49
	Inverter Transformer	MV6-3 T	370202	4907140	2	0	0	56.1	56.1	1	5912.68	3.25	0	86.44	0	1.94	0	0	13	0	0	0	0	0	0	-45.31	-45.31
	Inverter Transformer	MV6-2 T	370091	4907339	2	0	0	56.1	56.1	1	5979.97	3.25	0	86.53	0	1.96	0	0	13.08	0	0	0	0	0	0	-45.51	-45.51
	Inverter Transformer	MV4-15 T	369170	4908481	2	0	0	56.1	56.1	1	6364.12	3.25	0	87.07	0	2.08	0	0	13.53	0	0	0	0	0	0	-46.62	-46.62
	Inverter Transformer	MV4-14 T	369182	4908507	2	0	0	56.1	56.1	1	6392.66	3.25	0	87.11	0	2.09	0	0	13.56	0	0	0	0	0	0	-46.7	-46.7
	Inverter Transformer	MV4-13 T	369057	4908605	2	0	0	56.1	56.1	1	6418.53	3.25	0	87.15	0	2.09	0	0	13.59	0	0	0	0	0	0	-46.77	-46.77
	Inverter Transformer	MV4-12 T	369049	4908803	2	0	0	56.1	56.1	1	6590.31	3.25	0	87.38	0	2.14	0	0	13.78	0	0	0	0	0	0	-47.25	-47.25
	Inverter Transformer	MV4-11 T	369269	4908855	2	0	0	56.1	56.1	1	6739.18	3.25	0	87.57	0	2.19	0	0	13.95	0	0	0	0	0	0	-47.65	-47.65
	Inverter Transformer	MV4-10 T	369307	4908858	2	0	0	56.1	56.1	1	6760.09	3.25	0	87.6	0	2.19	0	0	13.97	0	0	0	0	0	0	-47.7	-47.7
	Inverter Transformer	MV4-7 T	369040	4909001	2	0	0	56.1	56.1	1	6763.09	3.25	0	87.6	0	2.19	0	0	13.97	0	0	0	0	0	0	-47.71	-47.71
	Inverter Transformer	MV5-6 T	369987	4908507	2	0	0	56.1	56.1	1	6824.28	3.25	0	87.68	0	2.21	0	0	14.04	0	0	0	0	0	0	-47.87	-47.87
	Inverter Transformer	MV4-8 T	369262	4909001	2	0	0	56.1	56.1	1	6864.41	3.25	0	87.73	0	2.22	0	0	14.08	0	0	0	0	0	0	-47.98	-47.98
	Inverter Transformer	MV4-9 T	369284	4909001	2	0	0	56.1	56.1	1	6874.76	3.25	0	87.75	0	2.22	0	0	14.09	0	0	0	0	0	0	-48.01	-48.01
	Inverter Transformer	MV4-4 T	369033	4909199	2	0	0	56.1	56.1	1	6938.1	3.25	0	87.82	0	2.24	0	0	14.16	0	0	0	0	0	0	-48.17	-48.17
	Inverter Transformer	MV5-5 T	370021	4908690	2	0	0	56.1	56.1	1	6993.69	3.25	0	87.89	0	2.26	0	0	14.22	0	0	0	0	0	0	-48.32	-48.32
	Inverter Transformer	MV4-6 T	369249	4909192	2	0	0	56.1	56.1	1	7027.71	3.25	0	87.94	0	2.27	0	0	14.26	0	0	0	0	0	0	-48.4	-48.4
	Inverter Transformer	MV4-5 T	369283	4909199	2	0	0	56.1	56.1	1	7049.51	3.25	0	87.96	0	2.27	0	0	14.28	0	0	0	0	0	0	-48.46	-48.46
	Inverter Transformer	MV4-1 T	369017	4909397	2	0	0	56.1	56.1	1	7110.55	3.25	0	88.04	0	2.29	0	0	14.35	0	0	0	0	0	0	-48.62	-48.62
	Inverter Transformer	MV5-2 T	370011	4908853	2	0	0	56.1	56.1	1	7122.75	3.25	0	88.05	0	2.29	0	0	14.36	0	0	0	0	0	0	-48.65	-48.65
	Inverter Transformer	MV5-4 T	370330	4908707	2	0	0	56.1	56.1	1	7187.66	3.25	0	88.13	0	2.31	0	0	14.43	0	0	0	0	0	0	-48.81	-48.81
	Inverter Transformer	MV4-3 T	369234	4909397	2	0	0	56.1	56.1	1	7204.06	3.25	0	88.15	0	2.31	0	0	14.45	0	0	0	0	0	0	-48.85	-48.85
	Inverter Transformer	MV4-2 T	369267	4909397	2	0	0	56.1	56.1	1	7218.74	3.25	0	88.17	0	2.32	0	0	14.46	0	0	0	0	0	0	-48.89	-48.89
	Inverter Transformer	MV5-3 T	370237	4908851	2	0	0	56.1	56.1	1	7249.5	3.25	0	88.21	0	2.33	0	0	14.49	0	0	0	0	0	0	-48.97	-48.97
	Inverter Transformer	MV5-1 T	370015	4909142	2	0	0	56.1	56.1	1	7366.62	3.25	0	88.35	0	2.36	0	0	14.62	0	0	0	0	0	0	-49.26	-49.26
	Line Reactor	NGR	369421	4908787.5	5	0	0	45.4	45.4	1	6754.76	5.25	0	87.59	0	3.22	1.37	0.1	2.76	0	0	0	0	0	0	-49.59	-49.59
Limit. Valu	0	0																								
Level D/N:	28.2626	28.2626																								

Receiver: Existing Noise Receptor
ID: G-20
X: 366034.2
Y: 4902964.1
Z: 4.5
Ground: 0

ISO	Description	ID	X	Y	Z	Ground	ReflOrd	LxT	LxN	L/A	Dist.	hm	Freq	Adiv	K0b	Agr	Abar	z	Aatm	Afol	Ahous	Cmet	CmetN	Dc	RL	LtotT	LtotN
	Sol_Luce Substation	S_Substation	369426	4908792	3.5	0	0	112.1	112.1	1	6743.05	5.25	0	87.58	0	1.33	2.49	0.31	10.5	0	0	0	0	0	0	10.18	10.18
	Gardiner Substation	G_Sub	366586.3	4903349.9	2.5	0	0	90.8	90.8	1	673.54	3.5	0	67.57	0	-0.4	0	0	1.83	0	0	0	0	0	0	21.79	21.79
	Inverter	MV1-15	365315	4904994	2	0	0	100.3	100.3	1	2153.54	3.25	0	77.66	0	0.17	0	0	13.78	0	0	0	0	0	0	8.7	8.7
	Inverters	G_Inv1	366526.4	4903225.8	2	0	0	87.7	87.7	1	557.45	3.25	0	65.92	0	2.4	0	0	0.84	0	0	0	0	0	0	18.5	18.5
	Inverters	G_Inv3	366583.7	4903091.4	2	0	0	87.7	87.7	1	564.06	3.25	0	66.03	0	2.4	0	0	0.85	0	0	0	0	0	0	18.39	18.39
	Inverters	G_Inv5	366638.5	4902958.1	2	0	0	87.7	87.7	1	604.33	3.25	0	66.63	0	2.4	0	0	0.91	0	0	0	0	0	0	17.73	17.73
	Inverter	MV1-12	365038	4905386	2	0	0	100.3	100.3	1	2618.78	3.25	0	79.36	0	0.28	0	0	14.68	0	0	0	0	0	0	5.98	5.98
	Inverter	MV1-11	364655	4905414	2	0	0	100.3	100.3	1	2811.44	3.25	0	79.98	0	0.32	0	0	15.03	0	0	0	0	0	0	4.97	4.97
	Inverters	G_Inv7	366694.6	4902824.7	2	0	0	87.7	87.7	1	674.96	3.25	0	67.59	0	2.4	0	0	1	0	0	0	0	0	0	16.67	16.67
	Inverter	MV1-8	364788	4905647	2	0	0	100.3	100.3	1	2958.2	3.25	0	80.42	0	0.35	0	0	15.3	0	0	0	0	0	0	4.24	4.24
	Inverters	G_Inv2	366676.9	4903239.1	2	0	0	87.7	87.7	1	699.07	3.25	0	67.89	0	2.41	0	0	1.04	0	0	0	0	0	0	16.33	16.33
	Inverters	G_Inv4	366732.8	4903105	2	0	0	87.7	87.7	1	712.67	3.25	0	68.06	0	2.41	0	0	1.05	0	0	0	0	0	0	16.14	16.14
	Inverter	MV1-9	364561	4905646	2	0	0	100.3	100.3	1	3059.89	3.25	0	80.71	0	0.37	0	0	15.48	0	0	0	0	0	0	3.75	3.75
	Inverter	MV1-14	365163	4905049	2	0	0	97.3	97.3	1	2259.6	3.25	0	78.08	0	0.2	0	0	13.99	0	0	0	0	0	0	5.04	5.04
	Inverter	MV1-4	364815	4905918	2	0	0	100.3	100.3	1	3195.62	3.25	0	81.09	0	0.4	0	0	15.71	0	0	0	0	0	0	3.11	3.11
	Inverter	MV1-5	364671	4905892	2	0	0	100.3	100.3	1	3229.69	3.25	0	81.18	0	0.4	0	0	15.77	0	0	0	0	0	0	2.95	2.95
	Inverters	G_Inv6	366788.5	4902972	2	0	0	87.7	87.7	1	754.35	3.25	0	68.55	0	2.41	0	0	1.11	0	0	0	0	0	0	15.59	15.59
	Inverter	MV1-6	364477	4905835	2	0	0	100.3	100.3	1	3266.03	3.25	0	81.28	0	0.41	0	0	15.84	0	0	0	0	0	0	2.79	2.79

Inverters	G_Inv9	366750.9	4902691.8	2	0	0	87.7	87.7	1	766.69	3.25	0	68.69	0	2.42	0	0	1.12	0	0	0	0	0	0	15.43	15.43
Inverter	MV1-2	364753	4906063	2	0	0	100.3	100.3	1	3353.31	3.25	0	81.51	0	0.43	0	0	15.98	0	0	0	0	0	0	2.39	2.39
Inverter	MV1-1	364715	4906166	2	0	0	100.3	100.3	1	3463.01	3.25	0	81.79	0	0.44	0	0	16.17	0	0	0	0	0	0	1.91	1.91
Inverters	G_Inv8	366844.5	4902838.5	2	0	0	87.7	87.7	1	819.98	3.25	0	69.28	0	2.42	0	0	1.19	0	0	0	0	0	0	14.77	14.77
Inverter	MV2-3	365820	4906641	2	0	0	100.3	100.3	1	3683.13	3.25	0	82.32	0	0.48	0	0	16.54	0	0	0	0	0	0	0.97	0.97
Inverter	MV2-4	365586	4906624	2	0	0	100.3	100.3	1	3687.24	3.25	0	82.33	0	0.48	0	0	16.54	0	0	0	0	0	0	0.96	0.96
Inverter	MV1-13	364731	4905241	2	0	0	97.3	97.3	1	2623.47	3.25	0	79.38	0	0.28	0	0	14.69	0	0	0	0	0	0	2.96	2.96
Inverters	G_Inv10	366900.7	4902704.8	2	0	0	87.7	87.7	1	904.47	3.25	0	70.13	0	2.44	0	0	1.3	0	0	0	0	0	0	13.79	13.79
Inverter	MV1-10	365004	4905564	2	0	0	97.3	97.3	1	2796.57	3.25	0	79.93	0	0.32	0	0	15.01	0	0	0	0	0	0	2.05	2.05
Inverter	MV1-7	364925	4905782	2	0	0	97.3	97.3	1	3028.35	3.25	0	80.62	0	0.37	0	0	15.42	0	0	0	0	0	0	0.9	0.9
Inverter	MV3-18	367752	4907412	2	0	0	100.3	100.3	1	4768.09	3.25	0	84.57	0	0.62	0	0	18.24	0	0	0	0	0	0	-3.11	-3.11
Inverter	MV3-21	368478	4907206	2	0	0	100.3	100.3	1	4895.5	3.25	0	84.8	0	0.63	0	0	18.43	0	0	0	0	0	0	-3.54	-3.54
Inverter	MV3-12	367668	4907594	2	0	0	100.3	100.3	1	4909.71	3.25	0	84.82	0	0.63	0	0	18.45	0	0	0	0	0	0	-3.59	-3.59
Inverter	MV3-19	368357	4907347	2	0	0	100.3	100.3	1	4960.36	3.25	0	84.91	0	0.64	0	0	18.52	0	0	0	0	0	0	-3.76	-3.76
Inverter	MV3-17	368178	4907472	2	0	0	100.3	100.3	1	4991.7	3.25	0	84.96	0	0.64	0	0	18.57	0	0	0	0	0	0	-3.86	-3.86
Inverter	MV3-13	367963	4907577	2	0	0	100.3	100.3	1	4999.91	3.25	0	84.98	0	0.64	0	0	18.58	0	0	0	0	0	0	-3.89	-3.89
Inverter	MV3-15	368357	4907477	2	0	0	100.3	100.3	1	5075.6	3.25	0	85.11	0	0.65	0	0	18.69	0	0	0	0	0	0	-4.14	-4.14
Inverter	MV3-20	368689	4907317	2	0	0	100.3	100.3	1	5098.6	3.25	0	85.15	0	0.65	0	0	18.72	0	0	0	0	0	0	-4.21	-4.21
Inverter	MV3-16	368514	4907475	2	0	0	100.3	100.3	1	5147.59	3.25	0	85.23	0	0.65	0	0	18.8	0	0	0	0	0	0	-4.37	-4.37
Inverter	MV3-7	367945	4907754	2	0	0	100.3	100.3	1	5156.97	3.25	0	85.25	0	0.66	0	0	18.81	0	0	0	0	0	0	-4.4	-4.4
Inverter	MV3-10	368167	4907669	2	0	0	100.3	100.3	1	5165.75	3.25	0	85.26	0	0.66	0	0	18.82	0	0	0	0	0	0	-4.43	-4.43
Inverter	MV3-11	368346	4907662	2	0	0	100.3	100.3	1	5235.9	3.25	0	85.38	0	0.66	0	0	18.92	0	0	0	0	0	0	-4.65	-4.65
Inverter	MV3-14	368684	4907498	2	0	0	100.3	100.3	1	5251.45	3.25	0	85.41	0	0.66	0	0	18.95	0	0	0	0	0	0	-4.7	-4.7
Inverter	MV3-6	368162	4907834	2	0	0	100.3	100.3	1	5314.46	3.25	0	85.51	0	0.67	0	0	19.04	0	0	0	0	0	0	-4.9	-4.9
Inverter	MV3-3	367939	4907927	2	0	0	100.3	100.3	1	5315.89	3.25	0	85.51	0	0.67	0	0	19.04	0	0	0	0	0	0	-4.91	-4.91
Inverter	MV3-9	368512	4907703	2	0	0	100.3	100.3	1	5347.59	3.25	0	85.56	0	0.67	0	0	19.08	0	0	0	0	0	0	-5.01	-5.01
Inverter	MV3-8	368680	4907712	2	0	0	100.3	100.3	1	5435.33	3.25	0	85.7	0	0.68	0	0	19.21	0	0	0	0	0	0	-5.28	-5.28
Inverter	MV2-1	365842	4906816	2	0	0	97.3	97.3	1	3856.69	3.25	0	82.72	0	0.51	0	0	16.82	0	0	0	0	0	0	-2.74	-2.74
Inverter	MV6-3	370207	4907140	2	0	0	100.3	100.3	1	5903.42	3.25	0	86.42	0	0.7	0	0	19.86	0	0	0	0	0	0	-6.67	-6.67
Inverter	MV6-2	370085	4907339	2	0	0	100.3	100.3	1	5962.28	3.25	0	86.51	0	0.7	0	0	19.94	0	0	0	0	0	0	-6.84	-6.84
Inverter	MV4-11	369264	4908855	2	0	0	100.3	100.3	1	6718.21	3.25	0	87.55	0	0.71	0	0	20.94	0	0	0	0	0	0	-8.89	-8.89
Inverter	MV4-7	369035	4909001	2	0	0	100.3	100.3	1	6741.59	3.25	0	87.58	0	0.71	0	0	20.97	0	0	0	0	0	0	-8.95	-8.95
Inverter	MV4-10	369312	4908858	2	0	0	100.3	100.3	1	6744.04	3.25	0	87.58	0	0.71	0	0	20.97	0	0	0	0	0	0	-8.96	-8.96
Inverter	MV4-8	369256	4909001	2	0	0	100.3	100.3	1	6842.82	3.25	0	87.7	0	0.71	0	0	21.1	0	0	0	0	0	0	-9.21	-9.21
Inverter	MV4-9	369289	4909001	2	0	0	100.3	100.3	1	6858.42	3.25	0	87.72	0	0.71	0	0	21.12	0	0	0	0	0	0	-9.25	-9.25
Inverter	MV4-4	369027	4909199	2	0	0	100.3	100.3	1	6915.98	3.25	0	87.8	0	0.71	0	0	21.19	0	0	0	0	0	0	-9.39	-9.39
Inverter	MV5-5	370015	4908690	2	0	0	100.3	100.3	1	6973.72	3.25	0	87.87	0	0.71	0	0	21.27	0	0	0	0	0	0	-9.53	-9.53
Inverter	MV4-6	369243	4909192	2	0	0	100.3	100.3	1	7005.94	3.25	0	87.91	0	0.71	0	0	21.31	0	0	0	0	0	0	-9.61	-9.61
Inverter	MV4-5	369289	4909199	2	0	0	100.3	100.3	1	7033.33	3.25	0	87.94	0	0.71	0	0	21.34	0	0	0	0	0	0	-9.68	-9.68
Inverter	MV4-1	369011	4909397	2	0	0	100.3	100.3	1	7088.27	3.25	0	88.01	0	0.71	0	0	21.41	0	0	0	0	0	0	-9.82	-9.82
Inverter	MV5-2	370006	4908853	2	0	0	100.3	100.3	1	7103.12	3.25	0	88.03	0	0.71	0	0	21.43	0	0	0	0	0	0	-9.85	-9.85
Inverter	MV5-4	370324	4908707	2	0	0	100.3	100.3	1	7168.21	3.25	0	88.11	0	0.7	0	0	21.51	0	0	0	0	0	0	-10.01	-10.01
Inverter	MV4-3	369229	4909397	2	0	0	100.3	100.3	1	7182.55	3.25	0	88.13	0	0.7	0	0	21.53	0	0	0	0	0	0	-10.04	-10.04
Inverter	MV4-2	369272	4909397	2	0	0	100.3	100.3	1	7201.77	3.25	0	88.15	0	0.7	0	0	21.55	0	0	0	0	0	0	-10.09	-10.09
Inverter	MV5-3	370231	4908851	2	0	0	100.3	100.3	1	7229.71	3.25	0	88.18	0	0.7	0	0	21.58	0	0	0	0	0	0	-10.16	-10.16
Inverter	MV5-1	370020	4909142	2	0	0	100.3	100.3	1	7352.08	3.25	0	88.33	0	0.7	0	0	21.73	0	0	0	0	0	0	-10.45	-10.45
Inverter	MV6-1	370235	4907364	2	0	0	97.3	97.3	1	6083.24	3.25	0	86.68	0	0.71	0	0	20.11	0	0	0	0	0	0	-10.18	-10.18
DSTATCOM - 10 MVAR #2	DSAT2	369403	4908757	2.5	0	0	96.6	96.6	1	6701.23	3.5	0	87.52	0	3.82	0	0	4.17	0	0	0	0	0	0	1.12	1.12
DSTATCOM - 10 MVAR #1	DSAT1	369437	4908757	2.5	0	0	96.6	96.6	1	6718.39	3.5	0	87.55	0	3.82	0	0	4.18	0	0	0	0	0	0	1.08	1.08
SubstationTransformer	W_ST	369711.17	4906112.3	2.5	0	0	92	92	1	4840.57	4.25	0	84.7	0	1.59	2.37	0.22	8.43	0	0	0	0	0	0	-5.11	-5.11
Inverter	MV1-3	364440	4906039	2	0	0	89.1	89.1	1	3463.59	3.25	0	81.79	0	1.26	0	0	10.31	0	0	0	0	0	0	-4.3	-4.3
Inverter	MV2-2	365977	4906654	2	0	0	89.1	89.1	1	3690.34	3.25	0	82.34	0	1.32	0	0	10.64	0	0	0	0	0	0	-5.24	-5.24
Westbrook Inverter Enclosur	W_INV3	369508	4906164	2	0	0	89.1	89.1	1	4722.99	3.25	0	84.48	0	1.57	0	0	12.09	0	0	0	0	0	0	-9.09	-9.09
Westbrook Inverter Enclosur	W_INV2	369374	4906388	2	0	0	89.1	89.1	1	4783.03	3.25	0	84.59	0	1.59	0	0	12.17	0	0	0	0	0	0	-9.29	-9.29
Westbrook Inverter Enclosur	W_INV4	369673	4906164	2	0	0	89.1	89.1	1	4845.64	3.25	0	84.71	0	1.6	0	0	12.26	0	0	0	0	0	0	-9.51	-9.51
Inverter	MV3-22	368656	4907142	2	0	0	89.1	89.1	1	4932.41	3.25	0	84.86	0	1.62	0	0	12.37	0	0	0	0	0	0	-9.8	-9.8
Westbrook Inverter Enclosur	W_INV7	369780	4906417	2	0	0	89.1	89.1	1	5094.46	3.25	0	85.14	0	1.66	0	0	12.59	0	0	0	0	0	0	-10.34	-10.34
Westbrook Inverter Enclosur	W_INV5	369719	4906574	2	0	0	89.1	89.1	1	5158.4	3.25	0	85.25	0	1.68	0	0	12.67	0	0	0	0	0	0	-10.55	-10.55
Westbrook Inverter Enclosur	W_INV6	369875	4906578	2	0	0	89.1	89.1	1	5273.71	3.25	0	85.44	0	1.71	0	0	12.83	0	0	0	0	0	0	-10.92	-10.92
Inverter	MV3-5	368340	4907843	2	0	0	89.1	89.1	1	5396.33	3.25	0	85.64	0	1.74	0	0	12.99	0	0	0	0	0	0	-11.31	-11.31
Inverter	MV3-1	368156	4907976	2	0	0	89.1	89.1	1	5442.53	3.25	0	85.72	0	1.75	0	0	13.05	0	0	0	0	0	0	-11.45	-11.45
Inverter	MV3-4	368502	4907925	2	0	0	89.1	89.1	1	5540.81	3.25	0	85.87	0	1.77	0	0	13.18	0	0	0	0	0	0	-11.76	-11.76
Inverter	MV3-2	368671	4907928	2	0	0	89.1	89.1	1	5620.77	3.25	0	86	0	1.79	0	0	13.28	0	0	0	0	0	0	-12.01	-12.01
Fixed Reactor Bank 1	FRB1	369378	4908755	6	0	0	89.8	89.8	1	6686.97	5.25	0	87.5	0	-0.32	0	0	10.44	0	0	0	0	0	0	-7.85	-7.85
Fixed Reactor Bank 2	FRB2	369464	4908755	6	0	0	89.8	89.8	1	6730.38	5.25	0	87.56	0	-0.32	0	0	10.49	0	0	0	0	0	0	-7.95	-7.95
Inverter	MV4-15	369176	4908481	2	0	0	89.1	89.1	1	6348.79	3.25	0	87.05	0	1.97	0	0	14.2	0	0	0	0	0	0	-14.16	-14.16
Inverter	MV4-14	369176	4908507	2	0	0	89.1	89.1	1	6371.39	3.25	0	87.08	0	1.98	0	0	14.23	0	0	0	0	0	0	-14.23	-14.23
Inverter	MV4-13	369051	4908605	2	0	0	89.1	89.1	1	6396.94	3.25	0	87.12	0	1.98	0	0	14.26	0	0	0	0	0	0	-14.3	-14.3
Inverter	MV4-12	369043	4908803	2	0	0	89.1	89.1	1	6568.53	3.25	0	87.35	0	2.02	0	0	14.47	0	0	0	0	0	0	-14.78	-14.78
Inverter	MV5-6	369982	4908507	2	0	0	89.1	89.1	1	6805.06	3.25	0	87.66	0	2.08	0	0	14.75	0	0	0	0	0	0	-15.43	-15.43
Westbrook Inverter Enclosur	W_INV1	369409	4906578	2	0	0	86.1	86.1	1	4944.65	3.25	0	84.88	0	1.63	0	0	12.39	0	0	0	0	0	0	-12.84	-12.84
Inverter	MV6-4	370250	4906966	2	0	0	86.1	86.1	1	5812.76	3.25	0	86.29	0	1.84	0	0	13.52	0	0	0	0	0	0	-15.59	-15.59
Westbrook Inverter Transfor	W_INVTR1	369403	4906578	2	0	0	78.2	78.2	1	4940.56	3.25	0	84.88	0	-3.17	0	0	2.39	0	0	0	0	0	0	-5.86	-5.86
Westbrook Inverter Transfor	W_INVTR3	369514	4906164	2	0	0	77.3	77.3	1	4727.41	3.25	0	84.49	0	-3.12	0	0	2.32	0	0	0	0	0	0	-6.35	-6.35

Westbrook Inverter Transfor	W_INVTR2	369368	4906388	2	0	0	77.3	77.3	1	4778.84	3.25	0	84.59	0	-3.13	0	0	2.34	0	0	0	0	0	0	-6.45	-6.45
Westbrook Inverter Transfor	W_INVTR4	369679	4906164	2	0	0	77.3	77.3	1	4850.15	3.25	0	84.72	0	-3.15	0	0	2.36	0	0	0	0	0	0	-6.59	-6.59
Westbrook Inverter Transfor	W_INVTR7	369786	4906417	2	0	0	77.3	77.3	1	5098.88	3.25	0	85.15	0	-3.2	0	0	2.45	0	0	0	0	0	0	-7.06	-7.06
Westbrook Inverter Transfor	W_INVTR5	369725	4906574	2	0	0	77.3	77.3	1	5162.69	3.25	0	85.26	0	-3.21	0	0	2.47	0	0	0	0	0	0	-7.17	-7.17
Westbrook Inverter Transfor	W_INVTR6	369881	4906578	2	0	0	77.3	77.3	1	5278.08	3.25	0	85.45	0	-3.23	0	0	2.51	0	0	0	0	0	0	-7.38	-7.38
Inverter Transformer	MV1-14 T	365157	4905049	2	0	0	69.4	69.4	1	2261.92	3.25	0	78.09	0	2.27	0	0	5.22	0	0	0	0	0	0	-16.23	-16.23
Inverter Transformer	MV1-13 T	364725	4905241	2	0	0	69.4	69.4	1	2626.46	3.25	0	79.39	0	2.39	0	0	5.56	0	0	0	0	0	0	-17.98	-17.98
Inverter Transformer	MV1-10 T	365010	4905564	2	0	0	69.4	69.4	1	2794.36	3.25	0	79.93	0	2.44	0	0	5.71	0	0	0	0	0	0	-18.72	-18.72
Inverter Transformer	MV1-7 T	364919	4905782	2	0	0	69.4	69.4	1	3030.55	3.25	0	80.63	0	2.52	0	0	5.91	0	0	0	0	0	0	-19.71	-19.71
Inverter Transformer	MV2-1 T	365836	4906816	2	0	0	69.4	69.4	1	3857	3.25	0	82.72	0	2.75	0	0	6.57	0	0	0	0	0	0	-22.69	-22.69
Inverter Transformer	MV6-4 T	370244	4906966	2	0	0	69.4	69.4	1	5808.41	3.25	0	86.28	0	3.16	0	0	7.9	0	0	0	0	0	0	-27.99	-27.99
Inverter Transformer	MV6-1 T	370230	4907364	2	0	0	69.4	69.4	1	6079.79	3.25	0	86.68	0	3.2	0	0	8.07	0	0	0	0	0	0	-28.59	-28.59
Inverter Transformer	MV1-15 T	365309	4904994	2	0	0	56.1	56.1	1	2155.55	3.25	0	77.67	0	0.47	0	0	7.35	0	0	0	0	0	0	-29.43	-29.43
Inverter Transformer	MV1-12 T	365044	4905386	2	0	0	56.1	56.1	1	2616.51	3.25	0	79.35	0	0.67	0	0	8.2	0	0	0	0	0	0	-32.16	-32.16
Inverter Transformer	MV1-11 T	364649	4905414	2	0	0	56.1	56.1	1	2814.39	3.25	0	79.99	0	0.75	0	0	8.55	0	0	0	0	0	0	-33.23	-33.23
Inverter Transformer	MV1-8 T	364782	4905647	2	0	0	56.1	56.1	1	2960.74	3.25	0	80.43	0	0.81	0	0	8.8	0	0	0	0	0	0	-33.98	-33.98
Inverter Transformer	MV1-9 T	364555	4905646	2	0	0	56.1	56.1	1	3062.78	3.25	0	80.72	0	0.86	0	0	8.97	0	0	0	0	0	0	-34.49	-34.49
Inverter Transformer	MV1-4 T	364821	4905918	2	0	0	56.1	56.1	1	3193.33	3.25	0	81.08	0	0.91	0	0	9.19	0	0	0	0	0	0	-35.13	-35.13
Inverter Transformer	MV1-5 T	364676	4905892	2	0	0	56.1	56.1	1	3227.59	3.25	0	81.18	0	0.93	0	0	9.25	0	0	0	0	0	0	-35.29	-35.29
Inverter Transformer	MV1-6 T	364482	4905835	2	0	0	56.1	56.1	1	3263.65	3.25	0	81.27	0	0.94	0	0	9.31	0	0	0	0	0	0	-35.46	-35.46
Inverter Transformer	MV1-2 T	364759	4906063	2	0	0	56.1	56.1	1	3351.02	3.25	0	81.5	0	0.98	0	0	9.45	0	0	0	0	0	0	-35.87	-35.87
Inverter Transformer	MV1-1 T	364721	4906166	2	0	0	56.1	56.1	1	3460.73	3.25	0	81.78	0	1.02	0	0	9.63	0	0	0	0	0	0	-36.37	-36.37
Inverter Transformer	MV1-3 T	364435	4906039	2	0	0	56.1	56.1	1	3465.9	3.25	0	81.8	0	1.03	0	0	9.63	0	0	0	0	0	0	-36.4	-36.4
Inverter Transformer	MV2-3 T	365814	4906641	2	0	0	56.1	56.1	1	3683.49	3.25	0	82.33	0	1.12	0	0	9.98	0	0	0	0	0	0	-37.36	-37.36
Inverter Transformer	MV2-2 T	365982	4906654	2	0	0	56.1	56.1	1	3690.27	3.25	0	82.34	0	1.12	0	0	9.99	0	0	0	0	0	0	-37.39	-37.39
Inverter Transformer	MV2-4 T	365590	4906628	2	0	0	56.1	56.1	1	3690.73	3.25	0	82.34	0	1.12	0	0	9.99	0	0	0	0	0	0	-37.39	-37.39
Inverter Transformer	MV3-18 T	367757	4907412	2	0	0	56.1	56.1	1	4769.89	3.25	0	84.57	0	1.54	0	0	11.55	0	0	0	0	0	0	-41.6	-41.6
Inverter Transformer	MV3-21 T	368484	4907206	2	0	0	56.1	56.1	1	4898.49	3.25	0	84.8	0	1.59	0	0	11.72	0	0	0	0	0	0	-42.05	-42.05
Inverter Transformer	MV3-12 T	367674	4907594	2	0	0	56.1	56.1	1	4911.71	3.25	0	84.82	0	1.59	0	0	11.74	0	0	0	0	0	0	-42.1	-42.1
Inverter Transformer	MV3-22 T	368661	4907142	2	0	0	56.1	56.1	1	4935.07	3.25	0	84.87	0	1.6	0	0	11.77	0	0	0	0	0	0	-42.18	-42.18
Inverter Transformer	MV3-19 T	368352	4907347	2	0	0	56.1	56.1	1	4958.03	3.25	0	84.91	0	1.61	0	0	11.8	0	0	0	0	0	0	-42.26	-42.26
Inverter Transformer	MV3-17 T	368183	4907472	2	0	0	56.1	56.1	1	4993.85	3.25	0	84.97	0	1.62	0	0	11.85	0	0	0	0	0	0	-42.38	-42.38
Inverter Transformer	MV3-13 T	367958	4907577	2	0	0	56.1	56.1	1	4997.99	3.25	0	84.98	0	1.62	0	0	11.85	0	0	0	0	0	0	-42.39	-42.39
Inverter Transformer	MV3-15 T	368351	4907477	2	0	0	56.1	56.1	1	5072.85	3.25	0	85.11	0	1.65	0	0	11.95	0	0	0	0	0	0	-42.65	-42.65
Inverter Transformer	MV3-20 T	368683	4907317	2	0	0	56.1	56.1	1	5095.48	3.25	0	85.14	0	1.66	0	0	11.98	0	0	0	0	0	0	-42.72	-42.72
Inverter Transformer	MV3-16 T	368509	4907475	2	0	0	56.1	56.1	1	5145.18	3.25	0	85.23	0	1.68	0	0	12.04	0	0	0	0	0	0	-42.89	-42.89
Inverter Transformer	MV3-7 T	367951	4907754	2	0	0	56.1	56.1	1	5159.19	3.25	0	85.25	0	1.68	0	0	12.06	0	0	0	0	0	0	-42.94	-42.94
Inverter Transformer	MV3-10 T	368162	4907669	2	0	0	56.1	56.1	1	5163.68	3.25	0	85.26	0	1.68	0	0	12.07	0	0	0	0	0	0	-42.95	-42.95
Inverter Transformer	MV3-11 T	368340	4907662	2	0	0	56.1	56.1	1	5233.26	3.25	0	85.38	0	1.71	0	0	12.16	0	0	0	0	0	0	-43.18	-43.18
Inverter Transformer	MV3-14 T	368678	4907498	2	0	0	56.1	56.1	1	5248.42	3.25	0	85.4	0	1.71	0	0	12.18	0	0	0	0	0	0	-43.23	-43.23
Inverter Transformer	MV3-6 T	368156	4907834	2	0	0	56.1	56.1	1	5312.06	3.25	0	85.51	0	1.74	0	0	12.26	0	0	0	0	0	0	-43.44	-43.44
Inverter Transformer	MV3-3 T	367944	4907927	2	0	0	56.1	56.1	1	5317.68	3.25	0	85.51	0	1.74	0	0	12.27	0	0	0	0	0	0	-43.46	-43.46
Inverter Transformer	MV3-9 T	368517	4907703	2	0	0	56.1	56.1	1	5349.9	3.25	0	85.57	0	1.75	0	0	12.31	0	0	0	0	0	0	-43.56	-43.56
Inverter Transformer	MV3-5 T	368335	4907843	2	0	0	56.1	56.1	1	5394.2	3.25	0	85.64	0	1.76	0	0	12.36	0	0	0	0	0	0	-43.71	-43.71
Inverter Transformer	MV3-8 T	368685	4907712	2	0	0	56.1	56.1	1	5437.77	3.25	0	85.71	0	1.78	0	0	12.42	0	0	0	0	0	0	-43.85	-43.85
Inverter Transformer	MV3-1 T	368150	4907976	2	0	0	56.1	56.1	1	5440.2	3.25	0	85.71	0	1.78	0	0	12.42	0	0	0	0	0	0	-43.85	-43.85
Inverter Transformer	MV3-4 T	368507	4907925	2	0	0	56.1	56.1	1	5543.04	3.25	0	85.87	0	1.82	0	0	12.55	0	0	0	0	0	0	-44.18	-44.18
Inverter Transformer	MV3-2 T	368677	4907928	2	0	0	56.1	56.1	1	5623.58	3.25	0	86	0	1.84	0	0	12.65	0	0	0	0	0	0	-44.43	-44.43
Inverter Transformer	MV6-3 T	370202	4907140	2	0	0	56.1	56.1	1	5899.89	3.25	0	86.42	0	1.93	0	0	12.98	0	0	0	0	0	0	-45.28	-45.28
Inverter Transformer	MV6-2 T	370091	4907339	2	0	0	56.1	56.1	1	5966.35	3.25	0	86.51	0	1.95	0	0	13.06	0	0	0	0	0	0	-45.47	-45.47
Inverter Transformer	MV4-15 T	369170	4908481	2	0	0	56.1	56.1	1	6345.82	3.25	0	87.05	0	2.07	0	0	13.51	0	0	0	0	0	0	-46.57	-46.57
Inverter Transformer	MV4-14 T	369182	4908507	2	0	0	56.1	56.1	1	6374.35	3.25	0	87.09	0	2.08	0	0	13.54	0	0	0	0	0	0	-46.65	-46.65
Inverter Transformer	MV4-13 T	369057	4908605	2	0	0	56.1	56.1	1	6399.77	3.25	0	87.12	0	2.09	0	0	13.57	0	0	0	0	0	0	-46.72	-46.72
Inverter Transformer	MV4-12 T	369049	4908803	2	0	0	56.1	56.1	1	6571.28	3.25	0	87.35	0	2.14	0	0	13.76	0	0	0	0	0	0	-47.19	-47.19
Inverter Transformer	MV4-11 T	369269	4908855	2	0	0	56.1	56.1	1	6720.61	3.25	0	87.55	0	2.18	0	0	13.93	0	0	0	0	0	0	-47.6	-47.6
Inverter Transformer	MV4-10 T	369307	4908858	2	0	0	56.1	56.1	1	6741.61	3.25	0	87.58	0	2.19	0	0	13.95	0	0	0	0	0	0	-47.65	-47.65
Inverter Transformer	MV4-7 T	369040	4909001	2	0	0	56.1	56.1	1	6743.81	3.25	0	87.58	0	2.19	0	0	13.95	0	0	0	0	0	0	-47.66	-47.66
Inverter Transformer	MV5-6 T	369987	4908507	2	0	0	56.1	56.1	1	6807.96	3.25	0	87.66	0	2.21	0	0	14.02	0	0	0	0	0	0	-47.83	-47.83
Inverter Transformer	MV4-8 T	369262	4909001	2	0	0	56.1	56.1	1	6845.65	3.25	0	87.71	0	2.22	0	0	14.06	0	0	0	0	0	0	-47.93	-47.93
Inverter Transformer	MV4-9 T	369284	4909001	2	0	0	56.1	56.1	1	6856.05	3.25	0	87.72	0	2.22	0	0	14.07	0	0	0	0	0	0	-47.96	-47.96
Inverter Transformer	MV4-4 T	369033	4909199	2	0	0	56.1	56.1	1	6918.58	3.25	0	87.8	0	2.24	0	0	14.14	0	0	0	0	0	0	-48.12	-48.12
Inverter Transformer	MV5-5 T	370021	4908690	2	0	0	56.1	56.1	1	6977.14	3.25	0	87.87	0	2.25	0	0	14.21	0	0	0	0	0	0	-48.27	-48.27
Inverter Transformer	MV4-6 T	369249	4909192	2	0	0	56.1	56.1	1	7008.69	3.25	0	87.91	0	2.26	0	0	14.24	0	0	0	0	0	0	-48.36	-48.36
Inverter Transformer	MV4-5 T	369283	4909199	2	0	0	56.1	56.1	1	7030.55	3.25	0	87.94	0	2.27	0	0	14.26	0	0	0	0	0	0	-48.41	-48.41
Inverter Transformer	MV4-1 T	369017	4909397	2	0	0	56.1	56.1	1	7090.79	3.25	0	88.01	0	2.28	0	0	14.33	0	0	0	0	0	0	-48.57	-48.57
Inverter Transformer	MV5-2 T	370011	4908853	2	0	0	56.1	56.1	1	7105.92	3.25	0	88.03	0	2.29	0	0	14.34	0	0	0	0	0	0	-48.6	-48.6
Inverter Transformer	MV5-4 T	370330	4908707	2	0	0	56.1	56.1	1	7171.81	3.25	0	88.11	0	2.31	0	0	14.41	0	0	0	0	0	0	-48.77	-48.77
Inverter Transformer	MV4-3 T	369234	4909397	2	0	0	56.1	56.1	1	7184.77	3.25	0	88.13	0	2.31	0	0	14.43	0	0	0	0	0	0	-48.81	-48.81
Inverter Transformer	MV4-2 T	369267	4909397	2	0	0	56.1	56.1	1	7199.53	3.25	0	88.15	0	2.31	0	0	14.44	0	0	0	0	0	0	-48.84	-48.84
Inverter Transformer	MV5-3 T	370237	4908851	2	0	0	56.1	56.1	1	7233.2	3.25	0	88.19	0	2.32	0	0	14.48	0	0	0	0	0	0	-48.93	-48.93
Inverter Transformer	MV5-1 T	370015	4909142	2	0	0	56.1	56.1	1	7349.37	3.25	0	88.33	0	2.35	0	0	14.6	0	0	0	0	0	0	-49.22	-49.22
Line Reactor	NGR	369421	4908787.5	5	0	0	45.4	45.4	1	6736.65	5.25	0	87.57	0	3.22	1.37	0.1	2.75	0	0	0	0	0	0	-49.56	-49.56
Limit. Valu 0	0																								
Level D/N: 28.2667	28.2667																								

Receiver: Existing Noise Receptor
ID: G-21
X: 366029.2
Y: 4903026.1
Z: 4.5
Ground: 0

ISO	Description	ID	X	Y	Z	Ground	ReflOrd	LxT	LxN	L/A	Dist.	hm	Freq	Adiv	K0b	Agr	Abar	z	Aatm	Afol	Ahous	Cmet	CmetN	Dc	RL	LtotT	LtotN
	Sol_Luce Substation	S_Substation	369426	4908792	3.5	0	0	112.1	112.1	1	6692.07	5.25	0	87.51	0	1.32	2.5	0.3	10.45	0	0	0	0	0	0	10.3	10.3
	Gardiner Substation	G_Sub	366586.3	4903349.9	2.5	0	0	90.8	90.8	1	644.37	3.5	0	67.18	0	-0.4	0	0	1.76	0	0	0	0	0	0	22.24	22.24
	Inverter	MV1-15	365315	4904994	2	0	0	100.3	100.3	1	2093.49	3.25	0	77.42	0	0.16	0	0	13.66	0	0	0	0	0	0	9.08	9.08
	Inverters	G_Inv1	366526.4	4903225.8	2	0	0	87.7	87.7	1	535.81	3.25	0	65.58	0	2.4	0	0	0.81	0	0	0	0	0	0	18.87	18.87
	Inverters	G_Inv3	366583.7	4903091.4	2	0	0	87.7	87.7	1	558.34	3.25	0	65.94	0	2.4	0	0	0.84	0	0	0	0	0	0	18.48	18.48
	Inverter	MV1-12	365038	4905386	2	0	0	100.3	100.3	1	2559.61	3.25	0	79.16	0	0.27	0	0	14.57	0	0	0	0	0	0	6.31	6.31
	Inverters	G_Inv5	366638.5	4902958.1	2	0	0	87.7	87.7	1	613.09	3.25	0	66.75	0	2.4	0	0	0.92	0	0	0	0	0	0	17.59	17.59
	Inverter	MV1-11	364655	4905414	2	0	0	100.3	100.3	1	2755.09	3.25	0	79.8	0	0.31	0	0	14.93	0	0	0	0	0	0	5.26	5.26
	Inverter	MV1-8	364788	4905647	2	0	0	100.3	100.3	1	2899.95	3.25	0	80.25	0	0.34	0	0	15.19	0	0	0	0	0	0	4.53	4.53
	Inverters	G_Inv2	366676.9	4903239.1	2	0	0	87.7	87.7	1	681.83	3.25	0	67.67	0	2.4	0	0	1.01	0	0	0	0	0	0	16.57	16.57
	Inverters	G_Inv7	366694.6	4902824.7	2	0	0	87.7	87.7	1	695.22	3.25	0	67.84	0	2.41	0	0	1.03	0	0	0	0	0	0	16.38	16.38
	Inverter	MV1-9	364561	4905646	2	0	0	100.3	100.3	1	3003.25	3.25	0	80.55	0	0.36	0	0	15.38	0	0	0	0	0	0	4.02	4.02
	Inverters	G_Inv4	366732.8	4903105	2	0	0	87.7	87.7	1	708.01	3.25	0	68	0	2.41	0	0	1.05	0	0	0	0	0	0	16.2	16.2
	Inverter	MV1-14	365163	4905049	2	0	0	97.3	97.3	1	2200.55	3.25	0	77.85	0	0.18	0	0	13.87	0	0	0	0	0	0	5.4	5.4
	Inverter	MV1-4	364815	4905918	2	0	0	100.3	100.3	1	3136.46	3.25	0	80.93	0	0.39	0	0	15.61	0	0	0	0	0	0	3.38	3.38
	Inverter	MV1-5	364671	4905892	2	0	0	100.3	100.3	1	3171.45	3.25	0	81.03	0	0.39	0	0	15.67	0	0	0	0	0	0	3.22	3.22
	Inverter	MV1-6	364477	4905835	2	0	0	100.3	100.3	1	3209.24	3.25	0	81.13	0	0.4	0	0	15.74	0	0	0	0	0	0	3.05	3.05
	Inverters	G_Inv6	366788.5	4902972	2	0	0	87.7	87.7	1	761.23	3.25	0	68.63	0	2.41	0	0	1.12	0	0	0	0	0	0	15.5	15.5
	Inverter	MV1-2	364753	4906063	2	0	0	100.3	100.3	1	3294.15	3.25	0	81.35	0	0.42	0	0	15.88	0	0	0	0	0	0	2.66	2.66
	Inverter	MV1-1	364715	4906166	2	0	0	100.3	100.3	1	3403.84	3.25	0	81.64	0	0.43	0	0	16.07	0	0	0	0	0	0	2.17	2.17
	Inverters	G_Inv9	366750.9	4902691.8	2	0	0	87.7	87.7	1	795.37	3.25	0	69.01	0	2.42	0	0	1.16	0	0	0	0	0	0	15.07	15.07
	Inverters	G_Inv8	366844.5	4902838.5	2	0	0	87.7	87.7	1	836.61	3.25	0	69.45	0	2.43	0	0	1.22	0	0	0	0	0	0	14.57	14.57
	Inverter	MV2-3	365820	4906641	2	0	0	100.3	100.3	1	3620.95	3.25	0	82.18	0	0.47	0	0	16.43	0	0	0	0	0	0	1.23	1.23
	Inverter	MV2-4	365586	4906624	2	0	0	100.3	100.3	1	3625.1	3.25	0	82.19	0	0.47	0	0	16.44	0	0	0	0	0	0	1.22	1.22
	Inverter	MV1-13	364731	4905241	2	0	0	97.3	97.3	1	2567.32	3.25	0	79.19	0	0.27	0	0	14.59	0	0	0	0	0	0	3.26	3.26
	Inverter	MV1-10	365004	4905564	2	0	0	97.3	97.3	1	2737.15	3.25	0	79.75	0	0.31	0	0	14.9	0	0	0	0	0	0	2.36	2.36
	Inverters	G_Inv10	366900.7	4902704.8	2	0	0	87.7	87.7	1	928.84	3.25	0	70.36	0	2.44	0	0	1.34	0	0	0	0	0	0	13.53	13.53
	Inverter	MV1-7	364925	4905782	2	0	0	97.3	97.3	1	2968.88	3.25	0	80.45	0	0.36	0	0	15.32	0	0	0	0	0	0	1.19	1.19
	Inverter	MV3-18	367752	4907412	2	0	0	100.3	100.3	1	4712.13	3.25	0	84.46	0	0.61	0	0	18.15	0	0	0	0	0	0	-2.92	-2.92
	Inverter	MV3-21	368478	4907206	2	0	0	100.3	100.3	1	4844.4	3.25	0	84.7	0	0.63	0	0	18.35	0	0	0	0	0	0	-3.37	-3.37
	Inverter	MV3-12	367668	4907594	2	0	0	100.3	100.3	1	4852.98	3.25	0	84.72	0	0.63	0	0	18.36	0	0	0	0	0	0	-3.4	-3.4
	Inverter	MV3-19	368357	4907347	2	0	0	100.3	100.3	1	4908.04	3.25	0	84.82	0	0.63	0	0	18.44	0	0	0	0	0	0	-3.58	-3.58
	Inverter	MV3-17	368178	4907472	2	0	0	100.3	100.3	1	4937.95	3.25	0	84.87	0	0.64	0	0	18.49	0	0	0	0	0	0	-3.68	-3.68
	Inverter	MV3-13	367963	4907577	2	0	0	100.3	100.3	1	4944.72	3.25	0	84.88	0	0.64	0	0	18.5	0	0	0	0	0	0	-3.71	-3.71
	Inverter	MV3-15	368357	4907477	2	0	0	100.3	100.3	1	5022.86	3.25	0	85.02	0	0.64	0	0	18.61	0	0	0	0	0	0	-3.96	-3.96
	Inverter	MV3-20	368689	4907317	2	0	0	100.3	100.3	1	5048.4	3.25	0	85.06	0	0.65	0	0	18.65	0	0	0	0	0	0	-4.05	-4.05
	Inverter	MV3-16	368514	4907475	2	0	0	100.3	100.3	1	5095.78	3.25	0	85.14	0	0.65	0	0	18.72	0	0	0	0	0	0	-4.2	-4.2
	Inverter	MV3-7	367945	4907754	2	0	0	100.3	100.3	1	5101.31	3.25	0	85.15	0	0.65	0	0	18.73	0	0	0	0	0	0	-4.22	-4.22
	Inverter	MV3-10	368167	4907669	2	0	0	100.3	100.3	1	5111.43	3.25	0	85.17	0	0.65	0	0	18.74	0	0	0	0	0	0	-4.25	-4.25
	Inverter	MV3-11	368346	4907662	2	0	0	100.3	100.3	1	5182.58	3.25	0	85.29	0	0.66	0	0	18.85	0	0	0	0	0	0	-4.48	-4.48
	Inverter	MV3-14	368684	4907498	2	0	0	100.3	100.3	1	5200.56	3.25	0	85.32	0	0.66	0	0	18.87	0	0	0	0	0	0	-4.54	-4.54
	Inverter	MV3-6	368162	4907834	2	0	0	100.3	100.3	1	5259.73	3.25	0	85.42	0	0.66	0	0	18.96	0	0	0	0	0	0	-4.73	-4.73
	Inverter	MV3-3	367939	4907927	2	0	0	100.3	100.3	1	5259.86	3.25	0	85.42	0	0.66	0	0	18.96	0	0	0	0	0	0	-4.73	-4.73
	Inverter	MV3-9	368512	4907703	2	0	0	100.3	100.3	1	5295.06	3.25	0	85.48	0	0.67	0	0	19.01	0	0	0	0	0	0	-4.84	-4.84
	Inverter	MV2-1	365842	4906816	2	0	0	97.3	97.3	1	3794.52	3.25	0	82.58	0	0.5	0	0	16.72	0	0	0	0	0	0	-2.49	-2.49
	Inverter	MV3-8	368680	4907712	2	0	0	100.3	100.3	1	5383.72	3.25	0	85.62	0	0.67	0	0	19.14	0	0	0	0	0	0	-5.12	-5.12
	Inverter	MV6-3	370207	4907140	2	0	0	100.3	100.3	1	5863.29	3.25	0	86.36	0	0.7	0	0	19.81	0	0	0	0	0	0	-6.56	-6.56
	Inverter	MV6-2	370085	4907339	2	0	0	100.3	100.3	1	5920.36	3.25	0	86.45	0	0.7	0	0	19.88	0	0	0	0	0	0	-6.72	-6.72
	Inverter	MV4-11	369264	4908855	2	0	0	100.3	100.3	1	6666.33	3.25	0	87.48	0	0.71	0	0	20.87	0	0	0	0	0	0	-8.76	-8.76
	Inverter	MV4-7	369035	4909001	2	0	0	100.3	100.3	1	6688.37	3.25	0	87.51	0	0.71	0	0	20.9	0	0	0	0	0	0	-8.81	-8.81
	Inverter	MV4-10	369312	4908858	2	0	0	100.3	100.3	1	6692.37	3.25	0	87.51	0	0.71	0	0	20.91	0	0	0	0	0	0	-8.82	-8.82
	Inverter	MV4-8	369256	4909001	2	0	0	100.3	100.3	1	6790.56	3.25	0	87.64	0	0.71	0	0	21.03	0	0	0	0	0	0	-9.07	-9.07
	Inverter	MV4-9	369289	4909001	2	0	0	100.3	100.3	1	6806.3	3.25	0	87.66	0	0.71	0	0	21.05	0	0	0	0	0	0	-9.11	-9.11
	Inverter	MV4-4	369027	4909199	2	0	0	100.3	100.3	1	6862.33	3.25	0	87.73	0	0.71	0	0	21.13	0	0	0	0	0	0	-9.26	-9.26
	Inverter	MV5-5	370015	4908690	2	0	0	100.3	100.3	1	6925.78	3.25	0	87.81	0	0.71	0	0	21.21	0	0	0	0	0	0	-9.41	-9.41
	Inverter	MV4-6	369243	4909192	2	0	0	100.3	100.3	1	6953.19	3.25	0	87.84	0	0.71	0	0	21.24	0	0	0	0	0	0	-9.48	-9.48
	Inverter	MV4-5	369289	4909199	2	0	0	100.3	100.3	1	6980.76	3.25	0	87.88	0	0.71	0	0	21.27	0	0	0	0	0	0	-9.55	-9.55
	Inverter	MV4-1	369011	4909397	2	0	0	100.3	100.3	1	7034.17	3.25	0	87.94	0	0.71	0	0	21.34	0	0	0	0	0	0	-9.68	-9.68
	Inverter	MV5-2	370006	4908853	2	0	0	100.3	100.3	1	7054.62	3.25	0	87.97	0	0.71	0	0	21.37	0	0	0	0	0	0	-9.73	-9.73
	Inverter	MV5-4	370324	4908707	2	0	0	100.3	100.3	1	7121.65	3.25	0	88.05	0	0.71	0	0	21.45	0	0	0	0	0	0	-9.9	-9.9
	Inverter	MV4-3	369229	4909397	2	0	0	100.3	100.3	1	7129.31	3.25	0	88.06	0	0.71	0	0	21.46	0	0	0	0	0	0	-9.92	-9.92
	Inverter	MV4-2	369272	4909397	2	0	0	100.3	100.3	1	7148.71	3.25	0	88.08	0	0.71	0	0	21.48	0	0	0	0	0	0	-9.96	-9.96
	Inverter	MV5-3	370231	4908851	2	0	0	100.3	100.3	1	7182.24	3.25	0	88.13	0	0.7	0	0	21.53	0	0	0	0	0	0	-10.04	-10.04
	Inverter	MV5-1	370020	4909142	2	0	0	100.3	100.3	1	7302.79	3.25	0	88.27	0	0.7	0	0	21.67	0	0	0	0	0	0	-10.33	-10.33
	Inverter	MV6-1	370235	4907364	2	0	0	97.3	97.3	1	6042.03	3.25	0	86.62	0	0.71	0	0	20.05	0	0	0	0	0	0	-10.07	-10.07

DSTATCOM - 10 MVAR #2	DSAT2	369403	4908757	2.5	0	0	96.6	96.6	1	6650.24	3.5	0	87.46	0	3.82	0	0	4.15	0	0	0	0	0	0	1.21	1.21
DSTATCOM - 10 MVAR #1	DSAT1	369437	4908757	2.5	0	0	96.6	96.6	1	6667.56	3.5	0	87.48	0	3.82	0	0	4.16	0	0	0	0	0	0	1.18	1.18
Inverter	MV1-3	364440	4906039	2	0	0	89.1	89.1	1	3406.34	3.25	0	81.65	0	1.25	0	0	10.22	0	0	0	0	0	0	-4.06	-4.06
SubstationTransformer	W_ST	369711.17	4906112.3	2.5	0	0	92	92	1	4804.31	4.25	0	84.63	0	1.58	2.38	0.22	8.39	0	0	0	0	0	0	-5	-5
Inverter	MV2-2	365977	4906654	2	0	0	89.1	89.1	1	3628.28	3.25	0	82.19	0	1.3	0	0	10.55	0	0	0	0	0	0	-4.99	-4.99
Westbrook Inverter Enclosur	W_INV3	369508	4906164	2	0	0	89.1	89.1	1	4684.92	3.25	0	84.41	0	1.56	0	0	12.04	0	0	0	0	0	0	-8.96	-8.96
Westbrook Inverter Enclosur	W_INV2	369374	4906388	2	0	0	89.1	89.1	1	4742.37	3.25	0	84.52	0	1.58	0	0	12.12	0	0	0	0	0	0	-9.15	-9.15
Westbrook Inverter Enclosur	W_INV4	369673	4906164	2	0	0	89.1	89.1	1	4808.71	3.25	0	84.64	0	1.59	0	0	12.21	0	0	0	0	0	0	-9.38	-9.38
Inverter	MV3-22	368656	4907142	2	0	0	89.1	89.1	1	4882.7	3.25	0	84.77	0	1.61	0	0	12.31	0	0	0	0	0	0	-9.63	-9.63
Westbrook Inverter Enclosur	W_INV7	369780	4906417	2	0	0	89.1	89.1	1	5056.35	3.25	0	85.08	0	1.65	0	0	12.54	0	0	0	0	0	0	-10.21	-10.21
Westbrook Inverter Enclosur	W_INV5	369719	4906574	2	0	0	89.1	89.1	1	5118.81	3.25	0	85.18	0	1.67	0	0	12.62	0	0	0	0	0	0	-10.42	-10.42
Westbrook Inverter Enclosur	W_INV6	369875	4906578	2	0	0	89.1	89.1	1	5235.09	3.25	0	85.38	0	1.7	0	0	12.78	0	0	0	0	0	0	-10.79	-10.79
Inverter	MV3-5	368340	4907843	2	0	0	89.1	89.1	1	5342.5	3.25	0	85.55	0	1.72	0	0	12.92	0	0	0	0	0	0	-11.14	-11.14
Inverter	MV3-1	368156	4907976	2	0	0	89.1	89.1	1	5387.47	3.25	0	85.63	0	1.74	0	0	12.98	0	0	0	0	0	0	-11.28	-11.28
Inverter	MV3-4	368502	4907925	2	0	0	89.1	89.1	1	5487.62	3.25	0	85.79	0	1.76	0	0	13.11	0	0	0	0	0	0	-11.6	-11.6
Inverter	MV3-2	368671	4907928	2	0	0	89.1	89.1	1	5568.46	3.25	0	85.91	0	1.78	0	0	13.21	0	0	0	0	0	0	-11.85	-11.85
Fixed Reactor Bank 1	FRB1	369378	4908755	6	0	0	89.8	89.8	1	6635.87	5.25	0	87.44	0	-0.33	0	0	10.39	0	0	0	0	0	0	-7.73	-7.73
Fixed Reactor Bank 2	FRB2	369464	4908755	6	0	0	89.8	89.8	1	6679.68	5.25	0	87.5	0	-0.32	0	0	10.44	0	0	0	0	0	0	-7.83	-7.83
Inverter	MV4-15	369176	4908481	2	0	0	89.1	89.1	1	6297.48	3.25	0	86.98	0	1.96	0	0	14.13	0	0	0	0	0	0	-14.02	-14.02
Inverter	MV4-14	369176	4908507	2	0	0	89.1	89.1	1	6320.02	3.25	0	87.01	0	1.96	0	0	14.16	0	0	0	0	0	0	-14.08	-14.08
Inverter	MV4-13	369051	4908605	2	0	0	89.1	89.1	1	6344.71	3.25	0	87.05	0	1.97	0	0	14.19	0	0	0	0	0	0	-14.15	-14.15
Inverter	MV4-12	369043	4908803	2	0	0	89.1	89.1	1	6515.79	3.25	0	87.28	0	2.01	0	0	14.4	0	0	0	0	0	0	-14.64	-14.64
Inverter	MV5-6	369982	4908507	2	0	0	89.1	89.1	1	6757.58	3.25	0	87.6	0	2.07	0	0	14.7	0	0	0	0	0	0	-15.3	-15.3
Westbrook Inverter Enclosur	W_INV1	369409	4906578	2	0	0	86.1	86.1	1	4902.96	3.25	0	84.81	0	1.62	0	0	12.33	0	0	0	0	0	0	-12.7	-12.7
Inverter	MV6-4	370250	4906966	2	0	0	86.1	86.1	1	5773.9	3.25	0	86.23	0	1.83	0	0	13.48	0	0	0	0	0	0	-15.48	-15.48
Westbrook Inverter Transfor	W_INVTR1	369403	4906578	2	0	0	78.2	78.2	1	4898.83	3.25	0	84.8	0	-3.16	0	0	2.38	0	0	0	0	0	0	-5.78	-5.78
Westbrook Inverter Transfor	W_INVTR3	369514	4906164	2	0	0	77.3	77.3	1	4689.38	3.25	0	84.42	0	-3.11	0	0	2.31	0	0	0	0	0	0	-6.27	-6.27
Westbrook Inverter Transfor	W_INVTR2	369368	4906388	2	0	0	77.3	77.3	1	4738.14	3.25	0	84.51	0	-3.12	0	0	2.32	0	0	0	0	0	0	-6.37	-6.37
Westbrook Inverter Transfor	W_INVTR4	369679	4906164	2	0	0	77.3	77.3	1	4813.26	3.25	0	84.65	0	-3.14	0	0	2.35	0	0	0	0	0	0	-6.52	-6.52
Westbrook Inverter Transfor	W_INVTR7	369786	4906417	2	0	0	77.3	77.3	1	5060.81	3.25	0	85.08	0	-3.19	0	0	2.43	0	0	0	0	0	0	-6.99	-6.99
Westbrook Inverter Transfor	W_INVTR5	369725	4906574	2	0	0	77.3	77.3	1	5123.14	3.25	0	85.19	0	-3.2	0	0	2.45	0	0	0	0	0	0	-7.1	-7.1
Westbrook Inverter Transfor	W_INVTR6	369881	4906578	2	0	0	77.3	77.3	1	5239.5	3.25	0	85.39	0	-3.22	0	0	2.49	0	0	0	0	0	0	-7.31	-7.31
Inverter Transformer	MV1-14 T	365157	4905049	2	0	0	69.4	69.4	1	2202.92	3.25	0	77.86	0	2.25	0	0	5.16	0	0	0	0	0	0	-15.92	-15.92
Inverter Transformer	MV1-13 T	364725	4905241	2	0	0	69.4	69.4	1	2570.36	3.25	0	79.2	0	2.37	0	0	5.51	0	0	0	0	0	0	-17.73	-17.73
Inverter Transformer	MV1-10 T	365010	4905564	2	0	0	69.4	69.4	1	2734.91	3.25	0	79.74	0	2.42	0	0	5.65	0	0	0	0	0	0	-18.47	-18.47
Inverter Transformer	MV1-7 T	364919	4905782	2	0	0	69.4	69.4	1	2971.12	3.25	0	80.46	0	2.5	0	0	5.86	0	0	0	0	0	0	-19.46	-19.46
Inverter Transformer	MV2-1 T	365836	4906816	2	0	0	69.4	69.4	1	3794.82	3.25	0	82.58	0	2.73	0	0	6.52	0	0	0	0	0	0	-22.49	-22.49
Inverter Transformer	MV6-4 T	370244	4906966	2	0	0	69.4	69.4	1	5769.52	3.25	0	86.22	0	3.15	0	0	7.88	0	0	0	0	0	0	-27.9	-27.9
Inverter Transformer	MV6-1 T	370230	4907364	2	0	0	69.4	69.4	1	6038.55	3.25	0	86.62	0	3.19	0	0	8.04	0	0	0	0	0	0	-28.5	-28.5
Inverter Transformer	MV1-15 T	365309	4904994	2	0	0	56.1	56.1	1	2095.55	3.25	0	77.43	0	0.44	0	0	7.23	0	0	0	0	0	0	-29.04	-29.04
Inverter Transformer	MV1-12 T	365044	4905386	2	0	0	56.1	56.1	1	2557.29	3.25	0	79.16	0	0.64	0	0	8.09	0	0	0	0	0	0	-31.83	-31.83
Inverter Transformer	MV1-11 T	364649	4905414	2	0	0	56.1	56.1	1	2758.08	3.25	0	79.81	0	0.73	0	0	8.45	0	0	0	0	0	0	-32.93	-32.93
Inverter Transformer	MV1-8 T	364782	4905647	2	0	0	56.1	56.1	1	2902.52	3.25	0	80.26	0	0.79	0	0	8.7	0	0	0	0	0	0	-33.69	-33.69
Inverter Transformer	MV1-9 T	364555	4905646	2	0	0	56.1	56.1	1	3006.18	3.25	0	80.56	0	0.83	0	0	8.88	0	0	0	0	0	0	-34.21	-34.21
Inverter Transformer	MV1-4 T	364821	4905918	2	0	0	56.1	56.1	1	3134.14	3.25	0	80.92	0	0.89	0	0	9.09	0	0	0	0	0	0	-34.84	-34.84
Inverter Transformer	MV1-5 T	364676	4905892	2	0	0	56.1	56.1	1	3169.31	3.25	0	81.02	0	0.9	0	0	9.15	0	0	0	0	0	0	-35.01	-35.01
Inverter Transformer	MV1-6 T	364482	4905835	2	0	0	56.1	56.1	1	3206.83	3.25	0	81.12	0	0.92	0	0	9.21	0	0	0	0	0	0	-35.19	-35.19
Inverter Transformer	MV1-2 T	364759	4906063	2	0	0	56.1	56.1	1	3291.83	3.25	0	81.35	0	0.95	0	0	9.35	0	0	0	0	0	0	-35.6	-35.6
Inverter Transformer	MV1-1 T	364721	4906166	2	0	0	56.1	56.1	1	3401.52	3.25	0	81.63	0	1	0	0	9.53	0	0	0	0	0	0	-36.1	-36.1
Inverter Transformer	MV1-3 T	364435	4906039	2	0	0	56.1	56.1	1	3408.67	3.25	0	81.65	0	1	0	0	9.54	0	0	0	0	0	0	-36.14	-36.14
Inverter Transformer	MV2-3 T	365814	4906641	2	0	0	56.1	56.1	1	3621.3	3.25	0	82.18	0	1.09	0	0	9.88	0	0	0	0	0	0	-37.09	-37.09
Inverter Transformer	MV2-2 T	365982	4906654	2	0	0	56.1	56.1	1	3628.21	3.25	0	82.19	0	1.09	0	0	9.89	0	0	0	0	0	0	-37.12	-37.12
Inverter Transformer	MV2-4 T	365590	4906628	2	0	0	56.1	56.1	1	3628.58	3.25	0	82.19	0	1.09	0	0	9.89	0	0	0	0	0	0	-37.12	-37.12
Inverter Transformer	MV3-18 T	367757	4907412	2	0	0	56.1	56.1	1	4713.96	3.25	0	84.47	0	1.52	0	0	11.47	0	0	0	0	0	0	-41.4	-41.4
Inverter Transformer	MV3-21 T	368484	4907206	2	0	0	56.1	56.1	1	4847.43	3.25	0	84.71	0	1.57	0	0	11.65	0	0	0	0	0	0	-41.87	-41.87
Inverter Transformer	MV3-12 T	367674	4907594	2	0	0	56.1	56.1	1	4855.01	3.25	0	84.72	0	1.57	0	0	11.66	0	0	0	0	0	0	-41.9	-41.9
Inverter Transformer	MV3-22 T	368661	4907142	2	0	0	56.1	56.1	1	4885.39	3.25	0	84.78	0	1.58	0	0	11.7	0	0	0	0	0	0	-42.01	-42.01
Inverter Transformer	MV3-19 T	368352	4907347	2	0	0	56.1	56.1	1	4905.67	3.25	0	84.81	0	1.59	0	0	11.73	0	0	0	0	0	0	-42.08	-42.08
Inverter Transformer	MV3-17 T	368183	4907472	2	0	0	56.1	56.1	1	4940.13	3.25	0	84.87	0	1.6	0	0	11.77	0	0	0	0	0	0	-42.19	-42.19
Inverter Transformer	MV3-13 T	367958	4907577	2	0	0	56.1	56.1	1	4942.77	3.25	0	84.88	0	1.6	0	0	11.78	0	0	0	0	0	0	-42.2	-42.2
Inverter Transformer	MV3-15 T	368351	4907477	2	0	0	56.1	56.1	1	5020.09	3.25	0	85.01	0	1.63	0	0	11.88	0	0	0	0	0	0	-42.47	-42.47
Inverter Transformer	MV3-20 T	368683	4907317	2	0	0	56.1	56.1	1	5045.24	3.25	0	85.06	0	1.64	0	0	11.91	0	0	0	0	0	0	-42.55	-42.55
Inverter Transformer	MV3-16 T	368509	4907475	2	0	0	56.1	56.1	1	5093.34	3.25	0	85.14	0	1.66	0	0	11.98	0	0	0	0	0	0	-42.72	-42.72
Inverter Transformer	MV3-7 T	367951	4907754	2	0	0	56.1	56.1	1	5103.56	3.25	0	85.16	0	1.66	0	0	11.99	0	0	0	0	0	0	-42.75	-42.75
Inverter Transformer	MV3-10 T	368162	4907669	2	0	0	56.1	56.1	1	5109.34	3.25	0	85.17	0	1.66	0	0	12	0	0	0	0	0	0	-42.77	-42.77
Inverter Transformer	MV3-11 T	368340	4907662	2	0	0	56.1	56.1	1	5179.9	3.25	0	85.29	0	1.69	0	0	12.09	0	0	0	0	0	0	-43.01	-43.01
Inverter Transformer	MV3-14 T	368678	4907498	2	0	0	56.1	56.1	1	5197.5	3.25	0	85.32	0	1.7	0	0	12.11	0	0	0	0	0	0	-43.07	-43.07
Inverter Transformer	MV3-6 T	368156	4907834	2	0	0	56.1	56.1	1	5257.3	3.25	0	85.42	0	1.72	0	0	12.19	0	0	0	0	0	0	-43.26	-43.26
Inverter Transformer	MV3-3 T	367944	4907927	2	0	0	56.1	56.1	1	5261.68	3.25	0	85.42	0	1.72	0	0	12.19	0	0	0	0	0	0	-43.28	-43.28
Inverter Transformer	MV3-9 T	368517	4907703	2	0	0	56.1	56.1	1	5297.41	3.25	0	85.48	0	1.73	0	0	12.24	0	0	0	0	0	0	-43.39	-43.39
Inverter Transformer	MV3-5 T	368335	4907843	2	0	0	56.1	56.1	1	5340.34	3.25	0	85.55	0	1.75	0	0	12.29	0	0	0	0	0	0	-43.53	-43.53
Inverter Transformer	MV3-1 T	368150	4907976	2	0	0	56.1	56.1	1	5385.1	3.25	0	85.62	0	1.76	0	0	12.35	0	0	0	0	0	0	-43.68	-43.68
Inverter Transformer	MV3-8 T	368685	4907712	2	0	0	56.1	56.1	1	5386.18	3.25	0	85.63	0	1.76	0	0	12.35	0	0	0	0	0	0	-43.68	-43.68
Inverter Transformer	MV3-4 T	368507	4907925	2	0	0	56.1	56.1	1	5489.87	3.25	0	85.79	0	1.8	0	0	12.48	0	0	0	0	0	0	-44.01	-44.01

	Inverter Transformer	MV3-2 T	368677	4907928	2	0	0	56.1	56.1	1	5571.31	3.25	0	85.92	0	1.82	0	0	12.58	0	0	0	0	0	0	-44.27	-44.27
	Inverter Transformer	MV6-3 T	370202	4907140	2	0	0	56.1	56.1	1	5859.73	3.25	0	86.36	0	1.92	0	0	12.94	0	0	0	0	0	0	-45.15	-45.15
	Inverter Transformer	MV6-2 T	370091	4907339	2	0	0	56.1	56.1	1	5924.47	3.25	0	86.45	0	1.94	0	0	13.01	0	0	0	0	0	0	-45.35	-45.35
	Inverter Transformer	MV4-15 T	369170	4908481	2	0	0	56.1	56.1	1	6294.49	3.25	0	86.98	0	2.06	0	0	13.45	0	0	0	0	0	0	-46.42	-46.42
	Inverter Transformer	MV4-14 T	369182	4908507	2	0	0	56.1	56.1	1	6323.01	3.25	0	87.02	0	2.06	0	0	13.48	0	0	0	0	0	0	-46.5	-46.5
	Inverter Transformer	MV4-13 T	369057	4908605	2	0	0	56.1	56.1	1	6347.57	3.25	0	87.05	0	2.07	0	0	13.51	0	0	0	0	0	0	-46.57	-46.57
	Inverter Transformer	MV4-12 T	369049	4908803	2	0	0	56.1	56.1	1	6518.57	3.25	0	87.28	0	2.12	0	0	13.7	0	0	0	0	0	0	-47.05	-47.05
	Inverter Transformer	MV4-11 T	369269	4908855	2	0	0	56.1	56.1	1	6668.76	3.25	0	87.48	0	2.17	0	0	13.87	0	0	0	0	0	0	-47.46	-47.46
	Inverter Transformer	MV4-10 T	369307	4908858	2	0	0	56.1	56.1	1	6689.92	3.25	0	87.51	0	2.17	0	0	13.89	0	0	0	0	0	0	-47.51	-47.51
	Inverter Transformer	MV4-7 T	369040	4909001	2	0	0	56.1	56.1	1	6690.62	3.25	0	87.51	0	2.17	0	0	13.89	0	0	0	0	0	0	-47.52	-47.52
	Inverter Transformer	MV5-6 T	369987	4908507	2	0	0	56.1	56.1	1	6760.51	3.25	0	87.6	0	2.19	0	0	13.97	0	0	0	0	0	0	-47.7	-47.7
	Inverter Transformer	MV4-8 T	369262	4909001	2	0	0	56.1	56.1	1	6793.41	3.25	0	87.64	0	2.2	0	0	14.01	0	0	0	0	0	0	-47.79	-47.79
	Inverter Transformer	MV4-9 T	369284	4909001	2	0	0	56.1	56.1	1	6803.91	3.25	0	87.66	0	2.21	0	0	14.02	0	0	0	0	0	0	-47.82	-47.82
	Inverter Transformer	MV4-4 T	369033	4909199	2	0	0	56.1	56.1	1	6864.95	3.25	0	87.73	0	2.22	0	0	14.08	0	0	0	0	0	0	-47.98	-47.98
	Inverter Transformer	MV5-5 T	370021	4908690	2	0	0	56.1	56.1	1	6929.23	3.25	0	87.81	0	2.24	0	0	14.15	0	0	0	0	0	0	-48.15	-48.15
	Inverter Transformer	MV4-6 T	369249	4909192	2	0	0	56.1	56.1	1	6955.96	3.25	0	87.85	0	2.25	0	0	14.18	0	0	0	0	0	0	-48.22	-48.22
	Inverter Transformer	MV4-5 T	369283	4909199	2	0	0	56.1	56.1	1	6977.96	3.25	0	87.87	0	2.25	0	0	14.21	0	0	0	0	0	0	-48.28	-48.28
	Inverter Transformer	MV4-1 T	369017	4909397	2	0	0	56.1	56.1	1	7036.71	3.25	0	87.95	0	2.27	0	0	14.27	0	0	0	0	0	0	-48.43	-48.43
	Inverter Transformer	MV5-2 T	370011	4908853	2	0	0	56.1	56.1	1	7057.44	3.25	0	87.97	0	2.28	0	0	14.29	0	0	0	0	0	0	-48.48	-48.48
	Inverter Transformer	MV5-4 T	370330	4908707	2	0	0	56.1	56.1	1	7125.27	3.25	0	88.06	0	2.29	0	0	14.36	0	0	0	0	0	0	-48.65	-48.65
	Inverter Transformer	MV4-3 T	369234	4909397	2	0	0	56.1	56.1	1	7131.56	3.25	0	88.06	0	2.29	0	0	14.37	0	0	0	0	0	0	-48.67	-48.67
	Inverter Transformer	MV4-2 T	369267	4909397	2	0	0	56.1	56.1	1	7146.45	3.25	0	88.08	0	2.3	0	0	14.39	0	0	0	0	0	0	-48.71	-48.71
	Inverter Transformer	MV5-3 T	370237	4908851	2	0	0	56.1	56.1	1	7185.75	3.25	0	88.13	0	2.31	0	0	14.43	0	0	0	0	0	0	-48.81	-48.81
	Inverter Transformer	MV5-1 T	370015	4909142	2	0	0	56.1	56.1	1	7300.06	3.25	0	88.27	0	2.34	0	0	14.55	0	0	0	0	0	0	-49.09	-49.09
	Line Reactor	NGR	369421	4908787.5	5	0	0	45.4	45.4	1	6685.66	5.25	0	87.5	0	3.23	1.37	0.1	2.73	0	0	0	0	0	0	-49.47	-49.47
Limit. Valu	0	0																								
Level D/N:	28.3948	28.3948																								

Receiver: Existing Noise Receptor
ID: G-22
X: 366017.2
Y: 4903032.1
Z: 4.5
Ground: 0

ISO	Description	ID	X	Y	Z	Ground	ReflOrd	LxT	LxN	L/A	Dist.	hm	Freq	Adiv	K0b	Agr	Abar	z	Aatm	Afol	Ahous	Cmet	CmetN	Dc	RL	LtotT	LtotN
	Sol_Luce Substation	S_Substation	369426	4908792	3.5	0	0	112.1	112.1	1	6693.01	5.25	0	87.51	0	1.32	2.5	0.3	10.45	0	0	0	0	0	0	10.29	10.29
	Gardiner Substation	G_Sub	366586.3	4903349.9	2.5	0	0	90.8	90.8	1	651.82	3.5	0	67.28	0	-0.4	0	0	1.78	0	0	0	0	0	0	22.12	22.12
	Inverter	MV1-15	365315	4904994	2	0	0	100.3	100.3	1	2083.78	3.25	0	77.38	0	0.15	0	0	13.64	0	0	0	0	0	0	9.15	9.15
	Inverters	G_Inv1	366526.4	4903225.8	2	0	0	87.7	87.7	1	544.8	3.25	0	65.72	0	2.4	0	0	0.83	0	0	0	0	0	0	18.71	18.71
	Inverters	G_Inv3	366583.7	4903091.4	2	0	0	87.7	87.7	1	569.6	3.25	0	66.11	0	2.4	0	0	0.86	0	0	0	0	0	0	18.29	18.29
	Inverter	MV1-12	365038	4905386	2	0	0	100.3	100.3	1	2549.45	3.25	0	79.13	0	0.27	0	0	14.55	0	0	0	0	0	0	6.36	6.36
	Inverters	G_Inv5	366638.5	4902958.1	2	0	0	87.7	87.7	1	625.7	3.25	0	66.93	0	2.4	0	0	0.94	0	0	0	0	0	0	17.4	17.4
	Inverter	MV1-11	364655	4905414	2	0	0	100.3	100.3	1	2743.91	3.25	0	79.77	0	0.31	0	0	14.91	0	0	0	0	0	0	5.32	5.32
	Inverter	MV1-8	364788	4905647	2	0	0	100.3	100.3	1	2889.4	3.25	0	80.22	0	0.34	0	0	15.18	0	0	0	0	0	0	4.58	4.58
	Inverters	G_Inv2	366676.9	4903239.1	2	0	0	87.7	87.7	1	691.42	3.25	0	67.79	0	2.41	0	0	1.02	0	0	0	0	0	0	16.43	16.43
	Inverter	MV1-9	364561	4905646	2	0	0	100.3	100.3	1	2992.16	3.25	0	80.52	0	0.36	0	0	15.36	0	0	0	0	0	0	4.07	4.07
	Inverters	G_Inv7	366694.6	4902824.7	2	0	0	87.7	87.7	1	708.44	3.25	0	68.01	0	2.41	0	0	1.05	0	0	0	0	0	0	16.2	16.2
	Inverters	G_Inv4	366732.8	4903105	2	0	0	87.7	87.7	1	719.31	3.25	0	68.14	0	2.41	0	0	1.06	0	0	0	0	0	0	16.05	16.05
	Inverter	MV1-14	365163	4905049	2	0	0	97.3	97.3	1	2190.33	3.25	0	77.81	0	0.18	0	0	13.85	0	0	0	0	0	0	5.47	5.47
	Inverter	MV1-4	364815	4905918	2	0	0	100.3	100.3	1	3126.29	3.25	0	80.9	0	0.39	0	0	15.59	0	0	0	0	0	0	3.43	3.43
	Inverter	MV1-5	364671	4905892	2	0	0	100.3	100.3	1	3160.9	3.25	0	81	0	0.39	0	0	15.65	0	0	0	0	0	0	3.27	3.27
	Inverter	MV1-6	364477	4905835	2	0	0	100.3	100.3	1	3198.2	3.25	0	81.1	0	0.4	0	0	15.72	0	0	0	0	0	0	3.1	3.1
	Inverter	MV1-2	364753	4906063	2	0	0	100.3	100.3	1	3283.99	3.25	0	81.33	0	0.41	0	0	15.87	0	0	0	0	0	0	2.7	2.7
	Inverters	G_Inv6	366788.5	4902972	2	0	0	87.7	87.7	1	773.64	3.25	0	68.77	0	2.42	0	0	1.13	0	0	0	0	0	0	15.34	15.34
	Inverter	MV1-1	364715	4906166	2	0	0	100.3	100.3	1	3393.68	3.25	0	81.61	0	0.43	0	0	16.05	0	0	0	0	0	0	2.21	2.21
	Inverters	G_Inv9	366750.9	4902691.8	2	0	0	87.7	87.7	1	808.78	3.25	0	69.16	0	2.42	0	0	1.18	0	0	0	0	0	0	14.9	14.9
	Inverter	MV1-13	364731	4905241	2	0	0	97.3	97.3	1	2556.08	3.25	0	79.15	0	0.27	0	0	14.56	0	0	0	0	0	0	3.33	3.33
	Inverter	MV2-3	365820	4906641	2	0	0	100.3	100.3	1	3614.28	3.25	0	82.16	0	0.47	0	0	16.42	0	0	0	0	0	0	1.26	1.26
	Inverter	MV2-4	365586	4906624	2	0	0	100.3	100.3	1	3617.69	3.25	0	82.17	0	0.47	0	0	16.43	0	0	0	0	0	0	1.25	1.25
	Inverters	G_Inv8	366844.5	4902838.5	2	0	0	87.7	87.7	1	849.65	3.25	0	69.58	0	2.43	0	0	1.23	0	0	0	0	0	0	14.41	14.41
	Inverter	MV1-10	365004	4905564	2	0	0	97.3	97.3	1	2727.1	3.25	0	79.71	0	0.31	0	0	14.88	0	0	0	0	0	0	2.41	2.41
	Inverters	G_Inv10	366900.7	4902704.8	2	0	0	87.7	87.7	1	942.18	3.25	0	70.48	0	2.44	0	0	1.35	0	0	0	0	0	0	13.38	13.38
	Inverter	MV1-7	364925	4905782	2	0	0	97.3	97.3	1	2958.86	3.25	0	80.42	0	0.35	0	0	15.3	0	0	0	0	0	0	1.24	1.24
	Inverter	MV3-18	367752	4907412	2	0	0	100.3	100.3	1	4710.95	3.25	0	84.46	0	0.61	0	0	18.15	0	0	0	0	0	0	-2.91	-2.91
	Inverter	MV3-21	368478	4907206	2	0	0	100.3	100.3	1	4845.31	3.25	0	84.71	0	0.63	0	0	18.35	0	0	0	0	0	0	-3.37	-3.37
	Inverter	MV3-12	367668	4907594	2	0	0	100.3	100.3	1	4851.4	3.25	0	84.72	0	0.63	0	0	18.36	0	0	0	0	0	0	-3.39	-3.39
	Inverter	MV3-19	368357	4907347	2	0	0	100.3	100.3	1	4908.47	3.25	0	84.82	0	0.63	0	0	18.45	0	0	0	0	0	0	-3.59	-3.59
	Inverter	MV3-17	368178	4907472	2	0	0	100.3	100.3	1	4937.79	3.25	0	84.87	0	0.64	0	0	18.49	0	0	0	0	0	0	-3.68	-3.68
	Inverter	MV3-13	367963	4907577	2	0	0	100.3	100.3	1	4943.91	3.25	0	84.88	0	0.64	0	0	18.5	0	0	0	0	0	0	-3.7	-3.7
	Inverter	MV3-15	368357	4907477	2	0	0	100.3	100.3	1	5023.13	3.25	0	85.02	0	0.64	0	0	18.61	0	0	0	0	0	0	-3.97	-3.97
	Inverter	MV3-20	368689	4907317	2	0	0	100.3	100.3	1	5049.64	3.25	0	85.07	0	0.65	0	0	18.65	0	0	0	0	0	0	-4.05	-4.05
	Inverter	MV3-16	368514	4907475	2	0	0	100.3	100.3	1	5096.41	3.25	0	85.15	0	0.65	0	0	18.72	0	0	0	0	0	0	-4.21	-4.21
	Inverter	MV3-7	367945	4907754	2	0	0	100.3	100.3	1	5100.27	3.25	0	85.15	0	0.65	0	0	18.73	0	0	0	0	0	0	-4.22	-4.22

Inverter	MV3-10	368167	4907669	2	0	0	100.3	100.3	1	5111.02	3.25	0	85.17	0	0.65	0	0	18.74	0	0	0	0	0	0	-4.25	-4.25
Inverter	MV3-11	368346	4907662	2	0	0	100.3	100.3	1	5182.59	3.25	0	85.29	0	0.66	0	0	18.85	0	0	0	0	0	0	-4.48	-4.48
Inverter	MV3-14	368684	4907498	2	0	0	100.3	100.3	1	5201.55	3.25	0	85.32	0	0.66	0	0	18.87	0	0	0	0	0	0	-4.54	-4.54
Inverter	MV3-3	367939	4907927	2	0	0	100.3	100.3	1	5258.65	3.25	0	85.42	0	0.66	0	0	18.96	0	0	0	0	0	0	-4.73	-4.73
Inverter	MV3-6	368162	4907834	2	0	0	100.3	100.3	1	5259.13	3.25	0	85.42	0	0.66	0	0	18.96	0	0	0	0	0	0	-4.73	-4.73
Inverter	MV3-9	368512	4907703	2	0	0	100.3	100.3	1	5295.41	3.25	0	85.48	0	0.67	0	0	19.01	0	0	0	0	0	0	-4.84	-4.84
Inverter	MV2-1	365842	4906816	2	0	0	97.3	97.3	1	3787.95	3.25	0	82.57	0	0.5	0	0	16.71	0	0	0	0	0	0	-2.46	-2.46
Inverter	MV3-8	368680	4907712	2	0	0	100.3	100.3	1	5384.42	3.25	0	85.62	0	0.67	0	0	19.14	0	0	0	0	0	0	-5.12	-5.12
Inverter	MV6-3	370207	4907140	2	0	0	100.3	100.3	1	5867.65	3.25	0	86.37	0	0.7	0	0	19.81	0	0	0	0	0	0	-6.57	-6.57
Inverter	MV6-2	370085	4907339	2	0	0	100.3	100.3	1	5924.22	3.25	0	86.45	0	0.7	0	0	19.89	0	0	0	0	0	0	-6.73	-6.73
Inverter	MV4-11	369264	4908855	2	0	0	100.3	100.3	1	6666.92	3.25	0	87.48	0	0.71	0	0	20.88	0	0	0	0	0	0	-8.76	-8.76
Inverter	MV4-7	369035	4909001	2	0	0	100.3	100.3	1	6688.41	3.25	0	87.51	0	0.71	0	0	20.9	0	0	0	0	0	0	-8.81	-8.81
Inverter	MV4-10	369312	4908858	2	0	0	100.3	100.3	1	6693.04	3.25	0	87.51	0	0.71	0	0	20.91	0	0	0	0	0	0	-8.82	-8.82
Inverter	MV4-8	369256	4909001	2	0	0	100.3	100.3	1	6790.99	3.25	0	87.64	0	0.71	0	0	21.03	0	0	0	0	0	0	-9.07	-9.07
Inverter	MV4-9	369289	4909001	2	0	0	100.3	100.3	1	6806.79	3.25	0	87.66	0	0.71	0	0	21.05	0	0	0	0	0	0	-9.12	-9.12
Inverter	MV4-4	369027	4909199	2	0	0	100.3	100.3	1	6862.18	3.25	0	87.73	0	0.71	0	0	21.13	0	0	0	0	0	0	-9.26	-9.26
Inverter	MV5-5	370015	4908690	2	0	0	100.3	100.3	1	6927.79	3.25	0	87.81	0	0.71	0	0	21.21	0	0	0	0	0	0	-9.42	-9.42
Inverter	MV4-6	369243	4909192	2	0	0	100.3	100.3	1	6953.43	3.25	0	87.84	0	0.71	0	0	21.24	0	0	0	0	0	0	-9.48	-9.48
Inverter	MV4-5	369289	4909199	2	0	0	100.3	100.3	1	6981.07	3.25	0	87.88	0	0.71	0	0	21.28	0	0	0	0	0	0	-9.55	-9.55
Inverter	MV4-1	369011	4909397	2	0	0	100.3	100.3	1	7033.83	3.25	0	87.94	0	0.71	0	0	21.34	0	0	0	0	0	0	-9.68	-9.68
Inverter	MV5-2	370006	4908853	2	0	0	100.3	100.3	1	7056.44	3.25	0	87.97	0	0.71	0	0	21.37	0	0	0	0	0	0	-9.74	-9.74
Inverter	MV5-4	370324	4908707	2	0	0	100.3	100.3	1	7124.12	3.25	0	88.05	0	0.71	0	0	21.45	0	0	0	0	0	0	-9.9	-9.9
Inverter	MV4-3	369229	4909397	2	0	0	100.3	100.3	1	7129.35	3.25	0	88.06	0	0.71	0	0	21.46	0	0	0	0	0	0	-9.92	-9.92
Inverter	MV4-2	369272	4909397	2	0	0	100.3	100.3	1	7148.82	3.25	0	88.08	0	0.71	0	0	21.48	0	0	0	0	0	0	-9.96	-9.96
Inverter	MV5-3	370231	4908851	2	0	0	100.3	100.3	1	7184.41	3.25	0	88.13	0	0.7	0	0	21.53	0	0	0	0	0	0	-10.05	-10.05
Inverter	MV5-1	370020	4909142	2	0	0	100.3	100.3	1	7304.33	3.25	0	88.27	0	0.7	0	0	21.68	0	0	0	0	0	0	-10.34	-10.34
Inverter	MV6-1	370235	4907364	2	0	0	97.3	97.3	1	6046.09	3.25	0	86.63	0	0.71	0	0	20.06	0	0	0	0	0	0	-10.08	-10.08
DSTATCOM - 10 MVAR #2	DSAT2	369403	4908757	2.5	0	0	96.6	96.6	1	6651.17	3.5	0	87.46	0	3.82	0	0	4.15	0	0	0	0	0	0	1.21	1.21
DSTATCOM - 10 MVAR #1	DSAT1	369437	4908757	2.5	0	0	96.6	96.6	1	6668.55	3.5	0	87.48	0	3.82	0	0	4.16	0	0	0	0	0	0	1.18	1.18
Inverter	MV1-3	364440	4906039	2	0	0	89.1	89.1	1	3395.44	3.25	0	81.62	0	1.24	0	0	10.21	0	0	0	0	0	0	-4.01	-4.01
SubstationTransformer	W_ST	369711.17	4906112.3	2.5	0	0	92	92	1	4809.66	4.25	0	84.64	0	1.59	2.38	0.23	8.39	0	0	0	0	0	0	-5.02	-5.02
Inverter	MV2-2	365977	4906654	2	0	0	89.1	89.1	1	3622.12	3.25	0	82.18	0	1.3	0	0	10.54	0	0	0	0	0	0	-4.96	-4.96
Westbrook Inverter Enclosur	W_INV3	369508	4906164	2	0	0	89.1	89.1	1	4689.83	3.25	0	84.42	0	1.56	0	0	12.04	0	0	0	0	0	0	-8.97	-8.97
Westbrook Inverter Enclosur	W_INV2	369374	4906388	2	0	0	89.1	89.1	1	4746.6	3.25	0	84.53	0	1.58	0	0	12.12	0	0	0	0	0	0	-9.17	-9.17
Westbrook Inverter Enclosur	W_INV4	369673	4906164	2	0	0	89.1	89.1	1	4813.9	3.25	0	84.65	0	1.59	0	0	12.21	0	0	0	0	0	0	-9.4	-9.4
Inverter	MV3-22	368656	4907142	2	0	0	89.1	89.1	1	4884.11	3.25	0	84.78	0	1.61	0	0	12.31	0	0	0	0	0	0	-9.64	-9.64
Westbrook Inverter Enclosur	W_INV7	369780	4906417	2	0	0	89.1	89.1	1	5061.25	3.25	0	85.09	0	1.65	0	0	12.55	0	0	0	0	0	0	-10.23	-10.23
Westbrook Inverter Enclosur	W_INV5	369719	4906574	2	0	0	89.1	89.1	1	5123.32	3.25	0	85.19	0	1.67	0	0	12.63	0	0	0	0	0	0	-10.43	-10.43
Westbrook Inverter Enclosur	W_INV6	369875	4906578	2	0	0	89.1	89.1	1	5239.85	3.25	0	85.39	0	1.7	0	0	12.78	0	0	0	0	0	0	-10.81	-10.81
Inverter	MV3-5	368340	4907843	2	0	0	89.1	89.1	1	5342.3	3.25	0	85.55	0	1.72	0	0	12.92	0	0	0	0	0	0	-11.14	-11.14
Inverter	MV3-1	368156	4907976	2	0	0	89.1	89.1	1	5386.71	3.25	0	85.63	0	1.74	0	0	12.97	0	0	0	0	0	0	-11.28	-11.28
Inverter	MV3-4	368502	4907925	2	0	0	89.1	89.1	1	5487.69	3.25	0	85.79	0	1.76	0	0	13.11	0	0	0	0	0	0	-11.6	-11.6
Inverter	MV3-2	368671	4907928	2	0	0	89.1	89.1	1	5568.89	3.25	0	85.92	0	1.78	0	0	13.21	0	0	0	0	0	0	-11.85	-11.85
Fixed Reactor Bank 1	FRB1	369378	4908755	6	0	0	89.8	89.8	1	6636.76	5.25	0	87.44	0	-0.33	0	0	10.4	0	0	0	0	0	0	-7.73	-7.73
Fixed Reactor Bank 2	FRB2	369464	4908755	6	0	0	89.8	89.8	1	6680.72	5.25	0	87.5	0	-0.32	0	0	10.44	0	0	0	0	0	0	-7.83	-7.83
Inverter	MV4-15	369176	4908481	2	0	0	89.1	89.1	1	6298.3	3.25	0	86.98	0	1.96	0	0	14.13	0	0	0	0	0	0	-14.02	-14.02
Inverter	MV4-14	369176	4908507	2	0	0	89.1	89.1	1	6320.8	3.25	0	87.02	0	1.96	0	0	14.16	0	0	0	0	0	0	-14.08	-14.08
Inverter	MV4-13	369051	4908605	2	0	0	89.1	89.1	1	6345.17	3.25	0	87.05	0	1.97	0	0	14.19	0	0	0	0	0	0	-14.15	-14.15
Inverter	MV4-12	369043	4908803	2	0	0	89.1	89.1	1	6516.04	3.25	0	87.28	0	2.01	0	0	14.4	0	0	0	0	0	0	-14.64	-14.64
Inverter	MV5-6	369982	4908507	2	0	0	89.1	89.1	1	6759.75	3.25	0	87.6	0	2.07	0	0	14.7	0	0	0	0	0	0	-15.31	-15.31
Westbrook Inverter Enclosur	W_INV1	369409	4906578	2	0	0	86.1	86.1	1	4906.91	3.25	0	84.82	0	1.62	0	0	12.34	0	0	0	0	0	0	-12.71	-12.71
Inverter	MV6-4	370250	4906966	2	0	0	86.1	86.1	1	5778.6	3.25	0	86.24	0	1.83	0	0	13.48	0	0	0	0	0	0	-15.49	-15.49
Westbrook Inverter Transfor	W_INVTR1	369403	4906578	2	0	0	78.2	78.2	1	4902.76	3.25	0	84.81	0	-3.16	0	0	2.38	0	0	0	0	0	0	-5.79	-5.79
Westbrook Inverter Transfor	W_INVTR3	369514	4906164	2	0	0	77.3	77.3	1	4694.3	3.25	0	84.43	0	-3.11	0	0	2.31	0	0	0	0	0	0	-6.28	-6.28
Westbrook Inverter Transfor	W_INVTR2	369368	4906388	2	0	0	77.3	77.3	1	4742.36	3.25	0	84.52	0	-3.12	0	0	2.32	0	0	0	0	0	0	-6.38	-6.38
Westbrook Inverter Transfor	W_INVTR4	369679	4906164	2	0	0	77.3	77.3	1	4818.46	3.25	0	84.66	0	-3.14	0	0	2.35	0	0	0	0	0	0	-6.53	-6.53
Westbrook Inverter Transfor	W_INVTR7	369786	4906417	2	0	0	77.3	77.3	1	5065.71	3.25	0	85.09	0	-3.19	0	0	2.44	0	0	0	0	0	0	-7	-7
Westbrook Inverter Transfor	W_INVTR5	369725	4906574	2	0	0	77.3	77.3	1	5127.65	3.25	0	85.2	0	-3.2	0	0	2.46	0	0	0	0	0	0	-7.11	-7.11
Westbrook Inverter Transfor	W_INVTR6	369881	4906578	2	0	0	77.3	77.3	1	5244.27	3.25	0	85.39	0	-3.23	0	0	2.5	0	0	0	0	0	0	-7.32	-7.32
Inverter Transformer	MV1-14 T	365157	4905049	2	0	0	69.4	69.4	1	2192.68	3.25	0	77.82	0	2.24	0	0	5.15	0	0	0	0	0	0	-15.87	-15.87
Inverter Transformer	MV1-13 T	364725	4905241	2	0	0	69.4	69.4	1	2559.11	3.25	0	79.16	0	2.37	0	0	5.5	0	0	0	0	0	0	-17.68	-17.68
Inverter Transformer	MV1-10 T	365010	4905564	2	0	0	69.4	69.4	1	2724.88	3.25	0	79.71	0	2.42	0	0	5.64	0	0	0	0	0	0	-18.42	-18.42
Inverter Transformer	MV1-7 T	364919	4905782	2	0	0	69.4	69.4	1	2961.08	3.25	0	80.43	0	2.5	0	0	5.85	0	0	0	0	0	0	-19.42	-19.42
Inverter Transformer	MV2-1 T	365836	4906816	2	0	0	69.4	69.4	1	3788.24	3.25	0	82.57	0	2.73	0	0	6.52	0	0	0	0	0	0	-22.47	-22.47
Inverter Transformer	MV6-4 T	370244	4906966	2	0	0	69.4	69.4	1	5774.2	3.25	0	86.23	0	3.15	0	0	7.88	0	0	0	0	0	0	-27.91	-27.91
Inverter Transformer	MV6-1 T	370230	4907364	2	0	0	69.4	69.4	1	6042.6	3.25	0	86.62	0	3.19	0	0	8.04	0	0	0	0	0	0	-28.51	-28.51
Inverter Transformer	MV1-15 T	365309	4904994	2	0	0	56.1	56.1	1	2085.81	3.25	0	77.39	0	0.44	0	0	7.21	0	0	0	0	0	0	-28.98	-28.98
Inverter Transformer	MV1-12 T	365044	4905386	2	0	0	56.1	56.1	1	2547.15	3.25	0	79.12	0	0.64	0	0	8.08	0	0	0	0	0	0	-31.77	-31.77
Inverter Transformer	MV1-11 T	364649	4905414	2	0	0	56.1	56.1	1	2746.89	3.25	0	79.78	0	0.72	0	0	8.43	0	0	0	0	0	0	-32.87	-32.87
Inverter Transformer	MV1-8 T	364782	4905647	2	0	0	56.1	56.1	1	2891.96	3.25	0	80.22	0	0.78	0	0	8.68	0	0	0	0	0	0	-33.63	-33.63
Inverter Transformer	MV1-9 T	364555	4905646	2	0	0	56.1	56.1	1	2995.08	3.25	0	80.53	0	0.83	0	0	8.86	0	0	0	0	0	0	-34.16	-34.16
Inverter Transformer	MV1-4 T	364821	4905918	2	0	0	56.1	56.1	1	3123.99	3.25	0	80.89	0	0.88	0	0	9.08	0	0	0	0	0	0	-34.79	-34.79
Inverter Transformer	MV1-5 T	364676	4905892	2	0	0	56.1	56.1	1	3158.77	3.25	0	80.99	0	0.9	0	0	9.13	0	0	0	0	0	0	-34.96	-34.96
Inverter Transformer	MV1-6 T	364482	4905835	2	0	0	56.1	56.1	1	3195.79	3.25	0	81.09	0	0.91	0	0	9.2	0	0	0	0	0	0	-35.14	-35.14

	Inverter Transformer	MV1-2 T	364759	4906063	2	0	0	56.1	56.1	1	3281.68	3.25	0	81.32	0	0.95	0	0	9.34	0	0	0	0	0	0	-35.55	-35.55
	Inverter Transformer	MV1-1 T	364721	4906166	2	0	0	56.1	56.1	1	3391.38	3.25	0	81.61	0	0.99	0	0	9.51	0	0	0	0	0	0	-36.06	-36.06
	Inverter Transformer	MV1-3 T	364435	4906039	2	0	0	56.1	56.1	1	3397.77	3.25	0	81.62	0	1	0	0	9.52	0	0	0	0	0	0	-36.09	-36.09
	Inverter Transformer	MV2-3 T	365814	4906641	2	0	0	56.1	56.1	1	3614.62	3.25	0	82.16	0	1.09	0	0	9.87	0	0	0	0	0	0	-37.06	-37.06
	Inverter Transformer	MV2-4 T	365590	4906628	2	0	0	56.1	56.1	1	3621.19	3.25	0	82.18	0	1.09	0	0	9.88	0	0	0	0	0	0	-37.09	-37.09
	Inverter Transformer	MV2-2 T	365982	4906654	2	0	0	56.1	56.1	1	3622.07	3.25	0	82.18	0	1.09	0	0	9.88	0	0	0	0	0	0	-37.09	-37.09
	Inverter Transformer	MV3-18 T	367757	4907412	2	0	0	56.1	56.1	1	4712.79	3.25	0	84.47	0	1.52	0	0	11.47	0	0	0	0	0	0	-41.4	-41.4
	Inverter Transformer	MV3-21 T	368484	4907206	2	0	0	56.1	56.1	1	4848.36	3.25	0	84.71	0	1.57	0	0	11.65	0	0	0	0	0	0	-41.88	-41.88
	Inverter Transformer	MV3-12 T	367674	4907594	2	0	0	56.1	56.1	1	4853.44	3.25	0	84.72	0	1.57	0	0	11.66	0	0	0	0	0	0	-41.89	-41.89
	Inverter Transformer	MV3-22 T	368661	4907142	2	0	0	56.1	56.1	1	4886.82	3.25	0	84.78	0	1.58	0	0	11.7	0	0	0	0	0	0	-42.01	-42.01
	Inverter Transformer	MV3-19 T	368352	4907347	2	0	0	56.1	56.1	1	4906.08	3.25	0	84.81	0	1.59	0	0	11.73	0	0	0	0	0	0	-42.08	-42.08
	Inverter Transformer	MV3-17 T	368183	4907472	2	0	0	56.1	56.1	1	4939.98	3.25	0	84.87	0	1.6	0	0	11.77	0	0	0	0	0	0	-42.19	-42.19
	Inverter Transformer	MV3-13 T	367958	4907577	2	0	0	56.1	56.1	1	4941.95	3.25	0	84.88	0	1.6	0	0	11.78	0	0	0	0	0	0	-42.2	-42.2
	Inverter Transformer	MV3-15 T	368351	4907477	2	0	0	56.1	56.1	1	5020.34	3.25	0	85.01	0	1.63	0	0	11.88	0	0	0	0	0	0	-42.47	-42.47
	Inverter Transformer	MV3-20 T	368683	4907317	2	0	0	56.1	56.1	1	5046.47	3.25	0	85.06	0	1.64	0	0	11.92	0	0	0	0	0	0	-42.56	-42.56
	Inverter Transformer	MV3-16 T	368509	4907475	2	0	0	56.1	56.1	1	5093.96	3.25	0	85.14	0	1.66	0	0	11.98	0	0	0	0	0	0	-42.72	-42.72
	Inverter Transformer	MV3-7 T	367951	4907754	2	0	0	56.1	56.1	1	5102.54	3.25	0	85.16	0	1.66	0	0	11.99	0	0	0	0	0	0	-42.75	-42.75
	Inverter Transformer	MV3-10 T	368162	4907669	2	0	0	56.1	56.1	1	5108.92	3.25	0	85.17	0	1.66	0	0	12	0	0	0	0	0	0	-42.77	-42.77
	Inverter Transformer	MV3-11 T	368340	4907662	2	0	0	56.1	56.1	1	5179.9	3.25	0	85.29	0	1.69	0	0	12.09	0	0	0	0	0	0	-43.01	-43.01
	Inverter Transformer	MV3-14 T	368678	4907498	2	0	0	56.1	56.1	1	5198.47	3.25	0	85.32	0	1.7	0	0	12.11	0	0	0	0	0	0	-43.07	-43.07
	Inverter Transformer	MV3-6 T	368156	4907834	2	0	0	56.1	56.1	1	5256.68	3.25	0	85.41	0	1.72	0	0	12.19	0	0	0	0	0	0	-43.26	-43.26
	Inverter Transformer	MV3-3 T	367944	4907927	2	0	0	56.1	56.1	1	5260.48	3.25	0	85.42	0	1.72	0	0	12.19	0	0	0	0	0	0	-43.27	-43.27
	Inverter Transformer	MV3-9 T	368517	4907703	2	0	0	56.1	56.1	1	5297.76	3.25	0	85.48	0	1.73	0	0	12.24	0	0	0	0	0	0	-43.39	-43.39
	Inverter Transformer	MV3-5 T	368335	4907843	2	0	0	56.1	56.1	1	5340.13	3.25	0	85.55	0	1.75	0	0	12.29	0	0	0	0	0	0	-43.53	-43.53
	Inverter Transformer	MV3-1 T	368150	4907976	2	0	0	56.1	56.1	1	5384.33	3.25	0	85.62	0	1.76	0	0	12.35	0	0	0	0	0	0	-43.68	-43.68
	Inverter Transformer	MV3-8 T	368685	4907712	2	0	0	56.1	56.1	1	5386.89	3.25	0	85.63	0	1.76	0	0	12.35	0	0	0	0	0	0	-43.68	-43.68
	Inverter Transformer	MV3-4 T	368507	4907925	2	0	0	56.1	56.1	1	5489.95	3.25	0	85.79	0	1.8	0	0	12.48	0	0	0	0	0	0	-44.01	-44.01
	Inverter Transformer	MV3-2 T	368677	4907928	2	0	0	56.1	56.1	1	5571.75	3.25	0	85.92	0	1.82	0	0	12.58	0	0	0	0	0	0	-44.27	-44.27
	Inverter Transformer	MV6-3 T	370202	4907140	2	0	0	56.1	56.1	1	5864.08	3.25	0	86.36	0	1.92	0	0	12.94	0	0	0	0	0	0	-45.17	-45.17
	Inverter Transformer	MV6-2 T	370091	4907339	2	0	0	56.1	56.1	1	5928.34	3.25	0	86.46	0	1.94	0	0	13.02	0	0	0	0	0	0	-45.36	-45.36
	Inverter Transformer	MV4-15 T	369170	4908481	2	0	0	56.1	56.1	1	6295.29	3.25	0	86.98	0	2.06	0	0	13.45	0	0	0	0	0	0	-46.43	-46.43
	Inverter Transformer	MV4-14 T	369182	4908507	2	0	0	56.1	56.1	1	6323.8	3.25	0	87.02	0	2.07	0	0	13.48	0	0	0	0	0	0	-46.51	-46.51
	Inverter Transformer	MV4-13 T	369057	4908605	2	0	0	56.1	56.1	1	6348.04	3.25	0	87.05	0	2.07	0	0	13.51	0	0	0	0	0	0	-46.57	-46.57
	Inverter Transformer	MV4-12 T	369049	4908803	2	0	0	56.1	56.1	1	6518.83	3.25	0	87.28	0	2.12	0	0	13.7	0	0	0	0	0	0	-47.05	-47.05
	Inverter Transformer	MV4-11 T	369269	4908855	2	0	0	56.1	56.1	1	6669.36	3.25	0	87.48	0	2.17	0	0	13.87	0	0	0	0	0	0	-47.46	-47.46
	Inverter Transformer	MV4-10 T	369307	4908858	2	0	0	56.1	56.1	1	6690.58	3.25	0	87.51	0	2.17	0	0	13.89	0	0	0	0	0	0	-47.52	-47.52
	Inverter Transformer	MV4-7 T	369040	4909001	2	0	0	56.1	56.1	1	6690.67	3.25	0	87.51	0	2.17	0	0	13.89	0	0	0	0	0	0	-47.52	-47.52
	Inverter Transformer	MV5-6 T	369987	4908507	2	0	0	56.1	56.1	1	6762.68	3.25	0	87.6	0	2.19	0	0	13.97	0	0	0	0	0	0	-47.71	-47.71
	Inverter Transformer	MV4-8 T	369262	4909001	2	0	0	56.1	56.1	1	6793.86	3.25	0	87.64	0	2.2	0	0	14.01	0	0	0	0	0	0	-47.79	-47.79
	Inverter Transformer	MV4-9 T	369284	4909001	2	0	0	56.1	56.1	1	6804.39	3.25	0	87.66	0	2.21	0	0	14.02	0	0	0	0	0	0	-47.82	-47.82
	Inverter Transformer	MV4-4 T	369033	4909199	2	0	0	56.1	56.1	1	6864.82	3.25	0	87.73	0	2.22	0	0	14.08	0	0	0	0	0	0	-47.98	-47.98
	Inverter Transformer	MV5-5 T	370021	4908690	2	0	0	56.1	56.1	1	6931.25	3.25	0	87.82	0	2.24	0	0	14.16	0	0	0	0	0	0	-48.15	-48.15
	Inverter Transformer	MV4-6 T	369249	4909192	2	0	0	56.1	56.1	1	6956.21	3.25	0	87.85	0	2.25	0	0	14.18	0	0	0	0	0	0	-48.22	-48.22
	Inverter Transformer	MV4-5 T	369283	4909199	2	0	0	56.1	56.1	1	6978.26	3.25	0	87.87	0	2.25	0	0	14.21	0	0	0	0	0	0	-48.28	-48.28
	Inverter Transformer	MV4-1 T	369017	4909397	2	0	0	56.1	56.1	1	7036.39	3.25	0	87.95	0	2.27	0	0	14.27	0	0	0	0	0	0	-48.43	-48.43
	Inverter Transformer	MV5-2 T	370011	4908853	2	0	0	56.1	56.1	1	7059.27	3.25	0	87.98	0	2.28	0	0	14.29	0	0	0	0	0	0	-48.49	-48.49
	Inverter Transformer	MV5-4 T	370330	4908707	2	0	0	56.1	56.1	1	7127.74	3.25	0	88.06	0	2.29	0	0	14.37	0	0	0	0	0	0	-48.66	-48.66
	Inverter Transformer	MV4-3 T	369234	4909397	2	0	0	56.1	56.1	1	7131.6	3.25	0	88.06	0	2.29	0	0	14.37	0	0	0	0	0	0	-48.67	-48.67
	Inverter Transformer	MV4-2 T	369267	4909397	2	0	0	56.1	56.1	1	7146.55	3.25	0	88.08	0	2.3	0	0	14.39	0	0	0	0	0	0	-48.71	-48.71
	Inverter Transformer	MV5-3 T	370237	4908851	2	0	0	56.1	56.1	1	7187.93	3.25	0	88.13	0	2.31	0	0	14.43	0	0	0	0	0	0	-48.81	-48.81
	Inverter Transformer	MV5-1 T	370015	4909142	2	0	0	56.1	56.1	1	7301.59	3.25	0	88.27	0	2.34	0	0	14.55	0	0	0	0	0	0	-49.1	-49.1
	Line Reactor	NGR	369421	4908787.5	5	0	0	45.4	45.4	1	6686.59	5.25	0	87.5	0	3.23	1.37	0.1	2.73	0	0	0	0	0	0	-49.48	-49.48
Limit. Valu	0	0																								
Level D/N:	28.2608	28.2608																								

Receiver: Existing Noise Receptor
ID: G-23
X: 366018.2
Y: 4902893.1
Z: 4.5
Ground: 0

ISO	Description	ID	X	Y	Z	Ground	ReflOrd	LxT	LxN	L/A	Dist.	hm	Freq	Adiv	K0b	Agr	Abar	z	Aatm	Afol	Ahous	Cmet	CmetN	Dc	RL	LtotT	LtotN
	Sol_Luce Substation	S_Substation	369426	4908792	3.5	0	0	112.1	112.1	1	6812.5	5.25	0	87.67	0	1.34	2.48	0.31	10.57	0	0	0	0	0	0	10.02	10.02
	Gardiner Substation	G_Sub	366586.3	4903349.9	2.5	0	0	90.8	90.8	1	728.98	3.5	0	68.25	0	-0.4	0	0	1.95	0	0	0	0	0	0	20.97	20.97
	Inverter	MV1-15	365315	4904994	2	0	0	100.3	100.3	1	2215.46	3.25	0	77.91	0	0.19	0	0	13.9	0	0	0	0	0	0	8.31	8.31
	Inverters	G_Inv3	366583.7	4903091.4	2	0	0	87.7	87.7	1	599.27	3.25	0	66.55	0	2.4	0	0	0.9	0	0	0	0	0	0	17.81	17.81
	Inverters	G_Inv1	366526.4	4903225.8	2	0	0	87.7	87.7	1	607.42	3.25	0	66.67	0	2.4	0	0	0.91	0	0	0	0	0	0	17.68	17.68
	Inverters	G_Inv5	366638.5	4902958.1	2	0	0	87.7	87.7	1	623.7	3.25	0	66.9	0	2.4	0	0	0.93	0	0	0	0	0	0	17.43	17.43
	Inverter	MV1-12	365038	4905386	2	0	0	100.3	100.3	1	2678.68	3.25	0	79.56	0	0.3	0	0	14.79	0	0	0	0	0	0	5.66	5.66
	Inverter	MV1-11	364655	4905414	2	0	0	100.3	100.3	1	2865.88	3.25	0	80.15	0	0.34	0	0	15.13	0	0	0	0	0	0	4.7	4.7
	Inverters	G_Inv7	366694.6	4902824.7	2	0	0	87.7	87.7	1	679.85	3.25	0	67.65	0	2.4	0	0	1.01	0	0	0	0	0	0	16.6	16.6
	Inverter	MV1-8	364788	4905647	2	0	0	100.3	100.3	1	3016.18	3.25	0	80.59	0	0.37	0	0	15.4	0	0	0	0	0	0	3.96	3.96
	Inverter	MV1-9	364561	4905646	2	0	0	100.3	100.3	1	3114.79	3.25	0	80.87	0	0.38	0	0	15.57	0	0	0	0	0	0	3.49	3.49

Inverters	G_Inv2	366676.9	4903239.1	2	0	0	87.7	87.7	1	744.05	3.25	0	68.43	0	2.41	0	0	1.09	0	0	0	0	0	0	15.72	15.72
Inverters	G_Inv4	366732.8	4903105	2	0	0	87.7	87.7	1	745.36	3.25	0	68.45	0	2.41	0	0	1.1	0	0	0	0	0	0	15.7	15.7
Inverter	MV1-4	364815	4905918	2	0	0	100.3	100.3	1	3255.41	3.25	0	81.25	0	0.41	0	0	15.82	0	0	0	0	0	0	2.83	2.83
Inverters	G_Inv9	366750.9	4902691.8	2	0	0	87.7	87.7	1	759.85	3.25	0	68.61	0	2.41	0	0	1.12	0	0	0	0	0	0	15.52	15.52
Inverter	MV1-14	365163	4905049	2	0	0	97.3	97.3	1	2319.33	3.25	0	78.31	0	0.21	0	0	14.11	0	0	0	0	0	0	4.68	4.68
Inverter	MV1-5	364671	4905892	2	0	0	100.3	100.3	1	3287.61	3.25	0	81.34	0	0.41	0	0	15.87	0	0	0	0	0	0	2.69	2.69
Inverter	MV1-6	364477	4905835	2	0	0	100.3	100.3	1	3321.16	3.25	0	81.43	0	0.42	0	0	15.93	0	0	0	0	0	0	2.54	2.54
Inverters	G_Inv6	366788.5	4902972	2	0	0	87.7	87.7	1	774.33	3.25	0	68.78	0	2.42	0	0	1.14	0	0	0	0	0	0	15.33	15.33
Inverter	MV1-2	364753	4906063	2	0	0	100.3	100.3	1	3413.06	3.25	0	81.66	0	0.44	0	0	16.09	0	0	0	0	0	0	2.13	2.13
Inverter	MV1-1	364715	4906166	2	0	0	100.3	100.3	1	3522.81	3.25	0	81.94	0	0.45	0	0	16.27	0	0	0	0	0	0	1.65	1.65
Inverters	G_Inv8	366844.5	4902838.5	2	0	0	87.7	87.7	1	828.11	3.25	0	69.36	0	2.42	0	0	1.21	0	0	0	0	0	0	14.67	14.67
Inverter	MV2-3	365820	4906641	2	0	0	100.3	100.3	1	3753.14	3.25	0	82.49	0	0.49	0	0	16.65	0	0	0	0	0	0	0.68	0.68
Inverter	MV2-4	365586	4906624	2	0	0	100.3	100.3	1	3755.85	3.25	0	82.49	0	0.49	0	0	16.65	0	0	0	0	0	0	0.67	0.67
Inverter	MV1-13	364731	4905241	2	0	0	97.3	97.3	1	2677.6	3.25	0	79.55	0	0.3	0	0	14.79	0	0	0	0	0	0	2.67	2.67
Inverters	G_Inv10	366900.7	4902704.8	2	0	0	87.7	87.7	1	902.37	3.25	0	70.11	0	2.44	0	0	1.3	0	0	0	0	0	0	13.82	13.82
Inverter	MV1-10	365004	4905564	2	0	0	97.3	97.3	1	2856.98	3.25	0	80.12	0	0.33	0	0	15.12	0	0	0	0	0	0	1.74	1.74
Inverter	MV1-7	364925	4905782	2	0	0	97.3	97.3	1	3088.82	3.25	0	80.8	0	0.38	0	0	15.53	0	0	0	0	0	0	0.61	0.61
Inverter	MV3-18	367752	4907412	2	0	0	100.3	100.3	1	4840.1	3.25	0	84.7	0	0.63	0	0	18.34	0	0	0	0	0	0	-3.36	-3.36
Inverter	MV3-21	368478	4907206	2	0	0	100.3	100.3	1	4965.05	3.25	0	84.92	0	0.64	0	0	18.53	0	0	0	0	0	0	-3.77	-3.77
Inverter	MV3-12	367668	4907594	2	0	0	100.3	100.3	1	4982	3.25	0	84.95	0	0.64	0	0	18.55	0	0	0	0	0	0	-3.83	-3.83
Inverter	MV3-19	368357	4907347	2	0	0	100.3	100.3	1	5030.63	3.25	0	85.03	0	0.64	0	0	18.63	0	0	0	0	0	0	-3.99	-3.99
Inverter	MV3-17	368178	4907472	2	0	0	100.3	100.3	1	5062.71	3.25	0	85.09	0	0.65	0	0	18.67	0	0	0	0	0	0	-4.1	-4.1
Inverter	MV3-13	367963	4907577	2	0	0	100.3	100.3	1	5071.6	3.25	0	85.1	0	0.65	0	0	18.69	0	0	0	0	0	0	-4.12	-4.12
Inverter	MV3-15	368357	4907477	2	0	0	100.3	100.3	1	5146.08	3.25	0	85.23	0	0.65	0	0	18.79	0	0	0	0	0	0	-4.37	-4.37
Inverter	MV3-20	368689	4907317	2	0	0	100.3	100.3	1	5167.6	3.25	0	85.27	0	0.66	0	0	18.82	0	0	0	0	0	0	-4.44	-4.44
Inverter	MV3-16	368514	4907475	2	0	0	100.3	100.3	1	5217.55	3.25	0	85.35	0	0.66	0	0	18.9	0	0	0	0	0	0	-4.59	-4.59
Inverter	MV3-7	367945	4907754	2	0	0	100.3	100.3	1	5228.85	3.25	0	85.37	0	0.66	0	0	18.91	0	0	0	0	0	0	-4.63	-4.63
Inverter	MV3-10	368167	4907669	2	0	0	100.3	100.3	1	5237.04	3.25	0	85.38	0	0.66	0	0	18.93	0	0	0	0	0	0	-4.66	-4.66
Inverter	MV3-11	368346	4907662	2	0	0	100.3	100.3	1	5306.7	3.25	0	85.5	0	0.67	0	0	19.03	0	0	0	0	0	0	-4.88	-4.88
Inverter	MV3-14	368684	4907498	2	0	0	100.3	100.3	1	5320.86	3.25	0	85.52	0	0.67	0	0	19.05	0	0	0	0	0	0	-4.92	-4.92
Inverter	MV3-6	368162	4907834	2	0	0	100.3	100.3	1	5385.94	3.25	0	85.63	0	0.67	0	0	19.14	0	0	0	0	0	0	-5.12	-5.12
Inverter	MV3-3	367939	4907927	2	0	0	100.3	100.3	1	5387.92	3.25	0	85.63	0	0.67	0	0	19.14	0	0	0	0	0	0	-5.13	-5.13
Inverter	MV3-9	368512	4907703	2	0	0	100.3	100.3	1	5417.95	3.25	0	85.68	0	0.68	0	0	19.18	0	0	0	0	0	0	-5.22	-5.22
Inverter	MV3-8	368680	4907712	2	0	0	100.3	100.3	1	5505.18	3.25	0	85.82	0	0.68	0	0	19.31	0	0	0	0	0	0	-5.49	-5.49
Inverter	MV2-1	365842	4906816	2	0	0	97.3	97.3	1	3926.86	3.25	0	82.88	0	0.52	0	0	16.93	0	0	0	0	0	0	-3.02	-3.02
Inverter	MV6-3	370207	4907140	2	0	0	100.3	100.3	1	5965.08	3.25	0	86.51	0	0.7	0	0	19.95	0	0	0	0	0	0	-6.85	-6.85
Inverter	MV6-2	370085	4907339	2	0	0	100.3	100.3	1	6025.35	3.25	0	86.6	0	0.71	0	0	20.03	0	0	0	0	0	0	-7.02	-7.02
Inverter	MV4-11	369264	4908855	2	0	0	100.3	100.3	1	6788.19	3.25	0	87.64	0	0.71	0	0	21.03	0	0	0	0	0	0	-9.07	-9.07
Inverter	MV4-7	369035	4909001	2	0	0	100.3	100.3	1	6812.31	3.25	0	87.67	0	0.71	0	0	21.06	0	0	0	0	0	0	-9.13	-9.13
Inverter	MV4-10	369312	4908858	2	0	0	100.3	100.3	1	6813.89	3.25	0	87.67	0	0.71	0	0	21.06	0	0	0	0	0	0	-9.13	-9.13
Inverter	MV4-8	369256	4909001	2	0	0	100.3	100.3	1	6913.02	3.25	0	87.79	0	0.71	0	0	21.19	0	0	0	0	0	0	-9.38	-9.38
Inverter	MV4-9	369289	4909001	2	0	0	100.3	100.3	1	6928.53	3.25	0	87.81	0	0.71	0	0	21.21	0	0	0	0	0	0	-9.42	-9.42
Inverter	MV4-4	369027	4909199	2	0	0	100.3	100.3	1	6986.93	3.25	0	87.89	0	0.71	0	0	21.28	0	0	0	0	0	0	-9.57	-9.57
Inverter	MV5-5	370015	4908690	2	0	0	100.3	100.3	1	7041.2	3.25	0	87.95	0	0.71	0	0	21.35	0	0	0	0	0	0	-9.7	-9.7
Inverter	MV4-6	369243	4909192	2	0	0	100.3	100.3	1	7076.4	3.25	0	88	0	0.71	0	0	21.39	0	0	0	0	0	0	-9.79	-9.79
Inverter	MV4-5	369289	4909199	2	0	0	100.3	100.3	1	7103.7	3.25	0	88.03	0	0.71	0	0	21.43	0	0	0	0	0	0	-9.85	-9.85
Inverter	MV4-1	369011	4909397	2	0	0	100.3	100.3	1	7159.44	3.25	0	88.1	0	0.7	0	0	21.5	0	0	0	0	0	0	-9.99	-9.99
Inverter	MV5-2	370006	4908853	2	0	0	100.3	100.3	1	7170.98	3.25	0	88.11	0	0.7	0	0	21.51	0	0	0	0	0	0	-10.02	-10.02
Inverter	MV5-4	370324	4908707	2	0	0	100.3	100.3	1	7234.73	3.25	0	88.19	0	0.7	0	0	21.59	0	0	0	0	0	0	-10.17	-10.17
Inverter	MV4-3	369229	4909397	2	0	0	100.3	100.3	1	7253.27	3.25	0	88.21	0	0.7	0	0	21.61	0	0	0	0	0	0	-10.21	-10.21
Inverter	MV4-2	369272	4909397	2	0	0	100.3	100.3	1	7272.41	3.25	0	88.23	0	0.7	0	0	21.64	0	0	0	0	0	0	-10.26	-10.26
Inverter	MV5-3	370231	4908851	2	0	0	100.3	100.3	1	7296.87	3.25	0	88.26	0	0.7	0	0	21.67	0	0	0	0	0	0	-10.32	-10.32
Inverter	MV5-1	370020	4909142	2	0	0	100.3	100.3	1	7420.46	3.25	0	88.41	0	0.69	0	0	21.82	0	0	0	0	0	0	-10.61	-10.61
Inverter	MV6-1	370235	4907364	2	0	0	97.3	97.3	1	6145.76	3.25	0	86.77	0	0.71	0	0	20.19	0	0	0	0	0	0	-10.36	-10.36
DSTATCOM - 10 MVAR #2	DSAT2	369403	4908757	2.5	0	0	96.6	96.6	1	6770.69	3.5	0	87.61	0	3.82	0	0	4.2	0	0	0	0	0	0	0.99	0.99
DSTATCOM - 10 MVAR #1	DSAT1	369437	4908757	2.5	0	0	96.6	96.6	1	6787.75	3.5	0	87.63	0	3.83	0	0	4.21	0	0	0	0	0	0	0.96	0.96
SubstationTransformer	W_ST	369711.17	4906112.3	2.5	0	0	92	92	1	4899.09	4.25	0	84.8	0	1.61	2.35	0.22	8.5	0	0	0	0	0	0	-5.29	-5.29
Inverter	MV1-3	364440	4906039	2	0	0	89.1	89.1	1	3519.58	3.25	0	81.93	0	1.27	0	0	10.39	0	0	0	0	0	0	-4.54	-4.54
Inverter	MV2-2	365977	4906654	2	0	0	89.1	89.1	1	3761.13	3.25	0	82.51	0	1.33	0	0	10.74	0	0	0	0	0	0	-5.52	-5.52
Westbrook Inverter Enclosur	W_INV3	369508	4906164	2	0	0	89.1	89.1	1	4783.04	3.25	0	84.59	0	1.59	0	0	12.17	0	0	0	0	0	0	-9.29	-9.29
Westbrook Inverter Enclosur	W_INV2	369374	4906388	2	0	0	89.1	89.1	1	4845.18	3.25	0	84.71	0	1.6	0	0	12.26	0	0	0	0	0	0	-9.51	-9.51
Westbrook Inverter Enclosur	W_INV4	369673	4906164	2	0	0	89.1	89.1	1	4904.73	3.25	0	84.81	0	1.62	0	0	12.34	0	0	0	0	0	0	-9.71	-9.71
Inverter	MV3-22	368656	4907142	2	0	0	89.1	89.1	1	5001.11	3.25	0	84.98	0	1.64	0	0	12.47	0	0	0	0	0	0	-10.03	-10.03
Westbrook Inverter Enclosur	W_INV7	369780	4906417	2	0	0	89.1	89.1	1	5154.51	3.25	0	85.24	0	1.68	0	0	12.67	0	0	0	0	0	0	-10.53	-10.53
Westbrook Inverter Enclosur	W_INV5	369719	4906574	2	0	0	89.1	89.1	1	5219.67	3.25	0	85.35	0	1.69	0	0	12.76	0	0	0	0	0	0	-10.74	-10.74
Westbrook Inverter Enclosur	W_INV6	369875	4906578	2	0	0	89.1	89.1	1	5334.17	3.25	0	85.54	0	1.72	0	0	12.91	0	0	0	0	0	0	-11.11	-11.11
Inverter	MV3-5	368340	4907843	2	0	0	89.1	89.1	1	5467.38	3.25	0	85.76	0	1.76	0	0	13.08	0	0	0	0	0	0	-11.53	-11.53
Inverter	MV3-1	368156	4907976	2	0	0	89.1	89.1	1	5514.17	3.25	0	85.83	0	1.77	0	0	13.14	0	0	0	0	0	0	-11.68	-11.68
Inverter	MV3-4	368502	4907925	2	0	0	89.1	89.1	1	5611.53	3.25	0	85.98	0	1.79	0	0	13.27	0	0	0	0	0	0	-11.98	-11.98
Inverter	MV3-2	368671	4907928	2	0	0	89.1	89.1	1	5691.01	3.25	0	86.1	0	1.81	0	0	13.37	0	0	0	0	0	0	-12.23	-12.23
Fixed Reactor Bank 1	FRB1	369378	4908755	6	0	0	89.8	89.8	1	6756.49	5.25	0	87.59	0	-0.31	0	0	10.51	0	0	0	0	0	0	-8.02	-8.02
Fixed Reactor Bank 2	FRB2	369464	4908755	6	0	0	89.8	89.8	1	6799.66	5.25	0	87.65	0	-0.31	0	0	10.56	0	0	0	0	0	0	-8.12	-8.12
Inverter	MV4-15	369176	4908481	2	0	0	89.1	89.1	1	6418.44	3.25	0	87.15	0	1.99	0	0	14.28	0	0	0	0	0	0	-14.36	-14.36
Inverter	MV4-14	369176	4908507	2	0	0	89.1	89.1	1	6441.09	3.25	0	87.18	0	1.99	0	0	14.31	0	0	0	0	0	0	-14.43	-14.43

Inverter	MV4-13	369051	4908605	2	0	0	89.1	89.1	1	6467.12	3.25	0	87.21	0	2	0	0	14.34	0	0	0	0	0	0	-14.5	-14.5
Inverter	MV4-12	369043	4908803	2	0	0	89.1	89.1	1	6639	3.25	0	87.44	0	2.04	0	0	14.55	0	0	0	0	0	0	-14.98	-14.98
Inverter	MV5-6	369982	4908507	2	0	0	89.1	89.1	1	6872.23	3.25	0	87.74	0	2.1	0	0	14.83	0	0	0	0	0	0	-15.62	-15.62
Westbrook Inverter Enclosur	W_INV1	369409	4906578	2	0	0	86.1	86.1	1	5007.6	3.25	0	84.99	0	1.64	0	0	12.47	0	0	0	0	0	0	-13.05	-13.05
Inverter	MV6-4	370250	4906966	2	0	0	86.1	86.1	1	5873.39	3.25	0	86.38	0	1.85	0	0	13.6	0	0	0	0	0	0	-15.78	-15.78
Westbrook Inverter Transfor	W_INVTR1	369403	4906578	2	0	0	78.2	78.2	1	5003.54	3.25	0	84.99	0	-3.18	0	0	2.41	0	0	0	0	0	0	-5.98	-5.98
Westbrook Inverter Transfor	W_INVTR3	369514	4906164	2	0	0	77.3	77.3	1	4787.42	3.25	0	84.6	0	-3.13	0	0	2.34	0	0	0	0	0	0	-6.47	-6.47
Westbrook Inverter Transfor	W_INVTR2	369368	4906388	2	0	0	77.3	77.3	1	4841.02	3.25	0	84.7	0	-3.15	0	0	2.36	0	0	0	0	0	0	-6.57	-6.57
Westbrook Inverter Transfor	W_INVTR4	369679	4906164	2	0	0	77.3	77.3	1	4909.2	3.25	0	84.82	0	-3.16	0	0	2.38	0	0	0	0	0	0	-6.7	-6.7
Westbrook Inverter Transfor	W_INVTR7	369786	4906417	2	0	0	77.3	77.3	1	5158.89	3.25	0	85.25	0	-3.21	0	0	2.47	0	0	0	0	0	0	-7.17	-7.17
Westbrook Inverter Transfor	W_INVTR5	369725	4906574	2	0	0	77.3	77.3	1	5223.93	3.25	0	85.36	0	-3.22	0	0	2.49	0	0	0	0	0	0	-7.29	-7.29
Westbrook Inverter Transfor	W_INVTR6	369881	4906578	2	0	0	77.3	77.3	1	5338.51	3.25	0	85.55	0	-3.24	0	0	2.53	0	0	0	0	0	0	-7.49	-7.49
Inverter Transformer	MV1-14 T	365157	4905049	2	0	0	69.4	69.4	1	2321.55	3.25	0	78.32	0	2.29	0	0	5.28	0	0	0	0	0	0	-16.53	-16.53
Inverter Transformer	MV1-13 T	364725	4905241	2	0	0	69.4	69.4	1	2680.49	3.25	0	79.56	0	2.41	0	0	5.61	0	0	0	0	0	0	-18.23	-18.23
Inverter Transformer	MV1-10 T	365010	4905564	2	0	0	69.4	69.4	1	2854.85	3.25	0	80.11	0	2.46	0	0	5.76	0	0	0	0	0	0	-18.98	-18.98
Inverter Transformer	MV1-7 T	364919	4905782	2	0	0	69.4	69.4	1	3090.95	3.25	0	80.8	0	2.53	0	0	5.96	0	0	0	0	0	0	-19.95	-19.95
Inverter Transformer	MV2-1 T	365836	4906816	2	0	0	69.4	69.4	1	3927.13	3.25	0	82.88	0	2.77	0	0	6.62	0	0	0	0	0	0	-22.92	-22.92
Inverter Transformer	MV6-4 T	370244	4906966	2	0	0	69.4	69.4	1	5869.06	3.25	0	86.37	0	3.17	0	0	7.94	0	0	0	0	0	0	-28.13	-28.13
Inverter Transformer	MV6-1 T	370230	4907364	2	0	0	69.4	69.4	1	6142.33	3.25	0	86.77	0	3.21	0	0	8.1	0	0	0	0	0	0	-28.73	-28.73
Inverter Transformer	MV1-15 T	365309	4904994	2	0	0	56.1	56.1	1	2217.37	3.25	0	77.92	0	0.5	0	0	7.46	0	0	0	0	0	0	-29.82	-29.82
Inverter Transformer	MV1-12 T	365044	4905386	2	0	0	56.1	56.1	1	2676.49	3.25	0	79.55	0	0.69	0	0	8.31	0	0	0	0	0	0	-32.49	-32.49
Inverter Transformer	MV1-11 T	364649	4905414	2	0	0	56.1	56.1	1	2868.74	3.25	0	80.15	0	0.77	0	0	8.64	0	0	0	0	0	0	-33.51	-33.51
Inverter Transformer	MV1-8 T	364782	4905647	2	0	0	56.1	56.1	1	3018.64	3.25	0	80.6	0	0.84	0	0	8.9	0	0	0	0	0	0	-34.28	-34.28
Inverter Transformer	MV1-9 T	364555	4905646	2	0	0	56.1	56.1	1	3117.6	3.25	0	80.88	0	0.88	0	0	9.07	0	0	0	0	0	0	-34.76	-34.76
Inverter Transformer	MV1-4 T	364821	4905918	2	0	0	56.1	56.1	1	3253.2	3.25	0	81.25	0	0.94	0	0	9.29	0	0	0	0	0	0	-35.41	-35.41
Inverter Transformer	MV1-5 T	364676	4905892	2	0	0	56.1	56.1	1	3285.56	3.25	0	81.33	0	0.95	0	0	9.34	0	0	0	0	0	0	-35.57	-35.57
Inverter Transformer	MV1-6 T	364482	4905835	2	0	0	56.1	56.1	1	3318.84	3.25	0	81.42	0	0.96	0	0	9.4	0	0	0	0	0	0	-35.72	-35.72
Inverter Transformer	MV1-2 T	364759	4906063	2	0	0	56.1	56.1	1	3410.84	3.25	0	81.66	0	1	0	0	9.55	0	0	0	0	0	0	-36.15	-36.15
Inverter Transformer	MV1-1 T	364721	4906166	2	0	0	56.1	56.1	1	3520.6	3.25	0	81.93	0	1.05	0	0	9.72	0	0	0	0	0	0	-36.64	-36.64
Inverter Transformer	MV1-3 T	364435	4906039	2	0	0	56.1	56.1	1	3521.82	3.25	0	81.94	0	1.05	0	0	9.72	0	0	0	0	0	0	-36.65	-36.65
Inverter Transformer	MV2-3 T	365814	4906641	2	0	0	56.1	56.1	1	3753.46	3.25	0	82.49	0	1.14	0	0	10.08	0	0	0	0	0	0	-37.66	-37.66
Inverter Transformer	MV2-4 T	365590	4906628	2	0	0	56.1	56.1	1	3759.37	3.25	0	82.5	0	1.15	0	0	10.09	0	0	0	0	0	0	-37.68	-37.68
Inverter Transformer	MV2-2 T	365982	4906654	2	0	0	56.1	56.1	1	3761.08	3.25	0	82.51	0	1.15	0	0	10.09	0	0	0	0	0	0	-37.69	-37.69
Inverter Transformer	MV3-18 T	367757	4907412	2	0	0	56.1	56.1	1	4841.89	3.25	0	84.7	0	1.57	0	0	11.64	0	0	0	0	0	0	-41.85	-41.85
Inverter Transformer	MV3-21 T	368484	4907206	2	0	0	56.1	56.1	1	4968.03	3.25	0	84.92	0	1.61	0	0	11.81	0	0	0	0	0	0	-42.29	-42.29
Inverter Transformer	MV3-12 T	367674	4907594	2	0	0	56.1	56.1	1	4983.99	3.25	0	84.95	0	1.62	0	0	11.83	0	0	0	0	0	0	-42.35	-42.35
Inverter Transformer	MV3-22 T	368661	4907142	2	0	0	56.1	56.1	1	5003.75	3.25	0	84.99	0	1.63	0	0	11.86	0	0	0	0	0	0	-42.41	-42.41
Inverter Transformer	MV3-19 T	368352	4907347	2	0	0	56.1	56.1	1	5028.31	3.25	0	85.03	0	1.64	0	0	11.89	0	0	0	0	0	0	-42.5	-42.5
Inverter Transformer	MV3-17 T	368183	4907472	2	0	0	56.1	56.1	1	5064.85	3.25	0	85.09	0	1.65	0	0	11.94	0	0	0	0	0	0	-42.62	-42.62
Inverter Transformer	MV3-13 T	367958	4907577	2	0	0	56.1	56.1	1	5069.69	3.25	0	85.1	0	1.65	0	0	11.95	0	0	0	0	0	0	-42.64	-42.64
Inverter Transformer	MV3-15 T	368351	4907477	2	0	0	56.1	56.1	1	5143.36	3.25	0	85.22	0	1.68	0	0	12.04	0	0	0	0	0	0	-42.88	-42.88
Inverter Transformer	MV3-20 T	368683	4907317	2	0	0	56.1	56.1	1	5164.5	3.25	0	85.26	0	1.68	0	0	12.07	0	0	0	0	0	0	-42.96	-42.96
Inverter Transformer	MV3-16 T	368509	4907475	2	0	0	56.1	56.1	1	5215.16	3.25	0	85.35	0	1.7	0	0	12.13	0	0	0	0	0	0	-43.12	-43.12
Inverter Transformer	MV3-7 T	367951	4907754	2	0	0	56.1	56.1	1	5231.07	3.25	0	85.37	0	1.71	0	0	12.15	0	0	0	0	0	0	-43.18	-43.18
Inverter Transformer	MV3-10 T	368162	4907669	2	0	0	56.1	56.1	1	5234.99	3.25	0	85.38	0	1.71	0	0	12.16	0	0	0	0	0	0	-43.19	-43.19
Inverter Transformer	MV3-11 T	368340	4907662	2	0	0	56.1	56.1	1	5304.07	3.25	0	85.49	0	1.73	0	0	12.25	0	0	0	0	0	0	-43.42	-43.42
Inverter Transformer	MV3-14 T	368678	4907498	2	0	0	56.1	56.1	1	5317.86	3.25	0	85.51	0	1.74	0	0	12.27	0	0	0	0	0	0	-43.46	-43.46
Inverter Transformer	MV3-6 T	368156	4907834	2	0	0	56.1	56.1	1	5383.56	3.25	0	85.62	0	1.76	0	0	12.35	0	0	0	0	0	0	-43.67	-43.67
Inverter Transformer	MV3-3 T	367944	4907927	2	0	0	56.1	56.1	1	5389.7	3.25	0	85.63	0	1.76	0	0	12.36	0	0	0	0	0	0	-43.69	-43.69
Inverter Transformer	MV3-9 T	368517	4907703	2	0	0	56.1	56.1	1	5420.25	3.25	0	85.68	0	1.77	0	0	12.4	0	0	0	0	0	0	-43.79	-43.79
Inverter Transformer	MV3-5 T	368335	4907843	2	0	0	56.1	56.1	1	5465.26	3.25	0	85.75	0	1.79	0	0	12.45	0	0	0	0	0	0	-43.93	-43.93
Inverter Transformer	MV3-8 T	368685	4907712	2	0	0	56.1	56.1	1	5507.6	3.25	0	85.82	0	1.8	0	0	12.5	0	0	0	0	0	0	-44.07	-44.07
Inverter Transformer	MV3-1 T	368150	4907976	2	0	0	56.1	56.1	1	5511.85	3.25	0	85.83	0	1.8	0	0	12.51	0	0	0	0	0	0	-44.08	-44.08
Inverter Transformer	MV3-4 T	368507	4907925	2	0	0	56.1	56.1	1	5613.75	3.25	0	85.99	0	1.84	0	0	12.64	0	0	0	0	0	0	-44.4	-44.4
Inverter Transformer	MV3-2 T	368677	4907928	2	0	0	56.1	56.1	1	5693.81	3.25	0	86.11	0	1.87	0	0	12.73	0	0	0	0	0	0	-44.65	-44.65
Inverter Transformer	MV6-3 T	370202	4907140	2	0	0	56.1	56.1	1	5961.57	3.25	0	86.51	0	1.95	0	0	13.06	0	0	0	0	0	0	-45.46	-45.46
Inverter Transformer	MV6-2 T	370091	4907339	2	0	0	56.1	56.1	1	6029.41	3.25	0	86.61	0	1.97	0	0	13.14	0	0	0	0	0	0	-45.66	-45.66
Inverter Transformer	MV4-15 T	369170	4908481	2	0	0	56.1	56.1	1	6415.49	3.25	0	87.14	0	2.09	0	0	13.58	0	0	0	0	0	0	-46.76	-46.76
Inverter Transformer	MV4-14 T	369182	4908507	2	0	0	56.1	56.1	1	6444.03	3.25	0	87.18	0	2.1	0	0	13.62	0	0	0	0	0	0	-46.84	-46.84
Inverter Transformer	MV4-13 T	369057	4908605	2	0	0	56.1	56.1	1	6469.94	3.25	0	87.22	0	2.11	0	0	13.65	0	0	0	0	0	0	-46.91	-46.91
Inverter Transformer	MV4-12 T	369049	4908803	2	0	0	56.1	56.1	1	6641.74	3.25	0	87.45	0	2.16	0	0	13.84	0	0	0	0	0	0	-47.38	-47.38
Inverter Transformer	MV4-11 T	369269	4908855	2	0	0	56.1	56.1	1	6790.58	3.25	0	87.64	0	2.2	0	0	14	0	0	0	0	0	0	-47.78	-47.78
Inverter Transformer	MV4-10 T	369307	4908858	2	0	0	56.1	56.1	1	6811.48	3.25	0	87.66	0	2.21	0	0	14.03	0	0	0	0	0	0	-47.84	-47.84
Inverter Transformer	MV4-7 T	369040	4909001	2	0	0	56.1	56.1	1	6814.52	3.25	0	87.67	0	2.21	0	0	14.03	0	0	0	0	0	0	-47.85	-47.85
Inverter Transformer	MV5-6 T	369987	4908507	2	0	0	56.1	56.1	1	6875.12	3.25	0	87.75	0	2.23	0	0	14.09	0	0	0	0	0	0	-48.01	-48.01
Inverter Transformer	MV4-8 T	369262	4909001	2	0	0	56.1	56.1	1	6915.83	3.25	0	87.8	0	2.24	0	0	14.14	0	0	0	0	0	0	-48.11	-48.11
Inverter Transformer	MV4-9 T	369284	4909001	2	0	0	56.1	56.1	1	6926.17	3.25	0	87.81	0	2.24	0	0	14.15	0	0	0	0	0	0	-48.14	-48.14
Inverter Transformer	MV4-4 T	369033	4909199	2	0	0	56.1	56.1	1	6989.52	3.25	0	87.89	0	2.26	0	0	14.22	0	0	0	0	0	0	-48.31	-48.31
Inverter Transformer	MV5-5 T	370021	4908690	2	0	0	56.1	56.1	1	7044.61	3.25	0	87.96	0	2.27	0	0	14.28	0	0	0	0	0	0	-48.45	-48.45
Inverter Transformer	MV4-6 T	369249	4909192	2	0	0	56.1	56.1	1	7079.14	3.25	0	88	0	2.28	0	0	14.31	0	0	0	0	0	0	-48.54	-48.54
Inverter Transformer	MV4-5 T	369283	4909199	2	0	0	56.1	56.1	1	7100.94	3.25	0	88.03	0	2.29	0	0	14.34	0	0	0	0	0	0	-48.59	-48.59
Inverter Transformer	MV4-1 T	369017	4909397	2	0	0	56.1	56.1	1	7161.95	3.25	0	88.1	0	2.3	0	0	14.4	0	0	0	0	0	0	-48.75	-48.75
Inverter Transformer	MV5-2 T	370011	4908853	2	0	0	56.1	56.1	1	7173.76	3.25	0	88.11	0	2.31	0	0	14.41	0	0	0	0	0	0	-48.78	-48.78
Inverter Transformer	MV5-4 T	370330	4908707	2	0	0	56.1	56.1	1	7238.3	3.25	0	88.19	0	2.32	0	0	14.48	0	0	0	0	0	0	-48.94	-48.94

	Inverter Transformer	MV4-3 T	369234	4909397	2	0	0	56.1	56.1	1	7255.49	3.25	0	88.21	0	2.33	0	0	14.5	0	0	0	0	0	0	-48.98	-48.98
	Inverter Transformer	MV4-2 T	369267	4909397	2	0	0	56.1	56.1	1	7270.17	3.25	0	88.23	0	2.33	0	0	14.52	0	0	0	0	0	0	-49.02	-49.02
	Inverter Transformer	MV5-3 T	370237	4908851	2	0	0	56.1	56.1	1	7300.33	3.25	0	88.27	0	2.34	0	0	14.55	0	0	0	0	0	0	-49.1	-49.1
	Inverter Transformer	MV5-1 T	370015	4909142	2	0	0	56.1	56.1	1	7417.76	3.25	0	88.41	0	2.37	0	0	14.67	0	0	0	0	0	0	-49.39	-49.39
	Line Reactor	NGR	369421	4908787.5	5	0	0	45.4	45.4	1	6806.1	5.25	0	87.66	0	3.22	1.37	0.1	2.78	0	0	0	0	0	0	-49.68	-49.68
Limit. Valu	0	0																								
Level D/N:	27.815	27.815																								

Receiver: Existing Noise Receptor
ID: G-24
X: 365998.2
Y: 4903069.1
Z: 4.5
Ground: 0

ISO	Description	ID	X	Y	Z	Ground	ReflOrd	LxT	LxN	L/A	Dist.	hm	Freq	Adiv	K0b	Agr	Abar	z	Aatm	Afol	Ahous	Cmet	CmetN	Dc	RL	LtotT	LtotN
	Sol_Luce Substation	S_Substation	369426	4908792	3.5	0	0	112.1	112.1	1	6670.94	5.25	0	87.48	0	1.31	2.51	0.3	10.43	0	0	0	0	0	0	10.34	10.34
	Gardiner Substation	G_Sub	366586.3	4903349.9	2.5	0	0	90.8	90.8	1	651.7	3.5	0	67.28	0	-0.4	0	0	1.78	0	0	0	0	0	0	22.12	22.12
	Inverter	MV1-15	365315	4904994	2	0	0	100.3	100.3	1	2042.55	3.25	0	77.2	0	0.14	0	0	13.55	0	0	0	0	0	0	9.42	9.42
	Inverters	G_Inv1	366526.4	4903225.8	2	0	0	87.7	87.7	1	550.96	3.25	0	65.82	0	2.4	0	0	0.83	0	0	0	0	0	0	18.61	18.61
	Inverter	MV1-12	365038	4905386	2	0	0	100.3	100.3	1	2507.99	3.25	0	78.99	0	0.26	0	0	14.47	0	0	0	0	0	0	6.59	6.59
	Inverters	G_Inv3	366583.7	4903091.4	2	0	0	87.7	87.7	1	585.93	3.25	0	66.36	0	2.4	0	0	0.88	0	0	0	0	0	0	18.02	18.02
	Inverter	MV1-11	364655	4905414	2	0	0	100.3	100.3	1	2702.36	3.25	0	79.63	0	0.3	0	0	14.84	0	0	0	0	0	0	5.54	5.54
	Inverters	G_Inv5	366638.5	4902958.1	2	0	0	87.7	87.7	1	649.85	3.25	0	67.26	0	2.4	0	0	0.97	0	0	0	0	0	0	17.03	17.03
	Inverter	MV1-8	364788	4905647	2	0	0	100.3	100.3	1	2847.83	3.25	0	80.09	0	0.33	0	0	15.1	0	0	0	0	0	0	4.79	4.79
	Inverter	MV1-9	364561	4905646	2	0	0	100.3	100.3	1	2950.59	3.25	0	80.4	0	0.35	0	0	15.28	0	0	0	0	0	0	4.28	4.28
	Inverters	G_Inv2	366676.9	4903239.1	2	0	0	87.7	87.7	1	699.67	3.25	0	67.9	0	2.41	0	0	1.04	0	0	0	0	0	0	16.32	16.32
	Inverter	MV1-14	365163	4905049	2	0	0	97.3	97.3	1	2148.85	3.25	0	77.64	0	0.17	0	0	13.77	0	0	0	0	0	0	5.73	5.73
	Inverter	MV1-4	364815	4905918	2	0	0	100.3	100.3	1	3084.83	3.25	0	80.78	0	0.38	0	0	15.52	0	0	0	0	0	0	3.63	3.63
	Inverter	MV1-5	364671	4905892	2	0	0	100.3	100.3	1	3119.33	3.25	0	80.88	0	0.38	0	0	15.58	0	0	0	0	0	0	3.46	3.46
	Inverters	G_Inv4	366732.8	4903105	2	0	0	87.7	87.7	1	735.48	3.25	0	68.33	0	2.41	0	0	1.08	0	0	0	0	0	0	15.83	15.83
	Inverter	MV1-6	364477	4905835	2	0	0	100.3	100.3	1	3156.62	3.25	0	80.98	0	0.39	0	0	15.65	0	0	0	0	0	0	3.29	3.29
	Inverters	G_Inv7	366694.6	4902824.7	2	0	0	87.7	87.7	1	738.05	3.25	0	68.36	0	2.41	0	0	1.09	0	0	0	0	0	0	15.8	15.8
	Inverter	MV1-2	364753	4906063	2	0	0	100.3	100.3	1	3242.52	3.25	0	81.22	0	0.41	0	0	15.79	0	0	0	0	0	0	2.89	2.89
	Inverter	MV1-1	364715	4906166	2	0	0	100.3	100.3	1	3352.22	3.25	0	81.51	0	0.43	0	0	15.98	0	0	0	0	0	0	2.4	2.4
	Inverters	G_Inv6	366788.5	4902972	2	0	0	87.7	87.7	1	796.25	3.25	0	69.02	0	2.42	0	0	1.16	0	0	0	0	0	0	15.06	15.06
	Inverter	MV1-13	364731	4905241	2	0	0	97.3	97.3	1	2514.55	3.25	0	79.01	0	0.26	0	0	14.49	0	0	0	0	0	0	3.56	3.56
	Inverter	MV2-3	365820	4906641	2	0	0	100.3	100.3	1	3576.34	3.25	0	82.07	0	0.46	0	0	16.36	0	0	0	0	0	0	1.42	1.42
	Inverter	MV2-4	365586	4906624	2	0	0	100.3	100.3	1	3578.72	3.25	0	82.07	0	0.46	0	0	16.36	0	0	0	0	0	0	1.41	1.41
	Inverters	G_Inv9	366750.9	4902691.8	2	0	0	87.7	87.7	1	841.97	3.25	0	69.51	0	2.43	0	0	1.22	0	0	0	0	0	0	14.5	14.5
	Inverters	G_Inv8	366844.5	4902838.5	2	0	0	87.7	87.7	1	877.16	3.25	0	69.86	0	2.43	0	0	1.27	0	0	0	0	0	0	14.1	14.1
	Inverter	MV1-10	365004	4905564	2	0	0	97.3	97.3	1	2685.7	3.25	0	79.58	0	0.3	0	0	14.81	0	0	0	0	0	0	2.63	2.63
	Inverter	MV1-7	364925	4905782	2	0	0	97.3	97.3	1	2917.46	3.25	0	80.3	0	0.35	0	0	15.23	0	0	0	0	0	0	1.44	1.44
	Inverters	G_Inv10	366900.7	4902704.8	2	0	0	87.7	87.7	1	973.26	3.25	0	70.76	0	2.45	0	0	1.39	0	0	0	0	0	0	13.06	13.06
	Inverter	MV3-18	367752	4907412	2	0	0	100.3	100.3	1	4683.65	3.25	0	84.41	0	0.61	0	0	18.11	0	0	0	0	0	0	-2.82	-2.82
	Inverter	MV3-12	367668	4907594	2	0	0	100.3	100.3	1	4823.17	3.25	0	84.67	0	0.63	0	0	18.32	0	0	0	0	0	0	-3.3	-3.3
	Inverter	MV3-21	368478	4907206	2	0	0	100.3	100.3	1	4823.21	3.25	0	84.67	0	0.63	0	0	18.32	0	0	0	0	0	0	-3.3	-3.3
	Inverter	MV3-19	368357	4907347	2	0	0	100.3	100.3	1	4885.12	3.25	0	84.78	0	0.63	0	0	18.41	0	0	0	0	0	0	-3.51	-3.51
	Inverter	MV3-17	368178	4907472	2	0	0	100.3	100.3	1	4912.95	3.25	0	84.83	0	0.63	0	0	18.45	0	0	0	0	0	0	-3.6	-3.6
	Inverter	MV3-13	367963	4907577	2	0	0	100.3	100.3	1	4917.48	3.25	0	84.83	0	0.63	0	0	18.46	0	0	0	0	0	0	-3.62	-3.62
	Inverter	MV3-15	368357	4907477	2	0	0	100.3	100.3	1	4999.35	3.25	0	84.98	0	0.64	0	0	18.58	0	0	0	0	0	0	-3.89	-3.89
	Inverter	MV3-20	368689	4907317	2	0	0	100.3	100.3	1	5028.43	3.25	0	85.03	0	0.64	0	0	18.62	0	0	0	0	0	0	-3.98	-3.98
	Inverter	MV3-7	367945	4907754	2	0	0	100.3	100.3	1	5073.3	3.25	0	85.11	0	0.65	0	0	18.69	0	0	0	0	0	0	-4.13	-4.13
	Inverter	MV3-16	368514	4907475	2	0	0	100.3	100.3	1	5073.58	3.25	0	85.11	0	0.65	0	0	18.69	0	0	0	0	0	0	-4.13	-4.13
	Inverter	MV3-10	368167	4907669	2	0	0	100.3	100.3	1	5085.55	3.25	0	85.13	0	0.65	0	0	18.71	0	0	0	0	0	0	-4.17	-4.17
	Inverter	MV3-11	368346	4907662	2	0	0	100.3	100.3	1	5158.19	3.25	0	85.25	0	0.66	0	0	18.81	0	0	0	0	0	0	-4.4	-4.4
	Inverter	MV3-14	368684	4907498	2	0	0	100.3	100.3	1	5179.64	3.25	0	85.29	0	0.66	0	0	18.84	0	0	0	0	0	0	-4.47	-4.47
	Inverter	MV3-3	367939	4907927	2	0	0	100.3	100.3	1	5231.24	3.25	0	85.37	0	0.66	0	0	18.92	0	0	0	0	0	0	-4.64	-4.64
	Inverter	MV3-6	368162	4907834	2	0	0	100.3	100.3	1	5233.19	3.25	0	85.38	0	0.66	0	0	18.92	0	0	0	0	0	0	-4.64	-4.64
	Inverter	MV3-9	368512	4907703	2	0	0	100.3	100.3	1	5271.83	3.25	0	85.44	0	0.66	0	0	18.98	0	0	0	0	0	0	-4.77	-4.77
	Inverter	MV2-1	365842	4906816	2	0	0	97.3	97.3	1	3750.16	3.25	0	82.48	0	0.49	0	0	16.64	0	0	0	0	0	0	-2.3	-2.3
	Inverter	MV3-8	368680	4907712	2	0	0	100.3	100.3	1	5361.77	3.25	0	85.59	0	0.67	0	0	19.1	0	0	0	0	0	0	-5.05	-5.05
	Inverter	MV6-3	370207	4907140	2	0	0	100.3	100.3	1	5855.44	3.25	0	86.35	0	0.7	0	0	19.8	0	0	0	0	0	0	-6.53	-6.53
	Inverter	MV6-2	370085	4907339	2	0	0	100.3	100.3	1	5910.5	3.25	0	86.43	0	0.7	0	0	19.87	0	0	0	0	0	0	-6.69	-6.69
	Inverter	MV4-11	369264	4908855	2	0	0	100.3	100.3	1	6643.95	3.25	0	87.45	0	0.71	0	0	20.85	0	0	0	0	0	0	-8.7	-8.7
	Inverter	MV4-7	369035	4909001	2	0	0	100.3	100.3	1	6664.05	3.25	0	87.47	0	0.71	0	0	20.87	0	0	0	0	0	0	-8.75	-8.75
	Inverter	MV4-10	369312	4908858	2	0	0	100.3	100.3	1	6670.28	3.25	0	87.48	0	0.71	0	0	20.88	0	0	0	0	0	0	-8.77	-8.77
	Inverter	MV4-8	369256	4909001	2	0	0	100.3	100.3	1	6767.62	3.25	0	87.61	0	0.71	0	0	21	0	0	0	0	0	0	-9.02	-9.02
	Inverter	MV4-9	369289	4909001	2	0	0	100.3	100.3	1	6783.57	3.25	0	87.63	0	0.71	0	0	21.03	0	0	0	0	0	0	-9.06	-9.06
	Inverter	MV4-4	369027	4909199	2	0	0	100.3	100.3	1	6837.35	3.25	0	87.7	0	0.71	0	0	21.09	0	0	0	0	0	0	-9.19	-9.19
	Inverter	MV5-5	370015	4908690	2	0	0	100.3	100.3	1	6908.63	3.25	0	87.79	0	0.71	0	0	21.18	0	0	0	0	0	0	-9.37	-9.37
	Inverter	MV4-6	369243	4909192	2	0	0	100.3	100.3	1	6929.55	3.25	0	87.81	0	0.71	0	0	21.21	0	0	0	0	0	0	-9.42	-9.42
	Inverter	MV4-5	369289	4909199	2	0	0	100.3	100.3	1	6957.37	3.25	0	87.85	0	0.71	0	0	21.25	0	0	0	0	0	0	-9.49	-9.49
	Inverter	MV4-1	369011	4909397	2	0	0	100.3	100.3	1	7008.52	3.25	0	87.91	0	0.71	0	0	21.31	0	0	0	0	0	0	-9.62	-9.62

Inverter	MV5-2	370006	4908853	2	0	0	100.3	100.3	1	7036.76	3.25	0	87.95	0	0.71	0	0	21.35	0	0	0	0	0	0	-9.69	-9.69
Inverter	MV4-3	369229	4909397	2	0	0	100.3	100.3	1	7104.96	3.25	0	88.03	0	0.71	0	0	21.43	0	0	0	0	0	0	-9.86	-9.86
Inverter	MV5-4	370324	4908707	2	0	0	100.3	100.3	1	7106.23	3.25	0	88.03	0	0.71	0	0	21.43	0	0	0	0	0	0	-9.86	-9.86
Inverter	MV4-2	369272	4909397	2	0	0	100.3	100.3	1	7124.61	3.25	0	88.06	0	0.71	0	0	21.45	0	0	0	0	0	0	-9.9	-9.9
Inverter	MV5-3	370231	4908851	2	0	0	100.3	100.3	1	7165.68	3.25	0	88.11	0	0.7	0	0	21.51	0	0	0	0	0	0	-10	-10
Inverter	MV5-1	370020	4909142	2	0	0	100.3	100.3	1	7283.89	3.25	0	88.25	0	0.7	0	0	21.65	0	0	0	0	0	0	-10.29	-10.29
Inverter	MV6-1	370235	4907364	2	0	0	97.3	97.3	1	6032.96	3.25	0	86.61	0	0.71	0	0	20.04	0	0	0	0	0	0	-10.04	-10.04
DSTATCOM - 10 MVAR #2	DSAT2	369403	4908757	2.5	0	0	96.6	96.6	1	6629.09	3.5	0	87.43	0	3.82	0	0	4.14	0	0	0	0	0	0	1.25	1.25
DSTATCOM - 10 MVAR #1	DSAT1	369437	4908757	2.5	0	0	96.6	96.6	1	6646.62	3.5	0	87.45	0	3.82	0	0	4.15	0	0	0	0	0	0	1.22	1.22
Inverter	MV1-3	364440	4906039	2	0	0	89.1	89.1	1	3353.85	3.25	0	81.51	0	1.23	0	0	10.15	0	0	0	0	0	0	-3.83	-3.83
SubstationTransformer	W_ST	369711.17	4906112.3	2.5	0	0	92	92	1	4800.73	4.25	0	84.63	0	1.58	2.38	0.23	8.38	0	0	0	0	0	0	-4.99	-4.99
Inverter	MV2-2	365977	4906654	2	0	0	89.1	89.1	1	3584.96	3.25	0	82.09	0	1.29	0	0	10.49	0	0	0	0	0	0	-4.81	-4.81
Westbrook Inverter Enclosur	W_INV3	369508	4906164	2	0	0	89.1	89.1	1	4679.43	3.25	0	84.4	0	1.56	0	0	12.03	0	0	0	0	0	0	-8.94	-8.94
Westbrook Inverter Enclosur	W_INV2	369374	4906388	2	0	0	89.1	89.1	1	4734.04	3.25	0	84.5	0	1.57	0	0	12.1	0	0	0	0	0	0	-9.13	-9.13
Westbrook Inverter Enclosur	W_INV4	369673	4906164	2	0	0	89.1	89.1	1	4804.43	3.25	0	84.63	0	1.59	0	0	12.2	0	0	0	0	0	0	-9.37	-9.37
Inverter	MV3-22	368656	4907142	2	0	0	89.1	89.1	1	4863.38	3.25	0	84.74	0	1.61	0	0	12.28	0	0	0	0	0	0	-9.57	-9.57
Westbrook Inverter Enclosur	W_INV7	369780	4906417	2	0	0	89.1	89.1	1	5050.79	3.25	0	85.07	0	1.65	0	0	12.53	0	0	0	0	0	0	-10.19	-10.19
Westbrook Inverter Enclosur	W_INV5	369719	4906574	2	0	0	89.1	89.1	1	5111.62	3.25	0	85.17	0	1.67	0	0	12.61	0	0	0	0	0	0	-10.39	-10.39
Westbrook Inverter Enclosur	W_INV6	369875	4906578	2	0	0	89.1	89.1	1	5228.95	3.25	0	85.37	0	1.7	0	0	12.77	0	0	0	0	0	0	-10.77	-10.77
Inverter	MV3-5	368340	4907843	2	0	0	89.1	89.1	1	5317.34	3.25	0	85.51	0	1.72	0	0	12.88	0	0	0	0	0	0	-11.06	-11.06
Inverter	MV3-1	368156	4907976	2	0	0	89.1	89.1	1	5360.39	3.25	0	85.58	0	1.73	0	0	12.94	0	0	0	0	0	0	-11.2	-11.2
Inverter	MV3-4	368502	4907925	2	0	0	89.1	89.1	1	5463.4	3.25	0	85.75	0	1.75	0	0	13.08	0	0	0	0	0	0	-11.52	-11.52
Inverter	MV3-2	368671	4907928	2	0	0	89.1	89.1	1	5545.52	3.25	0	85.88	0	1.77	0	0	13.18	0	0	0	0	0	0	-11.78	-11.78
Fixed Reactor Bank 1	FRB1	369378	4908755	6	0	0	89.8	89.8	1	6614.57	5.25	0	87.41	0	-0.33	0	0	10.37	0	0	0	0	0	0	-7.67	-7.67
Fixed Reactor Bank 2	FRB2	369464	4908755	6	0	0	89.8	89.8	1	6658.92	5.25	0	87.47	0	-0.33	0	0	10.42	0	0	0	0	0	0	-7.78	-7.78
Inverter	MV4-15	369176	4908481	2	0	0	89.1	89.1	1	6275.91	3.25	0	86.95	0	1.95	0	0	14.11	0	0	0	0	0	0	-13.96	-13.96
Inverter	MV4-14	369176	4908507	2	0	0	89.1	89.1	1	6298.35	3.25	0	86.98	0	1.96	0	0	14.14	0	0	0	0	0	0	-14.02	-14.02
Inverter	MV4-13	369051	4908605	2	0	0	89.1	89.1	1	6321.85	3.25	0	87.02	0	1.96	0	0	14.16	0	0	0	0	0	0	-14.09	-14.09
Inverter	MV4-12	369043	4908803	2	0	0	89.1	89.1	1	6492.18	3.25	0	87.25	0	2.01	0	0	14.37	0	0	0	0	0	0	-14.57	-14.57
Inverter	MV5-6	369982	4908507	2	0	0	89.1	89.1	1	6741.03	3.25	0	87.57	0	2.07	0	0	14.68	0	0	0	0	0	0	-15.26	-15.26
Westbrook Inverter Enclosur	W_INV1	369409	4906578	2	0	0	86.1	86.1	1	4893.46	3.25	0	84.79	0	1.61	0	0	12.32	0	0	0	0	0	0	-12.67	-12.67
Inverter	MV6-4	370250	4906966	2	0	0	86.1	86.1	1	5767.46	3.25	0	86.22	0	1.83	0	0	13.47	0	0	0	0	0	0	-15.46	-15.46
Westbrook Inverter Transfor	W_INVTR1	369403	4906578	2	0	0	78.2	78.2	1	4889.28	3.25	0	84.78	0	-3.15	0	0	2.37	0	0	0	0	0	0	-5.76	-5.76
Westbrook Inverter Transfor	W_INVTR3	369514	4906164	2	0	0	77.3	77.3	1	4683.94	3.25	0	84.41	0	-3.11	0	0	2.3	0	0	0	0	0	0	-6.26	-6.26
Westbrook Inverter Transfor	W_INVTR2	369368	4906388	2	0	0	77.3	77.3	1	4729.76	3.25	0	84.5	0	-3.12	0	0	2.32	0	0	0	0	0	0	-6.35	-6.35
Westbrook Inverter Transfor	W_INVTR4	369679	4906164	2	0	0	77.3	77.3	1	4809.02	3.25	0	84.64	0	-3.14	0	0	2.35	0	0	0	0	0	0	-6.51	-6.51
Westbrook Inverter Transfor	W_INVTR7	369786	4906417	2	0	0	77.3	77.3	1	5055.28	3.25	0	85.07	0	-3.19	0	0	2.43	0	0	0	0	0	0	-6.98	-6.98
Westbrook Inverter Transfor	W_INVTR5	369725	4906574	2	0	0	77.3	77.3	1	5115.99	3.25	0	85.18	0	-3.2	0	0	2.45	0	0	0	0	0	0	-7.09	-7.09
Westbrook Inverter Transfor	W_INVTR6	369881	4906578	2	0	0	77.3	77.3	1	5233.4	3.25	0	85.38	0	-3.22	0	0	2.49	0	0	0	0	0	0	-7.3	-7.3
Inverter Transformer	MV1-14 T	365157	4905049	2	0	0	69.4	69.4	1	2151.19	3.25	0	77.65	0	2.23	0	0	5.11	0	0	0	0	0	0	-15.65	-15.65
Inverter Transformer	MV1-13 T	364725	4905241	2	0	0	69.4	69.4	1	2517.58	3.25	0	79.02	0	2.35	0	0	5.46	0	0	0	0	0	0	-17.48	-17.48
Inverter Transformer	MV1-10 T	365010	4905564	2	0	0	69.4	69.4	1	2683.48	3.25	0	79.57	0	2.41	0	0	5.61	0	0	0	0	0	0	-18.24	-18.24
Inverter Transformer	MV1-7 T	364919	4905782	2	0	0	69.4	69.4	1	2919.68	3.25	0	80.31	0	2.48	0	0	5.81	0	0	0	0	0	0	-19.25	-19.25
Inverter Transformer	MV2-1 T	365836	4906816	2	0	0	69.4	69.4	1	3750.41	3.25	0	82.48	0	2.72	0	0	6.49	0	0	0	0	0	0	-22.34	-22.34
Inverter Transformer	MV6-4 T	370244	4906966	2	0	0	69.4	69.4	1	5763.04	3.25	0	86.21	0	3.15	0	0	7.87	0	0	0	0	0	0	-27.89	-27.89
Inverter Transformer	MV6-1 T	370230	4907364	2	0	0	69.4	69.4	1	6029.45	3.25	0	86.61	0	3.19	0	0	8.04	0	0	0	0	0	0	-28.48	-28.48
Inverter Transformer	MV1-15 T	365309	4904994	2	0	0	56.1	56.1	1	2044.56	3.25	0	77.21	0	0.42	0	0	7.13	0	0	0	0	0	0	-28.71	-28.71
Inverter Transformer	MV1-12 T	365044	4905386	2	0	0	56.1	56.1	1	2505.7	3.25	0	78.98	0	0.62	0	0	8	0	0	0	0	0	0	-31.54	-31.54
Inverter Transformer	MV1-11 T	364649	4905414	2	0	0	56.1	56.1	1	2705.35	3.25	0	79.64	0	0.7	0	0	8.36	0	0	0	0	0	0	-32.65	-32.65
Inverter Transformer	MV1-8 T	364782	4905647	2	0	0	56.1	56.1	1	2850.39	3.25	0	80.1	0	0.77	0	0	8.61	0	0	0	0	0	0	-33.42	-33.42
Inverter Transformer	MV1-9 T	364555	4905646	2	0	0	56.1	56.1	1	2953.51	3.25	0	80.41	0	0.81	0	0	8.79	0	0	0	0	0	0	-33.95	-33.95
Inverter Transformer	MV1-4 T	364821	4905918	2	0	0	56.1	56.1	1	3082.54	3.25	0	80.78	0	0.86	0	0	9.01	0	0	0	0	0	0	-34.59	-34.59
Inverter Transformer	MV1-5 T	364676	4905892	2	0	0	56.1	56.1	1	3117.21	3.25	0	80.88	0	0.88	0	0	9.07	0	0	0	0	0	0	-34.76	-34.76
Inverter Transformer	MV1-6 T	364482	4905835	2	0	0	56.1	56.1	1	3154.21	3.25	0	80.98	0	0.9	0	0	9.13	0	0	0	0	0	0	-34.94	-34.94
Inverter Transformer	MV1-2 T	364759	4906063	2	0	0	56.1	56.1	1	3240.23	3.25	0	81.21	0	0.93	0	0	9.27	0	0	0	0	0	0	-35.35	-35.35
Inverter Transformer	MV1-1 T	364721	4906166	2	0	0	56.1	56.1	1	3349.93	3.25	0	81.5	0	0.98	0	0	9.45	0	0	0	0	0	0	-35.87	-35.87
Inverter Transformer	MV1-3 T	364435	4906039	2	0	0	56.1	56.1	1	3356.17	3.25	0	81.52	0	0.98	0	0	9.46	0	0	0	0	0	0	-35.9	-35.9
Inverter Transformer	MV2-3 T	365814	4906641	2	0	0	56.1	56.1	1	3576.65	3.25	0	82.07	0	1.07	0	0	9.81	0	0	0	0	0	0	-36.89	-36.89
Inverter Transformer	MV2-4 T	365590	4906628	2	0	0	56.1	56.1	1	3582.23	3.25	0	82.08	0	1.07	0	0	9.82	0	0	0	0	0	0	-36.92	-36.92
Inverter Transformer	MV2-2 T	365982	4906654	2	0	0	56.1	56.1	1	3584.94	3.25	0	82.09	0	1.08	0	0	9.82	0	0	0	0	0	0	-36.93	-36.93
Inverter Transformer	MV3-18 T	367757	4907412	2	0	0	56.1	56.1	1	4685.53	3.25	0	84.42	0	1.51	0	0	11.43	0	0	0	0	0	0	-41.3	-41.3
Inverter Transformer	MV3-12 T	367674	4907594	2	0	0	56.1	56.1	1	4825.25	3.25	0	84.67	0	1.56	0	0	11.62	0	0	0	0	0	0	-41.8	-41.8
Inverter Transformer	MV3-21 T	368484	4907206	2	0	0	56.1	56.1	1	4826.3	3.25	0	84.67	0	1.56	0	0	11.62	0	0	0	0	0	0	-41.8	-41.8
Inverter Transformer	MV3-22 T	368661	4907142	2	0	0	56.1	56.1	1	4866.11	3.25	0	84.74	0	1.58	0	0	11.68	0	0	0	0	0	0	-41.94	-41.94
Inverter Transformer	MV3-19 T	368352	4907347	2	0	0	56.1	56.1	1	4882.71	3.25	0	84.77	0	1.58	0	0	11.7	0	0	0	0	0	0	-42	-42
Inverter Transformer	MV3-17 T	368183	4907472	2	0	0	56.1	56.1	1	4915.17	3.25	0	84.83	0	1.59	0	0	11.74	0	0	0	0	0	0	-42.11	-42.11
Inverter Transformer	MV3-13 T	367958	4907577	2	0	0	56.1	56.1	1	4915.48	3.25	0	84.83	0	1.59	0	0	11.74	0	0	0	0	0	0	-42.11	-42.11
Inverter Transformer	MV3-15 T	368351	4907477	2	0	0	56.1	56.1	1	4996.52	3.25	0	84.97	0	1.62	0	0	11.85	0	0	0	0	0	0	-42.39	-42.39
Inverter Transformer	MV3-20 T	368683	4907317	2	0	0	56.1	56.1	1	5025.22	3.25	0	85.02	0	1.63	0	0	11.89	0	0	0	0	0	0	-42.49	-42.49
Inverter Transformer	MV3-16 T	368509	4907475	2	0	0	56.1	56.1	1	5071.1	3.25	0	85.1	0	1.65	0	0	11.95	0	0	0	0	0	0	-42.64	-42.64
Inverter Transformer	MV3-7 T	367951	4907754	2	0	0	56.1	56.1	1	5075.6	3.25	0	85.11	0	1.65	0	0	11.95	0	0	0	0	0	0	-42.66	-42.66
Inverter Transformer	MV3-10 T	368162	4907669	2	0	0	56.1	56.1	1	5083.42	3.25	0	85.12	0	1.66	0	0	11.96	0	0	0	0	0	0	-42.68	-42.68
Inverter Transformer	MV3-11 T	368340	4907662	2	0	0	56.1	56.1	1	5155.46	3.25	0	85.25	0	1.68	0	0	12.06	0	0	0	0	0	0	-42.93	-42.93
Inverter Transformer	MV3-14 T	368678	4907498	2	0	0	56.1	56.1	1	5176.53	3.25	0	85.28	0	1.69	0	0	12.08	0	0	0	0	0	0	-43	-43

	Inverter Transformer	MV3-6 T	368156	4907834	2	0	0	56.1	56.1	1	5230.71	3.25	0	85.37	0	1.71	0	0	12.15	0	0	0	0	0	0	-43.17	-43.17
	Inverter Transformer	MV3-3 T	367944	4907927	2	0	0	56.1	56.1	1	5233.1	3.25	0	85.38	0	1.71	0	0	12.16	0	0	0	0	0	0	-43.18	-43.18
	Inverter Transformer	MV3-9 T	368517	4907703	2	0	0	56.1	56.1	1	5274.22	3.25	0	85.44	0	1.72	0	0	12.21	0	0	0	0	0	0	-43.32	-43.32
	Inverter Transformer	MV3-5 T	368335	4907843	2	0	0	56.1	56.1	1	5315.14	3.25	0	85.51	0	1.74	0	0	12.26	0	0	0	0	0	0	-43.45	-43.45
	Inverter Transformer	MV3-1 T	368150	4907976	2	0	0	56.1	56.1	1	5357.98	3.25	0	85.58	0	1.75	0	0	12.32	0	0	0	0	0	0	-43.59	-43.59
	Inverter Transformer	MV3-8 T	368685	4907712	2	0	0	56.1	56.1	1	5364.27	3.25	0	85.59	0	1.75	0	0	12.32	0	0	0	0	0	0	-43.61	-43.61
	Inverter Transformer	MV3-4 T	368507	4907925	2	0	0	56.1	56.1	1	5465.7	3.25	0	85.75	0	1.79	0	0	12.45	0	0	0	0	0	0	-43.94	-43.94
	Inverter Transformer	MV3-2 T	368677	4907928	2	0	0	56.1	56.1	1	5548.41	3.25	0	85.88	0	1.82	0	0	12.56	0	0	0	0	0	0	-44.2	-44.2
	Inverter Transformer	MV6-3 T	370202	4907140	2	0	0	56.1	56.1	1	5851.85	3.25	0	86.35	0	1.92	0	0	12.93	0	0	0	0	0	0	-45.13	-45.13
	Inverter Transformer	MV6-2 T	370091	4907339	2	0	0	56.1	56.1	1	5914.65	3.25	0	86.44	0	1.94	0	0	13	0	0	0	0	0	0	-45.32	-45.32
	Inverter Transformer	MV4-15 T	369170	4908481	2	0	0	56.1	56.1	1	6272.88	3.25	0	86.95	0	2.05	0	0	13.42	0	0	0	0	0	0	-46.36	-46.36
	Inverter Transformer	MV4-14 T	369182	4908507	2	0	0	56.1	56.1	1	6301.38	3.25	0	86.99	0	2.06	0	0	13.45	0	0	0	0	0	0	-46.44	-46.44
	Inverter Transformer	MV4-13 T	369057	4908605	2	0	0	56.1	56.1	1	6324.75	3.25	0	87.02	0	2.07	0	0	13.48	0	0	0	0	0	0	-46.51	-46.51
	Inverter Transformer	MV4-12 T	369049	4908803	2	0	0	56.1	56.1	1	6495	3.25	0	87.25	0	2.12	0	0	13.67	0	0	0	0	0	0	-46.98	-46.98
	Inverter Transformer	MV4-11 T	369269	4908855	2	0	0	56.1	56.1	1	6646.41	3.25	0	87.45	0	2.16	0	0	13.84	0	0	0	0	0	0	-47.4	-47.4
	Inverter Transformer	MV4-7 T	369040	4909001	2	0	0	56.1	56.1	1	6666.33	3.25	0	87.48	0	2.17	0	0	13.87	0	0	0	0	0	0	-47.45	-47.45
	Inverter Transformer	MV4-10 T	369307	4908858	2	0	0	56.1	56.1	1	6667.8	3.25	0	87.48	0	2.17	0	0	13.87	0	0	0	0	0	0	-47.46	-47.46
	Inverter Transformer	MV5-6 T	369987	4908507	2	0	0	56.1	56.1	1	6743.98	3.25	0	87.58	0	2.19	0	0	13.95	0	0	0	0	0	0	-47.66	-47.66
	Inverter Transformer	MV4-8 T	369262	4909001	2	0	0	56.1	56.1	1	6770.51	3.25	0	87.61	0	2.2	0	0	13.98	0	0	0	0	0	0	-47.73	-47.73
	Inverter Transformer	MV4-9 T	369284	4909001	2	0	0	56.1	56.1	1	6781.14	3.25	0	87.63	0	2.2	0	0	13.99	0	0	0	0	0	0	-47.76	-47.76
	Inverter Transformer	MV4-4 T	369033	4909199	2	0	0	56.1	56.1	1	6840.01	3.25	0	87.7	0	2.22	0	0	14.06	0	0	0	0	0	0	-47.91	-47.91
	Inverter Transformer	MV5-5 T	370021	4908690	2	0	0	56.1	56.1	1	6912.12	3.25	0	87.79	0	2.24	0	0	14.13	0	0	0	0	0	0	-48.1	-48.1
	Inverter Transformer	MV4-6 T	369249	4909192	2	0	0	56.1	56.1	1	6932.36	3.25	0	87.82	0	2.24	0	0	14.16	0	0	0	0	0	0	-48.16	-48.16
	Inverter Transformer	MV4-5 T	369283	4909199	2	0	0	56.1	56.1	1	6954.54	3.25	0	87.85	0	2.25	0	0	14.18	0	0	0	0	0	0	-48.21	-48.21
	Inverter Transformer	MV4-1 T	369017	4909397	2	0	0	56.1	56.1	1	7011.1	3.25	0	87.92	0	2.26	0	0	14.24	0	0	0	0	0	0	-48.36	-48.36
	Inverter Transformer	MV5-2 T	370011	4908853	2	0	0	56.1	56.1	1	7039.61	3.25	0	87.95	0	2.27	0	0	14.27	0	0	0	0	0	0	-48.43	-48.43
	Inverter Transformer	MV4-3 T	369234	4909397	2	0	0	56.1	56.1	1	7107.23	3.25	0	88.03	0	2.29	0	0	14.34	0	0	0	0	0	0	-48.61	-48.61
	Inverter Transformer	MV5-4 T	370330	4908707	2	0	0	56.1	56.1	1	7109.88	3.25	0	88.04	0	2.29	0	0	14.35	0	0	0	0	0	0	-48.61	-48.61
	Inverter Transformer	MV4-2 T	369267	4909397	2	0	0	56.1	56.1	1	7122.32	3.25	0	88.05	0	2.29	0	0	14.36	0	0	0	0	0	0	-48.65	-48.65
	Inverter Transformer	MV5-3 T	370237	4908851	2	0	0	56.1	56.1	1	7169.23	3.25	0	88.11	0	2.3	0	0	14.41	0	0	0	0	0	0	-48.77	-48.77
	Inverter Transformer	MV5-1 T	370015	4909142	2	0	0	56.1	56.1	1	7281.13	3.25	0	88.24	0	2.33	0	0	14.53	0	0	0	0	0	0	-49.05	-49.05
	Line Reactor	NGR	369421	4908787.5	5	0	0	45.4	45.4	1	6664.51	5.25	0	87.48	0	3.23	1.37	0.1	2.72	0	0	0	0	0	0	-49.44	-49.44
Limit. Valu	0	0																								
Level D/N:	28.1111	28.1111																								

Receiver: Existing Noise Receptor
ID: G-25
X: 365990.2
Y: 4903082.1
Z: 4.5
Ground: 0

ISO	Description	ID	X	Y	Z	Ground	ReflOrd	LxT	LxN	L/A	Dist.	hm	Freq	Adiv	K0b	Agr	Abar	z	Aatm	Afol	Ahous	Cmet	CmetN	Dc	RL	LtotT	LtotN
	Sol_Luce Substation	S_Substation	369426	4908792	3.5	0	0	112.1	112.1	1	6663.91	5.25	0	87.47	0	1.31	2.51	0.3	10.42	0	0	0	0	0	0	10.36	10.36
	Gardiner Substation	G_Sub	366586.3	4903349.9	2.5	0	0	90.8	90.8	1	653.5	3.5	0	67.3	0	-0.4	0	0	1.78	0	0	0	0	0	0	22.09	22.09
	Inverter	MV1-15	365315	4904994	2	0	0	100.3	100.3	1	2027.62	3.25	0	77.14	0	0.14	0	0	13.52	0	0	0	0	0	0	9.52	9.52
	Inverters	G_Inv1	366526.4	4903225.8	2	0	0	87.7	87.7	1	555.13	3.25	0	65.89	0	2.4	0	0	0.84	0	0	0	0	0	0	18.54	18.54
	Inverter	MV1-12	365038	4905386	2	0	0	100.3	100.3	1	2492.92	3.25	0	78.93	0	0.26	0	0	14.44	0	0	0	0	0	0	6.68	6.68
	Inverters	G_Inv3	366583.7	4903091.4	2	0	0	87.7	87.7	1	593.58	3.25	0	66.47	0	2.4	0	0	0.89	0	0	0	0	0	0	17.9	17.9
	Inverter	MV1-11	364655	4905414	2	0	0	100.3	100.3	1	2687.1	3.25	0	79.59	0	0.3	0	0	14.81	0	0	0	0	0	0	5.62	5.62
	Inverters	G_Inv5	366638.5	4902958.1	2	0	0	87.7	87.7	1	660.06	3.25	0	67.39	0	2.4	0	0	0.98	0	0	0	0	0	0	16.88	16.88
	Inverter	MV1-8	364788	4905647	2	0	0	100.3	100.3	1	2832.67	3.25	0	80.04	0	0.33	0	0	15.07	0	0	0	0	0	0	4.87	4.87
	Inverter	MV1-9	364561	4905646	2	0	0	100.3	100.3	1	2935.34	3.25	0	80.35	0	0.35	0	0	15.26	0	0	0	0	0	0	4.35	4.35
	Inverter	MV1-14	365163	4905049	2	0	0	97.3	97.3	1	2133.77	3.25	0	77.58	0	0.17	0	0	13.74	0	0	0	0	0	0	5.82	5.82
	Inverters	G_Inv2	366676.9	4903239.1	2	0	0	87.7	87.7	1	704.42	3.25	0	67.96	0	2.41	0	0	1.04	0	0	0	0	0	0	16.25	16.25
	Inverter	MV1-4	364815	4905918	2	0	0	100.3	100.3	1	3069.76	3.25	0	80.74	0	0.38	0	0	15.49	0	0	0	0	0	0	3.7	3.7
	Inverter	MV1-5	364671	4905892	2	0	0	100.3	100.3	1	3104.16	3.25	0	80.84	0	0.38	0	0	15.56	0	0	0	0	0	0	3.54	3.54
	Inverter	MV1-6	364477	4905835	2	0	0	100.3	100.3	1	3141.38	3.25	0	80.94	0	0.39	0	0	15.62	0	0	0	0	0	0	3.36	3.36
	Inverters	G_Inv4	366732.8	4903105	2	0	0	87.7	87.7	1	742.96	3.25	0	68.42	0	2.41	0	0	1.09	0	0	0	0	0	0	15.74	15.74
	Inverters	G_Inv7	366694.6	4902824.7	2	0	0	87.7	87.7	1	749.96	3.25	0	68.5	0	2.41	0	0	1.1	0	0	0	0	0	0	15.64	15.64
	Inverter	MV1-2	364753	4906063	2	0	0	100.3	100.3	1	3227.45	3.25	0	81.18	0	0.4	0	0	15.77	0	0	0	0	0	0	2.96	2.96
	Inverter	MV1-1	364715	4906166	2	0	0	100.3	100.3	1	3337.15	3.25	0	81.47	0	0.42	0	0	15.96	0	0	0	0	0	0	2.46	2.46
	Inverters	G_Inv6	366788.5	4902972	2	0	0	87.7	87.7	1	805.86	3.25	0	69.13	0	2.42	0	0	1.18	0	0	0	0	0	0	14.94	14.94
	Inverter	MV1-13	364731	4905241	2	0	0	97.3	97.3	1	2499.29	3.25	0	78.96	0	0.26	0	0	14.46	0	0	0	0	0	0	3.64	3.64
	Inverter	MV2-3	365820	4906641	2	0	0	100.3	100.3	1	3562.97	3.25	0	82.04	0	0.46	0	0	16.34	0	0	0	0	0	0	1.48	1.48
	Inverter	MV2-4	365586	4906624	2	0	0	100.3	100.3	1	3564.89	3.25	0	82.04	0	0.46	0	0	16.34	0	0	0	0	0	0	1.47	1.47
	Inverters	G_Inv9	366750.9	4902691.8	2	0	0	87.7	87.7	1	854.99	3.25	0	69.64	0	2.43	0	0	1.24	0	0	0	0	0	0	14.35	14.35
	Inverter	MV1-10	365004	4905564	2	0	0	97.3	97.3	1	2670.66	3.25	0	79.53	0	0.29	0	0	14.78	0	0	0	0	0	0	2.71	2.71
	Inverters	G_Inv8	366844.5	4902838.5	2	0	0	87.7	87.7	1	888.36	3.25	0	69.97	0	2.43	0	0	1.28	0	0	0	0	0	0	13.97	13.97
	Inverter	MV1-7	364925	4905782	2	0	0	97.3	97.3	1	2902.43	3.25	0	80.26	0	0.34	0	0	15.2	0	0	0	0	0	0	1.52	1.52
	Inverters	G_Inv10	366900.7	4902704.8	2	0	0	87.7	87.7	1	985.58	3.25	0	70.87	0	2.45	0	0	1.41	0	0	0	0	0	0	12.93	12.93
	Inverter	MV3-18	367752	4907412	2	0	0	100.3	100.3	1	4674.61	3.25	0	84.39	0	0.61	0	0	18.1	0	0	0	0	0	0	-2.79	-2.79
	Inverter	MV3-12	367668	4907594	2	0	0	100.3	100.3	1	4813.76	3.25	0	84.65	0	0.62	0	0	18.3	0	0	0	0	0	0	-3.27	-3.27
	Inverter	MV3-21	368478	4907206	2	0	0	100.3	100.3	1	4816.19	3.25	0	84.65	0	0.62	0	0	18.31	0	0	0	0	0	0	-3.27	-3.27

Inverter	MV3-19	368357	4907347	2	0	0	100.3	100.3	1	4877.61	3.25	0	84.76	0	0.63	0	0	18.4	0	0	0	0	0	0	-3.48	-3.48
Inverter	MV3-17	368178	4907472	2	0	0	100.3	100.3	1	4904.86	3.25	0	84.81	0	0.63	0	0	18.44	0	0	0	0	0	0	-3.57	-3.57
Inverter	MV3-13	367963	4907577	2	0	0	100.3	100.3	1	4908.78	3.25	0	84.82	0	0.63	0	0	18.45	0	0	0	0	0	0	-3.59	-3.59
Inverter	MV3-15	368357	4907477	2	0	0	100.3	100.3	1	4991.68	3.25	0	84.96	0	0.64	0	0	18.57	0	0	0	0	0	0	-3.86	-3.86
Inverter	MV3-20	368689	4907317	2	0	0	100.3	100.3	1	5021.74	3.25	0	85.02	0	0.64	0	0	18.61	0	0	0	0	0	0	-3.96	-3.96
Inverter	MV3-7	367945	4907754	2	0	0	100.3	100.3	1	5064.38	3.25	0	85.09	0	0.65	0	0	18.67	0	0	0	0	0	0	-4.1	-4.1
Inverter	MV3-16	368514	4907475	2	0	0	100.3	100.3	1	5066.28	3.25	0	85.09	0	0.65	0	0	18.68	0	0	0	0	0	0	-4.11	-4.11
Inverter	MV3-10	368167	4907669	2	0	0	100.3	100.3	1	5077.22	3.25	0	85.11	0	0.65	0	0	18.69	0	0	0	0	0	0	-4.14	-4.14
Inverter	MV3-11	368346	4907662	2	0	0	100.3	100.3	1	5150.27	3.25	0	85.24	0	0.66	0	0	18.8	0	0	0	0	0	0	-4.38	-4.38
Inverter	MV3-14	368684	4907498	2	0	0	100.3	100.3	1	5172.69	3.25	0	85.27	0	0.66	0	0	18.83	0	0	0	0	0	0	-4.45	-4.45
Inverter	MV3-3	367939	4907927	2	0	0	100.3	100.3	1	5222.15	3.25	0	85.36	0	0.66	0	0	18.9	0	0	0	0	0	0	-4.61	-4.61
Inverter	MV3-6	368162	4907834	2	0	0	100.3	100.3	1	5224.68	3.25	0	85.36	0	0.66	0	0	18.91	0	0	0	0	0	0	-4.62	-4.62
Inverter	MV3-9	368512	4907703	2	0	0	100.3	100.3	1	5264.24	3.25	0	85.43	0	0.66	0	0	18.96	0	0	0	0	0	0	-4.74	-4.74
Inverter	MV2-1	365842	4906816	2	0	0	97.3	97.3	1	3736.84	3.25	0	82.45	0	0.49	0	0	16.62	0	0	0	0	0	0	-2.25	-2.25
Inverter	MV3-8	368680	4907712	2	0	0	100.3	100.3	1	5354.53	3.25	0	85.57	0	0.67	0	0	19.09	0	0	0	0	0	0	-5.03	-5.03
Inverter	MV6-3	370207	4907140	2	0	0	100.3	100.3	1	5852.18	3.25	0	86.35	0	0.7	0	0	19.79	0	0	0	0	0	0	-6.52	-6.52
Inverter	MV6-2	370085	4907339	2	0	0	100.3	100.3	1	5906.66	3.25	0	86.43	0	0.7	0	0	19.87	0	0	0	0	0	0	-6.68	-6.68
Inverter	MV4-11	369264	4908855	2	0	0	100.3	100.3	1	6636.58	3.25	0	87.44	0	0.71	0	0	20.84	0	0	0	0	0	0	-8.68	-8.68
Inverter	MV4-7	369035	4909001	2	0	0	100.3	100.3	1	6656.14	3.25	0	87.46	0	0.71	0	0	20.86	0	0	0	0	0	0	-8.73	-8.73
Inverter	MV4-10	369312	4908858	2	0	0	100.3	100.3	1	6662.99	3.25	0	87.47	0	0.71	0	0	20.87	0	0	0	0	0	0	-8.75	-8.75
Inverter	MV4-8	369256	4909001	2	0	0	100.3	100.3	1	6760.09	3.25	0	87.6	0	0.71	0	0	21	0	0	0	0	0	0	-9	-9
Inverter	MV4-9	369289	4909001	2	0	0	100.3	100.3	1	6776.1	3.25	0	87.62	0	0.71	0	0	21.02	0	0	0	0	0	0	-9.04	-9.04
Inverter	MV4-4	369027	4909199	2	0	0	100.3	100.3	1	6829.25	3.25	0	87.69	0	0.71	0	0	21.08	0	0	0	0	0	0	-9.17	-9.17
Inverter	MV5-5	370015	4908690	2	0	0	100.3	100.3	1	6902.72	3.25	0	87.78	0	0.71	0	0	21.18	0	0	0	0	0	0	-9.36	-9.36
Inverter	MV4-6	369243	4909192	2	0	0	100.3	100.3	1	6921.82	3.25	0	87.8	0	0.71	0	0	21.2	0	0	0	0	0	0	-9.4	-9.4
Inverter	MV4-5	369289	4909199	2	0	0	100.3	100.3	1	6949.72	3.25	0	87.84	0	0.71	0	0	21.24	0	0	0	0	0	0	-9.47	-9.47
Inverter	MV4-1	369011	4909397	2	0	0	100.3	100.3	1	7000.23	3.25	0	87.9	0	0.71	0	0	21.3	0	0	0	0	0	0	-9.6	-9.6
Inverter	MV5-2	370006	4908853	2	0	0	100.3	100.3	1	7030.64	3.25	0	87.94	0	0.71	0	0	21.34	0	0	0	0	0	0	-9.67	-9.67
Inverter	MV4-3	369229	4909397	2	0	0	100.3	100.3	1	7097.03	3.25	0	88.02	0	0.71	0	0	21.42	0	0	0	0	0	0	-9.84	-9.84
Inverter	MV5-4	370324	4908707	2	0	0	100.3	100.3	1	7100.8	3.25	0	88.03	0	0.71	0	0	21.43	0	0	0	0	0	0	-9.85	-9.85
Inverter	MV4-2	369272	4909397	2	0	0	100.3	100.3	1	7116.75	3.25	0	88.05	0	0.71	0	0	21.45	0	0	0	0	0	0	-9.88	-9.88
Inverter	MV5-3	370231	4908851	2	0	0	100.3	100.3	1	7159.93	3.25	0	88.1	0	0.7	0	0	21.5	0	0	0	0	0	0	-9.99	-9.99
Inverter	MV5-1	370020	4909142	2	0	0	100.3	100.3	1	7277.48	3.25	0	88.24	0	0.7	0	0	21.64	0	0	0	0	0	0	-10.27	-10.27
Inverter	MV6-1	370235	4907364	2	0	0	97.3	97.3	1	6029.34	3.25	0	86.61	0	0.71	0	0	20.03	0	0	0	0	0	0	-10.03	-10.03
DSTATCOM - 10 MVAR #2	DSAT2	369403	4908757	2.5	0	0	96.6	96.6	1	6622.06	3.5	0	87.42	0	3.82	0	0	4.13	0	0	0	0	0	0	1.26	1.26
DSTATCOM - 10 MVAR #1	DSAT1	369437	4908757	2.5	0	0	96.6	96.6	1	6639.65	3.5	0	87.44	0	3.82	0	0	4.14	0	0	0	0	0	0	1.23	1.23
Inverter	MV1-3	364440	4906039	2	0	0	89.1	89.1	1	3338.62	3.25	0	81.47	0	1.23	0	0	10.12	0	0	0	0	0	0	-3.77	-3.77
SubstationTransformer	W_ST	369711.17	4906112.3	2.5	0	0	92	92	1	4798.7	4.25	0	84.62	0	1.58	2.38	0.23	8.38	0	0	0	0	0	0	-4.99	-4.99
Inverter	MV2-2	365977	4906654	2	0	0	89.1	89.1	1	3571.93	3.25	0	82.06	0	1.29	0	0	10.47	0	0	0	0	0	0	-4.75	-4.75
Westbrook Inverter Enclosur	W_INV3	369508	4906164	2	0	0	89.1	89.1	1	4676.86	3.25	0	84.4	0	1.56	0	0	12.03	0	0	0	0	0	0	-8.93	-8.93
Westbrook Inverter Enclosur	W_INV2	369374	4906388	2	0	0	89.1	89.1	1	4730.65	3.25	0	84.5	0	1.57	0	0	12.1	0	0	0	0	0	0	-9.11	-9.11
Westbrook Inverter Enclosur	W_INV4	369673	4906164	2	0	0	89.1	89.1	1	4802.2	3.25	0	84.63	0	1.59	0	0	12.2	0	0	0	0	0	0	-9.36	-9.36
Inverter	MV3-22	368656	4907142	2	0	0	89.1	89.1	1	4856.88	3.25	0	84.73	0	1.6	0	0	12.27	0	0	0	0	0	0	-9.54	-9.54
Westbrook Inverter Enclosur	W_INV7	369780	4906417	2	0	0	89.1	89.1	1	5048.18	3.25	0	85.06	0	1.65	0	0	12.53	0	0	0	0	0	0	-10.18	-10.18
Westbrook Inverter Enclosur	W_INV5	369719	4906574	2	0	0	89.1	89.1	1	5108.55	3.25	0	85.17	0	1.67	0	0	12.61	0	0	0	0	0	0	-10.38	-10.38
Westbrook Inverter Enclosur	W_INV6	369875	4906578	2	0	0	89.1	89.1	1	5226.18	3.25	0	85.36	0	1.7	0	0	12.76	0	0	0	0	0	0	-10.77	-10.77
Inverter	MV3-5	368340	4907843	2	0	0	89.1	89.1	1	5309.21	3.25	0	85.5	0	1.72	0	0	12.87	0	0	0	0	0	0	-11.03	-11.03
Inverter	MV3-1	368156	4907976	2	0	0	89.1	89.1	1	5351.72	3.25	0	85.57	0	1.73	0	0	12.93	0	0	0	0	0	0	-11.17	-11.17
Inverter	MV3-4	368502	4907925	2	0	0	89.1	89.1	1	5455.53	3.25	0	85.74	0	1.75	0	0	13.06	0	0	0	0	0	0	-11.5	-11.5
Inverter	MV3-2	368671	4907928	2	0	0	89.1	89.1	1	5538	3.25	0	85.87	0	1.77	0	0	13.17	0	0	0	0	0	0	-11.75	-11.75
Fixed Reactor Bank 1	FRB1	369378	4908755	6	0	0	89.8	89.8	1	6607.49	5.25	0	87.4	0	-0.33	0	0	10.37	0	0	0	0	0	0	-7.66	-7.66
Fixed Reactor Bank 2	FRB2	369464	4908755	6	0	0	89.8	89.8	1	6652	5.25	0	87.46	0	-0.33	0	0	10.41	0	0	0	0	0	0	-7.76	-7.76
Inverter	MV4-15	369176	4908481	2	0	0	89.1	89.1	1	6268.77	3.25	0	86.94	0	1.95	0	0	14.1	0	0	0	0	0	0	-13.94	-13.94
Inverter	MV4-14	369176	4908507	2	0	0	89.1	89.1	1	6291.17	3.25	0	86.97	0	1.96	0	0	14.13	0	0	0	0	0	0	-14	-14
Inverter	MV4-13	369051	4908605	2	0	0	89.1	89.1	1	6314.34	3.25	0	87.01	0	1.96	0	0	14.15	0	0	0	0	0	0	-14.07	-14.07
Inverter	MV4-12	369043	4908803	2	0	0	89.1	89.1	1	6484.47	3.25	0	87.24	0	2	0	0	14.36	0	0	0	0	0	0	-14.55	-14.55
Inverter	MV5-6	369982	4908507	2	0	0	89.1	89.1	1	6735.28	3.25	0	87.57	0	2.06	0	0	14.67	0	0	0	0	0	0	-15.24	-15.24
Westbrook Inverter Enclosur	W_INV1	369409	4906578	2	0	0	86.1	86.1	1	4889.74	3.25	0	84.79	0	1.61	0	0	12.32	0	0	0	0	0	0	-12.66	-12.66
Inverter	MV6-4	370250	4906966	2	0	0	86.1	86.1	1	5764.6	3.25	0	86.22	0	1.83	0	0	13.46	0	0	0	0	0	0	-15.45	-15.45
Westbrook Inverter Transfor	W_INVTR1	369403	4906578	2	0	0	78.2	78.2	1	4885.54	3.25	0	84.78	0	-3.15	0	0	2.37	0	0	0	0	0	0	-5.76	-5.76
Westbrook Inverter Transfor	W_INVTR3	369514	4906164	2	0	0	77.3	77.3	1	4681.38	3.25	0	84.41	0	-3.11	0	0	2.3	0	0	0	0	0	0	-6.26	-6.26
Westbrook Inverter Transfor	W_INVTR2	369368	4906388	2	0	0	77.3	77.3	1	4726.36	3.25	0	84.49	0	-3.12	0	0	2.32	0	0	0	0	0	0	-6.35	-6.35
Westbrook Inverter Transfor	W_INVTR4	369679	4906164	2	0	0	77.3	77.3	1	4806.8	3.25	0	84.64	0	-3.14	0	0	2.35	0	0	0	0	0	0	-6.5	-6.5
Westbrook Inverter Transfor	W_INVTR7	369786	4906417	2	0	0	77.3	77.3	1	5052.69	3.25	0	85.07	0	-3.19	0	0	2.43	0	0	0	0	0	0	-6.97	-6.97
Westbrook Inverter Transfor	W_INVTR5	369725	4906574	2	0	0	77.3	77.3	1	5112.93	3.25	0	85.17	0	-3.2	0	0	2.45	0	0	0	0	0	0	-7.08	-7.08
Westbrook Inverter Transfor	W_INVTR6	369881	4906578	2	0	0	77.3	77.3	1	5230.65	3.25	0	85.37	0	-3.22	0	0	2.49	0	0	0	0	0	0	-7.3	-7.3
Inverter Transformer	MV1-14 T	365157	4905049	2	0	0	69.4	69.4	1	2136.1	3.25	0	77.59	0	2.22	0	0	5.1	0	0	0	0	0	0	-15.56	-15.56
Inverter Transformer	MV1-13 T	364725	4905241	2	0	0	69.4	69.4	1	2502.32	3.25	0	78.97	0	2.35	0	0	5.45	0	0	0	0	0	0	-17.41	-17.41
Inverter Transformer	MV1-10 T	365010	4905564	2	0	0	69.4	69.4	1	2668.45	3.25	0	79.53	0	2.4	0	0	5.59	0	0	0	0	0	0	-18.17	-18.17
Inverter Transformer	MV1-7 T	364919	4905782	2	0	0	69.4	69.4	1	2904.64	3.25	0	80.26	0	2.48	0	0	5.8	0	0	0	0	0	0	-19.19	-19.19
Inverter Transformer	MV2-1 T	365836	4906816	2	0	0	69.4	69.4	1	3737.08	3.25	0	82.45	0	2.72	0	0	6.48	0	0	0	0	0	0	-22.3	-22.3
Inverter Transformer	MV6-4 T	370244	4906966	2	0	0	69.4	69.4	1	5760.16	3.25	0	86.21	0	3.15	0	0	7.87	0	0	0	0	0	0	-27.88	-27.88
Inverter Transformer	MV6-1 T	370230	4907364	2	0	0	69.4	69.4	1	6025.83	3.25	0	86.6	0	3.19	0	0	8.03	0	0	0	0	0	0	-28.48	-28.48
Inverter Transformer	MV1-15 T	365309	4904994	2	0	0	56.1	56.1	1	2029.63	3.25	0	77.15	0	0.42	0	0	7.1	0	0	0	0	0	0	-28.61	-28.61

	Inverter Transformer	MV1-12 T	365044	4905386	2	0	0	56.1	56.1	1	2490.63	3.25	0	78.93	0	0.61	0	0	7.97	0	0	0	0	0	0	-31.45	-31.45
	Inverter Transformer	MV1-11 T	364649	4905414	2	0	0	56.1	56.1	1	2690.09	3.25	0	79.6	0	0.7	0	0	8.33	0	0	0	0	0	0	-32.57	-32.57
	Inverter Transformer	MV1-8 T	364782	4905647	2	0	0	56.1	56.1	1	2835.22	3.25	0	80.05	0	0.76	0	0	8.59	0	0	0	0	0	0	-33.34	-33.34
	Inverter Transformer	MV1-9 T	364555	4905646	2	0	0	56.1	56.1	1	2938.26	3.25	0	80.36	0	0.8	0	0	8.76	0	0	0	0	0	0	-33.87	-33.87
	Inverter Transformer	MV1-4 T	364821	4905918	2	0	0	56.1	56.1	1	3067.47	3.25	0	80.74	0	0.86	0	0	8.98	0	0	0	0	0	0	-34.52	-34.52
	Inverter Transformer	MV1-5 T	364676	4905892	2	0	0	56.1	56.1	1	3102.04	3.25	0	80.83	0	0.87	0	0	9.04	0	0	0	0	0	0	-34.69	-34.69
	Inverter Transformer	MV1-6 T	364482	4905835	2	0	0	56.1	56.1	1	3138.97	3.25	0	80.94	0	0.89	0	0	9.1	0	0	0	0	0	0	-34.87	-34.87
	Inverter Transformer	MV1-2 T	364759	4906063	2	0	0	56.1	56.1	1	3225.15	3.25	0	81.17	0	0.93	0	0	9.24	0	0	0	0	0	0	-35.28	-35.28
	Inverter Transformer	MV1-1 T	364721	4906166	2	0	0	56.1	56.1	1	3334.86	3.25	0	81.46	0	0.97	0	0	9.42	0	0	0	0	0	0	-35.8	-35.8
	Inverter Transformer	MV1-3 T	364435	4906039	2	0	0	56.1	56.1	1	3340.94	3.25	0	81.48	0	0.97	0	0	9.43	0	0	0	0	0	0	-35.83	-35.83
	Inverter Transformer	MV2-3 T	365814	4906641	2	0	0	56.1	56.1	1	3563.26	3.25	0	82.04	0	1.07	0	0	9.79	0	0	0	0	0	0	-36.83	-36.83
	Inverter Transformer	MV2-4 T	365590	4906628	2	0	0	56.1	56.1	1	3568.41	3.25	0	82.05	0	1.07	0	0	9.8	0	0	0	0	0	0	-36.86	-36.86
	Inverter Transformer	MV2-2 T	365982	4906654	2	0	0	56.1	56.1	1	3571.91	3.25	0	82.06	0	1.07	0	0	9.8	0	0	0	0	0	0	-36.87	-36.87
	Inverter Transformer	MV3-18 T	367757	4907412	2	0	0	56.1	56.1	1	4676.5	3.25	0	84.4	0	1.51	0	0	11.42	0	0	0	0	0	0	-41.27	-41.27
	Inverter Transformer	MV3-12 T	367674	4907594	2	0	0	56.1	56.1	1	4815.85	3.25	0	84.65	0	1.56	0	0	11.61	0	0	0	0	0	0	-41.76	-41.76
	Inverter Transformer	MV3-21 T	368484	4907206	2	0	0	56.1	56.1	1	4819.29	3.25	0	84.66	0	1.56	0	0	11.61	0	0	0	0	0	0	-41.77	-41.77
	Inverter Transformer	MV3-22 T	368661	4907142	2	0	0	56.1	56.1	1	4859.63	3.25	0	84.73	0	1.57	0	0	11.67	0	0	0	0	0	0	-41.92	-41.92
	Inverter Transformer	MV3-19 T	368352	4907347	2	0	0	56.1	56.1	1	4875.19	3.25	0	84.76	0	1.58	0	0	11.69	0	0	0	0	0	0	-41.97	-41.97
	Inverter Transformer	MV3-13 T	367958	4907577	2	0	0	56.1	56.1	1	4906.77	3.25	0	84.82	0	1.59	0	0	11.73	0	0	0	0	0	0	-42.08	-42.08
	Inverter Transformer	MV3-17 T	368183	4907472	2	0	0	56.1	56.1	1	4907.1	3.25	0	84.82	0	1.59	0	0	11.73	0	0	0	0	0	0	-42.08	-42.08
	Inverter Transformer	MV3-15 T	368351	4907477	2	0	0	56.1	56.1	1	4988.84	3.25	0	84.96	0	1.62	0	0	11.84	0	0	0	0	0	0	-42.36	-42.36
	Inverter Transformer	MV3-20 T	368683	4907317	2	0	0	56.1	56.1	1	5018.52	3.25	0	85.01	0	1.63	0	0	11.88	0	0	0	0	0	0	-42.46	-42.46
	Inverter Transformer	MV3-16 T	368509	4907475	2	0	0	56.1	56.1	1	5063.79	3.25	0	85.09	0	1.65	0	0	11.94	0	0	0	0	0	0	-42.62	-42.62
	Inverter Transformer	MV3-7 T	367951	4907754	2	0	0	56.1	56.1	1	5066.69	3.25	0	85.09	0	1.65	0	0	11.94	0	0	0	0	0	0	-42.63	-42.63
	Inverter Transformer	MV3-10 T	368162	4907669	2	0	0	56.1	56.1	1	5075.07	3.25	0	85.11	0	1.65	0	0	11.95	0	0	0	0	0	0	-42.66	-42.66
	Inverter Transformer	MV3-11 T	368340	4907662	2	0	0	56.1	56.1	1	5147.53	3.25	0	85.23	0	1.68	0	0	12.05	0	0	0	0	0	0	-42.9	-42.9
	Inverter Transformer	MV3-14 T	368678	4907498	2	0	0	56.1	56.1	1	5169.57	3.25	0	85.27	0	1.69	0	0	12.08	0	0	0	0	0	0	-42.97	-42.97
	Inverter Transformer	MV3-6 T	368156	4907834	2	0	0	56.1	56.1	1	5222.19	3.25	0	85.36	0	1.7	0	0	12.14	0	0	0	0	0	0	-43.15	-43.15
	Inverter Transformer	MV3-3 T	367944	4907927	2	0	0	56.1	56.1	1	5224.02	3.25	0	85.36	0	1.71	0	0	12.15	0	0	0	0	0	0	-43.15	-43.15
	Inverter Transformer	MV3-9 T	368517	4907703	2	0	0	56.1	56.1	1	5266.63	3.25	0	85.43	0	1.72	0	0	12.2	0	0	0	0	0	0	-43.29	-43.29
	Inverter Transformer	MV3-5 T	368335	4907843	2	0	0	56.1	56.1	1	5307	3.25	0	85.5	0	1.73	0	0	12.25	0	0	0	0	0	0	-43.42	-43.42
	Inverter Transformer	MV3-1 T	368150	4907976	2	0	0	56.1	56.1	1	5349.3	3.25	0	85.57	0	1.75	0	0	12.31	0	0	0	0	0	0	-43.56	-43.56
	Inverter Transformer	MV3-8 T	368685	4907712	2	0	0	56.1	56.1	1	5357.04	3.25	0	85.58	0	1.75	0	0	12.32	0	0	0	0	0	0	-43.59	-43.59
	Inverter Transformer	MV3-4 T	368507	4907925	2	0	0	56.1	56.1	1	5457.84	3.25	0	85.74	0	1.79	0	0	12.44	0	0	0	0	0	0	-43.91	-43.91
	Inverter Transformer	MV3-2 T	368677	4907928	2	0	0	56.1	56.1	1	5540.91	3.25	0	85.87	0	1.81	0	0	12.55	0	0	0	0	0	0	-44.17	-44.17
	Inverter Transformer	MV6-3 T	370202	4907140	2	0	0	56.1	56.1	1	5848.57	3.25	0	86.34	0	1.92	0	0	12.92	0	0	0	0	0	0	-45.12	-45.12
	Inverter Transformer	MV6-2 T	370091	4907339	2	0	0	56.1	56.1	1	5910.82	3.25	0	86.43	0	1.94	0	0	13	0	0	0	0	0	0	-45.31	-45.31
	Inverter Transformer	MV4-15 T	369170	4908481	2	0	0	56.1	56.1	1	6265.72	3.25	0	86.94	0	2.05	0	0	13.41	0	0	0	0	0	0	-46.34	-46.34
	Inverter Transformer	MV4-14 T	369182	4908507	2	0	0	56.1	56.1	1	6294.21	3.25	0	86.98	0	2.06	0	0	13.45	0	0	0	0	0	0	-46.42	-46.42
	Inverter Transformer	MV4-13 T	369057	4908605	2	0	0	56.1	56.1	1	6317.25	3.25	0	87.01	0	2.06	0	0	13.47	0	0	0	0	0	0	-46.49	-46.49
	Inverter Transformer	MV4-12 T	369049	4908803	2	0	0	56.1	56.1	1	6487.29	3.25	0	87.24	0	2.11	0	0	13.67	0	0	0	0	0	0	-46.96	-46.96
	Inverter Transformer	MV4-11 T	369269	4908855	2	0	0	56.1	56.1	1	6639.04	3.25	0	87.44	0	2.16	0	0	13.84	0	0	0	0	0	0	-47.38	-47.38
	Inverter Transformer	MV4-7 T	369040	4909001	2	0	0	56.1	56.1	1	6658.43	3.25	0	87.47	0	2.16	0	0	13.86	0	0	0	0	0	0	-47.43	-47.43
	Inverter Transformer	MV4-10 T	369307	4908858	2	0	0	56.1	56.1	1	6660.49	3.25	0	87.47	0	2.16	0	0	13.86	0	0	0	0	0	0	-47.44	-47.44
	Inverter Transformer	MV5-6 T	369987	4908507	2	0	0	56.1	56.1	1	6738.25	3.25	0	87.57	0	2.19	0	0	13.95	0	0	0	0	0	0	-47.64	-47.64
	Inverter Transformer	MV4-8 T	369262	4909001	2	0	0	56.1	56.1	1	6762.99	3.25	0	87.6	0	2.19	0	0	13.97	0	0	0	0	0	0	-47.71	-47.71
	Inverter Transformer	MV4-9 T	369284	4909001	2	0	0	56.1	56.1	1	6773.66	3.25	0	87.62	0	2.2	0	0	13.98	0	0	0	0	0	0	-47.74	-47.74
	Inverter Transformer	MV4-4 T	369033	4909199	2	0	0	56.1	56.1	1	6831.92	3.25	0	87.69	0	2.21	0	0	14.05	0	0	0	0	0	0	-47.89	-47.89
	Inverter Transformer	MV5-5 T	370021	4908690	2	0	0	56.1	56.1	1	6906.22	3.25	0	87.78	0	2.23	0	0	14.13	0	0	0	0	0	0	-48.09	-48.09
	Inverter Transformer	MV4-6 T	369249	4909192	2	0	0	56.1	56.1	1	6924.64	3.25	0	87.81	0	2.24	0	0	14.15	0	0	0	0	0	0	-48.14	-48.14
	Inverter Transformer	MV4-5 T	369283	4909199	2	0	0	56.1	56.1	1	6946.87	3.25	0	87.84	0	2.24	0	0	14.17	0	0	0	0	0	0	-48.19	-48.19
	Inverter Transformer	MV4-1 T	369017	4909397	2	0	0	56.1	56.1	1	7002.82	3.25	0	87.91	0	2.26	0	0	14.23	0	0	0	0	0	0	-48.34	-48.34
	Inverter Transformer	MV5-2 T	370011	4908853	2	0	0	56.1	56.1	1	7033.5	3.25	0	87.94	0	2.27	0	0	14.27	0	0	0	0	0	0	-48.42	-48.42
	Inverter Transformer	MV4-3 T	369234	4909397	2	0	0	56.1	56.1	1	7099.31	3.25	0	88.02	0	2.29	0	0	14.34	0	0	0	0	0	0	-48.59	-48.59
	Inverter Transformer	MV5-4 T	370330	4908707	2	0	0	56.1	56.1	1	7104.46	3.25	0	88.03	0	2.29	0	0	14.34	0	0	0	0	0	0	-48.6	-48.6
	Inverter Transformer	MV4-2 T	369267	4909397	2	0	0	56.1	56.1	1	7114.45	3.25	0	88.04	0	2.29	0	0	14.35	0	0	0	0	0	0	-48.63	-48.63
	Inverter Transformer	MV5-3 T	370237	4908851	2	0	0	56.1	56.1	1	7163.49	3.25	0	88.1	0	2.3	0	0	14.4	0	0	0	0	0	0	-48.75	-48.75
	Inverter Transformer	MV5-1 T	370015	4909142	2	0	0	56.1	56.1	1	7274.71	3.25	0	88.24	0	2.33	0	0	14.52	0	0	0	0	0	0	-49.03	-49.03
	Line Reactor	NGR	369421	4908787.5	5	0	0	45.4	45.4	1	6657.48	5.25	0	87.47	0	3.23	1.37	0.1	2.72	0	0	0	0	0	0	-49.43	-49.43
Limit. Valu	0	0																								
Level D/N:	28.0385	28.0385																								

Receiver: Existing Noise Receptor
ID: G-26
X: 366304.1
Y: 4902384.2
Z: 4.5
Ground: 0

ISO	Description	ID	X	Y	Z	Ground	ReflOrd	LxT	LxN	L/A	Dist.	hm	Freq	Adiv	K0b	Agr	Abar	z	Aatm	Afol	Ahous	Cmet	CmetN	Dc	RL	LtotT	LtotN
	Sol_Luce Substation	S_Substation	369426	4908792	3.5	0	0	112.1	112.1	1	7127.84	5.25	0	88.06	0	1.41	2.42	0.32	10.87	0	0	0	0	0	0	9.32	9.32
	Inverters	G_Inv9	366750.9	4902691.8	2	0	0	87.7	87.7	1	542.45	3.25	0	65.69	0	2.4	0	0	0.82	0	0	0	0	0	0	18.75	18.75
	Inverters	G_Inv7	366694.6	4902824.7	2	0	0	87.7	87.7	1	588.67	3.25	0	66.4	0	2.4	0	0	0.89	0	0	0	0	0	0	17.98	17.98
	Inverter	MV1-15	365315	4904994	2	0	0	100.3	100.3	1	2790.95	3.25	0	79.92	0	0.32	0	0	15	0	0	0	0	0	0	5.08	5.08

Inverters	G_Inv5	366638.5	4902958.1	2	0	0	87.7	87.7	1	664.22	3.25	0	67.45	0	2.4	0	0	0.99	0	0	0	0	0	0	16.82	16.82
Inverters	G_Inv10	366900.7	4902704.8	2	0	0	87.7	87.7	1	677.29	3.25	0	67.62	0	2.4	0	0	1.01	0	0	0	0	0	0	16.63	16.63
Gardiner Substation	G_Sub	366586.3	4903349.9	2.5	0	0	90.8	90.8	1	1006.09	3.5	0	71.05	0	-0.37	0	0	2.53	0	0	0	0	0	0	17.56	17.56
Inverters	G_Inv8	366844.5	4902838.5	2	0	0	87.7	87.7	1	705.99	3.25	0	67.98	0	2.41	0	0	1.04	0	0	0	0	0	0	16.23	16.23
Inverter	MV1-12	365038	4905386	2	0	0	100.3	100.3	1	3257.89	3.25	0	81.26	0	0.41	0	0	15.82	0	0	0	0	0	0	2.82	2.82
Inverters	G_Inv3	366583.7	4903091.4	2	0	0	87.7	87.7	1	760.47	3.25	0	68.62	0	2.41	0	0	1.12	0	0	0	0	0	0	15.51	15.51
Inverters	G_Inv6	366788.5	4902972	2	0	0	87.7	87.7	1	761.68	3.25	0	68.64	0	2.41	0	0	1.12	0	0	0	0	0	0	15.49	15.49
Inverter	MV1-11	364655	4905414	2	0	0	100.3	100.3	1	3449.53	3.25	0	81.76	0	0.44	0	0	16.15	0	0	0	0	0	0	1.97	1.97
Inverter	MV1-8	364788	4905647	2	0	0	100.3	100.3	1	3597.84	3.25	0	82.12	0	0.47	0	0	16.39	0	0	0	0	0	0	1.33	1.33
Inverters	G_Inv4	366732.8	4903105	2	0	0	87.7	87.7	1	838.66	3.25	0	69.47	0	2.43	0	0	1.22	0	0	0	0	0	0	14.54	14.54
Inverter	MV1-9	364561	4905646	2	0	0	100.3	100.3	1	3698.34	3.25	0	82.36	0	0.48	0	0	16.56	0	0	0	0	0	0	0.91	0.91
Inverters	G_Inv1	366526.4	4903225.8	2	0	0	87.7	87.7	1	870.47	3.25	0	69.8	0	2.43	0	0	1.26	0	0	0	0	0	0	14.17	14.17
Inverter	MV1-4	364815	4905918	2	0	0	100.3	100.3	1	3834.73	3.25	0	82.67	0	0.5	0	0	16.78	0	0	0	0	0	0	0.35	0.35
Inverter	MV1-5	364671	4905892	2	0	0	100.3	100.3	1	3869.33	3.25	0	82.75	0	0.51	0	0	16.84	0	0	0	0	0	0	0.21	0.21
Inverter	MV1-6	364477	4905835	2	0	0	100.3	100.3	1	3904.65	3.25	0	82.83	0	0.51	0	0	16.9	0	0	0	0	0	0	0.07	0.07
Inverter	MV1-2	364753	4906063	2	0	0	100.3	100.3	1	3992.43	3.25	0	83.02	0	0.53	0	0	17.04	0	0	0	0	0	0	-0.28	-0.28
Inverters	G_Inv2	366676.9	4903239.1	2	0	0	87.7	87.7	1	932.65	3.25	0	70.39	0	2.44	0	0	1.34	0	0	0	0	0	0	13.49	13.49
Inverter	MV1-14	365163	4905049	2	0	0	97.3	97.3	1	2898.84	3.25	0	80.24	0	0.34	0	0	15.19	0	0	0	0	0	0	1.53	1.53
Inverter	MV1-1	364715	4906166	2	0	0	100.3	100.3	1	4102.1	3.25	0	83.26	0	0.54	0	0	17.21	0	0	0	0	0	0	-0.7	-0.7
Inverter	MV2-3	365820	4906641	2	0	0	100.3	100.3	1	4284.24	3.25	0	83.64	0	0.56	0	0	17.5	0	0	0	0	0	0	-1.39	-1.39
Inverter	MV2-4	365586	4906624	2	0	0	100.3	100.3	1	4300.18	3.25	0	83.67	0	0.57	0	0	17.52	0	0	0	0	0	0	-1.45	-1.45
Inverter	MV1-13	364731	4905241	2	0	0	97.3	97.3	1	3261.28	3.25	0	81.27	0	0.41	0	0	15.83	0	0	0	0	0	0	-0.19	-0.19
Inverter	MV1-10	365004	4905564	2	0	0	97.3	97.3	1	3435.32	3.25	0	81.72	0	0.44	0	0	16.12	0	0	0	0	0	0	-0.97	-0.97
Inverter	MV1-7	364925	4905782	2	0	0	97.3	97.3	1	3667.01	3.25	0	82.29	0	0.48	0	0	16.51	0	0	0	0	0	0	-1.96	-1.96
Inverter	MV3-18	367752	4907412	2	0	0	100.3	100.3	1	5232.13	3.25	0	85.37	0	0.66	0	0	18.92	0	0	0	0	0	0	-4.64	-4.64
Inverter	MV3-21	368478	4907206	2	0	0	100.3	100.3	1	5289.2	3.25	0	85.47	0	0.67	0	0	19	0	0	0	0	0	0	-4.82	-4.82
Inverter	MV3-19	368357	4907347	2	0	0	100.3	100.3	1	5370.64	3.25	0	85.6	0	0.67	0	0	19.12	0	0	0	0	0	0	-5.08	-5.08
Inverter	MV3-12	367668	4907594	2	0	0	100.3	100.3	1	5385.37	3.25	0	85.62	0	0.67	0	0	19.14	0	0	0	0	0	0	-5.12	-5.12
Inverter	MV3-17	368178	4907472	2	0	0	100.3	100.3	1	5421.92	3.25	0	85.68	0	0.68	0	0	19.19	0	0	0	0	0	0	-5.24	-5.24
Inverter	MV3-13	367963	4907577	2	0	0	100.3	100.3	1	5451.34	3.25	0	85.73	0	0.68	0	0	19.23	0	0	0	0	0	0	-5.33	-5.33
Inverter	MV3-20	368689	4907317	2	0	0	100.3	100.3	1	5479.08	3.25	0	85.77	0	0.68	0	0	19.27	0	0	0	0	0	0	-5.41	-5.41
Inverter	MV3-15	368357	4907477	2	0	0	100.3	100.3	1	5490.99	3.25	0	85.79	0	0.68	0	0	19.29	0	0	0	0	0	0	-5.45	-5.45
Inverter	MV3-16	368514	4907475	2	0	0	100.3	100.3	1	5549.77	3.25	0	85.89	0	0.68	0	0	19.37	0	0	0	0	0	0	-5.63	-5.63
Inverter	MV3-10	368167	4907669	2	0	0	100.3	100.3	1	5603.53	3.25	0	85.97	0	0.69	0	0	19.45	0	0	0	0	0	0	-5.79	-5.79
Inverter	MV3-7	367945	4907754	2	0	0	100.3	100.3	1	5614.92	3.25	0	85.99	0	0.69	0	0	19.46	0	0	0	0	0	0	-5.82	-5.82
Inverter	MV3-14	368684	4907498	2	0	0	100.3	100.3	1	5640.47	3.25	0	86.03	0	0.69	0	0	19.5	0	0	0	0	0	0	-5.9	-5.9
Inverter	MV3-11	368346	4907662	2	0	0	100.3	100.3	1	5659.02	3.25	0	86.05	0	0.69	0	0	19.52	0	0	0	0	0	0	-5.96	-5.96
Inverter	MV3-6	368162	4907834	2	0	0	100.3	100.3	1	5757.79	3.25	0	86.21	0	0.69	0	0	19.66	0	0	0	0	0	0	-6.25	-6.25
Inverter	MV3-9	368512	4907703	2	0	0	100.3	100.3	1	5758.86	3.25	0	86.21	0	0.69	0	0	19.66	0	0	0	0	0	0	-6.25	-6.25
Inverter	MV3-3	367939	4907927	2	0	0	100.3	100.3	1	5778.89	3.25	0	86.24	0	0.7	0	0	19.69	0	0	0	0	0	0	-6.31	-6.31
Inverter	MV3-8	368680	4907712	2	0	0	100.3	100.3	1	5833.55	3.25	0	86.32	0	0.7	0	0	19.77	0	0	0	0	0	0	-6.47	-6.47
Inverter	MV6-3	370207	4907140	2	0	0	100.3	100.3	1	6152.26	3.25	0	86.78	0	0.71	0	0	20.2	0	0	0	0	0	0	-7.38	-7.38
Inverter	MV6-2	370085	4907339	2	0	0	100.3	100.3	1	6232.6	3.25	0	86.89	0	0.71	0	0	20.31	0	0	0	0	0	0	-7.6	-7.6
Inverter	MV2-1	365842	4906816	2	0	0	97.3	97.3	1	4455.83	3.25	0	83.98	0	0.59	0	0	17.76	0	0	0	0	0	0	-5.01	-5.01
Inverter	MV4-11	369264	4908855	2	0	0	100.3	100.3	1	7115.64	3.25	0	88.04	0	0.71	0	0	21.44	0	0	0	0	0	0	-9.88	-9.88
Inverter	MV4-10	369312	4908858	2	0	0	100.3	100.3	1	7138.46	3.25	0	88.07	0	0.71	0	0	21.47	0	0	0	0	0	0	-9.94	-9.94
Inverter	MV4-7	369035	4909001	2	0	0	100.3	100.3	1	7158.2	3.25	0	88.1	0	0.7	0	0	21.5	0	0	0	0	0	0	-9.99	-9.99
Inverter	MV4-8	369256	4909001	2	0	0	100.3	100.3	1	7245.4	3.25	0	88.2	0	0.7	0	0	21.6	0	0	0	0	0	0	-10.2	-10.2
Inverter	MV4-9	369289	4909001	2	0	0	100.3	100.3	1	7258.9	3.25	0	88.22	0	0.7	0	0	21.62	0	0	0	0	0	0	-10.23	-10.23
Inverter	MV5-5	370015	4908690	2	0	0	100.3	100.3	1	7316.69	3.25	0	88.29	0	0.7	0	0	21.69	0	0	0	0	0	0	-10.36	-10.36
Inverter	MV4-4	369027	4909199	2	0	0	100.3	100.3	1	7338.64	3.25	0	88.31	0	0.7	0	0	21.72	0	0	0	0	0	0	-10.42	-10.42
Inverter	MV4-6	369243	4909192	2	0	0	100.3	100.3	1	7415.07	3.25	0	88.4	0	0.69	0	0	21.81	0	0	0	0	0	0	-10.6	-10.6
Inverter	MV4-5	369289	4909199	2	0	0	100.3	100.3	1	7439.83	3.25	0	88.43	0	0.69	0	0	21.84	0	0	0	0	0	0	-10.65	-10.65
Inverter	MV5-2	370006	4908853	2	0	0	100.3	100.3	1	7453.15	3.25	0	88.45	0	0.69	0	0	21.86	0	0	0	0	0	0	-10.68	-10.68
Inverter	MV5-4	370324	4908707	2	0	0	100.3	100.3	1	7492.49	3.25	0	88.49	0	0.69	0	0	21.91	0	0	0	0	0	0	-10.78	-10.78
Inverter	MV4-1	369011	4909397	2	0	0	100.3	100.3	1	7517.09	3.25	0	88.52	0	0.69	0	0	21.94	0	0	0	0	0	0	-10.83	-10.83
Inverter	MV5-3	370231	4908851	2	0	0	100.3	100.3	1	7565.72	3.25	0	88.58	0	0.69	0	0	21.99	0	0	0	0	0	0	-10.94	-10.94
Inverter	MV4-3	369229	4909397	2	0	0	100.3	100.3	1	7598.32	3.25	0	88.61	0	0.68	0	0	22.03	0	0	0	0	0	0	-11.02	-11.02
Inverter	MV4-2	369272	4909397	2	0	0	100.3	100.3	1	7614.97	3.25	0	88.63	0	0.68	0	0	22.05	0	0	0	0	0	0	-11.06	-11.06
Inverter	MV5-1	370020	4909142	2	0	0	100.3	100.3	1	7712.05	3.25	0	88.74	0	0.68	0	0	22.17	0	0	0	0	0	0	-11.28	-11.28
Inverter	MV6-1	370235	4907364	2	0	0	97.3	97.3	1	6344.32	3.25	0	87.05	0	0.71	0	0	20.45	0	0	0	0	0	0	-10.9	-10.9
DSTATCOM - 10 MVAR #2	DSAT2	369403	4908757	2.5	0	0	96.6	96.6	1	7086.31	3.5	0	88.01	0	3.84	0	0	4.35	0	0	0	0	0	0	0.43	0.43
DSTATCOM - 10 MVAR #1	DSAT1	369437	4908757	2.5	0	0	96.6	96.6	1	7101.24	3.5	0	88.03	0	3.84	0	0	4.36	0	0	0	0	0	0	0.4	0.4
SubstationTransformer	W_ST	369711.17	4906112.3	2.5	0	0	92	92	1	5050.41	3.5	0	85.07	0	0.57	0	-0.11	8.68	0	0	0	0	0	0	-2.34	-2.34
Inverter	MV1-3	364440	4906039	2	0	0	89.1	89.1	1	4102.74	3.25	0	83.26	0	1.42	0	0	11.23	0	0	0	0	0	0	-6.85	-6.85
Inverter	MV2-2	365977	4906654	2	0	0	89.1	89.1	1	4282.31	3.25	0	83.63	0	1.46	0	0	11.48	0	0	0	0	0	0	-7.52	-7.52
Westbrook Inverter Enclosur	W_INV3	369508	4906164	2	0	0	89.1	89.1	1	4954.98	3.25	0	84.9	0	1.63	0	0	12.4	0	0	0	0	0	0	-9.87	-9.87
Westbrook Inverter Enclosur	W_INV2	369374	4906388	2	0	0	89.1	89.1	1	5045.27	3.25	0	85.06	0	1.65	0	0	12.52	0	0	0	0	0	0	-10.17	-10.17
Westbrook Inverter Enclosur	W_INV4	369673	4906164	2	0	0	89.1	89.1	1	5063.24	3.25	0	85.09	0	1.66	0	0	12.55	0	0	0	0	0	0	-10.23	-10.23
Inverter	MV3-22	368656	4907142	2	0	0	89.1	89.1	1	5307.36	3.25	0	85.5	0	1.72	0	0	12.87	0	0	0	0	0	0	-11.03	-11.03
Westbrook Inverter Enclosur	W_INV7	369780	4906417	2	0	0	89.1	89.1	1	5324.04	3.25	0	85.52	0	1.72	0	0	12.89	0	0	0	0	0	0	-11.08	-11.08
Westbrook Inverter Enclosur	W_INV5	369719	4906574	2	0	0	89.1	89.1	1	5405.18	3.25	0	85.66	0	1.74	0	0	13	0	0	0	0	0	0	-11.34	-11.34
Westbrook Inverter Enclosur	W_INV6	369875	4906578	2	0	0	89.1	89.1	1	5508.11	3.25	0	85.82	0	1.77	0	0	13.13	0	0	0	0	0	0	-11.66	-11.66
Inverter	MV3-5	368340	4907843	2	0	0	89.1	89.1	1	5826.1	3.25	0	86.31	0	1.84	0	0	13.54	0	0	0	0	0	0	-12.63	-12.63

Inverter	MV3-1	368156	4907976	2	0	0	89.1	89.1	1	5890.48	3.25	0	86.4	0	1.86	0	0	13.62	0	0	0	0	0	0	-12.83	-12.83
Inverter	MV3-4	368502	4907925	2	0	0	89.1	89.1	1	5960.81	3.25	0	86.51	0	1.88	0	0	13.71	0	0	0	0	0	0	-13.04	-13.04
Inverter	MV3-2	368671	4907928	2	0	0	89.1	89.1	1	6027.93	3.25	0	86.6	0	1.89	0	0	13.8	0	0	0	0	0	0	-13.24	-13.24
Fixed Reactor Bank 1	FRB1	369378	4908755	6	0	0	89.8	89.8	1	7073.61	5.25	0	87.99	0	-0.28	0	0	10.82	0	0	0	0	0	0	-8.76	-8.76
Fixed Reactor Bank 2	FRB2	369464	4908755	6	0	0	89.8	89.8	1	7111.4	5.25	0	88.04	0	-0.27	0	0	10.85	0	0	0	0	0	0	-8.85	-8.85
Inverter	MV4-15	369176	4908481	2	0	0	89.1	89.1	1	6739.35	3.25	0	87.57	0	2.07	0	0	14.67	0	0	0	0	0	0	-15.25	-15.25
Inverter	MV4-14	369176	4908507	2	0	0	89.1	89.1	1	6762.88	3.25	0	87.6	0	2.07	0	0	14.7	0	0	0	0	0	0	-15.32	-15.32
Inverter	MV4-13	369051	4908605	2	0	0	89.1	89.1	1	6800.28	3.25	0	87.65	0	2.08	0	0	14.75	0	0	0	0	0	0	-15.42	-15.42
Inverter	MV4-12	369043	4908803	2	0	0	89.1	89.1	1	6978.72	3.25	0	87.88	0	2.12	0	0	14.96	0	0	0	0	0	0	-15.9	-15.9
Inverter	MV5-6	369982	4908507	2	0	0	89.1	89.1	1	7142.52	3.25	0	88.08	0	2.16	0	0	15.16	0	0	0	0	0	0	-16.34	-16.34
Westbrook Inverter Enclosur	W_INV1	369409	4906578	2	0	0	86.1	86.1	1	5218.08	3.25	0	85.35	0	1.69	0	0	12.75	0	0	0	0	0	0	-13.74	-13.74
Inverter	MV6-4	370250	4906966	2	0	0	86.1	86.1	1	6046.74	3.25	0	86.63	0	1.9	0	0	13.82	0	0	0	0	0	0	-16.29	-16.29
Westbrook Inverter Transfor	W_INVTR1	369403	4906578	2	0	0	78.2	78.2	1	5214.51	3.25	0	85.34	0	-3.22	0	0	2.49	0	0	0	0	0	0	-6.37	-6.37
Westbrook Inverter Transfor	W_INVTR3	369514	4906164	2	0	0	77.3	77.3	1	4958.87	3.25	0	84.91	0	-3.17	0	0	2.4	0	0	0	0	0	0	-6.8	-6.8
Westbrook Inverter Transfor	W_INVTR2	369368	4906388	2	0	0	77.3	77.3	1	5041.62	3.25	0	85.05	0	-3.19	0	0	2.43	0	0	0	0	0	0	-6.95	-6.95
Westbrook Inverter Transfor	W_INVTR4	369679	4906164	2	0	0	77.3	77.3	1	5067.23	3.25	0	85.1	0	-3.19	0	0	2.44	0	0	0	0	0	0	-7	-7
Westbrook Inverter Transfor	W_INVTR7	369786	4906417	2	0	0	77.3	77.3	1	5327.96	3.25	0	85.53	0	-3.24	0	0	2.52	0	0	0	0	0	0	-7.47	-7.47
Westbrook Inverter Transfor	W_INVTR5	369725	4906574	2	0	0	77.3	77.3	1	5408.97	3.25	0	85.66	0	-3.26	0	0	2.55	0	0	0	0	0	0	-7.61	-7.61
Westbrook Inverter Transfor	W_INVTR6	369881	4906578	2	0	0	77.3	77.3	1	5512	3.25	0	85.83	0	-3.28	0	0	2.58	0	0	0	0	0	0	-7.79	-7.79
Inverter Transformer	MV1-14 T	365157	4905049	2	0	0	69.4	69.4	1	2901.21	3.25	0	80.25	0	2.48	0	0	5.8	0	0	0	0	0	0	-19.18	-19.18
Inverter Transformer	MV1-13 T	364725	4905241	2	0	0	69.4	69.4	1	3264.18	3.25	0	81.28	0	2.59	0	0	6.1	0	0	0	0	0	0	-20.61	-20.61
Inverter Transformer	MV1-10 T	365010	4905564	2	0	0	69.4	69.4	1	3433.05	3.25	0	81.71	0	2.63	0	0	6.24	0	0	0	0	0	0	-21.24	-21.24
Inverter Transformer	MV1-7 T	364919	4905782	2	0	0	69.4	69.4	1	3669.27	3.25	0	82.29	0	2.7	0	0	6.42	0	0	0	0	0	0	-22.07	-22.07
Inverter Transformer	MV2-1 T	365836	4906816	2	0	0	69.4	69.4	1	4456.45	3.25	0	83.98	0	2.9	0	0	7.01	0	0	0	0	0	0	-24.53	-24.53
Inverter Transformer	MV6-4 T	370244	4906966	2	0	0	69.4	69.4	1	6042.82	3.25	0	86.62	0	3.19	0	0	8.04	0	0	0	0	0	0	-28.51	-28.51
Inverter Transformer	MV6-1 T	370230	4907364	2	0	0	69.4	69.4	1	6341.22	3.25	0	87.04	0	3.24	0	0	8.22	0	0	0	0	0	0	-29.15	-29.15
Inverter Transformer	MV1-15 T	365309	4904994	2	0	0	56.1	56.1	1	2793.08	3.25	0	79.92	0	0.74	0	0	8.51	0	0	0	0	0	0	-33.12	-33.12
Inverter Transformer	MV1-12 T	365044	4905386	2	0	0	56.1	56.1	1	3255.56	3.25	0	81.25	0	0.94	0	0	9.29	0	0	0	0	0	0	-35.43	-35.43
Inverter Transformer	MV1-11 T	364649	4905414	2	0	0	56.1	56.1	1	3452.4	3.25	0	81.76	0	1.02	0	0	9.61	0	0	0	0	0	0	-36.34	-36.34
Inverter Transformer	MV1-8 T	364782	4905647	2	0	0	56.1	56.1	1	3600.37	3.25	0	82.13	0	1.08	0	0	9.85	0	0	0	0	0	0	-37	-37
Inverter Transformer	MV1-9 T	364555	4905646	2	0	0	56.1	56.1	1	3701.17	3.25	0	82.37	0	1.12	0	0	10	0	0	0	0	0	0	-37.43	-37.43
Inverter Transformer	MV1-4 T	364821	4905918	2	0	0	56.1	56.1	1	3832.41	3.25	0	82.67	0	1.18	0	0	10.2	0	0	0	0	0	0	-37.99	-37.99
Inverter Transformer	MV1-5 T	364676	4905892	2	0	0	56.1	56.1	1	3867.22	3.25	0	82.75	0	1.19	0	0	10.26	0	0	0	0	0	0	-38.14	-38.14
Inverter Transformer	MV1-6 T	364482	4905835	2	0	0	56.1	56.1	1	3902.32	3.25	0	82.83	0	1.2	0	0	10.31	0	0	0	0	0	0	-38.28	-38.28
Inverter Transformer	MV1-2 T	364759	4906063	2	0	0	56.1	56.1	1	3990.1	3.25	0	83.02	0	1.24	0	0	10.44	0	0	0	0	0	0	-38.64	-38.64
Inverter Transformer	MV1-1 T	364721	4906166	2	0	0	56.1	56.1	1	4099.78	3.25	0	83.26	0	1.28	0	0	10.6	0	0	0	0	0	0	-39.08	-39.08
Inverter Transformer	MV1-3 T	364435	4906039	2	0	0	56.1	56.1	1	4105.01	3.25	0	83.27	0	1.29	0	0	10.61	0	0	0	0	0	0	-39.1	-39.1
Inverter Transformer	MV2-2 T	365982	4906654	2	0	0	56.1	56.1	1	4281.93	3.25	0	83.63	0	1.36	0	0	10.87	0	0	0	0	0	0	-39.8	-39.8
Inverter Transformer	MV2-3 T	365814	4906641	2	0	0	56.1	56.1	1	4284.92	3.25	0	83.64	0	1.36	0	0	10.87	0	0	0	0	0	0	-39.81	-39.81
Inverter Transformer	MV2-4 T	365590	4906628	2	0	0	56.1	56.1	1	4303.46	3.25	0	83.68	0	1.36	0	0	10.9	0	0	0	0	0	0	-39.88	-39.88
Inverter Transformer	MV3-18 T	367757	4907412	2	0	0	56.1	56.1	1	5233.52	3.25	0	85.38	0	1.71	0	0	12.16	0	0	0	0	0	0	-43.18	-43.18
Inverter Transformer	MV3-21 T	368484	4907206	2	0	0	56.1	56.1	1	5291.67	3.25	0	85.47	0	1.73	0	0	12.23	0	0	0	0	0	0	-43.37	-43.37
Inverter Transformer	MV3-22 T	368661	4907142	2	0	0	56.1	56.1	1	5309.58	3.25	0	85.5	0	1.74	0	0	12.26	0	0	0	0	0	0	-43.43	-43.43
Inverter Transformer	MV3-19 T	368352	4907347	2	0	0	56.1	56.1	1	5368.73	3.25	0	85.6	0	1.76	0	0	12.33	0	0	0	0	0	0	-43.63	-43.63
Inverter Transformer	MV3-12 T	367674	4907594	2	0	0	56.1	56.1	1	5386.9	3.25	0	85.63	0	1.76	0	0	12.35	0	0	0	0	0	0	-43.68	-43.68
Inverter Transformer	MV3-17 T	368183	4907472	2	0	0	56.1	56.1	1	5423.65	3.25	0	85.69	0	1.77	0	0	12.4	0	0	0	0	0	0	-43.8	-43.8
Inverter Transformer	MV3-13 T	367958	4907577	2	0	0	56.1	56.1	1	5449.82	3.25	0	85.73	0	1.78	0	0	12.43	0	0	0	0	0	0	-43.89	-43.89
Inverter Transformer	MV3-20 T	368683	4907317	2	0	0	56.1	56.1	1	5476.47	3.25	0	85.77	0	1.79	0	0	12.47	0	0	0	0	0	0	-43.97	-43.97
Inverter Transformer	MV3-15 T	368351	4907477	2	0	0	56.1	56.1	1	5488.75	3.25	0	85.79	0	1.8	0	0	12.48	0	0	0	0	0	0	-44.01	-44.01
Inverter Transformer	MV3-16 T	368509	4907475	2	0	0	56.1	56.1	1	5547.78	3.25	0	85.88	0	1.82	0	0	12.55	0	0	0	0	0	0	-44.2	-44.2
Inverter Transformer	MV3-10 T	368162	4907669	2	0	0	56.1	56.1	1	5601.87	3.25	0	85.97	0	1.83	0	0	12.62	0	0	0	0	0	0	-44.36	-44.36
Inverter Transformer	MV3-7 T	367951	4907754	2	0	0	56.1	56.1	1	5616.67	3.25	0	85.99	0	1.84	0	0	12.64	0	0	0	0	0	0	-44.41	-44.41
Inverter Transformer	MV3-14 T	368678	4907498	2	0	0	56.1	56.1	1	5637.94	3.25	0	86.02	0	1.85	0	0	12.67	0	0	0	0	0	0	-44.48	-44.48
Inverter Transformer	MV3-11 T	368340	4907662	2	0	0	56.1	56.1	1	5656.86	3.25	0	86.05	0	1.85	0	0	12.69	0	0	0	0	0	0	-44.54	-44.54
Inverter Transformer	MV3-6 T	368156	4907834	2	0	0	56.1	56.1	1	5755.85	3.25	0	86.2	0	1.89	0	0	12.81	0	0	0	0	0	0	-44.84	-44.84
Inverter Transformer	MV3-9 T	368517	4907703	2	0	0	56.1	56.1	1	5760.78	3.25	0	86.21	0	1.89	0	0	12.82	0	0	0	0	0	0	-44.86	-44.86
Inverter Transformer	MV3-3 T	367944	4907927	2	0	0	56.1	56.1	1	5780.3	3.25	0	86.24	0	1.89	0	0	12.84	0	0	0	0	0	0	-44.91	-44.91
Inverter Transformer	MV3-5 T	368335	4907843	2	0	0	56.1	56.1	1	5824.35	3.25	0	86.3	0	1.91	0	0	12.89	0	0	0	0	0	0	-45.05	-45.05
Inverter Transformer	MV3-8 T	368685	4907712	2	0	0	56.1	56.1	1	5835.59	3.25	0	86.32	0	1.91	0	0	12.91	0	0	0	0	0	0	-45.08	-45.08
Inverter Transformer	MV3-1 T	368150	4907976	2	0	0	56.1	56.1	1	5888.6	3.25	0	86.4	0	1.93	0	0	12.97	0	0	0	0	0	0	-45.24	-45.24
Inverter Transformer	MV3-4 T	368507	4907925	2	0	0	56.1	56.1	1	5962.65	3.25	0	86.51	0	1.95	0	0	13.06	0	0	0	0	0	0	-45.46	-45.46
Inverter Transformer	MV3-2 T	368677	4907928	2	0	0	56.1	56.1	1	6030.29	3.25	0	86.61	0	1.97	0	0	13.14	0	0	0	0	0	0	-45.66	-45.66
Inverter Transformer	MV6-3 T	370202	4907140	2	0	0	56.1	56.1	1	6149.09	3.25	0	86.78	0	2.01	0	0	13.28	0	0	0	0	0	0	-46.01	-46.01
Inverter Transformer	MV6-2 T	370091	4907339	2	0	0	56.1	56.1	1	6236.24	3.25	0	86.9	0	2.04	0	0	13.38	0	0	0	0	0	0	-46.26	-46.26
Inverter Transformer	MV4-15 T	369170	4908481	2	0	0	56.1	56.1	1	6736.79	3.25	0	87.57	0	2.19	0	0	13.94	0	0	0	0	0	0	-47.64	-47.64
Inverter Transformer	MV4-14 T	369182	4908507	2	0	0	56.1	56.1	1	6765.43	3.25	0	87.61	0	2.19	0	0	13.98	0	0	0	0	0	0	-47.72	-47.72
Inverter Transformer	MV4-13 T	369057	4908605	2	0	0	56.1	56.1	1	6802.71	3.25	0	87.65	0	2.2	0	0	14.02	0	0	0	0	0	0	-47.82	-47.82
Inverter Transformer	MV4-12 T	369049	4908803	2	0	0	56.1	56.1	1	6981.08	3.25	0	87.88	0	2.25	0	0	14.21	0	0	0	0	0	0	-48.28	-48.28
Inverter Transformer	MV4-11 T	369269	4908855	2	0	0	56.1	56.1	1	7117.72	3.25	0	88.05	0	2.29	0	0	14.36	0	0	0	0	0	0	-48.63	-48.63
Inverter Transformer	MV4-10 T	369307	4908858	2	0	0	56.1	56.1	1	7136.35	3.25	0	88.07	0	2.3	0	0	14.38	0	0	0	0	0	0	-48.68	-48.68
Inverter Transformer	MV5-6 T	369987	4908507	2	0	0	56.1	56.1	1	7145.1	3.25	0	88.08	0	2.3	0	0	14.38	0	0	0	0	0	0	-48.7	-48.7
Inverter Transformer	MV4-7 T	369040	4909001	2	0	0	56.1	56.1	1	7160.11	3.25	0	88.1	0	2.3	0	0	14.4	0	0	0	0	0	0	-48.74	-48.74
Inverter Transformer	MV4-8 T	369262	4909001	2	0	0	56.1	56.1	1	7247.84	3.25	0	88.2	0	2.33	0	0	14.49	0	0	0	0	0	0	-48.96	-48.96
Inverter Transformer	MV4-9 T	369284	4909001	2	0	0	56.1	56.1	1	7256.85	3.25	0	88.21	0	2.33	0	0	14.5	0	0	0	0	0	0	-48.99	-48.99

	Inverter Transformer	MV5-5 T	370021	4908690	2	0	0	56.1	56.1	1	7319.73	3.25	0	88.29	0	2.34	0	0	14.57	0	0	0	0	0	0	-49.14	-49.14
	Inverter Transformer	MV4-4 T	369033	4909199	2	0	0	56.1	56.1	1	7340.87	3.25	0	88.31	0	2.35	0	0	14.59	0	0	0	0	0	0	-49.2	-49.2
	Inverter Transformer	MV4-6 T	369249	4909192	2	0	0	56.1	56.1	1	7417.45	3.25	0	88.41	0	2.37	0	0	14.67	0	0	0	0	0	0	-49.39	-49.39
	Inverter Transformer	MV4-5 T	369283	4909199	2	0	0	56.1	56.1	1	7437.43	3.25	0	88.43	0	2.37	0	0	14.69	0	0	0	0	0	0	-49.43	-49.43
	Inverter Transformer	MV5-2 T	370011	4908853	2	0	0	56.1	56.1	1	7455.63	3.25	0	88.45	0	2.38	0	0	14.71	0	0	0	0	0	0	-49.48	-49.48
	Inverter Transformer	MV5-4 T	370330	4908707	2	0	0	56.1	56.1	1	7495.71	3.25	0	88.5	0	2.39	0	0	14.75	0	0	0	0	0	0	-49.58	-49.58
	Inverter Transformer	MV4-1 T	369017	4909397	2	0	0	56.1	56.1	1	7519.26	3.25	0	88.52	0	2.39	0	0	14.77	0	0	0	0	0	0	-49.63	-49.63
	Inverter Transformer	MV5-3 T	370237	4908851	2	0	0	56.1	56.1	1	7568.83	3.25	0	88.58	0	2.41	0	0	14.82	0	0	0	0	0	0	-49.75	-49.75
	Inverter Transformer	MV4-3 T	369234	4909397	2	0	0	56.1	56.1	1	7600.24	3.25	0	88.62	0	2.42	0	0	14.86	0	0	0	0	0	0	-49.83	-49.83
	Inverter Transformer	MV4-2 T	369267	4909397	2	0	0	56.1	56.1	1	7613.02	3.25	0	88.63	0	2.42	0	0	14.87	0	0	0	0	0	0	-49.86	-49.86
	Inverter Transformer	MV5-1 T	370015	4909142	2	0	0	56.1	56.1	1	7709.65	3.25	0	88.74	0	2.44	0	0	14.97	0	0	0	0	0	0	-50.09	-50.09
	Line Reactor	NGR	369421	4908787.5	5	0	0	45.4	45.4	1	7121.61	5.25	0	88.05	0	3.22	1.37	0.11	2.91	0	0	0	0	0	0	-50.19	-50.19
Limit. Valu	0	0																								
Level D/N:	27.1578	27.1578																								

Receiver: Existing Noise Receptor
ID: G-27
X: 366372.2
Y: 4902339.1
Z: 4.5
Ground: 0

ISO	Description	ID	X	Y	Z	Ground	ReflOrd	LxT	LxN	L/A	Dist.	hm	Freq	Adiv	K0b	Agr	Abar	z	Aatm	Afol	Ahous	Cmet	CmetN	Dc	RL	LtotT	LtotN
	Sol_Luce Substation	S_Substation	369426	4908792	3.5	0	0	112.1	112.1	1	7139.02	5.25	0	88.07	0	1.41	2.42	0.32	10.88	0	0	0	0	0	0	9.3	9.3
	Inverters	G_Inv9	366750.9	4902691.8	2	0	0	87.7	87.7	1	517.51	3.25	0	65.28	0	2.4	0	0	0.79	0	0	0	0	0	0	19.2	19.2
	Inverters	G_Inv7	366694.6	4902824.7	2	0	0	87.7	87.7	1	582.89	3.25	0	66.31	0	2.4	0	0	0.88	0	0	0	0	0	0	18.07	18.07
	Inverters	G_Inv10	366900.7	4902704.8	2	0	0	87.7	87.7	1	642.69	3.25	0	67.16	0	2.4	0	0	0.96	0	0	0	0	0	0	17.14	17.14
	Inverter	MV1-15	365315	4904994	2	0	0	100.3	100.3	1	2857.65	3.25	0	80.12	0	0.33	0	0	15.12	0	0	0	0	0	0	4.74	4.74
	Inverters	G_Inv5	366638.5	4902958.1	2	0	0	87.7	87.7	1	673.86	3.25	0	67.57	0	2.4	0	0	1	0	0	0	0	0	0	16.68	16.68
	Inverters	G_Inv8	366844.5	4902838.5	2	0	0	87.7	87.7	1	687.37	3.25	0	67.74	0	2.41	0	0	1.02	0	0	0	0	0	0	16.49	16.49
	Gardiner Substation	G_Sub	366586.3	4903349.9	2.5	0	0	90.8	90.8	1	1033.23	3.5	0	71.28	0	-0.37	0	0	2.59	0	0	0	0	0	0	17.27	17.27
	Inverters	G_Inv6	366788.5	4902972	2	0	0	87.7	87.7	1	757.54	3.25	0	68.59	0	2.41	0	0	1.11	0	0	0	0	0	0	15.55	15.55
	Inverter	MV1-12	365038	4905386	2	0	0	100.3	100.3	1	3326.21	3.25	0	81.44	0	0.42	0	0	15.94	0	0	0	0	0	0	2.51	2.51
	Inverters	G_Inv3	366583.7	4903091.4	2	0	0	87.7	87.7	1	781.47	3.25	0	68.86	0	2.42	0	0	1.14	0	0	0	0	0	0	15.24	15.24
	Inverter	MV1-11	364655	4905414	2	0	0	100.3	100.3	1	3521.9	3.25	0	81.94	0	0.45	0	0	16.27	0	0	0	0	0	0	1.65	1.65
	Inverters	G_Inv4	366732.8	4903105	2	0	0	87.7	87.7	1	846.55	3.25	0	69.55	0	2.43	0	0	1.23	0	0	0	0	0	0	14.45	14.45
	Inverter	MV1-8	364788	4905647	2	0	0	100.3	100.3	1	3667.68	3.25	0	82.29	0	0.48	0	0	16.51	0	0	0	0	0	0	1.04	1.04
	Inverter	MV1-9	364561	4905646	2	0	0	100.3	100.3	1	3770.42	3.25	0	82.53	0	0.49	0	0	16.68	0	0	0	0	0	0	0.61	0.61
	Inverters	G_Inv1	366526.4	4903225.8	2	0	0	87.7	87.7	1	900.01	3.25	0	70.08	0	2.43	0	0	1.3	0	0	0	0	0	0	13.84	13.84
	Inverter	MV1-4	364815	4905918	2	0	0	100.3	100.3	1	3903	3.25	0	82.83	0	0.51	0	0	16.89	0	0	0	0	0	0	0.08	0.08
	Inverter	MV1-5	364671	4905892	2	0	0	100.3	100.3	1	3939.19	3.25	0	82.91	0	0.52	0	0	16.95	0	0	0	0	0	0	-0.07	-0.07
	Inverter	MV1-6	364477	4905835	2	0	0	100.3	100.3	1	3976.57	3.25	0	82.99	0	0.52	0	0	17.01	0	0	0	0	0	0	-0.21	-0.21
	Inverter	MV1-2	364753	4906063	2	0	0	100.3	100.3	1	4060.7	3.25	0	83.17	0	0.54	0	0	17.15	0	0	0	0	0	0	-0.54	-0.54
	Inverters	G_Inv2	366676.9	4903239.1	2	0	0	87.7	87.7	1	950.18	3.25	0	70.56	0	2.44	0	0	1.36	0	0	0	0	0	0	13.3	13.3
	Inverter	MV1-1	364715	4906166	2	0	0	100.3	100.3	1	4170.31	3.25	0	83.4	0	0.55	0	0	17.32	0	0	0	0	0	0	-0.96	-0.96
	Inverter	MV1-14	365163	4905049	2	0	0	97.3	97.3	1	2967.44	3.25	0	80.45	0	0.36	0	0	15.31	0	0	0	0	0	0	1.19	1.19
	Inverter	MV2-3	365820	4906641	2	0	0	100.3	100.3	1	4337.2	3.25	0	83.74	0	0.57	0	0	17.58	0	0	0	0	0	0	-1.58	-1.58
	Inverter	MV2-4	365586	4906624	2	0	0	100.3	100.3	1	4356.43	3.25	0	83.78	0	0.57	0	0	17.61	0	0	0	0	0	0	-1.65	-1.65
	Inverter	MV1-13	364731	4905241	2	0	0	97.3	97.3	1	3333.85	3.25	0	81.46	0	0.42	0	0	15.95	0	0	0	0	0	0	-0.52	-0.52
	Inverter	MV1-10	365004	4905564	2	0	0	97.3	97.3	1	3503.14	3.25	0	81.89	0	0.45	0	0	16.24	0	0	0	0	0	0	-1.27	-1.27
	Inverter	MV3-18	367752	4907412	2	0	0	100.3	100.3	1	5257.2	3.25	0	85.42	0	0.66	0	0	18.95	0	0	0	0	0	0	-4.72	-4.72
	Inverter	MV1-7	364925	4905782	2	0	0	97.3	97.3	1	3734.7	3.25	0	82.45	0	0.49	0	0	16.62	0	0	0	0	0	0	-2.24	-2.24
	Inverter	MV3-21	368478	4907206	2	0	0	100.3	100.3	1	5302.93	3.25	0	85.49	0	0.67	0	0	19.02	0	0	0	0	0	0	-4.87	-4.87
	Inverter	MV3-19	368357	4907347	2	0	0	100.3	100.3	1	5386.88	3.25	0	85.63	0	0.67	0	0	19.14	0	0	0	0	0	0	-5.13	-5.13
	Inverter	MV3-12	367668	4907594	2	0	0	100.3	100.3	1	5412.31	3.25	0	85.67	0	0.67	0	0	19.18	0	0	0	0	0	0	-5.21	-5.21
	Inverter	MV3-17	368178	4907472	2	0	0	100.3	100.3	1	5441.28	3.25	0	85.71	0	0.68	0	0	19.22	0	0	0	0	0	0	-5.3	-5.3
	Inverter	MV3-13	367963	4907577	2	0	0	100.3	100.3	1	5474.14	3.25	0	85.77	0	0.68	0	0	19.26	0	0	0	0	0	0	-5.4	-5.4
	Inverter	MV3-20	368689	4907317	2	0	0	100.3	100.3	1	5490.63	3.25	0	85.79	0	0.68	0	0	19.29	0	0	0	0	0	0	-5.45	-5.45
	Inverter	MV3-15	368357	4907477	2	0	0	100.3	100.3	1	5507.94	3.25	0	85.82	0	0.68	0	0	19.31	0	0	0	0	0	0	-5.5	-5.5
	Inverter	MV3-16	368514	4907475	2	0	0	100.3	100.3	1	5564.6	3.25	0	85.91	0	0.68	0	0	19.39	0	0	0	0	0	0	-5.67	-5.67
	Inverter	MV3-10	368167	4907669	2	0	0	100.3	100.3	1	5623.98	3.25	0	86	0	0.69	0	0	19.47	0	0	0	0	0	0	-5.85	-5.85
	Inverter	MV3-7	367945	4907754	2	0	0	100.3	100.3	1	5638.69	3.25	0	86.02	0	0.69	0	0	19.5	0	0	0	0	0	0	-5.9	-5.9
	Inverter	MV3-14	368684	4907498	2	0	0	100.3	100.3	1	5653.2	3.25	0	86.05	0	0.69	0	0	19.52	0	0	0	0	0	0	-5.94	-5.94
	Inverter	MV3-11	368346	4907662	2	0	0	100.3	100.3	1	5677.07	3.25	0	86.08	0	0.69	0	0	19.55	0	0	0	0	0	0	-6.01	-6.01
	Inverter	MV3-9	368512	4907703	2	0	0	100.3	100.3	1	5774.96	3.25	0	86.23	0	0.7	0	0	19.68	0	0	0	0	0	0	-6.3	-6.3
	Inverter	MV3-6	368162	4907834	2	0	0	100.3	100.3	1	5779.04	3.25	0	86.24	0	0.7	0	0	19.69	0	0	0	0	0	0	-6.31	-6.31
	Inverter	MV3-3	367939	4907927	2	0	0	100.3	100.3	1	5803.4	3.25	0	86.27	0	0.7	0	0	19.72	0	0	0	0	0	0	-6.38	-6.38
	Inverter	MV3-8	368680	4907712	2	0	0	100.3	100.3	1	5847.56	3.25	0	86.34	0	0.7	0	0	19.78	0	0	0	0	0	0	-6.51	-6.51
	Inverter	MV6-3	370207	4907140	2	0	0	100.3	100.3	1	6144.46	3.25	0	86.77	0	0.71	0	0	20.19	0	0	0	0	0	0	-7.36	-7.36
	Inverter	MV6-2	370085	4907339	2	0	0	100.3	100.3	1	6227.67	3.25	0	86.89	0	0.71	0	0	20.3	0	0	0	0	0	0	-7.59	-7.59
	Inverter	MV2-1	365842	4906816	2	0	0	97.3	97.3	1	4508.19	3.25	0	84.08	0	0.59	0	0	17.84	0	0	0	0	0	0	-5.2	-5.2
	Inverter	MV4-11	369264	4908855	2	0	0	100.3	100.3	1	7128.78	3.25	0	88.06	0	0.71	0	0	21.46	0	0	0	0	0	0	-9.91	-9.91
	Inverter	MV4-10	369312	4908858	2	0	0	100.3	100.3	1	7151.12	3.25	0	88.09	0	0.71	0	0	21.49	0	0	0	0	0	0	-9.97	-9.97
	Inverter	MV4-7	369035	4909001	2	0	0	100.3	100.3	1	7174.36	3.25	0	88.12	0	0.7	0	0	21.52	0	0	0	0	0	0	-10.02	-10.02

Inverter	MV4-8	369256	4909001	2	0	0	100.3	100.3	1	7259.29	3.25	0	88.22	0	0.7	0	0	21.62	0	0	0	0	0	0	-10.23	-10.23
Inverter	MV4-9	369289	4909001	2	0	0	100.3	100.3	1	7272.46	3.25	0	88.23	0	0.7	0	0	21.64	0	0	0	0	0	0	-10.26	-10.26
Inverter	MV5-5	370015	4908690	2	0	0	100.3	100.3	1	7321.47	3.25	0	88.29	0	0.7	0	0	21.7	0	0	0	0	0	0	-10.38	-10.38
Inverter	MV4-4	369027	4909199	2	0	0	100.3	100.3	1	7355.69	3.25	0	88.33	0	0.7	0	0	21.74	0	0	0	0	0	0	-10.46	-10.46
Inverter	MV4-6	369243	4909192	2	0	0	100.3	100.3	1	7429.92	3.25	0	88.42	0	0.69	0	0	21.83	0	0	0	0	0	0	-10.63	-10.63
Inverter	MV4-5	369289	4909199	2	0	0	100.3	100.3	1	7454.26	3.25	0	88.45	0	0.69	0	0	21.86	0	0	0	0	0	0	-10.69	-10.69
Inverter	MV5-2	370006	4908853	2	0	0	100.3	100.3	1	7458.91	3.25	0	88.45	0	0.69	0	0	21.86	0	0	0	0	0	0	-10.7	-10.7
Inverter	MV5-4	370324	4908707	2	0	0	100.3	100.3	1	7494.46	3.25	0	88.49	0	0.69	0	0	21.91	0	0	0	0	0	0	-10.78	-10.78
Inverter	MV4-1	369011	4909397	2	0	0	100.3	100.3	1	7535.07	3.25	0	88.54	0	0.69	0	0	21.96	0	0	0	0	0	0	-10.87	-10.87
Inverter	MV5-3	370231	4908851	2	0	0	100.3	100.3	1	7569.36	3.25	0	88.58	0	0.69	0	0	22	0	0	0	0	0	0	-10.95	-10.95
Inverter	MV4-3	369229	4909397	2	0	0	100.3	100.3	1	7614.15	3.25	0	88.63	0	0.68	0	0	22.05	0	0	0	0	0	0	-11.05	-11.05
Inverter	MV4-2	369272	4909397	2	0	0	100.3	100.3	1	7630.39	3.25	0	88.65	0	0.68	0	0	22.07	0	0	0	0	0	0	-11.09	-11.09
Inverter	MV5-1	370020	4909142	2	0	0	100.3	100.3	1	7719.19	3.25	0	88.75	0	0.68	0	0	22.18	0	0	0	0	0	0	-11.29	-11.29
Inverter	MV6-1	370235	4907364	2	0	0	97.3	97.3	1	6338.05	3.25	0	87.04	0	0.71	0	0	20.45	0	0	0	0	0	0	-10.89	-10.89
DSTATCOM - 10 MVAR #2	DSAT2	369403	4908757	2.5	0	0	96.6	96.6	1	7097.55	3.5	0	88.02	0	3.84	0	0	4.36	0	0	0	0	0	0	0.41	0.41
DSTATCOM - 10 MVAR #1	DSAT1	369437	4908757	2.5	0	0	96.6	96.6	1	7112.13	3.5	0	88.04	0	3.84	0	0	4.36	0	0	0	0	0	0	0.38	0.38
SubstationTransformer	W_ST	369711.17	4906112.3	2.5	0	0	92	92	1	5038.41	3.5	0	85.05	0	0.57	0	-0.11	8.67	0	0	0	0	0	0	-2.31	-2.31
Inverter	MV1-3	364440	4906039	2	0	0	89.1	89.1	1	4174.05	3.25	0	83.41	0	1.44	0	0	11.33	0	0	0	0	0	0	-7.12	-7.12
Inverter	MV2-2	365977	4906654	2	0	0	89.1	89.1	1	4332.96	3.25	0	83.74	0	1.47	0	0	11.55	0	0	0	0	0	0	-7.71	-7.71
Westbrook Inverter Enclosur	W_INV3	369508	4906164	2	0	0	89.1	89.1	1	4946.02	3.25	0	84.89	0	1.63	0	0	12.39	0	0	0	0	0	0	-9.84	-9.84
Westbrook Inverter Enclosur	W_INV2	369374	4906388	2	0	0	89.1	89.1	1	5040.28	3.25	0	85.05	0	1.65	0	0	12.52	0	0	0	0	0	0	-10.16	-10.16
Westbrook Inverter Enclosur	W_INV4	369673	4906164	2	0	0	89.1	89.1	1	5052.24	3.25	0	85.07	0	1.65	0	0	12.53	0	0	0	0	0	0	-10.2	-10.2
Westbrook Inverter Enclosur	W_INV7	369780	4906417	2	0	0	89.1	89.1	1	5314.36	3.25	0	85.51	0	1.72	0	0	12.88	0	0	0	0	0	0	-11.05	-11.05
Inverter	MV3-22	368656	4907142	2	0	0	89.1	89.1	1	5318.23	3.25	0	85.52	0	1.72	0	0	12.89	0	0	0	0	0	0	-11.06	-11.06
Westbrook Inverter Enclosur	W_INV5	369719	4906574	2	0	0	89.1	89.1	1	5397.73	3.25	0	85.64	0	1.74	0	0	12.99	0	0	0	0	0	0	-11.31	-11.31
Westbrook Inverter Enclosur	W_INV6	369875	4906578	2	0	0	89.1	89.1	1	5498.9	3.25	0	85.81	0	1.76	0	0	13.12	0	0	0	0	0	0	-11.63	-11.63
Inverter	MV3-5	368340	4907843	2	0	0	89.1	89.1	1	5845.1	3.25	0	86.34	0	1.85	0	0	13.57	0	0	0	0	0	0	-12.69	-12.69
Inverter	MV3-1	368156	4907976	2	0	0	89.1	89.1	1	5912.41	3.25	0	86.44	0	1.86	0	0	13.65	0	0	0	0	0	0	-12.89	-12.89
Inverter	MV3-4	368502	4907925	2	0	0	89.1	89.1	1	5978.15	3.25	0	86.53	0	1.88	0	0	13.73	0	0	0	0	0	0	-13.09	-13.09
Inverter	MV3-2	368671	4907928	2	0	0	89.1	89.1	1	6043.2	3.25	0	86.63	0	1.9	0	0	13.82	0	0	0	0	0	0	-13.28	-13.28
Fixed Reactor Bank 1	FRB1	369378	4908755	6	0	0	89.8	89.8	1	7085.1	5.25	0	88.01	0	-0.27	0	0	10.83	0	0	0	0	0	0	-8.79	-8.79
Fixed Reactor Bank 2	FRB2	369464	4908755	6	0	0	89.8	89.8	1	7122.01	5.25	0	88.05	0	-0.27	0	0	10.86	0	0	0	0	0	0	-8.87	-8.87
Inverter	MV4-15	369176	4908481	2	0	0	89.1	89.1	1	6751.61	3.25	0	87.59	0	2.07	0	0	14.69	0	0	0	0	0	0	-15.29	-15.29
Inverter	MV4-14	369176	4908507	2	0	0	89.1	89.1	1	6775.27	3.25	0	87.62	0	2.07	0	0	14.72	0	0	0	0	0	0	-15.35	-15.35
Inverter	MV4-13	369051	4908605	2	0	0	89.1	89.1	1	6814.51	3.25	0	87.67	0	2.08	0	0	14.76	0	0	0	0	0	0	-15.46	-15.46
Inverter	MV4-12	369043	4908803	2	0	0	89.1	89.1	1	6993.94	3.25	0	87.89	0	2.13	0	0	14.98	0	0	0	0	0	0	-15.94	-15.94
Inverter	MV5-6	369982	4908507	2	0	0	89.1	89.1	1	7146.58	3.25	0	88.08	0	2.16	0	0	15.16	0	0	0	0	0	0	-16.35	-16.35
Westbrook Inverter Enclosur	W_INV1	369409	4906578	2	0	0	86.1	86.1	1	5214.44	3.25	0	85.34	0	1.69	0	0	12.75	0	0	0	0	0	0	-13.73	-13.73
Inverter	MV6-4	370250	4906966	2	0	0	86.1	86.1	1	6037.01	3.25	0	86.62	0	1.89	0	0	13.81	0	0	0	0	0	0	-16.26	-16.26
Westbrook Inverter Transfor	W_INVTR1	369403	4906578	2	0	0	78.2	78.2	1	5210.95	3.25	0	85.34	0	-3.22	0	0	2.48	0	0	0	0	0	0	-6.36	-6.36
Westbrook Inverter Transfor	W_INVTR3	369514	4906164	2	0	0	77.3	77.3	1	4949.83	3.25	0	84.89	0	-3.17	0	0	2.4	0	0	0	0	0	0	-6.78	-6.78
Westbrook Inverter Transfor	W_INVTR2	369368	4906388	2	0	0	77.3	77.3	1	5036.71	3.25	0	85.04	0	-3.18	0	0	2.43	0	0	0	0	0	0	-6.94	-6.94
Westbrook Inverter Transfor	W_INVTR4	369679	4906164	2	0	0	77.3	77.3	1	5056.16	3.25	0	85.08	0	-3.19	0	0	2.43	0	0	0	0	0	0	-6.98	-6.98
Westbrook Inverter Transfor	W_INVTR7	369786	4906417	2	0	0	77.3	77.3	1	5318.21	3.25	0	85.52	0	-3.24	0	0	2.52	0	0	0	0	0	0	-7.45	-7.45
Westbrook Inverter Transfor	W_INVTR5	369725	4906574	2	0	0	77.3	77.3	1	5401.45	3.25	0	85.65	0	-3.26	0	0	2.55	0	0	0	0	0	0	-7.6	-7.6
Westbrook Inverter Transfor	W_INVTR6	369881	4906578	2	0	0	77.3	77.3	1	5502.72	3.25	0	85.81	0	-3.28	0	0	2.58	0	0	0	0	0	0	-7.78	-7.78
Inverter Transformer	MV1-14 T	365157	4905049	2	0	0	69.4	69.4	1	2969.89	3.25	0	80.45	0	2.5	0	0	5.86	0	0	0	0	0	0	-19.46	-19.46
Inverter Transformer	MV1-13 T	364725	4905241	2	0	0	69.4	69.4	1	3336.81	3.25	0	81.47	0	2.61	0	0	6.16	0	0	0	0	0	0	-20.88	-20.88
Inverter Transformer	MV1-10 T	365010	4905564	2	0	0	69.4	69.4	1	3500.8	3.25	0	81.88	0	2.65	0	0	6.29	0	0	0	0	0	0	-21.48	-21.48
Inverter Transformer	MV1-7 T	364919	4905782	2	0	0	69.4	69.4	1	3737.03	3.25	0	82.45	0	2.72	0	0	6.48	0	0	0	0	0	0	-22.29	-22.29
Inverter Transformer	MV2-1 T	365836	4906816	2	0	0	69.4	69.4	1	4508.9	3.25	0	84.08	0	2.91	0	0	7.05	0	0	0	0	0	0	-24.68	-24.68
Inverter Transformer	MV6-4 T	370244	4906966	2	0	0	69.4	69.4	1	6033.16	3.25	0	86.61	0	3.19	0	0	8.04	0	0	0	0	0	0	-28.49	-28.49
Inverter Transformer	MV6-1 T	370230	4907364	2	0	0	69.4	69.4	1	6335	3.25	0	87.03	0	3.24	0	0	8.22	0	0	0	0	0	0	-29.14	-29.14
Inverter Transformer	MV1-15 T	365309	4904994	2	0	0	56.1	56.1	1	2859.88	3.25	0	80.13	0	0.77	0	0	8.63	0	0	0	0	0	0	-33.47	-33.47
Inverter Transformer	MV1-12 T	365044	4905386	2	0	0	56.1	56.1	1	3323.81	3.25	0	81.43	0	0.97	0	0	9.41	0	0	0	0	0	0	-35.75	-35.75
Inverter Transformer	MV1-11 T	364649	4905414	2	0	0	56.1	56.1	1	3524.83	3.25	0	81.94	0	1.05	0	0	9.73	0	0	0	0	0	0	-36.66	-36.66
Inverter Transformer	MV1-8 T	364782	4905647	2	0	0	56.1	56.1	1	3670.28	3.25	0	82.29	0	1.11	0	0	9.95	0	0	0	0	0	0	-37.3	-37.3
Inverter Transformer	MV1-9 T	364555	4905646	2	0	0	56.1	56.1	1	3773.3	3.25	0	82.53	0	1.15	0	0	10.11	0	0	0	0	0	0	-37.74	-37.74
Inverter Transformer	MV1-4 T	364821	4905918	2	0	0	56.1	56.1	1	3900.61	3.25	0	82.82	0	1.2	0	0	10.31	0	0	0	0	0	0	-38.27	-38.27
Inverter Transformer	MV1-5 T	364676	4905892	2	0	0	56.1	56.1	1	3937.03	3.25	0	82.9	0	1.22	0	0	10.36	0	0	0	0	0	0	-38.42	-38.42
Inverter Transformer	MV1-6 T	364482	4905835	2	0	0	56.1	56.1	1	3974.19	3.25	0	82.98	0	1.23	0	0	10.42	0	0	0	0	0	0	-38.58	-38.58
Inverter Transformer	MV1-2 T	364759	4906063	2	0	0	56.1	56.1	1	4058.31	3.25	0	83.17	0	1.27	0	0	10.54	0	0	0	0	0	0	-38.92	-38.92
Inverter Transformer	MV1-1 T	364721	4906166	2	0	0	56.1	56.1	1	4167.93	3.25	0	83.4	0	1.31	0	0	10.7	0	0	0	0	0	0	-39.35	-39.35
Inverter Transformer	MV1-3 T	364435	4906039	2	0	0	56.1	56.1	1	4176.36	3.25	0	83.42	0	1.31	0	0	10.71	0	0	0	0	0	0	-39.39	-39.39
Inverter Transformer	MV2-2 T	365982	4906654	2	0	0	56.1	56.1	1	4332.51	3.25	0	83.73	0	1.38	0	0	10.94	0	0	0	0	0	0	-39.99	-39.99
Inverter Transformer	MV2-3 T	365814	4906641	2	0	0	56.1	56.1	1	4337.96	3.25	0	83.75	0	1.38	0	0	10.95	0	0	0	0	0	0	-40.01	-40.01
Inverter Transformer	MV2-4 T	365590	4906628	2	0	0	56.1	56.1	1	4359.65	3.25	0	83.79	0	1.39	0	0	10.98	0	0	0	0	0	0	-40.09	-40.09
Inverter Transformer	MV3-18 T	367757	4907412	2	0	0	56.1	56.1	1	5258.52	3.25	0	85.42	0	1.72	0	0	12.19	0	0	0	0	0	0	-43.27	-43.27
Inverter Transformer	MV3-21 T	368484	4907206	2	0	0	56.1	56.1	1	5305.32	3.25	0	85.49	0	1.73	0	0	12.25	0	0	0	0	0	0	-43.42	-43.42
Inverter Transformer	MV3-22 T	368661	4907142	2	0	0	56.1	56.1	1	5320.38	3.25	0	85.52	0	1.74	0	0	12.27	0	0	0	0	0	0	-43.47	-43.47
Inverter Transformer	MV3-19 T	368352	4907347	2	0	0	56.1	56.1	1	5385.04	3.25	0	85.62	0	1.76	0	0	12.35	0	0	0	0	0	0	-43.68	-43.68
Inverter Transformer	MV3-12 T	367674	4907594	2	0	0	56.1	56.1	1	5413.75	3.25	0	85.67	0	1.77	0	0	12.39	0	0	0	0	0	0	-43.77	-43.77
Inverter Transformer	MV3-17 T	368183	4907472	2	0	0	56.1	56.1	1	5442.95	3.25	0	85.72	0	1.78	0	0	12.42	0	0	0	0	0	0	-43.86	-43.86
Inverter Transformer	MV3-13 T	367958	4907577	2	0	0	56.1	56.1	1	5472.69	3.25	0	85.76	0	1.79	0	0	12.46	0	0	0	0	0	0	-43.96	-43.96

	Inverter Transformer	MV3-20 T	368683	4907317	2	0	0	56.1	56.1	1	5488.1	3.25	0	85.79	0	1.8	0	0	12.48	0	0	0	0	0	0	-44.01	-44.01
	Inverter Transformer	MV3-15 T	368351	4907477	2	0	0	56.1	56.1	1	5505.79	3.25	0	85.82	0	1.8	0	0	12.5	0	0	0	0	0	0	-44.06	-44.06
	Inverter Transformer	MV3-16 T	368509	4907475	2	0	0	56.1	56.1	1	5562.68	3.25	0	85.91	0	1.82	0	0	12.57	0	0	0	0	0	0	-44.24	-44.24
	Inverter Transformer	MV3-10 T	368162	4907669	2	0	0	56.1	56.1	1	5622.39	3.25	0	86	0	1.84	0	0	12.65	0	0	0	0	0	0	-44.43	-44.43
	Inverter Transformer	MV3-7 T	367951	4907754	2	0	0	56.1	56.1	1	5640.37	3.25	0	86.03	0	1.85	0	0	12.67	0	0	0	0	0	0	-44.48	-44.48
	Inverter Transformer	MV3-14 T	368678	4907498	2	0	0	56.1	56.1	1	5650.75	3.25	0	86.04	0	1.85	0	0	12.68	0	0	0	0	0	0	-44.52	-44.52
	Inverter Transformer	MV3-11 T	368340	4907662	2	0	0	56.1	56.1	1	5674.99	3.25	0	86.08	0	1.86	0	0	12.71	0	0	0	0	0	0	-44.59	-44.59
	Inverter Transformer	MV3-9 T	368517	4907703	2	0	0	56.1	56.1	1	5776.82	3.25	0	86.23	0	1.89	0	0	12.84	0	0	0	0	0	0	-44.9	-44.9
	Inverter Transformer	MV3-6 T	368156	4907834	2	0	0	56.1	56.1	1	5777.19	3.25	0	86.23	0	1.89	0	0	12.84	0	0	0	0	0	0	-44.9	-44.9
	Inverter Transformer	MV3-3 T	367944	4907927	2	0	0	56.1	56.1	1	5804.76	3.25	0	86.28	0	1.9	0	0	12.87	0	0	0	0	0	0	-44.99	-44.99
	Inverter Transformer	MV3-5 T	368335	4907843	2	0	0	56.1	56.1	1	5843.42	3.25	0	86.33	0	1.91	0	0	12.92	0	0	0	0	0	0	-45.11	-45.11
	Inverter Transformer	MV3-8 T	368685	4907712	2	0	0	56.1	56.1	1	5849.54	3.25	0	86.34	0	1.92	0	0	12.92	0	0	0	0	0	0	-45.12	-45.12
	Inverter Transformer	MV3-1 T	368150	4907976	2	0	0	56.1	56.1	1	5910.6	3.25	0	86.43	0	1.94	0	0	13	0	0	0	0	0	0	-45.31	-45.31
	Inverter Transformer	MV3-4 T	368507	4907925	2	0	0	56.1	56.1	1	5979.94	3.25	0	86.53	0	1.96	0	0	13.08	0	0	0	0	0	0	-45.51	-45.51
	Inverter Transformer	MV3-2 T	368677	4907928	2	0	0	56.1	56.1	1	6045.49	3.25	0	86.63	0	1.98	0	0	13.16	0	0	0	0	0	0	-45.71	-45.71
	Inverter Transformer	MV6-3 T	370202	4907140	2	0	0	56.1	56.1	1	6141.34	3.25	0	86.77	0	2.01	0	0	13.27	0	0	0	0	0	0	-45.98	-45.98
	Inverter Transformer	MV6-2 T	370091	4907339	2	0	0	56.1	56.1	1	6231.25	3.25	0	86.89	0	2.04	0	0	13.37	0	0	0	0	0	0	-46.24	-46.24
	Inverter Transformer	MV4-15 T	369170	4908481	2	0	0	56.1	56.1	1	6749.12	3.25	0	87.58	0	2.19	0	0	13.96	0	0	0	0	0	0	-47.67	-47.67
	Inverter Transformer	MV4-14 T	369182	4908507	2	0	0	56.1	56.1	1	6777.76	3.25	0	87.62	0	2.2	0	0	13.99	0	0	0	0	0	0	-47.75	-47.75
	Inverter Transformer	MV4-13 T	369057	4908605	2	0	0	56.1	56.1	1	6816.87	3.25	0	87.67	0	2.21	0	0	14.03	0	0	0	0	0	0	-47.85	-47.85
	Inverter Transformer	MV4-12 T	369049	4908803	2	0	0	56.1	56.1	1	6996.23	3.25	0	87.9	0	2.26	0	0	14.23	0	0	0	0	0	0	-48.32	-48.32
	Inverter Transformer	MV4-11 T	369269	4908855	2	0	0	56.1	56.1	1	7130.81	3.25	0	88.06	0	2.29	0	0	14.37	0	0	0	0	0	0	-48.67	-48.67
	Inverter Transformer	MV4-10 T	369307	4908858	2	0	0	56.1	56.1	1	7149.06	3.25	0	88.08	0	2.3	0	0	14.39	0	0	0	0	0	0	-48.71	-48.71
	Inverter Transformer	MV5-6 T	369987	4908507	2	0	0	56.1	56.1	1	7149.11	3.25	0	88.09	0	2.3	0	0	14.39	0	0	0	0	0	0	-48.71	-48.71
	Inverter Transformer	MV4-7 T	369040	4909001	2	0	0	56.1	56.1	1	7176.22	3.25	0	88.12	0	2.31	0	0	14.42	0	0	0	0	0	0	-48.78	-48.78
	Inverter Transformer	MV4-8 T	369262	4909001	2	0	0	56.1	56.1	1	7261.67	3.25	0	88.22	0	2.33	0	0	14.51	0	0	0	0	0	0	-49	-49
	Inverter Transformer	MV4-9 T	369284	4909001	2	0	0	56.1	56.1	1	7270.45	3.25	0	88.23	0	2.33	0	0	14.52	0	0	0	0	0	0	-49.02	-49.02
	Inverter Transformer	MV5-5 T	370021	4908690	2	0	0	56.1	56.1	1	7324.46	3.25	0	88.3	0	2.35	0	0	14.57	0	0	0	0	0	0	-49.16	-49.16
	Inverter Transformer	MV4-4 T	369033	4909199	2	0	0	56.1	56.1	1	7357.86	3.25	0	88.34	0	2.35	0	0	14.61	0	0	0	0	0	0	-49.24	-49.24
	Inverter Transformer	MV4-6 T	369249	4909192	2	0	0	56.1	56.1	1	7432.24	3.25	0	88.42	0	2.37	0	0	14.68	0	0	0	0	0	0	-49.42	-49.42
	Inverter Transformer	MV4-5 T	369283	4909199	2	0	0	56.1	56.1	1	7451.91	3.25	0	88.45	0	2.38	0	0	14.7	0	0	0	0	0	0	-49.47	-49.47
	Inverter Transformer	MV5-2 T	370011	4908853	2	0	0	56.1	56.1	1	7461.35	3.25	0	88.46	0	2.38	0	0	14.71	0	0	0	0	0	0	-49.49	-49.49
	Inverter Transformer	MV5-4 T	370330	4908707	2	0	0	56.1	56.1	1	7497.62	3.25	0	88.5	0	2.39	0	0	14.75	0	0	0	0	0	0	-49.58	-49.58
	Inverter Transformer	MV4-1 T	369017	4909397	2	0	0	56.1	56.1	1	7537.17	3.25	0	88.54	0	2.4	0	0	14.79	0	0	0	0	0	0	-49.68	-49.68
	Inverter Transformer	MV5-3 T	370237	4908851	2	0	0	56.1	56.1	1	7572.42	3.25	0	88.58	0	2.41	0	0	14.83	0	0	0	0	0	0	-49.76	-49.76
	Inverter Transformer	MV4-3 T	369234	4909397	2	0	0	56.1	56.1	1	7616.03	3.25	0	88.63	0	2.42	0	0	14.87	0	0	0	0	0	0	-49.87	-49.87
	Inverter Transformer	MV4-2 T	369267	4909397	2	0	0	56.1	56.1	1	7628.49	3.25	0	88.65	0	2.42	0	0	14.89	0	0	0	0	0	0	-49.9	-49.9
	Inverter Transformer	MV5-1 T	370015	4909142	2	0	0	56.1	56.1	1	7716.83	3.25	0	88.75	0	2.44	0	0	14.97	0	0	0	0	0	0	-50.11	-50.11
	Line Reactor	NGR	369421	4908787.5	5	0	0	45.4	45.4	1	7132.81	5.25	0	88.07	0	3.22	1.37	0.11	2.91	0	0	0	0	0	0	-50.21	-50.21
Limit. Valu	0	0																								
Level D/N:	27.2069	27.2069																								

Receiver: Existing Noise Receptor
ID: G-28
X: 365968.2
Y: 4902982.1
Z: 4.5
Ground: 0

ISO	Description	ID	X	Y	Z	Ground	ReflOrd	LxT	LxN	L/A	Dist.	hm	Freq	Adiv	K0b	Agr	Abar	z	Aatm	Afol	Ahous	Cmet	CmetN	Dc	RL	LtotT	LtotN
	Sol_Luce Substation	S_Substation	369426	4908792	3.5	0	0	112.1	112.1	1	6761.01	5.25	0	87.6	0	1.33	2.49	0.3	10.52	0	0	0	0	0	0	10.14	10.14
	Inverter	MV1-15	365315	4904994	2	0	0	100.3	100.3	1	2115.28	3.25	0	77.51	0	0.16	0	0	13.7	0	0	0	0	0	0	8.94	8.94
	Gardiner Substation	G_Sub	366586.3	4903349.9	2.5	0	0	90.8	90.8	1	719.26	3.5	0	68.14	0	-0.4	0	0	1.93	0	0	0	0	0	0	21.11	21.11
	Inverter	MV1-12	365038	4905386	2	0	0	100.3	100.3	1	2577.6	3.25	0	79.22	0	0.27	0	0	14.6	0	0	0	0	0	0	6.21	6.21
	Inverters	G_Inv1	366526.4	4903225.8	2	0	0	87.7	87.7	1	609.08	3.25	0	66.69	0	2.4	0	0	0.91	0	0	0	0	0	0	17.65	17.65
	Inverters	G_Inv3	366583.7	4903091.4	2	0	0	87.7	87.7	1	625.13	3.25	0	66.92	0	2.4	0	0	0.94	0	0	0	0	0	0	17.41	17.41
	Inverter	MV1-11	364655	4905414	2	0	0	100.3	100.3	1	2763.81	3.25	0	79.83	0	0.31	0	0	14.95	0	0	0	0	0	0	5.22	5.22
	Inverters	G_Inv5	366638.5	4902958.1	2	0	0	87.7	87.7	1	670.73	3.25	0	67.53	0	2.4	0	0	1	0	0	0	0	0	0	16.73	16.73
	Inverter	MV1-8	364788	4905647	2	0	0	100.3	100.3	1	2914.54	3.25	0	80.29	0	0.35	0	0	15.22	0	0	0	0	0	0	4.45	4.45
	Inverter	MV1-9	364561	4905646	2	0	0	100.3	100.3	1	3012.74	3.25	0	80.58	0	0.36	0	0	15.39	0	0	0	0	0	0	3.97	3.97
	Inverter	MV1-14	365163	4905049	2	0	0	97.3	97.3	1	2218.2	3.25	0	77.92	0	0.19	0	0	13.91	0	0	0	0	0	0	5.29	5.29
	Inverter	MV1-4	364815	4905918	2	0	0	100.3	100.3	1	3154.26	3.25	0	80.98	0	0.39	0	0	15.64	0	0	0	0	0	0	3.3	3.3
	Inverter	MV1-5	364671	4905892	2	0	0	100.3	100.3	1	3185.95	3.25	0	81.06	0	0.4	0	0	15.7	0	0	0	0	0	0	3.15	3.15
	Inverters	G_Inv7	366694.6	4902824.7	2	0	0	87.7	87.7	1	743.26	3.25	0	68.42	0	2.41	0	0	1.09	0	0	0	0	0	0	15.73	15.73
	Inverter	MV1-6	364477	4905835	2	0	0	100.3	100.3	1	3219.12	3.25	0	81.15	0	0.4	0	0	15.75	0	0	0	0	0	0	3	3
	Inverters	G_Inv2	366676.9	4903239.1	2	0	0	87.7	87.7	1	753.86	3.25	0	68.55	0	2.41	0	0	1.11	0	0	0	0	0	0	15.59	15.59
	Inverter	MV1-2	364753	4906063	2	0	0	100.3	100.3	1	3311.9	3.25	0	81.4	0	0.42	0	0	15.91	0	0	0	0	0	0	2.58	2.58
	Inverters	G_Inv4	366732.8	4903105	2	0	0	87.7	87.7	1	774.42	3.25	0	68.78	0	2.42	0	0	1.14	0	0	0	0	0	0	15.33	15.33
	Inverter	MV1-1	364715	4906166	2	0	0	100.3	100.3	1	3421.66	3.25	0	81.68	0	0.44	0	0	16.1	0	0	0	0	0	0	2.09	2.09
	Inverters	G_Inv6	366788.5	4902972	2	0	0	87.7	87.7	1	820.37	3.25	0	69.28	0	2.42	0	0	1.2	0	0	0	0	0	0	14.76	14.76
	Inverters	G_Inv9	366750.9	4902691.8	2	0	0	87.7	87.7	1	834.81	3.25	0	69.43	0	2.43	0	0	1.21	0	0	0	0	0	0	14.59	14.59
	Inverter	MV1-13	364731	4905241	2	0	0	97.3	97.3	1	2575.52	3.25	0	79.22	0	0.27	0	0	14.6	0	0	0	0	0	0	3.22	3.22
	Inverter	MV2-4	365586	4906624	2	0	0	100.3	100.3	1	3661.9	3.25	0	82.27	0	0.48	0	0	16.5	0	0	0	0	0	0	1.06	1.06
	Inverter	MV2-3	365820	4906641	2	0	0	100.3	100.3	1	3661.9	3.25	0	82.27	0	0.48	0	0	16.5	0	0	0	0	0	0	1.06	1.06

Inverters	G_Inv8	366844.5	4902838.5	2	0	0	87.7	87.7	1	887.99	3.25	0	69.97	0	2.43	0	0	1.28	0	0	0	0	0	0	13.98	13.98
Inverter	MV1-10	365004	4905564	2	0	0	97.3	97.3	1	2756.07	3.25	0	79.81	0	0.31	0	0	14.93	0	0	0	0	0	0	2.26	2.26
Inverters	G_Inv10	366900.7	4902704.8	2	0	0	87.7	87.7	1	972.86	3.25	0	70.76	0	2.45	0	0	1.39	0	0	0	0	0	0	13.06	13.06
Inverter	MV1-7	364925	4905782	2	0	0	97.3	97.3	1	2987.93	3.25	0	80.51	0	0.36	0	0	15.35	0	0	0	0	0	0	1.09	1.09
Inverter	MV3-18	367752	4907412	2	0	0	100.3	100.3	1	4775.56	3.25	0	84.58	0	0.62	0	0	18.25	0	0	0	0	0	0	-3.14	-3.14
Inverter	MV3-21	368478	4907206	2	0	0	100.3	100.3	1	4913.29	3.25	0	84.83	0	0.63	0	0	18.45	0	0	0	0	0	0	-3.6	-3.6
Inverter	MV3-12	367668	4907594	2	0	0	100.3	100.3	1	4915.18	3.25	0	84.83	0	0.63	0	0	18.46	0	0	0	0	0	0	-3.61	-3.61
Inverter	MV3-19	368357	4907347	2	0	0	100.3	100.3	1	4975.81	3.25	0	84.94	0	0.64	0	0	18.54	0	0	0	0	0	0	-3.81	-3.81
Inverter	MV3-17	368178	4907472	2	0	0	100.3	100.3	1	5004.24	3.25	0	84.99	0	0.64	0	0	18.59	0	0	0	0	0	0	-3.9	-3.9
Inverter	MV3-13	367963	4907577	2	0	0	100.3	100.3	1	5009.23	3.25	0	85	0	0.64	0	0	18.59	0	0	0	0	0	0	-3.92	-3.92
Inverter	MV3-15	368357	4907477	2	0	0	100.3	100.3	1	5090.24	3.25	0	85.13	0	0.65	0	0	18.71	0	0	0	0	0	0	-4.19	-4.19
Inverter	MV3-20	368689	4907317	2	0	0	100.3	100.3	1	5118.02	3.25	0	85.18	0	0.65	0	0	18.75	0	0	0	0	0	0	-4.28	-4.28
Inverter	MV3-16	368514	4907475	2	0	0	100.3	100.3	1	5164.03	3.25	0	85.26	0	0.66	0	0	18.82	0	0	0	0	0	0	-4.42	-4.42
Inverter	MV3-7	367945	4907754	2	0	0	100.3	100.3	1	5165.15	3.25	0	85.26	0	0.66	0	0	18.82	0	0	0	0	0	0	-4.43	-4.43
Inverter	MV3-10	368167	4907669	2	0	0	100.3	100.3	1	5177.04	3.25	0	85.28	0	0.66	0	0	18.84	0	0	0	0	0	0	-4.47	-4.47
Inverter	MV3-11	368346	4907662	2	0	0	100.3	100.3	1	5249.32	3.25	0	85.4	0	0.66	0	0	18.94	0	0	0	0	0	0	-4.7	-4.7
Inverter	MV3-14	368684	4907498	2	0	0	100.3	100.3	1	5269.62	3.25	0	85.44	0	0.66	0	0	18.97	0	0	0	0	0	0	-4.76	-4.76
Inverter	MV3-3	367939	4907927	2	0	0	100.3	100.3	1	5323.17	3.25	0	85.52	0	0.67	0	0	19.05	0	0	0	0	0	0	-4.93	-4.93
Inverter	MV3-6	368162	4907834	2	0	0	100.3	100.3	1	5324.82	3.25	0	85.53	0	0.67	0	0	19.05	0	0	0	0	0	0	-4.93	-4.93
Inverter	MV3-9	368512	4907703	2	0	0	100.3	100.3	1	5362.63	3.25	0	85.59	0	0.67	0	0	19.11	0	0	0	0	0	0	-5.05	-5.05
Inverter	MV2-1	365842	4906816	2	0	0	97.3	97.3	1	3835.98	3.25	0	82.68	0	0.5	0	0	16.78	0	0	0	0	0	0	-2.65	-2.65
Inverter	MV3-8	368680	4907712	2	0	0	100.3	100.3	1	5452.14	3.25	0	85.73	0	0.68	0	0	19.23	0	0	0	0	0	0	-5.33	-5.33
Inverter	MV6-3	370207	4907140	2	0	0	100.3	100.3	1	5937.64	3.25	0	86.47	0	0.7	0	0	19.91	0	0	0	0	0	0	-6.77	-6.77
Inverter	MV6-2	370085	4907339	2	0	0	100.3	100.3	1	5994.22	3.25	0	86.55	0	0.7	0	0	19.99	0	0	0	0	0	0	-6.93	-6.93
Inverter	MV4-11	369264	4908855	2	0	0	100.3	100.3	1	6734.48	3.25	0	87.57	0	0.71	0	0	20.96	0	0	0	0	0	0	-8.93	-8.93
Inverter	MV4-7	369035	4909001	2	0	0	100.3	100.3	1	6755.18	3.25	0	87.59	0	0.71	0	0	20.99	0	0	0	0	0	0	-8.98	-8.98
Inverter	MV4-10	369312	4908858	2	0	0	100.3	100.3	1	6760.71	3.25	0	87.6	0	0.71	0	0	21	0	0	0	0	0	0	-9	-9
Inverter	MV4-8	369256	4909001	2	0	0	100.3	100.3	1	6858.34	3.25	0	87.72	0	0.71	0	0	21.12	0	0	0	0	0	0	-9.25	-9.25
Inverter	MV4-9	369289	4909001	2	0	0	100.3	100.3	1	6874.22	3.25	0	87.74	0	0.71	0	0	21.14	0	0	0	0	0	0	-9.29	-9.29
Inverter	MV4-4	369027	4909199	2	0	0	100.3	100.3	1	6928.64	3.25	0	87.81	0	0.71	0	0	21.21	0	0	0	0	0	0	-9.42	-9.42
Inverter	MV5-5	370015	4908690	2	0	0	100.3	100.3	1	6996.91	3.25	0	87.9	0	0.71	0	0	21.3	0	0	0	0	0	0	-9.59	-9.59
Inverter	MV4-6	369243	4909192	2	0	0	100.3	100.3	1	7020.48	3.25	0	87.93	0	0.71	0	0	21.32	0	0	0	0	0	0	-9.65	-9.65
Inverter	MV4-5	369289	4909199	2	0	0	100.3	100.3	1	7048.23	3.25	0	87.96	0	0.71	0	0	21.36	0	0	0	0	0	0	-9.72	-9.72
Inverter	MV4-1	369011	4909397	2	0	0	100.3	100.3	1	7099.97	3.25	0	88.03	0	0.71	0	0	21.42	0	0	0	0	0	0	-9.84	-9.84
Inverter	MV5-2	370006	4908853	2	0	0	100.3	100.3	1	7125.4	3.25	0	88.06	0	0.71	0	0	21.46	0	0	0	0	0	0	-9.91	-9.91
Inverter	MV5-4	370324	4908707	2	0	0	100.3	100.3	1	7193.57	3.25	0	88.14	0	0.7	0	0	21.54	0	0	0	0	0	0	-10.07	-10.07
Inverter	MV4-3	369229	4909397	2	0	0	100.3	100.3	1	7196.09	3.25	0	88.14	0	0.7	0	0	21.54	0	0	0	0	0	0	-10.08	-10.08
Inverter	MV4-2	369272	4909397	2	0	0	100.3	100.3	1	7215.68	3.25	0	88.17	0	0.7	0	0	21.57	0	0	0	0	0	0	-10.12	-10.12
Inverter	MV5-3	370231	4908851	2	0	0	100.3	100.3	1	7253.65	3.25	0	88.21	0	0.7	0	0	21.61	0	0	0	0	0	0	-10.21	-10.21
Inverter	MV5-1	370020	4909142	2	0	0	100.3	100.3	1	7373.02	3.25	0	88.35	0	0.7	0	0	21.76	0	0	0	0	0	0	-10.5	-10.5
Inverter	MV6-1	370235	4907364	2	0	0	97.3	97.3	1	6116.1	3.25	0	86.73	0	0.71	0	0	20.15	0	0	0	0	0	0	-10.28	-10.28
DSTATCOM - 10 MVAR #2	DSAT2	369403	4908757	2.5	0	0	96.6	96.6	1	6719.18	3.5	0	87.55	0	3.82	0	0	4.18	0	0	0	0	0	0	1.08	1.08
DSTATCOM - 10 MVAR #1	DSAT1	369437	4908757	2.5	0	0	96.6	96.6	1	6736.62	3.5	0	87.57	0	3.82	0	0	4.19	0	0	0	0	0	0	1.05	1.05
Inverter	MV1-3	364440	4906039	2	0	0	89.1	89.1	1	3417.61	3.25	0	81.67	0	1.25	0	0	10.24	0	0	0	0	0	0	-4.11	-4.11
SubstationTransformer	W_ST	369711.17	4906112.3	2.5	0	0	92	92	1	4879.32	4.25	0	84.77	0	1.6	2.36	0.23	8.48	0	0	0	0	0	0	-5.23	-5.23
Inverter	MV2-2	365977	4906654	2	0	0	89.1	89.1	1	3671.91	3.25	0	82.3	0	1.31	0	0	10.61	0	0	0	0	0	0	-5.16	-5.16
Westbrook Inverter Enclosur	W_INV3	369508	4906164	2	0	0	89.1	89.1	1	4759.69	3.25	0	84.55	0	1.58	0	0	12.14	0	0	0	0	0	0	-9.21	-9.21
Westbrook Inverter Enclosur	W_INV2	369374	4906388	2	0	0	89.1	89.1	1	4816.6	3.25	0	84.65	0	1.59	0	0	12.22	0	0	0	0	0	0	-9.41	-9.41
Westbrook Inverter Enclosur	W_INV4	369673	4906164	2	0	0	89.1	89.1	1	4883.65	3.25	0	84.77	0	1.61	0	0	12.31	0	0	0	0	0	0	-9.64	-9.64
Inverter	MV3-22	368656	4907142	2	0	0	89.1	89.1	1	4952.68	3.25	0	84.9	0	1.63	0	0	12.4	0	0	0	0	0	0	-9.87	-9.87
Westbrook Inverter Enclosur	W_INV7	369780	4906417	2	0	0	89.1	89.1	1	5131.12	3.25	0	85.2	0	1.67	0	0	12.64	0	0	0	0	0	0	-10.46	-10.46
Westbrook Inverter Enclosur	W_INV5	369719	4906574	2	0	0	89.1	89.1	1	5193.29	3.25	0	85.31	0	1.69	0	0	12.72	0	0	0	0	0	0	-10.66	-10.66
Westbrook Inverter Enclosur	W_INV6	369875	4906578	2	0	0	89.1	89.1	1	5309.76	3.25	0	85.5	0	1.72	0	0	12.87	0	0	0	0	0	0	-11.03	-11.03
Inverter	MV3-5	368340	4907843	2	0	0	89.1	89.1	1	5408.68	3.25	0	85.66	0	1.74	0	0	13	0	0	0	0	0	0	-11.35	-11.35
Inverter	MV3-1	368156	4907976	2	0	0	89.1	89.1	1	5452.11	3.25	0	85.73	0	1.75	0	0	13.06	0	0	0	0	0	0	-11.49	-11.49
Inverter	MV3-4	368502	4907925	2	0	0	89.1	89.1	1	5554.49	3.25	0	85.89	0	1.78	0	0	13.19	0	0	0	0	0	0	-11.8	-11.8
Inverter	MV3-2	368671	4907928	2	0	0	89.1	89.1	1	5636.23	3.25	0	86.02	0	1.8	0	0	13.3	0	0	0	0	0	0	-12.06	-12.06
Fixed Reactor Bank 1	FRB1	369378	4908755	6	0	0	89.8	89.8	1	6704.71	5.25	0	87.53	0	-0.32	0	0	10.46	0	0	0	0	0	0	-7.89	-7.89
Fixed Reactor Bank 2	FRB2	369464	4908755	6	0	0	89.8	89.8	1	6748.85	5.25	0	87.58	0	-0.32	0	0	10.51	0	0	0	0	0	0	-8	-8
Inverter	MV4-15	369176	4908481	2	0	0	89.1	89.1	1	6366.15	3.25	0	87.08	0	1.98	0	0	14.22	0	0	0	0	0	0	-14.21	-14.21
Inverter	MV4-14	369176	4908507	2	0	0	89.1	89.1	1	6388.62	3.25	0	87.11	0	1.98	0	0	14.25	0	0	0	0	0	0	-14.28	-14.28
Inverter	MV4-13	369051	4908605	2	0	0	89.1	89.1	1	6412.54	3.25	0	87.14	0	1.99	0	0	14.28	0	0	0	0	0	0	-14.35	-14.35
Inverter	MV4-12	369043	4908803	2	0	0	89.1	89.1	1	6583.11	3.25	0	87.37	0	2.03	0	0	14.48	0	0	0	0	0	0	-14.82	-14.82
Inverter	MV5-6	369982	4908507	2	0	0	89.1	89.1	1	6828.99	3.25	0	87.69	0	2.09	0	0	14.78	0	0	0	0	0	0	-15.5	-15.5
Westbrook Inverter Enclosur	W_INV1	369409	4906578	2	0	0	86.1	86.1	1	4976.91	3.25	0	84.94	0	1.63	0	0	12.43	0	0	0	0	0	0	-12.95	-12.95
Inverter	MV6-4	370250	4906966	2	0	0	86.1	86.1	1	5848.53	3.25	0	86.34	0	1.85	0	0	13.57	0	0	0	0	0	0	-15.7	-15.7
Westbrook Inverter Transfor	W_INVTR1	369403	4906578	2	0	0	78.2	78.2	1	4972.76	3.25	0	84.93	0	-3.17	0	0	2.4	0	0	0	0	0	0	-5.92	-5.92
Westbrook Inverter Transfor	W_INVTR3	369514	4906164	2	0	0	77.3	77.3	1	4764.16	3.25	0	84.56	0	-3.13	0	0	2.33	0	0	0	0	0	0	-6.42	-6.42
Westbrook Inverter Transfor	W_INVTR2	369368	4906388	2	0	0	77.3	77.3	1	4812.36	3.25	0	84.65	0	-3.14	0	0	2.35	0	0	0	0	0	0	-6.51	-6.51
Westbrook Inverter Transfor	W_INVTR4	369679	4906164	2	0	0	77.3	77.3	1	4888.2	3.25	0	84.78	0	-3.15	0	0	2.37	0	0	0	0	0	0	-6.66	-6.66
Westbrook Inverter Transfor	W_INVTR7	369786	4906417	2	0	0	77.3	77.3	1	5135.58	3.25	0	85.21	0	-3.2	0	0	2.46	0	0	0	0	0	0	-7.12	-7.12
Westbrook Inverter Transfor	W_INVTR5	369725	4906574	2	0	0	77.3	77.3	1	5197.62	3.25	0	85.32	0	-3.22	0	0	2.48	0	0	0	0	0	0	-7.24	-7.24
Westbrook Inverter Transfor	W_INVTR6	369881	4906578	2	0	0	77.3	77.3	1	5314.18	3.25	0	85.51	0	-3.24	0	0	2.52	0	0	0	0	0	0	-7.45	-7.45
Inverter Transformer	MV1-14 T	365157	4905049	2	0	0	69.4	69.4	1	2220.39	3.25	0	77.93	0	2.25	0	0	5.18	0	0	0	0	0	0	-16.01	-16.01

Inverter Transformer	MV1-13 T	364725	4905241	2	0	0	69.4	69.4	1	2578.41	3.25	0	79.23	0	2.37	0	0	5.51	0	0	0	0	0	0	-17.76	-17.76
Inverter Transformer	MV1-10 T	365010	4905564	2	0	0	69.4	69.4	1	2753.97	3.25	0	79.8	0	2.43	0	0	5.67	0	0	0	0	0	0	-18.55	-18.55
Inverter Transformer	MV1-7 T	364919	4905782	2	0	0	69.4	69.4	1	2990.03	3.25	0	80.51	0	2.5	0	0	5.87	0	0	0	0	0	0	-19.54	-19.54
Inverter Transformer	MV2-1 T	365836	4906816	2	0	0	69.4	69.4	1	3836.18	3.25	0	82.68	0	2.74	0	0	6.55	0	0	0	0	0	0	-22.62	-22.62
Inverter Transformer	MV6-4 T	370244	4906966	2	0	0	69.4	69.4	1	5844.14	3.25	0	86.33	0	3.16	0	0	7.92	0	0	0	0	0	0	-28.07	-28.07
Inverter Transformer	MV6-1 T	370230	4907364	2	0	0	69.4	69.4	1	6112.61	3.25	0	86.72	0	3.21	0	0	8.09	0	0	0	0	0	0	-28.67	-28.67
Inverter Transformer	MV1-15 T	365309	4904994	2	0	0	56.1	56.1	1	2117.14	3.25	0	77.52	0	0.45	0	0	7.27	0	0	0	0	0	0	-29.18	-29.18
Inverter Transformer	MV1-12 T	365044	4905386	2	0	0	56.1	56.1	1	2575.44	3.25	0	79.22	0	0.65	0	0	8.13	0	0	0	0	0	0	-31.93	-31.93
Inverter Transformer	MV1-11 T	364649	4905414	2	0	0	56.1	56.1	1	2766.66	3.25	0	79.84	0	0.73	0	0	8.47	0	0	0	0	0	0	-32.98	-32.98
Inverter Transformer	MV1-8 T	364782	4905647	2	0	0	56.1	56.1	1	2916.98	3.25	0	80.3	0	0.79	0	0	8.73	0	0	0	0	0	0	-33.76	-33.76
Inverter Transformer	MV1-9 T	364555	4905646	2	0	0	56.1	56.1	1	3015.54	3.25	0	80.59	0	0.84	0	0	8.89	0	0	0	0	0	0	-34.26	-34.26
Inverter Transformer	MV1-4 T	364821	4905918	2	0	0	56.1	56.1	1	3152.08	3.25	0	80.97	0	0.89	0	0	9.12	0	0	0	0	0	0	-34.93	-34.93
Inverter Transformer	MV1-5 T	364676	4905892	2	0	0	56.1	56.1	1	3183.91	3.25	0	81.06	0	0.91	0	0	9.18	0	0	0	0	0	0	-35.08	-35.08
Inverter Transformer	MV1-6 T	364482	4905835	2	0	0	56.1	56.1	1	3216.81	3.25	0	81.15	0	0.92	0	0	9.23	0	0	0	0	0	0	-35.24	-35.24
Inverter Transformer	MV1-2 T	364759	4906063	2	0	0	56.1	56.1	1	3309.7	3.25	0	81.4	0	0.96	0	0	9.38	0	0	0	0	0	0	-35.68	-35.68
Inverter Transformer	MV1-1 T	364721	4906166	2	0	0	56.1	56.1	1	3419.46	3.25	0	81.68	0	1.01	0	0	9.56	0	0	0	0	0	0	-36.19	-36.19
Inverter Transformer	MV1-3 T	364435	4906039	2	0	0	56.1	56.1	1	3419.85	3.25	0	81.68	0	1.01	0	0	9.56	0	0	0	0	0	0	-36.19	-36.19
Inverter Transformer	MV2-3 T	365814	4906641	2	0	0	56.1	56.1	1	3662.15	3.25	0	82.27	0	1.11	0	0	9.94	0	0	0	0	0	0	-37.27	-37.27
Inverter Transformer	MV2-4 T	365590	4906628	2	0	0	56.1	56.1	1	3665.46	3.25	0	82.28	0	1.11	0	0	9.95	0	0	0	0	0	0	-37.28	-37.28
Inverter Transformer	MV2-2 T	365982	4906654	2	0	0	56.1	56.1	1	3671.93	3.25	0	82.3	0	1.11	0	0	9.96	0	0	0	0	0	0	-37.31	-37.31
Inverter Transformer	MV3-18 T	367757	4907412	2	0	0	56.1	56.1	1	4777.43	3.25	0	84.58	0	1.54	0	0	11.56	0	0	0	0	0	0	-41.63	-41.63
Inverter Transformer	MV3-21 T	368484	4907206	2	0	0	56.1	56.1	1	4916.36	3.25	0	84.83	0	1.6	0	0	11.74	0	0	0	0	0	0	-42.11	-42.11
Inverter Transformer	MV3-12 T	367674	4907594	2	0	0	56.1	56.1	1	4917.25	3.25	0	84.83	0	1.6	0	0	11.74	0	0	0	0	0	0	-42.12	-42.12
Inverter Transformer	MV3-22 T	368661	4907142	2	0	0	56.1	56.1	1	4955.4	3.25	0	84.9	0	1.61	0	0	11.8	0	0	0	0	0	0	-42.25	-42.25
Inverter Transformer	MV3-19 T	368352	4907347	2	0	0	56.1	56.1	1	4973.42	3.25	0	84.93	0	1.62	0	0	11.82	0	0	0	0	0	0	-42.31	-42.31
Inverter Transformer	MV3-17 T	368183	4907472	2	0	0	56.1	56.1	1	5006.45	3.25	0	84.99	0	1.63	0	0	11.86	0	0	0	0	0	0	-42.42	-42.42
Inverter Transformer	MV3-13 T	367958	4907577	2	0	0	56.1	56.1	1	5007.24	3.25	0	84.99	0	1.63	0	0	11.86	0	0	0	0	0	0	-42.43	-42.43
Inverter Transformer	MV3-15 T	368351	4907477	2	0	0	56.1	56.1	1	5087.42	3.25	0	85.13	0	1.66	0	0	11.97	0	0	0	0	0	0	-42.7	-42.7
Inverter Transformer	MV3-20 T	368683	4907317	2	0	0	56.1	56.1	1	5114.83	3.25	0	85.18	0	1.67	0	0	12	0	0	0	0	0	0	-42.79	-42.79
Inverter Transformer	MV3-16 T	368509	4907475	2	0	0	56.1	56.1	1	5161.57	3.25	0	85.26	0	1.68	0	0	12.07	0	0	0	0	0	0	-42.95	-42.95
Inverter Transformer	MV3-7 T	367951	4907754	2	0	0	56.1	56.1	1	5167.45	3.25	0	85.27	0	1.69	0	0	12.07	0	0	0	0	0	0	-42.97	-42.97
Inverter Transformer	MV3-10 T	368162	4907669	2	0	0	56.1	56.1	1	5174.92	3.25	0	85.28	0	1.69	0	0	12.08	0	0	0	0	0	0	-42.99	-42.99
Inverter Transformer	MV3-11 T	368340	4907662	2	0	0	56.1	56.1	1	5246.61	3.25	0	85.4	0	1.71	0	0	12.17	0	0	0	0	0	0	-43.23	-43.23
Inverter Transformer	MV3-14 T	368678	4907498	2	0	0	56.1	56.1	1	5266.53	3.25	0	85.43	0	1.72	0	0	12.2	0	0	0	0	0	0	-43.29	-43.29
Inverter Transformer	MV3-6 T	368156	4907834	2	0	0	56.1	56.1	1	5322.35	3.25	0	85.52	0	1.74	0	0	12.27	0	0	0	0	0	0	-43.47	-43.47
Inverter Transformer	MV3-3 T	367944	4907927	2	0	0	56.1	56.1	1	5325.02	3.25	0	85.53	0	1.74	0	0	12.27	0	0	0	0	0	0	-43.48	-43.48
Inverter Transformer	MV3-9 T	368517	4907703	2	0	0	56.1	56.1	1	5365.01	3.25	0	85.59	0	1.75	0	0	12.33	0	0	0	0	0	0	-43.61	-43.61
Inverter Transformer	MV3-5 T	368335	4907843	2	0	0	56.1	56.1	1	5406.49	3.25	0	85.66	0	1.77	0	0	12.38	0	0	0	0	0	0	-43.75	-43.75
Inverter Transformer	MV3-1 T	368150	4907976	2	0	0	56.1	56.1	1	5449.71	3.25	0	85.73	0	1.78	0	0	12.43	0	0	0	0	0	0	-43.88	-43.88
Inverter Transformer	MV3-8 T	368685	4907712	2	0	0	56.1	56.1	1	5454.63	3.25	0	85.74	0	1.79	0	0	12.44	0	0	0	0	0	0	-43.9	-43.9
Inverter Transformer	MV3-4 T	368507	4907925	2	0	0	56.1	56.1	1	5556.78	3.25	0	85.9	0	1.82	0	0	12.57	0	0	0	0	0	0	-44.22	-44.22
Inverter Transformer	MV3-2 T	368677	4907928	2	0	0	56.1	56.1	1	5639.11	3.25	0	86.02	0	1.85	0	0	12.67	0	0	0	0	0	0	-44.48	-44.48
Inverter Transformer	MV6-3 T	370202	4907140	2	0	0	56.1	56.1	1	5934.07	3.25	0	86.47	0	1.94	0	0	13.02	0	0	0	0	0	0	-45.38	-45.38
Inverter Transformer	MV6-2 T	370091	4907339	2	0	0	56.1	56.1	1	5998.34	3.25	0	86.56	0	1.96	0	0	13.1	0	0	0	0	0	0	-45.57	-45.57
Inverter Transformer	MV4-15 T	369170	4908481	2	0	0	56.1	56.1	1	6363.13	3.25	0	87.07	0	2.08	0	0	13.52	0	0	0	0	0	0	-46.62	-46.62
Inverter Transformer	MV4-14 T	369182	4908507	2	0	0	56.1	56.1	1	6391.64	3.25	0	87.11	0	2.09	0	0	13.56	0	0	0	0	0	0	-46.7	-46.7
Inverter Transformer	MV4-13 T	369057	4908605	2	0	0	56.1	56.1	1	6415.43	3.25	0	87.14	0	2.09	0	0	13.58	0	0	0	0	0	0	-46.76	-46.76
Inverter Transformer	MV4-12 T	369049	4908803	2	0	0	56.1	56.1	1	6585.91	3.25	0	87.37	0	2.14	0	0	13.78	0	0	0	0	0	0	-47.23	-47.23
Inverter Transformer	MV4-11 T	369269	4908855	2	0	0	56.1	56.1	1	6736.93	3.25	0	87.57	0	2.19	0	0	13.94	0	0	0	0	0	0	-47.64	-47.64
Inverter Transformer	MV4-7 T	369040	4909001	2	0	0	56.1	56.1	1	6757.45	3.25	0	87.6	0	2.19	0	0	13.97	0	0	0	0	0	0	-47.7	-47.7
Inverter Transformer	MV4-10 T	369307	4908858	2	0	0	56.1	56.1	1	6758.24	3.25	0	87.6	0	2.19	0	0	13.97	0	0	0	0	0	0	-47.7	-47.7
Inverter Transformer	MV5-6 T	369987	4908507	2	0	0	56.1	56.1	1	6831.93	3.25	0	87.69	0	2.21	0	0	14.05	0	0	0	0	0	0	-47.89	-47.89
Inverter Transformer	MV4-8 T	369262	4909001	2	0	0	56.1	56.1	1	6861.22	3.25	0	87.73	0	2.22	0	0	14.08	0	0	0	0	0	0	-47.97	-47.97
Inverter Transformer	MV4-9 T	369284	4909001	2	0	0	56.1	56.1	1	6871.8	3.25	0	87.74	0	2.22	0	0	14.09	0	0	0	0	0	0	-48	-48
Inverter Transformer	MV4-4 T	369033	4909199	2	0	0	56.1	56.1	1	6931.3	3.25	0	87.82	0	2.24	0	0	14.16	0	0	0	0	0	0	-48.15	-48.15
Inverter Transformer	MV5-5 T	370021	4908690	2	0	0	56.1	56.1	1	7000.38	3.25	0	87.9	0	2.26	0	0	14.23	0	0	0	0	0	0	-48.33	-48.33
Inverter Transformer	MV4-6 T	369249	4909192	2	0	0	56.1	56.1	1	7023.28	3.25	0	87.93	0	2.27	0	0	14.25	0	0	0	0	0	0	-48.39	-48.39
Inverter Transformer	MV4-5 T	369283	4909199	2	0	0	56.1	56.1	1	7045.41	3.25	0	87.96	0	2.27	0	0	14.28	0	0	0	0	0	0	-48.45	-48.45
Inverter Transformer	MV4-1 T	369017	4909397	2	0	0	56.1	56.1	1	7102.54	3.25	0	88.03	0	2.29	0	0	14.34	0	0	0	0	0	0	-48.6	-48.6
Inverter Transformer	MV5-2 T	370011	4908853	2	0	0	56.1	56.1	1	7128.23	3.25	0	88.06	0	2.29	0	0	14.37	0	0	0	0	0	0	-48.66	-48.66
Inverter Transformer	MV5-4 T	370330	4908707	2	0	0	56.1	56.1	1	7197.21	3.25	0	88.14	0	2.31	0	0	14.44	0	0	0	0	0	0	-48.84	-48.84
Inverter Transformer	MV4-3 T	369234	4909397	2	0	0	56.1	56.1	1	7198.36	3.25	0	88.14	0	2.31	0	0	14.44	0	0	0	0	0	0	-48.84	-48.84
Inverter Transformer	MV4-2 T	369267	4909397	2	0	0	56.1	56.1	1	7213.39	3.25	0	88.16	0	2.32	0	0	14.46	0	0	0	0	0	0	-48.88	-48.88
Inverter Transformer	MV5-3 T	370237	4908851	2	0	0	56.1	56.1	1	7257.18	3.25	0	88.22	0	2.33	0	0	14.5	0	0	0	0	0	0	-48.99	-48.99
Inverter Transformer	MV5-1 T	370015	4909142	2	0	0	56.1	56.1	1	7370.28	3.25	0	88.35	0	2.36	0	0	14.62	0	0	0	0	0	0	-49.27	-49.27
Line Reactor	NGR	369421	4908787.5	5	0	0	45.4	45.4	1	6754.59	5.25	0	87.59	0	3.22	1.37	0.1	2.76	0	0	0	0	0	0	-49.59	-49.59
Limit. Valu 0	0																									
Level D/N: 27.5486	27.5486																									

Receiver: Existing Noise Receptor
ID: G-29
X: 365963.5
Y: 4902877.9
Z: 4.5

Ground: 0

ISO	Description	ID	X	Y	Z	Ground	ReflOrd	LxT	LxN	L/A	Dist.	hm	Freq	Adiv	K0b	Agr	Abar	z	Aatm	Afol	Ahous	Cmet	CmetN	Dc	RL	LtotT	LtotN
	Sol_Luce Substation	S_Substation	369426	4908792	3.5	0	0	112.1	112.1	1	6853.14	5.25	0	87.72	0	1.35	2.47	0.31	10.61	0	0	0	0	0	0	9.93	9.93
	Inverter	MV1-15	365315	4904994	2	0	0	100.3	100.3	1	2213.24	3.25	0	77.9	0	0.19	0	0	13.9	0	0	0	0	0	0	8.32	8.32
	Gardiner Substation	G_Sub	366586.3	4903349.9	2.5	0	0	90.8	90.8	1	781.45	3.5	0	68.86	0	-0.4	0	0	2.06	0	0	0	0	0	0	20.25	20.25
	Inverter	MV1-12	365038	4905386	2	0	0	100.3	100.3	1	2673.41	3.25	0	79.54	0	0.3	0	0	14.78	0	0	0	0	0	0	5.69	5.69
	Inverters	G_Inv3	366583.7	4903091.4	2	0	0	87.7	87.7	1	655.92	3.25	0	67.34	0	2.4	0	0	0.98	0	0	0	0	0	0	16.94	16.94
	Inverters	G_Inv1	366526.4	4903225.8	2	0	0	87.7	87.7	1	661.74	3.25	0	67.41	0	2.4	0	0	0.99	0	0	0	0	0	0	16.86	16.86
	Inverter	MV1-11	364655	4905414	2	0	0	100.3	100.3	1	2853.77	3.25	0	80.11	0	0.33	0	0	15.11	0	0	0	0	0	0	4.76	4.76
	Inverters	G_Inv5	366638.5	4902958.1	2	0	0	87.7	87.7	1	679.75	3.25	0	67.65	0	2.4	0	0	1.01	0	0	0	0	0	0	16.6	16.6
	Inverter	MV1-8	364788	4905647	2	0	0	100.3	100.3	1	3008.28	3.25	0	80.57	0	0.36	0	0	15.39	0	0	0	0	0	0	4	4
	Inverter	MV1-9	364561	4905646	2	0	0	100.3	100.3	1	3103.13	3.25	0	80.84	0	0.38	0	0	15.55	0	0	0	0	0	0	3.54	3.54
	Inverters	G_Inv7	366694.6	4902824.7	2	0	0	87.7	87.7	1	733.04	3.25	0	68.3	0	2.41	0	0	1.08	0	0	0	0	0	0	15.87	15.87
	Inverter	MV1-4	364815	4905918	2	0	0	100.3	100.3	1	3249.81	3.25	0	81.24	0	0.41	0	0	15.81	0	0	0	0	0	0	2.86	2.86
	Inverter	MV1-14	365163	4905049	2	0	0	97.3	97.3	1	2313.98	3.25	0	78.29	0	0.21	0	0	14.1	0	0	0	0	0	0	4.71	4.71
	Inverter	MV1-5	364671	4905892	2	0	0	100.3	100.3	1	3279.54	3.25	0	81.32	0	0.41	0	0	15.86	0	0	0	0	0	0	2.72	2.72
	Inverter	MV1-6	364477	4905835	2	0	0	100.3	100.3	1	3309.7	3.25	0	81.4	0	0.42	0	0	15.91	0	0	0	0	0	0	2.59	2.59
	Inverter	MV1-2	364753	4906063	2	0	0	100.3	100.3	1	3407.37	3.25	0	81.65	0	0.44	0	0	16.08	0	0	0	0	0	0	2.15	2.15
	Inverters	G_Inv2	366676.9	4903239.1	2	0	0	87.7	87.7	1	799.63	3.25	0	69.06	0	2.42	0	0	1.17	0	0	0	0	0	0	15.01	15.01
	Inverters	G_Inv4	366732.8	4903105	2	0	0	87.7	87.7	1	802.12	3.25	0	69.08	0	2.42	0	0	1.17	0	0	0	0	0	0	14.98	14.98
	Inverters	G_Inv9	366750.9	4902691.8	2	0	0	87.7	87.7	1	809.1	3.25	0	69.16	0	2.42	0	0	1.18	0	0	0	0	0	0	14.9	14.9
	Inverter	MV1-1	364715	4906166	2	0	0	100.3	100.3	1	3517.15	3.25	0	81.92	0	0.45	0	0	16.26	0	0	0	0	0	0	1.67	1.67
	Inverters	G_Inv6	366788.5	4902972	2	0	0	87.7	87.7	1	830.35	3.25	0	69.39	0	2.42	0	0	1.21	0	0	0	0	0	0	14.64	14.64
	Inverter	MV1-13	364731	4905241	2	0	0	97.3	97.3	1	2665.2	3.25	0	79.51	0	0.29	0	0	14.77	0	0	0	0	0	0	2.74	2.74
	Inverter	MV2-4	365586	4906624	2	0	0	100.3	100.3	1	3765.07	3.25	0	82.52	0	0.49	0	0	16.67	0	0	0	0	0	0	0.63	0.63
	Inverter	MV2-3	365820	4906641	2	0	0	100.3	100.3	1	3765.84	3.25	0	82.52	0	0.49	0	0	16.67	0	0	0	0	0	0	0.63	0.63
	Inverters	G_Inv8	366844.5	4902838.5	2	0	0	87.7	87.7	1	881.88	3.25	0	69.91	0	2.43	0	0	1.28	0	0	0	0	0	0	14.04	14.04
	Inverter	MV1-10	365004	4905564	2	0	0	97.3	97.3	1	2852.33	3.25	0	80.1	0	0.33	0	0	15.11	0	0	0	0	0	0	1.77	1.77
	Inverters	G_Inv10	366900.7	4902704.8	2	0	0	87.7	87.7	1	953.05	3.25	0	70.58	0	2.44	0	0	1.37	0	0	0	0	0	0	13.27	13.27
	Inverter	MV1-7	364925	4905782	2	0	0	97.3	97.3	1	3084.2	3.25	0	80.78	0	0.38	0	0	15.52	0	0	0	0	0	0	0.63	0.63
	Inverter	MV3-18	367752	4907412	2	0	0	100.3	100.3	1	4874.09	3.25	0	84.76	0	0.63	0	0	18.39	0	0	0	0	0	0	-3.47	-3.47
	Inverter	MV3-21	368478	4907206	2	0	0	100.3	100.3	1	5005.51	3.25	0	84.99	0	0.64	0	0	18.59	0	0	0	0	0	0	-3.91	-3.91
	Inverter	MV3-12	367668	4907594	2	0	0	100.3	100.3	1	5014.67	3.25	0	85	0	0.64	0	0	18.6	0	0	0	0	0	0	-3.94	-3.94
	Inverter	MV3-19	368357	4907347	2	0	0	100.3	100.3	1	5069.68	3.25	0	85.1	0	0.65	0	0	18.68	0	0	0	0	0	0	-4.12	-4.12
	Inverter	MV3-17	368178	4907472	2	0	0	100.3	100.3	1	5099.98	3.25	0	85.15	0	0.65	0	0	18.73	0	0	0	0	0	0	-4.22	-4.22
	Inverter	MV3-13	367963	4907577	2	0	0	100.3	100.3	1	5106.81	3.25	0	85.16	0	0.65	0	0	18.74	0	0	0	0	0	0	-4.24	-4.24
	Inverter	MV3-15	368357	4907477	2	0	0	100.3	100.3	1	5184.65	3.25	0	85.29	0	0.66	0	0	18.85	0	0	0	0	0	0	-4.49	-4.49
	Inverter	MV3-20	368689	4907317	2	0	0	100.3	100.3	1	5209.03	3.25	0	85.34	0	0.66	0	0	18.88	0	0	0	0	0	0	-4.57	-4.57
	Inverter	MV3-16	368514	4907475	2	0	0	100.3	100.3	1	5257.22	3.25	0	85.42	0	0.66	0	0	18.95	0	0	0	0	0	0	-4.72	-4.72
	Inverter	MV3-7	367945	4907754	2	0	0	100.3	100.3	1	5263.34	3.25	0	85.43	0	0.66	0	0	18.96	0	0	0	0	0	0	-4.74	-4.74
	Inverter	MV3-10	368167	4907669	2	0	0	100.3	100.3	1	5273.52	3.25	0	85.44	0	0.66	0	0	18.98	0	0	0	0	0	0	-4.77	-4.77
	Inverter	MV3-11	368346	4907662	2	0	0	100.3	100.3	1	5344.52	3.25	0	85.56	0	0.67	0	0	19.08	0	0	0	0	0	0	-5	-5
	Inverter	MV3-14	368684	4907498	2	0	0	100.3	100.3	1	5361.57	3.25	0	85.59	0	0.67	0	0	19.1	0	0	0	0	0	0	-5.05	-5.05
	Inverter	MV3-3	367939	4907927	2	0	0	100.3	100.3	1	5421.81	3.25	0	85.68	0	0.68	0	0	19.19	0	0	0	0	0	0	-5.24	-5.24
	Inverter	MV3-6	368162	4907834	2	0	0	100.3	100.3	1	5421.84	3.25	0	85.68	0	0.68	0	0	19.19	0	0	0	0	0	0	-5.24	-5.24
	Inverter	MV3-9	368512	4907703	2	0	0	100.3	100.3	1	5456.78	3.25	0	85.74	0	0.68	0	0	19.24	0	0	0	0	0	0	-5.34	-5.34
	Inverter	MV3-8	368680	4907712	2	0	0	100.3	100.3	1	5545.08	3.25	0	85.88	0	0.68	0	0	19.36	0	0	0	0	0	0	-5.61	-5.61
	Inverter	MV2-1	365842	4906816	2	0	0	97.3	97.3	1	3939.97	3.25	0	82.91	0	0.52	0	0	16.95	0	0	0	0	0	0	-3.07	-3.07
	Inverter	MV6-3	370207	4907140	2	0	0	100.3	100.3	1	6014.38	3.25	0	86.58	0	0.71	0	0	20.01	0	0	0	0	0	0	-6.99	-6.99
	Inverter	MV6-2	370085	4907339	2	0	0	100.3	100.3	1	6073.56	3.25	0	86.67	0	0.71	0	0	20.09	0	0	0	0	0	0	-7.16	-7.16
	Inverter	MV4-11	369264	4908855	2	0	0	100.3	100.3	1	6827.81	3.25	0	87.69	0	0.71	0	0	21.08	0	0	0	0	0	0	-9.17	-9.17
	Inverter	MV4-7	369035	4909001	2	0	0	100.3	100.3	1	6850.29	3.25	0	87.71	0	0.71	0	0	21.11	0	0	0	0	0	0	-9.23	-9.23
	Inverter	MV4-10	369312	4908858	2	0	0	100.3	100.3	1	6853.76	3.25	0	87.72	0	0.71	0	0	21.11	0	0	0	0	0	0	-9.23	-9.23
	Inverter	MV4-8	369256	4909001	2	0	0	100.3	100.3	1	6952.19	3.25	0	87.84	0	0.71	0	0	21.24	0	0	0	0	0	0	-9.48	-9.48
	Inverter	MV4-9	369289	4909001	2	0	0	100.3	100.3	1	6967.88	3.25	0	87.86	0	0.71	0	0	21.26	0	0	0	0	0	0	-9.52	-9.52
	Inverter	MV4-4	369027	4909199	2	0	0	100.3	100.3	1	7024.34	3.25	0	87.93	0	0.71	0	0	21.33	0	0	0	0	0	0	-9.66	-9.66
	Inverter	MV5-5	370015	4908690	2	0	0	100.3	100.3	1	7084.85	3.25	0	88.01	0	0.71	0	0	21.41	0	0	0	0	0	0	-9.81	-9.81
	Inverter	MV4-6	369243	4909192	2	0	0	100.3	100.3	1	7114.98	3.25	0	88.04	0	0.71	0	0	21.44	0	0	0	0	0	0	-9.88	-9.88
	Inverter	MV4-5	369289	4909199	2	0	0	100.3	100.3	1	7142.5	3.25	0	88.08	0	0.71	0	0	21.48	0	0	0	0	0	0	-9.95	-9.95
	Inverter	MV4-1	369011	4909397	2	0	0	100.3	100.3	1	7196.24	3.25	0	88.14	0	0.7	0	0	21.54	0	0	0	0	0	0	-10.08	-10.08
	Inverter	MV5-2	370006	4908853	2	0	0	100.3	100.3	1	7214.13	3.25	0	88.16	0	0.7	0	0	21.57	0	0	0	0	0	0	-10.12	-10.12
	Inverter	MV5-4	370324	4908707	2	0	0	100.3	100.3	1	7279.59	3.25	0	88.24	0	0.7	0	0	21.65	0	0	0	0	0	0	-10.28	-10.28
	Inverter	MV4-3	369229	4909397	2	0	0	100.3	100.3	1	7291.24	3.25	0	88.26	0	0.7	0	0	21.66	0	0	0	0	0	0	-10.3	-10.3
	Inverter	MV4-2	369272	4909397	2	0	0	100.3	100.3	1	7310.6	3.25	0	88.28	0	0.7	0	0	21.68	0	0	0	0	0	0	-10.35	-10.35
	Inverter	MV5-3	370231	4908851	2	0	0	100.3	100.3	1	7340.95	3.25	0	88.32	0	0.7	0	0	21.72	0	0	0	0	0	0	-10.42	-10.42
	Inverter	MV5-1	370020	4909142	2	0	0	100.3	100.3	1	7462.85	3.25	0	88.46	0	0.69	0	0	21.87	0	0	0	0	0	0	-10.71	-10.71
	Inverter	MV6-1	370235	4907364	2	0	0	97.3	97.3	1	6194.42	3.25	0	86.84	0	0.71	0	0	20.26	0	0	0	0	0	0	-10.49	-10.49
	DSTATCOM - 10 MVAR #2	DSAT2	369403	4908757	2.5	0	0	96.6	96.6	1	6811.31	3.5	0	87.66	0	3.83	0	0	4.22	0	0	0	0	0	0	0.92	0.92
	DSTATCOM - 10 MVAR #1	DSAT1	369437	4908757	2.5	0	0	96.6	96.6	1	6828.54	3.5	0	87.69	0	3.83	0	0	4.23	0	0	0	0	0	0	0.89	0.89
	Inverter	MV1-3	364440	4906039	2	0	0	89.1	89.1	1	3509.08	3.25	0	81.9	0	1.27	0	0	10.38	0	0	0	0	0	0	-4.49	-4.49
	SubstationTransformer	W_ST	369711.17	4906112.3	2.5	0	0	92	92	1	4950.37	4.25	0	84.89	0	1.62	2.34	0.22	8.56	0	0	0	0	0	0	-5.44	-5.44
	Inverter	MV2-2	365977	4906654	2	0	0	89.1	89.1	1	3776.12	3.25	0	82.54	0	1.34	0	0	10.76	0	0	0	0	0	0	-5.58	-5.58
	Westbrook Inverter Enclosur	W_INV3	369508	4906164	2	0	0	89.1	89.1	1	4833.42	3.25	0	84.69	0	1.6	0	0	12.24	0	0	0	0	0	0	-9.47	-9.47

Westbrook Inverter Enclosur	W_INV2	369374	4906388	2	0	0	89.1	89.1	1	4894.11	3.25	0	84.79	0	1.61	0	0	12.32	0	0	0	0	0	0	-9.67	-9.67
Westbrook Inverter Enclosur	W_INV4	369673	4906164	2	0	0	89.1	89.1	1	4955.69	3.25	0	84.9	0	1.63	0	0	12.4	0	0	0	0	0	0	-9.88	-9.88
Inverter	MV3-22	368656	4907142	2	0	0	89.1	89.1	1	5043.03	3.25	0	85.05	0	1.65	0	0	12.52	0	0	0	0	0	0	-10.17	-10.17
Westbrook Inverter Enclosur	W_INV7	369780	4906417	2	0	0	89.1	89.1	1	5204.89	3.25	0	85.33	0	1.69	0	0	12.74	0	0	0	0	0	0	-10.7	-10.7
Westbrook Inverter Enclosur	W_INV5	369719	4906574	2	0	0	89.1	89.1	1	5269.24	3.25	0	85.43	0	1.71	0	0	12.82	0	0	0	0	0	0	-10.9	-10.9
Westbrook Inverter Enclosur	W_INV6	369875	4906578	2	0	0	89.1	89.1	1	5384.29	3.25	0	85.62	0	1.73	0	0	12.97	0	0	0	0	0	0	-11.27	-11.27
Inverter	MV3-5	368340	4907843	2	0	0	89.1	89.1	1	5504.54	3.25	0	85.81	0	1.76	0	0	13.13	0	0	0	0	0	0	-11.65	-11.65
Inverter	MV3-1	368156	4907976	2	0	0	89.1	89.1	1	5549.57	3.25	0	85.89	0	1.78	0	0	13.19	0	0	0	0	0	0	-11.79	-11.79
Inverter	MV3-4	368502	4907925	2	0	0	89.1	89.1	1	5649.53	3.25	0	86.04	0	1.8	0	0	13.32	0	0	0	0	0	0	-12.1	-12.1
Inverter	MV3-2	368671	4907928	2	0	0	89.1	89.1	1	5730.1	3.25	0	86.16	0	1.82	0	0	13.42	0	0	0	0	0	0	-12.34	-12.34
Fixed Reactor Bank 1	FRB1	369378	4908755	6	0	0	89.8	89.8	1	6796.99	5.25	0	87.65	0	-0.31	0	0	10.55	0	0	0	0	0	0	-8.11	-8.11
Fixed Reactor Bank 2	FRB2	369464	4908755	6	0	0	89.8	89.8	1	6840.6	5.25	0	87.7	0	-0.3	0	0	10.6	0	0	0	0	0	0	-8.22	-8.22
Inverter	MV4-15	369176	4908481	2	0	0	89.1	89.1	1	6458.71	3.25	0	87.2	0	2	0	0	14.33	0	0	0	0	0	0	-14.48	-14.48
Inverter	MV4-14	369176	4908507	2	0	0	89.1	89.1	1	6481.28	3.25	0	87.23	0	2	0	0	14.36	0	0	0	0	0	0	-14.54	-14.54
Inverter	MV4-13	369051	4908605	2	0	0	89.1	89.1	1	6506.33	3.25	0	87.27	0	2.01	0	0	14.39	0	0	0	0	0	0	-14.61	-14.61
Inverter	MV4-12	369043	4908803	2	0	0	89.1	89.1	1	6677.58	3.25	0	87.49	0	2.05	0	0	14.6	0	0	0	0	0	0	-15.08	-15.08
Inverter	MV5-6	369982	4908507	2	0	0	89.1	89.1	1	6916.29	3.25	0	87.8	0	2.11	0	0	14.89	0	0	0	0	0	0	-15.73	-15.73
Westbrook Inverter Enclosur	W_INV1	369409	4906578	2	0	0	86.1	86.1	1	5055.91	3.25	0	85.08	0	1.65	0	0	12.54	0	0	0	0	0	0	-13.21	-13.21
Inverter	MV6-4	370250	4906966	2	0	0	86.1	86.1	1	5923.4	3.25	0	86.45	0	1.87	0	0	13.67	0	0	0	0	0	0	-15.93	-15.93
Westbrook Inverter Transfor	W_INVTR1	369403	4906578	2	0	0	78.2	78.2	1	5051.82	3.25	0	85.07	0	-3.19	0	0	2.43	0	0	0	0	0	0	-6.07	-6.07
Westbrook Inverter Transfor	W_INVTR3	369514	4906164	2	0	0	77.3	77.3	1	4837.82	3.25	0	84.69	0	-3.14	0	0	2.36	0	0	0	0	0	0	-6.56	-6.56
Westbrook Inverter Transfor	W_INVTR2	369368	4906388	2	0	0	77.3	77.3	1	4889.93	3.25	0	84.79	0	-3.16	0	0	2.38	0	0	0	0	0	0	-6.66	-6.66
Westbrook Inverter Transfor	W_INVTR4	369679	4906164	2	0	0	77.3	77.3	1	4960.18	3.25	0	84.91	0	-3.17	0	0	2.4	0	0	0	0	0	0	-6.8	-6.8
Westbrook Inverter Transfor	W_INVTR7	369786	4906417	2	0	0	77.3	77.3	1	5209.29	3.25	0	85.34	0	-3.22	0	0	2.48	0	0	0	0	0	0	-7.26	-7.26
Westbrook Inverter Transfor	W_INVTR5	369725	4906574	2	0	0	77.3	77.3	1	5273.52	3.25	0	85.44	0	-3.23	0	0	2.51	0	0	0	0	0	0	-7.37	-7.37
Westbrook Inverter Transfor	W_INVTR6	369881	4906578	2	0	0	77.3	77.3	1	5388.65	3.25	0	85.63	0	-3.25	0	0	2.54	0	0	0	0	0	0	-7.58	-7.58
Inverter Transformer	MV1-14 T	365157	4905049	2	0	0	69.4	69.4	1	2316.06	3.25	0	78.29	0	2.29	0	0	5.27	0	0	0	0	0	0	-16.5	-16.5
Inverter Transformer	MV1-13 T	364725	4905241	2	0	0	69.4	69.4	1	2667.98	3.25	0	79.52	0	2.4	0	0	5.59	0	0	0	0	0	0	-18.17	-18.17
Inverter Transformer	MV1-10 T	365010	4905564	2	0	0	69.4	69.4	1	2850.32	3.25	0	80.1	0	2.46	0	0	5.75	0	0	0	0	0	0	-18.96	-18.96
Inverter Transformer	MV1-7 T	364919	4905782	2	0	0	69.4	69.4	1	3086.22	3.25	0	80.79	0	2.53	0	0	5.96	0	0	0	0	0	0	-19.93	-19.93
Inverter Transformer	MV2-1 T	365836	4906816	2	0	0	69.4	69.4	1	3940.16	3.25	0	82.91	0	2.77	0	0	6.63	0	0	0	0	0	0	-22.96	-22.96
Inverter Transformer	MV6-4 T	370244	4906966	2	0	0	69.4	69.4	1	5919.06	3.25	0	86.45	0	3.18	0	0	7.97	0	0	0	0	0	0	-28.24	-28.24
Inverter Transformer	MV6-1 T	370230	4907364	2	0	0	69.4	69.4	1	6190.97	3.25	0	86.84	0	3.22	0	0	8.13	0	0	0	0	0	0	-28.83	-28.83
Inverter Transformer	MV1-15 T	365309	4904994	2	0	0	56.1	56.1	1	2215.01	3.25	0	77.91	0	0.49	0	0	7.46	0	0	0	0	0	0	-29.8	-29.8
Inverter Transformer	MV1-12 T	365044	4905386	2	0	0	56.1	56.1	1	2671.34	3.25	0	79.53	0	0.69	0	0	8.3	0	0	0	0	0	0	-32.46	-32.46
Inverter Transformer	MV1-11 T	364649	4905414	2	0	0	56.1	56.1	1	2856.52	3.25	0	80.12	0	0.77	0	0	8.62	0	0	0	0	0	0	-33.45	-33.45
Inverter Transformer	MV1-8 T	364782	4905647	2	0	0	56.1	56.1	1	3010.63	3.25	0	80.57	0	0.83	0	0	8.89	0	0	0	0	0	0	-34.24	-34.24
Inverter Transformer	MV1-9 T	364555	4905646	2	0	0	56.1	56.1	1	3105.84	3.25	0	80.84	0	0.87	0	0	9.05	0	0	0	0	0	0	-34.71	-34.71
Inverter Transformer	MV1-4 T	364821	4905918	2	0	0	56.1	56.1	1	3247.69	3.25	0	81.23	0	0.93	0	0	9.28	0	0	0	0	0	0	-35.39	-35.39
Inverter Transformer	MV1-5 T	364676	4905892	2	0	0	56.1	56.1	1	3277.57	3.25	0	81.31	0	0.95	0	0	9.33	0	0	0	0	0	0	-35.53	-35.53
Inverter Transformer	MV1-6 T	364482	4905835	2	0	0	56.1	56.1	1	3307.46	3.25	0	81.39	0	0.96	0	0	9.38	0	0	0	0	0	0	-35.67	-35.67
Inverter Transformer	MV1-2 T	364759	4906063	2	0	0	56.1	56.1	1	3405.24	3.25	0	81.64	0	1	0	0	9.54	0	0	0	0	0	0	-36.12	-36.12
Inverter Transformer	MV1-3 T	364435	4906039	2	0	0	56.1	56.1	1	3511.25	3.25	0	81.91	0	1.04	0	0	9.71	0	0	0	0	0	0	-36.6	-36.6
Inverter Transformer	MV1-1 T	364721	4906166	2	0	0	56.1	56.1	1	3515.03	3.25	0	81.92	0	1.05	0	0	9.71	0	0	0	0	0	0	-36.62	-36.62
Inverter Transformer	MV2-3 T	365814	4906641	2	0	0	56.1	56.1	1	3766.07	3.25	0	82.52	0	1.15	0	0	10.1	0	0	0	0	0	0	-37.71	-37.71
Inverter Transformer	MV2-4 T	365590	4906628	2	0	0	56.1	56.1	1	3768.65	3.25	0	82.52	0	1.15	0	0	10.11	0	0	0	0	0	0	-37.72	-37.72
Inverter Transformer	MV2-2 T	365982	4906654	2	0	0	56.1	56.1	1	3776.15	3.25	0	82.54	0	1.15	0	0	10.12	0	0	0	0	0	0	-37.75	-37.75
Inverter Transformer	MV3-18 T	367757	4907412	2	0	0	56.1	56.1	1	4875.93	3.25	0	84.76	0	1.58	0	0	11.69	0	0	0	0	0	0	-41.97	-41.97
Inverter Transformer	MV3-21 T	368484	4907206	2	0	0	56.1	56.1	1	5008.53	3.25	0	84.99	0	1.63	0	0	11.87	0	0	0	0	0	0	-42.43	-42.43
Inverter Transformer	MV3-12 T	367674	4907594	2	0	0	56.1	56.1	1	5016.71	3.25	0	85.01	0	1.63	0	0	11.88	0	0	0	0	0	0	-42.46	-42.46
Inverter Transformer	MV3-22 T	368661	4907142	2	0	0	56.1	56.1	1	5045.7	3.25	0	85.06	0	1.64	0	0	11.91	0	0	0	0	0	0	-42.56	-42.56
Inverter Transformer	MV3-19 T	368352	4907347	2	0	0	56.1	56.1	1	5067.33	3.25	0	85.1	0	1.65	0	0	11.94	0	0	0	0	0	0	-42.63	-42.63
Inverter Transformer	MV3-17 T	368183	4907472	2	0	0	56.1	56.1	1	5102.15	3.25	0	85.16	0	1.66	0	0	11.99	0	0	0	0	0	0	-42.75	-42.75
Inverter Transformer	MV3-13 T	367958	4907577	2	0	0	56.1	56.1	1	5104.86	3.25	0	85.16	0	1.66	0	0	11.99	0	0	0	0	0	0	-42.76	-42.76
Inverter Transformer	MV3-15 T	368351	4907477	2	0	0	56.1	56.1	1	5181.88	3.25	0	85.29	0	1.69	0	0	12.09	0	0	0	0	0	0	-43.01	-43.01
Inverter Transformer	MV3-20 T	368683	4907317	2	0	0	56.1	56.1	1	5205.89	3.25	0	85.33	0	1.7	0	0	12.12	0	0	0	0	0	0	-43.09	-43.09
Inverter Transformer	MV3-16 T	368509	4907475	2	0	0	56.1	56.1	1	5254.8	3.25	0	85.41	0	1.72	0	0	12.19	0	0	0	0	0	0	-43.25	-43.25
Inverter Transformer	MV3-7 T	367951	4907754	2	0	0	56.1	56.1	1	5265.6	3.25	0	85.43	0	1.72	0	0	12.2	0	0	0	0	0	0	-43.29	-43.29
Inverter Transformer	MV3-10 T	368162	4907669	2	0	0	56.1	56.1	1	5271.44	3.25	0	85.44	0	1.72	0	0	12.21	0	0	0	0	0	0	-43.31	-43.31
Inverter Transformer	MV3-11 T	368340	4907662	2	0	0	56.1	56.1	1	5341.85	3.25	0	85.55	0	1.75	0	0	12.3	0	0	0	0	0	0	-43.54	-43.54
Inverter Transformer	MV3-14 T	368678	4907498	2	0	0	56.1	56.1	1	5358.53	3.25	0	85.58	0	1.75	0	0	12.32	0	0	0	0	0	0	-43.59	-43.59
Inverter Transformer	MV3-6 T	368156	4907834	2	0	0	56.1	56.1	1	5419.41	3.25	0	85.68	0	1.77	0	0	12.39	0	0	0	0	0	0	-43.79	-43.79
Inverter Transformer	MV3-3 T	367944	4907927	2	0	0	56.1	56.1	1	5423.63	3.25	0	85.69	0	1.77	0	0	12.4	0	0	0	0	0	0	-43.8	-43.8
Inverter Transformer	MV3-9 T	368517	4907703	2	0	0	56.1	56.1	1	5459.12	3.25	0	85.74	0	1.79	0	0	12.44	0	0	0	0	0	0	-43.91	-43.91
Inverter Transformer	MV3-5 T	368335	4907843	2	0	0	56.1	56.1	1	5502.38	3.25	0	85.81	0	1.8	0	0	12.5	0	0	0	0	0	0	-44.05	-44.05
Inverter Transformer	MV3-1 T	368150	4907976	2	0	0	56.1	56.1	1	5547.2	3.25	0	85.88	0	1.82	0	0	12.55	0	0	0	0	0	0	-44.19	-44.19
Inverter Transformer	MV3-8 T	368685	4907712	2	0	0	56.1	56.1	1	5547.53	3.25	0	85.88	0	1.82	0	0	12.55	0	0	0	0	0	0	-44.19	-44.19
Inverter Transformer	MV3-4 T	368507	4907925	2	0	0	56.1	56.1	1	5651.78	3.25	0	86.04	0	1.85	0	0	12.68	0	0	0	0	0	0	-44.52	-44.52
Inverter Transformer	MV3-2 T	368677	4907928	2	0	0	56.1	56.1	1	5732.94	3.25	0	86.17	0	1.88	0	0	12.78	0	0	0	0	0	0	-44.77	-44.77
Inverter Transformer	MV6-3 T	370202	4907140	2	0	0	56.1	56.1	1	6010.86	3.25	0	86.58	0	1.97	0	0	13.12	0	0	0	0	0	0	-45.6	-45.6
Inverter Transformer	MV6-2 T	370091	4907339	2	0	0	56.1	56.1	1	6077.64	3.25	0	86.67	0	1.99	0	0	13.19	0	0	0	0	0	0	-45.8	-45.8
Inverter Transformer	MV4-15 T	369170	4908481	2	0	0	56.1	56.1	1	6455.72	3.25	0	87.2	0	2.1	0	0	13.63	0	0	0	0	0	0	-46.88	-46.88
Inverter Transformer	MV4-14 T	369182	4908507	2	0	0	56.1	56.1	1	6484.25	3.25	0	87.24	0	2.11	0	0	13.66	0	0	0	0	0	0	-46.95	-46.95
Inverter Transformer	MV4-13 T	369057	4908605	2	0	0	56.1	56.1	1	6509.18	3.25	0	87.27	0	2.12	0	0	13.69	0	0	0	0	0	0	-47.02	-47.02

	Inverter Transformer	MV4-12 T	369049	4908803	2	0	0	56.1	56.1	1	6680.35	3.25	0	87.5	0	2.17	0	0	13.88	0	0	0	0	0	0	-47.49	-47.49
	Inverter Transformer	MV4-11 T	369269	4908855	2	0	0	56.1	56.1	1	6830.23	3.25	0	87.69	0	2.21	0	0	14.05	0	0	0	0	0	0	-47.89	-47.89
	Inverter Transformer	MV4-10 T	369307	4908858	2	0	0	56.1	56.1	1	6851.32	3.25	0	87.72	0	2.22	0	0	14.07	0	0	0	0	0	0	-47.94	-47.94
	Inverter Transformer	MV4-7 T	369040	4909001	2	0	0	56.1	56.1	1	6852.53	3.25	0	87.72	0	2.22	0	0	14.07	0	0	0	0	0	0	-47.95	-47.95
	Inverter Transformer	MV5-6 T	369987	4908507	2	0	0	56.1	56.1	1	6919.2	3.25	0	87.8	0	2.24	0	0	14.14	0	0	0	0	0	0	-48.12	-48.12
	Inverter Transformer	MV4-8 T	369262	4909001	2	0	0	56.1	56.1	1	6955.03	3.25	0	87.85	0	2.25	0	0	14.18	0	0	0	0	0	0	-48.22	-48.22
	Inverter Transformer	MV4-9 T	369284	4909001	2	0	0	56.1	56.1	1	6965.49	3.25	0	87.86	0	2.25	0	0	14.19	0	0	0	0	0	0	-48.24	-48.24
	Inverter Transformer	MV4-4 T	369033	4909199	2	0	0	56.1	56.1	1	7026.96	3.25	0	87.94	0	2.27	0	0	14.26	0	0	0	0	0	0	-48.4	-48.4
	Inverter Transformer	MV5-5 T	370021	4908690	2	0	0	56.1	56.1	1	7088.29	3.25	0	88.01	0	2.28	0	0	14.32	0	0	0	0	0	0	-48.56	-48.56
	Inverter Transformer	MV4-6 T	369249	4909192	2	0	0	56.1	56.1	1	7117.75	3.25	0	88.05	0	2.29	0	0	14.36	0	0	0	0	0	0	-48.64	-48.64
	Inverter Transformer	MV4-5 T	369283	4909199	2	0	0	56.1	56.1	1	7139.71	3.25	0	88.07	0	2.3	0	0	14.38	0	0	0	0	0	0	-48.69	-48.69
	Inverter Transformer	MV4-1 T	369017	4909397	2	0	0	56.1	56.1	1	7198.79	3.25	0	88.15	0	2.31	0	0	14.44	0	0	0	0	0	0	-48.84	-48.84
	Inverter Transformer	MV5-2 T	370011	4908853	2	0	0	56.1	56.1	1	7216.93	3.25	0	88.17	0	2.32	0	0	14.46	0	0	0	0	0	0	-48.89	-48.89
	Inverter Transformer	MV5-4 T	370330	4908707	2	0	0	56.1	56.1	1	7283.18	3.25	0	88.25	0	2.33	0	0	14.53	0	0	0	0	0	0	-49.05	-49.05
	Inverter Transformer	MV4-3 T	369234	4909397	2	0	0	56.1	56.1	1	7293.48	3.25	0	88.26	0	2.34	0	0	14.54	0	0	0	0	0	0	-49.08	-49.08
	Inverter Transformer	MV4-2 T	369267	4909397	2	0	0	56.1	56.1	1	7308.34	3.25	0	88.28	0	2.34	0	0	14.56	0	0	0	0	0	0	-49.12	-49.12
	Inverter Transformer	MV5-3 T	370237	4908851	2	0	0	56.1	56.1	1	7344.44	3.25	0	88.32	0	2.35	0	0	14.59	0	0	0	0	0	0	-49.21	-49.21
	Inverter Transformer	MV5-1 T	370015	4909142	2	0	0	56.1	56.1	1	7460.13	3.25	0	88.45	0	2.38	0	0	14.71	0	0	0	0	0	0	-49.49	-49.49
	Line Reactor	NGR	369421	4908787.5	5	0	0	45.4	45.4	1	6846.73	5.25	0	87.71	0	3.22	1.37	0.1	2.8	0	0	0	0	0	0	-49.74	-49.74
Limit. Valu	0	0																								
Level D/N:	27.1573	27.1573																								

Receiver: Existing Noise Receptor
ID: G-30
X: 365942.2
Y: 4903033.1
Z: 4.5
Ground: 0

ISO	Description	ID	X	Y	Z	Ground	ReflOrd	LxT	LxN	L/A	Dist.	hm	Freq	Adiv	K0b	Agr	Abar	z	Aatm	Afol	Ahous	Cmet	CmetN	Dc	RL	LtotT	LtotN
	Sol_Luce Substation	S_Substation	369426	4908792	3.5	0	0	112.1	112.1	1	6730.66	5.25	0	87.56	0	1.33	2.49	0.3	10.49	0	0	0	0	0	0	10.21	10.21
	Inverter	MV1-15	365315	4904994	2	0	0	100.3	100.3	1	2058.77	3.25	0	77.27	0	0.15	0	0	13.58	0	0	0	0	0	0	9.31	9.31
	Gardiner Substation	G_Sub	366586.3	4903349.9	2.5	0	0	90.8	90.8	1	717.8	3.5	0	68.12	0	-0.4	0	0	1.93	0	0	0	0	0	0	21.13	21.13
	Inverter	MV1-12	365038	4905386	2	0	0	100.3	100.3	1	2520.66	3.25	0	79.03	0	0.26	0	0	14.5	0	0	0	0	0	0	6.52	6.52
	Inverters	G_Inv1	366526.4	4903225.8	2	0	0	87.7	87.7	1	615.17	3.25	0	66.78	0	2.4	0	0	0.92	0	0	0	0	0	0	17.56	17.56
	Inverter	MV1-11	364655	4905414	2	0	0	100.3	100.3	1	2706.58	3.25	0	79.65	0	0.3	0	0	14.84	0	0	0	0	0	0	5.52	5.52
	Inverters	G_Inv3	366583.7	4903091.4	2	0	0	87.7	87.7	1	644.15	3.25	0	67.18	0	2.4	0	0	0.96	0	0	0	0	0	0	17.12	17.12
	Inverter	MV1-8	364788	4905647	2	0	0	100.3	100.3	1	2857.39	3.25	0	80.12	0	0.33	0	0	15.12	0	0	0	0	0	0	4.74	4.74
	Inverter	MV1-9	364561	4905646	2	0	0	100.3	100.3	1	2955.5	3.25	0	80.41	0	0.35	0	0	15.29	0	0	0	0	0	0	4.25	4.25
	Inverters	G_Inv5	366638.5	4902958.1	2	0	0	87.7	87.7	1	700.33	3.25	0	67.91	0	2.41	0	0	1.04	0	0	0	0	0	0	16.31	16.31
	Inverter	MV1-14	365163	4905049	2	0	0	97.3	97.3	1	2161.25	3.25	0	77.69	0	0.17	0	0	13.79	0	0	0	0	0	0	5.65	5.65
	Inverter	MV1-4	364815	4905918	2	0	0	100.3	100.3	1	3097.29	3.25	0	80.82	0	0.38	0	0	15.54	0	0	0	0	0	0	3.57	3.57
	Inverter	MV1-5	364671	4905892	2	0	0	100.3	100.3	1	3128.78	3.25	0	80.91	0	0.39	0	0	15.6	0	0	0	0	0	0	3.42	3.42
	Inverter	MV1-6	364477	4905835	2	0	0	100.3	100.3	1	3161.88	3.25	0	81	0	0.39	0	0	15.66	0	0	0	0	0	0	3.27	3.27
	Inverter	MV1-2	364753	4906063	2	0	0	100.3	100.3	1	3254.92	3.25	0	81.25	0	0.41	0	0	15.82	0	0	0	0	0	0	2.84	2.84
	Inverters	G_Inv2	366676.9	4903239.1	2	0	0	87.7	87.7	1	763.04	3.25	0	68.65	0	2.41	0	0	1.12	0	0	0	0	0	0	15.47	15.47
	Inverters	G_Inv7	366694.6	4902824.7	2	0	0	87.7	87.7	1	780.73	3.25	0	68.85	0	2.42	0	0	1.14	0	0	0	0	0	0	15.25	15.25
	Inverter	MV1-1	364715	4906166	2	0	0	100.3	100.3	1	3364.68	3.25	0	81.54	0	0.43	0	0	16	0	0	0	0	0	0	2.34	2.34
	Inverters	G_Inv4	366732.8	4903105	2	0	0	87.7	87.7	1	793.87	3.25	0	68.99	0	2.42	0	0	1.16	0	0	0	0	0	0	15.09	15.09
	Inverter	MV1-13	364731	4905241	2	0	0	97.3	97.3	1	2518.3	3.25	0	79.02	0	0.26	0	0	14.49	0	0	0	0	0	0	3.54	3.54
	Inverter	MV2-4	365586	4906624	2	0	0	100.3	100.3	1	3608.52	3.25	0	82.15	0	0.47	0	0	16.41	0	0	0	0	0	0	1.28	1.28
	Inverter	MV2-3	365820	4906641	2	0	0	100.3	100.3	1	3609.97	3.25	0	82.15	0	0.47	0	0	16.41	0	0	0	0	0	0	1.28	1.28
	Inverters	G_Inv6	366788.5	4902972	2	0	0	87.7	87.7	1	848.51	3.25	0	69.57	0	2.43	0	0	1.23	0	0	0	0	0	0	14.43	14.43
	Inverters	G_Inv9	366750.9	4902691.8	2	0	0	87.7	87.7	1	877.77	3.25	0	69.87	0	2.43	0	0	1.27	0	0	0	0	0	0	14.09	14.09
	Inverter	MV1-10	365004	4905564	2	0	0	97.3	97.3	1	2699.2	3.25	0	79.62	0	0.3	0	0	14.83	0	0	0	0	0	0	2.56	2.56
	Inverters	G_Inv8	366844.5	4902838.5	2	0	0	87.7	87.7	1	923.05	3.25	0	70.3	0	2.44	0	0	1.33	0	0	0	0	0	0	13.59	13.59
	Inverter	MV1-7	364925	4905782	2	0	0	97.3	97.3	1	2931.07	3.25	0	80.34	0	0.35	0	0	15.25	0	0	0	0	0	0	1.37	1.37
	Inverters	G_Inv10	366900.7	4902704.8	2	0	0	87.7	87.7	1	1013.17	3.25	0	71.11	0	2.45	0	0	1.44	0	0	0	0	0	0	12.65	12.65
	Inverter	MV3-18	367752	4907412	2	0	0	100.3	100.3	1	4738.16	3.25	0	84.51	0	0.62	0	0	18.19	0	0	0	0	0	0	-3.01	-3.01
	Inverter	MV3-12	367668	4907594	2	0	0	100.3	100.3	1	4876.49	3.25	0	84.76	0	0.63	0	0	18.4	0	0	0	0	0	0	-3.48	-3.48
	Inverter	MV3-21	368478	4907206	2	0	0	100.3	100.3	1	4882.97	3.25	0	84.77	0	0.63	0	0	18.41	0	0	0	0	0	0	-3.5	-3.5
	Inverter	MV3-19	368357	4907347	2	0	0	100.3	100.3	1	4943.78	3.25	0	84.88	0	0.64	0	0	18.5	0	0	0	0	0	0	-3.7	-3.7
	Inverter	MV3-17	368178	4907472	2	0	0	100.3	100.3	1	4970.18	3.25	0	84.93	0	0.64	0	0	18.54	0	0	0	0	0	0	-3.79	-3.79
	Inverter	MV3-13	367963	4907577	2	0	0	100.3	100.3	1	4972.99	3.25	0	84.93	0	0.64	0	0	18.54	0	0	0	0	0	0	-3.8	-3.8
	Inverter	MV3-15	368357	4907477	2	0	0	100.3	100.3	1	5057.62	3.25	0	85.08	0	0.65	0	0	18.66	0	0	0	0	0	0	-4.08	-4.08
	Inverter	MV3-20	368689	4907317	2	0	0	100.3	100.3	1	5088.88	3.25	0	85.13	0	0.65	0	0	18.71	0	0	0	0	0	0	-4.18	-4.18
	Inverter	MV3-7	367945	4907754	2	0	0	100.3	100.3	1	5128.17	3.25	0	85.2	0	0.65	0	0	18.77	0	0	0	0	0	0	-4.31	-4.31
	Inverter	MV3-16	368514	4907475	2	0	0	100.3	100.3	1	5132.7	3.25	0	85.21	0	0.65	0	0	18.77	0	0	0	0	0	0	-4.32	-4.32
	Inverter	MV3-10	368167	4907669	2	0	0	100.3	100.3	1	5142.11	3.25	0	85.22	0	0.65	0	0	18.79	0	0	0	0	0	0	-4.35	-4.35
	Inverter	MV3-11	368346	4907662	2	0	0	100.3	100.3	1	5215.84	3.25	0	85.35	0	0.66	0	0	18.89	0	0	0	0	0	0	-4.59	-4.59
	Inverter	MV3-14	368684	4907498	2	0	0	100.3	100.3	1	5239.54	3.25	0	85.39	0	0.66	0	0	18.93	0	0	0	0	0	0	-4.66	-4.66
	Inverter	MV3-3	367939	4907927	2	0	0	100.3	100.3	1	5285.59	3.25	0	85.46	0	0.67	0	0	19	0	0	0	0	0	0	-4.81	-4.81
	Inverter	MV3-6	368162	4907834	2	0	0	100.3	100.3	1	5289.25	3.25	0	85.47	0	0.67	0	0	19	0	0	0	0	0	0	-4.82	-4.82
	Inverter	MV3-9	368512	4907703	2	0	0	100.3	100.3	1	5330.28	3.25	0	85.53	0	0.67	0	0	19.06	0	0	0	0	0	0	-4.95	-4.95

Inverter	MV2-1	365842	4906816	2	0	0	97.3	97.3	1	3784.23	3.25	0	82.56	0	0.5	0	0	16.7	0	0	0	0	0	0	-2.44	-2.44
Inverter	MV3-8	368680	4907712	2	0	0	100.3	100.3	1	5421.04	3.25	0	85.68	0	0.68	0	0	19.19	0	0	0	0	0	0	-5.23	-5.23
Inverter	MV6-3	370207	4907140	2	0	0	100.3	100.3	1	5920.74	3.25	0	86.45	0	0.7	0	0	19.89	0	0	0	0	0	0	-6.72	-6.72
Inverter	MV6-2	370085	4907339	2	0	0	100.3	100.3	1	5975.25	3.25	0	86.53	0	0.7	0	0	19.96	0	0	0	0	0	0	-6.88	-6.88
Inverter	MV4-11	369264	4908855	2	0	0	100.3	100.3	1	6702.9	3.25	0	87.53	0	0.71	0	0	20.92	0	0	0	0	0	0	-8.85	-8.85
Inverter	MV4-7	369035	4909001	2	0	0	100.3	100.3	1	6721.7	3.25	0	87.55	0	0.71	0	0	20.95	0	0	0	0	0	0	-8.9	-8.9
Inverter	MV4-10	369312	4908858	2	0	0	100.3	100.3	1	6729.41	3.25	0	87.56	0	0.71	0	0	20.96	0	0	0	0	0	0	-8.92	-8.92
Inverter	MV4-8	369256	4909001	2	0	0	100.3	100.3	1	6826.21	3.25	0	87.68	0	0.71	0	0	21.08	0	0	0	0	0	0	-9.16	-9.16
Inverter	MV4-9	369289	4909001	2	0	0	100.3	100.3	1	6842.29	3.25	0	87.7	0	0.71	0	0	21.1	0	0	0	0	0	0	-9.2	-9.2
Inverter	MV4-4	369027	4909199	2	0	0	100.3	100.3	1	6894.51	3.25	0	87.77	0	0.71	0	0	21.17	0	0	0	0	0	0	-9.34	-9.34
Inverter	MV5-5	370015	4908690	2	0	0	100.3	100.3	1	6970.53	3.25	0	87.87	0	0.71	0	0	21.26	0	0	0	0	0	0	-9.53	-9.53
Inverter	MV4-6	369243	4909192	2	0	0	100.3	100.3	1	6987.66	3.25	0	87.89	0	0.71	0	0	21.28	0	0	0	0	0	0	-9.57	-9.57
Inverter	MV4-5	369289	4909199	2	0	0	100.3	100.3	1	7015.65	3.25	0	87.92	0	0.71	0	0	21.32	0	0	0	0	0	0	-9.64	-9.64
Inverter	MV4-1	369011	4909397	2	0	0	100.3	100.3	1	7065.18	3.25	0	87.98	0	0.71	0	0	21.38	0	0	0	0	0	0	-9.76	-9.76
Inverter	MV5-2	370006	4908853	2	0	0	100.3	100.3	1	7098.29	3.25	0	88.02	0	0.71	0	0	21.42	0	0	0	0	0	0	-9.84	-9.84
Inverter	MV4-3	369229	4909397	2	0	0	100.3	100.3	1	7162.56	3.25	0	88.1	0	0.7	0	0	21.5	0	0	0	0	0	0	-10	-10
Inverter	MV5-4	370324	4908707	2	0	0	100.3	100.3	1	7168.91	3.25	0	88.11	0	0.7	0	0	21.51	0	0	0	0	0	0	-10.01	-10.01
Inverter	MV4-2	369272	4909397	2	0	0	100.3	100.3	1	7182.39	3.25	0	88.13	0	0.7	0	0	21.53	0	0	0	0	0	0	-10.04	-10.04
Inverter	MV5-3	370231	4908851	2	0	0	100.3	100.3	1	7227.85	3.25	0	88.18	0	0.7	0	0	21.58	0	0	0	0	0	0	-10.15	-10.15
Inverter	MV5-1	370020	4909142	2	0	0	100.3	100.3	1	7344.87	3.25	0	88.32	0	0.7	0	0	21.73	0	0	0	0	0	0	-10.43	-10.43
Inverter	MV6-1	370235	4907364	2	0	0	97.3	97.3	1	6097.94	3.25	0	86.7	0	0.71	0	0	20.13	0	0	0	0	0	0	-10.23	-10.23
DSTATCOM - 10 MVAR #2	DSAT2	369403	4908757	2.5	0	0	96.6	96.6	1	6688.81	3.5	0	87.51	0	3.82	0	0	4.17	0	0	0	0	0	0	1.14	1.14
DSTATCOM - 10 MVAR #1	DSAT1	369437	4908757	2.5	0	0	96.6	96.6	1	6706.46	3.5	0	87.53	0	3.82	0	0	4.17	0	0	0	0	0	0	1.11	1.11
Inverter	MV1-3	364440	4906039	2	0	0	89.1	89.1	1	3360.36	3.25	0	81.53	0	1.23	0	0	10.16	0	0	0	0	0	0	-3.86	-3.86
SubstationTransformer	W_ST	369711.17	4906112.3	2.5	0	0	92	92	1	4866.87	4.25	0	84.74	0	1.6	2.36	0.23	8.46	0	0	0	0	0	0	-5.19	-5.19
Inverter	MV2-2	365977	4906654	2	0	0	89.1	89.1	1	3621.07	3.25	0	82.18	0	1.3	0	0	10.54	0	0	0	0	0	0	-4.96	-4.96
Westbrook Inverter Enclosur	W_INV3	369508	4906164	2	0	0	89.1	89.1	1	4745.26	3.25	0	84.53	0	1.58	0	0	12.12	0	0	0	0	0	0	-9.16	-9.16
Westbrook Inverter Enclosur	W_INV2	369374	4906388	2	0	0	89.1	89.1	1	4799.23	3.25	0	84.62	0	1.59	0	0	12.19	0	0	0	0	0	0	-9.35	-9.35
Westbrook Inverter Enclosur	W_INV4	369673	4906164	2	0	0	89.1	89.1	1	4870.46	3.25	0	84.75	0	1.61	0	0	12.29	0	0	0	0	0	0	-9.59	-9.59
Inverter	MV3-22	368656	4907142	2	0	0	89.1	89.1	1	4924.2	3.25	0	84.85	0	1.62	0	0	12.36	0	0	0	0	0	0	-9.77	-9.77
Westbrook Inverter Enclosur	W_INV7	369780	4906417	2	0	0	89.1	89.1	1	5116.59	3.25	0	85.18	0	1.67	0	0	12.62	0	0	0	0	0	0	-10.41	-10.41
Westbrook Inverter Enclosur	W_INV5	369719	4906574	2	0	0	89.1	89.1	1	5177.08	3.25	0	85.28	0	1.68	0	0	12.7	0	0	0	0	0	0	-10.61	-10.61
Westbrook Inverter Enclosur	W_INV6	369875	4906578	2	0	0	89.1	89.1	1	5294.64	3.25	0	85.48	0	1.71	0	0	12.85	0	0	0	0	0	0	-10.99	-10.99
Inverter	MV3-5	368340	4907843	2	0	0	89.1	89.1	1	5374.44	3.25	0	85.61	0	1.73	0	0	12.96	0	0	0	0	0	0	-11.24	-11.24
Inverter	MV3-1	368156	4907976	2	0	0	89.1	89.1	1	5416.01	3.25	0	85.67	0	1.74	0	0	13.01	0	0	0	0	0	0	-11.37	-11.37
Inverter	MV3-4	368502	4907925	2	0	0	89.1	89.1	1	5521.17	3.25	0	85.84	0	1.77	0	0	13.15	0	0	0	0	0	0	-11.7	-11.7
Inverter	MV3-2	368671	4907928	2	0	0	89.1	89.1	1	5604.14	3.25	0	85.97	0	1.79	0	0	13.26	0	0	0	0	0	0	-11.96	-11.96
Fixed Reactor Bank 1	FRB1	369378	4908755	6	0	0	89.8	89.8	1	6674.19	5.25	0	87.49	0	-0.33	0	0	10.43	0	0	0	0	0	0	-7.82	-7.82
Fixed Reactor Bank 2	FRB2	369464	4908755	6	0	0	89.8	89.8	1	6718.87	5.25	0	87.55	0	-0.32	0	0	10.48	0	0	0	0	0	0	-7.93	-7.93
Inverter	MV4-15	369176	4908481	2	0	0	89.1	89.1	1	6335.38	3.25	0	87.04	0	1.97	0	0	14.18	0	0	0	0	0	0	-14.13	-14.13
Inverter	MV4-14	369176	4908507	2	0	0	89.1	89.1	1	6357.76	3.25	0	87.07	0	1.97	0	0	14.21	0	0	0	0	0	0	-14.19	-14.19
Inverter	MV4-13	369051	4908605	2	0	0	89.1	89.1	1	6380.49	3.25	0	87.1	0	1.98	0	0	14.24	0	0	0	0	0	0	-14.25	-14.25
Inverter	MV4-12	369043	4908803	2	0	0	89.1	89.1	1	6550.32	3.25	0	87.33	0	2.02	0	0	14.44	0	0	0	0	0	0	-14.73	-14.73
Inverter	MV5-6	369982	4908507	2	0	0	89.1	89.1	1	6803.2	3.25	0	87.65	0	2.08	0	0	14.75	0	0	0	0	0	0	-15.43	-15.43
Westbrook Inverter Enclosur	W_INV1	369409	4906578	2	0	0	86.1	86.1	1	4958.33	3.25	0	84.91	0	1.63	0	0	12.41	0	0	0	0	0	0	-12.89	-12.89
Inverter	MV6-4	370250	4906966	2	0	0	86.1	86.1	1	5833.08	3.25	0	86.32	0	1.85	0	0	13.55	0	0	0	0	0	0	-15.66	-15.66
Westbrook Inverter Transfor	W_INVTR1	369403	4906578	2	0	0	78.2	78.2	1	4954.14	3.25	0	84.9	0	-3.17	0	0	2.4	0	0	0	0	0	0	-5.89	-5.89
Westbrook Inverter Transfor	W_INVTR3	369514	4906164	2	0	0	77.3	77.3	1	4749.77	3.25	0	84.53	0	-3.13	0	0	2.33	0	0	0	0	0	0	-6.39	-6.39
Westbrook Inverter Transfor	W_INVTR2	369368	4906388	2	0	0	77.3	77.3	1	4794.94	3.25	0	84.62	0	-3.14	0	0	2.34	0	0	0	0	0	0	-6.48	-6.48
Westbrook Inverter Transfor	W_INVTR4	369679	4906164	2	0	0	77.3	77.3	1	4875.06	3.25	0	84.76	0	-3.15	0	0	2.37	0	0	0	0	0	0	-6.64	-6.64
Westbrook Inverter Transfor	W_INVTR7	369786	4906417	2	0	0	77.3	77.3	1	5121.09	3.25	0	85.19	0	-3.2	0	0	2.45	0	0	0	0	0	0	-7.1	-7.1
Westbrook Inverter Transfor	W_INVTR5	369725	4906574	2	0	0	77.3	77.3	1	5181.46	3.25	0	85.29	0	-3.21	0	0	2.47	0	0	0	0	0	0	-7.21	-7.21
Westbrook Inverter Transfor	W_INVTR6	369881	4906578	2	0	0	77.3	77.3	1	5299.1	3.25	0	85.48	0	-3.24	0	0	2.51	0	0	0	0	0	0	-7.42	-7.42
Inverter Transformer	MV1-14 T	365157	4905049	2	0	0	69.4	69.4	1	2163.42	3.25	0	77.7	0	2.23	0	0	5.13	0	0	0	0	0	0	-15.71	-15.71
Inverter Transformer	MV1-13 T	364725	4905241	2	0	0	69.4	69.4	1	2521.19	3.25	0	79.03	0	2.36	0	0	5.46	0	0	0	0	0	0	-17.5	-17.5
Inverter Transformer	MV1-10 T	365010	4905564	2	0	0	69.4	69.4	1	2697.12	3.25	0	79.62	0	2.41	0	0	5.62	0	0	0	0	0	0	-18.3	-18.3
Inverter Transformer	MV1-7 T	364919	4905782	2	0	0	69.4	69.4	1	2933.15	3.25	0	80.35	0	2.49	0	0	5.83	0	0	0	0	0	0	-19.31	-19.31
Inverter Transformer	MV2-1 T	365836	4906816	2	0	0	69.4	69.4	1	3784.39	3.25	0	82.56	0	2.73	0	0	6.51	0	0	0	0	0	0	-22.45	-22.45
Inverter Transformer	MV6-4 T	370244	4906966	2	0	0	69.4	69.4	1	5828.65	3.25	0	86.31	0	3.16	0	0	7.91	0	0	0	0	0	0	-28.04	-28.04
Inverter Transformer	MV6-1 T	370230	4907364	2	0	0	69.4	69.4	1	6094.42	3.25	0	86.7	0	3.2	0	0	8.08	0	0	0	0	0	0	-28.63	-28.63
Inverter Transformer	MV1-15 T	365309	4904994	2	0	0	56.1	56.1	1	2060.6	3.25	0	77.28	0	0.43	0	0	7.16	0	0	0	0	0	0	-28.81	-28.81
Inverter Transformer	MV1-12 T	365044	4905386	2	0	0	56.1	56.1	1	2518.51	3.25	0	79.02	0	0.62	0	0	8.02	0	0	0	0	0	0	-31.61	-31.61
Inverter Transformer	MV1-11 T	364649	4905414	2	0	0	56.1	56.1	1	2709.44	3.25	0	79.66	0	0.71	0	0	8.37	0	0	0	0	0	0	-32.67	-32.67
Inverter Transformer	MV1-8 T	364782	4905647	2	0	0	56.1	56.1	1	2859.82	3.25	0	80.13	0	0.77	0	0	8.63	0	0	0	0	0	0	-33.47	-33.47
Inverter Transformer	MV1-9 T	364555	4905646	2	0	0	56.1	56.1	1	2958.31	3.25	0	80.42	0	0.81	0	0	8.8	0	0	0	0	0	0	-33.97	-33.97
Inverter Transformer	MV1-4 T	364821	4905918	2	0	0	56.1	56.1	1	3095.12	3.25	0	80.81	0	0.87	0	0	9.03	0	0	0	0	0	0	-34.65	-34.65
Inverter Transformer	MV1-5 T	364676	4905892	2	0	0	56.1	56.1	1	3126.75	3.25	0	80.9	0	0.88	0	0	9.08	0	0	0	0	0	0	-34.81	-34.81
Inverter Transformer	MV1-6 T	364482	4905835	2	0	0	56.1	56.1	1	3159.56	3.25	0	80.99	0	0.9	0	0	9.14	0	0	0	0	0	0	-34.97	-34.97
Inverter Transformer	MV1-2 T	364759	4906063	2	0	0	56.1	56.1	1	3252.73	3.25	0	81.24	0	0.94	0	0	9.29	0	0	0	0	0	0	-35.41	-35.41
Inverter Transformer	MV1-1 T	364721	4906166	2	0	0	56.1	56.1	1	3362.5	3.25	0	81.53	0	0.98	0	0	9.47	0	0	0	0	0	0	-35.93	-35.93
Inverter Transformer	MV1-3 T	364435	4906039	2	0	0	56.1	56.1	1	3362.6	3.25	0	81.53	0	0.98	0	0	9.47	0	0	0	0	0	0	-35.93	-35.93
Inverter Transformer	MV2-3 T	365814	4906641	2	0	0	56.1	56.1	1	3610.18	3.25	0	82.15	0	1.09	0	0	9.86	0	0	0	0	0	0	-37.04	-37.04
Inverter Transformer	MV2-4 T	365590	4906628	2	0	0	56.1	56.1	1	3612.11	3.25	0	82.16	0	1.09	0	0	9.86	0	0	0	0	0	0	-37.05	-37.05
Inverter Transformer	MV2-2 T	365982	4906654	2	0	0	56.1	56.1	1	3621.12	3.25	0	82.18	0	1.09	0	0	9.88	0	0	0	0	0	0	-37.09	-37.09

	Inverter Transformer	MV3-18 T	367757	4907412	2	0	0	56.1	56.1	1	4740.07	3.25	0	84.52	0	1.53	0	0	11.51	0	0	0	0	0	0	-41.49	-41.49
	Inverter Transformer	MV3-12 T	367674	4907594	2	0	0	56.1	56.1	1	4878.62	3.25	0	84.77	0	1.58	0	0	11.69	0	0	0	0	0	0	-41.98	-41.98
	Inverter Transformer	MV3-21 T	368484	4907206	2	0	0	56.1	56.1	1	4886.09	3.25	0	84.78	0	1.58	0	0	11.7	0	0	0	0	0	0	-42.01	-42.01
	Inverter Transformer	MV3-22 T	368661	4907142	2	0	0	56.1	56.1	1	4926.96	3.25	0	84.85	0	1.6	0	0	11.76	0	0	0	0	0	0	-42.15	-42.15
	Inverter Transformer	MV3-19 T	368352	4907347	2	0	0	56.1	56.1	1	4941.34	3.25	0	84.88	0	1.6	0	0	11.78	0	0	0	0	0	0	-42.2	-42.2
	Inverter Transformer	MV3-13 T	367958	4907577	2	0	0	56.1	56.1	1	4970.96	3.25	0	84.93	0	1.61	0	0	11.82	0	0	0	0	0	0	-42.3	-42.3
	Inverter Transformer	MV3-17 T	368183	4907472	2	0	0	56.1	56.1	1	4972.43	3.25	0	84.93	0	1.62	0	0	11.82	0	0	0	0	0	0	-42.31	-42.31
	Inverter Transformer	MV3-15 T	368351	4907477	2	0	0	56.1	56.1	1	5054.76	3.25	0	85.07	0	1.65	0	0	11.93	0	0	0	0	0	0	-42.59	-42.59
	Inverter Transformer	MV3-20 T	368683	4907317	2	0	0	56.1	56.1	1	5085.65	3.25	0	85.13	0	1.66	0	0	11.97	0	0	0	0	0	0	-42.69	-42.69
	Inverter Transformer	MV3-16 T	368509	4907475	2	0	0	56.1	56.1	1	5130.2	3.25	0	85.2	0	1.67	0	0	12.02	0	0	0	0	0	0	-42.84	-42.84
	Inverter Transformer	MV3-7 T	367951	4907754	2	0	0	56.1	56.1	1	5130.51	3.25	0	85.2	0	1.67	0	0	12.02	0	0	0	0	0	0	-42.84	-42.84
	Inverter Transformer	MV3-10 T	368162	4907669	2	0	0	56.1	56.1	1	5139.95	3.25	0	85.22	0	1.68	0	0	12.04	0	0	0	0	0	0	-42.87	-42.87
	Inverter Transformer	MV3-11 T	368340	4907662	2	0	0	56.1	56.1	1	5213.08	3.25	0	85.34	0	1.7	0	0	12.13	0	0	0	0	0	0	-43.12	-43.12
	Inverter Transformer	MV3-14 T	368678	4907498	2	0	0	56.1	56.1	1	5236.41	3.25	0	85.38	0	1.71	0	0	12.16	0	0	0	0	0	0	-43.19	-43.19
	Inverter Transformer	MV3-6 T	368156	4907834	2	0	0	56.1	56.1	1	5286.73	3.25	0	85.46	0	1.73	0	0	12.23	0	0	0	0	0	0	-43.36	-43.36
	Inverter Transformer	MV3-3 T	367944	4907927	2	0	0	56.1	56.1	1	5287.48	3.25	0	85.46	0	1.73	0	0	12.23	0	0	0	0	0	0	-43.36	-43.36
	Inverter Transformer	MV3-9 T	368517	4907703	2	0	0	56.1	56.1	1	5332.69	3.25	0	85.54	0	1.74	0	0	12.28	0	0	0	0	0	0	-43.51	-43.51
	Inverter Transformer	MV3-5 T	368335	4907843	2	0	0	56.1	56.1	1	5372.21	3.25	0	85.6	0	1.76	0	0	12.33	0	0	0	0	0	0	-43.64	-43.64
	Inverter Transformer	MV3-1 T	368150	4907976	2	0	0	56.1	56.1	1	5413.56	3.25	0	85.67	0	1.77	0	0	12.39	0	0	0	0	0	0	-43.77	-43.77
	Inverter Transformer	MV3-8 T	368685	4907712	2	0	0	56.1	56.1	1	5423.57	3.25	0	85.69	0	1.77	0	0	12.4	0	0	0	0	0	0	-43.8	-43.8
	Inverter Transformer	MV3-4 T	368507	4907925	2	0	0	56.1	56.1	1	5523.49	3.25	0	85.84	0	1.81	0	0	12.52	0	0	0	0	0	0	-44.12	-44.12
	Inverter Transformer	MV3-2 T	368677	4907928	2	0	0	56.1	56.1	1	5607.07	3.25	0	85.97	0	1.84	0	0	12.63	0	0	0	0	0	0	-44.38	-44.38
	Inverter Transformer	MV6-3 T	370202	4907140	2	0	0	56.1	56.1	1	5917.14	3.25	0	86.44	0	1.94	0	0	13	0	0	0	0	0	0	-45.33	-45.33
	Inverter Transformer	MV6-2 T	370091	4907339	2	0	0	56.1	56.1	1	5979.41	3.25	0	86.53	0	1.96	0	0	13.08	0	0	0	0	0	0	-45.51	-45.51
	Inverter Transformer	MV4-15 T	369170	4908481	2	0	0	56.1	56.1	1	6332.32	3.25	0	87.03	0	2.07	0	0	13.49	0	0	0	0	0	0	-46.53	-46.53
	Inverter Transformer	MV4-14 T	369182	4908507	2	0	0	56.1	56.1	1	6360.81	3.25	0	87.07	0	2.08	0	0	13.52	0	0	0	0	0	0	-46.61	-46.61
	Inverter Transformer	MV4-13 T	369057	4908605	2	0	0	56.1	56.1	1	6383.42	3.25	0	87.1	0	2.08	0	0	13.55	0	0	0	0	0	0	-46.67	-46.67
	Inverter Transformer	MV4-12 T	369049	4908803	2	0	0	56.1	56.1	1	6553.16	3.25	0	87.33	0	2.13	0	0	13.74	0	0	0	0	0	0	-47.14	-47.14
	Inverter Transformer	MV4-11 T	369269	4908855	2	0	0	56.1	56.1	1	6705.38	3.25	0	87.53	0	2.18	0	0	13.91	0	0	0	0	0	0	-47.56	-47.56
	Inverter Transformer	MV4-7 T	369040	4909001	2	0	0	56.1	56.1	1	6724	3.25	0	87.55	0	2.18	0	0	13.93	0	0	0	0	0	0	-47.61	-47.61
	Inverter Transformer	MV4-10 T	369307	4908858	2	0	0	56.1	56.1	1	6726.91	3.25	0	87.56	0	2.18	0	0	13.93	0	0	0	0	0	0	-47.61	-47.61
	Inverter Transformer	MV5-6 T	369987	4908507	2	0	0	56.1	56.1	1	6806.17	3.25	0	87.66	0	2.21	0	0	14.02	0	0	0	0	0	0	-47.83	-47.83
	Inverter Transformer	MV4-8 T	369262	4909001	2	0	0	56.1	56.1	1	6829.12	3.25	0	87.69	0	2.21	0	0	14.04	0	0	0	0	0	0	-47.89	-47.89
	Inverter Transformer	MV4-9 T	369284	4909001	2	0	0	56.1	56.1	1	6839.84	3.25	0	87.7	0	2.22	0	0	14.06	0	0	0	0	0	0	-47.91	-47.91
	Inverter Transformer	MV4-4 T	369033	4909199	2	0	0	56.1	56.1	1	6897.2	3.25	0	87.77	0	2.23	0	0	14.12	0	0	0	0	0	0	-48.07	-48.07
	Inverter Transformer	MV5-5 T	370021	4908690	2	0	0	56.1	56.1	1	6974.03	3.25	0	87.87	0	2.25	0	0	14.2	0	0	0	0	0	0	-48.27	-48.27
	Inverter Transformer	MV4-6 T	369249	4909192	2	0	0	56.1	56.1	1	6990.49	3.25	0	87.89	0	2.26	0	0	14.22	0	0	0	0	0	0	-48.31	-48.31
	Inverter Transformer	MV4-5 T	369283	4909199	2	0	0	56.1	56.1	1	7012.79	3.25	0	87.92	0	2.26	0	0	14.24	0	0	0	0	0	0	-48.37	-48.37
	Inverter Transformer	MV4-1 T	369017	4909397	2	0	0	56.1	56.1	1	7067.79	3.25	0	87.99	0	2.28	0	0	14.3	0	0	0	0	0	0	-48.51	-48.51
	Inverter Transformer	MV5-2 T	370011	4908853	2	0	0	56.1	56.1	1	7101.15	3.25	0	88.03	0	2.29	0	0	14.34	0	0	0	0	0	0	-48.59	-48.59
	Inverter Transformer	MV4-3 T	369234	4909397	2	0	0	56.1	56.1	1	7164.86	3.25	0	88.1	0	2.3	0	0	14.41	0	0	0	0	0	0	-48.75	-48.75
	Inverter Transformer	MV5-4 T	370330	4908707	2	0	0	56.1	56.1	1	7172.58	3.25	0	88.11	0	2.31	0	0	14.41	0	0	0	0	0	0	-48.77	-48.77
	Inverter Transformer	MV4-2 T	369267	4909397	2	0	0	56.1	56.1	1	7180.08	3.25	0	88.12	0	2.31	0	0	14.42	0	0	0	0	0	0	-48.79	-48.79
	Inverter Transformer	MV5-3 T	370237	4908851	2	0	0	56.1	56.1	1	7231.41	3.25	0	88.18	0	2.32	0	0	14.48	0	0	0	0	0	0	-48.92	-48.92
	Inverter Transformer	MV5-1 T	370015	4909142	2	0	0	56.1	56.1	1	7342.1	3.25	0	88.32	0	2.35	0	0	14.59	0	0	0	0	0	0	-49.2	-49.2
	Line Reactor	NGR	369421	4908787.5	5	0	0	45.4	45.4	1	6724.22	5.25	0	87.55	0	3.22	1.37	0.1	2.75	0	0	0	0	0	0	-49.54	-49.54
Limit. Valu	0	0																								
Level D/N:	27.3849	27.3849																								

Receiver: Existing Noise Receptor
ID: G-31
X: 367523.9
Y: 4903182.4
Z: 4.5
Ground: 0

ISO	Description	ID	X	Y	Z	Ground	ReflOrd	LxT	LxN	L/A	Dist.	hm	Freq	Adiv	K0b	Agr	Abar	z	Aatm	Afol	Ahous	Cmet	CmetN	Dc	RL	LtotT	LtotN
	Sol_Luce Substation	S_Substation	369426	4908792	3.5	0	0	112.1	112.1	1	5923.31	5.25	0	86.45	0	1.14	2.66	0.33	9.66	0	0	0	0	0	0	12.16	12.16
	Gardiner Substation	G_Sub	366586.3	4903349.9	2.5	0	0	90.8	90.8	1	952.45	4.25	0	70.58	0	0.48	3.53	0.3	2.42	0	0	0	0	0	0	13.77	13.77
	Inverter	MV1-15	365315	4904994	2	0	0	100.3	100.3	1	2856.77	3.25	0	80.12	0	0.33	0	0	15.12	0	0	0	0	0	0	4.74	4.74
	Inverters	G_Inv8	366844.5	4902838.5	2	0	0	87.7	87.7	1	761.48	3.25	0	68.63	0	2.41	0	0	1.12	0	0	0	0	0	0	15.49	15.49
	Inverters	G_Inv6	366788.5	4902972	2	0	0	87.7	87.7	1	764.91	3.25	0	68.67	0	2.42	0	0	1.12	0	0	0	0	0	0	15.45	15.45
	Inverter	MV1-12	365038	4905386	2	0	0	100.3	100.3	1	3321.98	3.25	0	81.43	0	0.42	0	0	15.93	0	0	0	0	0	0	2.53	2.53
	Inverters	G_Inv10	366900.7	4902704.8	2	0	0	87.7	87.7	1	785.17	3.25	0	68.9	0	2.42	0	0	1.15	0	0	0	0	0	0	15.19	15.19
	Inverters	G_Inv4	366732.8	4903105	2	0	0	87.7	87.7	1	794.88	3.25	0	69.01	0	2.42	0	0	1.16	0	0	0	0	0	0	15.07	15.07
	Inverter	MV1-11	364655	4905414	2	0	0	100.3	100.3	1	3634.64	3.25	0	82.21	0	0.47	0	0	16.46	0	0	0	0	0	0	1.17	1.17
	Inverters	G_Inv2	366676.9	4903239.1	2	0	0	87.7	87.7	1	848.9	3.25	0	69.58	0	2.43	0	0	1.23	0	0	0	0	0	0	14.42	14.42
	Inverter	MV1-8	364788	4905647	2	0	0	100.3	100.3	1	3682.31	3.25	0	82.32	0	0.48	0	0	16.53	0	0	0	0	0	0	0.98	0.98
	Inverter	MV1-4	364815	4905918	2	0	0	100.3	100.3	1	3849.89	3.25	0	82.71	0	0.51	0	0	16.81	0	0	0	0	0	0	0.29	0.29
	Inverter	MV1-9	364561	4905646	2	0	0	100.3	100.3	1	3853.32	3.25	0	82.72	0	0.51	0	0	16.81	0	0	0	0	0	0	0.28	0.28
	Inverter	MV2-3	365820	4906641	2	0	0	100.3	100.3	1	3855.54	3.25	0	82.72	0	0.51	0	0	16.82	0	0	0	0	0	0	0.27	0.27
	Inverters	G_Inv7	366694.6	4902824.7	2	0	0	87.7	87.7	1	903.16	3.25	0	70.12	0	2.44	0	0	1.3	0	0	0	0	0	0	13.81	13.81
	Inverters	G_Inv5	366638.5	4902958.1	2	0	0	87.7	87.7	1	913.37	3.25	0	70.21	0	2.44	0	0	1.32	0	0	0	0	0	0	13.69	13.69
	Inverters	G_Inv9	366750.9	4902691.8	2	0	0	87.7	87.7	1	915.55	3.25	0	70.23	0	2.44	0	0	1.32	0	0	0	0	0	0	13.67	13.67

Inverter	MV1-5	364671	4905892	2	0	0	100.3	100.3	1	3934.59	3.25	0	82.9	0	0.52	0	0	16.94	0	0	0	0	0	0	-0.05	-0.05
Inverter	MV2-4	365586	4906624	2	0	0	100.3	100.3	1	3949.69	3.25	0	82.93	0	0.52	0	0	16.97	0	0	0	0	0	0	-0.11	-0.11
Inverter	MV1-2	364753	4906063	2	0	0	100.3	100.3	1	3996.97	3.25	0	83.03	0	0.53	0	0	17.04	0	0	0	0	0	0	-0.29	-0.29
Inverter	MV1-6	364477	4905835	2	0	0	100.3	100.3	1	4039.79	3.25	0	83.13	0	0.53	0	0	17.11	0	0	0	0	0	0	-0.46	-0.46
Inverters	G_Inv3	366583.7	4903091.4	2	0	0	87.7	87.7	1	944.6	3.25	0	70.5	0	2.44	0	0	1.36	0	0	0	0	0	0	13.36	13.36
Inverter	MV1-1	364715	4906166	2	0	0	100.3	100.3	1	4097.78	3.25	0	83.25	0	0.54	0	0	17.2	0	0	0	0	0	0	-0.68	-0.68
Inverter	MV3-21	368478	4907206	2	0	0	100.3	100.3	1	4135.17	3.25	0	83.33	0	0.55	0	0	17.26	0	0	0	0	0	0	-0.83	-0.83
Inverter	MV3-18	367752	4907412	2	0	0	100.3	100.3	1	4235.75	3.25	0	83.54	0	0.56	0	0	17.42	0	0	0	0	0	0	-1.21	-1.21
Inverter	MV3-19	368357	4907347	2	0	0	100.3	100.3	1	4247.11	3.25	0	83.56	0	0.56	0	0	17.44	0	0	0	0	0	0	-1.25	-1.25
Inverter	MV1-14	365163	4905049	2	0	0	97.3	97.3	1	3009.66	3.25	0	80.57	0	0.36	0	0	15.39	0	0	0	0	0	0	0.99	0.99
Inverters	G_Inv1	366526.4	4903225.8	2	0	0	87.7	87.7	1	998.45	3.25	0	70.99	0	2.45	0	0	1.42	0	0	0	0	0	0	12.8	12.8
Inverter	MV3-20	368689	4907317	2	0	0	100.3	100.3	1	4295.62	3.25	0	83.66	0	0.57	0	0	17.51	0	0	0	0	0	0	-1.43	-1.43
Inverter	MV3-17	368178	4907472	2	0	0	100.3	100.3	1	4339.18	3.25	0	83.75	0	0.57	0	0	17.58	0	0	0	0	0	0	-1.59	-1.59
Inverter	MV3-15	368357	4907477	2	0	0	100.3	100.3	1	4374.66	3.25	0	83.82	0	0.58	0	0	17.64	0	0	0	0	0	0	-1.72	-1.72
Inverter	MV3-16	368514	4907475	2	0	0	100.3	100.3	1	4405.31	3.25	0	83.88	0	0.58	0	0	17.68	0	0	0	0	0	0	-1.83	-1.83
Inverter	MV3-12	367668	4907594	2	0	0	100.3	100.3	1	4413.95	3.25	0	83.9	0	0.58	0	0	17.7	0	0	0	0	0	0	-1.86	-1.86
Inverter	MV3-13	367963	4907577	2	0	0	100.3	100.3	1	4416.48	3.25	0	83.9	0	0.58	0	0	17.7	0	0	0	0	0	0	-1.87	-1.87
Inverter	MV3-14	368684	4907498	2	0	0	100.3	100.3	1	4468.81	3.25	0	84	0	0.59	0	0	17.78	0	0	0	0	0	0	-2.06	-2.06
Inverter	MV3-10	368167	4907669	2	0	0	100.3	100.3	1	4532.46	3.25	0	84.13	0	0.59	0	0	17.88	0	0	0	0	0	0	-2.29	-2.29
Inverter	MV3-11	368346	4907662	2	0	0	100.3	100.3	1	4554.41	3.25	0	84.17	0	0.6	0	0	17.91	0	0	0	0	0	0	-2.37	-2.37
Inverter	MV3-7	367945	4907754	2	0	0	100.3	100.3	1	4590.95	3.25	0	84.24	0	0.6	0	0	17.97	0	0	0	0	0	0	-2.5	-2.5
Inverter	MV3-9	368512	4907703	2	0	0	100.3	100.3	1	4627.33	3.25	0	84.31	0	0.61	0	0	18.02	0	0	0	0	0	0	-2.62	-2.62
Inverter	MV3-8	368680	4907712	2	0	0	100.3	100.3	1	4674.81	3.25	0	84.4	0	0.61	0	0	18.1	0	0	0	0	0	0	-2.79	-2.79
Inverter	MV3-6	368162	4907834	2	0	0	100.3	100.3	1	4695.16	3.25	0	84.43	0	0.61	0	0	18.13	0	0	0	0	0	0	-2.86	-2.86
Inverter	MV3-3	367939	4907927	2	0	0	100.3	100.3	1	4762.72	3.25	0	84.56	0	0.62	0	0	18.23	0	0	0	0	0	0	-3.09	-3.09
Inverter	MV6-3	370207	4907140	2	0	0	100.3	100.3	1	4781.38	3.25	0	84.59	0	0.62	0	0	18.26	0	0	0	0	0	0	-3.16	-3.16
Inverter	MV6-2	370085	4907339	2	0	0	100.3	100.3	1	4882.27	3.25	0	84.77	0	0.63	0	0	18.41	0	0	0	0	0	0	-3.5	-3.5
Inverter	MV1-10	365004	4905564	2	0	0	97.3	97.3	1	3467.26	3.25	0	81.8	0	0.45	0	0	16.18	0	0	0	0	0	0	-1.11	-1.11
Inverter	MV1-13	364731	4905241	2	0	0	97.3	97.3	1	3469.6	3.25	0	81.81	0	0.45	0	0	16.18	0	0	0	0	0	0	-1.12	-1.12
Inverter	MV1-7	364925	4905782	2	0	0	97.3	97.3	1	3675.9	3.25	0	82.31	0	0.48	0	0	16.52	0	0	0	0	0	0	-2	-2
Inverter	MV2-1	365842	4906816	2	0	0	97.3	97.3	1	4003.98	3.25	0	83.05	0	0.53	0	0	17.05	0	0	0	0	0	0	-3.32	-3.32
Inverter	MV4-11	369264	4908855	2	0	0	100.3	100.3	1	5933.49	3.25	0	86.47	0	0.7	0	0	19.9	0	0	0	0	0	0	-6.76	-6.76
Inverter	MV4-10	369312	4908858	2	0	0	100.3	100.3	1	5950.61	3.25	0	86.49	0	0.7	0	0	19.93	0	0	0	0	0	0	-6.81	-6.81
Inverter	MV4-7	369035	4909001	2	0	0	100.3	100.3	1	6011.62	3.25	0	86.58	0	0.71	0	0	20.01	0	0	0	0	0	0	-6.98	-6.98
Inverter	MV5-5	370015	4908690	2	0	0	100.3	100.3	1	6044.77	3.25	0	86.63	0	0.71	0	0	20.05	0	0	0	0	0	0	-7.08	-7.08
Inverter	MV4-8	369256	4909001	2	0	0	100.3	100.3	1	6070.94	3.25	0	86.67	0	0.71	0	0	20.09	0	0	0	0	0	0	-7.15	-7.15
Inverter	MV4-9	369289	4909001	2	0	0	100.3	100.3	1	6080.44	3.25	0	86.68	0	0.71	0	0	20.1	0	0	0	0	0	0	-7.18	-7.18
Inverter	MV5-2	370006	4908853	2	0	0	100.3	100.3	1	6190.03	3.25	0	86.83	0	0.71	0	0	20.25	0	0	0	0	0	0	-7.48	-7.48
Inverter	MV5-4	370324	4908707	2	0	0	100.3	100.3	1	6193.69	3.25	0	86.84	0	0.71	0	0	20.25	0	0	0	0	0	0	-7.49	-7.49
Inverter	MV4-4	369027	4909199	2	0	0	100.3	100.3	1	6201.52	3.25	0	86.85	0	0.71	0	0	20.26	0	0	0	0	0	0	-7.51	-7.51
Inverter	MV4-6	369243	4909192	2	0	0	100.3	100.3	1	6250.65	3.25	0	86.92	0	0.71	0	0	20.33	0	0	0	0	0	0	-7.65	-7.65
Inverter	MV4-5	369289	4909199	2	0	0	100.3	100.3	1	6270.17	3.25	0	86.95	0	0.71	0	0	20.36	0	0	0	0	0	0	-7.7	-7.7
Inverter	MV5-3	370231	4908851	2	0	0	100.3	100.3	1	6281.83	3.25	0	86.96	0	0.71	0	0	20.37	0	0	0	0	0	0	-7.73	-7.73
Inverter	MV4-1	369011	4909397	2	0	0	100.3	100.3	1	6390.05	3.25	0	87.11	0	0.71	0	0	20.51	0	0	0	0	0	0	-8.03	-8.03
Inverter	MV4-3	369229	4909397	2	0	0	100.3	100.3	1	6444.27	3.25	0	87.18	0	0.71	0	0	20.59	0	0	0	0	0	0	-8.17	-8.17
Inverter	MV4-2	369272	4909397	2	0	0	100.3	100.3	1	6455.78	3.25	0	87.2	0	0.71	0	0	20.6	0	0	0	0	0	0	-8.2	-8.2
Inverter	MV5-1	370020	4909142	2	0	0	100.3	100.3	1	6461.22	3.25	0	87.21	0	0.71	0	0	20.61	0	0	0	0	0	0	-8.22	-8.22
Inverter	MV6-1	370235	4907364	2	0	0	97.3	97.3	1	4983.56	3.25	0	84.95	0	0.64	0	0	18.56	0	0	0	0	0	0	-6.84	-6.84
DSTATCOM - 10 MVAR #2	DSAT2	369403	4908757	2.5	0	0	96.6	96.6	1	5882.79	3.5	0	86.39	0	3.76	0	0	3.78	0	0	0	0	0	0	2.69	2.69
DSTATCOM - 10 MVAR #1	DSAT1	369437	4908757	2.5	0	0	96.6	96.6	1	5893.74	3.5	0	86.41	0	3.77	0	0	3.79	0	0	0	0	0	0	2.67	2.67
SubstationTransformer	W_ST	369711.17	4906112.3	2.5	0	0	92	92	1	3656.27	3.5	0	82.26	0	0.25	0	-0.11	6.9	0	0	0	0	0	0	2.57	2.57
Westbrook Inverter Enclosur	W_INV3	369508	4906164	2	0	0	89.1	89.1	1	3581.42	3.25	0	82.08	0	1.29	0	0	10.48	0	0	0	0	0	0	-4.79	-4.79
Westbrook Inverter Enclosur	W_INV4	369673	4906164	2	0	0	89.1	89.1	1	3675.4	3.25	0	82.31	0	1.31	0	0	10.62	0	0	0	0	0	0	-5.18	-5.18
Westbrook Inverter Enclosur	W_INV2	369374	4906388	2	0	0	89.1	89.1	1	3701.18	3.25	0	82.37	0	1.32	0	0	10.66	0	0	0	0	0	0	-5.28	-5.28
Inverter	MV2-2	365977	4906654	2	0	0	89.1	89.1	1	3800.65	3.25	0	82.6	0	1.34	0	0	10.8	0	0	0	0	0	0	-5.68	-5.68
Westbrook Inverter Enclosur	W_INV7	369780	4906417	2	0	0	89.1	89.1	1	3943.68	3.25	0	82.92	0	1.38	0	0	11	0	0	0	0	0	0	-6.24	-6.24
Westbrook Inverter Enclosur	W_INV5	369719	4906574	2	0	0	89.1	89.1	1	4039.98	3.25	0	83.13	0	1.4	0	0	11.14	0	0	0	0	0	0	-6.61	-6.61
Inverter	MV3-22	368656	4907142	2	0	0	89.1	89.1	1	4118.26	3.25	0	83.29	0	1.42	0	0	11.25	0	0	0	0	0	0	-6.91	-6.91
Westbrook Inverter Enclosur	W_INV6	369875	4906578	2	0	0	89.1	89.1	1	4130.11	3.25	0	83.32	0	1.42	0	0	11.27	0	0	0	0	0	0	-6.95	-6.95
Inverter	MV1-3	364440	4906039	2	0	0	89.1	89.1	1	4203.64	3.25	0	83.47	0	1.44	0	0	11.37	0	0	0	0	0	0	-7.23	-7.23
Inverter	MV3-5	368340	4907843	2	0	0	89.1	89.1	1	4731.51	3.25	0	84.5	0	1.57	0	0	12.1	0	0	0	0	0	0	-9.12	-9.12
Inverter	MV3-1	368156	4907976	2	0	0	89.1	89.1	1	4835.1	3.25	0	84.69	0	1.6	0	0	12.24	0	0	0	0	0	0	-9.47	-9.47
Inverter	MV3-4	368502	4907925	2	0	0	89.1	89.1	1	4842.41	3.25	0	84.7	0	1.6	0	0	12.25	0	0	0	0	0	0	-9.5	-9.5
Inverter	MV3-2	368671	4907928	2	0	0	89.1	89.1	1	4882.27	3.25	0	84.77	0	1.61	0	0	12.31	0	0	0	0	0	0	-9.63	-9.63
Fixed Reactor Bank 1	FRB1	369378	4908755	6	0	0	89.8	89.8	1	5872.95	5.25	0	86.38	0	-0.44	0	0	9.61	0	0	0	0	0	0	-5.77	-5.77
Fixed Reactor Bank 2	FRB2	369464	4908755	6	0	0	89.8	89.8	1	5900.67	5.25	0	86.42	0	-0.43	0	0	9.64	0	0	0	0	0	0	-5.85	-5.85
Westbrook Inverter Enclosur	W_INV1	369409	4906578	2	0	0	86.1	86.1	1	3883.77	3.25	0	82.79	0	1.36	0	0	10.92	0	0	0	0	0	0	-9.01	-9.01
Inverter	MV4-15	369176	4908481	2	0	0	89.1	89.1	1	5550.19	3.25	0	85.89	0	1.78	0	0	13.19	0	0	0	0	0	0	-11.79	-11.79
Inverter	MV4-14	369176	4908507	2	0	0	89.1	89.1	1	5575.02	3.25	0	85.92	0	1.78	0	0	13.22	0	0	0	0	0	0	-11.87	-11.87
Inverter	MV4-13	369051	4908605	2	0	0	89.1	89.1	1	5633.53	3.25	0	86.02	0	1.8	0	0	13.3	0	0	0	0	0	0	-12.05	-12.05
Inverter	MV4-12	369043	4908803	2	0	0	89.1	89.1	1	5822.27	3.25	0	86.3	0	1.84	0	0	13.54	0	0	0	0	0	0	-12.62	-12.62
Inverter	MV5-6	369982	4908507	2	0	0	89.1	89.1	1	5864.61	3.25	0	86.36	0	1.85	0	0	13.59	0	0	0	0	0	0	-12.75	-12.75
Inverter	MV6-4	370250	4906966	2	0	0	86.1	86.1	1	4663.4	3.25	0	84.37	0	1.56	0	0	12.01	0	0	0	0	0	0	-11.88	-11.88
Westbrook Inverter Transfor	W_INVTR1	369403	4906578	2	0	0	78.2	78.2	1	3880.87	3.25	0	82.78	0	-2.94	0	0	2.01	0	0	0	0	0	0	-3.61	-3.61

Westbrook Inverter Transfor	W_INVTR3	369514	4906164	2	0	0	77.3	77.3	1	3584.75	3.25	0	82.09	0	-2.86	0	0	1.89	0	0	0	0	0	0	-3.78	-3.78
Westbrook Inverter Transfor	W_INVTR4	369679	4906164	2	0	0	77.3	77.3	1	3678.91	3.25	0	82.31	0	-2.89	0	0	1.93	0	0	0	0	0	0	-4.02	-4.02
Westbrook Inverter Transfor	W_INVTR2	369368	4906388	2	0	0	77.3	77.3	1	3698.19	3.25	0	82.36	0	-2.89	0	0	1.94	0	0	0	0	0	0	-4.07	-4.07
Westbrook Inverter Transfor	W_INVTR7	369786	4906417	2	0	0	77.3	77.3	1	3947.12	3.25	0	82.93	0	-2.95	0	0	2.03	0	0	0	0	0	0	-4.67	-4.67
Westbrook Inverter Transfor	W_INVTR5	369725	4906574	2	0	0	77.3	77.3	1	4043.24	3.25	0	83.13	0	-2.97	0	0	2.07	0	0	0	0	0	0	-4.89	-4.89
Westbrook Inverter Transfor	W_INVTR6	369881	4906578	2	0	0	77.3	77.3	1	4133.52	3.25	0	83.33	0	-2.99	0	0	2.1	0	0	0	0	0	0	-5.1	-5.1
Inverter Transformer	MV1-14 T	365157	4905049	2	0	0	69.4	69.4	1	3014.37	3.25	0	80.58	0	2.51	0	0	5.89	0	0	0	0	0	0	-19.64	-19.64
Inverter Transformer	MV1-10 T	365010	4905564	2	0	0	69.4	69.4	1	3462.91	3.25	0	81.79	0	2.64	0	0	6.26	0	0	0	0	0	0	-21.34	-21.34
Inverter Transformer	MV1-13 T	364725	4905241	2	0	0	69.4	69.4	1	3474.43	3.25	0	81.82	0	2.65	0	0	6.27	0	0	0	0	0	0	-21.38	-21.38
Inverter Transformer	MV1-7 T	364919	4905782	2	0	0	69.4	69.4	1	3680.14	3.25	0	82.32	0	2.7	0	0	6.43	0	0	0	0	0	0	-22.1	-22.1
Inverter Transformer	MV2-1 T	365836	4906816	2	0	0	69.4	69.4	1	4006.5	3.25	0	83.06	0	2.79	0	0	6.68	0	0	0	0	0	0	-23.17	-23.17
Inverter Transformer	MV6-4 T	370244	4906966	2	0	0	69.4	69.4	1	4659.89	3.25	0	84.37	0	2.94	0	0	7.15	0	0	0	0	0	0	-25.11	-25.11
Inverter Transformer	MV6-1 T	370230	4907364	2	0	0	69.4	69.4	1	4980.84	3.25	0	84.95	0	3.01	0	0	7.37	0	0	0	0	0	0	-25.97	-25.97
Inverter Transformer	MV1-15 T	365309	4904994	2	0	0	56.1	56.1	1	2861.41	3.25	0	80.13	0	0.77	0	0	8.63	0	0	0	0	0	0	-33.47	-33.47
Inverter Transformer	MV1-12 T	365044	4905386	2	0	0	56.1	56.1	1	3317.49	3.25	0	81.42	0	0.96	0	0	9.39	0	0	0	0	0	0	-35.72	-35.72
Inverter Transformer	MV1-11 T	364649	4905414	2	0	0	56.1	56.1	1	3639.38	3.25	0	82.22	0	1.1	0	0	9.91	0	0	0	0	0	0	-37.17	-37.17
Inverter Transformer	MV1-8 T	364782	4905647	2	0	0	56.1	56.1	1	3686.77	3.25	0	82.33	0	1.12	0	0	9.98	0	0	0	0	0	0	-37.37	-37.37
Inverter Transformer	MV2-2 T	365982	4906654	2	0	0	56.1	56.1	1	3798.61	3.25	0	82.59	0	1.16	0	0	10.15	0	0	0	0	0	0	-37.85	-37.85
Inverter Transformer	MV1-4 T	364821	4905918	2	0	0	56.1	56.1	1	3845.67	3.25	0	82.7	0	1.18	0	0	10.22	0	0	0	0	0	0	-38.05	-38.05
Inverter Transformer	MV1-9 T	364555	4905646	2	0	0	56.1	56.1	1	3857.94	3.25	0	82.73	0	1.19	0	0	10.24	0	0	0	0	0	0	-38.1	-38.1
Inverter Transformer	MV2-3 T	365814	4906641	2	0	0	56.1	56.1	1	3858.2	3.25	0	82.73	0	1.19	0	0	10.24	0	0	0	0	0	0	-38.1	-38.1
Inverter Transformer	MV1-5 T	364676	4905892	2	0	0	56.1	56.1	1	3930.96	3.25	0	82.89	0	1.22	0	0	10.35	0	0	0	0	0	0	-38.4	-38.4
Inverter Transformer	MV2-4 T	365590	4906628	2	0	0	56.1	56.1	1	3951.22	3.25	0	82.93	0	1.22	0	0	10.38	0	0	0	0	0	0	-38.48	-38.48
Inverter Transformer	MV1-2 T	364759	4906063	2	0	0	56.1	56.1	1	3992.81	3.25	0	83.03	0	1.24	0	0	10.44	0	0	0	0	0	0	-38.65	-38.65
Inverter Transformer	MV1-6 T	364482	4905835	2	0	0	56.1	56.1	1	4036.02	3.25	0	83.12	0	1.26	0	0	10.51	0	0	0	0	0	0	-38.83	-38.83
Inverter Transformer	MV1-1 T	364721	4906166	2	0	0	56.1	56.1	1	4093.67	3.25	0	83.24	0	1.28	0	0	10.59	0	0	0	0	0	0	-39.06	-39.06
Inverter Transformer	MV3-22 T	368661	4907142	2	0	0	56.1	56.1	1	4119.64	3.25	0	83.3	0	1.29	0	0	10.63	0	0	0	0	0	0	-39.16	-39.16
Inverter Transformer	MV3-21 T	368484	4907206	2	0	0	56.1	56.1	1	4136.56	3.25	0	83.33	0	1.3	0	0	10.66	0	0	0	0	0	0	-39.23	-39.23
Inverter Transformer	MV1-3 T	364435	4906039	2	0	0	56.1	56.1	1	4207.31	3.25	0	83.48	0	1.33	0	0	10.76	0	0	0	0	0	0	-39.51	-39.51
Inverter Transformer	MV3-18 T	367757	4907412	2	0	0	56.1	56.1	1	4236.02	3.25	0	83.54	0	1.34	0	0	10.8	0	0	0	0	0	0	-39.62	-39.62
Inverter Transformer	MV3-19 T	368352	4907347	2	0	0	56.1	56.1	1	4246.13	3.25	0	83.56	0	1.34	0	0	10.82	0	0	0	0	0	0	-39.66	-39.66
Inverter Transformer	MV3-20 T	368683	4907317	2	0	0	56.1	56.1	1	4294	3.25	0	83.66	0	1.36	0	0	10.88	0	0	0	0	0	0	-39.84	-39.84
Inverter Transformer	MV3-17 T	368183	4907472	2	0	0	56.1	56.1	1	4339.94	3.25	0	83.75	0	1.38	0	0	10.95	0	0	0	0	0	0	-40.02	-40.02
Inverter Transformer	MV3-15 T	368351	4907477	2	0	0	56.1	56.1	1	4373.52	3.25	0	83.82	0	1.39	0	0	11	0	0	0	0	0	0	-40.15	-40.15
Inverter Transformer	MV3-16 T	368509	4907475	2	0	0	56.1	56.1	1	4404.18	3.25	0	83.88	0	1.4	0	0	11.04	0	0	0	0	0	0	-40.26	-40.26
Inverter Transformer	MV3-12 T	367674	4907594	2	0	0	56.1	56.1	1	4414.15	3.25	0	83.9	0	1.41	0	0	11.05	0	0	0	0	0	0	-40.3	-40.3
Inverter Transformer	MV3-13 T	367958	4907577	2	0	0	56.1	56.1	1	4415.99	3.25	0	83.9	0	1.41	0	0	11.06	0	0	0	0	0	0	-40.31	-40.31
Inverter Transformer	MV3-14 T	368678	4907498	2	0	0	56.1	56.1	1	4467.25	3.25	0	84	0	1.43	0	0	11.13	0	0	0	0	0	0	-40.5	-40.5
Inverter Transformer	MV3-10 T	368162	4907669	2	0	0	56.1	56.1	1	4531.75	3.25	0	84.13	0	1.45	0	0	11.22	0	0	0	0	0	0	-40.74	-40.74
Inverter Transformer	MV3-11 T	368340	4907662	2	0	0	56.1	56.1	1	4553.33	3.25	0	84.17	0	1.46	0	0	11.25	0	0	0	0	0	0	-40.82	-40.82
Inverter Transformer	MV3-7 T	367951	4907754	2	0	0	56.1	56.1	1	4591.51	3.25	0	84.24	0	1.47	0	0	11.3	0	0	0	0	0	0	-40.96	-40.96
Inverter Transformer	MV3-9 T	368517	4907703	2	0	0	56.1	56.1	1	4628.4	3.25	0	84.31	0	1.49	0	0	11.35	0	0	0	0	0	0	-41.09	-41.09
Inverter Transformer	MV3-8 T	368685	4907712	2	0	0	56.1	56.1	1	4676.05	3.25	0	84.4	0	1.51	0	0	11.42	0	0	0	0	0	0	-41.26	-41.26
Inverter Transformer	MV3-6 T	368156	4907834	2	0	0	56.1	56.1	1	4694.35	3.25	0	84.43	0	1.51	0	0	11.44	0	0	0	0	0	0	-41.33	-41.33
Inverter Transformer	MV3-5 T	368335	4907843	2	0	0	56.1	56.1	1	4730.65	3.25	0	84.5	0	1.53	0	0	11.49	0	0	0	0	0	0	-41.46	-41.46
Inverter Transformer	MV3-3 T	367944	4907927	2	0	0	56.1	56.1	1	4763.16	3.25	0	84.56	0	1.54	0	0	11.54	0	0	0	0	0	0	-41.58	-41.58
Inverter Transformer	MV6-3 T	370202	4907140	2	0	0	56.1	56.1	1	4778.58	3.25	0	84.59	0	1.54	0	0	11.56	0	0	0	0	0	0	-41.63	-41.63
Inverter Transformer	MV3-1 T	368150	4907976	2	0	0	56.1	56.1	1	4834.32	3.25	0	84.69	0	1.56	0	0	11.63	0	0	0	0	0	0	-41.83	-41.83
Inverter Transformer	MV3-4 T	368507	4907925	2	0	0	56.1	56.1	1	4843.42	3.25	0	84.7	0	1.57	0	0	11.65	0	0	0	0	0	0	-41.86	-41.86
Inverter Transformer	MV3-2 T	368677	4907928	2	0	0	56.1	56.1	1	4883.68	3.25	0	84.77	0	1.58	0	0	11.7	0	0	0	0	0	0	-42	-42
Inverter Transformer	MV6-2 T	370091	4907339	2	0	0	56.1	56.1	1	4885.42	3.25	0	84.78	0	1.58	0	0	11.7	0	0	0	0	0	0	-42.01	-42.01
Inverter Transformer	MV4-15 T	369170	4908481	2	0	0	56.1	56.1	1	5548.41	3.25	0	85.88	0	1.82	0	0	12.56	0	0	0	0	0	0	-44.2	-44.2
Inverter Transformer	MV4-14 T	369182	4908507	2	0	0	56.1	56.1	1	5576.8	3.25	0	85.93	0	1.83	0	0	12.59	0	0	0	0	0	0	-44.29	-44.29
Inverter Transformer	MV4-13 T	369057	4908605	2	0	0	56.1	56.1	1	5635.16	3.25	0	86.02	0	1.85	0	0	12.66	0	0	0	0	0	0	-44.47	-44.47
Inverter Transformer	MV4-12 T	369049	4908803	2	0	0	56.1	56.1	1	5823.84	3.25	0	86.3	0	1.91	0	0	12.89	0	0	0	0	0	0	-45.05	-45.05
Inverter Transformer	MV5-6 T	369987	4908507	2	0	0	56.1	56.1	1	5866.71	3.25	0	86.37	0	1.92	0	0	12.94	0	0	0	0	0	0	-45.18	-45.18
Inverter Transformer	MV4-11 T	369269	4908855	2	0	0	56.1	56.1	1	5934.96	3.25	0	86.47	0	1.94	0	0	13.03	0	0	0	0	0	0	-45.38	-45.38
Inverter Transformer	MV4-10 T	369307	4908858	2	0	0	56.1	56.1	1	5949.11	3.25	0	86.49	0	1.95	0	0	13.04	0	0	0	0	0	0	-45.42	-45.42
Inverter Transformer	MV4-7 T	369040	4909001	2	0	0	56.1	56.1	1	6012.88	3.25	0	86.58	0	1.97	0	0	13.12	0	0	0	0	0	0	-45.61	-45.61
Inverter Transformer	MV5-5 T	370021	4908690	2	0	0	56.1	56.1	1	6047.25	3.25	0	86.63	0	1.98	0	0	13.16	0	0	0	0	0	0	-45.71	-45.71
Inverter Transformer	MV4-8 T	369262	4909001	2	0	0	56.1	56.1	1	6072.65	3.25	0	86.67	0	1.99	0	0	13.19	0	0	0	0	0	0	-45.79	-45.79
Inverter Transformer	MV4-9 T	369284	4909001	2	0	0	56.1	56.1	1	6078.99	3.25	0	86.68	0	1.99	0	0	13.2	0	0	0	0	0	0	-45.8	-45.8
Inverter Transformer	MV5-2 T	370011	4908853	2	0	0	56.1	56.1	1	6192.04	3.25	0	86.84	0	2.02	0	0	13.33	0	0	0	0	0	0	-46.13	-46.13
Inverter Transformer	MV5-4 T	370330	4908707	2	0	0	56.1	56.1	1	6196.4	3.25	0	86.84	0	2.03	0	0	13.33	0	0	0	0	0	0	-46.14	-46.14
Inverter Transformer	MV4-4 T	369033	4909199	2	0	0	56.1	56.1	1	6202.97	3.25	0	86.85	0	2.03	0	0	13.34	0	0	0	0	0	0	-46.16	-46.16
Inverter Transformer	MV4-6 T	369249	4909192	2	0	0	56.1	56.1	1	6252.3	3.25	0	86.92	0	2.04	0	0	13.4	0	0	0	0	0	0	-46.3	-46.3
Inverter Transformer	MV4-5 T	369283	4909199	2	0	0	56.1	56.1	1	6268.49	3.25	0	86.94	0	2.05	0	0	13.42	0	0	0	0	0	0	-46.35	-46.35
Inverter Transformer	MV5-3 T	370237	4908851	2	0	0	56.1	56.1	1	6284.42	3.25	0	86.97	0	2.05	0	0	13.43	0	0	0	0	0	0	-46.39	-46.39
Inverter Transformer	MV4-1 T	369017	4909397	2	0	0	56.1	56.1	1	6391.45	3.25	0	87.11	0	2.09	0	0	13.56	0	0	0	0	0	0	-46.7	-46.7
Inverter Transformer	MV4-3 T	369234	4909397	2	0	0	56.1	56.1	1	6445.6	3.25	0	87.19	0	2.1	0	0	13.62	0	0	0	0	0	0	-46.85	-46.85
Inverter Transformer	MV4-2 T	369267	4909397	2	0	0	56.1	56.1	1	6454.43	3.25	0	87.2	0	2.1	0	0	13.63	0	0	0	0	0	0	-46.87	-46.87
Inverter Transformer	MV5-1 T	370015	4909142	2	0	0	56.1	56.1	1	6459.29	3.25	0	87.2	0	2.11	0	0	13.63	0	0	0	0	0	0	-46.89	-46.89
Line Reactor	NGR	369421	4908787.5	5	0	0	45.4	45.4	1	5917.44	5.25	0	86.44	0	3.24	1.36	0.11	2.42	0	0	0	0	0	0	-48.11	-48.11
Limit. Valu 0	0																								

Level D/N: 25.5745 25.5745

Receiver: Existing Noise Receptor
ID: G-32
X: 366038.7
Y: 4903554.7
Z: 4.5
Ground: 0

ISO	Description	ID	X	Y	Z	Ground	ReflOrd	LxT	LxN	L/A	Dist.	hm	Freq	Adiv	K0b	Agr	Abar	z	Aatm	Afol	Ahous	Cmet	CmetN	Dc	RL	LtotT	LtotN
	Sol_Luce Substation	S_Substation	369426	4908792	3.5	0	0	112.1	112.1	1	6237.24	5.25	0	86.9	0	1.22	2.59	0.3	9.99	0	0	0	0	0	0	11.38	11.38
	Inverter	MV1-15	365315	4904994	2	0	0	100.3	100.3	1	1611	3.25	0	75.14	0	0.01	0	0	12.59	0	0	0	0	0	0	12.57	12.57
	Gardiner Substation	G_Sub	366586.3	4903349.9	2.5	0	0	90.8	90.8	1	584.65	4.24	0	66.34	0	0.31	4.1	0.31	1.63	0	0	0	0	0	0	18.4	18.4
	Inverter	MV1-12	365038	4905386	2	0	0	100.3	100.3	1	2086.88	3.25	0	77.39	0	0.15	0	0	13.64	0	0	0	0	0	0	9.13	9.13
	Inverter	MV1-11	364655	4905414	2	0	0	100.3	100.3	1	2317.68	3.25	0	78.3	0	0.21	0	0	14.11	0	0	0	0	0	0	7.69	7.69
	Inverter	MV1-8	364788	4905647	2	0	0	100.3	100.3	1	2437.62	3.25	0	78.74	0	0.24	0	0	14.34	0	0	0	0	0	0	6.99	6.99
	Inverter	MV1-14	365163	4905049	2	0	0	97.3	97.3	1	1731.99	3.25	0	75.77	0	0.05	0	0	12.88	0	0	0	0	0	0	8.62	8.62
	Inverters	G_Inv1	366526.4	4903225.8	2	0	0	87.7	87.7	1	588.25	3.25	0	66.39	0	2.4	0	0	0.89	0	0	0	0	0	0	17.99	17.99
	Inverter	MV1-9	364561	4905646	2	0	0	100.3	100.3	1	2560.69	3.25	0	79.17	0	0.27	0	0	14.57	0	0	0	0	0	0	6.3	6.3
	Inverter	MV1-4	364815	4905918	2	0	0	100.3	100.3	1	2661.32	3.25	0	79.5	0	0.29	0	0	14.76	0	0	0	0	0	0	5.76	5.76
	Inverter	MV1-5	364671	4905892	2	0	0	100.3	100.3	1	2708.06	3.25	0	79.65	0	0.3	0	0	14.85	0	0	0	0	0	0	5.51	5.51
	Inverter	MV1-6	364477	4905835	2	0	0	100.3	100.3	1	2763.82	3.25	0	79.83	0	0.31	0	0	14.95	0	0	0	0	0	0	5.22	5.22
	Inverter	MV1-2	364753	4906063	2	0	0	100.3	100.3	1	2818.62	3.25	0	80	0	0.33	0	0	15.05	0	0	0	0	0	0	4.94	4.94
	Inverter	MV1-1	364715	4906166	2	0	0	100.3	100.3	1	2927.64	3.25	0	80.33	0	0.35	0	0	15.24	0	0	0	0	0	0	4.39	4.39
	Inverter	MV1-13	364731	4905241	2	0	0	97.3	97.3	1	2133.94	3.25	0	77.58	0	0.17	0	0	13.74	0	0	0	0	0	0	5.82	5.82
	Inverters	G_Inv2	366676.9	4903239.1	2	0	0	87.7	87.7	1	711.98	3.25	0	68.05	0	2.41	0	0	1.05	0	0	0	0	0	0	16.15	16.15
	Inverters	G_Inv3	366583.7	4903091.4	2	0	0	87.7	87.7	1	715.32	3.25	0	68.09	0	2.41	0	0	1.06	0	0	0	0	0	0	16.1	16.1
	Inverter	MV2-3	365820	4906641	2	0	0	100.3	100.3	1	3094.04	3.25	0	80.81	0	0.38	0	0	15.54	0	0	0	0	0	0	3.58	3.58
	Inverter	MV2-4	365586	4906624	2	0	0	100.3	100.3	1	3102.51	3.25	0	80.83	0	0.38	0	0	15.55	0	0	0	0	0	0	3.54	3.54
	Inverter	MV1-10	365004	4905564	2	0	0	97.3	97.3	1	2260.07	3.25	0	78.08	0	0.2	0	0	13.99	0	0	0	0	0	0	5.04	5.04
	Inverter	MV1-7	364925	4905782	2	0	0	97.3	97.3	1	2490.22	3.25	0	78.92	0	0.25	0	0	14.44	0	0	0	0	0	0	3.69	3.69
	Inverters	G_Inv4	366732.8	4903105	2	0	0	87.7	87.7	1	827.05	3.25	0	69.35	0	2.42	0	0	1.2	0	0	0	0	0	0	14.68	14.68
	Inverters	G_Inv5	366638.5	4902958.1	2	0	0	87.7	87.7	1	845.99	3.25	0	69.55	0	2.43	0	0	1.23	0	0	0	0	0	0	14.46	14.46
	Inverters	G_Inv6	366788.5	4902972	2	0	0	87.7	87.7	1	949.6	3.25	0	70.55	0	2.44	0	0	1.36	0	0	0	0	0	0	13.3	13.3
	Inverters	G_Inv7	366694.6	4902824.7	2	0	0	87.7	87.7	1	981.38	3.25	0	70.84	0	2.45	0	0	1.4	0	0	0	0	0	0	12.97	12.97
	Inverter	MV3-18	367752	4907412	2	0	0	100.3	100.3	1	4220.68	3.25	0	83.51	0	0.56	0	0	17.4	0	0	0	0	0	0	-1.15	-1.15
	Inverter	MV3-12	367668	4907594	2	0	0	100.3	100.3	1	4355.52	3.25	0	83.78	0	0.57	0	0	17.61	0	0	0	0	0	0	-1.65	-1.65
	Inverter	MV3-21	368478	4907206	2	0	0	100.3	100.3	1	4391.15	3.25	0	83.85	0	0.58	0	0	17.66	0	0	0	0	0	0	-1.78	-1.78
	Inverter	MV3-19	368357	4907347	2	0	0	100.3	100.3	1	4444.78	3.25	0	83.96	0	0.58	0	0	17.75	0	0	0	0	0	0	-1.97	-1.97
	Inverter	MV3-13	367963	4907577	2	0	0	100.3	100.3	1	4458.91	3.25	0	83.98	0	0.59	0	0	17.77	0	0	0	0	0	0	-2.03	-2.03
	Inverter	MV3-17	368178	4907472	2	0	0	100.3	100.3	1	4463.39	3.25	0	83.99	0	0.59	0	0	17.77	0	0	0	0	0	0	-2.04	-2.04
	Inverter	MV3-15	368357	4907477	2	0	0	100.3	100.3	1	4556.2	3.25	0	84.17	0	0.6	0	0	17.92	0	0	0	0	0	0	-2.37	-2.37
	Inverter	MV3-20	368689	4907317	2	0	0	100.3	100.3	1	4602.06	3.25	0	84.26	0	0.6	0	0	17.99	0	0	0	0	0	0	-2.54	-2.54
	Inverter	MV3-7	367945	4907754	2	0	0	100.3	100.3	1	4611.74	3.25	0	84.28	0	0.6	0	0	18	0	0	0	0	0	0	-2.57	-2.57
	Inverter	MV2-1	365842	4906816	2	0	0	97.3	97.3	1	3267.23	3.25	0	81.28	0	0.41	0	0	15.84	0	0	0	0	0	0	-0.22	-0.22
	Inverters	G_Inv8	366844.5	4902838.5	2	0	0	87.7	87.7	1	1078.08	3.25	0	71.65	0	2.46	0	0	1.53	0	0	0	0	0	0	12.02	12.02
	Inverter	MV3-10	368167	4907669	2	0	0	100.3	100.3	1	4632.18	3.25	0	84.32	0	0.61	0	0	18.03	0	0	0	0	0	0	-2.64	-2.64
	Inverter	MV3-16	368514	4907475	2	0	0	100.3	100.3	1	4636.36	3.25	0	84.32	0	0.61	0	0	18.04	0	0	0	0	0	0	-2.66	-2.66
	Inverter	MV3-11	368346	4907662	2	0	0	100.3	100.3	1	4711	3.25	0	84.46	0	0.61	0	0	18.15	0	0	0	0	0	0	-2.91	-2.91
	Inverter	MV3-14	368684	4907498	2	0	0	100.3	100.3	1	4748.39	3.25	0	84.53	0	0.62	0	0	18.21	0	0	0	0	0	0	-3.04	-3.04
	Inverter	MV3-3	367939	4907927	2	0	0	100.3	100.3	1	4767.41	3.25	0	84.57	0	0.62	0	0	18.24	0	0	0	0	0	0	-3.11	-3.11
	Inverter	MV3-6	368162	4907834	2	0	0	100.3	100.3	1	4777.11	3.25	0	84.58	0	0.62	0	0	18.25	0	0	0	0	0	0	-3.14	-3.14
	Inverters	G_Inv9	366750.9	4902691.8	2	0	0	87.7	87.7	1	1118.85	3.25	0	71.98	0	2.47	0	0	1.58	0	0	0	0	0	0	11.64	11.64
	Inverter	MV3-9	368512	4907703	2	0	0	100.3	100.3	1	4829.66	3.25	0	84.68	0	0.63	0	0	18.33	0	0	0	0	0	0	-3.32	-3.32
	Inverter	MV3-8	368680	4907712	2	0	0	100.3	100.3	1	4925.41	3.25	0	84.85	0	0.64	0	0	18.47	0	0	0	0	0	0	-3.64	-3.64
	Inverters	G_Inv10	366900.7	4902704.8	2	0	0	87.7	87.7	1	1210.53	3.25	0	72.66	0	2.48	0	0	1.69	0	0	0	0	0	0	10.83	10.83
	Inverter	MV6-3	370207	4907140	2	0	0	100.3	100.3	1	5498.1	3.25	0	85.8	0	0.68	0	0	19.3	0	0	0	0	0	0	-5.47	-5.47
	Inverter	MV6-2	370085	4907339	2	0	0	100.3	100.3	1	5540.17	3.25	0	85.87	0	0.68	0	0	19.36	0	0	0	0	0	0	-5.6	-5.6
	Inverter	MV4-11	369264	4908855	2	0	0	100.3	100.3	1	6204.49	3.25	0	86.85	0	0.71	0	0	20.27	0	0	0	0	0	0	-7.52	-7.52
	Inverter	MV4-7	369035	4909001	2	0	0	100.3	100.3	1	6216.11	3.25	0	86.87	0	0.71	0	0	20.28	0	0	0	0	0	0	-7.55	-7.55
	Inverter	MV4-10	369312	4908858	2	0	0	100.3	100.3	1	6232.13	3.25	0	86.89	0	0.71	0	0	20.31	0	0	0	0	0	0	-7.6	-7.6
	Inverter	MV4-8	369256	4909001	2	0	0	100.3	100.3	1	6325.6	3.25	0	87.02	0	0.71	0	0	20.43	0	0	0	0	0	0	-7.85	-7.85
	Inverter	MV4-9	369289	4909001	2	0	0	100.3	100.3	1	6342.45	3.25	0	87.05	0	0.71	0	0	20.45	0	0	0	0	0	0	-7.9	-7.9
	Inverter	MV4-4	369027	4909199	2	0	0	100.3	100.3	1	6386.55	3.25	0	87.11	0	0.71	0	0	20.51	0	0	0	0	0	0	-8.02	-8.02
	Inverter	MV4-6	369243	4909192	2	0	0	100.3	100.3	1	6484.34	3.25	0	87.24	0	0.71	0	0	20.64	0	0	0	0	0	0	-8.28	-8.28
	Inverter	MV5-5	370015	4908690	2	0	0	100.3	100.3	1	6494.79	3.25	0	87.25	0	0.71	0	0	20.65	0	0	0	0	0	0	-8.31	-8.31
	Inverter	MV4-5	369289	4909199	2	0	0	100.3	100.3	1	6513.26	3.25	0	87.28	0	0.71	0	0	20.68	0	0	0	0	0	0	-8.36	-8.36
	Inverter	MV4-1	369011	4909397	2	0	0	100.3	100.3	1	6554.93	3.25	0	87.33	0	0.71	0	0	20.73	0	0	0	0	0	0	-8.46	-8.46
	Inverter	MV5-2	370006	4908853	2	0	0	100.3	100.3	1	6619.02	3.25	0	87.42	0	0.71	0	0	20.81	0	0	0	0	0	0	-8.63	-8.63
	Inverter	MV4-3	369229	4909397	2	0	0	100.3	100.3	1	6656.61	3.25	0	87.47	0	0.71	0	0	20.86	0	0	0	0	0	0	-8.73	-8.73
	Inverter	MV4-2	369272	4909397	2	0	0	100.3	100.3	1	6677.33	3.25	0	87.49	0	0.71	0	0	20.89	0	0	0	0	0	0	-8.78	-8.78
	Inverter	MV5-4	370324	4908707	2	0	0	100.3	100.3	1	6701.49	3.25	0	87.52	0	0.71	0	0	20.92	0	0	0	0	0	0	-8.85	-8.85
	Inverter	MV5-3	370231	4908851	2	0	0	100.3	100.3	1	6754.72	3.25	0	87.59	0	0.71	0	0	20.99	0	0	0	0	0	0	-8.98	-8.98
	Inverter	MV5-1	370020	4909142	2	0	0	100.3	100.3	1	6860.66	3.25	0	87.73	0	0.71	0	0	21.12	0	0	0	0	0	0	-9.25	-9.25

Inverter	MV6-1	370235	4907364	2	0	0	97.3	97.3	1	5667.43	3.25	0	86.07	0	0.69	0	0	19.54	0	0	0	0	0	0	-8.98	-8.98
DSTATCOM - 10 MVAR #2	DSAT2	369403	4908757	2.5	0	0	96.6	96.6	1	6195.36	3.5	0	86.84	0	3.79	0	0	3.93	0	0	0	0	0	0	2.07	2.07
DSTATCOM - 10 MVAR #1	DSAT1	369437	4908757	2.5	0	0	96.6	96.6	1	6213.89	3.5	0	86.87	0	3.79	0	0	3.94	0	0	0	0	0	0	2.03	2.03
Inverter	MV1-3	364440	4906039	2	0	0	89.1	89.1	1	2954.25	3.25	0	80.41	0	1.14	0	0	9.55	0	0	0	0	0	0	-2.03	-2.03
Inverter	MV2-2	365977	4906654	2	0	0	89.1	89.1	1	3099.92	3.25	0	80.83	0	1.17	0	0	9.77	0	0	0	0	0	0	-2.71	-2.71
SubstationTransformer	W_ST	369711.17	4906112.3	2.5	0	0	92	92	1	4475.29	4.25	0	84.02	0	1.49	2.46	0.24	7.98	0	0	0	0	0	0	-3.98	-3.98
Westbrook Inverter Enclosur	W_INV3	369508	4906164	2	0	0	89.1	89.1	1	4341.02	3.25	0	83.75	0	1.48	0	0	11.56	0	0	0	0	0	0	-7.73	-7.73
Westbrook Inverter Enclosur	W_INV2	369374	4906388	2	0	0	89.1	89.1	1	4376.28	3.25	0	83.82	0	1.49	0	0	11.61	0	0	0	0	0	0	-7.86	-7.86
Inverter	MV3-22	368656	4907142	2	0	0	89.1	89.1	1	4440.61	3.25	0	83.95	0	1.5	0	0	11.7	0	0	0	0	0	0	-8.09	-8.09
Westbrook Inverter Enclosur	W_INV4	369673	4906164	2	0	0	89.1	89.1	1	4473.99	3.25	0	84.01	0	1.51	0	0	11.75	0	0	0	0	0	0	-8.21	-8.21
Westbrook Inverter Enclosur	W_INV7	369780	4906417	2	0	0	89.1	89.1	1	4710.64	3.25	0	84.46	0	1.57	0	0	12.07	0	0	0	0	0	0	-9.04	-9.04
Westbrook Inverter Enclosur	W_INV5	369719	4906574	2	0	0	89.1	89.1	1	4760.33	3.25	0	84.55	0	1.58	0	0	12.14	0	0	0	0	0	0	-9.22	-9.22
Inverter	MV3-5	368340	4907843	2	0	0	89.1	89.1	1	4866.78	3.25	0	84.74	0	1.61	0	0	12.28	0	0	0	0	0	0	-9.58	-9.58
Westbrook Inverter Enclosur	W_INV6	369875	4906578	2	0	0	89.1	89.1	1	4884.42	3.25	0	84.78	0	1.61	0	0	12.31	0	0	0	0	0	0	-9.64	-9.64
Inverter	MV3-1	368156	4907976	2	0	0	89.1	89.1	1	4902.13	3.25	0	84.81	0	1.62	0	0	12.33	0	0	0	0	0	0	-9.7	-9.7
Inverter	MV3-4	368502	4907925	2	0	0	89.1	89.1	1	5016.71	3.25	0	85.01	0	1.64	0	0	12.49	0	0	0	0	0	0	-10.08	-10.08
Inverter	MV3-2	368671	4907928	2	0	0	89.1	89.1	1	5104.39	3.25	0	85.16	0	1.67	0	0	12.6	0	0	0	0	0	0	-10.37	-10.37
Fixed Reactor Bank 1	FRB1	369378	4908755	6	0	0	89.8	89.8	1	6180.13	5.25	0	86.82	0	-0.39	0	0	9.93	0	0	0	0	0	0	-6.58	-6.58
Fixed Reactor Bank 2	FRB2	369464	4908755	6	0	0	89.8	89.8	1	6227.02	5.25	0	86.89	0	-0.39	0	0	9.98	0	0	0	0	0	0	-6.7	-6.7
Inverter	MV4-15	369176	4908481	2	0	0	89.1	89.1	1	5840.47	3.25	0	86.33	0	1.85	0	0	13.56	0	0	0	0	0	0	-12.68	-12.68
Inverter	MV4-14	369176	4908507	2	0	0	89.1	89.1	1	5862.42	3.25	0	86.36	0	1.85	0	0	13.59	0	0	0	0	0	0	-12.74	-12.74
Inverter	MV4-13	369051	4908605	2	0	0	89.1	89.1	1	5880.43	3.25	0	86.39	0	1.86	0	0	13.61	0	0	0	0	0	0	-12.8	-12.8
Inverter	MV4-12	369043	4908803	2	0	0	89.1	89.1	1	6047.35	3.25	0	86.63	0	1.9	0	0	13.82	0	0	0	0	0	0	-13.29	-13.29
Inverter	MV5-6	369982	4908507	2	0	0	89.1	89.1	1	6330.47	3.25	0	87.03	0	1.97	0	0	14.17	0	0	0	0	0	0	-14.11	-14.11
Westbrook Inverter Enclosur	W_INV1	369409	4906578	2	0	0	86.1	86.1	1	4527.61	3.25	0	84.12	0	1.52	0	0	11.82	0	0	0	0	0	0	-11.4	-11.4
Inverter	MV6-4	370250	4906966	2	0	0	86.1	86.1	1	5419.6	3.25	0	85.68	0	1.74	0	0	13.02	0	0	0	0	0	0	-14.38	-14.38
Westbrook Inverter Transfor	W_INVTR1	369403	4906578	2	0	0	78.2	78.2	1	4523.15	3.25	0	84.11	0	-3.08	0	0	2.25	0	0	0	0	0	0	-5.04	-5.04
Westbrook Inverter Transfor	W_INVTR3	369514	4906164	2	0	0	77.3	77.3	1	4345.82	3.25	0	83.76	0	-3.04	0	0	2.18	0	0	0	0	0	0	-5.56	-5.56
Inverter Transformer	MV1-14 T	365157	4905049	2	0	0	69.4	69.4	1	1735.03	3.25	0	75.79	0	2.07	0	0	4.69	0	0	0	0	0	0	-13.2	-13.2
Westbrook Inverter Transfor	W_INVTR2	369368	4906388	2	0	0	77.3	77.3	1	4371.71	3.25	0	83.81	0	-3.05	0	0	2.19	0	0	0	0	0	0	-5.62	-5.62
Westbrook Inverter Transfor	W_INVTR4	369679	4906164	2	0	0	77.3	77.3	1	4478.87	3.25	0	84.02	0	-3.07	0	0	2.23	0	0	0	0	0	0	-5.84	-5.84
Westbrook Inverter Transfor	W_INVTR7	369786	4906417	2	0	0	77.3	77.3	1	4715.4	3.25	0	84.47	0	-3.12	0	0	2.31	0	0	0	0	0	0	-6.32	-6.32
Westbrook Inverter Transfor	W_INVTR5	369725	4906574	2	0	0	77.3	77.3	1	4764.97	3.25	0	84.56	0	-3.13	0	0	2.33	0	0	0	0	0	0	-6.42	-6.42
Westbrook Inverter Transfor	W_INVTR6	369881	4906578	2	0	0	77.3	77.3	1	4889.13	3.25	0	84.78	0	-3.15	0	0	2.37	0	0	0	0	0	0	-6.66	-6.66
Inverter Transformer	MV1-13 T	364725	4905241	2	0	0	69.4	69.4	1	2137.62	3.25	0	77.6	0	2.22	0	0	5.1	0	0	0	0	0	0	-15.57	-15.57
Inverter Transformer	MV1-10 T	365010	4905564	2	0	0	69.4	69.4	1	2257.33	3.25	0	78.07	0	2.27	0	0	5.22	0	0	0	0	0	0	-16.2	-16.2
Inverter Transformer	MV1-7 T	364919	4905782	2	0	0	69.4	69.4	1	2492.91	3.25	0	78.93	0	2.35	0	0	5.44	0	0	0	0	0	0	-17.37	-17.37
Inverter Transformer	MV2-1 T	365836	4906816	2	0	0	69.4	69.4	1	3267.59	3.25	0	81.28	0	2.59	0	0	6.11	0	0	0	0	0	0	-20.63	-20.63
Inverter Transformer	MV6-4 T	370244	4906966	2	0	0	69.4	69.4	1	5414.94	3.25	0	85.67	0	3.09	0	0	7.65	0	0	0	0	0	0	-27.07	-27.07
Inverter Transformer	MV6-1 T	370230	4907364	2	0	0	69.4	69.4	1	5663.72	3.25	0	86.06	0	3.13	0	0	7.81	0	0	0	0	0	0	-27.66	-27.66
Inverter Transformer	MV1-15 T	365309	4904994	2	0	0	56.1	56.1	1	1613.71	3.25	0	75.16	0	0.24	0	0	6.26	0	0	0	0	0	0	-25.6	-25.6
Inverter Transformer	MV1-12 T	365044	4905386	2	0	0	56.1	56.1	1	2084.01	3.25	0	77.38	0	0.44	0	0	7.21	0	0	0	0	0	0	-28.97	-28.97
Inverter Transformer	MV1-11 T	364649	4905414	2	0	0	56.1	56.1	1	2321.26	3.25	0	78.31	0	0.54	0	0	7.66	0	0	0	0	0	0	-30.46	-30.46
Inverter Transformer	MV1-8 T	364782	4905647	2	0	0	56.1	56.1	1	2440.7	3.25	0	78.75	0	0.59	0	0	7.88	0	0	0	0	0	0	-31.16	-31.16
Inverter Transformer	MV1-9 T	364555	4905646	2	0	0	56.1	56.1	1	2564.16	3.25	0	79.18	0	0.64	0	0	8.11	0	0	0	0	0	0	-31.87	-31.87
Inverter Transformer	MV1-4 T	364821	4905918	2	0	0	56.1	56.1	1	2658.57	3.25	0	79.49	0	0.68	0	0	8.27	0	0	0	0	0	0	-32.39	-32.39
Inverter Transformer	MV1-5 T	364676	4905892	2	0	0	56.1	56.1	1	2705.54	3.25	0	79.65	0	0.7	0	0	8.36	0	0	0	0	0	0	-32.65	-32.65
Inverter Transformer	MV1-6 T	364482	4905835	2	0	0	56.1	56.1	1	2760.99	3.25	0	79.82	0	0.73	0	0	8.46	0	0	0	0	0	0	-32.95	-32.95
Inverter Transformer	MV1-2 T	364759	4906063	2	0	0	56.1	56.1	1	2815.88	3.25	0	79.99	0	0.75	0	0	8.55	0	0	0	0	0	0	-33.24	-33.24
Inverter Transformer	MV1-1 T	364721	4906166	2	0	0	56.1	56.1	1	2924.93	3.25	0	80.32	0	0.8	0	0	8.74	0	0	0	0	0	0	-33.8	-33.8
Inverter Transformer	MV1-3 T	364435	4906039	2	0	0	56.1	56.1	1	2956.96	3.25	0	80.42	0	0.81	0	0	8.79	0	0	0	0	0	0	-33.96	-33.96
Inverter Transformer	MV2-3 T	365814	4906641	2	0	0	56.1	56.1	1	3094.47	3.25	0	80.81	0	0.87	0	0	9.03	0	0	0	0	0	0	-34.65	-34.65
Inverter Transformer	MV2-2 T	365982	4906654	2	0	0	56.1	56.1	1	3099.82	3.25	0	80.83	0	0.87	0	0	9.04	0	0	0	0	0	0	-34.68	-34.68
Inverter Transformer	MV2-4 T	365590	4906628	2	0	0	56.1	56.1	1	3105.88	3.25	0	80.84	0	0.87	0	0	9.05	0	0	0	0	0	0	-34.71	-34.71
Inverter Transformer	MV3-18 T	367757	4907412	2	0	0	56.1	56.1	1	4222.72	3.25	0	83.51	0	1.33	0	0	10.78	0	0	0	0	0	0	-39.57	-39.57
Inverter Transformer	MV3-12 T	367674	4907594	2	0	0	56.1	56.1	1	4357.77	3.25	0	83.79	0	1.38	0	0	10.97	0	0	0	0	0	0	-40.09	-40.09
Inverter Transformer	MV3-21 T	368484	4907206	2	0	0	56.1	56.1	1	4394.48	3.25	0	83.86	0	1.4	0	0	11.03	0	0	0	0	0	0	-40.23	-40.23
Inverter Transformer	MV3-19 T	368352	4907347	2	0	0	56.1	56.1	1	4442.17	3.25	0	83.95	0	1.42	0	0	11.09	0	0	0	0	0	0	-40.41	-40.41
Inverter Transformer	MV3-22 T	368661	4907142	2	0	0	56.1	56.1	1	4443.56	3.25	0	83.95	0	1.42	0	0	11.1	0	0	0	0	0	0	-40.41	-40.41
Inverter Transformer	MV3-13 T	367958	4907577	2	0	0	56.1	56.1	1	4456.75	3.25	0	83.98	0	1.42	0	0	11.11	0	0	0	0	0	0	-40.46	-40.46
Inverter Transformer	MV3-17 T	368183	4907472	2	0	0	56.1	56.1	1	4465.79	3.25	0	84	0	1.43	0	0	11.13	0	0	0	0	0	0	-40.49	-40.49
Inverter Transformer	MV3-15 T	368351	4907477	2	0	0	56.1	56.1	1	4553.15	3.25	0	84.17	0	1.46	0	0	11.25	0	0	0	0	0	0	-40.82	-40.82
Inverter Transformer	MV3-20 T	368683	4907317	2	0	0	56.1	56.1	1	4598.61	3.25	0	84.25	0	1.48	0	0	11.31	0	0	0	0	0	0	-40.98	-40.98
Inverter Transformer	MV3-7 T	367951	4907754	2	0	0	56.1	56.1	1	4614.22	3.25	0	84.28	0	1.48	0	0	11.33	0	0	0	0	0	0	-41.04	-41.04
Inverter Transformer	MV3-10 T	368162	4907669	2	0	0	56.1	56.1	1	4629.89	3.25	0	84.31	0	1.49	0	0	11.36	0	0	0	0	0	0	-41.1	-41.1
Inverter Transformer	MV3-16 T	368509	4907475	2	0	0	56.1	56.1	1	4633.7	3.25	0	84.32	0	1.49	0	0	11.36	0	0	0	0	0	0	-41.11	-41.11
Inverter Transformer	MV3-11 T	368340	4907662	2	0	0	56.1	56.1	1	4708.07	3.25	0	84.46	0	1.52	0	0	11.46	0	0	0	0	0	0	-41.38	-41.38
Inverter Transformer	MV3-14 T	368678	4907498	2	0	0	56.1	56.1	1	4745.05	3.25	0	84.52	0	1.53	0	0	11.51	0	0	0	0	0	0	-41.51	-41.51
Inverter Transformer	MV3-3 T	367944	4907927	2	0	0	56.1	56.1	1	4769.4	3.25	0	84.57	0	1.54	0	0	11.55	0	0	0	0	0	0	-41.6	-41.6
Inverter Transformer	MV3-6 T	368156	4907834	2	0	0	56.1	56.1	1	4774.45	3.25	0	84.58	0	1.54	0	0	11.55	0	0	0	0	0	0	-41.62	-41.62
Inverter Transformer	MV3-9 T	368517	4907703	2	0	0	56.1	56.1	1	4832.22	3.25	0	84.68	0	1.56	0	0	11.63	0	0	0	0	0	0	-41.82	-41.82
Inverter Transformer	MV3-5 T	368335	4907843	2	0	0	56.1	56.1	1	4864.41	3.25	0	84.74	0	1.58	0	0	11.67	0	0	0	0	0	0	-41.93	-41.93
Inverter Transformer	MV3-1 T	368150	4907976	2	0	0	56.1	56.1	1	4899.54	3.25	0	84.8	0	1.59	0	0	11.72	0	0	0	0	0	0	-42.05	-42.05
Inverter Transformer	MV3-8 T	368685	4907712	2	0	0	56.1	56.1	1	4928.09	3.25	0	84.85	0	1.6	0	0	11.76	0	0	0	0	0	0	-42.15	-42.15

	Inverter Transformer	MV3-4 T	368507	4907925	2	0	0	56.1	56.1	1	5019.17	3.25	0	85.01	0	1.63	0	0	11.88	0	0	0	0	0	0	-42.47	-42.47
	Inverter Transformer	MV3-2 T	368677	4907928	2	0	0	56.1	56.1	1	5107.48	3.25	0	85.16	0	1.66	0	0	11.99	0	0	0	0	0	0	-42.76	-42.76
	Inverter Transformer	MV6-3 T	370202	4907140	2	0	0	56.1	56.1	1	5494.31	3.25	0	85.8	0	1.8	0	0	12.49	0	0	0	0	0	0	-44.03	-44.03
	Inverter Transformer	MV6-2 T	370091	4907339	2	0	0	56.1	56.1	1	5544.55	3.25	0	85.88	0	1.82	0	0	12.55	0	0	0	0	0	0	-44.19	-44.19
	Inverter Transformer	MV4-15 T	369170	4908481	2	0	0	56.1	56.1	1	5837.25	3.25	0	86.32	0	1.91	0	0	12.91	0	0	0	0	0	0	-45.09	-45.09
	Inverter Transformer	MV4-14 T	369182	4908507	2	0	0	56.1	56.1	1	5865.63	3.25	0	86.37	0	1.92	0	0	12.94	0	0	0	0	0	0	-45.17	-45.17
	Inverter Transformer	MV4-13 T	369057	4908605	2	0	0	56.1	56.1	1	5883.51	3.25	0	86.39	0	1.93	0	0	12.96	0	0	0	0	0	0	-45.23	-45.23
	Inverter Transformer	MV4-12 T	369049	4908803	2	0	0	56.1	56.1	1	6050.34	3.25	0	86.64	0	1.98	0	0	13.16	0	0	0	0	0	0	-45.72	-45.72
	Inverter Transformer	MV4-11 T	369269	4908855	2	0	0	56.1	56.1	1	6207.09	3.25	0	86.86	0	2.03	0	0	13.35	0	0	0	0	0	0	-46.17	-46.17
	Inverter Transformer	MV4-7 T	369040	4909001	2	0	0	56.1	56.1	1	6218.52	3.25	0	86.87	0	2.03	0	0	13.36	0	0	0	0	0	0	-46.21	-46.21
	Inverter Transformer	MV4-10 T	369307	4908858	2	0	0	56.1	56.1	1	6229.51	3.25	0	86.89	0	2.04	0	0	13.37	0	0	0	0	0	0	-46.24	-46.24
	Inverter Transformer	MV4-8 T	369262	4909001	2	0	0	56.1	56.1	1	6328.65	3.25	0	87.03	0	2.07	0	0	13.49	0	0	0	0	0	0	-46.52	-46.52
	Inverter Transformer	MV5-6 T	369987	4908507	2	0	0	56.1	56.1	1	6333.59	3.25	0	87.03	0	2.07	0	0	13.49	0	0	0	0	0	0	-46.53	-46.53
	Inverter Transformer	MV4-9 T	369284	4909001	2	0	0	56.1	56.1	1	6339.89	3.25	0	87.04	0	2.07	0	0	13.5	0	0	0	0	0	0	-46.55	-46.55
	Inverter Transformer	MV4-4 T	369033	4909199	2	0	0	56.1	56.1	1	6389.36	3.25	0	87.11	0	2.08	0	0	13.55	0	0	0	0	0	0	-46.69	-46.69
	Inverter Transformer	MV4-6 T	369249	4909192	2	0	0	56.1	56.1	1	6487.31	3.25	0	87.24	0	2.11	0	0	13.67	0	0	0	0	0	0	-46.96	-46.96
	Inverter Transformer	MV5-5 T	370021	4908690	2	0	0	56.1	56.1	1	6498.46	3.25	0	87.26	0	2.12	0	0	13.68	0	0	0	0	0	0	-46.99	-46.99
	Inverter Transformer	MV4-5 T	369283	4909199	2	0	0	56.1	56.1	1	6510.27	3.25	0	87.27	0	2.12	0	0	13.69	0	0	0	0	0	0	-47.03	-47.03
	Inverter Transformer	MV4-1 T	369017	4909397	2	0	0	56.1	56.1	1	6557.65	3.25	0	87.33	0	2.13	0	0	13.74	0	0	0	0	0	0	-47.16	-47.16
	Inverter Transformer	MV5-2 T	370011	4908853	2	0	0	56.1	56.1	1	6622.02	3.25	0	87.42	0	2.15	0	0	13.82	0	0	0	0	0	0	-47.33	-47.33
	Inverter Transformer	MV4-3 T	369234	4909397	2	0	0	56.1	56.1	1	6659.01	3.25	0	87.47	0	2.16	0	0	13.86	0	0	0	0	0	0	-47.43	-47.43
	Inverter Transformer	MV4-2 T	369267	4909397	2	0	0	56.1	56.1	1	6674.91	3.25	0	87.49	0	2.17	0	0	13.88	0	0	0	0	0	0	-47.47	-47.47
	Inverter Transformer	MV5-4 T	370330	4908707	2	0	0	56.1	56.1	1	6705.33	3.25	0	87.53	0	2.18	0	0	13.91	0	0	0	0	0	0	-47.56	-47.56
	Inverter Transformer	MV5-3 T	370237	4908851	2	0	0	56.1	56.1	1	6758.44	3.25	0	87.6	0	2.19	0	0	13.97	0	0	0	0	0	0	-47.7	-47.7
	Inverter Transformer	MV5-1 T	370015	4909142	2	0	0	56.1	56.1	1	6857.76	3.25	0	87.72	0	2.22	0	0	14.08	0	0	0	0	0	0	-47.96	-47.96
	Line Reactor	NGR	369421	4908787.5	5	0	0	45.4	45.4	1	6230.74	5.25	0	86.89	0	3.23	1.36	0.1	2.55	0	0	0	0	0	0	-48.68	-48.68
Limit. Valu	0	0																								
Level D/N:	26.7264	26.7264																								

Receiver: Existing Noise Receptor
ID: G-33
X: 365957.2
Y: 4903545.1
Z: 4.5
Ground: 0

ISO	Description	ID	X	Y	Z	Ground	ReflOrd	LxT	LxN	L/A	Dist.	hm	Freq	Adiv	K0b	Agr	Abar	z	Aatm	Afol	Ahous	Cmet	CmetN	Dc	RL	LtotT	LtotN
	Inverter	MV1-15	365315	4904994	2	0	0	100.3	100.3	1	1584.85	3.25	0	75	0	0	0	0	12.53	0	0	0	0	0	0	12.78	12.78
	Sol_Luce Substation	S_Substation	369426	4908792	3.5	0	0	112.1	112.1	1	6289.88	5.25	0	86.97	0	1.23	2.58	0.3	10.05	0	0	0	0	0	0	11.25	11.25
	Gardiner Substation	G_Sub	366586.3	4903349.9	2.5	0	0	90.8	90.8	1	658.69	4.24	0	67.37	0	0.24	3.51	0.31	1.79	0	0	0	0	0	0	17.86	17.86
	Inverter	MV1-12	365038	4905386	2	0	0	100.3	100.3	1	2057.63	3.25	0	77.27	0	0.15	0	0	13.58	0	0	0	0	0	0	9.32	9.32
	Inverter	MV1-11	364655	4905414	2	0	0	100.3	100.3	1	2277.83	3.25	0	78.15	0	0.2	0	0	14.03	0	0	0	0	0	0	7.93	7.93
	Inverter	MV1-14	365163	4905049	2	0	0	97.3	97.3	1	1700.73	3.25	0	75.61	0	0.04	0	0	12.8	0	0	0	0	0	0	8.86	8.86
	Inverter	MV1-8	364788	4905647	2	0	0	100.3	100.3	1	2405.21	3.25	0	78.62	0	0.23	0	0	14.28	0	0	0	0	0	0	7.18	7.18
	Inverter	MV1-9	364561	4905646	2	0	0	100.3	100.3	1	2522.53	3.25	0	79.04	0	0.26	0	0	14.5	0	0	0	0	0	0	6.51	6.51
	Inverter	MV1-4	364815	4905918	2	0	0	100.3	100.3	1	2633.49	3.25	0	79.41	0	0.29	0	0	14.71	0	0	0	0	0	0	5.91	5.91
	Inverter	MV1-5	364671	4905892	2	0	0	100.3	100.3	1	2676.24	3.25	0	79.55	0	0.3	0	0	14.79	0	0	0	0	0	0	5.68	5.68
	Inverter	MV1-6	364477	4905835	2	0	0	100.3	100.3	1	2726.65	3.25	0	79.71	0	0.31	0	0	14.88	0	0	0	0	0	0	5.41	5.41
	Inverter	MV1-2	364753	4906063	2	0	0	100.3	100.3	1	2791.04	3.25	0	79.92	0	0.32	0	0	15	0	0	0	0	0	0	5.08	5.08
	Inverters	G_Inv1	366526.4	4903225.8	2	0	0	87.7	87.7	1	652.65	3.25	0	67.29	0	2.4	0	0	0.97	0	0	0	0	0	0	16.99	16.99
	Inverter	MV1-1	364715	4906166	2	0	0	100.3	100.3	1	2900.38	3.25	0	80.25	0	0.34	0	0	15.2	0	0	0	0	0	0	4.53	4.53
	Inverter	MV1-13	364731	4905241	2	0	0	97.3	97.3	1	2092.76	3.25	0	77.41	0	0.16	0	0	13.65	0	0	0	0	0	0	6.09	6.09
	Inverter	MV2-3	365820	4906641	2	0	0	100.3	100.3	1	3098.94	3.25	0	80.82	0	0.38	0	0	15.55	0	0	0	0	0	0	3.56	3.56
	Inverter	MV2-4	365586	4906624	2	0	0	100.3	100.3	1	3101.2	3.25	0	80.83	0	0.38	0	0	15.55	0	0	0	0	0	0	3.55	3.55
	Inverter	MV1-10	365004	4905564	2	0	0	97.3	97.3	1	2232.61	3.25	0	77.98	0	0.19	0	0	13.94	0	0	0	0	0	0	5.21	5.21
	Inverters	G_Inv3	366583.7	4903091.4	2	0	0	87.7	87.7	1	773.53	3.25	0	68.77	0	2.42	0	0	1.13	0	0	0	0	0	0	15.34	15.34
	Inverters	G_Inv2	366676.9	4903239.1	2	0	0	87.7	87.7	1	782.06	3.25	0	68.86	0	2.42	0	0	1.15	0	0	0	0	0	0	15.23	15.23
	Inverter	MV1-7	364925	4905782	2	0	0	97.3	97.3	1	2463.57	3.25	0	78.83	0	0.25	0	0	14.39	0	0	0	0	0	0	3.84	3.84
	Inverters	G_Inv4	366732.8	4903105	2	0	0	87.7	87.7	1	891.77	3.25	0	70.01	0	2.43	0	0	1.29	0	0	0	0	0	0	13.93	13.93
	Inverters	G_Inv5	366638.5	4902958.1	2	0	0	87.7	87.7	1	899.3	3.25	0	70.08	0	2.43	0	0	1.3	0	0	0	0	0	0	13.85	13.85
	Inverter	MV3-18	367752	4907412	2	0	0	100.3	100.3	1	4263.12	3.25	0	83.59	0	0.56	0	0	17.46	0	0	0	0	0	0	-1.31	-1.31
	Inverters	G_Inv6	366788.5	4902972	2	0	0	87.7	87.7	1	1009.71	3.25	0	71.08	0	2.45	0	0	1.44	0	0	0	0	0	0	12.69	12.69
	Inverter	MV3-12	367668	4907594	2	0	0	100.3	100.3	1	4395.5	3.25	0	83.86	0	0.58	0	0	17.67	0	0	0	0	0	0	-1.8	-1.8
	Inverters	G_Inv7	366694.6	4902824.7	2	0	0	87.7	87.7	1	1030.89	3.25	0	71.26	0	2.45	0	0	1.47	0	0	0	0	0	0	12.48	12.48
	Inverter	MV3-21	368478	4907206	2	0	0	100.3	100.3	1	4444.84	3.25	0	83.96	0	0.58	0	0	17.75	0	0	0	0	0	0	-1.98	-1.98
	Inverter	MV3-19	368357	4907347	2	0	0	100.3	100.3	1	4495.94	3.25	0	84.06	0	0.59	0	0	17.82	0	0	0	0	0	0	-2.16	-2.16
	Inverter	MV3-13	367963	4907577	2	0	0	100.3	100.3	1	4503.27	3.25	0	84.07	0	0.59	0	0	17.84	0	0	0	0	0	0	-2.18	-2.18
	Inverter	MV3-17	368178	4907472	2	0	0	100.3	100.3	1	4511.37	3.25	0	84.09	0	0.59	0	0	17.85	0	0	0	0	0	0	-2.21	-2.21
	Inverter	MV3-15	368357	4907477	2	0	0	100.3	100.3	1	4606.4	3.25	0	84.27	0	0.6	0	0	17.99	0	0	0	0	0	0	-2.55	-2.55
	Inverter	MV2-1	365842	4906816	2	0	0	97.3	97.3	1	3272.93	3.25	0	81.3	0	0.41	0	0	15.85	0	0	0	0	0	0	-0.25	-0.25
	Inverter	MV3-7	367945	4907754	2	0	0	100.3	100.3	1	4654.7	3.25	0	84.36	0	0.61	0	0	18.07	0	0	0	0	0	0	-2.72	-2.72
	Inverter	MV3-20	368689	4907317	2	0	0	100.3	100.3	1	4657.25	3.25	0	84.36	0	0.61	0	0	18.07	0	0	0	0	0	0	-2.73	-2.73
	Inverter	MV3-10	368167	4907669	2	0	0	100.3	100.3	1	4678.65	3.25	0	84.4	0	0.61	0	0	18.1	0	0	0	0	0	0	-2.8	-2.8
	Inverter	MV3-16	368514	4907475	2	0	0	100.3	100.3	1	4688.43	3.25	0	84.42	0	0.61	0	0	18.12	0	0	0	0	0	0	-2.84	-2.84

Inverter	MV3-11	368346	4907662	2	0	0	100.3	100.3	1	4759.75	3.25	0	84.55	0	0.62	0	0	18.22	0	0	0	0	0	0	-3.08	-3.08
Inverter	MV3-14	368684	4907498	2	0	0	100.3	100.3	1	4802.17	3.25	0	84.63	0	0.62	0	0	18.29	0	0	0	0	0	0	-3.23	-3.23
Inverter	MV3-3	367939	4907927	2	0	0	100.3	100.3	1	4809.22	3.25	0	84.64	0	0.62	0	0	18.3	0	0	0	0	0	0	-3.25	-3.25
Inverter	MV3-6	368162	4907834	2	0	0	100.3	100.3	1	4822.43	3.25	0	84.67	0	0.63	0	0	18.32	0	0	0	0	0	0	-3.3	-3.3
Inverters	G_Inv8	366844.5	4902838.5	2	0	0	87.7	87.7	1	1134.28	3.25	0	72.09	0	2.47	0	0	1.6	0	0	0	0	0	0	11.5	11.5
Inverter	MV3-9	368512	4907703	2	0	0	100.3	100.3	1	4880.08	3.25	0	84.77	0	0.63	0	0	18.4	0	0	0	0	0	0	-3.49	-3.49
Inverter	MV3-8	368680	4907712	2	0	0	100.3	100.3	1	4977.62	3.25	0	84.94	0	0.64	0	0	18.55	0	0	0	0	0	0	-3.82	-3.82
Inverters	G_Inv9	366750.9	4902691.8	2	0	0	87.7	87.7	1	1165.37	3.25	0	72.33	0	2.47	0	0	1.63	0	0	0	0	0	0	11.22	11.22
Inverters	G_Inv10	366900.7	4902704.8	2	0	0	87.7	87.7	1	1263.45	3.25	0	73.03	0	2.49	0	0	1.76	0	0	0	0	0	0	10.39	10.39
Inverter	MV6-3	370207	4907140	2	0	0	100.3	100.3	1	5566.34	3.25	0	85.91	0	0.68	0	0	19.39	0	0	0	0	0	0	-5.68	-5.68
Inverter	MV6-2	370085	4907339	2	0	0	100.3	100.3	1	5606.46	3.25	0	85.97	0	0.69	0	0	19.45	0	0	0	0	0	0	-5.8	-5.8
Inverter	MV4-11	369264	4908855	2	0	0	100.3	100.3	1	6255.4	3.25	0	86.93	0	0.71	0	0	20.34	0	0	0	0	0	0	-7.66	-7.66
Inverter	MV4-7	369035	4909001	2	0	0	100.3	100.3	1	6264.16	3.25	0	86.94	0	0.71	0	0	20.35	0	0	0	0	0	0	-7.69	-7.69
Inverter	MV4-10	369312	4908858	2	0	0	100.3	100.3	1	6283.44	3.25	0	86.96	0	0.71	0	0	20.37	0	0	0	0	0	0	-7.74	-7.74
Inverter	MV4-8	369256	4909001	2	0	0	100.3	100.3	1	6375.65	3.25	0	87.09	0	0.71	0	0	20.5	0	0	0	0	0	0	-7.99	-7.99
Inverter	MV4-9	369289	4909001	2	0	0	100.3	100.3	1	6392.79	3.25	0	87.11	0	0.71	0	0	20.52	0	0	0	0	0	0	-8.03	-8.03
Inverter	MV4-4	369027	4909199	2	0	0	100.3	100.3	1	6433.53	3.25	0	87.17	0	0.71	0	0	20.57	0	0	0	0	0	0	-8.14	-8.14
Inverter	MV4-6	369243	4909192	2	0	0	100.3	100.3	1	6533.3	3.25	0	87.3	0	0.71	0	0	20.7	0	0	0	0	0	0	-8.41	-8.41
Inverter	MV5-5	370015	4908690	2	0	0	100.3	100.3	1	6552.54	3.25	0	87.33	0	0.71	0	0	20.73	0	0	0	0	0	0	-8.46	-8.46
Inverter	MV4-5	369289	4909199	2	0	0	100.3	100.3	1	6562.58	3.25	0	87.34	0	0.72	0	0	20.74	0	0	0	0	0	0	-8.48	-8.48
Inverter	MV4-1	369011	4909397	2	0	0	100.3	100.3	1	6600.79	3.25	0	87.39	0	0.72	0	0	20.79	0	0	0	0	0	0	-8.58	-8.58
Inverter	MV5-2	370006	4908853	2	0	0	100.3	100.3	1	6675.82	3.25	0	87.49	0	0.71	0	0	20.89	0	0	0	0	0	0	-8.78	-8.78
Inverter	MV4-3	369229	4909397	2	0	0	100.3	100.3	1	6704.43	3.25	0	87.53	0	0.71	0	0	20.92	0	0	0	0	0	0	-8.85	-8.85
Inverter	MV4-2	369272	4909397	2	0	0	100.3	100.3	1	6725.52	3.25	0	87.55	0	0.71	0	0	20.95	0	0	0	0	0	0	-8.91	-8.91
Inverter	MV5-4	370324	4908707	2	0	0	100.3	100.3	1	6761.22	3.25	0	87.6	0	0.71	0	0	21	0	0	0	0	0	0	-9	-9
Inverter	MV5-3	370231	4908851	2	0	0	100.3	100.3	1	6813.07	3.25	0	87.67	0	0.71	0	0	21.06	0	0	0	0	0	0	-9.13	-9.13
Inverter	MV5-1	370020	4909142	2	0	0	100.3	100.3	1	6916.04	3.25	0	87.8	0	0.71	0	0	21.19	0	0	0	0	0	0	-9.39	-9.39
Inverter	MV6-1	370235	4907364	2	0	0	97.3	97.3	1	5734.42	3.25	0	86.17	0	0.69	0	0	19.63	0	0	0	0	0	0	-9.18	-9.18
DSTATCOM - 10 MVAR #2	DSAT2	369403	4908757	2.5	0	0	96.6	96.6	1	6248	3.5	0	86.91	0	3.79	0	0	3.96	0	0	0	0	0	0	1.97	1.97
DSTATCOM - 10 MVAR #1	DSAT1	369437	4908757	2.5	0	0	96.6	96.6	1	6266.81	3.5	0	86.94	0	3.79	0	0	3.97	0	0	0	0	0	0	1.93	1.93
Inverter	MV1-3	364440	4906039	2	0	0	89.1	89.1	1	2919.15	3.25	0	80.31	0	1.13	0	0	9.49	0	0	0	0	0	0	-1.87	-1.87
Inverter	MV2-2	365977	4906654	2	0	0	89.1	89.1	1	3108.96	3.25	0	80.85	0	1.17	0	0	9.78	0	0	0	0	0	0	-2.75	-2.75
SubstationTransformer	W_ST	369711.17	4906112.3	2.5	0	0	92	92	1	4547.82	4.25	0	84.16	0	1.51	2.44	0.24	8.07	0	0	0	0	0	0	-4.21	-4.21
Westbrook Inverter Enclosur	W_INV3	369508	4906164	2	0	0	89.1	89.1	1	4412.12	3.25	0	83.89	0	1.49	0	0	11.66	0	0	0	0	0	0	-7.99	-7.99
Westbrook Inverter Enclosur	W_INV2	369374	4906388	2	0	0	89.1	89.1	1	4444.84	3.25	0	83.96	0	1.5	0	0	11.71	0	0	0	0	0	0	-8.11	-8.11
Inverter	MV3-22	368656	4907142	2	0	0	89.1	89.1	1	4496.8	3.25	0	84.06	0	1.52	0	0	11.78	0	0	0	0	0	0	-8.3	-8.3
Westbrook Inverter Enclosur	W_INV4	369673	4906164	2	0	0	89.1	89.1	1	4545.97	3.25	0	84.15	0	1.53	0	0	11.85	0	0	0	0	0	0	-8.47	-8.47
Westbrook Inverter Enclosur	W_INV7	369780	4906417	2	0	0	89.1	89.1	1	4781.38	3.25	0	84.59	0	1.59	0	0	12.17	0	0	0	0	0	0	-9.29	-9.29
Westbrook Inverter Enclosur	W_INV5	369719	4906574	2	0	0	89.1	89.1	1	4829.64	3.25	0	84.68	0	1.6	0	0	12.23	0	0	0	0	0	0	-9.45	-9.45
Inverter	MV3-5	368340	4907843	2	0	0	89.1	89.1	1	4914.23	3.25	0	84.83	0	1.62	0	0	12.35	0	0	0	0	0	0	-9.74	-9.74
Inverter	MV3-1	368156	4907976	2	0	0	89.1	89.1	1	4946.47	3.25	0	84.89	0	1.63	0	0	12.39	0	0	0	0	0	0	-9.85	-9.85
Westbrook Inverter Enclosur	W_INV6	369875	4906578	2	0	0	89.1	89.1	1	4954.56	3.25	0	84.9	0	1.63	0	0	12.4	0	0	0	0	0	0	-9.87	-9.87
Inverter	MV3-4	368502	4907925	2	0	0	89.1	89.1	1	5065.52	3.25	0	85.09	0	1.66	0	0	12.55	0	0	0	0	0	0	-10.24	-10.24
Inverter	MV3-2	368671	4907928	2	0	0	89.1	89.1	1	5155.05	3.25	0	85.24	0	1.68	0	0	12.67	0	0	0	0	0	0	-10.53	-10.53
Fixed Reactor Bank 1	FRB1	369378	4908755	6	0	0	89.8	89.8	1	6232.57	5.25	0	86.89	0	-0.39	0	0	9.99	0	0	0	0	0	0	-6.72	-6.72
Fixed Reactor Bank 2	FRB2	369464	4908755	6	0	0	89.8	89.8	1	6280.18	5.25	0	86.96	0	-0.38	0	0	10.04	0	0	0	0	0	0	-6.84	-6.84
Inverter	MV4-15	369176	4908481	2	0	0	89.1	89.1	1	5892.69	3.25	0	86.41	0	1.86	0	0	13.63	0	0	0	0	0	0	-12.83	-12.83
Inverter	MV4-14	369176	4908507	2	0	0	89.1	89.1	1	5914.48	3.25	0	86.44	0	1.86	0	0	13.65	0	0	0	0	0	0	-12.9	-12.9
Inverter	MV4-13	369051	4908605	2	0	0	89.1	89.1	1	5930.78	3.25	0	86.46	0	1.87	0	0	13.67	0	0	0	0	0	0	-12.95	-12.95
Inverter	MV4-12	369043	4908803	2	0	0	89.1	89.1	1	6096.53	3.25	0	86.7	0	1.91	0	0	13.88	0	0	0	0	0	0	-13.44	-13.44
Inverter	MV5-6	369982	4908507	2	0	0	89.1	89.1	1	6389.01	3.25	0	87.11	0	1.98	0	0	14.25	0	0	0	0	0	0	-14.28	-14.28
Westbrook Inverter Enclosur	W_INV1	369409	4906578	2	0	0	86.1	86.1	1	4594.93	3.25	0	84.25	0	1.54	0	0	11.92	0	0	0	0	0	0	-11.64	-11.64
Inverter	MV6-4	370250	4906966	2	0	0	86.1	86.1	1	5489.14	3.25	0	85.79	0	1.76	0	0	13.11	0	0	0	0	0	0	-14.6	-14.6
Westbrook Inverter Transfor	W_INVTR1	369403	4906578	2	0	0	78.2	78.2	1	4590.43	3.25	0	84.24	0	-3.09	0	0	2.27	0	0	0	0	0	0	-5.17	-5.17
Inverter Transformer	MV1-14 T	365157	4905049	2	0	0	69.4	69.4	1	1703.54	3.25	0	75.63	0	2.06	0	0	4.66	0	0	0	0	0	0	-12.99	-12.99
Westbrook Inverter Transfor	W_INVTR3	369514	4906164	2	0	0	77.3	77.3	1	4416.95	3.25	0	83.9	0	-3.06	0	0	2.21	0	0	0	0	0	0	-5.71	-5.71
Westbrook Inverter Transfor	W_INVTR2	369368	4906388	2	0	0	77.3	77.3	1	4440.23	3.25	0	83.95	0	-3.06	0	0	2.22	0	0	0	0	0	0	-5.76	-5.76
Westbrook Inverter Transfor	W_INVTR4	369679	4906164	2	0	0	77.3	77.3	1	4550.87	3.25	0	84.16	0	-3.08	0	0	2.26	0	0	0	0	0	0	-5.99	-5.99
Westbrook Inverter Transfor	W_INVTR7	369786	4906417	2	0	0	77.3	77.3	1	4786.18	3.25	0	84.6	0	-3.13	0	0	2.34	0	0	0	0	0	0	-6.46	-6.46
Westbrook Inverter Transfor	W_INVTR5	369725	4906574	2	0	0	77.3	77.3	1	4834.31	3.25	0	84.69	0	-3.14	0	0	2.36	0	0	0	0	0	0	-6.56	-6.56
Westbrook Inverter Transfor	W_INVTR6	369881	4906578	2	0	0	77.3	77.3	1	4959.3	3.25	0	84.91	0	-3.17	0	0	2.4	0	0	0	0	0	0	-6.8	-6.8
Inverter Transformer	MV1-13 T	364725	4905241	2	0	0	69.4	69.4	1	2096.28	3.25	0	77.43	0	2.21	0	0	5.06	0	0	0	0	0	0	-15.35	-15.35
Inverter Transformer	MV1-10 T	365010	4905564	2	0	0	69.4	69.4	1	2230.06	3.25	0	77.97	0	2.26	0	0	5.19	0	0	0	0	0	0	-16.06	-16.06
Inverter Transformer	MV1-7 T	364919	4905782	2	0	0	69.4	69.4	1	2466.09	3.25	0	78.84	0	2.34	0	0	5.41	0	0	0	0	0	0	-17.24	-17.24
Inverter Transformer	MV2-1 T	365836	4906816	2	0	0	69.4	69.4	1	3273.15	3.25	0	81.3	0	2.59	0	0	6.11	0	0	0	0	0	0	-20.65	-20.65
Inverter Transformer	MV6-4 T	370244	4906966	2	0	0	69.4	69.4	1	5484.45	3.25	0	85.78	0	3.1	0	0	7.7	0	0	0	0	0	0	-27.23	-27.23
Inverter Transformer	MV6-1 T	370230	4907364	2	0	0	69.4	69.4	1	5730.69	3.25	0	86.16	0	3.15	0	0	7.85	0	0	0	0	0	0	-27.81	-27.81
Inverter Transformer	MV1-15 T	365309	4904994	2	0	0	56.1	56.1	1	1587.29	3.25	0	75.01	0	0.23	0	0	6.2	0	0	0	0	0	0	-25.39	-25.39
Inverter Transformer	MV1-12 T	365044	4905386	2	0	0	56.1	56.1	1	2054.96	3.25	0	77.26	0	0.43	0	0	7.15	0	0	0	0	0	0	-28.78	-28.78
Inverter Transformer	MV1-11 T	364649	4905414	2	0	0	56.1	56.1	1	2281.27	3.25	0	78.16	0	0.52	0	0	7.58	0	0	0	0	0	0	-30.21	-30.21
Inverter Transformer	MV1-8 T	364782	4905647	2	0	0	56.1	56.1	1	2408.13	3.25	0	78.63	0	0.58	0	0	7.82	0	0	0	0	0	0	-30.97	-30.97
Inverter Transformer	MV1-9 T	364555	4905646	2	0	0	56.1	56.1	1	2525.86	3.25	0	79.05	0	0.63	0	0	8.04	0	0	0	0	0	0	-31.65	-31.65
Inverter Transformer	MV1-4 T	364821	4905918	2	0	0	56.1	56.1	1	2630.9	3.25	0	79.4	0	0.67	0	0	8.23	0	0	0	0	0	0	-32.24	-32.24
Inverter Transformer	MV1-5 T	364676	4905892	2	0	0	56.1	56.1	1	2673.84	3.25	0	79.54	0	0.69	0	0	8.3	0	0	0	0	0	0	-32.48	-32.48

	Inverter Transformer	MV1-6 T	364482	4905835	2	0	0	56.1	56.1	1	2723.94	3.25	0	79.7	0	0.71	0	0	8.39	0	0	0	0	0	0	-32.75	-32.75
	Inverter Transformer	MV1-2 T	364759	4906063	2	0	0	56.1	56.1	1	2788.46	3.25	0	79.91	0	0.74	0	0	8.5	0	0	0	0	0	0	-33.09	-33.09
	Inverter Transformer	MV1-1 T	364721	4906166	2	0	0	56.1	56.1	1	2897.81	3.25	0	80.24	0	0.79	0	0	8.69	0	0	0	0	0	0	-33.66	-33.66
	Inverter Transformer	MV1-3 T	364435	4906039	2	0	0	56.1	56.1	1	2921.75	3.25	0	80.31	0	0.8	0	0	8.73	0	0	0	0	0	0	-33.79	-33.79
	Inverter Transformer	MV2-3 T	365814	4906641	2	0	0	56.1	56.1	1	3099.21	3.25	0	80.83	0	0.87	0	0	9.04	0	0	0	0	0	0	-34.67	-34.67
	Inverter Transformer	MV2-4 T	365590	4906628	2	0	0	56.1	56.1	1	3104.69	3.25	0	80.84	0	0.87	0	0	9.04	0	0	0	0	0	0	-34.7	-34.7
	Inverter Transformer	MV2-2 T	365982	4906654	2	0	0	56.1	56.1	1	3109	3.25	0	80.85	0	0.88	0	0	9.05	0	0	0	0	0	0	-34.72	-34.72
	Inverter Transformer	MV3-18 T	367757	4907412	2	0	0	56.1	56.1	1	4265.23	3.25	0	83.6	0	1.35	0	0	10.84	0	0	0	0	0	0	-39.73	-39.73
	Inverter Transformer	MV3-12 T	367674	4907594	2	0	0	56.1	56.1	1	4397.84	3.25	0	83.86	0	1.4	0	0	11.03	0	0	0	0	0	0	-40.24	-40.24
	Inverter Transformer	MV3-21 T	368484	4907206	2	0	0	56.1	56.1	1	4448.25	3.25	0	83.96	0	1.42	0	0	11.1	0	0	0	0	0	0	-40.43	-40.43
	Inverter Transformer	MV3-19 T	368352	4907347	2	0	0	56.1	56.1	1	4493.27	3.25	0	84.05	0	1.44	0	0	11.17	0	0	0	0	0	0	-40.6	-40.6
	Inverter Transformer	MV3-22 T	368661	4907142	2	0	0	56.1	56.1	1	4499.8	3.25	0	84.06	0	1.44	0	0	11.18	0	0	0	0	0	0	-40.62	-40.62
	Inverter Transformer	MV3-13 T	367958	4907577	2	0	0	56.1	56.1	1	4501.05	3.25	0	84.07	0	1.44	0	0	11.18	0	0	0	0	0	0	-40.62	-40.62
	Inverter Transformer	MV3-17 T	368183	4907472	2	0	0	56.1	56.1	1	4513.84	3.25	0	84.09	0	1.44	0	0	11.19	0	0	0	0	0	0	-40.67	-40.67
	Inverter Transformer	MV3-15 T	368351	4907477	2	0	0	56.1	56.1	1	4603.27	3.25	0	84.26	0	1.48	0	0	11.32	0	0	0	0	0	0	-41	-41
	Inverter Transformer	MV3-20 T	368683	4907317	2	0	0	56.1	56.1	1	4653.73	3.25	0	84.36	0	1.5	0	0	11.39	0	0	0	0	0	0	-41.18	-41.18
	Inverter Transformer	MV3-7 T	367951	4907754	2	0	0	56.1	56.1	1	4657.26	3.25	0	84.36	0	1.5	0	0	11.39	0	0	0	0	0	0	-41.2	-41.2
	Inverter Transformer	MV3-10 T	368162	4907669	2	0	0	56.1	56.1	1	4676.29	3.25	0	84.4	0	1.51	0	0	11.42	0	0	0	0	0	0	-41.27	-41.27
	Inverter Transformer	MV3-16 T	368509	4907475	2	0	0	56.1	56.1	1	4685.7	3.25	0	84.42	0	1.51	0	0	11.43	0	0	0	0	0	0	-41.3	-41.3
	Inverter Transformer	MV3-11 T	368340	4907662	2	0	0	56.1	56.1	1	4756.74	3.25	0	84.55	0	1.54	0	0	11.53	0	0	0	0	0	0	-41.55	-41.55
	Inverter Transformer	MV3-14 T	368678	4907498	2	0	0	56.1	56.1	1	4798.77	3.25	0	84.62	0	1.55	0	0	11.59	0	0	0	0	0	0	-41.7	-41.7
	Inverter Transformer	MV3-3 T	367944	4907927	2	0	0	56.1	56.1	1	4811.28	3.25	0	84.65	0	1.56	0	0	11.6	0	0	0	0	0	0	-41.75	-41.75
	Inverter Transformer	MV3-6 T	368156	4907834	2	0	0	56.1	56.1	1	4819.69	3.25	0	84.66	0	1.56	0	0	11.61	0	0	0	0	0	0	-41.78	-41.78
	Inverter Transformer	MV3-9 T	368517	4907703	2	0	0	56.1	56.1	1	4882.7	3.25	0	84.77	0	1.58	0	0	11.7	0	0	0	0	0	0	-42	-42
	Inverter Transformer	MV3-5 T	368335	4907843	2	0	0	56.1	56.1	1	4911.81	3.25	0	84.82	0	1.59	0	0	11.74	0	0	0	0	0	0	-42.1	-42.1
	Inverter Transformer	MV3-1 T	368150	4907976	2	0	0	56.1	56.1	1	4943.81	3.25	0	84.88	0	1.61	0	0	11.78	0	0	0	0	0	0	-42.21	-42.21
	Inverter Transformer	MV3-8 T	368685	4907712	2	0	0	56.1	56.1	1	4980.36	3.25	0	84.95	0	1.62	0	0	11.83	0	0	0	0	0	0	-42.33	-42.33
	Inverter Transformer	MV3-4 T	368507	4907925	2	0	0	56.1	56.1	1	5068.04	3.25	0	85.1	0	1.65	0	0	11.94	0	0	0	0	0	0	-42.63	-42.63
	Inverter Transformer	MV3-2 T	368677	4907928	2	0	0	56.1	56.1	1	5158.21	3.25	0	85.25	0	1.68	0	0	12.06	0	0	0	0	0	0	-42.93	-42.93
	Inverter Transformer	MV6-3 T	370202	4907140	2	0	0	56.1	56.1	1	5562.52	3.25	0	85.91	0	1.82	0	0	12.57	0	0	0	0	0	0	-44.24	-44.24
	Inverter Transformer	MV6-2 T	370091	4907339	2	0	0	56.1	56.1	1	5610.88	3.25	0	85.98	0	1.84	0	0	12.63	0	0	0	0	0	0	-44.39	-44.39
	Inverter Transformer	MV4-15 T	369170	4908481	2	0	0	56.1	56.1	1	5889.41	3.25	0	86.4	0	1.93	0	0	12.97	0	0	0	0	0	0	-45.24	-45.24
	Inverter Transformer	MV4-14 T	369182	4908507	2	0	0	56.1	56.1	1	5917.75	3.25	0	86.44	0	1.94	0	0	13.01	0	0	0	0	0	0	-45.33	-45.33
	Inverter Transformer	MV4-13 T	369057	4908605	2	0	0	56.1	56.1	1	5933.92	3.25	0	86.47	0	1.94	0	0	13.02	0	0	0	0	0	0	-45.38	-45.38
	Inverter Transformer	MV4-12 T	369049	4908803	2	0	0	56.1	56.1	1	6099.57	3.25	0	86.71	0	2	0	0	13.22	0	0	0	0	0	0	-45.86	-45.86
	Inverter Transformer	MV4-11 T	369269	4908855	2	0	0	56.1	56.1	1	6258.04	3.25	0	86.93	0	2.05	0	0	13.4	0	0	0	0	0	0	-46.32	-46.32
	Inverter Transformer	MV4-7 T	369040	4909001	2	0	0	56.1	56.1	1	6266.62	3.25	0	86.94	0	2.05	0	0	13.41	0	0	0	0	0	0	-46.34	-46.34
	Inverter Transformer	MV4-10 T	369307	4908858	2	0	0	56.1	56.1	1	6280.77	3.25	0	86.96	0	2.05	0	0	13.43	0	0	0	0	0	0	-46.38	-46.38
	Inverter Transformer	MV4-8 T	369262	4909001	2	0	0	56.1	56.1	1	6378.76	3.25	0	87.09	0	2.08	0	0	13.54	0	0	0	0	0	0	-46.66	-46.66
	Inverter Transformer	MV4-9 T	369284	4909001	2	0	0	56.1	56.1	1	6390.18	3.25	0	87.11	0	2.09	0	0	13.56	0	0	0	0	0	0	-46.69	-46.69
	Inverter Transformer	MV5-6 T	369987	4908507	2	0	0	56.1	56.1	1	6392.16	3.25	0	87.11	0	2.09	0	0	13.56	0	0	0	0	0	0	-46.7	-46.7
	Inverter Transformer	MV4-4 T	369033	4909199	2	0	0	56.1	56.1	1	6436.39	3.25	0	87.17	0	2.1	0	0	13.61	0	0	0	0	0	0	-46.82	-46.82
	Inverter Transformer	MV4-6 T	369249	4909192	2	0	0	56.1	56.1	1	6536.32	3.25	0	87.31	0	2.13	0	0	13.72	0	0	0	0	0	0	-47.1	-47.1
	Inverter Transformer	MV5-5 T	370021	4908690	2	0	0	56.1	56.1	1	6556.25	3.25	0	87.33	0	2.13	0	0	13.74	0	0	0	0	0	0	-47.15	-47.15
	Inverter Transformer	MV4-5 T	369283	4909199	2	0	0	56.1	56.1	1	6559.54	3.25	0	87.34	0	2.14	0	0	13.75	0	0	0	0	0	0	-47.16	-47.16
	Inverter Transformer	MV4-1 T	369017	4909397	2	0	0	56.1	56.1	1	6603.57	3.25	0	87.4	0	2.15	0	0	13.8	0	0	0	0	0	0	-47.28	-47.28
	Inverter Transformer	MV5-2 T	370011	4908853	2	0	0	56.1	56.1	1	6678.85	3.25	0	87.49	0	2.17	0	0	13.88	0	0	0	0	0	0	-47.48	-47.48
	Inverter Transformer	MV4-3 T	369234	4909397	2	0	0	56.1	56.1	1	6706.87	3.25	0	87.53	0	2.18	0	0	13.91	0	0	0	0	0	0	-47.56	-47.56
	Inverter Transformer	MV4-2 T	369267	4909397	2	0	0	56.1	56.1	1	6723.06	3.25	0	87.55	0	2.18	0	0	13.93	0	0	0	0	0	0	-47.6	-47.6
	Inverter Transformer	MV5-4 T	370330	4908707	2	0	0	56.1	56.1	1	6765.1	3.25	0	87.61	0	2.19	0	0	13.97	0	0	0	0	0	0	-47.72	-47.72
	Inverter Transformer	MV5-3 T	370237	4908851	2	0	0	56.1	56.1	1	6816.84	3.25	0	87.67	0	2.21	0	0	14.03	0	0	0	0	0	0	-47.85	-47.85
	Inverter Transformer	MV5-1 T	370015	4909142	2	0	0	56.1	56.1	1	6913.11	3.25	0	87.79	0	2.24	0	0	14.14	0	0	0	0	0	0	-48.11	-48.11
	Line Reactor	NGR	369421	4908787.5	5	0	0	45.4	45.4	1	6283.36	5.25	0	86.96	0	3.23	1.36	0.1	2.57	0	0	0	0	0	0	-48.78	-48.78
Limit. Valu	0	0																								
Level D/N:	26.2333	26.2333																								

Receiver: Existing Noise Receptor
ID: G-34
X: 365864.2
Y: 4903408.1
Z: 4.5
Ground: 0

ISO	Description	ID	X	Y	Z	Ground	ReflOrd	LxT	LxN	L/A	Dist.	hm	Freq	Adiv	K0b	Agr	Abar	z	Aatm	Afol	Ahous	Cmet	CmetN	Dc	RL	LtotT	LtotN
	Sol_Luce Substation	S_Substation	369426	4908792	3.5	0	0	112.1	112.1	1	6455.45	5.25	0	87.2	0	1.27	2.55	0.3	10.21	0	0	0	0	0	0	10.85	10.85
	Inverter	MV1-15	365315	4904994	2	0	0	100.3	100.3	1	1678.3	3.25	0	75.5	0	0.03	0	0	12.75	0	0	0	0	0	0	12.03	12.03
	Inverter	MV1-12	365038	4905386	2	0	0	100.3	100.3	1	2143.53	3.25	0	77.62	0	0.17	0	0	13.76	0	0	0	0	0	0	8.76	8.76
	Gardiner Substation	G_Sub	366586.3	4903349.9	2.5	0	0	90.8	90.8	1	724.44	3.5	0	68.2	0	-0.4	0	0	1.94	0	0	0	0	0	0	21.04	21.04
	Inverter	MV1-11	364655	4905414	2	0	0	100.3	100.3	1	2342.18	3.25	0	78.39	0	0.22	0	0	14.15	0	0	0	0	0	0	7.55	7.55
	Inverter	MV1-8	364788	4905647	2	0	0	100.3	100.3	1	2484.13	3.25	0	78.9	0	0.25	0	0	14.43	0	0	0	0	0	0	6.73	6.73
	Inverter	MV1-14	365163	4905049	2	0	0	97.3	97.3	1	1784.44	3.25	0	76.03	0	0.06	0	0	12.99	0	0	0	0	0	0	8.22	8.22
	Inverter	MV1-9	364561	4905646	2	0	0	100.3	100.3	1	2589.7	3.25	0	79.26	0	0.28	0	0	14.63	0	0	0	0	0	0	6.14	6.14
	Inverter	MV1-4	364815	4905918	2	0	0	100.3	100.3	1	2720.37	3.25	0	79.69	0	0.31	0	0	14.87	0	0	0	0	0	0	5.44	5.44
	Inverter	MV1-5	364671	4905892	2	0	0	100.3	100.3	1	2755.63	3.25	0	79.8	0	0.31	0	0	14.93	0	0	0	0	0	0	5.26	5.26

Inverter	MV1-6	364477	4905835	2	0	0	100.3	100.3	1	2795.38	3.25	0	79.93	0	0.32	0	0	15.01	0	0	0	0	0	0	5.06	5.06
Inverter	MV1-2	364753	4906063	2	0	0	100.3	100.3	1	2878.07	3.25	0	80.18	0	0.34	0	0	15.16	0	0	0	0	0	0	4.64	4.64
Inverters	G_Inv1	366526.4	4903225.8	2	0	0	87.7	87.7	1	686.84	3.25	0	67.74	0	2.41	0	0	1.02	0	0	0	0	0	0	16.5	16.5
Inverter	MV1-1	364715	4906166	2	0	0	100.3	100.3	1	2987.75	3.25	0	80.51	0	0.36	0	0	15.35	0	0	0	0	0	0	4.09	4.09
Inverter	MV1-13	364731	4905241	2	0	0	97.3	97.3	1	2154.92	3.25	0	77.67	0	0.17	0	0	13.78	0	0	0	0	0	0	5.69	5.69
Inverter	MV2-4	365586	4906624	2	0	0	100.3	100.3	1	3227.91	3.25	0	81.18	0	0.4	0	0	15.77	0	0	0	0	0	0	2.96	2.96
Inverter	MV2-3	365820	4906641	2	0	0	100.3	100.3	1	3233.2	3.25	0	81.19	0	0.41	0	0	15.78	0	0	0	0	0	0	2.94	2.94
Inverter	MV1-10	365004	4905564	2	0	0	97.3	97.3	1	2321.18	3.25	0	78.31	0	0.21	0	0	14.11	0	0	0	0	0	0	4.67	4.67
Inverters	G_Inv3	366583.7	4903091.4	2	0	0	87.7	87.7	1	786.12	3.25	0	68.91	0	2.42	0	0	1.15	0	0	0	0	0	0	15.18	15.18
Inverters	G_Inv2	366676.9	4903239.1	2	0	0	87.7	87.7	1	830.09	3.25	0	69.38	0	2.42	0	0	1.21	0	0	0	0	0	0	14.65	14.65
Inverter	MV1-7	364925	4905782	2	0	0	97.3	97.3	1	2552.94	3.25	0	79.14	0	0.27	0	0	14.56	0	0	0	0	0	0	3.34	3.34
Inverters	G_Inv5	366638.5	4902958.1	2	0	0	87.7	87.7	1	895.57	3.25	0	70.04	0	2.43	0	0	1.29	0	0	0	0	0	0	13.89	13.89
Inverters	G_Inv4	366732.8	4903105	2	0	0	87.7	87.7	1	919.97	3.25	0	70.28	0	2.44	0	0	1.32	0	0	0	0	0	0	13.62	13.62
Inverters	G_Inv7	366694.6	4902824.7	2	0	0	87.7	87.7	1	1014.85	3.25	0	71.13	0	2.45	0	0	1.45	0	0	0	0	0	0	12.63	12.63
Inverters	G_Inv6	366788.5	4902972	2	0	0	87.7	87.7	1	1022.02	3.25	0	71.19	0	2.45	0	0	1.45	0	0	0	0	0	0	12.56	12.56
Inverter	MV3-18	367752	4907412	2	0	0	100.3	100.3	1	4426.63	3.25	0	83.92	0	0.58	0	0	17.72	0	0	0	0	0	0	-1.91	-1.91
Inverter	MV3-12	367668	4907594	2	0	0	100.3	100.3	1	4558.01	3.25	0	84.18	0	0.6	0	0	17.92	0	0	0	0	0	0	-2.38	-2.38
Inverter	MV3-21	368478	4907206	2	0	0	100.3	100.3	1	4610.42	3.25	0	84.27	0	0.6	0	0	18	0	0	0	0	0	0	-2.56	-2.56
Inverter	MV3-19	368357	4907347	2	0	0	100.3	100.3	1	4661.44	3.25	0	84.37	0	0.61	0	0	18.08	0	0	0	0	0	0	-2.74	-2.74
Inverter	MV3-13	367963	4907577	2	0	0	100.3	100.3	1	4667.41	3.25	0	84.38	0	0.61	0	0	18.08	0	0	0	0	0	0	-2.76	-2.76
Inverter	MV3-17	368178	4907472	2	0	0	100.3	100.3	1	4676.43	3.25	0	84.4	0	0.61	0	0	18.1	0	0	0	0	0	0	-2.79	-2.79
Inverter	MV3-15	368357	4907477	2	0	0	100.3	100.3	1	4771.79	3.25	0	84.57	0	0.62	0	0	18.24	0	0	0	0	0	0	-3.12	-3.12
Inverter	MV2-1	365842	4906816	2	0	0	97.3	97.3	1	3407.97	3.25	0	81.65	0	0.44	0	0	16.08	0	0	0	0	0	0	-0.85	-0.85
Inverter	MV3-7	367945	4907754	2	0	0	100.3	100.3	1	4818.36	3.25	0	84.66	0	0.62	0	0	18.31	0	0	0	0	0	0	-3.28	-3.28
Inverter	MV3-20	368689	4907317	2	0	0	100.3	100.3	1	4822.76	3.25	0	84.67	0	0.63	0	0	18.32	0	0	0	0	0	0	-3.3	-3.3
Inverter	MV3-10	368167	4907669	2	0	0	100.3	100.3	1	4843.36	3.25	0	84.7	0	0.63	0	0	18.35	0	0	0	0	0	0	-3.37	-3.37
Inverter	MV3-16	368514	4907475	2	0	0	100.3	100.3	1	4853.98	3.25	0	84.72	0	0.63	0	0	18.36	0	0	0	0	0	0	-3.4	-3.4
Inverters	G_Inv8	366844.5	4902838.5	2	0	0	87.7	87.7	1	1133.77	3.25	0	72.09	0	2.47	0	0	1.6	0	0	0	0	0	0	11.51	11.51
Inverters	G_Inv9	366750.9	4902691.8	2	0	0	87.7	87.7	1	1139.88	3.25	0	72.14	0	2.47	0	0	1.6	0	0	0	0	0	0	11.45	11.45
Inverter	MV3-11	368346	4907662	2	0	0	100.3	100.3	1	4924.94	3.25	0	84.85	0	0.64	0	0	18.47	0	0	0	0	0	0	-3.64	-3.64
Inverter	MV3-14	368684	4907498	2	0	0	100.3	100.3	1	4967.75	3.25	0	84.92	0	0.64	0	0	18.53	0	0	0	0	0	0	-3.78	-3.78
Inverter	MV3-3	367939	4907927	2	0	0	100.3	100.3	1	4972.45	3.25	0	84.93	0	0.64	0	0	18.54	0	0	0	0	0	0	-3.8	-3.8
Inverter	MV3-6	368162	4907834	2	0	0	100.3	100.3	1	4986.83	3.25	0	84.96	0	0.64	0	0	18.56	0	0	0	0	0	0	-3.85	-3.85
Inverter	MV3-9	368512	4907703	2	0	0	100.3	100.3	1	5045.49	3.25	0	85.06	0	0.65	0	0	18.65	0	0	0	0	0	0	-4.04	-4.04
Inverter	MV3-8	368680	4907712	2	0	0	100.3	100.3	1	5143.18	3.25	0	85.22	0	0.65	0	0	18.79	0	0	0	0	0	0	-4.36	-4.36
Inverters	G_Inv10	366900.7	4902704.8	2	0	0	87.7	87.7	1	1252.59	3.25	0	72.96	0	2.49	0	0	1.74	0	0	0	0	0	0	10.48	10.48
Inverter	MV6-3	370207	4907140	2	0	0	100.3	100.3	1	5725.99	3.25	0	86.16	0	0.69	0	0	19.62	0	0	0	0	0	0	-6.16	-6.16
Inverter	MV6-2	370085	4907339	2	0	0	100.3	100.3	1	5767.77	3.25	0	86.22	0	0.7	0	0	19.67	0	0	0	0	0	0	-6.28	-6.28
Inverter	MV4-11	369264	4908855	2	0	0	100.3	100.3	1	6420.85	3.25	0	87.15	0	0.71	0	0	20.56	0	0	0	0	0	0	-8.11	-8.11
Inverter	MV4-7	369035	4909001	2	0	0	100.3	100.3	1	6429.19	3.25	0	87.16	0	0.71	0	0	20.57	0	0	0	0	0	0	-8.13	-8.13
Inverter	MV4-10	369312	4908858	2	0	0	100.3	100.3	1	6448.93	3.25	0	87.19	0	0.71	0	0	20.59	0	0	0	0	0	0	-8.18	-8.18
Inverter	MV4-8	369256	4909001	2	0	0	100.3	100.3	1	6541.01	3.25	0	87.31	0	0.71	0	0	20.71	0	0	0	0	0	0	-8.43	-8.43
Inverter	MV4-9	369289	4909001	2	0	0	100.3	100.3	1	6558.19	3.25	0	87.34	0	0.72	0	0	20.73	0	0	0	0	0	0	-8.47	-8.47
Inverter	MV4-4	369027	4909199	2	0	0	100.3	100.3	1	6598.32	3.25	0	87.39	0	0.72	0	0	20.79	0	0	0	0	0	0	-8.58	-8.58
Inverter	MV4-6	369243	4909192	2	0	0	100.3	100.3	1	6698.49	3.25	0	87.52	0	0.71	0	0	20.92	0	0	0	0	0	0	-8.84	-8.84
Inverter	MV5-5	370015	4908690	2	0	0	100.3	100.3	1	6717.71	3.25	0	87.54	0	0.71	0	0	20.94	0	0	0	0	0	0	-8.89	-8.89
Inverter	MV4-5	369289	4909199	2	0	0	100.3	100.3	1	6727.84	3.25	0	87.56	0	0.71	0	0	20.95	0	0	0	0	0	0	-8.91	-8.91
Inverter	MV4-1	369011	4909397	2	0	0	100.3	100.3	1	6765.3	3.25	0	87.61	0	0.71	0	0	21	0	0	0	0	0	0	-9.01	-9.01
Inverter	MV5-2	370006	4908853	2	0	0	100.3	100.3	1	6841.16	3.25	0	87.7	0	0.71	0	0	21.1	0	0	0	0	0	0	-9.2	-9.2
Inverter	MV4-3	369229	4909397	2	0	0	100.3	100.3	1	6869.41	3.25	0	87.74	0	0.71	0	0	21.13	0	0	0	0	0	0	-9.27	-9.27
Inverter	MV4-2	369272	4909397	2	0	0	100.3	100.3	1	6890.58	3.25	0	87.77	0	0.71	0	0	21.16	0	0	0	0	0	0	-9.33	-9.33
Inverter	MV5-4	370324	4908707	2	0	0	100.3	100.3	1	6925.91	3.25	0	87.81	0	0.71	0	0	21.21	0	0	0	0	0	0	-9.41	-9.41
Inverter	MV5-3	370231	4908851	2	0	0	100.3	100.3	1	6978.12	3.25	0	87.87	0	0.71	0	0	21.27	0	0	0	0	0	0	-9.54	-9.54
Inverter	MV5-1	370020	4909142	2	0	0	100.3	100.3	1	7081.55	3.25	0	88	0	0.71	0	0	21.4	0	0	0	0	0	0	-9.8	-9.8
Inverter	MV6-1	370235	4907364	2	0	0	97.3	97.3	1	5895.17	3.25	0	86.41	0	0.7	0	0	19.85	0	0	0	0	0	0	-9.65	-9.65
DSTATCOM - 10 MVAR #2	DSAT2	369403	4908757	2.5	0	0	96.6	96.6	1	6413.57	3.5	0	87.14	0	3.8	0	0	4.04	0	0	0	0	0	0	1.65	1.65
DSTATCOM - 10 MVAR #1	DSAT1	369437	4908757	2.5	0	0	96.6	96.6	1	6432.39	3.5	0	87.17	0	3.8	0	0	4.05	0	0	0	0	0	0	1.61	1.61
Inverter	MV1-3	364440	4906039	2	0	0	89.1	89.1	1	2991.65	3.25	0	80.52	0	1.14	0	0	9.6	0	0	0	0	0	0	-2.21	-2.21
Inverter	MV2-2	365977	4906654	2	0	0	89.1	89.1	1	3247.86	3.25	0	81.23	0	1.21	0	0	9.99	0	0	0	0	0	0	-3.37	-3.37
SubstationTransformer	W_ST	369711.17	4906112.3	2.5	0	0	92	92	1	4702.31	4.25	0	84.45	0	1.56	2.4	0.24	8.26	0	0	0	0	0	0	-4.69	-4.69
Westbrook Inverter Enclosur	W_INV3	369508	4906164	2	0	0	89.1	89.1	1	4568.62	3.25	0	84.2	0	1.53	0	0	11.88	0	0	0	0	0	0	-8.55	-8.55
Westbrook Inverter Enclosur	W_INV2	369374	4906388	2	0	0	89.1	89.1	1	4604.18	3.25	0	84.26	0	1.54	0	0	11.93	0	0	0	0	0	0	-8.67	-8.67
Inverter	MV3-22	368656	4907142	2	0	0	89.1	89.1	1	4662.21	3.25	0	84.37	0	1.56	0	0	12.01	0	0	0	0	0	0	-8.88	-8.88
Westbrook Inverter Enclosur	W_INV4	369673	4906164	2	0	0	89.1	89.1	1	4701.27	3.25	0	84.44	0	1.57	0	0	12.06	0	0	0	0	0	0	-9.01	-9.01
Westbrook Inverter Enclosur	W_INV7	369780	4906417	2	0	0	89.1	89.1	1	4938.32	3.25	0	84.87	0	1.62	0	0	12.38	0	0	0	0	0	0	-9.82	-9.82
Westbrook Inverter Enclosur	W_INV5	369719	4906574	2	0	0	89.1	89.1	1	4988.23	3.25	0	84.96	0	1.64	0	0	12.45	0	0	0	0	0	0	-9.99	-9.99
Inverter	MV3-5	368340	4907843	2	0	0	89.1	89.1	1	5079.17	3.25	0	85.12	0	1.66	0	0	12.57	0	0	0	0	0	0	-10.29	-10.29
Inverter	MV3-1	368156	4907976	2	0	0	89.1	89.1	1	5110.58	3.25	0	85.17	0	1.67	0	0	12.61	0	0	0	0	0	0	-10.39	-10.39
Westbrook Inverter Enclosur	W_INV6	369875	4906578	2	0	0	89.1	89.1	1	5112.22	3.25	0	85.17	0	1.67	0	0	12.61	0	0	0	0	0	0	-10.39	-10.39
Inverter	MV3-4	368502	4907925	2	0	0	89.1	89.1	1	5230.72	3.25	0	85.37	0	1.7	0	0	12.77	0	0	0	0	0	0	-10.78	-10.78
Inverter	MV3-2	368671	4907928	2	0	0	89.1	89.1	1	5320.49	3.25	0	85.52	0	1.72	0	0	12.89	0	0	0	0	0	0	-11.07	-11.07
Fixed Reactor Bank 1	FRB1	369378	4908755	6	0	0	89.8	89.8	1	6398.14	5.25	0	87.12	0	-0.36	0	0	10.16	0	0	0	0	0	0	-7.14	-7.14
Fixed Reactor Bank 2	FRB2	369464	4908755	6	0	0	89.8	89.8	1	6445.77	5.25	0	87.19	0	-0.36	0	0	10.2	0	0	0	0	0	0	-7.26	-7.26
Inverter	MV4-15	369176	4908481	2	0	0	89.1	89.1	1	6058.25	3.25	0	86.65	0	1.9	0	0	13.84	0	0	0	0	0	0	-13.32	-13.32

Inverter	MV4-14	369176	4908507	2	0	0	89.1	89.1	1	6080.03	3.25	0	86.68	0	1.91	0	0	13.86	0	0	0	0	0	0	-13.39	-13.39
Inverter	MV4-13	369051	4908605	2	0	0	89.1	89.1	1	6096.18	3.25	0	86.7	0	1.91	0	0	13.88	0	0	0	0	0	0	-13.44	-13.44
Inverter	MV4-12	369043	4908803	2	0	0	89.1	89.1	1	6261.77	3.25	0	86.93	0	1.95	0	0	14.09	0	0	0	0	0	0	-13.92	-13.92
Inverter	MV5-6	369982	4908507	2	0	0	89.1	89.1	1	6554.01	3.25	0	87.33	0	2.02	0	0	14.45	0	0	0	0	0	0	-14.74	-14.74
Westbrook Inverter Enclosur	W_INV1	369409	4906578	2	0	0	86.1	86.1	1	4755.41	3.25	0	84.54	0	1.58	0	0	12.13	0	0	0	0	0	0	-12.2	-12.2
Inverter	MV6-4	370250	4906966	2	0	0	86.1	86.1	1	5647.47	3.25	0	86.04	0	1.8	0	0	13.31	0	0	0	0	0	0	-15.09	-15.09
Westbrook Inverter Transfor	W_INVTR1	369403	4906578	2	0	0	78.2	78.2	1	4750.93	3.25	0	84.54	0	-3.13	0	0	2.33	0	0	0	0	0	0	-5.49	-5.49
Inverter Transformer	MV1-14 T	365157	4905049	2	0	0	69.4	69.4	1	1786.81	3.25	0	76.04	0	2.09	0	0	4.75	0	0	0	0	0	0	-13.53	-13.53
Westbrook Inverter Transfor	W_INVTR3	369514	4906164	2	0	0	77.3	77.3	1	4573.4	3.25	0	84.2	0	-3.09	0	0	2.26	0	0	0	0	0	0	-6.04	-6.04
Westbrook Inverter Transfor	W_INVTR2	369368	4906388	2	0	0	77.3	77.3	1	4599.61	3.25	0	84.25	0	-3.09	0	0	2.27	0	0	0	0	0	0	-6.09	-6.09
Westbrook Inverter Transfor	W_INVTR4	369679	4906164	2	0	0	77.3	77.3	1	4706.13	3.25	0	84.45	0	-3.12	0	0	2.31	0	0	0	0	0	0	-6.31	-6.31
Westbrook Inverter Transfor	W_INVTR7	369786	4906417	2	0	0	77.3	77.3	1	4943.08	3.25	0	84.88	0	-3.17	0	0	2.39	0	0	0	0	0	0	-6.77	-6.77
Westbrook Inverter Transfor	W_INVTR5	369725	4906574	2	0	0	77.3	77.3	1	4992.87	3.25	0	84.97	0	-3.18	0	0	2.41	0	0	0	0	0	0	-6.86	-6.86
Westbrook Inverter Transfor	W_INVTR6	369881	4906578	2	0	0	77.3	77.3	1	5116.93	3.25	0	85.18	0	-3.2	0	0	2.45	0	0	0	0	0	0	-7.09	-7.09
Inverter Transformer	MV1-13 T	364725	4905241	2	0	0	69.4	69.4	1	2158.08	3.25	0	77.68	0	2.23	0	0	5.12	0	0	0	0	0	0	-15.68	-15.68
Inverter Transformer	MV1-10 T	365010	4905564	2	0	0	69.4	69.4	1	2318.96	3.25	0	78.31	0	2.29	0	0	5.28	0	0	0	0	0	0	-16.52	-16.52
Inverter Transformer	MV1-7 T	364919	4905782	2	0	0	69.4	69.4	1	2555.15	3.25	0	79.15	0	2.37	0	0	5.49	0	0	0	0	0	0	-17.66	-17.66
Inverter Transformer	MV2-1 T	365836	4906816	2	0	0	69.4	69.4	1	3408.02	3.25	0	81.65	0	2.63	0	0	6.22	0	0	0	0	0	0	-21.15	-21.15
Inverter Transformer	MV6-4 T	370244	4906966	2	0	0	69.4	69.4	1	5642.81	3.25	0	86.03	0	3.13	0	0	7.8	0	0	0	0	0	0	-27.61	-27.61
Inverter Transformer	MV6-1 T	370230	4907364	2	0	0	69.4	69.4	1	5891.47	3.25	0	86.4	0	3.17	0	0	7.95	0	0	0	0	0	0	-28.18	-28.18
Inverter Transformer	MV1-15 T	365309	4904994	2	0	0	56.1	56.1	1	1680.28	3.25	0	75.51	0	0.27	0	0	6.4	0	0	0	0	0	0	-26.12	-26.12
Inverter Transformer	MV1-12 T	365044	4905386	2	0	0	56.1	56.1	1	2141.22	3.25	0	77.61	0	0.46	0	0	7.32	0	0	0	0	0	0	-29.34	-29.34
Inverter Transformer	MV1-11 T	364649	4905414	2	0	0	56.1	56.1	1	2345.28	3.25	0	78.4	0	0.55	0	0	7.7	0	0	0	0	0	0	-30.6	-30.6
Inverter Transformer	MV1-8 T	364782	4905647	2	0	0	56.1	56.1	1	2486.73	3.25	0	78.91	0	0.61	0	0	7.97	0	0	0	0	0	0	-31.43	-31.43
Inverter Transformer	MV1-9 T	364555	4905646	2	0	0	56.1	56.1	1	2592.72	3.25	0	79.28	0	0.66	0	0	8.16	0	0	0	0	0	0	-32.03	-32.03
Inverter Transformer	MV1-4 T	364821	4905918	2	0	0	56.1	56.1	1	2718.06	3.25	0	79.69	0	0.71	0	0	8.38	0	0	0	0	0	0	-32.72	-32.72
Inverter Transformer	MV1-5 T	364676	4905892	2	0	0	56.1	56.1	1	2753.47	3.25	0	79.8	0	0.72	0	0	8.44	0	0	0	0	0	0	-32.91	-32.91
Inverter Transformer	MV1-6 T	364482	4905835	2	0	0	56.1	56.1	1	2792.91	3.25	0	79.92	0	0.74	0	0	8.51	0	0	0	0	0	0	-33.12	-33.12
Inverter Transformer	MV1-2 T	364759	4906063	2	0	0	56.1	56.1	1	2875.76	3.25	0	80.18	0	0.78	0	0	8.66	0	0	0	0	0	0	-33.55	-33.55
Inverter Transformer	MV1-1 T	364721	4906166	2	0	0	56.1	56.1	1	2985.45	3.25	0	80.5	0	0.82	0	0	8.84	0	0	0	0	0	0	-34.11	-34.11
Inverter Transformer	MV1-3 T	364435	4906039	2	0	0	56.1	56.1	1	2994.04	3.25	0	80.53	0	0.83	0	0	8.86	0	0	0	0	0	0	-34.15	-34.15
Inverter Transformer	MV2-4 T	365590	4906628	2	0	0	56.1	56.1	1	3231.56	3.25	0	81.19	0	0.93	0	0	9.25	0	0	0	0	0	0	-35.31	-35.31
Inverter Transformer	MV2-3 T	365814	4906641	2	0	0	56.1	56.1	1	3233.29	3.25	0	81.19	0	0.93	0	0	9.26	0	0	0	0	0	0	-35.32	-35.32
Inverter Transformer	MV2-2 T	365982	4906654	2	0	0	56.1	56.1	1	3248.04	3.25	0	81.23	0	0.93	0	0	9.28	0	0	0	0	0	0	-35.39	-35.39
Inverter Transformer	MV3-18 T	367757	4907412	2	0	0	56.1	56.1	1	4428.76	3.25	0	83.93	0	1.41	0	0	11.08	0	0	0	0	0	0	-40.35	-40.35
Inverter Transformer	MV3-12 T	367674	4907594	2	0	0	56.1	56.1	1	4560.39	3.25	0	84.18	0	1.46	0	0	11.26	0	0	0	0	0	0	-40.84	-40.84
Inverter Transformer	MV3-21 T	368484	4907206	2	0	0	56.1	56.1	1	4613.83	3.25	0	84.28	0	1.48	0	0	11.33	0	0	0	0	0	0	-41.04	-41.04
Inverter Transformer	MV3-19 T	368352	4907347	2	0	0	56.1	56.1	1	4658.76	3.25	0	84.37	0	1.5	0	0	11.4	0	0	0	0	0	0	-41.2	-41.2
Inverter Transformer	MV3-13 T	367958	4907577	2	0	0	56.1	56.1	1	4665.16	3.25	0	84.38	0	1.5	0	0	11.4	0	0	0	0	0	0	-41.23	-41.23
Inverter Transformer	MV3-22 T	368661	4907142	2	0	0	56.1	56.1	1	4665.2	3.25	0	84.38	0	1.5	0	0	11.4	0	0	0	0	0	0	-41.23	-41.23
Inverter Transformer	MV3-17 T	368183	4907472	2	0	0	56.1	56.1	1	4678.9	3.25	0	84.4	0	1.51	0	0	11.42	0	0	0	0	0	0	-41.27	-41.27
Inverter Transformer	MV3-15 T	368351	4907477	2	0	0	56.1	56.1	1	4768.66	3.25	0	84.57	0	1.54	0	0	11.55	0	0	0	0	0	0	-41.6	-41.6
Inverter Transformer	MV3-20 T	368683	4907317	2	0	0	56.1	56.1	1	4819.25	3.25	0	84.66	0	1.56	0	0	11.61	0	0	0	0	0	0	-41.77	-41.77
Inverter Transformer	MV3-7 T	367951	4907754	2	0	0	56.1	56.1	1	4820.95	3.25	0	84.66	0	1.56	0	0	11.62	0	0	0	0	0	0	-41.78	-41.78
Inverter Transformer	MV3-10 T	368162	4907669	2	0	0	56.1	56.1	1	4840.99	3.25	0	84.7	0	1.57	0	0	11.64	0	0	0	0	0	0	-41.85	-41.85
Inverter Transformer	MV3-16 T	368509	4907475	2	0	0	56.1	56.1	1	4851.25	3.25	0	84.72	0	1.57	0	0	11.66	0	0	0	0	0	0	-41.89	-41.89
Inverter Transformer	MV3-11 T	368340	4907662	2	0	0	56.1	56.1	1	4921.92	3.25	0	84.84	0	1.6	0	0	11.75	0	0	0	0	0	0	-42.13	-42.13
Inverter Transformer	MV3-14 T	368678	4907498	2	0	0	56.1	56.1	1	4964.35	3.25	0	84.92	0	1.61	0	0	11.81	0	0	0	0	0	0	-42.28	-42.28
Inverter Transformer	MV3-3 T	367944	4907927	2	0	0	56.1	56.1	1	4974.54	3.25	0	84.94	0	1.62	0	0	11.82	0	0	0	0	0	0	-42.31	-42.31
Inverter Transformer	MV3-6 T	368156	4907834	2	0	0	56.1	56.1	1	4984.07	3.25	0	84.95	0	1.62	0	0	11.83	0	0	0	0	0	0	-42.35	-42.35
Inverter Transformer	MV3-9 T	368517	4907703	2	0	0	56.1	56.1	1	5048.12	3.25	0	85.06	0	1.64	0	0	11.92	0	0	0	0	0	0	-42.56	-42.56
Inverter Transformer	MV3-5 T	368335	4907843	2	0	0	56.1	56.1	1	5076.73	3.25	0	85.11	0	1.65	0	0	11.95	0	0	0	0	0	0	-42.66	-42.66
Inverter Transformer	MV3-1 T	368150	4907976	2	0	0	56.1	56.1	1	5107.9	3.25	0	85.16	0	1.66	0	0	12	0	0	0	0	0	0	-42.77	-42.77
Inverter Transformer	MV3-8 T	368685	4907712	2	0	0	56.1	56.1	1	5145.92	3.25	0	85.23	0	1.68	0	0	12.04	0	0	0	0	0	0	-42.89	-42.89
Inverter Transformer	MV3-4 T	368507	4907925	2	0	0	56.1	56.1	1	5233.24	3.25	0	85.38	0	1.71	0	0	12.16	0	0	0	0	0	0	-43.18	-43.18
Inverter Transformer	MV3-2 T	368677	4907928	2	0	0	56.1	56.1	1	5323.66	3.25	0	85.52	0	1.74	0	0	12.27	0	0	0	0	0	0	-43.48	-43.48
Inverter Transformer	MV6-3 T	370202	4907140	2	0	0	56.1	56.1	1	5722.2	3.25	0	86.15	0	1.87	0	0	12.77	0	0	0	0	0	0	-44.74	-44.74
Inverter Transformer	MV6-2 T	370091	4907339	2	0	0	56.1	56.1	1	5772.16	3.25	0	86.23	0	1.89	0	0	12.83	0	0	0	0	0	0	-44.89	-44.89
Inverter Transformer	MV4-15 T	369170	4908481	2	0	0	56.1	56.1	1	6054.97	3.25	0	86.64	0	1.98	0	0	13.17	0	0	0	0	0	0	-45.73	-45.73
Inverter Transformer	MV4-14 T	369182	4908507	2	0	0	56.1	56.1	1	6083.3	3.25	0	86.68	0	1.99	0	0	13.2	0	0	0	0	0	0	-45.82	-45.82
Inverter Transformer	MV4-13 T	369057	4908605	2	0	0	56.1	56.1	1	6099.32	3.25	0	86.71	0	2	0	0	13.22	0	0	0	0	0	0	-45.86	-45.86
Inverter Transformer	MV4-12 T	369049	4908803	2	0	0	56.1	56.1	1	6264.81	3.25	0	86.94	0	2.05	0	0	13.41	0	0	0	0	0	0	-46.34	-46.34
Inverter Transformer	MV4-11 T	369269	4908855	2	0	0	56.1	56.1	1	6423.5	3.25	0	87.16	0	2.1	0	0	13.59	0	0	0	0	0	0	-46.79	-46.79
Inverter Transformer	MV4-7 T	369040	4909001	2	0	0	56.1	56.1	1	6431.66	3.25	0	87.17	0	2.1	0	0	13.6	0	0	0	0	0	0	-46.81	-46.81
Inverter Transformer	MV4-10 T	369307	4908858	2	0	0	56.1	56.1	1	6446.26	3.25	0	87.19	0	2.1	0	0	13.62	0	0	0	0	0	0	-46.85	-46.85
Inverter Transformer	MV4-8 T	369262	4909001	2	0	0	56.1	56.1	1	6544.13	3.25	0	87.32	0	2.13	0	0	13.73	0	0	0	0	0	0	-47.12	-47.12
Inverter Transformer	MV4-9 T	369284	4909001	2	0	0	56.1	56.1	1	6555.58	3.25	0	87.33	0	2.13	0	0	13.74	0	0	0	0	0	0	-47.15	-47.15
Inverter Transformer	MV5-6 T	369987	4908507	2	0	0	56.1	56.1	1	6557.15	3.25	0	87.33	0	2.13	0	0	13.74	0	0	0	0	0	0	-47.15	-47.15
Inverter Transformer	MV4-4 T	369033	4909199	2	0	0	56.1	56.1	1	6601.2	3.25	0	87.39	0	2.15	0	0	13.79	0	0	0	0	0	0	-47.27	-47.27
Inverter Transformer	MV4-6 T	369249	4909192	2	0	0	56.1	56.1	1	6701.52	3.25	0	87.52	0	2.18	0	0	13.9	0	0	0	0	0	0	-47.55	-47.55
Inverter Transformer	MV5-5 T	370021	4908690	2	0	0	56.1	56.1	1	6721.42	3.25	0	87.55	0	2.18	0	0	13.93	0	0	0	0	0	0	-47.6	-47.6
Inverter Transformer	MV4-5 T	369283	4909199	2	0	0	56.1	56.1	1	6724.78	3.25	0	87.55	0	2.18	0	0	13.93	0	0	0	0	0	0	-47.61	-47.61
Inverter Transformer	MV4-1 T	369017	4909397	2	0	0	56.1	56.1	1	6768.09	3.25	0	87.61	0	2.2	0	0	13.98	0	0	0	0	0	0	-47.72	-47.72
Inverter Transformer	MV5-2 T	370011	4908853	2	0	0	56.1	56.1	1	6844.19	3.25	0	87.71	0	2.22	0	0	14.06	0	0	0	0	0	0	-47.93	-47.93

	Inverter Transformer	MV4-3 T	369234	4909397	2	0	0	56.1	56.1	1	6871.86	3.25	0	87.74	0	2.22	0	0	14.09	0	0	0	0	0	0	-48	-48
	Inverter Transformer	MV4-2 T	369267	4909397	2	0	0	56.1	56.1	1	6888.1	3.25	0	87.76	0	2.23	0	0	14.11	0	0	0	0	0	0	-48.04	-48.04
	Inverter Transformer	MV5-4 T	370330	4908707	2	0	0	56.1	56.1	1	6929.77	3.25	0	87.81	0	2.24	0	0	14.15	0	0	0	0	0	0	-48.15	-48.15
	Inverter Transformer	MV5-3 T	370237	4908851	2	0	0	56.1	56.1	1	6981.87	3.25	0	87.88	0	2.25	0	0	14.21	0	0	0	0	0	0	-48.29	-48.29
	Inverter Transformer	MV5-1 T	370015	4909142	2	0	0	56.1	56.1	1	7078.61	3.25	0	88	0	2.28	0	0	14.31	0	0	0	0	0	0	-48.54	-48.54
	Line Reactor	NGR	369421	4908787.5	5	0	0	45.4	45.4	1	6448.94	5.25	0	87.19	0	3.23	1.37	0.1	2.64	0	0	0	0	0	0	-49.07	-49.07
Limit. Valu	0	0																								
Level D/N:	26.6429	26.6429																								

Receiver: Existing Noise Receptor
ID: G-35
X: 365768.8
Y: 4903003.6
Z: 4.5
Ground: 0

ISO	Description	ID	X	Y	Z	Ground	ReflOrd	LxT	LxN	L/A	Dist.	hm	Freq	Adiv	K0b	Agr	Abar	z	Aatm	Afol	Ahous	Cmet	CmetN	Dc	RL	LtotT	LtotN
	Sol_Luce Substation	S_Substation	369426	4908792	3.5	0	0	112.1	112.1	1	6846.95	5.25	0	87.71	0	1.35	2.47	0.3	10.6	0	0	0	0	0	0	9.94	9.94
	Inverter	MV1-15	365315	4904994	2	0	0	100.3	100.3	1	2041.48	3.25	0	77.2	0	0.14	0	0	13.55	0	0	0	0	0	0	9.42	9.42
	Inverter	MV1-12	365038	4905386	2	0	0	100.3	100.3	1	2491.97	3.25	0	78.93	0	0.26	0	0	14.44	0	0	0	0	0	0	6.68	6.68
	Inverter	MV1-11	364655	4905414	2	0	0	100.3	100.3	1	2655.29	3.25	0	79.48	0	0.29	0	0	14.75	0	0	0	0	0	0	5.79	5.79
	Gardiner Substation	G_Sub	366586.3	4903349.9	2.5	0	0	90.8	90.8	1	887.83	3.5	0	69.97	0	-0.39	0	0	2.29	0	0	0	0	0	0	18.91	18.91
	Inverter	MV1-8	364788	4905647	2	0	0	100.3	100.3	1	2819.49	3.25	0	80	0	0.33	0	0	15.05	0	0	0	0	0	0	4.93	4.93
	Inverter	MV1-9	364561	4905646	2	0	0	100.3	100.3	1	2905.35	3.25	0	80.26	0	0.34	0	0	15.2	0	0	0	0	0	0	4.5	4.5
	Inverter	MV1-14	365163	4905049	2	0	0	97.3	97.3	1	2133.23	3.25	0	77.58	0	0.17	0	0	13.74	0	0	0	0	0	0	5.83	5.83
	Inverter	MV1-4	364815	4905918	2	0	0	100.3	100.3	1	3066.51	3.25	0	80.73	0	0.37	0	0	15.49	0	0	0	0	0	0	3.72	3.72
	Inverter	MV1-5	364671	4905892	2	0	0	100.3	100.3	1	3089.99	3.25	0	80.8	0	0.38	0	0	15.53	0	0	0	0	0	0	3.6	3.6
	Inverter	MV1-6	364477	4905835	2	0	0	100.3	100.3	1	3112.17	3.25	0	80.86	0	0.38	0	0	15.57	0	0	0	0	0	0	3.5	3.5
	Inverter	MV1-2	364753	4906063	2	0	0	100.3	100.3	1	3223.63	3.25	0	81.17	0	0.4	0	0	15.76	0	0	0	0	0	0	2.98	2.98
	Inverter	MV1-1	364715	4906166	2	0	0	100.3	100.3	1	3333.36	3.25	0	81.46	0	0.42	0	0	15.95	0	0	0	0	0	0	2.48	2.48
	Inverters	G_Inv1	366526.4	4903225.8	2	0	0	87.7	87.7	1	789.52	3.25	0	68.95	0	2.42	0	0	1.15	0	0	0	0	0	0	15.14	15.14
	Inverter	MV1-13	364731	4905241	2	0	0	97.3	97.3	1	2466.37	3.25	0	78.84	0	0.25	0	0	14.39	0	0	0	0	0	0	3.83	3.83
	Inverters	G_Inv3	366583.7	4903091.4	2	0	0	87.7	87.7	1	819.62	3.25	0	69.27	0	2.42	0	0	1.19	0	0	0	0	0	0	14.77	14.77
	Inverter	MV2-4	365586	4906624	2	0	0	100.3	100.3	1	3625.01	3.25	0	82.19	0	0.47	0	0	16.44	0	0	0	0	0	0	1.22	1.22
	Inverter	MV2-3	365820	4906641	2	0	0	100.3	100.3	1	3637.76	3.25	0	82.22	0	0.47	0	0	16.46	0	0	0	0	0	0	1.16	1.16
	Inverters	G_Inv5	366638.5	4902958.1	2	0	0	87.7	87.7	1	870.89	3.25	0	69.8	0	2.43	0	0	1.26	0	0	0	0	0	0	14.17	14.17
	Inverter	MV1-10	365004	4905564	2	0	0	97.3	97.3	1	2672.19	3.25	0	79.54	0	0.3	0	0	14.78	0	0	0	0	0	0	2.7	2.7
	Inverters	G_Inv2	366676.9	4903239.1	2	0	0	87.7	87.7	1	938.14	3.25	0	70.45	0	2.44	0	0	1.35	0	0	0	0	0	0	13.43	13.43
	Inverters	G_Inv7	366694.6	4902824.7	2	0	0	87.7	87.7	1	942.93	3.25	0	70.49	0	2.44	0	0	1.35	0	0	0	0	0	0	13.38	13.38
	Inverter	MV1-7	364925	4905782	2	0	0	97.3	97.3	1	2903.71	3.25	0	80.26	0	0.34	0	0	15.2	0	0	0	0	0	0	1.51	1.51
	Inverters	G_Inv4	366732.8	4903105	2	0	0	87.7	87.7	1	969.32	3.25	0	70.73	0	2.44	0	0	1.39	0	0	0	0	0	0	13.1	13.1
	Inverters	G_Inv6	366788.5	4902972	2	0	0	87.7	87.7	1	1020.19	3.25	0	71.17	0	2.45	0	0	1.45	0	0	0	0	0	0	12.58	12.58
	Inverters	G_Inv9	366750.9	4902691.8	2	0	0	87.7	87.7	1	1030.41	3.25	0	71.26	0	2.45	0	0	1.47	0	0	0	0	0	0	12.48	12.48
	Inverters	G_Inv8	366844.5	4902838.5	2	0	0	87.7	87.7	1	1088.3	3.25	0	71.73	0	2.46	0	0	1.54	0	0	0	0	0	0	11.92	11.92
	Inverter	MV3-18	367752	4907412	2	0	0	100.3	100.3	1	4833.95	3.25	0	84.69	0	0.63	0	0	18.33	0	0	0	0	0	0	-3.33	-3.33
	Inverter	MV3-12	367668	4907594	2	0	0	100.3	100.3	1	4967.77	3.25	0	84.92	0	0.64	0	0	18.53	0	0	0	0	0	0	-3.78	-3.78
	Inverter	MV3-21	368478	4907206	2	0	0	100.3	100.3	1	4999.99	3.25	0	84.98	0	0.64	0	0	18.58	0	0	0	0	0	0	-3.89	-3.89
	Inverters	G_Inv10	366900.7	4902704.8	2	0	0	87.7	87.7	1	1170.68	3.25	0	72.37	0	2.47	0	0	1.64	0	0	0	0	0	0	11.18	11.18
	Inverter	MV3-19	368357	4907347	2	0	0	100.3	100.3	1	5056.08	3.25	0	85.08	0	0.65	0	0	18.66	0	0	0	0	0	0	-4.07	-4.07
	Inverter	MV3-13	367963	4907577	2	0	0	100.3	100.3	1	5072.52	3.25	0	85.1	0	0.65	0	0	18.69	0	0	0	0	0	0	-4.13	-4.13
	Inverter	MV3-17	368178	4907472	2	0	0	100.3	100.3	1	5076.5	3.25	0	85.11	0	0.65	0	0	18.69	0	0	0	0	0	0	-4.14	-4.14
	Inverter	MV3-15	368357	4907477	2	0	0	100.3	100.3	1	5168.18	3.25	0	85.27	0	0.66	0	0	18.83	0	0	0	0	0	0	-4.44	-4.44
	Inverter	MV3-20	368689	4907317	2	0	0	100.3	100.3	1	5208.93	3.25	0	85.33	0	0.66	0	0	18.88	0	0	0	0	0	0	-4.57	-4.57
	Inverter	MV3-7	367945	4907754	2	0	0	100.3	100.3	1	5225.15	3.25	0	85.36	0	0.66	0	0	18.91	0	0	0	0	0	0	-4.62	-4.62
	Inverter	MV3-10	368167	4907669	2	0	0	100.3	100.3	1	5245.7	3.25	0	85.4	0	0.66	0	0	18.94	0	0	0	0	0	0	-4.68	-4.68
	Inverter	MV3-16	368514	4907475	2	0	0	100.3	100.3	1	5246.86	3.25	0	85.4	0	0.66	0	0	18.94	0	0	0	0	0	0	-4.69	-4.69
	Inverter	MV3-11	368346	4907662	2	0	0	100.3	100.3	1	5323.78	3.25	0	85.52	0	0.67	0	0	19.05	0	0	0	0	0	0	-4.93	-4.93
	Inverter	MV3-14	368684	4907498	2	0	0	100.3	100.3	1	5357.05	3.25	0	85.58	0	0.67	0	0	19.1	0	0	0	0	0	0	-5.03	-5.03
	Inverter	MV3-3	367939	4907927	2	0	0	100.3	100.3	1	5380.49	3.25	0	85.62	0	0.67	0	0	19.13	0	0	0	0	0	0	-5.11	-5.11
	Inverter	MV2-1	365842	4906816	2	0	0	97.3	97.3	1	3813.1	3.25	0	82.63	0	0.5	0	0	16.75	0	0	0	0	0	0	-2.56	-2.56
	Inverter	MV3-6	368162	4907834	2	0	0	100.3	100.3	1	5390.75	3.25	0	85.63	0	0.67	0	0	19.15	0	0	0	0	0	0	-5.14	-5.14
	Inverter	MV3-9	368512	4907703	2	0	0	100.3	100.3	1	5441.46	3.25	0	85.71	0	0.68	0	0	19.22	0	0	0	0	0	0	-5.3	-5.3
	Inverter	MV3-8	368680	4907712	2	0	0	100.3	100.3	1	5535.71	3.25	0	85.86	0	0.68	0	0	19.35	0	0	0	0	0	0	-5.58	-5.58
	Inverter	MV6-3	370207	4907140	2	0	0	100.3	100.3	1	6066.91	3.25	0	86.66	0	0.71	0	0	20.08	0	0	0	0	0	0	-7.14	-7.14
	Inverter	MV6-2	370085	4907339	2	0	0	100.3	100.3	1	6117.62	3.25	0	86.73	0	0.71	0	0	20.15	0	0	0	0	0	0	-7.28	-7.28
	Inverter	MV4-11	369264	4908855	2	0	0	100.3	100.3	1	6815.81	3.25	0	87.67	0	0.71	0	0	21.07	0	0	0	0	0	0	-9.14	-9.14
	Inverter	MV4-7	369035	4909001	2	0	0	100.3	100.3	1	6829.12	3.25	0	87.69	0	0.71	0	0	21.08	0	0	0	0	0	0	-9.17	-9.17
	Inverter	MV4-10	369312	4908858	2	0	0	100.3	100.3	1	6843.12	3.25	0	87.71	0	0.71	0	0	21.1	0	0	0	0	0	0	-9.21	-9.21
	Inverter	MV4-8	369256	4909001	2	0	0	100.3	100.3	1	6937.53	3.25	0	87.82	0	0.71	0	0	21.22	0	0	0	0	0	0	-9.44	-9.44
	Inverter	MV4-9	369289	4909001	2	0	0	100.3	100.3	1	6954.18	3.25	0	87.84	0	0.71	0	0	21.24	0	0	0	0	0	0	-9.49	-9.49
	Inverter	MV4-4	369027	4909199	2	0	0	100.3	100.3	1	6999.92	3.25	0	87.9	0	0.71	0	0	21.3	0	0	0	0	0	0	-9.6	-9.6
	Inverter	MV5-5	370015	4908690	2	0	0	100.3	100.3	1	7096.86	3.25	0	88.02	0	0.71	0	0	21.42	0	0	0	0	0	0	-9.84	-9.84
	Inverter	MV4-6	369243	4909192	2	0	0	100.3	100.3	1	7096.93	3.25	0	88.02	0	0.71	0	0	21.42	0	0	0	0	0	0	-9.84	-9.84
	Inverter	MV4-5	369289	4909199	2	0	0	100.3	100.3	1	7125.64	3.25	0	88.06	0	0.71	0	0	21.46	0	0	0	0	0	0	-9.91	-9.91

Inverter	MV4-1	369011	4909397	2	0	0	100.3	100.3	1	7168.5	3.25	0	88.11	0	0.7	0	0	21.51	0	0	0	0	0	0	-10.01	-10.01
Inverter	MV5-2	370006	4908853	2	0	0	100.3	100.3	1	7222.84	3.25	0	88.17	0	0.7	0	0	21.58	0	0	0	0	0	0	-10.14	-10.14
Inverter	MV4-3	369229	4909397	2	0	0	100.3	100.3	1	7269.7	3.25	0	88.23	0	0.7	0	0	21.63	0	0	0	0	0	0	-10.25	-10.25
Inverter	MV4-2	369272	4909397	2	0	0	100.3	100.3	1	7290.27	3.25	0	88.25	0	0.7	0	0	21.66	0	0	0	0	0	0	-10.3	-10.3
Inverter	MV5-4	370324	4908707	2	0	0	100.3	100.3	1	7299.22	3.25	0	88.27	0	0.7	0	0	21.67	0	0	0	0	0	0	-10.32	-10.32
Inverter	MV5-3	370231	4908851	2	0	0	100.3	100.3	1	7355.5	3.25	0	88.33	0	0.7	0	0	21.74	0	0	0	0	0	0	-10.46	-10.46
Inverter	MV5-1	370020	4909142	2	0	0	100.3	100.3	1	7466.77	3.25	0	88.46	0	0.69	0	0	21.87	0	0	0	0	0	0	-10.72	-10.72
Inverter	MV6-1	370235	4907364	2	0	0	97.3	97.3	1	6241.8	3.25	0	86.91	0	0.71	0	0	20.32	0	0	0	0	0	0	-10.62	-10.62
DSTATCOM - 10 MVAR #2	DSAT2	369403	4908757	2.5	0	0	96.6	96.6	1	6805.07	3.5	0	87.66	0	3.83	0	0	4.22	0	0	0	0	0	0	0.93	0.93
DSTATCOM - 10 MVAR #1	DSAT1	369437	4908757	2.5	0	0	96.6	96.6	1	6823.29	3.5	0	87.68	0	3.83	0	0	4.23	0	0	0	0	0	0	0.89	0.89
Inverter	MV1-3	364440	4906039	2	0	0	89.1	89.1	1	3313.51	3.25	0	81.41	0	1.22	0	0	10.09	0	0	0	0	0	0	-3.66	-3.66
SubstationTransformer	W_ST	369711.17	4906112.3	2.5	0	0	92	92	1	5020.57	4.25	0	85.02	0	1.64	2.32	0.23	8.64	0	0	0	0	0	0	-5.65	-5.65
Inverter	MV2-2	365977	4906654	2	0	0	89.1	89.1	1	3656.33	3.25	0	82.26	0	1.31	0	0	10.59	0	0	0	0	0	0	-5.1	-5.1
Westbrook Inverter Enclosur	W_INV3	369508	4906164	2	0	0	89.1	89.1	1	4895.89	3.25	0	84.8	0	1.61	0	0	12.32	0	0	0	0	0	0	-9.68	-9.68
Westbrook Inverter Enclosur	W_INV2	369374	4906388	2	0	0	89.1	89.1	1	4944.86	3.25	0	84.88	0	1.63	0	0	12.39	0	0	0	0	0	0	-9.84	-9.84
Westbrook Inverter Enclosur	W_INV4	369673	4906164	2	0	0	89.1	89.1	1	5023.04	3.25	0	85.02	0	1.65	0	0	12.49	0	0	0	0	0	0	-10.1	-10.1
Inverter	MV3-22	368656	4907142	2	0	0	89.1	89.1	1	5046.02	3.25	0	85.06	0	1.65	0	0	12.53	0	0	0	0	0	0	-10.18	-10.18
Westbrook Inverter Enclosur	W_INV7	369780	4906417	2	0	0	89.1	89.1	1	5266.98	3.25	0	85.43	0	1.71	0	0	12.82	0	0	0	0	0	0	-10.9	-10.9
Westbrook Inverter Enclosur	W_INV5	369719	4906574	2	0	0	89.1	89.1	1	5324.64	3.25	0	85.53	0	1.72	0	0	12.89	0	0	0	0	0	0	-11.08	-11.08
Westbrook Inverter Enclosur	W_INV6	369875	4906578	2	0	0	89.1	89.1	1	5444.01	3.25	0	85.72	0	1.75	0	0	13.05	0	0	0	0	0	0	-11.46	-11.46
Inverter	MV3-5	368340	4907843	2	0	0	89.1	89.1	1	5480.04	3.25	0	85.78	0	1.76	0	0	13.1	0	0	0	0	0	0	-11.57	-11.57
Inverter	MV3-1	368156	4907976	2	0	0	89.1	89.1	1	5515.75	3.25	0	85.83	0	1.77	0	0	13.14	0	0	0	0	0	0	-11.68	-11.68
Inverter	MV3-4	368502	4907925	2	0	0	89.1	89.1	1	5629.44	3.25	0	86.01	0	1.8	0	0	13.29	0	0	0	0	0	0	-12.04	-12.04
Inverter	MV3-2	368671	4907928	2	0	0	89.1	89.1	1	5715.99	3.25	0	86.14	0	1.82	0	0	13.4	0	0	0	0	0	0	-12.3	-12.3
Fixed Reactor Bank 1	FRB1	369378	4908755	6	0	0	89.8	89.8	1	6790.06	5.25	0	87.64	0	-0.31	0	0	10.55	0	0	0	0	0	0	-8.1	-8.1
Fixed Reactor Bank 2	FRB2	369464	4908755	6	0	0	89.8	89.8	1	6836.16	5.25	0	87.7	0	-0.3	0	0	10.59	0	0	0	0	0	0	-8.21	-8.21
Inverter	MV4-15	369176	4908481	2	0	0	89.1	89.1	1	6450.65	3.25	0	87.19	0	2	0	0	14.32	0	0	0	0	0	0	-14.45	-14.45
Inverter	MV4-14	369176	4908507	2	0	0	89.1	89.1	1	6472.75	3.25	0	87.22	0	2	0	0	14.35	0	0	0	0	0	0	-14.51	-14.51
Inverter	MV4-13	369051	4908605	2	0	0	89.1	89.1	1	6492.19	3.25	0	87.25	0	2.01	0	0	14.37	0	0	0	0	0	0	-14.57	-14.57
Inverter	MV4-12	369043	4908803	2	0	0	89.1	89.1	1	6659.84	3.25	0	87.47	0	2.05	0	0	14.58	0	0	0	0	0	0	-15.04	-15.04
Inverter	MV5-6	369982	4908507	2	0	0	89.1	89.1	1	6930.98	3.25	0	87.82	0	2.11	0	0	14.9	0	0	0	0	0	0	-15.77	-15.77
Westbrook Inverter Enclosur	W_INV1	369409	4906578	2	0	0	86.1	86.1	1	5101.71	3.25	0	85.15	0	1.66	0	0	12.6	0	0	0	0	0	0	-13.36	-13.36
Inverter	MV6-4	370250	4906966	2	0	0	86.1	86.1	1	5981.79	3.25	0	86.54	0	1.88	0	0	13.74	0	0	0	0	0	0	-16.1	-16.1
Westbrook Inverter Transfor	W_INVTR1	369403	4906578	2	0	0	78.2	78.2	1	5097.43	3.25	0	85.15	0	-3.2	0	0	2.45	0	0	0	0	0	0	-6.15	-6.15
Westbrook Inverter Transfor	W_INVTR3	369514	4906164	2	0	0	77.3	77.3	1	4900.48	3.25	0	84.8	0	-3.16	0	0	2.38	0	0	0	0	0	0	-6.68	-6.68
Westbrook Inverter Transfor	W_INVTR2	369368	4906388	2	0	0	77.3	77.3	1	4940.49	3.25	0	84.88	0	-3.17	0	0	2.39	0	0	0	0	0	0	-6.76	-6.76
Westbrook Inverter Transfor	W_INVTR4	369679	4906164	2	0	0	77.3	77.3	1	5027.7	3.25	0	85.03	0	-3.18	0	0	2.42	0	0	0	0	0	0	-6.93	-6.93
Westbrook Inverter Transfor	W_INVTR7	369786	4906417	2	0	0	77.3	77.3	1	5271.55	3.25	0	85.44	0	-3.23	0	0	2.5	0	0	0	0	0	0	-7.37	-7.37
Westbrook Inverter Transfor	W_INVTR5	369725	4906574	2	0	0	77.3	77.3	1	5329.1	3.25	0	85.53	0	-3.24	0	0	2.52	0	0	0	0	0	0	-7.47	-7.47
Inverter Transformer	MV1-14 T	365157	4905049	2	0	0	69.4	69.4	1	2134.94	3.25	0	77.59	0	2.22	0	0	5.1	0	0	0	0	0	0	-15.56	-15.56
Westbrook Inverter Transfor	W_INVTR6	369881	4906578	2	0	0	77.3	77.3	1	5448.53	3.25	0	85.73	0	-3.27	0	0	2.56	0	0	0	0	0	0	-7.68	-7.68
Inverter Transformer	MV1-13 T	364725	4905241	2	0	0	69.4	69.4	1	2468.9	3.25	0	78.85	0	2.34	0	0	5.41	0	0	0	0	0	0	-17.25	-17.25
Inverter Transformer	MV1-10 T	365010	4905564	2	0	0	69.4	69.4	1	2670.47	3.25	0	79.53	0	2.4	0	0	5.6	0	0	0	0	0	0	-18.18	-18.18
Inverter Transformer	MV1-7 T	364919	4905782	2	0	0	69.4	69.4	1	2905.46	3.25	0	80.26	0	2.48	0	0	5.8	0	0	0	0	0	0	-19.19	-19.19
Inverter Transformer	MV2-1 T	365836	4906816	2	0	0	69.4	69.4	1	3812.99	3.25	0	82.63	0	2.74	0	0	6.54	0	0	0	0	0	0	-22.55	-22.55
Inverter Transformer	MV6-4 T	370244	4906966	2	0	0	69.4	69.4	1	5977.29	3.25	0	86.53	0	3.18	0	0	8	0	0	0	0	0	0	-28.37	-28.37
Inverter Transformer	MV6-1 T	370230	4907364	2	0	0	69.4	69.4	1	6238.22	3.25	0	86.9	0	3.22	0	0	8.16	0	0	0	0	0	0	-28.94	-28.94
Inverter Transformer	MV1-15 T	365309	4904994	2	0	0	56.1	56.1	1	2042.82	3.25	0	77.2	0	0.42	0	0	7.13	0	0	0	0	0	0	-28.7	-28.7
Inverter Transformer	MV1-12 T	365044	4905386	2	0	0	56.1	56.1	1	2490.22	3.25	0	78.92	0	0.61	0	0	7.97	0	0	0	0	0	0	-31.45	-31.45
Inverter Transformer	MV1-11 T	364649	4905414	2	0	0	56.1	56.1	1	2657.82	3.25	0	79.49	0	0.68	0	0	8.27	0	0	0	0	0	0	-32.39	-32.39
Inverter Transformer	MV1-8 T	364782	4905647	2	0	0	56.1	56.1	1	2821.59	3.25	0	80.01	0	0.75	0	0	8.56	0	0	0	0	0	0	-33.27	-33.27
Inverter Transformer	MV1-9 T	364555	4905646	2	0	0	56.1	56.1	1	2907.85	3.25	0	80.27	0	0.79	0	0	8.71	0	0	0	0	0	0	-33.71	-33.71
Inverter Transformer	MV1-4 T	364821	4905918	2	0	0	56.1	56.1	1	3064.65	3.25	0	80.73	0	0.86	0	0	8.98	0	0	0	0	0	0	-34.5	-34.5
Inverter Transformer	MV1-5 T	364676	4905892	2	0	0	56.1	56.1	1	3088.22	3.25	0	80.79	0	0.87	0	0	9.02	0	0	0	0	0	0	-34.62	-34.62
Inverter Transformer	MV1-6 T	364482	4905835	2	0	0	56.1	56.1	1	3110.09	3.25	0	80.86	0	0.88	0	0	9.05	0	0	0	0	0	0	-34.73	-34.73
Inverter Transformer	MV1-2 T	364759	4906063	2	0	0	56.1	56.1	1	3221.74	3.25	0	81.16	0	0.92	0	0	9.24	0	0	0	0	0	0	-35.27	-35.27
Inverter Transformer	MV1-3 T	364435	4906039	2	0	0	56.1	56.1	1	3315.52	3.25	0	81.41	0	0.96	0	0	9.39	0	0	0	0	0	0	-35.71	-35.71
Inverter Transformer	MV1-1 T	364721	4906166	2	0	0	56.1	56.1	1	3331.47	3.25	0	81.45	0	0.97	0	0	9.42	0	0	0	0	0	0	-35.78	-35.78
Inverter Transformer	MV2-4 T	365590	4906628	2	0	0	56.1	56.1	1	3628.81	3.25	0	82.2	0	1.09	0	0	9.89	0	0	0	0	0	0	-37.12	-37.12
Inverter Transformer	MV2-3 T	365814	4906641	2	0	0	56.1	56.1	1	3637.68	3.25	0	82.22	0	1.1	0	0	9.9	0	0	0	0	0	0	-37.16	-37.16
Inverter Transformer	MV2-2 T	365982	4906654	2	0	0	56.1	56.1	1	3656.62	3.25	0	82.26	0	1.1	0	0	9.93	0	0	0	0	0	0	-37.24	-37.24
Inverter Transformer	MV3-18 T	367757	4907412	2	0	0	56.1	56.1	1	4836	3.25	0	84.69	0	1.57	0	0	11.64	0	0	0	0	0	0	-41.83	-41.83
Inverter Transformer	MV3-12 T	367674	4907594	2	0	0	56.1	56.1	1	4970.07	3.25	0	84.93	0	1.61	0	0	11.81	0	0	0	0	0	0	-42.3	-42.3
Inverter Transformer	MV3-21 T	368484	4907206	2	0	0	56.1	56.1	1	5003.25	3.25	0	84.99	0	1.63	0	0	11.86	0	0	0	0	0	0	-42.41	-42.41
Inverter Transformer	MV3-22 T	368661	4907142	2	0	0	56.1	56.1	1	5048.88	3.25	0	85.06	0	1.64	0	0	11.92	0	0	0	0	0	0	-42.57	-42.57
Inverter Transformer	MV3-19 T	368352	4907347	2	0	0	56.1	56.1	1	5053.52	3.25	0	85.07	0	1.64	0	0	11.92	0	0	0	0	0	0	-42.58	-42.58
Inverter Transformer	MV3-13 T	367958	4907577	2	0	0	56.1	56.1	1	5070.36	3.25	0	85.1	0	1.65	0	0	11.95	0	0	0	0	0	0	-42.64	-42.64
Inverter Transformer	MV3-17 T	368183	4907472	2	0	0	56.1	56.1	1	5078.87	3.25	0	85.12	0	1.65	0	0	11.96	0	0	0	0	0	0	-42.67	-42.67
Inverter Transformer	MV3-15 T	368351	4907477	2	0	0	56.1	56.1	1	5165.18	3.25	0	85.26	0	1.68	0	0	12.07	0	0	0	0	0	0	-42.96	-42.96
Inverter Transformer	MV3-20 T	368683	4907317	2	0	0	56.1	56.1	1	5205.57	3.25	0	85.33	0	1.7	0	0	12.12	0	0	0	0	0	0	-43.09	-43.09
Inverter Transformer	MV3-7 T	367951	4907754	2	0	0	56.1	56.1	1	5227.65	3.25	0	85.37	0	1.71	0	0	12.15	0	0	0	0	0	0	-43.16	-43.16
Inverter Transformer	MV3-10 T	368162	4907669	2	0	0	56.1	56.1	1	5243.41	3.25	0	85.39	0	1.71	0	0	12.17	0	0	0	0	0	0	-43.22	-43.22
Inverter Transformer	MV3-16 T	368509	4907475	2	0	0	56.1	56.1	1	5244.25	3.25	0	85.39	0	1.71	0	0	12.17	0	0	0	0	0	0	-43.22	-43.22
Inverter Transformer	MV3-11 T	368340	4907662	2	0	0	56.1	56.1	1	5320.88	3.25	0	85.52	0	1.74	0	0	12.27	0	0	0	0	0	0	-43.47	-43.47

	Inverter Transformer	MV3-14 T	368678	4907498	2	0	0	56.1	56.1	1	5353.79	3.25	0	85.57	0	1.75	0	0	12.31	0	0	0	0	0	0	-43.58	-43.58
	Inverter Transformer	MV3-3 T	367944	4907927	2	0	0	56.1	56.1	1	5382.51	3.25	0	85.62	0	1.76	0	0	12.35	0	0	0	0	0	0	-43.67	-43.67
	Inverter Transformer	MV3-6 T	368156	4907834	2	0	0	56.1	56.1	1	5388.09	3.25	0	85.63	0	1.76	0	0	12.35	0	0	0	0	0	0	-43.69	-43.69
	Inverter Transformer	MV3-9 T	368517	4907703	2	0	0	56.1	56.1	1	5443.98	3.25	0	85.72	0	1.78	0	0	12.43	0	0	0	0	0	0	-43.87	-43.87
	Inverter Transformer	MV3-5 T	368335	4907843	2	0	0	56.1	56.1	1	5477.7	3.25	0	85.77	0	1.79	0	0	12.47	0	0	0	0	0	0	-43.97	-43.97
	Inverter Transformer	MV3-1 T	368150	4907976	2	0	0	56.1	56.1	1	5513.16	3.25	0	85.83	0	1.81	0	0	12.51	0	0	0	0	0	0	-44.09	-44.09
	Inverter Transformer	MV3-8 T	368685	4907712	2	0	0	56.1	56.1	1	5538.34	3.25	0	85.87	0	1.81	0	0	12.54	0	0	0	0	0	0	-44.17	-44.17
	Inverter Transformer	MV3-4 T	368507	4907925	2	0	0	56.1	56.1	1	5631.87	3.25	0	86.01	0	1.85	0	0	12.66	0	0	0	0	0	0	-44.46	-44.46
	Inverter Transformer	MV3-2 T	368677	4907928	2	0	0	56.1	56.1	1	5719.03	3.25	0	86.15	0	1.87	0	0	12.77	0	0	0	0	0	0	-44.73	-44.73
	Inverter Transformer	MV6-3 T	370202	4907140	2	0	0	56.1	56.1	1	6063.26	3.25	0	86.65	0	1.98	0	0	13.18	0	0	0	0	0	0	-45.76	-45.76
	Inverter Transformer	MV6-2 T	370091	4907339	2	0	0	56.1	56.1	1	6121.86	3.25	0	86.74	0	2	0	0	13.25	0	0	0	0	0	0	-45.93	-45.93
	Inverter Transformer	MV4-15 T	369170	4908481	2	0	0	56.1	56.1	1	6447.49	3.25	0	87.19	0	2.1	0	0	13.62	0	0	0	0	0	0	-46.85	-46.85
	Inverter Transformer	MV4-14 T	369182	4908507	2	0	0	56.1	56.1	1	6475.91	3.25	0	87.23	0	2.11	0	0	13.65	0	0	0	0	0	0	-46.93	-46.93
	Inverter Transformer	MV4-13 T	369057	4908605	2	0	0	56.1	56.1	1	6495.22	3.25	0	87.25	0	2.12	0	0	13.67	0	0	0	0	0	0	-46.98	-46.98
	Inverter Transformer	MV4-12 T	369049	4908803	2	0	0	56.1	56.1	1	6662.79	3.25	0	87.47	0	2.17	0	0	13.86	0	0	0	0	0	0	-47.44	-47.44
	Inverter Transformer	MV4-11 T	369269	4908855	2	0	0	56.1	56.1	1	6818.38	3.25	0	87.67	0	2.21	0	0	14.03	0	0	0	0	0	0	-47.86	-47.86
	Inverter Transformer	MV4-7 T	369040	4909001	2	0	0	56.1	56.1	1	6831.51	3.25	0	87.69	0	2.21	0	0	14.05	0	0	0	0	0	0	-47.89	-47.89
	Inverter Transformer	MV4-10 T	369307	4908858	2	0	0	56.1	56.1	1	6840.53	3.25	0	87.7	0	2.22	0	0	14.06	0	0	0	0	0	0	-47.92	-47.92
	Inverter Transformer	MV5-6 T	369987	4908507	2	0	0	56.1	56.1	1	6934.02	3.25	0	87.82	0	2.24	0	0	14.16	0	0	0	0	0	0	-48.16	-48.16
	Inverter Transformer	MV4-8 T	369262	4909001	2	0	0	56.1	56.1	1	6940.55	3.25	0	87.83	0	2.24	0	0	14.17	0	0	0	0	0	0	-48.18	-48.18
	Inverter Transformer	MV4-9 T	369284	4909001	2	0	0	56.1	56.1	1	6951.65	3.25	0	87.84	0	2.25	0	0	14.18	0	0	0	0	0	0	-48.21	-48.21
	Inverter Transformer	MV4-4 T	369033	4909199	2	0	0	56.1	56.1	1	7002.71	3.25	0	87.91	0	2.26	0	0	14.23	0	0	0	0	0	0	-48.34	-48.34
	Inverter Transformer	MV4-6 T	369249	4909192	2	0	0	56.1	56.1	1	7099.87	3.25	0	88.03	0	2.29	0	0	14.34	0	0	0	0	0	0	-48.59	-48.59
	Inverter Transformer	MV5-5 T	370021	4908690	2	0	0	56.1	56.1	1	7100.45	3.25	0	88.03	0	2.29	0	0	14.34	0	0	0	0	0	0	-48.59	-48.59
	Inverter Transformer	MV4-5 T	369283	4909199	2	0	0	56.1	56.1	1	7122.68	3.25	0	88.05	0	2.29	0	0	14.36	0	0	0	0	0	0	-48.65	-48.65
	Inverter Transformer	MV4-1 T	369017	4909397	2	0	0	56.1	56.1	1	7171.22	3.25	0	88.11	0	2.31	0	0	14.41	0	0	0	0	0	0	-48.77	-48.77
	Inverter Transformer	MV5-2 T	370011	4908853	2	0	0	56.1	56.1	1	7225.77	3.25	0	88.18	0	2.32	0	0	14.47	0	0	0	0	0	0	-48.91	-48.91
	Inverter Transformer	MV4-3 T	369234	4909397	2	0	0	56.1	56.1	1	7272.08	3.25	0	88.23	0	2.33	0	0	14.52	0	0	0	0	0	0	-49.02	-49.02
	Inverter Transformer	MV4-2 T	369267	4909397	2	0	0	56.1	56.1	1	7287.86	3.25	0	88.25	0	2.34	0	0	14.53	0	0	0	0	0	0	-49.06	-49.06
	Inverter Transformer	MV5-4 T	370330	4908707	2	0	0	56.1	56.1	1	7302.97	3.25	0	88.27	0	2.34	0	0	14.55	0	0	0	0	0	0	-49.1	-49.1
	Inverter Transformer	MV5-3 T	370237	4908851	2	0	0	56.1	56.1	1	7359.14	3.25	0	88.34	0	2.35	0	0	14.61	0	0	0	0	0	0	-49.24	-49.24
	Inverter Transformer	MV5-1 T	370015	4909142	2	0	0	56.1	56.1	1	7463.92	3.25	0	88.46	0	2.38	0	0	14.72	0	0	0	0	0	0	-49.5	-49.5
	Line Reactor	NGR	369421	4908787.5	5	0	0	45.4	45.4	1	6840.47	5.25	0	87.7	0	3.22	1.37	0.1	2.8	0	0	0	0	0	0	-49.73	-49.73
Limit. Valu	0	0																								
Level D/N:	25.6362	25.6362																								

Receiver: Existing Noise Receptor
ID: G-36
X: 365766.7
Y: 4902981.7
Z: 4.5
Ground: 0

ISO	Description	ID	X	Y	Z	Ground	ReflOrd	LxT	LxN	L/A	Dist.	hm	Freq	Adiv	K0b	Agr	Abar	z	Aatm	Afol	Ahous	Cmet	CmetN	Dc	RL	LtotT	LtotN
	Sol_Luce Substation	S_Substation	369426	4908792	3.5	0	0	112.1	112.1	1	6866.59	5.25	0	87.73	0	1.35	2.47	0.3	10.62	0	0	0	0	0	0	9.9	9.9
	Inverter	MV1-15	365315	4904994	2	0	0	100.3	100.3	1	2062.37	3.25	0	77.29	0	0.15	0	0	13.59	0	0	0	0	0	0	9.29	9.29
	Inverter	MV1-12	365038	4905386	2	0	0	100.3	100.3	1	2512.3	3.25	0	79	0	0.26	0	0	14.48	0	0	0	0	0	0	6.57	6.57
	Inverter	MV1-11	364655	4905414	2	0	0	100.3	100.3	1	2674.32	3.25	0	79.54	0	0.3	0	0	14.78	0	0	0	0	0	0	5.69	5.69
	Gardiner Substation	G_Sub	366586.3	4903349.9	2.5	0	0	90.8	90.8	1	898.51	3.5	0	70.07	0	-0.39	0	0	2.31	0	0	0	0	0	0	18.78	18.78
	Inverter	MV1-8	364788	4905647	2	0	0	100.3	100.3	1	2839.31	3.25	0	80.06	0	0.33	0	0	15.09	0	0	0	0	0	0	4.83	4.83
	Inverter	MV1-9	364561	4905646	2	0	0	100.3	100.3	1	2924.42	3.25	0	80.32	0	0.35	0	0	15.24	0	0	0	0	0	0	4.41	4.41
	Inverter	MV1-14	365163	4905049	2	0	0	97.3	97.3	1	2153.65	3.25	0	77.66	0	0.17	0	0	13.78	0	0	0	0	0	0	5.7	5.7
	Inverter	MV1-4	364815	4905918	2	0	0	100.3	100.3	1	3086.68	3.25	0	80.79	0	0.38	0	0	15.52	0	0	0	0	0	0	3.62	3.62
	Inverter	MV1-5	364671	4905892	2	0	0	100.3	100.3	1	3109.73	3.25	0	80.85	0	0.38	0	0	15.56	0	0	0	0	0	0	3.51	3.51
	Inverter	MV1-6	364477	4905835	2	0	0	100.3	100.3	1	3131.24	3.25	0	80.91	0	0.39	0	0	15.6	0	0	0	0	0	0	3.41	3.41
	Inverter	MV1-2	364753	4906063	2	0	0	100.3	100.3	1	3243.76	3.25	0	81.22	0	0.41	0	0	15.8	0	0	0	0	0	0	2.89	2.89
	Inverter	MV1-1	364715	4906166	2	0	0	100.3	100.3	1	3353.48	3.25	0	81.51	0	0.43	0	0	15.98	0	0	0	0	0	0	2.39	2.39
	Inverters	G_Inv1	366526.4	4903225.8	2	0	0	87.7	87.7	1	797.96	3.25	0	69.04	0	2.42	0	0	1.17	0	0	0	0	0	0	15.03	15.03
	Inverter	MV1-13	364731	4905241	2	0	0	97.3	97.3	1	2485.38	3.25	0	78.91	0	0.25	0	0	14.43	0	0	0	0	0	0	3.72	3.72
	Inverters	G_Inv3	366583.7	4903091.4	2	0	0	87.7	87.7	1	824.34	3.25	0	69.32	0	2.42	0	0	1.2	0	0	0	0	0	0	14.71	14.71
	Inverter	MV2-4	365586	4906624	2	0	0	100.3	100.3	1	3646.78	3.25	0	82.24	0	0.47	0	0	16.48	0	0	0	0	0	0	1.12	1.12
	Inverter	MV2-3	365820	4906641	2	0	0	100.3	100.3	1	3659.69	3.25	0	82.27	0	0.48	0	0	16.5	0	0	0	0	0	0	1.07	1.07
	Inverters	G_Inv5	366638.5	4902958.1	2	0	0	87.7	87.7	1	872.12	3.25	0	69.81	0	2.43	0	0	1.26	0	0	0	0	0	0	14.16	14.16
	Inverter	MV1-10	365004	4905564	2	0	0	97.3	97.3	1	2692.58	3.25	0	79.6	0	0.3	0	0	14.82	0	0	0	0	0	0	2.59	2.59
	Inverters	G_Inv7	366694.6	4902824.7	2	0	0	87.7	87.7	1	941.09	3.25	0	70.47	0	2.44	0	0	1.35	0	0	0	0	0	0	13.4	13.4
	Inverters	G_Inv2	366676.9	4903239.1	2	0	0	87.7	87.7	1	945.9	3.25	0	70.52	0	2.44	0	0	1.36	0	0	0	0	0	0	13.34	13.34
	Inverter	MV1-7	364925	4905782	2	0	0	97.3	97.3	1	2924.06	3.25	0	80.32	0	0.35	0	0	15.24	0	0	0	0	0	0	1.41	1.41
	Inverters	G_Inv4	366732.8	4903105	2	0	0	87.7	87.7	1	973.94	3.25	0	70.77	0	2.45	0	0	1.39	0	0	0	0	0	0	13.05	13.05
	Inverters	G_Inv6	366788.5	4902972	2	0	0	87.7	87.7	1	1021.85	3.25	0	71.19	0	2.45	0	0	1.45	0	0	0	0	0	0	12.57	12.57
	Inverters	G_Inv9	366750.9	4902691.8	2	0	0	87.7	87.7	1	1026.01	3.25	0	71.22	0	2.45	0	0	1.46	0	0	0	0	0	0	12.52	12.52
	Inverters	G_Inv8	366844.5	4902838.5	2	0	0	87.7	87.7	1	1087.27	3.25	0	71.73	0	2.46	0	0	1.54	0	0	0	0	0	0	11.93	11.93
	Inverter	MV3-18	367752	4907412	2	0	0	100.3	100.3	1	4854.79	3.25	0	84.72	0	0.63	0	0	18.37	0	0	0	0	0	0	-3.41	-3.41
	Inverter	MV3-12	367668	4907594	2	0	0	100.3	100.3	1	4988.81	3.25	0	84.96	0	0.64	0	0	18.56	0	0	0	0	0	0	-3.85	-3.85
	Inverters	G_Inv10	366900.7	4902704.8	2	0	0	87.7	87.7	1	1167.32	3.25	0	72.34	0	2.47	0	0	1.64	0	0	0	0	0	0	11.21	11.21

Inverter	MV3-21	368478	4907206	2	0	0	100.3	100.3	1	5019.55	3.25	0	85.01	0	0.64	0	0	18.61	0	0	0	0	0	0	-3.95	-3.95
Inverter	MV3-19	368357	4907347	2	0	0	100.3	100.3	1	5075.97	3.25	0	85.11	0	0.65	0	0	18.69	0	0	0	0	0	0	-4.14	-4.14
Inverter	MV3-13	367963	4907577	2	0	0	100.3	100.3	1	5093.18	3.25	0	85.14	0	0.65	0	0	18.72	0	0	0	0	0	0	-4.19	-4.19
Inverter	MV3-17	368178	4907472	2	0	0	100.3	100.3	1	5096.78	3.25	0	85.15	0	0.65	0	0	18.72	0	0	0	0	0	0	-4.21	-4.21
Inverter	MV3-15	368357	4907477	2	0	0	100.3	100.3	1	5188.2	3.25	0	85.3	0	0.66	0	0	18.85	0	0	0	0	0	0	-4.5	-4.5
Inverter	MV3-20	368689	4907317	2	0	0	100.3	100.3	1	5228.26	3.25	0	85.37	0	0.66	0	0	18.91	0	0	0	0	0	0	-4.63	-4.63
Inverter	MV3-7	367945	4907754	2	0	0	100.3	100.3	1	5245.94	3.25	0	85.4	0	0.66	0	0	18.94	0	0	0	0	0	0	-4.69	-4.69
Inverter	MV3-10	368167	4907669	2	0	0	100.3	100.3	1	5266.14	3.25	0	85.43	0	0.66	0	0	18.97	0	0	0	0	0	0	-4.75	-4.75
Inverter	MV3-16	368514	4907475	2	0	0	100.3	100.3	1	5266.63	3.25	0	85.43	0	0.66	0	0	18.97	0	0	0	0	0	0	-4.75	-4.75
Inverter	MV3-11	368346	4907662	2	0	0	100.3	100.3	1	5343.97	3.25	0	85.56	0	0.67	0	0	19.08	0	0	0	0	0	0	-4.99	-4.99
Inverter	MV3-14	368684	4907498	2	0	0	100.3	100.3	1	5376.58	3.25	0	85.61	0	0.67	0	0	19.13	0	0	0	0	0	0	-5.1	-5.1
Inverter	MV3-3	367939	4907927	2	0	0	100.3	100.3	1	5401.38	3.25	0	85.65	0	0.67	0	0	19.16	0	0	0	0	0	0	-5.17	-5.17
Inverter	MV3-6	368162	4907834	2	0	0	100.3	100.3	1	5411.31	3.25	0	85.67	0	0.67	0	0	19.17	0	0	0	0	0	0	-5.2	-5.2
Inverter	MV2-1	365842	4906816	2	0	0	97.3	97.3	1	3835.04	3.25	0	82.68	0	0.5	0	0	16.78	0	0	0	0	0	0	-2.65	-2.65
Inverter	MV3-9	368512	4907703	2	0	0	100.3	100.3	1	5461.44	3.25	0	85.75	0	0.68	0	0	19.25	0	0	0	0	0	0	-5.36	-5.36
Inverter	MV3-8	368680	4907712	2	0	0	100.3	100.3	1	5555.45	3.25	0	85.89	0	0.68	0	0	19.38	0	0	0	0	0	0	-5.64	-5.64
Inverter	MV6-3	370207	4907140	2	0	0	100.3	100.3	1	6083.4	3.25	0	86.68	0	0.71	0	0	20.11	0	0	0	0	0	0	-7.18	-7.18
Inverter	MV6-2	370085	4907339	2	0	0	100.3	100.3	1	6134.64	3.25	0	86.76	0	0.71	0	0	20.18	0	0	0	0	0	0	-7.33	-7.33
Inverter	MV4-11	369264	4908855	2	0	0	100.3	100.3	1	6835.7	3.25	0	87.7	0	0.71	0	0	21.09	0	0	0	0	0	0	-9.19	-9.19
Inverter	MV4-7	369035	4909001	2	0	0	100.3	100.3	1	6849.36	3.25	0	87.71	0	0.71	0	0	21.11	0	0	0	0	0	0	-9.22	-9.22
Inverter	MV4-10	369312	4908858	2	0	0	100.3	100.3	1	6862.95	3.25	0	87.73	0	0.71	0	0	21.13	0	0	0	0	0	0	-9.26	-9.26
Inverter	MV4-8	369256	4909001	2	0	0	100.3	100.3	1	6957.53	3.25	0	87.85	0	0.71	0	0	21.25	0	0	0	0	0	0	-9.49	-9.49
Inverter	MV4-9	369289	4909001	2	0	0	100.3	100.3	1	6974.14	3.25	0	87.87	0	0.71	0	0	21.27	0	0	0	0	0	0	-9.53	-9.53
Inverter	MV4-4	369027	4909199	2	0	0	100.3	100.3	1	7020.28	3.25	0	87.93	0	0.71	0	0	21.32	0	0	0	0	0	0	-9.65	-9.65
Inverter	MV5-5	370015	4908690	2	0	0	100.3	100.3	1	7115.67	3.25	0	88.04	0	0.71	0	0	21.44	0	0	0	0	0	0	-9.88	-9.88
Inverter	MV4-6	369243	4909192	2	0	0	100.3	100.3	1	7117.06	3.25	0	88.05	0	0.71	0	0	21.45	0	0	0	0	0	0	-9.89	-9.89
Inverter	MV4-5	369289	4909199	2	0	0	100.3	100.3	1	7145.73	3.25	0	88.08	0	0.71	0	0	21.48	0	0	0	0	0	0	-9.96	-9.96
Inverter	MV4-1	369011	4909397	2	0	0	100.3	100.3	1	7188.99	3.25	0	88.13	0	0.7	0	0	21.53	0	0	0	0	0	0	-10.06	-10.06
Inverter	MV5-2	370006	4908853	2	0	0	100.3	100.3	1	7241.81	3.25	0	88.2	0	0.7	0	0	21.6	0	0	0	0	0	0	-10.19	-10.19
Inverter	MV4-3	369229	4909397	2	0	0	100.3	100.3	1	7289.97	3.25	0	88.25	0	0.7	0	0	21.66	0	0	0	0	0	0	-10.3	-10.3
Inverter	MV4-2	369272	4909397	2	0	0	100.3	100.3	1	7310.49	3.25	0	88.28	0	0.7	0	0	21.68	0	0	0	0	0	0	-10.35	-10.35
Inverter	MV5-4	370324	4908707	2	0	0	100.3	100.3	1	7317.65	3.25	0	88.29	0	0.7	0	0	21.69	0	0	0	0	0	0	-10.37	-10.37
Inverter	MV5-3	370231	4908851	2	0	0	100.3	100.3	1	7374.19	3.25	0	88.35	0	0.7	0	0	21.76	0	0	0	0	0	0	-10.5	-10.5
Inverter	MV5-1	370020	4909142	2	0	0	100.3	100.3	1	7485.98	3.25	0	88.48	0	0.69	0	0	21.9	0	0	0	0	0	0	-10.76	-10.76
Inverter	MV6-1	370235	4907364	2	0	0	97.3	97.3	1	6258.62	3.25	0	86.93	0	0.71	0	0	20.34	0	0	0	0	0	0	-10.67	-10.67
DSTATCOM - 10 MVAR #2	DSAT2	369403	4908757	2.5	0	0	96.6	96.6	1	6824.72	3.5	0	87.68	0	3.83	0	0	4.23	0	0	0	0	0	0	0.89	0.89
DSTATCOM - 10 MVAR #1	DSAT1	369437	4908757	2.5	0	0	96.6	96.6	1	6842.89	3.5	0	87.7	0	3.83	0	0	4.24	0	0	0	0	0	0	0.86	0.86
Inverter	MV1-3	364440	4906039	2	0	0	89.1	89.1	1	3332.75	3.25	0	81.46	0	1.23	0	0	10.12	0	0	0	0	0	0	-3.74	-3.74
SubstationTransformer	W_ST	369711.17	4906112.3	2.5	0	0	92	92	1	5035.8	4.25	0	85.04	0	1.65	2.32	0.23	8.66	0	0	0	0	0	0	-5.69	-5.69
Inverter	MV2-2	365977	4906654	2	0	0	89.1	89.1	1	3678.32	3.25	0	82.31	0	1.31	0	0	10.62	0	0	0	0	0	0	-5.19	-5.19
Westbrook Inverter Enclosur	W_INV3	369508	4906164	2	0	0	89.1	89.1	1	4911.66	3.25	0	84.82	0	1.62	0	0	12.35	0	0	0	0	0	0	-9.73	-9.73
Westbrook Inverter Enclosur	W_INV2	369374	4906388	2	0	0	89.1	89.1	1	4961.4	3.25	0	84.91	0	1.63	0	0	12.41	0	0	0	0	0	0	-9.9	-9.9
Westbrook Inverter Enclosur	W_INV4	369673	4906164	2	0	0	89.1	89.1	1	5038.47	3.25	0	85.05	0	1.65	0	0	12.52	0	0	0	0	0	0	-10.15	-10.15
Inverter	MV3-22	368656	4907142	2	0	0	89.1	89.1	1	5065.19	3.25	0	85.09	0	1.66	0	0	12.55	0	0	0	0	0	0	-10.24	-10.24
Westbrook Inverter Enclosur	W_INV7	369780	4906417	2	0	0	89.1	89.1	1	5282.79	3.25	0	85.46	0	1.71	0	0	12.84	0	0	0	0	0	0	-10.95	-10.95
Westbrook Inverter Enclosur	W_INV5	369719	4906574	2	0	0	89.1	89.1	1	5340.91	3.25	0	85.55	0	1.72	0	0	12.92	0	0	0	0	0	0	-11.13	-11.13
Westbrook Inverter Enclosur	W_INV6	369875	4906578	2	0	0	89.1	89.1	1	5459.99	3.25	0	85.74	0	1.75	0	0	13.07	0	0	0	0	0	0	-11.51	-11.51
Inverter	MV3-5	368340	4907843	2	0	0	89.1	89.1	1	5500.37	3.25	0	85.81	0	1.76	0	0	13.12	0	0	0	0	0	0	-11.64	-11.64
Inverter	MV3-1	368156	4907976	2	0	0	89.1	89.1	1	5536.41	3.25	0	85.86	0	1.77	0	0	13.17	0	0	0	0	0	0	-11.75	-11.75
Inverter	MV3-4	368502	4907925	2	0	0	89.1	89.1	1	5649.61	3.25	0	86.04	0	1.8	0	0	13.32	0	0	0	0	0	0	-12.1	-12.1
Inverter	MV3-2	368671	4907928	2	0	0	89.1	89.1	1	5735.93	3.25	0	86.17	0	1.82	0	0	13.43	0	0	0	0	0	0	-12.36	-12.36
Fixed Reactor Bank 1	FRB1	369378	4908755	6	0	0	89.8	89.8	1	6809.73	5.25	0	87.66	0	-0.31	0	0	10.57	0	0	0	0	0	0	-8.14	-8.14
Fixed Reactor Bank 2	FRB2	369464	4908755	6	0	0	89.8	89.8	1	6855.73	5.25	0	87.72	0	-0.3	0	0	10.61	0	0	0	0	0	0	-8.25	-8.25
Inverter	MV4-15	369176	4908481	2	0	0	89.1	89.1	1	6470.37	3.25	0	87.22	0	2	0	0	14.35	0	0	0	0	0	0	-14.51	-14.51
Inverter	MV4-14	369176	4908507	2	0	0	89.1	89.1	1	6492.48	3.25	0	87.25	0	2.01	0	0	14.37	0	0	0	0	0	0	-14.57	-14.57
Inverter	MV4-13	369051	4908605	2	0	0	89.1	89.1	1	6512.15	3.25	0	87.27	0	2.01	0	0	14.4	0	0	0	0	0	0	-14.63	-14.63
Inverter	MV4-12	369043	4908803	2	0	0	89.1	89.1	1	6679.95	3.25	0	87.5	0	2.05	0	0	14.6	0	0	0	0	0	0	-15.09	-15.09
Inverter	MV5-6	369982	4908507	2	0	0	89.1	89.1	1	6949.65	3.25	0	87.84	0	2.12	0	0	14.93	0	0	0	0	0	0	-15.82	-15.82
Westbrook Inverter Enclosur	W_INV1	369409	4906578	2	0	0	86.1	86.1	1	5118.57	3.25	0	85.18	0	1.67	0	0	12.62	0	0	0	0	0	0	-13.42	-13.42
Inverter	MV6-4	370250	4906966	2	0	0	86.1	86.1	1	5997.89	3.25	0	86.56	0	1.89	0	0	13.76	0	0	0	0	0	0	-16.15	-16.15
Westbrook Inverter Transfor	W_INVTR1	369403	4906578	2	0	0	78.2	78.2	1	5114.3	3.25	0	85.18	0	-3.2	0	0	2.45	0	0	0	0	0	0	-6.19	-6.19
Westbrook Inverter Transfor	W_INVTR3	369514	4906164	2	0	0	77.3	77.3	1	4916.23	3.25	0	84.83	0	-3.16	0	0	2.38	0	0	0	0	0	0	-6.71	-6.71
Westbrook Inverter Transfor	W_INVTR2	369368	4906388	2	0	0	77.3	77.3	1	4957.04	3.25	0	84.9	0	-3.17	0	0	2.4	0	0	0	0	0	0	-6.79	-6.79
Westbrook Inverter Transfor	W_INVTR4	369679	4906164	2	0	0	77.3	77.3	1	5043.13	3.25	0	85.05	0	-3.19	0	0	2.43	0	0	0	0	0	0	-6.95	-6.95
Westbrook Inverter Transfor	W_INVTR7	369786	4906417	2	0	0	77.3	77.3	1	5287.35	3.25	0	85.46	0	-3.23	0	0	2.51	0	0	0	0	0	0	-7.4	-7.4
Westbrook Inverter Transfor	W_INVTR5	369725	4906574	2	0	0	77.3	77.3	1	5345.35	3.25	0	85.56	0	-3.25	0	0	2.53	0	0	0	0	0	0	-7.5	-7.5
Inverter Transformer	MV1-14 T	365157	4905049	2	0	0	69.4	69.4	1	2155.34	3.25	0	77.67	0	2.23	0	0	5.12	0	0	0	0	0	0	-15.67	-15.67
Westbrook Inverter Transfor	W_INVTR6	369881	4906578	2	0	0	77.3	77.3	1	5464.51	3.25	0	85.75	0	-3.27	0	0	2.57	0	0	0	0	0	0	-7.71	-7.71
Inverter Transformer	MV1-13 T	364725	4905241	2	0	0	69.4	69.4	1	2487.89	3.25	0	78.92	0	2.34	0	0	5.43	0	0	0	0	0	0	-17.34	-17.34
Inverter Transformer	MV1-10 T	365010	4905564	2	0	0	69.4	69.4	1	2690.89	3.25	0	79.6	0	2.41	0	0	5.61	0	0	0	0	0	0	-18.27	-18.27
Inverter Transformer	MV1-7 T	364919	4905782	2	0	0	69.4	69.4	1	2925.8	3.25	0	80.32	0	2.48	0	0	5.82	0	0	0	0	0	0	-19.28	-19.28
Inverter Transformer	MV2-1 T	365836	4906816	2	0	0	69.4	69.4	1	3834.93	3.25	0	82.68	0	2.74	0	0	6.55	0	0	0	0	0	0	-22.62	-22.62
Inverter Transformer	MV6-4 T	370244	4906966	2	0	0	69.4	69.4	1	5993.4	3.25	0	86.55	0	3.19	0	0	8.01	0	0	0	0	0	0	-28.4	-28.4
Inverter Transformer	MV6-1 T	370230	4907364	2	0	0	69.4	69.4	1	6255.05	3.25	0	86.92	0	3.23	0	0	8.17	0	0	0	0	0	0	-28.97	-28.97

	Inverter Transformer	MV1-15 T	365309	4904994	2	0	0	56.1	56.1	1	2063.7	3.25	0	77.29	0	0.43	0	0	7.17	0	0	0	0	0	0	-28.83	-28.83
	Inverter Transformer	MV1-12 T	365044	4905386	2	0	0	56.1	56.1	1	2510.57	3.25	0	79	0	0.62	0	0	8.01	0	0	0	0	0	0	-31.57	-31.57
	Inverter Transformer	MV1-11 T	364649	4905414	2	0	0	56.1	56.1	1	2676.82	3.25	0	79.55	0	0.69	0	0	8.31	0	0	0	0	0	0	-32.49	-32.49
	Inverter Transformer	MV1-8 T	364782	4905647	2	0	0	56.1	56.1	1	2841.38	3.25	0	80.07	0	0.76	0	0	8.6	0	0	0	0	0	0	-33.37	-33.37
	Inverter Transformer	MV1-9 T	364555	4905646	2	0	0	56.1	56.1	1	2926.9	3.25	0	80.33	0	0.8	0	0	8.74	0	0	0	0	0	0	-33.81	-33.81
	Inverter Transformer	MV1-4 T	364821	4905918	2	0	0	56.1	56.1	1	3084.84	3.25	0	80.78	0	0.87	0	0	9.01	0	0	0	0	0	0	-34.6	-34.6
	Inverter Transformer	MV1-5 T	364676	4905892	2	0	0	56.1	56.1	1	3107.97	3.25	0	80.85	0	0.88	0	0	9.05	0	0	0	0	0	0	-34.72	-34.72
	Inverter Transformer	MV1-6 T	364482	4905835	2	0	0	56.1	56.1	1	3129.18	3.25	0	80.91	0	0.88	0	0	9.09	0	0	0	0	0	0	-34.82	-34.82
	Inverter Transformer	MV1-2 T	364759	4906063	2	0	0	56.1	56.1	1	3241.89	3.25	0	81.22	0	0.93	0	0	9.27	0	0	0	0	0	0	-35.36	-35.36
	Inverter Transformer	MV1-3 T	364435	4906039	2	0	0	56.1	56.1	1	3334.74	3.25	0	81.46	0	0.97	0	0	9.42	0	0	0	0	0	0	-35.8	-35.8
	Inverter Transformer	MV1-1 T	364721	4906166	2	0	0	56.1	56.1	1	3351.61	3.25	0	81.51	0	0.98	0	0	9.45	0	0	0	0	0	0	-35.87	-35.87
	Inverter Transformer	MV2-4 T	365590	4906628	2	0	0	56.1	56.1	1	3650.58	3.25	0	82.25	0	1.1	0	0	9.92	0	0	0	0	0	0	-37.22	-37.22
	Inverter Transformer	MV2-3 T	365814	4906641	2	0	0	56.1	56.1	1	3659.61	3.25	0	82.27	0	1.11	0	0	9.94	0	0	0	0	0	0	-37.25	-37.25
	Inverter Transformer	MV2-2 T	365982	4906654	2	0	0	56.1	56.1	1	3678.61	3.25	0	82.31	0	1.11	0	0	9.97	0	0	0	0	0	0	-37.34	-37.34
	Inverter Transformer	MV3-18 T	367757	4907412	2	0	0	56.1	56.1	1	4856.84	3.25	0	84.73	0	1.57	0	0	11.66	0	0	0	0	0	0	-41.91	-41.91
	Inverter Transformer	MV3-12 T	367674	4907594	2	0	0	56.1	56.1	1	4991.1	3.25	0	84.96	0	1.62	0	0	11.84	0	0	0	0	0	0	-42.37	-42.37
	Inverter Transformer	MV3-21 T	368484	4907206	2	0	0	56.1	56.1	1	5022.79	3.25	0	85.02	0	1.63	0	0	11.88	0	0	0	0	0	0	-42.48	-42.48
	Inverter Transformer	MV3-22 T	368661	4907142	2	0	0	56.1	56.1	1	5068.04	3.25	0	85.1	0	1.65	0	0	11.94	0	0	0	0	0	0	-42.63	-42.63
	Inverter Transformer	MV3-19 T	368352	4907347	2	0	0	56.1	56.1	1	5073.42	3.25	0	85.11	0	1.65	0	0	11.95	0	0	0	0	0	0	-42.65	-42.65
	Inverter Transformer	MV3-13 T	367958	4907577	2	0	0	56.1	56.1	1	5091.03	3.25	0	85.14	0	1.66	0	0	11.97	0	0	0	0	0	0	-42.71	-42.71
	Inverter Transformer	MV3-17 T	368183	4907472	2	0	0	56.1	56.1	1	5099.15	3.25	0	85.15	0	1.66	0	0	11.98	0	0	0	0	0	0	-42.74	-42.74
	Inverter Transformer	MV3-15 T	368351	4907477	2	0	0	56.1	56.1	1	5185.2	3.25	0	85.3	0	1.69	0	0	12.1	0	0	0	0	0	0	-43.02	-43.02
	Inverter Transformer	MV3-20 T	368683	4907317	2	0	0	56.1	56.1	1	5224.91	3.25	0	85.36	0	1.71	0	0	12.15	0	0	0	0	0	0	-43.16	-43.16
	Inverter Transformer	MV3-7 T	367951	4907754	2	0	0	56.1	56.1	1	5248.43	3.25	0	85.4	0	1.71	0	0	12.18	0	0	0	0	0	0	-43.23	-43.23
	Inverter Transformer	MV3-10 T	368162	4907669	2	0	0	56.1	56.1	1	5263.86	3.25	0	85.43	0	1.72	0	0	12.2	0	0	0	0	0	0	-43.28	-43.28
	Inverter Transformer	MV3-16 T	368509	4907475	2	0	0	56.1	56.1	1	5264.03	3.25	0	85.43	0	1.72	0	0	12.2	0	0	0	0	0	0	-43.28	-43.28
	Inverter Transformer	MV3-11 T	368340	4907662	2	0	0	56.1	56.1	1	5341.08	3.25	0	85.55	0	1.75	0	0	12.3	0	0	0	0	0	0	-43.54	-43.54
	Inverter Transformer	MV3-14 T	368678	4907498	2	0	0	56.1	56.1	1	5373.33	3.25	0	85.6	0	1.76	0	0	12.34	0	0	0	0	0	0	-43.64	-43.64
	Inverter Transformer	MV3-3 T	367944	4907927	2	0	0	56.1	56.1	1	5403.39	3.25	0	85.65	0	1.77	0	0	12.37	0	0	0	0	0	0	-43.74	-43.74
	Inverter Transformer	MV3-6 T	368156	4907834	2	0	0	56.1	56.1	1	5408.66	3.25	0	85.66	0	1.77	0	0	12.38	0	0	0	0	0	0	-43.75	-43.75
	Inverter Transformer	MV3-9 T	368517	4907703	2	0	0	56.1	56.1	1	5463.96	3.25	0	85.75	0	1.79	0	0	12.45	0	0	0	0	0	0	-43.93	-43.93
	Inverter Transformer	MV3-5 T	368335	4907843	2	0	0	56.1	56.1	1	5498.04	3.25	0	85.8	0	1.8	0	0	12.49	0	0	0	0	0	0	-44.04	-44.04
	Inverter Transformer	MV3-1 T	368150	4907976	2	0	0	56.1	56.1	1	5533.82	3.25	0	85.86	0	1.81	0	0	12.54	0	0	0	0	0	0	-44.15	-44.15
	Inverter Transformer	MV3-8 T	368685	4907712	2	0	0	56.1	56.1	1	5558.08	3.25	0	85.9	0	1.82	0	0	12.57	0	0	0	0	0	0	-44.23	-44.23
	Inverter Transformer	MV3-4 T	368507	4907925	2	0	0	56.1	56.1	1	5652.03	3.25	0	86.04	0	1.85	0	0	12.68	0	0	0	0	0	0	-44.52	-44.52
	Inverter Transformer	MV3-2 T	368677	4907928	2	0	0	56.1	56.1	1	5738.97	3.25	0	86.18	0	1.88	0	0	12.79	0	0	0	0	0	0	-44.79	-44.79
	Inverter Transformer	MV6-3 T	370202	4907140	2	0	0	56.1	56.1	1	6079.75	3.25	0	86.68	0	1.99	0	0	13.2	0	0	0	0	0	0	-45.81	-45.81
	Inverter Transformer	MV6-2 T	370091	4907339	2	0	0	56.1	56.1	1	6138.86	3.25	0	86.76	0	2.01	0	0	13.27	0	0	0	0	0	0	-45.98	-45.98
	Inverter Transformer	MV4-15 T	369170	4908481	2	0	0	56.1	56.1	1	6467.21	3.25	0	87.21	0	2.11	0	0	13.64	0	0	0	0	0	0	-46.91	-46.91
	Inverter Transformer	MV4-14 T	369182	4908507	2	0	0	56.1	56.1	1	6495.63	3.25	0	87.25	0	2.12	0	0	13.68	0	0	0	0	0	0	-46.99	-46.99
	Inverter Transformer	MV4-13 T	369057	4908605	2	0	0	56.1	56.1	1	6515.18	3.25	0	87.28	0	2.12	0	0	13.7	0	0	0	0	0	0	-47.04	-47.04
	Inverter Transformer	MV4-12 T	369049	4908803	2	0	0	56.1	56.1	1	6682.89	3.25	0	87.5	0	2.17	0	0	13.88	0	0	0	0	0	0	-47.5	-47.5
	Inverter Transformer	MV4-11 T	369269	4908855	2	0	0	56.1	56.1	1	6838.26	3.25	0	87.7	0	2.21	0	0	14.05	0	0	0	0	0	0	-47.91	-47.91
	Inverter Transformer	MV4-7 T	369040	4909001	2	0	0	56.1	56.1	1	6851.75	3.25	0	87.72	0	2.22	0	0	14.07	0	0	0	0	0	0	-47.95	-47.95
	Inverter Transformer	MV4-10 T	369307	4908858	2	0	0	56.1	56.1	1	6860.37	3.25	0	87.73	0	2.22	0	0	14.08	0	0	0	0	0	0	-47.97	-47.97
	Inverter Transformer	MV5-6 T	369987	4908507	2	0	0	56.1	56.1	1	6952.69	3.25	0	87.84	0	2.25	0	0	14.18	0	0	0	0	0	0	-48.21	-48.21
	Inverter Transformer	MV4-8 T	369262	4909001	2	0	0	56.1	56.1	1	6960.54	3.25	0	87.85	0	2.25	0	0	14.19	0	0	0	0	0	0	-48.23	-48.23
	Inverter Transformer	MV4-9 T	369284	4909001	2	0	0	56.1	56.1	1	6971.61	3.25	0	87.87	0	2.25	0	0	14.2	0	0	0	0	0	0	-48.26	-48.26
	Inverter Transformer	MV4-4 T	369033	4909199	2	0	0	56.1	56.1	1	7023.07	3.25	0	87.93	0	2.27	0	0	14.25	0	0	0	0	0	0	-48.39	-48.39
	Inverter Transformer	MV5-5 T	370021	4908690	2	0	0	56.1	56.1	1	7119.25	3.25	0	88.05	0	2.29	0	0	14.36	0	0	0	0	0	0	-48.64	-48.64
	Inverter Transformer	MV4-6 T	369249	4909192	2	0	0	56.1	56.1	1	7119.99	3.25	0	88.05	0	2.29	0	0	14.36	0	0	0	0	0	0	-48.64	-48.64
	Inverter Transformer	MV4-5 T	369283	4909199	2	0	0	56.1	56.1	1	7142.77	3.25	0	88.08	0	2.3	0	0	14.38	0	0	0	0	0	0	-48.7	-48.7
	Inverter Transformer	MV4-1 T	369017	4909397	2	0	0	56.1	56.1	1	7191.7	3.25	0	88.14	0	2.31	0	0	14.43	0	0	0	0	0	0	-48.82	-48.82
	Inverter Transformer	MV5-2 T	370011	4908853	2	0	0	56.1	56.1	1	7244.74	3.25	0	88.2	0	2.32	0	0	14.49	0	0	0	0	0	0	-48.96	-48.96
	Inverter Transformer	MV4-3 T	369234	4909397	2	0	0	56.1	56.1	1	7292.34	3.25	0	88.26	0	2.34	0	0	14.54	0	0	0	0	0	0	-49.08	-49.08
	Inverter Transformer	MV4-2 T	369267	4909397	2	0	0	56.1	56.1	1	7308.09	3.25	0	88.28	0	2.34	0	0	14.56	0	0	0	0	0	0	-49.11	-49.11
	Inverter Transformer	MV5-4 T	370330	4908707	2	0	0	56.1	56.1	1	7321.39	3.25	0	88.29	0	2.34	0	0	14.57	0	0	0	0	0	0	-49.15	-49.15
	Inverter Transformer	MV5-3 T	370237	4908851	2	0	0	56.1	56.1	1	7377.82	3.25	0	88.36	0	2.36	0	0	14.63	0	0	0	0	0	0	-49.29	-49.29
	Inverter Transformer	MV5-1 T	370015	4909142	2	0	0	56.1	56.1	1	7483.14	3.25	0	88.48	0	2.39	0	0	14.74	0	0	0	0	0	0	-49.55	-49.55
	Line Reactor	NGR	369421	4908787.5	5	0	0	45.4	45.4	1	6860.12	5.25	0	87.73	0	3.22	1.37	0.1	2.8	0	0	0	0	0	0	-49.77	-49.77
Limit. Valu	0	0																								
Level D/N:	25.5736	25.5736																								

Receiver: Existing Noise Receptor
ID: G-37
X: 365856.4
Y: 4903450.3
Z: 4.5
Ground: 0

ISO	Description	ID	X	Y	Z	Ground	ReflOrd	LxT	LxN	L/A	Dist.	hm	Freq	Adiv	K0b	Agr	Abar	z	Aatm	Afol	Ahous	Cmet	CmetN	Dc	RL	LtotT	LtotN
	Inverter	MV1-15	365315	4904994	2	0	0	100.3	100.3	1	1635.89	3.25	0	75.28	0	0.02	0	0	12.65	0	0	0	0	0	0	12.37	12.37
	Sol_Luce Substation	S_Substation	369426	4908792	3.5	0	0	112.1	112.1	1	6424.62	5.25	0	87.16	0	1.26	2.56	0.29	10.18	0	0	0	0	0	0	10.92	10.92
	Inverter	MV1-12	365038	4905386	2	0	0	100.3	100.3	1	2101.6	3.25	0	77.45	0	0.16	0	0	13.67	0	0	0	0	0	0	9.03	9.03

Gardiner Substation	G_Sub	366586.3	4903349.9	2.5	0	0	90.8	90.8	1	736.78	4.25	0	68.35	0	0.04	2.46	0.3	1.97	0	0	0	0	0	0	17.97	17.97
Inverter	MV1-11	364655	4905414	2	0	0	100.3	100.3	1	2302.06	3.25	0	78.24	0	0.21	0	0	14.08	0	0	0	0	0	0	7.78	7.78
Inverter	MV1-8	364788	4905647	2	0	0	100.3	100.3	1	2442.74	3.25	0	78.76	0	0.24	0	0	14.35	0	0	0	0	0	0	6.96	6.96
Inverter	MV1-14	365163	4905049	2	0	0	97.3	97.3	1	1742.6	3.25	0	75.82	0	0.05	0	0	12.9	0	0	0	0	0	0	8.54	8.54
Inverter	MV1-9	364561	4905646	2	0	0	100.3	100.3	1	2549.35	3.25	0	79.13	0	0.27	0	0	14.55	0	0	0	0	0	0	6.36	6.36
Inverter	MV1-4	364815	4905918	2	0	0	100.3	100.3	1	2678.44	3.25	0	79.56	0	0.3	0	0	14.79	0	0	0	0	0	0	5.67	5.67
Inverter	MV1-5	364671	4905892	2	0	0	100.3	100.3	1	2714.24	3.25	0	79.67	0	0.3	0	0	14.86	0	0	0	0	0	0	5.48	5.48
Inverter	MV1-6	364477	4905835	2	0	0	100.3	100.3	1	2754.91	3.25	0	79.8	0	0.31	0	0	14.93	0	0	0	0	0	0	5.26	5.26
Inverter	MV1-2	364753	4906063	2	0	0	100.3	100.3	1	2836.14	3.25	0	80.05	0	0.33	0	0	15.08	0	0	0	0	0	0	4.85	4.85
Inverter	MV1-1	364715	4906166	2	0	0	100.3	100.3	1	2945.82	3.25	0	80.38	0	0.35	0	0	15.28	0	0	0	0	0	0	4.3	4.3
Inverter	MV1-13	364731	4905241	2	0	0	97.3	97.3	1	2114.98	3.25	0	77.51	0	0.16	0	0	13.7	0	0	0	0	0	0	5.94	5.94
Inverters	G_Inv1	366526.4	4903225.8	2	0	0	87.7	87.7	1	706.62	3.25	0	67.98	0	2.41	0	0	1.05	0	0	0	0	0	0	16.22	16.22
Inverter	MV2-4	365586	4906624	2	0	0	100.3	100.3	1	3185.2	3.25	0	81.06	0	0.4	0	0	15.7	0	0	0	0	0	0	3.16	3.16
Inverter	MV2-3	365820	4906641	2	0	0	100.3	100.3	1	3190.91	3.25	0	81.08	0	0.4	0	0	15.71	0	0	0	0	0	0	3.13	3.13
Inverter	MV1-10	365004	4905564	2	0	0	97.3	97.3	1	2279.11	3.25	0	78.16	0	0.2	0	0	14.03	0	0	0	0	0	0	4.92	4.92
Inverters	G_Inv3	366583.7	4903091.4	2	0	0	87.7	87.7	1	811.04	3.25	0	69.18	0	2.42	0	0	1.18	0	0	0	0	0	0	14.87	14.87
Inverter	MV1-7	364925	4905782	2	0	0	97.3	97.3	1	2510.84	3.25	0	79	0	0.26	0	0	14.48	0	0	0	0	0	0	3.58	3.58
Inverters	G_Inv2	366676.9	4903239.1	2	0	0	87.7	87.7	1	847.25	3.25	0	69.56	0	2.43	0	0	1.23	0	0	0	0	0	0	14.44	14.44
Inverters	G_Inv5	366638.5	4902958.1	2	0	0	87.7	87.7	1	924.09	3.25	0	70.31	0	2.44	0	0	1.33	0	0	0	0	0	0	13.58	13.58
Inverters	G_Inv4	366732.8	4903105	2	0	0	87.7	87.7	1	941.97	3.25	0	70.48	0	2.44	0	0	1.35	0	0	0	0	0	0	13.39	13.39
Inverter	MV3-18	367752	4907412	2	0	0	100.3	100.3	1	4391.85	3.25	0	83.85	0	0.58	0	0	17.66	0	0	0	0	0	0	-1.78	-1.78
Inverters	G_Inv7	366694.6	4902824.7	2	0	0	87.7	87.7	1	1045.93	3.25	0	71.39	0	2.46	0	0	1.48	0	0	0	0	0	0	12.33	12.33
Inverters	G_Inv6	366788.5	4902972	2	0	0	87.7	87.7	1	1047.66	3.25	0	71.4	0	2.46	0	0	1.49	0	0	0	0	0	0	12.31	12.31
Inverter	MV3-12	367668	4907594	2	0	0	100.3	100.3	1	4522.41	3.25	0	84.11	0	0.59	0	0	17.86	0	0	0	0	0	0	-2.25	-2.25
Inverter	MV3-21	368478	4907206	2	0	0	100.3	100.3	1	4580.18	3.25	0	84.22	0	0.6	0	0	17.95	0	0	0	0	0	0	-2.46	-2.46
Inverter	MV3-19	368357	4907347	2	0	0	100.3	100.3	1	4630.04	3.25	0	84.31	0	0.61	0	0	18.03	0	0	0	0	0	0	-2.63	-2.63
Inverter	MV3-13	367963	4907577	2	0	0	100.3	100.3	1	4633.3	3.25	0	84.32	0	0.61	0	0	18.03	0	0	0	0	0	0	-2.64	-2.64
Inverter	MV3-17	368178	4907472	2	0	0	100.3	100.3	1	4643.7	3.25	0	84.34	0	0.61	0	0	18.05	0	0	0	0	0	0	-2.68	-2.68
Inverter	MV3-15	368357	4907477	2	0	0	100.3	100.3	1	4739.97	3.25	0	84.52	0	0.62	0	0	18.19	0	0	0	0	0	0	-3.01	-3.01
Inverter	MV2-1	365842	4906816	2	0	0	97.3	97.3	1	3365.73	3.25	0	81.54	0	0.43	0	0	16.01	0	0	0	0	0	0	-0.66	-0.66
Inverter	MV3-7	367945	4907754	2	0	0	100.3	100.3	1	4783.73	3.25	0	84.6	0	0.62	0	0	18.26	0	0	0	0	0	0	-3.16	-3.16
Inverter	MV3-20	368689	4907317	2	0	0	100.3	100.3	1	4793.22	3.25	0	84.61	0	0.62	0	0	18.27	0	0	0	0	0	0	-3.2	-3.2
Inverter	MV3-10	368167	4907669	2	0	0	100.3	100.3	1	4810.02	3.25	0	84.64	0	0.62	0	0	18.3	0	0	0	0	0	0	-3.25	-3.25
Inverter	MV3-16	368514	4907475	2	0	0	100.3	100.3	1	4822.97	3.25	0	84.67	0	0.63	0	0	18.32	0	0	0	0	0	0	-3.3	-3.3
Inverter	MV3-11	368346	4907662	2	0	0	100.3	100.3	1	4892.5	3.25	0	84.79	0	0.63	0	0	18.42	0	0	0	0	0	0	-3.53	-3.53
Inverter	MV3-3	367939	4907927	2	0	0	100.3	100.3	1	4937.42	3.25	0	84.87	0	0.64	0	0	18.49	0	0	0	0	0	0	-3.68	-3.68
Inverter	MV3-14	368684	4907498	2	0	0	100.3	100.3	1	4937.53	3.25	0	84.87	0	0.64	0	0	18.49	0	0	0	0	0	0	-3.68	-3.68
Inverter	MV3-6	368162	4907834	2	0	0	100.3	100.3	1	4953.04	3.25	0	84.9	0	0.64	0	0	18.51	0	0	0	0	0	0	-3.73	-3.73
Inverters	G_Inv8	366844.5	4902838.5	2	0	0	87.7	87.7	1	1162.17	3.25	0	72.31	0	2.47	0	0	1.63	0	0	0	0	0	0	11.25	11.25
Inverter	MV3-9	368512	4907703	2	0	0	100.3	100.3	1	5013.75	3.25	0	85	0	0.64	0	0	18.6	0	0	0	0	0	0	-3.93	-3.93
Inverters	G_Inv9	366750.9	4902691.8	2	0	0	87.7	87.7	1	1172.8	3.25	0	72.38	0	2.47	0	0	1.64	0	0	0	0	0	0	11.16	11.16
Inverter	MV3-8	368680	4907712	2	0	0	100.3	100.3	1	5112.22	3.25	0	85.17	0	0.65	0	0	18.74	0	0	0	0	0	0	-4.26	-4.26
Inverters	G_Inv10	366900.7	4902704.8	2	0	0	87.7	87.7	1	1283.1	3.25	0	73.17	0	2.49	0	0	1.78	0	0	0	0	0	0	10.23	10.23
Inverter	MV6-3	370207	4907140	2	0	0	100.3	100.3	1	5704.53	3.25	0	86.12	0	0.69	0	0	19.59	0	0	0	0	0	0	-6.09	-6.09
Inverter	MV6-2	370085	4907339	2	0	0	100.3	100.3	1	5744.83	3.25	0	86.19	0	0.69	0	0	19.64	0	0	0	0	0	0	-6.21	-6.21
Inverter	MV4-11	369264	4908855	2	0	0	100.3	100.3	1	6389.25	3.25	0	87.11	0	0.71	0	0	20.51	0	0	0	0	0	0	-8.02	-8.02
Inverter	MV4-7	369035	4909001	2	0	0	100.3	100.3	1	6396.39	3.25	0	87.12	0	0.71	0	0	20.52	0	0	0	0	0	0	-8.04	-8.04
Inverter	MV4-10	369312	4908858	2	0	0	100.3	100.3	1	6417.51	3.25	0	87.15	0	0.71	0	0	20.55	0	0	0	0	0	0	-8.1	-8.1
Inverter	MV4-8	369256	4909001	2	0	0	100.3	100.3	1	6509.04	3.25	0	87.27	0	0.71	0	0	20.67	0	0	0	0	0	0	-8.34	-8.34
Inverter	MV4-9	369289	4909001	2	0	0	100.3	100.3	1	6526.33	3.25	0	87.29	0	0.71	0	0	20.69	0	0	0	0	0	0	-8.39	-8.39
Inverter	MV4-4	369027	4909199	2	0	0	100.3	100.3	1	6565.08	3.25	0	87.34	0	0.72	0	0	20.74	0	0	0	0	0	0	-8.49	-8.49
Inverter	MV4-6	369243	4909192	2	0	0	100.3	100.3	1	6666.05	3.25	0	87.48	0	0.71	0	0	20.87	0	0	0	0	0	0	-8.75	-8.75
Inverter	MV5-5	370015	4908690	2	0	0	100.3	100.3	1	6689.43	3.25	0	87.51	0	0.71	0	0	20.9	0	0	0	0	0	0	-8.81	-8.81
Inverter	MV4-5	369289	4909199	2	0	0	100.3	100.3	1	6695.54	3.25	0	87.52	0	0.71	0	0	20.91	0	0	0	0	0	0	-8.83	-8.83
Inverter	MV4-1	369011	4909397	2	0	0	100.3	100.3	1	6731.62	3.25	0	87.56	0	0.71	0	0	20.96	0	0	0	0	0	0	-8.92	-8.92
Inverter	MV5-2	370006	4908853	2	0	0	100.3	100.3	1	6812.37	3.25	0	87.67	0	0.71	0	0	21.06	0	0	0	0	0	0	-9.13	-9.13
Inverter	MV4-3	369229	4909397	2	0	0	100.3	100.3	1	6836.5	3.25	0	87.7	0	0.71	0	0	21.09	0	0	0	0	0	0	-9.19	-9.19
Inverter	MV4-2	369272	4909397	2	0	0	100.3	100.3	1	6857.81	3.25	0	87.72	0	0.71	0	0	21.12	0	0	0	0	0	0	-9.24	-9.24
Inverter	MV5-4	370324	4908707	2	0	0	100.3	100.3	1	6898.72	3.25	0	87.78	0	0.71	0	0	21.17	0	0	0	0	0	0	-9.35	-9.35
Inverter	MV5-3	370231	4908851	2	0	0	100.3	100.3	1	6950.16	3.25	0	87.84	0	0.71	0	0	21.24	0	0	0	0	0	0	-9.48	-9.48
Inverter	MV5-1	370020	4909142	2	0	0	100.3	100.3	1	7052.02	3.25	0	87.97	0	0.71	0	0	21.36	0	0	0	0	0	0	-9.73	-9.73
Inverter	MV6-1	370235	4907364	2	0	0	97.3	97.3	1	5872.75	3.25	0	86.38	0	0.7	0	0	19.82	0	0	0	0	0	0	-9.58	-9.58
DSTATCOM - 10 MVAR #2	DSAT2	369403	4908757	2.5	0	0	96.6	96.6	1	6382.75	3.5	0	87.1	0	3.8	0	0	4.02	0	0	0	0	0	0	1.71	1.71
DSTATCOM - 10 MVAR #1	DSAT1	369437	4908757	2.5	0	0	96.6	96.6	1	6401.7	3.5	0	87.13	0	3.8	0	0	4.03	0	0	0	0	0	0	1.67	1.67
Inverter	MV1-3	364440	4906039	2	0	0	89.1	89.1	1	2950.86	3.25	0	80.4	0	1.13	0	0	9.54	0	0	0	0	0	0	-2.02	-2.02
Inverter	MV2-2	365977	4906654	2	0	0	89.1	89.1	1	3205.97	3.25	0	81.12	0	1.2	0	0	9.93	0	0	0	0	0	0	-3.19	-3.19
SubstationTransformer	W_ST	369711.17	4906112.3	2.5	0	0	92	92	1	4684.59	4.25	0	84.41	0	1.55	2.41	0.24	8.24	0	0	0	0	0	0	-4.64	-4.64
Westbrook Inverter Enclosur	W_INV3	369508	4906164	2	0	0	89.1	89.1	1	4549.54	3.25	0	84.16	0	1.53	0	0	11.85	0	0	0	0	0	0	-8.48	-8.48
Westbrook Inverter Enclosur	W_INV2	369374	4906388	2	0	0	89.1	89.1	1	4582.97	3.25	0	84.22	0	1.54	0	0	11.9	0	0	0	0	0	0	-8.6	-8.6
Inverter	MV3-22	368656	4907142	2	0	0	89.1	89.1	1	4633.19	3.25	0	84.32	0	1.55	0	0	11.97	0	0	0	0	0	0	-8.78	-8.78
Westbrook Inverter Enclosur	W_INV4	369673	4906164	2	0	0	89.1	89.1	1	4683.01	3.25	0	84.41	0	1.56	0	0	12.04	0	0	0	0	0	0	-8.95	-8.95
Westbrook Inverter Enclosur	W_INV7	369780	4906417	2	0	0	89.1	89.1	1	4918.94	3.25	0	84.84	0	1.62	0	0	12.35	0	0	0	0	0	0	-9.75	-9.75
Westbrook Inverter Enclosur	W_INV5	369719	4906574	2	0	0	89.1	89.1	1	4967.61	3.25	0	84.92	0	1.63	0	0	12.42	0	0	0	0	0	0	-9.92	-9.92
Inverter	MV3-5	368340	4907843	2	0	0	89.1	89.1	1	5046.2	3.25	0	85.06	0	1.65	0	0	12.53	0	0	0	0	0	0	-10.18	-10.18

Inverter	MV3-1	368156	4907976	2	0	0	89.1	89.1	1	5076.43	3.25	0	85.11	0	1.66	0	0	12.57	0	0	0	0	0	0	-10.28	-10.28
Westbrook Inverter Enclosur	W_INV6	369875	4906578	2	0	0	89.1	89.1	1	5092.31	3.25	0	85.14	0	1.66	0	0	12.59	0	0	0	0	0	0	-10.33	-10.33
Inverter	MV3-4	368502	4907925	2	0	0	89.1	89.1	1	5198.28	3.25	0	85.32	0	1.69	0	0	12.73	0	0	0	0	0	0	-10.68	-10.68
Inverter	MV3-2	368671	4907928	2	0	0	89.1	89.1	1	5288.84	3.25	0	85.47	0	1.71	0	0	12.85	0	0	0	0	0	0	-10.97	-10.97
Fixed Reactor Bank 1	FRB1	369378	4908755	6	0	0	89.8	89.8	1	6367.22	5.25	0	87.08	0	-0.37	0	0	10.12	0	0	0	0	0	0	-7.06	-7.06
Fixed Reactor Bank 2	FRB2	369464	4908755	6	0	0	89.8	89.8	1	6415.19	5.25	0	87.14	0	-0.36	0	0	10.17	0	0	0	0	0	0	-7.18	-7.18
Inverter	MV4-15	369176	4908481	2	0	0	89.1	89.1	1	6027.25	3.25	0	86.6	0	1.89	0	0	13.8	0	0	0	0	0	0	-13.23	-13.23
Inverter	MV4-14	369176	4908507	2	0	0	89.1	89.1	1	6048.96	3.25	0	86.63	0	1.9	0	0	13.82	0	0	0	0	0	0	-13.3	-13.3
Inverter	MV4-13	369051	4908605	2	0	0	89.1	89.1	1	6064.36	3.25	0	86.66	0	1.9	0	0	13.84	0	0	0	0	0	0	-13.34	-13.34
Inverter	MV4-12	369043	4908803	2	0	0	89.1	89.1	1	6229.43	3.25	0	86.89	0	1.94	0	0	14.05	0	0	0	0	0	0	-13.82	-13.82
Inverter	MV5-6	369982	4908507	2	0	0	89.1	89.1	1	6526.16	3.25	0	87.29	0	2.01	0	0	14.42	0	0	0	0	0	0	-14.66	-14.66
Westbrook Inverter Enclosur	W_INV1	369409	4906578	2	0	0	86.1	86.1	1	4733.23	3.25	0	84.5	0	1.57	0	0	12.1	0	0	0	0	0	0	-12.12	-12.12
Inverter	MV6-4	370250	4906966	2	0	0	86.1	86.1	1	5627.07	3.25	0	86.01	0	1.79	0	0	13.29	0	0	0	0	0	0	-15.03	-15.03
Westbrook Inverter Transfor	W_INVTR1	369403	4906578	2	0	0	78.2	78.2	1	4728.73	3.25	0	84.49	0	-3.12	0	0	2.32	0	0	0	0	0	0	-5.45	-5.45
Inverter Transformer	MV1-14 T	365157	4905049	2	0	0	69.4	69.4	1	1745	3.25	0	75.84	0	2.08	0	0	4.7	0	0	0	0	0	0	-13.26	-13.26
Westbrook Inverter Transfor	W_INVTR3	369514	4906164	2	0	0	77.3	77.3	1	4554.36	3.25	0	84.17	0	-3.09	0	0	2.26	0	0	0	0	0	0	-6	-6
Westbrook Inverter Transfor	W_INVTR2	369368	4906388	2	0	0	77.3	77.3	1	4578.36	3.25	0	84.21	0	-3.09	0	0	2.27	0	0	0	0	0	0	-6.05	-6.05
Westbrook Inverter Transfor	W_INVTR4	369679	4906164	2	0	0	77.3	77.3	1	4687.9	3.25	0	84.42	0	-3.11	0	0	2.3	0	0	0	0	0	0	-6.27	-6.27
Westbrook Inverter Transfor	W_INVTR7	369786	4906417	2	0	0	77.3	77.3	1	4923.73	3.25	0	84.85	0	-3.16	0	0	2.39	0	0	0	0	0	0	-6.73	-6.73
Westbrook Inverter Transfor	W_INVTR5	369725	4906574	2	0	0	77.3	77.3	1	4972.28	3.25	0	84.93	0	-3.17	0	0	2.4	0	0	0	0	0	0	-6.82	-6.82
Westbrook Inverter Transfor	W_INVTR6	369881	4906578	2	0	0	77.3	77.3	1	5097.05	3.25	0	85.15	0	-3.2	0	0	2.45	0	0	0	0	0	0	-7.05	-7.05
Inverter Transformer	MV1-13 T	364725	4905241	2	0	0	69.4	69.4	1	2118.18	3.25	0	77.52	0	2.22	0	0	5.08	0	0	0	0	0	0	-15.47	-15.47
Inverter Transformer	MV1-10 T	365010	4905564	2	0	0	69.4	69.4	1	2276.87	3.25	0	78.15	0	2.27	0	0	5.24	0	0	0	0	0	0	-16.3	-16.3
Inverter Transformer	MV1-7 T	364919	4905782	2	0	0	69.4	69.4	1	2513.08	3.25	0	79	0	2.35	0	0	5.45	0	0	0	0	0	0	-17.46	-17.46
Inverter Transformer	MV2-1 T	365836	4906816	2	0	0	69.4	69.4	1	3365.76	3.25	0	81.54	0	2.62	0	0	6.18	0	0	0	0	0	0	-20.99	-20.99
Inverter Transformer	MV6-4 T	370244	4906966	2	0	0	69.4	69.4	1	5622.38	3.25	0	86	0	3.13	0	0	7.78	0	0	0	0	0	0	-27.56	-27.56
Inverter Transformer	MV6-1 T	370230	4907364	2	0	0	69.4	69.4	1	5869.02	3.25	0	86.37	0	3.17	0	0	7.94	0	0	0	0	0	0	-28.13	-28.13
Inverter Transformer	MV1-15 T	365309	4904994	2	0	0	56.1	56.1	1	1637.88	3.25	0	75.29	0	0.25	0	0	6.31	0	0	0	0	0	0	-25.79	-25.79
Inverter Transformer	MV1-12 T	365044	4905386	2	0	0	56.1	56.1	1	2099.27	3.25	0	77.44	0	0.45	0	0	7.24	0	0	0	0	0	0	-29.07	-29.07
Inverter Transformer	MV1-11 T	364649	4905414	2	0	0	56.1	56.1	1	2305.2	3.25	0	78.25	0	0.53	0	0	7.63	0	0	0	0	0	0	-30.36	-30.36
Inverter Transformer	MV1-8 T	364782	4905647	2	0	0	56.1	56.1	1	2445.37	3.25	0	78.77	0	0.59	0	0	7.89	0	0	0	0	0	0	-31.19	-31.19
Inverter Transformer	MV1-9 T	364555	4905646	2	0	0	56.1	56.1	1	2552.4	3.25	0	79.14	0	0.64	0	0	8.08	0	0	0	0	0	0	-31.8	-31.8
Inverter Transformer	MV1-4 T	364821	4905918	2	0	0	56.1	56.1	1	2676.12	3.25	0	79.55	0	0.69	0	0	8.31	0	0	0	0	0	0	-32.49	-32.49
Inverter Transformer	MV1-5 T	364676	4905892	2	0	0	56.1	56.1	1	2712.06	3.25	0	79.67	0	0.71	0	0	8.37	0	0	0	0	0	0	-32.68	-32.68
Inverter Transformer	MV1-6 T	364482	4905835	2	0	0	56.1	56.1	1	2752.41	3.25	0	79.79	0	0.72	0	0	8.44	0	0	0	0	0	0	-32.9	-32.9
Inverter Transformer	MV1-2 T	364759	4906063	2	0	0	56.1	56.1	1	2833.81	3.25	0	80.05	0	0.76	0	0	8.58	0	0	0	0	0	0	-33.33	-33.33
Inverter Transformer	MV1-1 T	364721	4906166	2	0	0	56.1	56.1	1	2943.5	3.25	0	80.38	0	0.81	0	0	8.77	0	0	0	0	0	0	-33.9	-33.9
Inverter Transformer	MV1-3 T	364435	4906039	2	0	0	56.1	56.1	1	2953.26	3.25	0	80.41	0	0.81	0	0	8.79	0	0	0	0	0	0	-33.95	-33.95
Inverter Transformer	MV2-4 T	365590	4906628	2	0	0	56.1	56.1	1	3188.85	3.25	0	81.07	0	0.91	0	0	9.18	0	0	0	0	0	0	-35.11	-35.11
Inverter Transformer	MV2-3 T	365814	4906641	2	0	0	56.1	56.1	1	3190.98	3.25	0	81.08	0	0.91	0	0	9.19	0	0	0	0	0	0	-35.12	-35.12
Inverter Transformer	MV2-2 T	365982	4906654	2	0	0	56.1	56.1	1	3206.16	3.25	0	81.12	0	0.92	0	0	9.21	0	0	0	0	0	0	-35.19	-35.19
Inverter Transformer	MV3-18 T	367757	4907412	2	0	0	56.1	56.1	1	4394.01	3.25	0	83.86	0	1.4	0	0	11.03	0	0	0	0	0	0	-40.22	-40.22
Inverter Transformer	MV3-12 T	367674	4907594	2	0	0	56.1	56.1	1	4524.81	3.25	0	84.11	0	1.45	0	0	11.21	0	0	0	0	0	0	-40.71	-40.71
Inverter Transformer	MV3-21 T	368484	4907206	2	0	0	56.1	56.1	1	4583.62	3.25	0	84.22	0	1.47	0	0	11.29	0	0	0	0	0	0	-40.93	-40.93
Inverter Transformer	MV3-19 T	368352	4907347	2	0	0	56.1	56.1	1	4627.34	3.25	0	84.31	0	1.49	0	0	11.35	0	0	0	0	0	0	-41.09	-41.09
Inverter Transformer	MV3-13 T	367958	4907577	2	0	0	56.1	56.1	1	4631.02	3.25	0	84.31	0	1.49	0	0	11.36	0	0	0	0	0	0	-41.1	-41.1
Inverter Transformer	MV3-22 T	368661	4907142	2	0	0	56.1	56.1	1	4636.21	3.25	0	84.32	0	1.49	0	0	11.36	0	0	0	0	0	0	-41.12	-41.12
Inverter Transformer	MV3-17 T	368183	4907472	2	0	0	56.1	56.1	1	4646.2	3.25	0	84.34	0	1.49	0	0	11.38	0	0	0	0	0	0	-41.16	-41.16
Inverter Transformer	MV3-15 T	368351	4907477	2	0	0	56.1	56.1	1	4736.81	3.25	0	84.51	0	1.53	0	0	11.5	0	0	0	0	0	0	-41.48	-41.48
Inverter Transformer	MV3-7 T	367951	4907754	2	0	0	56.1	56.1	1	4786.35	3.25	0	84.6	0	1.55	0	0	11.57	0	0	0	0	0	0	-41.66	-41.66
Inverter Transformer	MV3-20 T	368683	4907317	2	0	0	56.1	56.1	1	4789.68	3.25	0	84.61	0	1.55	0	0	11.57	0	0	0	0	0	0	-41.67	-41.67
Inverter Transformer	MV3-10 T	368162	4907669	2	0	0	56.1	56.1	1	4807.62	3.25	0	84.64	0	1.56	0	0	11.6	0	0	0	0	0	0	-41.73	-41.73
Inverter Transformer	MV3-16 T	368509	4907475	2	0	0	56.1	56.1	1	4820.22	3.25	0	84.66	0	1.56	0	0	11.61	0	0	0	0	0	0	-41.78	-41.78
Inverter Transformer	MV3-11 T	368340	4907662	2	0	0	56.1	56.1	1	4889.45	3.25	0	84.79	0	1.59	0	0	11.71	0	0	0	0	0	0	-42.02	-42.02
Inverter Transformer	MV3-14 T	368678	4907498	2	0	0	56.1	56.1	1	4934.1	3.25	0	84.86	0	1.6	0	0	11.77	0	0	0	0	0	0	-42.17	-42.17
Inverter Transformer	MV3-3 T	367944	4907927	2	0	0	56.1	56.1	1	4939.53	3.25	0	84.87	0	1.6	0	0	11.77	0	0	0	0	0	0	-42.19	-42.19
Inverter Transformer	MV3-6 T	368156	4907834	2	0	0	56.1	56.1	1	4950.25	3.25	0	84.89	0	1.61	0	0	11.79	0	0	0	0	0	0	-42.23	-42.23
Inverter Transformer	MV3-9 T	368517	4907703	2	0	0	56.1	56.1	1	5016.4	3.25	0	85.01	0	1.63	0	0	11.88	0	0	0	0	0	0	-42.46	-42.46
Inverter Transformer	MV3-5 T	368335	4907843	2	0	0	56.1	56.1	1	5043.74	3.25	0	85.06	0	1.64	0	0	11.91	0	0	0	0	0	0	-42.55	-42.55
Inverter Transformer	MV3-1 T	368150	4907976	2	0	0	56.1	56.1	1	5073.71	3.25	0	85.11	0	1.65	0	0	11.95	0	0	0	0	0	0	-42.65	-42.65
Inverter Transformer	MV3-8 T	368685	4907712	2	0	0	56.1	56.1	1	5114.98	3.25	0	85.18	0	1.67	0	0	12	0	0	0	0	0	0	-42.79	-42.79
Inverter Transformer	MV3-4 T	368507	4907925	2	0	0	56.1	56.1	1	5200.83	3.25	0	85.32	0	1.7	0	0	12.12	0	0	0	0	0	0	-43.08	-43.08
Inverter Transformer	MV3-2 T	368677	4907928	2	0	0	56.1	56.1	1	5292.03	3.25	0	85.47	0	1.73	0	0	12.23	0	0	0	0	0	0	-43.38	-43.38
Inverter Transformer	MV6-3 T	370202	4907140	2	0	0	56.1	56.1	1	5700.71	3.25	0	86.12	0	1.87	0	0	12.74	0	0	0	0	0	0	-44.67	-44.67
Inverter Transformer	MV6-2 T	370091	4907339	2	0	0	56.1	56.1	1	5749.25	3.25	0	86.19	0	1.88	0	0	12.8	0	0	0	0	0	0	-44.82	-44.82
Inverter Transformer	MV4-15 T	369170	4908481	2	0	0	56.1	56.1	1	6023.94	3.25	0	86.6	0	1.97	0	0	13.13	0	0	0	0	0	0	-45.64	-45.64
Inverter Transformer	MV4-14 T	369182	4908507	2	0	0	56.1	56.1	1	6052.26	3.25	0	86.64	0	1.98	0	0	13.16	0	0	0	0	0	0	-45.73	-45.73
Inverter Transformer	MV4-13 T	369057	4908605	2	0	0	56.1	56.1	1	6067.52	3.25	0	86.66	0	1.99	0	0	13.18	0	0	0	0	0	0	-45.77	-45.77
Inverter Transformer	MV4-12 T	369049	4908803	2	0	0	56.1	56.1	1	6232.5	3.25	0	86.89	0	2.04	0	0	13.37	0	0	0	0	0	0	-46.25	-46.25
Inverter Transformer	MV4-11 T	369269	4908855	2	0	0	56.1	56.1	1	6391.92	3.25	0	87.11	0	2.09	0	0	13.56	0	0	0	0	0	0	-46.7	-46.7
Inverter Transformer	MV4-7 T	369040	4909001	2	0	0	56.1	56.1	1	6398.87	3.25	0	87.12	0	2.09	0	0	13.57	0	0	0	0	0	0	-46.72	-46.72
Inverter Transformer	MV4-10 T	369307	4908858	2	0	0	56.1	56.1	1	6414.82	3.25	0	87.14	0	2.09	0	0	13.58	0	0	0	0	0	0	-46.76	-46.76
Inverter Transformer	MV4-8 T	369262	4909001	2	0	0	56.1	56.1	1	6512.17	3.25	0	87.27	0	2.12	0	0	13.69	0	0	0	0	0	0	-47.03	-47.03
Inverter Transformer	MV4-9 T	369284	4909001	2	0	0	56.1	56.1	1	6523.7	3.25	0	87.29	0	2.12	0	0	13.71	0	0	0	0	0	0	-47.06	-47.06

	Inverter Transformer	MV5-6 T	369987	4908507	2	0	0	56.1	56.1	1	6529.32	3.25	0	87.3	0	2.13	0	0	13.71	0	0	0	0	0	0	-47.08	-47.08
	Inverter Transformer	MV4-4 T	369033	4909199	2	0	0	56.1	56.1	1	6567.98	3.25	0	87.35	0	2.14	0	0	13.76	0	0	0	0	0	0	-47.18	-47.18
	Inverter Transformer	MV4-6 T	369249	4909192	2	0	0	56.1	56.1	1	6669.1	3.25	0	87.48	0	2.17	0	0	13.87	0	0	0	0	0	0	-47.46	-47.46
	Inverter Transformer	MV4-5 T	369283	4909199	2	0	0	56.1	56.1	1	6692.47	3.25	0	87.51	0	2.17	0	0	13.89	0	0	0	0	0	0	-47.52	-47.52
	Inverter Transformer	MV5-5 T	370021	4908690	2	0	0	56.1	56.1	1	6693.16	3.25	0	87.51	0	2.17	0	0	13.9	0	0	0	0	0	0	-47.52	-47.52
	Inverter Transformer	MV4-1 T	369017	4909397	2	0	0	56.1	56.1	1	6734.44	3.25	0	87.57	0	2.19	0	0	13.94	0	0	0	0	0	0	-47.63	-47.63
	Inverter Transformer	MV5-2 T	370011	4908853	2	0	0	56.1	56.1	1	6815.41	3.25	0	87.67	0	2.21	0	0	14.03	0	0	0	0	0	0	-47.85	-47.85
	Inverter Transformer	MV4-3 T	369234	4909397	2	0	0	56.1	56.1	1	6838.96	3.25	0	87.7	0	2.22	0	0	14.06	0	0	0	0	0	0	-47.91	-47.91
	Inverter Transformer	MV4-2 T	369267	4909397	2	0	0	56.1	56.1	1	6855.32	3.25	0	87.72	0	2.22	0	0	14.07	0	0	0	0	0	0	-47.96	-47.96
	Inverter Transformer	MV5-4 T	370330	4908707	2	0	0	56.1	56.1	1	6902.61	3.25	0	87.78	0	2.23	0	0	14.12	0	0	0	0	0	0	-48.08	-48.08
	Inverter Transformer	MV5-3 T	370237	4908851	2	0	0	56.1	56.1	1	6953.94	3.25	0	87.84	0	2.25	0	0	14.18	0	0	0	0	0	0	-48.21	-48.21
	Inverter Transformer	MV5-1 T	370015	4909142	2	0	0	56.1	56.1	1	7049.07	3.25	0	87.96	0	2.27	0	0	14.28	0	0	0	0	0	0	-48.46	-48.46
	Line Reactor	NGR	369421	4908787.5	5	0	0	45.4	45.4	1	6418.11	5.25	0	87.15	0	3.23	1.37	0.1	2.62	0	0	0	0	0	0	-49.01	-49.01
Limit. Valu	0	0																								
Level D/N:	25.8951	25.8951																								

Receiver: Existing Noise Receptor
ID: G-38
X: 365899.2
Y: 4903590.1
Z: 4.5
Ground: 0

ISO	Description	ID	X	Y	Z	Ground	ReflOrd	LxT	LxN	L/A	Dist.	hm	Freq	Adiv	K0b	Agr	Abar	z	Aatm	Afol	Ahous	Cmet	CmetN	Dc	RL	LtotT	LtotN
	Inverter	MV1-15	365315	4904994	2	0	0	100.3	100.3	1	1520.6	3.25	0	74.64	0	-0.03	0	0	12.38	0	0	0	0	0	0	13.32	13.32
	Sol_Luce Substation	S_Substation	369426	4908792	3.5	0	0	112.1	112.1	1	6284.75	5.25	0	86.97	0	1.23	2.58	0.29	10.04	0	0	0	0	0	0	11.26	11.26
	Inverter	MV1-12	365038	4905386	2	0	0	100.3	100.3	1	1991.71	3.25	0	76.98	0	0.13	0	0	13.44	0	0	0	0	0	0	9.76	9.76
	Gardiner Substation	G_Sub	366586.3	4903349.9	2.5	0	0	90.8	90.8	1	727.88	4.25	0	68.24	0	0.33	3.64	0.31	1.95	0	0	0	0	0	0	16.63	16.63
	Inverter	MV1-11	364655	4905414	2	0	0	100.3	100.3	1	2207.86	3.25	0	77.88	0	0.19	0	0	13.89	0	0	0	0	0	0	8.36	8.36
	Inverter	MV1-14	365163	4905049	2	0	0	97.3	97.3	1	1634.13	3.25	0	75.27	0	0.01	0	0	12.65	0	0	0	0	0	0	9.38	9.38
	Inverter	MV1-8	364788	4905647	2	0	0	100.3	100.3	1	2337.86	3.25	0	78.38	0	0.22	0	0	14.15	0	0	0	0	0	0	7.57	7.57
	Inverter	MV1-9	364561	4905646	2	0	0	100.3	100.3	1	2453.06	3.25	0	78.79	0	0.25	0	0	14.37	0	0	0	0	0	0	6.9	6.9
	Inverter	MV1-4	364815	4905918	2	0	0	100.3	100.3	1	2568	3.25	0	79.19	0	0.27	0	0	14.59	0	0	0	0	0	0	6.26	6.26
	Inverter	MV1-5	364671	4905892	2	0	0	100.3	100.3	1	2609.07	3.25	0	79.33	0	0.28	0	0	14.66	0	0	0	0	0	0	6.04	6.04
	Inverter	MV1-6	364477	4905835	2	0	0	100.3	100.3	1	2657.49	3.25	0	79.49	0	0.29	0	0	14.75	0	0	0	0	0	0	5.78	5.78
	Inverter	MV1-2	364753	4906063	2	0	0	100.3	100.3	1	2725.62	3.25	0	79.71	0	0.31	0	0	14.88	0	0	0	0	0	0	5.42	5.42
	Inverter	MV1-1	364715	4906166	2	0	0	100.3	100.3	1	2835.07	3.25	0	80.05	0	0.33	0	0	15.08	0	0	0	0	0	0	4.85	4.85
	Inverter	MV1-13	364731	4905241	2	0	0	97.3	97.3	1	2022.42	3.25	0	77.12	0	0.14	0	0	13.51	0	0	0	0	0	0	6.55	6.55
	Inverter	MV2-4	365586	4906624	2	0	0	100.3	100.3	1	3050.02	3.25	0	80.69	0	0.37	0	0	15.46	0	0	0	0	0	0	3.79	3.79
	Inverter	MV2-3	365820	4906641	2	0	0	100.3	100.3	1	3051.93	3.25	0	80.69	0	0.37	0	0	15.46	0	0	0	0	0	0	3.78	3.78
	Inverter	MV1-10	365004	4905564	2	0	0	97.3	97.3	1	2167.41	3.25	0	77.72	0	0.18	0	0	13.81	0	0	0	0	0	0	5.61	5.61
	Inverters	G_Inv1	366526.4	4903225.8	2	0	0	87.7	87.7	1	725.33	3.25	0	68.21	0	2.41	0	0	1.07	0	0	0	0	0	0	15.97	15.97
	Inverter	MV1-7	364925	4905782	2	0	0	97.3	97.3	1	2398.64	3.25	0	78.6	0	0.23	0	0	14.26	0	0	0	0	0	0	4.22	4.22
	Inverters	G_Inv3	366583.7	4903091.4	2	0	0	87.7	87.7	1	846.91	3.25	0	69.56	0	2.43	0	0	1.23	0	0	0	0	0	0	14.45	14.45
	Inverters	G_Inv2	366676.9	4903239.1	2	0	0	87.7	87.7	1	853.24	3.25	0	69.62	0	2.43	0	0	1.24	0	0	0	0	0	0	14.37	14.37
	Inverters	G_Inv4	366732.8	4903105	2	0	0	87.7	87.7	1	964.48	3.25	0	70.69	0	2.44	0	0	1.38	0	0	0	0	0	0	13.15	13.15
	Inverters	G_Inv5	366638.5	4902958.1	2	0	0	87.7	87.7	1	972.62	3.25	0	70.76	0	2.45	0	0	1.39	0	0	0	0	0	0	13.06	13.06
	Inverter	MV3-18	367752	4907412	2	0	0	100.3	100.3	1	4247.33	3.25	0	83.56	0	0.56	0	0	17.44	0	0	0	0	0	0	-1.25	-1.25
	Inverter	MV3-12	367668	4907594	2	0	0	100.3	100.3	1	4377.2	3.25	0	83.82	0	0.58	0	0	17.64	0	0	0	0	0	0	-1.73	-1.73
	Inverter	MV3-21	368478	4907206	2	0	0	100.3	100.3	1	4441.28	3.25	0	83.95	0	0.58	0	0	17.74	0	0	0	0	0	0	-1.96	-1.96
	Inverter	MV3-13	367963	4907577	2	0	0	100.3	100.3	1	4489.39	3.25	0	84.04	0	0.59	0	0	17.81	0	0	0	0	0	0	-2.14	-2.14
	Inverter	MV3-19	368357	4907347	2	0	0	100.3	100.3	1	4489.44	3.25	0	84.04	0	0.59	0	0	17.81	0	0	0	0	0	0	-2.14	-2.14
	Inverter	MV3-17	368178	4907472	2	0	0	100.3	100.3	1	4501.34	3.25	0	84.07	0	0.59	0	0	17.83	0	0	0	0	0	0	-2.18	-2.18
	Inverter	MV2-1	365842	4906816	2	0	0	97.3	97.3	1	3226.41	3.25	0	81.17	0	0.4	0	0	15.77	0	0	0	0	0	0	-0.03	-0.03
	Inverter	MV3-15	368357	4907477	2	0	0	100.3	100.3	1	4598.78	3.25	0	84.25	0	0.6	0	0	17.98	0	0	0	0	0	0	-2.52	-2.52
	Inverter	MV3-7	367945	4907754	2	0	0	100.3	100.3	1	4639.33	3.25	0	84.33	0	0.61	0	0	18.04	0	0	0	0	0	0	-2.67	-2.67
	Inverters	G_Inv6	366788.5	4902972	2	0	0	87.7	87.7	1	1083.01	3.25	0	71.69	0	2.46	0	0	1.53	0	0	0	0	0	0	11.97	11.97
	Inverter	MV3-20	368689	4907317	2	0	0	100.3	100.3	1	4655.4	3.25	0	84.36	0	0.61	0	0	18.07	0	0	0	0	0	0	-2.72	-2.72
	Inverter	MV3-10	368167	4907669	2	0	0	100.3	100.3	1	4666.94	3.25	0	84.38	0	0.61	0	0	18.08	0	0	0	0	0	0	-2.76	-2.76
	Inverter	MV3-16	368514	4907475	2	0	0	100.3	100.3	1	4682.91	3.25	0	84.41	0	0.61	0	0	18.11	0	0	0	0	0	0	-2.82	-2.82
	Inverters	G_Inv7	366694.6	4902824.7	2	0	0	87.7	87.7	1	1103.86	3.25	0	71.86	0	2.46	0	0	1.56	0	0	0	0	0	0	11.78	11.78
	Inverter	MV3-11	368346	4907662	2	0	0	100.3	100.3	1	4750.5	3.25	0	84.53	0	0.62	0	0	18.21	0	0	0	0	0	0	-3.05	-3.05
	Inverter	MV3-3	367939	4907927	2	0	0	100.3	100.3	1	4792.65	3.25	0	84.61	0	0.62	0	0	18.27	0	0	0	0	0	0	-3.19	-3.19
	Inverter	MV3-14	368684	4907498	2	0	0	100.3	100.3	1	4798.62	3.25	0	84.62	0	0.62	0	0	18.28	0	0	0	0	0	0	-3.22	-3.22
	Inverter	MV3-6	368162	4907834	2	0	0	100.3	100.3	1	4809.47	3.25	0	84.64	0	0.62	0	0	18.3	0	0	0	0	0	0	-3.25	-3.25
	Inverter	MV3-9	368512	4907703	2	0	0	100.3	100.3	1	4872.65	3.25	0	84.76	0	0.63	0	0	18.39	0	0	0	0	0	0	-3.47	-3.47
	Inverter	MV3-8	368680	4907712	2	0	0	100.3	100.3	1	4972.21	3.25	0	84.93	0	0.64	0	0	18.54	0	0	0	0	0	0	-3.8	-3.8
	Inverters	G_Inv8	366844.5	4902838.5	2	0	0	87.7	87.7	1	1207.68	3.25	0	72.64	0	2.48	0	0	1.69	0	0	0	0	0	0	10.85	10.85
	Inverters	G_Inv9	366750.9	4902691.8	2	0	0	87.7	87.7	1	1237.88	3.25	0	72.85	0	2.48	0	0	1.72	0	0	0	0	0	0	10.6	10.6
	Inverter	MV6-3	370207	4907140	2	0	0	100.3	100.3	1	5582.02	3.25	0	85.94	0	0.69	0	0	19.42	0	0	0	0	0	0	-5.73	-5.73
	Inverter	MV6-2	370085	4907339	2	0	0	100.3	100.3	1	5619.18	3.25	0	85.99	0	0.69	0	0	19.47	0	0	0	0	0	0	-5.84	-5.84
	Inverters	G_Inv10	366900.7	4902704.8	2	0	0	87.7	87.7	1	1336.7	3.25	0	73.52	0	2.5	0	0	1.85	0	0	0	0	0	0	9.8	9.8
	Inverter	MV4-11	369264	4908855	2	0	0	100.3	100.3	1	6248.28	3.25	0	86.92	0	0.71	0	0	20.33	0	0	0	0	0	0	-7.64	-7.64
	Inverter	MV4-7	369035	4909001	2	0	0	100.3	100.3	1	6253.89	3.25	0	86.92	0	0.71	0	0	20.33	0	0	0	0	0	0	-7.66	-7.66

Inverter	MV4-10	369312	4908858	2	0	0	100.3	100.3	1	6276.78	3.25	0	86.95	0	0.71	0	0	20.36	0	0	0	0	0	0	-7.72	-7.72
Inverter	MV4-8	369256	4909001	2	0	0	100.3	100.3	1	6367.57	3.25	0	87.08	0	0.71	0	0	20.49	0	0	0	0	0	0	-7.97	-7.97
Inverter	MV4-9	369289	4909001	2	0	0	100.3	100.3	1	6385.03	3.25	0	87.1	0	0.71	0	0	20.51	0	0	0	0	0	0	-8.01	-8.01
Inverter	MV4-4	369027	4909199	2	0	0	100.3	100.3	1	6422.06	3.25	0	87.15	0	0.71	0	0	20.56	0	0	0	0	0	0	-8.11	-8.11
Inverter	MV4-6	369243	4909192	2	0	0	100.3	100.3	1	6523.98	3.25	0	87.29	0	0.71	0	0	20.69	0	0	0	0	0	0	-8.38	-8.38
Inverter	MV5-5	370015	4908690	2	0	0	100.3	100.3	1	6553.53	3.25	0	87.33	0	0.71	0	0	20.73	0	0	0	0	0	0	-8.46	-8.46
Inverter	MV4-5	369289	4909199	2	0	0	100.3	100.3	1	6553.66	3.25	0	87.33	0	0.71	0	0	20.73	0	0	0	0	0	0	-8.46	-8.46
Inverter	MV4-1	369011	4909397	2	0	0	100.3	100.3	1	6588.13	3.25	0	87.38	0	0.72	0	0	20.77	0	0	0	0	0	0	-8.55	-8.55
Inverter	MV5-2	370006	4908853	2	0	0	100.3	100.3	1	6675.62	3.25	0	87.49	0	0.71	0	0	20.89	0	0	0	0	0	0	-8.78	-8.78
Inverter	MV4-3	369229	4909397	2	0	0	100.3	100.3	1	6693.85	3.25	0	87.51	0	0.71	0	0	20.91	0	0	0	0	0	0	-8.83	-8.83
Inverter	MV4-2	369272	4909397	2	0	0	100.3	100.3	1	6715.35	3.25	0	87.54	0	0.71	0	0	20.94	0	0	0	0	0	0	-8.88	-8.88
Inverter	MV5-4	370324	4908707	2	0	0	100.3	100.3	1	6764.73	3.25	0	87.61	0	0.71	0	0	21	0	0	0	0	0	0	-9.01	-9.01
Inverter	MV5-3	370231	4908851	2	0	0	100.3	100.3	1	6814.8	3.25	0	87.67	0	0.71	0	0	21.06	0	0	0	0	0	0	-9.14	-9.14
Inverter	MV5-1	370020	4909142	2	0	0	100.3	100.3	1	6914.09	3.25	0	87.79	0	0.71	0	0	21.19	0	0	0	0	0	0	-9.39	-9.39
Inverter	MV6-1	370235	4907364	2	0	0	97.3	97.3	1	5748.17	3.25	0	86.19	0	0.69	0	0	19.65	0	0	0	0	0	0	-9.22	-9.22
DSTATCOM - 10 MVAR #2	DSAT2	369403	4908757	2.5	0	0	96.6	96.6	1	6242.87	3.5	0	86.91	0	3.79	0	0	3.96	0	0	0	0	0	0	1.98	1.98
DSTATCOM - 10 MVAR #1	DSAT1	369437	4908757	2.5	0	0	96.6	96.6	1	6262.02	3.5	0	86.93	0	3.79	0	0	3.96	0	0	0	0	0	0	1.94	1.94
Inverter	MV1-3	364440	4906039	2	0	0	89.1	89.1	1	2850.68	3.25	0	80.1	0	1.11	0	0	9.39	0	0	0	0	0	0	-1.54	-1.54
Inverter	MV2-2	365977	4906654	2	0	0	89.1	89.1	1	3064.89	3.25	0	80.73	0	1.16	0	0	9.72	0	0	0	0	0	0	-2.55	-2.55
SubstationTransformer	W_ST	369711.17	4906112.3	2.5	0	0	92	92	1	4570.83	4.25	0	84.2	0	1.52	2.44	0.24	8.1	0	0	0	0	0	0	-4.28	-4.28
Westbrook Inverter Enclosur	W_INV3	369508	4906164	2	0	0	89.1	89.1	1	4432.65	3.25	0	83.93	0	1.5	0	0	11.69	0	0	0	0	0	0	-8.07	-8.07
Westbrook Inverter Enclosur	W_INV2	369374	4906388	2	0	0	89.1	89.1	1	4461.22	3.25	0	83.99	0	1.51	0	0	11.73	0	0	0	0	0	0	-8.17	-8.17
Inverter	MV3-22	368656	4907142	2	0	0	89.1	89.1	1	4496.21	3.25	0	84.06	0	1.52	0	0	11.78	0	0	0	0	0	0	-8.29	-8.29
Westbrook Inverter Enclosur	W_INV4	369673	4906164	2	0	0	89.1	89.1	1	4567.99	3.25	0	84.19	0	1.53	0	0	11.88	0	0	0	0	0	0	-8.55	-8.55
Westbrook Inverter Enclosur	W_INV7	369780	4906417	2	0	0	89.1	89.1	1	4801.25	3.25	0	84.63	0	1.59	0	0	12.2	0	0	0	0	0	0	-9.36	-9.36
Westbrook Inverter Enclosur	W_INV5	369719	4906574	2	0	0	89.1	89.1	1	4847.12	3.25	0	84.71	0	1.6	0	0	12.26	0	0	0	0	0	0	-9.51	-9.51
Inverter	MV3-5	368340	4907843	2	0	0	89.1	89.1	1	4903.54	3.25	0	84.81	0	1.62	0	0	12.33	0	0	0	0	0	0	-9.7	-9.7
Inverter	MV3-1	368156	4907976	2	0	0	89.1	89.1	1	4932.47	3.25	0	84.86	0	1.62	0	0	12.37	0	0	0	0	0	0	-9.8	-9.8
Westbrook Inverter Enclosur	W_INV6	369875	4906578	2	0	0	89.1	89.1	1	4973.38	3.25	0	84.93	0	1.63	0	0	12.43	0	0	0	0	0	0	-9.94	-9.94
Inverter	MV3-4	368502	4907925	2	0	0	89.1	89.1	1	5056.28	3.25	0	85.08	0	1.65	0	0	12.54	0	0	0	0	0	0	-10.21	-10.21
Inverter	MV3-2	368671	4907928	2	0	0	89.1	89.1	1	5147.84	3.25	0	85.23	0	1.68	0	0	12.66	0	0	0	0	0	0	-10.51	-10.51
Fixed Reactor Bank 1	FRB1	369378	4908755	6	0	0	89.8	89.8	1	6227.22	5.25	0	86.89	0	-0.39	0	0	9.98	0	0	0	0	0	0	-6.7	-6.7
Fixed Reactor Bank 2	FRB2	369464	4908755	6	0	0	89.8	89.8	1	6275.67	5.25	0	86.95	0	-0.38	0	0	10.03	0	0	0	0	0	0	-6.83	-6.83
Inverter	MV4-15	369176	4908481	2	0	0	89.1	89.1	1	5887.13	3.25	0	86.4	0	1.86	0	0	13.62	0	0	0	0	0	0	-12.82	-12.82
Inverter	MV4-14	369176	4908507	2	0	0	89.1	89.1	1	5908.75	3.25	0	86.43	0	1.86	0	0	13.65	0	0	0	0	0	0	-12.88	-12.88
Inverter	MV4-13	369051	4908605	2	0	0	89.1	89.1	1	5923.1	3.25	0	86.45	0	1.87	0	0	13.67	0	0	0	0	0	0	-12.93	-12.93
Inverter	MV4-12	369043	4908803	2	0	0	89.1	89.1	1	6087.51	3.25	0	86.69	0	1.91	0	0	13.87	0	0	0	0	0	0	-13.41	-13.41
Inverter	MV5-6	369982	4908507	2	0	0	89.1	89.1	1	6391.02	3.25	0	87.11	0	1.98	0	0	14.25	0	0	0	0	0	0	-14.28	-14.28
Westbrook Inverter Enclosur	W_INV1	369409	4906578	2	0	0	86.1	86.1	1	4609.37	3.25	0	84.27	0	1.54	0	0	11.93	0	0	0	0	0	0	-11.69	-11.69
Inverter	MV6-4	370250	4906966	2	0	0	86.1	86.1	1	5506.92	3.25	0	85.82	0	1.76	0	0	13.13	0	0	0	0	0	0	-14.66	-14.66
Inverter Transformer	MV1-14 T	365157	4905049	2	0	0	69.4	69.4	1	1636.84	3.25	0	75.28	0	2.03	0	0	4.59	0	0	0	0	0	0	-12.55	-12.55
Westbrook Inverter Transfor	W_INVTR1	369403	4906578	2	0	0	78.2	78.2	1	4604.8	3.25	0	84.26	0	-3.1	0	0	2.28	0	0	0	0	0	0	-5.2	-5.2
Westbrook Inverter Transfor	W_INVTR3	369514	4906164	2	0	0	77.3	77.3	1	4437.54	3.25	0	83.94	0	-3.06	0	0	2.22	0	0	0	0	0	0	-5.76	-5.76
Westbrook Inverter Transfor	W_INVTR2	369368	4906388	2	0	0	77.3	77.3	1	4456.55	3.25	0	83.98	0	-3.06	0	0	2.22	0	0	0	0	0	0	-5.8	-5.8
Westbrook Inverter Transfor	W_INVTR4	369679	4906164	2	0	0	77.3	77.3	1	4572.95	3.25	0	84.2	0	-3.09	0	0	2.26	0	0	0	0	0	0	-6.04	-6.04
Westbrook Inverter Transfor	W_INVTR7	369786	4906417	2	0	0	77.3	77.3	1	4806.1	3.25	0	84.64	0	-3.14	0	0	2.35	0	0	0	0	0	0	-6.5	-6.5
Westbrook Inverter Transfor	W_INVTR5	369725	4906574	2	0	0	77.3	77.3	1	4851.85	3.25	0	84.72	0	-3.15	0	0	2.36	0	0	0	0	0	0	-6.59	-6.59
Westbrook Inverter Transfor	W_INVTR6	369881	4906578	2	0	0	77.3	77.3	1	4978.18	3.25	0	84.94	0	-3.17	0	0	2.41	0	0	0	0	0	0	-6.83	-6.83
Inverter Transformer	MV1-13 T	364725	4905241	2	0	0	69.4	69.4	1	2025.89	3.25	0	77.13	0	2.18	0	0	4.99	0	0	0	0	0	0	-14.96	-14.96
Inverter Transformer	MV1-10 T	365010	4905564	2	0	0	69.4	69.4	1	2164.94	3.25	0	77.71	0	2.23	0	0	5.13	0	0	0	0	0	0	-15.72	-15.72
Inverter Transformer	MV1-7 T	364919	4905782	2	0	0	69.4	69.4	1	2401.09	3.25	0	78.61	0	2.32	0	0	5.35	0	0	0	0	0	0	-16.92	-16.92
Inverter Transformer	MV2-1 T	365836	4906816	2	0	0	69.4	69.4	1	3226.52	3.25	0	81.17	0	2.58	0	0	6.07	0	0	0	0	0	0	-20.47	-20.47
Inverter Transformer	MV6-4 T	370244	4906966	2	0	0	69.4	69.4	1	5502.18	3.25	0	85.81	0	3.11	0	0	7.71	0	0	0	0	0	0	-27.28	-27.28
Inverter Transformer	MV6-1 T	370230	4907364	2	0	0	69.4	69.4	1	5744.4	3.25	0	86.18	0	3.15	0	0	7.86	0	0	0	0	0	0	-27.84	-27.84
Inverter Transformer	MV1-15 T	365309	4904994	2	0	0	56.1	56.1	1	1522.92	3.25	0	74.65	0	0.21	0	0	6.07	0	0	0	0	0	0	-24.87	-24.87
Inverter Transformer	MV1-12 T	365044	4905386	2	0	0	56.1	56.1	1	1989.13	3.25	0	76.97	0	0.4	0	0	7.02	0	0	0	0	0	0	-28.34	-28.34
Inverter Transformer	MV1-11 T	364649	4905414	2	0	0	56.1	56.1	1	2211.25	3.25	0	77.89	0	0.49	0	0	7.45	0	0	0	0	0	0	-29.78	-29.78
Inverter Transformer	MV1-8 T	364782	4905647	2	0	0	56.1	56.1	1	2340.72	3.25	0	78.39	0	0.55	0	0	7.7	0	0	0	0	0	0	-30.57	-30.57
Inverter Transformer	MV1-9 T	364555	4905646	2	0	0	56.1	56.1	1	2456.34	3.25	0	78.81	0	0.6	0	0	7.91	0	0	0	0	0	0	-31.25	-31.25
Inverter Transformer	MV1-4 T	364821	4905918	2	0	0	56.1	56.1	1	2565.47	3.25	0	79.18	0	0.64	0	0	8.11	0	0	0	0	0	0	-31.88	-31.88
Inverter Transformer	MV1-5 T	364676	4905892	2	0	0	56.1	56.1	1	2606.72	3.25	0	79.32	0	0.66	0	0	8.18	0	0	0	0	0	0	-32.11	-32.11
Inverter Transformer	MV1-6 T	364482	4905835	2	0	0	56.1	56.1	1	2654.81	3.25	0	79.48	0	0.68	0	0	8.27	0	0	0	0	0	0	-32.37	-32.37
Inverter Transformer	MV1-2 T	364759	4906063	2	0	0	56.1	56.1	1	2723.1	3.25	0	79.7	0	0.71	0	0	8.39	0	0	0	0	0	0	-32.74	-32.74
Inverter Transformer	MV1-1 T	364721	4906166	2	0	0	56.1	56.1	1	2832.56	3.25	0	80.04	0	0.76	0	0	8.58	0	0	0	0	0	0	-33.32	-33.32
Inverter Transformer	MV1-3 T	364435	4906039	2	0	0	56.1	56.1	1	2853.24	3.25	0	80.11	0	0.77	0	0	8.62	0	0	0	0	0	0	-33.43	-33.43
Inverter Transformer	MV2-3 T	365814	4906641	2	0	0	56.1	56.1	1	3052.09	3.25	0	80.69	0	0.85	0	0	8.96	0	0	0	0	0	0	-34.44	-34.44
Inverter Transformer	MV2-4 T	365590	4906628	2	0	0	56.1	56.1	1	3053.6	3.25	0	80.7	0	0.85	0	0	8.96	0	0	0	0	0	0	-34.45	-34.45
Inverter Transformer	MV2-2 T	365982	4906654	2	0	0	56.1	56.1	1	3065.02	3.25	0	80.73	0	0.86	0	0	8.98	0	0	0	0	0	0	-34.51	-34.51
Inverter Transformer	MV3-18 T	367757	4907412	2	0	0	56.1	56.1	1	4249.51	3.25	0	83.57	0	1.34	0	0	10.82	0	0	0	0	0	0	-39.67	-39.67
Inverter Transformer	MV3-12 T	367674	4907594	2	0	0	56.1	56.1	1	4379.63	3.25	0	83.83	0	1.39	0	0	11.01	0	0	0	0	0	0	-40.17	-40.17
Inverter Transformer	MV3-21 T	368484	4907206	2	0	0	56.1	56.1	1	4444.76	3.25	0	83.96	0	1.42	0	0	11.1	0	0	0	0	0	0	-40.41	-40.41
Inverter Transformer	MV3-19 T	368352	4907347	2	0	0	56.1	56.1	1	4486.71	3.25	0	84.04	0	1.43	0	0	11.16	0	0	0	0	0	0	-40.57	-40.57
Inverter Transformer	MV3-13 T	367958	4907577	2	0	0	56.1	56.1	1	4487.1	3.25	0	84.04	0	1.43	0	0	11.16	0	0	0	0	0	0	-40.57	-40.57
Inverter Transformer	MV3-22 T	368661	4907142	2	0	0	56.1	56.1	1	4499.28	3.25	0	84.06	0	1.44	0	0	11.17	0	0	0	0	0	0	-40.62	-40.62

	Inverter Transformer	MV3-17 T	368183	4907472	2	0	0	56.1	56.1	1	4503.88	3.25	0	84.07	0	1.44	0	0	11.18	0	0	0	0	0	0	-40.64	-40.64
	Inverter Transformer	MV3-15 T	368351	4907477	2	0	0	56.1	56.1	1	4595.58	3.25	0	84.25	0	1.48	0	0	11.31	0	0	0	0	0	0	-40.97	-40.97
	Inverter Transformer	MV3-7 T	367951	4907754	2	0	0	56.1	56.1	1	4641.98	3.25	0	84.33	0	1.49	0	0	11.37	0	0	0	0	0	0	-41.14	-41.14
	Inverter Transformer	MV3-20 T	368683	4907317	2	0	0	56.1	56.1	1	4651.81	3.25	0	84.35	0	1.5	0	0	11.39	0	0	0	0	0	0	-41.18	-41.18
	Inverter Transformer	MV3-10 T	368162	4907669	2	0	0	56.1	56.1	1	4664.51	3.25	0	84.38	0	1.5	0	0	11.4	0	0	0	0	0	0	-41.22	-41.22
	Inverter Transformer	MV3-16 T	368509	4907475	2	0	0	56.1	56.1	1	4680.12	3.25	0	84.41	0	1.51	0	0	11.42	0	0	0	0	0	0	-41.28	-41.28
	Inverter Transformer	MV3-11 T	368340	4907662	2	0	0	56.1	56.1	1	4747.41	3.25	0	84.53	0	1.53	0	0	11.52	0	0	0	0	0	0	-41.52	-41.52
	Inverter Transformer	MV3-3 T	367944	4907927	2	0	0	56.1	56.1	1	4794.78	3.25	0	84.62	0	1.55	0	0	11.58	0	0	0	0	0	0	-41.69	-41.69
	Inverter Transformer	MV3-14 T	368678	4907498	2	0	0	56.1	56.1	1	4795.15	3.25	0	84.62	0	1.55	0	0	11.58	0	0	0	0	0	0	-41.69	-41.69
	Inverter Transformer	MV3-6 T	368156	4907834	2	0	0	56.1	56.1	1	4806.65	3.25	0	84.64	0	1.55	0	0	11.6	0	0	0	0	0	0	-41.73	-41.73
	Inverter Transformer	MV3-9 T	368517	4907703	2	0	0	56.1	56.1	1	4875.33	3.25	0	84.76	0	1.58	0	0	11.69	0	0	0	0	0	0	-41.97	-41.97
	Inverter Transformer	MV3-5 T	368335	4907843	2	0	0	56.1	56.1	1	4901.05	3.25	0	84.81	0	1.59	0	0	11.72	0	0	0	0	0	0	-42.06	-42.06
	Inverter Transformer	MV3-1 T	368150	4907976	2	0	0	56.1	56.1	1	4929.73	3.25	0	84.86	0	1.6	0	0	11.76	0	0	0	0	0	0	-42.16	-42.16
	Inverter Transformer	MV3-8 T	368685	4907712	2	0	0	56.1	56.1	1	4975.01	3.25	0	84.94	0	1.62	0	0	11.82	0	0	0	0	0	0	-42.31	-42.31
	Inverter Transformer	MV3-4 T	368507	4907925	2	0	0	56.1	56.1	1	5058.85	3.25	0	85.08	0	1.65	0	0	11.93	0	0	0	0	0	0	-42.6	-42.6
	Inverter Transformer	MV3-2 T	368677	4907928	2	0	0	56.1	56.1	1	5151.07	3.25	0	85.24	0	1.68	0	0	12.05	0	0	0	0	0	0	-42.91	-42.91
	Inverter Transformer	MV6-3 T	370202	4907140	2	0	0	56.1	56.1	1	5578.16	3.25	0	85.93	0	1.83	0	0	12.59	0	0	0	0	0	0	-44.29	-44.29
	Inverter Transformer	MV6-2 T	370091	4907339	2	0	0	56.1	56.1	1	5623.65	3.25	0	86	0	1.84	0	0	12.65	0	0	0	0	0	0	-44.43	-44.43
	Inverter Transformer	MV4-15 T	369170	4908481	2	0	0	56.1	56.1	1	5883.79	3.25	0	86.39	0	1.93	0	0	12.96	0	0	0	0	0	0	-45.23	-45.23
	Inverter Transformer	MV4-14 T	369182	4908507	2	0	0	56.1	56.1	1	5912.08	3.25	0	86.43	0	1.94	0	0	13	0	0	0	0	0	0	-45.31	-45.31
	Inverter Transformer	MV4-13 T	369057	4908605	2	0	0	56.1	56.1	1	5926.29	3.25	0	86.46	0	1.94	0	0	13.02	0	0	0	0	0	0	-45.35	-45.35
	Inverter Transformer	MV4-12 T	369049	4908803	2	0	0	56.1	56.1	1	6090.61	3.25	0	86.69	0	1.99	0	0	13.21	0	0	0	0	0	0	-45.84	-45.84
	Inverter Transformer	MV4-11 T	369269	4908855	2	0	0	56.1	56.1	1	6250.98	3.25	0	86.92	0	2.04	0	0	13.4	0	0	0	0	0	0	-46.3	-46.3
	Inverter Transformer	MV4-7 T	369040	4909001	2	0	0	56.1	56.1	1	6256.39	3.25	0	86.93	0	2.04	0	0	13.4	0	0	0	0	0	0	-46.32	-46.32
	Inverter Transformer	MV4-10 T	369307	4908858	2	0	0	56.1	56.1	1	6274.06	3.25	0	86.95	0	2.05	0	0	13.42	0	0	0	0	0	0	-46.37	-46.37
	Inverter Transformer	MV4-8 T	369262	4909001	2	0	0	56.1	56.1	1	6370.74	3.25	0	87.08	0	2.08	0	0	13.53	0	0	0	0	0	0	-46.64	-46.64
	Inverter Transformer	MV4-9 T	369284	4909001	2	0	0	56.1	56.1	1	6382.38	3.25	0	87.1	0	2.08	0	0	13.55	0	0	0	0	0	0	-46.67	-46.67
	Inverter Transformer	MV5-6 T	369987	4908507	2	0	0	56.1	56.1	1	6394.22	3.25	0	87.12	0	2.09	0	0	13.56	0	0	0	0	0	0	-46.7	-46.7
	Inverter Transformer	MV4-4 T	369033	4909199	2	0	0	56.1	56.1	1	6424.99	3.25	0	87.16	0	2.1	0	0	13.6	0	0	0	0	0	0	-46.79	-46.79
	Inverter Transformer	MV4-6 T	369249	4909192	2	0	0	56.1	56.1	1	6527.06	3.25	0	87.29	0	2.13	0	0	13.71	0	0	0	0	0	0	-47.07	-47.07
	Inverter Transformer	MV4-5 T	369283	4909199	2	0	0	56.1	56.1	1	6550.56	3.25	0	87.33	0	2.13	0	0	13.74	0	0	0	0	0	0	-47.14	-47.14
	Inverter Transformer	MV5-5 T	370021	4908690	2	0	0	56.1	56.1	1	6557.3	3.25	0	87.33	0	2.13	0	0	13.74	0	0	0	0	0	0	-47.15	-47.15
	Inverter Transformer	MV4-1 T	369017	4909397	2	0	0	56.1	56.1	1	6590.96	3.25	0	87.38	0	2.14	0	0	13.78	0	0	0	0	0	0	-47.25	-47.25
	Inverter Transformer	MV5-2 T	370011	4908853	2	0	0	56.1	56.1	1	6678.7	3.25	0	87.49	0	2.17	0	0	13.88	0	0	0	0	0	0	-47.48	-47.48
	Inverter Transformer	MV4-3 T	369234	4909397	2	0	0	56.1	56.1	1	6696.34	3.25	0	87.52	0	2.17	0	0	13.9	0	0	0	0	0	0	-47.53	-47.53
	Inverter Transformer	MV4-2 T	369267	4909397	2	0	0	56.1	56.1	1	6712.84	3.25	0	87.54	0	2.18	0	0	13.92	0	0	0	0	0	0	-47.58	-47.58
	Inverter Transformer	MV5-4 T	370330	4908707	2	0	0	56.1	56.1	1	6768.65	3.25	0	87.61	0	2.2	0	0	13.98	0	0	0	0	0	0	-47.73	-47.73
	Inverter Transformer	MV5-3 T	370237	4908851	2	0	0	56.1	56.1	1	6818.62	3.25	0	87.67	0	2.21	0	0	14.03	0	0	0	0	0	0	-47.86	-47.86
	Inverter Transformer	MV5-1 T	370015	4909142	2	0	0	56.1	56.1	1	6911.11	3.25	0	87.79	0	2.24	0	0	14.13	0	0	0	0	0	0	-48.1	-48.1
	Line Reactor	NGR	369421	4908787.5	5	0	0	45.4	45.4	1	6278.22	5.25	0	86.96	0	3.23	1.36	0.1	2.57	0	0	0	0	0	0	-48.77	-48.77
Limit. Valu	0	0																								
Level D/N:	25.709	25.709																								

Receiver: Existing Noise Receptor
ID: G-39
X: 366132.2
Y: 4902195.1
Z: 4.5
Ground: 0

ISO	Description	ID	X	Y	Z	Ground	ReflOrd	LxT	LxN	L/A	Dist.	hm	Freq	Adiv	K0b	Agr	Abar	z	Aatm	Afol	Ahous	Cmet	CmetN	Dc	RL	LtotT	LtotN
	Sol_Luce Substation	S_Substation	369426	4908792	3.5	0	0	112.1	112.1	1	7373.48	5.25	0	88.35	0	1.45	2.37	0.32	11.1	0	0	0	0	0	0	8.8	8.8
	Inverter	MV1-15	365315	4904994	2	0	0	100.3	100.3	1	2915.76	3.25	0	80.3	0	0.35	0	0	15.22	0	0	0	0	0	0	4.45	4.45
	Inverter	MV1-12	365038	4905386	2	0	0	100.3	100.3	1	3373.3	3.25	0	81.56	0	0.43	0	0	16.02	0	0	0	0	0	0	2.3	2.3
	Inverters	G_Inv9	366750.9	4902691.8	2	0	0	87.7	87.7	1	793.41	3.25	0	68.99	0	2.42	0	0	1.16	0	0	0	0	0	0	15.09	15.09
	Inverter	MV1-11	364655	4905414	2	0	0	100.3	100.3	1	3541.67	3.25	0	81.98	0	0.46	0	0	16.3	0	0	0	0	0	0	1.57	1.57
	Inverters	G_Inv7	366694.6	4902824.7	2	0	0	87.7	87.7	1	844.21	3.25	0	69.53	0	2.43	0	0	1.23	0	0	0	0	0	0	14.48	14.48
	Inverter	MV1-8	364788	4905647	2	0	0	100.3	100.3	1	3704.39	3.25	0	82.37	0	0.48	0	0	16.57	0	0	0	0	0	0	0.88	0.88
	Gardiner Substation	G_Sub	366586.3	4903349.9	2.5	0	0	90.8	90.8	1	1240.88	3.5	0	72.87	0	-0.33	0	0	3	0	0	0	0	0	0	15.23	15.23
	Inverter	MV1-9	364561	4905646	2	0	0	100.3	100.3	1	3791.75	3.25	0	82.58	0	0.5	0	0	16.71	0	0	0	0	0	0	0.53	0.53
	Inverters	G_Inv5	366638.5	4902958.1	2	0	0	87.7	87.7	1	915.7	3.25	0	70.24	0	2.44	0	0	1.32	0	0	0	0	0	0	13.67	13.67
	Inverter	MV1-4	364815	4905918	2	0	0	100.3	100.3	1	3949.05	3.25	0	82.93	0	0.52	0	0	16.97	0	0	0	0	0	0	-0.1	-0.1
	Inverters	G_Inv10	366900.7	4902704.8	2	0	0	87.7	87.7	1	922.17	3.25	0	70.3	0	2.44	0	0	1.33	0	0	0	0	0	0	13.6	13.6
	Inverter	MV1-5	364671	4905892	2	0	0	100.3	100.3	1	3975.2	3.25	0	82.99	0	0.52	0	0	17.01	0	0	0	0	0	0	-0.21	-0.21
	Inverter	MV1-6	364477	4905835	2	0	0	100.3	100.3	1	3998.57	3.25	0	83.04	0	0.53	0	0	17.05	0	0	0	0	0	0	-0.3	-0.3
	Inverter	MV1-2	364753	4906063	2	0	0	100.3	100.3	1	4106.44	3.25	0	83.27	0	0.54	0	0	17.22	0	0	0	0	0	0	-0.72	-0.72
	Inverters	G_Inv8	366844.5	4902838.5	2	0	0	87.7	87.7	1	959.87	3.25	0	70.64	0	2.44	0	0	1.38	0	0	0	0	0	0	13.2	13.2
	Inverter	MV1-1	364715	4906166	2	0	0	100.3	100.3	1	4216.22	3.25	0	83.5	0	0.56	0	0	17.39	0	0	0	0	0	0	-1.13	-1.13
	Inverter	MV1-14	365163	4905049	2	0	0	97.3	97.3	1	3013.98	3.25	0	80.58	0	0.36	0	0	15.4	0	0	0	0	0	0	0.97	0.97
	Inverters	G_Inv3	366583.7	4903091.4	2	0	0	87.7	87.7	1	1003.6	3.25	0	71.03	0	2.45	0	0	1.43	0	0	0	0	0	0	12.75	12.75
	Inverters	G_Inv6	366788.5	4902972	2	0	0	87.7	87.7	1	1017.01	3.25	0	71.15	0	2.45	0	0	1.45	0	0	0	0	0	0	12.61	12.61
	Inverter	MV2-3	365820	4906641	2	0	0	100.3	100.3	1	4456.85	3.25	0	83.98	0	0.59	0	0	17.76	0	0	0	0	0	0	-2.02	-2.02
	Inverter	MV2-4	365586	4906624	2	0	0	100.3	100.3	1	4462.45	3.25	0	83.99	0	0.59	0	0	17.77	0	0	0	0	0	0	-2.04	-2.04
	Inverters	G_Inv4	366732.8	4903105	2	0	0	87.7	87.7	1	1090.25	3.25	0	71.75	0	2.46	0	0	1.54	0	0	0	0	0	0	11.91	11.91

Inverters	G_Inv1	366526.4	4903225.8	2	0	0	87.7	87.7	1	1103.51	3.25	0	71.86	0	2.46	0	0	1.56	0	0	0	0	0	0	11.78	11.78
Inverter	MV1-13	364731	4905241	2	0	0	97.3	97.3	1	3352.74	3.25	0	81.51	0	0.43	0	0	15.98	0	0	0	0	0	0	-0.61	-0.61
Inverter	MV1-10	365004	4905564	2	0	0	97.3	97.3	1	3552.79	3.25	0	82.01	0	0.46	0	0	16.32	0	0	0	0	0	0	-1.48	-1.48
Inverters	G_Inv2	366676.9	4903239.1	2	0	0	87.7	87.7	1	1177.56	3.25	0	72.42	0	2.48	0	0	1.65	0	0	0	0	0	0	11.12	11.12
Inverter	MV1-7	364925	4905782	2	0	0	97.3	97.3	1	3784.6	3.25	0	82.56	0	0.5	0	0	16.7	0	0	0	0	0	0	-2.45	-2.45
Inverter	MV3-18	367752	4907412	2	0	0	100.3	100.3	1	5462.58	3.25	0	85.75	0	0.68	0	0	19.25	0	0	0	0	0	0	-5.36	-5.36
Inverter	MV3-21	368478	4907206	2	0	0	100.3	100.3	1	5532.8	3.25	0	85.86	0	0.68	0	0	19.35	0	0	0	0	0	0	-5.58	-5.58
Inverter	MV3-19	368357	4907347	2	0	0	100.3	100.3	1	5611.76	3.25	0	85.98	0	0.69	0	0	19.46	0	0	0	0	0	0	-5.81	-5.81
Inverter	MV3-12	367668	4907594	2	0	0	100.3	100.3	1	5613.09	3.25	0	85.98	0	0.69	0	0	19.46	0	0	0	0	0	0	-5.82	-5.82
Inverter	MV3-17	368178	4907472	2	0	0	100.3	100.3	1	5659.59	3.25	0	86.06	0	0.69	0	0	19.52	0	0	0	0	0	0	-5.96	-5.96
Inverter	MV3-13	367963	4907577	2	0	0	100.3	100.3	1	5684.78	3.25	0	86.09	0	0.69	0	0	19.56	0	0	0	0	0	0	-6.03	-6.03
Inverter	MV3-20	368689	4907317	2	0	0	100.3	100.3	1	5724.6	3.25	0	86.15	0	0.69	0	0	19.62	0	0	0	0	0	0	-6.15	-6.15
Inverter	MV3-15	368357	4907477	2	0	0	100.3	100.3	1	5731.34	3.25	0	86.17	0	0.69	0	0	19.62	0	0	0	0	0	0	-6.17	-6.17
Inverter	MV3-16	368514	4907475	2	0	0	100.3	100.3	1	5792.26	3.25	0	86.26	0	0.7	0	0	19.71	0	0	0	0	0	0	-6.35	-6.35
Inverter	MV3-10	368167	4907669	2	0	0	100.3	100.3	1	5839.86	3.25	0	86.33	0	0.7	0	0	19.77	0	0	0	0	0	0	-6.49	-6.49
Inverter	MV3-7	367945	4907754	2	0	0	100.3	100.3	1	5847.02	3.25	0	86.34	0	0.7	0	0	19.78	0	0	0	0	0	0	-6.51	-6.51
Inverter	MV3-14	368684	4907498	2	0	0	100.3	100.3	1	5884.93	3.25	0	86.39	0	0.7	0	0	19.84	0	0	0	0	0	0	-6.62	-6.62
Inverter	MV3-11	368346	4907662	2	0	0	100.3	100.3	1	5898.13	3.25	0	86.41	0	0.7	0	0	19.85	0	0	0	0	0	0	-6.66	-6.66
Inverter	MV3-6	368162	4907834	2	0	0	100.3	100.3	1	5993.1	3.25	0	86.55	0	0.7	0	0	19.98	0	0	0	0	0	0	-6.93	-6.93
Inverter	MV3-9	368512	4907703	2	0	0	100.3	100.3	1	6000.03	3.25	0	86.56	0	0.7	0	0	19.99	0	0	0	0	0	0	-6.95	-6.95
Inverter	MV3-3	367939	4907927	2	0	0	100.3	100.3	1	6009.93	3.25	0	86.58	0	0.71	0	0	20.01	0	0	0	0	0	0	-6.98	-6.98
Inverter	MV3-8	368680	4907712	2	0	0	100.3	100.3	1	6076.8	3.25	0	86.67	0	0.71	0	0	20.1	0	0	0	0	0	0	-7.17	-7.17
Inverter	MV6-3	370207	4907140	2	0	0	100.3	100.3	1	6407.5	3.25	0	87.13	0	0.71	0	0	20.54	0	0	0	0	0	0	-8.07	-8.07
Inverter	MV6-2	370085	4907339	2	0	0	100.3	100.3	1	6487.24	3.25	0	87.24	0	0.71	0	0	20.64	0	0	0	0	0	0	-8.29	-8.29
Inverter	MV2-1	365842	4906816	2	0	0	97.3	97.3	1	4630	3.25	0	84.31	0	0.61	0	0	18.03	0	0	0	0	0	0	-5.63	-5.63
Inverter	MV4-11	369264	4908855	2	0	0	100.3	100.3	1	7359.51	3.25	0	88.34	0	0.7	0	0	21.74	0	0	0	0	0	0	-10.47	-10.47
Inverter	MV4-10	369312	4908858	2	0	0	100.3	100.3	1	7382.78	3.25	0	88.36	0	0.7	0	0	21.77	0	0	0	0	0	0	-10.52	-10.52
Inverter	MV4-7	369035	4909001	2	0	0	100.3	100.3	1	7399.09	3.25	0	88.38	0	0.69	0	0	21.79	0	0	0	0	0	0	-10.56	-10.56
Inverter	MV4-8	369256	4909001	2	0	0	100.3	100.3	1	7488.55	3.25	0	88.49	0	0.69	0	0	21.9	0	0	0	0	0	0	-10.77	-10.77
Inverter	MV4-9	369289	4909001	2	0	0	100.3	100.3	1	7502.38	3.25	0	88.5	0	0.69	0	0	21.92	0	0	0	0	0	0	-10.8	-10.8
Inverter	MV5-5	370015	4908690	2	0	0	100.3	100.3	1	7567.03	3.25	0	88.58	0	0.69	0	0	22	0	0	0	0	0	0	-10.95	-10.95
Inverter	MV4-4	369027	4909199	2	0	0	100.3	100.3	1	7578.55	3.25	0	88.59	0	0.68	0	0	22.01	0	0	0	0	0	0	-10.97	-10.97
Inverter	MV4-6	369243	4909192	2	0	0	100.3	100.3	1	7657.26	3.25	0	88.68	0	0.68	0	0	22.1	0	0	0	0	0	0	-11.15	-11.15
Inverter	MV4-5	369289	4909199	2	0	0	100.3	100.3	1	7682.45	3.25	0	88.71	0	0.68	0	0	22.13	0	0	0	0	0	0	-11.21	-11.21
Inverter	MV5-2	370006	4908853	2	0	0	100.3	100.3	1	7702.85	3.25	0	88.73	0	0.68	0	0	22.16	0	0	0	0	0	0	-11.25	-11.25
Inverter	MV5-4	370324	4908707	2	0	0	100.3	100.3	1	7744.42	3.25	0	88.78	0	0.67	0	0	22.21	0	0	0	0	0	0	-11.35	-11.35
Inverter	MV4-1	369011	4909397	2	0	0	100.3	100.3	1	7755.96	3.25	0	88.79	0	0.67	0	0	22.22	0	0	0	0	0	0	-11.37	-11.37
Inverter	MV5-3	370231	4908851	2	0	0	100.3	100.3	1	7816.72	3.25	0	88.86	0	0.67	0	0	22.29	0	0	0	0	0	0	-11.51	-11.51
Inverter	MV4-3	369229	4909397	2	0	0	100.3	100.3	1	7839.49	3.25	0	88.89	0	0.67	0	0	22.32	0	0	0	0	0	0	-11.56	-11.56
Inverter	MV4-2	369272	4909397	2	0	0	100.3	100.3	1	7856.57	3.25	0	88.9	0	0.67	0	0	22.34	0	0	0	0	0	0	-11.6	-11.6
Inverter	MV5-1	370020	4909142	2	0	0	100.3	100.3	1	7960.8	3.25	0	89.02	0	0.66	0	0	22.46	0	0	0	0	0	0	-11.82	-11.82
Inverter	MV6-1	370235	4907364	2	0	0	97.3	97.3	1	6599.28	3.25	0	87.39	0	0.72	0	0	20.79	0	0	0	0	0	0	-11.58	-11.58
DSTATCOM - 10 MVAR #2	DSAT2	369403	4908757	2.5	0	0	96.6	96.6	1	7331.89	3.5	0	88.3	0	3.85	0	0	4.46	0	0	0	0	0	0	0.01	0.01
DSTATCOM - 10 MVAR #1	DSAT1	369437	4908757	2.5	0	0	96.6	96.6	1	7347.12	3.5	0	88.32	0	3.85	0	0	4.47	0	0	0	0	0	0	-0.02	-0.02
SubstationTransformer	W_ST	369711.17	4906112.3	2.5	0	0	92	92	1	5305.96	3.5	0	85.5	0	0.63	0	-0.11	8.98	0	0	0	0	0	0	-3.12	-3.12
Inverter	MV1-3	364440	4906039	2	0	0	89.1	89.1	1	4199.89	3.25	0	83.46	0	1.44	0	0	11.37	0	0	0	0	0	0	-7.22	-7.22
Inverter	MV2-2	365977	4906654	2	0	0	89.1	89.1	1	4461.6	3.25	0	83.99	0	1.51	0	0	11.73	0	0	0	0	0	0	-8.17	-8.17
Westbrook Inverter Enclosur	W_INV3	369508	4906164	2	0	0	89.1	89.1	1	5210.39	3.25	0	85.34	0	1.69	0	0	12.74	0	0	0	0	0	0	-10.71	-10.71
Westbrook Inverter Enclosur	W_INV2	369374	4906388	2	0	0	89.1	89.1	1	5299.97	3.25	0	85.49	0	1.71	0	0	12.86	0	0	0	0	0	0	-11	-11
Westbrook Inverter Enclosur	W_INV4	369673	4906164	2	0	0	89.1	89.1	1	5318.78	3.25	0	85.52	0	1.72	0	0	12.89	0	0	0	0	0	0	-11.06	-11.06
Inverter	MV3-22	368656	4907142	2	0	0	89.1	89.1	1	5553.5	3.25	0	85.89	0	1.78	0	0	13.19	0	0	0	0	0	0	-11.8	-11.8
Westbrook Inverter Enclosur	W_INV7	369780	4906417	2	0	0	89.1	89.1	1	5579.51	3.25	0	85.93	0	1.78	0	0	13.23	0	0	0	0	0	0	-11.88	-11.88
Westbrook Inverter Enclosur	W_INV5	369719	4906574	2	0	0	89.1	89.1	1	5660.38	3.25	0	86.06	0	1.8	0	0	13.33	0	0	0	0	0	0	-12.13	-12.13
Westbrook Inverter Enclosur	W_INV6	369875	4906578	2	0	0	89.1	89.1	1	5763.54	3.25	0	86.21	0	1.83	0	0	13.46	0	0	0	0	0	0	-12.45	-12.45
Inverter	MV3-5	368340	4907843	2	0	0	89.1	89.1	1	6064.09	3.26	0	86.66	0	2.65	2.04	0	13.84	0	0	0	0	0	0	-16.13	-16.13
Inverter	MV3-1	368156	4907976	2	0	0	89.1	89.1	1	6124.91	3.25	0	86.74	0	1.92	0	0	13.92	0	0	0	0	0	0	-13.52	-13.52
Inverter	MV3-4	368502	4907925	2	0	0	89.1	89.1	1	6200.62	3.25	0	86.85	0	1.93	0	0	14.01	0	0	0	0	0	0	-13.74	-13.74
Inverter	MV3-2	368671	4907928	2	0	0	89.1	89.1	1	6269.9	3.25	0	86.95	0	1.95	0	0	14.1	0	0	0	0	0	0	-13.94	-13.94
Fixed Reactor Bank 1	FRB1	369378	4908755	6	0	0	89.8	89.8	1	7318.98	5.25	0	88.29	0	-0.25	0	0	11.05	0	0	0	0	0	0	-9.31	-9.31
Fixed Reactor Bank 2	FRB2	369464	4908755	6	0	0	89.8	89.8	1	7357.53	5.25	0	88.33	0	-0.24	0	0	11.08	0	0	0	0	0	0	-9.4	-9.4
Inverter	MV4-15	369176	4908481	2	0	0	89.1	89.1	1	6984.07	3.25	0	87.88	0	2.12	0	0	14.97	0	0	0	0	0	0	-15.92	-15.92
Inverter	MV4-14	369176	4908507	2	0	0	89.1	89.1	1	7007.48	3.25	0	87.91	0	2.13	0	0	15	0	0	0	0	0	0	-15.98	-15.98
Inverter	MV4-13	369051	4908605	2	0	0	89.1	89.1	1	7043.17	3.25	0	87.96	0	2.14	0	0	15.04	0	0	0	0	0	0	-16.07	-16.07
Inverter	MV4-12	369043	4908803	2	0	0	89.1	89.1	1	7220.6	3.25	0	88.17	0	2.18	0	0	15.25	0	0	0	0	0	0	-16.54	-16.54
Inverter	MV5-6	369982	4908507	2	0	0	89.1	89.1	1	7393.31	3.25	0	88.38	0	2.22	0	0	15.45	0	0	0	0	0	0	-16.99	-16.99
Westbrook Inverter Enclosur	W_INV1	369409	4906578	2	0	0	86.1	86.1	1	5472.41	3.25	0	85.76	0	1.76	0	0	13.09	0	0	0	0	0	0	-14.55	-14.55
Inverter	MV6-4	370250	4906966	2	0	0	86.1	86.1	1	6302.2	3.25	0	86.99	0	1.96	0	0	14.14	0	0	0	0	0	0	-17.03	-17.03
Westbrook Inverter Transfor	W_INVTR1	369403	4906578	2	0	0	78.2	78.2	1	5468.82	3.25	0	85.76	0	-3.27	0	0	2.57	0	0	0	0	0	0	-6.82	-6.82
Westbrook Inverter Transfor	W_INVTR3	369514	4906164	2	0	0	77.3	77.3	1	5214.28	3.25	0	85.34	0	-3.22	0	0	2.49	0	0	0	0	0	0	-7.27	-7.27
Westbrook Inverter Transfor	W_INVTR2	369368	4906388	2	0	0	77.3	77.3	1	5296.3	3.25	0	85.48	0	-3.24	0	0	2.51	0	0	0	0	0	0	-7.42	-7.42
Westbrook Inverter Transfor	W_INVTR4	369679	4906164	2	0	0	77.3	77.3	1	5322.78	3.25	0	85.52	0	-3.24	0	0	2.52	0	0	0	0	0	0	-7.46	-7.46
Westbrook Inverter Transfor	W_INVTR7	369786	4906417	2	0	0	77.3	77.3	1	5583.43	3.25	0	85.94	0	-3.29	0	0	2.61	0	0	0	0	0	0	-7.91	-7.91
Westbrook Inverter Transfor	W_INVTR5	369725	4906574	2	0	0	77.3	77.3	1	5664.18	3.25	0	86.06	0	-3.31	0	0	2.63	0	0	0	0	0	0	-8.05	-8.05
Westbrook Inverter Transfor	W_INVTR6	369881	4906578	2	0	0	77.3	77.3	1	5767.44	3.25	0	86.22	0	-3.33	0	0	2.67	0	0	0	0	0	0	-8.22	-8.22

Inverter Transformer	MV1-14 T	365157	4905049	2	0	0	69.4	69.4	1	3015.92	3.25	0	80.59	0	2.51	0	0	5.9	0	0	0	0	0	0	-19.65	-19.65
Inverter Transformer	MV1-13 T	364725	4905241	2	0	0	69.4	69.4	1	3355.25	3.25	0	81.51	0	2.61	0	0	6.18	0	0	0	0	0	0	-20.95	-20.95
Inverter Transformer	MV1-10 T	365010	4905564	2	0	0	69.4	69.4	1	3550.89	3.25	0	82.01	0	2.67	0	0	6.33	0	0	0	0	0	0	-21.66	-21.66
Inverter Transformer	MV1-7 T	364919	4905782	2	0	0	69.4	69.4	1	3786.52	3.25	0	82.56	0	2.73	0	0	6.52	0	0	0	0	0	0	-22.46	-22.46
Inverter Transformer	MV2-1 T	365836	4906816	2	0	0	69.4	69.4	1	4630.38	3.25	0	84.31	0	2.93	0	0	7.13	0	0	0	0	0	0	-25.03	-25.03
Inverter Transformer	MV6-4 T	370244	4906966	2	0	0	69.4	69.4	1	6298.28	3.25	0	86.98	0	3.23	0	0	8.2	0	0	0	0	0	0	-29.06	-29.06
Inverter Transformer	MV6-1 T	370230	4907364	2	0	0	69.4	69.4	1	6596.17	3.25	0	87.39	0	3.27	0	0	8.37	0	0	0	0	0	0	-29.68	-29.68
Inverter Transformer	MV1-15 T	365309	4904994	2	0	0	56.1	56.1	1	2917.45	3.25	0	80.3	0	0.79	0	0	8.73	0	0	0	0	0	0	-33.76	-33.76
Inverter Transformer	MV1-12 T	365044	4905386	2	0	0	56.1	56.1	1	3371.35	3.25	0	81.56	0	0.99	0	0	9.48	0	0	0	0	0	0	-35.97	-35.97
Inverter Transformer	MV1-11 T	364649	4905414	2	0	0	56.1	56.1	1	3544.18	3.25	0	81.99	0	1.06	0	0	9.76	0	0	0	0	0	0	-36.75	-36.75
Inverter Transformer	MV1-8 T	364782	4905647	2	0	0	56.1	56.1	1	3706.57	3.25	0	82.38	0	1.13	0	0	10.01	0	0	0	0	0	0	-37.46	-37.46
Inverter Transformer	MV1-9 T	364555	4905646	2	0	0	56.1	56.1	1	3794.24	3.25	0	82.58	0	1.16	0	0	10.15	0	0	0	0	0	0	-37.83	-37.83
Inverter Transformer	MV1-4 T	364821	4905918	2	0	0	56.1	56.1	1	3947.05	3.25	0	82.93	0	1.22	0	0	10.38	0	0	0	0	0	0	-38.47	-38.47
Inverter Transformer	MV1-5 T	364676	4905892	2	0	0	56.1	56.1	1	3973.36	3.25	0	82.98	0	1.23	0	0	10.42	0	0	0	0	0	0	-38.57	-38.57
Inverter Transformer	MV1-6 T	364482	4905835	2	0	0	56.1	56.1	1	3996.5	3.25	0	83.03	0	1.24	0	0	10.45	0	0	0	0	0	0	-38.67	-38.67
Inverter Transformer	MV1-2 T	364759	4906063	2	0	0	56.1	56.1	1	4104.43	3.25	0	83.27	0	1.29	0	0	10.61	0	0	0	0	0	0	-39.1	-39.1
Inverter Transformer	MV1-3 T	364435	4906039	2	0	0	56.1	56.1	1	4201.91	3.25	0	83.47	0	1.32	0	0	10.75	0	0	0	0	0	0	-39.49	-39.49
Inverter Transformer	MV1-1 T	364721	4906166	2	0	0	56.1	56.1	1	4214.21	3.25	0	83.49	0	1.33	0	0	10.77	0	0	0	0	0	0	-39.53	-39.53
Inverter Transformer	MV2-3 T	365814	4906641	2	0	0	56.1	56.1	1	4457.27	3.25	0	83.98	0	1.42	0	0	11.12	0	0	0	0	0	0	-40.46	-40.46
Inverter Transformer	MV2-2 T	365982	4906654	2	0	0	56.1	56.1	1	4461.43	3.25	0	83.99	0	1.42	0	0	11.12	0	0	0	0	0	0	-40.48	-40.48
Inverter Transformer	MV2-4 T	365590	4906628	2	0	0	56.1	56.1	1	4465.94	3.25	0	84	0	1.43	0	0	11.13	0	0	0	0	0	0	-40.49	-40.49
Inverter Transformer	MV3-18 T	367757	4907412	2	0	0	56.1	56.1	1	5464.07	3.25	0	85.75	0	1.79	0	0	12.45	0	0	0	0	0	0	-43.93	-43.93
Inverter Transformer	MV3-21 T	368484	4907206	2	0	0	56.1	56.1	1	5535.35	3.25	0	85.86	0	1.81	0	0	12.54	0	0	0	0	0	0	-44.16	-44.16
Inverter Transformer	MV3-22 T	368661	4907142	2	0	0	56.1	56.1	1	5555.78	3.25	0	85.89	0	1.82	0	0	12.56	0	0	0	0	0	0	-44.22	-44.22
Inverter Transformer	MV3-19 T	368352	4907347	2	0	0	56.1	56.1	1	5609.78	3.25	0	85.98	0	1.84	0	0	12.63	0	0	0	0	0	0	-44.39	-44.39
Inverter Transformer	MV3-12 T	367674	4907594	2	0	0	56.1	56.1	1	5614.74	3.25	0	85.99	0	1.84	0	0	12.64	0	0	0	0	0	0	-44.41	-44.41
Inverter Transformer	MV3-17 T	368183	4907472	2	0	0	56.1	56.1	1	5661.4	3.25	0	86.06	0	1.85	0	0	12.69	0	0	0	0	0	0	-44.55	-44.55
Inverter Transformer	MV3-13 T	367958	4907577	2	0	0	56.1	56.1	1	5683.17	3.25	0	86.09	0	1.86	0	0	12.72	0	0	0	0	0	0	-44.62	-44.62
Inverter Transformer	MV3-20 T	368683	4907317	2	0	0	56.1	56.1	1	5721.93	3.25	0	86.15	0	1.87	0	0	12.77	0	0	0	0	0	0	-44.74	-44.74
Inverter Transformer	MV3-15 T	368351	4907477	2	0	0	56.1	56.1	1	5729.01	3.25	0	86.16	0	1.88	0	0	12.78	0	0	0	0	0	0	-44.76	-44.76
Inverter Transformer	MV3-16 T	368509	4907475	2	0	0	56.1	56.1	1	5790.21	3.25	0	86.25	0	1.9	0	0	12.85	0	0	0	0	0	0	-44.94	-44.94
Inverter Transformer	MV3-10 T	368162	4907669	2	0	0	56.1	56.1	1	5838.12	3.25	0	86.33	0	1.91	0	0	12.91	0	0	0	0	0	0	-45.09	-45.09
Inverter Transformer	MV3-7 T	367951	4907754	2	0	0	56.1	56.1	1	5848.88	3.25	0	86.34	0	1.92	0	0	12.92	0	0	0	0	0	0	-45.12	-45.12
Inverter Transformer	MV3-14 T	368678	4907498	2	0	0	56.1	56.1	1	5882.33	3.25	0	86.39	0	1.93	0	0	12.96	0	0	0	0	0	0	-45.22	-45.22
Inverter Transformer	MV3-11 T	368340	4907662	2	0	0	56.1	56.1	1	5895.88	3.25	0	86.41	0	1.93	0	0	12.98	0	0	0	0	0	0	-45.26	-45.26
Inverter Transformer	MV3-6 T	368156	4907834	2	0	0	56.1	56.1	1	5991.07	3.25	0	86.55	0	1.96	0	0	13.09	0	0	0	0	0	0	-45.55	-45.55
Inverter Transformer	MV3-9 T	368517	4907703	2	0	0	56.1	56.1	1	6002.02	3.25	0	86.57	0	1.97	0	0	13.11	0	0	0	0	0	0	-45.58	-45.58
Inverter Transformer	MV3-3 T	367944	4907927	2	0	0	56.1	56.1	1	6011.43	3.25	0	86.58	0	1.97	0	0	13.12	0	0	0	0	0	0	-45.61	-45.61
Inverter Transformer	MV3-5 T	368335	4907843	2	0	0	56.1	56.1	1	6062.27	3.26	0	86.65	0	2.83	1.77	0	13.18	0	0	0	0	0	0	-48.37	-48.37
Inverter Transformer	MV3-8 T	368685	4907712	2	0	0	56.1	56.1	1	6078.9	3.25	0	86.68	0	1.99	0	0	13.2	0	0	0	0	0	0	-45.8	-45.8
Inverter Transformer	MV3-1 T	368150	4907976	2	0	0	56.1	56.1	1	6122.93	3.25	0	86.74	0	2	0	0	13.25	0	0	0	0	0	0	-45.93	-45.93
Inverter Transformer	MV3-4 T	368507	4907925	2	0	0	56.1	56.1	1	6202.53	3.25	0	86.85	0	2.03	0	0	13.34	0	0	0	0	0	0	-46.16	-46.16
Inverter Transformer	MV3-2 T	368677	4907928	2	0	0	56.1	56.1	1	6272.33	3.25	0	86.95	0	2.05	0	0	13.42	0	0	0	0	0	0	-46.36	-46.36
Inverter Transformer	MV6-3 T	370202	4907140	2	0	0	56.1	56.1	1	6404.32	3.25	0	87.13	0	2.09	0	0	13.57	0	0	0	0	0	0	-46.73	-46.73
Inverter Transformer	MV6-2 T	370091	4907339	2	0	0	56.1	56.1	1	6490.9	3.25	0	87.25	0	2.12	0	0	13.67	0	0	0	0	0	0	-46.97	-46.97
Inverter Transformer	MV4-15 T	369170	4908481	2	0	0	56.1	56.1	1	6981.46	3.25	0	87.88	0	2.25	0	0	14.21	0	0	0	0	0	0	-48.28	-48.28
Inverter Transformer	MV4-14 T	369182	4908507	2	0	0	56.1	56.1	1	7010.09	3.25	0	87.91	0	2.26	0	0	14.24	0	0	0	0	0	0	-48.36	-48.36
Inverter Transformer	MV4-13 T	369057	4908605	2	0	0	56.1	56.1	1	7045.66	3.25	0	87.96	0	2.27	0	0	14.28	0	0	0	0	0	0	-48.45	-48.45
Inverter Transformer	MV4-12 T	369049	4908803	2	0	0	56.1	56.1	1	7223.02	3.25	0	88.17	0	2.32	0	0	14.47	0	0	0	0	0	0	-48.9	-48.9
Inverter Transformer	MV4-11 T	369269	4908855	2	0	0	56.1	56.1	1	7361.64	3.25	0	88.34	0	2.36	0	0	14.61	0	0	0	0	0	0	-49.25	-49.25
Inverter Transformer	MV4-10 T	369307	4908858	2	0	0	56.1	56.1	1	7380.62	3.25	0	88.36	0	2.36	0	0	14.63	0	0	0	0	0	0	-49.29	-49.29
Inverter Transformer	MV5-6 T	369987	4908507	2	0	0	56.1	56.1	1	7395.92	3.25	0	88.38	0	2.36	0	0	14.65	0	0	0	0	0	0	-49.33	-49.33
Inverter Transformer	MV4-7 T	369040	4909001	2	0	0	56.1	56.1	1	7401.05	3.25	0	88.39	0	2.37	0	0	14.65	0	0	0	0	0	0	-49.35	-49.35
Inverter Transformer	MV4-8 T	369262	4909001	2	0	0	56.1	56.1	1	7491.06	3.25	0	88.49	0	2.39	0	0	14.75	0	0	0	0	0	0	-49.57	-49.57
Inverter Transformer	MV4-9 T	369284	4909001	2	0	0	56.1	56.1	1	7500.27	3.25	0	88.5	0	2.39	0	0	14.75	0	0	0	0	0	0	-49.59	-49.59
Inverter Transformer	MV5-5 T	370021	4908690	2	0	0	56.1	56.1	1	7570.11	3.25	0	88.58	0	2.41	0	0	14.83	0	0	0	0	0	0	-49.76	-49.76
Inverter Transformer	MV4-4 T	369033	4909199	2	0	0	56.1	56.1	1	7580.85	3.25	0	88.59	0	2.41	0	0	14.84	0	0	0	0	0	0	-49.78	-49.78
Inverter Transformer	MV4-6 T	369249	4909192	2	0	0	56.1	56.1	1	7659.7	3.25	0	88.68	0	2.43	0	0	14.92	0	0	0	0	0	0	-49.97	-49.97
Inverter Transformer	MV4-5 T	369283	4909199	2	0	0	56.1	56.1	1	7679.98	3.25	0	88.71	0	2.43	0	0	14.94	0	0	0	0	0	0	-50.02	-50.02
Inverter Transformer	MV5-2 T	370011	4908853	2	0	0	56.1	56.1	1	7705.37	3.25	0	88.74	0	2.44	0	0	14.96	0	0	0	0	0	0	-50.08	-50.08
Inverter Transformer	MV5-4 T	370330	4908707	2	0	0	56.1	56.1	1	7747.67	3.25	0	88.78	0	2.45	0	0	15.01	0	0	0	0	0	0	-50.18	-50.18
Inverter Transformer	MV4-1 T	369017	4909397	2	0	0	56.1	56.1	1	7758.19	3.25	0	88.8	0	2.45	0	0	15.02	0	0	0	0	0	0	-50.21	-50.21
Inverter Transformer	MV5-3 T	370237	4908851	2	0	0	56.1	56.1	1	7819.87	3.25	0	88.86	0	2.47	0	0	15.08	0	0	0	0	0	0	-50.35	-50.35
Inverter Transformer	MV4-3 T	369234	4909397	2	0	0	56.1	56.1	1	7841.46	3.25	0	88.89	0	2.47	0	0	15.1	0	0	0	0	0	0	-50.4	-50.4
Inverter Transformer	MV4-2 T	369267	4909397	2	0	0	56.1	56.1	1	7854.57	3.25	0	88.9	0	2.48	0	0	15.11	0	0	0	0	0	0	-50.43	-50.43
Inverter Transformer	MV5-1 T	370015	4909142	2	0	0	56.1	56.1	1	7958.36	3.25	0	89.02	0	2.5	0	0	15.22	0	0	0	0	0	0	-50.67	-50.67
Line Reactor	NGR	369421	4908787.5	5	0	0	45.4	45.4	1	7367.22	5.25	0	88.35	0	3.21	1.37	0.11	3.01	0	0	0	0	0	0	-50.59	-50.59
Limit. Valu 0	0																									
Level D/N: 24.4308	24.4308																									

Receiver: Existing Noise Receptor
ID: G-40
X: 365786.2
Y: 4903405

Z: 4.5
Ground: 0

ISO	Description	ID	X	Y	Z	Ground	ReflOrd	LxT	LxN	L/A	Dist.	hm	Freq	Adiv	K0b	Agr	Abar	z	Aatm	Afol	Ahous	Cmet	CmetN	Dc	RL	LtotT	LtotN
	Inverter	MV1-15	365315	4904994	2	0	0	100.3	100.3	1	1657.39	3.25	0	75.39	0	0.02	0	0	12.7	0	0	0	0	0	0	12.2	12.2
	Sol_Luce Substation	S_Substation	369426	4908792	3.5	0	0	112.1	112.1	1	6501.38	5.25	0	87.26	0	1.28	2.54	0.29	10.26	0	0	0	0	0	0	10.74	10.74
	Inverter	MV1-12	365038	4905386	2	0	0	100.3	100.3	1	2117.59	3.25	0	77.52	0	0.16	0	0	13.71	0	0	0	0	0	0	8.93	8.93
	Inverter	MV1-11	364655	4905414	2	0	0	100.3	100.3	1	2305.58	3.25	0	78.26	0	0.21	0	0	14.08	0	0	0	0	0	0	7.76	7.76
	Gardiner Substation	G_Sub	366586.3	4903349.9	2.5	0	0	90.8	90.8	1	802	3.5	0	69.08	0	-0.4	0	0	2.11	0	0	0	0	0	0	19.98	19.98
	Inverter	MV1-8	364788	4905647	2	0	0	100.3	100.3	1	2454.17	3.25	0	78.8	0	0.25	0	0	14.37	0	0	0	0	0	0	6.9	6.9
	Inverter	MV1-14	365163	4905049	2	0	0	97.3	97.3	1	1758.16	3.25	0	75.9	0	0.06	0	0	12.94	0	0	0	0	0	0	8.42	8.42
	Inverter	MV1-9	364561	4905646	2	0	0	100.3	100.3	1	2554.06	3.25	0	79.14	0	0.27	0	0	14.56	0	0	0	0	0	0	6.34	6.34
	Inverter	MV1-4	364815	4905918	2	0	0	100.3	100.3	1	2694.14	3.25	0	79.61	0	0.3	0	0	14.82	0	0	0	0	0	0	5.58	5.58
	Inverter	MV1-5	364671	4905892	2	0	0	100.3	100.3	1	2725.59	3.25	0	79.71	0	0.31	0	0	14.88	0	0	0	0	0	0	5.42	5.42
	Inverter	MV1-6	364477	4905835	2	0	0	100.3	100.3	1	2760.24	3.25	0	79.82	0	0.31	0	0	14.94	0	0	0	0	0	0	5.24	5.24
	Inverter	MV1-2	364753	4906063	2	0	0	100.3	100.3	1	2851.75	3.25	0	80.1	0	0.33	0	0	15.11	0	0	0	0	0	0	4.77	4.77
	Inverter	MV1-1	364715	4906166	2	0	0	100.3	100.3	1	2961.52	3.25	0	80.43	0	0.35	0	0	15.3	0	0	0	0	0	0	4.22	4.22
	Inverter	MV1-13	364731	4905241	2	0	0	97.3	97.3	1	2117.63	3.25	0	77.52	0	0.16	0	0	13.71	0	0	0	0	0	0	5.93	5.93
	Inverter	MV2-4	365586	4906624	2	0	0	100.3	100.3	1	3225.22	3.25	0	81.17	0	0.4	0	0	15.76	0	0	0	0	0	0	2.97	2.97
	Inverter	MV2-3	365820	4906641	2	0	0	100.3	100.3	1	3236.18	3.25	0	81.2	0	0.41	0	0	15.78	0	0	0	0	0	0	2.92	2.92
	Inverter	MV1-10	365004	4905564	2	0	0	97.3	97.3	1	2296.33	3.25	0	78.22	0	0.21	0	0	14.06	0	0	0	0	0	0	4.82	4.82
	Inverters	G_Inv1	366526.4	4903225.8	2	0	0	87.7	87.7	1	761.59	3.25	0	68.63	0	2.41	0	0	1.12	0	0	0	0	0	0	15.49	15.49
	Inverter	MV1-7	364925	4905782	2	0	0	97.3	97.3	1	2528.2	3.25	0	79.06	0	0.26	0	0	14.51	0	0	0	0	0	0	3.48	3.48
	Inverters	G_Inv3	366583.7	4903091.4	2	0	0	87.7	87.7	1	856.95	3.25	0	69.66	0	2.43	0	0	1.24	0	0	0	0	0	0	14.33	14.33
	Inverters	G_Inv2	366676.9	4903239.1	2	0	0	87.7	87.7	1	906.02	3.25	0	70.14	0	2.44	0	0	1.31	0	0	0	0	0	0	13.78	13.78
	Inverters	G_Inv5	366638.5	4902958.1	2	0	0	87.7	87.7	1	962.36	3.25	0	70.67	0	2.44	0	0	1.38	0	0	0	0	0	0	13.17	13.17
	Inverters	G_Inv4	366732.8	4903105	2	0	0	87.7	87.7	1	993	3.25	0	70.94	0	2.45	0	0	1.42	0	0	0	0	0	0	12.85	12.85
	Inverter	MV3-18	367752	4907412	2	0	0	100.3	100.3	1	4463.23	3.25	0	83.99	0	0.59	0	0	17.77	0	0	0	0	0	0	-2.04	-2.04
	Inverter	MV3-12	367668	4907594	2	0	0	100.3	100.3	1	4592.27	3.25	0	84.24	0	0.6	0	0	17.97	0	0	0	0	0	0	-2.5	-2.5
	Inverters	G_Inv7	366694.6	4902824.7	2	0	0	87.7	87.7	1	1077.94	3.25	0	71.65	0	2.46	0	0	1.53	0	0	0	0	0	0	12.02	12.02
	Inverter	MV3-21	368478	4907206	2	0	0	100.3	100.3	1	4657.62	3.25	0	84.36	0	0.61	0	0	18.07	0	0	0	0	0	0	-2.73	-2.73
	Inverters	G_Inv6	366788.5	4902972	2	0	0	87.7	87.7	1	1091.83	3.25	0	71.76	0	2.46	0	0	1.54	0	0	0	0	0	0	11.89	11.89
	Inverter	MV3-13	367963	4907577	2	0	0	100.3	100.3	1	4705.75	3.25	0	84.45	0	0.61	0	0	18.14	0	0	0	0	0	0	-2.9	-2.9
	Inverter	MV3-19	368357	4907347	2	0	0	100.3	100.3	1	4706.21	3.25	0	84.45	0	0.61	0	0	18.14	0	0	0	0	0	0	-2.9	-2.9
	Inverter	MV3-17	368178	4907472	2	0	0	100.3	100.3	1	4718.18	3.25	0	84.48	0	0.61	0	0	18.16	0	0	0	0	0	0	-2.94	-2.94
	Inverter	MV3-15	368357	4907477	2	0	0	100.3	100.3	1	4815.62	3.25	0	84.65	0	0.62	0	0	18.31	0	0	0	0	0	0	-3.27	-3.27
	Inverter	MV2-1	365842	4906816	2	0	0	97.3	97.3	1	3411.46	3.25	0	81.66	0	0.44	0	0	16.08	0	0	0	0	0	0	-0.87	-0.87
	Inverter	MV3-7	367945	4907754	2	0	0	100.3	100.3	1	4855.33	3.25	0	84.72	0	0.63	0	0	18.37	0	0	0	0	0	0	-3.41	-3.41
	Inverter	MV3-20	368689	4907317	2	0	0	100.3	100.3	1	4871.34	3.25	0	84.75	0	0.63	0	0	18.39	0	0	0	0	0	0	-3.46	-3.46
	Inverter	MV3-10	368167	4907669	2	0	0	100.3	100.3	1	4883.64	3.25	0	84.77	0	0.63	0	0	18.41	0	0	0	0	0	0	-3.5	-3.5
	Inverter	MV3-16	368514	4907475	2	0	0	100.3	100.3	1	4899.57	3.25	0	84.8	0	0.63	0	0	18.43	0	0	0	0	0	0	-3.56	-3.56
	Inverter	MV3-11	368346	4907662	2	0	0	100.3	100.3	1	4967.36	3.25	0	84.92	0	0.64	0	0	18.53	0	0	0	0	0	0	-3.78	-3.78
	Inverter	MV3-3	367939	4907927	2	0	0	100.3	100.3	1	5008.3	3.25	0	84.99	0	0.64	0	0	18.59	0	0	0	0	0	0	-3.92	-3.92
	Inverter	MV3-14	368684	4907498	2	0	0	100.3	100.3	1	5014.97	3.25	0	85.01	0	0.64	0	0	18.6	0	0	0	0	0	0	-3.94	-3.94
	Inverter	MV3-6	368162	4907834	2	0	0	100.3	100.3	1	5025.98	3.25	0	85.02	0	0.64	0	0	18.62	0	0	0	0	0	0	-3.98	-3.98
	Inverter	MV3-9	368512	4907703	2	0	0	100.3	100.3	1	5089.48	3.25	0	85.13	0	0.65	0	0	18.71	0	0	0	0	0	0	-4.18	-4.18
	Inverters	G_Inv9	366750.9	4902691.8	2	0	0	87.7	87.7	1	1199.71	3.25	0	72.58	0	2.48	0	0	1.68	0	0	0	0	0	0	10.92	10.92
	Inverters	G_Inv8	366844.5	4902838.5	2	0	0	87.7	87.7	1	1200.39	3.25	0	72.59	0	2.48	0	0	1.68	0	0	0	0	0	0	10.92	10.92
	Inverter	MV3-8	368680	4907712	2	0	0	100.3	100.3	1	5188.87	3.25	0	85.3	0	0.66	0	0	18.86	0	0	0	0	0	0	-4.5	-4.5
	Inverters	G_Inv10	366900.7	4902704.8	2	0	0	87.7	87.7	1	1316.21	3.25	0	73.39	0	2.49	0	0	1.82	0	0	0	0	0	0	9.96	9.96
	Inverter	MV6-3	370207	4907140	2	0	0	100.3	100.3	1	5787.37	3.25	0	86.25	0	0.7	0	0	19.7	0	0	0	0	0	0	-6.34	-6.34
	Inverter	MV6-2	370085	4907339	2	0	0	100.3	100.3	1	5827.18	3.25	0	86.31	0	0.7	0	0	19.76	0	0	0	0	0	0	-6.45	-6.45
	Inverter	MV4-11	369264	4908855	2	0	0	100.3	100.3	1	6465.11	3.25	0	87.21	0	0.71	0	0	20.61	0	0	0	0	0	0	-8.23	-8.23
	Inverter	MV4-7	369035	4909001	2	0	0	100.3	100.3	1	6470.7	3.25	0	87.22	0	0.71	0	0	20.62	0	0	0	0	0	0	-8.24	-8.24
	Inverter	MV4-10	369312	4908858	2	0	0	100.3	100.3	1	6493.57	3.25	0	87.25	0	0.71	0	0	20.65	0	0	0	0	0	0	-8.3	-8.3
	Inverter	MV4-8	369256	4909001	2	0	0	100.3	100.3	1	6584.43	3.25	0	87.37	0	0.72	0	0	20.77	0	0	0	0	0	0	-8.54	-8.54
	Inverter	MV4-9	369289	4909001	2	0	0	100.3	100.3	1	6601.88	3.25	0	87.39	0	0.72	0	0	20.79	0	0	0	0	0	0	-8.59	-8.59
	Inverter	MV4-4	369027	4909199	2	0	0	100.3	100.3	1	6638.77	3.25	0	87.44	0	0.71	0	0	20.84	0	0	0	0	0	0	-8.68	-8.68
	Inverter	MV4-6	369243	4909192	2	0	0	100.3	100.3	1	6740.83	3.25	0	87.57	0	0.71	0	0	20.97	0	0	0	0	0	0	-8.95	-8.95
	Inverter	MV5-5	370015	4908690	2	0	0	100.3	100.3	1	6768.6	3.25	0	87.61	0	0.71	0	0	21.01	0	0	0	0	0	0	-9.02	-9.02
	Inverter	MV4-5	369289	4909199	2	0	0	100.3	100.3	1	6770.53	3.25	0	87.61	0	0.71	0	0	21.01	0	0	0	0	0	0	-9.02	-9.02
	Inverter	MV4-1	369011	4909397	2	0	0	100.3	100.3	1	6804.66	3.25	0	87.66	0	0.71	0	0	21.05	0	0	0	0	0	0	-9.11	-9.11
	Inverter	MV5-2	370006	4908853	2	0	0	100.3	100.3	1	6891.11	3.25	0	87.77	0	0.71	0	0	21.16	0	0	0	0	0	0	-9.33	-9.33
	Inverter	MV4-3	369229	4909397	2	0	0	100.3	100.3	1	6910.64	3.25	0	87.79	0	0.71	0	0	21.19	0	0	0	0	0	0	-9.38	-9.38
	Inverter	MV4-2	369272	4909397	2	0	0	100.3	100.3	1	6932.16	3.25	0	87.82	0	0.71	0	0	21.21	0	0	0	0	0	0	-9.43	-9.43
	Inverter	MV5-4	370324	4908707	2	0	0	100.3	100.3	1	6978.74	3.25	0	87.88	0	0.71	0	0	21.27	0	0	0	0	0	0	-9.55	-9.55
	Inverter	MV5-3	370231	4908851	2	0	0	100.3	100.3	1	7029.59	3.25	0	87.94	0	0.71	0	0	21.34	0	0	0	0	0	0	-9.67	-9.67
	Inverter	MV5-1	370020	4909142	2	0	0	100.3	100.3	1	7130.09	3.25	0	88.06	0	0.71	0	0	21.46	0	0	0	0	0	0	-9.92	-9.92
	Inverter	MV6-1	370235	4907364	2	0	0	97.3	97.3	1	5955.29	3.25	0	86.5	0	0.7	0	0	19.93	0	0	0	0	0	0	-9.82	-9.82
	DSTATCOM - 10 MVAR #2	DSAT2	369403	4908757	2.5	0	0	96.6	96.6	1	6459.5	3.5	0	87.2	0	3.81	0	0	4.06	0	0	0	0	0	0	1.56	1.56
	DSTATCOM - 10 MVAR #1	DSAT1	369437	4908757	2.5	0	0	96.6	96.6	1	6478.6	3.5	0	87.23	0	3.81	0	0	4.07	0	0	0	0	0	0	1.53	1.53
	Inverter	MV1-3	364440	4906039	2	0	0	89.1	89.1	1	2958.08	3.25	0	80.42	0	1.14	0	0	9.55	0	0	0	0	0	0	-2.05	-2.05
	Inverter	MV2-2	365977	4906654	2	0	0	89.1	89.1	1	3254.6	3.25	0	81.25	0	1.21	0	0	10	0	0	0	0	0	0	-3.4	-3.4
	SubstationTransformer	W_ST	369711.17	4906112.3	2.5	0	0	92	92	1	4768.09	4.25	0	84.57	0	1.58	2.39	0.24	8.34	0	0	0	0	0	0	-4.89	-4.89

Westbrook Inverter Enclosur	W_INV3	369508	4906164	2	0	0	89.1	89.1	1	4632.91	3.25	0	84.32	0	1.55	0	0	11.97	0	0	0	0	0	0	-8.78	-8.78
Westbrook Inverter Enclosur	W_INV2	369374	4906388	2	0	0	89.1	89.1	1	4665.9	3.25	0	84.38	0	1.56	0	0	12.01	0	0	0	0	0	0	-8.89	-8.89
Inverter	MV3-22	368656	4907142	2	0	0	89.1	89.1	1	4711.79	3.25	0	84.46	0	1.57	0	0	12.07	0	0	0	0	0	0	-9.05	-9.05
Westbrook Inverter Enclosur	W_INV4	369673	4906164	2	0	0	89.1	89.1	1	4766.48	3.25	0	84.56	0	1.58	0	0	12.15	0	0	0	0	0	0	-9.24	-9.24
Westbrook Inverter Enclosur	W_INV7	369780	4906417	2	0	0	89.1	89.1	1	5002.26	3.25	0	84.98	0	1.64	0	0	12.47	0	0	0	0	0	0	-10.03	-10.03
Westbrook Inverter Enclosur	W_INV5	369719	4906574	2	0	0	89.1	89.1	1	5050.69	3.25	0	85.07	0	1.65	0	0	12.53	0	0	0	0	0	0	-10.19	-10.19
Inverter	MV3-5	368340	4907843	2	0	0	89.1	89.1	1	5120.33	3.25	0	85.19	0	1.67	0	0	12.62	0	0	0	0	0	0	-10.42	-10.42
Inverter	MV3-1	368156	4907976	2	0	0	89.1	89.1	1	5148.79	3.25	0	85.23	0	1.68	0	0	12.66	0	0	0	0	0	0	-10.51	-10.51
Westbrook Inverter Enclosur	W_INV6	369875	4906578	2	0	0	89.1	89.1	1	5175.54	3.25	0	85.28	0	1.68	0	0	12.7	0	0	0	0	0	0	-10.6	-10.6
Inverter	MV3-4	368502	4907925	2	0	0	89.1	89.1	1	5273.14	3.25	0	85.44	0	1.71	0	0	12.83	0	0	0	0	0	0	-10.92	-10.92
Inverter	MV3-2	368671	4907928	2	0	0	89.1	89.1	1	5364.66	3.25	0	85.59	0	1.73	0	0	12.95	0	0	0	0	0	0	-11.21	-11.21
Fixed Reactor Bank 1	FRB1	369378	4908755	6	0	0	89.8	89.8	1	6443.88	5.25	0	87.18	0	-0.36	0	0	10.2	0	0	0	0	0	0	-7.25	-7.25
Fixed Reactor Bank 2	FRB2	369464	4908755	6	0	0	89.8	89.8	1	6492.2	5.25	0	87.25	0	-0.35	0	0	10.25	0	0	0	0	0	0	-7.37	-7.37
Inverter	MV4-15	369176	4908481	2	0	0	89.1	89.1	1	6103.81	3.25	0	86.71	0	1.91	0	0	13.89	0	0	0	0	0	0	-13.46	-13.46
Inverter	MV4-14	369176	4908507	2	0	0	89.1	89.1	1	6125.45	3.25	0	86.74	0	1.92	0	0	13.92	0	0	0	0	0	0	-13.52	-13.52
Inverter	MV4-13	369051	4908605	2	0	0	89.1	89.1	1	6139.95	3.25	0	86.76	0	1.92	0	0	13.94	0	0	0	0	0	0	-13.56	-13.56
Inverter	MV4-12	369043	4908803	2	0	0	89.1	89.1	1	6304.38	3.25	0	86.99	0	1.96	0	0	14.14	0	0	0	0	0	0	-14.04	-14.04
Inverter	MV5-6	369982	4908507	2	0	0	89.1	89.1	1	6605.69	3.25	0	87.4	0	2.03	0	0	14.51	0	0	0	0	0	0	-14.89	-14.89
Westbrook Inverter Enclosur	W_INV1	369409	4906578	2	0	0	86.1	86.1	1	4815.87	3.25	0	84.65	0	1.59	0	0	12.22	0	0	0	0	0	0	-12.41	-12.41
Inverter	MV6-4	370250	4906966	2	0	0	86.1	86.1	1	5710.19	3.25	0	86.13	0	1.81	0	0	13.39	0	0	0	0	0	0	-15.28	-15.28
Westbrook Inverter Transfor	W_INVTR1	369403	4906578	2	0	0	78.2	78.2	1	4811.36	3.25	0	84.65	0	-3.14	0	0	2.35	0	0	0	0	0	0	-5.61	-5.61
Inverter Transformer	MV1-14 T	365157	4905049	2	0	0	69.4	69.4	1	1760.29	3.25	0	75.91	0	2.08	0	0	4.72	0	0	0	0	0	0	-13.36	-13.36
Westbrook Inverter Transfor	W_INVTR3	369514	4906164	2	0	0	77.3	77.3	1	4637.73	3.25	0	84.33	0	-3.1	0	0	2.29	0	0	0	0	0	0	-6.17	-6.17
Westbrook Inverter Transfor	W_INVTR2	369368	4906388	2	0	0	77.3	77.3	1	4661.29	3.25	0	84.37	0	-3.11	0	0	2.3	0	0	0	0	0	0	-6.22	-6.22
Westbrook Inverter Transfor	W_INVTR4	369679	4906164	2	0	0	77.3	77.3	1	4771.37	3.25	0	84.57	0	-3.13	0	0	2.33	0	0	0	0	0	0	-6.43	-6.43
Westbrook Inverter Transfor	W_INVTR7	369786	4906417	2	0	0	77.3	77.3	1	5007.05	3.25	0	84.99	0	-3.18	0	0	2.42	0	0	0	0	0	0	-6.89	-6.89
Westbrook Inverter Transfor	W_INVTR5	369725	4906574	2	0	0	77.3	77.3	1	5055.36	3.25	0	85.08	0	-3.19	0	0	2.43	0	0	0	0	0	0	-6.98	-6.98
Westbrook Inverter Transfor	W_INVTR6	369881	4906578	2	0	0	77.3	77.3	1	5180.28	3.25	0	85.29	0	-3.21	0	0	2.47	0	0	0	0	0	0	-7.21	-7.21
Inverter Transformer	MV1-13 T	364725	4905241	2	0	0	69.4	69.4	1	2120.62	3.25	0	77.53	0	2.22	0	0	5.08	0	0	0	0	0	0	-15.48	-15.48
Inverter Transformer	MV1-10 T	365010	4905564	2	0	0	69.4	69.4	1	2294.29	3.25	0	78.21	0	2.28	0	0	5.25	0	0	0	0	0	0	-16.39	-16.39
Inverter Transformer	MV1-7 T	364919	4905782	2	0	0	69.4	69.4	1	2530.25	3.25	0	79.06	0	2.36	0	0	5.47	0	0	0	0	0	0	-17.54	-17.54
Inverter Transformer	MV2-1 T	365836	4906816	2	0	0	69.4	69.4	1	3411.36	3.25	0	81.66	0	2.63	0	0	6.22	0	0	0	0	0	0	-21.16	-21.16
Inverter Transformer	MV6-4 T	370244	4906966	2	0	0	69.4	69.4	1	5705.5	3.25	0	86.13	0	3.14	0	0	7.84	0	0	0	0	0	0	-27.75	-27.75
Inverter Transformer	MV6-1 T	370230	4907364	2	0	0	69.4	69.4	1	5951.56	3.25	0	86.49	0	3.18	0	0	7.99	0	0	0	0	0	0	-28.31	-28.31
Inverter Transformer	MV1-15 T	365309	4904994	2	0	0	56.1	56.1	1	1659.11	3.25	0	75.4	0	0.26	0	0	6.35	0	0	0	0	0	0	-25.96	-25.96
Inverter Transformer	MV1-12 T	365044	4905386	2	0	0	56.1	56.1	1	2115.47	3.25	0	77.51	0	0.45	0	0	7.27	0	0	0	0	0	0	-29.17	-29.17
Inverter Transformer	MV1-11 T	364649	4905414	2	0	0	56.1	56.1	1	2308.53	3.25	0	78.27	0	0.53	0	0	7.64	0	0	0	0	0	0	-30.38	-30.38
Inverter Transformer	MV1-8 T	364782	4905647	2	0	0	56.1	56.1	1	2456.62	3.25	0	78.81	0	0.6	0	0	7.91	0	0	0	0	0	0	-31.26	-31.26
Inverter Transformer	MV1-9 T	364555	4905646	2	0	0	56.1	56.1	1	2556.94	3.25	0	79.15	0	0.64	0	0	8.09	0	0	0	0	0	0	-31.83	-31.83
Inverter Transformer	MV1-4 T	364821	4905918	2	0	0	56.1	56.1	1	2691.99	3.25	0	79.6	0	0.7	0	0	8.33	0	0	0	0	0	0	-32.58	-32.58
Inverter Transformer	MV1-5 T	364676	4905892	2	0	0	56.1	56.1	1	2723.55	3.25	0	79.7	0	0.71	0	0	8.39	0	0	0	0	0	0	-32.75	-32.75
Inverter Transformer	MV1-6 T	364482	4905835	2	0	0	56.1	56.1	1	2757.87	3.25	0	79.81	0	0.73	0	0	8.45	0	0	0	0	0	0	-32.93	-32.93
Inverter Transformer	MV1-2 T	364759	4906063	2	0	0	56.1	56.1	1	2849.58	3.25	0	80.1	0	0.77	0	0	8.61	0	0	0	0	0	0	-33.41	-33.41
Inverter Transformer	MV1-1 T	364721	4906166	2	0	0	56.1	56.1	1	2959.35	3.25	0	80.42	0	0.81	0	0	8.8	0	0	0	0	0	0	-33.98	-33.98
Inverter Transformer	MV1-3 T	364435	4906039	2	0	0	56.1	56.1	1	2960.36	3.25	0	80.43	0	0.81	0	0	8.8	0	0	0	0	0	0	-33.98	-33.98
Inverter Transformer	MV2-4 T	365590	4906628	2	0	0	56.1	56.1	1	3228.97	3.25	0	81.18	0	0.93	0	0	9.25	0	0	0	0	0	0	-35.3	-35.3
Inverter Transformer	MV2-3 T	365814	4906641	2	0	0	56.1	56.1	1	3236.12	3.25	0	81.2	0	0.93	0	0	9.26	0	0	0	0	0	0	-35.33	-35.33
Inverter Transformer	MV2-2 T	365982	4906654	2	0	0	56.1	56.1	1	3254.9	3.25	0	81.25	0	0.94	0	0	9.29	0	0	0	0	0	0	-35.42	-35.42
Inverter Transformer	MV3-18 T	367757	4907412	2	0	0	56.1	56.1	1	4465.43	3.25	0	84	0	1.43	0	0	11.13	0	0	0	0	0	0	-40.49	-40.49
Inverter Transformer	MV3-12 T	367674	4907594	2	0	0	56.1	56.1	1	4594.73	3.25	0	84.25	0	1.48	0	0	11.31	0	0	0	0	0	0	-40.97	-40.97
Inverter Transformer	MV3-21 T	368484	4907206	2	0	0	56.1	56.1	1	4661.09	3.25	0	84.37	0	1.5	0	0	11.4	0	0	0	0	0	0	-41.21	-41.21
Inverter Transformer	MV3-13 T	367958	4907577	2	0	0	56.1	56.1	1	4703.44	3.25	0	84.45	0	1.52	0	0	11.46	0	0	0	0	0	0	-41.36	-41.36
Inverter Transformer	MV3-19 T	368352	4907347	2	0	0	56.1	56.1	1	4703.48	3.25	0	84.45	0	1.52	0	0	11.46	0	0	0	0	0	0	-41.36	-41.36
Inverter Transformer	MV3-22 T	368661	4907142	2	0	0	56.1	56.1	1	4714.83	3.25	0	84.47	0	1.52	0	0	11.47	0	0	0	0	0	0	-41.4	-41.4
Inverter Transformer	MV3-17 T	368183	4907472	2	0	0	56.1	56.1	1	4720.71	3.25	0	84.48	0	1.52	0	0	11.48	0	0	0	0	0	0	-41.42	-41.42
Inverter Transformer	MV3-15 T	368351	4907477	2	0	0	56.1	56.1	1	4812.42	3.25	0	84.65	0	1.56	0	0	11.6	0	0	0	0	0	0	-41.75	-41.75
Inverter Transformer	MV3-7 T	367951	4907754	2	0	0	56.1	56.1	1	4858	3.25	0	84.73	0	1.57	0	0	11.67	0	0	0	0	0	0	-41.91	-41.91
Inverter Transformer	MV3-20 T	368683	4907317	2	0	0	56.1	56.1	1	4867.77	3.25	0	84.75	0	1.58	0	0	11.68	0	0	0	0	0	0	-41.94	-41.94
Inverter Transformer	MV3-10 T	368162	4907669	2	0	0	56.1	56.1	1	4881.2	3.25	0	84.77	0	1.58	0	0	11.7	0	0	0	0	0	0	-41.99	-41.99
Inverter Transformer	MV3-16 T	368509	4907475	2	0	0	56.1	56.1	1	4896.79	3.25	0	84.8	0	1.59	0	0	11.72	0	0	0	0	0	0	-42.04	-42.04
Inverter Transformer	MV3-11 T	368340	4907662	2	0	0	56.1	56.1	1	4964.27	3.25	0	84.92	0	1.61	0	0	11.81	0	0	0	0	0	0	-42.28	-42.28
Inverter Transformer	MV3-3 T	367944	4907927	2	0	0	56.1	56.1	1	5010.45	3.25	0	85	0	1.63	0	0	11.87	0	0	0	0	0	0	-42.44	-42.44
Inverter Transformer	MV3-14 T	368678	4907498	2	0	0	56.1	56.1	1	5011.5	3.25	0	85	0	1.63	0	0	11.87	0	0	0	0	0	0	-42.44	-42.44
Inverter Transformer	MV3-6 T	368156	4907834	2	0	0	56.1	56.1	1	5023.15	3.25	0	85.02	0	1.63	0	0	11.88	0	0	0	0	0	0	-42.48	-42.48
Inverter Transformer	MV3-9 T	368517	4907703	2	0	0	56.1	56.1	1	5092.16	3.25	0	85.14	0	1.66	0	0	11.98	0	0	0	0	0	0	-42.71	-42.71
Inverter Transformer	MV3-5 T	368335	4907843	2	0	0	56.1	56.1	1	5117.83	3.25	0	85.18	0	1.67	0	0	12.01	0	0	0	0	0	0	-42.8	-42.8
Inverter Transformer	MV3-1 T	368150	4907976	2	0	0	56.1	56.1	1	5146.03	3.25	0	85.23	0	1.68	0	0	12.05	0	0	0	0	0	0	-42.89	-42.89
Inverter Transformer	MV3-8 T	368685	4907712	2	0	0	56.1	56.1	1	5191.66	3.25	0	85.31	0	1.69	0	0	12.1	0	0	0	0	0	0	-43.05	-43.05
Inverter Transformer	MV3-4 T	368507	4907925	2	0	0	56.1	56.1	1	5275.71	3.25	0	85.45	0	1.72	0	0	12.21	0	0	0	0	0	0	-43.32	-43.32
Inverter Transformer	MV3-2 T	368677	4907928	2	0	0	56.1	56.1	1	5367.89	3.25	0	85.6	0	1.76	0	0	12.33	0	0	0	0	0	0	-43.62	-43.62
Inverter Transformer	MV6-3 T	370202	4907140	2	0	0	56.1	56.1	1	5783.56	3.25	0	86.24	0	1.9	0	0	12.84	0	0	0	0	0	0	-44.92	-44.92
Inverter Transformer	MV6-2 T	370091	4907339	2	0	0	56.1	56.1	1	5831.61	3.25	0	86.32	0	1.91	0	0	12.9	0	0	0	0	0	0	-45.07	-45.07
Inverter Transformer	MV4-15 T	369170	4908481	2	0	0	56.1	56.1	1	6100.48	3.25	0	86.71	0	2	0	0	13.22	0	0	0	0	0	0	-45.87	-45.87
Inverter Transformer	MV4-14 T	369182	4908507	2	0	0	56.1	56.1	1	6128.77	3.25	0	86.75	0	2.01	0	0	13.25	0	0	0	0	0	0	-45.95	-45.95

	Inverter Transformer	MV4-13 T	369057	4908605	2	0	0	56.1	56.1	1	6143.14	3.25	0	86.77	0	2.01	0	0	13.27	0	0	0	0	0	0	-45.99	-45.99
	Inverter Transformer	MV4-12 T	369049	4908803	2	0	0	56.1	56.1	1	6307.48	3.25	0	87	0	2.06	0	0	13.46	0	0	0	0	0	0	-46.46	-46.46
	Inverter Transformer	MV4-11 T	369269	4908855	2	0	0	56.1	56.1	1	6467.8	3.25	0	87.22	0	2.11	0	0	13.64	0	0	0	0	0	0	-46.91	-46.91
	Inverter Transformer	MV4-7 T	369040	4909001	2	0	0	56.1	56.1	1	6473.21	3.25	0	87.22	0	2.11	0	0	13.65	0	0	0	0	0	0	-46.92	-46.92
	Inverter Transformer	MV4-10 T	369307	4908858	2	0	0	56.1	56.1	1	6490.86	3.25	0	87.25	0	2.12	0	0	13.67	0	0	0	0	0	0	-46.97	-46.97
	Inverter Transformer	MV4-8 T	369262	4909001	2	0	0	56.1	56.1	1	6587.6	3.25	0	87.37	0	2.14	0	0	13.78	0	0	0	0	0	0	-47.24	-47.24
	Inverter Transformer	MV4-9 T	369284	4909001	2	0	0	56.1	56.1	1	6599.23	3.25	0	87.39	0	2.15	0	0	13.79	0	0	0	0	0	0	-47.27	-47.27
	Inverter Transformer	MV5-6 T	369987	4908507	2	0	0	56.1	56.1	1	6608.87	3.25	0	87.4	0	2.15	0	0	13.8	0	0	0	0	0	0	-47.3	-47.3
	Inverter Transformer	MV4-4 T	369033	4909199	2	0	0	56.1	56.1	1	6641.7	3.25	0	87.45	0	2.16	0	0	13.84	0	0	0	0	0	0	-47.38	-47.38
	Inverter Transformer	MV4-6 T	369249	4909192	2	0	0	56.1	56.1	1	6743.91	3.25	0	87.58	0	2.19	0	0	13.95	0	0	0	0	0	0	-47.66	-47.66
	Inverter Transformer	MV4-5 T	369283	4909199	2	0	0	56.1	56.1	1	6767.43	3.25	0	87.61	0	2.19	0	0	13.98	0	0	0	0	0	0	-47.72	-47.72
	Inverter Transformer	MV5-5 T	370021	4908690	2	0	0	56.1	56.1	1	6772.35	3.25	0	87.61	0	2.2	0	0	13.98	0	0	0	0	0	0	-47.74	-47.74
	Inverter Transformer	MV4-1 T	369017	4909397	2	0	0	56.1	56.1	1	6807.51	3.25	0	87.66	0	2.21	0	0	14.02	0	0	0	0	0	0	-47.83	-47.83
	Inverter Transformer	MV5-2 T	370011	4908853	2	0	0	56.1	56.1	1	6894.17	3.25	0	87.77	0	2.23	0	0	14.12	0	0	0	0	0	0	-48.06	-48.06
	Inverter Transformer	MV4-3 T	369234	4909397	2	0	0	56.1	56.1	1	6913.13	3.25	0	87.79	0	2.24	0	0	14.14	0	0	0	0	0	0	-48.11	-48.11
	Inverter Transformer	MV4-2 T	369267	4909397	2	0	0	56.1	56.1	1	6929.65	3.25	0	87.81	0	2.24	0	0	14.15	0	0	0	0	0	0	-48.15	-48.15
	Inverter Transformer	MV5-4 T	370330	4908707	2	0	0	56.1	56.1	1	6982.64	3.25	0	87.88	0	2.25	0	0	14.21	0	0	0	0	0	0	-48.29	-48.29
	Inverter Transformer	MV5-3 T	370237	4908851	2	0	0	56.1	56.1	1	7033.39	3.25	0	87.94	0	2.27	0	0	14.27	0	0	0	0	0	0	-48.42	-48.42
	Inverter Transformer	MV5-1 T	370015	4909142	2	0	0	56.1	56.1	1	7127.13	3.25	0	88.06	0	2.29	0	0	14.37	0	0	0	0	0	0	-48.66	-48.66
	Line Reactor	NGR	369421	4908787.5	5	0	0	45.4	45.4	1	6494.85	5.25	0	87.25	0	3.23	1.37	0.1	2.65	0	0	0	0	0	0	-49.15	-49.15
Limit. Valu	0	0																								
Level D/N:	26.006	26.006																								

Receiver: Existing Noise Receptor
ID: G-41
X: 366115.2
Y: 4902187.1
Z: 4.5
Ground: 0

ISO	Description	ID	X	Y	Z	Ground	ReflOrd	LxT	LxN	L/A	Dist.	hm	Freq	Adiv	K0b	Agr	Abar	z	Aatm	Afol	Ahous	Cmet	CmetN	Dc	RL	LtotT	LtotN
	Sol_Luce Substation	S_Substation	369426	4908792	3.5	0	0	112.1	112.1	1	7388.24	5.25	0	88.37	0	1.46	2.37	0.32	11.11	0	0	0	0	0	0	8.77	8.77
	Inverter	MV1-15	365315	4904994	2	0	0	100.3	100.3	1	2918.73	3.25	0	80.3	0	0.35	0	0	15.23	0	0	0	0	0	0	4.43	4.43
	Inverter	MV1-12	365038	4905386	2	0	0	100.3	100.3	1	3375.4	3.25	0	81.57	0	0.43	0	0	16.02	0	0	0	0	0	0	2.29	2.29
	Inverters	G_Inv9	366750.9	4902691.8	2	0	0	87.7	87.7	1	811.69	3.25	0	69.19	0	2.42	0	0	1.18	0	0	0	0	0	0	14.87	14.87
	Inverter	MV1-11	364655	4905414	2	0	0	100.3	100.3	1	3541.9	3.25	0	81.98	0	0.46	0	0	16.3	0	0	0	0	0	0	1.57	1.57
	Inverters	G_Inv7	366694.6	4902824.7	2	0	0	87.7	87.7	1	861.54	3.25	0	69.71	0	2.43	0	0	1.25	0	0	0	0	0	0	14.28	14.28
	Inverter	MV1-8	364788	4905647	2	0	0	100.3	100.3	1	3705.72	3.25	0	82.38	0	0.48	0	0	16.57	0	0	0	0	0	0	0.88	0.88
	Gardiner Substation	G_Sub	366586.3	4903349.9	2.5	0	0	90.8	90.8	1	1254.61	3.5	0	72.97	0	-0.33	0	0	3.02	0	0	0	0	0	0	15.11	15.11
	Inverter	MV1-9	364561	4905646	2	0	0	100.3	100.3	1	3792.04	3.25	0	82.58	0	0.5	0	0	16.71	0	0	0	0	0	0	0.52	0.52
	Inverter	MV1-4	364815	4905918	2	0	0	100.3	100.3	1	3950.97	3.25	0	82.93	0	0.52	0	0	16.97	0	0	0	0	0	0	-0.11	-0.11
	Inverter	MV1-5	364671	4905892	2	0	0	100.3	100.3	1	3976.43	3.25	0	82.99	0	0.52	0	0	17.01	0	0	0	0	0	0	-0.21	-0.21
	Inverters	G_Inv5	366638.5	4902958.1	2	0	0	87.7	87.7	1	931.82	3.25	0	70.39	0	2.44	0	0	1.34	0	0	0	0	0	0	13.49	13.49
	Inverter	MV1-6	364477	4905835	2	0	0	100.3	100.3	1	3998.86	3.25	0	83.04	0	0.53	0	0	17.05	0	0	0	0	0	0	-0.3	-0.3
	Inverters	G_Inv10	366900.7	4902704.8	2	0	0	87.7	87.7	1	940.76	3.25	0	70.47	0	2.44	0	0	1.35	0	0	0	0	0	0	13.4	13.4
	Inverter	MV1-2	364753	4906063	2	0	0	100.3	100.3	1	4108.31	3.25	0	83.27	0	0.54	0	0	17.22	0	0	0	0	0	0	-0.72	-0.72
	Inverters	G_Inv8	366844.5	4902838.5	2	0	0	87.7	87.7	1	977.86	3.25	0	70.81	0	2.45	0	0	1.4	0	0	0	0	0	0	13.01	13.01
	Inverter	MV1-1	364715	4906166	2	0	0	100.3	100.3	1	4218.08	3.25	0	83.5	0	0.56	0	0	17.39	0	0	0	0	0	0	-1.14	-1.14
	Inverter	MV1-14	365163	4905049	2	0	0	97.3	97.3	1	3016.15	3.25	0	80.59	0	0.37	0	0	15.4	0	0	0	0	0	0	0.96	0.96
	Inverters	G_Inv3	366583.7	4903091.4	2	0	0	87.7	87.7	1	1018.46	3.25	0	71.16	0	2.45	0	0	1.45	0	0	0	0	0	0	12.6	12.6
	Inverters	G_Inv6	366788.5	4902972	2	0	0	87.7	87.7	1	1034.12	3.25	0	71.29	0	2.45	0	0	1.47	0	0	0	0	0	0	12.44	12.44
	Inverter	MV2-3	365820	4906641	2	0	0	100.3	100.3	1	4463.67	3.25	0	83.99	0	0.59	0	0	17.77	0	0	0	0	0	0	-2.04	-2.04
	Inverter	MV2-4	365586	4906624	2	0	0	100.3	100.3	1	4468.35	3.25	0	84	0	0.59	0	0	17.78	0	0	0	0	0	0	-2.06	-2.06
	Inverter	MV1-13	364731	4905241	2	0	0	97.3	97.3	1	3352.96	3.25	0	81.51	0	0.43	0	0	15.98	0	0	0	0	0	0	-0.61	-0.61
	Inverters	G_Inv4	366732.8	4903105	2	0	0	87.7	87.7	1	1106.33	3.25	0	71.88	0	2.46	0	0	1.56	0	0	0	0	0	0	11.76	11.76
	Inverters	G_Inv1	366526.4	4903225.8	2	0	0	87.7	87.7	1	1117.13	3.25	0	71.96	0	2.47	0	0	1.57	0	0	0	0	0	0	11.66	11.66
	Inverter	MV1-10	365004	4905564	2	0	0	97.3	97.3	1	3555.03	3.25	0	82.02	0	0.46	0	0	16.32	0	0	0	0	0	0	-1.49	-1.49
	Inverters	G_Inv2	366676.9	4903239.1	2	0	0	87.7	87.7	1	1192.57	3.25	0	72.53	0	2.48	0	0	1.67	0	0	0	0	0	0	10.99	10.99
	Inverter	MV1-7	364925	4905782	2	0	0	97.3	97.3	1	3786.8	3.25	0	82.57	0	0.5	0	0	16.7	0	0	0	0	0	0	-2.45	-2.45
	Inverter	MV3-18	367752	4907412	2	0	0	100.3	100.3	1	5475.28	3.25	0	85.77	0	0.68	0	0	19.27	0	0	0	0	0	0	-5.4	-5.4
	Inverter	MV3-21	368478	4907206	2	0	0	100.3	100.3	1	5547.27	3.25	0	85.88	0	0.68	0	0	19.37	0	0	0	0	0	0	-5.62	-5.62
	Inverter	MV3-12	367668	4907594	2	0	0	100.3	100.3	1	5625.46	3.25	0	86	0	0.69	0	0	19.48	0	0	0	0	0	0	-5.86	-5.86
	Inverter	MV3-19	368357	4907347	2	0	0	100.3	100.3	1	5625.85	3.25	0	86	0	0.69	0	0	19.48	0	0	0	0	0	0	-5.86	-5.86
	Inverter	MV3-17	368178	4907472	2	0	0	100.3	100.3	1	5673.21	3.25	0	86.08	0	0.69	0	0	19.54	0	0	0	0	0	0	-6	-6
	Inverter	MV3-13	367963	4907577	2	0	0	100.3	100.3	1	5697.84	3.25	0	86.11	0	0.69	0	0	19.58	0	0	0	0	0	0	-6.07	-6.07
	Inverter	MV3-20	368689	4907317	2	0	0	100.3	100.3	1	5739.37	3.25	0	86.18	0	0.69	0	0	19.64	0	0	0	0	0	0	-6.19	-6.19
	Inverter	MV3-15	368357	4907477	2	0	0	100.3	100.3	1	5745.32	3.25	0	86.19	0	0.69	0	0	19.64	0	0	0	0	0	0	-6.21	-6.21
	Inverter	MV3-16	368514	4907475	2	0	0	100.3	100.3	1	5806.56	3.25	0	86.28	0	0.7	0	0	19.73	0	0	0	0	0	0	-6.39	-6.39
	Inverter	MV3-10	368167	4907669	2	0	0	100.3	100.3	1	5853.3	3.25	0	86.35	0	0.7	0	0	19.79	0	0	0	0	0	0	-6.53	-6.53
	Inverter	MV3-7	367945	4907754	2	0	0	100.3	100.3	1	5859.91	3.25	0	86.36	0	0.7	0	0	19.8	0	0	0	0	0	0	-6.55	-6.55
	Inverter	MV3-14	368684	4907498	2	0	0	100.3	100.3	1	5899.53	3.25	0	86.42	0	0.7	0	0	19.86	0	0	0	0	0	0	-6.66	-6.66
	Inverter	MV3-11	368346	4907662	2	0	0	100.3	100.3	1	5911.94	3.27	0	86.43	0	1.68	2.52	0	19.87	0	0	0	0	0	0	-10.19	-10.19
	Inverter	MV3-6	368162	4907834	2	0	0	100.3	100.3	1	6006.4	3.25	0	86.57	0	0.71	0	0	20	0	0	0	0	0	0	-6.97	-6.97
	Inverter	MV3-9	368512	4907703	2	0	0	100.3	100.3	1	6014.13	3.25	0	86.58	0	0.71	0	0	20.01	0	0	0	0	0	0	-6.99	-6.99

Inverter	MV3-3	367939	4907927	2	0	0	100.3	100.3	1	6022.68	3.25	0	86.6	0	0.71	0	0	20.02	0	0	0	0	0	0	-7.01	-7.01
Inverter	MV3-8	368680	4907712	2	0	0	100.3	100.3	1	6091.2	3.25	0	86.69	0	0.71	0	0	20.12	0	0	0	0	0	0	-7.21	-7.21
Inverter	MV6-3	370207	4907140	2	0	0	100.3	100.3	1	6424.49	3.25	0	87.16	0	0.71	0	0	20.56	0	0	0	0	0	0	-8.12	-8.12
Inverter	MV6-2	370085	4907339	2	0	0	100.3	100.3	1	6503.95	3.25	0	87.26	0	0.71	0	0	20.66	0	0	0	0	0	0	-8.33	-8.33
Inverter	MV2-1	365842	4906816	2	0	0	97.3	97.3	1	4636.96	3.25	0	84.32	0	0.61	0	0	18.04	0	0	0	0	0	0	-5.66	-5.66
Inverter	MV4-11	369264	4908855	2	0	0	100.3	100.3	1	7374	3.25	0	88.35	0	0.7	0	0	21.76	0	0	0	0	0	0	-10.5	-10.5
Inverter	MV4-10	369312	4908858	2	0	0	100.3	100.3	1	7397.33	3.25	0	88.38	0	0.69	0	0	21.79	0	0	0	0	0	0	-10.55	-10.55
Inverter	MV4-7	369035	4909001	2	0	0	100.3	100.3	1	7413.13	3.25	0	88.4	0	0.69	0	0	21.81	0	0	0	0	0	0	-10.59	-10.59
Inverter	MV4-8	369256	4909001	2	0	0	100.3	100.3	1	7502.92	3.25	0	88.5	0	0.69	0	0	21.92	0	0	0	0	0	0	-10.8	-10.8
Inverter	MV4-9	369289	4909001	2	0	0	100.3	100.3	1	7516.8	3.25	0	88.52	0	0.69	0	0	21.93	0	0	0	0	0	0	-10.83	-10.83
Inverter	MV5-5	370015	4908690	2	0	0	100.3	100.3	1	7582.62	3.25	0	88.6	0	0.68	0	0	22.01	0	0	0	0	0	0	-10.98	-10.98
Inverter	MV4-4	369027	4909199	2	0	0	100.3	100.3	1	7592.45	3.25	0	88.61	0	0.68	0	0	22.03	0	0	0	0	0	0	-11	-11
Inverter	MV4-6	369243	4909192	2	0	0	100.3	100.3	1	7671.49	3.25	0	88.7	0	0.68	0	0	22.12	0	0	0	0	0	0	-11.18	-11.18
Inverter	MV4-5	369289	4909199	2	0	0	100.3	100.3	1	7696.74	3.25	0	88.73	0	0.68	0	0	22.15	0	0	0	0	0	0	-11.24	-11.24
Inverter	MV5-2	370006	4908853	2	0	0	100.3	100.3	1	7718.33	3.25	0	88.75	0	0.68	0	0	22.18	0	0	0	0	0	0	-11.29	-11.29
Inverter	MV5-4	370324	4908707	2	0	0	100.3	100.3	1	7760.35	3.25	0	88.8	0	0.67	0	0	22.23	0	0	0	0	0	0	-11.38	-11.38
Inverter	MV4-1	369011	4909397	2	0	0	100.3	100.3	1	7769.71	3.25	0	88.81	0	0.67	0	0	22.24	0	0	0	0	0	0	-11.4	-11.4
Inverter	MV5-3	370231	4908851	2	0	0	100.3	100.3	1	7832.46	3.25	0	88.88	0	0.67	0	0	22.31	0	0	0	0	0	0	-11.54	-11.54
Inverter	MV4-3	369229	4909397	2	0	0	100.3	100.3	1	7853.56	3.25	0	88.9	0	0.67	0	0	22.33	0	0	0	0	0	0	-11.59	-11.59
Inverter	MV4-2	369272	4909397	2	0	0	100.3	100.3	1	7870.71	3.25	0	88.92	0	0.66	0	0	22.36	0	0	0	0	0	0	-11.63	-11.63
Inverter	MV5-1	370020	4909142	2	0	0	100.3	100.3	1	7976.1	3.25	0	89.04	0	0.66	0	0	22.48	0	0	0	0	0	0	-11.86	-11.86
Inverter	MV6-1	370235	4907364	2	0	0	97.3	97.3	1	6616.12	3.25	0	87.41	0	0.71	0	0	20.81	0	0	0	0	0	0	-11.62	-11.62
DSTATCOM - 10 MVAR #2	DSAT2	369403	4908757	2.5	0	0	96.6	96.6	1	7346.65	3.5	0	88.32	0	3.85	0	0	4.47	0	0	0	0	0	0	-0.02	-0.02
DSTATCOM - 10 MVAR #1	DSAT1	369437	4908757	2.5	0	0	96.6	96.6	1	7361.93	3.5	0	88.34	0	3.86	0	0	4.48	0	0	0	0	0	0	-0.04	-0.04
SubstationTransformer	W_ST	369711.17	4906112.3	2.5	0	0	92	92	1	5323.34	3.5	0	85.52	0	0.63	0	-0.11	9	0	0	0	0	0	0	-3.18	-3.18
Inverter	MV1-3	364440	4906039	2	0	0	89.1	89.1	1	4200.41	3.25	0	83.47	0	1.44	0	0	11.37	0	0	0	0	0	0	-7.22	-7.22
Inverter	MV2-2	365977	4906654	2	0	0	89.1	89.1	1	4469.04	3.25	0	84	0	1.51	0	0	11.74	0	0	0	0	0	0	-8.2	-8.2
Westbrook Inverter Enclosur	W_INV3	369508	4906164	2	0	0	89.1	89.1	1	5227.51	3.25	0	85.37	0	1.7	0	0	12.77	0	0	0	0	0	0	-10.77	-10.77
Westbrook Inverter Enclosur	W_INV2	369374	4906388	2	0	0	89.1	89.1	1	5316.7	3.25	0	85.51	0	1.72	0	0	12.88	0	0	0	0	0	0	-11.06	-11.06
Westbrook Inverter Enclosur	W_INV4	369673	4906164	2	0	0	89.1	89.1	1	5336.07	3.25	0	85.54	0	1.72	0	0	12.91	0	0	0	0	0	0	-11.12	-11.12
Inverter	MV3-22	368656	4907142	2	0	0	89.1	89.1	1	5568.37	3.25	0	85.91	0	1.78	0	0	13.21	0	0	0	0	0	0	-11.85	-11.85
Westbrook Inverter Enclosur	W_INV7	369780	4906417	2	0	0	89.1	89.1	1	5596.68	3.25	0	85.96	0	1.79	0	0	13.25	0	0	0	0	0	0	-11.94	-11.94
Westbrook Inverter Enclosur	W_INV5	369719	4906574	2	0	0	89.1	89.1	1	5677.35	3.25	0	86.08	0	1.81	0	0	13.35	0	0	0	0	0	0	-12.18	-12.18
Westbrook Inverter Enclosur	W_INV6	369875	4906578	2	0	0	89.1	89.1	1	5780.67	3.25	0	86.24	0	1.83	0	0	13.48	0	0	0	0	0	0	-12.5	-12.5
Inverter	MV3-5	368340	4907843	2	0	0	89.1	89.1	1	6077.74	3.25	0	86.67	0	1.9	0	0	13.86	0	0	0	0	0	0	-13.38	-13.38
Inverter	MV3-1	368156	4907976	2	0	0	89.1	89.1	1	6138.1	3.25	0	86.76	0	1.92	0	0	13.94	0	0	0	0	0	0	-13.56	-13.56
Inverter	MV3-4	368502	4907925	2	0	0	89.1	89.1	1	6214.52	3.25	0	86.87	0	1.94	0	0	14.03	0	0	0	0	0	0	-13.78	-13.78
Inverter	MV3-2	368671	4907928	2	0	0	89.1	89.1	1	6284.11	3.25	0	86.96	0	1.96	0	0	14.12	0	0	0	0	0	0	-13.98	-13.98
Fixed Reactor Bank 1	FRB1	369378	4908755	6	0	0	89.8	89.8	1	7333.7	5.25	0	88.31	0	-0.24	0	0	11.06	0	0	0	0	0	0	-9.35	-9.35
Fixed Reactor Bank 2	FRB2	369464	4908755	6	0	0	89.8	89.8	1	7372.37	5.25	0	88.35	0	-0.24	0	0	11.1	0	0	0	0	0	0	-9.43	-9.43
Inverter	MV4-15	369176	4908481	2	0	0	89.1	89.1	1	6998.69	3.25	0	87.9	0	2.13	0	0	14.98	0	0	0	0	0	0	-15.95	-15.95
Inverter	MV4-14	369176	4908507	2	0	0	89.1	89.1	1	7022.08	3.25	0	87.93	0	2.13	0	0	15.01	0	0	0	0	0	0	-16.02	-16.02
Inverter	MV4-13	369051	4908605	2	0	0	89.1	89.1	1	7057.5	3.25	0	87.97	0	2.14	0	0	15.05	0	0	0	0	0	0	-16.11	-16.11
Inverter	MV4-12	369043	4908803	2	0	0	89.1	89.1	1	7234.79	3.25	0	88.19	0	2.18	0	0	15.26	0	0	0	0	0	0	-16.58	-16.58
Inverter	MV5-6	369982	4908507	2	0	0	89.1	89.1	1	7409	3.25	0	88.4	0	2.22	0	0	15.47	0	0	0	0	0	0	-17.03	-17.03
Westbrook Inverter Enclosur	W_INV1	369409	4906578	2	0	0	86.1	86.1	1	5489	3.25	0	85.79	0	1.76	0	0	13.11	0	0	0	0	0	0	-14.6	-14.6
Inverter	MV6-4	370250	4906966	2	0	0	86.1	86.1	1	6319.37	3.25	0	87.01	0	1.96	0	0	14.16	0	0	0	0	0	0	-17.08	-17.08
Westbrook Inverter Transfor	W_INVTR1	369403	4906578	2	0	0	78.2	78.2	1	5485.4	3.25	0	85.78	0	-3.27	0	0	2.58	0	0	0	0	0	0	-6.85	-6.85
Westbrook Inverter Transfor	W_INVTR3	369514	4906164	2	0	0	77.3	77.3	1	5231.4	3.25	0	85.37	0	-3.22	0	0	2.49	0	0	0	0	0	0	-7.3	-7.3
Westbrook Inverter Transfor	W_INVTR2	369368	4906388	2	0	0	77.3	77.3	1	5313.03	3.25	0	85.51	0	-3.24	0	0	2.52	0	0	0	0	0	0	-7.44	-7.44
Westbrook Inverter Transfor	W_INVTR4	369679	4906164	2	0	0	77.3	77.3	1	5340.08	3.25	0	85.55	0	-3.24	0	0	2.53	0	0	0	0	0	0	-7.49	-7.49
Westbrook Inverter Transfor	W_INVTR7	369786	4906417	2	0	0	77.3	77.3	1	5600.61	3.25	0	85.96	0	-3.29	0	0	2.61	0	0	0	0	0	0	-7.94	-7.94
Westbrook Inverter Transfor	W_INVTR5	369725	4906574	2	0	0	77.3	77.3	1	5681.16	3.25	0	86.09	0	-3.31	0	0	2.64	0	0	0	0	0	0	-8.08	-8.08
Westbrook Inverter Transfor	W_INVTR6	369881	4906578	2	0	0	77.3	77.3	1	5784.57	3.25	0	86.25	0	-3.33	0	0	2.67	0	0	0	0	0	0	-8.25	-8.25
Inverter Transformer	MV1-14 T	365157	4905049	2	0	0	69.4	69.4	1	3018.05	3.25	0	80.59	0	2.51	0	0	5.9	0	0	0	0	0	0	-19.65	-19.65
Inverter Transformer	MV1-13 T	364725	4905241	2	0	0	69.4	69.4	1	3355.44	3.25	0	81.51	0	2.61	0	0	6.18	0	0	0	0	0	0	-20.95	-20.95
Inverter Transformer	MV1-10 T	365010	4905564	2	0	0	69.4	69.4	1	3553.16	3.25	0	82.01	0	2.67	0	0	6.33	0	0	0	0	0	0	-21.66	-21.66
Inverter Transformer	MV1-7 T	364919	4905782	2	0	0	69.4	69.4	1	3788.69	3.25	0	82.57	0	2.73	0	0	6.52	0	0	0	0	0	0	-22.47	-22.47
Inverter Transformer	MV2-1 T	365836	4906816	2	0	0	69.4	69.4	1	4637.31	3.25	0	84.33	0	2.94	0	0	7.13	0	0	0	0	0	0	-25.05	-25.05
Inverter Transformer	MV6-4 T	370244	4906966	2	0	0	69.4	69.4	1	6315.45	3.25	0	87.01	0	3.23	0	0	8.21	0	0	0	0	0	0	-29.1	-29.1
Inverter Transformer	MV6-1 T	370230	4907364	2	0	0	69.4	69.4	1	6613.01	3.25	0	87.41	0	3.27	0	0	8.38	0	0	0	0	0	0	-29.71	-29.71
Inverter Transformer	MV1-15 T	365309	4904994	2	0	0	56.1	56.1	1	2920.39	3.25	0	80.31	0	0.8	0	0	8.73	0	0	0	0	0	0	-33.78	-33.78
Inverter Transformer	MV1-12 T	365044	4905386	2	0	0	56.1	56.1	1	3373.49	3.25	0	81.56	0	0.99	0	0	9.49	0	0	0	0	0	0	-35.98	-35.98
Inverter Transformer	MV1-11 T	364649	4905414	2	0	0	56.1	56.1	1	3544.38	3.25	0	81.99	0	1.06	0	0	9.76	0	0	0	0	0	0	-36.75	-36.75
Inverter Transformer	MV1-8 T	364782	4905647	2	0	0	56.1	56.1	1	3707.87	3.25	0	82.38	0	1.13	0	0	10.01	0	0	0	0	0	0	-37.46	-37.46
Inverter Transformer	MV1-9 T	364555	4905646	2	0	0	56.1	56.1	1	3794.5	3.25	0	82.58	0	1.16	0	0	10.15	0	0	0	0	0	0	-37.83	-37.83
Inverter Transformer	MV1-4 T	364821	4905918	2	0	0	56.1	56.1	1	3949	3.25	0	82.93	0	1.22	0	0	10.38	0	0	0	0	0	0	-38.47	-38.47
Inverter Transformer	MV1-5 T	364676	4905892	2	0	0	56.1	56.1	1	3974.62	3.25	0	82.99	0	1.23	0	0	10.42	0	0	0	0	0	0	-38.58	-38.58
Inverter Transformer	MV1-6 T	364482	4905835	2	0	0	56.1	56.1	1	3996.81	3.25	0	83.03	0	1.24	0	0	10.45	0	0	0	0	0	0	-38.67	-38.67
Inverter Transformer	MV1-2 T	364759	4906063	2	0	0	56.1	56.1	1	4106.32	3.25	0	83.27	0	1.29	0	0	10.61	0	0	0	0	0	0	-39.11	-39.11
Inverter Transformer	MV1-3 T	364435	4906039	2	0	0	56.1	56.1	1	4202.41	3.25	0	83.47	0	1.32	0	0	10.75	0	0	0	0	0	0	-39.49	-39.49
Inverter Transformer	MV1-1 T	364721	4906166	2	0	0	56.1	56.1	1	4216.09	3.25	0	83.5	0	1.33	0	0	10.77	0	0	0	0	0	0	-39.54	-39.54
Inverter Transformer	MV2-3 T	365814	4906641	2	0	0	56.1	56.1	1	4464.07	3.25	0	83.99	0	1.43	0	0	11.13	0	0	0	0	0	0	-40.49	-40.49
Inverter Transformer	MV2-2 T	365982	4906654	2	0	0	56.1	56.1	1	4468.89	3.25	0	84	0	1.43	0	0	11.13	0	0	0	0	0	0	-40.51	-40.51

	Inverter Transformer	MV2-4 T	365590	4906628	2	0	0	56.1	56.1	1	4471.85	3.25	0	84.01	0	1.43	0	0	11.14	0	0	0	0	0	0	-40.52	-40.52
	Inverter Transformer	MV3-18 T	367757	4907412	2	0	0	56.1	56.1	1	5476.78	3.25	0	85.77	0	1.79	0	0	12.47	0	0	0	0	0	0	-43.97	-43.97
	Inverter Transformer	MV3-21 T	368484	4907206	2	0	0	56.1	56.1	1	5549.83	3.25	0	85.89	0	1.82	0	0	12.56	0	0	0	0	0	0	-44.2	-44.2
	Inverter Transformer	MV3-22 T	368661	4907142	2	0	0	56.1	56.1	1	5570.65	3.25	0	85.92	0	1.82	0	0	12.58	0	0	0	0	0	0	-44.27	-44.27
	Inverter Transformer	MV3-19 T	368352	4907347	2	0	0	56.1	56.1	1	5623.86	3.25	0	86	0	1.84	0	0	12.65	0	0	0	0	0	0	-44.43	-44.43
	Inverter Transformer	MV3-12 T	367674	4907594	2	0	0	56.1	56.1	1	5627.12	3.25	0	86.01	0	1.84	0	0	12.65	0	0	0	0	0	0	-44.44	-44.44
	Inverter Transformer	MV3-17 T	368183	4907472	2	0	0	56.1	56.1	1	5675.03	3.25	0	86.08	0	1.86	0	0	12.71	0	0	0	0	0	0	-44.59	-44.59
	Inverter Transformer	MV3-13 T	367958	4907577	2	0	0	56.1	56.1	1	5696.22	3.25	0	86.11	0	1.87	0	0	12.74	0	0	0	0	0	0	-44.66	-44.66
	Inverter Transformer	MV3-20 T	368683	4907317	2	0	0	56.1	56.1	1	5736.68	3.25	0	86.17	0	1.88	0	0	12.79	0	0	0	0	0	0	-44.78	-44.78
	Inverter Transformer	MV3-15 T	368351	4907477	2	0	0	56.1	56.1	1	5742.98	3.25	0	86.18	0	1.88	0	0	12.79	0	0	0	0	0	0	-44.8	-44.8
	Inverter Transformer	MV3-16 T	368509	4907475	2	0	0	56.1	56.1	1	5804.5	3.25	0	86.28	0	1.9	0	0	12.87	0	0	0	0	0	0	-44.99	-44.99
	Inverter Transformer	MV3-10 T	368162	4907669	2	0	0	56.1	56.1	1	5851.55	3.25	0	86.35	0	1.92	0	0	12.93	0	0	0	0	0	0	-45.13	-45.13
	Inverter Transformer	MV3-7 T	367951	4907754	2	0	0	56.1	56.1	1	5861.79	3.25	0	86.36	0	1.92	0	0	12.94	0	0	0	0	0	0	-45.16	-45.16
	Inverter Transformer	MV3-14 T	368678	4907498	2	0	0	56.1	56.1	1	5896.92	3.25	0	86.41	0	1.93	0	0	12.98	0	0	0	0	0	0	-45.27	-45.27
	Inverter Transformer	MV3-11 T	368340	4907662	2	0	0	56.1	56.1	1	5909.68	3.27	0	86.43	0	2.79	1.81	0	13	0	0	0	0	0	0	-47.96	-47.96
	Inverter Transformer	MV3-6 T	368156	4907834	2	0	0	56.1	56.1	1	6004.36	3.25	0	86.57	0	1.97	0	0	13.11	0	0	0	0	0	0	-45.59	-45.59
	Inverter Transformer	MV3-9 T	368517	4907703	2	0	0	56.1	56.1	1	6016.13	3.25	0	86.59	0	1.97	0	0	13.12	0	0	0	0	0	0	-45.62	-45.62
	Inverter Transformer	MV3-3 T	367944	4907927	2	0	0	56.1	56.1	1	6024.2	3.25	0	86.6	0	1.97	0	0	13.13	0	0	0	0	0	0	-45.64	-45.64
	Inverter Transformer	MV3-5 T	368335	4907843	2	0	0	56.1	56.1	1	6075.91	3.25	0	86.67	0	1.99	0	0	13.19	0	0	0	0	0	0	-45.79	-45.79
	Inverter Transformer	MV3-8 T	368685	4907712	2	0	0	56.1	56.1	1	6093.31	3.25	0	86.7	0	1.99	0	0	13.21	0	0	0	0	0	0	-45.85	-45.85
	Inverter Transformer	MV3-1 T	368150	4907976	2	0	0	56.1	56.1	1	6136.1	3.25	0	86.76	0	2.01	0	0	13.26	0	0	0	0	0	0	-45.97	-45.97
	Inverter Transformer	MV3-4 T	368507	4907925	2	0	0	56.1	56.1	1	6216.45	3.25	0	86.87	0	2.03	0	0	13.36	0	0	0	0	0	0	-46.2	-46.2
	Inverter Transformer	MV3-2 T	368677	4907928	2	0	0	56.1	56.1	1	6286.55	3.25	0	86.97	0	2.05	0	0	13.44	0	0	0	0	0	0	-46.4	-46.4
	Inverter Transformer	MV6-3 T	370202	4907140	2	0	0	56.1	56.1	1	6421.31	3.25	0	87.15	0	2.09	0	0	13.59	0	0	0	0	0	0	-46.78	-46.78
	Inverter Transformer	MV6-2 T	370091	4907339	2	0	0	56.1	56.1	1	6507.62	3.25	0	87.27	0	2.12	0	0	13.69	0	0	0	0	0	0	-47.02	-47.02
	Inverter Transformer	MV4-15 T	369170	4908481	2	0	0	56.1	56.1	1	6996.07	3.25	0	87.9	0	2.26	0	0	14.23	0	0	0	0	0	0	-48.32	-48.32
	Inverter Transformer	MV4-14 T	369182	4908507	2	0	0	56.1	56.1	1	7024.7	3.25	0	87.93	0	2.27	0	0	14.26	0	0	0	0	0	0	-48.4	-48.4
	Inverter Transformer	MV4-13 T	369057	4908605	2	0	0	56.1	56.1	1	7060	3.25	0	87.98	0	2.28	0	0	14.29	0	0	0	0	0	0	-48.49	-48.49
	Inverter Transformer	MV4-12 T	369049	4908803	2	0	0	56.1	56.1	1	7237.22	3.25	0	88.19	0	2.32	0	0	14.48	0	0	0	0	0	0	-48.94	-48.94
	Inverter Transformer	MV4-11 T	369269	4908855	2	0	0	56.1	56.1	1	7376.13	3.25	0	88.36	0	2.36	0	0	14.63	0	0	0	0	0	0	-49.28	-49.28
	Inverter Transformer	MV4-10 T	369307	4908858	2	0	0	56.1	56.1	1	7395.17	3.25	0	88.38	0	2.36	0	0	14.65	0	0	0	0	0	0	-49.33	-49.33
	Inverter Transformer	MV5-6 T	369987	4908507	2	0	0	56.1	56.1	1	7411.61	3.25	0	88.4	0	2.37	0	0	14.66	0	0	0	0	0	0	-49.37	-49.37
	Inverter Transformer	MV4-7 T	369040	4909001	2	0	0	56.1	56.1	1	7415.1	3.25	0	88.4	0	2.37	0	0	14.67	0	0	0	0	0	0	-49.38	-49.38
	Inverter Transformer	MV4-8 T	369262	4909001	2	0	0	56.1	56.1	1	7505.44	3.25	0	88.51	0	2.39	0	0	14.76	0	0	0	0	0	0	-49.6	-49.6
	Inverter Transformer	MV4-9 T	369284	4909001	2	0	0	56.1	56.1	1	7514.69	3.25	0	88.52	0	2.39	0	0	14.77	0	0	0	0	0	0	-49.62	-49.62
	Inverter Transformer	MV5-5 T	370021	4908690	2	0	0	56.1	56.1	1	7585.71	3.25	0	88.6	0	2.41	0	0	14.84	0	0	0	0	0	0	-49.79	-49.79
	Inverter Transformer	MV4-4 T	369033	4909199	2	0	0	56.1	56.1	1	7594.76	3.25	0	88.61	0	2.41	0	0	14.85	0	0	0	0	0	0	-49.82	-49.82
	Inverter Transformer	MV4-6 T	369249	4909192	2	0	0	56.1	56.1	1	7673.94	3.25	0	88.7	0	2.43	0	0	14.93	0	0	0	0	0	0	-50.01	-50.01
	Inverter Transformer	MV4-5 T	369283	4909199	2	0	0	56.1	56.1	1	7694.26	3.25	0	88.72	0	2.44	0	0	14.95	0	0	0	0	0	0	-50.05	-50.05
	Inverter Transformer	MV5-2 T	370011	4908853	2	0	0	56.1	56.1	1	7720.85	3.25	0	88.75	0	2.44	0	0	14.98	0	0	0	0	0	0	-50.12	-50.12
	Inverter Transformer	MV5-4 T	370330	4908707	2	0	0	56.1	56.1	1	7763.61	3.25	0	88.8	0	2.45	0	0	15.02	0	0	0	0	0	0	-50.22	-50.22
	Inverter Transformer	MV4-1 T	369017	4909397	2	0	0	56.1	56.1	1	7771.94	3.25	0	88.81	0	2.46	0	0	15.03	0	0	0	0	0	0	-50.24	-50.24
	Inverter Transformer	MV5-3 T	370237	4908851	2	0	0	56.1	56.1	1	7835.61	3.25	0	88.88	0	2.47	0	0	15.09	0	0	0	0	0	0	-50.39	-50.39
	Inverter Transformer	MV4-3 T	369234	4909397	2	0	0	56.1	56.1	1	7855.54	3.25	0	88.9	0	2.48	0	0	15.11	0	0	0	0	0	0	-50.44	-50.44
	Inverter Transformer	MV4-2 T	369267	4909397	2	0	0	56.1	56.1	1	7868.7	3.25	0	88.92	0	2.48	0	0	15.13	0	0	0	0	0	0	-50.47	-50.47
	Inverter Transformer	MV5-1 T	370015	4909142	2	0	0	56.1	56.1	1	7973.65	3.25	0	89.03	0	2.5	0	0	15.23	0	0	0	0	0	0	-50.71	-50.71
	Line Reactor	NGR	369421	4908787.5	5	0	0	45.4	45.4	1	7381.98	5.25	0	88.36	0	3.21	1.37	0.11	3.02	0	0	0	0	0	0	-50.61	-50.61
Limit. Valu	0	0																								
Level D/N:	24.2777	24.2777																								

Receiver: Existing Noise Receptor
ID: G-42
X: 365916.2
Y: 4903656.1
Z: 4.5
Ground: 0

ISO	Description	ID	X	Y	Z	Ground	ReflOrd	LxT	LxN	L/A	Dist.	hm	Freq	Adiv	K0b	Agr	Abar	z	Aatm	Afol	Ahous	Cmet	CmetN	Dc	RL	LtotT	LtotN
	Inverter	MV1-15	365315	4904994	2	0	0	100.3	100.3	1	1466.77	3.25	0	74.33	0	-0.05	0	0	12.24	0	0	0	0	0	0	13.79	13.79
	Sol_Luce Substation	S_Substation	369426	4908792	3.5	0	0	112.1	112.1	1	6220.62	5.25	0	86.88	0	1.21	2.6	0.29	9.97	0	0	0	0	0	0	11.42	11.42
	Inverter	MV1-12	365038	4905386	2	0	0	100.3	100.3	1	1940.05	3.25	0	76.76	0	0.11	0	0	13.33	0	0	0	0	0	0	10.11	10.11
	Inverter	MV1-11	364655	4905414	2	0	0	100.3	100.3	1	2163.53	3.25	0	77.7	0	0.17	0	0	13.8	0	0	0	0	0	0	8.64	8.64
	Gardiner Substation	G_Sub	366586.3	4903349.9	2.5	0	0	90.8	90.8	1	736.75	4.25	0	68.35	0	0.46	4.21	0.3	1.97	0	0	0	0	0	0	15.8	15.8
	Inverter	MV1-14	365163	4905049	2	0	0	97.3	97.3	1	1583.5	3.25	0	74.99	0	0	0	0	12.53	0	0	0	0	0	0	9.79	9.79
	Inverter	MV1-8	364788	4905647	2	0	0	100.3	100.3	1	2288.35	3.25	0	78.19	0	0.21	0	0	14.05	0	0	0	0	0	0	7.87	7.87
	Inverter	MV1-9	364561	4905646	2	0	0	100.3	100.3	1	2407.55	3.25	0	78.63	0	0.24	0	0	14.28	0	0	0	0	0	0	7.16	7.16
	Inverter	MV1-4	364815	4905918	2	0	0	100.3	100.3	1	2515.72	3.25	0	79.01	0	0.26	0	0	14.49	0	0	0	0	0	0	6.55	6.55
	Inverter	MV1-5	364671	4905892	2	0	0	100.3	100.3	1	2559.25	3.25	0	79.16	0	0.27	0	0	14.57	0	0	0	0	0	0	6.31	6.31
	Inverter	MV1-6	364477	4905835	2	0	0	100.3	100.3	1	2611.3	3.25	0	79.34	0	0.28	0	0	14.67	0	0	0	0	0	0	6.03	6.03
	Inverter	MV1-2	364753	4906063	2	0	0	100.3	100.3	1	2673.24	3.25	0	79.54	0	0.3	0	0	14.78	0	0	0	0	0	0	5.69	5.69
	Inverter	MV1-1	364715	4906166	2	0	0	100.3	100.3	1	2782.53	3.25	0	79.89	0	0.32	0	0	14.98	0	0	0	0	0	0	5.12	5.12
	Inverter	MV1-13	364731	4905241	2	0	0	97.3	97.3	1	1979.04	3.25	0	76.93	0	0.12	0	0	13.42	0	0	0	0	0	0	6.84	6.84
	Inverter	MV2-4	365586	4906624	2	0	0	100.3	100.3	1	2986.21	3.25	0	80.5	0	0.36	0	0	15.35	0	0	0	0	0	0	4.1	4.1
	Inverter	MV2-3	365820	4906641	2	0	0	100.3	100.3	1	2986.45	3.25	0	80.5	0	0.36	0	0	15.35	0	0	0	0	0	0	4.1	4.1

Inverter	MV1-10	365004	4905564	2	0	0	97.3	97.3	1	2114.76	3.25	0	77.51	0	0.16	0	0	13.7	0	0	0	0	0	0	5.95	5.95
Inverters	G_Inv1	366526.4	4903225.8	2	0	0	87.7	87.7	1	746.66	3.25	0	68.46	0	2.41	0	0	1.1	0	0	0	0	0	0	15.69	15.69
Inverter	MV1-7	364925	4905782	2	0	0	97.3	97.3	1	2345.62	3.25	0	78.41	0	0.22	0	0	14.16	0	0	0	0	0	0	4.53	4.53
Inverters	G_Inv2	366676.9	4903239.1	2	0	0	87.7	87.7	1	867.5	3.25	0	69.77	0	2.43	0	0	1.26	0	0	0	0	0	0	14.21	14.21
Inverters	G_Inv3	366583.7	4903091.4	2	0	0	87.7	87.7	1	874.33	3.25	0	69.83	0	2.43	0	0	1.27	0	0	0	0	0	0	14.13	14.13
Inverter	MV3-18	367752	4907412	2	0	0	100.3	100.3	1	4180.54	3.25	0	83.42	0	0.55	0	0	17.33	0	0	0	0	0	0	-1	-1
Inverters	G_Inv4	366732.8	4903105	2	0	0	87.7	87.7	1	985.17	3.25	0	70.87	0	2.45	0	0	1.41	0	0	0	0	0	0	12.93	12.93
Inverter	MV3-12	367668	4907594	2	0	0	100.3	100.3	1	4309.97	3.25	0	83.69	0	0.57	0	0	17.54	0	0	0	0	0	0	-1.48	-1.48
Inverters	G_Inv5	366638.5	4902958.1	2	0	0	87.7	87.7	1	1004.45	3.25	0	71.04	0	2.45	0	0	1.43	0	0	0	0	0	0	12.74	12.74
Inverter	MV3-21	368478	4907206	2	0	0	100.3	100.3	1	4377.74	3.25	0	83.83	0	0.58	0	0	17.64	0	0	0	0	0	0	-1.73	-1.73
Inverter	MV3-13	367963	4907577	2	0	0	100.3	100.3	1	4422.99	3.25	0	83.91	0	0.58	0	0	17.71	0	0	0	0	0	0	-1.9	-1.9
Inverter	MV3-19	368357	4907347	2	0	0	100.3	100.3	1	4424.96	3.25	0	83.92	0	0.58	0	0	17.72	0	0	0	0	0	0	-1.9	-1.9
Inverter	MV3-17	368178	4907472	2	0	0	100.3	100.3	1	4435.86	3.25	0	83.94	0	0.58	0	0	17.73	0	0	0	0	0	0	-1.94	-1.94
Inverter	MV2-1	365842	4906816	2	0	0	97.3	97.3	1	3160.77	3.25	0	81	0	0.39	0	0	15.65	0	0	0	0	0	0	0.27	0.27
Inverter	MV3-15	368357	4907477	2	0	0	100.3	100.3	1	4533.96	3.25	0	84.13	0	0.59	0	0	17.88	0	0	0	0	0	0	-2.29	-2.29
Inverter	MV3-7	367945	4907754	2	0	0	100.3	100.3	1	4572.62	3.25	0	84.2	0	0.6	0	0	17.94	0	0	0	0	0	0	-2.43	-2.43
Inverter	MV3-20	368689	4907317	2	0	0	100.3	100.3	1	4592.45	3.25	0	84.24	0	0.6	0	0	17.97	0	0	0	0	0	0	-2.5	-2.5
Inverter	MV3-10	368167	4907669	2	0	0	100.3	100.3	1	4601.03	3.25	0	84.26	0	0.6	0	0	17.98	0	0	0	0	0	0	-2.53	-2.53
Inverter	MV3-16	368514	4907475	2	0	0	100.3	100.3	1	4618.72	3.25	0	84.29	0	0.6	0	0	18.01	0	0	0	0	0	0	-2.59	-2.59
Inverter	MV3-11	368346	4907662	2	0	0	100.3	100.3	1	4685.21	3.25	0	84.41	0	0.61	0	0	18.11	0	0	0	0	0	0	-2.83	-2.83
Inverter	MV3-3	367939	4907927	2	0	0	100.3	100.3	1	4725.71	3.25	0	84.49	0	0.62	0	0	18.17	0	0	0	0	0	0	-2.97	-2.97
Inverter	MV3-14	368684	4907498	2	0	0	100.3	100.3	1	4735.07	3.25	0	84.51	0	0.62	0	0	18.19	0	0	0	0	0	0	-3	-3
Inverter	MV3-6	368162	4907834	2	0	0	100.3	100.3	1	4743.26	3.25	0	84.52	0	0.62	0	0	18.2	0	0	0	0	0	0	-3.03	-3.03
Inverters	G_Inv6	366788.5	4902972	2	0	0	87.7	87.7	1	1108.56	3.25	0	71.9	0	2.47	0	0	1.56	0	0	0	0	0	0	11.74	11.74
Inverter	MV3-9	368512	4907703	2	0	0	100.3	100.3	1	4807.87	3.25	0	84.64	0	0.62	0	0	18.3	0	0	0	0	0	0	-3.25	-3.25
Inverters	G_Inv7	366694.6	4902824.7	2	0	0	87.7	87.7	1	1138.92	3.25	0	72.13	0	2.47	0	0	1.6	0	0	0	0	0	0	11.46	11.46
Inverter	MV3-8	368680	4907712	2	0	0	100.3	100.3	1	4908.05	3.25	0	84.82	0	0.63	0	0	18.44	0	0	0	0	0	0	-3.58	-3.58
Inverters	G_Inv8	366844.5	4902838.5	2	0	0	87.7	87.7	1	1237.02	3.25	0	72.85	0	2.48	0	0	1.72	0	0	0	0	0	0	10.61	10.61
Inverters	G_Inv9	366750.9	4902691.8	2	0	0	87.7	87.7	1	1275.38	3.25	0	73.11	0	2.49	0	0	1.77	0	0	0	0	0	0	10.29	10.29
Inverter	MV6-3	370207	4907140	2	0	0	100.3	100.3	1	5527.07	3.25	0	85.85	0	0.68	0	0	19.34	0	0	0	0	0	0	-5.56	-5.56
Inverter	MV6-2	370085	4907339	2	0	0	100.3	100.3	1	5562.61	3.25	0	85.91	0	0.68	0	0	19.39	0	0	0	0	0	0	-5.67	-5.67
Inverters	G_Inv10	366900.7	4902704.8	2	0	0	87.7	87.7	1	1369.02	3.25	0	73.73	0	2.5	0	0	1.89	0	0	0	0	0	0	9.55	9.55
Inverter	MV4-11	369264	4908855	2	0	0	100.3	100.3	1	6183.55	3.25	0	86.82	0	0.71	0	0	20.24	0	0	0	0	0	0	-7.46	-7.46
Inverter	MV4-7	369035	4909001	2	0	0	100.3	100.3	1	6188.29	3.25	0	86.83	0	0.71	0	0	20.25	0	0	0	0	0	0	-7.48	-7.48
Inverter	MV4-10	369312	4908858	2	0	0	100.3	100.3	1	6212.18	3.25	0	86.86	0	0.71	0	0	20.28	0	0	0	0	0	0	-7.54	-7.54
Inverter	MV4-8	369256	4909001	2	0	0	100.3	100.3	1	6302.56	3.25	0	86.99	0	0.71	0	0	20.4	0	0	0	0	0	0	-7.79	-7.79
Inverter	MV4-9	369289	4909001	2	0	0	100.3	100.3	1	6320.11	3.25	0	87.01	0	0.71	0	0	20.42	0	0	0	0	0	0	-7.84	-7.84
Inverter	MV4-4	369027	4909199	2	0	0	100.3	100.3	1	6356.16	3.25	0	87.06	0	0.71	0	0	20.47	0	0	0	0	0	0	-7.94	-7.94
Inverter	MV4-6	369243	4909192	2	0	0	100.3	100.3	1	6458.62	3.25	0	87.2	0	0.71	0	0	20.6	0	0	0	0	0	0	-8.21	-8.21
Inverter	MV4-5	369289	4909199	2	0	0	100.3	100.3	1	6488.41	3.25	0	87.24	0	0.71	0	0	20.64	0	0	0	0	0	0	-8.29	-8.29
Inverter	MV5-5	370015	4908690	2	0	0	100.3	100.3	1	6491.56	3.25	0	87.25	0	0.71	0	0	20.65	0	0	0	0	0	0	-8.3	-8.3
Inverter	MV4-1	369011	4909397	2	0	0	100.3	100.3	1	6521.94	3.25	0	87.29	0	0.71	0	0	20.69	0	0	0	0	0	0	-8.38	-8.38
Inverter	MV5-2	370006	4908853	2	0	0	100.3	100.3	1	6613.19	3.25	0	87.41	0	0.71	0	0	20.81	0	0	0	0	0	0	-8.62	-8.62
Inverter	MV4-3	369229	4909397	2	0	0	100.3	100.3	1	6628.17	3.25	0	87.43	0	0.71	0	0	20.83	0	0	0	0	0	0	-8.66	-8.66
Inverter	MV4-2	369272	4909397	2	0	0	100.3	100.3	1	6649.76	3.25	0	87.46	0	0.71	0	0	20.85	0	0	0	0	0	0	-8.71	-8.71
Inverter	MV5-4	370324	4908707	2	0	0	100.3	100.3	1	6703.75	3.25	0	87.53	0	0.71	0	0	20.92	0	0	0	0	0	0	-8.85	-8.85
Inverter	MV5-3	370231	4908851	2	0	0	100.3	100.3	1	6753.11	3.25	0	87.59	0	0.71	0	0	20.99	0	0	0	0	0	0	-8.98	-8.98
Inverter	MV5-1	370020	4909142	2	0	0	100.3	100.3	1	6851.01	3.25	0	87.72	0	0.71	0	0	21.11	0	0	0	0	0	0	-9.23	-9.23
Inverter	MV6-1	370235	4907364	2	0	0	97.3	97.3	1	5692.15	3.25	0	86.11	0	0.69	0	0	19.57	0	0	0	0	0	0	-9.05	-9.05
DSTATCOM - 10 MVAR #2	DSAT2	369403	4908757	2.5	0	0	96.6	96.6	1	6178.75	3.5	0	86.82	0	3.79	0	0	3.92	0	0	0	0	0	0	2.1	2.1
DSTATCOM - 10 MVAR #1	DSAT1	369437	4908757	2.5	0	0	96.6	96.6	1	6198	3.5	0	86.85	0	3.79	0	0	3.93	0	0	0	0	0	0	2.06	2.06
Inverter	MV1-3	364440	4906039	2	0	0	89.1	89.1	1	2803.1	3.25	0	79.95	0	1.1	0	0	9.32	0	0	0	0	0	0	-1.31	-1.31
Inverter	MV2-2	365977	4906654	2	0	0	89.1	89.1	1	2998.52	3.25	0	80.54	0	1.15	0	0	9.61	0	0	0	0	0	0	-2.24	-2.24
SubstationTransformer	W_ST	369711.17	4906112.3	2.5	0	0	92	92	1	4520.46	4.25	0	84.1	0	1.51	2.45	0.24	8.04	0	0	0	0	0	0	-4.12	-4.12
Westbrook Inverter Enclosur	W_INV3	369508	4906164	2	0	0	89.1	89.1	1	4380.71	3.25	0	83.83	0	1.49	0	0	11.62	0	0	0	0	0	0	-7.88	-7.88
Westbrook Inverter Enclosur	W_INV2	369374	4906388	2	0	0	89.1	89.1	1	4406.77	3.25	0	83.88	0	1.49	0	0	11.66	0	0	0	0	0	0	-7.97	-7.97
Inverter	MV3-22	368656	4907142	2	0	0	89.1	89.1	1	4433.74	3.25	0	83.94	0	1.5	0	0	11.69	0	0	0	0	0	0	-8.07	-8.07
Westbrook Inverter Enclosur	W_INV4	369673	4906164	2	0	0	89.1	89.1	1	4516.98	3.25	0	84.1	0	1.52	0	0	11.81	0	0	0	0	0	0	-8.37	-8.37
Westbrook Inverter Enclosur	W_INV7	369780	4906417	2	0	0	89.1	89.1	1	4748.84	3.25	0	84.53	0	1.58	0	0	12.13	0	0	0	0	0	0	-9.18	-9.18
Westbrook Inverter Enclosur	W_INV5	369719	4906574	2	0	0	89.1	89.1	1	4793.27	3.25	0	84.61	0	1.59	0	0	12.19	0	0	0	0	0	0	-9.33	-9.33
Inverter	MV3-5	368340	4907843	2	0	0	89.1	89.1	1	4837.87	3.25	0	84.69	0	1.6	0	0	12.25	0	0	0	0	0	0	-9.48	-9.48
Inverter	MV3-1	368156	4907976	2	0	0	89.1	89.1	1	4866.03	3.25	0	84.74	0	1.61	0	0	12.28	0	0	0	0	0	0	-9.58	-9.58
Westbrook Inverter Enclosur	W_INV6	369875	4906578	2	0	0	89.1	89.1	1	4920.33	3.25	0	84.84	0	1.62	0	0	12.36	0	0	0	0	0	0	-9.76	-9.76
Inverter	MV3-4	368502	4907925	2	0	0	89.1	89.1	1	4990.98	3.25	0	84.96	0	1.64	0	0	12.45	0	0	0	0	0	0	-9.99	-9.99
Inverter	MV3-2	368671	4907928	2	0	0	89.1	89.1	1	5083.12	3.25	0	85.12	0	1.66	0	0	12.57	0	0	0	0	0	0	-10.3	-10.3
Fixed Reactor Bank 1	FRB1	369378	4908755	6	0	0	89.8	89.8	1	6163.02	5.25	0	86.8	0	-0.39	0	0	9.91	0	0	0	0	0	0	-6.54	-6.54
Fixed Reactor Bank 2	FRB2	369464	4908755	6	0	0	89.8	89.8	1	6211.74	5.25	0	86.86	0	-0.39	0	0	9.96	0	0	0	0	0	0	-6.66	-6.66
Inverter	MV4-15	369176	4908481	2	0	0	89.1	89.1	1	5822.88	3.25	0	86.3	0	1.84	0	0	13.54	0	0	0	0	0	0	-12.63	-12.63
Inverter	MV4-14	369176	4908507	2	0	0	89.1	89.1	1	5844.44	3.25	0	86.33	0	1.85	0	0	13.57	0	0	0	0	0	0	-12.69	-12.69
Inverter	MV4-13	369051	4908605	2	0	0	89.1	89.1	1	5858.21	3.25	0	86.36	0	1.85	0	0	13.58	0	0	0	0	0	0	-12.73	-12.73
Inverter	MV4-12	369043	4908803	2	0	0	89.1	89.1	1	6022.25	3.25	0	86.6	0	1.89	0	0	13.79	0	0	0	0	0	0	-13.22	-13.22
Inverter	MV5-6	369982	4908507	2	0	0	89.1	89.1	1	6329.45	3.25	0	87.03	0	1.97	0	0	14.17	0	0	0	0	0	0	-14.11	-14.11
Westbrook Inverter Enclosur	W_INV1	369409	4906578	2	0	0	86.1	86.1	1	4553.81	3.25	0	84.17	0	1.53	0	0	11.86	0	0	0	0	0	0	-11.5	-11.5
Inverter	MV6-4	370250	4906966	2	0	0	86.1	86.1	1	5453.19	3.25	0	85.73	0	1.75	0	0	13.06	0	0	0	0	0	0	-14.49	-14.49

Inverter Transformer	MV1-14 T	365157	4905049	2	0	0	69.4	69.4	1	1586.37	3.25	0	75.01	0	2.01	0	0	4.53	0	0	0	0	0	0	-12.2	-12.2
Westbrook Inverter Transfor	W_INVTR1	369403	4906578	2	0	0	78.2	78.2	1	4549.21	3.25	0	84.16	0	-3.08	0	0	2.26	0	0	0	0	0	0	-5.09	-5.09
Westbrook Inverter Transfor	W_INVTR3	369514	4906164	2	0	0	77.3	77.3	1	4385.63	3.25	0	83.84	0	-3.05	0	0	2.2	0	0	0	0	0	0	-5.65	-5.65
Westbrook Inverter Transfor	W_INVTR2	369368	4906388	2	0	0	77.3	77.3	1	4402.07	3.25	0	83.87	0	-3.05	0	0	2.2	0	0	0	0	0	0	-5.68	-5.68
Westbrook Inverter Transfor	W_INVTR4	369679	4906164	2	0	0	77.3	77.3	1	4521.97	3.25	0	84.11	0	-3.08	0	0	2.25	0	0	0	0	0	0	-5.93	-5.93
Westbrook Inverter Transfor	W_INVTR7	369786	4906417	2	0	0	77.3	77.3	1	4753.73	3.25	0	84.54	0	-3.13	0	0	2.33	0	0	0	0	0	0	-6.4	-6.4
Westbrook Inverter Transfor	W_INVTR5	369725	4906574	2	0	0	77.3	77.3	1	4798.03	3.25	0	84.62	0	-3.14	0	0	2.34	0	0	0	0	0	0	-6.49	-6.49
Westbrook Inverter Transfor	W_INVTR6	369881	4906578	2	0	0	77.3	77.3	1	4925.15	3.25	0	84.85	0	-3.16	0	0	2.39	0	0	0	0	0	0	-6.73	-6.73
Inverter Transformer	MV1-13 T	364725	4905241	2	0	0	69.4	69.4	1	1982.64	3.25	0	76.94	0	2.17	0	0	4.95	0	0	0	0	0	0	-14.71	-14.71
Inverter Transformer	MV1-10 T	365010	4905564	2	0	0	69.4	69.4	1	2112.18	3.25	0	77.49	0	2.21	0	0	5.08	0	0	0	0	0	0	-15.43	-15.43
Inverter Transformer	MV1-7 T	364919	4905782	2	0	0	69.4	69.4	1	2348.16	3.25	0	78.41	0	2.3	0	0	5.3	0	0	0	0	0	0	-16.66	-16.66
Inverter Transformer	MV2-1 T	365836	4906816	2	0	0	69.4	69.4	1	3160.92	3.25	0	81	0	2.56	0	0	6.02	0	0	0	0	0	0	-20.22	-20.22
Inverter Transformer	MV6-4 T	370244	4906966	2	0	0	69.4	69.4	1	5448.42	3.25	0	85.73	0	3.1	0	0	7.67	0	0	0	0	0	0	-27.15	-27.15
Inverter Transformer	MV6-1 T	370230	4907364	2	0	0	69.4	69.4	1	5688.36	3.25	0	86.1	0	3.14	0	0	7.83	0	0	0	0	0	0	-27.71	-27.71
Inverter Transformer	MV1-15 T	365309	4904994	2	0	0	56.1	56.1	1	1469.24	3.25	0	74.34	0	0.19	0	0	5.95	0	0	0	0	0	0	-24.42	-24.42
Inverter Transformer	MV1-12 T	365044	4905386	2	0	0	56.1	56.1	1	1937.34	3.25	0	76.74	0	0.38	0	0	6.92	0	0	0	0	0	0	-27.98	-27.98
Inverter Transformer	MV1-11 T	364649	4905414	2	0	0	56.1	56.1	1	2167.03	3.25	0	77.72	0	0.47	0	0	7.37	0	0	0	0	0	0	-29.5	-29.5
Inverter Transformer	MV1-8 T	364782	4905647	2	0	0	56.1	56.1	1	2291.31	3.25	0	78.2	0	0.53	0	0	7.6	0	0	0	0	0	0	-30.27	-30.27
Inverter Transformer	MV1-9 T	364555	4905646	2	0	0	56.1	56.1	1	2410.93	3.25	0	78.64	0	0.58	0	0	7.83	0	0	0	0	0	0	-30.99	-30.99
Inverter Transformer	MV1-4 T	364821	4905918	2	0	0	56.1	56.1	1	2513.1	3.25	0	79	0	0.62	0	0	8.01	0	0	0	0	0	0	-31.58	-31.58
Inverter Transformer	MV1-5 T	364676	4905892	2	0	0	56.1	56.1	1	2556.82	3.25	0	79.15	0	0.64	0	0	8.09	0	0	0	0	0	0	-31.83	-31.83
Inverter Transformer	MV1-6 T	364482	4905835	2	0	0	56.1	56.1	1	2608.55	3.25	0	79.33	0	0.66	0	0	8.19	0	0	0	0	0	0	-32.12	-32.12
Inverter Transformer	MV1-2 T	364759	4906063	2	0	0	56.1	56.1	1	2670.63	3.25	0	79.53	0	0.69	0	0	8.3	0	0	0	0	0	0	-32.46	-32.46
Inverter Transformer	MV1-1 T	364721	4906166	2	0	0	56.1	56.1	1	2779.95	3.25	0	79.88	0	0.74	0	0	8.49	0	0	0	0	0	0	-33.05	-33.05
Inverter Transformer	MV1-3 T	364435	4906039	2	0	0	56.1	56.1	1	2805.74	3.25	0	79.96	0	0.75	0	0	8.53	0	0	0	0	0	0	-33.18	-33.18
Inverter Transformer	MV2-3 T	365814	4906641	2	0	0	56.1	56.1	1	2986.65	3.25	0	80.5	0	0.82	0	0	8.85	0	0	0	0	0	0	-34.11	-34.11
Inverter Transformer	MV2-4 T	365590	4906628	2	0	0	56.1	56.1	1	2989.75	3.25	0	80.51	0	0.83	0	0	8.85	0	0	0	0	0	0	-34.13	-34.13
Inverter Transformer	MV2-2 T	365982	4906654	2	0	0	56.1	56.1	1	2998.62	3.25	0	80.54	0	0.83	0	0	8.87	0	0	0	0	0	0	-34.18	-34.18
Inverter Transformer	MV3-18 T	367757	4907412	2	0	0	56.1	56.1	1	4182.74	3.25	0	83.43	0	1.32	0	0	10.72	0	0	0	0	0	0	-39.41	-39.41
Inverter Transformer	MV3-12 T	367674	4907594	2	0	0	56.1	56.1	1	4312.42	3.25	0	83.69	0	1.37	0	0	10.91	0	0	0	0	0	0	-39.91	-39.91
Inverter Transformer	MV3-21 T	368484	4907206	2	0	0	56.1	56.1	1	4381.25	3.25	0	83.83	0	1.39	0	0	11.01	0	0	0	0	0	0	-40.18	-40.18
Inverter Transformer	MV3-13 T	367958	4907577	2	0	0	56.1	56.1	1	4420.68	3.25	0	83.91	0	1.41	0	0	11.06	0	0	0	0	0	0	-40.32	-40.32
Inverter Transformer	MV3-19 T	368352	4907347	2	0	0	56.1	56.1	1	4422.2	3.25	0	83.91	0	1.41	0	0	11.07	0	0	0	0	0	0	-40.33	-40.33
Inverter Transformer	MV3-22 T	368661	4907142	2	0	0	56.1	56.1	1	4436.83	3.25	0	83.94	0	1.42	0	0	11.09	0	0	0	0	0	0	-40.39	-40.39
Inverter Transformer	MV3-17 T	368183	4907472	2	0	0	56.1	56.1	1	4438.41	3.25	0	83.94	0	1.42	0	0	11.09	0	0	0	0	0	0	-40.39	-40.39
Inverter Transformer	MV3-15 T	368351	4907477	2	0	0	56.1	56.1	1	4530.73	3.25	0	84.12	0	1.45	0	0	11.22	0	0	0	0	0	0	-40.73	-40.73
Inverter Transformer	MV3-7 T	367951	4907754	2	0	0	56.1	56.1	1	4575.28	3.25	0	84.21	0	1.47	0	0	11.28	0	0	0	0	0	0	-40.9	-40.9
Inverter Transformer	MV3-20 T	368683	4907317	2	0	0	56.1	56.1	1	4588.83	3.25	0	84.23	0	1.47	0	0	11.3	0	0	0	0	0	0	-40.95	-40.95
Inverter Transformer	MV3-10 T	368162	4907669	2	0	0	56.1	56.1	1	4598.59	3.25	0	84.25	0	1.48	0	0	11.31	0	0	0	0	0	0	-40.98	-40.98
Inverter Transformer	MV3-16 T	368509	4907475	2	0	0	56.1	56.1	1	4615.91	3.25	0	84.29	0	1.48	0	0	11.34	0	0	0	0	0	0	-41.05	-41.05
Inverter Transformer	MV3-11 T	368340	4907662	2	0	0	56.1	56.1	1	4682.1	3.25	0	84.41	0	1.51	0	0	11.43	0	0	0	0	0	0	-41.29	-41.29
Inverter Transformer	MV3-3 T	367944	4907927	2	0	0	56.1	56.1	1	4727.85	3.25	0	84.49	0	1.53	0	0	11.49	0	0	0	0	0	0	-41.45	-41.45
Inverter Transformer	MV3-14 T	368678	4907498	2	0	0	56.1	56.1	1	4731.57	3.25	0	84.5	0	1.53	0	0	11.49	0	0	0	0	0	0	-41.46	-41.46
Inverter Transformer	MV3-6 T	368156	4907834	2	0	0	56.1	56.1	1	4740.42	3.25	0	84.52	0	1.53	0	0	11.51	0	0	0	0	0	0	-41.49	-41.49
Inverter Transformer	MV3-9 T	368517	4907703	2	0	0	56.1	56.1	1	4810.57	3.25	0	84.64	0	1.56	0	0	11.6	0	0	0	0	0	0	-41.74	-41.74
Inverter Transformer	MV3-5 T	368335	4907843	2	0	0	56.1	56.1	1	4835.36	3.25	0	84.69	0	1.57	0	0	11.64	0	0	0	0	0	0	-41.83	-41.83
Inverter Transformer	MV3-1 T	368150	4907976	2	0	0	56.1	56.1	1	4863.27	3.25	0	84.74	0	1.58	0	0	11.67	0	0	0	0	0	0	-41.93	-41.93
Inverter Transformer	MV3-8 T	368685	4907712	2	0	0	56.1	56.1	1	4910.86	3.25	0	84.82	0	1.59	0	0	11.74	0	0	0	0	0	0	-42.09	-42.09
Inverter Transformer	MV3-4 T	368507	4907925	2	0	0	56.1	56.1	1	4993.57	3.25	0	84.97	0	1.62	0	0	11.85	0	0	0	0	0	0	-42.38	-42.38
Inverter Transformer	MV3-2 T	368677	4907928	2	0	0	56.1	56.1	1	5086.37	3.25	0	85.13	0	1.66	0	0	11.97	0	0	0	0	0	0	-42.69	-42.69
Inverter Transformer	MV6-3 T	370202	4907140	2	0	0	56.1	56.1	1	5523.19	3.25	0	85.84	0	1.81	0	0	12.52	0	0	0	0	0	0	-44.12	-44.12
Inverter Transformer	MV6-2 T	370091	4907339	2	0	0	56.1	56.1	1	5567.11	3.25	0	85.91	0	1.82	0	0	12.58	0	0	0	0	0	0	-44.26	-44.26
Inverter Transformer	MV4-15 T	369170	4908481	2	0	0	56.1	56.1	1	5819.53	3.25	0	86.3	0	1.91	0	0	12.89	0	0	0	0	0	0	-45.03	-45.03
Inverter Transformer	MV4-14 T	369182	4908507	2	0	0	56.1	56.1	1	5847.79	3.25	0	86.34	0	1.92	0	0	12.92	0	0	0	0	0	0	-45.12	-45.12
Inverter Transformer	MV4-13 T	369057	4908605	2	0	0	56.1	56.1	1	5861.42	3.25	0	86.36	0	1.92	0	0	12.94	0	0	0	0	0	0	-45.16	-45.16
Inverter Transformer	MV4-12 T	369049	4908803	2	0	0	56.1	56.1	1	6025.36	3.25	0	86.6	0	1.97	0	0	13.13	0	0	0	0	0	0	-45.65	-45.65
Inverter Transformer	MV4-11 T	369269	4908855	2	0	0	56.1	56.1	1	6186.26	3.25	0	86.83	0	2.02	0	0	13.32	0	0	0	0	0	0	-46.11	-46.11
Inverter Transformer	MV4-7 T	369040	4909001	2	0	0	56.1	56.1	1	6190.81	3.25	0	86.83	0	2.02	0	0	13.33	0	0	0	0	0	0	-46.13	-46.13
Inverter Transformer	MV4-10 T	369307	4908858	2	0	0	56.1	56.1	1	6209.45	3.25	0	86.86	0	2.03	0	0	13.35	0	0	0	0	0	0	-46.18	-46.18
Inverter Transformer	MV4-8 T	369262	4909001	2	0	0	56.1	56.1	1	6305.74	3.25	0	86.99	0	2.06	0	0	13.46	0	0	0	0	0	0	-46.46	-46.46
Inverter Transformer	MV4-9 T	369284	4909001	2	0	0	56.1	56.1	1	6317.44	3.25	0	87.01	0	2.06	0	0	13.47	0	0	0	0	0	0	-46.49	-46.49
Inverter Transformer	MV5-6 T	369987	4908507	2	0	0	56.1	56.1	1	6332.67	3.25	0	87.03	0	2.07	0	0	13.49	0	0	0	0	0	0	-46.53	-46.53
Inverter Transformer	MV4-4 T	369033	4909199	2	0	0	56.1	56.1	1	6359.1	3.25	0	87.07	0	2.08	0	0	13.52	0	0	0	0	0	0	-46.61	-46.61
Inverter Transformer	MV4-6 T	369249	4909192	2	0	0	56.1	56.1	1	6461.71	3.25	0	87.21	0	2.11	0	0	13.64	0	0	0	0	0	0	-46.89	-46.89
Inverter Transformer	MV4-5 T	369283	4909199	2	0	0	56.1	56.1	1	6485.3	3.25	0	87.24	0	2.11	0	0	13.66	0	0	0	0	0	0	-46.96	-46.96
Inverter Transformer	MV5-5 T	370021	4908690	2	0	0	56.1	56.1	1	6495.35	3.25	0	87.25	0	2.12	0	0	13.67	0	0	0	0	0	0	-46.98	-46.98
Inverter Transformer	MV4-1 T	369017	4909397	2	0	0	56.1	56.1	1	6524.79	3.25	0	87.29	0	2.13	0	0	13.71	0	0	0	0	0	0	-47.07	-47.07
Inverter Transformer	MV5-2 T	370011	4908853	2	0	0	56.1	56.1	1	6616.28	3.25	0	87.41	0	2.15	0	0	13.81	0	0	0	0	0	0	-47.32	-47.32
Inverter Transformer	MV4-3 T	369234	4909397	2	0	0	56.1	56.1	1	6630.67	3.25	0	87.43	0	2.16	0	0	13.83	0	0	0	0	0	0	-47.35	-47.35
Inverter Transformer	MV4-2 T	369267	4909397	2	0	0	56.1	56.1	1	6647.24	3.25	0	87.45	0	2.16	0	0	13.84	0	0	0	0	0	0	-47.4	-47.4
Inverter Transformer	MV5-4 T	370330	4908707	2	0	0	56.1	56.1	1	6707.7	3.25	0	87.53	0	2.18	0	0	13.91	0	0	0	0	0	0	-47.56	-47.56
Inverter Transformer	MV5-3 T	370237	4908851	2	0	0	56.1	56.1	1	6756.94	3.25	0	87.6	0	2.19	0	0	13.97	0	0	0	0	0	0	-47.69	-47.69
Inverter Transformer	MV5-1 T	370015	4909142	2	0	0	56.1	56.1	1	6848.01	3.25	0	87.71	0	2.22	0	0	14.07	0	0	0	0	0	0	-47.94	-47.94
Line Reactor	NGR	369421	4908787.5	5	0	0	45.4	45.4	1	6214.09	5.25	0	86.87	0	3.23	1.36	0.1	2.54	0	0	0	0	0	0	-48.65	-48.65

Limit. Valu 0 0
Level D/N: 25.5825 25.5825

Receiver: Existing Noise Receptor
ID: G-43
X: 365772.2
Y: 4903432
Z: 4.5
Ground: 0

ISO	Description	ID	X	Y	Z	Ground	ReflOrd	LxT	LxN	L/A	Dist.	hm	Freq	Adiv	K0b	Agr	Abar	z	Aatm	Afol	Ahous	Cmet	CmetN	Dc	RL	LtotT	LtotN
	Inverter	MV1-15	365315	4904994	2	0	0	100.3	100.3	1	1627.54	3.25	0	75.23	0	0.01	0	0	12.63	0	0	0	0	0	0	12.44	12.44
	Sol_Luce Substation	S_Substation	369426	4908792	3.5	0	0	112.1	112.1	1	6486.9	5.25	0	87.24	0	1.27	2.54	0.29	10.25	0	0	0	0	0	0	10.77	10.77
	Inverter	MV1-12	365038	4905386	2	0	0	100.3	100.3	1	2087.38	3.25	0	77.39	0	0.15	0	0	13.64	0	0	0	0	0	0	9.12	9.12
	Inverter	MV1-11	364655	4905414	2	0	0	100.3	100.3	1	2275.18	3.25	0	78.14	0	0.2	0	0	14.02	0	0	0	0	0	0	7.95	7.95
	Inverter	MV1-8	364788	4905647	2	0	0	100.3	100.3	1	2423.82	3.25	0	78.69	0	0.24	0	0	14.31	0	0	0	0	0	0	7.07	7.07
	Inverter	MV1-14	365163	4905049	2	0	0	97.3	97.3	1	1727.95	3.25	0	75.75	0	0.05	0	0	12.87	0	0	0	0	0	0	8.65	8.65
	Gardiner Substation	G_Sub	366586.3	4903349.9	2.5	0	0	90.8	90.8	1	818.23	3.5	0	69.26	0	-0.39	0	0	2.14	0	0	0	0	0	0	19.77	19.77
	Inverter	MV1-9	364561	4905646	2	0	0	100.3	100.3	1	2523.65	3.25	0	79.04	0	0.26	0	0	14.5	0	0	0	0	0	0	6.51	6.51
	Inverter	MV1-4	364815	4905918	2	0	0	100.3	100.3	1	2663.91	3.25	0	79.51	0	0.29	0	0	14.77	0	0	0	0	0	0	5.74	5.74
	Inverter	MV1-5	364671	4905892	2	0	0	100.3	100.3	1	2695.23	3.25	0	79.61	0	0.3	0	0	14.82	0	0	0	0	0	0	5.58	5.58
	Inverter	MV1-6	364477	4905835	2	0	0	100.3	100.3	1	2729.83	3.25	0	79.72	0	0.31	0	0	14.89	0	0	0	0	0	0	5.4	5.4
	Inverter	MV1-2	364753	4906063	2	0	0	100.3	100.3	1	2821.51	3.25	0	80.01	0	0.33	0	0	15.05	0	0	0	0	0	0	4.92	4.92
	Inverter	MV1-1	364715	4906166	2	0	0	100.3	100.3	1	2931.29	3.25	0	80.34	0	0.35	0	0	15.25	0	0	0	0	0	0	4.37	4.37
	Inverter	MV1-13	364731	4905241	2	0	0	97.3	97.3	1	2087.24	3.25	0	77.39	0	0.15	0	0	13.64	0	0	0	0	0	0	6.12	6.12
	Inverter	MV2-4	365586	4906624	2	0	0	100.3	100.3	1	3197.43	3.25	0	81.1	0	0.4	0	0	15.72	0	0	0	0	0	0	3.1	3.1
	Inverter	MV1-10	365004	4905564	2	0	0	97.3	97.3	1	2266.18	3.25	0	78.11	0	0.2	0	0	14.01	0	0	0	0	0	0	5	5
	Inverter	MV2-3	365820	4906641	2	0	0	100.3	100.3	1	3209.36	3.25	0	81.13	0	0.4	0	0	15.74	0	0	0	0	0	0	3.05	3.05
	Inverters	G_Inv1	366526.4	4903225.8	2	0	0	87.7	87.7	1	781.88	3.25	0	68.86	0	2.42	0	0	1.14	0	0	0	0	0	0	15.23	15.23
	Inverter	MV1-7	364925	4905782	2	0	0	97.3	97.3	1	2498.05	3.25	0	78.95	0	0.26	0	0	14.45	0	0	0	0	0	0	3.65	3.65
	Inverters	G_Inv3	366583.7	4903091.4	2	0	0	87.7	87.7	1	880.08	3.25	0	69.89	0	2.43	0	0	1.27	0	0	0	0	0	0	14.07	14.07
	Inverters	G_Inv2	366676.9	4903239.1	2	0	0	87.7	87.7	1	925.04	3.25	0	70.32	0	2.44	0	0	1.33	0	0	0	0	0	0	13.57	13.57
	Inverters	G_Inv5	366638.5	4902958.1	2	0	0	87.7	87.7	1	987.45	3.25	0	70.89	0	2.45	0	0	1.41	0	0	0	0	0	0	12.91	12.91
	Inverters	G_Inv4	366732.8	4903105	2	0	0	87.7	87.7	1	1014.74	3.25	0	71.13	0	2.45	0	0	1.45	0	0	0	0	0	0	12.64	12.64
	Inverter	MV3-18	367752	4907412	2	0	0	100.3	100.3	1	4445.22	3.25	0	83.96	0	0.58	0	0	17.75	0	0	0	0	0	0	-1.98	-1.98
	Inverter	MV3-12	367668	4907594	2	0	0	100.3	100.3	1	4573.44	3.25	0	84.2	0	0.6	0	0	17.94	0	0	0	0	0	0	-2.43	-2.43
	Inverter	MV3-21	368478	4907206	2	0	0	100.3	100.3	1	4643.75	3.25	0	84.34	0	0.61	0	0	18.05	0	0	0	0	0	0	-2.68	-2.68
	Inverter	MV3-13	367963	4907577	2	0	0	100.3	100.3	1	4688.35	3.25	0	84.42	0	0.61	0	0	18.12	0	0	0	0	0	0	-2.84	-2.84
	Inverter	MV3-19	368357	4907347	2	0	0	100.3	100.3	1	4691.31	3.25	0	84.43	0	0.61	0	0	18.12	0	0	0	0	0	0	-2.85	-2.85
	Inverter	MV3-17	368178	4907472	2	0	0	100.3	100.3	1	4702.07	3.25	0	84.45	0	0.61	0	0	18.14	0	0	0	0	0	0	-2.88	-2.88
	Inverters	G_Inv7	366694.6	4902824.7	2	0	0	87.7	87.7	1	1104.37	3.25	0	71.86	0	2.46	0	0	1.56	0	0	0	0	0	0	11.77	11.77
	Inverter	MV2-1	365842	4906816	2	0	0	97.3	97.3	1	3384.72	3.25	0	81.59	0	0.43	0	0	16.04	0	0	0	0	0	0	-0.75	-0.75
	Inverters	G_Inv6	366788.5	4902972	2	0	0	87.7	87.7	1	1115.56	3.25	0	71.95	0	2.47	0	0	1.57	0	0	0	0	0	0	11.67	11.67
	Inverter	MV3-15	368357	4907477	2	0	0	100.3	100.3	1	4800.34	3.25	0	84.63	0	0.62	0	0	18.28	0	0	0	0	0	0	-3.22	-3.22
	Inverter	MV3-7	367945	4907754	2	0	0	100.3	100.3	1	4837.43	3.25	0	84.69	0	0.63	0	0	18.34	0	0	0	0	0	0	-3.35	-3.35
	Inverter	MV3-20	368689	4907317	2	0	0	100.3	100.3	1	4858.08	3.25	0	84.73	0	0.63	0	0	18.37	0	0	0	0	0	0	-3.42	-3.42
	Inverter	MV3-10	368167	4907669	2	0	0	100.3	100.3	1	4866.95	3.25	0	84.75	0	0.63	0	0	18.38	0	0	0	0	0	0	-3.45	-3.45
	Inverter	MV3-16	368514	4907475	2	0	0	100.3	100.3	1	4885.01	3.25	0	84.78	0	0.63	0	0	18.41	0	0	0	0	0	0	-3.51	-3.51
	Inverter	MV3-11	368346	4907662	2	0	0	100.3	100.3	1	4951.5	3.25	0	84.89	0	0.64	0	0	18.51	0	0	0	0	0	0	-3.73	-3.73
	Inverter	MV3-3	367939	4907927	2	0	0	100.3	100.3	1	4990	3.25	0	84.96	0	0.64	0	0	18.57	0	0	0	0	0	0	-3.86	-3.86
	Inverter	MV3-14	368684	4907498	2	0	0	100.3	100.3	1	5001.09	3.25	0	84.98	0	0.64	0	0	18.58	0	0	0	0	0	0	-3.89	-3.89
	Inverter	MV3-6	368162	4907834	2	0	0	100.3	100.3	1	5008.87	3.25	0	84.99	0	0.64	0	0	18.59	0	0	0	0	0	0	-3.92	-3.92
	Inverter	MV3-9	368512	4907703	2	0	0	100.3	100.3	1	5074.24	3.25	0	85.11	0	0.65	0	0	18.69	0	0	0	0	0	0	-4.13	-4.13
	Inverter	MV3-8	368680	4907712	2	0	0	100.3	100.3	1	5174.33	3.25	0	85.28	0	0.66	0	0	18.83	0	0	0	0	0	0	-4.46	-4.46
	Inverters	G_Inv8	366844.5	4902838.5	2	0	0	87.7	87.7	1	1225.59	3.25	0	72.77	0	2.48	0	0	1.71	0	0	0	0	0	0	10.7	10.7
	Inverters	G_Inv9	366750.9	4902691.8	2	0	0	87.7	87.7	1	1227.09	3.25	0	72.78	0	2.48	0	0	1.71	0	0	0	0	0	0	10.69	10.69
	Inverters	G_Inv10	366900.7	4902704.8	2	0	0	87.7	87.7	1	1342.51	3.25	0	73.56	0	2.5	0	0	1.85	0	0	0	0	0	0	9.75	9.75
	Inverter	MV6-3	370207	4907140	2	0	0	100.3	100.3	1	5780.72	3.25	0	86.24	0	0.7	0	0	19.69	0	0	0	0	0	0	-6.32	-6.32
	Inverter	MV6-2	370085	4907339	2	0	0	100.3	100.3	1	5819.36	3.25	0	86.3	0	0.7	0	0	19.75	0	0	0	0	0	0	-6.43	-6.43
	Inverter	MV4-11	369264	4908855	2	0	0	100.3	100.3	1	6449.93	3.25	0	87.19	0	0.71	0	0	20.59	0	0	0	0	0	0	-8.19	-8.19
	Inverter	MV4-7	369035	4909001	2	0	0	100.3	100.3	1	6454.43	3.25	0	87.2	0	0.71	0	0	20.6	0	0	0	0	0	0	-8.2	-8.2
	Inverter	MV4-10	369312	4908858	2	0	0	100.3	100.3	1	6478.55	3.25	0	87.23	0	0.71	0	0	20.63	0	0	0	0	0	0	-8.26	-8.26
	Inverter	MV4-8	369256	4909001	2	0	0	100.3	100.3	1	6568.91	3.25	0	87.35	0	0.72	0	0	20.75	0	0	0	0	0	0	-8.5	-8.5
	Inverter	MV4-9	369289	4909001	2	0	0	100.3	100.3	1	6586.47	3.25	0	87.37	0	0.72	0	0	20.77	0	0	0	0	0	0	-8.55	-8.55
	Inverter	MV4-4	369027	4909199	2	0	0	100.3	100.3	1	6622.09	3.25	0	87.42	0	0.71	0	0	20.82	0	0	0	0	0	0	-8.64	-8.64
	Inverter	MV4-6	369243	4909192	2	0	0	100.3	100.3	1	6724.88	3.25	0	87.55	0	0.71	0	0	20.95	0	0	0	0	0	0	-8.91	-8.91
	Inverter	MV4-5	369289	4909199	2	0	0	100.3	100.3	1	6754.72	3.25	0	87.59	0	0.71	0	0	20.99	0	0	0	0	0	0	-8.98	-8.98
	Inverter	MV5-5	370015	4908690	2	0	0	100.3	100.3	1	6756.32	3.25	0	87.59	0	0.71	0	0	20.99	0	0	0	0	0	0	-8.99	-8.99
	Inverter	MV4-1	369011	4909397	2	0	0	100.3	100.3	1	6787.57	3.25	0	87.63	0	0.71	0	0	21.03	0	0	0	0	0	0	-9.07	-9.07
	Inverter	MV5-2	370006	4908853	2	0	0	100.3	100.3	1	6878.39	3.25	0	87.75	0	0.71	0	0	21.15	0	0	0	0	0	0	-9.3	-9.3
	Inverter	MV4-3	369229	4909397	2	0	0	100.3	100.3	1	6894.25	3.25	0	87.77	0	0.71	0	0	21.17	0	0	0	0	0	0	-9.34	-9.34
	Inverter	MV4-2	369272	4909397	2	0	0	100.3	100.3	1	6915.91	3.25	0	87.8	0	0.71	0	0	21.19	0	0	0	0	0	0	-9.39	-9.39
	Inverter	MV5-4	370324	4908707	2	0	0	100.3	100.3	1	6967.39	3.25	0	87.86	0	0.71	0	0	21.26	0	0	0	0	0	0	-9.52	-9.52
	Inverter	MV5-3	370231	4908851	2	0	0	100.3	100.3	1	7017.58	3.25	0	87.92	0	0.71	0	0	21.32	0	0	0	0	0	0	-9.64	-9.64

Inverter	MV5-1	370020	4909142	2	0	0	100.3	100.3	1	7116.73	3.25	0	88.05	0	0.71	0	0	21.45	0	0	0	0	0	0	-9.88	-9.88
Inverter	MV6-1	370235	4907364	2	0	0	97.3	97.3	1	5947.87	3.25	0	86.49	0	0.7	0	0	19.92	0	0	0	0	0	0	-9.8	-9.8
DSTATCOM - 10 MVAR #2	DSAT2	369403	4908757	2.5	0	0	96.6	96.6	1	6445.02	3.5	0	87.18	0	3.8	0	0	4.05	0	0	0	0	0	0	1.59	1.59
DSTATCOM - 10 MVAR #1	DSAT1	369437	4908757	2.5	0	0	96.6	96.6	1	6464.24	3.5	0	87.21	0	3.81	0	0	4.06	0	0	0	0	0	0	1.55	1.55
Inverter	MV1-3	364440	4906039	2	0	0	89.1	89.1	1	2927.66	3.25	0	80.33	0	1.13	0	0	9.51	0	0	0	0	0	0	-1.91	-1.91
Inverter	MV2-2	365977	4906654	2	0	0	89.1	89.1	1	3228.5	3.25	0	81.18	0	1.2	0	0	9.96	0	0	0	0	0	0	-3.29	-3.29
SubstationTransformer	W_ST	369711.17	4906112.3	2.5	0	0	92	92	1	4764.38	4.25	0	84.56	0	1.57	2.39	0.24	8.34	0	0	0	0	0	0	-4.88	-4.88
Westbrook Inverter Enclosur	W_INV3	369508	4906164	2	0	0	89.1	89.1	1	4628.18	3.25	0	84.31	0	1.55	0	0	11.96	0	0	0	0	0	0	-8.76	-8.76
Westbrook Inverter Enclosur	W_INV2	369374	4906388	2	0	0	89.1	89.1	1	4659.5	3.25	0	84.37	0	1.56	0	0	12	0	0	0	0	0	0	-8.87	-8.87
Inverter	MV3-22	368656	4907142	2	0	0	89.1	89.1	1	4698.98	3.25	0	84.44	0	1.57	0	0	12.06	0	0	0	0	0	0	-9	-9
Westbrook Inverter Enclosur	W_INV4	369673	4906164	2	0	0	89.1	89.1	1	4762.36	3.25	0	84.56	0	1.58	0	0	12.14	0	0	0	0	0	0	-9.22	-9.22
Westbrook Inverter Enclosur	W_INV7	369780	4906417	2	0	0	89.1	89.1	1	4997.27	3.25	0	84.97	0	1.64	0	0	12.46	0	0	0	0	0	0	-10.02	-10.02
Westbrook Inverter Enclosur	W_INV5	369719	4906574	2	0	0	89.1	89.1	1	5044.74	3.25	0	85.06	0	1.65	0	0	12.52	0	0	0	0	0	0	-10.17	-10.17
Inverter	MV3-5	368340	4907843	2	0	0	89.1	89.1	1	5103.97	3.25	0	85.16	0	1.67	0	0	12.6	0	0	0	0	0	0	-10.37	-10.37
Inverter	MV3-1	368156	4907976	2	0	0	89.1	89.1	1	5131.32	3.25	0	85.2	0	1.67	0	0	12.64	0	0	0	0	0	0	-10.46	-10.46
Westbrook Inverter Enclosur	W_INV6	369875	4906578	2	0	0	89.1	89.1	1	5170.13	3.25	0	85.27	0	1.68	0	0	12.69	0	0	0	0	0	0	-10.58	-10.58
Inverter	MV3-4	368502	4907925	2	0	0	89.1	89.1	1	5257.27	3.25	0	85.42	0	1.7	0	0	12.81	0	0	0	0	0	0	-10.87	-10.87
Inverter	MV3-2	368671	4907928	2	0	0	89.1	89.1	1	5349.49	3.25	0	85.57	0	1.73	0	0	12.93	0	0	0	0	0	0	-11.16	-11.16
Fixed Reactor Bank 1	FRB1	369378	4908755	6	0	0	89.8	89.8	1	6429.32	5.25	0	87.16	0	-0.36	0	0	10.19	0	0	0	0	0	0	-7.22	-7.22
Fixed Reactor Bank 2	FRB2	369464	4908755	6	0	0	89.8	89.8	1	6477.94	5.25	0	87.23	0	-0.35	0	0	10.24	0	0	0	0	0	0	-7.34	-7.34
Inverter	MV4-15	369176	4908481	2	0	0	89.1	89.1	1	6089.19	3.25	0	86.69	0	1.91	0	0	13.87	0	0	0	0	0	0	-13.42	-13.42
Inverter	MV4-14	369176	4908507	2	0	0	89.1	89.1	1	6110.77	3.25	0	86.72	0	1.91	0	0	13.9	0	0	0	0	0	0	-13.48	-13.48
Inverter	MV4-13	369051	4908605	2	0	0	89.1	89.1	1	6124.58	3.25	0	86.74	0	1.92	0	0	13.92	0	0	0	0	0	0	-13.52	-13.52
Inverter	MV4-12	369043	4908803	2	0	0	89.1	89.1	1	6288.54	3.25	0	86.97	0	1.96	0	0	14.12	0	0	0	0	0	0	-13.99	-13.99
Inverter	MV5-6	369982	4908507	2	0	0	89.1	89.1	1	6593.79	3.25	0	87.38	0	2.03	0	0	14.5	0	0	0	0	0	0	-14.85	-14.85
Westbrook Inverter Enclosur	W_INV1	369409	4906578	2	0	0	86.1	86.1	1	4808.7	3.25	0	84.64	0	1.59	0	0	12.21	0	0	0	0	0	0	-12.38	-12.38
Inverter	MV6-4	370250	4906966	2	0	0	86.1	86.1	1	5704.37	3.25	0	86.12	0	1.81	0	0	13.39	0	0	0	0	0	0	-15.27	-15.27
Westbrook Inverter Transfor	W_INVTR1	369403	4906578	2	0	0	78.2	78.2	1	4804.17	3.25	0	84.63	0	-3.14	0	0	2.35	0	0	0	0	0	0	-5.6	-5.6
Inverter Transformer	MV1-14 T	365157	4905049	2	0	0	69.4	69.4	1	1730.08	3.25	0	75.76	0	2.07	0	0	4.69	0	0	0	0	0	0	-13.17	-13.17
Westbrook Inverter Transfor	W_INVTR3	369514	4906164	2	0	0	77.3	77.3	1	4633.02	3.25	0	84.32	0	-3.1	0	0	2.29	0	0	0	0	0	0	-6.16	-6.16
Westbrook Inverter Transfor	W_INVTR2	369368	4906388	2	0	0	77.3	77.3	1	4654.86	3.25	0	84.36	0	-3.11	0	0	2.29	0	0	0	0	0	0	-6.2	-6.2
Westbrook Inverter Transfor	W_INVTR4	369679	4906164	2	0	0	77.3	77.3	1	4767.28	3.25	0	84.57	0	-3.13	0	0	2.33	0	0	0	0	0	0	-6.43	-6.43
Westbrook Inverter Transfor	W_INVTR7	369786	4906417	2	0	0	77.3	77.3	1	5002.08	3.25	0	84.98	0	-3.18	0	0	2.41	0	0	0	0	0	0	-6.88	-6.88
Westbrook Inverter Transfor	W_INVTR5	369725	4906574	2	0	0	77.3	77.3	1	5049.44	3.25	0	85.06	0	-3.19	0	0	2.43	0	0	0	0	0	0	-6.97	-6.97
Westbrook Inverter Transfor	W_INVTR6	369881	4906578	2	0	0	77.3	77.3	1	5174.9	3.25	0	85.28	0	-3.21	0	0	2.47	0	0	0	0	0	0	-7.2	-7.2
Inverter Transformer	MV1-13 T	364725	4905241	2	0	0	69.4	69.4	1	2090.24	3.25	0	77.4	0	2.21	0	0	5.06	0	0	0	0	0	0	-15.31	-15.31
Inverter Transformer	MV1-10 T	365010	4905564	2	0	0	69.4	69.4	1	2264.15	3.25	0	78.1	0	2.27	0	0	5.22	0	0	0	0	0	0	-16.24	-16.24
Inverter Transformer	MV1-7 T	364919	4905782	2	0	0	69.4	69.4	1	2500.09	3.25	0	78.96	0	2.35	0	0	5.44	0	0	0	0	0	0	-17.4	-17.4
Inverter Transformer	MV2-1 T	365836	4906816	2	0	0	69.4	69.4	1	3384.6	3.25	0	81.59	0	2.62	0	0	6.2	0	0	0	0	0	0	-21.06	-21.06
Inverter Transformer	MV6-4 T	370244	4906966	2	0	0	69.4	69.4	1	5699.66	3.25	0	86.12	0	3.14	0	0	7.83	0	0	0	0	0	0	-27.74	-27.74
Inverter Transformer	MV6-1 T	370230	4907364	2	0	0	69.4	69.4	1	5944.12	3.25	0	86.48	0	3.18	0	0	7.98	0	0	0	0	0	0	-28.3	-28.3
Inverter Transformer	MV1-15 T	365309	4904994	2	0	0	56.1	56.1	1	1629.23	3.25	0	75.24	0	0.25	0	0	6.29	0	0	0	0	0	0	-25.72	-25.72
Inverter Transformer	MV1-12 T	365044	4905386	2	0	0	56.1	56.1	1	2085.28	3.25	0	77.38	0	0.44	0	0	7.21	0	0	0	0	0	0	-28.97	-28.97
Inverter Transformer	MV1-11 T	364649	4905414	2	0	0	56.1	56.1	1	2278.14	3.25	0	78.15	0	0.52	0	0	7.58	0	0	0	0	0	0	-30.19	-30.19
Inverter Transformer	MV1-8 T	364782	4905647	2	0	0	56.1	56.1	1	2426.26	3.25	0	78.7	0	0.58	0	0	7.85	0	0	0	0	0	0	-31.08	-31.08
Inverter Transformer	MV1-9 T	364555	4905646	2	0	0	56.1	56.1	1	2526.53	3.25	0	79.05	0	0.63	0	0	8.04	0	0	0	0	0	0	-31.66	-31.66
Inverter Transformer	MV1-4 T	364821	4905918	2	0	0	56.1	56.1	1	2661.76	3.25	0	79.5	0	0.69	0	0	8.28	0	0	0	0	0	0	-32.41	-32.41
Inverter Transformer	MV1-5 T	364676	4905892	2	0	0	56.1	56.1	1	2693.19	3.25	0	79.61	0	0.7	0	0	8.34	0	0	0	0	0	0	-32.58	-32.58
Inverter Transformer	MV1-6 T	364482	4905835	2	0	0	56.1	56.1	1	2727.46	3.25	0	79.72	0	0.71	0	0	8.4	0	0	0	0	0	0	-32.77	-32.77
Inverter Transformer	MV1-2 T	364759	4906063	2	0	0	56.1	56.1	1	2819.35	3.25	0	80	0	0.75	0	0	8.56	0	0	0	0	0	0	-33.26	-33.26
Inverter Transformer	MV1-1 T	364721	4906166	2	0	0	56.1	56.1	1	2929.13	3.25	0	80.33	0	0.8	0	0	8.75	0	0	0	0	0	0	-33.82	-33.82
Inverter Transformer	MV1-3 T	364435	4906039	2	0	0	56.1	56.1	1	2929.94	3.25	0	80.34	0	0.8	0	0	8.75	0	0	0	0	0	0	-33.83	-33.83
Inverter Transformer	MV2-4 T	365590	4906628	2	0	0	56.1	56.1	1	3201.19	3.25	0	81.11	0	0.91	0	0	9.2	0	0	0	0	0	0	-35.17	-35.17
Inverter Transformer	MV2-3 T	365814	4906641	2	0	0	56.1	56.1	1	3209.27	3.25	0	81.13	0	0.92	0	0	9.22	0	0	0	0	0	0	-35.21	-35.21
Inverter Transformer	MV2-2 T	365982	4906654	2	0	0	56.1	56.1	1	3228.82	3.25	0	81.18	0	0.93	0	0	9.25	0	0	0	0	0	0	-35.3	-35.3
Inverter Transformer	MV3-18 T	367757	4907412	2	0	0	56.1	56.1	1	4447.45	3.25	0	83.96	0	1.42	0	0	11.1	0	0	0	0	0	0	-40.43	-40.43
Inverter Transformer	MV3-12 T	367674	4907594	2	0	0	56.1	56.1	1	4575.93	3.25	0	84.21	0	1.47	0	0	11.28	0	0	0	0	0	0	-40.9	-40.9
Inverter Transformer	MV3-21 T	368484	4907206	2	0	0	56.1	56.1	1	4647.25	3.25	0	84.34	0	1.5	0	0	11.38	0	0	0	0	0	0	-41.16	-41.16
Inverter Transformer	MV3-13 T	367958	4907577	2	0	0	56.1	56.1	1	4686.02	3.25	0	84.42	0	1.51	0	0	11.43	0	0	0	0	0	0	-41.3	-41.3
Inverter Transformer	MV3-19 T	368352	4907347	2	0	0	56.1	56.1	1	4688.56	3.25	0	84.42	0	1.51	0	0	11.44	0	0	0	0	0	0	-41.31	-41.31
Inverter Transformer	MV3-22 T	368661	4907142	2	0	0	56.1	56.1	1	4702.05	3.25	0	84.45	0	1.52	0	0	11.45	0	0	0	0	0	0	-41.36	-41.36
Inverter Transformer	MV3-17 T	368183	4907472	2	0	0	56.1	56.1	1	4704.63	3.25	0	84.45	0	1.52	0	0	11.46	0	0	0	0	0	0	-41.37	-41.37
Inverter Transformer	MV3-15 T	368351	4907477	2	0	0	56.1	56.1	1	4797.11	3.25	0	84.62	0	1.55	0	0	11.58	0	0	0	0	0	0	-41.7	-41.7
Inverter Transformer	MV3-7 T	367951	4907754	2	0	0	56.1	56.1	1	4840.13	3.25	0	84.7	0	1.57	0	0	11.64	0	0	0	0	0	0	-41.85	-41.85
Inverter Transformer	MV3-20 T	368683	4907317	2	0	0	56.1	56.1	1	4854.48	3.25	0	84.72	0	1.57	0	0	11.66	0	0	0	0	0	0	-41.9	-41.9
Inverter Transformer	MV3-10 T	368162	4907669	2	0	0	56.1	56.1	1	4864.5	3.25	0	84.74	0	1.58	0	0	11.67	0	0	0	0	0	0	-41.93	-41.93
Inverter Transformer	MV3-16 T	368509	4907475	2	0	0	56.1	56.1	1	4882.21	3.25	0	84.77	0	1.58	0	0	11.7	0	0	0	0	0	0	-41.99	-41.99
Inverter Transformer	MV3-11 T	368340	4907662	2	0	0	56.1	56.1	1	4948.38	3.25	0	84.89	0	1.61	0	0	11.79	0	0	0	0	0	0	-42.22	-42.22
Inverter Transformer	MV3-3 T	367944	4907927	2	0	0	56.1	56.1	1	4992.17	3.25	0	84.97	0	1.62	0	0	11.84	0	0	0	0	0	0	-42.37	-42.37
Inverter Transformer	MV3-14 T	368678	4907498	2	0	0	56.1	56.1	1	4997.6	3.25	0	84.98	0	1.62	0	0	11.85	0	0	0	0	0	0	-42.39	-42.39
Inverter Transformer	MV3-6 T	368156	4907834	2	0	0	56.1	56.1	1	5006.01	3.25	0	84.99	0	1.63	0	0	11.86	0	0	0	0	0	0	-42.42	-42.42
Inverter Transformer	MV3-9 T	368517	4907703	2	0	0	56.1	56.1	1	5076.95	3.25	0	85.11	0	1.65	0	0	11.96	0	0	0	0	0	0	-42.66	-42.66
Inverter Transformer	MV3-5 T	368335	4907843	2	0	0	56.1	56.1	1	5101.46	3.25	0	85.15	0	1.66	0	0	11.99	0	0	0	0	0	0	-42.74	-42.74
Inverter Transformer	MV3-1 T	368150	4907976	2	0	0	56.1	56.1	1	5128.54	3.25	0	85.2	0	1.67	0	0	12.02	0	0	0	0	0	0	-42.84	-42.84

	Inverter Transformer	MV3-8 T	368685	4907712	2	0	0	56.1	56.1	1	5177.14	3.25	0	85.28	0	1.69	0	0	12.09	0	0	0	0	0	0	-43	-43
	Inverter Transformer	MV3-4 T	368507	4907925	2	0	0	56.1	56.1	1	5259.87	3.25	0	85.42	0	1.72	0	0	12.19	0	0	0	0	0	0	-43.27	-43.27
	Inverter Transformer	MV3-2 T	368677	4907928	2	0	0	56.1	56.1	1	5352.75	3.25	0	85.57	0	1.75	0	0	12.31	0	0	0	0	0	0	-43.57	-43.57
	Inverter Transformer	MV6-3 T	370202	4907140	2	0	0	56.1	56.1	1	5776.88	3.25	0	86.23	0	1.89	0	0	12.84	0	0	0	0	0	0	-44.9	-44.9
	Inverter Transformer	MV6-2 T	370091	4907339	2	0	0	56.1	56.1	1	5823.8	3.25	0	86.3	0	1.91	0	0	12.89	0	0	0	0	0	0	-45.05	-45.05
	Inverter Transformer	MV4-15 T	369170	4908481	2	0	0	56.1	56.1	1	6085.84	3.25	0	86.69	0	1.99	0	0	13.2	0	0	0	0	0	0	-45.82	-45.82
	Inverter Transformer	MV4-14 T	369182	4908507	2	0	0	56.1	56.1	1	6114.11	3.25	0	86.73	0	2	0	0	13.24	0	0	0	0	0	0	-45.91	-45.91
	Inverter Transformer	MV4-13 T	369057	4908605	2	0	0	56.1	56.1	1	6127.79	3.25	0	86.75	0	2	0	0	13.25	0	0	0	0	0	0	-45.95	-45.95
	Inverter Transformer	MV4-12 T	369049	4908803	2	0	0	56.1	56.1	1	6291.67	3.25	0	86.98	0	2.06	0	0	13.44	0	0	0	0	0	0	-46.42	-46.42
	Inverter Transformer	MV4-11 T	369269	4908855	2	0	0	56.1	56.1	1	6452.64	3.25	0	87.19	0	2.1	0	0	13.63	0	0	0	0	0	0	-46.87	-46.87
	Inverter Transformer	MV4-7 T	369040	4909001	2	0	0	56.1	56.1	1	6456.96	3.25	0	87.2	0	2.1	0	0	13.63	0	0	0	0	0	0	-46.88	-46.88
	Inverter Transformer	MV4-10 T	369307	4908858	2	0	0	56.1	56.1	1	6475.82	3.25	0	87.23	0	2.11	0	0	13.65	0	0	0	0	0	0	-46.93	-46.93
	Inverter Transformer	MV4-8 T	369262	4909001	2	0	0	56.1	56.1	1	6572.1	3.25	0	87.35	0	2.14	0	0	13.76	0	0	0	0	0	0	-47.2	-47.2
	Inverter Transformer	MV4-9 T	369284	4909001	2	0	0	56.1	56.1	1	6583.81	3.25	0	87.37	0	2.14	0	0	13.77	0	0	0	0	0	0	-47.23	-47.23
	Inverter Transformer	MV5-6 T	369987	4908507	2	0	0	56.1	56.1	1	6596.98	3.25	0	87.39	0	2.15	0	0	13.79	0	0	0	0	0	0	-47.26	-47.26
	Inverter Transformer	MV4-4 T	369033	4909199	2	0	0	56.1	56.1	1	6625.04	3.25	0	87.42	0	2.15	0	0	13.82	0	0	0	0	0	0	-47.34	-47.34
	Inverter Transformer	MV4-6 T	369249	4909192	2	0	0	56.1	56.1	1	6727.98	3.25	0	87.56	0	2.18	0	0	13.93	0	0	0	0	0	0	-47.62	-47.62
	Inverter Transformer	MV4-5 T	369283	4909199	2	0	0	56.1	56.1	1	6751.59	3.25	0	87.59	0	2.19	0	0	13.96	0	0	0	0	0	0	-47.68	-47.68
	Inverter Transformer	MV5-5 T	370021	4908690	2	0	0	56.1	56.1	1	6760.09	3.25	0	87.6	0	2.19	0	0	13.97	0	0	0	0	0	0	-47.7	-47.7
	Inverter Transformer	MV4-1 T	369017	4909397	2	0	0	56.1	56.1	1	6790.43	3.25	0	87.64	0	2.2	0	0	14	0	0	0	0	0	0	-47.78	-47.78
	Inverter Transformer	MV5-2 T	370011	4908853	2	0	0	56.1	56.1	1	6881.47	3.25	0	87.75	0	2.23	0	0	14.1	0	0	0	0	0	0	-48.02	-48.02
	Inverter Transformer	MV4-3 T	369234	4909397	2	0	0	56.1	56.1	1	6896.76	3.25	0	87.77	0	2.23	0	0	14.12	0	0	0	0	0	0	-48.06	-48.06
	Inverter Transformer	MV4-2 T	369267	4909397	2	0	0	56.1	56.1	1	6913.38	3.25	0	87.79	0	2.24	0	0	14.14	0	0	0	0	0	0	-48.11	-48.11
	Inverter Transformer	MV5-4 T	370330	4908707	2	0	0	56.1	56.1	1	6971.31	3.25	0	87.87	0	2.25	0	0	14.2	0	0	0	0	0	0	-48.26	-48.26
	Inverter Transformer	MV5-3 T	370237	4908851	2	0	0	56.1	56.1	1	7021.4	3.25	0	87.93	0	2.27	0	0	14.25	0	0	0	0	0	0	-48.39	-48.39
	Inverter Transformer	MV5-1 T	370015	4909142	2	0	0	56.1	56.1	1	7113.75	3.25	0	88.04	0	2.29	0	0	14.35	0	0	0	0	0	0	-48.62	-48.62
	Line Reactor	NGR	369421	4908787.5	5	0	0	45.4	45.4	1	6480.36	5.25	0	87.23	0	3.23	1.37	0.1	2.65	0	0	0	0	0	0	-49.12	-49.12
Limit. Valu	0	0																								
Level D/N:	25.8816	25.8816																								

Receiver: Existing Noise Receptor
ID: G-44
X: 365675.2
Y: 4903041.4
Z: 4.5
Ground: 0

ISO	Description	ID	X	Y	Z	Ground	ReflOrd	LxT	LxN	L/A	Dist.	hm	Freq	Adiv	K0b	Agr	Abar	z	Aatm	Afol	Ahous	Cmet	CmetN	Dc	RL	LtotT	LtotN
	Sol_Luce Substation	S_Substation	369426	4908792	3.5	0	0	112.1	112.1	1	6865.7	5.25	0	87.73	0	1.35	2.47	0.3	10.62	0	0	0	0	0	0	9.9	9.9
	Inverter	MV1-15	365315	4904994	2	0	0	100.3	100.3	1	1985.55	3.25	0	76.96	0	0.13	0	0	13.43	0	0	0	0	0	0	9.8	9.8
	Inverter	MV1-12	365038	4905386	2	0	0	100.3	100.3	1	2429.65	3.25	0	78.71	0	0.24	0	0	14.32	0	0	0	0	0	0	7.04	7.04
	Inverter	MV1-11	364655	4905414	2	0	0	100.3	100.3	1	2582.64	3.25	0	79.24	0	0.28	0	0	14.61	0	0	0	0	0	0	6.18	6.18
	Inverter	MV1-8	364788	4905647	2	0	0	100.3	100.3	1	2752.5	3.25	0	79.79	0	0.31	0	0	14.93	0	0	0	0	0	0	5.28	5.28
	Inverter	MV1-9	364561	4905646	2	0	0	100.3	100.3	1	2832.91	3.25	0	80.04	0	0.33	0	0	15.07	0	0	0	0	0	0	4.86	4.86
	Gardiner Substation	G_Sub	366586.3	4903349.9	2.5	0	0	90.8	90.8	1	961.91	3.5	0	70.66	0	-0.38	0	0	2.44	0	0	0	0	0	0	18.05	18.05
	Inverter	MV1-14	365163	4905049	2	0	0	97.3	97.3	1	2071.91	3.25	0	77.33	0	0.15	0	0	13.61	0	0	0	0	0	0	6.22	6.22
	Inverter	MV1-4	364815	4905918	2	0	0	100.3	100.3	1	3002.46	3.25	0	80.55	0	0.36	0	0	15.38	0	0	0	0	0	0	4.02	4.02
	Inverter	MV1-5	364671	4905892	2	0	0	100.3	100.3	1	3022.31	3.25	0	80.61	0	0.37	0	0	15.41	0	0	0	0	0	0	3.93	3.93
	Inverter	MV1-6	364477	4905835	2	0	0	100.3	100.3	1	3039.72	3.25	0	80.66	0	0.37	0	0	15.44	0	0	0	0	0	0	3.84	3.84
	Inverter	MV1-2	364753	4906063	2	0	0	100.3	100.3	1	3159.2	3.25	0	80.99	0	0.39	0	0	15.65	0	0	0	0	0	0	3.28	3.28
	Inverter	MV1-1	364715	4906166	2	0	0	100.3	100.3	1	3268.81	3.25	0	81.29	0	0.41	0	0	15.84	0	0	0	0	0	0	2.77	2.77
	Inverter	MV1-13	364731	4905241	2	0	0	97.3	97.3	1	2393.69	3.25	0	78.58	0	0.23	0	0	14.25	0	0	0	0	0	0	4.24	4.24
	Inverter	MV2-4	365586	4906624	2	0	0	100.3	100.3	1	3583.71	3.25	0	82.09	0	0.46	0	0	16.37	0	0	0	0	0	0	1.39	1.39
	Inverter	MV2-3	365820	4906641	2	0	0	100.3	100.3	1	3602.51	3.25	0	82.13	0	0.47	0	0	16.4	0	0	0	0	0	0	1.31	1.31
	Inverter	MV1-10	365004	4905564	2	0	0	97.3	97.3	1	2610.37	3.25	0	79.33	0	0.28	0	0	14.67	0	0	0	0	0	0	3.03	3.03
	Inverters	G_Inv1	366526.4	4903225.8	2	0	0	87.7	87.7	1	870.95	3.25	0	69.8	0	2.43	0	0	1.26	0	0	0	0	0	0	14.17	14.17
	Inverters	G_Inv3	366583.7	4903091.4	2	0	0	87.7	87.7	1	909.88	3.25	0	70.18	0	2.44	0	0	1.31	0	0	0	0	0	0	13.73	13.73
	Inverter	MV1-7	364925	4905782	2	0	0	97.3	97.3	1	2841.42	3.25	0	80.07	0	0.33	0	0	15.09	0	0	0	0	0	0	1.82	1.82
	Inverters	G_Inv5	366638.5	4902958.1	2	0	0	87.7	87.7	1	966.9	3.25	0	70.71	0	2.44	0	0	1.38	0	0	0	0	0	0	13.12	13.12
	Inverters	G_Inv2	366676.9	4903239.1	2	0	0	87.7	87.7	1	1021.03	3.25	0	71.18	0	2.45	0	0	1.45	0	0	0	0	0	0	12.57	12.57
	Inverters	G_Inv7	366694.6	4902824.7	2	0	0	87.7	87.7	1	1042.18	3.25	0	71.36	0	2.46	0	0	1.48	0	0	0	0	0	0	12.37	12.37
	Inverters	G_Inv4	366732.8	4903105	2	0	0	87.7	87.7	1	1059.51	3.25	0	71.5	0	2.46	0	0	1.5	0	0	0	0	0	0	12.2	12.2
	Inverters	G_Inv6	366788.5	4902972	2	0	0	87.7	87.7	1	1115.46	3.25	0	71.95	0	2.47	0	0	1.57	0	0	0	0	0	0	11.67	11.67
	Inverter	MV3-18	367752	4907412	2	0	0	100.3	100.3	1	4838.93	3.25	0	84.69	0	0.63	0	0	18.34	0	0	0	0	0	0	-3.35	-3.35
	Inverters	G_Inv9	366750.9	4902691.8	2	0	0	87.7	87.7	1	1131.09	3.25	0	72.07	0	2.47	0	0	1.59	0	0	0	0	0	0	11.53	11.53
	Inverter	MV3-12	367668	4907594	2	0	0	100.3	100.3	1	4969.65	3.25	0	84.93	0	0.64	0	0	18.54	0	0	0	0	0	0	-3.79	-3.79
	Inverter	MV3-21	368478	4907206	2	0	0	100.3	100.3	1	5019.92	3.25	0	85.01	0	0.64	0	0	18.61	0	0	0	0	0	0	-3.96	-3.96
	Inverter	MV3-19	368357	4907347	2	0	0	100.3	100.3	1	5072.5	3.25	0	85.1	0	0.65	0	0	18.69	0	0	0	0	0	0	-4.13	-4.13
	Inverter	MV3-13	367963	4907577	2	0	0	100.3	100.3	1	5079.93	3.25	0	85.12	0	0.65	0	0	18.7	0	0	0	0	0	0	-4.15	-4.15
	Inverter	MV3-17	368178	4907472	2	0	0	100.3	100.3	1	5088.64	3.25	0	85.13	0	0.65	0	0	18.71	0	0	0	0	0	0	-4.18	-4.18
	Inverters	G_Inv8	366844.5	4902838.5	2	0	0	87.7	87.7	1	1186.78	3.25	0	72.49	0	2.48	0	0	1.66	0	0	0	0	0	0	11.04	11.04
	Inverter	MV3-15	368357	4907477	2	0	0	100.3	100.3	1	5183.3	3.25	0	85.29	0	0.66	0	0	18.85	0	0	0	0	0	0	-4.49	-4.49
	Inverter	MV3-7	367945	4907754	2	0	0	100.3	100.3	1	5230.74	3.25	0	85.37	0	0.66	0	0	18.92	0	0	0	0	0	0	-4.64	-4.64
	Inverter	MV3-20	368689	4907317	2	0	0	100.3	100.3	1	5231.04	3.25	0	85.37	0	0.66	0	0	18.92	0	0	0	0	0	0	-4.64	-4.64

Inverter	MV3-10	368167	4907669	2	0	0	100.3	100.3	1	5255.83	3.25	0	85.41	0	0.66	0	0	18.95	0	0	0	0	0	0	-4.72	-4.72
Inverter	MV3-16	368514	4907475	2	0	0	100.3	100.3	1	5264.56	3.25	0	85.43	0	0.66	0	0	18.96	0	0	0	0	0	0	-4.74	-4.74
Inverter	MV3-11	368346	4907662	2	0	0	100.3	100.3	1	5336.96	3.25	0	85.55	0	0.67	0	0	19.07	0	0	0	0	0	0	-4.97	-4.97
Inverter	MV2-1	365842	4906816	2	0	0	97.3	97.3	1	3778.28	3.25	0	82.55	0	0.49	0	0	16.69	0	0	0	0	0	0	-2.42	-2.42
Inverter	MV3-14	368684	4907498	2	0	0	100.3	100.3	1	5377.19	3.25	0	85.61	0	0.67	0	0	19.13	0	0	0	0	0	0	-5.1	-5.1
Inverter	MV3-3	367939	4907927	2	0	0	100.3	100.3	1	5384.6	3.25	0	85.62	0	0.67	0	0	19.14	0	0	0	0	0	0	-5.12	-5.12
Inverter	MV3-6	368162	4907834	2	0	0	100.3	100.3	1	5399.37	3.25	0	85.65	0	0.67	0	0	19.16	0	0	0	0	0	0	-5.17	-5.17
Inverters	G_Inv10	366900.7	4902704.8	2	0	0	87.7	87.7	1	1270.89	3.25	0	73.08	0	2.49	0	0	1.76	0	0	0	0	0	0	10.33	10.33
Inverter	MV3-9	368512	4907703	2	0	0	100.3	100.3	1	5456.92	3.25	0	85.74	0	0.68	0	0	19.24	0	0	0	0	0	0	-5.34	-5.34
Inverter	MV3-8	368680	4907712	2	0	0	100.3	100.3	1	5553.68	3.25	0	85.89	0	0.68	0	0	19.38	0	0	0	0	0	0	-5.64	-5.64
Inverter	MV6-3	370207	4907140	2	0	0	100.3	100.3	1	6110.3	3.25	0	86.72	0	0.71	0	0	20.14	0	0	0	0	0	0	-7.26	-7.26
Inverter	MV6-2	370085	4907339	2	0	0	100.3	100.3	1	6157.57	3.25	0	86.79	0	0.71	0	0	20.21	0	0	0	0	0	0	-7.39	-7.39
Inverter	MV4-11	369264	4908855	2	0	0	100.3	100.3	1	6832.09	3.25	0	87.69	0	0.71	0	0	21.09	0	0	0	0	0	0	-9.18	-9.18
Inverter	MV4-7	369035	4909001	2	0	0	100.3	100.3	1	6841.42	3.25	0	87.7	0	0.71	0	0	21.1	0	0	0	0	0	0	-9.2	-9.2
Inverter	MV4-10	369312	4908858	2	0	0	100.3	100.3	1	6859.97	3.25	0	87.73	0	0.71	0	0	21.12	0	0	0	0	0	0	-9.25	-9.25
Inverter	MV4-8	369256	4909001	2	0	0	100.3	100.3	1	6952.62	3.25	0	87.84	0	0.71	0	0	21.24	0	0	0	0	0	0	-9.48	-9.48
Inverter	MV4-9	369289	4909001	2	0	0	100.3	100.3	1	6969.68	3.25	0	87.86	0	0.71	0	0	21.26	0	0	0	0	0	0	-9.52	-9.52
Inverter	MV4-4	369027	4909199	2	0	0	100.3	100.3	1	7010.75	3.25	0	87.92	0	0.71	0	0	21.31	0	0	0	0	0	0	-9.63	-9.63
Inverter	MV4-6	369243	4909192	2	0	0	100.3	100.3	1	7110.49	3.25	0	88.04	0	0.71	0	0	21.44	0	0	0	0	0	0	-9.87	-9.87
Inverter	MV5-5	370015	4908690	2	0	0	100.3	100.3	1	7123.24	3.25	0	88.05	0	0.71	0	0	21.45	0	0	0	0	0	0	-9.9	-9.9
Inverter	MV4-5	369289	4909199	2	0	0	100.3	100.3	1	7139.72	3.25	0	88.07	0	0.71	0	0	21.47	0	0	0	0	0	0	-9.94	-9.94
Inverter	MV4-1	369011	4909397	2	0	0	100.3	100.3	1	7177.83	3.25	0	88.12	0	0.7	0	0	21.52	0	0	0	0	0	0	-10.03	-10.03
Inverter	MV5-2	370006	4908853	2	0	0	100.3	100.3	1	7247.79	3.25	0	88.2	0	0.7	0	0	21.61	0	0	0	0	0	0	-10.2	-10.2
Inverter	MV4-3	369229	4909397	2	0	0	100.3	100.3	1	7281.7	3.25	0	88.24	0	0.7	0	0	21.65	0	0	0	0	0	0	-10.28	-10.28
Inverter	MV4-2	369272	4909397	2	0	0	100.3	100.3	1	7302.78	3.25	0	88.27	0	0.7	0	0	21.67	0	0	0	0	0	0	-10.33	-10.33
Inverter	MV5-4	370324	4908707	2	0	0	100.3	100.3	1	7328.74	3.25	0	88.3	0	0.7	0	0	21.71	0	0	0	0	0	0	-10.39	-10.39
Inverter	MV5-3	370231	4908851	2	0	0	100.3	100.3	1	7382.87	3.25	0	88.36	0	0.7	0	0	21.77	0	0	0	0	0	0	-10.52	-10.52
Inverter	MV5-1	370020	4909142	2	0	0	100.3	100.3	1	7489.63	3.25	0	88.49	0	0.69	0	0	21.9	0	0	0	0	0	0	-10.77	-10.77
Inverter	MV6-1	370235	4907364	2	0	0	97.3	97.3	1	6283.04	3.25	0	86.96	0	0.71	0	0	20.37	0	0	0	0	0	0	-10.74	-10.74
DSTATCOM - 10 MVAR #2	DSAT2	369403	4908757	2.5	0	0	96.6	96.6	1	6823.82	3.5	0	87.68	0	3.83	0	0	4.23	0	0	0	0	0	0	0.89	0.89
DSTATCOM - 10 MVAR #1	DSAT1	369437	4908757	2.5	0	0	96.6	96.6	1	6842.46	3.5	0	87.7	0	3.83	0	0	4.24	0	0	0	0	0	0	0.86	0.86
Inverter	MV1-3	364440	4906039	2	0	0	89.1	89.1	1	3242.12	3.25	0	81.22	0	1.21	0	0	9.98	0	0	0	0	0	0	-3.35	-3.35
SubstationTransformer	W_ST	369711.17	4906112.3	2.5	0	0	92	92	1	5071.42	4.25	0	85.1	0	1.66	2.31	0.23	8.7	0	0	0	0	0	0	-5.8	-5.8
Inverter	MV2-2	365977	4906654	2	0	0	89.1	89.1	1	3625.19	3.25	0	82.19	0	1.3	0	0	10.55	0	0	0	0	0	0	-4.97	-4.97
Westbrook Inverter Enclosur	W_INV3	369508	4906164	2	0	0	89.1	89.1	1	4943.78	3.25	0	84.88	0	1.63	0	0	12.39	0	0	0	0	0	0	-9.84	-9.84
Westbrook Inverter Enclosur	W_INV2	369374	4906388	2	0	0	89.1	89.1	1	4988.07	3.25	0	84.96	0	1.64	0	0	12.45	0	0	0	0	0	0	-9.99	-9.99
Inverter	MV3-22	368656	4907142	2	0	0	89.1	89.1	1	5069.53	3.25	0	85.1	0	1.66	0	0	12.56	0	0	0	0	0	0	-10.25	-10.25
Westbrook Inverter Enclosur	W_INV4	369673	4906164	2	0	0	89.1	89.1	1	5072.77	3.25	0	85.1	0	1.66	0	0	12.56	0	0	0	0	0	0	-10.27	-10.27
Westbrook Inverter Enclosur	W_INV7	369780	4906417	2	0	0	89.1	89.1	1	5314.51	3.25	0	85.51	0	1.72	0	0	12.88	0	0	0	0	0	0	-11.05	-11.05
Westbrook Inverter Enclosur	W_INV5	369719	4906574	2	0	0	89.1	89.1	1	5369.51	3.25	0	85.6	0	1.73	0	0	12.95	0	0	0	0	0	0	-11.22	-11.22
Westbrook Inverter Enclosur	W_INV6	369875	4906578	2	0	0	89.1	89.1	1	5490.53	3.25	0	85.79	0	1.76	0	0	13.11	0	0	0	0	0	0	-11.61	-11.61
Inverter	MV3-5	368340	4907843	2	0	0	89.1	89.1	1	5491.5	3.25	0	85.79	0	1.76	0	0	13.11	0	0	0	0	0	0	-11.61	-11.61
Inverter	MV3-1	368156	4907976	2	0	0	89.1	89.1	1	5523.1	3.25	0	85.84	0	1.77	0	0	13.15	0	0	0	0	0	0	-11.71	-11.71
Inverter	MV3-4	368502	4907925	2	0	0	89.1	89.1	1	5642.73	3.25	0	86.03	0	1.8	0	0	13.31	0	0	0	0	0	0	-12.08	-12.08
Inverter	MV3-2	368671	4907928	2	0	0	89.1	89.1	1	5731.81	3.25	0	86.17	0	1.82	0	0	13.42	0	0	0	0	0	0	-12.35	-12.35
Fixed Reactor Bank 1	FRB1	369378	4908755	6	0	0	89.8	89.8	1	6808.52	5.25	0	87.66	0	-0.31	0	0	10.56	0	0	0	0	0	0	-8.14	-8.14
Fixed Reactor Bank 2	FRB2	369464	4908755	6	0	0	89.8	89.8	1	6855.67	5.25	0	87.72	0	-0.3	0	0	10.61	0	0	0	0	0	0	-8.25	-8.25
Inverter	MV4-15	369176	4908481	2	0	0	89.1	89.1	1	6468.76	3.25	0	87.22	0	2	0	0	14.35	0	0	0	0	0	0	-14.5	-14.5
Inverter	MV4-14	369176	4908507	2	0	0	89.1	89.1	1	6490.64	3.25	0	87.25	0	2.01	0	0	14.37	0	0	0	0	0	0	-14.57	-14.57
Inverter	MV4-13	369051	4908605	2	0	0	89.1	89.1	1	6507.66	3.25	0	87.27	0	2.01	0	0	14.39	0	0	0	0	0	0	-14.61	-14.61
Inverter	MV4-12	369043	4908803	2	0	0	89.1	89.1	1	6673.69	3.25	0	87.49	0	2.05	0	0	14.59	0	0	0	0	0	0	-15.07	-15.07
Inverter	MV5-6	369982	4908507	2	0	0	89.1	89.1	1	6958.54	3.25	0	87.85	0	2.12	0	0	14.94	0	0	0	0	0	0	-15.85	-15.85
Westbrook Inverter Enclosur	W_INV1	369409	4906578	2	0	0	86.1	86.1	1	5142.84	3.25	0	85.22	0	1.68	0	0	12.65	0	0	0	0	0	0	-13.5	-13.5
Inverter	MV6-4	370250	4906966	2	0	0	86.1	86.1	1	6027.54	3.25	0	86.6	0	1.89	0	0	13.8	0	0	0	0	0	0	-16.23	-16.23
Westbrook Inverter Transfor	W_INVTR1	369403	4906578	2	0	0	78.2	78.2	1	5138.49	3.25	0	85.22	0	-3.21	0	0	2.46	0	0	0	0	0	0	-6.23	-6.23
Westbrook Inverter Transfor	W_INVTR3	369514	4906164	2	0	0	77.3	77.3	1	4948.44	3.25	0	84.89	0	-3.17	0	0	2.4	0	0	0	0	0	0	-6.78	-6.78
Westbrook Inverter Transfor	W_INVTR2	369368	4906388	2	0	0	77.3	77.3	1	4983.62	3.25	0	84.95	0	-3.17	0	0	2.41	0	0	0	0	0	0	-6.84	-6.84
Westbrook Inverter Transfor	W_INVTR4	369679	4906164	2	0	0	77.3	77.3	1	5077.5	3.25	0	85.11	0	-3.19	0	0	2.44	0	0	0	0	0	0	-7.02	-7.02
Inverter Transformer	MV1-14 T	365157	4905049	2	0	0	69.4	69.4	1	2073.4	3.25	0	77.33	0	2.2	0	0	5.04	0	0	0	0	0	0	-15.22	-15.22
Westbrook Inverter Transfor	W_INVTR7	369786	4906417	2	0	0	77.3	77.3	1	5319.15	3.25	0	85.52	0	-3.24	0	0	2.52	0	0	0	0	0	0	-7.46	-7.46
Westbrook Inverter Transfor	W_INVTR5	369725	4906574	2	0	0	77.3	77.3	1	5374.03	3.25	0	85.61	0	-3.25	0	0	2.54	0	0	0	0	0	0	-7.55	-7.55
Westbrook Inverter Transfor	W_INVTR6	369881	4906578	2	0	0	77.3	77.3	1	5495.12	3.25	0	85.8	0	-3.27	0	0	2.58	0	0	0	0	0	0	-7.76	-7.76
Inverter Transformer	MV1-13 T	364725	4905241	2	0	0	69.4	69.4	1	2396.06	3.25	0	78.59	0	2.31	0	0	5.35	0	0	0	0	0	0	-16.9	-16.9
Inverter Transformer	MV1-10 T	365010	4905564	2	0	0	69.4	69.4	1	2608.83	3.25	0	79.33	0	2.38	0	0	5.54	0	0	0	0	0	0	-17.9	-17.9
Inverter Transformer	MV1-7 T	364919	4905782	2	0	0	69.4	69.4	1	2843.01	3.25	0	80.08	0	2.46	0	0	5.75	0	0	0	0	0	0	-18.93	-18.93
Inverter Transformer	MV2-1 T	365836	4906816	2	0	0	69.4	69.4	1	3778.02	3.25	0	82.55	0	2.73	0	0	6.51	0	0	0	0	0	0	-22.43	-22.43
Inverter Transformer	MV6-4 T	370244	4906966	2	0	0	69.4	69.4	1	6022.99	3.25	0	86.6	0	3.19	0	0	8.03	0	0	0	0	0	0	-28.47	-28.47
Inverter Transformer	MV6-1 T	370230	4907364	2	0	0	69.4	69.4	1	6279.42	3.25	0	86.96	0	3.23	0	0	8.19	0	0	0	0	0	0	-29.02	-29.02
Inverter Transformer	MV1-15 T	365309	4904994	2	0	0	56.1	56.1	1	1986.64	3.25	0	76.96	0	0.4	0	0	7.02	0	0	0	0	0	0	-28.32	-28.32
Inverter Transformer	MV1-12 T	365044	4905386	2	0	0	56.1	56.1	1	2428.08	3.25	0	78.71	0	0.59	0	0	7.86	0	0	0	0	0	0	-31.09	-31.09
Inverter Transformer	MV1-11 T	364649	4905414	2	0	0	56.1	56.1	1	2585.02	3.25	0	79.25	0	0.65	0	0	8.14	0	0	0	0	0	0	-31.99	-31.99
Inverter Transformer	MV1-8 T	364782	4905647	2	0	0	56.1	56.1	1	2754.44	3.25	0	79.8	0	0.73	0	0	8.44	0	0	0	0	0	0	-32.91	-32.91
Inverter Transformer	MV1-9 T	364555	4905646	2	0	0	56.1	56.1	1	2835.28	3.25	0	80.05	0	0.76	0	0	8.59	0	0	0	0	0	0	-33.34	-33.34
Inverter Transformer	MV1-4 T	364821	4905918	2	0	0	56.1	56.1	1	3000.75	3.25	0	80.54	0	0.83	0	0	8.87	0	0	0	0	0	0	-34.19	-34.19

	Inverter Transformer	MV1-5 T	364676	4905892	2	0	0	56.1	56.1	1	3020.65	3.25	0	80.6	0	0.84	0	0	8.9	0	0	0	0	0	0	-34.29	-34.29
	Inverter Transformer	MV1-6 T	364482	4905835	2	0	0	56.1	56.1	1	3037.75	3.25	0	80.65	0	0.85	0	0	8.93	0	0	0	0	0	0	-34.37	-34.37
	Inverter Transformer	MV1-2 T	364759	4906063	2	0	0	56.1	56.1	1	3157.45	3.25	0	80.99	0	0.9	0	0	9.13	0	0	0	0	0	0	-34.96	-34.96
	Inverter Transformer	MV1-3 T	364435	4906039	2	0	0	56.1	56.1	1	3244.03	3.25	0	81.22	0	0.93	0	0	9.28	0	0	0	0	0	0	-35.37	-35.37
	Inverter Transformer	MV1-1 T	364721	4906166	2	0	0	56.1	56.1	1	3267.05	3.25	0	81.28	0	0.94	0	0	9.31	0	0	0	0	0	0	-35.48	-35.48
	Inverter Transformer	MV2-4 T	365590	4906628	2	0	0	56.1	56.1	1	3587.61	3.25	0	82.1	0	1.08	0	0	9.83	0	0	0	0	0	0	-36.94	-36.94
	Inverter Transformer	MV2-3 T	365814	4906641	2	0	0	56.1	56.1	1	3602.28	3.25	0	82.13	0	1.08	0	0	9.85	0	0	0	0	0	0	-37	-37
	Inverter Transformer	MV2-2 T	365982	4906654	2	0	0	56.1	56.1	1	3625.6	3.25	0	82.19	0	1.09	0	0	9.89	0	0	0	0	0	0	-37.11	-37.11
	Inverter Transformer	MV3-18 T	367757	4907412	2	0	0	56.1	56.1	1	4841.08	3.25	0	84.7	0	1.57	0	0	11.64	0	0	0	0	0	0	-41.85	-41.85
	Inverter Transformer	MV3-12 T	367674	4907594	2	0	0	56.1	56.1	1	4972.06	3.25	0	84.93	0	1.62	0	0	11.82	0	0	0	0	0	0	-42.3	-42.3
	Inverter Transformer	MV3-21 T	368484	4907206	2	0	0	56.1	56.1	1	5023.27	3.25	0	85.02	0	1.63	0	0	11.88	0	0	0	0	0	0	-42.48	-42.48
	Inverter Transformer	MV3-19 T	368352	4907347	2	0	0	56.1	56.1	1	5069.86	3.25	0	85.1	0	1.65	0	0	11.95	0	0	0	0	0	0	-42.64	-42.64
	Inverter Transformer	MV3-22 T	368661	4907142	2	0	0	56.1	56.1	1	5072.47	3.25	0	85.1	0	1.65	0	0	11.95	0	0	0	0	0	0	-42.65	-42.65
	Inverter Transformer	MV3-13 T	367958	4907577	2	0	0	56.1	56.1	1	5077.68	3.25	0	85.11	0	1.65	0	0	11.96	0	0	0	0	0	0	-42.66	-42.66
	Inverter Transformer	MV3-17 T	368183	4907472	2	0	0	56.1	56.1	1	5091.1	3.25	0	85.14	0	1.66	0	0	11.97	0	0	0	0	0	0	-42.71	-42.71
	Inverter Transformer	MV3-15 T	368351	4907477	2	0	0	56.1	56.1	1	5180.2	3.25	0	85.29	0	1.69	0	0	12.09	0	0	0	0	0	0	-43.01	-43.01
	Inverter Transformer	MV3-20 T	368683	4907317	2	0	0	56.1	56.1	1	5227.58	3.25	0	85.37	0	1.71	0	0	12.15	0	0	0	0	0	0	-43.16	-43.16
	Inverter Transformer	MV3-7 T	367951	4907754	2	0	0	56.1	56.1	1	5233.34	3.25	0	85.38	0	1.71	0	0	12.16	0	0	0	0	0	0	-43.18	-43.18
	Inverter Transformer	MV3-10 T	368162	4907669	2	0	0	56.1	56.1	1	5253.46	3.25	0	85.41	0	1.72	0	0	12.18	0	0	0	0	0	0	-43.25	-43.25
	Inverter Transformer	MV3-16 T	368509	4907475	2	0	0	56.1	56.1	1	5261.87	3.25	0	85.42	0	1.72	0	0	12.19	0	0	0	0	0	0	-43.28	-43.28
	Inverter Transformer	MV3-11 T	368340	4907662	2	0	0	56.1	56.1	1	5333.96	3.25	0	85.54	0	1.74	0	0	12.29	0	0	0	0	0	0	-43.51	-43.51
	Inverter Transformer	MV3-14 T	368678	4907498	2	0	0	56.1	56.1	1	5373.83	3.25	0	85.61	0	1.76	0	0	12.34	0	0	0	0	0	0	-43.64	-43.64
	Inverter Transformer	MV3-3 T	367944	4907927	2	0	0	56.1	56.1	1	5386.7	3.25	0	85.63	0	1.76	0	0	12.35	0	0	0	0	0	0	-43.68	-43.68
	Inverter Transformer	MV3-6 T	368156	4907834	2	0	0	56.1	56.1	1	5396.61	3.25	0	85.64	0	1.77	0	0	12.37	0	0	0	0	0	0	-43.71	-43.71
	Inverter Transformer	MV3-9 T	368517	4907703	2	0	0	56.1	56.1	1	5459.52	3.25	0	85.74	0	1.79	0	0	12.44	0	0	0	0	0	0	-43.92	-43.92
	Inverter Transformer	MV3-5 T	368335	4907843	2	0	0	56.1	56.1	1	5489.07	3.25	0	85.79	0	1.8	0	0	12.48	0	0	0	0	0	0	-44.01	-44.01
	Inverter Transformer	MV3-1 T	368150	4907976	2	0	0	56.1	56.1	1	5520.41	3.25	0	85.84	0	1.81	0	0	12.52	0	0	0	0	0	0	-44.11	-44.11
	Inverter Transformer	MV3-8 T	368685	4907712	2	0	0	56.1	56.1	1	5556.38	3.25	0	85.9	0	1.82	0	0	12.57	0	0	0	0	0	0	-44.22	-44.22
	Inverter Transformer	MV3-4 T	368507	4907925	2	0	0	56.1	56.1	1	5645.23	3.25	0	86.03	0	1.85	0	0	12.68	0	0	0	0	0	0	-44.5	-44.5
	Inverter Transformer	MV3-2 T	368677	4907928	2	0	0	56.1	56.1	1	5734.95	3.25	0	86.17	0	1.88	0	0	12.78	0	0	0	0	0	0	-44.78	-44.78
	Inverter Transformer	MV6-3 T	370202	4907140	2	0	0	56.1	56.1	1	6106.59	3.25	0	86.72	0	2	0	0	13.23	0	0	0	0	0	0	-45.88	-45.88
	Inverter Transformer	MV6-2 T	370091	4907339	2	0	0	56.1	56.1	1	6161.87	3.25	0	86.79	0	2.02	0	0	13.29	0	0	0	0	0	0	-46.04	-46.04
	Inverter Transformer	MV4-15 T	369170	4908481	2	0	0	56.1	56.1	1	6465.51	3.25	0	87.21	0	2.11	0	0	13.64	0	0	0	0	0	0	-46.9	-46.9
	Inverter Transformer	MV4-14 T	369182	4908507	2	0	0	56.1	56.1	1	6493.88	3.25	0	87.25	0	2.12	0	0	13.67	0	0	0	0	0	0	-46.98	-46.98
	Inverter Transformer	MV4-13 T	369057	4908605	2	0	0	56.1	56.1	1	6510.78	3.25	0	87.27	0	2.12	0	0	13.69	0	0	0	0	0	0	-47.03	-47.03
	Inverter Transformer	MV4-12 T	369049	4908803	2	0	0	56.1	56.1	1	6676.72	3.25	0	87.49	0	2.17	0	0	13.88	0	0	0	0	0	0	-47.48	-47.48
	Inverter Transformer	MV4-11 T	369269	4908855	2	0	0	56.1	56.1	1	6834.72	3.25	0	87.69	0	2.21	0	0	14.05	0	0	0	0	0	0	-47.9	-47.9
	Inverter Transformer	MV4-7 T	369040	4909001	2	0	0	56.1	56.1	1	6843.88	3.25	0	87.71	0	2.22	0	0	14.06	0	0	0	0	0	0	-47.92	-47.92
	Inverter Transformer	MV4-10 T	369307	4908858	2	0	0	56.1	56.1	1	6857.32	3.25	0	87.72	0	2.22	0	0	14.08	0	0	0	0	0	0	-47.96	-47.96
	Inverter Transformer	MV4-8 T	369262	4909001	2	0	0	56.1	56.1	1	6955.72	3.25	0	87.85	0	2.25	0	0	14.18	0	0	0	0	0	0	-48.22	-48.22
	Inverter Transformer	MV5-6 T	369987	4908507	2	0	0	56.1	56.1	1	6961.64	3.25	0	87.85	0	2.25	0	0	14.19	0	0	0	0	0	0	-48.23	-48.23
	Inverter Transformer	MV4-9 T	369284	4909001	2	0	0	56.1	56.1	1	6967.09	3.25	0	87.86	0	2.25	0	0	14.19	0	0	0	0	0	0	-48.25	-48.25
	Inverter Transformer	MV4-4 T	369033	4909199	2	0	0	56.1	56.1	1	7013.62	3.25	0	87.92	0	2.26	0	0	14.24	0	0	0	0	0	0	-48.37	-48.37
	Inverter Transformer	MV4-6 T	369249	4909192	2	0	0	56.1	56.1	1	7113.5	3.25	0	88.04	0	2.29	0	0	14.35	0	0	0	0	0	0	-48.62	-48.62
	Inverter Transformer	MV5-5 T	370021	4908690	2	0	0	56.1	56.1	1	7126.9	3.25	0	88.06	0	2.29	0	0	14.37	0	0	0	0	0	0	-48.66	-48.66
	Inverter Transformer	MV4-5 T	369283	4909199	2	0	0	56.1	56.1	1	7136.68	3.25	0	88.07	0	2.3	0	0	14.38	0	0	0	0	0	0	-48.68	-48.68
	Inverter Transformer	MV4-1 T	369017	4909397	2	0	0	56.1	56.1	1	7180.62	3.25	0	88.12	0	2.31	0	0	14.42	0	0	0	0	0	0	-48.79	-48.79
	Inverter Transformer	MV5-2 T	370011	4908853	2	0	0	56.1	56.1	1	7250.78	3.25	0	88.21	0	2.33	0	0	14.5	0	0	0	0	0	0	-48.97	-48.97
	Inverter Transformer	MV4-3 T	369234	4909397	2	0	0	56.1	56.1	1	7284.14	3.25	0	88.25	0	2.34	0	0	14.53	0	0	0	0	0	0	-49.05	-49.05
	Inverter Transformer	MV4-2 T	369267	4909397	2	0	0	56.1	56.1	1	7300.32	3.25	0	88.27	0	2.34	0	0	14.55	0	0	0	0	0	0	-49.1	-49.1
	Inverter Transformer	MV5-4 T	370330	4908707	2	0	0	56.1	56.1	1	7332.54	3.25	0	88.31	0	2.35	0	0	14.58	0	0	0	0	0	0	-49.18	-49.18
	Inverter Transformer	MV5-3 T	370237	4908851	2	0	0	56.1	56.1	1	7386.57	3.25	0	88.37	0	2.36	0	0	14.64	0	0	0	0	0	0	-49.31	-49.31
	Inverter Transformer	MV5-1 T	370015	4909142	2	0	0	56.1	56.1	1	7486.73	3.25	0	88.49	0	2.39	0	0	14.74	0	0	0	0	0	0	-49.56	-49.56
	Line Reactor	NGR	369421	4908787.5	5	0	0	45.4	45.4	1	6859.2	5.25	0	87.73	0	3.22	1.37	0.1	2.8	0	0	0	0	0	0	-49.76	-49.76
Limit. Valu	0	0																								
Level D/N:	24.9537	24.9537																								

Receiver: Existing Noise Receptor
ID: G-45
X: 366061.5
Y: 4902159.7
Z: 4.5
Ground: 0

ISO	Description	ID	X	Y	Z	Ground	ReflOrd	LxT	LxN	L/A	Dist.	hm	Freq	Adiv	K0b	Agr	Abar	z	Aatm	Afol	Ahous	Cmet	CmetN	Dc	RL	LtotT	LtotN
	Sol_Luce Substation	S_Substation	369426	4908792	3.5	0	0	112.1	112.1	1	7436.89	5.25	0	88.43	0	1.46	2.36	0.32	11.16	0	0	0	0	0	0	8.67	8.67
	Inverter	MV1-15	365315	4904994	2	0	0	100.3	100.3	1	2930.96	3.25	0	80.34	0	0.35	0	0	15.25	0	0	0	0	0	0	4.37	4.37
	Inverter	MV1-12	365038	4905386	2	0	0	100.3	100.3	1	3384.76	3.25	0	81.59	0	0.43	0	0	16.04	0	0	0	0	0	0	2.25	2.25
	Inverter	MV1-11	364655	4905414	2	0	0	100.3	100.3	1	3545.24	3.25	0	81.99	0	0.46	0	0	16.31	0	0	0	0	0	0	1.55	1.55
	Inverter	MV1-8	364788	4905647	2	0	0	100.3	100.3	1	3712.56	3.25	0	82.39	0	0.48	0	0	16.58	0	0	0	0	0	0	0.85	0.85
	Inverters	G_Inv9	366750.9	4902691.8	2	0	0	87.7	87.7	1	870.87	3.25	0	69.8	0	2.43	0	0	1.26	0	0	0	0	0	0	14.17	14.17
	Inverter	MV1-9	364561	4905646	2	0	0	100.3	100.3	1	3795.5	3.25	0	82.59	0	0.5	0	0	16.72	0	0	0	0	0	0	0.51	0.51
	Gardiner Substation	G_Sub	366586.3	4903349.9	2.5	0	0	90.8	90.8	1	1300.77	3.5	0	73.28	0	-0.32	0	0	3.11	0	0	0	0	0	0	14.7	14.7
	Inverters	G_Inv7	366694.6	4902824.7	2	0	0	87.7	87.7	1	918.18	3.25	0	70.26	0	2.44	0	0	1.32	0	0	0	0	0	0	13.64	13.64

Inverter	MV1-4	364815	4905918	2	0	0	100.3	100.3	1	3959.62	3.25	0	82.95	0	0.52	0	0	16.98	0	0	0	0	0	0	-0.15	-0.15
Inverter	MV1-5	364671	4905892	2	0	0	100.3	100.3	1	3982.91	3.25	0	83	0	0.52	0	0	17.02	0	0	0	0	0	0	-0.24	-0.24
Inverter	MV1-6	364477	4905835	2	0	0	100.3	100.3	1	4002.31	3.25	0	83.05	0	0.53	0	0	17.05	0	0	0	0	0	0	-0.31	-0.31
Inverter	MV1-2	364753	4906063	2	0	0	100.3	100.3	1	4116.79	3.25	0	83.29	0	0.54	0	0	17.23	0	0	0	0	0	0	-0.76	-0.76
Inverter	MV1-1	364715	4906166	2	0	0	100.3	100.3	1	4226.52	3.25	0	83.52	0	0.56	0	0	17.41	0	0	0	0	0	0	-1.17	-1.17
Inverters	G_Inv5	366638.5	4902958.1	2	0	0	87.7	87.7	1	985.08	3.25	0	70.87	0	2.45	0	0	1.41	0	0	0	0	0	0	12.94	12.94
Inverter	MV1-14	365163	4905049	2	0	0	97.3	97.3	1	3025.78	3.25	0	80.62	0	0.37	0	0	15.42	0	0	0	0	0	0	0.91	0.91
Inverters	G_Inv10	366900.7	4902704.8	2	0	0	87.7	87.7	1	1000.7	3.25	0	71.01	0	2.45	0	0	1.43	0	0	0	0	0	0	12.78	12.78
Inverters	G_Inv8	366844.5	4902838.5	2	0	0	87.7	87.7	1	1036.27	3.25	0	71.31	0	2.45	0	0	1.47	0	0	0	0	0	0	12.42	12.42
Inverter	MV2-3	365820	4906641	2	0	0	100.3	100.3	1	4487.8	3.25	0	84.04	0	0.59	0	0	17.81	0	0	0	0	0	0	-2.13	-2.13
Inverter	MV2-4	365586	4906624	2	0	0	100.3	100.3	1	4489.55	3.25	0	84.04	0	0.59	0	0	17.81	0	0	0	0	0	0	-2.14	-2.14
Inverters	G_Inv3	366583.7	4903091.4	2	0	0	87.7	87.7	1	1068.07	3.25	0	71.57	0	2.46	0	0	1.51	0	0	0	0	0	0	12.12	12.12
Inverters	G_Inv6	366788.5	4902972	2	0	0	87.7	87.7	1	1090.12	3.25	0	71.75	0	2.46	0	0	1.54	0	0	0	0	0	0	11.91	11.91
Inverter	MV1-13	364731	4905241	2	0	0	97.3	97.3	1	3356.28	3.25	0	81.52	0	0.43	0	0	15.99	0	0	0	0	0	0	-0.62	-0.62
Inverters	G_Inv4	366732.8	4903105	2	0	0	87.7	87.7	1	1159.41	3.25	0	72.28	0	2.47	0	0	1.63	0	0	0	0	0	0	11.28	11.28
Inverters	G_Inv1	366526.4	4903225.8	2	0	0	87.7	87.7	1	1163.06	3.25	0	72.31	0	2.47	0	0	1.63	0	0	0	0	0	0	11.24	11.24
Inverter	MV1-10	365004	4905564	2	0	0	97.3	97.3	1	3564.77	3.25	0	82.04	0	0.46	0	0	16.34	0	0	0	0	0	0	-1.53	-1.53
Inverters	G_Inv2	366676.9	4903239.1	2	0	0	87.7	87.7	1	1242.51	3.25	0	72.89	0	2.48	0	0	1.73	0	0	0	0	0	0	10.56	10.56
Inverter	MV1-7	364925	4905782	2	0	0	97.3	97.3	1	3796.41	3.25	0	82.59	0	0.5	0	0	16.72	0	0	0	0	0	0	-2.49	-2.49
Inverter	MV3-18	367752	4907412	2	0	0	100.3	100.3	1	5517.65	3.25	0	85.84	0	0.68	0	0	19.33	0	0	0	0	0	0	-5.53	-5.53
Inverter	MV3-21	368478	4907206	2	0	0	100.3	100.3	1	5595.05	3.25	0	85.96	0	0.69	0	0	19.43	0	0	0	0	0	0	-5.76	-5.76
Inverter	MV3-12	367668	4907594	2	0	0	100.3	100.3	1	5666.79	3.25	0	86.07	0	0.69	0	0	19.53	0	0	0	0	0	0	-5.98	-5.98
Inverter	MV3-19	368357	4907347	2	0	0	100.3	100.3	1	5672.51	3.29	0	86.08	0	1.65	2.57	0	19.54	0	0	0	0	0	0	-9.52	-9.52
Inverter	MV3-17	368178	4907472	2	0	0	100.3	100.3	1	5718.4	3.25	0	86.15	0	0.69	0	0	19.61	0	0	0	0	0	0	-6.13	-6.13
Inverter	MV3-13	367963	4907577	2	0	0	100.3	100.3	1	5741.33	3.25	0	86.18	0	0.69	0	0	19.64	0	0	0	0	0	0	-6.2	-6.2
Inverter	MV3-20	368689	4907317	2	0	0	100.3	100.3	1	5788.05	3.25	0	86.25	0	0.7	0	0	19.7	0	0	0	0	0	0	-6.34	-6.34
Inverter	MV3-15	368357	4907477	2	0	0	100.3	100.3	1	5791.63	3.25	0	86.26	0	0.7	0	0	19.71	0	0	0	0	0	0	-6.35	-6.35
Inverter	MV3-16	368514	4907475	2	0	0	100.3	100.3	1	5853.82	3.25	0	86.35	0	0.7	0	0	19.79	0	0	0	0	0	0	-6.53	-6.53
Inverter	MV3-10	368167	4907669	2	0	0	100.3	100.3	1	5897.93	3.25	0	86.41	0	0.7	0	0	19.85	0	0	0	0	0	0	-6.66	-6.66
Inverter	MV3-7	367945	4907754	2	0	0	100.3	100.3	1	5902.86	3.25	0	86.42	0	0.7	0	0	19.86	0	0	0	0	0	0	-6.67	-6.67
Inverter	MV3-14	368684	4907498	2	0	0	100.3	100.3	1	5947.69	3.25	0	86.49	0	0.7	0	0	19.92	0	0	0	0	0	0	-6.8	-6.8
Inverter	MV3-11	368346	4907662	2	0	0	100.3	100.3	1	5957.71	3.25	0	86.5	0	0.7	0	0	19.94	0	0	0	0	0	0	-6.83	-6.83
Inverter	MV3-6	368162	4907834	2	0	0	100.3	100.3	1	6050.6	3.25	0	86.64	0	0.71	0	0	20.06	0	0	0	0	0	0	-7.09	-7.09
Inverter	MV3-9	368512	4907703	2	0	0	100.3	100.3	1	6060.79	3.27	0	86.65	0	1.69	2.49	0	20.08	0	0	0	0	0	0	-10.59	-10.59
Inverter	MV3-3	367939	4907927	2	0	0	100.3	100.3	1	6065.21	3.25	0	86.66	0	0.71	0	0	20.08	0	0	0	0	0	0	-7.13	-7.13
Inverter	MV3-8	368680	4907712	2	0	0	100.3	100.3	1	6138.78	3.25	0	86.76	0	0.71	0	0	20.18	0	0	0	0	0	0	-7.34	-7.34
Inverter	MV6-3	370207	4907140	2	0	0	100.3	100.3	1	6479.86	3.25	0	87.23	0	0.71	0	0	20.63	0	0	0	0	0	0	-8.27	-8.27
Inverter	MV6-2	370085	4907339	2	0	0	100.3	100.3	1	6558.48	3.25	0	87.34	0	0.72	0	0	20.74	0	0	0	0	0	0	-8.47	-8.47
Inverter	MV2-1	365842	4906816	2	0	0	97.3	97.3	1	4661.47	3.25	0	84.37	0	0.61	0	0	18.08	0	0	0	0	0	0	-5.74	-5.74
Inverter	MV4-11	369264	4908855	2	0	0	100.3	100.3	1	7421.8	3.25	0	88.41	0	0.69	0	0	21.82	0	0	0	0	0	0	-10.61	-10.61
Inverter	MV4-10	369312	4908858	2	0	0	100.3	100.3	1	7445.33	3.25	0	88.44	0	0.69	0	0	21.85	0	0	0	0	0	0	-10.67	-10.67
Inverter	MV4-7	369035	4909001	2	0	0	100.3	100.3	1	7459.56	3.25	0	88.45	0	0.69	0	0	21.87	0	0	0	0	0	0	-10.7	-10.7
Inverter	MV4-8	369256	4909001	2	0	0	100.3	100.3	1	7550.38	3.25	0	88.56	0	0.69	0	0	21.98	0	0	0	0	0	0	-10.91	-10.91
Inverter	MV4-9	369289	4909001	2	0	0	100.3	100.3	1	7564.4	3.25	0	88.58	0	0.69	0	0	21.99	0	0	0	0	0	0	-10.94	-10.94
Inverter	MV5-5	370015	4908690	2	0	0	100.3	100.3	1	7633.81	3.25	0	88.65	0	0.68	0	0	22.08	0	0	0	0	0	0	-11.1	-11.1
Inverter	MV4-4	369027	4909199	2	0	0	100.3	100.3	1	7638.45	3.25	0	88.66	0	0.68	0	0	22.08	0	0	0	0	0	0	-11.11	-11.11
Inverter	MV4-6	369243	4909192	2	0	0	100.3	100.3	1	7718.5	3.25	0	88.75	0	0.68	0	0	22.18	0	0	0	0	0	0	-11.29	-11.29
Inverter	MV4-5	369289	4909199	2	0	0	100.3	100.3	1	7743.93	3.25	0	88.78	0	0.67	0	0	22.21	0	0	0	0	0	0	-11.35	-11.35
Inverter	MV5-2	370006	4908853	2	0	0	100.3	100.3	1	7769.13	3.25	0	88.81	0	0.67	0	0	22.24	0	0	0	0	0	0	-11.4	-11.4
Inverter	MV5-4	370324	4908707	2	0	0	100.3	100.3	1	7812.56	3.25	0	88.86	0	0.67	0	0	22.29	0	0	0	0	0	0	-11.5	-11.5
Inverter	MV4-1	369011	4909397	2	0	0	100.3	100.3	1	7815.25	3.25	0	88.86	0	0.67	0	0	22.29	0	0	0	0	0	0	-11.51	-11.51
Inverter	MV5-3	370231	4908851	2	0	0	100.3	100.3	1	7884.05	3.25	0	88.93	0	0.66	0	0	22.37	0	0	0	0	0	0	-11.66	-11.66
Inverter	MV4-3	369229	4909397	2	0	0	100.3	100.3	1	7900.1	3.25	0	88.95	0	0.66	0	0	22.39	0	0	0	0	0	0	-11.69	-11.69
Inverter	MV4-2	369272	4909397	2	0	0	100.3	100.3	1	7917.44	3.25	0	88.97	0	0.66	0	0	22.41	0	0	0	0	0	0	-11.73	-11.73
Inverter	MV5-1	370020	4909142	2	0	0	100.3	100.3	1	8026.35	3.25	0	89.09	0	0.65	0	0	22.54	0	0	0	0	0	0	-11.97	-11.97
Inverter	MV6-1	370235	4907364	2	0	0	97.3	97.3	1	6671.05	3.25	0	87.48	0	0.71	0	0	20.88	0	0	0	0	0	0	-11.77	-11.77
DSTATCOM - 10 MVAR #2	DSAT2	369403	4908757	2.5	0	0	96.6	96.6	1	7395.27	3.5	0	88.38	0	3.86	0	0	4.49	0	0	0	0	0	0	-0.1	-0.1
DSTATCOM - 10 MVAR #1	DSAT1	369437	4908757	2.5	0	0	96.6	96.6	1	7410.69	3.5	0	88.4	0	3.86	0	0	4.5	0	0	0	0	0	0	-0.13	-0.13
SubstationTransformer	W_ST	369711.17	4906112.3	2.5	0	0	92	92	1	5379.86	3.5	0	85.62	0	0.64	0	-0.1	9.06	0	0	0	0	0	0	-3.34	-3.34
Inverter	MV1-3	364440	4906039	2	0	0	89.1	89.1	1	4204.55	3.25	0	83.47	0	1.44	0	0	11.37	0	0	0	0	0	0	-7.23	-7.23
Inverter	MV2-2	365977	4906654	2	0	0	89.1	89.1	1	4495.09	3.25	0	84.05	0	1.51	0	0	11.78	0	0	0	0	0	0	-8.29	-8.29
Westbrook Inverter Enclosur	W_INV3	369508	4906164	2	0	0	89.1	89.1	1	5283.26	3.25	0	85.46	0	1.71	0	0	12.84	0	0	0	0	0	0	-10.95	-10.95
Westbrook Inverter Enclosur	W_INV2	369374	4906388	2	0	0	89.1	89.1	1	5371.33	3.25	0	85.6	0	1.73	0	0	12.95	0	0	0	0	0	0	-11.23	-11.23
Westbrook Inverter Enclosur	W_INV4	369673	4906164	2	0	0	89.1	89.1	1	5392.34	3.25	0	85.64	0	1.74	0	0	12.98	0	0	0	0	0	0	-11.3	-11.3
Inverter	MV3-22	368656	4907142	2	0	0	89.1	89.1	1	5617.36	3.25	0	85.99	0	1.79	0	0	13.27	0	0	0	0	0	0	-12	-12
Westbrook Inverter Enclosur	W_INV7	369780	4906417	2	0	0	89.1	89.1	1	5652.6	3.25	0	86.04	0	1.8	0	0	13.32	0	0	0	0	0	0	-12.11	-12.11
Westbrook Inverter Enclosur	W_INV5	369719	4906574	2	0	0	89.1	89.1	1	5732.66	3.25	0	86.17	0	1.82	0	0	13.42	0	0	0	0	0	0	-12.35	-12.35
Westbrook Inverter Enclosur	W_INV6	369875	4906578	2	0	0	89.1	89.1	1	5836.45	3.25	0	86.32	0	1.85	0	0	13.56	0	0	0	0	0	0	-12.67	-12.67
Inverter	MV3-5	368340	4907843	2	0	0	89.1	89.1	1	6123.03	3.25	0	86.74	0	1.92	0	0	13.92	0	0	0	0	0	0	-13.51	-13.51
Inverter	MV3-1	368156	4907976	2	0	0	89.1	89.1	1	6181.93	3.25	0	86.82	0	1.93	0	0	13.99	0	0	0	0	0	0	-13.69	-13.69
Inverter	MV3-4	368502	4907925	2	0	0	89.1	89.1	1	6260.57	3.25	0	86.93	0	1.95	0	0	14.09	0	0	0	0	0	0	-13.91	-13.91
Inverter	MV3-2	368671	4907928	2	0	0	89.1	89.1	1	6331.1	3.25	0	87.03	0	1.97	0	0	14.18	0	0	0	0	0	0	-14.11	-14.11
Fixed Reactor Bank 1	FRB1	369378	4908755	6	0	0	89.8	89.8	1	7382.22	5.25	0	88.36	0	-0.24	0	0	11.11	0	0	0	0	0	0	-9.45	-9.45
Fixed Reactor Bank 2	FRB2	369464	4908755	6	0	0	89.8	89.8	1	7421.25	5.25	0	88.41	0	-0.23	0	0	11.14	0	0	0	0	0	0	-9.54	-9.54

Inverter	MV4-15	369176	4908481	2	0	0	89.1	89.1	1	7046.91	3.25	0	87.96	0	2.14	0	0	15.04	0	0	0	0	0	0	-16.08	-16.08
Inverter	MV4-14	369176	4908507	2	0	0	89.1	89.1	1	7070.24	3.25	0	87.99	0	2.14	0	0	15.07	0	0	0	0	0	0	-16.15	-16.15
Inverter	MV4-13	369051	4908605	2	0	0	89.1	89.1	1	7104.86	3.25	0	88.03	0	2.15	0	0	15.11	0	0	0	0	0	0	-16.24	-16.24
Inverter	MV4-12	369043	4908803	2	0	0	89.1	89.1	1	7281.67	3.25	0	88.24	0	2.19	0	0	15.32	0	0	0	0	0	0	-16.7	-16.7
Inverter	MV5-6	369982	4908507	2	0	0	89.1	89.1	1	7460.47	3.25	0	88.46	0	2.24	0	0	15.53	0	0	0	0	0	0	-17.16	-17.16
Westbrook Inverter Enclosur	W_INV1	369409	4906578	2	0	0	86.1	86.1	1	5543.21	3.25	0	85.88	0	1.77	0	0	13.18	0	0	0	0	0	0	-14.77	-14.77
Inverter	MV6-4	370250	4906966	2	0	0	86.1	86.1	1	6375.27	3.25	0	87.09	0	1.98	0	0	14.23	0	0	0	0	0	0	-17.24	-17.24
Westbrook Inverter Transfor	W_INVTR1	369403	4906578	2	0	0	78.2	78.2	1	5539.59	3.25	0	85.87	0	-3.28	0	0	2.59	0	0	0	0	0	0	-6.94	-6.94
Westbrook Inverter Transfor	W_INVTR3	369514	4906164	2	0	0	77.3	77.3	1	5287.17	3.25	0	85.46	0	-3.23	0	0	2.51	0	0	0	0	0	0	-7.4	-7.4
Westbrook Inverter Transfor	W_INVTR2	369368	4906388	2	0	0	77.3	77.3	1	5367.63	3.25	0	85.6	0	-3.25	0	0	2.54	0	0	0	0	0	0	-7.54	-7.54
Westbrook Inverter Transfor	W_INVTR4	369679	4906164	2	0	0	77.3	77.3	1	5396.36	3.25	0	85.64	0	-3.26	0	0	2.55	0	0	0	0	0	0	-7.59	-7.59
Westbrook Inverter Transfor	W_INVTR7	369786	4906417	2	0	0	77.3	77.3	1	5656.55	3.25	0	86.05	0	-3.3	0	0	2.63	0	0	0	0	0	0	-8.04	-8.04
Westbrook Inverter Transfor	W_INVTR5	369725	4906574	2	0	0	77.3	77.3	1	5736.49	3.25	0	86.17	0	-3.32	0	0	2.66	0	0	0	0	0	0	-8.17	-8.17
Westbrook Inverter Transfor	W_INVTR6	369881	4906578	2	0	0	77.3	77.3	1	5840.37	3.25	0	86.33	0	-3.34	0	0	2.69	0	0	0	0	0	0	-8.34	-8.34
Inverter Transformer	MV1-14 T	365157	4905049	2	0	0	69.4	69.4	1	3027.57	3.25	0	80.62	0	2.52	0	0	5.91	0	0	0	0	0	0	-19.69	-19.69
Inverter Transformer	MV1-13 T	364725	4905241	2	0	0	69.4	69.4	1	3358.67	3.25	0	81.52	0	2.61	0	0	6.18	0	0	0	0	0	0	-20.97	-20.97
Inverter Transformer	MV1-10 T	365010	4905564	2	0	0	69.4	69.4	1	3562.99	3.25	0	82.04	0	2.67	0	0	6.34	0	0	0	0	0	0	-21.7	-21.7
Inverter Transformer	MV1-7 T	364919	4905782	2	0	0	69.4	69.4	1	3798.21	3.25	0	82.59	0	2.73	0	0	6.52	0	0	0	0	0	0	-22.5	-22.5
Inverter Transformer	MV2-1 T	365836	4906816	2	0	0	69.4	69.4	1	4661.76	3.25	0	84.37	0	2.94	0	0	7.15	0	0	0	0	0	0	-25.11	-25.11
Inverter Transformer	MV6-4 T	370244	4906966	2	0	0	69.4	69.4	1	6371.33	3.25	0	87.08	0	3.24	0	0	8.24	0	0	0	0	0	0	-29.22	-29.22
Inverter Transformer	MV6-1 T	370230	4907364	2	0	0	69.4	69.4	1	6667.92	3.25	0	87.48	0	3.28	0	0	8.41	0	0	0	0	0	0	-29.82	-29.82
Inverter Transformer	MV1-15 T	365309	4904994	2	0	0	56.1	56.1	1	2932.49	3.25	0	80.34	0	0.8	0	0	8.75	0	0	0	0	0	0	-33.84	-33.84
Inverter Transformer	MV1-12 T	365044	4905386	2	0	0	56.1	56.1	1	3382.95	3.25	0	81.59	0	0.99	0	0	9.5	0	0	0	0	0	0	-36.02	-36.02
Inverter Transformer	MV1-11 T	364649	4905414	2	0	0	56.1	56.1	1	3547.62	3.25	0	82	0	1.06	0	0	9.76	0	0	0	0	0	0	-36.76	-36.76
Inverter Transformer	MV1-8 T	364782	4905647	2	0	0	56.1	56.1	1	3714.62	3.25	0	82.4	0	1.13	0	0	10.02	0	0	0	0	0	0	-37.49	-37.49
Inverter Transformer	MV1-9 T	364555	4905646	2	0	0	56.1	56.1	1	3797.87	3.25	0	82.59	0	1.16	0	0	10.15	0	0	0	0	0	0	-37.85	-37.85
Inverter Transformer	MV1-4 T	364821	4905918	2	0	0	56.1	56.1	1	3957.73	3.25	0	82.95	0	1.23	0	0	10.39	0	0	0	0	0	0	-38.51	-38.51
Inverter Transformer	MV1-5 T	364676	4905892	2	0	0	56.1	56.1	1	3981.17	3.25	0	83	0	1.24	0	0	10.43	0	0	0	0	0	0	-38.61	-38.61
Inverter Transformer	MV1-6 T	364482	4905835	2	0	0	56.1	56.1	1	4000.33	3.25	0	83.04	0	1.24	0	0	10.46	0	0	0	0	0	0	-38.68	-38.68
Inverter Transformer	MV1-2 T	364759	4906063	2	0	0	56.1	56.1	1	4114.88	3.25	0	83.29	0	1.29	0	0	10.62	0	0	0	0	0	0	-39.14	-39.14
Inverter Transformer	MV1-3 T	364435	4906039	2	0	0	56.1	56.1	1	4206.48	3.25	0	83.48	0	1.33	0	0	10.76	0	0	0	0	0	0	-39.5	-39.5
Inverter Transformer	MV1-1 T	364721	4906166	2	0	0	56.1	56.1	1	4224.62	3.25	0	83.52	0	1.33	0	0	10.78	0	0	0	0	0	0	-39.57	-39.57
Inverter Transformer	MV2-3 T	365814	4906641	2	0	0	56.1	56.1	1	4488.13	3.25	0	84.04	0	1.44	0	0	11.16	0	0	0	0	0	0	-40.58	-40.58
Inverter Transformer	MV2-4 T	365590	4906628	2	0	0	56.1	56.1	1	4493.11	3.25	0	84.05	0	1.44	0	0	11.17	0	0	0	0	0	0	-40.6	-40.6
Inverter Transformer	MV2-2 T	365982	4906654	2	0	0	56.1	56.1	1	4495	3.25	0	84.05	0	1.44	0	0	11.17	0	0	0	0	0	0	-40.6	-40.6
Inverter Transformer	MV3-18 T	367757	4907412	2	0	0	56.1	56.1	1	5519.18	3.25	0	85.84	0	1.81	0	0	12.52	0	0	0	0	0	0	-44.11	-44.11
Inverter Transformer	MV3-21 T	368484	4907206	2	0	0	56.1	56.1	1	5597.65	3.25	0	85.96	0	1.83	0	0	12.62	0	0	0	0	0	0	-44.35	-44.35
Inverter Transformer	MV3-22 T	368661	4907142	2	0	0	56.1	56.1	1	5619.67	3.25	0	85.99	0	1.84	0	0	12.64	0	0	0	0	0	0	-44.42	-44.42
Inverter Transformer	MV3-12 T	367674	4907594	2	0	0	56.1	56.1	1	5668.49	3.25	0	86.07	0	1.86	0	0	12.7	0	0	0	0	0	0	-44.57	-44.57
Inverter Transformer	MV3-19 T	368352	4907347	2	0	0	56.1	56.1	1	5670.49	3.29	0	86.07	0	2.72	1.86	0	12.71	0	0	0	0	0	0	-47.31	-47.31
Inverter Transformer	MV3-17 T	368183	4907472	2	0	0	56.1	56.1	1	5720.25	3.25	0	86.15	0	1.87	0	0	12.77	0	0	0	0	0	0	-44.73	-44.73
Inverter Transformer	MV3-13 T	367958	4907577	2	0	0	56.1	56.1	1	5739.67	3.25	0	86.18	0	1.88	0	0	12.79	0	0	0	0	0	0	-44.79	-44.79
Inverter Transformer	MV3-20 T	368683	4907317	2	0	0	56.1	56.1	1	5785.33	3.25	0	86.25	0	1.9	0	0	12.85	0	0	0	0	0	0	-44.93	-44.93
Inverter Transformer	MV3-15 T	368351	4907477	2	0	0	56.1	56.1	1	5789.26	3.25	0	86.25	0	1.9	0	0	12.85	0	0	0	0	0	0	-44.94	-44.94
Inverter Transformer	MV3-16 T	368509	4907475	2	0	0	56.1	56.1	1	5851.72	3.25	0	86.35	0	1.92	0	0	12.93	0	0	0	0	0	0	-45.13	-45.13
Inverter Transformer	MV3-10 T	368162	4907669	2	0	0	56.1	56.1	1	5896.14	3.25	0	86.41	0	1.93	0	0	12.98	0	0	0	0	0	0	-45.26	-45.26
Inverter Transformer	MV3-7 T	367951	4907754	2	0	0	56.1	56.1	1	5904.78	3.25	0	86.42	0	1.93	0	0	12.99	0	0	0	0	0	0	-45.29	-45.29
Inverter Transformer	MV3-14 T	368678	4907498	2	0	0	56.1	56.1	1	5945.04	3.25	0	86.48	0	1.95	0	0	13.04	0	0	0	0	0	0	-45.41	-45.41
Inverter Transformer	MV3-11 T	368340	4907662	2	0	0	56.1	56.1	1	5955.41	3.25	0	86.5	0	1.95	0	0	13.05	0	0	0	0	0	0	-45.44	-45.44
Inverter Transformer	MV3-6 T	368156	4907834	2	0	0	56.1	56.1	1	6048.52	3.25	0	86.63	0	1.98	0	0	13.16	0	0	0	0	0	0	-45.71	-45.71
Inverter Transformer	MV3-9 T	368517	4907703	2	0	0	56.1	56.1	1	6062.81	3.27	0	86.65	0	2.83	1.77	0	13.18	0	0	0	0	0	0	-48.37	-48.37
Inverter Transformer	MV3-3 T	367944	4907927	2	0	0	56.1	56.1	1	6066.76	3.25	0	86.66	0	1.99	0	0	13.18	0	0	0	0	0	0	-45.77	-45.77
Inverter Transformer	MV3-5 T	368335	4907843	2	0	0	56.1	56.1	1	6121.17	3.25	0	86.74	0	2	0	0	13.25	0	0	0	0	0	0	-45.93	-45.93
Inverter Transformer	MV3-8 T	368685	4907712	2	0	0	56.1	56.1	1	6140.91	3.25	0	86.76	0	2.01	0	0	13.27	0	0	0	0	0	0	-45.98	-45.98
Inverter Transformer	MV3-1 T	368150	4907976	2	0	0	56.1	56.1	1	6179.9	3.25	0	86.82	0	2.02	0	0	13.31	0	0	0	0	0	0	-46.1	-46.1
Inverter Transformer	MV3-4 T	368507	4907925	2	0	0	56.1	56.1	1	6262.52	3.25	0	86.93	0	2.05	0	0	13.41	0	0	0	0	0	0	-46.33	-46.33
Inverter Transformer	MV3-2 T	368677	4907928	2	0	0	56.1	56.1	1	6333.57	3.25	0	87.03	0	2.07	0	0	13.49	0	0	0	0	0	0	-46.53	-46.53
Inverter Transformer	MV6-3 T	370202	4907140	2	0	0	56.1	56.1	1	6476.66	3.25	0	87.23	0	2.11	0	0	13.65	0	0	0	0	0	0	-46.93	-46.93
Inverter Transformer	MV6-2 T	370091	4907339	2	0	0	56.1	56.1	1	6562.17	3.25	0	87.34	0	2.14	0	0	13.75	0	0	0	0	0	0	-47.17	-47.17
Inverter Transformer	MV4-15 T	369170	4908481	2	0	0	56.1	56.1	1	7044.26	3.25	0	87.96	0	2.27	0	0	14.28	0	0	0	0	0	0	-48.45	-48.45
Inverter Transformer	MV4-14 T	369182	4908507	2	0	0	56.1	56.1	1	7072.89	3.25	0	87.99	0	2.28	0	0	14.31	0	0	0	0	0	0	-48.52	-48.52
Inverter Transformer	MV4-13 T	369057	4908605	2	0	0	56.1	56.1	1	7107.38	3.25	0	88.03	0	2.29	0	0	14.34	0	0	0	0	0	0	-48.61	-48.61
Inverter Transformer	MV4-12 T	369049	4908803	2	0	0	56.1	56.1	1	7284.13	3.25	0	88.25	0	2.34	0	0	14.53	0	0	0	0	0	0	-49.05	-49.05
Inverter Transformer	MV4-11 T	369269	4908855	2	0	0	56.1	56.1	1	7423.95	3.25	0	88.41	0	2.37	0	0	14.68	0	0	0	0	0	0	-49.4	-49.4
Inverter Transformer	MV4-10 T	369307	4908858	2	0	0	56.1	56.1	1	7443.15	3.25	0	88.44	0	2.38	0	0	14.7	0	0	0	0	0	0	-49.45	-49.45
Inverter Transformer	MV4-7 T	369040	4909001	2	0	0	56.1	56.1	1	7461.56	3.25	0	88.46	0	2.38	0	0	14.71	0	0	0	0	0	0	-49.49	-49.49
Inverter Transformer	MV5-6 T	369987	4908507	2	0	0	56.1	56.1	1	7463.09	3.25	0	88.46	0	2.38	0	0	14.72	0	0	0	0	0	0	-49.5	-49.5
Inverter Transformer	MV4-8 T	369262	4909001	2	0	0	56.1	56.1	1	7552.92	3.25	0	88.56	0	2.4	0	0	14.81	0	0	0	0	0	0	-49.72	-49.72
Inverter Transformer	MV4-9 T	369284	4909001	2	0	0	56.1	56.1	1	7562.27	3.25	0	88.57	0	2.41	0	0	14.82	0	0	0	0	0	0	-49.74	-49.74
Inverter Transformer	MV5-5 T	370021	4908690	2	0	0	56.1	56.1	1	7636.91	3.25	0	88.66	0	2.42	0	0	14.89	0	0	0	0	0	0	-49.92	-49.92
Inverter Transformer	MV4-4 T	369033	4909199	2	0	0	56.1	56.1	1	7640.78	3.25	0	88.66	0	2.42	0	0	14.9	0	0	0	0	0	0	-49.93	-49.93
Inverter Transformer	MV4-6 T	369249	4909192	2	0	0	56.1	56.1	1	7720.97	3.25	0	88.75	0	2.44	0	0	14.98	0	0	0	0	0	0	-50.12	-50.12
Inverter Transformer	MV4-5 T	369283	4909199	2	0	0	56.1	56.1	1	7741.43	3.25	0	88.78	0	2.45	0	0	15	0	0	0	0	0	0	-50.17	-50.17
Inverter Transformer	MV5-2 T	370011	4908853	2	0	0	56.1	56.1	1	7771.67	3.25	0	88.81	0	2.46	0	0	15.03	0	0	0	0	0	0	-50.24	-50.24

	Inverter Transformer	MV5-4 T	370330	4908707	2	0	0	56.1	56.1	1	7815.83	3.25	0	88.86	0	2.47	0	0	15.07	0	0	0	0	0	0	-50.34	-50.34
	Inverter Transformer	MV4-1 T	369017	4909397	2	0	0	56.1	56.1	1	7817.51	3.25	0	88.86	0	2.47	0	0	15.08	0	0	0	0	0	0	-50.35	-50.35
	Inverter Transformer	MV5-3 T	370237	4908851	2	0	0	56.1	56.1	1	7887.22	3.25	0	88.94	0	2.48	0	0	15.14	0	0	0	0	0	0	-50.51	-50.51
	Inverter Transformer	MV4-3 T	369234	4909397	2	0	0	56.1	56.1	1	7902.11	3.25	0	88.95	0	2.49	0	0	15.16	0	0	0	0	0	0	-50.54	-50.54
	Inverter Transformer	MV4-2 T	369267	4909397	2	0	0	56.1	56.1	1	7915.41	3.25	0	88.97	0	2.49	0	0	15.17	0	0	0	0	0	0	-50.57	-50.57
	Inverter Transformer	MV5-1 T	370015	4909142	2	0	0	56.1	56.1	1	8023.88	3.25	0	89.09	0	2.52	0	0	15.28	0	0	0	0	0	0	-50.82	-50.82
	Line Reactor	NGR	369421	4908787.5	5	0	0	45.4	45.4	1	7430.61	5.25	0	88.42	0	3.21	1.37	0.11	3.04	0	0	0	0	0	0	-50.68	-50.68
Limit. Valu	0	0																								
Level D/N:	23.7975	23.7975																								

Receiver: Existing Noise Receptor
ID: G-46
X: 365641.7
Y: 4903197.7
Z: 4.5
Ground: 0

ISO	Description	ID	X	Y	Z	Ground	ReflOrd	LxT	LxN	L/A	Dist.	hm	Freq	Adiv	K0b	Agr	Abar	z	Aatm	Afol	Ahous	Cmet	CmetN	Dc	RL	LtotT	LtotN
	Sol_Luce Substation	S_Substation	369426	4908792	3.5	0	0	112.1	112.1	1	6754.04	5.25	0	87.59	0	1.33	2.49	0.29	10.51	0	0	0	0	0	0	10.15	10.15
	Inverter	MV1-15	365315	4904994	2	0	0	100.3	100.3	1	1825.77	3.25	0	76.23	0	0.08	0	0	13.09	0	0	0	0	0	0	10.92	10.92
	Inverter	MV1-12	365038	4905386	2	0	0	100.3	100.3	1	2270.05	3.25	0	78.12	0	0.2	0	0	14.01	0	0	0	0	0	0	7.98	7.98
	Inverter	MV1-11	364655	4905414	2	0	0	100.3	100.3	1	2426.02	3.25	0	78.7	0	0.24	0	0	14.32	0	0	0	0	0	0	7.06	7.06
	Inverter	MV1-8	364788	4905647	2	0	0	100.3	100.3	1	2593.82	3.25	0	79.28	0	0.28	0	0	14.63	0	0	0	0	0	0	6.12	6.12
	Inverter	MV1-9	364561	4905646	2	0	0	100.3	100.3	1	2676.21	3.25	0	79.55	0	0.3	0	0	14.79	0	0	0	0	0	0	5.68	5.68
	Inverter	MV1-14	365163	4905049	2	0	0	97.3	97.3	1	1912.19	3.25	0	76.63	0	0.1	0	0	13.27	0	0	0	0	0	0	7.3	7.3
	Inverter	MV1-4	364815	4905918	2	0	0	100.3	100.3	1	2843.14	3.25	0	80.08	0	0.33	0	0	15.09	0	0	0	0	0	0	4.81	4.81
	Inverter	MV1-5	364671	4905892	2	0	0	100.3	100.3	1	2863.83	3.25	0	80.14	0	0.34	0	0	15.13	0	0	0	0	0	0	4.71	4.71
	Gardiner Substation	G_Sub	366586.3	4903349.9	2.5	0	0	90.8	90.8	1	956.79	3.5	0	70.62	0	-0.38	0	0	2.43	0	0	0	0	0	0	18.11	18.11
	Inverter	MV1-6	364477	4905835	2	0	0	100.3	100.3	1	2883.03	3.25	0	80.2	0	0.34	0	0	15.16	0	0	0	0	0	0	4.61	4.61
	Inverter	MV1-2	364753	4906063	2	0	0	100.3	100.3	1	2999.96	3.25	0	80.54	0	0.36	0	0	15.37	0	0	0	0	0	0	4.04	4.04
	Inverter	MV1-1	364715	4906166	2	0	0	100.3	100.3	1	3109.6	3.25	0	80.85	0	0.38	0	0	15.56	0	0	0	0	0	0	3.51	3.51
	Inverter	MV1-13	364731	4905241	2	0	0	97.3	97.3	1	2237.06	3.25	0	77.99	0	0.19	0	0	13.95	0	0	0	0	0	0	5.18	5.18
	Inverter	MV2-4	365586	4906624	2	0	0	100.3	100.3	1	3426.75	3.25	0	81.7	0	0.44	0	0	16.11	0	0	0	0	0	0	2.07	2.07
	Inverter	MV2-3	365820	4906641	2	0	0	100.3	100.3	1	3447.91	3.25	0	81.75	0	0.44	0	0	16.14	0	0	0	0	0	0	1.97	1.97
	Inverter	MV1-10	365004	4905564	2	0	0	97.3	97.3	1	2450.72	3.25	0	78.79	0	0.25	0	0	14.36	0	0	0	0	0	0	3.92	3.92
	Inverter	MV1-7	364925	4905782	2	0	0	97.3	97.3	1	2681.84	3.25	0	79.57	0	0.3	0	0	14.8	0	0	0	0	0	0	2.65	2.65
	Inverters	G_Inv1	366526.4	4903225.8	2	0	0	87.7	87.7	1	885.15	3.25	0	69.94	0	2.43	0	0	1.28	0	0	0	0	0	0	14.01	14.01
	Inverters	G_Inv3	366583.7	4903091.4	2	0	0	87.7	87.7	1	947.98	3.25	0	70.54	0	2.44	0	0	1.36	0	0	0	0	0	0	13.32	13.32
	Inverters	G_Inv5	366638.5	4902958.1	2	0	0	87.7	87.7	1	1025.19	3.25	0	71.22	0	2.45	0	0	1.46	0	0	0	0	0	0	12.53	12.53
	Inverters	G_Inv2	366676.9	4903239.1	2	0	0	87.7	87.7	1	1036.03	3.25	0	71.31	0	2.45	0	0	1.47	0	0	0	0	0	0	12.43	12.43
	Inverters	G_Inv4	366732.8	4903105	2	0	0	87.7	87.7	1	1095.03	3.25	0	71.79	0	2.46	0	0	1.55	0	0	0	0	0	0	11.86	11.86
	Inverter	MV3-18	367752	4907412	2	0	0	100.3	100.3	1	4713.14	3.25	0	84.47	0	0.61	0	0	18.15	0	0	0	0	0	0	-2.92	-2.92
	Inverters	G_Inv7	366694.6	4902824.7	2	0	0	87.7	87.7	1	1117.02	3.25	0	71.96	0	2.47	0	0	1.57	0	0	0	0	0	0	11.66	11.66
	Inverter	MV3-12	367668	4907594	2	0	0	100.3	100.3	1	4840.8	3.25	0	84.7	0	0.63	0	0	18.34	0	0	0	0	0	0	-3.36	-3.36
	Inverter	MV3-21	368478	4907206	2	0	0	100.3	100.3	1	4910.3	3.25	0	84.82	0	0.63	0	0	18.45	0	0	0	0	0	0	-3.59	-3.59
	Inverter	MV3-13	367963	4907577	2	0	0	100.3	100.3	1	4956.48	3.25	0	84.9	0	0.64	0	0	18.52	0	0	0	0	0	0	-3.75	-3.75
	Inverter	MV3-19	368357	4907347	2	0	0	100.3	100.3	1	4958.79	3.25	0	84.91	0	0.64	0	0	18.52	0	0	0	0	0	0	-3.75	-3.75
	Inverter	MV3-17	368178	4907472	2	0	0	100.3	100.3	1	4970.16	3.25	0	84.93	0	0.64	0	0	18.54	0	0	0	0	0	0	-3.79	-3.79
	Inverters	G_Inv6	366788.5	4902972	2	0	0	87.7	87.7	1	1168.8	3.25	0	72.35	0	2.47	0	0	1.64	0	0	0	0	0	0	11.19	11.19
	Inverter	MV3-15	368357	4907477	2	0	0	100.3	100.3	1	5068.06	3.25	0	85.1	0	0.65	0	0	18.68	0	0	0	0	0	0	-4.11	-4.11
	Inverter	MV3-7	367945	4907754	2	0	0	100.3	100.3	1	5105.4	3.25	0	85.16	0	0.65	0	0	18.73	0	0	0	0	0	0	-4.23	-4.23
	Inverter	MV2-1	365842	4906816	2	0	0	97.3	97.3	1	3623.84	3.25	0	82.18	0	0.47	0	0	16.44	0	0	0	0	0	0	-1.78	-1.78
	Inverter	MV3-20	368689	4907317	2	0	0	100.3	100.3	1	5123.93	3.25	0	85.19	0	0.65	0	0	18.76	0	0	0	0	0	0	-4.29	-4.29
	Inverter	MV3-10	368167	4907669	2	0	0	100.3	100.3	1	5135.14	3.25	0	85.21	0	0.65	0	0	18.78	0	0	0	0	0	0	-4.33	-4.33
	Inverter	MV3-16	368514	4907475	2	0	0	100.3	100.3	1	5152.22	3.25	0	85.24	0	0.66	0	0	18.8	0	0	0	0	0	0	-4.39	-4.39
	Inverter	MV3-11	368346	4907662	2	0	0	100.3	100.3	1	5219.5	3.25	0	85.35	0	0.66	0	0	18.9	0	0	0	0	0	0	-4.6	-4.6
	Inverters	G_Inv9	366750.9	4902691.8	2	0	0	87.7	87.7	1	1219.12	3.25	0	72.72	0	2.48	0	0	1.7	0	0	0	0	0	0	10.76	10.76
	Inverter	MV3-3	367939	4907927	2	0	0	100.3	100.3	1	5257.74	3.25	0	85.42	0	0.66	0	0	18.96	0	0	0	0	0	0	-4.72	-4.72
	Inverter	MV3-14	368684	4907498	2	0	0	100.3	100.3	1	5267.65	3.25	0	85.43	0	0.66	0	0	18.97	0	0	0	0	0	0	-4.75	-4.75
	Inverter	MV3-6	368162	4907834	2	0	0	100.3	100.3	1	5277.04	3.25	0	85.45	0	0.66	0	0	18.98	0	0	0	0	0	0	-4.78	-4.78
	Inverter	MV3-9	368512	4907703	2	0	0	100.3	100.3	1	5341.94	3.25	0	85.55	0	0.67	0	0	19.08	0	0	0	0	0	0	-4.99	-4.99
	Inverters	G_Inv8	366844.5	4902838.5	2	0	0	87.7	87.7	1	1255.29	3.25	0	72.97	0	2.49	0	0	1.75	0	0	0	0	0	0	10.45	10.45
	Inverter	MV3-8	368680	4907712	2	0	0	100.3	100.3	1	5441.52	3.25	0	85.71	0	0.68	0	0	19.22	0	0	0	0	0	0	-5.3	-5.3
	Inverters	G_Inv10	366900.7	4902704.8	2	0	0	87.7	87.7	1	1352.05	3.25	0	73.62	0	2.5	0	0	1.86	0	0	0	0	0	0	9.68	9.68
	Inverter	MV6-3	370207	4907140	2	0	0	100.3	100.3	1	6031.89	3.25	0	86.61	0	0.71	0	0	20.04	0	0	0	0	0	0	-7.04	-7.04
	Inverter	MV6-2	370085	4907339	2	0	0	100.3	100.3	1	6073.98	3.25	0	86.67	0	0.71	0	0	20.09	0	0	0	0	0	0	-7.16	-7.16
	Inverter	MV4-11	369264	4908855	2	0	0	100.3	100.3	1	6717.6	3.25	0	87.54	0	0.71	0	0	20.94	0	0	0	0	0	0	-8.89	-8.89
	Inverter	MV4-7	369035	4909001	2	0	0	100.3	100.3	1	6722.56	3.25	0	87.55	0	0.71	0	0	20.95	0	0	0	0	0	0	-8.9	-8.9
	Inverter	MV4-10	369312	4908858	2	0	0	100.3	100.3	1	6746.12	3.25	0	87.58	0	0.71	0	0	20.98	0	0	0	0	0	0	-8.96	-8.96
	Inverter	MV4-8	369256	4909001	2	0	0	100.3	100.3	1	6836.77	3.25	0	87.7	0	0.71	0	0	21.09	0	0	0	0	0	0	-9.19	-9.19
	Inverter	MV4-9	369289	4909001	2	0	0	100.3	100.3	1	6854.28	3.25	0	87.72	0	0.71	0	0	21.12	0	0	0	0	0	0	-9.24	-9.24
	Inverter	MV4-4	369027	4909199	2	0	0	100.3	100.3	1	6890.27	3.25	0	87.76	0	0.71	0	0	21.16	0	0	0	0	0	0	-9.33	-9.33
	Inverter	MV4-6	369243	4909192	2	0	0	100.3	100.3	1	6992.93	3.25	0	87.89	0	0.71	0	0	21.29	0	0	0	0	0	0	-9.58	-9.58
	Inverter	MV5-5	370015	4908690	2	0	0	100.3	100.3	1	7020.76	3.25	0	87.93	0	0.71	0	0	21.33	0	0	0	0	0	0	-9.65	-9.65

Inverter	MV4-5	369289	4909199	2	0	0	100.3	100.3	1	7022.71	3.25	0	87.93	0	0.71	0	0	21.33	0	0	0	0	0	0	-9.65	-9.65
Inverter	MV4-1	369011	4909397	2	0	0	100.3	100.3	1	7055.74	3.25	0	87.97	0	0.71	0	0	21.37	0	0	0	0	0	0	-9.74	-9.74
Inverter	MV5-2	370006	4908853	2	0	0	100.3	100.3	1	7143.5	3.25	0	88.08	0	0.71	0	0	21.48	0	0	0	0	0	0	-9.95	-9.95
Inverter	MV4-3	369229	4909397	2	0	0	100.3	100.3	1	7162.41	3.25	0	88.1	0	0.7	0	0	21.5	0	0	0	0	0	0	-10	-10
Inverter	MV4-2	369272	4909397	2	0	0	100.3	100.3	1	7184.04	3.25	0	88.13	0	0.7	0	0	21.53	0	0	0	0	0	0	-10.05	-10.05
Inverter	MV5-4	370324	4908707	2	0	0	100.3	100.3	1	7230.24	3.25	0	88.18	0	0.7	0	0	21.59	0	0	0	0	0	0	-10.16	-10.16
Inverter	MV5-3	370231	4908851	2	0	0	100.3	100.3	1	7281.59	3.25	0	88.24	0	0.7	0	0	21.65	0	0	0	0	0	0	-10.28	-10.28
Inverter	MV5-1	370020	4909142	2	0	0	100.3	100.3	1	7382.7	3.25	0	88.36	0	0.7	0	0	21.77	0	0	0	0	0	0	-10.52	-10.52
Inverter	MV6-1	370235	4907364	2	0	0	97.3	97.3	1	6201.33	3.25	0	86.85	0	0.71	0	0	20.26	0	0	0	0	0	0	-10.51	-10.51
DSTATCOM - 10 MVAR #2	DSAT2	369403	4908757	2.5	0	0	96.6	96.6	1	6712.17	3.5	0	87.54	0	3.82	0	0	4.18	0	0	0	0	0	0	1.1	1.1
DSTATCOM - 10 MVAR #1	DSAT1	369437	4908757	2.5	0	0	96.6	96.6	1	6731.28	3.5	0	87.56	0	3.82	0	0	4.19	0	0	0	0	0	0	1.06	1.06
Inverter	MV1-3	364440	4906039	2	0	0	89.1	89.1	1	3084.98	3.25	0	80.79	0	1.17	0	0	9.75	0	0	0	0	0	0	-2.64	-2.64
Inverter	MV2-2	365977	4906654	2	0	0	89.1	89.1	1	3472.53	3.25	0	81.81	0	1.26	0	0	10.32	0	0	0	0	0	0	-4.34	-4.34
SubstationTransformer	W_ST	369711.17	4906112.3	2.5	0	0	92	92	1	5005.53	4.25	0	84.99	0	1.64	2.33	0.24	8.63	0	0	0	0	0	0	-5.61	-5.61
Westbrook Inverter Enclosur	W_INV3	369508	4906164	2	0	0	89.1	89.1	1	4873.11	3.25	0	84.76	0	1.61	0	0	12.29	0	0	0	0	0	0	-9.6	-9.6
Westbrook Inverter Enclosur	W_INV2	369374	4906388	2	0	0	89.1	89.1	1	4910	3.25	0	84.82	0	1.62	0	0	12.34	0	0	0	0	0	0	-9.72	-9.72
Inverter	MV3-22	368656	4907142	2	0	0	89.1	89.1	1	4964.22	3.25	0	84.92	0	1.63	0	0	12.42	0	0	0	0	0	0	-9.91	-9.91
Westbrook Inverter Enclosur	W_INV4	369673	4906164	2	0	0	89.1	89.1	1	5005.03	3.25	0	84.99	0	1.64	0	0	12.47	0	0	0	0	0	0	-10.04	-10.04
Westbrook Inverter Enclosur	W_INV7	369780	4906417	2	0	0	89.1	89.1	1	5243.04	3.25	0	85.39	0	1.7	0	0	12.79	0	0	0	0	0	0	-10.82	-10.82
Westbrook Inverter Enclosur	W_INV5	369719	4906574	2	0	0	89.1	89.1	1	5293.75	3.25	0	85.48	0	1.71	0	0	12.85	0	0	0	0	0	0	-10.98	-10.98
Inverter	MV3-5	368340	4907843	2	0	0	89.1	89.1	1	5372.12	3.25	0	85.6	0	1.73	0	0	12.96	0	0	0	0	0	0	-11.23	-11.23
Inverter	MV3-1	368156	4907976	2	0	0	89.1	89.1	1	5399.43	3.25	0	85.65	0	1.74	0	0	12.99	0	0	0	0	0	0	-11.32	-11.32
Westbrook Inverter Enclosur	W_INV6	369875	4906578	2	0	0	89.1	89.1	1	5417.31	3.25	0	85.68	0	1.74	0	0	13.01	0	0	0	0	0	0	-11.38	-11.38
Inverter	MV3-4	368502	4907925	2	0	0	89.1	89.1	1	5525.28	3.25	0	85.85	0	1.77	0	0	13.16	0	0	0	0	0	0	-11.71	-11.71
Inverter	MV3-2	368671	4907928	2	0	0	89.1	89.1	1	5617.15	3.25	0	85.99	0	1.79	0	0	13.27	0	0	0	0	0	0	-12	-12
Fixed Reactor Bank 1	FRB1	369378	4908755	6	0	0	89.8	89.8	1	6696.53	5.25	0	87.52	0	-0.32	0	0	10.45	0	0	0	0	0	0	-7.87	-7.87
Fixed Reactor Bank 2	FRB2	369464	4908755	6	0	0	89.8	89.8	1	6744.89	5.25	0	87.58	0	-0.32	0	0	10.5	0	0	0	0	0	0	-7.99	-7.99
Inverter	MV4-15	369176	4908481	2	0	0	89.1	89.1	1	6356.46	3.25	0	87.06	0	1.97	0	0	14.21	0	0	0	0	0	0	-14.19	-14.19
Inverter	MV4-14	369176	4908507	2	0	0	89.1	89.1	1	6378.08	3.25	0	87.09	0	1.98	0	0	14.23	0	0	0	0	0	0	-14.25	-14.25
Inverter	MV4-13	369051	4908605	2	0	0	89.1	89.1	1	6392.36	3.25	0	87.11	0	1.98	0	0	14.25	0	0	0	0	0	0	-14.29	-14.29
Inverter	MV4-12	369043	4908803	2	0	0	89.1	89.1	1	6556.54	3.25	0	87.33	0	2.02	0	0	14.45	0	0	0	0	0	0	-14.75	-14.75
Inverter	MV5-6	369982	4908507	2	0	0	89.1	89.1	1	6857.61	3.25	0	87.72	0	2.09	0	0	14.82	0	0	0	0	0	0	-15.58	-15.58
Westbrook Inverter Enclosur	W_INV1	369409	4906578	2	0	0	86.1	86.1	1	5061.52	3.25	0	85.09	0	1.65	0	0	12.55	0	0	0	0	0	0	-13.23	-13.23
Inverter	MV6-4	370250	4906966	2	0	0	86.1	86.1	1	5952.86	3.25	0	86.49	0	1.87	0	0	13.7	0	0	0	0	0	0	-16.01	-16.01
Westbrook Inverter Transfor	W_INVTR1	369403	4906578	2	0	0	78.2	78.2	1	5057.06	3.25	0	85.08	0	-3.19	0	0	2.43	0	0	0	0	0	0	-6.08	-6.08
Inverter Transformer	MV1-14 T	365157	4905049	2	0	0	69.4	69.4	1	1913.7	3.25	0	76.64	0	2.14	0	0	4.88	0	0	0	0	0	0	-14.31	-14.31
Westbrook Inverter Transfor	W_INVTR3	369514	4906164	2	0	0	77.3	77.3	1	4877.87	3.25	0	84.76	0	-3.15	0	0	2.37	0	0	0	0	0	0	-6.64	-6.64
Westbrook Inverter Transfor	W_INVTR2	369368	4906388	2	0	0	77.3	77.3	1	4905.44	3.25	0	84.81	0	-3.16	0	0	2.38	0	0	0	0	0	0	-6.69	-6.69
Westbrook Inverter Transfor	W_INVTR4	369679	4906164	2	0	0	77.3	77.3	1	5009.86	3.25	0	85	0	-3.18	0	0	2.42	0	0	0	0	0	0	-6.89	-6.89
Westbrook Inverter Transfor	W_INVTR7	369786	4906417	2	0	0	77.3	77.3	1	5247.77	3.25	0	85.4	0	-3.23	0	0	2.5	0	0	0	0	0	0	-7.33	-7.33
Westbrook Inverter Transfor	W_INVTR5	369725	4906574	2	0	0	77.3	77.3	1	5298.37	3.25	0	85.48	0	-3.24	0	0	2.51	0	0	0	0	0	0	-7.42	-7.42
Westbrook Inverter Transfor	W_INVTR6	369881	4906578	2	0	0	77.3	77.3	1	5422	3.25	0	85.68	0	-3.26	0	0	2.55	0	0	0	0	0	0	-7.64	-7.64
Inverter Transformer	MV1-13 T	364725	4905241	2	0	0	69.4	69.4	1	2239.51	3.25	0	78	0	2.26	0	0	5.2	0	0	0	0	0	0	-16.11	-16.11
Inverter Transformer	MV1-10 T	365010	4905564	2	0	0	69.4	69.4	1	2449.17	3.25	0	78.78	0	2.33	0	0	5.4	0	0	0	0	0	0	-17.16	-17.16
Inverter Transformer	MV1-7 T	364919	4905782	2	0	0	69.4	69.4	1	2683.45	3.25	0	79.57	0	2.41	0	0	5.61	0	0	0	0	0	0	-18.24	-18.24
Inverter Transformer	MV2-1 T	365836	4906816	2	0	0	69.4	69.4	1	3623.51	3.25	0	82.18	0	2.69	0	0	6.39	0	0	0	0	0	0	-21.91	-21.91
Inverter Transformer	MV6-4 T	370244	4906966	2	0	0	69.4	69.4	1	5948.21	3.25	0	86.49	0	3.18	0	0	7.99	0	0	0	0	0	0	-28.3	-28.3
Inverter Transformer	MV6-1 T	370230	4907364	2	0	0	69.4	69.4	1	6197.63	3.25	0	86.84	0	3.22	0	0	8.14	0	0	0	0	0	0	-28.85	-28.85
Inverter Transformer	MV1-15 T	365309	4904994	2	0	0	56.1	56.1	1	1826.85	3.25	0	76.23	0	0.33	0	0	6.7	0	0	0	0	0	0	-27.21	-27.21
Inverter Transformer	MV1-12 T	365044	4905386	2	0	0	56.1	56.1	1	2268.46	3.25	0	78.11	0	0.52	0	0	7.56	0	0	0	0	0	0	-30.13	-30.13
Inverter Transformer	MV1-11 T	364649	4905414	2	0	0	56.1	56.1	1	2428.47	3.25	0	78.71	0	0.59	0	0	7.86	0	0	0	0	0	0	-31.09	-31.09
Inverter Transformer	MV1-8 T	364782	4905647	2	0	0	56.1	56.1	1	2595.8	3.25	0	79.29	0	0.66	0	0	8.16	0	0	0	0	0	0	-32.05	-32.05
Inverter Transformer	MV1-9 T	364555	4905646	2	0	0	56.1	56.1	1	2678.64	3.25	0	79.56	0	0.69	0	0	8.31	0	0	0	0	0	0	-32.5	-32.5
Inverter Transformer	MV1-4 T	364821	4905918	2	0	0	56.1	56.1	1	2841.41	3.25	0	80.07	0	0.76	0	0	8.6	0	0	0	0	0	0	-33.37	-33.37
Inverter Transformer	MV1-5 T	364676	4905892	2	0	0	56.1	56.1	1	2862.14	3.25	0	80.13	0	0.77	0	0	8.63	0	0	0	0	0	0	-33.48	-33.48
Inverter Transformer	MV1-6 T	364482	4905835	2	0	0	56.1	56.1	1	2881.02	3.25	0	80.19	0	0.78	0	0	8.66	0	0	0	0	0	0	-33.58	-33.58
Inverter Transformer	MV1-2 T	364759	4906063	2	0	0	56.1	56.1	1	2998.18	3.25	0	80.54	0	0.83	0	0	8.86	0	0	0	0	0	0	-34.17	-34.17
Inverter Transformer	MV1-3 T	364435	4906039	2	0	0	56.1	56.1	1	3086.93	3.25	0	80.79	0	0.87	0	0	9.01	0	0	0	0	0	0	-34.61	-34.61
Inverter Transformer	MV1-1 T	364721	4906166	2	0	0	56.1	56.1	1	3107.81	3.25	0	80.85	0	0.88	0	0	9.05	0	0	0	0	0	0	-34.72	-34.72
Inverter Transformer	MV2-4 T	365590	4906628	2	0	0	56.1	56.1	1	3430.69	3.25	0	81.71	0	1.01	0	0	9.58	0	0	0	0	0	0	-36.24	-36.24
Inverter Transformer	MV2-3 T	365814	4906641	2	0	0	56.1	56.1	1	3447.61	3.25	0	81.75	0	1.02	0	0	9.6	0	0	0	0	0	0	-36.31	-36.31
Inverter Transformer	MV2-2 T	365982	4906654	2	0	0	56.1	56.1	1	3473.01	3.25	0	81.81	0	1.03	0	0	9.64	0	0	0	0	0	0	-36.43	-36.43
Inverter Transformer	MV3-18 T	367757	4907412	2	0	0	56.1	56.1	1	4715.38	3.25	0	84.47	0	1.52	0	0	11.47	0	0	0	0	0	0	-41.41	-41.41
Inverter Transformer	MV3-12 T	367674	4907594	2	0	0	56.1	56.1	1	4843.32	3.25	0	84.7	0	1.57	0	0	11.65	0	0	0	0	0	0	-41.86	-41.86
Inverter Transformer	MV3-21 T	368484	4907206	2	0	0	56.1	56.1	1	4913.77	3.25	0	84.83	0	1.59	0	0	11.74	0	0	0	0	0	0	-42.1	-42.1
Inverter Transformer	MV3-13 T	367958	4907577	2	0	0	56.1	56.1	1	4954.14	3.25	0	84.9	0	1.61	0	0	11.79	0	0	0	0	0	0	-42.24	-42.24
Inverter Transformer	MV3-19 T	368352	4907347	2	0	0	56.1	56.1	1	4956.05	3.25	0	84.9	0	1.61	0	0	11.8	0	0	0	0	0	0	-42.25	-42.25
Inverter Transformer	MV3-22 T	368661	4907142	2	0	0	56.1	56.1	1	4967.26	3.25	0	84.92	0	1.61	0	0	11.81	0	0	0	0	0	0	-42.29	-42.29
Inverter Transformer	MV3-17 T	368183	4907472	2	0	0	56.1	56.1	1	4972.71	3.25	0	84.93	0	1.62	0	0	11.82	0	0	0	0	0	0	-42.31	-42.31
Inverter Transformer	MV3-15 T	368351	4907477	2	0	0	56.1	56.1	1	5064.85	3.25	0	85.09	0	1.65	0	0	11.94	0	0	0	0	0	0	-42.62	-42.62
Inverter Transformer	MV3-7 T	367951	4907754	2	0	0	56.1	56.1	1	5108.11	3.25	0	85.17	0	1.66	0	0	12	0	0	0	0	0	0	-42.77	-42.77
Inverter Transformer	MV3-20 T	368683	4907317	2	0	0	56.1	56.1	1	5120.37	3.25	0	85.19	0	1.67	0	0	12.01	0	0	0	0	0	0	-42.81	-42.81
Inverter Transformer	MV3-10 T	368162	4907669	2	0	0	56.1	56.1	1	5132.68	3.25	0	85.21	0	1.67	0	0	12.03	0	0	0	0	0	0	-42.85	-42.85
Inverter Transformer	MV3-16 T	368509	4907475	2	0	0	56.1	56.1	1	5149.44	3.25	0	85.24	0	1.68	0	0	12.05	0	0	0	0	0	0	-42.91	-42.91

	Inverter Transformer	MV3-11 T	368340	4907662	2	0	0	56.1	56.1	1	5216.4	3.25	0	85.35	0	1.7	0	0	12.14	0	0	0	0	0	0	-43.13	-43.13
	Inverter Transformer	MV3-3 T	367944	4907927	2	0	0	56.1	56.1	1	5259.93	3.25	0	85.42	0	1.72	0	0	12.19	0	0	0	0	0	0	-43.27	-43.27
	Inverter Transformer	MV3-14 T	368678	4907498	2	0	0	56.1	56.1	1	5264.19	3.25	0	85.43	0	1.72	0	0	12.2	0	0	0	0	0	0	-43.28	-43.28
	Inverter Transformer	MV3-6 T	368156	4907834	2	0	0	56.1	56.1	1	5274.18	3.25	0	85.44	0	1.72	0	0	12.21	0	0	0	0	0	0	-43.32	-43.32
	Inverter Transformer	MV3-9 T	368517	4907703	2	0	0	56.1	56.1	1	5344.63	3.25	0	85.56	0	1.75	0	0	12.3	0	0	0	0	0	0	-43.55	-43.55
	Inverter Transformer	MV3-5 T	368335	4907843	2	0	0	56.1	56.1	1	5369.61	3.25	0	85.6	0	1.76	0	0	12.33	0	0	0	0	0	0	-43.63	-43.63
	Inverter Transformer	MV3-1 T	368150	4907976	2	0	0	56.1	56.1	1	5396.64	3.25	0	85.64	0	1.77	0	0	12.37	0	0	0	0	0	0	-43.72	-43.72
	Inverter Transformer	MV3-8 T	368685	4907712	2	0	0	56.1	56.1	1	5444.32	3.25	0	85.72	0	1.78	0	0	12.43	0	0	0	0	0	0	-43.87	-43.87
	Inverter Transformer	MV3-4 T	368507	4907925	2	0	0	56.1	56.1	1	5527.87	3.25	0	85.85	0	1.81	0	0	12.53	0	0	0	0	0	0	-44.13	-44.13
	Inverter Transformer	MV3-2 T	368677	4907928	2	0	0	56.1	56.1	1	5620.39	3.25	0	86	0	1.84	0	0	12.64	0	0	0	0	0	0	-44.42	-44.42
	Inverter Transformer	MV6-3 T	370202	4907140	2	0	0	56.1	56.1	1	6028.11	3.25	0	86.6	0	1.97	0	0	13.14	0	0	0	0	0	0	-45.65	-45.65
	Inverter Transformer	MV6-2 T	370091	4907339	2	0	0	56.1	56.1	1	6078.37	3.25	0	86.68	0	1.99	0	0	13.2	0	0	0	0	0	0	-45.8	-45.8
	Inverter Transformer	MV4-15 T	369170	4908481	2	0	0	56.1	56.1	1	6353.12	3.25	0	87.06	0	2.07	0	0	13.51	0	0	0	0	0	0	-46.59	-46.59
	Inverter Transformer	MV4-14 T	369182	4908507	2	0	0	56.1	56.1	1	6381.41	3.25	0	87.1	0	2.08	0	0	13.55	0	0	0	0	0	0	-46.67	-46.67
	Inverter Transformer	MV4-13 T	369057	4908605	2	0	0	56.1	56.1	1	6395.56	3.25	0	87.12	0	2.09	0	0	13.56	0	0	0	0	0	0	-46.71	-46.71
	Inverter Transformer	MV4-12 T	369049	4908803	2	0	0	56.1	56.1	1	6559.66	3.25	0	87.34	0	2.14	0	0	13.75	0	0	0	0	0	0	-47.16	-47.16
	Inverter Transformer	MV4-11 T	369269	4908855	2	0	0	56.1	56.1	1	6720.29	3.25	0	87.55	0	2.18	0	0	13.93	0	0	0	0	0	0	-47.6	-47.6
	Inverter Transformer	MV4-7 T	369040	4909001	2	0	0	56.1	56.1	1	6725.08	3.25	0	87.55	0	2.18	0	0	13.93	0	0	0	0	0	0	-47.61	-47.61
	Inverter Transformer	MV4-10 T	369307	4908858	2	0	0	56.1	56.1	1	6743.4	3.25	0	87.58	0	2.19	0	0	13.95	0	0	0	0	0	0	-47.66	-47.66
	Inverter Transformer	MV4-8 T	369262	4909001	2	0	0	56.1	56.1	1	6839.95	3.25	0	87.7	0	2.22	0	0	14.06	0	0	0	0	0	0	-47.91	-47.91
	Inverter Transformer	MV4-9 T	369284	4909001	2	0	0	56.1	56.1	1	6851.62	3.25	0	87.72	0	2.22	0	0	14.07	0	0	0	0	0	0	-47.95	-47.95
	Inverter Transformer	MV5-6 T	369987	4908507	2	0	0	56.1	56.1	1	6860.78	3.25	0	87.73	0	2.22	0	0	14.08	0	0	0	0	0	0	-47.97	-47.97
	Inverter Transformer	MV4-4 T	369033	4909199	2	0	0	56.1	56.1	1	6893.22	3.25	0	87.77	0	2.23	0	0	14.11	0	0	0	0	0	0	-48.05	-48.05
	Inverter Transformer	MV4-6 T	369249	4909192	2	0	0	56.1	56.1	1	6996.02	3.25	0	87.9	0	2.26	0	0	14.23	0	0	0	0	0	0	-48.32	-48.32
	Inverter Transformer	MV4-5 T	369283	4909199	2	0	0	56.1	56.1	1	7019.59	3.25	0	87.93	0	2.26	0	0	14.25	0	0	0	0	0	0	-48.38	-48.38
	Inverter Transformer	MV5-5 T	370021	4908690	2	0	0	56.1	56.1	1	7024.5	3.25	0	87.93	0	2.27	0	0	14.26	0	0	0	0	0	0	-48.4	-48.4
	Inverter Transformer	MV4-1 T	369017	4909397	2	0	0	56.1	56.1	1	7058.61	3.25	0	87.97	0	2.28	0	0	14.29	0	0	0	0	0	0	-48.48	-48.48
	Inverter Transformer	MV5-2 T	370011	4908853	2	0	0	56.1	56.1	1	7146.55	3.25	0	88.08	0	2.3	0	0	14.39	0	0	0	0	0	0	-48.71	-48.71
	Inverter Transformer	MV4-3 T	369234	4909397	2	0	0	56.1	56.1	1	7164.91	3.25	0	88.1	0	2.3	0	0	14.41	0	0	0	0	0	0	-48.75	-48.75
	Inverter Transformer	MV4-2 T	369267	4909397	2	0	0	56.1	56.1	1	7181.51	3.25	0	88.12	0	2.31	0	0	14.42	0	0	0	0	0	0	-48.8	-48.8
	Inverter Transformer	MV5-4 T	370330	4908707	2	0	0	56.1	56.1	1	7234.12	3.25	0	88.19	0	2.32	0	0	14.48	0	0	0	0	0	0	-48.93	-48.93
	Inverter Transformer	MV5-3 T	370237	4908851	2	0	0	56.1	56.1	1	7285.37	3.25	0	88.25	0	2.34	0	0	14.53	0	0	0	0	0	0	-49.06	-49.06
	Inverter Transformer	MV5-1 T	370015	4909142	2	0	0	56.1	56.1	1	7379.73	3.25	0	88.36	0	2.36	0	0	14.63	0	0	0	0	0	0	-49.29	-49.29
	Line Reactor	NGR	369421	4908787.5	5	0	0	45.4	45.4	1	6747.52	5.25	0	87.58	0	3.22	1.37	0.1	2.76	0	0	0	0	0	0	-49.58	-49.58
Limit. Valu	0	0																								
Level D/N:	24.9138	24.9138																								

Receiver: Existing Noise Receptor
ID: G-47
X: 365751.2
Y: 4902462.1
Z: 4.5
Ground: 0

ISO	Description	ID	X	Y	Z	Ground	ReflOrd	LxT	LxN	L/A	Dist.	hm	Freq	Adiv	K0b	Agr	Abar	z	Aatm	Afol	Ahous	Cmet	CmetN	Dc	RL	LtotT	LtotN
	Sol_Luce Substation	S_Substation	369426	4908792	3.5	0	0	112.1	112.1	1	7319.28	5.25	0	88.29	0	1.44	2.38	0.31	11.05	0	0	0	0	0	0	8.91	8.91
	Inverter	MV1-15	365315	4904994	2	0	0	100.3	100.3	1	2569.2	3.25	0	79.2	0	0.27	0	0	14.59	0	0	0	0	0	0	6.25	6.25
	Inverter	MV1-12	365038	4905386	2	0	0	100.3	100.3	1	3009.63	3.25	0	80.57	0	0.36	0	0	15.39	0	0	0	0	0	0	3.99	3.99
	Inverter	MV1-11	364655	4905414	2	0	0	100.3	100.3	1	3148.87	3.25	0	80.96	0	0.39	0	0	15.63	0	0	0	0	0	0	3.33	3.33
	Inverter	MV1-8	364788	4905647	2	0	0	100.3	100.3	1	3327.36	3.25	0	81.44	0	0.42	0	0	15.94	0	0	0	0	0	0	2.51	2.51
	Inverter	MV1-9	364561	4905646	2	0	0	100.3	100.3	1	3399.09	3.25	0	81.63	0	0.43	0	0	16.06	0	0	0	0	0	0	2.19	2.19
	Inverter	MV1-4	364815	4905918	2	0	0	100.3	100.3	1	3580.46	3.25	0	82.08	0	0.46	0	0	16.37	0	0	0	0	0	0	1.4	1.4
	Inverter	MV1-5	364671	4905892	2	0	0	100.3	100.3	1	3595.98	3.25	0	82.12	0	0.47	0	0	16.39	0	0	0	0	0	0	1.34	1.34
	Inverter	MV1-6	364477	4905835	2	0	0	100.3	100.3	1	3605.56	3.25	0	82.14	0	0.47	0	0	16.41	0	0	0	0	0	0	1.3	1.3
	Gardiner Substation	G_Sub	366586.3	4903349.9	2.5	0	0	90.8	90.8	1	1218.85	3.5	0	72.72	0	-0.33	0	0	2.95	0	0	0	0	0	0	15.44	15.44
	Inverter	MV1-2	364753	4906063	2	0	0	100.3	100.3	1	3736.7	3.25	0	82.45	0	0.49	0	0	16.62	0	0	0	0	0	0	0.75	0.75
	Inverter	MV1-14	365163	4905049	2	0	0	97.3	97.3	1	2652.93	3.25	0	79.47	0	0.29	0	0	14.74	0	0	0	0	0	0	2.8	2.8
	Inverter	MV1-1	364715	4906166	2	0	0	100.3	100.3	1	3846.11	3.25	0	82.7	0	0.5	0	0	16.8	0	0	0	0	0	0	0.31	0.31
	Inverter	MV2-4	365586	4906624	2	0	0	100.3	100.3	1	4165.18	3.25	0	83.39	0	0.55	0	0	17.31	0	0	0	0	0	0	-0.94	-0.94
	Inverter	MV2-3	365820	4906641	2	0	0	100.3	100.3	1	4179.47	3.25	0	83.42	0	0.55	0	0	17.33	0	0	0	0	0	0	-0.99	-0.99
	Inverter	MV1-13	364731	4905241	2	0	0	97.3	97.3	1	2960.25	3.25	0	80.43	0	0.35	0	0	15.3	0	0	0	0	0	0	1.23	1.23
	Inverters	G_Inv7	366694.6	4902824.7	2	0	0	87.7	87.7	1	1010.69	3.25	0	71.09	0	2.45	0	0	1.44	0	0	0	0	0	0	12.68	12.68
	Inverters	G_Inv5	366638.5	4902958.1	2	0	0	87.7	87.7	1	1016.53	3.25	0	71.14	0	2.45	0	0	1.45	0	0	0	0	0	0	12.62	12.62
	Inverters	G_Inv9	366750.9	4902691.8	2	0	0	87.7	87.7	1	1025.75	3.25	0	71.22	0	2.45	0	0	1.46	0	0	0	0	0	0	12.53	12.53
	Inverters	G_Inv3	366583.7	4903091.4	2	0	0	87.7	87.7	1	1043.59	3.25	0	71.37	0	2.46	0	0	1.48	0	0	0	0	0	0	12.35	12.35
	Inverter	MV1-10	365004	4905564	2	0	0	97.3	97.3	1	3190.63	3.25	0	81.08	0	0.4	0	0	15.71	0	0	0	0	0	0	0.13	0.13
	Inverters	G_Inv1	366526.4	4903225.8	2	0	0	87.7	87.7	1	1088.2	3.25	0	71.73	0	2.46	0	0	1.54	0	0	0	0	0	0	11.93	11.93
	Inverter	MV1-7	364925	4905782	2	0	0	97.3	97.3	1	3421.16	3.25	0	81.68	0	0.44	0	0	16.1	0	0	0	0	0	0	-0.91	-0.91
	Inverters	G_Inv6	366788.5	4902972	2	0	0	87.7	87.7	1	1155.85	3.25	0	72.26	0	2.47	0	0	1.62	0	0	0	0	0	0	11.31	11.31
	Inverters	G_Inv8	366844.5	4902838.5	2	0	0	87.7	87.7	1	1156.28	3.25	0	72.26	0	2.47	0	0	1.62	0	0	0	0	0	0	11.3	11.3
	Inverters	G_Inv4	366732.8	4903105	2	0	0	87.7	87.7	1	1173.4	3.25	0	72.39	0	2.47	0	0	1.64	0	0	0	0	0	0	11.15	11.15
	Inverters	G_Inv10	366900.7	4902704.8	2	0	0	87.7	87.7	1	1174.84	3.25	0	72.4	0	2.47	0	0	1.65	0	0	0	0	0	0	11.14	11.14
	Inverters	G_Inv2	366676.9	4903239.1	2	0	0	87.7	87.7	1	1208.58	3.25	0	72.65	0	2.48	0	0	1.69	0	0	0	0	0	0	10.85	10.85
	Inverter	MV3-18	367752	4907412	2	0	0	100.3	100.3	1	5338.98	3.25	0	85.55	0	0.67	0	0	19.07	0	0	0	0	0	0	-4.98	-4.98

Inverter	MV3-21	368478	4907206	2	0	0	100.3	100.3	1	5471.75	3.25	0	85.76	0	0.68	0	0	19.26	0	0	0	0	0	0	-5.39	-5.39
Inverter	MV3-12	367668	4907594	2	0	0	100.3	100.3	1	5478.19	3.25	0	85.77	0	0.68	0	0	19.27	0	0	0	0	0	0	-5.41	-5.41
Inverter	MV3-19	368357	4907347	2	0	0	100.3	100.3	1	5536.47	3.25	0	85.86	0	0.68	0	0	19.35	0	0	0	0	0	0	-5.59	-5.59
Inverter	MV3-17	368178	4907472	2	0	0	100.3	100.3	1	5566.73	3.25	0	85.91	0	0.68	0	0	19.39	0	0	0	0	0	0	-5.68	-5.68
Inverter	MV3-13	367963	4907577	2	0	0	100.3	100.3	1	5572.64	3.25	0	85.92	0	0.68	0	0	19.4	0	0	0	0	0	0	-5.7	-5.7
Inverter	MV3-15	368357	4907477	2	0	0	100.3	100.3	1	5651.5	3.25	0	86.04	0	0.69	0	0	19.51	0	0	0	0	0	0	-5.93	-5.93
Inverter	MV3-20	368689	4907317	2	0	0	100.3	100.3	1	5674.57	3.25	0	86.08	0	0.69	0	0	19.55	0	0	0	0	0	0	-6	-6
Inverter	MV3-16	368514	4907475	2	0	0	100.3	100.3	1	5723.83	3.25	0	86.15	0	0.69	0	0	19.61	0	0	0	0	0	0	-6.15	-6.15
Inverter	MV3-7	367945	4907754	2	0	0	100.3	100.3	1	5728.61	3.25	0	86.16	0	0.69	0	0	19.62	0	0	0	0	0	0	-6.16	-6.16
Inverter	MV3-10	368167	4907669	2	0	0	100.3	100.3	1	5740.03	3.25	0	86.18	0	0.69	0	0	19.64	0	0	0	0	0	0	-6.2	-6.2
Inverter	MV3-11	368346	4907662	2	0	0	100.3	100.3	1	5811.36	3.25	0	86.29	0	0.7	0	0	19.74	0	0	0	0	0	0	-6.41	-6.41
Inverter	MV3-14	368684	4907498	2	0	0	100.3	100.3	1	5827.66	3.25	0	86.31	0	0.7	0	0	19.76	0	0	0	0	0	0	-6.45	-6.45
Inverter	MV3-3	367939	4907927	2	0	0	100.3	100.3	1	5886.56	3.25	0	86.4	0	0.7	0	0	19.84	0	0	0	0	0	0	-6.62	-6.62
Inverter	MV3-6	368162	4907834	2	0	0	100.3	100.3	1	5888.06	3.25	0	86.4	0	0.7	0	0	19.84	0	0	0	0	0	0	-6.63	-6.63
Inverter	MV3-9	368512	4907703	2	0	0	100.3	100.3	1	5923.6	3.25	0	86.45	0	0.7	0	0	19.89	0	0	0	0	0	0	-6.73	-6.73
Inverter	MV3-8	368680	4907712	2	0	0	100.3	100.3	1	6011.6	3.25	0	86.58	0	0.71	0	0	20.01	0	0	0	0	0	0	-6.98	-6.98
Inverter	MV2-1	365842	4906816	2	0	0	97.3	97.3	1	4354.85	3.25	0	83.78	0	0.57	0	0	17.61	0	0	0	0	0	0	-4.65	-4.65
Inverter	MV6-3	370207	4907140	2	0	0	100.3	100.3	1	6460.41	3.25	0	87.21	0	0.71	0	0	20.61	0	0	0	0	0	0	-8.21	-8.21
Inverter	MV6-2	370085	4907339	2	0	0	100.3	100.3	1	6524.26	3.25	0	87.29	0	0.71	0	0	20.69	0	0	0	0	0	0	-8.38	-8.38
Inverter	MV4-11	369264	4908855	2	0	0	100.3	100.3	1	7294.45	3.25	0	88.26	0	0.7	0	0	21.66	0	0	0	0	0	0	-10.31	-10.31
Inverter	MV4-7	369035	4909001	2	0	0	100.3	100.3	1	7317.14	3.25	0	88.29	0	0.7	0	0	21.69	0	0	0	0	0	0	-10.37	-10.37
Inverter	MV4-10	369312	4908858	2	0	0	100.3	100.3	1	7320.3	3.25	0	88.29	0	0.7	0	0	21.7	0	0	0	0	0	0	-10.37	-10.37
Inverter	MV4-8	369256	4909001	2	0	0	100.3	100.3	1	7418.95	3.25	0	88.41	0	0.69	0	0	21.82	0	0	0	0	0	0	-10.6	-10.6
Inverter	MV4-9	369289	4909001	2	0	0	100.3	100.3	1	7434.6	3.25	0	88.43	0	0.69	0	0	21.84	0	0	0	0	0	0	-10.64	-10.64
Inverter	MV4-4	369027	4909199	2	0	0	100.3	100.3	1	7491.11	3.25	0	88.49	0	0.69	0	0	21.9	0	0	0	0	0	0	-10.77	-10.77
Inverter	MV5-5	370015	4908690	2	0	0	100.3	100.3	1	7547.63	3.25	0	88.56	0	0.69	0	0	21.97	0	0	0	0	0	0	-10.9	-10.9
Inverter	MV4-6	369243	4909192	2	0	0	100.3	100.3	1	7581.84	3.25	0	88.6	0	0.68	0	0	22.01	0	0	0	0	0	0	-10.98	-10.98
Inverter	MV4-5	369289	4909199	2	0	0	100.3	100.3	1	7609.33	3.25	0	88.63	0	0.68	0	0	22.05	0	0	0	0	0	0	-11.04	-11.04
Inverter	MV4-1	369011	4909397	2	0	0	100.3	100.3	1	7662.84	3.25	0	88.69	0	0.68	0	0	22.11	0	0	0	0	0	0	-11.16	-11.16
Inverter	MV5-2	370006	4908853	2	0	0	100.3	100.3	1	7677.69	3.25	0	88.7	0	0.68	0	0	22.13	0	0	0	0	0	0	-11.2	-11.2
Inverter	MV5-4	370324	4908707	2	0	0	100.3	100.3	1	7740.11	3.25	0	88.77	0	0.67	0	0	22.2	0	0	0	0	0	0	-11.34	-11.34
Inverter	MV4-3	369229	4909397	2	0	0	100.3	100.3	1	7758.09	3.25	0	88.8	0	0.67	0	0	22.22	0	0	0	0	0	0	-11.38	-11.38
Inverter	MV4-2	369272	4909397	2	0	0	100.3	100.3	1	7777.46	3.25	0	88.82	0	0.67	0	0	22.25	0	0	0	0	0	0	-11.42	-11.42
Inverter	MV5-3	370231	4908851	2	0	0	100.3	100.3	1	7802.99	3.25	0	88.85	0	0.67	0	0	22.28	0	0	0	0	0	0	-11.48	-11.48
Inverter	MV5-1	370020	4909142	2	0	0	100.3	100.3	1	7927.4	3.25	0	88.98	0	0.66	0	0	22.42	0	0	0	0	0	0	-11.75	-11.75
Inverter	MV6-1	370235	4907364	2	0	0	97.3	97.3	1	6643.27	3.25	0	87.45	0	0.71	0	0	20.85	0	0	0	0	0	0	-11.7	-11.7
DSTATCOM - 10 MVAR #2	DSAT2	369403	4908757	2.5	0	0	96.6	96.6	1	7277.46	3.5	0	88.24	0	3.85	0	0	4.44	0	0	0	0	0	0	0.1	0.1
DSTATCOM - 10 MVAR #1	DSAT1	369437	4908757	2.5	0	0	96.6	96.6	1	7294.58	3.5	0	88.26	0	3.85	0	0	4.45	0	0	0	0	0	0	0.07	0.07
Inverter	MV1-3	364440	4906039	2	0	0	89.1	89.1	1	3809.65	3.25	0	82.62	0	1.35	0	0	10.81	0	0	0	0	0	0	-5.72	-5.72
SubstationTransformer	W_ST	369711.17	4906112.3	2.5	0	0	92	92	1	5385.64	4.25	0	85.62	0	1.73	2.24	0.22	9.07	0	0	0	0	0	0	-6.69	-6.69
Inverter	MV2-2	365977	4906654	2	0	0	89.1	89.1	1	4197.98	3.25	0	83.46	0	1.44	0	0	11.36	0	0	0	0	0	0	-7.21	-7.21
Westbrook Inverter Enclosur	W_INV3	369508	4906164	2	0	0	89.1	89.1	1	5274.24	3.25	0	85.44	0	1.71	0	0	12.83	0	0	0	0	0	0	-10.92	-10.92
Westbrook Inverter Enclosur	W_INV2	369374	4906388	2	0	0	89.1	89.1	1	5342.04	3.25	0	85.55	0	1.72	0	0	12.92	0	0	0	0	0	0	-11.14	-11.14
Westbrook Inverter Enclosur	W_INV4	369673	4906164	2	0	0	89.1	89.1	1	5393.01	3.25	0	85.64	0	1.74	0	0	12.98	0	0	0	0	0	0	-11.3	-11.3
Inverter	MV3-22	368656	4907142	2	0	0	89.1	89.1	1	5508.12	3.25	0	85.82	0	1.77	0	0	13.13	0	0	0	0	0	0	-11.66	-11.66
Westbrook Inverter Enclosur	W_INV7	369780	4906417	2	0	0	89.1	89.1	1	5645.57	3.25	0	86.03	0	1.8	0	0	13.31	0	0	0	0	0	0	-12.09	-12.09
Westbrook Inverter Enclosur	W_INV5	369719	4906574	2	0	0	89.1	89.1	1	5714.12	3.25	0	86.14	0	1.82	0	0	13.4	0	0	0	0	0	0	-12.3	-12.3
Westbrook Inverter Enclosur	W_INV6	369875	4906578	2	0	0	89.1	89.1	1	5826.35	3.25	0	86.31	0	1.84	0	0	13.54	0	0	0	0	0	0	-12.64	-12.64
Inverter	MV3-5	368340	4907843	2	0	0	89.1	89.1	1	5971.26	3.25	0	86.52	0	1.88	0	0	13.73	0	0	0	0	0	0	-13.07	-13.07
Inverter	MV3-1	368156	4907976	2	0	0	89.1	89.1	1	6015.49	3.25	0	86.59	0	1.89	0	0	13.78	0	0	0	0	0	0	-13.2	-13.2
Inverter	MV3-4	368502	4907925	2	0	0	89.1	89.1	1	6116.39	3.25	0	86.73	0	1.91	0	0	13.91	0	0	0	0	0	0	-13.49	-13.49
Inverter	MV3-2	368671	4907928	2	0	0	89.1	89.1	1	6196.88	3.25	0	86.84	0	1.93	0	0	14.01	0	0	0	0	0	0	-13.73	-13.73
Fixed Reactor Bank 1	FRB1	369378	4908755	6	0	0	89.8	89.8	1	7263.21	5.25	0	88.22	0	-0.25	0	0	11	0	0	0	0	0	0	-9.19	-9.19
Fixed Reactor Bank 2	FRB2	369464	4908755	6	0	0	89.8	89.8	1	7306.54	5.25	0	88.27	0	-0.25	0	0	11.04	0	0	0	0	0	0	-9.29	-9.29
Inverter	MV4-15	369176	4908481	2	0	0	89.1	89.1	1	6925.06	3.25	0	87.81	0	2.11	0	0	14.9	0	0	0	0	0	0	-15.76	-15.76
Inverter	MV4-14	369176	4908507	2	0	0	89.1	89.1	1	6947.67	3.25	0	87.84	0	2.12	0	0	14.92	0	0	0	0	0	0	-15.82	-15.82
Inverter	MV4-13	369051	4908605	2	0	0	89.1	89.1	1	6973.08	3.25	0	87.87	0	2.12	0	0	14.95	0	0	0	0	0	0	-15.89	-15.89
Inverter	MV4-12	369043	4908803	2	0	0	89.1	89.1	1	7144.44	3.25	0	88.08	0	2.16	0	0	15.16	0	0	0	0	0	0	-16.34	-16.34
Inverter	MV5-6	369982	4908507	2	0	0	89.1	89.1	1	7378.38	3.25	0	88.36	0	2.22	0	0	15.43	0	0	0	0	0	0	-16.95	-16.95
Westbrook Inverter Enclosur	W_INV1	369409	4906578	2	0	0	86.1	86.1	1	5506.37	3.25	0	85.82	0	1.76	0	0	13.13	0	0	0	0	0	0	-14.65	-14.65
Inverter	MV6-4	370250	4906966	2	0	0	86.1	86.1	1	6365.87	3.25	0	87.08	0	1.98	0	0	14.22	0	0	0	0	0	0	-17.21	-17.21
Westbrook Inverter Transfor	W_INVTR1	369403	4906578	2	0	0	78.2	78.2	1	5502.39	3.25	0	85.81	0	-3.28	0	0	2.58	0	0	0	0	0	0	-6.88	-6.88
Westbrook Inverter Transfor	W_INVTR3	369514	4906164	2	0	0	77.3	77.3	1	5278.52	3.25	0	85.45	0	-3.23	0	0	2.51	0	0	0	0	0	0	-7.38	-7.38
Westbrook Inverter Transfor	W_INVTR2	369368	4906388	2	0	0	77.3	77.3	1	5337.97	3.25	0	85.55	0	-3.24	0	0	2.53	0	0	0	0	0	0	-7.49	-7.49
Westbrook Inverter Transfor	W_INVTR4	369679	4906164	2	0	0	77.3	77.3	1	5397.38	3.25	0	85.64	0	-3.26	0	0	2.55	0	0	0	0	0	0	-7.59	-7.59
Westbrook Inverter Transfor	W_INVTR7	369786	4906417	2	0	0	77.3	77.3	1	5649.85	3.25	0	86.04	0	-3.3	0	0	2.63	0	0	0	0	0	0	-8.03	-8.03
Westbrook Inverter Transfor	W_INVTR5	369725	4906574	2	0	0	77.3	77.3	1	5718.29	3.25	0	86.15	0	-3.32	0	0	2.65	0	0	0	0	0	0	-8.14	-8.14
Westbrook Inverter Transfor	W_INVTR6	369881	4906578	2	0	0	77.3	77.3	1	5830.6	3.25	0	86.31	0	-3.34	0	0	2.69	0	0	0	0	0	0	-8.32	-8.32
Inverter Transformer	MV1-14 T	365157	4905049	2	0	0	69.4	69.4	1	2654.27	3.25	0	79.48	0	2.4	0	0	5.58	0	0	0	0	0	0	-18.11	-18.11
Inverter Transformer	MV1-13 T	364725	4905241	2	0	0	69.4	69.4	1	2962.33	3.25	0	80.43	0	2.5	0	0	5.85	0	0	0	0	0	0	-19.43	-19.43
Inverter Transformer	MV1-10 T	365010	4905564	2	0	0	69.4	69.4	1	3189.23	3.25	0	81.07	0	2.56	0	0	6.04	0	0	0	0	0	0	-20.33	-20.33
Inverter Transformer	MV1-7 T	364919	4905782	2	0	0	69.4	69.4	1	3422.62	3.25	0	81.69	0	2.63	0	0	6.23	0	0	0	0	0	0	-21.2	-21.2
Inverter Transformer	MV2-1 T	365836	4906816	2	0	0	69.4	69.4	1	4354.73	3.25	0	83.78	0	2.87	0	0	6.94	0	0	0	0	0	0	-24.24	-24.24
Inverter Transformer	MV6-4 T	370244	4906966	2	0	0	69.4	69.4	1	6361.63	3.25	0	87.07	0	3.24	0	0	8.23	0	0	0	0	0	0	-29.2	-29.2

	Inverter Transformer	MV6-1 T	370230	4907364	2	0	0	69.4	69.4	1	6639.9	3.25	0	87.44	0	3.28	0	0	8.4	0	0	0	0	0	0	-29.77	-29.77
	Inverter Transformer	MV1-15 T	365309	4904994	2	0	0	56.1	56.1	1	2570.23	3.25	0	79.2	0	0.65	0	0	8.12	0	0	0	0	0	0	-31.9	-31.9
	Inverter Transformer	MV1-12 T	365044	4905386	2	0	0	56.1	56.1	1	3008.21	3.25	0	80.57	0	0.83	0	0	8.88	0	0	0	0	0	0	-34.22	-34.22
	Inverter Transformer	MV1-11 T	364649	4905414	2	0	0	56.1	56.1	1	3150.96	3.25	0	80.97	0	0.89	0	0	9.12	0	0	0	0	0	0	-34.93	-34.93
	Inverter Transformer	MV1-8 T	364782	4905647	2	0	0	56.1	56.1	1	3329.11	3.25	0	81.45	0	0.97	0	0	9.41	0	0	0	0	0	0	-35.77	-35.77
	Inverter Transformer	MV1-9 T	364555	4905646	2	0	0	56.1	56.1	1	3401.19	3.25	0	81.63	0	1	0	0	9.53	0	0	0	0	0	0	-36.1	-36.1
	Inverter Transformer	MV1-4 T	364821	4905918	2	0	0	56.1	56.1	1	3578.9	3.25	0	82.07	0	1.07	0	0	9.81	0	0	0	0	0	0	-36.9	-36.9
	Inverter Transformer	MV1-5 T	364676	4905892	2	0	0	56.1	56.1	1	3594.48	3.25	0	82.11	0	1.08	0	0	9.84	0	0	0	0	0	0	-36.97	-36.97
	Inverter Transformer	MV1-6 T	364482	4905835	2	0	0	56.1	56.1	1	3603.79	3.25	0	82.14	0	1.08	0	0	9.85	0	0	0	0	0	0	-37.01	-37.01
	Inverter Transformer	MV1-2 T	364759	4906063	2	0	0	56.1	56.1	1	3735.1	3.25	0	82.45	0	1.14	0	0	10.05	0	0	0	0	0	0	-37.58	-37.58
	Inverter Transformer	MV1-3 T	364435	4906039	2	0	0	56.1	56.1	1	3811.38	3.25	0	82.62	0	1.17	0	0	10.17	0	0	0	0	0	0	-37.9	-37.9
	Inverter Transformer	MV1-1 T	364721	4906166	2	0	0	56.1	56.1	1	3844.5	3.25	0	82.7	0	1.18	0	0	10.22	0	0	0	0	0	0	-38.04	-38.04
	Inverter Transformer	MV2-4 T	365590	4906628	2	0	0	56.1	56.1	1	4169.02	3.25	0	83.4	0	1.31	0	0	10.7	0	0	0	0	0	0	-39.36	-39.36
	Inverter Transformer	MV2-3 T	365814	4906641	2	0	0	56.1	56.1	1	4179.37	3.25	0	83.42	0	1.32	0	0	10.72	0	0	0	0	0	0	-39.4	-39.4
	Inverter Transformer	MV2-2 T	365982	4906654	2	0	0	56.1	56.1	1	4198.25	3.25	0	83.46	0	1.32	0	0	10.75	0	0	0	0	0	0	-39.47	-39.47
	Inverter Transformer	MV3-18 T	367757	4907412	2	0	0	56.1	56.1	1	5340.86	3.25	0	85.55	0	1.75	0	0	12.3	0	0	0	0	0	0	-43.53	-43.53
	Inverter Transformer	MV3-21 T	368484	4907206	2	0	0	56.1	56.1	1	5474.74	3.25	0	85.77	0	1.79	0	0	12.46	0	0	0	0	0	0	-43.96	-43.96
	Inverter Transformer	MV3-12 T	367674	4907594	2	0	0	56.1	56.1	1	5480.29	3.25	0	85.78	0	1.79	0	0	12.47	0	0	0	0	0	0	-43.98	-43.98
	Inverter Transformer	MV3-22 T	368661	4907142	2	0	0	56.1	56.1	1	5510.75	3.25	0	85.82	0	1.8	0	0	12.51	0	0	0	0	0	0	-44.08	-44.08
	Inverter Transformer	MV3-19 T	368352	4907347	2	0	0	56.1	56.1	1	5534.11	3.25	0	85.86	0	1.81	0	0	12.54	0	0	0	0	0	0	-44.15	-44.15
	Inverter Transformer	MV3-17 T	368183	4907472	2	0	0	56.1	56.1	1	5568.91	3.25	0	85.92	0	1.82	0	0	12.58	0	0	0	0	0	0	-44.26	-44.26
	Inverter Transformer	MV3-13 T	367958	4907577	2	0	0	56.1	56.1	1	5570.65	3.25	0	85.92	0	1.82	0	0	12.58	0	0	0	0	0	0	-44.27	-44.27
	Inverter Transformer	MV3-15 T	368351	4907477	2	0	0	56.1	56.1	1	5648.73	3.25	0	86.04	0	1.85	0	0	12.68	0	0	0	0	0	0	-44.51	-44.51
	Inverter Transformer	MV3-20 T	368683	4907317	2	0	0	56.1	56.1	1	5671.46	3.25	0	86.07	0	1.86	0	0	12.71	0	0	0	0	0	0	-44.58	-44.58
	Inverter Transformer	MV3-16 T	368509	4907475	2	0	0	56.1	56.1	1	5721.42	3.25	0	86.15	0	1.87	0	0	12.77	0	0	0	0	0	0	-44.73	-44.73
	Inverter Transformer	MV3-7 T	367951	4907754	2	0	0	56.1	56.1	1	5730.91	3.25	0	86.16	0	1.88	0	0	12.78	0	0	0	0	0	0	-44.76	-44.76
	Inverter Transformer	MV3-10 T	368162	4907669	2	0	0	56.1	56.1	1	5737.92	3.25	0	86.18	0	1.88	0	0	12.79	0	0	0	0	0	0	-44.79	-44.79
	Inverter Transformer	MV3-11 T	368340	4907662	2	0	0	56.1	56.1	1	5808.69	3.25	0	86.28	0	1.9	0	0	12.87	0	0	0	0	0	0	-45	-45
	Inverter Transformer	MV3-14 T	368678	4907498	2	0	0	56.1	56.1	1	5824.64	3.25	0	86.31	0	1.91	0	0	12.89	0	0	0	0	0	0	-45.05	-45.05
	Inverter Transformer	MV3-6 T	368156	4907834	2	0	0	56.1	56.1	1	5885.61	3.25	0	86.4	0	1.93	0	0	12.97	0	0	0	0	0	0	-45.23	-45.23
	Inverter Transformer	MV3-3 T	367944	4907927	2	0	0	56.1	56.1	1	5888.42	3.25	0	86.4	0	1.93	0	0	12.97	0	0	0	0	0	0	-45.24	-45.24
	Inverter Transformer	MV3-9 T	368517	4907703	2	0	0	56.1	56.1	1	5925.93	3.25	0	86.46	0	1.94	0	0	13.01	0	0	0	0	0	0	-45.35	-45.35
	Inverter Transformer	MV3-5 T	368335	4907843	2	0	0	56.1	56.1	1	5969.1	3.25	0	86.52	0	1.95	0	0	13.07	0	0	0	0	0	0	-45.48	-45.48
	Inverter Transformer	MV3-1 T	368150	4907976	2	0	0	56.1	56.1	1	6013.1	3.25	0	86.58	0	1.97	0	0	13.12	0	0	0	0	0	0	-45.61	-45.61
	Inverter Transformer	MV3-8 T	368685	4907712	2	0	0	56.1	56.1	1	6014.04	3.25	0	86.58	0	1.97	0	0	13.12	0	0	0	0	0	0	-45.61	-45.61
	Inverter Transformer	MV3-4 T	368507	4907925	2	0	0	56.1	56.1	1	6118.64	3.25	0	86.73	0	2	0	0	13.24	0	0	0	0	0	0	-45.92	-45.92
	Inverter Transformer	MV3-2 T	368677	4907928	2	0	0	56.1	56.1	1	6199.71	3.25	0	86.85	0	2.03	0	0	13.34	0	0	0	0	0	0	-46.15	-46.15
	Inverter Transformer	MV6-3 T	370202	4907140	2	0	0	56.1	56.1	1	6456.96	3.25	0	87.2	0	2.1	0	0	13.63	0	0	0	0	0	0	-46.88	-46.88
	Inverter Transformer	MV6-2 T	370091	4907339	2	0	0	56.1	56.1	1	6528.25	3.25	0	87.3	0	2.13	0	0	13.71	0	0	0	0	0	0	-47.08	-47.08
	Inverter Transformer	MV4-15 T	369170	4908481	2	0	0	56.1	56.1	1	6922.09	3.25	0	87.8	0	2.24	0	0	14.15	0	0	0	0	0	0	-48.13	-48.13
	Inverter Transformer	MV4-14 T	369182	4908507	2	0	0	56.1	56.1	1	6950.63	3.25	0	87.84	0	2.25	0	0	14.18	0	0	0	0	0	0	-48.2	-48.2
	Inverter Transformer	MV4-13 T	369057	4908605	2	0	0	56.1	56.1	1	6975.93	3.25	0	87.87	0	2.25	0	0	14.2	0	0	0	0	0	0	-48.27	-48.27
	Inverter Transformer	MV4-12 T	369049	4908803	2	0	0	56.1	56.1	1	7147.2	3.25	0	88.08	0	2.3	0	0	14.39	0	0	0	0	0	0	-48.71	-48.71
	Inverter Transformer	MV4-11 T	369269	4908855	2	0	0	56.1	56.1	1	7296.86	3.25	0	88.26	0	2.34	0	0	14.54	0	0	0	0	0	0	-49.09	-49.09
	Inverter Transformer	MV4-10 T	369307	4908858	2	0	0	56.1	56.1	1	7317.87	3.25	0	88.29	0	2.34	0	0	14.57	0	0	0	0	0	0	-49.14	-49.14
	Inverter Transformer	MV4-7 T	369040	4909001	2	0	0	56.1	56.1	1	7319.39	3.25	0	88.29	0	2.34	0	0	14.57	0	0	0	0	0	0	-49.14	-49.14
	Inverter Transformer	MV5-6 T	369987	4908507	2	0	0	56.1	56.1	1	7381.25	3.25	0	88.36	0	2.36	0	0	14.63	0	0	0	0	0	0	-49.3	-49.3
	Inverter Transformer	MV4-8 T	369262	4909001	2	0	0	56.1	56.1	1	7421.79	3.25	0	88.41	0	2.37	0	0	14.67	0	0	0	0	0	0	-49.4	-49.4
	Inverter Transformer	MV4-9 T	369284	4909001	2	0	0	56.1	56.1	1	7432.22	3.25	0	88.42	0	2.37	0	0	14.68	0	0	0	0	0	0	-49.42	-49.42
	Inverter Transformer	MV4-4 T	369033	4909199	2	0	0	56.1	56.1	1	7493.73	3.25	0	88.49	0	2.39	0	0	14.75	0	0	0	0	0	0	-49.57	-49.57
	Inverter Transformer	MV5-5 T	370021	4908690	2	0	0	56.1	56.1	1	7551.02	3.25	0	88.56	0	2.4	0	0	14.81	0	0	0	0	0	0	-49.71	-49.71
	Inverter Transformer	MV4-6 T	369249	4909192	2	0	0	56.1	56.1	1	7584.6	3.25	0	88.6	0	2.41	0	0	14.84	0	0	0	0	0	0	-49.79	-49.79
	Inverter Transformer	MV4-5 T	369283	4909199	2	0	0	56.1	56.1	1	7606.54	3.25	0	88.62	0	2.42	0	0	14.86	0	0	0	0	0	0	-49.85	-49.85
	Inverter Transformer	MV4-1 T	369017	4909397	2	0	0	56.1	56.1	1	7665.4	3.25	0	88.69	0	2.43	0	0	14.92	0	0	0	0	0	0	-49.99	-49.99
	Inverter Transformer	MV5-2 T	370011	4908853	2	0	0	56.1	56.1	1	7680.46	3.25	0	88.71	0	2.43	0	0	14.94	0	0	0	0	0	0	-50.02	-50.02
	Inverter Transformer	MV5-4 T	370330	4908707	2	0	0	56.1	56.1	1	7743.65	3.25	0	88.78	0	2.45	0	0	15	0	0	0	0	0	0	-50.17	-50.17
	Inverter Transformer	MV4-3 T	369234	4909397	2	0	0	56.1	56.1	1	7760.33	3.25	0	88.8	0	2.45	0	0	15.02	0	0	0	0	0	0	-50.21	-50.21
	Inverter Transformer	MV4-2 T	369267	4909397	2	0	0	56.1	56.1	1	7775.2	3.25	0	88.81	0	2.46	0	0	15.03	0	0	0	0	0	0	-50.25	-50.25
	Inverter Transformer	MV5-3 T	370237	4908851	2	0	0	56.1	56.1	1	7806.44	3.25	0	88.85	0	2.46	0	0	15.06	0	0	0	0	0	0	-50.32	-50.32
	Inverter Transformer	MV5-1 T	370015	4909142	2	0	0	56.1	56.1	1	7924.71	3.25	0	88.98	0	2.49	0	0	15.18	0	0	0	0	0	0	-50.6	-50.6
	Line Reactor	NGR	369421	4908787.5	5	0	0	45.4	45.4	1	7312.87	5.25	0	88.28	0	3.21	1.37	0.1	2.99	0	0	0	0	0	0	-50.5	-50.5
Limit. Valu	0	0																								
Level D/N:	23.6555	23.6555																								

Receiver: Existing Noise Receptor
ID: G-48
X: 365762.2
Y: 4903627
Z: 4.5
Ground: 0

ISO	Description	ID	X	Y	Z	Ground	ReflOrd	LxT	LxN	L/A	Dist.	hm	Freq	Adiv	K0b	Agr	Abar	z	Aatm	Afol	Ahous	Cmet	CmetN	Dc	RL	LtotT	LtotN
	Inverter	MV1-15	365315	4904994	2	0	0	100.3	100.3	1	1438.29	3.25	0	74.16	0	-0.06	0	0	12.17	0	0	0	0	0	0	14.04	14.04
	Sol_Luce Substation	S_Substation	369426	4908792	3.5	0	0	112.1	112.1	1	6332.51	5.25	0	87.03	0	1.24	2.57	0.29	10.09	0	0	0	0	0	0	11.14	11.14

Inverter	MV1-12	365038	4905386	2	0	0	100.3	100.3	1	1902.25	3.25	0	76.59	0	0.1	0	0	13.25	0	0	0	0	0	0	10.37	10.37
Inverter	MV1-11	364655	4905414	2	0	0	100.3	100.3	1	2102.21	3.25	0	77.45	0	0.16	0	0	13.67	0	0	0	0	0	0	9.03	9.03
Inverter	MV1-14	365163	4905049	2	0	0	97.3	97.3	1	1543.09	3.25	0	74.77	0	-0.02	0	0	12.43	0	0	0	0	0	0	10.13	10.13
Inverter	MV1-8	364788	4905647	2	0	0	100.3	100.3	1	2242.65	3.25	0	78.02	0	0.19	0	0	13.96	0	0	0	0	0	0	8.14	8.14
Inverter	MV1-9	364561	4905646	2	0	0	100.3	100.3	1	2349.31	3.25	0	78.42	0	0.22	0	0	14.17	0	0	0	0	0	0	7.5	7.5
Inverter	MV1-4	364815	4905918	2	0	0	100.3	100.3	1	2479.09	3.25	0	78.89	0	0.25	0	0	14.42	0	0	0	0	0	0	6.76	6.76
Inverter	MV1-5	364671	4905892	2	0	0	100.3	100.3	1	2514.15	3.25	0	79.01	0	0.26	0	0	14.48	0	0	0	0	0	0	6.56	6.56
Inverter	MV1-6	364477	4905835	2	0	0	100.3	100.3	1	2554.8	3.25	0	79.15	0	0.27	0	0	14.56	0	0	0	0	0	0	6.33	6.33
Gardiner Substation	G_Sub	366586.3	4903349.9	2.5	0	0	90.8	90.8	1	869.44	4.25	0	69.78	0	0.35	3.28	0.31	2.25	0	0	0	0	0	0	15.11	15.11
Inverter	MV1-2	364753	4906063	2	0	0	100.3	100.3	1	2636.78	3.25	0	79.42	0	0.29	0	0	14.71	0	0	0	0	0	0	5.89	5.89
Inverter	MV1-13	364731	4905241	2	0	0	97.3	97.3	1	1915.3	3.25	0	76.64	0	0.1	0	0	13.28	0	0	0	0	0	0	7.28	7.28
Inverter	MV1-1	364715	4906166	2	0	0	100.3	100.3	1	2746.48	3.25	0	79.78	0	0.31	0	0	14.92	0	0	0	0	0	0	5.31	5.31
Inverter	MV1-10	365004	4905564	2	0	0	97.3	97.3	1	2080.11	3.25	0	77.36	0	0.15	0	0	13.63	0	0	0	0	0	0	6.17	6.17
Inverter	MV2-4	365586	4906624	2	0	0	100.3	100.3	1	3002.18	3.25	0	80.55	0	0.36	0	0	15.38	0	0	0	0	0	0	4.02	4.02
Inverter	MV2-3	365820	4906641	2	0	0	100.3	100.3	1	3014.56	3.25	0	80.58	0	0.36	0	0	15.4	0	0	0	0	0	0	3.96	3.96
Inverter	MV1-7	364925	4905782	2	0	0	97.3	97.3	1	2311.91	3.25	0	78.28	0	0.21	0	0	14.1	0	0	0	0	0	0	4.73	4.73
Inverters	G_Inv1	366526.4	4903225.8	2	0	0	87.7	87.7	1	863.12	3.25	0	69.72	0	2.43	0	0	1.25	0	0	0	0	0	0	14.26	14.26
Inverters	G_Inv3	366583.7	4903091.4	2	0	0	87.7	87.7	1	980.68	3.25	0	70.83	0	2.45	0	0	1.4	0	0	0	0	0	0	12.98	12.98
Inverters	G_Inv2	366676.9	4903239.1	2	0	0	87.7	87.7	1	993.55	3.25	0	70.94	0	2.45	0	0	1.42	0	0	0	0	0	0	12.85	12.85
Inverter	MV3-18	367752	4907412	2	0	0	100.3	100.3	1	4276.16	3.25	0	83.62	0	0.56	0	0	17.48	0	0	0	0	0	0	-1.36	-1.36
Inverter	MV3-12	367668	4907594	2	0	0	100.3	100.3	1	4401.04	3.25	0	83.87	0	0.58	0	0	17.68	0	0	0	0	0	0	-1.82	-1.82
Inverter	MV3-21	368478	4907206	2	0	0	100.3	100.3	1	4492.75	3.25	0	84.05	0	0.59	0	0	17.82	0	0	0	0	0	0	-2.15	-2.15
Inverter	MV2-1	365842	4906816	2	0	0	97.3	97.3	1	3190	3.25	0	81.08	0	0.4	0	0	15.7	0	0	0	0	0	0	0.13	0.13
Inverter	MV3-13	367963	4907577	2	0	0	100.3	100.3	1	4521.73	3.25	0	84.11	0	0.59	0	0	17.86	0	0	0	0	0	0	-2.25	-2.25
Inverter	MV3-19	368357	4907347	2	0	0	100.3	100.3	1	4535.57	3.25	0	84.13	0	0.59	0	0	17.88	0	0	0	0	0	0	-2.3	-2.3
Inverter	MV3-17	368178	4907472	2	0	0	100.3	100.3	1	4540.94	3.25	0	84.14	0	0.6	0	0	17.89	0	0	0	0	0	0	-2.32	-2.32
Inverter	MV3-15	368357	4907477	2	0	0	100.3	100.3	1	4642.79	3.25	0	84.34	0	0.61	0	0	18.05	0	0	0	0	0	0	-2.68	-2.68
Inverter	MV3-7	367945	4907754	2	0	0	100.3	100.3	1	4668.7	3.25	0	84.38	0	0.61	0	0	18.09	0	0	0	0	0	0	-2.77	-2.77
Inverter	MV3-10	368167	4907669	2	0	0	100.3	100.3	1	4703.28	3.25	0	84.45	0	0.61	0	0	18.14	0	0	0	0	0	0	-2.89	-2.89
Inverter	MV3-20	368689	4907317	2	0	0	100.3	100.3	1	4709.81	3.25	0	84.46	0	0.61	0	0	18.15	0	0	0	0	0	0	-2.91	-2.91
Inverters	G_Inv4	366732.8	4903105	2	0	0	87.7	87.7	1	1102.07	3.25	0	71.84	0	2.46	0	0	1.56	0	0	0	0	0	0	11.8	11.8
Inverter	MV3-16	368514	4907475	2	0	0	100.3	100.3	1	4730.7	3.25	0	84.5	0	0.62	0	0	18.18	0	0	0	0	0	0	-2.98	-2.98
Inverters	G_Inv5	366638.5	4902958.1	2	0	0	87.7	87.7	1	1102.42	3.25	0	71.85	0	2.46	0	0	1.56	0	0	0	0	0	0	11.79	11.79
Inverter	MV3-11	368346	4907662	2	0	0	100.3	100.3	1	4791.37	3.25	0	84.61	0	0.62	0	0	18.27	0	0	0	0	0	0	-3.19	-3.19
Inverter	MV3-3	367939	4907927	2	0	0	100.3	100.3	1	4819.59	3.25	0	84.66	0	0.63	0	0	18.31	0	0	0	0	0	0	-3.29	-3.29
Inverter	MV3-6	368162	4907834	2	0	0	100.3	100.3	1	4843.34	3.25	0	84.7	0	0.63	0	0	18.35	0	0	0	0	0	0	-3.37	-3.37
Inverter	MV3-14	368684	4907498	2	0	0	100.3	100.3	1	4849.9	3.25	0	84.71	0	0.63	0	0	18.36	0	0	0	0	0	0	-3.39	-3.39
Inverter	MV3-9	368512	4907703	2	0	0	100.3	100.3	1	4916.83	3.25	0	84.83	0	0.63	0	0	18.46	0	0	0	0	0	0	-3.61	-3.61
Inverter	MV3-8	368680	4907712	2	0	0	100.3	100.3	1	5020.04	3.25	0	85.01	0	0.64	0	0	18.61	0	0	0	0	0	0	-3.96	-3.96
Inverters	G_Inv6	366788.5	4902972	2	0	0	87.7	87.7	1	1217.51	3.25	0	72.71	0	2.48	0	0	1.7	0	0	0	0	0	0	10.77	10.77
Inverters	G_Inv7	366694.6	4902824.7	2	0	0	87.7	87.7	1	1230.07	3.25	0	72.8	0	2.48	0	0	1.71	0	0	0	0	0	0	10.66	10.66
Inverter	MV6-3	370207	4907140	2	0	0	100.3	100.3	1	5665.46	3.25	0	86.06	0	0.69	0	0	19.53	0	0	0	0	0	0	-5.98	-5.98
Inverter	MV6-2	370085	4907339	2	0	0	100.3	100.3	1	5697.85	3.25	0	86.11	0	0.69	0	0	19.58	0	0	0	0	0	0	-6.07	-6.07
Inverters	G_Inv8	366844.5	4902838.5	2	0	0	87.7	87.7	1	1339.07	3.25	0	73.54	0	2.5	0	0	1.85	0	0	0	0	0	0	9.78	9.78
Inverters	G_Inv9	366750.9	4902691.8	2	0	0	87.7	87.7	1	1360.93	3.25	0	73.68	0	2.5	0	0	1.88	0	0	0	0	0	0	9.61	9.61
Inverters	G_Inv10	366900.7	4902704.8	2	0	0	87.7	87.7	1	1465.14	3.25	0	74.32	0	2.51	0	0	2	0	0	0	0	0	0	8.83	8.83
Inverter	MV4-7	369035	4909001	2	0	0	100.3	100.3	1	6292.15	3.25	0	86.98	0	0.71	0	0	20.39	0	0	0	0	0	0	-7.76	-7.76
Inverter	MV4-11	369264	4908855	2	0	0	100.3	100.3	1	6292.42	3.25	0	86.98	0	0.71	0	0	20.39	0	0	0	0	0	0	-7.76	-7.76
Inverter	MV4-10	369312	4908858	2	0	0	100.3	100.3	1	6321.74	3.25	0	87.02	0	0.71	0	0	20.42	0	0	0	0	0	0	-7.84	-7.84
Inverter	MV4-8	369256	4909001	2	0	0	100.3	100.3	1	6409.88	3.25	0	87.14	0	0.71	0	0	20.54	0	0	0	0	0	0	-8.08	-8.08
Inverter	MV4-9	369289	4909001	2	0	0	100.3	100.3	1	6427.92	3.25	0	87.16	0	0.71	0	0	20.56	0	0	0	0	0	0	-8.13	-8.13
Inverter	MV4-4	369027	4909199	2	0	0	100.3	100.3	1	6458.03	3.25	0	87.2	0	0.71	0	0	20.6	0	0	0	0	0	0	-8.21	-8.21
Inverter	MV4-6	369243	4909192	2	0	0	100.3	100.3	1	6563.93	3.25	0	87.34	0	0.72	0	0	20.74	0	0	0	0	0	0	-8.49	-8.49
Inverter	MV4-5	369289	4909199	2	0	0	100.3	100.3	1	6594.35	3.25	0	87.38	0	0.72	0	0	20.78	0	0	0	0	0	0	-8.57	-8.57
Inverter	MV5-5	370015	4908690	2	0	0	100.3	100.3	1	6612.13	3.25	0	87.41	0	0.71	0	0	20.8	0	0	0	0	0	0	-8.61	-8.61
Inverter	MV4-1	369011	4909397	2	0	0	100.3	100.3	1	6621.75	3.25	0	87.42	0	0.71	0	0	20.82	0	0	0	0	0	0	-8.64	-8.64
Inverter	MV4-3	369229	4909397	2	0	0	100.3	100.3	1	6731.39	3.25	0	87.56	0	0.71	0	0	20.96	0	0	0	0	0	0	-8.92	-8.92
Inverter	MV5-2	370006	4908853	2	0	0	100.3	100.3	1	6732.08	3.25	0	87.56	0	0.71	0	0	20.96	0	0	0	0	0	0	-8.92	-8.92
Inverter	MV4-2	369272	4909397	2	0	0	100.3	100.3	1	6753.64	3.25	0	87.59	0	0.71	0	0	20.99	0	0	0	0	0	0	-8.98	-8.98
Inverter	MV5-4	370324	4908707	2	0	0	100.3	100.3	1	6827.62	3.25	0	87.69	0	0.71	0	0	21.08	0	0	0	0	0	0	-9.17	-9.17
Inverter	MV5-3	370231	4908851	2	0	0	100.3	100.3	1	6874.62	3.25	0	87.74	0	0.71	0	0	21.14	0	0	0	0	0	0	-9.29	-9.29
Inverter	MV5-1	370020	4909142	2	0	0	100.3	100.3	1	6967.36	3.25	0	87.86	0	0.71	0	0	21.26	0	0	0	0	0	0	-9.52	-9.52
Inverter	MV6-1	370235	4907364	2	0	0	97.3	97.3	1	5828.47	3.25	0	86.31	0	0.7	0	0	19.76	0	0	0	0	0	0	-9.46	-9.46
DSTATCOM - 10 MVAR #2	DSAT2	369403	4908757	2.5	0	0	96.6	96.6	1	6290.65	3.5	0	86.97	0	3.79	0	0	3.98	0	0	0	0	0	0	1.88	1.88
DSTATCOM - 10 MVAR #1	DSAT1	369437	4908757	2.5	0	0	96.6	96.6	1	6310.39	3.5	0	87	0	3.8	0	0	3.99	0	0	0	0	0	0	1.85	1.85
Inverter	MV1-3	364440	4906039	2	0	0	89.1	89.1	1	2750.63	3.25	0	79.79	0	1.09	0	0	9.24	0	0	0	0	0	0	-1.05	-1.05
Inverter	MV2-2	365977	4906654	2	0	0	89.1	89.1	1	3034.61	3.25	0	80.64	0	1.16	0	0	9.67	0	0	0	0	0	0	-2.41	-2.41
SubstationTransformer	W_ST	369711.17	4906112.3	2.5	0	0	92	92	1	4665.93	4.25	0	84.38	0	1.55	2.41	0.25	8.22	0	0	0	0	0	0	-4.58	-4.58
Westbrook Inverter Enclosur	W_INV3	369508	4906164	2	0	0	89.1	89.1	1	4524.09	3.25	0	84.11	0	1.52	0	0	11.82	0	0	0	0	0	0	-8.39	-8.39
Westbrook Inverter Enclosur	W_INV2	369374	4906388	2	0	0	89.1	89.1	1	4546.23	3.25	0	84.15	0	1.53	0	0	11.85	0	0	0	0	0	0	-8.47	-8.47
Inverter	MV3-22	368656	4907142	2	0	0	89.1	89.1	1	4552.95	3.25	0	84.17	0	1.53	0	0	11.86	0	0	0	0	0	0	-8.49	-8.49
Westbrook Inverter Enclosur	W_INV4	369673	4906164	2	0	0	89.1	89.1	1	4661.62	3.25	0	84.37	0	1.56	0	0	12.01	0	0	0	0	0	0	-8.88	-8.88
Westbrook Inverter Enclosur	W_INV7	369780	4906417	2	0	0	89.1	89.1	1	4891.51	3.25	0	84.79	0	1.61	0	0	12.32	0	0	0	0	0	0	-9.66	-9.66
Westbrook Inverter Enclosur	W_INV5	369719	4906574	2	0	0	89.1	89.1	1	4933.67	3.25	0	84.86	0	1.62	0	0	12.37	0	0	0	0	0	0	-9.8	-9.8

Inverter	MV3-5	368340	4907843	2	0	0	89.1	89.1	1	4941.63	3.25	0	84.88	0	1.63	0	0	12.39	0	0	0	0	0	0	-9.83	-9.83
Inverter	MV3-1	368156	4907976	2	0	0	89.1	89.1	1	4964.28	3.25	0	84.92	0	1.63	0	0	12.42	0	0	0	0	0	0	-9.91	-9.91
Westbrook Inverter Enclosur	W_INV6	369875	4906578	2	0	0	89.1	89.1	1	5061.97	3.25	0	85.09	0	1.66	0	0	12.55	0	0	0	0	0	0	-10.23	-10.23
Inverter	MV3-4	368502	4907925	2	0	0	89.1	89.1	1	5096.99	3.25	0	85.15	0	1.66	0	0	12.59	0	0	0	0	0	0	-10.35	-10.35
Inverter	MV3-2	368671	4907928	2	0	0	89.1	89.1	1	5192.28	3.25	0	85.31	0	1.69	0	0	12.72	0	0	0	0	0	0	-10.66	-10.66
Fixed Reactor Bank 1	FRB1	369378	4908755	6	0	0	89.8	89.8	1	6274.58	5.25	0	86.95	0	-0.38	0	0	10.03	0	0	0	0	0	0	-6.83	-6.83
Fixed Reactor Bank 2	FRB2	369464	4908755	6	0	0	89.8	89.8	1	6324.53	5.25	0	87.02	0	-0.37	0	0	10.08	0	0	0	0	0	0	-6.95	-6.95
Inverter	MV4-15	369176	4908481	2	0	0	89.1	89.1	1	5934.25	3.25	0	86.47	0	1.87	0	0	13.68	0	0	0	0	0	0	-12.96	-12.96
Inverter	MV4-14	369176	4908507	2	0	0	89.1	89.1	1	5955.54	3.25	0	86.5	0	1.88	0	0	13.71	0	0	0	0	0	0	-13.02	-13.02
Inverter	MV4-13	369051	4908605	2	0	0	89.1	89.1	1	5966.3	3.25	0	86.51	0	1.88	0	0	13.72	0	0	0	0	0	0	-13.05	-13.05
Inverter	MV4-12	369043	4908803	2	0	0	89.1	89.1	1	6128.18	3.25	0	86.75	0	1.92	0	0	13.92	0	0	0	0	0	0	-13.53	-13.53
Inverter	MV5-6	369982	4908507	2	0	0	89.1	89.1	1	6451.44	3.25	0	87.19	0	2	0	0	14.32	0	0	0	0	0	0	-14.45	-14.45
Westbrook Inverter Enclosur	W_INV1	369409	4906578	2	0	0	86.1	86.1	1	4691.22	3.25	0	84.43	0	1.56	0	0	12.05	0	0	0	0	0	0	-11.98	-11.98
Inverter	MV6-4	370250	4906966	2	0	0	86.1	86.1	1	5593.68	3.25	0	85.95	0	1.79	0	0	13.24	0	0	0	0	0	0	-14.93	-14.93
Inverter Transformer	MV1-14 T	365157	4905049	2	0	0	69.4	69.4	1	1545.43	3.25	0	74.78	0	1.99	0	0	4.49	0	0	0	0	0	0	-11.91	-11.91
Westbrook Inverter Transfor	W_INVTR1	369403	4906578	2	0	0	78.2	78.2	1	4686.56	3.25	0	84.42	0	-3.11	0	0	2.3	0	0	0	0	0	0	-5.37	-5.37
Westbrook Inverter Transfor	W_INVTR3	369514	4906164	2	0	0	77.3	77.3	1	4529.06	3.25	0	84.12	0	-3.08	0	0	2.25	0	0	0	0	0	0	-5.95	-5.95
Westbrook Inverter Transfor	W_INVTR2	369368	4906388	2	0	0	77.3	77.3	1	4541.47	3.25	0	84.14	0	-3.08	0	0	2.25	0	0	0	0	0	0	-5.97	-5.97
Westbrook Inverter Transfor	W_INVTR4	369679	4906164	2	0	0	77.3	77.3	1	4666.66	3.25	0	84.38	0	-3.11	0	0	2.3	0	0	0	0	0	0	-6.23	-6.23
Inverter Transformer	MV1-13 T	364725	4905241	2	0	0	69.4	69.4	1	1918.54	3.25	0	76.66	0	2.14	0	0	4.88	0	0	0	0	0	0	-14.34	-14.34
Westbrook Inverter Transfor	W_INVTR7	369786	4906417	2	0	0	77.3	77.3	1	4896.43	3.25	0	84.8	0	-3.16	0	0	2.38	0	0	0	0	0	0	-6.68	-6.68
Westbrook Inverter Transfor	W_INVTR5	369725	4906574	2	0	0	77.3	77.3	1	4938.48	3.25	0	84.87	0	-3.16	0	0	2.39	0	0	0	0	0	0	-6.76	-6.76
Westbrook Inverter Transfor	W_INVTR6	369881	4906578	2	0	0	77.3	77.3	1	5066.85	3.25	0	85.09	0	-3.19	0	0	2.44	0	0	0	0	0	0	-7	-7
Inverter Transformer	MV1-10 T	365010	4905564	2	0	0	69.4	69.4	1	2077.93	3.25	0	77.35	0	2.2	0	0	5.04	0	0	0	0	0	0	-15.25	-15.25
Inverter Transformer	MV1-7 T	364919	4905782	2	0	0	69.4	69.4	1	2314.09	3.25	0	78.29	0	2.29	0	0	5.27	0	0	0	0	0	0	-16.49	-16.49
Inverter Transformer	MV2-1 T	365836	4906816	2	0	0	69.4	69.4	1	3189.85	3.25	0	81.08	0	2.56	0	0	6.04	0	0	0	0	0	0	-20.33	-20.33
Inverter Transformer	MV6-4 T	370244	4906966	2	0	0	69.4	69.4	1	5588.87	3.25	0	85.95	0	3.12	0	0	7.76	0	0	0	0	0	0	-27.48	-27.48
Inverter Transformer	MV6-1 T	370230	4907364	2	0	0	69.4	69.4	1	5824.64	3.25	0	86.31	0	3.16	0	0	7.91	0	0	0	0	0	0	-28.03	-28.03
Inverter Transformer	MV1-15 T	365309	4904994	2	0	0	56.1	56.1	1	1440.17	3.25	0	74.17	0	0.18	0	0	5.89	0	0	0	0	0	0	-24.17	-24.17
Inverter Transformer	MV1-12 T	365044	4905386	2	0	0	56.1	56.1	1	1899.97	3.25	0	76.57	0	0.36	0	0	6.85	0	0	0	0	0	0	-27.72	-27.72
Inverter Transformer	MV1-11 T	364649	4905414	2	0	0	56.1	56.1	1	2105.37	3.25	0	77.47	0	0.45	0	0	7.25	0	0	0	0	0	0	-29.11	-29.11
Inverter Transformer	MV1-8 T	364782	4905647	2	0	0	56.1	56.1	1	2245.26	3.25	0	78.03	0	0.51	0	0	7.52	0	0	0	0	0	0	-29.99	-29.99
Inverter Transformer	MV1-9 T	364555	4905646	2	0	0	56.1	56.1	1	2352.38	3.25	0	78.43	0	0.55	0	0	7.72	0	0	0	0	0	0	-30.64	-30.64
Inverter Transformer	MV1-4 T	364821	4905918	2	0	0	56.1	56.1	1	2476.8	3.25	0	78.88	0	0.61	0	0	7.95	0	0	0	0	0	0	-31.37	-31.37
Inverter Transformer	MV1-5 T	364676	4905892	2	0	0	56.1	56.1	1	2511.98	3.25	0	79	0	0.62	0	0	8.01	0	0	0	0	0	0	-31.57	-31.57
Inverter Transformer	MV1-6 T	364482	4905835	2	0	0	56.1	56.1	1	2552.29	3.25	0	79.14	0	0.64	0	0	8.08	0	0	0	0	0	0	-31.8	-31.8
Inverter Transformer	MV1-2 T	364759	4906063	2	0	0	56.1	56.1	1	2634.49	3.25	0	79.41	0	0.67	0	0	8.23	0	0	0	0	0	0	-32.26	-32.26
Inverter Transformer	MV1-1 T	364721	4906166	2	0	0	56.1	56.1	1	2744.2	3.25	0	79.77	0	0.72	0	0	8.43	0	0	0	0	0	0	-32.86	-32.86
Inverter Transformer	MV1-3 T	364435	4906039	2	0	0	56.1	56.1	1	2753.04	3.25	0	79.8	0	0.72	0	0	8.44	0	0	0	0	0	0	-32.9	-32.9
Inverter Transformer	MV2-4 T	365590	4906628	2	0	0	56.1	56.1	1	3005.94	3.25	0	80.56	0	0.83	0	0	8.88	0	0	0	0	0	0	-34.21	-34.21
Inverter Transformer	MV2-3 T	365814	4906641	2	0	0	56.1	56.1	1	3014.45	3.25	0	80.58	0	0.84	0	0	8.89	0	0	0	0	0	0	-34.25	-34.25
Inverter Transformer	MV2-2 T	365982	4906654	2	0	0	56.1	56.1	1	3034.97	3.25	0	80.64	0	0.84	0	0	8.93	0	0	0	0	0	0	-34.36	-34.36
Inverter Transformer	MV3-18 T	367757	4907412	2	0	0	56.1	56.1	1	4278.49	3.25	0	83.63	0	1.35	0	0	10.86	0	0	0	0	0	0	-39.78	-39.78
Inverter Transformer	MV3-12 T	367674	4907594	2	0	0	56.1	56.1	1	4403.64	3.25	0	83.88	0	1.4	0	0	11.04	0	0	0	0	0	0	-40.26	-40.26
Inverter Transformer	MV3-21 T	368484	4907206	2	0	0	56.1	56.1	1	4496.38	3.25	0	84.06	0	1.44	0	0	11.17	0	0	0	0	0	0	-40.61	-40.61
Inverter Transformer	MV3-13 T	367958	4907577	2	0	0	56.1	56.1	1	4519.3	3.25	0	84.1	0	1.45	0	0	11.2	0	0	0	0	0	0	-40.69	-40.69
Inverter Transformer	MV3-19 T	368352	4907347	2	0	0	56.1	56.1	1	4532.71	3.25	0	84.13	0	1.45	0	0	11.22	0	0	0	0	0	0	-40.74	-40.74
Inverter Transformer	MV3-17 T	368183	4907472	2	0	0	56.1	56.1	1	4543.6	3.25	0	84.15	0	1.46	0	0	11.24	0	0	0	0	0	0	-40.78	-40.78
Inverter Transformer	MV3-22 T	368661	4907142	2	0	0	56.1	56.1	1	4556.12	3.25	0	84.17	0	1.46	0	0	11.25	0	0	0	0	0	0	-40.83	-40.83
Inverter Transformer	MV3-15 T	368351	4907477	2	0	0	56.1	56.1	1	4639.44	3.25	0	84.33	0	1.49	0	0	11.37	0	0	0	0	0	0	-41.13	-41.13
Inverter Transformer	MV3-7 T	367951	4907754	2	0	0	56.1	56.1	1	4671.51	3.25	0	84.39	0	1.5	0	0	11.41	0	0	0	0	0	0	-41.25	-41.25
Inverter Transformer	MV3-10 T	368162	4907669	2	0	0	56.1	56.1	1	4700.72	3.25	0	84.44	0	1.52	0	0	11.45	0	0	0	0	0	0	-41.35	-41.35
Inverter Transformer	MV3-20 T	368683	4907317	2	0	0	56.1	56.1	1	4706.08	3.25	0	84.45	0	1.52	0	0	11.46	0	0	0	0	0	0	-41.37	-41.37
Inverter Transformer	MV3-16 T	368509	4907475	2	0	0	56.1	56.1	1	4727.79	3.25	0	84.49	0	1.53	0	0	11.49	0	0	0	0	0	0	-41.45	-41.45
Inverter Transformer	MV3-11 T	368340	4907662	2	0	0	56.1	56.1	1	4788.14	3.25	0	84.6	0	1.55	0	0	11.57	0	0	0	0	0	0	-41.66	-41.66
Inverter Transformer	MV3-3 T	367944	4907927	2	0	0	56.1	56.1	1	4821.85	3.25	0	84.66	0	1.56	0	0	11.62	0	0	0	0	0	0	-41.78	-41.78
Inverter Transformer	MV3-6 T	368156	4907834	2	0	0	56.1	56.1	1	4840.37	3.25	0	84.7	0	1.57	0	0	11.64	0	0	0	0	0	0	-41.85	-41.85
Inverter Transformer	MV3-14 T	368678	4907498	2	0	0	56.1	56.1	1	4846.29	3.25	0	84.71	0	1.57	0	0	11.65	0	0	0	0	0	0	-41.87	-41.87
Inverter Transformer	MV3-9 T	368517	4907703	2	0	0	56.1	56.1	1	4919.62	3.25	0	84.84	0	1.6	0	0	11.75	0	0	0	0	0	0	-42.12	-42.12
Inverter Transformer	MV3-5 T	368335	4907843	2	0	0	56.1	56.1	1	4939.02	3.25	0	84.87	0	1.6	0	0	11.77	0	0	0	0	0	0	-42.19	-42.19
Inverter Transformer	MV3-1 T	368150	4907976	2	0	0	56.1	56.1	1	4961.39	3.25	0	84.91	0	1.61	0	0	11.8	0	0	0	0	0	0	-42.27	-42.27
Inverter Transformer	MV3-8 T	368685	4907712	2	0	0	56.1	56.1	1	5022.95	3.25	0	85.02	0	1.63	0	0	11.88	0	0	0	0	0	0	-42.48	-42.48
Inverter Transformer	MV3-4 T	368507	4907925	2	0	0	56.1	56.1	1	5099.68	3.25	0	85.15	0	1.66	0	0	11.98	0	0	0	0	0	0	-42.74	-42.74
Inverter Transformer	MV3-2 T	368677	4907928	2	0	0	56.1	56.1	1	5195.64	3.25	0	85.31	0	1.7	0	0	12.11	0	0	0	0	0	0	-43.06	-43.06
Inverter Transformer	MV6-3 T	370202	4907140	2	0	0	56.1	56.1	1	5661.54	3.25	0	86.06	0	1.85	0	0	12.7	0	0	0	0	0	0	-44.55	-44.55
Inverter Transformer	MV6-2 T	370091	4907339	2	0	0	56.1	56.1	1	5702.41	3.25	0	86.12	0	1.87	0	0	12.75	0	0	0	0	0	0	-44.68	-44.68
Inverter Transformer	MV4-15 T	369170	4908481	2	0	0	56.1	56.1	1	5930.8	3.25	0	86.46	0	1.94	0	0	13.02	0	0	0	0	0	0	-45.37	-45.37
Inverter Transformer	MV4-14 T	369182	4908507	2	0	0	56.1	56.1	1	5958.98	3.25	0	86.5	0	1.95	0	0	13.05	0	0	0	0	0	0	-45.45	-45.45
Inverter Transformer	MV4-13 T	369057	4908605	2	0	0	56.1	56.1	1	5969.61	3.25	0	86.52	0	1.96	0	0	13.07	0	0	0	0	0	0	-45.48	-45.48
Inverter Transformer	MV4-12 T	369049	4908803	2	0	0	56.1	56.1	1	6131.4	3.25	0	86.75	0	2.01	0	0	13.26	0	0	0	0	0	0	-45.96	-45.96
Inverter Transformer	MV4-7 T	369040	4909001	2	0	0	56.1	56.1	1	6294.75	3.25	0	86.98	0	2.06	0	0	13.45	0	0	0	0	0	0	-46.42	-46.42
Inverter Transformer	MV4-11 T	369269	4908855	2	0	0	56.1	56.1	1	6295.21	3.25	0	86.98	0	2.06	0	0	13.45	0	0	0	0	0	0	-46.43	-46.43
Inverter Transformer	MV4-10 T	369307	4908858	2	0	0	56.1	56.1	1	6318.94	3.25	0	87.01	0	2.06	0	0	13.47	0	0	0	0	0	0	-46.49	-46.49
Inverter Transformer	MV4-8 T	369262	4909001	2	0	0	56.1	56.1	1	6413.15	3.25	0	87.14	0	2.09	0	0	13.58	0	0	0	0	0	0	-46.76	-46.76

	Inverter Transformer	MV4-9 T	369284	4909001	2	0	0	56.1	56.1	1	6425.18	3.25	0	87.16	0	2.1	0	0	13.6	0	0	0	0	0	0	-46.79	-46.79
	Inverter Transformer	MV5-6 T	369987	4908507	2	0	0	56.1	56.1	1	6454.71	3.25	0	87.2	0	2.1	0	0	13.63	0	0	0	0	0	0	-46.87	-46.87
	Inverter Transformer	MV4-4 T	369033	4909199	2	0	0	56.1	56.1	1	6461.06	3.25	0	87.21	0	2.11	0	0	13.64	0	0	0	0	0	0	-46.89	-46.89
	Inverter Transformer	MV4-6 T	369249	4909192	2	0	0	56.1	56.1	1	6567.12	3.25	0	87.35	0	2.14	0	0	13.76	0	0	0	0	0	0	-47.18	-47.18
	Inverter Transformer	MV4-5 T	369283	4909199	2	0	0	56.1	56.1	1	6591.15	3.25	0	87.38	0	2.14	0	0	13.78	0	0	0	0	0	0	-47.25	-47.25
	Inverter Transformer	MV5-5 T	370021	4908690	2	0	0	56.1	56.1	1	6615.99	3.25	0	87.41	0	2.15	0	0	13.81	0	0	0	0	0	0	-47.31	-47.31
	Inverter Transformer	MV4-1 T	369017	4909397	2	0	0	56.1	56.1	1	6624.7	3.25	0	87.42	0	2.15	0	0	13.82	0	0	0	0	0	0	-47.34	-47.34
	Inverter Transformer	MV4-3 T	369234	4909397	2	0	0	56.1	56.1	1	6733.97	3.25	0	87.57	0	2.19	0	0	13.94	0	0	0	0	0	0	-47.63	-47.63
	Inverter Transformer	MV5-2 T	370011	4908853	2	0	0	56.1	56.1	1	6735.23	3.25	0	87.57	0	2.19	0	0	13.94	0	0	0	0	0	0	-47.64	-47.64
	Inverter Transformer	MV4-2 T	369267	4909397	2	0	0	56.1	56.1	1	6751.04	3.25	0	87.59	0	2.19	0	0	13.96	0	0	0	0	0	0	-47.68	-47.68
	Inverter Transformer	MV5-4 T	370330	4908707	2	0	0	56.1	56.1	1	6831.63	3.25	0	87.69	0	2.21	0	0	14.05	0	0	0	0	0	0	-47.89	-47.89
	Inverter Transformer	MV5-3 T	370237	4908851	2	0	0	56.1	56.1	1	6878.52	3.25	0	87.75	0	2.23	0	0	14.1	0	0	0	0	0	0	-48.02	-48.02
	Inverter Transformer	MV5-1 T	370015	4909142	2	0	0	56.1	56.1	1	6964.3	3.25	0	87.86	0	2.25	0	0	14.19	0	0	0	0	0	0	-48.24	-48.24
	Line Reactor	NGR	369421	4908787.5	5	0	0	45.4	45.4	1	6325.94	5.25	0	87.02	0	3.23	1.36	0.1	2.59	0	0	0	0	0	0	-48.85	-48.85
Limit. Valu	0	0																								
Level D/N:	25.0232	25.0232																								

Receiver: Existing Noise Receptor
ID: G-49
X: 365686.2
Y: 4903496.1
Z: 4.5
Ground: 0

ISO	Description	ID	X	Y	Z	Ground	ReflOrd	LxT	LxN	L/A	Dist.	hm	Freq	Adiv	K0b	Agr	Abar	z	Aatm	Afol	Ahous	Cmet	CmetN	Dc	RL	LtotT	LtotN
	Inverter	MV1-15	365315	4904994	2	0	0	100.3	100.3	1	1543.21	3.25	0	74.77	0	-0.02	0	0	12.43	0	0	0	0	0	0	13.13	13.13
	Sol_Luce Substation	S_Substation	369426	4908792	3.5	0	0	112.1	112.1	1	6483.26	5.25	0	87.24	0	1.27	2.54	0.29	10.24	0	0	0	0	0	0	10.78	10.78
	Inverter	MV1-12	365038	4905386	2	0	0	100.3	100.3	1	1997.97	3.25	0	77.01	0	0.13	0	0	13.46	0	0	0	0	0	0	9.71	9.71
	Inverter	MV1-11	364655	4905414	2	0	0	100.3	100.3	1	2177.55	3.25	0	77.76	0	0.18	0	0	13.83	0	0	0	0	0	0	8.55	8.55
	Inverter	MV1-14	365163	4905049	2	0	0	97.3	97.3	1	1638.67	3.25	0	75.29	0	0.02	0	0	12.66	0	0	0	0	0	0	9.35	9.35
	Inverter	MV1-8	364788	4905647	2	0	0	100.3	100.3	1	2330.91	3.25	0	78.35	0	0.22	0	0	14.13	0	0	0	0	0	0	7.61	7.61
	Inverter	MV1-9	364561	4905646	2	0	0	100.3	100.3	1	2426.55	3.25	0	78.7	0	0.24	0	0	14.32	0	0	0	0	0	0	7.05	7.05
	Inverter	MV1-4	364815	4905918	2	0	0	100.3	100.3	1	2573.83	3.25	0	79.21	0	0.27	0	0	14.6	0	0	0	0	0	0	6.23	6.23
	Inverter	MV1-5	364671	4905892	2	0	0	100.3	100.3	1	2602.11	3.25	0	79.31	0	0.28	0	0	14.65	0	0	0	0	0	0	6.08	6.08
	Inverter	MV1-6	364477	4905835	2	0	0	100.3	100.3	1	2632.99	3.25	0	79.41	0	0.29	0	0	14.71	0	0	0	0	0	0	5.91	5.91
	Inverter	MV1-2	364753	4906063	2	0	0	100.3	100.3	1	2731.27	3.25	0	79.73	0	0.31	0	0	14.89	0	0	0	0	0	0	5.39	5.39
	Gardiner Substation	G_Sub	366586.3	4903349.9	2.5	0	0	90.8	90.8	1	911.9	4.25	0	70.2	0	0.09	2.27	0.3	2.34	0	0	0	0	0	0	15.87	15.87
	Inverter	MV1-13	364731	4905241	2	0	0	97.3	97.3	1	1989.24	3.25	0	76.97	0	0.13	0	0	13.44	0	0	0	0	0	0	6.77	6.77
	Inverter	MV1-1	364715	4906166	2	0	0	100.3	100.3	1	2841.06	3.25	0	80.07	0	0.33	0	0	15.09	0	0	0	0	0	0	4.82	4.82
	Inverter	MV1-10	365004	4905564	2	0	0	97.3	97.3	1	2177.52	3.25	0	77.76	0	0.18	0	0	13.83	0	0	0	0	0	0	5.55	5.55
	Inverter	MV2-4	365586	4906624	2	0	0	100.3	100.3	1	3129.51	3.25	0	80.91	0	0.39	0	0	15.6	0	0	0	0	0	0	3.42	3.42
	Inverter	MV2-3	365820	4906641	2	0	0	100.3	100.3	1	3147.75	3.25	0	80.96	0	0.39	0	0	15.63	0	0	0	0	0	0	3.33	3.33
	Inverter	MV1-7	364925	4905782	2	0	0	97.3	97.3	1	2409.31	3.25	0	78.64	0	0.24	0	0	14.28	0	0	0	0	0	0	4.15	4.15
	Inverters	G_Inv1	366526.4	4903225.8	2	0	0	87.7	87.7	1	882.61	3.25	0	69.92	0	2.43	0	0	1.28	0	0	0	0	0	0	14.04	14.04
	Inverters	G_Inv3	366583.7	4903091.4	2	0	0	87.7	87.7	1	984.53	3.25	0	70.86	0	2.45	0	0	1.41	0	0	0	0	0	0	12.94	12.94
	Inverters	G_Inv2	366676.9	4903239.1	2	0	0	87.7	87.7	1	1023.49	3.25	0	71.2	0	2.45	0	0	1.46	0	0	0	0	0	0	12.55	12.55
	Inverter	MV3-18	367752	4907412	2	0	0	100.3	100.3	1	4427.39	3.25	0	83.92	0	0.58	0	0	17.72	0	0	0	0	0	0	-1.91	-1.91
	Inverter	MV3-12	367668	4907594	2	0	0	100.3	100.3	1	4551.96	3.25	0	84.16	0	0.6	0	0	17.91	0	0	0	0	0	0	-2.36	-2.36
	Inverter	MV3-21	368478	4907206	2	0	0	100.3	100.3	1	4643.01	3.25	0	84.34	0	0.61	0	0	18.05	0	0	0	0	0	0	-2.68	-2.68
	Inverter	MV3-13	367963	4907577	2	0	0	100.3	100.3	1	4673.07	3.25	0	84.39	0	0.61	0	0	18.09	0	0	0	0	0	0	-2.78	-2.78
	Inverter	MV3-19	368357	4907347	2	0	0	100.3	100.3	1	4686.43	3.25	0	84.42	0	0.61	0	0	18.11	0	0	0	0	0	0	-2.83	-2.83
	Inverter	MV3-17	368178	4907472	2	0	0	100.3	100.3	1	4692.21	3.25	0	84.43	0	0.61	0	0	18.12	0	0	0	0	0	0	-2.85	-2.85
	Inverters	G_Inv5	366638.5	4902958.1	2	0	0	87.7	87.7	1	1093.77	3.25	0	71.78	0	2.46	0	0	1.55	0	0	0	0	0	0	11.87	11.87
	Inverter	MV2-1	365842	4906816	2	0	0	97.3	97.3	1	3323.55	3.25	0	81.43	0	0.42	0	0	15.93	0	0	0	0	0	0	-0.47	-0.47
	Inverter	MV3-15	368357	4907477	2	0	0	100.3	100.3	1	4793.82	3.25	0	84.61	0	0.62	0	0	18.27	0	0	0	0	0	0	-3.2	-3.2
	Inverters	G_Inv4	366732.8	4903105	2	0	0	87.7	87.7	1	1117.29	3.25	0	71.96	0	2.47	0	0	1.57	0	0	0	0	0	0	11.66	11.66
	Inverter	MV3-7	367945	4907754	2	0	0	100.3	100.3	1	4819.95	3.25	0	84.66	0	0.63	0	0	18.31	0	0	0	0	0	0	-3.29	-3.29
	Inverter	MV3-10	368167	4907669	2	0	0	100.3	100.3	1	4854.63	3.25	0	84.72	0	0.63	0	0	18.37	0	0	0	0	0	0	-3.4	-3.4
	Inverter	MV3-20	368689	4907317	2	0	0	100.3	100.3	1	4859.64	3.25	0	84.73	0	0.63	0	0	18.37	0	0	0	0	0	0	-3.42	-3.42
	Inverter	MV3-16	368514	4907475	2	0	0	100.3	100.3	1	4881.4	3.25	0	84.77	0	0.63	0	0	18.41	0	0	0	0	0	0	-3.49	-3.49
	Inverter	MV3-11	368346	4907662	2	0	0	100.3	100.3	1	4942.6	3.25	0	84.88	0	0.64	0	0	18.5	0	0	0	0	0	0	-3.7	-3.7
	Inverter	MV3-3	367939	4907927	2	0	0	100.3	100.3	1	4970.71	3.25	0	84.93	0	0.64	0	0	18.54	0	0	0	0	0	0	-3.79	-3.79
	Inverter	MV3-6	368162	4907834	2	0	0	100.3	100.3	1	4994.69	3.25	0	84.97	0	0.64	0	0	18.57	0	0	0	0	0	0	-3.87	-3.87
	Inverter	MV3-14	368684	4907498	2	0	0	100.3	100.3	1	5000.2	3.25	0	84.98	0	0.64	0	0	18.58	0	0	0	0	0	0	-3.89	-3.89
	Inverter	MV3-9	368512	4907703	2	0	0	100.3	100.3	1	5067.86	3.25	0	85.1	0	0.65	0	0	18.68	0	0	0	0	0	0	-4.11	-4.11
	Inverter	MV3-8	368680	4907712	2	0	0	100.3	100.3	1	5170.75	3.25	0	85.27	0	0.66	0	0	18.83	0	0	0	0	0	0	-4.45	-4.45
	Inverters	G_Inv7	366694.6	4902824.7	2	0	0	87.7	87.7	1	1211.47	3.25	0	72.67	0	2.48	0	0	1.69	0	0	0	0	0	0	10.82	10.82
	Inverters	G_Inv6	366788.5	4902972	2	0	0	87.7	87.7	1	1220.55	3.25	0	72.73	0	2.48	0	0	1.7	0	0	0	0	0	0	10.75	10.75
	Inverters	G_Inv8	366844.5	4902838.5	2	0	0	87.7	87.7	1	1331.95	3.25	0	73.49	0	2.5	0	0	1.84	0	0	0	0	0	0	9.83	9.83
	Inverters	G_Inv9	366750.9	4902691.8	2	0	0	87.7	87.7	1	1334.35	3.25	0	73.51	0	2.5	0	0	1.84	0	0	0	0	0	0	9.82	9.82
	Inverter	MV6-3	370207	4907140	2	0	0	100.3	100.3	1	5806.52	3.25	0	86.28	0	0.7	0	0	19.73	0	0	0	0	0	0	-6.39	-6.39
	Inverter	MV6-2	370085	4907339	2	0	0	100.3	100.3	1	5841	3.25	0	86.33	0	0.7	0	0	19.78	0	0	0	0	0	0	-6.49	-6.49
	Inverters	G_Inv10	366900.7	4902704.8	2	0	0	87.7	87.7	1	1449.54	3.25	0	74.22	0	2.51	0	0	1.98	0	0	0	0	0	0	8.94	8.94
	Inverter	MV4-7	369035	4909001	2	0	0	100.3	100.3	1	6443.48	3.25	0	87.18	0	0.71	0	0	20.59	0	0	0	0	0	0	-8.17	-8.17

Inverter	MV4-11	369264	4908855	2	0	0	100.3	100.3	1	6443.48	3.25	0	87.18	0	0.71	0	0	20.59	0	0	0	0	0	0	-8.17	-8.17
Inverter	MV4-10	369312	4908858	2	0	0	100.3	100.3	1	6472.74	3.25	0	87.22	0	0.71	0	0	20.62	0	0	0	0	0	0	-8.25	-8.25
Inverter	MV4-8	369256	4909001	2	0	0	100.3	100.3	1	6561.05	3.25	0	87.34	0	0.72	0	0	20.74	0	0	0	0	0	0	-8.48	-8.48
Inverter	MV4-9	369289	4909001	2	0	0	100.3	100.3	1	6579.07	3.25	0	87.36	0	0.72	0	0	20.76	0	0	0	0	0	0	-8.53	-8.53
Inverter	MV4-4	369027	4909199	2	0	0	100.3	100.3	1	6609.39	3.25	0	87.4	0	0.72	0	0	20.8	0	0	0	0	0	0	-8.61	-8.61
Inverter	MV4-6	369243	4909192	2	0	0	100.3	100.3	1	6715.21	3.25	0	87.54	0	0.71	0	0	20.94	0	0	0	0	0	0	-8.88	-8.88
Inverter	MV4-5	369289	4909199	2	0	0	100.3	100.3	1	6745.61	3.25	0	87.58	0	0.71	0	0	20.98	0	0	0	0	0	0	-8.96	-8.96
Inverter	MV5-5	370015	4908690	2	0	0	100.3	100.3	1	6761.3	3.25	0	87.6	0	0.71	0	0	21	0	0	0	0	0	0	-9	-9
Inverter	MV4-1	369011	4909397	2	0	0	100.3	100.3	1	6773.1	3.25	0	87.62	0	0.71	0	0	21.01	0	0	0	0	0	0	-9.03	-9.03
Inverter	MV5-2	370006	4908853	2	0	0	100.3	100.3	1	6881.65	3.25	0	87.75	0	0.71	0	0	21.15	0	0	0	0	0	0	-9.3	-9.3
Inverter	MV4-3	369229	4909397	2	0	0	100.3	100.3	1	6882.74	3.25	0	87.76	0	0.71	0	0	21.15	0	0	0	0	0	0	-9.31	-9.31
Inverter	MV4-2	369272	4909397	2	0	0	100.3	100.3	1	6904.97	3.25	0	87.78	0	0.71	0	0	21.18	0	0	0	0	0	0	-9.36	-9.36
Inverter	MV5-4	370324	4908707	2	0	0	100.3	100.3	1	6975.86	3.25	0	87.87	0	0.71	0	0	21.27	0	0	0	0	0	0	-9.54	-9.54
Inverter	MV5-3	370231	4908851	2	0	0	100.3	100.3	1	7023.54	3.25	0	87.93	0	0.71	0	0	21.33	0	0	0	0	0	0	-9.66	-9.66
Inverter	MV5-1	370020	4909142	2	0	0	100.3	100.3	1	7117.44	3.25	0	88.05	0	0.71	0	0	21.45	0	0	0	0	0	0	-9.89	-9.89
Inverter	MV6-1	370235	4907364	2	0	0	97.3	97.3	1	5970.95	3.25	0	86.52	0	0.7	0	0	19.95	0	0	0	0	0	0	-9.87	-9.87
DSTATCOM - 10 MVAR #2	DSAT2	369403	4908757	2.5	0	0	96.6	96.6	1	6441.4	3.5	0	87.18	0	3.8	0	0	4.05	0	0	0	0	0	0	1.6	1.6
DSTATCOM - 10 MVAR #1	DSAT1	369437	4908757	2.5	0	0	96.6	96.6	1	6461.08	3.5	0	87.21	0	3.81	0	0	4.06	0	0	0	0	0	0	1.56	1.56
Inverter	MV1-3	364440	4906039	2	0	0	89.1	89.1	1	2831.85	3.25	0	80.04	0	1.11	0	0	9.36	0	0	0	0	0	0	-1.45	-1.45
Inverter	MV2-2	365977	4906654	2	0	0	89.1	89.1	1	3171.26	3.25	0	81.02	0	1.19	0	0	9.88	0	0	0	0	0	0	-3.03	-3.03
SubstationTransformer	W_ST	369711.17	4906112.3	2.5	0	0	92	92	1	4800.49	4.25	0	84.63	0	1.58	2.38	0.24	8.38	0	0	0	0	0	0	-4.99	-4.99
Westbrook Inverter Enclosur	W_INV3	369508	4906164	2	0	0	89.1	89.1	1	4660.89	3.25	0	84.37	0	1.56	0	0	12.01	0	0	0	0	0	0	-8.87	-8.87
Westbrook Inverter Enclosur	W_INV2	369374	4906388	2	0	0	89.1	89.1	1	4686.47	3.25	0	84.42	0	1.56	0	0	12.04	0	0	0	0	0	0	-8.96	-8.96
Inverter	MV3-22	368656	4907142	2	0	0	89.1	89.1	1	4702.37	3.25	0	84.45	0	1.57	0	0	12.06	0	0	0	0	0	0	-9.02	-9.02
Westbrook Inverter Enclosur	W_INV4	369673	4906164	2	0	0	89.1	89.1	1	4797.11	3.25	0	84.62	0	1.59	0	0	12.19	0	0	0	0	0	0	-9.34	-9.34
Westbrook Inverter Enclosur	W_INV7	369780	4906417	2	0	0	89.1	89.1	1	5029	3.25	0	85.03	0	1.65	0	0	12.5	0	0	0	0	0	0	-10.12	-10.12
Westbrook Inverter Enclosur	W_INV5	369719	4906574	2	0	0	89.1	89.1	1	5073.16	3.25	0	85.11	0	1.66	0	0	12.56	0	0	0	0	0	0	-10.27	-10.27
Inverter	MV3-5	368340	4907843	2	0	0	89.1	89.1	1	5092.96	3.25	0	85.14	0	1.66	0	0	12.59	0	0	0	0	0	0	-10.33	-10.33
Inverter	MV3-1	368156	4907976	2	0	0	89.1	89.1	1	5115.61	3.25	0	85.18	0	1.67	0	0	12.62	0	0	0	0	0	0	-10.41	-10.41
Westbrook Inverter Enclosur	W_INV6	369875	4906578	2	0	0	89.1	89.1	1	5200.4	3.25	0	85.32	0	1.69	0	0	12.73	0	0	0	0	0	0	-10.68	-10.68
Inverter	MV3-4	368502	4907925	2	0	0	89.1	89.1	1	5248.23	3.25	0	85.4	0	1.7	0	0	12.79	0	0	0	0	0	0	-10.84	-10.84
Inverter	MV3-2	368671	4907928	2	0	0	89.1	89.1	1	5343.29	3.25	0	85.56	0	1.72	0	0	12.92	0	0	0	0	0	0	-11.14	-11.14
Fixed Reactor Bank 1	FRB1	369378	4908755	6	0	0	89.8	89.8	1	6425.37	5.25	0	87.16	0	-0.36	0	0	10.18	0	0	0	0	0	0	-7.21	-7.21
Fixed Reactor Bank 2	FRB2	369464	4908755	6	0	0	89.8	89.8	1	6475.17	5.25	0	87.23	0	-0.35	0	0	10.23	0	0	0	0	0	0	-7.33	-7.33
Inverter	MV4-15	369176	4908481	2	0	0	89.1	89.1	1	6085.06	3.25	0	86.69	0	1.91	0	0	13.87	0	0	0	0	0	0	-13.4	-13.4
Inverter	MV4-14	369176	4908507	2	0	0	89.1	89.1	1	6106.38	3.25	0	86.72	0	1.91	0	0	13.9	0	0	0	0	0	0	-13.47	-13.47
Inverter	MV4-13	369051	4908605	2	0	0	89.1	89.1	1	6117.41	3.25	0	86.73	0	1.91	0	0	13.91	0	0	0	0	0	0	-13.5	-13.5
Inverter	MV4-12	369043	4908803	2	0	0	89.1	89.1	1	6279.43	3.25	0	86.96	0	1.95	0	0	14.11	0	0	0	0	0	0	-13.97	-13.97
Inverter	MV5-6	369982	4908507	2	0	0	89.1	89.1	1	6600.23	3.25	0	87.39	0	2.03	0	0	14.51	0	0	0	0	0	0	-14.87	-14.87
Westbrook Inverter Enclosur	W_INV1	369409	4906578	2	0	0	86.1	86.1	1	4832.94	3.25	0	84.68	0	1.6	0	0	12.24	0	0	0	0	0	0	-12.46	-12.46
Inverter	MV6-4	370250	4906966	2	0	0	86.1	86.1	1	5733.1	3.25	0	86.17	0	1.82	0	0	13.42	0	0	0	0	0	0	-15.35	-15.35
Inverter Transformer	MV1-14 T	365157	4905049	2	0	0	69.4	69.4	1	1640.6	3.25	0	75.3	0	2.03	0	0	4.59	0	0	0	0	0	0	-12.57	-12.57
Westbrook Inverter Transfor	W_INVTR1	369403	4906578	2	0	0	78.2	78.2	1	4828.32	3.25	0	84.68	0	-3.14	0	0	2.35	0	0	0	0	0	0	-5.65	-5.65
Westbrook Inverter Transfor	W_INVTR3	369514	4906164	2	0	0	77.3	77.3	1	4665.81	3.25	0	84.38	0	-3.11	0	0	2.3	0	0	0	0	0	0	-6.23	-6.23
Westbrook Inverter Transfor	W_INVTR2	369368	4906388	2	0	0	77.3	77.3	1	4681.75	3.25	0	84.41	0	-3.11	0	0	2.3	0	0	0	0	0	0	-6.26	-6.26
Westbrook Inverter Transfor	W_INVTR4	369679	4906164	2	0	0	77.3	77.3	1	4802.1	3.25	0	84.63	0	-3.14	0	0	2.34	0	0	0	0	0	0	-6.49	-6.49
Inverter Transformer	MV1-13 T	364725	4905241	2	0	0	69.4	69.4	1	1992.13	3.25	0	76.99	0	2.17	0	0	4.96	0	0	0	0	0	0	-14.76	-14.76
Westbrook Inverter Transfor	W_INVTR7	369786	4906417	2	0	0	77.3	77.3	1	5033.89	3.25	0	85.04	0	-3.18	0	0	2.42	0	0	0	0	0	0	-6.94	-6.94
Westbrook Inverter Transfor	W_INVTR5	369725	4906574	2	0	0	77.3	77.3	1	5077.93	3.25	0	85.11	0	-3.19	0	0	2.44	0	0	0	0	0	0	-7.02	-7.02
Westbrook Inverter Transfor	W_INVTR6	369881	4906578	2	0	0	77.3	77.3	1	5205.23	3.25	0	85.33	0	-3.22	0	0	2.48	0	0	0	0	0	0	-7.25	-7.25
Inverter Transformer	MV1-10 T	365010	4905564	2	0	0	69.4	69.4	1	2175.65	3.25	0	77.75	0	2.24	0	0	5.14	0	0	0	0	0	0	-15.78	-15.78
Inverter Transformer	MV1-7 T	364919	4905782	2	0	0	69.4	69.4	1	2411.21	3.25	0	78.64	0	2.32	0	0	5.36	0	0	0	0	0	0	-16.97	-16.97
Inverter Transformer	MV2-1 T	365836	4906816	2	0	0	69.4	69.4	1	3323.28	3.25	0	81.43	0	2.6	0	0	6.15	0	0	0	0	0	0	-20.83	-20.83
Inverter Transformer	MV6-4 T	370244	4906966	2	0	0	69.4	69.4	1	5728.33	3.25	0	86.16	0	3.15	0	0	7.85	0	0	0	0	0	0	-27.81	-27.81
Inverter Transformer	MV6-1 T	370230	4907364	2	0	0	69.4	69.4	1	5967.14	3.25	0	86.52	0	3.18	0	0	8	0	0	0	0	0	0	-28.35	-28.35
Inverter Transformer	MV1-15 T	365309	4904994	2	0	0	56.1	56.1	1	1544.67	3.25	0	74.78	0	0.22	0	0	6.11	0	0	0	0	0	0	-25.05	-25.05
Inverter Transformer	MV1-12 T	365044	4905386	2	0	0	56.1	56.1	1	1996.03	3.25	0	77	0	0.4	0	0	7.04	0	0	0	0	0	0	-28.38	-28.38
Inverter Transformer	MV1-11 T	364649	4905414	2	0	0	56.1	56.1	1	2180.4	3.25	0	77.77	0	0.48	0	0	7.39	0	0	0	0	0	0	-29.59	-29.59
Inverter Transformer	MV1-8 T	364782	4905647	2	0	0	56.1	56.1	1	2333.23	3.25	0	78.36	0	0.55	0	0	7.68	0	0	0	0	0	0	-30.53	-30.53
Inverter Transformer	MV1-9 T	364555	4905646	2	0	0	56.1	56.1	1	2429.34	3.25	0	78.71	0	0.59	0	0	7.86	0	0	0	0	0	0	-31.1	-31.1
Inverter Transformer	MV1-4 T	364821	4905918	2	0	0	56.1	56.1	1	2571.8	3.25	0	79.2	0	0.65	0	0	8.12	0	0	0	0	0	0	-31.91	-31.91
Inverter Transformer	MV1-5 T	364676	4905892	2	0	0	56.1	56.1	1	2600.16	3.25	0	79.3	0	0.66	0	0	8.17	0	0	0	0	0	0	-32.07	-32.07
Inverter Transformer	MV1-6 T	364482	4905835	2	0	0	56.1	56.1	1	2630.7	3.25	0	79.4	0	0.67	0	0	8.23	0	0	0	0	0	0	-32.24	-32.24
Inverter Transformer	MV1-2 T	364759	4906063	2	0	0	56.1	56.1	1	2729.23	3.25	0	79.72	0	0.71	0	0	8.4	0	0	0	0	0	0	-32.78	-32.78
Inverter Transformer	MV1-3 T	364435	4906039	2	0	0	56.1	56.1	1	2834.05	3.25	0	80.05	0	0.76	0	0	8.58	0	0	0	0	0	0	-33.33	-33.33
Inverter Transformer	MV1-1 T	364721	4906166	2	0	0	56.1	56.1	1	2839.01	3.25	0	80.06	0	0.76	0	0	8.59	0	0	0	0	0	0	-33.36	-33.36
Inverter Transformer	MV2-4 T	365590	4906628	2	0	0	56.1	56.1	1	3133.38	3.25	0	80.92	0	0.89	0	0	9.09	0	0	0	0	0	0	-34.84	-34.84
Inverter Transformer	MV2-3 T	365814	4906641	2	0	0	56.1	56.1	1	3147.5	3.25	0	80.96	0	0.89	0	0	9.12	0	0	0	0	0	0	-34.91	-34.91
Inverter Transformer	MV2-2 T	365982	4906654	2	0	0	56.1	56.1	1	3171.72	3.25	0	81.03	0	0.9	0	0	9.16	0	0	0	0	0	0	-35.03	-35.03
Inverter Transformer	MV3-18 T	367757	4907412	2	0	0	56.1	56.1	1	4429.73	3.25	0	83.93	0	1.41	0	0	11.08	0	0	0	0	0	0	-40.36	-40.36
Inverter Transformer	MV3-12 T	367674	4907594	2	0	0	56.1	56.1	1	4554.57	3.25	0	84.17	0	1.46	0	0	11.25	0	0	0	0	0	0	-40.82	-40.82
Inverter Transformer	MV3-21 T	368484	4907206	2	0	0	56.1	56.1	1	4646.62	3.25	0	84.34	0	1.5	0	0	11.38	0	0	0	0	0	0	-41.16	-41.16
Inverter Transformer	MV3-13 T	367958	4907577	2	0	0	56.1	56.1	1	4670.63	3.25	0	84.39	0	1.5	0	0	11.41	0	0	0	0	0	0	-41.24	-41.24
Inverter Transformer	MV3-19 T	368352	4907347	2	0	0	56.1	56.1	1	4683.58	3.25	0	84.41	0	1.51	0	0	11.43	0	0	0	0	0	0	-41.29	-41.29

	Inverter Transformer	MV3-17 T	368183	4907472	2	0	0	56.1	56.1	1	4694.87	3.25	0	84.43	0	1.51	0	0	11.44	0	0	0	0	0	0	-41.33	-41.33
	Inverter Transformer	MV3-22 T	368661	4907142	2	0	0	56.1	56.1	1	4705.53	3.25	0	84.45	0	1.52	0	0	11.46	0	0	0	0	0	0	-41.37	-41.37
	Inverter Transformer	MV3-15 T	368351	4907477	2	0	0	56.1	56.1	1	4790.48	3.25	0	84.61	0	1.55	0	0	11.57	0	0	0	0	0	0	-41.67	-41.67
	Inverter Transformer	MV3-7 T	367951	4907754	2	0	0	56.1	56.1	1	4822.76	3.25	0	84.67	0	1.56	0	0	11.62	0	0	0	0	0	0	-41.79	-41.79
	Inverter Transformer	MV3-10 T	368162	4907669	2	0	0	56.1	56.1	1	4852.08	3.25	0	84.72	0	1.57	0	0	11.66	0	0	0	0	0	0	-41.89	-41.89
	Inverter Transformer	MV3-20 T	368683	4907317	2	0	0	56.1	56.1	1	4855.93	3.25	0	84.73	0	1.57	0	0	11.66	0	0	0	0	0	0	-41.9	-41.9
	Inverter Transformer	MV3-16 T	368509	4907475	2	0	0	56.1	56.1	1	4878.51	3.25	0	84.77	0	1.58	0	0	11.69	0	0	0	0	0	0	-41.98	-41.98
	Inverter Transformer	MV3-11 T	368340	4907662	2	0	0	56.1	56.1	1	4939.37	3.25	0	84.87	0	1.6	0	0	11.77	0	0	0	0	0	0	-42.19	-42.19
	Inverter Transformer	MV3-3 T	367944	4907927	2	0	0	56.1	56.1	1	4972.98	3.25	0	84.93	0	1.62	0	0	11.82	0	0	0	0	0	0	-42.31	-42.31
	Inverter Transformer	MV3-6 T	368156	4907834	2	0	0	56.1	56.1	1	4991.72	3.25	0	84.97	0	1.62	0	0	11.84	0	0	0	0	0	0	-42.37	-42.37
	Inverter Transformer	MV3-14 T	368678	4907498	2	0	0	56.1	56.1	1	4996.61	3.25	0	84.97	0	1.62	0	0	11.85	0	0	0	0	0	0	-42.39	-42.39
	Inverter Transformer	MV3-9 T	368517	4907703	2	0	0	56.1	56.1	1	5070.65	3.25	0	85.1	0	1.65	0	0	11.95	0	0	0	0	0	0	-42.64	-42.64
	Inverter Transformer	MV3-5 T	368335	4907843	2	0	0	56.1	56.1	1	5090.35	3.25	0	85.13	0	1.66	0	0	11.97	0	0	0	0	0	0	-42.71	-42.71
	Inverter Transformer	MV3-1 T	368150	4907976	2	0	0	56.1	56.1	1	5112.71	3.25	0	85.17	0	1.67	0	0	12	0	0	0	0	0	0	-42.78	-42.78
	Inverter Transformer	MV3-8 T	368685	4907712	2	0	0	56.1	56.1	1	5173.65	3.25	0	85.28	0	1.69	0	0	12.08	0	0	0	0	0	0	-42.99	-42.99
	Inverter Transformer	MV3-4 T	368507	4907925	2	0	0	56.1	56.1	1	5250.91	3.25	0	85.4	0	1.71	0	0	12.18	0	0	0	0	0	0	-43.24	-43.24
	Inverter Transformer	MV3-2 T	368677	4907928	2	0	0	56.1	56.1	1	5346.65	3.25	0	85.56	0	1.75	0	0	12.3	0	0	0	0	0	0	-43.55	-43.55
	Inverter Transformer	MV6-3 T	370202	4907140	2	0	0	56.1	56.1	1	5802.63	3.25	0	86.27	0	1.9	0	0	12.87	0	0	0	0	0	0	-44.98	-44.98
	Inverter Transformer	MV6-2 T	370091	4907339	2	0	0	56.1	56.1	1	5845.52	3.25	0	86.34	0	1.92	0	0	12.92	0	0	0	0	0	0	-45.11	-45.11
	Inverter Transformer	MV4-15 T	369170	4908481	2	0	0	56.1	56.1	1	6081.62	3.25	0	86.68	0	1.99	0	0	13.2	0	0	0	0	0	0	-45.81	-45.81
	Inverter Transformer	MV4-14 T	369182	4908507	2	0	0	56.1	56.1	1	6109.81	3.25	0	86.72	0	2	0	0	13.23	0	0	0	0	0	0	-45.89	-45.89
	Inverter Transformer	MV4-13 T	369057	4908605	2	0	0	56.1	56.1	1	6120.72	3.25	0	86.74	0	2	0	0	13.24	0	0	0	0	0	0	-45.93	-45.93
	Inverter Transformer	MV4-12 T	369049	4908803	2	0	0	56.1	56.1	1	6282.64	3.25	0	86.96	0	2.05	0	0	13.43	0	0	0	0	0	0	-46.39	-46.39
	Inverter Transformer	MV4-7 T	369040	4909001	2	0	0	56.1	56.1	1	6446.08	3.25	0	87.19	0	2.1	0	0	13.62	0	0	0	0	0	0	-46.85	-46.85
	Inverter Transformer	MV4-11 T	369269	4908855	2	0	0	56.1	56.1	1	6446.26	3.25	0	87.19	0	2.1	0	0	13.62	0	0	0	0	0	0	-46.85	-46.85
	Inverter Transformer	MV4-10 T	369307	4908858	2	0	0	56.1	56.1	1	6469.94	3.25	0	87.22	0	2.11	0	0	13.65	0	0	0	0	0	0	-46.91	-46.91
	Inverter Transformer	MV4-8 T	369262	4909001	2	0	0	56.1	56.1	1	6564.32	3.25	0	87.34	0	2.14	0	0	13.75	0	0	0	0	0	0	-47.17	-47.17
	Inverter Transformer	MV4-9 T	369284	4909001	2	0	0	56.1	56.1	1	6576.33	3.25	0	87.36	0	2.14	0	0	13.77	0	0	0	0	0	0	-47.21	-47.21
	Inverter Transformer	MV5-6 T	369987	4908507	2	0	0	56.1	56.1	1	6603.48	3.25	0	87.4	0	2.15	0	0	13.8	0	0	0	0	0	0	-47.28	-47.28
	Inverter Transformer	MV4-4 T	369033	4909199	2	0	0	56.1	56.1	1	6612.42	3.25	0	87.41	0	2.15	0	0	13.81	0	0	0	0	0	0	-47.31	-47.31
	Inverter Transformer	MV4-6 T	369249	4909192	2	0	0	56.1	56.1	1	6718.39	3.25	0	87.55	0	2.18	0	0	13.92	0	0	0	0	0	0	-47.59	-47.59
	Inverter Transformer	MV4-5 T	369283	4909199	2	0	0	56.1	56.1	1	6742.41	3.25	0	87.58	0	2.19	0	0	13.95	0	0	0	0	0	0	-47.66	-47.66
	Inverter Transformer	MV5-5 T	370021	4908690	2	0	0	56.1	56.1	1	6765.14	3.25	0	87.61	0	2.19	0	0	13.97	0	0	0	0	0	0	-47.72	-47.72
	Inverter Transformer	MV4-1 T	369017	4909397	2	0	0	56.1	56.1	1	6776.05	3.25	0	87.62	0	2.2	0	0	13.99	0	0	0	0	0	0	-47.75	-47.75
	Inverter Transformer	MV5-2 T	370011	4908853	2	0	0	56.1	56.1	1	6884.79	3.25	0	87.76	0	2.23	0	0	14.11	0	0	0	0	0	0	-48.03	-48.03
	Inverter Transformer	MV4-3 T	369234	4909397	2	0	0	56.1	56.1	1	6885.31	3.25	0	87.76	0	2.23	0	0	14.11	0	0	0	0	0	0	-48.03	-48.03
	Inverter Transformer	MV4-2 T	369267	4909397	2	0	0	56.1	56.1	1	6902.37	3.25	0	87.78	0	2.23	0	0	14.12	0	0	0	0	0	0	-48.08	-48.08
	Inverter Transformer	MV5-4 T	370330	4908707	2	0	0	56.1	56.1	1	6979.85	3.25	0	87.88	0	2.25	0	0	14.21	0	0	0	0	0	0	-48.28	-48.28
	Inverter Transformer	MV5-3 T	370237	4908851	2	0	0	56.1	56.1	1	7027.43	3.25	0	87.94	0	2.27	0	0	14.26	0	0	0	0	0	0	-48.4	-48.4
	Inverter Transformer	MV5-1 T	370015	4909142	2	0	0	56.1	56.1	1	7114.4	3.25	0	88.04	0	2.29	0	0	14.35	0	0	0	0	0	0	-48.63	-48.63
	Line Reactor	NGR	369421	4908787.5	5	0	0	45.4	45.4	1	6476.7	5.25	0	87.23	0	3.23	1.37	0.1	2.65	0	0	0	0	0	0	-49.12	-49.12
Limit. Valu	0	0																								
Level D/N:	24.8375	24.8375																								

Receiver: Existing Noise Receptor
ID: G-50
X: 367854.2
Y: 4903074.1
Z: 4.5
Ground: 0

ISO	Description	ID	X	Y	Z	Ground	ReflOrd	LxT	LxN	L/A	Dist.	hm	Freq	Adiv	K0b	Agr	Abar	z	Aatm	Afol	Ahous	Cmet	CmetN	Dc	RL	LtotT	LtotN
	Sol_Luce Substation	S_Substation	369426	4908792	3.5	0	0	112.1	112.1	1	5930	5.25	0	86.46	0	1.14	2.66	0.34	9.67	0	0	0	0	0	0	12.15	12.15
	Inverter	MV1-15	365315	4904994	2	0	0	100.3	100.3	1	3183.33	3.25	0	81.06	0	0.4	0	0	15.69	0	0	0	0	0	0	3.17	3.17
	Inverter	MV1-12	365038	4905386	2	0	0	100.3	100.3	1	3643.61	3.25	0	82.23	0	0.47	0	0	16.47	0	0	0	0	0	0	1.14	1.14
	Gardiner Substation	G_Sub	366586.3	4903349.9	2.5	0	0	90.8	90.8	1	1297.55	4.25	0	73.26	0	0.83	4.87	0.3	3.11	0	0	0	0	0	0	8.71	8.71
	Inverter	MV1-11	364655	4905414	2	0	0	100.3	100.3	1	3963.59	3.25	0	82.96	0	0.52	0	0	16.99	0	0	0	0	0	0	-0.16	-0.16
	Inverter	MV1-8	364788	4905647	2	0	0	100.3	100.3	1	4002.67	3.25	0	83.05	0	0.53	0	0	17.05	0	0	0	0	0	0	-0.32	-0.32
	Inverter	MV2-3	365820	4906641	2	0	0	100.3	100.3	1	4106.18	3.25	0	83.27	0	0.54	0	0	17.22	0	0	0	0	0	0	-0.72	-0.72
	Inverter	MV1-4	364815	4905918	2	0	0	100.3	100.3	1	4162.27	3.25	0	83.39	0	0.55	0	0	17.31	0	0	0	0	0	0	-0.93	-0.93
	Inverter	MV1-9	364561	4905646	2	0	0	100.3	100.3	1	4178.5	3.25	0	83.42	0	0.55	0	0	17.33	0	0	0	0	0	0	-0.99	-0.99
	Inverter	MV3-21	368478	4907206	2	0	0	100.3	100.3	1	4178.72	3.25	0	83.42	0	0.55	0	0	17.33	0	0	0	0	0	0	-0.99	-0.99
	Inverter	MV2-4	365586	4906624	2	0	0	100.3	100.3	1	4212.66	3.25	0	83.49	0	0.56	0	0	17.39	0	0	0	0	0	0	-1.12	-1.12
	Inverter	MV1-5	364671	4905892	2	0	0	100.3	100.3	1	4251.27	3.25	0	83.57	0	0.56	0	0	17.45	0	0	0	0	0	0	-1.26	-1.26
	Inverter	MV3-19	368357	4907347	2	0	0	100.3	100.3	1	4302.38	3.25	0	83.67	0	0.57	0	0	17.53	0	0	0	0	0	0	-1.45	-1.45
	Inverter	MV1-2	364753	4906063	2	0	0	100.3	100.3	1	4307.08	3.25	0	83.68	0	0.57	0	0	17.53	0	0	0	0	0	0	-1.47	-1.47
	Inverter	MV3-20	368689	4907317	2	0	0	100.3	100.3	1	4324.25	3.25	0	83.72	0	0.57	0	0	17.56	0	0	0	0	0	0	-1.54	-1.54
	Inverter	MV3-18	367752	4907412	2	0	0	100.3	100.3	1	4339.1	3.25	0	83.75	0	0.57	0	0	17.58	0	0	0	0	0	0	-1.59	-1.59
	Inverter	MV1-6	364477	4905835	2	0	0	100.3	100.3	1	4362.12	3.25	0	83.79	0	0.57	0	0	17.62	0	0	0	0	0	0	-1.67	-1.67
	Inverters	G_Inv10	366900.7	4902704.8	2	0	0	87.7	87.7	1	1022.52	3.25	0	71.19	0	2.45	0	0	1.46	0	0	0	0	0	0	12.56	12.56
	Inverter	MV1-1	364715	4906166	2	0	0	100.3	100.3	1	4406.18	3.25	0	83.88	0	0.58	0	0	17.69	0	0	0	0	0	0	-1.84	-1.84
	Inverter	MV3-17	368178	4907472	2	0	0	100.3	100.3	1	4409.8	3.25	0	83.89	0	0.58	0	0	17.69	0	0	0	0	0	0	-1.85	-1.85
	Inverter	MV3-15	368357	4907477	2	0	0	100.3	100.3	1	4431.52	3.25	0	83.93	0	0.58	0	0	17.73	0	0	0	0	0	0	-1.93	-1.93
	Inverters	G_Inv8	366844.5	4902838.5	2	0	0	87.7	87.7	1	1036.83	3.25	0	71.31	0	2.45	0	0	1.47	0	0	0	0	0	0	12.42	12.42

Inverter	MV3-16	368514	4907475	2	0	0	100.3	100.3	1	4450.09	3.25	0	83.97	0	0.58	0	0	17.75	0	0	0	0	0	0	-1.99	-1.99
Inverter	MV3-14	368684	4907498	2	0	0	100.3	100.3	1	4501.05	3.25	0	84.07	0	0.59	0	0	17.83	0	0	0	0	0	0	-2.18	-2.18
Inverter	MV3-13	367963	4907577	2	0	0	100.3	100.3	1	4504.21	3.25	0	84.07	0	0.59	0	0	17.84	0	0	0	0	0	0	-2.19	-2.19
Inverter	MV3-12	367668	4907594	2	0	0	100.3	100.3	1	4523.73	3.25	0	84.11	0	0.59	0	0	17.87	0	0	0	0	0	0	-2.26	-2.26
Inverters	G_Inv6	366788.5	4902972	2	0	0	87.7	87.7	1	1070.58	3.25	0	71.59	0	2.46	0	0	1.52	0	0	0	0	0	0	12.09	12.09
Inverter	MV3-10	368167	4907669	2	0	0	100.3	100.3	1	4605.54	3.25	0	84.27	0	0.6	0	0	17.99	0	0	0	0	0	0	-2.55	-2.55
Inverter	MV3-11	368346	4907662	2	0	0	100.3	100.3	1	4614.18	3.25	0	84.28	0	0.6	0	0	18	0	0	0	0	0	0	-2.58	-2.58
Inverter	MV3-9	368512	4907703	2	0	0	100.3	100.3	1	4675.41	3.25	0	84.4	0	0.61	0	0	18.1	0	0	0	0	0	0	-2.79	-2.79
Inverter	MV3-7	367945	4907754	2	0	0	100.3	100.3	1	4680.78	3.25	0	84.41	0	0.61	0	0	18.1	0	0	0	0	0	0	-2.81	-2.81
Inverter	MV6-3	370207	4907140	2	0	0	100.3	100.3	1	4697.58	3.25	0	84.44	0	0.61	0	0	18.13	0	0	0	0	0	0	-2.87	-2.87
Inverter	MV3-8	368680	4907712	2	0	0	100.3	100.3	1	4710.85	3.25	0	84.46	0	0.61	0	0	18.15	0	0	0	0	0	0	-2.91	-2.91
Inverter	MV1-14	365163	4905049	2	0	0	97.3	97.3	1	3338.08	3.25	0	81.47	0	0.42	0	0	15.96	0	0	0	0	0	0	-0.54	-0.54
Inverter	MV3-6	368162	4907834	2	0	0	100.3	100.3	1	4769.84	3.25	0	84.57	0	0.62	0	0	18.24	0	0	0	0	0	0	-3.12	-3.12
Inverter	MV6-2	370085	4907339	2	0	0	100.3	100.3	1	4813.09	3.25	0	84.65	0	0.62	0	0	18.3	0	0	0	0	0	0	-3.26	-3.26
Inverters	G_Inv4	366732.8	4903105	2	0	0	87.7	87.7	1	1121.83	3.25	0	72	0	2.47	0	0	1.58	0	0	0	0	0	0	11.61	11.61
Inverter	MV3-3	367939	4907927	2	0	0	100.3	100.3	1	4853.64	3.25	0	84.72	0	0.63	0	0	18.36	0	0	0	0	0	0	-3.4	-3.4
Inverters	G_Inv9	366750.9	4902691.8	2	0	0	87.7	87.7	1	1167.66	3.25	0	72.35	0	2.47	0	0	1.64	0	0	0	0	0	0	11.2	11.2
Inverters	G_Inv7	366694.6	4902824.7	2	0	0	87.7	87.7	1	1186.12	3.25	0	72.48	0	2.48	0	0	1.66	0	0	0	0	0	0	11.04	11.04
Inverters	G_Inv2	366676.9	4903239.1	2	0	0	87.7	87.7	1	1188.81	3.25	0	72.5	0	2.48	0	0	1.66	0	0	0	0	0	0	11.02	11.02
Inverters	G_Inv5	366638.5	4902958.1	2	0	0	87.7	87.7	1	1221.22	3.25	0	72.74	0	2.48	0	0	1.7	0	0	0	0	0	0	10.74	10.74
Inverter	MV1-10	365004	4905564	2	0	0	97.3	97.3	1	3784.61	3.25	0	82.56	0	0.5	0	0	16.7	0	0	0	0	0	0	-2.45	-2.45
Inverter	MV1-13	364731	4905241	2	0	0	97.3	97.3	1	3801.29	3.25	0	82.6	0	0.5	0	0	16.73	0	0	0	0	0	0	-2.51	-2.51
Inverters	G_Inv3	366583.7	4903091.4	2	0	0	87.7	87.7	1	1270.62	3.25	0	73.08	0	2.49	0	0	1.76	0	0	0	0	0	0	10.33	10.33
Inverter	MV1-7	364925	4905782	2	0	0	97.3	97.3	1	3989.1	3.25	0	83.02	0	0.53	0	0	17.03	0	0	0	0	0	0	-3.26	-3.26
Inverters	G_Inv1	366526.4	4903225.8	2	0	0	87.7	87.7	1	1336.44	3.25	0	73.52	0	2.5	0	0	1.85	0	0	0	0	0	0	9.8	9.8
Inverter	MV4-11	369264	4908855	2	0	0	100.3	100.3	1	5950.32	3.25	0	86.49	0	0.7	0	0	19.93	0	0	0	0	0	0	-6.81	-6.81
Inverter	MV4-10	369312	4908858	2	0	0	100.3	100.3	1	5964.79	3.25	0	86.51	0	0.7	0	0	19.95	0	0	0	0	0	0	-6.85	-6.85
Inverter	MV2-1	365842	4906816	2	0	0	97.3	97.3	1	4248.62	3.25	0	83.56	0	0.56	0	0	17.44	0	0	0	0	0	0	-4.25	-4.25
Inverter	MV5-5	370015	4908690	2	0	0	100.3	100.3	1	6017.26	3.25	0	86.59	0	0.71	0	0	20.02	0	0	0	0	0	0	-7	-7
Inverter	MV4-7	369035	4909001	2	0	0	100.3	100.3	1	6043.38	3.25	0	86.63	0	0.71	0	0	20.05	0	0	0	0	0	0	-7.07	-7.07
Inverter	MV4-8	369256	4909001	2	0	0	100.3	100.3	1	6090.42	3.25	0	86.69	0	0.71	0	0	20.12	0	0	0	0	0	0	-7.2	-7.2
Inverter	MV4-9	369289	4909001	2	0	0	100.3	100.3	1	6098.1	3.25	0	86.7	0	0.71	0	0	20.13	0	0	0	0	0	0	-7.23	-7.23
Inverter	MV5-4	370324	4908707	2	0	0	100.3	100.3	1	6150.57	3.25	0	86.78	0	0.71	0	0	20.2	0	0	0	0	0	0	-7.37	-7.37
Inverter	MV5-2	370006	4908853	2	0	0	100.3	100.3	1	6166.52	3.25	0	86.8	0	0.71	0	0	20.22	0	0	0	0	0	0	-7.42	-7.42
Inverter	MV4-4	369027	4909199	2	0	0	100.3	100.3	1	6236.17	3.25	0	86.9	0	0.71	0	0	20.31	0	0	0	0	0	0	-7.61	-7.61
Inverter	MV5-3	370231	4908851	2	0	0	100.3	100.3	1	6246.74	3.25	0	86.91	0	0.71	0	0	20.32	0	0	0	0	0	0	-7.64	-7.64
Inverter	MV4-6	369243	4909192	2	0	0	100.3	100.3	1	6273.55	3.25	0	86.95	0	0.71	0	0	20.36	0	0	0	0	0	0	-7.71	-7.71
Inverter	MV4-5	369289	4909199	2	0	0	100.3	100.3	1	6290.71	3.25	0	86.97	0	0.71	0	0	20.38	0	0	0	0	0	0	-7.76	-7.76
Inverter	MV4-1	369011	4909397	2	0	0	100.3	100.3	1	6427.85	3.25	0	87.16	0	0.71	0	0	20.56	0	0	0	0	0	0	-8.13	-8.13
Inverter	MV5-1	370020	4909142	2	0	0	100.3	100.3	1	6442.83	3.25	0	87.18	0	0.71	0	0	20.58	0	0	0	0	0	0	-8.17	-8.17
Inverter	MV4-3	369229	4909397	2	0	0	100.3	100.3	1	6470.64	3.25	0	87.22	0	0.71	0	0	20.62	0	0	0	0	0	0	-8.24	-8.24
Inverter	MV4-2	369272	4909397	2	0	0	100.3	100.3	1	6479.91	3.25	0	87.23	0	0.71	0	0	20.63	0	0	0	0	0	0	-8.27	-8.27
Inverter	MV6-1	370235	4907364	2	0	0	97.3	97.3	1	4906.27	3.25	0	84.82	0	0.63	0	0	18.44	0	0	0	0	0	0	-6.58	-6.58
DSTATCOM - 10 MVAR #2	DSAT2	369403	4908757	2.5	0	0	96.6	96.6	1	5890.17	3.5	0	86.4	0	3.76	0	0	3.79	0	0	0	0	0	0	2.68	2.68
DSTATCOM - 10 MVAR #1	DSAT1	369437	4908757	2.5	0	0	96.6	96.6	1	5899.2	3.5	0	86.42	0	3.77	0	0	3.79	0	0	0	0	0	0	2.66	2.66
SubstationTransformer	W_ST	369711.17	4906112.3	2.5	0	0	92	92	1	3560.73	3.5	0	82.03	0	0.22	0	-0.12	6.77	0	0	0	0	0	0	2.96	2.96
Westbrook Inverter Enclosur	W_INV3	369508	4906164	2	0	0	89.1	89.1	1	3504.65	3.25	0	81.89	0	1.27	0	0	10.37	0	0	0	0	0	0	-4.47	-4.47
Westbrook Inverter Enclosur	W_INV4	369673	4906164	2	0	0	89.1	89.1	1	3585.46	3.25	0	82.09	0	1.29	0	0	10.49	0	0	0	0	0	0	-4.81	-4.81
Westbrook Inverter Enclosur	W_INV2	369374	4906388	2	0	0	89.1	89.1	1	3645.78	3.25	0	82.24	0	1.3	0	0	10.58	0	0	0	0	0	0	-5.06	-5.06
Westbrook Inverter Enclosur	W_INV7	369780	4906417	2	0	0	89.1	89.1	1	3857.94	3.25	0	82.73	0	1.36	0	0	10.88	0	0	0	0	0	0	-5.91	-5.91
Westbrook Inverter Enclosur	W_INV5	369719	4906574	2	0	0	89.1	89.1	1	3965.7	3.25	0	82.97	0	1.38	0	0	11.04	0	0	0	0	0	0	-6.33	-6.33
Inverter	MV2-2	365977	4906654	2	0	0	89.1	89.1	1	4042.22	3.25	0	83.13	0	1.4	0	0	11.14	0	0	0	0	0	0	-6.62	-6.62
Westbrook Inverter Enclosur	W_INV6	369875	4906578	2	0	0	89.1	89.1	1	4044.87	3.25	0	83.14	0	1.4	0	0	11.15	0	0	0	0	0	0	-6.63	-6.63
Inverter	MV3-22	368656	4907142	2	0	0	89.1	89.1	1	4146.17	3.25	0	83.35	0	1.43	0	0	11.29	0	0	0	0	0	0	-7.01	-7.01
Inverter	MV1-3	364440	4906039	2	0	0	89.1	89.1	1	4521.88	3.25	0	84.11	0	1.52	0	0	11.81	0	0	0	0	0	0	-8.38	-8.38
Inverter	MV3-5	368340	4907843	2	0	0	89.1	89.1	1	4793.58	3.25	0	84.61	0	1.59	0	0	12.19	0	0	0	0	0	0	-9.33	-9.33
Inverter	MV3-4	368502	4907925	2	0	0	89.1	89.1	1	4893.96	3.25	0	84.79	0	1.61	0	0	12.32	0	0	0	0	0	0	-9.67	-9.67
Inverter	MV3-1	368156	4907976	2	0	0	89.1	89.1	1	4911.18	3.25	0	84.82	0	1.62	0	0	12.34	0	0	0	0	0	0	-9.73	-9.73
Inverter	MV3-2	368671	4907928	2	0	0	89.1	89.1	1	4922.15	3.25	0	84.84	0	1.62	0	0	12.36	0	0	0	0	0	0	-9.76	-9.76
Fixed Reactor Bank 1	FRB1	369378	4908755	6	0	0	89.8	89.8	1	5881.72	5.25	0	86.39	0	-0.43	0	0	9.62	0	0	0	0	0	0	-5.79	-5.79
Westbrook Inverter Enclosur	W_INV1	369409	4906578	2	0	0	86.1	86.1	1	3833.37	3.25	0	82.67	0	1.35	0	0	10.85	0	0	0	0	0	0	-8.81	-8.81
Fixed Reactor Bank 2	FRB2	369464	4908755	6	0	0	89.8	89.8	1	5904.58	5.25	0	86.42	0	-0.43	0	0	9.64	0	0	0	0	0	0	-5.86	-5.86
Inverter	MV4-15	369176	4908481	2	0	0	89.1	89.1	1	5566.12	3.25	0	85.91	0	1.78	0	0	13.21	0	0	0	0	0	0	-11.84	-11.84
Inverter	MV4-14	369176	4908507	2	0	0	89.1	89.1	1	5591.38	3.25	0	85.95	0	1.79	0	0	13.24	0	0	0	0	0	0	-11.92	-11.92
Inverter	MV4-13	369051	4908605	2	0	0	89.1	89.1	1	5658.9	3.25	0	86.05	0	1.8	0	0	13.33	0	0	0	0	0	0	-12.13	-12.13
Inverter	MV5-6	369982	4908507	2	0	0	89.1	89.1	1	5834.72	3.25	0	86.32	0	1.85	0	0	13.55	0	0	0	0	0	0	-12.66	-12.66
Inverter	MV4-12	369043	4908803	2	0	0	89.1	89.1	1	5850.94	3.25	0	86.34	0	1.85	0	0	13.57	0	0	0	0	0	0	-12.71	-12.71
Inverter	MV6-4	370250	4906966	2	0	0	86.1	86.1	1	4570.2	3.25	0	84.2	0	1.53	0	0	11.88	0	0	0	0	0	0	-11.56	-11.56
Westbrook Inverter Transfor	W_INVTR1	369403	4906578	2	0	0	78.2	78.2	1	3830.94	3.25	0	82.67	0	-2.92	0	0	1.99	0	0	0	0	0	0	-3.49	-3.49
Westbrook Inverter Transfor	W_INVTR3	369514	4906164	2	0	0	77.3	77.3	1	3507.48	3.25	0	81.9	0	-2.85	0	0	1.86	0	0	0	0	0	0	-3.58	-3.58
Westbrook Inverter Transfor	W_INVTR4	369679	4906164	2	0	0	77.3	77.3	1	3588.51	3.25	0	82.1	0	-2.87	0	0	1.9	0	0	0	0	0	0	-3.79	-3.79
Westbrook Inverter Transfor	W_INVTR2	369368	4906388	2	0	0	77.3	77.3	1	3643.29	3.25	0	82.23	0	-2.88	0	0	1.92	0	0	0	0	0	0	-3.93	-3.93
Westbrook Inverter Transfor	W_INVTR7	369786	4906417	2	0	0	77.3	77.3	1	3860.94	3.25	0	82.73	0	-2.93	0	0	2	0	0	0	0	0	0	-4.46	-4.46
Westbrook Inverter Transfor	W_INVTR5	369725	4906574	2	0	0	77.3	77.3	1	3968.53	3.25	0	82.97	0	-2.96	0	0	2.04	0	0	0	0	0	0	-4.72	-4.72

Westbrook Inverter Transfor	W_INVTR6	369881	4906578	2	0	0	77.3	77.3	1	4047.87	3.25	0	83.14	0	-2.97	0	0	2.07	0	0	0	0	0	0	-4.9	-4.9
Inverter Transformer	MV1-14 T	365157	4905049	2	0	0	69.4	69.4	1	3342.92	3.25	0	81.48	0	2.61	0	0	6.17	0	0	0	0	0	0	-20.91	-20.91
Inverter Transformer	MV1-10 T	365010	4905564	2	0	0	69.4	69.4	1	3780.09	3.25	0	82.55	0	2.73	0	0	6.51	0	0	0	0	0	0	-22.44	-22.44
Inverter Transformer	MV1-13 T	364725	4905241	2	0	0	69.4	69.4	1	3806.23	3.25	0	82.61	0	2.74	0	0	6.53	0	0	0	0	0	0	-22.53	-22.53
Inverter Transformer	MV1-7 T	364919	4905782	2	0	0	69.4	69.4	1	3993.51	3.25	0	83.03	0	2.78	0	0	6.67	0	0	0	0	0	0	-23.13	-23.13
Inverter Transformer	MV2-1 T	365836	4906816	2	0	0	69.4	69.4	1	4251.46	3.25	0	83.57	0	2.85	0	0	6.86	0	0	0	0	0	0	-23.93	-23.93
Inverter Transformer	MV6-4 T	370244	4906966	2	0	0	69.4	69.4	1	4567.06	3.25	0	84.19	0	2.92	0	0	7.09	0	0	0	0	0	0	-24.85	-24.85
Inverter Transformer	MV6-1 T	370230	4907364	2	0	0	69.4	69.4	1	4903.84	3.25	0	84.81	0	2.99	0	0	7.32	0	0	0	0	0	0	-25.77	-25.77
Inverter Transformer	MV1-15 T	365309	4904994	2	0	0	56.1	56.1	1	3188.11	3.25	0	81.07	0	0.91	0	0	9.18	0	0	0	0	0	0	-35.1	-35.1
Inverter Transformer	MV1-12 T	365044	4905386	2	0	0	56.1	56.1	1	3638.97	3.25	0	82.22	0	1.1	0	0	9.91	0	0	0	0	0	0	-37.16	-37.16
Inverter Transformer	MV1-11 T	364649	4905414	2	0	0	56.1	56.1	1	3968.43	3.25	0	82.97	0	1.23	0	0	10.41	0	0	0	0	0	0	-38.55	-38.55
Inverter Transformer	MV1-8 T	364782	4905647	2	0	0	56.1	56.1	1	4007.27	3.25	0	83.06	0	1.25	0	0	10.47	0	0	0	0	0	0	-38.71	-38.71
Inverter Transformer	MV2-2 T	365982	4906654	2	0	0	56.1	56.1	1	4039.9	3.25	0	83.13	0	1.26	0	0	10.51	0	0	0	0	0	0	-38.84	-38.84
Inverter Transformer	MV2-3 T	365814	4906641	2	0	0	56.1	56.1	1	4109.16	3.25	0	83.28	0	1.29	0	0	10.62	0	0	0	0	0	0	-39.12	-39.12
Inverter Transformer	MV3-22 T	368661	4907142	2	0	0	56.1	56.1	1	4147.14	3.25	0	83.35	0	1.3	0	0	10.67	0	0	0	0	0	0	-39.27	-39.27
Inverter Transformer	MV1-4 T	364821	4905918	2	0	0	56.1	56.1	1	4157.89	3.25	0	83.38	0	1.31	0	0	10.69	0	0	0	0	0	0	-39.31	-39.31
Inverter Transformer	MV3-21 T	368484	4907206	2	0	0	56.1	56.1	1	4179.62	3.25	0	83.42	0	1.32	0	0	10.72	0	0	0	0	0	0	-39.4	-39.4
Inverter Transformer	MV1-9 T	364555	4905646	2	0	0	56.1	56.1	1	4183.23	3.25	0	83.43	0	1.32	0	0	10.72	0	0	0	0	0	0	-39.41	-39.41
Inverter Transformer	MV2-4 T	365590	4906628	2	0	0	56.1	56.1	1	4213.88	3.25	0	83.49	0	1.33	0	0	10.77	0	0	0	0	0	0	-39.53	-39.53
Inverter Transformer	MV1-5 T	364676	4905892	2	0	0	56.1	56.1	1	4247.53	3.25	0	83.56	0	1.34	0	0	10.82	0	0	0	0	0	0	-39.66	-39.66
Inverter Transformer	MV3-19 T	368352	4907347	2	0	0	56.1	56.1	1	4301.8	3.25	0	83.67	0	1.36	0	0	10.9	0	0	0	0	0	0	-39.87	-39.87
Inverter Transformer	MV1-2 T	364759	4906063	2	0	0	56.1	56.1	1	4302.77	3.25	0	83.67	0	1.36	0	0	10.9	0	0	0	0	0	0	-39.88	-39.88
Inverter Transformer	MV3-20 T	368683	4907317	2	0	0	56.1	56.1	1	4323.09	3.25	0	83.72	0	1.37	0	0	10.93	0	0	0	0	0	0	-39.95	-39.95
Inverter Transformer	MV3-18 T	367757	4907412	2	0	0	56.1	56.1	1	4338.99	3.25	0	83.75	0	1.38	0	0	10.95	0	0	0	0	0	0	-40.02	-40.02
Inverter Transformer	MV1-6 T	364482	4905835	2	0	0	56.1	56.1	1	4358.25	3.25	0	83.79	0	1.39	0	0	10.98	0	0	0	0	0	0	-40.09	-40.09
Inverter Transformer	MV1-1 T	364721	4906166	2	0	0	56.1	56.1	1	4401.91	3.25	0	83.87	0	1.4	0	0	11.04	0	0	0	0	0	0	-40.25	-40.25
Inverter Transformer	MV3-17 T	368183	4907472	2	0	0	56.1	56.1	1	4410.17	3.25	0	83.89	0	1.41	0	0	11.05	0	0	0	0	0	0	-40.29	-40.29
Inverter Transformer	MV3-15 T	368351	4907477	2	0	0	56.1	56.1	1	4430.84	3.25	0	83.93	0	1.41	0	0	11.08	0	0	0	0	0	0	-40.36	-40.36
Inverter Transformer	MV3-16 T	368509	4907475	2	0	0	56.1	56.1	1	4449.35	3.25	0	83.97	0	1.42	0	0	11.1	0	0	0	0	0	0	-40.43	-40.43
Inverter Transformer	MV3-14 T	368678	4907498	2	0	0	56.1	56.1	1	4499.95	3.25	0	84.06	0	1.44	0	0	11.18	0	0	0	0	0	0	-40.62	-40.62
Inverter Transformer	MV3-13 T	367958	4907577	2	0	0	56.1	56.1	1	4504.1	3.25	0	84.07	0	1.44	0	0	11.18	0	0	0	0	0	0	-40.64	-40.64
Inverter Transformer	MV3-12 T	367674	4907594	2	0	0	56.1	56.1	1	4523.49	3.25	0	84.11	0	1.45	0	0	11.21	0	0	0	0	0	0	-40.71	-40.71
Inverter Transformer	MV1-3 T	364435	4906039	2	0	0	56.1	56.1	1	4525.66	3.25	0	84.11	0	1.45	0	0	11.21	0	0	0	0	0	0	-40.72	-40.72
Inverter Transformer	MV3-10 T	368162	4907669	2	0	0	56.1	56.1	1	4605.2	3.25	0	84.26	0	1.48	0	0	11.32	0	0	0	0	0	0	-41.01	-41.01
Inverter Transformer	MV3-11 T	368340	4907662	2	0	0	56.1	56.1	1	4613.55	3.25	0	84.28	0	1.48	0	0	11.33	0	0	0	0	0	0	-41.04	-41.04
Inverter Transformer	MV3-9 T	368517	4907703	2	0	0	56.1	56.1	1	4676.11	3.25	0	84.4	0	1.51	0	0	11.42	0	0	0	0	0	0	-41.26	-41.26
Inverter Transformer	MV3-7 T	367951	4907754	2	0	0	56.1	56.1	1	4680.9	3.25	0	84.41	0	1.51	0	0	11.43	0	0	0	0	0	0	-41.28	-41.28
Inverter Transformer	MV6-3 T	370202	4907140	2	0	0	56.1	56.1	1	4695.07	3.25	0	84.43	0	1.51	0	0	11.44	0	0	0	0	0	0	-41.33	-41.33
Inverter Transformer	MV3-8 T	368685	4907712	2	0	0	56.1	56.1	1	4711.72	3.25	0	84.46	0	1.52	0	0	11.47	0	0	0	0	0	0	-41.39	-41.39
Inverter Transformer	MV3-6 T	368156	4907834	2	0	0	56.1	56.1	1	4769.46	3.25	0	84.57	0	1.54	0	0	11.55	0	0	0	0	0	0	-41.6	-41.6
Inverter Transformer	MV3-5 T	368335	4907843	2	0	0	56.1	56.1	1	4793.08	3.25	0	84.61	0	1.55	0	0	11.58	0	0	0	0	0	0	-41.68	-41.68
Inverter Transformer	MV6-2 T	370091	4907339	2	0	0	56.1	56.1	1	4815.88	3.25	0	84.65	0	1.56	0	0	11.61	0	0	0	0	0	0	-41.76	-41.76
Inverter Transformer	MV3-3 T	367944	4907927	2	0	0	56.1	56.1	1	4853.73	3.25	0	84.72	0	1.57	0	0	11.66	0	0	0	0	0	0	-41.89	-41.89
Inverter Transformer	MV3-4 T	368507	4907925	2	0	0	56.1	56.1	1	4894.63	3.25	0	84.79	0	1.59	0	0	11.71	0	0	0	0	0	0	-42.04	-42.04
Inverter Transformer	MV3-1 T	368150	4907976	2	0	0	56.1	56.1	1	4910.82	3.25	0	84.82	0	1.59	0	0	11.74	0	0	0	0	0	0	-42.09	-42.09
Inverter Transformer	MV3-2 T	368677	4907928	2	0	0	56.1	56.1	1	4923.14	3.25	0	84.84	0	1.6	0	0	11.75	0	0	0	0	0	0	-42.14	-42.14
Inverter Transformer	MV4-15 T	369170	4908481	2	0	0	56.1	56.1	1	5564.7	3.25	0	85.91	0	1.82	0	0	12.58	0	0	0	0	0	0	-44.25	-44.25
Inverter Transformer	MV4-14 T	369182	4908507	2	0	0	56.1	56.1	1	5592.8	3.25	0	85.95	0	1.83	0	0	12.61	0	0	0	0	0	0	-44.34	-44.34
Inverter Transformer	MV4-13 T	369057	4908605	2	0	0	56.1	56.1	1	5660.18	3.25	0	86.06	0	1.85	0	0	12.69	0	0	0	0	0	0	-44.55	-44.55
Inverter Transformer	MV5-6 T	369987	4908507	2	0	0	56.1	56.1	1	5836.54	3.25	0	86.32	0	1.91	0	0	12.91	0	0	0	0	0	0	-45.08	-45.08
Inverter Transformer	MV4-12 T	369049	4908803	2	0	0	56.1	56.1	1	5852.17	3.25	0	86.35	0	1.92	0	0	12.93	0	0	0	0	0	0	-45.13	-45.13
Inverter Transformer	MV4-11 T	369269	4908855	2	0	0	56.1	56.1	1	5951.51	3.25	0	86.49	0	1.95	0	0	13.05	0	0	0	0	0	0	-45.43	-45.43
Inverter Transformer	MV4-10 T	369307	4908858	2	0	0	56.1	56.1	1	5963.57	3.25	0	86.51	0	1.95	0	0	13.06	0	0	0	0	0	0	-45.46	-45.46
Inverter Transformer	MV5-5 T	370021	4908690	2	0	0	56.1	56.1	1	6019.42	3.25	0	86.59	0	1.97	0	0	13.13	0	0	0	0	0	0	-45.63	-45.63
Inverter Transformer	MV4-7 T	369040	4909001	2	0	0	56.1	56.1	1	6044.36	3.25	0	86.63	0	1.98	0	0	13.16	0	0	0	0	0	0	-45.7	-45.7
Inverter Transformer	MV4-8 T	369262	4909001	2	0	0	56.1	56.1	1	6091.8	3.25	0	86.69	0	1.99	0	0	13.21	0	0	0	0	0	0	-45.84	-45.84
Inverter Transformer	MV4-9 T	369284	4909001	2	0	0	56.1	56.1	1	6096.92	3.25	0	86.7	0	2	0	0	13.22	0	0	0	0	0	0	-45.86	-45.86
Inverter Transformer	MV5-4 T	370330	4908707	2	0	0	56.1	56.1	1	6152.98	3.25	0	86.78	0	2.01	0	0	13.28	0	0	0	0	0	0	-46.02	-46.02
Inverter Transformer	MV5-2 T	370011	4908853	2	0	0	56.1	56.1	1	6168.26	3.25	0	86.8	0	2.02	0	0	13.3	0	0	0	0	0	0	-46.06	-46.06
Inverter Transformer	MV4-4 T	369033	4909199	2	0	0	56.1	56.1	1	6237.31	3.25	0	86.9	0	2.04	0	0	13.38	0	0	0	0	0	0	-46.26	-46.26
Inverter Transformer	MV5-3 T	370237	4908851	2	0	0	56.1	56.1	1	6249.03	3.25	0	86.92	0	2.04	0	0	13.39	0	0	0	0	0	0	-46.29	-46.29
Inverter Transformer	MV4-6 T	369249	4909192	2	0	0	56.1	56.1	1	6274.88	3.25	0	86.95	0	2.05	0	0	13.42	0	0	0	0	0	0	-46.37	-46.37
Inverter Transformer	MV4-5 T	369283	4909199	2	0	0	56.1	56.1	1	6289.35	3.25	0	86.97	0	2.05	0	0	13.44	0	0	0	0	0	0	-46.41	-46.41
Inverter Transformer	MV4-1 T	369017	4909397	2	0	0	56.1	56.1	1	6428.93	3.25	0	87.16	0	2.1	0	0	13.6	0	0	0	0	0	0	-46.8	-46.8
Inverter Transformer	MV5-1 T	370015	4909142	2	0	0	56.1	56.1	1	6441.15	3.25	0	87.18	0	2.1	0	0	13.61	0	0	0	0	0	0	-46.83	-46.83
Inverter Transformer	MV4-3 T	369234	4909397	2	0	0	56.1	56.1	1	6471.7	3.25	0	87.22	0	2.11	0	0	13.65	0	0	0	0	0	0	-46.92	-46.92
Inverter Transformer	MV4-2 T	369267	4909397	2	0	0	56.1	56.1	1	6478.82	3.25	0	87.23	0	2.11	0	0	13.66	0	0	0	0	0	0	-46.94	-46.94
Line Reactor	NGR	369421	4908787.5	5	0	0	45.4	45.4	1	5924.34	5.25	0	86.45	0	3.24	1.36	0.11	2.42	0	0	0	0	0	0	-48.12	-48.12
Limit. Valu 0	0																								
Level D/N: 23.0391	23.0391																								

Receiver: Existing Noise Receptor
ID: G-51
X: 365602.2

Y: 4903245.1
Z: 4.5
Ground: 0

ISO	Description	ID	X	Y	Z	Ground	ReflOrd	LxT	LxN	L/A	Dist.	hm	Freq	Adiv	K0b	Agr	Abar	z	Aatm	Afol	Ahous	Cmet	CmetN	Dc	RL	LtotT	LtotN
	Sol_Luce Substation	S_Substation	369426	4908792	3.5	0	0	112.1	112.1	1	6737.18	5.25	0	87.57	0	1.33	2.49	0.29	10.49	0	0	0	0	0	0	10.19	10.19
	Inverter	MV1-15	365315	4904994	2	0	0	100.3	100.3	1	1772.33	3.25	0	75.97	0	0.06	0	0	12.97	0	0	0	0	0	0	11.31	11.31
	Inverter	MV1-12	365038	4905386	2	0	0	100.3	100.3	1	2214	3.25	0	77.9	0	0.19	0	0	13.9	0	0	0	0	0	0	8.32	8.32
	Inverter	MV1-11	364655	4905414	2	0	0	100.3	100.3	1	2366.71	3.25	0	78.48	0	0.23	0	0	14.2	0	0	0	0	0	0	7.4	7.4
	Inverter	MV1-8	364788	4905647	2	0	0	100.3	100.3	1	2536.15	3.25	0	79.08	0	0.27	0	0	14.53	0	0	0	0	0	0	6.44	6.44
	Inverter	MV1-9	364561	4905646	2	0	0	100.3	100.3	1	2616.95	3.25	0	79.36	0	0.28	0	0	14.68	0	0	0	0	0	0	5.99	5.99
	Inverter	MV1-14	365163	4905049	2	0	0	97.3	97.3	1	1856.6	3.25	0	76.37	0	0.09	0	0	13.15	0	0	0	0	0	0	7.7	7.7
	Inverter	MV1-4	364815	4905918	2	0	0	100.3	100.3	1	2786.41	3.25	0	79.9	0	0.32	0	0	14.99	0	0	0	0	0	0	5.1	5.1
	Inverter	MV1-5	364671	4905892	2	0	0	100.3	100.3	1	2805.93	3.25	0	79.96	0	0.32	0	0	15.02	0	0	0	0	0	0	5	5
	Inverter	MV1-6	364477	4905835	2	0	0	100.3	100.3	1	2823.77	3.25	0	80.02	0	0.33	0	0	15.06	0	0	0	0	0	0	4.91	4.91
	Inverter	MV1-2	364753	4906063	2	0	0	100.3	100.3	1	2943.08	3.25	0	80.38	0	0.35	0	0	15.27	0	0	0	0	0	0	4.31	4.31
	Gardiner Substation	G_Sub	366586.3	4903349.9	2.5	0	0	90.8	90.8	1	989.67	3.5	0	70.91	0	-0.37	0	0	2.5	0	0	0	0	0	0	17.74	17.74
	Inverter	MV1-1	364715	4906166	2	0	0	100.3	100.3	1	3052.67	3.25	0	80.69	0	0.37	0	0	15.46	0	0	0	0	0	0	3.78	3.78
	Inverter	MV1-13	364731	4905241	2	0	0	97.3	97.3	1	2177.75	3.25	0	77.76	0	0.18	0	0	13.83	0	0	0	0	0	0	5.55	5.55
	Inverter	MV2-4	365586	4906624	2	0	0	100.3	100.3	1	3378.94	3.25	0	81.58	0	0.43	0	0	16.03	0	0	0	0	0	0	2.28	2.28
	Inverter	MV1-10	365004	4905564	2	0	0	97.3	97.3	1	2394.82	3.25	0	78.59	0	0.23	0	0	14.26	0	0	0	0	0	0	4.24	4.24
	Inverter	MV2-3	365820	4906641	2	0	0	100.3	100.3	1	3402.88	3.25	0	81.64	0	0.43	0	0	16.07	0	0	0	0	0	0	2.17	2.17
	Inverter	MV1-7	364925	4905782	2	0	0	97.3	97.3	1	2625.73	3.25	0	79.39	0	0.29	0	0	14.69	0	0	0	0	0	0	2.95	2.95
	Inverters	G_Inv1	366526.4	4903225.8	2	0	0	87.7	87.7	1	924.4	3.25	0	70.32	0	2.44	0	0	1.33	0	0	0	0	0	0	13.57	13.57
	Inverters	G_Inv3	366583.7	4903091.4	2	0	0	87.7	87.7	1	993.46	3.25	0	70.94	0	2.45	0	0	1.42	0	0	0	0	0	0	12.85	12.85
	Inverters	G_Inv2	366676.9	4903239.1	2	0	0	87.7	87.7	1	1074.72	3.25	0	71.63	0	2.46	0	0	1.52	0	0	0	0	0	0	12.05	12.05
	Inverters	G_Inv5	366638.5	4902958.1	2	0	0	87.7	87.7	1	1075.31	3.25	0	71.63	0	2.46	0	0	1.52	0	0	0	0	0	0	12.05	12.05
	Inverter	MV3-18	367752	4907412	2	0	0	100.3	100.3	1	4688.78	3.25	0	84.42	0	0.61	0	0	18.12	0	0	0	0	0	0	-2.84	-2.84
	Inverter	MV3-12	367668	4907594	2	0	0	100.3	100.3	1	4814.61	3.25	0	84.65	0	0.62	0	0	18.31	0	0	0	0	0	0	-3.27	-3.27
	Inverters	G_Inv4	366732.8	4903105	2	0	0	87.7	87.7	1	1139.25	3.25	0	72.13	0	2.47	0	0	1.6	0	0	0	0	0	0	11.46	11.46
	Inverter	MV3-21	368478	4907206	2	0	0	100.3	100.3	1	4894.79	3.25	0	84.79	0	0.63	0	0	18.42	0	0	0	0	0	0	-3.54	-3.54
	Inverter	MV3-13	367963	4907577	2	0	0	100.3	100.3	1	4933.43	3.25	0	84.86	0	0.64	0	0	18.48	0	0	0	0	0	0	-3.67	-3.67
	Inverter	MV3-19	368357	4907347	2	0	0	100.3	100.3	1	4941.1	3.25	0	84.88	0	0.64	0	0	18.49	0	0	0	0	0	0	-3.69	-3.69
	Inverter	MV3-17	368178	4907472	2	0	0	100.3	100.3	1	4949.89	3.25	0	84.89	0	0.64	0	0	18.51	0	0	0	0	0	0	-3.72	-3.72
	Inverters	G_Inv7	366694.6	4902824.7	2	0	0	87.7	87.7	1	1170.5	3.25	0	72.37	0	2.47	0	0	1.64	0	0	0	0	0	0	11.18	11.18
	Inverter	MV3-15	368357	4907477	2	0	0	100.3	100.3	1	5049.55	3.25	0	85.07	0	0.65	0	0	18.65	0	0	0	0	0	0	-4.05	-4.05
	Inverter	MV2-1	365842	4906816	2	0	0	97.3	97.3	1	3578.94	3.25	0	82.08	0	0.46	0	0	16.36	0	0	0	0	0	0	-1.59	-1.59
	Inverter	MV3-7	367945	4907754	2	0	0	100.3	100.3	1	5081.23	3.25	0	85.12	0	0.65	0	0	18.7	0	0	0	0	0	0	-4.16	-4.16
	Inverter	MV3-20	368689	4907317	2	0	0	100.3	100.3	1	5109.67	3.25	0	85.17	0	0.65	0	0	18.74	0	0	0	0	0	0	-4.25	-4.25
	Inverter	MV3-10	368167	4907669	2	0	0	100.3	100.3	1	5113.62	3.25	0	85.17	0	0.65	0	0	18.75	0	0	0	0	0	0	-4.26	-4.26
	Inverter	MV3-16	368514	4907475	2	0	0	100.3	100.3	1	5135.24	3.25	0	85.21	0	0.65	0	0	18.78	0	0	0	0	0	0	-4.33	-4.33
	Inverter	MV3-11	368346	4907662	2	0	0	100.3	100.3	1	5199.75	3.25	0	85.32	0	0.66	0	0	18.87	0	0	0	0	0	0	-4.54	-4.54
	Inverters	G_Inv6	366788.5	4902972	2	0	0	87.7	87.7	1	1217.33	3.25	0	72.71	0	2.48	0	0	1.7	0	0	0	0	0	0	10.77	10.77
	Inverter	MV3-3	367939	4907927	2	0	0	100.3	100.3	1	5232.67	3.25	0	85.37	0	0.66	0	0	18.92	0	0	0	0	0	0	-4.64	-4.64
	Inverter	MV3-14	368684	4907498	2	0	0	100.3	100.3	1	5252.11	3.25	0	85.41	0	0.66	0	0	18.95	0	0	0	0	0	0	-4.7	-4.7
	Inverter	MV3-6	368162	4907834	2	0	0	100.3	100.3	1	5254.58	3.25	0	85.41	0	0.66	0	0	18.95	0	0	0	0	0	0	-4.71	-4.71
	Inverter	MV3-9	368512	4907703	2	0	0	100.3	100.3	1	5323.52	3.25	0	85.52	0	0.67	0	0	19.05	0	0	0	0	0	0	-4.93	-4.93
	Inverter	MV3-8	368680	4907712	2	0	0	100.3	100.3	1	5424.58	3.25	0	85.69	0	0.68	0	0	19.19	0	0	0	0	0	0	-5.24	-5.24
	Inverters	G_Inv9	366750.9	4902691.8	2	0	0	87.7	87.7	1	1275.01	3.25	0	73.11	0	2.49	0	0	1.77	0	0	0	0	0	0	10.29	10.29
	Inverters	G_Inv8	366844.5	4902838.5	2	0	0	87.7	87.7	1	1307.15	3.25	0	73.33	0	2.49	0	0	1.81	0	0	0	0	0	0	10.03	10.03
	Inverter	MV6-3	370207	4907140	2	0	0	100.3	100.3	1	6031.12	3.25	0	86.61	0	0.71	0	0	20.04	0	0	0	0	0	0	-7.04	-7.04
	Inverters	G_Inv10	366900.7	4902704.8	2	0	0	87.7	87.7	1	1406.43	3.25	0	73.96	0	2.51	0	0	1.93	0	0	0	0	0	0	9.26	9.26
	Inverter	MV6-2	370085	4907339	2	0	0	100.3	100.3	1	6070.87	3.25	0	86.67	0	0.71	0	0	20.09	0	0	0	0	0	0	-7.15	-7.15
	Inverter	MV4-11	369264	4908855	2	0	0	100.3	100.3	1	6699.24	3.25	0	87.52	0	0.71	0	0	20.92	0	0	0	0	0	0	-8.84	-8.84
	Inverter	MV4-7	369035	4909001	2	0	0	100.3	100.3	1	6701.83	3.25	0	87.52	0	0.71	0	0	20.92	0	0	0	0	0	0	-8.85	-8.85
	Inverter	MV4-10	369312	4908858	2	0	0	100.3	100.3	1	6728.1	3.25	0	87.56	0	0.71	0	0	20.95	0	0	0	0	0	0	-8.91	-8.91
	Inverter	MV4-8	369256	4909001	2	0	0	100.3	100.3	1	6817.67	3.25	0	87.67	0	0.71	0	0	21.07	0	0	0	0	0	0	-9.14	-9.14
	Inverter	MV4-9	369289	4909001	2	0	0	100.3	100.3	1	6835.41	3.25	0	87.7	0	0.71	0	0	21.09	0	0	0	0	0	0	-9.19	-9.19
	Inverter	MV4-4	369027	4909199	2	0	0	100.3	100.3	1	6868.64	3.25	0	87.74	0	0.71	0	0	21.13	0	0	0	0	0	0	-9.27	-9.27
	Inverter	MV4-6	369243	4909192	2	0	0	100.3	100.3	1	6972.88	3.25	0	87.87	0	0.71	0	0	21.27	0	0	0	0	0	0	-9.53	-9.53
	Inverter	MV4-5	369289	4909199	2	0	0	100.3	100.3	1	7002.96	3.25	0	87.91	0	0.71	0	0	21.3	0	0	0	0	0	0	-9.61	-9.61
	Inverter	MV5-5	370015	4908690	2	0	0	100.3	100.3	1	7008.55	3.25	0	87.91	0	0.71	0	0	21.31	0	0	0	0	0	0	-9.62	-9.62
	Inverter	MV4-1	369011	4909397	2	0	0	100.3	100.3	1	7033.19	3.25	0	87.94	0	0.71	0	0	21.34	0	0	0	0	0	0	-9.68	-9.68
	Inverter	MV5-2	370006	4908853	2	0	0	100.3	100.3	1	7130.36	3.25	0	88.06	0	0.71	0	0	21.46	0	0	0	0	0	0	-9.92	-9.92
	Inverter	MV4-3	369229	4909397	2	0	0	100.3	100.3	1	7141.4	3.25	0	88.08	0	0.71	0	0	21.48	0	0	0	0	0	0	-9.94	-9.94
	Inverter	MV4-2	369272	4909397	2	0	0	100.3	100.3	1	7163.33	3.25	0	88.1	0	0.7	0	0	21.5	0	0	0	0	0	0	-10	-10
	Inverter	MV5-4	370324	4908707	2	0	0	100.3	100.3	1	7219.96	3.25	0	88.17	0	0.7	0	0	21.57	0	0	0	0	0	0	-10.13	-10.13
	Inverter	MV5-3	370231	4908851	2	0	0	100.3	100.3	1	7269.93	3.25	0	88.23	0	0.7	0	0	21.63	0	0	0	0	0	0	-10.25	-10.25
	Inverter	MV5-1	370020	4909142	2	0	0	100.3	100.3	1	7368.2	3.25	0	88.35	0	0.7	0	0	21.75	0	0	0	0	0	0	-10.49	-10.49
	Inverter	MV6-1	370235	4907364	2	0	0	97.3	97.3	1	6199.05	3.25	0	86.85	0	0.71	0	0	20.26	0	0	0	0	0	0	-10.51	-10.51
	DSTATCOM - 10 MVAR #2	DSAT2	369403	4908757	2.5	0	0	96.6	96.6	1	6695.31	3.5	0	87.52	0	3.82	0	0	4.17	0	0	0	0	0	0	1.13	1.13
	DSTATCOM - 10 MVAR #1	DSAT1	369437	4908757	2.5	0	0	96.6	96.6	1	6714.67	3.5	0	87.54	0	3.82	0	0	4.18	0	0	0	0	0	0	1.09	1.09
	Inverter	MV1-3	364440	4906039	2	0	0	89.1	89.1	1	3025.99	3.25	0	80.62	0	1.15	0	0	9.66	0	0	0	0	0	0	-2.37	-2.37
	Inverter	MV2-2	365977	4906654	2	0	0	89.1	89.1	1	3429.44	3.25	0	81.7	0	1.25	0	0	10.26	0	0	0	0	0	0	-4.16	-4.16

SubstationTransformer	W_ST	369711.17	4906112.3	2.5	0	0	92	92	1	5010.42	4.25	0	85	0	1.64	2.33	0.24	8.63	0	0	0	0	0	0	-5.62	-5.62
Westbrook Inverter Enclosur	W_INV3	369508	4906164	2	0	0	89.1	89.1	1	4875.99	3.25	0	84.76	0	1.61	0	0	12.3	0	0	0	0	0	0	-9.61	-9.61
Westbrook Inverter Enclosur	W_INV2	369374	4906388	2	0	0	89.1	89.1	1	4909.61	3.25	0	84.82	0	1.62	0	0	12.34	0	0	0	0	0	0	-9.72	-9.72
Inverter	MV3-22	368656	4907142	2	0	0	89.1	89.1	1	4950.91	3.25	0	84.89	0	1.63	0	0	12.4	0	0	0	0	0	0	-9.86	-9.86
Westbrook Inverter Enclosur	W_INV4	369673	4906164	2	0	0	89.1	89.1	1	5009.13	3.25	0	85	0	1.64	0	0	12.48	0	0	0	0	0	0	-10.06	-10.06
Westbrook Inverter Enclosur	W_INV7	369780	4906417	2	0	0	89.1	89.1	1	5245.47	3.25	0	85.4	0	1.7	0	0	12.79	0	0	0	0	0	0	-10.83	-10.83
Westbrook Inverter Enclosur	W_INV5	369719	4906574	2	0	0	89.1	89.1	1	5294.3	3.25	0	85.48	0	1.71	0	0	12.85	0	0	0	0	0	0	-10.98	-10.98
Inverter	MV3-5	368340	4907843	2	0	0	89.1	89.1	1	5351.28	3.25	0	85.57	0	1.73	0	0	12.93	0	0	0	0	0	0	-11.17	-11.17
Inverter	MV3-1	368156	4907976	2	0	0	89.1	89.1	1	5376.18	3.25	0	85.61	0	1.73	0	0	12.96	0	0	0	0	0	0	-11.25	-11.25
Westbrook Inverter Enclosur	W_INV6	369875	4906578	2	0	0	89.1	89.1	1	5418.95	3.25	0	85.68	0	1.74	0	0	13.02	0	0	0	0	0	0	-11.38	-11.38
Inverter	MV3-4	368502	4907925	2	0	0	89.1	89.1	1	5505.48	3.25	0	85.82	0	1.76	0	0	13.13	0	0	0	0	0	0	-11.65	-11.65
Inverter	MV3-2	368671	4907928	2	0	0	89.1	89.1	1	5598.85	3.25	0	85.96	0	1.79	0	0	13.25	0	0	0	0	0	0	-11.94	-11.94
Fixed Reactor Bank 1	FRB1	369378	4908755	6	0	0	89.8	89.8	1	6679.5	5.25	0	87.49	0	-0.32	0	0	10.44	0	0	0	0	0	0	-7.83	-7.83
Fixed Reactor Bank 2	FRB2	369464	4908755	6	0	0	89.8	89.8	1	6728.48	5.25	0	87.56	0	-0.32	0	0	10.49	0	0	0	0	0	0	-7.95	-7.95
Inverter	MV4-15	369176	4908481	2	0	0	89.1	89.1	1	6339.3	3.25	0	87.04	0	1.97	0	0	14.19	0	0	0	0	0	0	-14.14	-14.14
Inverter	MV4-14	369176	4908507	2	0	0	89.1	89.1	1	6360.79	3.25	0	87.07	0	1.97	0	0	14.21	0	0	0	0	0	0	-14.2	-14.2
Inverter	MV4-13	369051	4908605	2	0	0	89.1	89.1	1	6373.6	3.25	0	87.09	0	1.98	0	0	14.23	0	0	0	0	0	0	-14.23	-14.23
Inverter	MV4-12	369043	4908803	2	0	0	89.1	89.1	1	6536.77	3.25	0	87.31	0	2.02	0	0	14.43	0	0	0	0	0	0	-14.69	-14.69
Inverter	MV5-6	369982	4908507	2	0	0	89.1	89.1	1	6846.18	3.25	0	87.71	0	2.09	0	0	14.8	0	0	0	0	0	0	-15.54	-15.54
Westbrook Inverter Enclosur	W_INV1	369409	4906578	2	0	0	86.1	86.1	1	5059.64	3.25	0	85.08	0	1.65	0	0	12.54	0	0	0	0	0	0	-13.22	-13.22
Inverter	MV6-4	370250	4906966	2	0	0	86.1	86.1	1	5953.75	3.25	0	86.5	0	1.87	0	0	13.7	0	0	0	0	0	0	-16.02	-16.02
Westbrook Inverter Transfor	W_INVTR1	369403	4906578	2	0	0	78.2	78.2	1	5055.13	3.25	0	85.07	0	-3.19	0	0	2.43	0	0	0	0	0	0	-6.08	-6.08
Inverter Transformer	MV1-14 T	365157	4905049	2	0	0	69.4	69.4	1	1858.03	3.25	0	76.38	0	2.12	0	0	4.82	0	0	0	0	0	0	-13.97	-13.97
Westbrook Inverter Transfor	W_INVTR3	369514	4906164	2	0	0	77.3	77.3	1	4880.8	3.25	0	84.77	0	-3.15	0	0	2.37	0	0	0	0	0	0	-6.65	-6.65
Westbrook Inverter Transfor	W_INVTR2	369368	4906388	2	0	0	77.3	77.3	1	4905.01	3.25	0	84.81	0	-3.16	0	0	2.38	0	0	0	0	0	0	-6.69	-6.69
Westbrook Inverter Transfor	W_INVTR4	369679	4906164	2	0	0	77.3	77.3	1	5014.01	3.25	0	85	0	-3.18	0	0	2.42	0	0	0	0	0	0	-6.9	-6.9
Westbrook Inverter Transfor	W_INVTR7	369786	4906417	2	0	0	77.3	77.3	1	5250.25	3.25	0	85.4	0	-3.23	0	0	2.5	0	0	0	0	0	0	-7.33	-7.33
Westbrook Inverter Transfor	W_INVTR5	369725	4906574	2	0	0	77.3	77.3	1	5298.97	3.25	0	85.48	0	-3.24	0	0	2.51	0	0	0	0	0	0	-7.42	-7.42
Westbrook Inverter Transfor	W_INVTR6	369881	4906578	2	0	0	77.3	77.3	1	5423.68	3.25	0	85.69	0	-3.26	0	0	2.56	0	0	0	0	0	0	-7.64	-7.64
Inverter Transformer	MV1-13 T	364725	4905241	2	0	0	69.4	69.4	1	2180.16	3.25	0	77.77	0	2.24	0	0	5.14	0	0	0	0	0	0	-15.8	-15.8
Inverter Transformer	MV1-10 T	365010	4905564	2	0	0	69.4	69.4	1	2393.32	3.25	0	78.58	0	2.31	0	0	5.34	0	0	0	0	0	0	-16.89	-16.89
Inverter Transformer	MV1-7 T	364919	4905782	2	0	0	69.4	69.4	1	2627.29	3.25	0	79.39	0	2.39	0	0	5.56	0	0	0	0	0	0	-17.99	-17.99
Inverter Transformer	MV2-1 T	365836	4906816	2	0	0	69.4	69.4	1	3578.55	3.25	0	82.07	0	2.67	0	0	6.35	0	0	0	0	0	0	-21.75	-21.75
Inverter Transformer	MV6-4 T	370244	4906966	2	0	0	69.4	69.4	1	5949.07	3.25	0	86.49	0	3.18	0	0	7.99	0	0	0	0	0	0	-28.31	-28.31
Inverter Transformer	MV6-1 T	370230	4907364	2	0	0	69.4	69.4	1	6195.31	3.25	0	86.84	0	3.22	0	0	8.14	0	0	0	0	0	0	-28.84	-28.84
Inverter Transformer	MV1-15 T	365309	4904994	2	0	0	56.1	56.1	1	1773.31	3.25	0	75.98	0	0.31	0	0	6.59	0	0	0	0	0	0	-26.82	-26.82
Inverter Transformer	MV1-12 T	365044	4905386	2	0	0	56.1	56.1	1	2212.48	3.25	0	77.9	0	0.49	0	0	7.45	0	0	0	0	0	0	-29.79	-29.79
Inverter Transformer	MV1-11 T	364649	4905414	2	0	0	56.1	56.1	1	2369.12	3.25	0	78.49	0	0.56	0	0	7.75	0	0	0	0	0	0	-30.74	-30.74
Inverter Transformer	MV1-8 T	364782	4905647	2	0	0	56.1	56.1	1	2538.08	3.25	0	79.09	0	0.63	0	0	8.06	0	0	0	0	0	0	-31.72	-31.72
Inverter Transformer	MV1-9 T	364555	4905646	2	0	0	56.1	56.1	1	2619.34	3.25	0	79.36	0	0.67	0	0	8.2	0	0	0	0	0	0	-32.18	-32.18
Inverter Transformer	MV1-4 T	364821	4905918	2	0	0	56.1	56.1	1	2784.72	3.25	0	79.9	0	0.74	0	0	8.5	0	0	0	0	0	0	-33.07	-33.07
Inverter Transformer	MV1-5 T	364676	4905892	2	0	0	56.1	56.1	1	2804.27	3.25	0	79.96	0	0.75	0	0	8.53	0	0	0	0	0	0	-33.18	-33.18
Inverter Transformer	MV1-6 T	364482	4905835	2	0	0	56.1	56.1	1	2821.78	3.25	0	80.01	0	0.75	0	0	8.56	0	0	0	0	0	0	-33.27	-33.27
Inverter Transformer	MV1-2 T	364759	4906063	2	0	0	56.1	56.1	1	2941.35	3.25	0	80.37	0	0.8	0	0	8.77	0	0	0	0	0	0	-33.89	-33.89
Inverter Transformer	MV1-3 T	364435	4906039	2	0	0	56.1	56.1	1	3027.91	3.25	0	80.62	0	0.84	0	0	8.92	0	0	0	0	0	0	-34.32	-34.32
Inverter Transformer	MV1-1 T	364721	4906166	2	0	0	56.1	56.1	1	3050.93	3.25	0	80.69	0	0.85	0	0	8.95	0	0	0	0	0	0	-34.44	-34.44
Inverter Transformer	MV2-4 T	365590	4906628	2	0	0	56.1	56.1	1	3382.92	3.25	0	81.59	0	0.99	0	0	9.5	0	0	0	0	0	0	-36.02	-36.02
Inverter Transformer	MV2-3 T	365814	4906641	2	0	0	56.1	56.1	1	3402.5	3.25	0	81.64	0	1	0	0	9.53	0	0	0	0	0	0	-36.11	-36.11
Inverter Transformer	MV2-2 T	365982	4906654	2	0	0	56.1	56.1	1	3429.99	3.25	0	81.71	0	1.01	0	0	9.58	0	0	0	0	0	0	-36.23	-36.23
Inverter Transformer	MV3-18 T	367757	4907412	2	0	0	56.1	56.1	1	4691.08	3.25	0	84.43	0	1.51	0	0	11.44	0	0	0	0	0	0	-41.32	-41.32
Inverter Transformer	MV3-12 T	367674	4907594	2	0	0	56.1	56.1	1	4817.19	3.25	0	84.66	0	1.56	0	0	11.61	0	0	0	0	0	0	-41.77	-41.77
Inverter Transformer	MV3-21 T	368484	4907206	2	0	0	56.1	56.1	1	4898.32	3.25	0	84.8	0	1.59	0	0	11.72	0	0	0	0	0	0	-42.05	-42.05
Inverter Transformer	MV3-13 T	367958	4907577	2	0	0	56.1	56.1	1	4931.04	3.25	0	84.86	0	1.6	0	0	11.76	0	0	0	0	0	0	-42.16	-42.16
Inverter Transformer	MV3-19 T	368352	4907347	2	0	0	56.1	56.1	1	4938.32	3.25	0	84.87	0	1.6	0	0	11.77	0	0	0	0	0	0	-42.19	-42.19
Inverter Transformer	MV3-17 T	368183	4907472	2	0	0	56.1	56.1	1	4952.5	3.25	0	84.9	0	1.61	0	0	11.79	0	0	0	0	0	0	-42.24	-42.24
Inverter Transformer	MV3-22 T	368661	4907142	2	0	0	56.1	56.1	1	4954	3.25	0	84.9	0	1.61	0	0	11.79	0	0	0	0	0	0	-42.24	-42.24
Inverter Transformer	MV3-15 T	368351	4907477	2	0	0	56.1	56.1	1	5046.27	3.25	0	85.06	0	1.64	0	0	11.91	0	0	0	0	0	0	-42.56	-42.56
Inverter Transformer	MV3-7 T	367951	4907754	2	0	0	56.1	56.1	1	5084	3.25	0	85.12	0	1.66	0	0	11.96	0	0	0	0	0	0	-42.69	-42.69
Inverter Transformer	MV3-20 T	368683	4907317	2	0	0	56.1	56.1	1	5106.05	3.25	0	85.16	0	1.66	0	0	11.99	0	0	0	0	0	0	-42.76	-42.76
Inverter Transformer	MV3-10 T	368162	4907669	2	0	0	56.1	56.1	1	5111.11	3.25	0	85.17	0	1.67	0	0	12	0	0	0	0	0	0	-42.78	-42.78
Inverter Transformer	MV3-16 T	368509	4907475	2	0	0	56.1	56.1	1	5132.4	3.25	0	85.21	0	1.67	0	0	12.03	0	0	0	0	0	0	-42.85	-42.85
Inverter Transformer	MV3-11 T	368340	4907662	2	0	0	56.1	56.1	1	5196.59	3.25	0	85.31	0	1.7	0	0	12.11	0	0	0	0	0	0	-43.06	-43.06
Inverter Transformer	MV3-3 T	367944	4907927	2	0	0	56.1	56.1	1	5234.9	3.25	0	85.38	0	1.71	0	0	12.16	0	0	0	0	0	0	-43.19	-43.19
Inverter Transformer	MV3-14 T	368678	4907498	2	0	0	56.1	56.1	1	5248.59	3.25	0	85.4	0	1.71	0	0	12.18	0	0	0	0	0	0	-43.23	-43.23
Inverter Transformer	MV3-6 T	368156	4907834	2	0	0	56.1	56.1	1	5251.66	3.25	0	85.41	0	1.71	0	0	12.18	0	0	0	0	0	0	-43.24	-43.24
Inverter Transformer	MV3-9 T	368517	4907703	2	0	0	56.1	56.1	1	5326.25	3.25	0	85.53	0	1.74	0	0	12.28	0	0	0	0	0	0	-43.49	-43.49
Inverter Transformer	MV3-5 T	368335	4907843	2	0	0	56.1	56.1	1	5348.73	3.25	0	85.57	0	1.75	0	0	12.31	0	0	0	0	0	0	-43.56	-43.56
Inverter Transformer	MV3-1 T	368150	4907976	2	0	0	56.1	56.1	1	5373.33	3.25	0	85.6	0	1.76	0	0	12.34	0	0	0	0	0	0	-43.64	-43.64
Inverter Transformer	MV3-8 T	368685	4907712	2	0	0	56.1	56.1	1	5427.42	3.25	0	85.69	0	1.78	0	0	12.4	0	0	0	0	0	0	-43.81	-43.81
Inverter Transformer	MV3-4 T	368507	4907925	2	0	0	56.1	56.1	1	5508.12	3.25	0	85.82	0	1.8	0	0	12.51	0	0	0	0	0	0	-44.07	-44.07
Inverter Transformer	MV3-2 T	368677	4907928	2	0	0	56.1	56.1	1	5602.14	3.25	0	85.97	0	1.84	0	0	12.62	0	0	0	0	0	0	-44.37	-44.37
Inverter Transformer	MV6-3 T	370202	4907140	2	0	0	56.1	56.1	1	6027.31	3.25	0	86.6	0	1.97	0	0	13.14	0	0	0	0	0	0	-45.65	-45.65
Inverter Transformer	MV6-2 T	370091	4907339	2	0	0	56.1	56.1	1	6075.31	3.25	0	86.67	0	1.99	0	0	13.19	0	0	0	0	0	0	-45.79	-45.79
Inverter Transformer	MV4-15 T	369170	4908481	2	0	0	56.1	56.1	1	6335.92	3.25	0	87.04	0	2.07	0	0	13.49	0	0	0	0	0	0	-46.54	-46.54

	Inverter Transformer	MV4-14 T	369182	4908507	2	0	0	56.1	56.1	1	6364.16	3.25	0	87.07	0	2.08	0	0	13.53	0	0	0	0	0	0	-46.62	-46.62
	Inverter Transformer	MV4-13 T	369057	4908605	2	0	0	56.1	56.1	1	6376.85	3.25	0	87.09	0	2.08	0	0	13.54	0	0	0	0	0	0	-46.66	-46.66
	Inverter Transformer	MV4-12 T	369049	4908803	2	0	0	56.1	56.1	1	6539.93	3.25	0	87.31	0	2.13	0	0	13.72	0	0	0	0	0	0	-47.11	-47.11
	Inverter Transformer	MV4-11 T	369269	4908855	2	0	0	56.1	56.1	1	6701.97	3.25	0	87.52	0	2.18	0	0	13.91	0	0	0	0	0	0	-47.55	-47.55
	Inverter Transformer	MV4-7 T	369040	4909001	2	0	0	56.1	56.1	1	6704.39	3.25	0	87.53	0	2.18	0	0	13.91	0	0	0	0	0	0	-47.55	-47.55
	Inverter Transformer	MV4-10 T	369307	4908858	2	0	0	56.1	56.1	1	6725.34	3.25	0	87.55	0	2.18	0	0	13.93	0	0	0	0	0	0	-47.61	-47.61
	Inverter Transformer	MV4-8 T	369262	4909001	2	0	0	56.1	56.1	1	6820.89	3.25	0	87.68	0	2.21	0	0	14.04	0	0	0	0	0	0	-47.86	-47.86
	Inverter Transformer	MV4-9 T	369284	4909001	2	0	0	56.1	56.1	1	6832.72	3.25	0	87.69	0	2.21	0	0	14.05	0	0	0	0	0	0	-47.9	-47.9
	Inverter Transformer	MV5-6 T	369987	4908507	2	0	0	56.1	56.1	1	6849.38	3.25	0	87.71	0	2.22	0	0	14.07	0	0	0	0	0	0	-47.94	-47.94
	Inverter Transformer	MV4-4 T	369033	4909199	2	0	0	56.1	56.1	1	6871.63	3.25	0	87.74	0	2.22	0	0	14.09	0	0	0	0	0	0	-48	-48
	Inverter Transformer	MV4-6 T	369249	4909192	2	0	0	56.1	56.1	1	6976.01	3.25	0	87.87	0	2.25	0	0	14.2	0	0	0	0	0	0	-48.27	-48.27
	Inverter Transformer	MV4-5 T	369283	4909199	2	0	0	56.1	56.1	1	6999.8	3.25	0	87.9	0	2.26	0	0	14.23	0	0	0	0	0	0	-48.33	-48.33
	Inverter Transformer	MV5-5 T	370021	4908690	2	0	0	56.1	56.1	1	7012.33	3.25	0	87.92	0	2.26	0	0	14.24	0	0	0	0	0	0	-48.36	-48.36
	Inverter Transformer	MV4-1 T	369017	4909397	2	0	0	56.1	56.1	1	7036.1	3.25	0	87.95	0	2.27	0	0	14.27	0	0	0	0	0	0	-48.43	-48.43
	Inverter Transformer	MV5-2 T	370011	4908853	2	0	0	56.1	56.1	1	7133.45	3.25	0	88.07	0	2.3	0	0	14.37	0	0	0	0	0	0	-48.68	-48.68
	Inverter Transformer	MV4-3 T	369234	4909397	2	0	0	56.1	56.1	1	7143.94	3.25	0	88.08	0	2.3	0	0	14.38	0	0	0	0	0	0	-48.7	-48.7
	Inverter Transformer	MV4-2 T	369267	4909397	2	0	0	56.1	56.1	1	7160.77	3.25	0	88.1	0	2.3	0	0	14.4	0	0	0	0	0	0	-48.74	-48.74
	Inverter Transformer	MV5-4 T	370330	4908707	2	0	0	56.1	56.1	1	7223.88	3.25	0	88.18	0	2.32	0	0	14.47	0	0	0	0	0	0	-48.9	-48.9
	Inverter Transformer	MV5-3 T	370237	4908851	2	0	0	56.1	56.1	1	7273.75	3.25	0	88.24	0	2.33	0	0	14.52	0	0	0	0	0	0	-49.03	-49.03
	Inverter Transformer	MV5-1 T	370015	4909142	2	0	0	56.1	56.1	1	7365.2	3.25	0	88.34	0	2.36	0	0	14.62	0	0	0	0	0	0	-49.26	-49.26
	Line Reactor	NGR	369421	4908787.5	5	0	0	45.4	45.4	1	6730.63	5.25	0	87.56	0	3.22	1.37	0.1	2.75	0	0	0	0	0	0	-49.55	-49.55
Limit. Valu	0	0																								
Level D/N:	24.6966	24.6966																								

Receiver: Existing Noise Receptor
ID: G-52
X: 365980.2
Y: 4902130.1
Z: 4.5
Ground: 0

ISO	Description	ID	X	Y	Z	Ground	ReflOrd	LxT	LxN	L/A	Dist.	hm	Freq	Adiv	K0b	Agr	Abar	z	Aatm	Afol	Ahous	Cmet	CmetN	Dc	RL	LtotT	LtotN
	Sol_Luce Substation	S_Substation	369426	4908792	3.5	0	0	112.1	112.1	1	7500.3	5.25	0	88.5	0	1.48	2.35	0.31	11.21	0	0	0	0	0	0	8.53	8.53
	Inverter	MV1-15	365315	4904994	2	0	0	100.3	100.3	1	2940.14	3.25	0	80.37	0	0.35	0	0	15.27	0	0	0	0	0	0	4.33	4.33
	Inverter	MV1-12	365038	4905386	2	0	0	100.3	100.3	1	3389.49	3.25	0	81.6	0	0.43	0	0	16.05	0	0	0	0	0	0	2.23	2.23
	Inverter	MV1-11	364655	4905414	2	0	0	100.3	100.3	1	3541.21	3.25	0	81.98	0	0.46	0	0	16.3	0	0	0	0	0	0	1.57	1.57
	Inverter	MV1-8	364788	4905647	2	0	0	100.3	100.3	1	3713.48	3.25	0	82.4	0	0.48	0	0	16.58	0	0	0	0	0	0	0.85	0.85
	Inverter	MV1-9	364561	4905646	2	0	0	100.3	100.3	1	3791.53	3.25	0	82.58	0	0.5	0	0	16.71	0	0	0	0	0	0	0.53	0.53
	Inverter	MV1-4	364815	4905918	2	0	0	100.3	100.3	1	3963.06	3.25	0	82.96	0	0.52	0	0	16.99	0	0	0	0	0	0	-0.16	-0.16
	Inverter	MV1-5	364671	4905892	2	0	0	100.3	100.3	1	3983.2	3.25	0	83	0	0.52	0	0	17.02	0	0	0	0	0	0	-0.24	-0.24
	Inverter	MV1-6	364477	4905835	2	0	0	100.3	100.3	1	3998.24	3.25	0	83.04	0	0.53	0	0	17.05	0	0	0	0	0	0	-0.3	-0.3
	Gardiner Substation	G_Sub	366586.3	4903349.9	2.5	0	0	90.8	90.8	1	1362.08	3.5	0	73.68	0	-0.31	0	0	3.23	0	0	0	0	0	0	14.17	14.17
	Inverters	G_Inv9	366750.9	4902691.8	2	0	0	87.7	87.7	1	953.67	3.25	0	70.59	0	2.44	0	0	1.37	0	0	0	0	0	0	13.26	13.26
	Inverter	MV1-2	364753	4906063	2	0	0	100.3	100.3	1	4119.92	3.25	0	83.3	0	0.54	0	0	17.24	0	0	0	0	0	0	-0.77	-0.77
	Inverter	MV1-1	364715	4906166	2	0	0	100.3	100.3	1	4229.57	3.25	0	83.53	0	0.56	0	0	17.41	0	0	0	0	0	0	-1.18	-1.18
	Inverters	G_Inv7	366694.6	4902824.7	2	0	0	87.7	87.7	1	996.41	3.25	0	70.97	0	2.45	0	0	1.42	0	0	0	0	0	0	12.82	12.82
	Inverter	MV1-14	365163	4905049	2	0	0	97.3	97.3	1	3031.14	3.25	0	80.63	0	0.37	0	0	15.43	0	0	0	0	0	0	0.88	0.88
	Inverter	MV2-4	365586	4906624	2	0	0	100.3	100.3	1	4511.16	3.25	0	84.09	0	0.59	0	0	17.85	0	0	0	0	0	0	-2.21	-2.21
	Inverter	MV2-3	365820	4906641	2	0	0	100.3	100.3	1	4513.74	3.25	0	84.09	0	0.59	0	0	17.85	0	0	0	0	0	0	-2.22	-2.22
	Inverters	G_Inv5	366638.5	4902958.1	2	0	0	87.7	87.7	1	1057.8	3.25	0	71.49	0	2.46	0	0	1.5	0	0	0	0	0	0	12.21	12.21
	Inverters	G_Inv10	366900.7	4902704.8	2	0	0	87.7	87.7	1	1085.18	3.25	0	71.71	0	2.46	0	0	1.53	0	0	0	0	0	0	11.95	11.95
	Inverter	MV1-13	364731	4905241	2	0	0	97.3	97.3	1	3352.34	3.25	0	81.51	0	0.43	0	0	15.98	0	0	0	0	0	0	-0.6	-0.6
	Inverters	G_Inv8	366844.5	4902838.5	2	0	0	87.7	87.7	1	1117.52	3.25	0	71.97	0	2.47	0	0	1.57	0	0	0	0	0	0	11.65	11.65
	Inverters	G_Inv3	366583.7	4903091.4	2	0	0	87.7	87.7	1	1135.04	3.25	0	72.1	0	2.47	0	0	1.6	0	0	0	0	0	0	11.49	11.49
	Inverters	G_Inv6	366788.5	4902972	2	0	0	87.7	87.7	1	1167.11	3.25	0	72.34	0	2.47	0	0	1.64	0	0	0	0	0	0	11.21	11.21
	Inverter	MV1-10	365004	4905564	2	0	0	97.3	97.3	1	3569.96	3.25	0	82.05	0	0.46	0	0	16.35	0	0	0	0	0	0	-1.55	-1.55
	Inverters	G_Inv1	366526.4	4903225.8	2	0	0	87.7	87.7	1	1224.3	3.25	0	72.76	0	2.48	0	0	1.71	0	0	0	0	0	0	10.71	10.71
	Inverters	G_Inv4	366732.8	4903105	2	0	0	87.7	87.7	1	1231.6	3.25	0	72.81	0	2.48	0	0	1.72	0	0	0	0	0	0	10.65	10.65
	Inverter	MV1-7	364925	4905782	2	0	0	97.3	97.3	1	3801.29	3.25	0	82.6	0	0.5	0	0	16.73	0	0	0	0	0	0	-2.51	-2.51
	Inverter	MV3-18	367752	4907412	2	0	0	100.3	100.3	1	5571.15	3.25	0	85.92	0	0.68	0	0	19.4	0	0	0	0	0	0	-5.69	-5.69
	Inverters	G_Inv2	366676.9	4903239.1	2	0	0	87.7	87.7	1	1309.69	3.25	0	73.34	0	2.49	0	0	1.81	0	0	0	0	0	0	10.01	10.01
	Inverter	MV3-21	368478	4907206	2	0	0	100.3	100.3	1	5657.19	3.25	0	86.05	0	0.69	0	0	19.52	0	0	0	0	0	0	-5.95	-5.95
	Inverter	MV3-12	367668	4907594	2	0	0	100.3	100.3	1	5718.64	3.25	0	86.15	0	0.69	0	0	19.61	0	0	0	0	0	0	-6.13	-6.13
	Inverter	MV3-19	368357	4907347	2	0	0	100.3	100.3	1	5732.82	3.25	0	86.17	0	0.69	0	0	19.63	0	0	0	0	0	0	-6.18	-6.18
	Inverter	MV3-17	368178	4907472	2	0	0	100.3	100.3	1	5776.35	3.25	0	86.23	0	0.7	0	0	19.69	0	0	0	0	0	0	-6.3	-6.3
	Inverter	MV3-13	367963	4907577	2	0	0	100.3	100.3	1	5796.57	3.25	0	86.26	0	0.7	0	0	19.71	0	0	0	0	0	0	-6.36	-6.36
	Inverter	MV3-15	368357	4907477	2	0	0	100.3	100.3	1	5851.37	3.25	0	86.35	0	0.7	0	0	19.79	0	0	0	0	0	0	-6.52	-6.52
	Inverter	MV3-20	368689	4907317	2	0	0	100.3	100.3	1	5851.63	3.25	0	86.35	0	0.7	0	0	19.79	0	0	0	0	0	0	-6.52	-6.52
	Inverter	MV3-16	368514	4907475	2	0	0	100.3	100.3	1	5915.07	3.25	0	86.44	0	0.7	0	0	19.88	0	0	0	0	0	0	-6.71	-6.71
	Inverter	MV3-10	368167	4907669	2	0	0	100.3	100.3	1	5954.96	3.25	0	86.5	0	0.7	0	0	19.93	0	0	0	0	0	0	-6.82	-6.82
	Inverter	MV3-7	367945	4907754	2	0	0	100.3	100.3	1	5957.24	3.25	0	86.5	0	0.7	0	0	19.93	0	0	0	0	0	0	-6.83	-6.83
	Inverter	MV3-14	368684	4907498	2	0	0	100.3	100.3	1	6010.4	3.25	0	86.58	0	0.71	0	0	20.01	0	0	0	0	0	0	-6.98	-6.98
	Inverter	MV3-11	368346	4907662	2	0	0	100.3	100.3	1	6016.55	3.25	0	86.59	0	0.71	0	0	20.02	0	0	0	0	0	0	-7	-7
	Inverter	MV3-6	368162	4907834	2	0	0	100.3	100.3	1	6106.94	3.25	0	86.72	0	0.71	0	0	20.14	0	0	0	0	0	0	-7.25	-7.25

Inverter	MV3-3	367939	4907927	2	0	0	100.3	100.3	1	6118.9	3.25	0	86.73	0	0.71	0	0	20.15	0	0	0	0	0	0	-7.28	-7.28
Inverter	MV3-9	368512	4907703	2	0	0	100.3	100.3	1	6121.05	3.25	0	86.74	0	0.71	0	0	20.16	0	0	0	0	0	0	-7.29	-7.29
Inverter	MV3-8	368680	4907712	2	0	0	100.3	100.3	1	6200.53	3.25	0	86.85	0	0.71	0	0	20.26	0	0	0	0	0	0	-7.51	-7.51
Inverter	MV6-3	370207	4907140	2	0	0	100.3	100.3	1	6554.76	3.25	0	87.33	0	0.71	0	0	20.73	0	0	0	0	0	0	-8.46	-8.46
Inverter	MV2-1	365842	4906816	2	0	0	97.3	97.3	1	4687.94	3.25	0	84.42	0	0.61	0	0	18.12	0	0	0	0	0	0	-5.83	-5.83
Inverter	MV6-2	370085	4907339	2	0	0	100.3	100.3	1	6631.89	3.25	0	87.43	0	0.71	0	0	20.83	0	0	0	0	0	0	-8.67	-8.67
Inverter	MV4-11	369264	4908855	2	0	0	100.3	100.3	1	7483.82	3.25	0	88.48	0	0.69	0	0	21.89	0	0	0	0	0	0	-10.76	-10.76
Inverter	MV4-10	369312	4908858	2	0	0	100.3	100.3	1	7507.7	3.25	0	88.51	0	0.69	0	0	21.92	0	0	0	0	0	0	-10.81	-10.81
Inverter	MV4-7	369035	4909001	2	0	0	100.3	100.3	1	7519.38	3.25	0	88.52	0	0.69	0	0	21.94	0	0	0	0	0	0	-10.84	-10.84
Inverter	MV4-8	369256	4909001	2	0	0	100.3	100.3	1	7611.84	3.25	0	88.63	0	0.68	0	0	22.05	0	0	0	0	0	0	-11.05	-11.05
Inverter	MV4-9	369289	4909001	2	0	0	100.3	100.3	1	7626.1	3.25	0	88.65	0	0.68	0	0	22.07	0	0	0	0	0	0	-11.08	-11.08
Inverter	MV4-4	369027	4909199	2	0	0	100.3	100.3	1	7697.55	3.25	0	88.73	0	0.68	0	0	22.15	0	0	0	0	0	0	-11.24	-11.24
Inverter	MV5-5	370015	4908690	2	0	0	100.3	100.3	1	7701.42	3.25	0	88.73	0	0.68	0	0	22.16	0	0	0	0	0	0	-11.25	-11.25
Inverter	MV4-6	369243	4909192	2	0	0	100.3	100.3	1	7779.22	3.25	0	88.82	0	0.67	0	0	22.25	0	0	0	0	0	0	-11.43	-11.43
Inverter	MV4-5	369289	4909199	2	0	0	100.3	100.3	1	7804.97	3.25	0	88.85	0	0.67	0	0	22.28	0	0	0	0	0	0	-11.48	-11.48
Inverter	MV5-2	370006	4908853	2	0	0	100.3	100.3	1	7836.1	3.25	0	88.88	0	0.67	0	0	22.31	0	0	0	0	0	0	-11.55	-11.55
Inverter	MV4-1	369011	4909397	2	0	0	100.3	100.3	1	7873.6	3.25	0	88.92	0	0.66	0	0	22.36	0	0	0	0	0	0	-11.63	-11.63
Inverter	MV5-4	370324	4908707	2	0	0	100.3	100.3	1	7881.89	3.25	0	88.93	0	0.66	0	0	22.37	0	0	0	0	0	0	-11.65	-11.65
Inverter	MV5-3	370231	4908851	2	0	0	100.3	100.3	1	7952.35	3.25	0	89.01	0	0.66	0	0	22.45	0	0	0	0	0	0	-11.81	-11.81
Inverter	MV4-3	369229	4909397	2	0	0	100.3	100.3	1	7960.06	3.25	0	89.02	0	0.66	0	0	22.46	0	0	0	0	0	0	-11.82	-11.82
Inverter	MV4-2	369272	4909397	2	0	0	100.3	100.3	1	7977.71	3.25	0	89.04	0	0.66	0	0	22.48	0	0	0	0	0	0	-11.86	-11.86
Inverter	MV5-1	370020	4909142	2	0	0	100.3	100.3	1	8092.39	3.25	0	89.16	0	0.64	0	0	22.61	0	0	0	0	0	0	-12.11	-12.11
Inverter	MV6-1	370235	4907364	2	0	0	97.3	97.3	1	6745.15	3.25	0	87.58	0	0.71	0	0	20.98	0	0	0	0	0	0	-11.96	-11.96
DSTATCOM - 10 MVAR #2	DSAT2	369403	4908757	2.5	0	0	96.6	96.6	1	7458.64	3.5	0	88.45	0	3.86	0	0	4.52	0	0	0	0	0	0	-0.21	-0.21
DSTATCOM - 10 MVAR #1	DSAT1	369437	4908757	2.5	0	0	96.6	96.6	1	7474.31	3.5	0	88.47	0	3.86	0	0	4.53	0	0	0	0	0	0	-0.23	-0.23
SubstationTransformer	W_ST	369711.17	4906112.3	2.5	0	0	92	92	1	5456.91	3.5	0	85.74	0	0.66	0	-0.1	9.15	0	0	0	0	0	0	-3.57	-3.57
Inverter	MV1-3	364440	4906039	2	0	0	89.1	89.1	1	4201.4	3.25	0	83.47	0	1.44	0	0	11.37	0	0	0	0	0	0	-7.22	-7.22
Inverter	MV2-2	365977	4906654	2	0	0	89.1	89.1	1	4523.9	3.25	0	84.11	0	1.52	0	0	11.82	0	0	0	0	0	0	-8.39	-8.39
Westbrook Inverter Enclosur	W_INV3	369508	4906164	2	0	0	89.1	89.1	1	5358.89	3.25	0	85.58	0	1.73	0	0	12.94	0	0	0	0	0	0	-11.19	-11.19
Westbrook Inverter Enclosur	W_INV2	369374	4906388	2	0	0	89.1	89.1	1	5444.96	3.25	0	85.72	0	1.75	0	0	13.05	0	0	0	0	0	0	-11.46	-11.46
Westbrook Inverter Enclosur	W_INV4	369673	4906164	2	0	0	89.1	89.1	1	5468.92	3.25	0	85.76	0	1.76	0	0	13.08	0	0	0	0	0	0	-11.54	-11.54
Inverter	MV3-22	368656	4907142	2	0	0	89.1	89.1	1	5681.47	3.25	0	86.09	0	1.81	0	0	13.36	0	0	0	0	0	0	-12.2	-12.2
Westbrook Inverter Enclosur	W_INV7	369780	4906417	2	0	0	89.1	89.1	1	5728.52	3.25	0	86.16	0	1.82	0	0	13.42	0	0	0	0	0	0	-12.34	-12.34
Westbrook Inverter Enclosur	W_INV5	369719	4906574	2	0	0	89.1	89.1	1	5807.48	3.25	0	86.28	0	1.84	0	0	13.52	0	0	0	0	0	0	-12.58	-12.58
Westbrook Inverter Enclosur	W_INV6	369875	4906578	2	0	0	89.1	89.1	1	5912.13	3.25	0	86.43	0	1.86	0	0	13.65	0	0	0	0	0	0	-12.89	-12.89
Inverter	MV3-5	368340	4907843	2	0	0	89.1	89.1	1	6181.09	3.25	0	86.82	0	1.93	0	0	13.99	0	0	0	0	0	0	-13.68	-13.68
Inverter	MV3-1	368156	4907976	2	0	0	89.1	89.1	1	6237.68	3.25	0	86.9	0	1.94	0	0	14.06	0	0	0	0	0	0	-13.85	-13.85
Inverter	MV3-4	368502	4907925	2	0	0	89.1	89.1	1	6319.84	3.25	0	87.01	0	1.96	0	0	14.16	0	0	0	0	0	0	-14.08	-14.08
Inverter	MV3-2	368671	4907928	2	0	0	89.1	89.1	1	6391.87	3.25	0	87.11	0	1.98	0	0	14.25	0	0	0	0	0	0	-14.29	-14.29
Fixed Reactor Bank 1	FRB1	369378	4908755	6	0	0	89.8	89.8	1	7445.42	5.25	0	88.44	0	-0.23	0	0	11.16	0	0	0	0	0	0	-9.59	-9.59
Fixed Reactor Bank 2	FRB2	369464	4908755	6	0	0	89.8	89.8	1	7485.06	5.25	0	88.48	0	-0.23	0	0	11.2	0	0	0	0	0	0	-9.68	-9.68
Inverter	MV4-15	369176	4908481	2	0	0	89.1	89.1	1	7109.65	3.25	0	88.04	0	2.15	0	0	15.12	0	0	0	0	0	0	-16.25	-16.25
Inverter	MV4-14	369176	4908507	2	0	0	89.1	89.1	1	7132.88	3.25	0	88.07	0	2.16	0	0	15.14	0	0	0	0	0	0	-16.31	-16.31
Inverter	MV4-13	369051	4908605	2	0	0	89.1	89.1	1	7166.18	3.25	0	88.11	0	2.17	0	0	15.18	0	0	0	0	0	0	-16.4	-16.4
Inverter	MV4-12	369043	4908803	2	0	0	89.1	89.1	1	7342.23	3.25	0	88.32	0	2.21	0	0	15.39	0	0	0	0	0	0	-16.86	-16.86
Inverter	MV5-6	369982	4908507	2	0	0	89.1	89.1	1	7528.56	3.25	0	88.53	0	2.25	0	0	15.61	0	0	0	0	0	0	-17.33	-17.33
Westbrook Inverter Enclosur	W_INV1	369409	4906578	2	0	0	86.1	86.1	1	5616.09	3.25	0	85.99	0	1.79	0	0	13.27	0	0	0	0	0	0	-15	-15
Inverter	MV6-4	370250	4906966	2	0	0	86.1	86.1	1	6451.13	3.25	0	87.19	0	2	0	0	14.32	0	0	0	0	0	0	-17.45	-17.45
Westbrook Inverter Transfor	W_INVTR1	369403	4906578	2	0	0	78.2	78.2	1	5612.43	3.25	0	85.98	0	-3.3	0	0	2.62	0	0	0	0	0	0	-7.06	-7.06
Westbrook Inverter Transfor	W_INVTR3	369514	4906164	2	0	0	77.3	77.3	1	5362.84	3.25	0	85.59	0	-3.25	0	0	2.54	0	0	0	0	0	0	-7.53	-7.53
Westbrook Inverter Transfor	W_INVTR2	369368	4906388	2	0	0	77.3	77.3	1	5441.22	3.25	0	85.71	0	-3.26	0	0	2.56	0	0	0	0	0	0	-7.67	-7.67
Westbrook Inverter Transfor	W_INVTR4	369679	4906164	2	0	0	77.3	77.3	1	5472.98	3.25	0	85.76	0	-3.27	0	0	2.57	0	0	0	0	0	0	-7.72	-7.72
Westbrook Inverter Transfor	W_INVTR7	369786	4906417	2	0	0	77.3	77.3	1	5732.51	3.25	0	86.17	0	-3.32	0	0	2.66	0	0	0	0	0	0	-8.16	-8.16
Westbrook Inverter Transfor	W_INVTR5	369725	4906574	2	0	0	77.3	77.3	1	5811.35	3.25	0	86.29	0	-3.33	0	0	2.68	0	0	0	0	0	0	-8.29	-8.29
Westbrook Inverter Transfor	W_INVTR6	369881	4906578	2	0	0	77.3	77.3	1	5916.08	3.25	0	86.44	0	-3.35	0	0	2.71	0	0	0	0	0	0	-8.46	-8.46
Inverter Transformer	MV1-14 T	365157	4905049	2	0	0	69.4	69.4	1	3032.76	3.25	0	80.64	0	2.52	0	0	5.91	0	0	0	0	0	0	-19.71	-19.71
Inverter Transformer	MV1-13 T	364725	4905241	2	0	0	69.4	69.4	1	3354.58	3.25	0	81.51	0	2.61	0	0	6.18	0	0	0	0	0	0	-20.95	-20.95
Inverter Transformer	MV1-10 T	365010	4905564	2	0	0	69.4	69.4	1	3568.33	3.25	0	82.05	0	2.67	0	0	6.35	0	0	0	0	0	0	-21.72	-21.72
Inverter Transformer	MV1-7 T	364919	4905782	2	0	0	69.4	69.4	1	3802.96	3.25	0	82.6	0	2.74	0	0	6.53	0	0	0	0	0	0	-22.51	-22.51
Inverter Transformer	MV2-1 T	365836	4906816	2	0	0	69.4	69.4	1	4688.12	3.25	0	84.42	0	2.95	0	0	7.17	0	0	0	0	0	0	-25.19	-25.19
Inverter Transformer	MV6-4 T	370244	4906966	2	0	0	69.4	69.4	1	6447.16	3.25	0	87.19	0	3.25	0	0	8.28	0	0	0	0	0	0	-29.37	-29.37
Inverter Transformer	MV6-1 T	370230	4907364	2	0	0	69.4	69.4	1	6742	3.25	0	87.58	0	3.29	0	0	8.46	0	0	0	0	0	0	-29.97	-29.97
Inverter Transformer	MV1-15 T	365309	4904994	2	0	0	56.1	56.1	1	2941.5	3.25	0	80.37	0	0.8	0	0	8.77	0	0	0	0	0	0	-33.89	-33.89
Inverter Transformer	MV1-12 T	365044	4905386	2	0	0	56.1	56.1	1	3387.83	3.25	0	81.6	0	0.99	0	0	9.51	0	0	0	0	0	0	-36.04	-36.04
Inverter Transformer	MV1-11 T	364649	4905414	2	0	0	56.1	56.1	1	3543.46	3.25	0	81.99	0	1.06	0	0	9.76	0	0	0	0	0	0	-36.74	-36.74
Inverter Transformer	MV1-8 T	364782	4905647	2	0	0	56.1	56.1	1	3715.41	3.25	0	82.4	0	1.13	0	0	10.02	0	0	0	0	0	0	-37.49	-37.49
Inverter Transformer	MV1-9 T	364555	4905646	2	0	0	56.1	56.1	1	3793.78	3.25	0	82.58	0	1.16	0	0	10.14	0	0	0	0	0	0	-37.83	-37.83
Inverter Transformer	MV1-4 T	364821	4905918	2	0	0	56.1	56.1	1	3961.3	3.25	0	82.96	0	1.23	0	0	10.4	0	0	0	0	0	0	-38.52	-38.52
Inverter Transformer	MV1-5 T	364676	4905892	2	0	0	56.1	56.1	1	3981.56	3.25	0	83	0	1.24	0	0	10.43	0	0	0	0	0	0	-38.61	-38.61
Inverter Transformer	MV1-6 T	364482	4905835	2	0	0	56.1	56.1	1	3996.36	3.25	0	83.03	0	1.24	0	0	10.45	0	0	0	0	0	0	-38.67	-38.67
Inverter Transformer	MV1-2 T	364759	4906063	2	0	0	56.1	56.1	1	4118.14	3.25	0	83.29	0	1.29	0	0	10.63	0	0	0	0	0	0	-39.16	-39.16
Inverter Transformer	MV1-3 T	364435	4906039	2	0	0	56.1	56.1	1	4203.23	3.25	0	83.47	0	1.32	0	0	10.75	0	0	0	0	0	0	-39.49	-39.49
Inverter Transformer	MV1-1 T	364721	4906166	2	0	0	56.1	56.1	1	4227.77	3.25	0	83.52	0	1.33	0	0	10.79	0	0	0	0	0	0	-39.59	-39.59
Inverter Transformer	MV2-3 T	365814	4906641	2	0	0	56.1	56.1	1	4513.96	3.25	0	84.09	0	1.44	0	0	11.19	0	0	0	0	0	0	-40.67	-40.67

Inverter Transformer	MV2-4 T	365590	4906628	2	0	0	56.1	56.1	1	4514.79	3.25	0	84.09	0	1.45	0	0	11.2	0	0	0	0	0	0	-40.68	-40.68
Inverter Transformer	MV2-2 T	365982	4906654	2	0	0	56.1	56.1	1	4523.9	3.25	0	84.11	0	1.45	0	0	11.21	0	0	0	0	0	0	-40.71	-40.71
Inverter Transformer	MV3-18 T	367757	4907412	2	0	0	56.1	56.1	1	5572.75	3.25	0	85.92	0	1.83	0	0	12.59	0	0	0	0	0	0	-44.27	-44.27
Inverter Transformer	MV3-21 T	368484	4907206	2	0	0	56.1	56.1	1	5659.84	3.25	0	86.06	0	1.85	0	0	12.69	0	0	0	0	0	0	-44.55	-44.55
Inverter Transformer	MV3-22 T	368661	4907142	2	0	0	56.1	56.1	1	5683.82	3.25	0	86.09	0	1.86	0	0	12.72	0	0	0	0	0	0	-44.62	-44.62
Inverter Transformer	MV3-12 T	367674	4907594	2	0	0	56.1	56.1	1	5720.42	3.25	0	86.15	0	1.87	0	0	12.77	0	0	0	0	0	0	-44.73	-44.73
Inverter Transformer	MV3-19 T	368352	4907347	2	0	0	56.1	56.1	1	5730.75	3.25	0	86.16	0	1.88	0	0	12.78	0	0	0	0	0	0	-44.76	-44.76
Inverter Transformer	MV3-17 T	368183	4907472	2	0	0	56.1	56.1	1	5778.25	3.25	0	86.24	0	1.89	0	0	12.84	0	0	0	0	0	0	-44.91	-44.91
Inverter Transformer	MV3-13 T	367958	4907577	2	0	0	56.1	56.1	1	5794.86	3.25	0	86.26	0	1.9	0	0	12.86	0	0	0	0	0	0	-44.96	-44.96
Inverter Transformer	MV3-20 T	368683	4907317	2	0	0	56.1	56.1	1	5848.85	3.25	0	86.34	0	1.92	0	0	12.92	0	0	0	0	0	0	-45.12	-45.12
Inverter Transformer	MV3-15 T	368351	4907477	2	0	0	56.1	56.1	1	5848.93	3.25	0	86.34	0	1.92	0	0	12.92	0	0	0	0	0	0	-45.12	-45.12
Inverter Transformer	MV3-16 T	368509	4907475	2	0	0	56.1	56.1	1	5912.93	3.25	0	86.44	0	1.94	0	0	13	0	0	0	0	0	0	-45.31	-45.31
Inverter Transformer	MV3-10 T	368162	4907669	2	0	0	56.1	56.1	1	5953.12	3.25	0	86.49	0	1.95	0	0	13.05	0	0	0	0	0	0	-45.43	-45.43
Inverter Transformer	MV3-7 T	367951	4907754	2	0	0	56.1	56.1	1	5959.22	3.25	0	86.5	0	1.95	0	0	13.05	0	0	0	0	0	0	-45.45	-45.45
Inverter Transformer	MV3-14 T	368678	4907498	2	0	0	56.1	56.1	1	6007.7	3.25	0	86.57	0	1.97	0	0	13.11	0	0	0	0	0	0	-45.59	-45.59
Inverter Transformer	MV3-11 T	368340	4907662	2	0	0	56.1	56.1	1	6014.2	3.25	0	86.58	0	1.97	0	0	13.12	0	0	0	0	0	0	-45.61	-45.61
Inverter Transformer	MV3-6 T	368156	4907834	2	0	0	56.1	56.1	1	6104.8	3.25	0	86.71	0	2	0	0	13.23	0	0	0	0	0	0	-45.88	-45.88
Inverter Transformer	MV3-3 T	367944	4907927	2	0	0	56.1	56.1	1	6120.5	3.25	0	86.74	0	2	0	0	13.24	0	0	0	0	0	0	-45.92	-45.92
Inverter Transformer	MV3-9 T	368517	4907703	2	0	0	56.1	56.1	1	6123.12	3.25	0	86.74	0	2	0	0	13.25	0	0	0	0	0	0	-45.93	-45.93
Inverter Transformer	MV3-5 T	368335	4907843	2	0	0	56.1	56.1	1	6179.18	3.25	0	86.82	0	2.02	0	0	13.31	0	0	0	0	0	0	-46.09	-46.09
Inverter Transformer	MV3-8 T	368685	4907712	2	0	0	56.1	56.1	1	6202.71	3.25	0	86.85	0	2.03	0	0	13.34	0	0	0	0	0	0	-46.16	-46.16
Inverter Transformer	MV3-1 T	368150	4907976	2	0	0	56.1	56.1	1	6235.59	3.25	0	86.9	0	2.04	0	0	13.38	0	0	0	0	0	0	-46.26	-46.26
Inverter Transformer	MV3-4 T	368507	4907925	2	0	0	56.1	56.1	1	6321.83	3.25	0	87.02	0	2.06	0	0	13.48	0	0	0	0	0	0	-46.5	-46.5
Inverter Transformer	MV3-2 T	368677	4907928	2	0	0	56.1	56.1	1	6394.4	3.25	0	87.12	0	2.09	0	0	13.56	0	0	0	0	0	0	-46.7	-46.7
Inverter Transformer	MV6-3 T	370202	4907140	2	0	0	56.1	56.1	1	6551.54	3.25	0	87.33	0	2.13	0	0	13.74	0	0	0	0	0	0	-47.14	-47.14
Inverter Transformer	MV6-2 T	370091	4907339	2	0	0	56.1	56.1	1	6635.61	3.25	0	87.44	0	2.16	0	0	13.83	0	0	0	0	0	0	-47.37	-47.37
Inverter Transformer	MV4-15 T	369170	4908481	2	0	0	56.1	56.1	1	7106.95	3.25	0	88.03	0	2.29	0	0	14.34	0	0	0	0	0	0	-48.61	-48.61
Inverter Transformer	MV4-14 T	369182	4908507	2	0	0	56.1	56.1	1	7135.57	3.25	0	88.07	0	2.3	0	0	14.37	0	0	0	0	0	0	-48.68	-48.68
Inverter Transformer	MV4-13 T	369057	4908605	2	0	0	56.1	56.1	1	7168.75	3.25	0	88.11	0	2.3	0	0	14.41	0	0	0	0	0	0	-48.76	-48.76
Inverter Transformer	MV4-12 T	369049	4908803	2	0	0	56.1	56.1	1	7344.74	3.25	0	88.32	0	2.35	0	0	14.59	0	0	0	0	0	0	-49.21	-49.21
Inverter Transformer	MV4-11 T	369269	4908855	2	0	0	56.1	56.1	1	7486.02	3.25	0	88.49	0	2.39	0	0	14.74	0	0	0	0	0	0	-49.55	-49.55
Inverter Transformer	MV4-10 T	369307	4908858	2	0	0	56.1	56.1	1	7505.48	3.25	0	88.51	0	2.39	0	0	14.76	0	0	0	0	0	0	-49.6	-49.6
Inverter Transformer	MV4-7 T	369040	4909001	2	0	0	56.1	56.1	1	7521.41	3.25	0	88.53	0	2.4	0	0	14.78	0	0	0	0	0	0	-49.64	-49.64
Inverter Transformer	MV5-6 T	369987	4908507	2	0	0	56.1	56.1	1	7531.22	3.25	0	88.54	0	2.4	0	0	14.79	0	0	0	0	0	0	-49.66	-49.66
Inverter Transformer	MV4-8 T	369262	4909001	2	0	0	56.1	56.1	1	7614.43	3.25	0	88.63	0	2.42	0	0	14.87	0	0	0	0	0	0	-49.86	-49.86
Inverter Transformer	MV4-9 T	369284	4909001	2	0	0	56.1	56.1	1	7623.93	3.25	0	88.64	0	2.42	0	0	14.88	0	0	0	0	0	0	-49.89	-49.89
Inverter Transformer	MV4-4 T	369033	4909199	2	0	0	56.1	56.1	1	7699.93	3.25	0	88.73	0	2.44	0	0	14.96	0	0	0	0	0	0	-50.07	-50.07
Inverter Transformer	MV5-5 T	370021	4908690	2	0	0	56.1	56.1	1	7704.57	3.25	0	88.73	0	2.44	0	0	14.96	0	0	0	0	0	0	-50.08	-50.08
Inverter Transformer	MV4-6 T	369249	4909192	2	0	0	56.1	56.1	1	7781.74	3.25	0	88.82	0	2.46	0	0	15.04	0	0	0	0	0	0	-50.26	-50.26
Inverter Transformer	MV4-5 T	369283	4909199	2	0	0	56.1	56.1	1	7802.43	3.25	0	88.84	0	2.46	0	0	15.06	0	0	0	0	0	0	-50.31	-50.31
Inverter Transformer	MV5-2 T	370011	4908853	2	0	0	56.1	56.1	1	7838.67	3.25	0	88.88	0	2.47	0	0	15.1	0	0	0	0	0	0	-50.4	-50.4
Inverter Transformer	MV4-1 T	369017	4909397	2	0	0	56.1	56.1	1	7875.91	3.25	0	88.93	0	2.48	0	0	15.13	0	0	0	0	0	0	-50.48	-50.48
Inverter Transformer	MV5-4 T	370330	4908707	2	0	0	56.1	56.1	1	7885.2	3.25	0	88.94	0	2.48	0	0	15.14	0	0	0	0	0	0	-50.5	-50.5
Inverter Transformer	MV5-3 T	370237	4908851	2	0	0	56.1	56.1	1	7955.55	3.25	0	89.01	0	2.5	0	0	15.21	0	0	0	0	0	0	-50.67	-50.67
Inverter Transformer	MV4-3 T	369234	4909397	2	0	0	56.1	56.1	1	7962.1	3.25	0	89.02	0	2.5	0	0	15.22	0	0	0	0	0	0	-50.68	-50.68
Inverter Transformer	MV4-2 T	369267	4909397	2	0	0	56.1	56.1	1	7975.64	3.25	0	89.04	0	2.5	0	0	15.23	0	0	0	0	0	0	-50.71	-50.71
Inverter Transformer	MV5-1 T	370015	4909142	2	0	0	56.1	56.1	1	8089.89	3.25	0	89.16	0	2.53	0	0	15.34	0	0	0	0	0	0	-50.98	-50.98
Line Reactor	NGR	369421	4908787.5	5	0	0	45.4	45.4	1	7494	5.25	0	88.49	0	3.21	1.37	0.1	3.06	0	0	0	0	0	0	-50.78	-50.78
Limit. Valu 0	0																								
Level D/N: 23.1969	23.1969																								

Receiver: Existing Noise Receptor
ID: G-53
X: 365781.2
Y: 4903713
Z: 4.5
Ground: 0

ISO	Description	ID	X	Y	Z	Ground	ReflOrd	LxT	LxN	L/A	Dist.	hm	Freq	Adiv	K0b	Agr	Abar	z	Aatm	Afol	Ahous	Cmet	CmetN	Dc	RL	LtotT	LtotN
	Inverter	MV1-15	365315	4904994	2	0	0	100.3	100.3	1	1363.2	3.25	0	73.69	0	-0.09	0	0	11.97	0	0	0	0	0	0	14.73	14.73
	Sol_Luce Substation	S_Substation	369426	4908792	3.5	0	0	112.1	112.1	1	6251.46	5.25	0	86.92	0	1.22	2.59	0.29	10.01	0	0	0	0	0	0	11.34	11.34
	Inverter	MV1-12	365038	4905386	2	0	0	100.3	100.3	1	1830.65	3.25	0	76.25	0	0.08	0	0	13.1	0	0	0	0	0	0	10.88	10.88
	Inverter	MV1-11	364655	4905414	2	0	0	100.3	100.3	1	2040.03	3.25	0	77.19	0	0.14	0	0	13.55	0	0	0	0	0	0	9.43	9.43
	Inverter	MV1-14	365163	4905049	2	0	0	97.3	97.3	1	1472.1	3.25	0	74.36	0	-0.04	0	0	12.25	0	0	0	0	0	0	10.74	10.74
	Inverter	MV1-8	364788	4905647	2	0	0	100.3	100.3	1	2174.12	3.25	0	77.75	0	0.18	0	0	13.82	0	0	0	0	0	0	8.57	8.57
	Inverter	MV1-9	364561	4905646	2	0	0	100.3	100.3	1	2285.91	3.25	0	78.18	0	0.21	0	0	14.04	0	0	0	0	0	0	7.88	7.88
	Inverter	MV1-4	364815	4905918	2	0	0	100.3	100.3	1	2407.4	3.25	0	78.63	0	0.24	0	0	14.28	0	0	0	0	0	0	7.16	7.16
	Inverter	MV1-5	364671	4905892	2	0	0	100.3	100.3	1	2445.52	3.25	0	78.77	0	0.24	0	0	14.35	0	0	0	0	0	0	6.95	6.95
	Inverter	MV1-6	364477	4905835	2	0	0	100.3	100.3	1	2490.75	3.25	0	78.93	0	0.25	0	0	14.44	0	0	0	0	0	0	6.69	6.69
	Inverter	MV1-2	364753	4906063	2	0	0	100.3	100.3	1	2565.09	3.25	0	79.18	0	0.27	0	0	14.58	0	0	0	0	0	0	6.28	6.28
	Inverter	MV1-13	364731	4905241	2	0	0	97.3	97.3	1	1854.11	3.25	0	76.36	0	0.09	0	0	13.15	0	0	0	0	0	0	7.71	7.71
	Gardiner Substation	G_Sub	366586.3	4903349.9	2.5	0	0	90.8	90.8	1	883.19	4.25	0	69.92	0	0.5	3.86	0.3	2.28	0	0	0	0	0	0	14.21	14.21
	Inverter	MV1-1	364715	4906166	2	0	0	100.3	100.3	1	2674.7	3.25	0	79.55	0	0.3	0	0	14.79	0	0	0	0	0	0	5.69	5.69
	Inverter	MV1-10	365004	4905564	2	0	0	97.3	97.3	1	2007.55	3.25	0	77.05	0	0.13	0	0	13.48	0	0	0	0	0	0	6.65	6.65

Inverter	MV2-4	365586	4906624	2	0	0	100.3	100.3	1	2917.54	3.25	0	80.3	0	0.35	0	0	15.23	0	0	0	0	0	0	4.44	4.44
Inverter	MV2-3	365820	4906641	2	0	0	100.3	100.3	1	2928.26	3.25	0	80.33	0	0.35	0	0	15.24	0	0	0	0	0	0	4.39	4.39
Inverter	MV1-7	364925	4905782	2	0	0	97.3	97.3	1	2239.16	3.25	0	78	0	0.19	0	0	13.95	0	0	0	0	0	0	5.17	5.17
Inverters	G_Inv1	366526.4	4903225.8	2	0	0	87.7	87.7	1	890.33	3.25	0	69.99	0	2.43	0	0	1.29	0	0	0	0	0	0	13.95	13.95
Inverter	MV3-18	367752	4907412	2	0	0	100.3	100.3	1	4191.26	3.25	0	83.45	0	0.55	0	0	17.35	0	0	0	0	0	0	-1.04	-1.04
Inverter	MV3-12	367668	4907594	2	0	0	100.3	100.3	1	4315.34	3.25	0	83.7	0	0.57	0	0	17.55	0	0	0	0	0	0	-1.5	-1.5
Inverters	G_Inv2	366676.9	4903239.1	2	0	0	87.7	87.7	1	1013.34	3.25	0	71.12	0	2.45	0	0	1.44	0	0	0	0	0	0	12.65	12.65
Inverters	G_Inv3	366583.7	4903091.4	2	0	0	87.7	87.7	1	1015.09	3.25	0	71.13	0	2.45	0	0	1.45	0	0	0	0	0	0	12.63	12.63
Inverter	MV2-1	365842	4906816	2	0	0	97.3	97.3	1	3103.6	3.25	0	80.84	0	0.38	0	0	15.55	0	0	0	0	0	0	0.54	0.54
Inverter	MV3-21	368478	4907206	2	0	0	100.3	100.3	1	4412.91	3.25	0	83.89	0	0.58	0	0	17.7	0	0	0	0	0	0	-1.86	-1.86
Inverter	MV3-13	367963	4907577	2	0	0	100.3	100.3	1	4437.43	3.25	0	83.94	0	0.58	0	0	17.73	0	0	0	0	0	0	-1.95	-1.95
Inverter	MV3-19	368357	4907347	2	0	0	100.3	100.3	1	4454.29	3.25	0	83.98	0	0.59	0	0	17.76	0	0	0	0	0	0	-2.01	-2.01
Inverter	MV3-17	368178	4907472	2	0	0	100.3	100.3	1	4458.11	3.25	0	83.98	0	0.59	0	0	17.77	0	0	0	0	0	0	-2.02	-2.02
Inverter	MV3-15	368357	4907477	2	0	0	100.3	100.3	1	4560.97	3.25	0	84.18	0	0.6	0	0	17.92	0	0	0	0	0	0	-2.39	-2.39
Inverter	MV3-7	367945	4907754	2	0	0	100.3	100.3	1	4583.85	3.25	0	84.22	0	0.6	0	0	17.96	0	0	0	0	0	0	-2.47	-2.47
Inverter	MV3-10	368167	4907669	2	0	0	100.3	100.3	1	4619.74	3.25	0	84.29	0	0.6	0	0	18.01	0	0	0	0	0	0	-2.6	-2.6
Inverter	MV3-20	368689	4907317	2	0	0	100.3	100.3	1	4630.78	3.25	0	84.31	0	0.61	0	0	18.03	0	0	0	0	0	0	-2.64	-2.64
Inverter	MV3-16	368514	4907475	2	0	0	100.3	100.3	1	4649.82	3.25	0	84.35	0	0.61	0	0	18.06	0	0	0	0	0	0	-2.7	-2.7
Inverter	MV3-11	368346	4907662	2	0	0	100.3	100.3	1	4708.8	3.25	0	84.46	0	0.61	0	0	18.15	0	0	0	0	0	0	-2.91	-2.91
Inverter	MV3-3	367939	4907927	2	0	0	100.3	100.3	1	4734.33	3.25	0	84.51	0	0.62	0	0	18.19	0	0	0	0	0	0	-3	-3
Inverter	MV3-6	368162	4907834	2	0	0	100.3	100.3	1	4759.29	3.25	0	84.55	0	0.62	0	0	18.22	0	0	0	0	0	0	-3.08	-3.08
Inverter	MV3-14	368684	4907498	2	0	0	100.3	100.3	1	4769.96	3.25	0	84.57	0	0.62	0	0	18.24	0	0	0	0	0	0	-3.12	-3.12
Inverter	MV3-9	368512	4907703	2	0	0	100.3	100.3	1	4835.02	3.25	0	84.69	0	0.63	0	0	18.34	0	0	0	0	0	0	-3.34	-3.34
Inverters	G_Inv4	366732.8	4903105	2	0	0	87.7	87.7	1	1129.25	3.25	0	72.06	0	2.47	0	0	1.59	0	0	0	0	0	0	11.55	11.55
Inverters	G_Inv5	366638.5	4902958.1	2	0	0	87.7	87.7	1	1142.3	3.25	0	72.16	0	2.47	0	0	1.61	0	0	0	0	0	0	11.43	11.43
Inverter	MV3-8	368680	4907712	2	0	0	100.3	100.3	1	4939.13	3.25	0	84.87	0	0.64	0	0	18.49	0	0	0	0	0	0	-3.69	-3.69
Inverters	G_Inv6	366788.5	4902972	2	0	0	87.7	87.7	1	1250.5	3.25	0	72.94	0	2.49	0	0	1.74	0	0	0	0	0	0	10.49	10.49
Inverters	G_Inv7	366694.6	4902824.7	2	0	0	87.7	87.7	1	1274.12	3.25	0	73.1	0	2.49	0	0	1.77	0	0	0	0	0	0	10.3	10.3
Inverter	MV6-3	370207	4907140	2	0	0	100.3	100.3	1	5597.5	3.25	0	85.96	0	0.69	0	0	19.44	0	0	0	0	0	0	-5.77	-5.77
Inverter	MV6-2	370085	4907339	2	0	0	100.3	100.3	1	5627.66	3.25	0	86.01	0	0.69	0	0	19.48	0	0	0	0	0	0	-5.86	-5.86
Inverters	G_Inv8	366844.5	4902838.5	2	0	0	87.7	87.7	1	1376.72	3.25	0	73.78	0	2.5	0	0	1.89	0	0	0	0	0	0	9.49	9.49
Inverters	G_Inv9	366750.9	4902691.8	2	0	0	87.7	87.7	1	1408.25	3.25	0	73.97	0	2.51	0	0	1.93	0	0	0	0	0	0	9.25	9.25
Inverter	MV4-7	369035	4909001	2	0	0	100.3	100.3	1	6208.88	3.25	0	86.86	0	0.71	0	0	20.27	0	0	0	0	0	0	-7.53	-7.53
Inverter	MV4-11	369264	4908855	2	0	0	100.3	100.3	1	6210.48	3.25	0	86.86	0	0.71	0	0	20.28	0	0	0	0	0	0	-7.54	-7.54
Inverter	MV4-10	369312	4908858	2	0	0	100.3	100.3	1	6240	3.25	0	86.9	0	0.71	0	0	20.32	0	0	0	0	0	0	-7.62	-7.62
Inverter	MV4-8	369256	4909001	2	0	0	100.3	100.3	1	6327.49	3.25	0	87.02	0	0.71	0	0	20.43	0	0	0	0	0	0	-7.86	-7.86
Inverter	MV4-9	369289	4909001	2	0	0	100.3	100.3	1	6345.68	3.25	0	87.05	0	0.71	0	0	20.46	0	0	0	0	0	0	-7.91	-7.91
Inverter	MV4-4	369027	4909199	2	0	0	100.3	100.3	1	6374.28	3.25	0	87.09	0	0.71	0	0	20.49	0	0	0	0	0	0	-7.98	-7.98
Inverters	G_Inv10	366900.7	4902704.8	2	0	0	87.7	87.7	1	1506.57	3.25	0	74.56	0	2.52	0	0	2.05	0	0	0	0	0	0	8.53	8.53
Inverter	MV4-6	369243	4909192	2	0	0	100.3	100.3	1	6481.01	3.25	0	87.23	0	0.71	0	0	20.63	0	0	0	0	0	0	-8.27	-8.27
Inverter	MV4-5	369289	4909199	2	0	0	100.3	100.3	1	6511.59	3.25	0	87.27	0	0.71	0	0	20.67	0	0	0	0	0	0	-8.35	-8.35
Inverter	MV5-5	370015	4908690	2	0	0	100.3	100.3	1	6534.19	3.25	0	87.3	0	0.71	0	0	20.7	0	0	0	0	0	0	-8.41	-8.41
Inverter	MV4-1	369011	4909397	2	0	0	100.3	100.3	1	6537.54	3.25	0	87.31	0	0.71	0	0	20.71	0	0	0	0	0	0	-8.42	-8.42
Inverter	MV4-3	369229	4909397	2	0	0	100.3	100.3	1	6647.95	3.25	0	87.45	0	0.71	0	0	20.85	0	0	0	0	0	0	-8.71	-8.71
Inverter	MV5-2	370006	4908853	2	0	0	100.3	100.3	1	6653.46	3.25	0	87.46	0	0.71	0	0	20.86	0	0	0	0	0	0	-8.72	-8.72
Inverter	MV4-2	369272	4909397	2	0	0	100.3	100.3	1	6670.35	3.25	0	87.48	0	0.71	0	0	20.88	0	0	0	0	0	0	-8.77	-8.77
Inverter	MV5-4	370324	4908707	2	0	0	100.3	100.3	1	6751.08	3.25	0	87.59	0	0.71	0	0	20.98	0	0	0	0	0	0	-8.97	-8.97
Inverter	MV5-3	370231	4908851	2	0	0	100.3	100.3	1	6797.04	3.25	0	87.65	0	0.71	0	0	21.04	0	0	0	0	0	0	-9.09	-9.09
Inverter	MV5-1	370020	4909142	2	0	0	100.3	100.3	1	6887.78	3.25	0	87.76	0	0.71	0	0	21.16	0	0	0	0	0	0	-9.32	-9.32
Inverter	MV6-1	370235	4907364	2	0	0	97.3	97.3	1	5759.01	3.25	0	86.21	0	0.69	0	0	19.66	0	0	0	0	0	0	-9.25	-9.25
DSTATCOM - 10 MVAR #2	DSAT2	369403	4908757	2.5	0	0	96.6	96.6	1	6209.62	3.5	0	86.86	0	3.79	0	0	3.94	0	0	0	0	0	0	2.04	2.04
DSTATCOM - 10 MVAR #1	DSAT1	369437	4908757	2.5	0	0	96.6	96.6	1	6229.51	3.5	0	86.89	0	3.79	0	0	3.95	0	0	0	0	0	0	2	2
Inverter	MV1-3	364440	4906039	2	0	0	89.1	89.1	1	2684.98	3.25	0	79.58	0	1.07	0	0	9.13	0	0	0	0	0	0	-0.73	-0.73
Inverter	MV2-2	365977	4906654	2	0	0	89.1	89.1	1	2947.51	3.25	0	80.39	0	1.13	0	0	9.54	0	0	0	0	0	0	-2	-2
SubstationTransformer	W_ST	369711.17	4906112.3	2.5	0	0	92	92	1	4604.47	4.25	0	84.26	0	1.53	2.43	0.25	8.14	0	0	0	0	0	0	-4.39	-4.39
Westbrook Inverter Enclosur	W_INV3	369508	4906164	2	0	0	89.1	89.1	1	4460.54	3.25	0	83.99	0	1.51	0	0	11.73	0	0	0	0	0	0	-8.17	-8.17
Inverter	MV3-22	368656	4907142	2	0	0	89.1	89.1	1	4474.65	3.25	0	84.02	0	1.51	0	0	11.75	0	0	0	0	0	0	-8.22	-8.22
Westbrook Inverter Enclosur	W_INV2	369374	4906388	2	0	0	89.1	89.1	1	4479.27	3.25	0	84.02	0	1.51	0	0	11.76	0	0	0	0	0	0	-8.23	-8.23
Westbrook Inverter Enclosur	W_INV4	369673	4906164	2	0	0	89.1	89.1	1	4599.29	3.25	0	84.25	0	1.54	0	0	11.92	0	0	0	0	0	0	-8.66	-8.66
Westbrook Inverter Enclosur	W_INV7	369780	4906417	2	0	0	89.1	89.1	1	4827.22	3.25	0	84.67	0	1.6	0	0	12.23	0	0	0	0	0	0	-9.44	-9.44
Inverter	MV3-5	368340	4907843	2	0	0	89.1	89.1	1	4858.43	3.25	0	84.73	0	1.6	0	0	12.27	0	0	0	0	0	0	-9.55	-9.55
Westbrook Inverter Enclosur	W_INV5	369719	4906574	2	0	0	89.1	89.1	1	4867.4	3.25	0	84.75	0	1.61	0	0	12.29	0	0	0	0	0	0	-9.58	-9.58
Inverter	MV3-1	368156	4907976	2	0	0	89.1	89.1	1	4879.84	3.25	0	84.77	0	1.61	0	0	12.3	0	0	0	0	0	0	-9.62	-9.62
Westbrook Inverter Enclosur	W_INV6	369875	4906578	2	0	0	89.1	89.1	1	4996.74	3.25	0	84.97	0	1.64	0	0	12.46	0	0	0	0	0	0	-10.01	-10.01
Inverter	MV3-4	368502	4907925	2	0	0	89.1	89.1	1	5014.35	3.25	0	85	0	1.64	0	0	12.48	0	0	0	0	0	0	-10.07	-10.07
Inverter	MV3-2	368671	4907928	2	0	0	89.1	89.1	1	5110.5	3.25	0	85.17	0	1.67	0	0	12.61	0	0	0	0	0	0	-10.39	-10.39
Fixed Reactor Bank 1	FRB1	369378	4908755	6	0	0	89.8	89.8	1	6193.44	5.25	0	86.84	0	-0.39	0	0	9.95	0	0	0	0	0	0	-6.62	-6.62
Fixed Reactor Bank 2	FRB2	369464	4908755	6	0	0	89.8	89.8	1	6243.78	5.25	0	86.91	0	-0.38	0	0	10	0	0	0	0	0	0	-6.75	-6.75
Inverter	MV4-15	369176	4908481	2	0	0	89.1	89.1	1	5853.08	3.25	0	86.35	0	1.85	0	0	13.58	0	0	0	0	0	0	-12.72	-12.72
Inverter	MV4-14	369176	4908507	2	0	0	89.1	89.1	1	5874.28	3.25	0	86.38	0	1.86	0	0	13.6	0	0	0	0	0	0	-12.78	-12.78
Inverter	MV4-13	369051	4908605	2	0	0	89.1	89.1	1	5884.15	3.25	0	86.39	0	1.86	0	0	13.62	0	0	0	0	0	0	-12.81	-12.81
Inverter	MV4-12	369043	4908803	2	0	0	89.1	89.1	1	6045.45	3.25	0	86.63	0	1.9	0	0	13.82	0	0	0	0	0	0	-13.29	-13.29
Inverter	MV5-6	369982	4908507	2	0	0	89.1	89.1	1	6374.1	3.25	0	87.09	0	1.98	0	0	14.23	0	0	0	0	0	0	-14.24	-14.24
Westbrook Inverter Enclosur	W_INV1	369409	4906578	2	0	0	86.1	86.1	1	4622.68	3.25	0	84.3	0	1.55	0	0	11.95	0	0	0	0	0	0	-11.74	-11.74

Inverter	MV6-4	370250	4906966	2	0	0	86.1	86.1	1	5527.4	3.25	0	85.85	0	1.77	0	0	13.16	0	0	0	0	0	0	-14.72	-14.72
Inverter Transformer	MV1-14 T	365157	4905049	2	0	0	69.4	69.4	1	1474.63	3.25	0	74.37	0	1.96	0	0	4.41	0	0	0	0	0	0	-11.39	-11.39
Westbrook Inverter Transfor	W_INVTR1	369403	4906578	2	0	0	78.2	78.2	1	4617.97	3.25	0	84.29	0	-3.1	0	0	2.28	0	0	0	0	0	0	-5.23	-5.23
Westbrook Inverter Transfor	W_INVTR3	369514	4906164	2	0	0	77.3	77.3	1	4465.56	3.25	0	84	0	-3.07	0	0	2.23	0	0	0	0	0	0	-5.82	-5.82
Westbrook Inverter Transfor	W_INVTR2	369368	4906388	2	0	0	77.3	77.3	1	4474.46	3.25	0	84.01	0	-3.07	0	0	2.23	0	0	0	0	0	0	-5.83	-5.83
Westbrook Inverter Transfor	W_INVTR4	369679	4906164	2	0	0	77.3	77.3	1	4604.37	3.25	0	84.26	0	-3.1	0	0	2.28	0	0	0	0	0	0	-6.1	-6.1
Inverter Transformer	MV1-13 T	364725	4905241	2	0	0	69.4	69.4	1	1857.51	3.25	0	76.38	0	2.12	0	0	4.82	0	0	0	0	0	0	-13.97	-13.97
Westbrook Inverter Transfor	W_INVTR7	369786	4906417	2	0	0	77.3	77.3	1	4832.19	3.25	0	84.68	0	-3.14	0	0	2.36	0	0	0	0	0	0	-6.55	-6.55
Westbrook Inverter Transfor	W_INVTR5	369725	4906574	2	0	0	77.3	77.3	1	4872.26	3.25	0	84.75	0	-3.15	0	0	2.37	0	0	0	0	0	0	-6.63	-6.63
Westbrook Inverter Transfor	W_INVTR6	369881	4906578	2	0	0	77.3	77.3	1	5001.66	3.25	0	84.98	0	-3.18	0	0	2.41	0	0	0	0	0	0	-6.88	-6.88
Inverter Transformer	MV1-10 T	365010	4905564	2	0	0	69.4	69.4	1	2005.23	3.25	0	77.04	0	2.18	0	0	4.97	0	0	0	0	0	0	-14.84	-14.84
Inverter Transformer	MV1-7 T	364919	4905782	2	0	0	69.4	69.4	1	2241.46	3.25	0	78.01	0	2.26	0	0	5.2	0	0	0	0	0	0	-16.12	-16.12
Inverter Transformer	MV2-1 T	365836	4906816	2	0	0	69.4	69.4	1	3103.48	3.25	0	80.84	0	2.54	0	0	5.97	0	0	0	0	0	0	-19.99	-19.99
Inverter Transformer	MV6-4 T	370244	4906966	2	0	0	69.4	69.4	1	5522.55	3.25	0	85.84	0	3.11	0	0	7.72	0	0	0	0	0	0	-27.32	-27.32
Inverter Transformer	MV6-1 T	370230	4907364	2	0	0	69.4	69.4	1	5755.14	3.25	0	86.2	0	3.15	0	0	7.87	0	0	0	0	0	0	-27.87	-27.87
Inverter Transformer	MV1-15 T	365309	4904994	2	0	0	56.1	56.1	1	1365.26	3.25	0	73.7	0	0.15	0	0	5.73	0	0	0	0	0	0	-23.52	-23.52
Inverter Transformer	MV1-12 T	365044	4905386	2	0	0	56.1	56.1	1	1828.22	3.25	0	76.24	0	0.33	0	0	6.7	0	0	0	0	0	0	-27.22	-27.22
Inverter Transformer	MV1-11 T	364649	4905414	2	0	0	56.1	56.1	1	2043.35	3.25	0	77.21	0	0.42	0	0	7.13	0	0	0	0	0	0	-28.7	-28.7
Inverter Transformer	MV1-8 T	364782	4905647	2	0	0	56.1	56.1	1	2176.87	3.25	0	77.76	0	0.48	0	0	7.39	0	0	0	0	0	0	-29.56	-29.56
Inverter Transformer	MV1-9 T	364555	4905646	2	0	0	56.1	56.1	1	2289.12	3.25	0	78.19	0	0.53	0	0	7.6	0	0	0	0	0	0	-30.26	-30.26
Inverter Transformer	MV1-4 T	364821	4905918	2	0	0	56.1	56.1	1	2405	3.25	0	78.62	0	0.58	0	0	7.82	0	0	0	0	0	0	-30.95	-30.95
Inverter Transformer	MV1-5 T	364676	4905892	2	0	0	56.1	56.1	1	2443.26	3.25	0	78.76	0	0.59	0	0	7.89	0	0	0	0	0	0	-31.18	-31.18
Inverter Transformer	MV1-6 T	364482	4905835	2	0	0	56.1	56.1	1	2488.13	3.25	0	78.92	0	0.61	0	0	7.97	0	0	0	0	0	0	-31.44	-31.44
Inverter Transformer	MV1-2 T	364759	4906063	2	0	0	56.1	56.1	1	2562.69	3.25	0	79.17	0	0.64	0	0	8.1	0	0	0	0	0	0	-31.86	-31.86
Inverter Transformer	MV1-1 T	364721	4906166	2	0	0	56.1	56.1	1	2672.31	3.25	0	79.54	0	0.69	0	0	8.3	0	0	0	0	0	0	-32.47	-32.47
Inverter Transformer	MV1-3 T	364435	4906039	2	0	0	56.1	56.1	1	2687.48	3.25	0	79.59	0	0.7	0	0	8.33	0	0	0	0	0	0	-32.55	-32.55
Inverter Transformer	MV2-4 T	365590	4906628	2	0	0	56.1	56.1	1	2921.26	3.25	0	80.31	0	0.8	0	0	8.73	0	0	0	0	0	0	-33.78	-33.78
Inverter Transformer	MV2-3 T	365814	4906641	2	0	0	56.1	56.1	1	2928.18	3.25	0	80.33	0	0.8	0	0	8.75	0	0	0	0	0	0	-33.82	-33.82
Inverter Transformer	MV2-2 T	365982	4906654	2	0	0	56.1	56.1	1	2947.85	3.25	0	80.39	0	0.81	0	0	8.78	0	0	0	0	0	0	-33.92	-33.92
Inverter Transformer	MV3-18 T	367757	4907412	2	0	0	56.1	56.1	1	4193.61	3.25	0	83.45	0	1.32	0	0	10.74	0	0	0	0	0	0	-39.45	-39.45
Inverter Transformer	MV3-12 T	367674	4907594	2	0	0	56.1	56.1	1	4317.97	3.25	0	83.71	0	1.37	0	0	10.92	0	0	0	0	0	0	-39.93	-39.93
Inverter Transformer	MV3-21 T	368484	4907206	2	0	0	56.1	56.1	1	4416.58	3.25	0	83.9	0	1.41	0	0	11.06	0	0	0	0	0	0	-40.31	-40.31
Inverter Transformer	MV3-13 T	367958	4907577	2	0	0	56.1	56.1	1	4434.97	3.25	0	83.94	0	1.41	0	0	11.08	0	0	0	0	0	0	-40.38	-40.38
Inverter Transformer	MV3-19 T	368352	4907347	2	0	0	56.1	56.1	1	4451.4	3.25	0	83.97	0	1.42	0	0	11.11	0	0	0	0	0	0	-40.44	-40.44
Inverter Transformer	MV3-17 T	368183	4907472	2	0	0	56.1	56.1	1	4460.8	3.25	0	83.99	0	1.42	0	0	11.12	0	0	0	0	0	0	-40.47	-40.47
Inverter Transformer	MV3-22 T	368661	4907142	2	0	0	56.1	56.1	1	4477.87	3.25	0	84.02	0	1.43	0	0	11.14	0	0	0	0	0	0	-40.54	-40.54
Inverter Transformer	MV3-15 T	368351	4907477	2	0	0	56.1	56.1	1	4557.58	3.25	0	84.17	0	1.46	0	0	11.26	0	0	0	0	0	0	-40.83	-40.83
Inverter Transformer	MV3-7 T	367951	4907754	2	0	0	56.1	56.1	1	4586.69	3.25	0	84.23	0	1.47	0	0	11.3	0	0	0	0	0	0	-40.94	-40.94
Inverter Transformer	MV3-10 T	368162	4907669	2	0	0	56.1	56.1	1	4617.16	3.25	0	84.29	0	1.48	0	0	11.34	0	0	0	0	0	0	-41.05	-41.05
Inverter Transformer	MV3-20 T	368683	4907317	2	0	0	56.1	56.1	1	4627.01	3.25	0	84.31	0	1.49	0	0	11.35	0	0	0	0	0	0	-41.09	-41.09
Inverter Transformer	MV3-16 T	368509	4907475	2	0	0	56.1	56.1	1	4646.89	3.25	0	84.34	0	1.5	0	0	11.38	0	0	0	0	0	0	-41.16	-41.16
Inverter Transformer	MV3-11 T	368340	4907662	2	0	0	56.1	56.1	1	4705.54	3.25	0	84.45	0	1.52	0	0	11.46	0	0	0	0	0	0	-41.37	-41.37
Inverter Transformer	MV3-3 T	367944	4907927	2	0	0	56.1	56.1	1	4736.61	3.25	0	84.51	0	1.53	0	0	11.5	0	0	0	0	0	0	-41.48	-41.48
Inverter Transformer	MV3-6 T	368156	4907834	2	0	0	56.1	56.1	1	4756.29	3.25	0	84.55	0	1.54	0	0	11.53	0	0	0	0	0	0	-41.55	-41.55
Inverter Transformer	MV3-14 T	368678	4907498	2	0	0	56.1	56.1	1	4766.31	3.25	0	84.56	0	1.54	0	0	11.54	0	0	0	0	0	0	-41.59	-41.59
Inverter Transformer	MV3-9 T	368517	4907703	2	0	0	56.1	56.1	1	4837.84	3.25	0	84.69	0	1.57	0	0	11.64	0	0	0	0	0	0	-41.84	-41.84
Inverter Transformer	MV3-5 T	368335	4907843	2	0	0	56.1	56.1	1	4855.8	3.25	0	84.73	0	1.57	0	0	11.66	0	0	0	0	0	0	-41.9	-41.9
Inverter Transformer	MV3-1 T	368150	4907976	2	0	0	56.1	56.1	1	4876.92	3.25	0	84.76	0	1.58	0	0	11.69	0	0	0	0	0	0	-41.98	-41.98
Inverter Transformer	MV3-8 T	368685	4907712	2	0	0	56.1	56.1	1	4942.07	3.25	0	84.88	0	1.6	0	0	11.78	0	0	0	0	0	0	-42.2	-42.2
Inverter Transformer	MV3-4 T	368507	4907925	2	0	0	56.1	56.1	1	5017.06	3.25	0	85.01	0	1.63	0	0	11.88	0	0	0	0	0	0	-42.46	-42.46
Inverter Transformer	MV3-2 T	368677	4907928	2	0	0	56.1	56.1	1	5113.89	3.25	0	85.18	0	1.67	0	0	12	0	0	0	0	0	0	-42.79	-42.79
Inverter Transformer	MV6-3 T	370202	4907140	2	0	0	56.1	56.1	1	5593.55	3.25	0	85.95	0	1.83	0	0	12.61	0	0	0	0	0	0	-44.34	-44.34
Inverter Transformer	MV6-2 T	370091	4907339	2	0	0	56.1	56.1	1	5632.25	3.25	0	86.01	0	1.85	0	0	12.66	0	0	0	0	0	0	-44.46	-44.46
Inverter Transformer	MV4-15 T	369170	4908481	2	0	0	56.1	56.1	1	5849.6	3.25	0	86.34	0	1.92	0	0	12.92	0	0	0	0	0	0	-45.12	-45.12
Inverter Transformer	MV4-14 T	369182	4908507	2	0	0	56.1	56.1	1	5877.74	3.25	0	86.38	0	1.93	0	0	12.96	0	0	0	0	0	0	-45.21	-45.21
Inverter Transformer	MV4-13 T	369057	4908605	2	0	0	56.1	56.1	1	5887.49	3.25	0	86.4	0	1.93	0	0	12.97	0	0	0	0	0	0	-45.24	-45.24
Inverter Transformer	MV4-12 T	369049	4908803	2	0	0	56.1	56.1	1	6048.69	3.25	0	86.63	0	1.98	0	0	13.16	0	0	0	0	0	0	-45.72	-45.72
Inverter Transformer	MV4-7 T	369040	4909001	2	0	0	56.1	56.1	1	6211.5	3.25	0	86.86	0	2.03	0	0	13.35	0	0	0	0	0	0	-46.19	-46.19
Inverter Transformer	MV4-11 T	369269	4908855	2	0	0	56.1	56.1	1	6213.29	3.25	0	86.87	0	2.03	0	0	13.35	0	0	0	0	0	0	-46.19	-46.19
Inverter Transformer	MV4-10 T	369307	4908858	2	0	0	56.1	56.1	1	6237.17	3.25	0	86.9	0	2.04	0	0	13.38	0	0	0	0	0	0	-46.26	-46.26
Inverter Transformer	MV4-8 T	369262	4909001	2	0	0	56.1	56.1	1	6330.79	3.25	0	87.03	0	2.07	0	0	13.49	0	0	0	0	0	0	-46.53	-46.53
Inverter Transformer	MV4-9 T	369284	4909001	2	0	0	56.1	56.1	1	6342.91	3.25	0	87.05	0	2.07	0	0	13.5	0	0	0	0	0	0	-46.56	-46.56
Inverter Transformer	MV4-4 T	369033	4909199	2	0	0	56.1	56.1	1	6377.34	3.25	0	87.09	0	2.08	0	0	13.54	0	0	0	0	0	0	-46.66	-46.66
Inverter Transformer	MV5-6 T	369987	4908507	2	0	0	56.1	56.1	1	6377.4	3.25	0	87.09	0	2.08	0	0	13.54	0	0	0	0	0	0	-46.66	-46.66
Inverter Transformer	MV4-6 T	369249	4909192	2	0	0	56.1	56.1	1	6484.22	3.25	0	87.24	0	2.11	0	0	13.66	0	0	0	0	0	0	-46.95	-46.95
Inverter Transformer	MV4-5 T	369283	4909199	2	0	0	56.1	56.1	1	6508.36	3.25	0	87.27	0	2.12	0	0	13.69	0	0	0	0	0	0	-47.02	-47.02
Inverter Transformer	MV5-5 T	370021	4908690	2	0	0	56.1	56.1	1	6538.08	3.25	0	87.31	0	2.13	0	0	13.72	0	0	0	0	0	0	-47.1	-47.1
Inverter Transformer	MV4-1 T	369017	4909397	2	0	0	56.1	56.1	1	6540.51	3.25	0	87.31	0	2.13	0	0	13.73	0	0	0	0	0	0	-47.11	-47.11
Inverter Transformer	MV4-3 T	369234	4909397	2	0	0	56.1	56.1	1	6650.54	3.25	0	87.46	0	2.16	0	0	13.85	0	0	0	0	0	0	-47.41	-47.41
Inverter Transformer	MV5-2 T	370011	4908853	2	0	0	56.1	56.1	1	6656.64	3.25	0	87.47	0	2.16	0	0	13.86	0	0	0	0	0	0	-47.43	-47.43
Inverter Transformer	MV4-2 T	369267	4909397	2	0	0	56.1	56.1	1	6667.73	3.25	0	87.48	0	2.17	0	0	13.87	0	0	0	0	0	0	-47.45	-47.45
Inverter Transformer	MV5-4 T	370330	4908707	2	0	0	56.1	56.1	1	6755.12	3.25	0	87.59	0	2.19	0	0	13.96	0	0	0	0	0	0	-47.69	-47.69
Inverter Transformer	MV5-3 T	370237	4908851	2	0	0	56.1	56.1	1	6800.97	3.25	0	87.65	0	2.2	0	0	14.01	0	0	0	0	0	0	-47.81	-47.81
Inverter Transformer	MV5-1 T	370015	4909142	2	0	0	56.1	56.1	1	6884.7	3.25	0	87.76	0	2.23	0	0	14.11	0	0	0	0	0	0	-48.03	-48.03

	Line Reactor	NGR	369421	4908787.5	5	0	0	45.4	45.4	1	6244.89	5.25	0	86.91	0	3.23	1.36	0.1	2.55	0	0	0	0	0	0	-48.71	-48.71
Limit. Valu	0	0																									
Level D/N:	25.0111	25.0111																									

Receiver: Existing Noise Receptor
ID: G-54
X: 367146.2
Y: 4904098.1
Z: 4.5
Ground: 0

ISO	Description	ID	X	Y	Z	Ground	ReflOrd	LxT	LxN	L/A	Dist.	hm	Freq	Adiv	K0b	Agr	Abar	z	Aatm	Afol	Ahous	Cmet	CmetN	Dc	RL	LtotT	LtotN
	Sol_Luce Substation	S_Substation	369426	4908792	3.5	0	0	112.1	112.1	1	5218.26	5.25	0	85.35	0	0.96	2.82	0.32	8.88	0	0	0	0	0	0	14.08	14.08
	Inverter	MV1-15	365315	4904994	2	0	0	100.3	100.3	1	2038.61	3.25	0	77.19	0	0.14	0	0	13.54	0	0	0	0	0	0	9.44	9.44
	Inverter	MV1-12	365038	4905386	2	0	0	100.3	100.3	1	2470.47	3.25	0	78.86	0	0.25	0	0	14.4	0	0	0	0	0	0	6.8	6.8
	Gardiner Substation	G_Sub	366586.3	4903349.9	2.5	0	0	90.8	90.8	1	934.5	4.25	0	70.41	0	0.86	5.94	0.37	2.39	0	0	0	0	0	0	11.18	11.18
	Inverter	MV1-11	364655	4905414	2	0	0	100.3	100.3	1	2817.39	3.25	0	80	0	0.33	0	0	15.05	0	0	0	0	0	0	4.94	4.94
	Inverter	MV1-8	364788	4905647	2	0	0	100.3	100.3	1	2821.38	3.25	0	80.01	0	0.33	0	0	15.05	0	0	0	0	0	0	4.92	4.92
	Inverter	MV2-3	365820	4906641	2	0	0	100.3	100.3	1	2867.95	3.25	0	80.15	0	0.34	0	0	15.14	0	0	0	0	0	0	4.69	4.69
	Inverter	MV1-4	364815	4905918	2	0	0	100.3	100.3	1	2957.45	3.25	0	80.42	0	0.35	0	0	15.3	0	0	0	0	0	0	4.24	4.24
	Inverter	MV2-4	365586	4906624	2	0	0	100.3	100.3	1	2968.91	3.25	0	80.45	0	0.36	0	0	15.32	0	0	0	0	0	0	4.19	4.19
	Inverter	MV1-9	364561	4905646	2	0	0	100.3	100.3	1	3013.18	3.25	0	80.58	0	0.36	0	0	15.4	0	0	0	0	0	0	3.97	3.97
	Inverter	MV1-5	364671	4905892	2	0	0	100.3	100.3	1	3056.91	3.25	0	80.71	0	0.37	0	0	15.47	0	0	0	0	0	0	3.76	3.76
	Inverter	MV1-2	364753	4906063	2	0	0	100.3	100.3	1	3096.49	3.25	0	80.82	0	0.38	0	0	15.54	0	0	0	0	0	0	3.57	3.57
	Inverter	MV1-14	365163	4905049	2	0	0	97.3	97.3	1	2199.39	3.25	0	77.85	0	0.18	0	0	13.87	0	0	0	0	0	0	5.41	5.41
	Inverter	MV1-6	364477	4905835	2	0	0	100.3	100.3	1	3184.57	3.25	0	81.06	0	0.4	0	0	15.69	0	0	0	0	0	0	3.16	3.16
	Inverter	MV1-1	364715	4906166	2	0	0	100.3	100.3	1	3191.7	3.25	0	81.08	0	0.4	0	0	15.71	0	0	0	0	0	0	3.13	3.13
	Inverter	MV3-18	367752	4907412	2	0	0	100.3	100.3	1	3368.82	3.25	0	81.55	0	0.43	0	0	16.01	0	0	0	0	0	0	2.32	2.32
	Inverter	MV3-21	368478	4907206	2	0	0	100.3	100.3	1	3381.23	3.25	0	81.58	0	0.43	0	0	16.03	0	0	0	0	0	0	2.27	2.27
	Inverter	MV3-19	368357	4907347	2	0	0	100.3	100.3	1	3467.19	3.25	0	81.8	0	0.45	0	0	16.18	0	0	0	0	0	0	1.89	1.89
	Inverter	MV3-17	368178	4907472	2	0	0	100.3	100.3	1	3528.15	3.25	0	81.95	0	0.46	0	0	16.28	0	0	0	0	0	0	1.63	1.63
	Inverter	MV3-12	367668	4907594	2	0	0	100.3	100.3	1	3534.63	3.25	0	81.97	0	0.46	0	0	16.29	0	0	0	0	0	0	1.6	1.6
	Inverter	MV3-20	368689	4907317	2	0	0	100.3	100.3	1	3569.53	3.25	0	82.05	0	0.46	0	0	16.35	0	0	0	0	0	0	1.45	1.45
	Inverter	MV3-13	367963	4907577	2	0	0	100.3	100.3	1	3573.5	3.25	0	82.06	0	0.46	0	0	16.35	0	0	0	0	0	0	1.43	1.43
	Inverter	MV3-15	368357	4907477	2	0	0	100.3	100.3	1	3589.29	3.25	0	82.1	0	0.47	0	0	16.38	0	0	0	0	0	0	1.37	1.37
	Inverter	MV3-16	368514	4907475	2	0	0	100.3	100.3	1	3643.4	3.25	0	82.23	0	0.47	0	0	16.47	0	0	0	0	0	0	1.14	1.14
	Inverter	MV1-10	365004	4905564	2	0	0	97.3	97.3	1	2595.74	3.25	0	79.29	0	0.28	0	0	14.64	0	0	0	0	0	0	3.11	3.11
	Inverter	MV3-10	368167	4907669	2	0	0	100.3	100.3	1	3713.94	3.25	0	82.4	0	0.49	0	0	16.59	0	0	0	0	0	0	0.84	0.84
	Inverter	MV3-14	368684	4907498	2	0	0	100.3	100.3	1	3731.51	3.25	0	82.44	0	0.49	0	0	16.61	0	0	0	0	0	0	0.77	0.77
	Inverter	MV3-7	367945	4907754	2	0	0	100.3	100.3	1	3742.15	3.25	0	82.46	0	0.49	0	0	16.63	0	0	0	0	0	0	0.73	0.73
	Inverter	MV3-11	368346	4907662	2	0	0	100.3	100.3	1	3760.44	3.25	0	82.5	0	0.49	0	0	16.66	0	0	0	0	0	0	0.65	0.65
	Inverter	MV1-13	364731	4905241	2	0	0	97.3	97.3	1	2671.97	3.25	0	79.54	0	0.3	0	0	14.78	0	0	0	0	0	0	2.7	2.7
	Inverter	MV3-9	368512	4907703	2	0	0	100.3	100.3	1	3854.96	3.25	0	82.72	0	0.51	0	0	16.82	0	0	0	0	0	0	0.27	0.27
	Inverter	MV3-6	368162	4907834	2	0	0	100.3	100.3	1	3871.54	3.25	0	82.76	0	0.51	0	0	16.84	0	0	0	0	0	0	0.2	0.2
	Inverter	MV3-3	367939	4907927	2	0	0	100.3	100.3	1	3910.12	3.25	0	82.84	0	0.51	0	0	16.9	0	0	0	0	0	0	0.05	0.05
	Inverter	MV3-8	368680	4907712	2	0	0	100.3	100.3	1	3925.92	3.25	0	82.88	0	0.52	0	0	16.93	0	0	0	0	0	0	-0.01	-0.01
	Inverter	MV1-7	364925	4905782	2	0	0	97.3	97.3	1	2787.34	3.25	0	79.9	0	0.32	0	0	14.99	0	0	0	0	0	0	2.1	2.1
	Inverters	G_Inv2	366676.9	4903239.1	2	0	0	87.7	87.7	1	978.84	3.25	0	70.81	0	2.45	0	0	1.4	0	0	0	0	0	0	13	13
	Inverter	MV2-1	365842	4906816	2	0	0	97.3	97.3	1	3014.62	3.25	0	80.58	0	0.36	0	0	15.4	0	0	0	0	0	0	0.96	0.96
	Inverter	MV6-3	370207	4907140	2	0	0	100.3	100.3	1	4315.28	3.25	0	83.7	0	0.57	0	0	17.55	0	0	0	0	0	0	-1.5	-1.5
	Inverter	MV6-2	370085	4907339	2	0	0	100.3	100.3	1	4374.93	3.25	0	83.82	0	0.58	0	0	17.64	0	0	0	0	0	0	-1.72	-1.72
	Inverters	G_Inv1	366526.4	4903225.8	2	0	0	87.7	87.7	1	1070.08	3.25	0	71.59	0	2.46	0	0	1.52	0	0	0	0	0	0	12.1	12.1
	Inverters	G_Inv4	366732.8	4903105	2	0	0	87.7	87.7	1	1075.71	3.25	0	71.63	0	2.46	0	0	1.52	0	0	0	0	0	0	12.04	12.04
	Inverters	G_Inv3	366583.7	4903091.4	2	0	0	87.7	87.7	1	1153.19	3.25	0	72.24	0	2.47	0	0	1.62	0	0	0	0	0	0	11.33	11.33
	Inverters	G_Inv6	366788.5	4902972	2	0	0	87.7	87.7	1	1181.55	3.25	0	72.45	0	2.48	0	0	1.65	0	0	0	0	0	0	11.08	11.08
	Inverter	MV4-11	369264	4908855	2	0	0	100.3	100.3	1	5207.03	3.25	0	85.33	0	0.66	0	0	18.88	0	0	0	0	0	0	-4.56	-4.56
	Inverter	MV4-10	369312	4908858	2	0	0	100.3	100.3	1	5229.47	3.25	0	85.37	0	0.66	0	0	18.91	0	0	0	0	0	0	-4.63	-4.63
	Inverter	MV4-7	369035	4909001	2	0	0	100.3	100.3	1	5254.14	3.25	0	85.41	0	0.66	0	0	18.95	0	0	0	0	0	0	-4.71	-4.71
	Inverter	MV4-8	369256	4909001	2	0	0	100.3	100.3	1	5337.57	3.25	0	85.55	0	0.67	0	0	19.07	0	0	0	0	0	0	-4.97	-4.97
	Inverter	MV4-9	369289	4909001	2	0	0	100.3	100.3	1	5350.7	3.25	0	85.57	0	0.67	0	0	19.09	0	0	0	0	0	0	-5.02	-5.02
	Inverters	G_Inv5	366638.5	4902958.1	2	0	0	87.7	87.7	1	1247.94	3.25	0	72.92	0	2.48	0	0	1.74	0	0	0	0	0	0	10.51	10.51
	Inverter	MV5-5	370015	4908690	2	0	0	100.3	100.3	1	5414.39	3.25	0	85.67	0	0.67	0	0	19.18	0	0	0	0	0	0	-5.21	-5.21
	Inverter	MV4-4	369027	4909199	2	0	0	100.3	100.3	1	5436.6	3.25	0	85.71	0	0.68	0	0	19.21	0	0	0	0	0	0	-5.28	-5.28
	Inverter	MV4-6	369243	4909192	2	0	0	100.3	100.3	1	5508.57	3.25	0	85.82	0	0.68	0	0	19.31	0	0	0	0	0	0	-5.5	-5.5
	Inverter	MV4-5	369289	4909199	2	0	0	100.3	100.3	1	5532.7	3.25	0	85.86	0	0.68	0	0	19.35	0	0	0	0	0	0	-5.58	-5.58
	Inverter	MV5-2	370006	4908853	2	0	0	100.3	100.3	1	5548.65	3.25	0	85.88	0	0.68	0	0	19.37	0	0	0	0	0	0	-5.62	-5.62
	Inverters	G_Inv8	366844.5	4902838.5	2	0	0	87.7	87.7	1	1295.23	3.25	0	73.25	0	2.49	0	0	1.79	0	0	0	0	0	0	10.13	10.13
	Inverter	MV5-4	370324	4908707	2	0	0	100.3	100.3	1	5598.25	3.25	0	85.96	0	0.69	0	0	19.44	0	0	0	0	0	0	-5.77	-5.77
	Inverter	MV4-1	369011	4909397	2	0	0	100.3	100.3	1	5617.46	3.25	0	85.99	0	0.69	0	0	19.47	0	0	0	0	0	0	-5.83	-5.83
	Inverter	MV5-3	370231	4908851	2	0	0	100.3	100.3	1	5666.22	3.25	0	86.07	0	0.69	0	0	19.53	0	0	0	0	0	0	-5.98	-5.98
	Inverter	MV4-3	369229	4909397	2	0	0	100.3	100.3	1	5693.54	3.25	0	86.11	0	0.69	0	0	19.57	0	0	0	0	0	0	-6.06	-6.06
	Inverter	MV4-2	369272	4909397	2	0	0	100.3	100.3	1	5709.41	3.25	0	86.13	0	0.69	0	0	19.59	0	0	0	0	0	0	-6.11	-6.11
	Inverters	G_Inv7	366694.6	4902824.7	2	0	0	87.7	87.7	1	1351.11	3.25	0	73.61	0	2.5	0	0	1.86	0	0	0	0	0	0	9.68	9.68
	Inverter	MV5-1	370020	4909142	2	0	0	100.3	100.3	1	5805.14	3.25	0	86.28	0	0.7	0	0	19.73	0	0	0	0	0	0	-6.39	-6.39

Inverters	G_Inv10	366900.7	4902704.8	2	0	0	87.7	87.7	1	1414.77	3.25	0	74.01	0	2.51	0	0	1.94	0	0	0	0	0	0	9.2	9.2
Inverters	G_Inv9	366750.9	4902691.8	2	0	0	87.7	87.7	1	1460.8	3.25	0	74.29	0	2.51	0	0	2	0	0	0	0	0	0	8.86	8.86
Inverter	MV6-1	370235	4907364	2	0	0	97.3	97.3	1	4495.2	3.25	0	84.05	0	0.59	0	0	17.82	0	0	0	0	0	0	-5.16	-5.16
DSTATCOM - 10 MVAR #2	DSAT2	369403	4908757	2.5	0	0	96.6	96.6	1	5176.73	3.5	0	85.28	0	3.7	0	0	3.44	0	0	0	0	0	0	4.21	4.21
DSTATCOM - 10 MVAR #1	DSAT1	369437	4908757	2.5	0	0	96.6	96.6	1	5191.64	3.5	0	85.31	0	3.7	0	0	3.45	0	0	0	0	0	0	4.17	4.17
SubstationTransformer	W_ST	369711.17	4906112.3	2.5	0	0	92	92	1	3261.28	4.25	0	81.27	0	1.13	2.82	0.23	6.34	0	0	0	0	0	0	0.42	0.42
Inverter	MV2-2	365977	4906654	2	0	0	89.1	89.1	1	2810.63	3.25	0	79.98	0	1.1	0	0	9.33	0	0	0	0	0	0	-1.35	-1.35
Westbrook Inverter Enclosur	W_INV3	369508	4906164	2	0	0	89.1	89.1	1	3137.84	3.25	0	80.93	0	1.18	0	0	9.83	0	0	0	0	0	0	-2.88	-2.88
Westbrook Inverter Enclosur	W_INV2	369374	4906388	2	0	0	89.1	89.1	1	3194.8	3.25	0	81.09	0	1.19	0	0	9.91	0	0	0	0	0	0	-3.14	-3.14
Westbrook Inverter Enclosur	W_INV4	369673	4906164	2	0	0	89.1	89.1	1	3263.84	3.25	0	81.27	0	1.21	0	0	10.01	0	0	0	0	0	0	-3.44	-3.44
Inverter	MV1-3	364440	4906039	2	0	0	89.1	89.1	1	3330.26	3.25	0	81.45	0	1.23	0	0	10.11	0	0	0	0	0	0	-3.73	-3.73
Inverter	MV3-22	368656	4907142	2	0	0	89.1	89.1	1	3397.77	3.25	0	81.62	0	1.24	0	0	10.21	0	0	0	0	0	0	-4.02	-4.02
Westbrook Inverter Enclosur	W_INV7	369780	4906417	2	0	0	89.1	89.1	1	3509.16	3.25	0	81.9	0	1.27	0	0	10.38	0	0	0	0	0	0	-4.49	-4.49
Westbrook Inverter Enclosur	W_INV5	369719	4906574	2	0	0	89.1	89.1	1	3570.63	3.25	0	82.05	0	1.29	0	0	10.47	0	0	0	0	0	0	-4.75	-4.75
Westbrook Inverter Enclosur	W_INV6	369875	4906578	2	0	0	89.1	89.1	1	3687.31	3.25	0	82.33	0	1.32	0	0	10.64	0	0	0	0	0	0	-5.23	-5.23
Inverter	MV3-5	368340	4907843	2	0	0	89.1	89.1	1	3930.58	3.25	0	82.89	0	1.38	0	0	10.99	0	0	0	0	0	0	-6.19	-6.19
Inverter	MV3-1	368156	4907976	2	0	0	89.1	89.1	1	4007.22	3.25	0	83.06	0	1.39	0	0	11.09	0	0	0	0	0	0	-6.49	-6.49
Inverter	MV3-4	368502	4907925	2	0	0	89.1	89.1	1	4059.97	3.25	0	83.17	0	1.41	0	0	11.17	0	0	0	0	0	0	-6.69	-6.69
Inverter	MV3-2	368671	4907928	2	0	0	89.1	89.1	1	4122.28	3.25	0	83.3	0	1.42	0	0	11.26	0	0	0	0	0	0	-6.93	-6.93
Westbrook Inverter Enclosur	W_INV1	369409	4906578	2	0	0	86.1	86.1	1	3357.11	3.25	0	81.52	0	1.23	0	0	10.15	0	0	0	0	0	0	-6.85	-6.85
Fixed Reactor Bank 1	FRB1	369378	4908755	6	0	0	89.8	89.8	1	5164.07	5.25	0	85.26	0	-0.54	0	0	8.81	0	0	0	0	0	0	-3.75	-3.75
Fixed Reactor Bank 2	FRB2	369464	4908755	6	0	0	89.8	89.8	1	5201.82	5.25	0	85.32	0	-0.54	0	0	8.86	0	0	0	0	0	0	-3.87	-3.87
Inverter	MV4-15	369176	4908481	2	0	0	89.1	89.1	1	4830.1	3.25	0	84.68	0	1.6	0	0	12.24	0	0	0	0	0	0	-9.45	-9.45
Inverter	MV4-14	369176	4908507	2	0	0	89.1	89.1	1	4853.71	3.25	0	84.72	0	1.6	0	0	12.27	0	0	0	0	0	0	-9.53	-9.53
Inverter	MV4-13	369051	4908605	2	0	0	89.1	89.1	1	4892.89	3.25	0	84.79	0	1.61	0	0	12.32	0	0	0	0	0	0	-9.67	-9.67
Inverter	MV4-12	369043	4908803	2	0	0	89.1	89.1	1	5072.86	3.25	0	85.11	0	1.66	0	0	12.56	0	0	0	0	0	0	-10.27	-10.27
Inverter	MV5-6	369982	4908507	2	0	0	89.1	89.1	1	5242.15	3.25	0	85.39	0	1.7	0	0	12.79	0	0	0	0	0	0	-10.82	-10.82
Inverter	MV6-4	370250	4906966	2	0	0	86.1	86.1	1	4225.92	3.25	0	83.52	0	1.45	0	0	11.4	0	0	0	0	0	0	-10.31	-10.31
Westbrook Inverter Transfor	W_INVTR1	369403	4906578	2	0	0	78.2	78.2	1	3353.07	3.25	0	81.51	0	-2.81	0	0	1.8	0	0	0	0	0	0	-2.26	-2.26
Westbrook Inverter Transfor	W_INVTR3	369514	4906164	2	0	0	77.3	77.3	1	3142.36	3.25	0	80.95	0	-2.75	0	0	1.72	0	0	0	0	0	0	-2.57	-2.57
Westbrook Inverter Transfor	W_INVTR2	369368	4906388	2	0	0	77.3	77.3	1	3190.62	3.25	0	81.08	0	-2.77	0	0	1.74	0	0	0	0	0	0	-2.71	-2.71
Westbrook Inverter Transfor	W_INVTR4	369679	4906164	2	0	0	77.3	77.3	1	3268.49	3.25	0	81.29	0	-2.79	0	0	1.77	0	0	0	0	0	0	-2.93	-2.93
Westbrook Inverter Transfor	W_INVTR7	369786	4906417	2	0	0	77.3	77.3	1	3513.67	3.25	0	81.92	0	-2.85	0	0	1.87	0	0	0	0	0	0	-3.59	-3.59
Westbrook Inverter Transfor	W_INVTR5	369725	4906574	2	0	0	77.3	77.3	1	3574.95	3.25	0	82.07	0	-2.86	0	0	1.89	0	0	0	0	0	0	-3.75	-3.75
Westbrook Inverter Transfor	W_INVTR6	369881	4906578	2	0	0	77.3	77.3	1	3691.75	3.25	0	82.34	0	-2.89	0	0	1.94	0	0	0	0	0	0	-4.05	-4.05
Inverter Transformer	MV1-14 T	365157	4905049	2	0	0	69.4	69.4	1	2204.8	3.25	0	77.87	0	2.25	0	0	5.17	0	0	0	0	0	0	-15.93	-15.93
Inverter Transformer	MV1-10 T	365010	4905564	2	0	0	69.4	69.4	1	2590.8	3.25	0	79.27	0	2.38	0	0	5.53	0	0	0	0	0	0	-17.82	-17.82
Inverter Transformer	MV1-13 T	364725	4905241	2	0	0	69.4	69.4	1	2677.39	3.25	0	79.55	0	2.41	0	0	5.6	0	0	0	0	0	0	-18.21	-18.21
Inverter Transformer	MV1-7 T	364919	4905782	2	0	0	69.4	69.4	1	2792.12	3.25	0	79.92	0	2.44	0	0	5.7	0	0	0	0	0	0	-18.71	-18.71
Inverter Transformer	MV2-1 T	365836	4906816	2	0	0	69.4	69.4	1	3017.22	3.25	0	80.59	0	2.51	0	0	5.9	0	0	0	0	0	0	-19.65	-19.65
Inverter Transformer	MV6-4 T	370244	4906966	2	0	0	69.4	69.4	1	4221.52	3.25	0	83.51	0	2.84	0	0	6.84	0	0	0	0	0	0	-23.84	-23.84
Inverter Transformer	MV6-1 T	370230	4907364	2	0	0	69.4	69.4	1	4491.76	3.25	0	84.05	0	2.9	0	0	7.03	0	0	0	0	0	0	-24.63	-24.63
Inverter Transformer	MV1-15 T	365309	4904994	2	0	0	56.1	56.1	1	2044	3.25	0	77.21	0	0.42	0	0	7.13	0	0	0	0	0	0	-28.7	-28.7
Inverter Transformer	MV1-12 T	365044	4905386	2	0	0	56.1	56.1	1	2465.35	3.25	0	78.84	0	0.6	0	0	7.93	0	0	0	0	0	0	-31.31	-31.31
Inverter Transformer	MV2-2 T	365982	4906654	2	0	0	56.1	56.1	1	2808.56	3.25	0	79.97	0	0.75	0	0	8.54	0	0	0	0	0	0	-33.2	-33.2
Inverter Transformer	MV1-11 T	364649	4905414	2	0	0	56.1	56.1	1	2822.69	3.25	0	80.01	0	0.75	0	0	8.56	0	0	0	0	0	0	-33.27	-33.27
Inverter Transformer	MV1-8 T	364782	4905647	2	0	0	56.1	56.1	1	2826.4	3.25	0	80.02	0	0.76	0	0	8.57	0	0	0	0	0	0	-33.29	-33.29
Inverter Transformer	MV2-3 T	365814	4906641	2	0	0	56.1	56.1	1	2870.73	3.25	0	80.16	0	0.77	0	0	8.65	0	0	0	0	0	0	-33.52	-33.52
Inverter Transformer	MV1-4 T	364821	4905918	2	0	0	56.1	56.1	1	2952.73	3.25	0	80.4	0	0.81	0	0	8.79	0	0	0	0	0	0	-33.94	-33.94
Inverter Transformer	MV2-4 T	365590	4906628	2	0	0	56.1	56.1	1	2970.21	3.25	0	80.46	0	0.82	0	0	8.82	0	0	0	0	0	0	-34.03	-34.03
Inverter Transformer	MV1-9 T	364555	4905646	2	0	0	56.1	56.1	1	3018.33	3.25	0	80.6	0	0.84	0	0	8.9	0	0	0	0	0	0	-34.27	-34.27
Inverter Transformer	MV1-5 T	364676	4905892	2	0	0	56.1	56.1	1	3052.86	3.25	0	80.69	0	0.85	0	0	8.96	0	0	0	0	0	0	-34.45	-34.45
Inverter Transformer	MV1-2 T	364759	4906063	2	0	0	56.1	56.1	1	3091.85	3.25	0	80.8	0	0.87	0	0	9.02	0	0	0	0	0	0	-34.64	-34.64
Inverter Transformer	MV1-6 T	364482	4905835	2	0	0	56.1	56.1	1	3180.38	3.25	0	81.05	0	0.91	0	0	9.17	0	0	0	0	0	0	-35.07	-35.07
Inverter Transformer	MV1-1 T	364721	4906166	2	0	0	56.1	56.1	1	3187.13	3.25	0	81.07	0	0.91	0	0	9.18	0	0	0	0	0	0	-35.1	-35.1
Inverter Transformer	MV1-3 T	364435	4906039	2	0	0	56.1	56.1	1	3334.32	3.25	0	81.46	0	0.97	0	0	9.42	0	0	0	0	0	0	-35.79	-35.79
Inverter Transformer	MV3-18 T	367757	4907412	2	0	0	56.1	56.1	1	3369.72	3.25	0	81.55	0	0.99	0	0	9.48	0	0	0	0	0	0	-35.96	-35.96
Inverter Transformer	MV3-21 T	368484	4907206	2	0	0	56.1	56.1	1	3383.6	3.25	0	81.59	0	0.99	0	0	9.5	0	0	0	0	0	0	-36.02	-36.02
Inverter Transformer	MV3-22 T	368661	4907142	2	0	0	56.1	56.1	1	3399.99	3.25	0	81.63	0	1	0	0	9.53	0	0	0	0	0	0	-36.1	-36.1
Inverter Transformer	MV3-19 T	368352	4907347	2	0	0	56.1	56.1	1	3465.45	3.25	0	81.8	0	1.03	0	0	9.63	0	0	0	0	0	0	-36.4	-36.4
Inverter Transformer	MV3-17 T	368183	4907472	2	0	0	56.1	56.1	1	3529.61	3.25	0	81.95	0	1.05	0	0	9.73	0	0	0	0	0	0	-36.68	-36.68
Inverter Transformer	MV3-12 T	367674	4907594	2	0	0	56.1	56.1	1	3535.52	3.25	0	81.97	0	1.05	0	0	9.74	0	0	0	0	0	0	-36.71	-36.71
Inverter Transformer	MV3-20 T	368683	4907317	2	0	0	56.1	56.1	1	3566.94	3.25	0	82.05	0	1.07	0	0	9.79	0	0	0	0	0	0	-36.85	-36.85
Inverter Transformer	MV3-13 T	367958	4907577	2	0	0	56.1	56.1	1	3572.36	3.25	0	82.06	0	1.07	0	0	9.8	0	0	0	0	0	0	-36.87	-36.87
Inverter Transformer	MV3-15 T	368351	4907477	2	0	0	56.1	56.1	1	3587.27	3.25	0	82.1	0	1.08	0	0	9.83	0	0	0	0	0	0	-36.94	-36.94
Inverter Transformer	MV3-16 T	368509	4907475	2	0	0	56.1	56.1	1	3641.52	3.25	0	82.23	0	1.1	0	0	9.91	0	0	0	0	0	0	-37.18	-37.18
Inverter Transformer	MV3-10 T	368162	4907669	2	0	0	56.1	56.1	1	3712.57	3.25	0	82.39	0	1.13	0	0	10.02	0	0	0	0	0	0	-37.48	-37.48
Inverter Transformer	MV3-14 T	368678	4907498	2	0	0	56.1	56.1	1	3729.04	3.25	0	82.43	0	1.13	0	0	10.05	0	0	0	0	0	0	-37.55	-37.55
Inverter Transformer	MV3-7 T	367951	4907754	2	0	0	56.1	56.1	1	3743.44	3.25	0	82.47	0	1.14	0	0	10.07	0	0	0	0	0	0	-37.61	-37.61
Inverter Transformer	MV3-11 T	368340	4907662	2	0	0	56.1	56.1	1	3758.53	3.25	0	82.5	0	1.15	0	0	10.09	0	0	0	0	0	0	-37.68	-37.68
Inverter Transformer	MV3-9 T	368517	4907703	2	0	0	56.1	56.1	1	3856.73	3.25	0	82.72	0	1.19	0	0	10.24	0	0	0	0	0	0	-38.09	-38.09
Inverter Transformer	MV3-6 T	368156	4907834	2	0	0	56.1	56.1	1	3869.97	3.25	0	82.75	0	1.19	0	0	10.26	0	0	0	0	0	0	-38.15	-38.15
Inverter Transformer	MV3-3 T	367944	4907927	2	0	0	56.1	56.1	1	3911.13	3.25	0	82.85	0	1.21	0	0	10.32	0	0	0	0	0	0	-38.32	-38.32
Inverter Transformer	MV3-8 T	368685	4907712	2	0	0	56.1	56.1	1	3927.87	3.25	0	82.88	0	1.22	0	0	10.35	0	0	0	0	0	0	-38.39	-38.39

	Inverter Transformer	MV3-5 T	368335	4907843	2	0	0	56.1	56.1	1	3929.06	3.25	0	82.89	0	1.22	0	0	10.35	0	0	0	0	0	0	-38.39	-38.39
	Inverter Transformer	MV3-1 T	368150	4907976	2	0	0	56.1	56.1	1	4005.71	3.25	0	83.05	0	1.25	0	0	10.46	0	0	0	0	0	0	-38.7	-38.7
	Inverter Transformer	MV3-4 T	368507	4907925	2	0	0	56.1	56.1	1	4061.64	3.25	0	83.17	0	1.27	0	0	10.55	0	0	0	0	0	0	-38.93	-38.93
	Inverter Transformer	MV3-2 T	368677	4907928	2	0	0	56.1	56.1	1	4124.5	3.25	0	83.31	0	1.29	0	0	10.64	0	0	0	0	0	0	-39.18	-39.18
	Inverter Transformer	MV6-3 T	370202	4907140	2	0	0	56.1	56.1	1	4311.74	3.25	0	83.69	0	1.37	0	0	10.91	0	0	0	0	0	0	-39.91	-39.91
	Inverter Transformer	MV6-2 T	370091	4907339	2	0	0	56.1	56.1	1	4378.96	3.25	0	83.83	0	1.39	0	0	11.01	0	0	0	0	0	0	-40.17	-40.17
	Inverter Transformer	MV4-15 T	369170	4908481	2	0	0	56.1	56.1	1	4827.59	3.25	0	84.67	0	1.56	0	0	11.62	0	0	0	0	0	0	-41.8	-41.8
	Inverter Transformer	MV4-14 T	369182	4908507	2	0	0	56.1	56.1	1	4856.22	3.25	0	84.73	0	1.57	0	0	11.66	0	0	0	0	0	0	-41.9	-41.9
	Inverter Transformer	MV4-13 T	369057	4908605	2	0	0	56.1	56.1	1	4895.23	3.25	0	84.8	0	1.59	0	0	11.72	0	0	0	0	0	0	-42.04	-42.04
	Inverter Transformer	MV4-12 T	369049	4908803	2	0	0	56.1	56.1	1	5075.11	3.25	0	85.11	0	1.65	0	0	11.95	0	0	0	0	0	0	-42.66	-42.66
	Inverter Transformer	MV4-11 T	369269	4908855	2	0	0	56.1	56.1	1	5209.07	3.25	0	85.34	0	1.7	0	0	12.13	0	0	0	0	0	0	-43.1	-43.1
	Inverter Transformer	MV4-10 T	369307	4908858	2	0	0	56.1	56.1	1	5227.4	3.25	0	85.37	0	1.71	0	0	12.15	0	0	0	0	0	0	-43.16	-43.16
	Inverter Transformer	MV5-6 T	369987	4908507	2	0	0	56.1	56.1	1	5244.86	3.25	0	85.39	0	1.71	0	0	12.17	0	0	0	0	0	0	-43.22	-43.22
	Inverter Transformer	MV4-7 T	369040	4909001	2	0	0	56.1	56.1	1	5255.94	3.25	0	85.41	0	1.72	0	0	12.19	0	0	0	0	0	0	-43.26	-43.26
	Inverter Transformer	MV4-8 T	369262	4909001	2	0	0	56.1	56.1	1	5339.95	3.25	0	85.55	0	1.75	0	0	12.29	0	0	0	0	0	0	-43.53	-43.53
	Inverter Transformer	MV4-9 T	369284	4909001	2	0	0	56.1	56.1	1	5348.7	3.25	0	85.56	0	1.75	0	0	12.31	0	0	0	0	0	0	-43.56	-43.56
	Inverter Transformer	MV5-5 T	370021	4908690	2	0	0	56.1	56.1	1	5417.57	3.25	0	85.68	0	1.77	0	0	12.39	0	0	0	0	0	0	-43.78	-43.78
	Inverter Transformer	MV4-4 T	369033	4909199	2	0	0	56.1	56.1	1	5438.68	3.25	0	85.71	0	1.78	0	0	12.42	0	0	0	0	0	0	-43.85	-43.85
	Inverter Transformer	MV4-6 T	369249	4909192	2	0	0	56.1	56.1	1	5510.86	3.25	0	85.82	0	1.8	0	0	12.51	0	0	0	0	0	0	-44.08	-44.08
	Inverter Transformer	MV4-5 T	369283	4909199	2	0	0	56.1	56.1	1	5530.38	3.25	0	85.86	0	1.81	0	0	12.53	0	0	0	0	0	0	-44.14	-44.14
	Inverter Transformer	MV5-2 T	370011	4908853	2	0	0	56.1	56.1	1	5551.23	3.25	0	85.89	0	1.82	0	0	12.56	0	0	0	0	0	0	-44.21	-44.21
	Inverter Transformer	MV5-4 T	370330	4908707	2	0	0	56.1	56.1	1	5601.66	3.25	0	85.97	0	1.83	0	0	12.62	0	0	0	0	0	0	-44.36	-44.36
	Inverter Transformer	MV4-1 T	369017	4909397	2	0	0	56.1	56.1	1	5619.45	3.25	0	85.99	0	1.84	0	0	12.64	0	0	0	0	0	0	-44.42	-44.42
	Inverter Transformer	MV5-3 T	370237	4908851	2	0	0	56.1	56.1	1	5669.49	3.25	0	86.07	0	1.86	0	0	12.7	0	0	0	0	0	0	-44.57	-44.57
	Inverter Transformer	MV4-3 T	369234	4909397	2	0	0	56.1	56.1	1	5695.37	3.25	0	86.11	0	1.87	0	0	12.74	0	0	0	0	0	0	-44.65	-44.65
	Inverter Transformer	MV4-2 T	369267	4909397	2	0	0	56.1	56.1	1	5707.55	3.25	0	86.13	0	1.87	0	0	12.75	0	0	0	0	0	0	-44.69	-44.69
	Inverter Transformer	MV5-1 T	370015	4909142	2	0	0	56.1	56.1	1	5802.67	3.25	0	86.27	0	1.9	0	0	12.87	0	0	0	0	0	0	-44.98	-44.98
	Line Reactor	NGR	369421	4908787.5	5	0	0	45.4	45.4	1	5212.02	5.25	0	85.34	0	3.26	1.35	0.11	2.13	0	0	0	0	0	0	-46.73	-46.73
Limit. Valu	0	0																								
Level D/N:	24.1257	24.1257																								

Receiver: Existing Noise Receptor
ID: G-55
X: 367888.2
Y: 4903013.1
Z: 4.5
Ground: 0

ISO	Description	ID	X	Y	Z	Ground	ReflOrd	LxT	LxN	L/A	Dist.	hm	Freq	Adiv	K0b	Agr	Abar	z	Aatm	Afol	Ahous	Cmet	CmetN	Dc	RL	LtotT	LtotN
	Sol_Luce Substation	S_Substation	369426	4908792	3.5	0	0	112.1	112.1	1	5980.01	5.25	0	86.53	0	1.16	2.65	0.34	9.72	0	0	0	0	0	0	12.02	12.02
	Inverter	MV1-15	365315	4904994	2	0	0	100.3	100.3	1	3247.36	3.25	0	81.23	0	0.41	0	0	15.8	0	0	0	0	0	0	2.87	2.87
	Inverter	MV1-12	365038	4905386	2	0	0	100.3	100.3	1	3708.68	3.25	0	82.38	0	0.48	0	0	16.58	0	0	0	0	0	0	0.87	0.87
	Inverter	MV1-11	364655	4905414	2	0	0	100.3	100.3	1	4027.15	3.25	0	83.1	0	0.53	0	0	17.09	0	0	0	0	0	0	-0.41	-0.41
	Gardiner Substation	G_Sub	366586.3	4903349.9	2.5	0	0	90.8	90.8	1	1344.76	4.25	0	73.57	0	0.83	4.79	0.31	3.19	0	0	0	0	0	0	8.39	8.39
	Inverter	MV1-8	364788	4905647	2	0	0	100.3	100.3	1	4068.01	3.25	0	83.19	0	0.54	0	0	17.16	0	0	0	0	0	0	-0.57	-0.57
	Inverter	MV2-3	365820	4906641	2	0	0	100.3	100.3	1	4176.02	3.25	0	83.42	0	0.55	0	0	17.33	0	0	0	0	0	0	-0.98	-0.98
	Inverter	MV1-4	364815	4905918	2	0	0	100.3	100.3	1	4228.83	3.25	0	83.52	0	0.56	0	0	17.41	0	0	0	0	0	0	-1.18	-1.18
	Inverter	MV3-21	368478	4907206	2	0	0	100.3	100.3	1	4234.18	3.25	0	83.54	0	0.56	0	0	17.42	0	0	0	0	0	0	-1.2	-1.2
	Inverter	MV1-9	364561	4905646	2	0	0	100.3	100.3	1	4242.93	3.25	0	83.55	0	0.56	0	0	17.43	0	0	0	0	0	0	-1.23	-1.23
	Inverter	MV2-4	365586	4906624	2	0	0	100.3	100.3	1	4282.37	3.25	0	83.63	0	0.56	0	0	17.49	0	0	0	0	0	0	-1.38	-1.38
	Inverter	MV1-5	364671	4905892	2	0	0	100.3	100.3	1	4317.23	3.25	0	83.7	0	0.57	0	0	17.55	0	0	0	0	0	0	-1.51	-1.51
	Inverter	MV3-19	368357	4907347	2	0	0	100.3	100.3	1	4359.18	3.25	0	83.79	0	0.57	0	0	17.61	0	0	0	0	0	0	-1.66	-1.66
	Inverter	MV1-2	364753	4906063	2	0	0	100.3	100.3	1	4373.94	3.25	0	83.82	0	0.58	0	0	17.64	0	0	0	0	0	0	-1.72	-1.72
	Inverter	MV3-20	368689	4907317	2	0	0	100.3	100.3	1	4377.77	3.25	0	83.83	0	0.58	0	0	17.64	0	0	0	0	0	0	-1.73	-1.73
	Inverter	MV3-18	367752	4907412	2	0	0	100.3	100.3	1	4401.01	3.25	0	83.87	0	0.58	0	0	17.68	0	0	0	0	0	0	-1.82	-1.82
	Inverter	MV1-6	364477	4905835	2	0	0	100.3	100.3	1	4427.12	3.25	0	83.92	0	0.58	0	0	17.72	0	0	0	0	0	0	-1.91	-1.91
	Inverters	G_Inv10	366900.7	4902704.8	2	0	0	87.7	87.7	1	1034.51	3.25	0	71.29	0	2.45	0	0	1.47	0	0	0	0	0	0	12.44	12.44
	Inverter	MV3-17	368178	4907472	2	0	0	100.3	100.3	1	4468.31	3.25	0	84	0	0.59	0	0	17.78	0	0	0	0	0	0	-2.06	-2.06
	Inverter	MV1-1	364715	4906166	2	0	0	100.3	100.3	1	4473.25	3.25	0	84.01	0	0.59	0	0	17.79	0	0	0	0	0	0	-2.08	-2.08
	Inverter	MV3-15	368357	4907477	2	0	0	100.3	100.3	1	4488.45	3.25	0	84.04	0	0.59	0	0	17.81	0	0	0	0	0	0	-2.13	-2.13
	Inverter	MV3-16	368514	4907475	2	0	0	100.3	100.3	1	4505.57	3.25	0	84.07	0	0.59	0	0	17.84	0	0	0	0	0	0	-2.19	-2.19
	Inverters	G_Inv8	366844.5	4902838.5	2	0	0	87.7	87.7	1	1058.21	3.25	0	71.49	0	2.46	0	0	1.5	0	0	0	0	0	0	12.21	12.21
	Inverter	MV3-14	368684	4907498	2	0	0	100.3	100.3	1	4554.96	3.25	0	84.17	0	0.6	0	0	17.91	0	0	0	0	0	0	-2.37	-2.37
	Inverter	MV3-13	367963	4907577	2	0	0	100.3	100.3	1	4564.51	3.25	0	84.19	0	0.6	0	0	17.93	0	0	0	0	0	0	-2.4	-2.4
	Inverter	MV3-12	367668	4907594	2	0	0	100.3	100.3	1	4586.19	3.25	0	84.23	0	0.6	0	0	17.96	0	0	0	0	0	0	-2.48	-2.48
	Inverter	MV3-10	368167	4907669	2	0	0	100.3	100.3	1	4664.24	3.25	0	84.38	0	0.61	0	0	18.08	0	0	0	0	0	0	-2.75	-2.75
	Inverter	MV3-11	368346	4907662	2	0	0	100.3	100.3	1	4671.39	3.25	0	84.39	0	0.61	0	0	18.09	0	0	0	0	0	0	-2.78	-2.78
	Inverters	G_Inv6	366788.5	4902972	2	0	0	87.7	87.7	1	1100.47	3.25	0	71.83	0	2.46	0	0	1.55	0	0	0	0	0	0	11.81	11.81
	Inverter	MV3-9	368512	4907703	2	0	0	100.3	100.3	1	4731.2	3.25	0	84.5	0	0.62	0	0	18.18	0	0	0	0	0	0	-2.98	-2.98
	Inverter	MV6-3	370207	4907140	2	0	0	100.3	100.3	1	4733.72	3.25	0	84.5	0	0.62	0	0	18.18	0	0	0	0	0	0	-2.99	-2.99
	Inverter	MV3-7	367945	4907754	2	0	0	100.3	100.3	1	4741.24	3.25	0	84.52	0	0.62	0	0	18.2	0	0	0	0	0	0	-3.02	-3.02
	Inverter	MV3-8	368680	4907712	2	0	0	100.3	100.3	1	4765.15	3.25	0	84.56	0	0.62	0	0	18.23	0	0	0	0	0	0	-3.1	-3.1
	Inverter	MV1-14	365163	4905049	2	0	0	97.3	97.3	1	3401.71	3.25	0	81.63	0	0.43	0	0	16.07	0	0	0	0	0	0	-0.82	-0.82
	Inverter	MV3-6	368162	4907834	2	0	0	100.3	100.3	1	4828.67	3.25	0	84.68	0	0.63	0	0	18.33	0	0	0	0	0	0	-3.32	-3.32

Inverter	MV6-2	370085	4907339	2	0	0	100.3	100.3	1	4851.74	3.25	0	84.72	0	0.63	0	0	18.36	0	0	0	0	0	0	-3.4	-3.4
Inverter	MV3-3	367939	4907927	2	0	0	100.3	100.3	1	4914.16	3.25	0	84.83	0	0.63	0	0	18.45	0	0	0	0	0	0	-3.6	-3.6
Inverters	G_Inv4	366732.8	4903105	2	0	0	87.7	87.7	1	1159.05	3.25	0	72.28	0	2.47	0	0	1.63	0	0	0	0	0	0	11.28	11.28
Inverters	G_Inv9	366750.9	4902691.8	2	0	0	87.7	87.7	1	1181.82	3.25	0	72.45	0	2.48	0	0	1.65	0	0	0	0	0	0	11.08	11.08
Inverters	G_Inv7	366694.6	4902824.7	2	0	0	87.7	87.7	1	1208.38	3.25	0	72.64	0	2.48	0	0	1.69	0	0	0	0	0	0	10.85	10.85
Inverters	G_Inv2	366676.9	4903239.1	2	0	0	87.7	87.7	1	1232.21	3.25	0	72.81	0	2.48	0	0	1.72	0	0	0	0	0	0	10.65	10.65
Inverters	G_Inv5	366638.5	4902958.1	2	0	0	87.7	87.7	1	1250.91	3.25	0	72.94	0	2.49	0	0	1.74	0	0	0	0	0	0	10.49	10.49
Inverter	MV1-10	365004	4905564	2	0	0	97.3	97.3	1	3850.42	3.25	0	82.71	0	0.51	0	0	16.81	0	0	0	0	0	0	-2.71	-2.71
Inverter	MV1-13	364731	4905241	2	0	0	97.3	97.3	1	3864.12	3.25	0	82.74	0	0.51	0	0	16.83	0	0	0	0	0	0	-2.77	-2.77
Inverters	G_Inv3	366583.7	4903091.4	2	0	0	87.7	87.7	1	1306.85	3.25	0	73.32	0	2.49	0	0	1.81	0	0	0	0	0	0	10.03	10.03
Inverter	MV1-7	364925	4905782	2	0	0	97.3	97.3	1	4055.54	3.25	0	83.16	0	0.53	0	0	17.14	0	0	0	0	0	0	-3.52	-3.52
Inverters	G_Inv1	366526.4	4903225.8	2	0	0	87.7	87.7	1	1378.31	3.25	0	73.79	0	2.5	0	0	1.9	0	0	0	0	0	0	9.47	9.47
Inverter	MV4-11	369264	4908855	2	0	0	100.3	100.3	1	6001.72	3.25	0	86.57	0	0.7	0	0	20	0	0	0	0	0	0	-6.95	-6.95
Inverter	MV4-10	369312	4908858	2	0	0	100.3	100.3	1	6015.82	3.25	0	86.59	0	0.71	0	0	20.01	0	0	0	0	0	0	-6.99	-6.99
Inverter	MV5-5	370015	4908690	2	0	0	100.3	100.3	1	6062.22	3.25	0	86.65	0	0.71	0	0	20.08	0	0	0	0	0	0	-7.12	-7.12
Inverter	MV4-7	369035	4909001	2	0	0	100.3	100.3	1	6096.73	3.25	0	86.7	0	0.71	0	0	20.12	0	0	0	0	0	0	-7.22	-7.22
Inverter	MV2-1	365842	4906816	2	0	0	97.3	97.3	1	4318.45	3.25	0	83.71	0	0.57	0	0	17.55	0	0	0	0	0	0	-4.51	-4.51
Inverter	MV4-8	369256	4909001	2	0	0	100.3	100.3	1	6142.14	3.25	0	86.77	0	0.71	0	0	20.19	0	0	0	0	0	0	-7.35	-7.35
Inverter	MV4-9	369289	4909001	2	0	0	100.3	100.3	1	6149.57	3.25	0	86.78	0	0.71	0	0	20.2	0	0	0	0	0	0	-7.37	-7.37
Inverter	MV5-4	370324	4908707	2	0	0	100.3	100.3	1	6193.03	3.25	0	86.84	0	0.71	0	0	20.25	0	0	0	0	0	0	-7.49	-7.49
Inverter	MV5-2	370006	4908853	2	0	0	100.3	100.3	1	6212.05	3.25	0	86.86	0	0.71	0	0	20.28	0	0	0	0	0	0	-7.54	-7.54
Inverter	MV4-4	369027	4909199	2	0	0	100.3	100.3	1	6289.85	3.25	0	86.97	0	0.71	0	0	20.38	0	0	0	0	0	0	-7.76	-7.76
Inverter	MV5-3	370231	4908851	2	0	0	100.3	100.3	1	6290.45	3.25	0	86.97	0	0.71	0	0	20.38	0	0	0	0	0	0	-7.76	-7.76
Inverter	MV4-6	369243	4909192	2	0	0	100.3	100.3	1	6325.69	3.25	0	87.02	0	0.71	0	0	20.43	0	0	0	0	0	0	-7.85	-7.85
Inverter	MV4-5	369289	4909199	2	0	0	100.3	100.3	1	6342.52	3.25	0	87.05	0	0.71	0	0	20.45	0	0	0	0	0	0	-7.9	-7.9
Inverter	MV4-1	369011	4909397	2	0	0	100.3	100.3	1	6481.89	3.25	0	87.23	0	0.71	0	0	20.64	0	0	0	0	0	0	-8.27	-8.27
Inverter	MV5-1	370020	4909142	2	0	0	100.3	100.3	1	6489.07	3.25	0	87.24	0	0.71	0	0	20.64	0	0	0	0	0	0	-8.29	-8.29
Inverter	MV4-3	369229	4909397	2	0	0	100.3	100.3	1	6523.18	3.25	0	87.29	0	0.71	0	0	20.69	0	0	0	0	0	0	-8.38	-8.38
Inverter	MV4-2	369272	4909397	2	0	0	100.3	100.3	1	6532.16	3.25	0	87.3	0	0.71	0	0	20.7	0	0	0	0	0	0	-8.4	-8.4
Inverter	MV6-1	370235	4907364	2	0	0	97.3	97.3	1	4943.46	3.25	0	84.88	0	0.64	0	0	18.5	0	0	0	0	0	0	-6.7	-6.7
DSTATCOM - 10 MVAR #2	DSAT2	369403	4908757	2.5	0	0	96.6	96.6	1	5940.29	3.5	0	86.48	0	3.77	0	0	3.81	0	0	0	0	0	0	2.57	2.57
DSTATCOM - 10 MVAR #1	DSAT1	369437	4908757	2.5	0	0	96.6	96.6	1	5949.05	3.5	0	86.49	0	3.77	0	0	3.81	0	0	0	0	0	0	2.56	2.56
SubstationTransformer	W_ST	369711.17	4906112.3	2.5	0	0	92	92	1	3595.56	3.5	0	82.12	0	0.23	0	-0.12	6.82	0	0	0	0	0	0	2.81	2.81
Westbrook Inverter Enclosur	W_INV3	369508	4906164	2	0	0	89.1	89.1	1	3542.87	3.25	0	81.99	0	1.28	0	0	10.43	0	0	0	0	0	0	-4.63	-4.63
Westbrook Inverter Enclosur	W_INV4	369673	4906164	2	0	0	89.1	89.1	1	3621.28	3.25	0	82.18	0	1.3	0	0	10.54	0	0	0	0	0	0	-4.96	-4.96
Westbrook Inverter Enclosur	W_INV2	369374	4906388	2	0	0	89.1	89.1	1	3687.49	3.25	0	82.33	0	1.32	0	0	10.64	0	0	0	0	0	0	-5.23	-5.23
Westbrook Inverter Enclosur	W_INV7	369780	4906417	2	0	0	89.1	89.1	1	3894.28	3.25	0	82.81	0	1.37	0	0	10.93	0	0	0	0	0	0	-6.05	-6.05
Westbrook Inverter Enclosur	W_INV5	369719	4906574	2	0	0	89.1	89.1	1	4003.98	3.25	0	83.05	0	1.39	0	0	11.09	0	0	0	0	0	0	-6.48	-6.48
Westbrook Inverter Enclosur	W_INV6	369875	4906578	2	0	0	89.1	89.1	1	4081.16	3.25	0	83.22	0	1.41	0	0	11.2	0	0	0	0	0	0	-6.77	-6.77
Inverter	MV2-2	365977	4906654	2	0	0	89.1	89.1	1	4112.04	3.25	0	83.28	0	1.42	0	0	11.24	0	0	0	0	0	0	-6.89	-6.89
Inverter	MV3-22	368656	4907142	2	0	0	89.1	89.1	1	4199.68	3.25	0	83.46	0	1.44	0	0	11.37	0	0	0	0	0	0	-7.21	-7.21
Inverter	MV1-3	364440	4906039	2	0	0	89.1	89.1	1	4587.61	3.25	0	84.23	0	1.54	0	0	11.91	0	0	0	0	0	0	-8.62	-8.62
Inverter	MV3-5	368340	4907843	2	0	0	89.1	89.1	1	4850.99	3.25	0	84.72	0	1.6	0	0	12.26	0	0	0	0	0	0	-9.52	-9.52
Inverter	MV3-4	368502	4907925	2	0	0	89.1	89.1	1	4950.1	3.25	0	84.89	0	1.63	0	0	12.4	0	0	0	0	0	0	-9.86	-9.86
Inverter	MV3-1	368156	4907976	2	0	0	89.1	89.1	1	4970.12	3.25	0	84.93	0	1.63	0	0	12.42	0	0	0	0	0	0	-9.93	-9.93
Inverter	MV3-2	368671	4907928	2	0	0	89.1	89.1	1	4976.85	3.25	0	84.94	0	1.63	0	0	12.43	0	0	0	0	0	0	-9.95	-9.95
Fixed Reactor Bank 1	FRB1	369378	4908755	6	0	0	89.8	89.8	1	5932.03	5.25	0	86.46	0	-0.43	0	0	9.67	0	0	0	0	0	0	-5.93	-5.93
Westbrook Inverter Enclosur	W_INV1	369409	4906578	2	0	0	86.1	86.1	1	3875.74	3.25	0	82.77	0	1.36	0	0	10.91	0	0	0	0	0	0	-8.98	-8.98
Fixed Reactor Bank 2	FRB2	369464	4908755	6	0	0	89.8	89.8	1	5954.21	5.25	0	86.5	0	-0.42	0	0	9.69	0	0	0	0	0	0	-5.99	-5.99
Inverter	MV4-15	369176	4908481	2	0	0	89.1	89.1	1	5617.51	3.25	0	85.99	0	1.79	0	0	13.27	0	0	0	0	0	0	-12	-12
Inverter	MV4-14	369176	4908507	2	0	0	89.1	89.1	1	5642.82	3.25	0	86.03	0	1.8	0	0	13.31	0	0	0	0	0	0	-12.08	-12.08
Inverter	MV4-13	369051	4908605	2	0	0	89.1	89.1	1	5711.52	3.25	0	86.14	0	1.82	0	0	13.4	0	0	0	0	0	0	-12.29	-12.29
Inverter	MV5-6	369982	4908507	2	0	0	89.1	89.1	1	5879.37	3.25	0	86.39	0	1.86	0	0	13.61	0	0	0	0	0	0	-12.79	-12.79
Inverter	MV4-12	369043	4908803	2	0	0	89.1	89.1	1	5903.94	3.25	0	86.42	0	1.86	0	0	13.64	0	0	0	0	0	0	-12.87	-12.87
Inverter	MV6-4	370250	4906966	2	0	0	86.1	86.1	1	4604.73	3.25	0	84.26	0	1.54	0	0	11.93	0	0	0	0	0	0	-11.68	-11.68
Westbrook Inverter Transfor	W_INVTR1	369403	4906578	2	0	0	78.2	78.2	1	3873.39	3.25	0	82.76	0	-2.93	0	0	2.01	0	0	0	0	0	0	-3.59	-3.59
Westbrook Inverter Transfor	W_INVTR3	369514	4906164	2	0	0	77.3	77.3	1	3545.62	3.25	0	81.99	0	-2.86	0	0	1.88	0	0	0	0	0	0	-3.68	-3.68
Westbrook Inverter Transfor	W_INVTR4	369679	4906164	2	0	0	77.3	77.3	1	3624.24	3.25	0	82.18	0	-2.87	0	0	1.91	0	0	0	0	0	0	-3.88	-3.88
Westbrook Inverter Transfor	W_INVTR2	369368	4906388	2	0	0	77.3	77.3	1	3685.07	3.25	0	82.33	0	-2.89	0	0	1.93	0	0	0	0	0	0	-4.03	-4.03
Westbrook Inverter Transfor	W_INVTR7	369786	4906417	2	0	0	77.3	77.3	1	3897.2	3.25	0	82.82	0	-2.94	0	0	2.02	0	0	0	0	0	0	-4.55	-4.55
Westbrook Inverter Transfor	W_INVTR5	369725	4906574	2	0	0	77.3	77.3	1	4006.73	3.25	0	83.06	0	-2.96	0	0	2.06	0	0	0	0	0	0	-4.81	-4.81
Westbrook Inverter Transfor	W_INVTR6	369881	4906578	2	0	0	77.3	77.3	1	4084.09	3.25	0	83.22	0	-2.98	0	0	2.09	0	0	0	0	0	0	-4.98	-4.98
Inverter Transformer	MV1-14 T	365157	4905049	2	0	0	69.4	69.4	1	3406.52	3.25	0	81.65	0	2.63	0	0	6.22	0	0	0	0	0	0	-21.14	-21.14
Inverter Transformer	MV1-10 T	365010	4905564	2	0	0	69.4	69.4	1	3845.92	3.25	0	82.7	0	2.75	0	0	6.56	0	0	0	0	0	0	-22.66	-22.66
Inverter Transformer	MV1-13 T	364725	4905241	2	0	0	69.4	69.4	1	3869.03	3.25	0	82.75	0	2.75	0	0	6.58	0	0	0	0	0	0	-22.73	-22.73
Inverter Transformer	MV1-7 T	364919	4905782	2	0	0	69.4	69.4	1	4059.92	3.25	0	83.17	0	2.8	0	0	6.72	0	0	0	0	0	0	-23.34	-23.34
Inverter Transformer	MV2-1 T	365836	4906816	2	0	0	69.4	69.4	1	4321.29	3.25	0	83.71	0	2.86	0	0	6.91	0	0	0	0	0	0	-24.14	-24.14
Inverter Transformer	MV6-4 T	370244	4906966	2	0	0	69.4	69.4	1	4601.65	3.25	0	84.26	0	2.93	0	0	7.11	0	0	0	0	0	0	-24.95	-24.95
Inverter Transformer	MV6-1 T	370230	4907364	2	0	0	69.4	69.4	1	4941.09	3.25	0	84.88	0	3	0	0	7.34	0	0	0	0	0	0	-25.87	-25.87
Inverter Transformer	MV1-15 T	365309	4904994	2	0	0	56.1	56.1	1	3252.11	3.25	0	81.24	0	0.94	0	0	9.29	0	0	0	0	0	0	-35.41	-35.41
Inverter Transformer	MV1-12 T	365044	4905386	2	0	0	56.1	56.1	1	3704.07	3.25	0	82.37	0	1.12	0	0	10.01	0	0	0	0	0	0	-37.45	-37.45
Inverter Transformer	MV1-11 T	364649	4905414	2	0	0	56.1	56.1	1	4031.97	3.25	0	83.11	0	1.26	0	0	10.5	0	0	0	0	0	0	-38.81	-38.81
Inverter Transformer	MV1-8 T	364782	4905647	2	0	0	56.1	56.1	1	4072.58	3.25	0	83.2	0	1.27	0	0	10.56	0	0	0	0	0	0	-38.97	-38.97
Inverter Transformer	MV2-2 T	365982	4906654	2	0	0	56.1	56.1	1	4109.72	3.25	0	83.28	0	1.29	0	0	10.62	0	0	0	0	0	0	-39.12	-39.12

	Inverter Transformer	MV2-3 T	365814	4906641	2	0	0	56.1	56.1	1	4178.99	3.25	0	83.42	0	1.32	0	0	10.72	0	0	0	0	0	0	-39.4	-39.4
	Inverter Transformer	MV3-22 T	368661	4907142	2	0	0	56.1	56.1	1	4200.6	3.25	0	83.47	0	1.32	0	0	10.75	0	0	0	0	0	0	-39.48	-39.48
	Inverter Transformer	MV1-4 T	364821	4905918	2	0	0	56.1	56.1	1	4224.47	3.25	0	83.52	0	1.33	0	0	10.78	0	0	0	0	0	0	-39.57	-39.57
	Inverter Transformer	MV3-21 T	368484	4907206	2	0	0	56.1	56.1	1	4235.02	3.25	0	83.54	0	1.34	0	0	10.8	0	0	0	0	0	0	-39.61	-39.61
	Inverter Transformer	MV1-9 T	364555	4905646	2	0	0	56.1	56.1	1	4247.63	3.25	0	83.56	0	1.34	0	0	10.82	0	0	0	0	0	0	-39.66	-39.66
	Inverter Transformer	MV2-4 T	365590	4906628	2	0	0	56.1	56.1	1	4283.6	3.25	0	83.64	0	1.36	0	0	10.87	0	0	0	0	0	0	-39.8	-39.8
	Inverter Transformer	MV1-5 T	364676	4905892	2	0	0	56.1	56.1	1	4313.5	3.25	0	83.7	0	1.37	0	0	10.91	0	0	0	0	0	0	-39.92	-39.92
	Inverter Transformer	MV3-19 T	368352	4907347	2	0	0	56.1	56.1	1	4358.65	3.25	0	83.79	0	1.39	0	0	10.98	0	0	0	0	0	0	-40.09	-40.09
	Inverter Transformer	MV1-2 T	364759	4906063	2	0	0	56.1	56.1	1	4369.64	3.25	0	83.81	0	1.39	0	0	10.99	0	0	0	0	0	0	-40.13	-40.13
	Inverter Transformer	MV3-20 T	368683	4907317	2	0	0	56.1	56.1	1	4376.67	3.25	0	83.82	0	1.39	0	0	11	0	0	0	0	0	0	-40.16	-40.16
	Inverter Transformer	MV3-18 T	367757	4907412	2	0	0	56.1	56.1	1	4400.86	3.25	0	83.87	0	1.4	0	0	11.04	0	0	0	0	0	0	-40.25	-40.25
	Inverter Transformer	MV1-6 T	364482	4905835	2	0	0	56.1	56.1	1	4423.27	3.25	0	83.91	0	1.41	0	0	11.07	0	0	0	0	0	0	-40.33	-40.33
	Inverter Transformer	MV3-17 T	368183	4907472	2	0	0	56.1	56.1	1	4468.64	3.25	0	84	0	1.43	0	0	11.13	0	0	0	0	0	0	-40.5	-40.5
	Inverter Transformer	MV1-1 T	364721	4906166	2	0	0	56.1	56.1	1	4469	3.25	0	84	0	1.43	0	0	11.13	0	0	0	0	0	0	-40.51	-40.51
	Inverter Transformer	MV3-15 T	368351	4907477	2	0	0	56.1	56.1	1	4487.83	3.25	0	84.04	0	1.43	0	0	11.16	0	0	0	0	0	0	-40.58	-40.58
	Inverter Transformer	MV3-16 T	368509	4907475	2	0	0	56.1	56.1	1	4504.88	3.25	0	84.07	0	1.44	0	0	11.18	0	0	0	0	0	0	-40.64	-40.64
	Inverter Transformer	MV3-14 T	368678	4907498	2	0	0	56.1	56.1	1	4553.91	3.25	0	84.17	0	1.46	0	0	11.25	0	0	0	0	0	0	-40.82	-40.82
	Inverter Transformer	MV3-13 T	367958	4907577	2	0	0	56.1	56.1	1	4564.43	3.25	0	84.19	0	1.46	0	0	11.27	0	0	0	0	0	0	-40.86	-40.86
	Inverter Transformer	MV3-12 T	367674	4907594	2	0	0	56.1	56.1	1	4585.91	3.25	0	84.23	0	1.47	0	0	11.29	0	0	0	0	0	0	-40.94	-40.94
	Inverter Transformer	MV1-3 T	364435	4906039	2	0	0	56.1	56.1	1	4591.37	3.25	0	84.24	0	1.47	0	0	11.3	0	0	0	0	0	0	-40.96	-40.96
	Inverter Transformer	MV3-10 T	368162	4907669	2	0	0	56.1	56.1	1	4663.94	3.25	0	84.38	0	1.5	0	0	11.4	0	0	0	0	0	0	-41.22	-41.22
	Inverter Transformer	MV3-11 T	368340	4907662	2	0	0	56.1	56.1	1	4670.8	3.25	0	84.39	0	1.5	0	0	11.41	0	0	0	0	0	0	-41.25	-41.25
	Inverter Transformer	MV6-3 T	370202	4907140	2	0	0	56.1	56.1	1	4731.28	3.25	0	84.5	0	1.53	0	0	11.49	0	0	0	0	0	0	-41.46	-41.46
	Inverter Transformer	MV3-9 T	368517	4907703	2	0	0	56.1	56.1	1	4731.87	3.25	0	84.5	0	1.53	0	0	11.5	0	0	0	0	0	0	-41.46	-41.46
	Inverter Transformer	MV3-7 T	367951	4907754	2	0	0	56.1	56.1	1	4741.32	3.25	0	84.52	0	1.53	0	0	11.51	0	0	0	0	0	0	-41.5	-41.5
	Inverter Transformer	MV3-8 T	368685	4907712	2	0	0	56.1	56.1	1	4765.98	3.25	0	84.56	0	1.54	0	0	11.54	0	0	0	0	0	0	-41.59	-41.59
	Inverter Transformer	MV3-6 T	368156	4907834	2	0	0	56.1	56.1	1	4828.33	3.25	0	84.68	0	1.56	0	0	11.63	0	0	0	0	0	0	-41.81	-41.81
	Inverter Transformer	MV3-5 T	368335	4907843	2	0	0	56.1	56.1	1	4850.52	3.25	0	84.72	0	1.57	0	0	11.66	0	0	0	0	0	0	-41.88	-41.88
	Inverter Transformer	MV6-2 T	370091	4907339	2	0	0	56.1	56.1	1	4854.46	3.25	0	84.72	0	1.57	0	0	11.66	0	0	0	0	0	0	-41.9	-41.9
	Inverter Transformer	MV3-3 T	367944	4907927	2	0	0	56.1	56.1	1	4914.22	3.25	0	84.83	0	1.59	0	0	11.74	0	0	0	0	0	0	-42.11	-42.11
	Inverter Transformer	MV3-4 T	368507	4907925	2	0	0	56.1	56.1	1	4950.73	3.25	0	84.89	0	1.61	0	0	11.79	0	0	0	0	0	0	-42.23	-42.23
	Inverter Transformer	MV3-1 T	368150	4907976	2	0	0	56.1	56.1	1	4969.8	3.25	0	84.93	0	1.61	0	0	11.81	0	0	0	0	0	0	-42.3	-42.3
	Inverter Transformer	MV3-2 T	368677	4907928	2	0	0	56.1	56.1	1	4977.8	3.25	0	84.94	0	1.62	0	0	11.82	0	0	0	0	0	0	-42.32	-42.32
	Inverter Transformer	MV4-15 T	369170	4908481	2	0	0	56.1	56.1	1	5616.13	3.25	0	85.99	0	1.84	0	0	12.64	0	0	0	0	0	0	-44.41	-44.41
	Inverter Transformer	MV4-14 T	369182	4908507	2	0	0	56.1	56.1	1	5644.19	3.25	0	86.03	0	1.85	0	0	12.67	0	0	0	0	0	0	-44.5	-44.5
	Inverter Transformer	MV4-13 T	369057	4908605	2	0	0	56.1	56.1	1	5712.74	3.25	0	86.14	0	1.87	0	0	12.76	0	0	0	0	0	0	-44.71	-44.71
	Inverter Transformer	MV5-6 T	369987	4908507	2	0	0	56.1	56.1	1	5881.15	3.25	0	86.39	0	1.93	0	0	12.96	0	0	0	0	0	0	-45.22	-45.22
	Inverter Transformer	MV4-12 T	369049	4908803	2	0	0	56.1	56.1	1	5905.12	3.25	0	86.42	0	1.93	0	0	12.99	0	0	0	0	0	0	-45.29	-45.29
	Inverter Transformer	MV4-11 T	369269	4908855	2	0	0	56.1	56.1	1	6002.87	3.25	0	86.57	0	1.97	0	0	13.11	0	0	0	0	0	0	-45.58	-45.58
	Inverter Transformer	MV4-10 T	369307	4908858	2	0	0	56.1	56.1	1	6014.64	3.25	0	86.58	0	1.97	0	0	13.12	0	0	0	0	0	0	-45.62	-45.62
	Inverter Transformer	MV5-5 T	370021	4908690	2	0	0	56.1	56.1	1	6064.32	3.25	0	86.66	0	1.99	0	0	13.18	0	0	0	0	0	0	-45.76	-45.76
	Inverter Transformer	MV4-7 T	369040	4909001	2	0	0	56.1	56.1	1	6097.67	3.25	0	86.7	0	2	0	0	13.22	0	0	0	0	0	0	-45.86	-45.86
	Inverter Transformer	MV4-8 T	369262	4909001	2	0	0	56.1	56.1	1	6143.47	3.25	0	86.77	0	2.01	0	0	13.27	0	0	0	0	0	0	-45.99	-45.99
	Inverter Transformer	MV4-9 T	369284	4909001	2	0	0	56.1	56.1	1	6148.43	3.25	0	86.78	0	2.01	0	0	13.28	0	0	0	0	0	0	-46.01	-46.01
	Inverter Transformer	MV5-4 T	370330	4908707	2	0	0	56.1	56.1	1	6195.39	3.25	0	86.84	0	2.03	0	0	13.33	0	0	0	0	0	0	-46.14	-46.14
	Inverter Transformer	MV5-2 T	370011	4908853	2	0	0	56.1	56.1	1	6213.75	3.25	0	86.87	0	2.03	0	0	13.35	0	0	0	0	0	0	-46.19	-46.19
	Inverter Transformer	MV4-4 T	369033	4909199	2	0	0	56.1	56.1	1	6290.94	3.25	0	86.97	0	2.06	0	0	13.44	0	0	0	0	0	0	-46.41	-46.41
	Inverter Transformer	MV5-3 T	370237	4908851	2	0	0	56.1	56.1	1	6292.69	3.25	0	86.98	0	2.06	0	0	13.44	0	0	0	0	0	0	-46.42	-46.42
	Inverter Transformer	MV4-6 T	369249	4909192	2	0	0	56.1	56.1	1	6326.97	3.25	0	87.02	0	2.07	0	0	13.48	0	0	0	0	0	0	-46.52	-46.52
	Inverter Transformer	MV4-5 T	369283	4909199	2	0	0	56.1	56.1	1	6341.2	3.25	0	87.04	0	2.07	0	0	13.5	0	0	0	0	0	0	-46.56	-46.56
	Inverter Transformer	MV4-1 T	369017	4909397	2	0	0	56.1	56.1	1	6482.93	3.25	0	87.24	0	2.11	0	0	13.66	0	0	0	0	0	0	-46.95	-46.95
	Inverter Transformer	MV5-1 T	370015	4909142	2	0	0	56.1	56.1	1	6487.43	3.25	0	87.24	0	2.11	0	0	13.67	0	0	0	0	0	0	-46.96	-46.96
	Inverter Transformer	MV4-3 T	369234	4909397	2	0	0	56.1	56.1	1	6524.21	3.25	0	87.29	0	2.12	0	0	13.71	0	0	0	0	0	0	-47.06	-47.06
	Inverter Transformer	MV4-2 T	369267	4909397	2	0	0	56.1	56.1	1	6531.1	3.25	0	87.3	0	2.13	0	0	13.71	0	0	0	0	0	0	-47.08	-47.08
	Line Reactor	NGR	369421	4908787.5	5	0	0	45.4	45.4	1	5974.38	5.25	0	86.53	0	3.24	1.36	0.11	2.44	0	0	0	0	0	0	-48.22	-48.22
Limit. Valu	0	0																								
Level D/N:	22.814	22.814																								

Receiver: Existing Noise Receptor
ID: G-56
X: 367908.9
Y: 4903049.2
Z: 4.5
Ground: 0

ISO	Description	ID	X	Y	Z	Ground	ReflOrd	LxT	LxN	L/A	Dist.	hm	Freq	Adiv	K0b	Agr	Abar	z	Aatm	Afol	Ahous	Cmet	CmetN	Dc	RL	LtotT	LtotN
	Sol_Luce Substation	S_Substation	369426	4908792	3.5	0	0	112.1	112.1	1	5939.81	5.25	0	86.48	0	1.15	2.66	0.34	9.68	0	0	0	0	0	0	12.12	12.12
	Inverter	MV1-15	365315	4904994	2	0	0	100.3	100.3	1	3242	3.25	0	81.22	0	0.41	0	0	15.79	0	0	0	0	0	0	2.9	2.9
	Inverter	MV1-12	365038	4905386	2	0	0	100.3	100.3	1	3701.72	3.25	0	82.37	0	0.48	0	0	16.57	0	0	0	0	0	0	0.9	0.9
	Inverter	MV1-11	364655	4905414	2	0	0	100.3	100.3	1	4022.46	3.25	0	83.09	0	0.53	0	0	17.08	0	0	0	0	0	0	-0.39	-0.39
	Inverter	MV1-8	364788	4905647	2	0	0	100.3	100.3	1	4060.61	3.25	0	83.17	0	0.54	0	0	17.15	0	0	0	0	0	0	-0.54	-0.54
	Gardiner Substation	G_Sub	366586.3	4903349.9	2.5	0	0	90.8	90.8	1	1356.35	4.25	0	73.65	0	0.83	4.76	0.3	3.22	0	0	0	0	0	0	8.32	8.32
	Inverter	MV2-3	365820	4906641	2	0	0	100.3	100.3	1	4155.06	3.25	0	83.37	0	0.55	0	0	17.29	0	0	0	0	0	0	-0.9	-0.9
	Inverter	MV3-21	368478	4907206	2	0	0	100.3	100.3	1	4195.58	3.25	0	83.46	0	0.55	0	0	17.36	0	0	0	0	0	0	-1.06	-1.06

Inverter	MV1-4	364815	4905918	2	0	0	100.3	100.3	1	4219.27	3.25	0	83.5	0	0.56	0	0	17.4	0	0	0	0	0	0	-1.14	-1.14
Inverter	MV1-9	364561	4905646	2	0	0	100.3	100.3	1	4236.96	3.25	0	83.54	0	0.56	0	0	17.42	0	0	0	0	0	0	-1.21	-1.21
Inverter	MV2-4	365586	4906624	2	0	0	100.3	100.3	1	4263.22	3.25	0	83.59	0	0.56	0	0	17.46	0	0	0	0	0	0	-1.31	-1.31
Inverter	MV1-5	364671	4905892	2	0	0	100.3	100.3	1	4308.77	3.25	0	83.69	0	0.57	0	0	17.54	0	0	0	0	0	0	-1.48	-1.48
Inverter	MV3-19	368357	4907347	2	0	0	100.3	100.3	1	4321.1	3.25	0	83.71	0	0.57	0	0	17.55	0	0	0	0	0	0	-1.52	-1.52
Inverter	MV3-20	368689	4907317	2	0	0	100.3	100.3	1	4338.51	3.25	0	83.75	0	0.57	0	0	17.58	0	0	0	0	0	0	-1.59	-1.59
Inverter	MV1-2	364753	4906063	2	0	0	100.3	100.3	1	4363.79	3.25	0	83.8	0	0.57	0	0	17.62	0	0	0	0	0	0	-1.68	-1.68
Inverter	MV3-18	367752	4907412	2	0	0	100.3	100.3	1	4365.62	3.25	0	83.8	0	0.57	0	0	17.62	0	0	0	0	0	0	-1.69	-1.69
Inverter	MV1-6	364477	4905835	2	0	0	100.3	100.3	1	4420.25	3.25	0	83.91	0	0.58	0	0	17.71	0	0	0	0	0	0	-1.89	-1.89
Inverter	MV3-17	368178	4907472	2	0	0	100.3	100.3	1	4430.98	3.25	0	83.93	0	0.58	0	0	17.72	0	0	0	0	0	0	-1.92	-1.92
Inverter	MV3-15	368357	4907477	2	0	0	100.3	100.3	1	4450.42	3.25	0	83.97	0	0.59	0	0	17.75	0	0	0	0	0	0	-2	-2
Inverter	MV1-1	364715	4906166	2	0	0	100.3	100.3	1	4462.67	3.25	0	83.99	0	0.59	0	0	17.77	0	0	0	0	0	0	-2.04	-2.04
Inverter	MV3-16	368514	4907475	2	0	0	100.3	100.3	1	4466.97	3.25	0	84	0	0.59	0	0	17.78	0	0	0	0	0	0	-2.05	-2.05
Inverter	MV3-14	368684	4907498	2	0	0	100.3	100.3	1	4515.82	3.25	0	84.09	0	0.59	0	0	17.85	0	0	0	0	0	0	-2.23	-2.23
Inverter	MV3-13	367963	4907577	2	0	0	100.3	100.3	1	4528.12	3.25	0	84.12	0	0.59	0	0	17.87	0	0	0	0	0	0	-2.27	-2.27
Inverter	MV3-12	367668	4907594	2	0	0	100.3	100.3	1	4551.18	3.25	0	84.16	0	0.6	0	0	17.91	0	0	0	0	0	0	-2.36	-2.36
Inverters	G_Inv10	366900.7	4902704.8	2	0	0	87.7	87.7	1	1065.4	3.25	0	71.55	0	2.46	0	0	1.51	0	0	0	0	0	0	12.14	12.14
Inverter	MV3-10	368167	4907669	2	0	0	100.3	100.3	1	4627	3.25	0	84.31	0	0.61	0	0	18.02	0	0	0	0	0	0	-2.62	-2.62
Inverter	MV3-11	368346	4907662	2	0	0	100.3	100.3	1	4633.46	3.25	0	84.32	0	0.61	0	0	18.03	0	0	0	0	0	0	-2.65	-2.65
Inverters	G_Inv8	366844.5	4902838.5	2	0	0	87.7	87.7	1	1085.06	3.25	0	71.71	0	2.46	0	0	1.53	0	0	0	0	0	0	11.96	11.96
Inverter	MV6-3	370207	4907140	2	0	0	100.3	100.3	1	4692.11	3.25	0	84.43	0	0.61	0	0	18.12	0	0	0	0	0	0	-2.85	-2.85
Inverter	MV3-9	368512	4907703	2	0	0	100.3	100.3	1	4692.72	3.25	0	84.43	0	0.61	0	0	18.12	0	0	0	0	0	0	-2.85	-2.85
Inverter	MV3-7	367945	4907754	2	0	0	100.3	100.3	1	4704.94	3.25	0	84.45	0	0.61	0	0	18.14	0	0	0	0	0	0	-2.89	-2.89
Inverter	MV3-8	368680	4907712	2	0	0	100.3	100.3	1	4726.13	3.25	0	84.49	0	0.62	0	0	18.17	0	0	0	0	0	0	-2.97	-2.97
Inverter	MV3-6	368162	4907834	2	0	0	100.3	100.3	1	4791.49	3.25	0	84.61	0	0.62	0	0	18.27	0	0	0	0	0	0	-3.19	-3.19
Inverter	MV1-14	365163	4905049	2	0	0	97.3	97.3	1	3396.94	3.25	0	81.62	0	0.43	0	0	16.06	0	0	0	0	0	0	-0.8	-0.8
Inverter	MV6-2	370085	4907339	2	0	0	100.3	100.3	1	4810.18	3.25	0	84.64	0	0.62	0	0	18.3	0	0	0	0	0	0	-3.25	-3.25
Inverters	G_Inv6	366788.5	4902972	2	0	0	87.7	87.7	1	1123.06	3.25	0	72.01	0	2.47	0	0	1.58	0	0	0	0	0	0	11.6	11.6
Inverter	MV3-3	367939	4907927	2	0	0	100.3	100.3	1	4877.89	3.25	0	84.76	0	0.63	0	0	18.4	0	0	0	0	0	0	-3.48	-3.48
Inverters	G_Inv4	366732.8	4903105	2	0	0	87.7	87.7	1	1177.43	3.25	0	72.42	0	2.48	0	0	1.65	0	0	0	0	0	0	11.12	11.12
Inverters	G_Inv9	366750.9	4902691.8	2	0	0	87.7	87.7	1	1211.9	3.25	0	72.67	0	2.48	0	0	1.69	0	0	0	0	0	0	10.82	10.82
Inverters	G_Inv7	366694.6	4902824.7	2	0	0	87.7	87.7	1	1234.88	3.25	0	72.83	0	2.48	0	0	1.72	0	0	0	0	0	0	10.62	10.62
Inverters	G_Inv2	366676.9	4903239.1	2	0	0	87.7	87.7	1	1246.55	3.25	0	72.91	0	2.48	0	0	1.74	0	0	0	0	0	0	10.53	10.53
Inverter	MV1-10	365004	4905564	2	0	0	97.3	97.3	1	3842.22	3.25	0	82.69	0	0.5	0	0	16.79	0	0	0	0	0	0	-2.68	-2.68
Inverter	MV1-13	364731	4905241	2	0	0	97.3	97.3	1	3860.45	3.25	0	82.73	0	0.51	0	0	16.82	0	0	0	0	0	0	-2.75	-2.75
Inverters	G_Inv5	366638.5	4902958.1	2	0	0	87.7	87.7	1	1273.66	3.25	0	73.1	0	2.49	0	0	1.77	0	0	0	0	0	0	10.3	10.3
Inverters	G_Inv3	366583.7	4903091.4	2	0	0	87.7	87.7	1	1325.87	3.25	0	73.45	0	2.5	0	0	1.83	0	0	0	0	0	0	9.88	9.88
Inverter	MV1-7	364925	4905782	2	0	0	97.3	97.3	1	4046.22	3.25	0	83.14	0	0.53	0	0	17.12	0	0	0	0	0	0	-3.48	-3.48
Inverter	MV4-11	369264	4908855	2	0	0	100.3	100.3	1	5961.85	3.25	0	86.51	0	0.7	0	0	19.94	0	0	0	0	0	0	-6.84	-6.84
Inverter	MV4-10	369312	4908858	2	0	0	100.3	100.3	1	5975.86	3.25	0	86.53	0	0.7	0	0	19.96	0	0	0	0	0	0	-6.88	-6.88
Inverters	G_Inv1	366526.4	4903225.8	2	0	0	87.7	87.7	1	1393.74	3.25	0	73.88	0	2.5	0	0	1.92	0	0	0	0	0	0	9.36	9.36
Inverter	MV5-5	370015	4908690	2	0	0	100.3	100.3	1	6021.15	3.25	0	86.59	0	0.71	0	0	20.02	0	0	0	0	0	0	-7.01	-7.01
Inverter	MV4-7	369035	4909001	2	0	0	100.3	100.3	1	6057.39	3.25	0	86.65	0	0.71	0	0	20.07	0	0	0	0	0	0	-7.11	-7.11
Inverter	MV2-1	365842	4906816	2	0	0	97.3	97.3	1	4296.61	3.25	0	83.66	0	0.57	0	0	17.52	0	0	0	0	0	0	-4.43	-4.43
Inverter	MV4-8	369256	4909001	2	0	0	100.3	100.3	1	6102.34	3.25	0	86.71	0	0.71	0	0	20.13	0	0	0	0	0	0	-7.24	-7.24
Inverter	MV4-9	369289	4909001	2	0	0	100.3	100.3	1	6109.71	3.25	0	86.72	0	0.71	0	0	20.14	0	0	0	0	0	0	-7.26	-7.26
Inverter	MV5-4	370324	4908707	2	0	0	100.3	100.3	1	6151.7	3.25	0	86.78	0	0.71	0	0	20.2	0	0	0	0	0	0	-7.38	-7.38
Inverter	MV5-2	370006	4908853	2	0	0	100.3	100.3	1	6171.06	3.25	0	86.81	0	0.71	0	0	20.22	0	0	0	0	0	0	-7.43	-7.43
Inverter	MV5-3	370231	4908851	2	0	0	100.3	100.3	1	6249.24	3.25	0	86.92	0	0.71	0	0	20.33	0	0	0	0	0	0	-7.64	-7.64
Inverter	MV4-4	369027	4909199	2	0	0	100.3	100.3	1	6250.62	3.25	0	86.92	0	0.71	0	0	20.33	0	0	0	0	0	0	-7.65	-7.65
Inverter	MV4-6	369243	4909192	2	0	0	100.3	100.3	1	6286	3.25	0	86.97	0	0.71	0	0	20.38	0	0	0	0	0	0	-7.75	-7.75
Inverter	MV4-5	369289	4909199	2	0	0	100.3	100.3	1	6302.76	3.25	0	86.99	0	0.71	0	0	20.4	0	0	0	0	0	0	-7.79	-7.79
Inverter	MV4-1	369011	4909397	2	0	0	100.3	100.3	1	6442.76	3.25	0	87.18	0	0.71	0	0	20.58	0	0	0	0	0	0	-8.17	-8.17
Inverter	MV5-1	370020	4909142	2	0	0	100.3	100.3	1	6448.18	3.25	0	87.19	0	0.71	0	0	20.59	0	0	0	0	0	0	-8.18	-8.18
Inverter	MV4-3	369229	4909397	2	0	0	100.3	100.3	1	6483.61	3.25	0	87.24	0	0.71	0	0	20.64	0	0	0	0	0	0	-8.28	-8.28
Inverter	MV4-2	369272	4909397	2	0	0	100.3	100.3	1	6492.5	3.25	0	87.25	0	0.71	0	0	20.65	0	0	0	0	0	0	-8.3	-8.3
Inverter	MV6-1	370235	4907364	2	0	0	97.3	97.3	1	4901.86	3.25	0	84.81	0	0.63	0	0	18.44	0	0	0	0	0	0	-6.56	-6.56
DSTATCOM - 10 MVAR #2	DSAT2	369403	4908757	2.5	0	0	96.6	96.6	1	5900.11	3.5	0	86.42	0	3.77	0	0	3.79	0	0	0	0	0	0	2.66	2.66
DSTATCOM - 10 MVAR #1	DSAT1	369437	4908757	2.5	0	0	96.6	96.6	1	5908.81	3.5	0	86.43	0	3.77	0	0	3.8	0	0	0	0	0	0	2.64	2.64
SubstationTransformer	W_ST	369711.17	4906112.3	2.5	0	0	92	92	1	3553.95	3.5	0	82.01	0	0.22	0	-0.12	6.76	0	0	0	0	0	0	2.98	2.98
Westbrook Inverter Enclosur	W_INV3	369508	4906164	2	0	0	89.1	89.1	1	3501.3	3.25	0	81.88	0	1.27	0	0	10.36	0	0	0	0	0	0	-4.46	-4.46
Westbrook Inverter Enclosur	W_INV4	369673	4906164	2	0	0	89.1	89.1	1	3579.67	3.25	0	82.08	0	1.29	0	0	10.48	0	0	0	0	0	0	-4.79	-4.79
Westbrook Inverter Enclosur	W_INV2	369374	4906388	2	0	0	89.1	89.1	1	3646.11	3.25	0	82.24	0	1.31	0	0	10.58	0	0	0	0	0	0	-5.06	-5.06
Westbrook Inverter Enclosur	W_INV7	369780	4906417	2	0	0	89.1	89.1	1	3852.67	3.25	0	82.72	0	1.36	0	0	10.87	0	0	0	0	0	0	-5.89	-5.89
Westbrook Inverter Enclosur	W_INV5	369719	4906574	2	0	0	89.1	89.1	1	3962.41	3.25	0	82.96	0	1.38	0	0	11.03	0	0	0	0	0	0	-6.32	-6.32
Westbrook Inverter Enclosur	W_INV6	369875	4906578	2	0	0	89.1	89.1	1	4039.55	3.25	0	83.13	0	1.4	0	0	11.14	0	0	0	0	0	0	-6.61	-6.61
Inverter	MV2-2	365977	4906654	2	0	0	89.1	89.1	1	4089.84	3.25	0	83.23	0	1.41	0	0	11.21	0	0	0	0	0	0	-6.8	-6.8
Inverter	MV3-22	368656	4907142	2	0	0	89.1	89.1	1	4160.43	3.25	0	83.38	0	1.43	0	0	11.31	0	0	0	0	0	0	-7.07	-7.07
Inverter	MV1-3	364440	4906039	2	0	0	89.1	89.1	1	4579.54	3.25	0	84.22	0	1.54	0	0	11.89	0	0	0	0	0	0	-8.59	-8.59
Inverter	MV3-5	368340	4907843	2	0	0	89.1	89.1	1	4813.15	3.25	0	84.65	0	1.59	0	0	12.21	0	0	0	0	0	0	-9.4	-9.4
Inverter	MV3-4	368502	4907925	2	0	0	89.1	89.1	1	4911.74	3.25	0	84.82	0	1.62	0	0	12.35	0	0	0	0	0	0	-9.73	-9.73
Inverter	MV3-1	368156	4907976	2	0	0	89.1	89.1	1	4932.99	3.25	0	84.86	0	1.62	0	0	12.37	0	0	0	0	0	0	-9.8	-9.8
Inverter	MV3-2	368671	4907928	2	0	0	89.1	89.1	1	4937.96	3.25	0	84.87	0	1.62	0	0	12.38	0	0	0	0	0	0	-9.82	-9.82
Westbrook Inverter Enclosur	W_INV1	369409	4906578	2	0	0	86.1	86.1	1	3834.41	3.25	0	82.67	0	1.35	0	0	10.85	0	0	0	0	0	0	-8.82	-8.82

Fixed Reactor Bank 1	FRB1	369378	4908755	6	0	0	89.8	89.8	1	5891.89	5.25	0	86.41	0	-0.43	0	0	9.63	0	0	0	0	0	0	-5.82	-5.82
Fixed Reactor Bank 2	FRB2	369464	4908755	6	0	0	89.8	89.8	1	5913.92	5.25	0	86.44	0	-0.43	0	0	9.65	0	0	0	0	0	0	-5.88	-5.88
Inverter	MV4-15	369176	4908481	2	0	0	89.1	89.1	1	5577.63	3.25	0	85.93	0	1.78	0	0	13.22	0	0	0	0	0	0	-11.88	-11.88
Inverter	MV4-14	369176	4908507	2	0	0	89.1	89.1	1	5602.96	3.25	0	85.97	0	1.79	0	0	13.26	0	0	0	0	0	0	-11.95	-11.95
Inverter	MV4-13	369051	4908605	2	0	0	89.1	89.1	1	5671.98	3.25	0	86.07	0	1.81	0	0	13.34	0	0	0	0	0	0	-12.17	-12.17
Inverter	MV5-6	369982	4908507	2	0	0	89.1	89.1	1	5838.26	3.25	0	86.33	0	1.85	0	0	13.56	0	0	0	0	0	0	-12.67	-12.67
Inverter	MV4-12	369043	4908803	2	0	0	89.1	89.1	1	5864.5	3.25	0	86.36	0	1.85	0	0	13.59	0	0	0	0	0	0	-12.75	-12.75
Inverter	MV6-4	370250	4906966	2	0	0	86.1	86.1	1	4563.12	3.25	0	84.19	0	1.53	0	0	11.87	0	0	0	0	0	0	-11.53	-11.53
Westbrook Inverter Transfor	W_INVTR1	369403	4906578	2	0	0	78.2	78.2	1	3832.07	3.25	0	82.67	0	-2.92	0	0	1.99	0	0	0	0	0	0	-3.49	-3.49
Westbrook Inverter Transfor	W_INVTR3	369514	4906164	2	0	0	77.3	77.3	1	3504.04	3.25	0	81.89	0	-2.85	0	0	1.86	0	0	0	0	0	0	-3.57	-3.57
Westbrook Inverter Transfor	W_INVTR4	369679	4906164	2	0	0	77.3	77.3	1	3582.63	3.25	0	82.08	0	-2.86	0	0	1.89	0	0	0	0	0	0	-3.77	-3.77
Westbrook Inverter Transfor	W_INVTR2	369368	4906388	2	0	0	77.3	77.3	1	3643.7	3.25	0	82.23	0	-2.88	0	0	1.92	0	0	0	0	0	0	-3.93	-3.93
Westbrook Inverter Transfor	W_INVTR7	369786	4906417	2	0	0	77.3	77.3	1	3855.59	3.25	0	82.72	0	-2.93	0	0	2	0	0	0	0	0	0	-4.45	-4.45
Westbrook Inverter Transfor	W_INVTR5	369725	4906574	2	0	0	77.3	77.3	1	3965.15	3.25	0	82.97	0	-2.96	0	0	2.04	0	0	0	0	0	0	-4.71	-4.71
Westbrook Inverter Transfor	W_INVTR6	369881	4906578	2	0	0	77.3	77.3	1	4042.48	3.25	0	83.13	0	-2.97	0	0	2.07	0	0	0	0	0	0	-4.89	-4.89
Inverter Transformer	MV1-14 T	365157	4905049	2	0	0	69.4	69.4	1	3401.79	3.25	0	81.63	0	2.63	0	0	6.21	0	0	0	0	0	0	-21.12	-21.12
Inverter Transformer	MV1-10 T	365010	4905564	2	0	0	69.4	69.4	1	3837.69	3.25	0	82.68	0	2.74	0	0	6.55	0	0	0	0	0	0	-22.63	-22.63
Inverter Transformer	MV1-13 T	364725	4905241	2	0	0	69.4	69.4	1	3865.39	3.25	0	82.74	0	2.75	0	0	6.58	0	0	0	0	0	0	-22.72	-22.72
Inverter Transformer	MV1-7 T	364919	4905782	2	0	0	69.4	69.4	1	4050.64	3.25	0	83.15	0	2.8	0	0	6.71	0	0	0	0	0	0	-23.31	-23.31
Inverter Transformer	MV2-1 T	365836	4906816	2	0	0	69.4	69.4	1	4299.5	3.25	0	83.67	0	2.86	0	0	6.9	0	0	0	0	0	0	-24.07	-24.07
Inverter Transformer	MV6-4 T	370244	4906966	2	0	0	69.4	69.4	1	4560.05	3.25	0	84.18	0	2.92	0	0	7.08	0	0	0	0	0	0	-24.83	-24.83
Inverter Transformer	MV6-1 T	370230	4907364	2	0	0	69.4	69.4	1	4899.49	3.25	0	84.8	0	2.99	0	0	7.31	0	0	0	0	0	0	-25.76	-25.76
Inverter Transformer	MV1-15 T	365309	4904994	2	0	0	56.1	56.1	1	3246.8	3.25	0	81.23	0	0.93	0	0	9.28	0	0	0	0	0	0	-35.38	-35.38
Inverter Transformer	MV1-12 T	365044	4905386	2	0	0	56.1	56.1	1	3697.07	3.25	0	82.36	0	1.12	0	0	10	0	0	0	0	0	0	-37.42	-37.42
Inverter Transformer	MV1-11 T	364649	4905414	2	0	0	56.1	56.1	1	4027.31	3.25	0	83.1	0	1.25	0	0	10.5	0	0	0	0	0	0	-38.79	-38.79
Inverter Transformer	MV1-8 T	364782	4905647	2	0	0	56.1	56.1	1	4065.23	3.25	0	83.18	0	1.27	0	0	10.55	0	0	0	0	0	0	-38.94	-38.94
Inverter Transformer	MV2-2 T	365982	4906654	2	0	0	56.1	56.1	1	4087.48	3.25	0	83.23	0	1.28	0	0	10.58	0	0	0	0	0	0	-39.03	-39.03
Inverter Transformer	MV2-3 T	365814	4906641	2	0	0	56.1	56.1	1	4158.08	3.25	0	83.38	0	1.31	0	0	10.69	0	0	0	0	0	0	-39.31	-39.31
Inverter Transformer	MV3-22 T	368661	4907142	2	0	0	56.1	56.1	1	4161.33	3.25	0	83.38	0	1.31	0	0	10.69	0	0	0	0	0	0	-39.33	-39.33
Inverter Transformer	MV3-21 T	368484	4907206	2	0	0	56.1	56.1	1	4196.4	3.25	0	83.46	0	1.32	0	0	10.74	0	0	0	0	0	0	-39.46	-39.46
Inverter Transformer	MV1-4 T	364821	4905918	2	0	0	56.1	56.1	1	4214.87	3.25	0	83.5	0	1.33	0	0	10.77	0	0	0	0	0	0	-39.54	-39.54
Inverter Transformer	MV1-9 T	364555	4905646	2	0	0	56.1	56.1	1	4241.7	3.25	0	83.55	0	1.34	0	0	10.81	0	0	0	0	0	0	-39.64	-39.64
Inverter Transformer	MV2-4 T	365590	4906628	2	0	0	56.1	56.1	1	4264.4	3.25	0	83.6	0	1.35	0	0	10.84	0	0	0	0	0	0	-39.73	-39.73
Inverter Transformer	MV1-5 T	364676	4905892	2	0	0	56.1	56.1	1	4305.02	3.25	0	83.68	0	1.36	0	0	10.9	0	0	0	0	0	0	-39.89	-39.89
Inverter Transformer	MV3-19 T	368352	4907347	2	0	0	56.1	56.1	1	4320.58	3.25	0	83.71	0	1.37	0	0	10.92	0	0	0	0	0	0	-39.94	-39.94
Inverter Transformer	MV3-20 T	368683	4907317	2	0	0	56.1	56.1	1	4337.44	3.25	0	83.74	0	1.38	0	0	10.95	0	0	0	0	0	0	-40.01	-40.01
Inverter Transformer	MV1-2 T	364759	4906063	2	0	0	56.1	56.1	1	4359.46	3.25	0	83.79	0	1.39	0	0	10.98	0	0	0	0	0	0	-40.09	-40.09
Inverter Transformer	MV3-18 T	367757	4907412	2	0	0	56.1	56.1	1	4365.44	3.25	0	83.8	0	1.39	0	0	10.99	0	0	0	0	0	0	-40.12	-40.12
Inverter Transformer	MV1-6 T	364482	4905835	2	0	0	56.1	56.1	1	4416.37	3.25	0	83.9	0	1.41	0	0	11.06	0	0	0	0	0	0	-40.31	-40.31
Inverter Transformer	MV3-17 T	368183	4907472	2	0	0	56.1	56.1	1	4431.29	3.25	0	83.93	0	1.41	0	0	11.08	0	0	0	0	0	0	-40.36	-40.36
Inverter Transformer	MV3-15 T	368351	4907477	2	0	0	56.1	56.1	1	4449.82	3.25	0	83.97	0	1.42	0	0	11.11	0	0	0	0	0	0	-40.43	-40.43
Inverter Transformer	MV1-1 T	364721	4906166	2	0	0	56.1	56.1	1	4458.38	3.25	0	83.98	0	1.42	0	0	11.12	0	0	0	0	0	0	-40.47	-40.47
Inverter Transformer	MV3-16 T	368509	4907475	2	0	0	56.1	56.1	1	4466.3	3.25	0	84	0	1.43	0	0	11.13	0	0	0	0	0	0	-40.5	-40.5
Inverter Transformer	MV3-14 T	368678	4907498	2	0	0	56.1	56.1	1	4514.79	3.25	0	84.09	0	1.45	0	0	11.2	0	0	0	0	0	0	-40.68	-40.68
Inverter Transformer	MV3-13 T	367958	4907577	2	0	0	56.1	56.1	1	4528.07	3.25	0	84.12	0	1.45	0	0	11.21	0	0	0	0	0	0	-40.72	-40.72
Inverter Transformer	MV3-12 T	367674	4907594	2	0	0	56.1	56.1	1	4550.87	3.25	0	84.16	0	1.46	0	0	11.25	0	0	0	0	0	0	-40.81	-40.81
Inverter Transformer	MV1-3 T	364435	4906039	2	0	0	56.1	56.1	1	4583.33	3.25	0	84.22	0	1.47	0	0	11.29	0	0	0	0	0	0	-40.93	-40.93
Inverter Transformer	MV3-10 T	368162	4907669	2	0	0	56.1	56.1	1	4626.73	3.25	0	84.31	0	1.49	0	0	11.35	0	0	0	0	0	0	-41.09	-41.09
Inverter Transformer	MV3-11 T	368340	4907662	2	0	0	56.1	56.1	1	4632.9	3.25	0	84.32	0	1.49	0	0	11.36	0	0	0	0	0	0	-41.11	-41.11
Inverter Transformer	MV6-3 T	370202	4907140	2	0	0	56.1	56.1	1	4689.67	3.25	0	84.42	0	1.51	0	0	11.44	0	0	0	0	0	0	-41.31	-41.31
Inverter Transformer	MV3-9 T	368517	4907703	2	0	0	56.1	56.1	1	4693.36	3.25	0	84.43	0	1.51	0	0	11.44	0	0	0	0	0	0	-41.33	-41.33
Inverter Transformer	MV3-7 T	367951	4907754	2	0	0	56.1	56.1	1	4704.99	3.25	0	84.45	0	1.52	0	0	11.46	0	0	0	0	0	0	-41.37	-41.37
Inverter Transformer	MV3-8 T	368685	4907712	2	0	0	56.1	56.1	1	4726.95	3.25	0	84.49	0	1.53	0	0	11.49	0	0	0	0	0	0	-41.45	-41.45
Inverter Transformer	MV3-6 T	368156	4907834	2	0	0	56.1	56.1	1	4791.18	3.25	0	84.61	0	1.55	0	0	11.58	0	0	0	0	0	0	-41.67	-41.67
Inverter Transformer	MV3-5 T	368335	4907843	2	0	0	56.1	56.1	1	4812.7	3.25	0	84.65	0	1.56	0	0	11.6	0	0	0	0	0	0	-41.75	-41.75
Inverter Transformer	MV6-2 T	370091	4907339	2	0	0	56.1	56.1	1	4812.89	3.25	0	84.65	0	1.56	0	0	11.6	0	0	0	0	0	0	-41.75	-41.75
Inverter Transformer	MV3-3 T	367944	4907927	2	0	0	56.1	56.1	1	4877.93	3.25	0	84.76	0	1.58	0	0	11.69	0	0	0	0	0	0	-41.98	-41.98
Inverter Transformer	MV3-4 T	368507	4907925	2	0	0	56.1	56.1	1	4912.35	3.25	0	84.83	0	1.59	0	0	11.74	0	0	0	0	0	0	-42.1	-42.1
Inverter Transformer	MV3-1 T	368150	4907976	2	0	0	56.1	56.1	1	4932.7	3.25	0	84.86	0	1.6	0	0	11.77	0	0	0	0	0	0	-42.17	-42.17
Inverter Transformer	MV3-2 T	368677	4907928	2	0	0	56.1	56.1	1	4938.89	3.25	0	84.87	0	1.6	0	0	11.77	0	0	0	0	0	0	-42.19	-42.19
Inverter Transformer	MV4-15 T	369170	4908481	2	0	0	56.1	56.1	1	5576.27	3.25	0	85.93	0	1.83	0	0	12.59	0	0	0	0	0	0	-44.28	-44.28
Inverter Transformer	MV4-14 T	369182	4908507	2	0	0	56.1	56.1	1	5604.32	3.25	0	85.97	0	1.84	0	0	12.62	0	0	0	0	0	0	-44.37	-44.37
Inverter Transformer	MV4-13 T	369057	4908605	2	0	0	56.1	56.1	1	5673.19	3.25	0	86.08	0	1.86	0	0	12.71	0	0	0	0	0	0	-44.59	-44.59
Inverter Transformer	MV5-6 T	369987	4908507	2	0	0	56.1	56.1	1	5840.04	3.25	0	86.33	0	1.91	0	0	12.91	0	0	0	0	0	0	-45.1	-45.1
Inverter Transformer	MV4-12 T	369049	4908803	2	0	0	56.1	56.1	1	5865.67	3.25	0	86.37	0	1.92	0	0	12.94	0	0	0	0	0	0	-45.17	-45.17
Inverter Transformer	MV4-11 T	369269	4908855	2	0	0	56.1	56.1	1	5962.99	3.25	0	86.51	0	1.95	0	0	13.06	0	0	0	0	0	0	-45.46	-45.46
Inverter Transformer	MV4-10 T	369307	4908858	2	0	0	56.1	56.1	1	5974.68	3.25	0	86.53	0	1.96	0	0	13.07	0	0	0	0	0	0	-45.5	-45.5
Inverter Transformer	MV5-5 T	370021	4908690	2	0	0	56.1	56.1	1	6023.25	3.25	0	86.6	0	1.97	0	0	13.13	0	0	0	0	0	0	-45.64	-45.64
Inverter Transformer	MV4-7 T	369040	4909001	2	0	0	56.1	56.1	1	6058.33	3.25	0	86.65	0	1.98	0	0	13.17	0	0	0	0	0	0	-45.74	-45.74
Inverter Transformer	MV4-8 T	369262	4909001	2	0	0	56.1	56.1	1	6103.67	3.25	0	86.71	0	2	0	0	13.22	0	0	0	0	0	0	-45.88	-45.88
Inverter Transformer	MV4-9 T	369284	4909001	2	0	0	56.1	56.1	1	6108.59	3.25	0	86.72	0	2	0	0	13.23	0	0	0	0	0	0	-45.89	-45.89
Inverter Transformer	MV5-4 T	370330	4908707	2	0	0	56.1	56.1	1	6154.06	3.25	0	86.78	0	2.01	0	0	13.28	0	0	0	0	0	0	-46.02	-46.02
Inverter Transformer	MV5-2 T	370011	4908853	2	0	0	56.1	56.1	1	6172.76	3.25	0	86.81	0	2.02	0	0	13.31	0	0	0	0	0	0	-46.08	-46.08
Inverter Transformer	MV5-3 T	370237	4908851	2	0	0	56.1	56.1	1	6251.47	3.25	0	86.92	0	2.04	0	0	13.4	0	0	0	0	0	0	-46.3	-46.3

	Inverter Transformer	MV4-4 T	369033	4909199	2	0	0	56.1	56.1	1	6251.69	3.25	0	86.92	0	2.04	0	0	13.4	0	0	0	0	0	0	-46.3	-46.3
	Inverter Transformer	MV4-6 T	369249	4909192	2	0	0	56.1	56.1	1	6287.28	3.25	0	86.97	0	2.05	0	0	13.44	0	0	0	0	0	0	-46.4	-46.4
	Inverter Transformer	MV4-5 T	369283	4909199	2	0	0	56.1	56.1	1	6301.44	3.25	0	86.99	0	2.06	0	0	13.45	0	0	0	0	0	0	-46.44	-46.44
	Inverter Transformer	MV4-1 T	369017	4909397	2	0	0	56.1	56.1	1	6443.79	3.25	0	87.18	0	2.1	0	0	13.62	0	0	0	0	0	0	-46.84	-46.84
	Inverter Transformer	MV5-1 T	370015	4909142	2	0	0	56.1	56.1	1	6446.54	3.25	0	87.19	0	2.1	0	0	13.62	0	0	0	0	0	0	-46.85	-46.85
	Inverter Transformer	MV4-3 T	369234	4909397	2	0	0	56.1	56.1	1	6484.63	3.25	0	87.24	0	2.11	0	0	13.66	0	0	0	0	0	0	-46.96	-46.96
	Inverter Transformer	MV4-2 T	369267	4909397	2	0	0	56.1	56.1	1	6491.46	3.25	0	87.25	0	2.12	0	0	13.67	0	0	0	0	0	0	-46.97	-46.97
	Line Reactor	NGR	369421	4908787.5	5	0	0	45.4	45.4	1	5934.18	5.25	0	86.47	0	3.24	1.36	0.11	2.43	0	0	0	0	0	0	-48.14	-48.14
Limit. Valu	0	0																								
Level D/N:	22.7005	22.7005																								

Receiver: Existing Noise Receptor
ID: G-57
X: 365676.2
Y: 4902425
Z: 4.5
Ground: 0

ISO	Description	ID	X	Y	Z	Ground	ReflOrd	LxT	LxN	L/A	Dist.	hm	Freq	Adiv	K0b	Agr	Abar	z	Aatm	Afol	Ahous	Cmet	CmetN	Dc	RL	LtotT	LtotN
	Sol_Luce Substation	S_Substation	369426	4908792	3.5	0	0	112.1	112.1	1	7389.16	5.25	0	88.37	0	1.46	2.37	0.3	11.11	0	0	0	0	0	0	8.77	8.77
	Inverter	MV1-15	365315	4904994	2	0	0	100.3	100.3	1	2594.27	3.25	0	79.28	0	0.28	0	0	14.64	0	0	0	0	0	0	6.12	6.12
	Inverter	MV1-12	365038	4905386	2	0	0	100.3	100.3	1	3029	3.25	0	80.63	0	0.37	0	0	15.42	0	0	0	0	0	0	3.9	3.9
	Inverter	MV1-11	364655	4905414	2	0	0	100.3	100.3	1	3158.64	3.25	0	80.99	0	0.39	0	0	15.65	0	0	0	0	0	0	3.28	3.28
	Inverter	MV1-8	364788	4905647	2	0	0	100.3	100.3	1	3342.18	3.25	0	81.48	0	0.42	0	0	15.97	0	0	0	0	0	0	2.44	2.44
	Inverter	MV1-9	364561	4905646	2	0	0	100.3	100.3	1	3408.59	3.25	0	81.65	0	0.44	0	0	16.08	0	0	0	0	0	0	2.15	2.15
	Inverter	MV1-4	364815	4905918	2	0	0	100.3	100.3	1	3597.6	3.25	0	82.12	0	0.47	0	0	16.39	0	0	0	0	0	0	1.33	1.33
	Inverter	MV1-5	364671	4905892	2	0	0	100.3	100.3	1	3609.78	3.25	0	82.15	0	0.47	0	0	16.41	0	0	0	0	0	0	1.28	1.28
	Inverter	MV1-6	364477	4905835	2	0	0	100.3	100.3	1	3614.72	3.25	0	82.16	0	0.47	0	0	16.42	0	0	0	0	0	0	1.26	1.26
	Inverter	MV1-2	364753	4906063	2	0	0	100.3	100.3	1	3753.31	3.25	0	82.49	0	0.49	0	0	16.65	0	0	0	0	0	0	0.68	0.68
	Inverter	MV1-14	365163	4905049	2	0	0	97.3	97.3	1	2673.72	3.25	0	79.54	0	0.3	0	0	14.78	0	0	0	0	0	0	2.69	2.69
	Inverter	MV1-1	364715	4906166	2	0	0	100.3	100.3	1	3862.51	3.25	0	82.74	0	0.51	0	0	16.83	0	0	0	0	0	0	0.24	0.24
	Gardiner Substation	G_Sub	366586.3	4903349.9	2.5	0	0	90.8	90.8	1	1297.58	3.5	0	73.26	0	-0.32	0	0	3.11	0	0	0	0	0	0	14.73	14.73
	Inverter	MV1-13	364731	4905241	2	0	0	97.3	97.3	1	2970.4	3.25	0	80.46	0	0.36	0	0	15.32	0	0	0	0	0	0	1.18	1.18
	Inverter	MV2-4	365586	4906624	2	0	0	100.3	100.3	1	4199.97	3.25	0	83.46	0	0.55	0	0	17.37	0	0	0	0	0	0	-1.07	-1.07
	Inverter	MV2-3	365820	4906641	2	0	0	100.3	100.3	1	4218.45	3.25	0	83.5	0	0.56	0	0	17.39	0	0	0	0	0	0	-1.14	-1.14
	Inverter	MV1-10	365004	4905564	2	0	0	97.3	97.3	1	3210.17	3.25	0	81.13	0	0.4	0	0	15.74	0	0	0	0	0	0	0.04	0.04
	Inverters	G_Inv7	366694.6	4902824.7	2	0	0	87.7	87.7	1	1094.03	3.25	0	71.78	0	2.46	0	0	1.55	0	0	0	0	0	0	11.87	11.87
	Inverters	G_Inv5	366638.5	4902958.1	2	0	0	87.7	87.7	1	1100.1	3.25	0	71.83	0	2.46	0	0	1.55	0	0	0	0	0	0	11.81	11.81
	Inverters	G_Inv9	366750.9	4902691.8	2	0	0	87.7	87.7	1	1107.32	3.25	0	71.89	0	2.47	0	0	1.56	0	0	0	0	0	0	11.75	11.75
	Inverters	G_Inv3	366583.7	4903091.4	2	0	0	87.7	87.7	1	1125.9	3.25	0	72.03	0	2.47	0	0	1.59	0	0	0	0	0	0	11.58	11.58
	Inverter	MV1-7	364925	4905782	2	0	0	97.3	97.3	1	3440.02	3.25	0	81.73	0	0.44	0	0	16.13	0	0	0	0	0	0	-0.99	-0.99
	Inverters	G_Inv1	366526.4	4903225.8	2	0	0	87.7	87.7	1	1167.96	3.25	0	72.35	0	2.47	0	0	1.64	0	0	0	0	0	0	11.2	11.2
	Inverters	G_Inv8	366844.5	4902838.5	2	0	0	87.7	87.7	1	1239.32	3.25	0	72.86	0	2.48	0	0	1.73	0	0	0	0	0	0	10.59	10.59
	Inverters	G_Inv6	366788.5	4902972	2	0	0	87.7	87.7	1	1239.53	3.25	0	72.87	0	2.48	0	0	1.73	0	0	0	0	0	0	10.59	10.59
	Inverters	G_Inv10	366900.7	4902704.8	2	0	0	87.7	87.7	1	1256.06	3.25	0	72.98	0	2.49	0	0	1.75	0	0	0	0	0	0	10.45	10.45
	Inverters	G_Inv4	366732.8	4903105	2	0	0	87.7	87.7	1	1256.51	3.25	0	72.98	0	2.49	0	0	1.75	0	0	0	0	0	0	10.44	10.44
	Inverter	MV3-18	367752	4907412	2	0	0	100.3	100.3	1	5401.77	3.25	0	85.65	0	0.67	0	0	19.16	0	0	0	0	0	0	-5.17	-5.17
	Inverters	G_Inv2	366676.9	4903239.1	2	0	0	87.7	87.7	1	1290.03	3.25	0	73.21	0	2.49	0	0	1.79	0	0	0	0	0	0	10.17	10.17
	Inverter	MV3-12	367668	4907594	2	0	0	100.3	100.3	1	5539.48	3.25	0	85.87	0	0.68	0	0	19.36	0	0	0	0	0	0	-5.6	-5.6
	Inverter	MV3-21	368478	4907206	2	0	0	100.3	100.3	1	5541.48	3.25	0	85.87	0	0.68	0	0	19.36	0	0	0	0	0	0	-5.6	-5.6
	Inverter	MV3-19	368357	4907347	2	0	0	100.3	100.3	1	5604.71	3.25	0	85.97	0	0.69	0	0	19.45	0	0	0	0	0	0	-5.79	-5.79
	Inverter	MV3-17	368178	4907472	2	0	0	100.3	100.3	1	5633.05	3.25	0	86.01	0	0.69	0	0	19.49	0	0	0	0	0	0	-5.88	-5.88
	Inverter	MV3-13	367963	4907577	2	0	0	100.3	100.3	1	5636.72	3.25	0	86.02	0	0.69	0	0	19.49	0	0	0	0	0	0	-5.89	-5.89
	Inverter	MV3-15	368357	4907477	2	0	0	100.3	100.3	1	5719.21	3.25	0	86.15	0	0.69	0	0	19.61	0	0	0	0	0	0	-6.14	-6.14
	Inverter	MV3-20	368689	4907317	2	0	0	100.3	100.3	1	5745.31	3.25	0	86.19	0	0.69	0	0	19.64	0	0	0	0	0	0	-6.21	-6.21
	Inverter	MV3-7	367945	4907754	2	0	0	100.3	100.3	1	5791.87	3.25	0	86.26	0	0.7	0	0	19.71	0	0	0	0	0	0	-6.35	-6.35
	Inverter	MV3-16	368514	4907475	2	0	0	100.3	100.3	1	5792.72	3.25	0	86.26	0	0.7	0	0	19.71	0	0	0	0	0	0	-6.35	-6.35
	Inverter	MV3-10	368167	4907669	2	0	0	100.3	100.3	1	5805.48	3.25	0	86.28	0	0.7	0	0	19.73	0	0	0	0	0	0	-6.39	-6.39
	Inverter	MV3-11	368346	4907662	2	0	0	100.3	100.3	1	5878.27	3.25	0	86.38	0	0.7	0	0	19.83	0	0	0	0	0	0	-6.6	-6.6
	Inverter	MV3-14	368684	4907498	2	0	0	100.3	100.3	1	5897.64	3.25	0	86.41	0	0.7	0	0	19.85	0	0	0	0	0	0	-6.66	-6.66
	Inverter	MV3-3	367939	4907927	2	0	0	100.3	100.3	1	5949.14	3.25	0	86.49	0	0.7	0	0	19.92	0	0	0	0	0	0	-6.8	-6.8
	Inverter	MV3-6	368162	4907834	2	0	0	100.3	100.3	1	5952.86	3.25	0	86.49	0	0.7	0	0	19.93	0	0	0	0	0	0	-6.81	-6.81
	Inverter	MV3-9	368512	4907703	2	0	0	100.3	100.3	1	5991.58	3.25	0	86.55	0	0.7	0	0	19.98	0	0	0	0	0	0	-6.93	-6.93
	Inverter	MV3-8	368680	4907712	2	0	0	100.3	100.3	1	6080.72	3.25	0	86.68	0	0.71	0	0	20.1	0	0	0	0	0	0	-7.18	-7.18
	Inverter	MV2-1	365842	4906816	2	0	0	97.3	97.3	1	4394.13	3.25	0	83.86	0	0.58	0	0	17.67	0	0	0	0	0	0	-4.79	-4.79
	Inverter	MV6-3	370207	4907140	2	0	0	100.3	100.3	1	6539.07	3.25	0	87.31	0	0.71	0	0	20.71	0	0	0	0	0	0	-8.42	-8.42
	Inverter	MV6-2	370085	4907339	2	0	0	100.3	100.3	1	6601.89	3.25	0	87.39	0	0.72	0	0	20.79	0	0	0	0	0	0	-8.59	-8.59
	Inverter	MV4-11	369264	4908855	2	0	0	100.3	100.3	1	7363.23	3.25	0	88.34	0	0.7	0	0	21.75	0	0	0	0	0	0	-10.47	-10.47
	Inverter	MV4-7	369035	4909001	2	0	0	100.3	100.3	1	7384.13	3.25	0	88.37	0	0.7	0	0	21.77	0	0	0	0	0	0	-10.52	-10.52
	Inverter	MV4-10	369312	4908858	2	0	0	100.3	100.3	1	7389.35	3.25	0	88.37	0	0.7	0	0	21.78	0	0	0	0	0	0	-10.54	-10.54
	Inverter	MV4-8	369256	4909001	2	0	0	100.3	100.3	1	7487.24	3.25	0	88.49	0	0.69	0	0	21.9	0	0	0	0	0	0	-10.76	-10.76
	Inverter	MV4-9	369289	4909001	2	0	0	100.3	100.3	1	7503.07	3.25	0	88.5	0	0.69	0	0	21.92	0	0	0	0	0	0	-10.8	-10.8
	Inverter	MV4-4	369027	4909199	2	0	0	100.3	100.3	1	7557.44	3.25	0	88.57	0	0.69	0	0	21.98	0	0	0	0	0	0	-10.92	-10.92
	Inverter	MV5-5	370015	4908690	2	0	0	100.3	100.3	1	7620.72	3.25	0	88.64	0	0.68	0	0	22.06	0	0	0	0	0	0	-11.07	-11.07

Inverter	MV4-6	369243	4909192	2	0	0	100.3	100.3	1	7649.47	3.25	0	88.67	0	0.68	0	0	22.09	0	0	0	0	0	0	-11.13	-11.13
Inverter	MV4-5	369289	4909199	2	0	0	100.3	100.3	1	7677.2	3.25	0	88.7	0	0.68	0	0	22.13	0	0	0	0	0	0	-11.2	-11.2
Inverter	MV4-1	369011	4909397	2	0	0	100.3	100.3	1	7728.5	3.25	0	88.76	0	0.67	0	0	22.19	0	0	0	0	0	0	-11.31	-11.31
Inverter	MV5-2	370006	4908853	2	0	0	100.3	100.3	1	7750.25	3.25	0	88.79	0	0.67	0	0	22.21	0	0	0	0	0	0	-11.36	-11.36
Inverter	MV5-4	370324	4908707	2	0	0	100.3	100.3	1	7814.45	3.25	0	88.86	0	0.67	0	0	22.29	0	0	0	0	0	0	-11.5	-11.5
Inverter	MV4-3	369229	4909397	2	0	0	100.3	100.3	1	7825.04	3.25	0	88.87	0	0.67	0	0	22.3	0	0	0	0	0	0	-11.53	-11.53
Inverter	MV4-2	369272	4909397	2	0	0	100.3	100.3	1	7844.65	3.25	0	88.89	0	0.67	0	0	22.32	0	0	0	0	0	0	-11.57	-11.57
Inverter	MV5-3	370231	4908851	2	0	0	100.3	100.3	1	7876.53	3.25	0	88.93	0	0.66	0	0	22.36	0	0	0	0	0	0	-11.64	-11.64
Inverter	MV5-1	370020	4909142	2	0	0	100.3	100.3	1	7999.17	3.25	0	89.06	0	0.65	0	0	22.5	0	0	0	0	0	0	-11.91	-11.91
Inverter	MV6-1	370235	4907364	2	0	0	97.3	97.3	1	6721.34	3.25	0	87.55	0	0.71	0	0	20.95	0	0	0	0	0	0	-11.9	-11.9
DSTATCOM - 10 MVAR #2	DSAT2	369403	4908757	2.5	0	0	96.6	96.6	1	7347.33	3.5	0	88.32	0	3.85	0	0	4.47	0	0	0	0	0	0	-0.02	-0.02
DSTATCOM - 10 MVAR #1	DSAT1	369437	4908757	2.5	0	0	96.6	96.6	1	7364.63	3.5	0	88.34	0	3.86	0	0	4.48	0	0	0	0	0	0	-0.05	-0.05
Inverter	MV1-3	364440	4906039	2	0	0	89.1	89.1	1	3819.58	3.25	0	82.64	0	1.35	0	0	10.83	0	0	0	0	0	0	-5.76	-5.76
SubstationTransformer	W_ST	369711.17	4906112.3	2.5	0	0	92	92	1	5465.98	4.25	0	85.75	0	1.75	2.22	0.22	9.16	0	0	0	0	0	0	-6.91	-6.91
Inverter	MV2-2	365977	4906654	2	0	0	89.1	89.1	1	4239.68	3.25	0	83.55	0	1.45	0	0	11.42	0	0	0	0	0	0	-7.36	-7.36
Westbrook Inverter Enclosur	W_INV3	369508	4906164	2	0	0	89.1	89.1	1	5353.77	3.25	0	85.57	0	1.73	0	0	12.93	0	0	0	0	0	0	-11.17	-11.17
Westbrook Inverter Enclosur	W_INV2	369374	4906388	2	0	0	89.1	89.1	1	5420.25	3.25	0	85.68	0	1.74	0	0	13.02	0	0	0	0	0	0	-11.38	-11.38
Westbrook Inverter Enclosur	W_INV4	369673	4906164	2	0	0	89.1	89.1	1	5473.07	3.25	0	85.76	0	1.76	0	0	13.09	0	0	0	0	0	0	-11.55	-11.55
Inverter	MV3-22	368656	4907142	2	0	0	89.1	89.1	1	5579.36	3.25	0	85.93	0	1.78	0	0	13.23	0	0	0	0	0	0	-11.88	-11.88
Westbrook Inverter Enclosur	W_INV7	369780	4906417	2	0	0	89.1	89.1	1	5725.14	3.25	0	86.16	0	1.82	0	0	13.41	0	0	0	0	0	0	-12.33	-12.33
Westbrook Inverter Enclosur	W_INV5	369719	4906574	2	0	0	89.1	89.1	1	5792.96	3.25	0	86.26	0	1.84	0	0	13.5	0	0	0	0	0	0	-12.53	-12.53
Westbrook Inverter Enclosur	W_INV6	369875	4906578	2	0	0	89.1	89.1	1	5905.7	3.25	0	86.43	0	1.86	0	0	13.64	0	0	0	0	0	0	-12.87	-12.87
Inverter	MV3-5	368340	4907843	2	0	0	89.1	89.1	1	6037.43	3.25	0	86.62	0	1.9	0	0	13.81	0	0	0	0	0	0	-13.26	-13.26
Inverter	MV3-1	368156	4907976	2	0	0	89.1	89.1	1	6079.72	3.25	0	86.68	0	1.91	0	0	13.86	0	0	0	0	0	0	-13.39	-13.39
Inverter	MV3-4	368502	4907925	2	0	0	89.1	89.1	1	6183.46	3.25	0	86.82	0	1.93	0	0	13.99	0	0	0	0	0	0	-13.69	-13.69
Inverter	MV3-2	368671	4907928	2	0	0	89.1	89.1	1	6265.13	3.25	0	86.94	0	1.95	0	0	14.09	0	0	0	0	0	0	-13.93	-13.93
Fixed Reactor Bank 1	FRB1	369378	4908755	6	0	0	89.8	89.8	1	7332.95	5.25	0	88.31	0	-0.24	0	0	11.06	0	0	0	0	0	0	-9.34	-9.34
Fixed Reactor Bank 2	FRB2	369464	4908755	6	0	0	89.8	89.8	1	7376.74	5.25	0	88.36	0	-0.24	0	0	11.1	0	0	0	0	0	0	-9.44	-9.44
Inverter	MV4-15	369176	4908481	2	0	0	89.1	89.1	1	6994.55	3.25	0	87.9	0	2.13	0	0	14.98	0	0	0	0	0	0	-15.94	-15.94
Inverter	MV4-14	369176	4908507	2	0	0	89.1	89.1	1	7017.07	3.25	0	87.92	0	2.13	0	0	15.01	0	0	0	0	0	0	-16	-16
Inverter	MV4-13	369051	4908605	2	0	0	89.1	89.1	1	7041.43	3.25	0	87.95	0	2.14	0	0	15.04	0	0	0	0	0	0	-16.07	-16.07
Inverter	MV4-12	369043	4908803	2	0	0	89.1	89.1	1	7212.09	3.25	0	88.16	0	2.18	0	0	15.24	0	0	0	0	0	0	-16.52	-16.52
Inverter	MV5-6	369982	4908507	2	0	0	89.1	89.1	1	7451.89	3.25	0	88.45	0	2.23	0	0	15.52	0	0	0	0	0	0	-17.14	-17.14
Westbrook Inverter Enclosur	W_INV1	369409	4906578	2	0	0	86.1	86.1	1	5584.01	3.25	0	85.94	0	1.78	0	0	13.23	0	0	0	0	0	0	-14.9	-14.9
Inverter	MV6-4	370250	4906966	2	0	0	86.1	86.1	1	6445.18	3.25	0	87.18	0	1.99	0	0	14.32	0	0	0	0	0	0	-17.44	-17.44
Westbrook Inverter Transfor	W_INVTR1	369403	4906578	2	0	0	78.2	78.2	1	5580	3.25	0	85.93	0	-3.29	0	0	2.61	0	0	0	0	0	0	-7.01	-7.01
Westbrook Inverter Transfor	W_INVTR3	369514	4906164	2	0	0	77.3	77.3	1	5358.06	3.25	0	85.58	0	-3.25	0	0	2.53	0	0	0	0	0	0	-7.52	-7.52
Westbrook Inverter Transfor	W_INVTR2	369368	4906388	2	0	0	77.3	77.3	1	5416.16	3.25	0	85.67	0	-3.26	0	0	2.55	0	0	0	0	0	0	-7.63	-7.63
Westbrook Inverter Transfor	W_INVTR4	369679	4906164	2	0	0	77.3	77.3	1	5477.46	3.25	0	85.77	0	-3.27	0	0	2.57	0	0	0	0	0	0	-7.73	-7.73
Westbrook Inverter Transfor	W_INVTR7	369786	4906417	2	0	0	77.3	77.3	1	5729.44	3.25	0	86.16	0	-3.32	0	0	2.65	0	0	0	0	0	0	-8.16	-8.16
Westbrook Inverter Transfor	W_INVTR5	369725	4906574	2	0	0	77.3	77.3	1	5797.15	3.25	0	86.26	0	-3.33	0	0	2.68	0	0	0	0	0	0	-8.27	-8.27
Westbrook Inverter Transfor	W_INVTR6	369881	4906578	2	0	0	77.3	77.3	1	5909.97	3.25	0	86.43	0	-3.35	0	0	2.71	0	0	0	0	0	0	-8.45	-8.45
Inverter Transformer	MV1-14 T	365157	4905049	2	0	0	69.4	69.4	1	2674.87	3.25	0	79.55	0	2.41	0	0	5.6	0	0	0	0	0	0	-18.2	-18.2
Inverter Transformer	MV1-13 T	364725	4905241	2	0	0	69.4	69.4	1	2972.31	3.25	0	80.46	0	2.5	0	0	5.86	0	0	0	0	0	0	-19.47	-19.47
Inverter Transformer	MV1-10 T	365010	4905564	2	0	0	69.4	69.4	1	3208.92	3.25	0	81.13	0	2.57	0	0	6.06	0	0	0	0	0	0	-20.4	-20.4
Inverter Transformer	MV1-7 T	364919	4905782	2	0	0	69.4	69.4	1	3441.34	3.25	0	81.73	0	2.64	0	0	6.25	0	0	0	0	0	0	-21.27	-21.27
Inverter Transformer	MV2-1 T	365836	4906816	2	0	0	69.4	69.4	1	4393.91	3.25	0	83.86	0	2.88	0	0	6.96	0	0	0	0	0	0	-24.35	-24.35
Inverter Transformer	MV6-4 T	370244	4906966	2	0	0	69.4	69.4	1	6440.92	3.25	0	87.18	0	3.25	0	0	8.28	0	0	0	0	0	0	-29.36	-29.36
Inverter Transformer	MV6-1 T	370230	4907364	2	0	0	69.4	69.4	1	6717.95	3.25	0	87.54	0	3.29	0	0	8.44	0	0	0	0	0	0	-29.92	-29.92
Inverter Transformer	MV1-15 T	365309	4904994	2	0	0	56.1	56.1	1	2595.11	3.25	0	79.28	0	0.66	0	0	8.16	0	0	0	0	0	0	-32.04	-32.04
Inverter Transformer	MV1-12 T	365044	4905386	2	0	0	56.1	56.1	1	3027.74	3.25	0	80.62	0	0.84	0	0	8.92	0	0	0	0	0	0	-34.32	-34.32
Inverter Transformer	MV1-11 T	364649	4905414	2	0	0	56.1	56.1	1	3160.58	3.25	0	81	0	0.9	0	0	9.14	0	0	0	0	0	0	-34.97	-34.97
Inverter Transformer	MV1-8 T	364782	4905647	2	0	0	56.1	56.1	1	3343.78	3.25	0	81.48	0	0.97	0	0	9.44	0	0	0	0	0	0	-35.84	-35.84
Inverter Transformer	MV1-9 T	364555	4905646	2	0	0	56.1	56.1	1	3410.56	3.25	0	81.66	0	1	0	0	9.55	0	0	0	0	0	0	-36.15	-36.15
Inverter Transformer	MV1-4 T	364821	4905918	2	0	0	56.1	56.1	1	3596.17	3.25	0	82.12	0	1.08	0	0	9.84	0	0	0	0	0	0	-36.98	-36.98
Inverter Transformer	MV1-5 T	364676	4905892	2	0	0	56.1	56.1	1	3608.39	3.25	0	82.15	0	1.08	0	0	9.86	0	0	0	0	0	0	-37.03	-37.03
Inverter Transformer	MV1-6 T	364482	4905835	2	0	0	56.1	56.1	1	3613.06	3.25	0	82.16	0	1.09	0	0	9.87	0	0	0	0	0	0	-37.05	-37.05
Inverter Transformer	MV1-2 T	364759	4906063	2	0	0	56.1	56.1	1	3751.84	3.25	0	82.48	0	1.14	0	0	10.08	0	0	0	0	0	0	-37.65	-37.65
Inverter Transformer	MV1-3 T	364435	4906039	2	0	0	56.1	56.1	1	3821.2	3.25	0	82.64	0	1.17	0	0	10.19	0	0	0	0	0	0	-37.94	-37.94
Inverter Transformer	MV1-1 T	364721	4906166	2	0	0	56.1	56.1	1	3861.02	3.25	0	82.73	0	1.19	0	0	10.25	0	0	0	0	0	0	-38.11	-38.11
Inverter Transformer	MV2-4 T	365590	4906628	2	0	0	56.1	56.1	1	4203.88	3.25	0	83.47	0	1.32	0	0	10.75	0	0	0	0	0	0	-39.49	-39.49
Inverter Transformer	MV2-3 T	365814	4906641	2	0	0	56.1	56.1	1	4218.25	3.25	0	83.5	0	1.33	0	0	10.77	0	0	0	0	0	0	-39.55	-39.55
Inverter Transformer	MV2-2 T	365982	4906654	2	0	0	56.1	56.1	1	4240.04	3.25	0	83.55	0	1.34	0	0	10.81	0	0	0	0	0	0	-39.63	-39.63
Inverter Transformer	MV3-18 T	367757	4907412	2	0	0	56.1	56.1	1	5403.69	3.25	0	85.65	0	1.77	0	0	12.37	0	0	0	0	0	0	-43.74	-43.74
Inverter Transformer	MV3-12 T	367674	4907594	2	0	0	56.1	56.1	1	5541.64	3.25	0	85.87	0	1.81	0	0	12.55	0	0	0	0	0	0	-44.18	-44.18
Inverter Transformer	MV3-21 T	368484	4907206	2	0	0	56.1	56.1	1	5544.52	3.25	0	85.88	0	1.82	0	0	12.55	0	0	0	0	0	0	-44.19	-44.19
Inverter Transformer	MV3-22 T	368661	4907142	2	0	0	56.1	56.1	1	5582.04	3.25	0	85.94	0	1.83	0	0	12.6	0	0	0	0	0	0	-44.3	-44.3
Inverter Transformer	MV3-19 T	368352	4907347	2	0	0	56.1	56.1	1	5602.32	3.25	0	85.97	0	1.84	0	0	12.62	0	0	0	0	0	0	-44.37	-44.37
Inverter Transformer	MV3-13 T	367958	4907577	2	0	0	56.1	56.1	1	5634.69	3.25	0	86.02	0	1.85	0	0	12.66	0	0	0	0	0	0	-44.47	-44.47
Inverter Transformer	MV3-17 T	368183	4907472	2	0	0	56.1	56.1	1	5635.27	3.25	0	86.02	0	1.85	0	0	12.66	0	0	0	0	0	0	-44.47	-44.47
Inverter Transformer	MV3-15 T	368351	4907477	2	0	0	56.1	56.1	1	5716.4	3.25	0	86.14	0	1.87	0	0	12.76	0	0	0	0	0	0	-44.72	-44.72
Inverter Transformer	MV3-20 T	368683	4907317	2	0	0	56.1	56.1	1	5742.17	3.25	0	86.18	0	1.88	0	0	12.79	0	0	0	0	0	0	-44.8	-44.8
Inverter Transformer	MV3-16 T	368509	4907475	2	0	0	56.1	56.1	1	5790.27	3.25	0	86.25	0	1.9	0	0	12.85	0	0	0	0	0	0	-44.94	-44.94
Inverter Transformer	MV3-7 T	367951	4907754	2	0	0	56.1	56.1	1	5794.22	3.25	0	86.26	0	1.9	0	0	12.86	0	0	0	0	0	0	-44.96	-44.96

	Inverter Transformer	MV3-10 T	368162	4907669	2	0	0	56.1	56.1	1	5803.34	3.25	0	86.27	0	1.9	0	0	12.87	0	0	0	0	0	0	-44.98	-44.98
	Inverter Transformer	MV3-11 T	368340	4907662	2	0	0	56.1	56.1	1	5875.54	3.25	0	86.38	0	1.92	0	0	12.95	0	0	0	0	0	0	-45.2	-45.2
	Inverter Transformer	MV3-14 T	368678	4907498	2	0	0	56.1	56.1	1	5894.59	3.25	0	86.41	0	1.93	0	0	12.98	0	0	0	0	0	0	-45.26	-45.26
	Inverter Transformer	MV3-6 T	368156	4907834	2	0	0	56.1	56.1	1	5950.35	3.25	0	86.49	0	1.95	0	0	13.04	0	0	0	0	0	0	-45.43	-45.43
	Inverter Transformer	MV3-3 T	367944	4907927	2	0	0	56.1	56.1	1	5951.04	3.25	0	86.49	0	1.95	0	0	13.04	0	0	0	0	0	0	-45.43	-45.43
	Inverter Transformer	MV3-9 T	368517	4907703	2	0	0	56.1	56.1	1	5993.95	3.25	0	86.55	0	1.96	0	0	13.1	0	0	0	0	0	0	-45.55	-45.55
	Inverter Transformer	MV3-5 T	368335	4907843	2	0	0	56.1	56.1	1	6035.23	3.25	0	86.61	0	1.98	0	0	13.14	0	0	0	0	0	0	-45.68	-45.68
	Inverter Transformer	MV3-1 T	368150	4907976	2	0	0	56.1	56.1	1	6077.28	3.25	0	86.67	0	1.99	0	0	13.19	0	0	0	0	0	0	-45.8	-45.8
	Inverter Transformer	MV3-8 T	368685	4907712	2	0	0	56.1	56.1	1	6083.19	3.25	0	86.68	0	1.99	0	0	13.2	0	0	0	0	0	0	-45.82	-45.82
	Inverter Transformer	MV3-4 T	368507	4907925	2	0	0	56.1	56.1	1	6185.74	3.25	0	86.83	0	2.02	0	0	13.32	0	0	0	0	0	0	-46.11	-46.11
	Inverter Transformer	MV3-2 T	368677	4907928	2	0	0	56.1	56.1	1	6268	3.25	0	86.94	0	2.05	0	0	13.42	0	0	0	0	0	0	-46.35	-46.35
	Inverter Transformer	MV6-3 T	370202	4907140	2	0	0	56.1	56.1	1	6535.6	3.25	0	87.31	0	2.13	0	0	13.72	0	0	0	0	0	0	-47.1	-47.1
	Inverter Transformer	MV6-2 T	370091	4907339	2	0	0	56.1	56.1	1	6605.9	3.25	0	87.4	0	2.15	0	0	13.8	0	0	0	0	0	0	-47.29	-47.29
	Inverter Transformer	MV4-15 T	369170	4908481	2	0	0	56.1	56.1	1	6991.55	3.25	0	87.89	0	2.26	0	0	14.22	0	0	0	0	0	0	-48.31	-48.31
	Inverter Transformer	MV4-14 T	369182	4908507	2	0	0	56.1	56.1	1	7020.07	3.25	0	87.93	0	2.26	0	0	14.25	0	0	0	0	0	0	-48.38	-48.38
	Inverter Transformer	MV4-13 T	369057	4908605	2	0	0	56.1	56.1	1	7044.3	3.25	0	87.96	0	2.27	0	0	14.28	0	0	0	0	0	0	-48.45	-48.45
	Inverter Transformer	MV4-12 T	369049	4908803	2	0	0	56.1	56.1	1	7214.89	3.25	0	88.16	0	2.32	0	0	14.46	0	0	0	0	0	0	-48.88	-48.88
	Inverter Transformer	MV4-11 T	369269	4908855	2	0	0	56.1	56.1	1	7365.67	3.25	0	88.34	0	2.36	0	0	14.62	0	0	0	0	0	0	-49.26	-49.26
	Inverter Transformer	MV4-7 T	369040	4909001	2	0	0	56.1	56.1	1	7386.4	3.25	0	88.37	0	2.36	0	0	14.64	0	0	0	0	0	0	-49.31	-49.31
	Inverter Transformer	MV4-10 T	369307	4908858	2	0	0	56.1	56.1	1	7386.89	3.25	0	88.37	0	2.36	0	0	14.64	0	0	0	0	0	0	-49.31	-49.31
	Inverter Transformer	MV5-6 T	369987	4908507	2	0	0	56.1	56.1	1	7454.78	3.25	0	88.45	0	2.38	0	0	14.71	0	0	0	0	0	0	-49.48	-49.48
	Inverter Transformer	MV4-8 T	369262	4909001	2	0	0	56.1	56.1	1	7490.11	3.25	0	88.49	0	2.39	0	0	14.74	0	0	0	0	0	0	-49.56	-49.56
	Inverter Transformer	MV4-9 T	369284	4909001	2	0	0	56.1	56.1	1	7500.67	3.25	0	88.5	0	2.39	0	0	14.76	0	0	0	0	0	0	-49.59	-49.59
	Inverter Transformer	MV4-4 T	369033	4909199	2	0	0	56.1	56.1	1	7560.11	3.25	0	88.57	0	2.41	0	0	14.82	0	0	0	0	0	0	-49.73	-49.73
	Inverter Transformer	MV5-5 T	370021	4908690	2	0	0	56.1	56.1	1	7624.14	3.25	0	88.64	0	2.42	0	0	14.88	0	0	0	0	0	0	-49.89	-49.89
	Inverter Transformer	MV4-6 T	369249	4909192	2	0	0	56.1	56.1	1	7652.27	3.25	0	88.68	0	2.43	0	0	14.91	0	0	0	0	0	0	-49.95	-49.95
	Inverter Transformer	MV4-5 T	369283	4909199	2	0	0	56.1	56.1	1	7674.38	3.25	0	88.7	0	2.43	0	0	14.93	0	0	0	0	0	0	-50.01	-50.01
	Inverter Transformer	MV4-1 T	369017	4909397	2	0	0	56.1	56.1	1	7731.09	3.25	0	88.76	0	2.45	0	0	14.99	0	0	0	0	0	0	-50.14	-50.14
	Inverter Transformer	MV5-2 T	370011	4908853	2	0	0	56.1	56.1	1	7753.04	3.25	0	88.79	0	2.45	0	0	15.01	0	0	0	0	0	0	-50.19	-50.19
	Inverter Transformer	MV5-4 T	370330	4908707	2	0	0	56.1	56.1	1	7818.02	3.25	0	88.86	0	2.47	0	0	15.08	0	0	0	0	0	0	-50.35	-50.35
	Inverter Transformer	MV4-3 T	369234	4909397	2	0	0	56.1	56.1	1	7827.31	3.25	0	88.87	0	2.47	0	0	15.09	0	0	0	0	0	0	-50.37	-50.37
	Inverter Transformer	MV4-2 T	369267	4909397	2	0	0	56.1	56.1	1	7842.36	3.25	0	88.89	0	2.47	0	0	15.1	0	0	0	0	0	0	-50.4	-50.4
	Inverter Transformer	MV5-3 T	370237	4908851	2	0	0	56.1	56.1	1	7880	3.25	0	88.93	0	2.48	0	0	15.14	0	0	0	0	0	0	-50.49	-50.49
	Inverter Transformer	MV5-1 T	370015	4909142	2	0	0	56.1	56.1	1	7996.45	3.25	0	89.06	0	2.51	0	0	15.25	0	0	0	0	0	0	-50.76	-50.76
	Line Reactor	NGR	369421	4908787.5	5	0	0	45.4	45.4	1	7382.75	5.25	0	88.36	0	3.21	1.37	0.1	3.02	0	0	0	0	0	0	-50.61	-50.61
Limit. Valu	0	0																								
Level D/N:	23.0419	23.0419																								

Receiver: Existing Noise Receptor
ID: G-58
X: 365654.2
Y: 4903592.1
Z: 4.5
Ground: 0

ISO	Description	ID	X	Y	Z	Ground	ReflOrd	LxT	LxN	L/A	Dist.	hm	Freq	Adiv	K0b	Agr	Abar	z	Aatm	Afol	Ahous	Cmet	CmetN	Dc	RL	LtotT	LtotN
	Inverter	MV1-15	365315	4904994	2	0	0	100.3	100.3	1	1442.35	3.25	0	74.18	0	-0.06	0	0	12.18	0	0	0	0	0	0	14.01	14.01
	Sol_Luce Substation	S_Substation	369426	4908792	3.5	0	0	112.1	112.1	1	6423.82	5.25	0	87.16	0	1.26	2.56	0.29	10.18	0	0	0	0	0	0	10.92	10.92
	Inverter	MV1-12	365038	4905386	2	0	0	100.3	100.3	1	1896.78	3.25	0	76.56	0	0.1	0	0	13.24	0	0	0	0	0	0	10.41	10.41
	Inverter	MV1-11	364655	4905414	2	0	0	100.3	100.3	1	2077.91	3.25	0	77.35	0	0.15	0	0	13.62	0	0	0	0	0	0	9.18	9.18
	Inverter	MV1-14	365163	4905049	2	0	0	97.3	97.3	1	1537.48	3.25	0	74.74	0	-0.02	0	0	12.42	0	0	0	0	0	0	10.18	10.18
	Inverter	MV1-8	364788	4905647	2	0	0	100.3	100.3	1	2230.01	3.25	0	77.97	0	0.19	0	0	13.93	0	0	0	0	0	0	8.22	8.22
	Inverter	MV1-9	364561	4905646	2	0	0	100.3	100.3	1	2326.71	3.25	0	78.33	0	0.22	0	0	14.12	0	0	0	0	0	0	7.64	7.64
	Inverter	MV1-4	364815	4905918	2	0	0	100.3	100.3	1	2472.67	3.25	0	78.86	0	0.25	0	0	14.41	0	0	0	0	0	0	6.79	6.79
	Inverter	MV1-5	364671	4905892	2	0	0	100.3	100.3	1	2501.25	3.25	0	78.96	0	0.26	0	0	14.46	0	0	0	0	0	0	6.63	6.63
	Inverter	MV1-6	364477	4905835	2	0	0	100.3	100.3	1	2533.06	3.25	0	79.07	0	0.26	0	0	14.52	0	0	0	0	0	0	6.45	6.45
	Inverter	MV1-2	364753	4906063	2	0	0	100.3	100.3	1	2630.12	3.25	0	79.4	0	0.29	0	0	14.7	0	0	0	0	0	0	5.92	5.92
	Inverter	MV1-13	364731	4905241	2	0	0	97.3	97.3	1	1889.76	3.25	0	76.53	0	0.1	0	0	13.23	0	0	0	0	0	0	7.46	7.46
	Inverter	MV1-1	364715	4906166	2	0	0	100.3	100.3	1	2739.9	3.25	0	79.75	0	0.31	0	0	14.9	0	0	0	0	0	0	5.34	5.34
	Gardiner Substation	G_Sub	366586.3	4903349.9	2.5	0	0	90.8	90.8	1	963.06	4.25	0	70.67	0	0.24	2.67	0.31	2.44	0	0	0	0	0	0	14.75	14.75
	Inverter	MV1-10	365004	4905564	2	0	0	97.3	97.3	1	2076.33	3.25	0	77.35	0	0.15	0	0	13.62	0	0	0	0	0	0	6.19	6.19
	Inverter	MV2-4	365586	4906624	2	0	0	100.3	100.3	1	3032.67	3.25	0	80.64	0	0.37	0	0	15.43	0	0	0	0	0	0	3.88	3.88
	Inverter	MV2-3	365820	4906641	2	0	0	100.3	100.3	1	3053.41	3.25	0	80.7	0	0.37	0	0	15.47	0	0	0	0	0	0	3.78	3.78
	Inverter	MV1-7	364925	4905782	2	0	0	97.3	97.3	1	2308.12	3.25	0	78.27	0	0.21	0	0	14.09	0	0	0	0	0	0	4.75	4.75
	Inverters	G_Inv1	366526.4	4903225.8	2	0	0	87.7	87.7	1	946	3.25	0	70.52	0	2.44	0	0	1.36	0	0	0	0	0	0	13.34	13.34
	Inverter	MV3-18	367752	4907412	2	0	0	100.3	100.3	1	4358.03	3.25	0	83.79	0	0.57	0	0	17.61	0	0	0	0	0	0	-1.66	-1.66
	Inverter	MV3-12	367668	4907594	2	0	0	100.3	100.3	1	4480.02	3.25	0	84.03	0	0.59	0	0	17.8	0	0	0	0	0	0	-2.1	-2.1
	Inverters	G_Inv3	366583.7	4903091.4	2	0	0	87.7	87.7	1	1055.78	3.25	0	71.47	0	2.46	0	0	1.5	0	0	0	0	0	0	12.23	12.23
	Inverter	MV2-1	365842	4906816	2	0	0	97.3	97.3	1	3229.37	3.25	0	81.18	0	0.4	0	0	15.77	0	0	0	0	0	0	-0.05	-0.05
	Inverter	MV3-21	368478	4907206	2	0	0	100.3	100.3	1	4586.3	3.25	0	84.23	0	0.6	0	0	17.96	0	0	0	0	0	0	-2.48	-2.48
	Inverter	MV3-13	367963	4907577	2	0	0	100.3	100.3	1	4605.43	3.25	0	84.27	0	0.6	0	0	17.99	0	0	0	0	0	0	-2.55	-2.55
	Inverter	MV3-19	368357	4907347	2	0	0	100.3	100.3	1	4626.49	3.25	0	84.31	0	0.6	0	0	18.02	0	0	0	0	0	0	-2.62	-2.62
	Inverter	MV3-17	368178	4907472	2	0	0	100.3	100.3	1	4628.52	3.25	0	84.31	0	0.61	0	0	18.03	0	0	0	0	0	0	-2.63	-2.63
	Inverters	G_Inv2	366676.9	4903239.1	2	0	0	87.7	87.7	1	1081.91	3.25	0	71.68	0	2.46	0	0	1.53	0	0	0	0	0	0	11.98	11.98

Inverter	MV3-15	368357	4907477	2	0	0	100.3	100.3	1	4732.61	3.25	0	84.5	0	0.62	0	0	18.18	0	0	0	0	0	0	-2.99	-2.99
Inverter	MV3-7	367945	4907754	2	0	0	100.3	100.3	1	4750.7	3.25	0	84.54	0	0.62	0	0	18.21	0	0	0	0	0	0	-3.05	-3.05
Inverter	MV3-10	368167	4907669	2	0	0	100.3	100.3	1	4789.08	3.25	0	84.61	0	0.62	0	0	18.27	0	0	0	0	0	0	-3.18	-3.18
Inverter	MV3-20	368689	4907317	2	0	0	100.3	100.3	1	4804.67	3.25	0	84.63	0	0.62	0	0	18.29	0	0	0	0	0	0	-3.24	-3.24
Inverter	MV3-16	368514	4907475	2	0	0	100.3	100.3	1	4822.38	3.25	0	84.67	0	0.63	0	0	18.32	0	0	0	0	0	0	-3.3	-3.3
Inverter	MV3-11	368346	4907662	2	0	0	100.3	100.3	1	4879.54	3.25	0	84.77	0	0.63	0	0	18.4	0	0	0	0	0	0	-3.49	-3.49
Inverter	MV3-3	367939	4907927	2	0	0	100.3	100.3	1	4900.17	3.25	0	84.8	0	0.63	0	0	18.43	0	0	0	0	0	0	-3.56	-3.56
Inverter	MV3-6	368162	4907834	2	0	0	100.3	100.3	1	4927.76	3.25	0	84.85	0	0.64	0	0	18.47	0	0	0	0	0	0	-3.65	-3.65
Inverter	MV3-14	368684	4907498	2	0	0	100.3	100.3	1	4943.25	3.25	0	84.88	0	0.64	0	0	18.5	0	0	0	0	0	0	-3.7	-3.7
Inverter	MV3-9	368512	4907703	2	0	0	100.3	100.3	1	5006.65	3.25	0	84.99	0	0.64	0	0	18.59	0	0	0	0	0	0	-3.91	-3.91
Inverters	G_Inv5	366638.5	4902958.1	2	0	0	87.7	87.7	1	1170.82	3.25	0	72.37	0	2.47	0	0	1.64	0	0	0	0	0	0	11.18	11.18
Inverters	G_Inv4	366732.8	4903105	2	0	0	87.7	87.7	1	1183.49	3.25	0	72.46	0	2.48	0	0	1.66	0	0	0	0	0	0	11.06	11.06
Inverter	MV3-8	368680	4907712	2	0	0	100.3	100.3	1	5111.66	3.25	0	85.17	0	0.65	0	0	18.74	0	0	0	0	0	0	-4.25	-4.25
Inverters	G_Inv6	366788.5	4902972	2	0	0	87.7	87.7	1	1292.74	3.25	0	73.23	0	2.49	0	0	1.79	0	0	0	0	0	0	10.15	10.15
Inverters	G_Inv7	366694.6	4902824.7	2	0	0	87.7	87.7	1	1292.8	3.25	0	73.23	0	2.49	0	0	1.79	0	0	0	0	0	0	10.15	10.15
Inverter	MV6-3	370207	4907140	2	0	0	100.3	100.3	1	5771.97	3.25	0	86.23	0	0.7	0	0	19.68	0	0	0	0	0	0	-6.29	-6.29
Inverter	MV6-2	370085	4907339	2	0	0	100.3	100.3	1	5802.69	3.25	0	86.27	0	0.7	0	0	19.72	0	0	0	0	0	0	-6.38	-6.38
Inverters	G_Inv8	366844.5	4902838.5	2	0	0	87.7	87.7	1	1408.81	3.25	0	73.98	0	2.51	0	0	1.93	0	0	0	0	0	0	9.24	9.24
Inverters	G_Inv9	366750.9	4902691.8	2	0	0	87.7	87.7	1	1418.91	3.25	0	74.04	0	2.51	0	0	1.95	0	0	0	0	0	0	9.17	9.17
Inverter	MV4-7	369035	4909001	2	0	0	100.3	100.3	1	6378.56	3.25	0	87.09	0	0.71	0	0	20.5	0	0	0	0	0	0	-8	-8
Inverter	MV4-11	369264	4908855	2	0	0	100.3	100.3	1	6381.91	3.25	0	87.1	0	0.71	0	0	20.5	0	0	0	0	0	0	-8	-8
Inverter	MV4-10	369312	4908858	2	0	0	100.3	100.3	1	6411.65	3.25	0	87.14	0	0.71	0	0	20.54	0	0	0	0	0	0	-8.08	-8.08
Inverter	MV4-8	369256	4909001	2	0	0	100.3	100.3	1	6498.4	3.25	0	87.26	0	0.71	0	0	20.66	0	0	0	0	0	0	-8.32	-8.32
Inverter	MV4-9	369289	4909001	2	0	0	100.3	100.3	1	6516.75	3.25	0	87.28	0	0.71	0	0	20.68	0	0	0	0	0	0	-8.36	-8.36
Inverter	MV4-4	369027	4909199	2	0	0	100.3	100.3	1	6543.17	3.25	0	87.32	0	0.71	0	0	20.72	0	0	0	0	0	0	-8.43	-8.43
Inverters	G_Inv10	366900.7	4902704.8	2	0	0	87.7	87.7	1	1530.06	3.25	0	74.69	0	2.52	0	0	2.08	0	0	0	0	0	0	8.36	8.36
Inverter	MV4-6	369243	4909192	2	0	0	100.3	100.3	1	6651.19	3.25	0	87.46	0	0.71	0	0	20.86	0	0	0	0	0	0	-8.72	-8.72
Inverter	MV4-5	369289	4909199	2	0	0	100.3	100.3	1	6682	3.25	0	87.5	0	0.71	0	0	20.89	0	0	0	0	0	0	-8.8	-8.8
Inverter	MV4-1	369011	4909397	2	0	0	100.3	100.3	1	6705.59	3.25	0	87.53	0	0.71	0	0	20.93	0	0	0	0	0	0	-8.86	-8.86
Inverter	MV5-5	370015	4908690	2	0	0	100.3	100.3	1	6708.59	3.25	0	87.53	0	0.71	0	0	20.93	0	0	0	0	0	0	-8.86	-8.86
Inverter	MV4-3	369229	4909397	2	0	0	100.3	100.3	1	6817.34	3.25	0	87.67	0	0.71	0	0	21.07	0	0	0	0	0	0	-9.14	-9.14
Inverter	MV5-2	370006	4908853	2	0	0	100.3	100.3	1	6827.54	3.25	0	87.69	0	0.71	0	0	21.08	0	0	0	0	0	0	-9.17	-9.17
Inverter	MV4-2	369272	4909397	2	0	0	100.3	100.3	1	6839.98	3.25	0	87.7	0	0.71	0	0	21.1	0	0	0	0	0	0	-9.2	-9.2
Inverter	MV5-4	370324	4908707	2	0	0	100.3	100.3	1	6925.98	3.25	0	87.81	0	0.71	0	0	21.21	0	0	0	0	0	0	-9.42	-9.42
Inverter	MV5-3	370231	4908851	2	0	0	100.3	100.3	1	6971.59	3.25	0	87.87	0	0.71	0	0	21.26	0	0	0	0	0	0	-9.53	-9.53
Inverter	MV5-1	370020	4909142	2	0	0	100.3	100.3	1	7061.28	3.25	0	87.98	0	0.71	0	0	21.38	0	0	0	0	0	0	-9.75	-9.75
Inverter	MV6-1	370235	4907364	2	0	0	97.3	97.3	1	5933.88	3.25	0	86.47	0	0.7	0	0	19.9	0	0	0	0	0	0	-9.76	-9.76
DSTATCOM - 10 MVAR #2	DSAT2	369403	4908757	2.5	0	0	96.6	96.6	1	6381.98	3.5	0	87.1	0	3.8	0	0	4.02	0	0	0	0	0	0	1.71	1.71
DSTATCOM - 10 MVAR #1	DSAT1	369437	4908757	2.5	0	0	96.6	96.6	1	6402.01	3.5	0	87.13	0	3.8	0	0	4.03	0	0	0	0	0	0	1.67	1.67
Inverter	MV1-3	364440	4906039	2	0	0	89.1	89.1	1	2731.59	3.25	0	79.73	0	1.08	0	0	9.21	0	0	0	0	0	0	-0.96	-0.96
Inverter	MV2-2	365977	4906654	2	0	0	89.1	89.1	1	3078.87	3.25	0	80.77	0	1.17	0	0	9.74	0	0	0	0	0	0	-2.61	-2.61
SubstationTransformer	W_ST	369711.17	4906112.3	2.5	0	0	92	92	1	4776.01	4.25	0	84.58	0	1.58	2.39	0.25	8.35	0	0	0	0	0	0	-4.92	-4.92
Westbrook Inverter Enclosur	W_INV3	369508	4906164	2	0	0	89.1	89.1	1	4633.19	3.25	0	84.32	0	1.55	0	0	11.97	0	0	0	0	0	0	-8.78	-8.78
Inverter	MV3-22	368656	4907142	2	0	0	89.1	89.1	1	4648.94	3.25	0	84.35	0	1.55	0	0	11.99	0	0	0	0	0	0	-8.83	-8.83
Westbrook Inverter Enclosur	W_INV2	369374	4906388	2	0	0	89.1	89.1	1	4653.38	3.25	0	84.36	0	1.55	0	0	12	0	0	0	0	0	0	-8.85	-8.85
Westbrook Inverter Enclosur	W_INV4	369673	4906164	2	0	0	89.1	89.1	1	4771.31	3.25	0	84.57	0	1.58	0	0	12.16	0	0	0	0	0	0	-9.25	-9.25
Westbrook Inverter Enclosur	W_INV7	369780	4906417	2	0	0	89.1	89.1	1	5000.23	3.25	0	84.98	0	1.64	0	0	12.46	0	0	0	0	0	0	-10.03	-10.03
Inverter	MV3-5	368340	4907843	2	0	0	89.1	89.1	1	5028.29	3.25	0	85.03	0	1.65	0	0	12.5	0	0	0	0	0	0	-10.12	-10.12
Westbrook Inverter Enclosur	W_INV5	369719	4906574	2	0	0	89.1	89.1	1	5041.26	3.25	0	85.05	0	1.65	0	0	12.52	0	0	0	0	0	0	-10.16	-10.16
Inverter	MV3-1	368156	4907976	2	0	0	89.1	89.1	1	5047.53	3.25	0	85.06	0	1.65	0	0	12.53	0	0	0	0	0	0	-10.18	-10.18
Westbrook Inverter Enclosur	W_INV6	369875	4906578	2	0	0	89.1	89.1	1	5170.18	3.25	0	85.27	0	1.68	0	0	12.69	0	0	0	0	0	0	-10.58	-10.58
Inverter	MV3-4	368502	4907925	2	0	0	89.1	89.1	1	5184.98	3.25	0	85.29	0	1.69	0	0	12.71	0	0	0	0	0	0	-10.63	-10.63
Inverter	MV3-2	368671	4907928	2	0	0	89.1	89.1	1	5282.15	3.25	0	85.46	0	1.71	0	0	12.84	0	0	0	0	0	0	-10.95	-10.95
Fixed Reactor Bank 1	FRB1	369378	4908755	6	0	0	89.8	89.8	1	6365.71	5.25	0	87.08	0	-0.37	0	0	10.12	0	0	0	0	0	0	-7.06	-7.06
Fixed Reactor Bank 2	FRB2	369464	4908755	6	0	0	89.8	89.8	1	6416.39	5.25	0	87.15	0	-0.36	0	0	10.17	0	0	0	0	0	0	-7.18	-7.18
Inverter	MV4-15	369176	4908481	2	0	0	89.1	89.1	1	6025.32	3.25	0	86.6	0	1.89	0	0	13.79	0	0	0	0	0	0	-13.23	-13.23
Inverter	MV4-14	369176	4908507	2	0	0	89.1	89.1	1	6046.43	3.25	0	86.63	0	1.9	0	0	13.82	0	0	0	0	0	0	-13.29	-13.29
Inverter	MV4-13	369051	4908605	2	0	0	89.1	89.1	1	6055.36	3.25	0	86.64	0	1.9	0	0	13.83	0	0	0	0	0	0	-13.32	-13.32
Inverter	MV4-12	369043	4908803	2	0	0	89.1	89.1	1	6215.9	3.25	0	86.87	0	1.94	0	0	14.03	0	0	0	0	0	0	-13.78	-13.78
Inverter	MV5-6	369982	4908507	2	0	0	89.1	89.1	1	6548.75	3.25	0	87.32	0	2.02	0	0	14.44	0	0	0	0	0	0	-14.73	-14.73
Westbrook Inverter Enclosur	W_INV1	369409	4906578	2	0	0	86.1	86.1	1	4797.3	3.25	0	84.62	0	1.59	0	0	12.19	0	0	0	0	0	0	-12.34	-12.34
Inverter	MV6-4	370250	4906966	2	0	0	86.1	86.1	1	5701.28	3.25	0	86.12	0	1.81	0	0	13.38	0	0	0	0	0	0	-15.26	-15.26
Inverter Transformer	MV1-14 T	365157	4905049	2	0	0	69.4	69.4	1	1539.41	3.25	0	74.75	0	1.99	0	0	4.48	0	0	0	0	0	0	-11.87	-11.87
Westbrook Inverter Transfor	W_INVTR1	369403	4906578	2	0	0	78.2	78.2	1	4792.61	3.25	0	84.61	0	-3.14	0	0	2.34	0	0	0	0	0	0	-5.58	-5.58
Westbrook Inverter Transfor	W_INVTR3	369514	4906164	2	0	0	77.3	77.3	1	4638.18	3.25	0	84.33	0	-3.1	0	0	2.29	0	0	0	0	0	0	-6.17	-6.17
Westbrook Inverter Transfor	W_INVTR2	369368	4906388	2	0	0	77.3	77.3	1	4648.59	3.25	0	84.35	0	-3.11	0	0	2.29	0	0	0	0	0	0	-6.19	-6.19
Inverter Transformer	MV1-13 T	364725	4905241	2	0	0	69.4	69.4	1	1892.69	3.25	0	76.54	0	2.13	0	0	4.86	0	0	0	0	0	0	-14.18	-14.18
Westbrook Inverter Transfor	W_INVTR4	369679	4906164	2	0	0	77.3	77.3	1	4776.37	3.25	0	84.58	0	-3.13	0	0	2.34	0	0	0	0	0	0	-6.44	-6.44
Westbrook Inverter Transfor	W_INVTR7	369786	4906417	2	0	0	77.3	77.3	1	5005.18	3.25	0	84.99	0	-3.18	0	0	2.41	0	0	0	0	0	0	-6.88	-6.88
Westbrook Inverter Transfor	W_INVTR5	369725	4906574	2	0	0	77.3	77.3	1	5046.1	3.25	0	85.06	0	-3.19	0	0	2.43	0	0	0	0	0	0	-6.96	-6.96
Westbrook Inverter Transfor	W_INVTR6	369881	4906578	2	0	0	77.3	77.3	1	5175.08	3.25	0	85.28	0	-3.21	0	0	2.47	0	0	0	0	0	0	-7.2	-7.2
Inverter Transformer	MV1-10 T	365010	4905564	2	0	0	69.4	69.4	1	2074.46	3.25	0	77.34	0	2.2	0	0	5.04	0	0	0	0	0	0	-15.23	-15.23
Inverter Transformer	MV1-7 T	364919	4905782	2	0	0	69.4	69.4	1	2310.02	3.25	0	78.27	0	2.28	0	0	5.27	0	0	0	0	0	0	-16.47	-16.47
Inverter Transformer	MV2-1 T	365836	4906816	2	0	0	69.4	69.4	1	3229.02	3.25	0	81.18	0	2.58	0	0	6.07	0	0	0	0	0	0	-20.48	-20.48

	Inverter Transformer	MV6-4 T	370244	4906966	2	0	0	69.4	69.4	1	5696.44	3.25	0	86.11	0	3.14	0	0	7.83	0	0	0	0	0	0	-27.73	-27.73
	Inverter Transformer	MV6-1 T	370230	4907364	2	0	0	69.4	69.4	1	5930.02	3.25	0	86.46	0	3.18	0	0	7.98	0	0	0	0	0	0	-28.26	-28.26
	Inverter Transformer	MV1-15 T	365309	4904994	2	0	0	56.1	56.1	1	1443.78	3.25	0	74.19	0	0.18	0	0	5.9	0	0	0	0	0	0	-24.2	-24.2
	Inverter Transformer	MV1-12 T	365044	4905386	2	0	0	56.1	56.1	1	1894.84	3.25	0	76.55	0	0.36	0	0	6.84	0	0	0	0	0	0	-27.69	-27.69
	Inverter Transformer	MV1-11 T	364649	4905414	2	0	0	56.1	56.1	1	2080.81	3.25	0	77.36	0	0.44	0	0	7.2	0	0	0	0	0	0	-28.95	-28.95
	Inverter Transformer	MV1-8 T	364782	4905647	2	0	0	56.1	56.1	1	2232.34	3.25	0	77.98	0	0.5	0	0	7.49	0	0	0	0	0	0	-29.91	-29.91
	Inverter Transformer	MV1-9 T	364555	4905646	2	0	0	56.1	56.1	1	2329.54	3.25	0	78.35	0	0.54	0	0	7.68	0	0	0	0	0	0	-30.51	-30.51
	Inverter Transformer	MV1-4 T	364821	4905918	2	0	0	56.1	56.1	1	2470.64	3.25	0	78.86	0	0.6	0	0	7.94	0	0	0	0	0	0	-31.34	-31.34
	Inverter Transformer	MV1-5 T	364676	4905892	2	0	0	56.1	56.1	1	2499.28	3.25	0	78.96	0	0.62	0	0	7.99	0	0	0	0	0	0	-31.5	-31.5
	Inverter Transformer	MV1-6 T	364482	4905835	2	0	0	56.1	56.1	1	2530.74	3.25	0	79.06	0	0.63	0	0	8.05	0	0	0	0	0	0	-31.68	-31.68
	Inverter Transformer	MV1-2 T	364759	4906063	2	0	0	56.1	56.1	1	2628.07	3.25	0	79.39	0	0.67	0	0	8.22	0	0	0	0	0	0	-32.23	-32.23
	Inverter Transformer	MV1-3 T	364435	4906039	2	0	0	56.1	56.1	1	2733.82	3.25	0	79.74	0	0.72	0	0	8.41	0	0	0	0	0	0	-32.8	-32.8
	Inverter Transformer	MV1-1 T	364721	4906166	2	0	0	56.1	56.1	1	2737.85	3.25	0	79.75	0	0.72	0	0	8.42	0	0	0	0	0	0	-32.82	-32.82
	Inverter Transformer	MV2-4 T	365590	4906628	2	0	0	56.1	56.1	1	3036.58	3.25	0	80.65	0	0.85	0	0	8.93	0	0	0	0	0	0	-34.36	-34.36
	Inverter Transformer	MV2-3 T	365814	4906641	2	0	0	56.1	56.1	1	3053.09	3.25	0	80.69	0	0.85	0	0	8.96	0	0	0	0	0	0	-34.45	-34.45
	Inverter Transformer	MV2-2 T	365982	4906654	2	0	0	56.1	56.1	1	3079.4	3.25	0	80.77	0	0.86	0	0	9	0	0	0	0	0	0	-34.58	-34.58
	Inverter Transformer	MV3-18 T	367757	4907412	2	0	0	56.1	56.1	1	4360.44	3.25	0	83.79	0	1.39	0	0	10.98	0	0	0	0	0	0	-40.1	-40.1
	Inverter Transformer	MV3-12 T	367674	4907594	2	0	0	56.1	56.1	1	4482.72	3.25	0	84.03	0	1.43	0	0	11.15	0	0	0	0	0	0	-40.56	-40.56
	Inverter Transformer	MV3-21 T	368484	4907206	2	0	0	56.1	56.1	1	4589.99	3.25	0	84.24	0	1.47	0	0	11.3	0	0	0	0	0	0	-40.95	-40.95
	Inverter Transformer	MV3-13 T	367958	4907577	2	0	0	56.1	56.1	1	4602.93	3.25	0	84.26	0	1.48	0	0	11.32	0	0	0	0	0	0	-41	-41
	Inverter Transformer	MV3-19 T	368352	4907347	2	0	0	56.1	56.1	1	4623.57	3.25	0	84.3	0	1.49	0	0	11.35	0	0	0	0	0	0	-41.07	-41.07
	Inverter Transformer	MV3-17 T	368183	4907472	2	0	0	56.1	56.1	1	4631.25	3.25	0	84.31	0	1.49	0	0	11.36	0	0	0	0	0	0	-41.1	-41.1
	Inverter Transformer	MV3-22 T	368661	4907142	2	0	0	56.1	56.1	1	4652.17	3.25	0	84.35	0	1.5	0	0	11.39	0	0	0	0	0	0	-41.18	-41.18
	Inverter Transformer	MV3-15 T	368351	4907477	2	0	0	56.1	56.1	1	4729.18	3.25	0	84.5	0	1.53	0	0	11.49	0	0	0	0	0	0	-41.45	-41.45
	Inverter Transformer	MV3-7 T	367951	4907754	2	0	0	56.1	56.1	1	4753.6	3.25	0	84.54	0	1.54	0	0	11.52	0	0	0	0	0	0	-41.54	-41.54
	Inverter Transformer	MV3-10 T	368162	4907669	2	0	0	56.1	56.1	1	4786.46	3.25	0	84.6	0	1.55	0	0	11.57	0	0	0	0	0	0	-41.66	-41.66
	Inverter Transformer	MV3-20 T	368683	4907317	2	0	0	56.1	56.1	1	4800.89	3.25	0	84.63	0	1.55	0	0	11.59	0	0	0	0	0	0	-41.71	-41.71
	Inverter Transformer	MV3-16 T	368509	4907475	2	0	0	56.1	56.1	1	4819.42	3.25	0	84.66	0	1.56	0	0	11.61	0	0	0	0	0	0	-41.77	-41.77
	Inverter Transformer	MV3-11 T	368340	4907662	2	0	0	56.1	56.1	1	4876.23	3.25	0	84.76	0	1.58	0	0	11.69	0	0	0	0	0	0	-41.97	-41.97
	Inverter Transformer	MV3-3 T	367944	4907927	2	0	0	56.1	56.1	1	4902.5	3.25	0	84.81	0	1.59	0	0	11.72	0	0	0	0	0	0	-42.06	-42.06
	Inverter Transformer	MV3-6 T	368156	4907834	2	0	0	56.1	56.1	1	4924.71	3.25	0	84.85	0	1.6	0	0	11.75	0	0	0	0	0	0	-42.14	-42.14
	Inverter Transformer	MV3-14 T	368678	4907498	2	0	0	56.1	56.1	1	4939.58	3.25	0	84.87	0	1.6	0	0	11.77	0	0	0	0	0	0	-42.19	-42.19
	Inverter Transformer	MV3-9 T	368517	4907703	2	0	0	56.1	56.1	1	5009.5	3.25	0	85	0	1.63	0	0	11.87	0	0	0	0	0	0	-42.43	-42.43
	Inverter Transformer	MV3-5 T	368335	4907843	2	0	0	56.1	56.1	1	5025.62	3.25	0	85.02	0	1.63	0	0	11.89	0	0	0	0	0	0	-42.49	-42.49
	Inverter Transformer	MV3-1 T	368150	4907976	2	0	0	56.1	56.1	1	5044.56	3.25	0	85.06	0	1.64	0	0	11.91	0	0	0	0	0	0	-42.55	-42.55
	Inverter Transformer	MV3-8 T	368685	4907712	2	0	0	56.1	56.1	1	5114.62	3.25	0	85.18	0	1.67	0	0	12	0	0	0	0	0	0	-42.79	-42.79
	Inverter Transformer	MV3-4 T	368507	4907925	2	0	0	56.1	56.1	1	5187.73	3.25	0	85.3	0	1.69	0	0	12.1	0	0	0	0	0	0	-43.03	-43.03
	Inverter Transformer	MV3-2 T	368677	4907928	2	0	0	56.1	56.1	1	5285.58	3.25	0	85.46	0	1.73	0	0	12.22	0	0	0	0	0	0	-43.35	-43.35
	Inverter Transformer	MV6-3 T	370202	4907140	2	0	0	56.1	56.1	1	5768.02	3.25	0	86.22	0	1.89	0	0	12.82	0	0	0	0	0	0	-44.88	-44.88
	Inverter Transformer	MV6-2 T	370091	4907339	2	0	0	56.1	56.1	1	5807.28	3.25	0	86.28	0	1.9	0	0	12.87	0	0	0	0	0	0	-45	-45
	Inverter Transformer	MV4-15 T	369170	4908481	2	0	0	56.1	56.1	1	6021.81	3.25	0	86.59	0	1.97	0	0	13.13	0	0	0	0	0	0	-45.64	-45.64
	Inverter Transformer	MV4-14 T	369182	4908507	2	0	0	56.1	56.1	1	6049.93	3.25	0	86.64	0	1.98	0	0	13.16	0	0	0	0	0	0	-45.72	-45.72
	Inverter Transformer	MV4-13 T	369057	4908605	2	0	0	56.1	56.1	1	6058.73	3.25	0	86.65	0	1.98	0	0	13.17	0	0	0	0	0	0	-45.74	-45.74
	Inverter Transformer	MV4-12 T	369049	4908803	2	0	0	56.1	56.1	1	6219.18	3.25	0	86.87	0	2.03	0	0	13.36	0	0	0	0	0	0	-46.21	-46.21
	Inverter Transformer	MV4-7 T	369040	4909001	2	0	0	56.1	56.1	1	6381.21	3.25	0	87.1	0	2.08	0	0	13.55	0	0	0	0	0	0	-46.67	-46.67
	Inverter Transformer	MV4-11 T	369269	4908855	2	0	0	56.1	56.1	1	6384.74	3.25	0	87.1	0	2.08	0	0	13.55	0	0	0	0	0	0	-46.68	-46.68
	Inverter Transformer	MV4-10 T	369307	4908858	2	0	0	56.1	56.1	1	6408.8	3.25	0	87.14	0	2.09	0	0	13.58	0	0	0	0	0	0	-46.74	-46.74
	Inverter Transformer	MV4-8 T	369262	4909001	2	0	0	56.1	56.1	1	6501.72	3.25	0	87.26	0	2.12	0	0	13.68	0	0	0	0	0	0	-47	-47
	Inverter Transformer	MV4-9 T	369284	4909001	2	0	0	56.1	56.1	1	6513.96	3.25	0	87.28	0	2.12	0	0	13.7	0	0	0	0	0	0	-47.04	-47.04
	Inverter Transformer	MV4-4 T	369033	4909199	2	0	0	56.1	56.1	1	6546.27	3.25	0	87.32	0	2.13	0	0	13.73	0	0	0	0	0	0	-47.12	-47.12
	Inverter Transformer	MV5-6 T	369987	4908507	2	0	0	56.1	56.1	1	6552.05	3.25	0	87.33	0	2.13	0	0	13.74	0	0	0	0	0	0	-47.14	-47.14
	Inverter Transformer	MV4-6 T	369249	4909192	2	0	0	56.1	56.1	1	6654.43	3.25	0	87.46	0	2.16	0	0	13.85	0	0	0	0	0	0	-47.42	-47.42
	Inverter Transformer	MV4-5 T	369283	4909199	2	0	0	56.1	56.1	1	6678.74	3.25	0	87.49	0	2.17	0	0	13.88	0	0	0	0	0	0	-47.48	-47.48
	Inverter Transformer	MV4-1 T	369017	4909397	2	0	0	56.1	56.1	1	6708.6	3.25	0	87.53	0	2.18	0	0	13.91	0	0	0	0	0	0	-47.56	-47.56
	Inverter Transformer	MV5-5 T	370021	4908690	2	0	0	56.1	56.1	1	6712.49	3.25	0	87.54	0	2.18	0	0	13.92	0	0	0	0	0	0	-47.58	-47.58
	Inverter Transformer	MV4-3 T	369234	4909397	2	0	0	56.1	56.1	1	6819.96	3.25	0	87.68	0	2.21	0	0	14.03	0	0	0	0	0	0	-47.86	-47.86
	Inverter Transformer	MV5-2 T	370011	4908853	2	0	0	56.1	56.1	1	6830.72	3.25	0	87.69	0	2.21	0	0	14.05	0	0	0	0	0	0	-47.89	-47.89
	Inverter Transformer	MV4-2 T	369267	4909397	2	0	0	56.1	56.1	1	6837.34	3.25	0	87.7	0	2.21	0	0	14.05	0	0	0	0	0	0	-47.91	-47.91
	Inverter Transformer	MV5-4 T	370330	4908707	2	0	0	56.1	56.1	1	6930.03	3.25	0	87.81	0	2.24	0	0	14.15	0	0	0	0	0	0	-48.15	-48.15
	Inverter Transformer	MV5-3 T	370237	4908851	2	0	0	56.1	56.1	1	6975.54	3.25	0	87.87	0	2.25	0	0	14.2	0	0	0	0	0	0	-48.27	-48.27
	Inverter Transformer	MV5-1 T	370015	4909142	2	0	0	56.1	56.1	1	7058.18	3.25	0	87.97	0	2.28	0	0	14.29	0	0	0	0	0	0	-48.48	-48.48
	Line Reactor	NGR	369421	4908787.5	5	0	0	45.4	45.4	1	6417.24	5.25	0	87.15	0	3.23	1.37	0.1	2.62	0	0	0	0	0	0	-49.01	-49.01
Limit. Valu	0	0																								
Level D/N:	24.6656	24.6656																								

Receiver: Existing Noise Receptor
ID: G-59
X: 365730.2
Y: 4903727
Z: 4.5
Ground: 0

ISO	Description	ID	X	Y	Z	Ground	ReflOrd	LxT	LxN	L/A	Dist.	hm	Freq	Adiv	K0b	Agr	Abar	z	Aatm	Afol	Ahous	Cmet	CmetN	Dc	RL	LtotT	LtotN
	Inverter	MV1-15	365315	4904994	2	0	0	100.3	100.3	1	1333.3	3.25	0	73.5	0	-0.1	0	0	11.9	0	0	0	0	0	0	15.02	15.02

Sol_Luce Substation	S_Substation	369426	4908792	3.5	0	0	112.1	112.1	1	6270.02	5.25	0	86.95	0	1.22	2.59	0.29	10.02	0	0	0	0	0	0	11.3	11.3
Inverter	MV1-12	365038	4905386	2	0	0	100.3	100.3	1	1797.62	3.25	0	76.09	0	0.07	0	0	13.02	0	0	0	0	0	0	11.13	11.13
Inverter	MV1-11	364655	4905414	2	0	0	100.3	100.3	1	2000.51	3.25	0	77.02	0	0.13	0	0	13.46	0	0	0	0	0	0	9.7	9.7
Inverter	MV1-14	365163	4905049	2	0	0	97.3	97.3	1	1438.54	3.25	0	74.16	0	-0.06	0	0	12.17	0	0	0	0	0	0	11.04	11.04
Inverter	MV1-8	364788	4905647	2	0	0	100.3	100.3	1	2138.73	3.25	0	77.6	0	0.17	0	0	13.75	0	0	0	0	0	0	8.79	8.79
Inverter	MV1-9	364561	4905646	2	0	0	100.3	100.3	1	2247.13	3.25	0	78.03	0	0.2	0	0	13.97	0	0	0	0	0	0	8.12	8.12
Inverter	MV1-4	364815	4905918	2	0	0	100.3	100.3	1	2374.46	3.25	0	78.51	0	0.23	0	0	14.22	0	0	0	0	0	0	7.36	7.36
Inverter	MV1-5	364671	4905892	2	0	0	100.3	100.3	1	2410.21	3.25	0	78.64	0	0.24	0	0	14.29	0	0	0	0	0	0	7.15	7.15
Inverter	MV1-6	364477	4905835	2	0	0	100.3	100.3	1	2452.38	3.25	0	78.79	0	0.25	0	0	14.37	0	0	0	0	0	0	6.91	6.91
Inverter	MV1-2	364753	4906063	2	0	0	100.3	100.3	1	2532.16	3.25	0	79.07	0	0.26	0	0	14.52	0	0	0	0	0	0	6.46	6.46
Inverter	MV1-13	364731	4905241	2	0	0	97.3	97.3	1	1814	3.25	0	76.17	0	0.07	0	0	13.06	0	0	0	0	0	0	8.01	8.01
Inverter	MV1-1	364715	4906166	2	0	0	100.3	100.3	1	2641.85	3.25	0	79.44	0	0.29	0	0	14.72	0	0	0	0	0	0	5.86	5.86
Inverter	MV1-10	365004	4905564	2	0	0	97.3	97.3	1	1975.33	3.25	0	76.91	0	0.12	0	0	13.41	0	0	0	0	0	0	6.87	6.87
Gardiner Substation	G_Sub	366586.3	4903349.9	2.5	0	0	90.8	90.8	1	935.48	4.25	0	70.42	0	0.51	3.71	0.3	2.39	0	0	0	0	0	0	13.75	13.75
Inverter	MV2-4	365586	4906624	2	0	0	100.3	100.3	1	2900.59	3.25	0	80.25	0	0.34	0	0	15.2	0	0	0	0	0	0	4.52	4.52
Inverter	MV2-3	365820	4906641	2	0	0	100.3	100.3	1	2915.38	3.25	0	80.29	0	0.35	0	0	15.22	0	0	0	0	0	0	4.45	4.45
Inverter	MV1-7	364925	4905782	2	0	0	97.3	97.3	1	2207.12	3.25	0	77.88	0	0.19	0	0	13.89	0	0	0	0	0	0	5.36	5.36
Inverters	G_Inv1	366526.4	4903225.8	2	0	0	87.7	87.7	1	940.82	3.25	0	70.47	0	2.44	0	0	1.35	0	0	0	0	0	0	13.4	13.4
Inverter	MV3-18	367752	4907412	2	0	0	100.3	100.3	1	4203.2	3.25	0	83.47	0	0.55	0	0	17.37	0	0	0	0	0	0	-1.08	-1.08
Inverter	MV3-12	367668	4907594	2	0	0	100.3	100.3	1	4325.36	3.25	0	83.72	0	0.57	0	0	17.56	0	0	0	0	0	0	-1.54	-1.54
Inverter	MV2-1	365842	4906816	2	0	0	97.3	97.3	1	3091.02	3.25	0	80.8	0	0.38	0	0	15.53	0	0	0	0	0	0	0.6	0.6
Inverter	MV3-21	368478	4907206	2	0	0	100.3	100.3	1	4433.27	3.25	0	83.93	0	0.58	0	0	17.73	0	0	0	0	0	0	-1.93	-1.93
Inverter	MV3-13	367963	4907577	2	0	0	100.3	100.3	1	4450.61	3.25	0	83.97	0	0.59	0	0	17.75	0	0	0	0	0	0	-2	-2
Inverter	MV3-19	368357	4907347	2	0	0	100.3	100.3	1	4472.64	3.25	0	84.01	0	0.59	0	0	17.79	0	0	0	0	0	0	-2.08	-2.08
Inverter	MV3-17	368178	4907472	2	0	0	100.3	100.3	1	4474.01	3.25	0	84.01	0	0.59	0	0	17.79	0	0	0	0	0	0	-2.08	-2.08
Inverters	G_Inv3	366583.7	4903091.4	2	0	0	87.7	87.7	1	1064.17	3.25	0	71.54	0	2.46	0	0	1.51	0	0	0	0	0	0	12.15	12.15
Inverters	G_Inv2	366676.9	4903239.1	2	0	0	87.7	87.7	1	1065.03	3.25	0	71.55	0	2.46	0	0	1.51	0	0	0	0	0	0	12.15	12.15
Inverter	MV3-15	368357	4907477	2	0	0	100.3	100.3	1	4578.49	3.25	0	84.21	0	0.6	0	0	17.95	0	0	0	0	0	0	-2.45	-2.45
Inverter	MV3-7	367945	4907754	2	0	0	100.3	100.3	1	4595.88	3.25	0	84.25	0	0.6	0	0	17.98	0	0	0	0	0	0	-2.51	-2.51
Inverter	MV3-10	368167	4907669	2	0	0	100.3	100.3	1	4634.37	3.25	0	84.32	0	0.61	0	0	18.03	0	0	0	0	0	0	-2.65	-2.65
Inverter	MV3-20	368689	4907317	2	0	0	100.3	100.3	1	4652.16	3.25	0	84.35	0	0.61	0	0	18.06	0	0	0	0	0	0	-2.71	-2.71
Inverter	MV3-16	368514	4907475	2	0	0	100.3	100.3	1	4668.73	3.25	0	84.38	0	0.61	0	0	18.09	0	0	0	0	0	0	-2.77	-2.77
Inverter	MV3-11	368346	4907662	2	0	0	100.3	100.3	1	4725.11	3.25	0	84.49	0	0.62	0	0	18.17	0	0	0	0	0	0	-2.96	-2.96
Inverter	MV3-3	367939	4907927	2	0	0	100.3	100.3	1	4745.4	3.25	0	84.53	0	0.62	0	0	18.2	0	0	0	0	0	0	-3.03	-3.03
Inverter	MV3-6	368162	4907834	2	0	0	100.3	100.3	1	4772.96	3.25	0	84.58	0	0.62	0	0	18.24	0	0	0	0	0	0	-3.13	-3.13
Inverter	MV3-14	368684	4907498	2	0	0	100.3	100.3	1	4790.13	3.25	0	84.61	0	0.62	0	0	18.27	0	0	0	0	0	0	-3.19	-3.19
Inverter	MV3-9	368512	4907703	2	0	0	100.3	100.3	1	4852.52	3.25	0	84.72	0	0.63	0	0	18.36	0	0	0	0	0	0	-3.4	-3.4
Inverter	MV3-8	368680	4907712	2	0	0	100.3	100.3	1	4957.98	3.25	0	84.91	0	0.64	0	0	18.52	0	0	0	0	0	0	-3.75	-3.75
Inverters	G_Inv4	366732.8	4903105	2	0	0	87.7	87.7	1	1179.87	3.25	0	72.44	0	2.48	0	0	1.65	0	0	0	0	0	0	11.1	11.1
Inverters	G_Inv5	366638.5	4902958.1	2	0	0	87.7	87.7	1	1190.05	3.25	0	72.51	0	2.48	0	0	1.67	0	0	0	0	0	0	11.01	11.01
Inverters	G_Inv6	366788.5	4902972	2	0	0	87.7	87.7	1	1300.01	3.25	0	73.28	0	2.49	0	0	1.8	0	0	0	0	0	0	10.09	10.09
Inverter	MV6-3	370207	4907140	2	0	0	100.3	100.3	1	5629.42	3.25	0	86.01	0	0.69	0	0	19.48	0	0	0	0	0	0	-5.87	-5.87
Inverter	MV6-2	370085	4907339	2	0	0	100.3	100.3	1	5657.81	3.25	0	86.05	0	0.69	0	0	19.52	0	0	0	0	0	0	-5.95	-5.95
Inverters	G_Inv7	366694.6	4902824.7	2	0	0	87.7	87.7	1	1320.69	3.25	0	73.42	0	2.49	0	0	1.83	0	0	0	0	0	0	9.92	9.92
Inverters	G_Inv8	366844.5	4902838.5	2	0	0	87.7	87.7	1	1425.17	3.25	0	74.08	0	2.51	0	0	1.95	0	0	0	0	0	0	9.12	9.12
Inverter	MV4-7	369035	4909001	2	0	0	100.3	100.3	1	6223.89	3.25	0	86.88	0	0.71	0	0	20.29	0	0	0	0	0	0	-7.57	-7.57
Inverter	MV4-11	369264	4908855	2	0	0	100.3	100.3	1	6227.69	3.25	0	86.89	0	0.71	0	0	20.3	0	0	0	0	0	0	-7.59	-7.59
Inverters	G_Inv9	366750.9	4902691.8	2	0	0	87.7	87.7	1	1453.78	3.25	0	74.25	0	2.51	0	0	1.99	0	0	0	0	0	0	8.91	8.91
Inverter	MV4-10	369312	4908858	2	0	0	100.3	100.3	1	6257.51	3.25	0	86.93	0	0.71	0	0	20.34	0	0	0	0	0	0	-7.67	-7.67
Inverter	MV4-8	369256	4909001	2	0	0	100.3	100.3	1	6344	3.25	0	87.05	0	0.71	0	0	20.45	0	0	0	0	0	0	-7.9	-7.9
Inverter	MV4-9	369289	4909001	2	0	0	100.3	100.3	1	6362.4	3.25	0	87.07	0	0.71	0	0	20.48	0	0	0	0	0	0	-7.95	-7.95
Inverter	MV4-4	369027	4909199	2	0	0	100.3	100.3	1	6388.4	3.25	0	87.11	0	0.71	0	0	20.51	0	0	0	0	0	0	-8.02	-8.02
Inverter	MV4-6	369243	4909192	2	0	0	100.3	100.3	1	6496.61	3.25	0	87.25	0	0.71	0	0	20.65	0	0	0	0	0	0	-8.31	-8.31
Inverter	MV4-5	369289	4909199	2	0	0	100.3	100.3	1	6527.47	3.25	0	87.29	0	0.71	0	0	20.69	0	0	0	0	0	0	-8.39	-8.39
Inverter	MV4-1	369011	4909397	2	0	0	100.3	100.3	1	6550.77	3.25	0	87.33	0	0.71	0	0	20.73	0	0	0	0	0	0	-8.45	-8.45
Inverter	MV5-5	370015	4908690	2	0	0	100.3	100.3	1	6556.74	3.25	0	87.33	0	0.71	0	0	20.73	0	0	0	0	0	0	-8.47	-8.47
Inverter	MV4-3	369229	4909397	2	0	0	100.3	100.3	1	6662.62	3.25	0	87.47	0	0.71	0	0	20.87	0	0	0	0	0	0	-8.75	-8.75
Inverters	G_Inv10	366900.7	4902704.8	2	0	0	87.7	87.7	1	1554.02	3.25	0	74.83	0	2.53	0	0	2.11	0	0	0	0	0	0	8.2	8.2
Inverter	MV5-2	370006	4908853	2	0	0	100.3	100.3	1	6675.2	3.25	0	87.49	0	0.71	0	0	20.89	0	0	0	0	0	0	-8.78	-8.78
Inverter	MV4-2	369272	4909397	2	0	0	100.3	100.3	1	6685.3	3.25	0	87.5	0	0.71	0	0	20.9	0	0	0	0	0	0	-8.8	-8.8
Inverter	MV5-4	370324	4908707	2	0	0	100.3	100.3	1	6775.21	3.25	0	87.62	0	0.71	0	0	21.01	0	0	0	0	0	0	-9.03	-9.03
Inverter	MV5-3	370231	4908851	2	0	0	100.3	100.3	1	6820.01	3.25	0	87.68	0	0.71	0	0	21.07	0	0	0	0	0	0	-9.15	-9.15
Inverter	MV5-1	370020	4909142	2	0	0	100.3	100.3	1	6908.3	3.25	0	87.79	0	0.71	0	0	21.18	0	0	0	0	0	0	-9.37	-9.37
Inverter	MV6-1	370235	4907364	2	0	0	97.3	97.3	1	5789.73	3.25	0	86.25	0	0.7	0	0	19.71	0	0	0	0	0	0	-9.34	-9.34
DSTATCOM - 10 MVAR #2	DSAT2	369403	4908757	2.5	0	0	96.6	96.6	1	6228.19	3.5	0	86.89	0	3.79	0	0	3.95	0	0	0	0	0	0	2.01	2.01
DSTATCOM - 10 MVAR #1	DSAT1	369437	4908757	2.5	0	0	96.6	96.6	1	6248.3	3.5	0	86.92	0	3.79	0	0	3.96	0	0	0	0	0	0	1.97	1.97
Inverter	MV1-3	364440	4906039	2	0	0	89.1	89.1	1	2647.63	3.25	0	79.46	0	1.06	0	0	9.08	0	0	0	0	0	0	-0.54	-0.54
Inverter	MV2-2	365977	4906654	2	0	0	89.1	89.1	1	2937.39	3.25	0	80.36	0	1.13	0	0	9.52	0	0	0	0	0	0	-1.95	-1.95
SubstationTransformer	W_ST	369711.17	4906112.3	2.5	0	0	92	92	1	4640.87	4.25	0	84.33	0	1.54	2.42	0.25	8.19	0	0	0	0	0	0	-4.5	-4.5
Westbrook Inverter Enclosur	W_INV3	369508	4906164	2	0	0	89.1	89.1	1	4495.64	3.25	0	84.06	0	1.51	0	0	11.78	0	0	0	0	0	0	-8.29	-8.29
Inverter	MV3-22	368656	4907142	2	0	0	89.1	89.1	1	4496.95	3.25	0	84.06	0	1.52	0	0	11.78	0	0	0	0	0	0	-8.3	-8.3
Westbrook Inverter Enclosur	W_INV2	369374	4906388	2	0	0	89.1	89.1	1	4512.01	3.25	0	84.09	0	1.52	0	0	11.8	0	0	0	0	0	0	-8.35	-8.35
Westbrook Inverter Enclosur	W_INV4	369673	4906164	2	0	0	89.1	89.1	1	4635.15	3.25	0	84.32	0	1.55	0	0	11.97	0	0	0	0	0	0	-8.78	-8.78
Westbrook Inverter Enclosur	W_INV7	369780	4906417	2	0	0	89.1	89.1	1	4861.79	3.25	0	84.74	0	1.61	0	0	12.28	0	0	0	0	0	0	-9.56	-9.56

Inverter	MV3-5	368340	4907843	2	0	0	89.1	89.1	1	4873.66	3.25	0	84.76	0	1.61	0	0	12.29	0	0	0	0	0	0	-9.6	-9.6
Inverter	MV3-1	368156	4907976	2	0	0	89.1	89.1	1	4892.7	3.25	0	84.79	0	1.61	0	0	12.32	0	0	0	0	0	0	-9.67	-9.67
Westbrook Inverter Enclosur	W_INV5	369719	4906574	2	0	0	89.1	89.1	1	4900.61	3.25	0	84.8	0	1.62	0	0	12.33	0	0	0	0	0	0	-9.69	-9.69
Inverter	MV3-4	368502	4907925	2	0	0	89.1	89.1	1	5030.52	3.25	0	85.03	0	1.65	0	0	12.5	0	0	0	0	0	0	-10.13	-10.13
Westbrook Inverter Enclosur	W_INV6	369875	4906578	2	0	0	89.1	89.1	1	5030.66	3.25	0	85.03	0	1.65	0	0	12.5	0	0	0	0	0	0	-10.13	-10.13
Inverter	MV3-2	368671	4907928	2	0	0	89.1	89.1	1	5128.03	3.25	0	85.2	0	1.67	0	0	12.63	0	0	0	0	0	0	-10.45	-10.45
Fixed Reactor Bank 1	FRB1	369378	4908755	6	0	0	89.8	89.8	1	6211.86	5.25	0	86.86	0	-0.39	0	0	9.96	0	0	0	0	0	0	-6.66	-6.66
Fixed Reactor Bank 2	FRB2	369464	4908755	6	0	0	89.8	89.8	1	6262.75	5.25	0	86.94	0	-0.38	0	0	10.02	0	0	0	0	0	0	-6.8	-6.8
Inverter	MV4-15	369176	4908481	2	0	0	89.1	89.1	1	5871.46	3.25	0	86.37	0	1.85	0	0	13.6	0	0	0	0	0	0	-12.77	-12.77
Inverter	MV4-14	369176	4908507	2	0	0	89.1	89.1	1	5892.53	3.25	0	86.41	0	1.86	0	0	13.63	0	0	0	0	0	0	-12.83	-12.83
Inverter	MV4-13	369051	4908605	2	0	0	89.1	89.1	1	5901.07	3.25	0	86.42	0	1.86	0	0	13.64	0	0	0	0	0	0	-12.86	-12.86
Inverter	MV4-12	369043	4908803	2	0	0	89.1	89.1	1	6061.39	3.25	0	86.65	0	1.9	0	0	13.84	0	0	0	0	0	0	-13.33	-13.33
Inverter	MV5-6	369982	4908507	2	0	0	89.1	89.1	1	6397.36	3.25	0	87.12	0	1.98	0	0	14.26	0	0	0	0	0	0	-14.3	-14.3
Westbrook Inverter Enclosur	W_INV1	369409	4906578	2	0	0	86.1	86.1	1	4654.22	3.25	0	84.36	0	1.55	0	0	12	0	0	0	0	0	0	-11.85	-11.85
Inverter	MV6-4	370250	4906966	2	0	0	86.1	86.1	1	5560.55	3.25	0	85.9	0	1.78	0	0	13.2	0	0	0	0	0	0	-14.82	-14.82
Inverter Transformer	MV1-14 T	365157	4905049	2	0	0	69.4	69.4	1	1440.92	3.25	0	74.17	0	1.95	0	0	4.37	0	0	0	0	0	0	-11.13	-11.13
Westbrook Inverter Transfor	W_INVTR1	369403	4906578	2	0	0	78.2	78.2	1	4649.48	3.25	0	84.35	0	-3.11	0	0	2.29	0	0	0	0	0	0	-5.29	-5.29
Westbrook Inverter Transfor	W_INVTR3	369514	4906164	2	0	0	77.3	77.3	1	4500.68	3.25	0	84.07	0	-3.07	0	0	2.24	0	0	0	0	0	0	-5.89	-5.89
Westbrook Inverter Transfor	W_INVTR2	369368	4906388	2	0	0	77.3	77.3	1	4507.16	3.25	0	84.08	0	-3.08	0	0	2.24	0	0	0	0	0	0	-5.9	-5.9
Inverter Transformer	MV1-13 T	364725	4905241	2	0	0	69.4	69.4	1	1817.31	3.25	0	76.19	0	2.1	0	0	4.78	0	0	0	0	0	0	-13.72	-13.72
Westbrook Inverter Transfor	W_INVTR4	369679	4906164	2	0	0	77.3	77.3	1	4640.26	3.25	0	84.33	0	-3.1	0	0	2.29	0	0	0	0	0	0	-6.17	-6.17
Westbrook Inverter Transfor	W_INVTR7	369786	4906417	2	0	0	77.3	77.3	1	4866.79	3.25	0	84.74	0	-3.15	0	0	2.37	0	0	0	0	0	0	-6.62	-6.62
Westbrook Inverter Transfor	W_INVTR5	369725	4906574	2	0	0	77.3	77.3	1	4905.49	3.25	0	84.81	0	-3.16	0	0	2.38	0	0	0	0	0	0	-6.69	-6.69
Inverter Transformer	MV1-10 T	365010	4905564	2	0	0	69.4	69.4	1	1973.14	3.25	0	76.9	0	2.16	0	0	4.94	0	0	0	0	0	0	-14.65	-14.65
Westbrook Inverter Transfor	W_INVTR6	369881	4906578	2	0	0	77.3	77.3	1	5035.61	3.25	0	85.04	0	-3.18	0	0	2.43	0	0	0	0	0	0	-6.94	-6.94
Inverter Transformer	MV1-7 T	364919	4905782	2	0	0	69.4	69.4	1	2209.32	3.25	0	77.89	0	2.25	0	0	5.17	0	0	0	0	0	0	-15.95	-15.95
Inverter Transformer	MV2-1 T	365836	4906816	2	0	0	69.4	69.4	1	3090.81	3.25	0	80.8	0	2.53	0	0	5.96	0	0	0	0	0	0	-19.94	-19.94
Inverter Transformer	MV6-4 T	370244	4906966	2	0	0	69.4	69.4	1	5555.67	3.25	0	85.89	0	3.12	0	0	7.74	0	0	0	0	0	0	-27.4	-27.4
Inverter Transformer	MV6-1 T	370230	4907364	2	0	0	69.4	69.4	1	5785.84	3.25	0	86.25	0	3.15	0	0	7.89	0	0	0	0	0	0	-27.94	-27.94
Inverter Transformer	MV1-15 T	365309	4904994	2	0	0	56.1	56.1	1	1335.18	3.25	0	73.51	0	0.13	0	0	5.66	0	0	0	0	0	0	-23.25	-23.25
Inverter Transformer	MV1-12 T	365044	4905386	2	0	0	56.1	56.1	1	1795.32	3.25	0	76.08	0	0.32	0	0	6.63	0	0	0	0	0	0	-26.98	-26.98
Inverter Transformer	MV1-11 T	364649	4905414	2	0	0	56.1	56.1	1	2003.74	3.25	0	77.04	0	0.41	0	0	7.05	0	0	0	0	0	0	-28.43	-28.43
Inverter Transformer	MV1-8 T	364782	4905647	2	0	0	56.1	56.1	1	2141.38	3.25	0	77.61	0	0.46	0	0	7.32	0	0	0	0	0	0	-29.34	-29.34
Inverter Transformer	MV1-9 T	364555	4905646	2	0	0	56.1	56.1	1	2250.26	3.25	0	78.04	0	0.51	0	0	7.53	0	0	0	0	0	0	-30.02	-30.02
Inverter Transformer	MV1-4 T	364821	4905918	2	0	0	56.1	56.1	1	2372.16	3.25	0	78.5	0	0.56	0	0	7.75	0	0	0	0	0	0	-30.76	-30.76
Inverter Transformer	MV1-5 T	364676	4905892	2	0	0	56.1	56.1	1	2408.02	3.25	0	78.63	0	0.58	0	0	7.82	0	0	0	0	0	0	-30.97	-30.97
Inverter Transformer	MV1-6 T	364482	4905835	2	0	0	56.1	56.1	1	2449.83	3.25	0	78.78	0	0.59	0	0	7.9	0	0	0	0	0	0	-31.22	-31.22
Inverter Transformer	MV1-2 T	364759	4906063	2	0	0	56.1	56.1	1	2529.85	3.25	0	79.06	0	0.63	0	0	8.04	0	0	0	0	0	0	-31.68	-31.68
Inverter Transformer	MV1-1 T	364721	4906166	2	0	0	56.1	56.1	1	2639.55	3.25	0	79.43	0	0.68	0	0	8.24	0	0	0	0	0	0	-32.29	-32.29
Inverter Transformer	MV1-3 T	364435	4906039	2	0	0	56.1	56.1	1	2650.07	3.25	0	79.47	0	0.68	0	0	8.26	0	0	0	0	0	0	-32.35	-32.35
Inverter Transformer	MV2-4 T	365590	4906628	2	0	0	56.1	56.1	1	2904.39	3.25	0	80.26	0	0.79	0	0	8.7	0	0	0	0	0	0	-33.7	-33.7
Inverter Transformer	MV2-3 T	365814	4906641	2	0	0	56.1	56.1	1	2915.21	3.25	0	80.29	0	0.79	0	0	8.72	0	0	0	0	0	0	-33.75	-33.75
Inverter Transformer	MV2-2 T	365982	4906654	2	0	0	56.1	56.1	1	2937.81	3.25	0	80.36	0	0.8	0	0	8.76	0	0	0	0	0	0	-33.87	-33.87
Inverter Transformer	MV3-18 T	367757	4907412	2	0	0	56.1	56.1	1	4205.61	3.25	0	83.48	0	1.33	0	0	10.76	0	0	0	0	0	0	-39.5	-39.5
Inverter Transformer	MV3-12 T	367674	4907594	2	0	0	56.1	56.1	1	4328.05	3.25	0	83.73	0	1.37	0	0	10.93	0	0	0	0	0	0	-39.97	-39.97
Inverter Transformer	MV3-21 T	368484	4907206	2	0	0	56.1	56.1	1	4436.99	3.25	0	83.94	0	1.42	0	0	11.09	0	0	0	0	0	0	-40.39	-40.39
Inverter Transformer	MV3-13 T	367958	4907577	2	0	0	56.1	56.1	1	4448.1	3.25	0	83.96	0	1.42	0	0	11.1	0	0	0	0	0	0	-40.43	-40.43
Inverter Transformer	MV3-19 T	368352	4907347	2	0	0	56.1	56.1	1	4469.7	3.25	0	84.01	0	1.43	0	0	11.13	0	0	0	0	0	0	-40.51	-40.51
Inverter Transformer	MV3-17 T	368183	4907472	2	0	0	56.1	56.1	1	4476.75	3.25	0	84.02	0	1.43	0	0	11.14	0	0	0	0	0	0	-40.53	-40.53
Inverter Transformer	MV3-22 T	368661	4907142	2	0	0	56.1	56.1	1	4500.2	3.25	0	84.06	0	1.44	0	0	11.18	0	0	0	0	0	0	-40.62	-40.62
Inverter Transformer	MV3-15 T	368351	4907477	2	0	0	56.1	56.1	1	4575.05	3.25	0	84.21	0	1.47	0	0	11.28	0	0	0	0	0	0	-40.9	-40.9
Inverter Transformer	MV3-7 T	367951	4907754	2	0	0	56.1	56.1	1	4598.77	3.25	0	84.25	0	1.48	0	0	11.31	0	0	0	0	0	0	-40.98	-40.98
Inverter Transformer	MV3-10 T	368162	4907669	2	0	0	56.1	56.1	1	4631.74	3.25	0	84.31	0	1.49	0	0	11.36	0	0	0	0	0	0	-41.1	-41.1
Inverter Transformer	MV3-20 T	368683	4907317	2	0	0	56.1	56.1	1	4648.35	3.25	0	84.35	0	1.5	0	0	11.38	0	0	0	0	0	0	-41.16	-41.16
Inverter Transformer	MV3-16 T	368509	4907475	2	0	0	56.1	56.1	1	4665.75	3.25	0	84.38	0	1.5	0	0	11.4	0	0	0	0	0	0	-41.23	-41.23
Inverter Transformer	MV3-11 T	368340	4907662	2	0	0	56.1	56.1	1	4721.79	3.25	0	84.48	0	1.52	0	0	11.48	0	0	0	0	0	0	-41.43	-41.43
Inverter Transformer	MV3-3 T	367944	4907927	2	0	0	56.1	56.1	1	4747.73	3.25	0	84.53	0	1.53	0	0	11.52	0	0	0	0	0	0	-41.52	-41.52
Inverter Transformer	MV3-6 T	368156	4907834	2	0	0	56.1	56.1	1	4769.9	3.25	0	84.57	0	1.54	0	0	11.55	0	0	0	0	0	0	-41.6	-41.6
Inverter Transformer	MV3-14 T	368678	4907498	2	0	0	56.1	56.1	1	4786.44	3.25	0	84.6	0	1.55	0	0	11.57	0	0	0	0	0	0	-41.66	-41.66
Inverter Transformer	MV3-9 T	368517	4907703	2	0	0	56.1	56.1	1	4855.39	3.25	0	84.72	0	1.57	0	0	11.66	0	0	0	0	0	0	-41.9	-41.9
Inverter Transformer	MV3-5 T	368335	4907843	2	0	0	56.1	56.1	1	4870.98	3.25	0	84.75	0	1.58	0	0	11.68	0	0	0	0	0	0	-41.96	-41.96
Inverter Transformer	MV3-1 T	368150	4907976	2	0	0	56.1	56.1	1	4889.73	3.25	0	84.79	0	1.59	0	0	11.71	0	0	0	0	0	0	-42.02	-42.02
Inverter Transformer	MV3-8 T	368685	4907712	2	0	0	56.1	56.1	1	4960.95	3.25	0	84.91	0	1.61	0	0	11.8	0	0	0	0	0	0	-42.27	-42.27
Inverter Transformer	MV3-4 T	368507	4907925	2	0	0	56.1	56.1	1	5033.27	3.25	0	85.04	0	1.64	0	0	11.9	0	0	0	0	0	0	-42.51	-42.51
Inverter Transformer	MV3-2 T	368677	4907928	2	0	0	56.1	56.1	1	5131.48	3.25	0	85.2	0	1.67	0	0	12.03	0	0	0	0	0	0	-42.85	-42.85
Inverter Transformer	MV6-3 T	370202	4907140	2	0	0	56.1	56.1	1	5625.44	3.25	0	86	0	1.84	0	0	12.65	0	0	0	0	0	0	-44.44	-44.44
Inverter Transformer	MV6-2 T	370091	4907339	2	0	0	56.1	56.1	1	5662.43	3.25	0	86.06	0	1.86	0	0	12.7	0	0	0	0	0	0	-44.55	-44.55
Inverter Transformer	MV4-15 T	369170	4908481	2	0	0	56.1	56.1	1	5867.94	3.25	0	86.37	0	1.92	0	0	12.95	0	0	0	0	0	0	-45.18	-45.18
Inverter Transformer	MV4-14 T	369182	4908507	2	0	0	56.1	56.1	1	5896.04	3.25	0	86.41	0	1.93	0	0	12.98	0	0	0	0	0	0	-45.26	-45.26
Inverter Transformer	MV4-13 T	369057	4908605	2	0	0	56.1	56.1	1	5904.45	3.25	0	86.42	0	1.93	0	0	12.99	0	0	0	0	0	0	-45.29	-45.29
Inverter Transformer	MV4-12 T	369049	4908803	2	0	0	56.1	56.1	1	6064.67	3.25	0	86.66	0	1.99	0	0	13.18	0	0	0	0	0	0	-45.76	-45.76
Inverter Transformer	MV4-7 T	369040	4909001	2	0	0	56.1	56.1	1	6226.54	3.25	0	86.88	0	2.04	0	0	13.37	0	0	0	0	0	0	-46.23	-46.23
Inverter Transformer	MV4-11 T	369269	4908855	2	0	0	56.1	56.1	1	6230.53	3.25	0	86.89	0	2.04	0	0	13.37	0	0	0	0	0	0	-46.24	-46.24
Inverter Transformer	MV4-10 T	369307	4908858	2	0	0	56.1	56.1	1	6254.65	3.25	0	86.92	0	2.04	0	0	13.4	0	0	0	0	0	0	-46.31	-46.31

	Inverter Transformer	MV4-8 T	369262	4909001	2	0	0	56.1	56.1	1	6347.34	3.25	0	87.05	0	2.07	0	0	13.51	0	0	0	0	0	0	-46.57	-46.57
	Inverter Transformer	MV4-9 T	369284	4909001	2	0	0	56.1	56.1	1	6359.61	3.25	0	87.07	0	2.08	0	0	13.52	0	0	0	0	0	0	-46.61	-46.61
	Inverter Transformer	MV4-4 T	369033	4909199	2	0	0	56.1	56.1	1	6391.5	3.25	0	87.11	0	2.09	0	0	13.56	0	0	0	0	0	0	-46.7	-46.7
	Inverter Transformer	MV5-6 T	369987	4908507	2	0	0	56.1	56.1	1	6400.68	3.25	0	87.12	0	2.09	0	0	13.57	0	0	0	0	0	0	-46.72	-46.72
	Inverter Transformer	MV4-6 T	369249	4909192	2	0	0	56.1	56.1	1	6499.86	3.25	0	87.26	0	2.12	0	0	13.68	0	0	0	0	0	0	-47	-47
	Inverter Transformer	MV4-5 T	369283	4909199	2	0	0	56.1	56.1	1	6524.2	3.25	0	87.29	0	2.12	0	0	13.71	0	0	0	0	0	0	-47.06	-47.06
	Inverter Transformer	MV4-1 T	369017	4909397	2	0	0	56.1	56.1	1	6553.77	3.25	0	87.33	0	2.13	0	0	13.74	0	0	0	0	0	0	-47.15	-47.15
	Inverter Transformer	MV5-5 T	370021	4908690	2	0	0	56.1	56.1	1	6560.67	3.25	0	87.34	0	2.14	0	0	13.75	0	0	0	0	0	0	-47.16	-47.16
	Inverter Transformer	MV4-3 T	369234	4909397	2	0	0	56.1	56.1	1	6665.25	3.25	0	87.48	0	2.17	0	0	13.86	0	0	0	0	0	0	-47.45	-47.45
	Inverter Transformer	MV5-2 T	370011	4908853	2	0	0	56.1	56.1	1	6678.41	3.25	0	87.49	0	2.17	0	0	13.88	0	0	0	0	0	0	-47.48	-47.48
	Inverter Transformer	MV4-2 T	369267	4909397	2	0	0	56.1	56.1	1	6682.65	3.25	0	87.5	0	2.17	0	0	13.88	0	0	0	0	0	0	-47.5	-47.5
	Inverter Transformer	MV5-4 T	370330	4908707	2	0	0	56.1	56.1	1	6779.27	3.25	0	87.62	0	2.2	0	0	13.99	0	0	0	0	0	0	-47.75	-47.75
	Inverter Transformer	MV5-3 T	370237	4908851	2	0	0	56.1	56.1	1	6823.97	3.25	0	87.68	0	2.21	0	0	14.04	0	0	0	0	0	0	-47.87	-47.87
	Inverter Transformer	MV5-1 T	370015	4909142	2	0	0	56.1	56.1	1	6905.2	3.25	0	87.78	0	2.23	0	0	14.13	0	0	0	0	0	0	-48.09	-48.09
	Line Reactor	NGR	369421	4908787.5	5	0	0	45.4	45.4	1	6263.44	5.25	0	86.94	0	3.23	1.36	0.1	2.56	0	0	0	0	0	0	-48.74	-48.74
Limit. Valu	0	0																								
Level D/N:	24.8778	24.8778																								

Receiver: Existing Noise Receptor
ID: G-60
X: 367925.7
Y: 4903216.3
Z: 4.5
Ground: 0

ISO	Description	ID	X	Y	Z	Ground	ReflOrd	LxT	LxN	L/A	Dist.	hm	Freq	Adiv	K0b	Agr	Abar	z	Aatm	Afol	Ahous	Cmet	CmetN	Dc	RL	LtotT	LtotN
	Sol_Luce Substation	S_Substation	369426	4908792	3.5	0	0	112.1	112.1	1	5774.02	5.25	0	86.23	0	1.1	2.69	0.34	9.5	0	0	0	0	0	0	12.55	12.55
	Inverter	MV1-15	365315	4904994	2	0	0	100.3	100.3	1	3158.48	3.25	0	80.99	0	0.39	0	0	15.65	0	0	0	0	0	0	3.28	3.28
	Inverter	MV1-12	365038	4905386	2	0	0	100.3	100.3	1	3611.98	3.25	0	82.15	0	0.47	0	0	16.42	0	0	0	0	0	0	1.27	1.27
	Inverter	MV1-11	364655	4905414	2	0	0	100.3	100.3	1	3940.48	3.25	0	82.91	0	0.52	0	0	16.95	0	0	0	0	0	0	-0.07	-0.07
	Inverter	MV1-8	364788	4905647	2	0	0	100.3	100.3	1	3969.06	3.25	0	82.97	0	0.52	0	0	17	0	0	0	0	0	0	-0.18	-0.18
	Inverter	MV2-3	365820	4906641	2	0	0	100.3	100.3	1	4020.27	3.25	0	83.09	0	0.53	0	0	17.08	0	0	0	0	0	0	-0.38	-0.38
	Inverter	MV3-21	368478	4907206	2	0	0	100.3	100.3	1	4027.75	3.25	0	83.1	0	0.53	0	0	17.09	0	0	0	0	0	0	-0.41	-0.41
	Gardiner Substation	G_Sub	366586.3	4903349.9	2.5	0	0	90.8	90.8	1	1346.05	4.25	0	73.58	0	0.82	4.74	0.3	3.2	0	0	0	0	0	0	8.44	8.44
	Inverter	MV1-4	364815	4905918	2	0	0	100.3	100.3	1	4120.15	3.25	0	83.3	0	0.54	0	0	17.24	0	0	0	0	0	0	-0.77	-0.77
	Inverter	MV2-4	365586	4906624	2	0	0	100.3	100.3	1	4133.6	3.25	0	83.33	0	0.55	0	0	17.26	0	0	0	0	0	0	-0.82	-0.82
	Inverter	MV1-9	364561	4905646	2	0	0	100.3	100.3	1	4150.26	3.25	0	83.36	0	0.55	0	0	17.29	0	0	0	0	0	0	-0.88	-0.88
	Inverter	MV3-19	368357	4907347	2	0	0	100.3	100.3	1	4153.16	3.25	0	83.37	0	0.55	0	0	17.29	0	0	0	0	0	0	-0.89	-0.89
	Inverter	MV3-20	368689	4907317	2	0	0	100.3	100.3	1	4171.14	3.25	0	83.41	0	0.55	0	0	17.32	0	0	0	0	0	0	-0.96	-0.96
	Inverter	MV3-18	367752	4907412	2	0	0	100.3	100.3	1	4199.29	3.25	0	83.46	0	0.55	0	0	17.36	0	0	0	0	0	0	-1.07	-1.07
	Inverter	MV1-5	364671	4905892	2	0	0	100.3	100.3	1	4213.37	3.25	0	83.49	0	0.56	0	0	17.39	0	0	0	0	0	0	-1.12	-1.12
	Inverter	MV1-2	364753	4906063	2	0	0	100.3	100.3	1	4262.6	3.25	0	83.59	0	0.56	0	0	17.46	0	0	0	0	0	0	-1.31	-1.31
	Inverter	MV3-17	368178	4907472	2	0	0	100.3	100.3	1	4263.17	3.25	0	83.59	0	0.56	0	0	17.46	0	0	0	0	0	0	-1.31	-1.31
	Inverter	MV3-15	368357	4907477	2	0	0	100.3	100.3	1	4282.47	3.25	0	83.63	0	0.56	0	0	17.49	0	0	0	0	0	0	-1.38	-1.38
	Inverter	MV3-16	368514	4907475	2	0	0	100.3	100.3	1	4299.14	3.25	0	83.67	0	0.57	0	0	17.52	0	0	0	0	0	0	-1.44	-1.44
	Inverter	MV1-6	364477	4905835	2	0	0	100.3	100.3	1	4330.26	3.25	0	83.73	0	0.57	0	0	17.57	0	0	0	0	0	0	-1.56	-1.56
	Inverter	MV3-14	368684	4907498	2	0	0	100.3	100.3	1	4348.33	3.25	0	83.77	0	0.57	0	0	17.6	0	0	0	0	0	0	-1.62	-1.62
	Inverter	MV1-1	364715	4906166	2	0	0	100.3	100.3	1	4359.97	3.25	0	83.79	0	0.57	0	0	17.61	0	0	0	0	0	0	-1.67	-1.67
	Inverter	MV3-13	367963	4907577	2	0	0	100.3	100.3	1	4360.86	3.25	0	83.79	0	0.57	0	0	17.62	0	0	0	0	0	0	-1.67	-1.67
	Inverter	MV3-12	367668	4907594	2	0	0	100.3	100.3	1	4385.28	3.25	0	83.84	0	0.58	0	0	17.65	0	0	0	0	0	0	-1.76	-1.76
	Inverter	MV3-10	368167	4907669	2	0	0	100.3	100.3	1	4459.23	3.25	0	83.99	0	0.59	0	0	17.77	0	0	0	0	0	0	-2.03	-2.03
	Inverter	MV3-11	368346	4907662	2	0	0	100.3	100.3	1	4465.52	3.25	0	84	0	0.59	0	0	17.78	0	0	0	0	0	0	-2.05	-2.05
	Inverter	MV3-9	368512	4907703	2	0	0	100.3	100.3	1	4524.85	3.25	0	84.11	0	0.59	0	0	17.87	0	0	0	0	0	0	-2.26	-2.26
	Inverter	MV3-7	367945	4907754	2	0	0	100.3	100.3	1	4537.74	3.25	0	84.14	0	0.6	0	0	17.89	0	0	0	0	0	0	-2.31	-2.31
	Inverter	MV6-3	370207	4907140	2	0	0	100.3	100.3	1	4538.7	3.25	0	84.14	0	0.6	0	0	17.89	0	0	0	0	0	0	-2.31	-2.31
	Inverter	MV3-8	368680	4907712	2	0	0	100.3	100.3	1	4558.54	3.25	0	84.18	0	0.6	0	0	17.92	0	0	0	0	0	0	-2.38	-2.38
	Inverter	MV3-6	368162	4907834	2	0	0	100.3	100.3	1	4623.74	3.25	0	84.3	0	0.6	0	0	18.02	0	0	0	0	0	0	-2.61	-2.61
	Inverter	MV6-2	370085	4907339	2	0	0	100.3	100.3	1	4653.95	3.25	0	84.36	0	0.61	0	0	18.06	0	0	0	0	0	0	-2.72	-2.72
	Inverter	MV1-14	365163	4905049	2	0	0	97.3	97.3	1	3315.31	3.25	0	81.41	0	0.42	0	0	15.92	0	0	0	0	0	0	-0.44	-0.44
	Inverter	MV3-3	367939	4907927	2	0	0	100.3	100.3	1	4710.72	3.25	0	84.46	0	0.61	0	0	18.15	0	0	0	0	0	0	-2.91	-2.91
	Inverters	G_Inv8	366844.5	4902838.5	2	0	0	87.7	87.7	1	1145.31	3.25	0	72.18	0	2.47	0	0	1.61	0	0	0	0	0	0	11.4	11.4
	Inverters	G_Inv10	366900.7	4902704.8	2	0	0	87.7	87.7	1	1145.54	3.25	0	72.18	0	2.47	0	0	1.61	0	0	0	0	0	0	11.4	11.4
	Inverters	G_Inv6	366788.5	4902972	2	0	0	87.7	87.7	1	1163.15	3.25	0	72.31	0	2.47	0	0	1.63	0	0	0	0	0	0	11.24	11.24
	Inverters	G_Inv4	366732.8	4903105	2	0	0	87.7	87.7	1	1198.08	3.25	0	72.57	0	2.48	0	0	1.68	0	0	0	0	0	0	10.94	10.94
	Inverter	MV1-10	365004	4905564	2	0	0	97.3	97.3	1	3748.07	3.25	0	82.48	0	0.49	0	0	16.64	0	0	0	0	0	0	-2.3	-2.3
	Inverter	MV1-13	364731	4905241	2	0	0	97.3	97.3	1	3782.26	3.25	0	82.56	0	0.5	0	0	16.7	0	0	0	0	0	0	-2.44	-2.44
	Inverters	G_Inv2	366676.9	4903239.1	2	0	0	87.7	87.7	1	1249.01	3.25	0	72.93	0	2.49	0	0	1.74	0	0	0	0	0	0	10.51	10.51
	Inverters	G_Inv9	366750.9	4902691.8	2	0	0	87.7	87.7	1	1286.57	3.25	0	73.19	0	2.49	0	0	1.78	0	0	0	0	0	0	10.2	10.2
	Inverters	G_Inv7	366694.6	4902824.7	2	0	0	87.7	87.7	1	1291.88	3.25	0	73.22	0	2.49	0	0	1.79	0	0	0	0	0	0	10.15	10.15
	Inverter	MV1-7	364925	4905782	2	0	0	97.3	97.3	1	3948.04	3.25	0	82.93	0	0.52	0	0	16.97	0	0	0	0	0	0	-3.1	-3.1
	Inverters	G_Inv5	366638.5	4902958.1	2	0	0	87.7	87.7	1	1312.84	3.25	0	73.36	0	2.49	0	0	1.82	0	0	0	0	0	0	9.99	9.99
	Inverters	G_Inv3	366583.7	4903091.4	2	0	0	87.7	87.7	1	1347.8	3.25	0	73.59	0	2.5	0	0	1.86	0	0	0	0	0	0	9.71	9.71
	Inverter	MV4-11	369264	4908855	2	0	0	100.3	100.3	1	5795.34	3.25	0	86.26	0	0.7	0	0	19.71	0	0	0	0	0	0	-6.36	-6.36
	Inverter	MV4-10	369312	4908858	2	0	0	100.3	100.3	1	5809.53	3.25	0	86.28	0	0.7	0	0	19.73	0	0	0	0	0	0	-6.4	-6.4

Inverter	MV5-5	370015	4908690	2	0	0	100.3	100.3	1	5858.89	3.25	0	86.36	0	0.7	0	0	19.8	0	0	0	0	0	0	-6.54	-6.54
Inverter	MV2-1	365842	4906816	2	0	0	97.3	97.3	1	4159.29	3.25	0	83.38	0	0.55	0	0	17.3	0	0	0	0	0	0	-3.92	-3.92
Inverter	MV4-7	369035	4909001	2	0	0	100.3	100.3	1	5890.1	3.25	0	86.4	0	0.7	0	0	19.84	0	0	0	0	0	0	-6.63	-6.63
Inverter	MV4-8	369256	4909001	2	0	0	100.3	100.3	1	5935.69	3.25	0	86.47	0	0.7	0	0	19.91	0	0	0	0	0	0	-6.77	-6.77
Inverter	MV4-9	369289	4909001	2	0	0	100.3	100.3	1	5943.18	3.25	0	86.48	0	0.7	0	0	19.92	0	0	0	0	0	0	-6.79	-6.79
Inverter	MV5-4	370324	4908707	2	0	0	100.3	100.3	1	5991.63	3.25	0	86.55	0	0.7	0	0	19.98	0	0	0	0	0	0	-6.93	-6.93
Inverters	G_Inv1	366526.4	4903225.8	2	0	0	87.7	87.7	1	1399.33	3.25	0	73.92	0	2.51	0	0	1.92	0	0	0	0	0	0	9.31	9.31
Inverter	MV5-2	370006	4908853	2	0	0	100.3	100.3	1	6008.33	3.25	0	86.58	0	0.71	0	0	20	0	0	0	0	0	0	-6.97	-6.97
Inverter	MV4-4	369027	4909199	2	0	0	100.3	100.3	1	6083.22	3.25	0	86.68	0	0.71	0	0	20.11	0	0	0	0	0	0	-7.18	-7.18
Inverter	MV5-3	370231	4908851	2	0	0	100.3	100.3	1	6088.04	3.25	0	86.69	0	0.71	0	0	20.11	0	0	0	0	0	0	-7.2	-7.2
Inverter	MV4-6	369243	4909192	2	0	0	100.3	100.3	1	6119.17	3.25	0	86.73	0	0.71	0	0	20.15	0	0	0	0	0	0	-7.28	-7.28
Inverter	MV4-5	369289	4909199	2	0	0	100.3	100.3	1	6136.06	3.25	0	86.76	0	0.71	0	0	20.18	0	0	0	0	0	0	-7.33	-7.33
Inverter	MV4-1	369011	4909397	2	0	0	100.3	100.3	1	6275.26	3.25	0	86.95	0	0.71	0	0	20.36	0	0	0	0	0	0	-7.72	-7.72
Inverter	MV5-1	370020	4909142	2	0	0	100.3	100.3	1	6284.9	3.25	0	86.97	0	0.71	0	0	20.38	0	0	0	0	0	0	-7.74	-7.74
Inverter	MV4-3	369229	4909397	2	0	0	100.3	100.3	1	6316.62	3.25	0	87.01	0	0.71	0	0	20.42	0	0	0	0	0	0	-7.83	-7.83
Inverter	MV4-2	369272	4909397	2	0	0	100.3	100.3	1	6325.63	3.25	0	87.02	0	0.71	0	0	20.43	0	0	0	0	0	0	-7.85	-7.85
Inverter	MV6-1	370235	4907364	2	0	0	97.3	97.3	1	4747.24	3.25	0	84.53	0	0.62	0	0	18.2	0	0	0	0	0	0	-6.04	-6.04
DSTATCOM - 10 MVAR #2	DSAT2	369403	4908757	2.5	0	0	96.6	96.6	1	5734.26	3.5	0	86.17	0	3.75	0	0	3.71	0	0	0	0	0	0	3	3
DSTATCOM - 10 MVAR #1	DSAT1	369437	4908757	2.5	0	0	96.6	96.6	1	5743.12	3.5	0	86.18	0	3.75	0	0	3.72	0	0	0	0	0	0	2.98	2.98
SubstationTransformer	W_ST	369711.17	4906112.3	2.5	0	0	92	92	1	3402.14	3.5	0	81.64	0	0.18	0	-0.12	6.54	0	0	0	0	0	0	3.61	3.61
Westbrook Inverter Enclosur	W_INV3	369508	4906164	2	0	0	89.1	89.1	1	3345.54	3.25	0	81.49	0	1.23	0	0	10.13	0	0	0	0	0	0	-3.8	-3.8
Westbrook Inverter Enclosur	W_INV4	369673	4906164	2	0	0	89.1	89.1	1	3426.66	3.25	0	81.7	0	1.25	0	0	10.25	0	0	0	0	0	0	-4.15	-4.15
Westbrook Inverter Enclosur	W_INV2	369374	4906388	2	0	0	89.1	89.1	1	3486.73	3.25	0	81.85	0	1.27	0	0	10.34	0	0	0	0	0	0	-4.4	-4.4
Westbrook Inverter Enclosur	W_INV7	369780	4906417	2	0	0	89.1	89.1	1	3699.04	3.25	0	82.36	0	1.32	0	0	10.65	0	0	0	0	0	0	-5.27	-5.27
Westbrook Inverter Enclosur	W_INV5	369719	4906574	2	0	0	89.1	89.1	1	3806.58	3.25	0	82.61	0	1.34	0	0	10.81	0	0	0	0	0	0	-5.71	-5.71
Westbrook Inverter Enclosur	W_INV6	369875	4906578	2	0	0	89.1	89.1	1	3885.98	3.25	0	82.79	0	1.36	0	0	10.92	0	0	0	0	0	0	-6.02	-6.02
Inverter	MV2-2	365977	4906654	2	0	0	89.1	89.1	1	3951.61	3.25	0	82.94	0	1.38	0	0	11.02	0	0	0	0	0	0	-6.27	-6.27
Inverter	MV3-22	368656	4907142	2	0	0	89.1	89.1	1	3993.05	3.25	0	83.03	0	1.39	0	0	11.07	0	0	0	0	0	0	-6.43	-6.43
Inverter	MV1-3	364440	4906039	2	0	0	89.1	89.1	1	4485.28	3.25	0	84.04	0	1.51	0	0	11.76	0	0	0	0	0	0	-8.25	-8.25
Inverter	MV3-5	368340	4907843	2	0	0	89.1	89.1	1	4645.21	3.25	0	84.34	0	1.55	0	0	11.98	0	0	0	0	0	0	-8.82	-8.82
Inverter	MV3-4	368502	4907925	2	0	0	89.1	89.1	1	4743.84	3.25	0	84.52	0	1.58	0	0	12.12	0	0	0	0	0	0	-9.16	-9.16
Inverter	MV3-1	368156	4907976	2	0	0	89.1	89.1	1	4765.27	3.25	0	84.56	0	1.58	0	0	12.15	0	0	0	0	0	0	-9.23	-9.23
Inverter	MV3-2	368671	4907928	2	0	0	89.1	89.1	1	4770.28	3.25	0	84.57	0	1.58	0	0	12.15	0	0	0	0	0	0	-9.25	-9.25
Westbrook Inverter Enclosur	W_INV1	369409	4906578	2	0	0	86.1	86.1	1	3674.4	3.25	0	82.3	0	1.31	0	0	10.62	0	0	0	0	0	0	-8.17	-8.17
Fixed Reactor Bank 1	FRB1	369378	4908755	6	0	0	89.8	89.8	1	5725.94	5.25	0	86.16	0	-0.46	0	0	9.45	0	0	0	0	0	0	-5.37	-5.37
Fixed Reactor Bank 2	FRB2	369464	4908755	6	0	0	89.8	89.8	1	5748.35	5.25	0	86.19	0	-0.45	0	0	9.47	0	0	0	0	0	0	-5.43	-5.43
Inverter	MV4-15	369176	4908481	2	0	0	89.1	89.1	1	5411.13	3.25	0	85.67	0	1.74	0	0	13.01	0	0	0	0	0	0	-11.36	-11.36
Inverter	MV4-14	369176	4908507	2	0	0	89.1	89.1	1	5436.43	3.25	0	85.71	0	1.75	0	0	13.04	0	0	0	0	0	0	-11.44	-11.44
Inverter	MV4-13	369051	4908605	2	0	0	89.1	89.1	1	5504.94	3.25	0	85.82	0	1.76	0	0	13.13	0	0	0	0	0	0	-11.65	-11.65
Inverter	MV5-6	369982	4908507	2	0	0	89.1	89.1	1	5676.26	3.25	0	86.08	0	1.81	0	0	13.35	0	0	0	0	0	0	-12.18	-12.18
Inverter	MV4-12	369043	4908803	2	0	0	89.1	89.1	1	5697.33	3.25	0	86.11	0	1.81	0	0	13.38	0	0	0	0	0	0	-12.24	-12.24
Inverter	MV6-4	370250	4906966	2	0	0	86.1	86.1	1	4411.65	3.25	0	83.89	0	1.49	0	0	11.66	0	0	0	0	0	0	-10.99	-10.99
Westbrook Inverter Transfor	W_INVTR1	369403	4906578	2	0	0	78.2	78.2	1	3671.98	3.25	0	82.3	0	-2.89	0	0	1.93	0	0	0	0	0	0	-3.1	-3.1
Westbrook Inverter Transfor	W_INVTR3	369514	4906164	2	0	0	77.3	77.3	1	3348.38	3.25	0	81.5	0	-2.81	0	0	1.8	0	0	0	0	0	0	-3.15	-3.15
Westbrook Inverter Transfor	W_INVTR4	369679	4906164	2	0	0	77.3	77.3	1	3429.72	3.25	0	81.71	0	-2.83	0	0	1.83	0	0	0	0	0	0	-3.37	-3.37
Westbrook Inverter Transfor	W_INVTR2	369368	4906388	2	0	0	77.3	77.3	1	3484.24	3.25	0	81.84	0	-2.84	0	0	1.86	0	0	0	0	0	0	-3.52	-3.52
Westbrook Inverter Transfor	W_INVTR7	369786	4906417	2	0	0	77.3	77.3	1	3702.05	3.25	0	82.37	0	-2.89	0	0	1.94	0	0	0	0	0	0	-4.07	-4.07
Westbrook Inverter Transfor	W_INVTR5	369725	4906574	2	0	0	77.3	77.3	1	3809.41	3.25	0	82.62	0	-2.92	0	0	1.98	0	0	0	0	0	0	-4.34	-4.34
Westbrook Inverter Transfor	W_INVTR6	369881	4906578	2	0	0	77.3	77.3	1	3888.99	3.25	0	82.8	0	-2.94	0	0	2.01	0	0	0	0	0	0	-4.53	-4.53
Inverter Transformer	MV1-14 T	365157	4905049	2	0	0	69.4	69.4	1	3320.32	3.25	0	81.42	0	2.6	0	0	6.15	0	0	0	0	0	0	-20.82	-20.82
Inverter Transformer	MV1-10 T	365010	4905564	2	0	0	69.4	69.4	1	3743.4	3.25	0	82.47	0	2.72	0	0	6.48	0	0	0	0	0	0	-22.32	-22.32
Inverter Transformer	MV1-13 T	364725	4905241	2	0	0	69.4	69.4	1	3787.33	3.25	0	82.57	0	2.73	0	0	6.52	0	0	0	0	0	0	-22.46	-22.46
Inverter Transformer	MV1-7 T	364919	4905782	2	0	0	69.4	69.4	1	3952.6	3.25	0	82.94	0	2.77	0	0	6.64	0	0	0	0	0	0	-23	-23
Inverter Transformer	MV2-1 T	365836	4906816	2	0	0	69.4	69.4	1	4162.29	3.25	0	83.39	0	2.83	0	0	6.8	0	0	0	0	0	0	-23.66	-23.66
Inverter Transformer	MV6-4 T	370244	4906966	2	0	0	69.4	69.4	1	4408.49	3.96	0	83.89	0	3.68	0.94	0	6.97	0	0	0	0	0	0	-26.12	-26.12
Inverter Transformer	MV6-1 T	370230	4907364	2	0	0	69.4	69.4	1	4744.81	3.25	0	84.52	0	2.96	0	0	7.21	0	0	0	0	0	0	-25.34	-25.34
Inverter Transformer	MV1-15 T	365309	4904994	2	0	0	56.1	56.1	1	3163.44	3.25	0	81	0	0.9	0	0	9.14	0	0	0	0	0	0	-34.99	-34.99
Inverter Transformer	MV1-12 T	365044	4905386	2	0	0	56.1	56.1	1	3607.19	3.25	0	82.14	0	1.08	0	0	9.86	0	0	0	0	0	0	-37.03	-37.03
Inverter Transformer	MV1-11 T	364649	4905414	2	0	0	56.1	56.1	1	3945.46	3.25	0	82.92	0	1.22	0	0	10.37	0	0	0	0	0	0	-38.46	-38.46
Inverter Transformer	MV2-2 T	365982	4906654	2	0	0	56.1	56.1	1	3949.15	3.25	0	82.93	0	1.22	0	0	10.38	0	0	0	0	0	0	-38.47	-38.47
Inverter Transformer	MV1-8 T	364782	4905647	2	0	0	56.1	56.1	1	3973.81	3.25	0	82.98	0	1.23	0	0	10.42	0	0	0	0	0	0	-38.58	-38.58
Inverter Transformer	MV3-22 T	368661	4907142	2	0	0	56.1	56.1	1	3993.97	3.25	0	83.03	0	1.24	0	0	10.45	0	0	0	0	0	0	-38.66	-38.66
Inverter Transformer	MV2-3 T	365814	4906641	2	0	0	56.1	56.1	1	4023.41	3.25	0	83.09	0	1.25	0	0	10.49	0	0	0	0	0	0	-38.78	-38.78
Inverter Transformer	MV3-21 T	368484	4907206	2	0	0	56.1	56.1	1	4028.57	3.25	0	83.1	0	1.26	0	0	10.5	0	0	0	0	0	0	-38.8	-38.8
Inverter Transformer	MV1-4 T	364821	4905918	2	0	0	56.1	56.1	1	4115.62	3.25	0	83.29	0	1.29	0	0	10.63	0	0	0	0	0	0	-39.15	-39.15
Inverter Transformer	MV2-4 T	365590	4906628	2	0	0	56.1	56.1	1	4134.63	3.25	0	83.33	0	1.3	0	0	10.65	0	0	0	0	0	0	-39.22	-39.22
Inverter Transformer	MV3-19 T	368352	4907347	2	0	0	56.1	56.1	1	4152.64	3.25	0	83.37	0	1.3	0	0	10.68	0	0	0	0	0	0	-39.29	-39.29
Inverter Transformer	MV1-9 T	364555	4905646	2	0	0	56.1	56.1	1	4155.13	3.25	0	83.37	0	1.31	0	0	10.68	0	0	0	0	0	0	-39.3	-39.3
Inverter Transformer	MV3-20 T	368683	4907317	2	0	0	56.1	56.1	1	4170.04	3.25	0	83.4	0	1.31	0	0	10.7	0	0	0	0	0	0	-39.36	-39.36
Inverter Transformer	MV3-18 T	367757	4907412	2	0	0	56.1	56.1	1	4199.09	3.25	0	83.46	0	1.32	0	0	10.75	0	0	0	0	0	0	-39.47	-39.47
Inverter Transformer	MV1-5 T	364676	4905892	2	0	0	56.1	56.1	1	4209.5	3.25	0	83.48	0	1.33	0	0	10.76	0	0	0	0	0	0	-39.52	-39.52
Inverter Transformer	MV1-2 T	364759	4906063	2	0	0	56.1	56.1	1	4258.13	3.25	0	83.58	0	1.35	0	0	10.83	0	0	0	0	0	0	-39.7	-39.7
Inverter Transformer	MV3-17 T	368183	4907472	2	0	0	56.1	56.1	1	4263.47	3.25	0	83.6	0	1.35	0	0	10.84	0	0	0	0	0	0	-39.73	-39.73
Inverter Transformer	MV3-15 T	368351	4907477	2	0	0	56.1	56.1	1	4281.87	3.25	0	83.63	0	1.36	0	0	10.87	0	0	0	0	0	0	-39.8	-39.8

	Inverter Transformer	MV3-16 T	368509	4907475	2	0	0	56.1	56.1	1	4298.46	3.25	0	83.67	0	1.36	0	0	10.89	0	0	0	0	0	0	-39.86	-39.86
	Inverter Transformer	MV1-6 T	364482	4905835	2	0	0	56.1	56.1	1	4326.28	3.25	0	83.72	0	1.37	0	0	10.93	0	0	0	0	0	0	-39.97	-39.97
	Inverter Transformer	MV3-14 T	368678	4907498	2	0	0	56.1	56.1	1	4347.29	3.25	0	83.76	0	1.38	0	0	10.96	0	0	0	0	0	0	-40.05	-40.05
	Inverter Transformer	MV1-1 T	364721	4906166	2	0	0	56.1	56.1	1	4355.55	3.25	0	83.78	0	1.38	0	0	10.97	0	0	0	0	0	0	-40.08	-40.08
	Inverter Transformer	MV3-13 T	367958	4907577	2	0	0	56.1	56.1	1	4360.82	3.25	0	83.79	0	1.39	0	0	10.98	0	0	0	0	0	0	-40.1	-40.1
	Inverter Transformer	MV3-12 T	367674	4907594	2	0	0	56.1	56.1	1	4384.93	3.25	0	83.84	0	1.4	0	0	11.01	0	0	0	0	0	0	-40.19	-40.19
	Inverter Transformer	MV3-10 T	368162	4907669	2	0	0	56.1	56.1	1	4458.97	3.25	0	83.98	0	1.42	0	0	11.12	0	0	0	0	0	0	-40.47	-40.47
	Inverter Transformer	MV3-11 T	368340	4907662	2	0	0	56.1	56.1	1	4464.96	3.25	0	84	0	1.43	0	0	11.13	0	0	0	0	0	0	-40.49	-40.49
	Inverter Transformer	MV1-3 T	364435	4906039	2	0	0	56.1	56.1	1	4489.17	3.25	0	84.04	0	1.44	0	0	11.16	0	0	0	0	0	0	-40.58	-40.58
	Inverter Transformer	MV3-9 T	368517	4907703	2	0	0	56.1	56.1	1	4525.5	3.25	0	84.11	0	1.45	0	0	11.21	0	0	0	0	0	0	-40.72	-40.72
	Inverter Transformer	MV6-3 T	370202	4907140	2	0	0	56.1	56.1	1	4536.18	3.25	0	84.13	0	1.45	0	0	11.23	0	0	0	0	0	0	-40.75	-40.75
	Inverter Transformer	MV3-7 T	367951	4907754	2	0	0	56.1	56.1	1	4537.77	3.25	0	84.14	0	1.45	0	0	11.23	0	0	0	0	0	0	-40.76	-40.76
	Inverter Transformer	MV3-8 T	368685	4907712	2	0	0	56.1	56.1	1	4559.37	3.25	0	84.18	0	1.46	0	0	11.26	0	0	0	0	0	0	-40.84	-40.84
	Inverter Transformer	MV3-6 T	368156	4907834	2	0	0	56.1	56.1	1	4623.44	3.25	0	84.3	0	1.49	0	0	11.35	0	0	0	0	0	0	-41.07	-41.07
	Inverter Transformer	MV3-5 T	368335	4907843	2	0	0	56.1	56.1	1	4644.77	3.25	0	84.34	0	1.49	0	0	11.38	0	0	0	0	0	0	-41.15	-41.15
	Inverter Transformer	MV6-2 T	370091	4907339	2	0	0	56.1	56.1	1	4656.74	3.25	0	84.36	0	1.5	0	0	11.39	0	0	0	0	0	0	-41.19	-41.19
	Inverter Transformer	MV3-3 T	367944	4907927	2	0	0	56.1	56.1	1	4710.74	3.25	0	84.46	0	1.52	0	0	11.47	0	0	0	0	0	0	-41.39	-41.39
	Inverter Transformer	MV3-4 T	368507	4907925	2	0	0	56.1	56.1	1	4744.45	3.25	0	84.52	0	1.53	0	0	11.51	0	0	0	0	0	0	-41.51	-41.51
	Inverter Transformer	MV3-1 T	368150	4907976	2	0	0	56.1	56.1	1	4764.98	3.25	0	84.56	0	1.54	0	0	11.54	0	0	0	0	0	0	-41.58	-41.58
	Inverter Transformer	MV3-2 T	368677	4907928	2	0	0	56.1	56.1	1	4771.22	3.25	0	84.57	0	1.54	0	0	11.55	0	0	0	0	0	0	-41.6	-41.6
	Inverter Transformer	MV4-15 T	369170	4908481	2	0	0	56.1	56.1	1	5409.75	3.25	0	85.66	0	1.77	0	0	12.38	0	0	0	0	0	0	-43.76	-43.76
	Inverter Transformer	MV4-14 T	369182	4908507	2	0	0	56.1	56.1	1	5437.81	3.25	0	85.71	0	1.78	0	0	12.42	0	0	0	0	0	0	-43.85	-43.85
	Inverter Transformer	MV4-13 T	369057	4908605	2	0	0	56.1	56.1	1	5506.17	3.25	0	85.82	0	1.8	0	0	12.5	0	0	0	0	0	0	-44.06	-44.06
	Inverter Transformer	MV5-6 T	369987	4908507	2	0	0	56.1	56.1	1	5678.07	3.25	0	86.08	0	1.86	0	0	12.72	0	0	0	0	0	0	-44.6	-44.6
	Inverter Transformer	MV4-12 T	369049	4908803	2	0	0	56.1	56.1	1	5698.51	3.25	0	86.12	0	1.87	0	0	12.74	0	0	0	0	0	0	-44.66	-44.66
	Inverter Transformer	MV4-11 T	369269	4908855	2	0	0	56.1	56.1	1	5796.5	3.25	0	86.26	0	1.9	0	0	12.86	0	0	0	0	0	0	-44.96	-44.96
	Inverter Transformer	MV4-10 T	369307	4908858	2	0	0	56.1	56.1	1	5808.34	3.25	0	86.28	0	1.9	0	0	12.87	0	0	0	0	0	0	-45	-45
	Inverter Transformer	MV5-5 T	370021	4908690	2	0	0	56.1	56.1	1	5861.03	3.25	0	86.36	0	1.92	0	0	12.94	0	0	0	0	0	0	-45.16	-45.16
	Inverter Transformer	MV4-7 T	369040	4909001	2	0	0	56.1	56.1	1	5891.05	3.25	0	86.4	0	1.93	0	0	12.97	0	0	0	0	0	0	-45.25	-45.25
	Inverter Transformer	MV4-8 T	369262	4909001	2	0	0	56.1	56.1	1	5937.04	3.25	0	86.47	0	1.94	0	0	13.03	0	0	0	0	0	0	-45.39	-45.39
	Inverter Transformer	MV4-9 T	369284	4909001	2	0	0	56.1	56.1	1	5942.03	3.25	0	86.48	0	1.95	0	0	13.03	0	0	0	0	0	0	-45.4	-45.4
	Inverter Transformer	MV5-4 T	370330	4908707	2	0	0	56.1	56.1	1	5994.03	3.25	0	86.55	0	1.96	0	0	13.1	0	0	0	0	0	0	-45.55	-45.55
	Inverter Transformer	MV5-2 T	370011	4908853	2	0	0	56.1	56.1	1	6010.06	3.25	0	86.58	0	1.97	0	0	13.11	0	0	0	0	0	0	-45.6	-45.6
	Inverter Transformer	MV4-4 T	369033	4909199	2	0	0	56.1	56.1	1	6084.31	3.25	0	86.68	0	1.99	0	0	13.2	0	0	0	0	0	0	-45.82	-45.82
	Inverter Transformer	MV5-3 T	370237	4908851	2	0	0	56.1	56.1	1	6090.32	3.25	0	86.69	0	1.99	0	0	13.21	0	0	0	0	0	0	-45.84	-45.84
	Inverter Transformer	MV4-6 T	369249	4909192	2	0	0	56.1	56.1	1	6120.47	3.25	0	86.74	0	2	0	0	13.24	0	0	0	0	0	0	-45.92	-45.92
	Inverter Transformer	MV4-5 T	369283	4909199	2	0	0	56.1	56.1	1	6134.73	3.25	0	86.76	0	2.01	0	0	13.26	0	0	0	0	0	0	-45.97	-45.97
	Inverter Transformer	MV4-1 T	369017	4909397	2	0	0	56.1	56.1	1	6276.3	3.25	0	86.95	0	2.05	0	0	13.43	0	0	0	0	0	0	-46.37	-46.37
	Inverter Transformer	MV5-1 T	370015	4909142	2	0	0	56.1	56.1	1	6283.24	3.25	0	86.96	0	2.05	0	0	13.43	0	0	0	0	0	0	-46.39	-46.39
	Inverter Transformer	MV4-3 T	369234	4909397	2	0	0	56.1	56.1	1	6317.65	3.25	0	87.01	0	2.06	0	0	13.47	0	0	0	0	0	0	-46.49	-46.49
	Inverter Transformer	MV4-2 T	369267	4909397	2	0	0	56.1	56.1	1	6324.57	3.25	0	87.02	0	2.07	0	0	13.48	0	0	0	0	0	0	-46.51	-46.51
	Line Reactor	NGR	369421	4908787.5	5	0	0	45.4	45.4	1	5768.38	5.25	0	86.22	0	3.24	1.36	0.11	2.36	0	0	0	0	0	0	-47.83	-47.83
Limit. Valu	0	0																								
Level D/N:	22.6136	22.6136																								

Receiver: Existing Noise Receptor
ID: G-61
X: 367944.4
Y: 4903077.9
Z: 4.5
Ground: 0

ISO	Description	ID	X	Y	Z	Ground	ReflOrd	LxT	LxN	L/A	Dist.	hm	Freq	Adiv	K0b	Agr	Abar	z	Aatm	Afol	Ahous	Cmet	CmetN	Dc	RL	LtotT	LtotN
	Sol_Luce Substation	S_Substation	369426	4908792	3.5	0	0	112.1	112.1	1	5903.06	5.25	0	86.42	0	1.14	2.66	0.34	9.64	0	0	0	0	0	0	12.22	12.22
	Inverter	MV1-15	365315	4904994	2	0	0	100.3	100.3	1	3253.49	3.25	0	81.25	0	0.41	0	0	15.81	0	0	0	0	0	0	2.84	2.84
	Inverter	MV1-12	365038	4905386	2	0	0	100.3	100.3	1	3711.4	3.25	0	82.39	0	0.48	0	0	16.58	0	0	0	0	0	0	0.86	0.86
	Inverter	MV1-11	364655	4905414	2	0	0	100.3	100.3	1	4034.54	3.25	0	83.12	0	0.53	0	0	17.1	0	0	0	0	0	0	-0.44	-0.44
	Inverter	MV1-8	364788	4905647	2	0	0	100.3	100.3	1	4069.78	3.25	0	83.19	0	0.54	0	0	17.16	0	0	0	0	0	0	-0.58	-0.58
	Inverter	MV2-3	365820	4906641	2	0	0	100.3	100.3	1	4148.34	3.25	0	83.36	0	0.55	0	0	17.28	0	0	0	0	0	0	-0.88	-0.88
	Gardiner Substation	G_Sub	366586.3	4903349.9	2.5	0	0	90.8	90.8	1	1385.07	4.25	0	73.83	0	0.83	4.7	0.3	3.27	0	0	0	0	0	0	8.15	8.15
	Inverter	MV3-21	368478	4907206	2	0	0	100.3	100.3	1	4162.44	3.25	0	83.39	0	0.55	0	0	17.31	0	0	0	0	0	0	-0.93	-0.93
	Inverter	MV1-4	364815	4905918	2	0	0	100.3	100.3	1	4226.03	3.25	0	83.52	0	0.56	0	0	17.41	0	0	0	0	0	0	-1.17	-1.17
	Inverter	MV1-9	364561	4905646	2	0	0	100.3	100.3	1	4247.65	3.25	0	83.56	0	0.56	0	0	17.44	0	0	0	0	0	0	-1.25	-1.25
	Inverter	MV2-4	365586	4906624	2	0	0	100.3	100.3	1	4258.74	3.25	0	83.59	0	0.56	0	0	17.46	0	0	0	0	0	0	-1.29	-1.29
	Inverter	MV3-19	368357	4907347	2	0	0	100.3	100.3	1	4288.99	3.25	0	83.65	0	0.57	0	0	17.5	0	0	0	0	0	0	-1.4	-1.4
	Inverter	MV3-20	368689	4907317	2	0	0	100.3	100.3	1	4304	3.25	0	83.68	0	0.57	0	0	17.53	0	0	0	0	0	0	-1.46	-1.46
	Inverter	MV1-5	364671	4905892	2	0	0	100.3	100.3	1	4316.75	3.25	0	83.7	0	0.57	0	0	17.55	0	0	0	0	0	0	-1.51	-1.51
	Inverter	MV3-18	367752	4907412	2	0	0	100.3	100.3	1	4338.37	3.25	0	83.75	0	0.57	0	0	17.58	0	0	0	0	0	0	-1.59	-1.59
	Inverter	MV1-2	364753	4906063	2	0	0	100.3	100.3	1	4369.88	3.25	0	83.81	0	0.58	0	0	17.63	0	0	0	0	0	0	-1.7	-1.7
	Inverter	MV3-17	368178	4907472	2	0	0	100.3	100.3	1	4400.31	3.25	0	83.87	0	0.58	0	0	17.68	0	0	0	0	0	0	-1.81	-1.81
	Inverter	MV3-15	368357	4907477	2	0	0	100.3	100.3	1	4418.41	3.25	0	83.91	0	0.58	0	0	17.7	0	0	0	0	0	0	-1.88	-1.88
	Inverter	MV1-6	364477	4905835	2	0	0	100.3	100.3	1	4429.95	3.25	0	83.93	0	0.58	0	0	17.72	0	0	0	0	0	0	-1.92	-1.92
	Inverter	MV3-16	368514	4907475	2	0	0	100.3	100.3	1	4433.84	3.25	0	83.94	0	0.58	0	0	17.73	0	0	0	0	0	0	-1.94	-1.94
	Inverter	MV1-1	364715	4906166	2	0	0	100.3	100.3	1	4468.27	3.25	0	84	0	0.59	0	0	17.78	0	0	0	0	0	0	-2.06	-2.06

Inverter	MV3-14	368684	4907498	2	0	0	100.3	100.3	1	4481.55	3.25	0	84.03	0	0.59	0	0	17.8	0	0	0	0	0	0	-2.11	-2.11
Inverter	MV3-13	367963	4907577	2	0	0	100.3	100.3	1	4499.14	3.25	0	84.06	0	0.59	0	0	17.83	0	0	0	0	0	0	-2.17	-2.17
Inverter	MV3-12	367668	4907594	2	0	0	100.3	100.3	1	4524.55	3.25	0	84.11	0	0.59	0	0	17.87	0	0	0	0	0	0	-2.26	-2.26
Inverter	MV3-10	368167	4907669	2	0	0	100.3	100.3	1	4596.49	3.25	0	84.25	0	0.6	0	0	17.98	0	0	0	0	0	0	-2.52	-2.52
Inverter	MV3-11	368346	4907662	2	0	0	100.3	100.3	1	4601.66	3.25	0	84.26	0	0.6	0	0	17.99	0	0	0	0	0	0	-2.53	-2.53
Inverter	MV6-3	370207	4907140	2	0	0	100.3	100.3	1	4649.73	3.25	0	84.35	0	0.61	0	0	18.06	0	0	0	0	0	0	-2.7	-2.7
Inverter	MV3-9	368512	4907703	2	0	0	100.3	100.3	1	4659.8	3.25	0	84.37	0	0.61	0	0	18.07	0	0	0	0	0	0	-2.74	-2.74
Inverter	MV3-7	367945	4907754	2	0	0	100.3	100.3	1	4676.1	3.25	0	84.4	0	0.61	0	0	18.1	0	0	0	0	0	0	-2.79	-2.79
Inverter	MV3-8	368680	4907712	2	0	0	100.3	100.3	1	4692.12	3.25	0	84.43	0	0.61	0	0	18.12	0	0	0	0	0	0	-2.85	-2.85
Inverters	G_Inv10	366900.7	4902704.8	2	0	0	87.7	87.7	1	1108.39	3.25	0	71.89	0	2.47	0	0	1.56	0	0	0	0	0	0	11.74	11.74
Inverter	MV3-6	368162	4907834	2	0	0	100.3	100.3	1	4761.08	3.25	0	84.55	0	0.62	0	0	18.23	0	0	0	0	0	0	-3.09	-3.09
Inverter	MV6-2	370085	4907339	2	0	0	100.3	100.3	1	4768.56	3.25	0	84.57	0	0.62	0	0	18.24	0	0	0	0	0	0	-3.11	-3.11
Inverter	MV1-14	365163	4905049	2	0	0	97.3	97.3	1	3409.02	3.25	0	81.65	0	0.44	0	0	16.08	0	0	0	0	0	0	-0.85	-0.85
Inverters	G_Inv8	366844.5	4902838.5	2	0	0	87.7	87.7	1	1125.65	3.25	0	72.03	0	2.47	0	0	1.58	0	0	0	0	0	0	11.58	11.58
Inverter	MV3-3	367939	4907927	2	0	0	100.3	100.3	1	4849.1	3.25	0	84.71	0	0.63	0	0	18.36	0	0	0	0	0	0	-3.39	-3.39
Inverters	G_Inv6	366788.5	4902972	2	0	0	87.7	87.7	1	1160.74	3.25	0	72.29	0	2.47	0	0	1.63	0	0	0	0	0	0	11.26	11.26
Inverters	G_Inv4	366732.8	4903105	2	0	0	87.7	87.7	1	1211.91	3.25	0	72.67	0	2.48	0	0	1.69	0	0	0	0	0	0	10.82	10.82
Inverters	G_Inv9	366750.9	4902691.8	2	0	0	87.7	87.7	1	1254.4	3.25	0	72.97	0	2.49	0	0	1.74	0	0	0	0	0	0	10.46	10.46
Inverter	MV1-10	365004	4905564	2	0	0	97.3	97.3	1	3850.54	3.25	0	82.71	0	0.51	0	0	16.81	0	0	0	0	0	0	-2.71	-2.71
Inverter	MV1-13	364731	4905241	2	0	0	97.3	97.3	1	3873.62	3.25	0	82.76	0	0.51	0	0	16.85	0	0	0	0	0	0	-2.8	-2.8
Inverters	G_Inv7	366694.6	4902824.7	2	0	0	87.7	87.7	1	1275.19	3.25	0	73.11	0	2.49	0	0	1.77	0	0	0	0	0	0	10.29	10.29
Inverters	G_Inv2	366676.9	4903239.1	2	0	0	87.7	87.7	1	1277.71	3.25	0	73.13	0	2.49	0	0	1.77	0	0	0	0	0	0	10.27	10.27
Inverters	G_Inv5	366638.5	4902958.1	2	0	0	87.7	87.7	1	1311.39	3.25	0	73.35	0	2.49	0	0	1.81	0	0	0	0	0	0	10	10
Inverter	MV1-7	364925	4905782	2	0	0	97.3	97.3	1	4053.26	3.25	0	83.16	0	0.53	0	0	17.13	0	0	0	0	0	0	-3.51	-3.51
Inverters	G_Inv3	366583.7	4903091.4	2	0	0	87.7	87.7	1	1360.77	3.25	0	73.68	0	2.5	0	0	1.88	0	0	0	0	0	0	9.61	9.61
Inverter	MV4-11	369264	4908855	2	0	0	100.3	100.3	1	5925.9	3.25	0	86.46	0	0.7	0	0	19.89	0	0	0	0	0	0	-6.74	-6.74
Inverter	MV4-10	369312	4908858	2	0	0	100.3	100.3	1	5939.69	3.25	0	86.48	0	0.7	0	0	19.91	0	0	0	0	0	0	-6.78	-6.78
Inverter	MV5-5	370015	4908690	2	0	0	100.3	100.3	1	5981.89	3.25	0	86.54	0	0.7	0	0	19.97	0	0	0	0	0	0	-6.9	-6.9
Inverter	MV4-7	369035	4909001	2	0	0	100.3	100.3	1	6022.67	3.25	0	86.6	0	0.71	0	0	20.02	0	0	0	0	0	0	-7.01	-7.01
Inverter	MV2-1	365842	4906816	2	0	0	97.3	97.3	1	4288.76	3.25	0	83.65	0	0.57	0	0	17.5	0	0	0	0	0	0	-4.4	-4.4
Inverter	MV4-8	369256	4909001	2	0	0	100.3	100.3	1	6066.58	3.25	0	86.66	0	0.71	0	0	20.08	0	0	0	0	0	0	-7.14	-7.14
Inverter	MV4-9	369289	4909001	2	0	0	100.3	100.3	1	6073.8	3.25	0	86.67	0	0.71	0	0	20.09	0	0	0	0	0	0	-7.16	-7.16
Inverter	MV5-4	370324	4908707	2	0	0	100.3	100.3	1	6111.4	3.25	0	86.72	0	0.71	0	0	20.14	0	0	0	0	0	0	-7.26	-7.26
Inverters	G_Inv1	366526.4	4903225.8	2	0	0	87.7	87.7	1	1425.69	3.25	0	74.08	0	2.51	0	0	1.95	0	0	0	0	0	0	9.12	9.12
Inverter	MV5-2	370006	4908853	2	0	0	100.3	100.3	1	6132.05	3.25	0	86.75	0	0.71	0	0	20.17	0	0	0	0	0	0	-7.32	-7.32
Inverter	MV5-3	370231	4908851	2	0	0	100.3	100.3	1	6209.45	3.25	0	86.86	0	0.71	0	0	20.28	0	0	0	0	0	0	-7.54	-7.54
Inverter	MV4-4	369027	4909199	2	0	0	100.3	100.3	1	6216.1	3.25	0	86.87	0	0.71	0	0	20.28	0	0	0	0	0	0	-7.55	-7.55
Inverter	MV4-6	369243	4909192	2	0	0	100.3	100.3	1	6250.49	3.25	0	86.92	0	0.71	0	0	20.33	0	0	0	0	0	0	-7.65	-7.65
Inverter	MV4-5	369289	4909199	2	0	0	100.3	100.3	1	6267.04	3.25	0	86.94	0	0.71	0	0	20.35	0	0	0	0	0	0	-7.69	-7.69
Inverter	MV4-1	369011	4909397	2	0	0	100.3	100.3	1	6408.48	3.25	0	87.14	0	0.71	0	0	20.54	0	0	0	0	0	0	-8.08	-8.08
Inverter	MV5-1	370020	4909142	2	0	0	100.3	100.3	1	6409.48	3.25	0	87.14	0	0.71	0	0	20.54	0	0	0	0	0	0	-8.08	-8.08
Inverter	MV4-3	369229	4909397	2	0	0	100.3	100.3	1	6448.35	3.25	0	87.19	0	0.71	0	0	20.59	0	0	0	0	0	0	-8.18	-8.18
Inverter	MV4-2	369272	4909397	2	0	0	100.3	100.3	1	6457.05	3.25	0	87.2	0	0.71	0	0	20.6	0	0	0	0	0	0	-8.21	-8.21
Inverter	MV6-1	370235	4907364	2	0	0	97.3	97.3	1	4859.78	3.25	0	84.73	0	0.63	0	0	18.37	0	0	0	0	0	0	-6.42	-6.42
DSTATCOM - 10 MVAR #2	DSAT2	369403	4908757	2.5	0	0	96.6	96.6	1	5863.42	3.5	0	86.36	0	3.76	0	0	3.77	0	0	0	0	0	0	2.73	2.73
DSTATCOM - 10 MVAR #1	DSAT1	369437	4908757	2.5	0	0	96.6	96.6	1	5871.97	3.5	0	86.38	0	3.76	0	0	3.78	0	0	0	0	0	0	2.71	2.71
SubstationTransformer	W_ST	369711.17	4906112.3	2.5	0	0	92	92	1	3511.25	3.5	0	81.91	0	0.21	0	-0.12	6.7	0	0	0	0	0	0	3.16	3.16
Westbrook Inverter Enclosur	W_INV3	369508	4906164	2	0	0	89.1	89.1	1	3459.6	3.25	0	81.78	0	1.26	0	0	10.3	0	0	0	0	0	0	-4.29	-4.29
Westbrook Inverter Enclosur	W_INV4	369673	4906164	2	0	0	89.1	89.1	1	3537.24	3.25	0	81.97	0	1.28	0	0	10.42	0	0	0	0	0	0	-4.61	-4.61
Westbrook Inverter Enclosur	W_INV2	369374	4906388	2	0	0	89.1	89.1	1	3605.62	3.25	0	82.14	0	1.3	0	0	10.52	0	0	0	0	0	0	-4.89	-4.89
Westbrook Inverter Enclosur	W_INV7	369780	4906417	2	0	0	89.1	89.1	1	3810.38	3.25	0	82.62	0	1.35	0	0	10.81	0	0	0	0	0	0	-5.72	-5.72
Westbrook Inverter Enclosur	W_INV5	369719	4906574	2	0	0	89.1	89.1	1	3920.7	3.25	0	82.87	0	1.37	0	0	10.97	0	0	0	0	0	0	-6.15	-6.15
Westbrook Inverter Enclosur	W_INV6	369875	4906578	2	0	0	89.1	89.1	1	3997.24	3.25	0	83.04	0	1.39	0	0	11.08	0	0	0	0	0	0	-6.45	-6.45
Inverter	MV2-2	365977	4906654	2	0	0	89.1	89.1	1	4081.56	3.25	0	83.22	0	1.41	0	0	11.2	0	0	0	0	0	0	-6.77	-6.77
Inverter	MV3-22	368656	4907142	2	0	0	89.1	89.1	1	4125.93	3.25	0	83.31	0	1.42	0	0	11.26	0	0	0	0	0	0	-6.94	-6.94
Inverter	MV1-3	364440	4906039	2	0	0	89.1	89.1	1	4587.91	3.25	0	84.23	0	1.54	0	0	11.91	0	0	0	0	0	0	-8.62	-8.62
Inverter	MV3-5	368340	4907843	2	0	0	89.1	89.1	1	4781.49	3.25	0	84.59	0	1.59	0	0	12.17	0	0	0	0	0	0	-9.29	-9.29
Inverter	MV3-4	368502	4907925	2	0	0	89.1	89.1	1	4879.07	3.25	0	84.77	0	1.61	0	0	12.3	0	0	0	0	0	0	-9.62	-9.62
Inverter	MV3-1	368156	4907976	2	0	0	89.1	89.1	1	4902.67	3.25	0	84.81	0	1.62	0	0	12.33	0	0	0	0	0	0	-9.7	-9.7
Inverter	MV3-2	368671	4907928	2	0	0	89.1	89.1	1	4904.23	3.25	0	84.81	0	1.62	0	0	12.34	0	0	0	0	0	0	-9.7	-9.7
Westbrook Inverter Enclosur	W_INV1	369409	4906578	2	0	0	86.1	86.1	1	3794.17	3.25	0	82.58	0	1.34	0	0	10.79	0	0	0	0	0	0	-8.66	-8.66
Fixed Reactor Bank 1	FRB1	369378	4908755	6	0	0	89.8	89.8	1	5855.31	5.25	0	86.35	0	-0.44	0	0	9.59	0	0	0	0	0	0	-5.72	-5.72
Fixed Reactor Bank 2	FRB2	369464	4908755	6	0	0	89.8	89.8	1	5876.96	5.25	0	86.38	0	-0.44	0	0	9.61	0	0	0	0	0	0	-5.78	-5.78
Inverter	MV4-15	369176	4908481	2	0	0	89.1	89.1	1	5541.69	3.25	0	85.87	0	1.77	0	0	13.18	0	0	0	0	0	0	-11.76	-11.76
Inverter	MV4-14	369176	4908507	2	0	0	89.1	89.1	1	5567.04	3.25	0	85.91	0	1.78	0	0	13.21	0	0	0	0	0	0	-11.84	-11.84
Inverter	MV4-13	369051	4908605	2	0	0	89.1	89.1	1	5636.79	3.25	0	86.02	0	1.8	0	0	13.3	0	0	0	0	0	0	-12.06	-12.06
Inverter	MV5-6	369982	4908507	2	0	0	89.1	89.1	1	5798.87	3.25	0	86.27	0	1.84	0	0	13.51	0	0	0	0	0	0	-12.55	-12.55
Inverter	MV4-12	369043	4908803	2	0	0	89.1	89.1	1	5829.55	3.25	0	86.31	0	1.84	0	0	13.55	0	0	0	0	0	0	-12.65	-12.65
Inverter	MV6-4	370250	4906966	2	0	0	86.1	86.1	1	4520.3	3.25	0	84.1	0	1.52	0	0	11.81	0	0	0	0	0	0	-11.38	-11.38
Westbrook Inverter Transfor	W_INVTR1	369403	4906578	2	0	0	78.2	78.2	1	3791.86	3.25	0	82.58	0	-2.91	0	0	1.98	0	0	0	0	0	0	-3.4	-3.4
Westbrook Inverter Transfor	W_INVTR3	369514	4906164	2	0	0	77.3	77.3	1	3462.32	3.25	0	81.79	0	-2.83	0	0	1.85	0	0	0	0	0	0	-3.46	-3.46
Westbrook Inverter Transfor	W_INVTR4	369679	4906164	2	0	0	77.3	77.3	1	3540.18	3.25	0	81.98	0	-2.85	0	0	1.88	0	0	0	0	0	0	-3.66	-3.66
Westbrook Inverter Transfor	W_INVTR2	369368	4906388	2	0	0	77.3	77.3	1	3603.25	3.25	0	82.13	0	-2.87	0	0	1.9	0	0	0	0	0	0	-3.83	-3.83
Westbrook Inverter Transfor	W_INVTR7	369786	4906417	2	0	0	77.3	77.3	1	3813.28	3.25	0	82.63	0	-2.92	0	0	1.98	0	0	0	0	0	0	-4.35	-4.35

Westbrook Inverter Transfor	W_INVTR5	369725	4906574	2	0	0	77.3	77.3	1	3923.42	3.25	0	82.87	0	-2.95	0	0	2.03	0	0	0	0	0	0	-4.61	-4.61
Westbrook Inverter Transfor	W_INVTR6	369881	4906578	2	0	0	77.3	77.3	1	4000.14	3.25	0	83.04	0	-2.96	0	0	2.05	0	0	0	0	0	0	-4.79	-4.79
Inverter Transformer	MV1-14 T	365157	4905049	2	0	0	69.4	69.4	1	3413.92	3.25	0	81.67	0	2.63	0	0	6.22	0	0	0	0	0	0	-21.17	-21.17
Inverter Transformer	MV1-10 T	365010	4905564	2	0	0	69.4	69.4	1	3845.96	3.25	0	82.7	0	2.75	0	0	6.56	0	0	0	0	0	0	-22.66	-22.66
Inverter Transformer	MV1-13 T	364725	4905241	2	0	0	69.4	69.4	1	3878.6	3.25	0	82.77	0	2.75	0	0	6.59	0	0	0	0	0	0	-22.76	-22.76
Inverter Transformer	MV1-7 T	364919	4905782	2	0	0	69.4	69.4	1	4057.73	3.25	0	83.17	0	2.8	0	0	6.72	0	0	0	0	0	0	-23.33	-23.33
Inverter Transformer	MV2-1 T	365836	4906816	2	0	0	69.4	69.4	1	4291.71	3.25	0	83.65	0	2.86	0	0	6.89	0	0	0	0	0	0	-24.05	-24.05
Inverter Transformer	MV6-4 T	370244	4906966	2	0	0	69.4	69.4	1	4517.24	3.25	0	84.1	0	2.91	0	0	7.05	0	0	0	0	0	0	-24.71	-24.71
Inverter Transformer	MV6-1 T	370230	4907364	2	0	0	69.4	69.4	1	4857.43	3.25	0	84.73	0	2.98	0	0	7.29	0	0	0	0	0	0	-25.65	-25.65
Inverter Transformer	MV1-15 T	365309	4904994	2	0	0	56.1	56.1	1	3258.34	3.25	0	81.26	0	0.94	0	0	9.3	0	0	0	0	0	0	-35.44	-35.44
Inverter Transformer	MV1-12 T	365044	4905386	2	0	0	56.1	56.1	1	3706.7	3.25	0	82.38	0	1.13	0	0	10.01	0	0	0	0	0	0	-37.46	-37.46
Inverter Transformer	MV1-11 T	364649	4905414	2	0	0	56.1	56.1	1	4039.43	3.25	0	83.13	0	1.26	0	0	10.51	0	0	0	0	0	0	-38.84	-38.84
Inverter Transformer	MV1-8 T	364782	4905647	2	0	0	56.1	56.1	1	4074.44	3.25	0	83.2	0	1.27	0	0	10.57	0	0	0	0	0	0	-38.98	-38.98
Inverter Transformer	MV2-2 T	365982	4906654	2	0	0	56.1	56.1	1	4079.16	3.25	0	83.21	0	1.28	0	0	10.57	0	0	0	0	0	0	-39	-39
Inverter Transformer	MV3-22 T	368661	4907142	2	0	0	56.1	56.1	1	4126.79	3.25	0	83.31	0	1.29	0	0	10.64	0	0	0	0	0	0	-39.19	-39.19
Inverter Transformer	MV2-3 T	365814	4906641	2	0	0	56.1	56.1	1	4151.42	3.25	0	83.36	0	1.3	0	0	10.68	0	0	0	0	0	0	-39.29	-39.29
Inverter Transformer	MV3-21 T	368484	4907206	2	0	0	56.1	56.1	1	4163.22	3.25	0	83.39	0	1.31	0	0	10.7	0	0	0	0	0	0	-39.33	-39.33
Inverter Transformer	MV1-4 T	364821	4905918	2	0	0	56.1	56.1	1	4221.59	3.25	0	83.51	0	1.33	0	0	10.78	0	0	0	0	0	0	-39.56	-39.56
Inverter Transformer	MV1-9 T	364555	4905646	2	0	0	56.1	56.1	1	4252.43	3.25	0	83.57	0	1.34	0	0	10.82	0	0	0	0	0	0	-39.68	-39.68
Inverter Transformer	MV2-4 T	365590	4906628	2	0	0	56.1	56.1	1	4259.86	3.25	0	83.59	0	1.35	0	0	10.83	0	0	0	0	0	0	-39.71	-39.71
Inverter Transformer	MV3-19 T	368352	4907347	2	0	0	56.1	56.1	1	4288.51	3.25	0	83.65	0	1.36	0	0	10.88	0	0	0	0	0	0	-39.82	-39.82
Inverter Transformer	MV3-20 T	368683	4907317	2	0	0	56.1	56.1	1	4302.96	3.25	0	83.68	0	1.36	0	0	10.9	0	0	0	0	0	0	-39.88	-39.88
Inverter Transformer	MV1-5 T	364676	4905892	2	0	0	56.1	56.1	1	4312.96	3.25	0	83.7	0	1.37	0	0	10.91	0	0	0	0	0	0	-39.92	-39.92
Inverter Transformer	MV3-18 T	367757	4907412	2	0	0	56.1	56.1	1	4338.15	3.25	0	83.75	0	1.38	0	0	10.95	0	0	0	0	0	0	-40.01	-40.01
Inverter Transformer	MV1-2 T	364759	4906063	2	0	0	56.1	56.1	1	4365.5	3.25	0	83.8	0	1.39	0	0	10.99	0	0	0	0	0	0	-40.12	-40.12
Inverter Transformer	MV3-17 T	368183	4907472	2	0	0	56.1	56.1	1	4400.57	3.25	0	83.87	0	1.4	0	0	11.04	0	0	0	0	0	0	-40.25	-40.25
Inverter Transformer	MV3-15 T	368351	4907477	2	0	0	56.1	56.1	1	4417.85	3.25	0	83.9	0	1.41	0	0	11.06	0	0	0	0	0	0	-40.31	-40.31
Inverter Transformer	MV1-6 T	364482	4905835	2	0	0	56.1	56.1	1	4426.04	3.25	0	83.92	0	1.41	0	0	11.07	0	0	0	0	0	0	-40.34	-40.34
Inverter Transformer	MV3-16 T	368509	4907475	2	0	0	56.1	56.1	1	4433.2	3.25	0	83.93	0	1.41	0	0	11.08	0	0	0	0	0	0	-40.37	-40.37
Inverter Transformer	MV1-1 T	364721	4906166	2	0	0	56.1	56.1	1	4463.93	3.25	0	83.99	0	1.43	0	0	11.12	0	0	0	0	0	0	-40.49	-40.49
Inverter Transformer	MV3-14 T	368678	4907498	2	0	0	56.1	56.1	1	4480.56	3.25	0	84.03	0	1.43	0	0	11.15	0	0	0	0	0	0	-40.55	-40.55
Inverter Transformer	MV3-13 T	367958	4907577	2	0	0	56.1	56.1	1	4499.12	3.25	0	84.06	0	1.44	0	0	11.17	0	0	0	0	0	0	-40.62	-40.62
Inverter Transformer	MV3-12 T	367674	4907594	2	0	0	56.1	56.1	1	4524.19	3.25	0	84.11	0	1.45	0	0	11.21	0	0	0	0	0	0	-40.71	-40.71
Inverter Transformer	MV1-3 T	364435	4906039	2	0	0	56.1	56.1	1	4591.73	3.25	0	84.24	0	1.47	0	0	11.3	0	0	0	0	0	0	-40.96	-40.96
Inverter Transformer	MV3-10 T	368162	4907669	2	0	0	56.1	56.1	1	4596.25	3.25	0	84.25	0	1.48	0	0	11.31	0	0	0	0	0	0	-40.98	-40.98
Inverter Transformer	MV3-11 T	368340	4907662	2	0	0	56.1	56.1	1	4601.14	3.25	0	84.26	0	1.48	0	0	11.32	0	0	0	0	0	0	-40.99	-40.99
Inverter Transformer	MV6-3 T	370202	4907140	2	0	0	56.1	56.1	1	4647.3	3.25	0	84.34	0	1.5	0	0	11.38	0	0	0	0	0	0	-41.16	-41.16
Inverter Transformer	MV3-9 T	368517	4907703	2	0	0	56.1	56.1	1	4660.41	3.25	0	84.37	0	1.5	0	0	11.4	0	0	0	0	0	0	-41.21	-41.21
Inverter Transformer	MV3-7 T	367951	4907754	2	0	0	56.1	56.1	1	4676.11	3.25	0	84.4	0	1.51	0	0	11.42	0	0	0	0	0	0	-41.26	-41.26
Inverter Transformer	MV3-8 T	368685	4907712	2	0	0	56.1	56.1	1	4692.91	3.25	0	84.43	0	1.51	0	0	11.44	0	0	0	0	0	0	-41.32	-41.32
Inverter Transformer	MV3-6 T	368156	4907834	2	0	0	56.1	56.1	1	4760.81	3.25	0	84.55	0	1.54	0	0	11.53	0	0	0	0	0	0	-41.57	-41.57
Inverter Transformer	MV6-2 T	370091	4907339	2	0	0	56.1	56.1	1	4771.25	3.25	0	84.57	0	1.54	0	0	11.55	0	0	0	0	0	0	-41.6	-41.6
Inverter Transformer	MV3-5 T	368335	4907843	2	0	0	56.1	56.1	1	4781.08	3.25	0	84.59	0	1.55	0	0	11.56	0	0	0	0	0	0	-41.64	-41.64
Inverter Transformer	MV3-3 T	367944	4907927	2	0	0	56.1	56.1	1	4849.1	3.25	0	84.71	0	1.57	0	0	11.65	0	0	0	0	0	0	-41.88	-41.88
Inverter Transformer	MV3-4 T	368507	4907925	2	0	0	56.1	56.1	1	4879.64	3.25	0	84.77	0	1.58	0	0	11.69	0	0	0	0	0	0	-41.99	-41.99
Inverter Transformer	MV3-1 T	368150	4907976	2	0	0	56.1	56.1	1	4902.41	3.25	0	84.81	0	1.59	0	0	11.72	0	0	0	0	0	0	-42.06	-42.06
Inverter Transformer	MV3-2 T	368677	4907928	2	0	0	56.1	56.1	1	4905.12	3.25	0	84.81	0	1.59	0	0	11.73	0	0	0	0	0	0	-42.07	-42.07
Inverter Transformer	MV4-15 T	369170	4908481	2	0	0	56.1	56.1	1	5540.36	3.25	0	85.87	0	1.81	0	0	12.55	0	0	0	0	0	0	-44.17	-44.17
Inverter Transformer	MV4-14 T	369182	4908507	2	0	0	56.1	56.1	1	5568.37	3.25	0	85.91	0	1.82	0	0	12.58	0	0	0	0	0	0	-44.26	-44.26
Inverter Transformer	MV4-13 T	369057	4908605	2	0	0	56.1	56.1	1	5637.97	3.25	0	86.02	0	1.85	0	0	12.67	0	0	0	0	0	0	-44.48	-44.48
Inverter Transformer	MV5-6 T	369987	4908507	2	0	0	56.1	56.1	1	5800.63	3.25	0	86.27	0	1.9	0	0	12.86	0	0	0	0	0	0	-44.98	-44.98
Inverter Transformer	MV4-12 T	369049	4908803	2	0	0	56.1	56.1	1	5830.69	3.25	0	86.31	0	1.91	0	0	12.9	0	0	0	0	0	0	-45.07	-45.07
Inverter Transformer	MV4-11 T	369269	4908855	2	0	0	56.1	56.1	1	5927.01	3.25	0	86.46	0	1.94	0	0	13.02	0	0	0	0	0	0	-45.36	-45.36
Inverter Transformer	MV4-10 T	369307	4908858	2	0	0	56.1	56.1	1	5938.54	3.25	0	86.47	0	1.95	0	0	13.03	0	0	0	0	0	0	-45.39	-45.39
Inverter Transformer	MV5-5 T	370021	4908690	2	0	0	56.1	56.1	1	5983.97	3.25	0	86.54	0	1.96	0	0	13.08	0	0	0	0	0	0	-45.52	-45.52
Inverter Transformer	MV4-7 T	369040	4909001	2	0	0	56.1	56.1	1	6023.58	3.25	0	86.6	0	1.97	0	0	13.13	0	0	0	0	0	0	-45.64	-45.64
Inverter Transformer	MV4-8 T	369262	4909001	2	0	0	56.1	56.1	1	6067.88	3.25	0	86.66	0	1.99	0	0	13.18	0	0	0	0	0	0	-45.77	-45.77
Inverter Transformer	MV4-9 T	369284	4909001	2	0	0	56.1	56.1	1	6072.7	3.25	0	86.67	0	1.99	0	0	13.19	0	0	0	0	0	0	-45.79	-45.79
Inverter Transformer	MV5-4 T	370330	4908707	2	0	0	56.1	56.1	1	6113.74	3.25	0	86.73	0	2	0	0	13.24	0	0	0	0	0	0	-45.9	-45.9
Inverter Transformer	MV5-2 T	370011	4908853	2	0	0	56.1	56.1	1	6133.73	3.25	0	86.75	0	2.01	0	0	13.26	0	0	0	0	0	0	-45.96	-45.96
Inverter Transformer	MV5-3 T	370237	4908851	2	0	0	56.1	56.1	1	6211.66	3.25	0	86.86	0	2.03	0	0	13.35	0	0	0	0	0	0	-46.19	-46.19
Inverter Transformer	MV4-4 T	369033	4909199	2	0	0	56.1	56.1	1	6217.15	3.25	0	86.87	0	2.03	0	0	13.36	0	0	0	0	0	0	-46.2	-46.2
Inverter Transformer	MV4-6 T	369249	4909192	2	0	0	56.1	56.1	1	6251.74	3.25	0	86.92	0	2.04	0	0	13.4	0	0	0	0	0	0	-46.3	-46.3
Inverter Transformer	MV4-5 T	369283	4909199	2	0	0	56.1	56.1	1	6265.76	3.25	0	86.94	0	2.05	0	0	13.41	0	0	0	0	0	0	-46.34	-46.34
Inverter Transformer	MV5-1 T	370015	4909142	2	0	0	56.1	56.1	1	6407.86	3.25	0	87.13	0	2.09	0	0	13.58	0	0	0	0	0	0	-46.74	-46.74
Inverter Transformer	MV4-1 T	369017	4909397	2	0	0	56.1	56.1	1	6409.49	3.25	0	87.14	0	2.09	0	0	13.58	0	0	0	0	0	0	-46.75	-46.75
Inverter Transformer	MV4-3 T	369234	4909397	2	0	0	56.1	56.1	1	6449.35	3.25	0	87.19	0	2.1	0	0	13.62	0	0	0	0	0	0	-46.86	-46.86
Inverter Transformer	MV4-2 T	369267	4909397	2	0	0	56.1	56.1	1	6456.03	3.25	0	87.2	0	2.1	0	0	13.63	0	0	0	0	0	0	-46.88	-46.88
Line Reactor	NGR	369421	4908787.5	5	0	0	45.4	45.4	1	5897.45	5.25	0	86.41	0	3.24	1.36	0.11	2.41	0	0	0	0	0	0	-48.07	-48.07
Limit. Valu 0	0																									
Level D/N: 22.5037	22.5037																									

Receiver: Existing Noise Receptor
ID: G-62

X: 365879.2
Y: 4902086.4
Z: 4.5
Ground: 0

ISO	Description	ID	X	Y	Z	Ground	ReflOrd	LxT	LxN	L/A	Dist.	hm	Freq	Adiv	K0b	Agr	Abar	z	Aatm	Afol	Ahous	Cmet	CmetN	Dc	RL	LtotT	LtotN
	Sol_Luce Substation	S_Substation	369426	4908792	3.5	0	0	112.1	112.1	1	7585.83	5.25	0	88.6	0	1.49	2.34	0.31	11.29	0	0	0	0	0	0	8.36	8.36
	Inverter	MV1-15	365315	4904994	2	0	0	100.3	100.3	1	2961.83	3.25	0	80.43	0	0.35	0	0	15.3	0	0	0	0	0	0	4.22	4.22
	Inverter	MV1-12	365038	4905386	2	0	0	100.3	100.3	1	3405.14	3.25	0	81.64	0	0.44	0	0	16.07	0	0	0	0	0	0	2.16	2.16
	Inverter	MV1-11	364655	4905414	2	0	0	100.3	100.3	1	3545.64	3.25	0	81.99	0	0.46	0	0	16.31	0	0	0	0	0	0	1.55	1.55
	Inverter	MV1-8	364788	4905647	2	0	0	100.3	100.3	1	3724.06	3.25	0	82.42	0	0.49	0	0	16.6	0	0	0	0	0	0	0.8	0.8
	Inverter	MV1-9	364561	4905646	2	0	0	100.3	100.3	1	3795.84	3.25	0	82.59	0	0.5	0	0	16.72	0	0	0	0	0	0	0.51	0.51
	Inverter	MV1-4	364815	4905918	2	0	0	100.3	100.3	1	3976.64	3.25	0	82.99	0	0.52	0	0	17.01	0	0	0	0	0	0	-0.21	-0.21
	Inverter	MV1-5	364671	4905892	2	0	0	100.3	100.3	1	3992.79	3.25	0	83.03	0	0.53	0	0	17.04	0	0	0	0	0	0	-0.28	-0.28
	Inverter	MV1-6	364477	4905835	2	0	0	100.3	100.3	1	4002.27	3.25	0	83.05	0	0.53	0	0	17.05	0	0	0	0	0	0	-0.31	-0.31
	Inverter	MV1-2	364753	4906063	2	0	0	100.3	100.3	1	4133	3.25	0	83.33	0	0.55	0	0	17.26	0	0	0	0	0	0	-0.82	-0.82
	Inverter	MV1-1	364715	4906166	2	0	0	100.3	100.3	1	4242.46	3.25	0	83.55	0	0.56	0	0	17.43	0	0	0	0	0	0	-1.23	-1.23
	Inverter	MV1-14	365163	4905049	2	0	0	97.3	97.3	1	3047.94	3.25	0	80.68	0	0.37	0	0	15.46	0	0	0	0	0	0	0.8	0.8
	Gardiner Substation	G_Sub	366586.3	4903349.9	2.5	0	0	90.8	90.8	1	1447.9	3.5	0	74.21	0	-0.29	0	0	3.39	0	0	0	0	0	0	13.46	13.46
	Inverter	MV2-4	365586	4906624	2	0	0	100.3	100.3	1	4547.06	3.25	0	84.15	0	0.6	0	0	17.9	0	0	0	0	0	0	-2.34	-2.34
	Inverters	G_Inv9	366750.9	4902691.8	2	0	0	87.7	87.7	1	1061.31	3.25	0	71.52	0	2.46	0	0	1.5	0	0	0	0	0	0	12.18	12.18
	Inverter	MV2-3	365820	4906641	2	0	0	100.3	100.3	1	4554.99	3.25	0	84.17	0	0.6	0	0	17.91	0	0	0	0	0	0	-2.37	-2.37
	Inverters	G_Inv7	366694.6	4902824.7	2	0	0	87.7	87.7	1	1099.99	3.25	0	71.83	0	2.46	0	0	1.55	0	0	0	0	0	0	11.82	11.82
	Inverter	MV1-13	364731	4905241	2	0	0	97.3	97.3	1	3357.06	3.25	0	81.52	0	0.43	0	0	15.99	0	0	0	0	0	0	-0.62	-0.62
	Inverters	G_Inv5	366638.5	4902958.1	2	0	0	87.7	87.7	1	1156.03	3.25	0	72.26	0	2.47	0	0	1.62	0	0	0	0	0	0	11.31	11.31
	Inverter	MV1-10	365004	4905564	2	0	0	97.3	97.3	1	3586.04	3.25	0	82.09	0	0.46	0	0	16.37	0	0	0	0	0	0	-1.62	-1.62
	Inverters	G_Inv10	366900.7	4902704.8	2	0	0	87.7	87.7	1	1194.11	3.25	0	72.54	0	2.48	0	0	1.67	0	0	0	0	0	0	10.97	10.97
	Inverters	G_Inv8	366844.5	4902838.5	2	0	0	87.7	87.7	1	1223.71	3.25	0	72.75	0	2.48	0	0	1.71	0	0	0	0	0	0	10.72	10.72
	Inverters	G_Inv3	366583.7	4903091.4	2	0	0	87.7	87.7	1	1227.34	3.25	0	72.78	0	2.48	0	0	1.71	0	0	0	0	0	0	10.69	10.69
	Inverter	MV1-7	364925	4905782	2	0	0	97.3	97.3	1	3816.8	3.25	0	82.63	0	0.5	0	0	16.75	0	0	0	0	0	0	-2.58	-2.58
	Inverters	G_Inv6	366788.5	4902972	2	0	0	87.7	87.7	1	1269.3	3.25	0	73.07	0	2.49	0	0	1.76	0	0	0	0	0	0	10.34	10.34
	Inverters	G_Inv1	366526.4	4903225.8	2	0	0	87.7	87.7	1	1310.38	3.25	0	73.35	0	2.49	0	0	1.81	0	0	0	0	0	0	10.01	10.01
	Inverter	MV3-18	367752	4907412	2	0	0	100.3	100.3	1	5645.3	3.25	0	86.03	0	0.69	0	0	19.5	0	0	0	0	0	0	-5.92	-5.92
	Inverters	G_Inv4	366732.8	4903105	2	0	0	87.7	87.7	1	1328.98	3.25	0	73.47	0	2.5	0	0	1.84	0	0	0	0	0	0	9.86	9.86
	Inverter	MV3-21	368478	4907206	2	0	0	100.3	100.3	1	5741.43	3.25	0	86.18	0	0.69	0	0	19.64	0	0	0	0	0	0	-6.2	-6.2
	Inverter	MV3-12	367668	4907594	2	0	0	100.3	100.3	1	5790.81	3.25	0	86.25	0	0.7	0	0	19.71	0	0	0	0	0	0	-6.35	-6.35
	Inverter	MV3-19	368357	4907347	2	0	0	100.3	100.3	1	5814.93	3.25	0	86.29	0	0.7	0	0	19.74	0	0	0	0	0	0	-6.42	-6.42
	Inverter	MV3-17	368178	4907472	2	0	0	100.3	100.3	1	5855.7	3.25	0	86.35	0	0.7	0	0	19.8	0	0	0	0	0	0	-6.53	-6.53
	Inverter	MV3-13	367963	4907577	2	0	0	100.3	100.3	1	5872.73	3.25	0	86.38	0	0.7	0	0	19.82	0	0	0	0	0	0	-6.58	-6.58
	Inverter	MV3-15	368357	4907477	2	0	0	100.3	100.3	1	5932.8	3.25	0	86.47	0	0.7	0	0	19.9	0	0	0	0	0	0	-6.76	-6.76
	Inverter	MV3-20	368689	4907317	2	0	0	100.3	100.3	1	5937.52	3.25	0	86.47	0	0.7	0	0	19.91	0	0	0	0	0	0	-6.77	-6.77
	Inverter	MV3-16	368514	4907475	2	0	0	100.3	100.3	1	5998.27	3.25	0	86.56	0	0.7	0	0	19.99	0	0	0	0	0	0	-6.94	-6.94
	Inverters	G_Inv2	366676.9	4903239.1	2	0	0	87.7	87.7	1	1401.8	3.25	0	73.93	0	2.51	0	0	1.92	0	0	0	0	0	0	9.3	9.3
	Inverter	MV3-7	367945	4907754	2	0	0	100.3	100.3	1	6032.35	3.25	0	86.61	0	0.71	0	0	20.04	0	0	0	0	0	0	-7.04	-7.04
	Inverter	MV3-10	368167	4907669	2	0	0	100.3	100.3	1	6033.2	3.25	0	86.61	0	0.71	0	0	20.04	0	0	0	0	0	0	-7.04	-7.04
	Inverter	MV3-14	368684	4907498	2	0	0	100.3	100.3	1	6095.27	3.25	0	86.7	0	0.71	0	0	20.12	0	0	0	0	0	0	-7.22	-7.22
	Inverter	MV3-11	368346	4907662	2	0	0	100.3	100.3	1	6096.92	3.25	0	86.7	0	0.71	0	0	20.12	0	0	0	0	0	0	-7.22	-7.22
	Inverter	MV3-6	368162	4907834	2	0	0	100.3	100.3	1	6184.34	3.25	0	86.83	0	0.71	0	0	20.24	0	0	0	0	0	0	-7.47	-7.47
	Inverter	MV3-3	367939	4907927	2	0	0	100.3	100.3	1	6193.17	3.25	0	86.84	0	0.71	0	0	20.25	0	0	0	0	0	0	-7.49	-7.49
	Inverter	MV3-9	368512	4907703	2	0	0	100.3	100.3	1	6203.05	3.25	0	86.85	0	0.71	0	0	20.27	0	0	0	0	0	0	-7.52	-7.52
	Inverter	MV3-8	368680	4907712	2	0	0	100.3	100.3	1	6284.26	3.25	0	86.97	0	0.71	0	0	20.37	0	0	0	0	0	0	-7.74	-7.74
	Inverter	MV6-3	370207	4907140	2	0	0	100.3	100.3	1	6653.48	3.25	0	87.46	0	0.71	0	0	20.86	0	0	0	0	0	0	-8.72	-8.72
	Inverter	MV2-1	365842	4906816	2	0	0	97.3	97.3	1	4729.75	3.25	0	84.5	0	0.62	0	0	18.18	0	0	0	0	0	0	-5.98	-5.98
	Inverter	MV6-2	370085	4907339	2	0	0	100.3	100.3	1	6728.94	3.25	0	87.56	0	0.71	0	0	20.96	0	0	0	0	0	0	-8.92	-8.92
	Inverter	MV4-11	369264	4908855	2	0	0	100.3	100.3	1	7567.75	3.25	0	88.58	0	0.69	0	0	22	0	0	0	0	0	0	-10.95	-10.95
	Inverter	MV4-10	369312	4908858	2	0	0	100.3	100.3	1	7592.01	3.25	0	88.61	0	0.68	0	0	22.03	0	0	0	0	0	0	-11	-11
	Inverter	MV4-7	369035	4909001	2	0	0	100.3	100.3	1	7600.71	3.25	0	88.62	0	0.68	0	0	22.04	0	0	0	0	0	0	-11.02	-11.02
	Inverter	MV4-8	369256	4909001	2	0	0	100.3	100.3	1	7695.09	3.25	0	88.72	0	0.68	0	0	22.15	0	0	0	0	0	0	-11.24	-11.24
	Inverter	MV4-9	369289	4909001	2	0	0	100.3	100.3	1	7709.63	3.25	0	88.74	0	0.68	0	0	22.17	0	0	0	0	0	0	-11.27	-11.27
	Inverter	MV4-4	369027	4909199	2	0	0	100.3	100.3	1	7778.03	3.25	0	88.82	0	0.67	0	0	22.25	0	0	0	0	0	0	-11.42	-11.42
	Inverter	MV5-5	370015	4908690	2	0	0	100.3	100.3	1	7791.81	3.25	0	88.83	0	0.67	0	0	22.26	0	0	0	0	0	0	-11.45	-11.45
	Inverter	MV4-6	369243	4909192	2	0	0	100.3	100.3	1	7861.6	3.25	0	88.91	0	0.66	0	0	22.34	0	0	0	0	0	0	-11.61	-11.61
	Inverter	MV4-5	369289	4909199	2	0	0	100.3	100.3	1	7887.7	3.25	0	88.94	0	0.66	0	0	22.37	0	0	0	0	0	0	-11.66	-11.66
	Inverter	MV5-2	370006	4908853	2	0	0	100.3	100.3	1	7925.74	3.25	0	88.98	0	0.66	0	0	22.42	0	0	0	0	0	0	-11.75	-11.75
	Inverter	MV4-1	369011	4909397	2	0	0	100.3	100.3	1	7953.18	3.25	0	89.01	0	0.66	0	0	22.45	0	0	0	0	0	0	-11.81	-11.81
	Inverter	MV5-4	370324	4908707	2	0	0	100.3	100.3	1	7974.25	3.25	0	89.03	0	0.66	0	0	22.48	0	0	0	0	0	0	-11.85	-11.85
	Inverter	MV4-3	369229	4909397	2	0	0	100.3	100.3	1	8041.52	3.25	0	89.11	0	0.65	0	0	22.55	0	0	0	0	0	0	-12	-12
	Inverter	MV5-3	370231	4908851	2	0	0	100.3	100.3	1	8043.51	3.25	0	89.11	0	0.65	0	0	22.56	0	0	0	0	0	0	-12	-12
	Inverter	MV4-2	369272	4909397	2	0	0	100.3	100.3	1	8059.53	3.25	0	89.13	0	0.65	0	0	22.57	0	0	0	0	0	0	-12.04	-12.04
	Inverter	MV5-1	370020	4909142	2	0	0	100.3	100.3	1	8180.94	3.25	0	89.26	0	0.64	0	0	22.71	0	0	0	0	0	0	-12.29	-12.29
	Inverter	MV6-1	370235	4907364	2	0	0	97.3	97.3	1	6842.96	3.25	0	87.7	0	0.71	0	0	21.1	0	0	0	0	0	0	-12.21	-12.21
	DSTATCOM - 10 MVAR #2	DSAT2	369403	4908757	2.5	0	0	96.6	96.6	1	7544.14	3.5	0	88.55	0	3.86	0	0	4.56	0	0	0	0	0	0	-0.35	-0.35
	DSTATCOM - 10 MVAR #1	DSAT1	369437	4908757	2.5	0	0	96.6	96.6	1	7560.08	3.5	0	88.57	0	3.86	0	0	4.57	0	0	0	0	0	0	-0.37	-0.37
	SubstationTransformer	W_ST	369711.17	4906112.3	2.5	0	0	92	92	1	5558.02	3.5	0	85.9	0	0.68	0	-0.1	9.26	0	0	0	0	0	0	-3.86	-3.86

Inverter	MV1-3	364440	4906039	2	0	0	89.1	89.1	1	4206.47	3.25	0	83.48	0	1.44	0	0	11.38	0	0	0	0	0	0	-7.24	-7.24
Inverter	MV2-2	365977	4906654	2	0	0	89.1	89.1	1	4568.65	3.25	0	84.2	0	1.53	0	0	11.88	0	0	0	0	0	0	-8.55	-8.55
Westbrook Inverter Enclosur	W_INV3	369508	4906164	2	0	0	89.1	89.1	1	5458.48	3.25	0	85.74	0	1.75	0	0	13.07	0	0	0	0	0	0	-11.51	-11.51
Westbrook Inverter Enclosur	W_INV2	369374	4906388	2	0	0	89.1	89.1	1	5542.33	3.25	0	85.87	0	1.77	0	0	13.18	0	0	0	0	0	0	-11.77	-11.77
Westbrook Inverter Enclosur	W_INV4	369673	4906164	2	0	0	89.1	89.1	1	5569.54	3.25	0	85.92	0	1.78	0	0	13.21	0	0	0	0	0	0	-11.85	-11.85
Inverter	MV3-22	368656	4907142	2	0	0	89.1	89.1	1	5767.99	3.25	0	86.22	0	1.83	0	0	13.47	0	0	0	0	0	0	-12.46	-12.46
Westbrook Inverter Enclosur	W_INV7	369780	4906417	2	0	0	89.1	89.1	1	5828.41	3.25	0	86.31	0	1.84	0	0	13.54	0	0	0	0	0	0	-12.64	-12.64
Westbrook Inverter Enclosur	W_INV5	369719	4906574	2	0	0	89.1	89.1	1	5906.15	3.25	0	86.43	0	1.86	0	0	13.64	0	0	0	0	0	0	-12.87	-12.87
Westbrook Inverter Enclosur	W_INV6	369875	4906578	2	0	0	89.1	89.1	1	6011.73	3.25	0	86.58	0	1.89	0	0	13.78	0	0	0	0	0	0	-13.19	-13.19
Inverter	MV3-5	368340	4907843	2	0	0	89.1	89.1	1	6260.51	3.25	0	86.93	0	1.95	0	0	14.09	0	0	0	0	0	0	-13.91	-13.91
Inverter	MV3-1	368156	4907976	2	0	0	89.1	89.1	1	6314.37	3.25	0	87.01	0	1.96	0	0	14.15	0	0	0	0	0	0	-14.07	-14.07
Inverter	MV3-4	368502	4907925	2	0	0	89.1	89.1	1	6400.65	3.25	0	87.12	0	1.98	0	0	14.26	0	0	0	0	0	0	-14.31	-14.31
Inverter	MV3-2	368671	4907928	2	0	0	89.1	89.1	1	6474.45	3.25	0	87.22	0	2	0	0	14.35	0	0	0	0	0	0	-14.52	-14.52
Fixed Reactor Bank 1	FRB1	369378	4908755	6	0	0	89.8	89.8	1	7530.73	5.25	0	88.54	0	-0.22	0	0	11.24	0	0	0	0	0	0	-9.78	-9.78
Fixed Reactor Bank 2	FRB2	369464	4908755	6	0	0	89.8	89.8	1	7571.06	5.25	0	88.58	0	-0.22	0	0	11.28	0	0	0	0	0	0	-9.87	-9.87
Inverter	MV4-15	369176	4908481	2	0	0	89.1	89.1	1	7194.43	3.25	0	88.14	0	2.17	0	0	15.22	0	0	0	0	0	0	-16.47	-16.47
Inverter	MV4-14	369176	4908507	2	0	0	89.1	89.1	1	7217.55	3.25	0	88.17	0	2.18	0	0	15.24	0	0	0	0	0	0	-16.53	-16.53
Inverter	MV4-13	369051	4908605	2	0	0	89.1	89.1	1	7249.31	3.25	0	88.21	0	2.19	0	0	15.28	0	0	0	0	0	0	-16.62	-16.62
Inverter	MV4-12	369043	4908803	2	0	0	89.1	89.1	1	7424.44	3.25	0	88.41	0	2.23	0	0	15.48	0	0	0	0	0	0	-17.07	-17.07
Inverter	MV5-6	369982	4908507	2	0	0	89.1	89.1	1	7619.52	3.25	0	88.64	0	2.27	0	0	15.71	0	0	0	0	0	0	-17.56	-17.56
Westbrook Inverter Enclosur	W_INV1	369409	4906578	2	0	0	86.1	86.1	1	5712.61	3.25	0	86.14	0	1.82	0	0	13.4	0	0	0	0	0	0	-15.29	-15.29
Inverter	MV6-4	370250	4906966	2	0	0	86.1	86.1	1	6550.91	3.25	0	87.33	0	2.02	0	0	14.45	0	0	0	0	0	0	-17.73	-17.73
Westbrook Inverter Transfor	W_INVTR1	369403	4906578	2	0	0	78.2	78.2	1	5708.91	3.25	0	86.13	0	-3.31	0	0	2.65	0	0	0	0	0	0	-7.22	-7.22
Westbrook Inverter Transfor	W_INVTR3	369514	4906164	2	0	0	77.3	77.3	1	5462.47	3.25	0	85.75	0	-3.27	0	0	2.57	0	0	0	0	0	0	-7.71	-7.71
Westbrook Inverter Transfor	W_INVTR2	369368	4906388	2	0	0	77.3	77.3	1	5538.55	3.25	0	85.87	0	-3.28	0	0	2.59	0	0	0	0	0	0	-7.84	-7.84
Westbrook Inverter Transfor	W_INVTR4	369679	4906164	2	0	0	77.3	77.3	1	5573.63	3.25	0	85.92	0	-3.29	0	0	2.6	0	0	0	0	0	0	-7.9	-7.9
Westbrook Inverter Transfor	W_INVTR7	369786	4906417	2	0	0	77.3	77.3	1	5832.43	3.25	0	86.32	0	-3.34	0	0	2.69	0	0	0	0	0	0	-8.33	-8.33
Westbrook Inverter Transfor	W_INVTR5	369725	4906574	2	0	0	77.3	77.3	1	5910.05	3.25	0	86.43	0	-3.35	0	0	2.71	0	0	0	0	0	0	-8.45	-8.45
Westbrook Inverter Transfor	W_INVTR6	369881	4906578	2	0	0	77.3	77.3	1	6015.72	3.25	0	86.59	0	-3.37	0	0	2.75	0	0	0	0	0	0	-8.62	-8.62
Inverter Transformer	MV1-14 T	365157	4905049	2	0	0	69.4	69.4	1	3049.36	3.25	0	80.68	0	2.52	0	0	5.92	0	0	0	0	0	0	-19.78	-19.78
Inverter Transformer	MV1-13 T	364725	4905241	2	0	0	69.4	69.4	1	3359.12	3.25	0	81.52	0	2.61	0	0	6.18	0	0	0	0	0	0	-20.97	-20.97
Inverter Transformer	MV1-10 T	365010	4905564	2	0	0	69.4	69.4	1	3584.58	3.25	0	82.09	0	2.68	0	0	6.36	0	0	0	0	0	0	-21.77	-21.77
Inverter Transformer	MV1-7 T	364919	4905782	2	0	0	69.4	69.4	1	3818.3	3.25	0	82.64	0	2.74	0	0	6.54	0	0	0	0	0	0	-22.57	-22.57
Inverter Transformer	MV2-1 T	365836	4906816	2	0	0	69.4	69.4	1	4729.8	3.25	0	84.5	0	2.96	0	0	7.2	0	0	0	0	0	0	-25.3	-25.3
Inverter Transformer	MV6-4 T	370244	4906966	2	0	0	69.4	69.4	1	6546.91	3.25	0	87.32	0	3.26	0	0	8.34	0	0	0	0	0	0	-29.58	-29.58
Inverter Transformer	MV6-1 T	370230	4907364	2	0	0	69.4	69.4	1	6839.78	3.25	0	87.7	0	3.3	0	0	8.51	0	0	0	0	0	0	-30.16	-30.16
Inverter Transformer	MV1-15 T	365309	4904994	2	0	0	56.1	56.1	1	2962.98	3.25	0	80.43	0	0.81	0	0	8.81	0	0	0	0	0	0	-34	-34
Inverter Transformer	MV1-12 T	365044	4905386	2	0	0	56.1	56.1	1	3403.66	3.25	0	81.64	0	1	0	0	9.53	0	0	0	0	0	0	-36.11	-36.11
Inverter Transformer	MV1-11 T	364649	4905414	2	0	0	56.1	56.1	1	3547.72	3.25	0	82	0	1.06	0	0	9.76	0	0	0	0	0	0	-36.76	-36.76
Inverter Transformer	MV1-8 T	364782	4905647	2	0	0	56.1	56.1	1	3725.82	3.25	0	82.42	0	1.13	0	0	10.04	0	0	0	0	0	0	-37.54	-37.54
Inverter Transformer	MV1-9 T	364555	4905646	2	0	0	56.1	56.1	1	3797.93	3.25	0	82.59	0	1.16	0	0	10.15	0	0	0	0	0	0	-37.85	-37.85
Inverter Transformer	MV1-4 T	364821	4905918	2	0	0	56.1	56.1	1	3975.04	3.25	0	82.99	0	1.23	0	0	10.42	0	0	0	0	0	0	-38.58	-38.58
Inverter Transformer	MV1-5 T	364676	4905892	2	0	0	56.1	56.1	1	3991.28	3.25	0	83.02	0	1.24	0	0	10.44	0	0	0	0	0	0	-38.65	-38.65
Inverter Transformer	MV1-6 T	364482	4905835	2	0	0	56.1	56.1	1	4000.52	3.25	0	83.04	0	1.24	0	0	10.46	0	0	0	0	0	0	-38.68	-38.68
Inverter Transformer	MV1-2 T	364759	4906063	2	0	0	56.1	56.1	1	4131.37	3.25	0	83.32	0	1.3	0	0	10.65	0	0	0	0	0	0	-39.21	-39.21
Inverter Transformer	MV1-3 T	364435	4906039	2	0	0	56.1	56.1	1	4208.18	3.25	0	83.48	0	1.33	0	0	10.76	0	0	0	0	0	0	-39.51	-39.51
Inverter Transformer	MV1-1 T	364721	4906166	2	0	0	56.1	56.1	1	4240.82	3.25	0	83.55	0	1.34	0	0	10.81	0	0	0	0	0	0	-39.64	-39.64
Inverter Transformer	MV2-4 T	365590	4906628	2	0	0	56.1	56.1	1	4550.8	3.25	0	84.16	0	1.46	0	0	11.25	0	0	0	0	0	0	-40.81	-40.81
Inverter Transformer	MV2-3 T	365814	4906641	2	0	0	56.1	56.1	1	4555.07	3.25	0	84.17	0	1.46	0	0	11.25	0	0	0	0	0	0	-40.82	-40.82
Inverter Transformer	MV2-2 T	365982	4906654	2	0	0	56.1	56.1	1	4568.76	3.25	0	84.2	0	1.47	0	0	11.27	0	0	0	0	0	0	-40.87	-40.87
Inverter Transformer	MV3-18 T	367757	4907412	2	0	0	56.1	56.1	1	5646.96	3.25	0	86.04	0	1.85	0	0	12.68	0	0	0	0	0	0	-44.51	-44.51
Inverter Transformer	MV3-21 T	368484	4907206	2	0	0	56.1	56.1	1	5744.15	3.25	0	86.18	0	1.88	0	0	12.8	0	0	0	0	0	0	-44.8	-44.8
Inverter Transformer	MV3-22 T	368661	4907142	2	0	0	56.1	56.1	1	5770.4	3.25	0	86.22	0	1.89	0	0	12.83	0	0	0	0	0	0	-44.88	-44.88
Inverter Transformer	MV3-12 T	367674	4907594	2	0	0	56.1	56.1	1	5792.67	3.25	0	86.26	0	1.9	0	0	12.85	0	0	0	0	0	0	-44.95	-44.95
Inverter Transformer	MV3-19 T	368352	4907347	2	0	0	56.1	56.1	1	5812.8	3.25	0	86.29	0	1.9	0	0	12.88	0	0	0	0	0	0	-45.01	-45.01
Inverter Transformer	MV3-17 T	368183	4907472	2	0	0	56.1	56.1	1	5857.66	3.25	0	86.35	0	1.92	0	0	12.93	0	0	0	0	0	0	-45.15	-45.15
Inverter Transformer	MV3-13 T	367958	4907577	2	0	0	56.1	56.1	1	5870.95	3.25	0	86.37	0	1.92	0	0	12.95	0	0	0	0	0	0	-45.19	-45.19
Inverter Transformer	MV3-15 T	368351	4907477	2	0	0	56.1	56.1	1	5930.29	3.25	0	86.46	0	1.94	0	0	13.02	0	0	0	0	0	0	-45.37	-45.37
Inverter Transformer	MV3-20 T	368683	4907317	2	0	0	56.1	56.1	1	5934.68	3.25	0	86.47	0	1.94	0	0	13.03	0	0	0	0	0	0	-45.38	-45.38
Inverter Transformer	MV3-16 T	368509	4907475	2	0	0	56.1	56.1	1	5996.07	3.25	0	86.56	0	1.96	0	0	13.1	0	0	0	0	0	0	-45.56	-45.56
Inverter Transformer	MV3-10 T	368162	4907669	2	0	0	56.1	56.1	1	6031.3	3.25	0	86.61	0	1.97	0	0	13.14	0	0	0	0	0	0	-45.66	-45.66
Inverter Transformer	MV3-7 T	367951	4907754	2	0	0	56.1	56.1	1	6034.41	3.25	0	86.61	0	1.98	0	0	13.14	0	0	0	0	0	0	-45.67	-45.67
Inverter Transformer	MV3-14 T	368678	4907498	2	0	0	56.1	56.1	1	6092.51	3.25	0	86.7	0	1.99	0	0	13.21	0	0	0	0	0	0	-45.84	-45.84
Inverter Transformer	MV3-11 T	368340	4907662	2	0	0	56.1	56.1	1	6094.49	3.25	0	86.7	0	1.99	0	0	13.21	0	0	0	0	0	0	-45.85	-45.85
Inverter Transformer	MV3-6 T	368156	4907834	2	0	0	56.1	56.1	1	6182.13	3.25	0	86.82	0	2.02	0	0	13.32	0	0	0	0	0	0	-46.1	-46.1
Inverter Transformer	MV3-3 T	367944	4907927	2	0	0	56.1	56.1	1	6194.84	3.25	0	86.84	0	2.03	0	0	13.33	0	0	0	0	0	0	-46.14	-46.14
Inverter Transformer	MV3-9 T	368517	4907703	2	0	0	56.1	56.1	1	6205.17	3.25	0	86.86	0	2.03	0	0	13.34	0	0	0	0	0	0	-46.17	-46.17
Inverter Transformer	MV3-5 T	368335	4907843	2	0	0	56.1	56.1	1	6258.55	3.25	0	86.93	0	2.05	0	0	13.4	0	0	0	0	0	0	-46.32	-46.32
Inverter Transformer	MV3-8 T	368685	4907712	2	0	0	56.1	56.1	1	6286.49	3.25	0	86.97	0	2.05	0	0	13.44	0	0	0	0	0	0	-46.4	-46.4
Inverter Transformer	MV3-1 T	368150	4907976	2	0	0	56.1	56.1	1	6312.2	3.25	0	87	0	2.06	0	0	13.47	0	0	0	0	0	0	-46.47	-46.47
Inverter Transformer	MV3-4 T	368507	4907925	2	0	0	56.1	56.1	1	6402.7	3.25	0	87.13	0	2.09	0	0	13.57	0	0	0	0	0	0	-46.73	-46.73
Inverter Transformer	MV3-2 T	368677	4907928	2	0	0	56.1	56.1	1	6477.03	3.25	0	87.23	0	2.11	0	0	13.65	0	0	0	0	0	0	-46.93	-46.93
Inverter Transformer	MV6-3 T	370202	4907140	2	0	0	56.1	56.1	1	6650.22	3.25	0	87.46	0	2.16	0	0	13.85	0	0	0	0	0	0	-47.41	-47.41
Inverter Transformer	MV6-2 T	370091	4907339	2	0	0	56.1	56.1	1	6732.69	3.25	0	87.56	0	2.19	0	0	13.94	0	0	0	0	0	0	-47.63	-47.63

	Inverter Transformer	MV4-15 T	369170	4908481	2	0	0	56.1	56.1	1	7191.68	3.25	0	88.14	0	2.31	0	0	14.43	0	0	0	0	0	0	-48.82	-48.82
	Inverter Transformer	MV4-14 T	369182	4908507	2	0	0	56.1	56.1	1	7220.29	3.25	0	88.17	0	2.32	0	0	14.46	0	0	0	0	0	0	-48.89	-48.89
	Inverter Transformer	MV4-13 T	369057	4908605	2	0	0	56.1	56.1	1	7251.94	3.25	0	88.21	0	2.33	0	0	14.5	0	0	0	0	0	0	-48.97	-48.97
	Inverter Transformer	MV4-12 T	369049	4908803	2	0	0	56.1	56.1	1	7427	3.25	0	88.42	0	2.37	0	0	14.68	0	0	0	0	0	0	-49.41	-49.41
	Inverter Transformer	MV4-11 T	369269	4908855	2	0	0	56.1	56.1	1	7569.99	3.25	0	88.58	0	2.41	0	0	14.83	0	0	0	0	0	0	-49.76	-49.76
	Inverter Transformer	MV4-10 T	369307	4908858	2	0	0	56.1	56.1	1	7589.76	3.25	0	88.6	0	2.41	0	0	14.85	0	0	0	0	0	0	-49.8	-49.8
	Inverter Transformer	MV4-7 T	369040	4909001	2	0	0	56.1	56.1	1	7602.79	3.25	0	88.62	0	2.42	0	0	14.86	0	0	0	0	0	0	-49.84	-49.84
	Inverter Transformer	MV5-6 T	369987	4908507	2	0	0	56.1	56.1	1	7622.21	3.25	0	88.64	0	2.42	0	0	14.88	0	0	0	0	0	0	-49.88	-49.88
	Inverter Transformer	MV4-8 T	369262	4909001	2	0	0	56.1	56.1	1	7697.73	3.25	0	88.73	0	2.44	0	0	14.96	0	0	0	0	0	0	-50.06	-50.06
	Inverter Transformer	MV4-9 T	369284	4909001	2	0	0	56.1	56.1	1	7707.42	3.25	0	88.74	0	2.44	0	0	14.97	0	0	0	0	0	0	-50.09	-50.09
	Inverter Transformer	MV4-4 T	369033	4909199	2	0	0	56.1	56.1	1	7780.46	3.25	0	88.82	0	2.46	0	0	15.04	0	0	0	0	0	0	-50.26	-50.26
	Inverter Transformer	MV5-5 T	370021	4908690	2	0	0	56.1	56.1	1	7795	3.25	0	88.84	0	2.46	0	0	15.05	0	0	0	0	0	0	-50.29	-50.29
	Inverter Transformer	MV4-6 T	369249	4909192	2	0	0	56.1	56.1	1	7864.17	3.25	0	88.91	0	2.48	0	0	15.12	0	0	0	0	0	0	-50.46	-50.46
	Inverter Transformer	MV4-5 T	369283	4909199	2	0	0	56.1	56.1	1	7885.11	3.25	0	88.94	0	2.48	0	0	15.14	0	0	0	0	0	0	-50.5	-50.5
	Inverter Transformer	MV5-2 T	370011	4908853	2	0	0	56.1	56.1	1	7928.34	3.25	0	88.98	0	2.49	0	0	15.19	0	0	0	0	0	0	-50.6	-50.6
	Inverter Transformer	MV4-1 T	369017	4909397	2	0	0	56.1	56.1	1	7955.54	3.25	0	89.01	0	2.5	0	0	15.21	0	0	0	0	0	0	-50.67	-50.67
	Inverter Transformer	MV5-4 T	370330	4908707	2	0	0	56.1	56.1	1	7977.59	3.25	0	89.04	0	2.5	0	0	15.23	0	0	0	0	0	0	-50.72	-50.72
	Inverter Transformer	MV4-3 T	369234	4909397	2	0	0	56.1	56.1	1	8043.6	3.25	0	89.11	0	2.52	0	0	15.3	0	0	0	0	0	0	-50.87	-50.87
	Inverter Transformer	MV5-3 T	370237	4908851	2	0	0	56.1	56.1	1	8046.75	3.25	0	89.11	0	2.52	0	0	15.3	0	0	0	0	0	0	-50.88	-50.88
	Inverter Transformer	MV4-2 T	369267	4909397	2	0	0	56.1	56.1	1	8057.42	3.25	0	89.12	0	2.52	0	0	15.31	0	0	0	0	0	0	-50.9	-50.9
	Inverter Transformer	MV5-1 T	370015	4909142	2	0	0	56.1	56.1	1	8178.41	3.25	0	89.25	0	2.55	0	0	15.43	0	0	0	0	0	0	-51.18	-51.18
	Line Reactor	NGR	369421	4908787.5	5	0	0	45.4	45.4	1	7579.52	5.25	0	88.59	0	3.21	1.37	0.1	3.1	0	0	0	0	0	0	-50.92	-50.92
Limit. Valu	0	0																								
Level D/N:	22.4566	22.4566																								

Receiver: Existing Noise Receptor
ID: G-63
X: 365489
Y: 4903250.2
Z: 4.5
Ground: 0

ISO	Description	ID	X	Y	Z	Ground	ReflOrd	LxT	LxN	L/A	Dist.	hm	Freq	Adiv	K0b	Agr	Abar	z	Aatm	Afol	Ahous	Cmet	CmetN	Dc	RL	LtotT	LtotN
	Inverter	MV1-15	365315	4904994	2	0	0	100.3	100.3	1	1752.46	3.25	0	75.87	0	0.05	0	0	12.92	0	0	0	0	0	0	11.46	11.46
	Sol_Luce Substation	S_Substation	369426	4908792	3.5	0	0	112.1	112.1	1	6797.91	5.25	0	87.65	0	1.34	2.48	0.29	10.55	0	0	0	0	0	0	10.05	10.05
	Inverter	MV1-12	365038	4905386	2	0	0	100.3	100.3	1	2182.9	3.25	0	77.78	0	0.18	0	0	13.84	0	0	0	0	0	0	8.51	8.51
	Inverter	MV1-11	364655	4905414	2	0	0	100.3	100.3	1	2318.96	3.25	0	78.31	0	0.21	0	0	14.11	0	0	0	0	0	0	7.68	7.68
	Inverter	MV1-8	364788	4905647	2	0	0	100.3	100.3	1	2497.21	3.25	0	78.95	0	0.26	0	0	14.45	0	0	0	0	0	0	6.65	6.65
	Inverter	MV1-9	364561	4905646	2	0	0	100.3	100.3	1	2569.25	3.25	0	79.2	0	0.27	0	0	14.59	0	0	0	0	0	0	6.25	6.25
	Inverter	MV1-14	365163	4905049	2	0	0	97.3	97.3	1	1828.1	3.25	0	76.24	0	0.08	0	0	13.09	0	0	0	0	0	0	7.9	7.9
	Inverter	MV1-4	364815	4905918	2	0	0	100.3	100.3	1	2751.62	3.25	0	79.79	0	0.31	0	0	14.93	0	0	0	0	0	0	5.28	5.28
	Inverter	MV1-5	364671	4905892	2	0	0	100.3	100.3	1	2765.54	3.25	0	79.84	0	0.32	0	0	14.95	0	0	0	0	0	0	5.21	5.21
	Inverter	MV1-6	364477	4905835	2	0	0	100.3	100.3	1	2775.85	3.25	0	79.87	0	0.32	0	0	14.97	0	0	0	0	0	0	5.16	5.16
	Inverter	MV1-2	364753	4906063	2	0	0	100.3	100.3	1	2907.5	3.25	0	80.27	0	0.34	0	0	15.21	0	0	0	0	0	0	4.49	4.49
	Inverter	MV1-13	364731	4905241	2	0	0	97.3	97.3	1	2130.22	3.25	0	77.57	0	0.17	0	0	13.73	0	0	0	0	0	0	5.85	5.85
	Inverter	MV1-1	364715	4906166	2	0	0	100.3	100.3	1	3016.78	3.25	0	80.59	0	0.37	0	0	15.4	0	0	0	0	0	0	3.95	3.95
	Gardiner Substation	G_Sub	366586.3	4903349.9	2.5	0	0	90.8	90.8	1	1101.82	3.5	0	71.84	0	-0.35	0	0	2.72	0	0	0	0	0	0	16.56	16.56
	Inverter	MV1-10	365004	4905564	2	0	0	97.3	97.3	1	2364.09	3.25	0	78.47	0	0.23	0	0	14.2	0	0	0	0	0	0	4.42	4.42
	Inverter	MV2-4	365586	4906624	2	0	0	100.3	100.3	1	3375.2	3.25	0	81.57	0	0.43	0	0	16.02	0	0	0	0	0	0	2.29	2.29
	Inverter	MV2-3	365820	4906641	2	0	0	100.3	100.3	1	3406.92	3.25	0	81.65	0	0.44	0	0	16.07	0	0	0	0	0	0	2.15	2.15
	Inverter	MV1-7	364925	4905782	2	0	0	97.3	97.3	1	2593.86	3.25	0	79.28	0	0.28	0	0	14.63	0	0	0	0	0	0	3.12	3.12
	Inverters	G_Inv1	366526.4	4903225.8	2	0	0	87.7	87.7	1	1037.69	3.25	0	71.32	0	2.45	0	0	1.47	0	0	0	0	0	0	12.41	12.41
	Inverter	MV3-18	367752	4907412	2	0	0	100.3	100.3	1	4737.27	3.25	0	84.51	0	0.62	0	0	18.19	0	0	0	0	0	0	-3.01	-3.01
	Inverters	G_Inv3	366583.7	4903091.4	2	0	0	87.7	87.7	1	1106.16	3.25	0	71.88	0	2.46	0	0	1.56	0	0	0	0	0	0	11.76	11.76
	Inverter	MV3-12	367668	4907594	2	0	0	100.3	100.3	1	4859.7	3.25	0	84.73	0	0.63	0	0	18.37	0	0	0	0	0	0	-3.42	-3.42
	Inverter	MV3-21	368478	4907206	2	0	0	100.3	100.3	1	4958.07	3.25	0	84.91	0	0.64	0	0	18.52	0	0	0	0	0	0	-3.75	-3.75
	Inverter	MV3-13	367963	4907577	2	0	0	100.3	100.3	1	4984.16	3.25	0	84.95	0	0.64	0	0	18.56	0	0	0	0	0	0	-3.84	-3.84
	Inverter	MV3-19	368357	4907347	2	0	0	100.3	100.3	1	5000.92	3.25	0	84.98	0	0.64	0	0	18.58	0	0	0	0	0	0	-3.89	-3.89
	Inverter	MV3-17	368178	4907472	2	0	0	100.3	100.3	1	5005.43	3.25	0	84.99	0	0.64	0	0	18.59	0	0	0	0	0	0	-3.91	-3.91
	Inverter	MV2-1	365842	4906816	2	0	0	97.3	97.3	1	3583.23	3.25	0	82.09	0	0.46	0	0	16.37	0	0	0	0	0	0	-1.61	-1.61
	Inverters	G_Inv5	366638.5	4902958.1	2	0	0	87.7	87.7	1	1186.03	3.25	0	72.48	0	2.48	0	0	1.66	0	0	0	0	0	0	11.04	11.04
	Inverters	G_Inv2	366676.9	4903239.1	2	0	0	87.7	87.7	1	1187.95	3.25	0	72.5	0	2.48	0	0	1.66	0	0	0	0	0	0	11.03	11.03
	Inverter	MV3-15	368357	4907477	2	0	0	100.3	100.3	1	5107.96	3.25	0	85.16	0	0.65	0	0	18.74	0	0	0	0	0	0	-4.24	-4.24
	Inverter	MV3-7	367945	4907754	2	0	0	100.3	100.3	1	5129.93	3.25	0	85.2	0	0.65	0	0	18.77	0	0	0	0	0	0	-4.31	-4.31
	Inverter	MV3-10	368167	4907669	2	0	0	100.3	100.3	1	5166.96	3.25	0	85.26	0	0.66	0	0	18.82	0	0	0	0	0	0	-4.43	-4.43
	Inverter	MV3-20	368689	4907317	2	0	0	100.3	100.3	1	5174.83	3.25	0	85.28	0	0.66	0	0	18.84	0	0	0	0	0	0	-4.46	-4.46
	Inverter	MV3-16	368514	4907475	2	0	0	100.3	100.3	1	5196.11	3.25	0	85.31	0	0.66	0	0	18.87	0	0	0	0	0	0	-4.53	-4.53
	Inverter	MV3-11	368346	4907662	2	0	0	100.3	100.3	1	5256.09	3.25	0	85.41	0	0.66	0	0	18.95	0	0	0	0	0	0	-4.72	-4.72
	Inverter	MV3-3	367939	4907927	2	0	0	100.3	100.3	1	5279.67	3.25	0	85.45	0	0.67	0	0	18.99	0	0	0	0	0	0	-4.79	-4.79
	Inverter	MV3-6	368162	4907834	2	0	0	100.3	100.3	1	5306.24	3.25	0	85.5	0	0.67	0	0	19.02	0	0	0	0	0	0	-4.88	-4.88
	Inverter	MV3-14	368684	4907498	2	0	0	100.3	100.3	1	5315.25	3.25	0	85.51	0	0.67	0	0	19.04	0	0	0	0	0	0	-4.9	-4.9
	Inverters	G_Inv4	366732.8	4903105	2	0	0	87.7	87.7	1	1252.25	3.25	0	72.95	0	2.49	0	0	1.74	0	0	0	0	0	0	10.48	10.48
	Inverter	MV3-9	368512	4907703	2	0	0	100.3	100.3	1	5382	3.25	0	85.62	0	0.67	0	0	19.13	0	0	0	0	0	0	-5.11	-5.11
	Inverter	MV3-8	368680	4907712	2	0	0	100.3	100.3	1	5485.45	3.25	0	85.78	0	0.68	0	0	19.28	0	0	0	0	0	0	-5.43	-5.43

Inverters	G_Inv7	366694.6	4902824.7	2	0	0	87.7	87.7	1	1278.49	3.25	0	73.13	0	2.49	0	0	1.77	0	0	0	0	0	0	10.26	10.26
Inverters	G_Inv6	366788.5	4902972	2	0	0	87.7	87.7	1	1328.95	3.25	0	73.47	0	2.5	0	0	1.84	0	0	0	0	0	0	9.86	9.86
Inverters	G_Inv9	366750.9	4902691.8	2	0	0	87.7	87.7	1	1379.93	3.25	0	73.8	0	2.5	0	0	1.9	0	0	0	0	0	0	9.46	9.46
Inverters	G_Inv8	366844.5	4902838.5	2	0	0	87.7	87.7	1	1416.65	3.25	0	74.03	0	2.51	0	0	1.94	0	0	0	0	0	0	9.18	9.18
Inverter	MV6-3	370207	4907140	2	0	0	100.3	100.3	1	6114.74	3.25	0	86.73	0	0.71	0	0	20.15	0	0	0	0	0	0	-7.27	-7.27
Inverter	MV6-2	370085	4907339	2	0	0	100.3	100.3	1	6151.55	3.25	0	86.78	0	0.71	0	0	20.2	0	0	0	0	0	0	-7.37	-7.37
Inverters	G_Inv10	366900.7	4902704.8	2	0	0	87.7	87.7	1	1513.39	3.25	0	74.6	0	2.52	0	0	2.06	0	0	0	0	0	0	8.48	8.48
Inverter	MV4-7	369035	4909001	2	0	0	100.3	100.3	1	6756.17	3.25	0	87.59	0	0.71	0	0	20.99	0	0	0	0	0	0	-8.99	-8.99
Inverter	MV4-11	369264	4908855	2	0	0	100.3	100.3	1	6757.54	3.25	0	87.6	0	0.71	0	0	20.99	0	0	0	0	0	0	-8.99	-8.99
Inverter	MV4-10	369312	4908858	2	0	0	100.3	100.3	1	6786.95	3.25	0	87.63	0	0.71	0	0	21.03	0	0	0	0	0	0	-9.06	-9.06
Inverter	MV4-8	369256	4909001	2	0	0	100.3	100.3	1	6874.74	3.25	0	87.75	0	0.71	0	0	21.14	0	0	0	0	0	0	-9.29	-9.29
Inverter	MV4-9	369289	4909001	2	0	0	100.3	100.3	1	6892.87	3.25	0	87.77	0	0.71	0	0	21.16	0	0	0	0	0	0	-9.33	-9.33
Inverter	MV4-4	369027	4909199	2	0	0	100.3	100.3	1	6921.39	3.25	0	87.8	0	0.71	0	0	21.2	0	0	0	0	0	0	-9.4	-9.4
Inverter	MV4-6	369243	4909192	2	0	0	100.3	100.3	1	7028.34	3.25	0	87.94	0	0.71	0	0	21.33	0	0	0	0	0	0	-9.67	-9.67
Inverter	MV4-5	369289	4909199	2	0	0	100.3	100.3	1	7058.91	3.25	0	87.97	0	0.71	0	0	21.37	0	0	0	0	0	0	-9.74	-9.74
Inverter	MV5-5	370015	4908690	2	0	0	100.3	100.3	1	7076.45	3.25	0	88	0	0.71	0	0	21.39	0	0	0	0	0	0	-9.79	-9.79
Inverter	MV4-1	369011	4909397	2	0	0	100.3	100.3	1	7084.32	3.25	0	88.01	0	0.71	0	0	21.4	0	0	0	0	0	0	-9.81	-9.81
Inverter	MV4-3	369229	4909397	2	0	0	100.3	100.3	1	7195.19	3.25	0	88.14	0	0.7	0	0	21.54	0	0	0	0	0	0	-10.07	-10.07
Inverter	MV5-2	370006	4908853	2	0	0	100.3	100.3	1	7196.85	3.25	0	88.14	0	0.7	0	0	21.54	0	0	0	0	0	0	-10.08	-10.08
Inverter	MV4-2	369272	4909397	2	0	0	100.3	100.3	1	7217.63	3.25	0	88.17	0	0.7	0	0	21.57	0	0	0	0	0	0	-10.13	-10.13
Inverter	MV5-4	370324	4908707	2	0	0	100.3	100.3	1	7290.67	3.25	0	88.26	0	0.7	0	0	21.66	0	0	0	0	0	0	-10.3	-10.3
Inverter	MV5-3	370231	4908851	2	0	0	100.3	100.3	1	7338.63	3.25	0	88.31	0	0.7	0	0	21.72	0	0	0	0	0	0	-10.42	-10.42
Inverter	MV5-1	370020	4909142	2	0	0	100.3	100.3	1	7432.58	3.25	0	88.42	0	0.69	0	0	21.83	0	0	0	0	0	0	-10.64	-10.64
Inverter	MV6-1	370235	4907364	2	0	0	97.3	97.3	1	6280.75	3.25	0	86.96	0	0.71	0	0	20.37	0	0	0	0	0	0	-10.73	-10.73
DSTATCOM - 10 MVAR #2	DSAT2	369403	4908757	2.5	0	0	96.6	96.6	1	6756.05	3.5	0	87.59	0	3.82	0	0	4.2	0	0	0	0	0	0	1.02	1.02
DSTATCOM - 10 MVAR #1	DSAT1	369437	4908757	2.5	0	0	96.6	96.6	1	6775.81	3.5	0	87.62	0	3.82	0	0	4.21	0	0	0	0	0	0	0.98	0.98
Inverter	MV1-3	364440	4906039	2	0	0	89.1	89.1	1	2979.57	3.25	0	80.48	0	1.14	0	0	9.59	0	0	0	0	0	0	-2.15	-2.15
Inverter	MV2-2	365977	4906654	2	0	0	89.1	89.1	1	3438.61	3.25	0	81.73	0	1.25	0	0	10.27	0	0	0	0	0	0	-4.2	-4.2
SubstationTransformer	W_ST	369711.17	4906112.3	2.5	0	0	92	92	1	5100.8	4.25	0	85.15	0	1.66	2.3	0.24	8.74	0	0	0	0	0	0	-5.88	-5.88
Westbrook Inverter Enclosur	W_INV3	369508	4906164	2	0	0	89.1	89.1	1	4964.13	3.25	0	84.92	0	1.63	0	0	12.42	0	0	0	0	0	0	-9.91	-9.91
Westbrook Inverter Enclosur	W_INV2	369374	4906388	2	0	0	89.1	89.1	1	4993.9	3.25	0	84.97	0	1.64	0	0	12.46	0	0	0	0	0	0	-10	-10
Inverter	MV3-22	368656	4907142	2	0	0	89.1	89.1	1	5017.57	3.25	0	85.01	0	1.64	0	0	12.49	0	0	0	0	0	0	-10.08	-10.08
Westbrook Inverter Enclosur	W_INV4	369673	4906164	2	0	0	89.1	89.1	1	5098.64	3.25	0	85.15	0	1.66	0	0	12.6	0	0	0	0	0	0	-10.35	-10.35
Westbrook Inverter Enclosur	W_INV7	369780	4906417	2	0	0	89.1	89.1	1	5333.04	3.25	0	85.54	0	1.72	0	0	12.9	0	0	0	0	0	0	-11.11	-11.11
Westbrook Inverter Enclosur	W_INV5	369719	4906574	2	0	0	89.1	89.1	1	5379.64	3.25	0	85.62	0	1.73	0	0	12.97	0	0	0	0	0	0	-11.26	-11.26
Inverter	MV3-5	368340	4907843	2	0	0	89.1	89.1	1	5405.74	3.25	0	85.66	0	1.74	0	0	13	0	0	0	0	0	0	-11.34	-11.34
Inverter	MV3-1	368156	4907976	2	0	0	89.1	89.1	1	5426.42	3.25	0	85.69	0	1.75	0	0	13.03	0	0	0	0	0	0	-11.4	-11.4
Westbrook Inverter Enclosur	W_INV6	369875	4906578	2	0	0	89.1	89.1	1	5505.57	3.25	0	85.82	0	1.76	0	0	13.13	0	0	0	0	0	0	-11.65	-11.65
Inverter	MV3-4	368502	4907925	2	0	0	89.1	89.1	1	5561.65	3.25	0	85.9	0	1.78	0	0	13.2	0	0	0	0	0	0	-11.83	-11.83
Inverter	MV3-2	368671	4907928	2	0	0	89.1	89.1	1	5657.47	3.25	0	86.05	0	1.8	0	0	13.33	0	0	0	0	0	0	-12.12	-12.12
Fixed Reactor Bank 1	FRB1	369378	4908755	6	0	0	89.8	89.8	1	6739.97	5.25	0	87.57	0	-0.32	0	0	10.5	0	0	0	0	0	0	-7.98	-7.98
Fixed Reactor Bank 2	FRB2	369464	4908755	6	0	0	89.8	89.8	1	6789.95	5.25	0	87.64	0	-0.31	0	0	10.55	0	0	0	0	0	0	-8.1	-8.1
Inverter	MV4-15	369176	4908481	2	0	0	89.1	89.1	1	6399.63	3.25	0	87.12	0	1.98	0	0	14.26	0	0	0	0	0	0	-14.31	-14.31
Inverter	MV4-14	369176	4908507	2	0	0	89.1	89.1	1	6420.9	3.25	0	87.15	0	1.99	0	0	14.29	0	0	0	0	0	0	-14.37	-14.37
Inverter	MV4-13	369051	4908605	2	0	0	89.1	89.1	1	6431.31	3.25	0	87.17	0	1.99	0	0	14.3	0	0	0	0	0	0	-14.4	-14.4
Inverter	MV4-12	369043	4908803	2	0	0	89.1	89.1	1	6592.76	3.25	0	87.38	0	2.03	0	0	14.5	0	0	0	0	0	0	-14.85	-14.85
Inverter	MV5-6	369982	4908507	2	0	0	89.1	89.1	1	6915.27	3.25	0	87.8	0	2.11	0	0	14.89	0	0	0	0	0	0	-15.73	-15.73
Westbrook Inverter Enclosur	W_INV1	369409	4906578	2	0	0	86.1	86.1	1	5142.05	3.25	0	85.22	0	1.67	0	0	12.65	0	0	0	0	0	0	-13.49	-13.49
Inverter	MV6-4	370250	4906966	2	0	0	86.1	86.1	1	6039.4	3.25	0	86.62	0	1.9	0	0	13.81	0	0	0	0	0	0	-16.27	-16.27
Inverter Transformer	MV1-14 T	365157	4905049	2	0	0	69.4	69.4	1	1829.18	3.25	0	76.25	0	2.11	0	0	4.79	0	0	0	0	0	0	-13.79	-13.79
Westbrook Inverter Transfor	W_INVTR1	369403	4906578	2	0	0	78.2	78.2	1	5137.48	3.25	0	85.21	0	-3.2	0	0	2.46	0	0	0	0	0	0	-6.23	-6.23
Westbrook Inverter Transfor	W_INVTR3	369514	4906164	2	0	0	77.3	77.3	1	4968.99	3.25	0	84.93	0	-3.17	0	0	2.4	0	0	0	0	0	0	-6.82	-6.82
Westbrook Inverter Transfor	W_INVTR2	369368	4906388	2	0	0	77.3	77.3	1	4989.23	3.25	0	84.96	0	-3.18	0	0	2.41	0	0	0	0	0	0	-6.85	-6.85
Westbrook Inverter Transfor	W_INVTR4	369679	4906164	2	0	0	77.3	77.3	1	5103.56	3.25	0	85.16	0	-3.2	0	0	2.45	0	0	0	0	0	0	-7.07	-7.07
Westbrook Inverter Transfor	W_INVTR7	369786	4906417	2	0	0	77.3	77.3	1	5337.87	3.25	0	85.55	0	-3.24	0	0	2.53	0	0	0	0	0	0	-7.49	-7.49
Inverter Transformer	MV1-13 T	364725	4905241	2	0	0	69.4	69.4	1	2132.37	3.25	0	77.58	0	2.22	0	0	5.1	0	0	0	0	0	0	-15.54	-15.54
Westbrook Inverter Transfor	W_INVTR5	369725	4906574	2	0	0	77.3	77.3	1	5384.36	3.25	0	85.62	0	-3.25	0	0	2.54	0	0	0	0	0	0	-7.57	-7.57
Westbrook Inverter Transfor	W_INVTR6	369881	4906578	2	0	0	77.3	77.3	1	5510.35	3.25	0	85.82	0	-3.28	0	0	2.58	0	0	0	0	0	0	-7.79	-7.79
Inverter Transformer	MV1-10 T	365010	4905564	2	0	0	69.4	69.4	1	2362.86	3.25	0	78.47	0	2.3	0	0	5.32	0	0	0	0	0	0	-16.74	-16.74
Inverter Transformer	MV1-7 T	364919	4905782	2	0	0	69.4	69.4	1	2595.17	3.25	0	79.28	0	2.38	0	0	5.53	0	0	0	0	0	0	-17.84	-17.84
Inverter Transformer	MV2-1 T	365836	4906816	2	0	0	69.4	69.4	1	3582.64	3.25	0	82.08	0	2.68	0	0	6.36	0	0	0	0	0	0	-21.77	-21.77
Inverter Transformer	MV6-4 T	370244	4906966	2	0	0	69.4	69.4	1	6034.67	3.25	0	86.61	0	3.19	0	0	8.04	0	0	0	0	0	0	-28.5	-28.5
Inverter Transformer	MV6-1 T	370230	4907364	2	0	0	69.4	69.4	1	6276.98	3.25	0	86.96	0	3.23	0	0	8.18	0	0	0	0	0	0	-29.02	-29.02
Inverter Transformer	MV1-15 T	365309	4904994	2	0	0	56.1	56.1	1	1753.07	3.25	0	75.88	0	0.3	0	0	6.55	0	0	0	0	0	0	-26.67	-26.67
Inverter Transformer	MV1-12 T	365044	4905386	2	0	0	56.1	56.1	1	2181.67	3.25	0	77.78	0	0.48	0	0	7.4	0	0	0	0	0	0	-29.59	-29.59
Inverter Transformer	MV1-11 T	364649	4905414	2	0	0	56.1	56.1	1	2321.13	3.25	0	78.31	0	0.54	0	0	7.66	0	0	0	0	0	0	-30.45	-30.45
Inverter Transformer	MV1-8 T	364782	4905647	2	0	0	56.1	56.1	1	2498.9	3.25	0	78.95	0	0.62	0	0	7.99	0	0	0	0	0	0	-31.5	-31.5
Inverter Transformer	MV1-9 T	364555	4905646	2	0	0	56.1	56.1	1	2571.42	3.25	0	79.2	0	0.65	0	0	8.12	0	0	0	0	0	0	-31.91	-31.91
Inverter Transformer	MV1-4 T	364821	4905918	2	0	0	56.1	56.1	1	2750.16	3.25	0	79.79	0	0.72	0	0	8.44	0	0	0	0	0	0	-32.89	-32.89
Inverter Transformer	MV1-5 T	364676	4905892	2	0	0	56.1	56.1	1	2764.07	3.25	0	79.83	0	0.73	0	0	8.46	0	0	0	0	0	0	-32.96	-32.96
Inverter Transformer	MV1-6 T	364482	4905835	2	0	0	56.1	56.1	1	2774.03	3.25	0	79.86	0	0.73	0	0	8.48	0	0	0	0	0	0	-33.02	-33.02
Inverter Transformer	MV1-2 T	364759	4906063	2	0	0	56.1	56.1	1	2905.99	3.25	0	80.27	0	0.79	0	0	8.71	0	0	0	0	0	0	-33.7	-33.7
Inverter Transformer	MV1-3 T	364435	4906039	2	0	0	56.1	56.1	1	2981.33	3.25	0	80.49	0	0.82	0	0	8.84	0	0	0	0	0	0	-34.09	-34.09
Inverter Transformer	MV1-1 T	364721	4906166	2	0	0	56.1	56.1	1	3015.25	3.25	0	80.59	0	0.84	0	0	8.89	0	0	0	0	0	0	-34.26	-34.26

	Inverter Transformer	MV2-4 T	365590	4906628	2	0	0	56.1	56.1	1	3379.31	3.25	0	81.58	0	0.99	0	0	9.49	0	0	0	0	0	0	-36	-36
	Inverter Transformer	MV2-3 T	365814	4906641	2	0	0	56.1	56.1	1	3406.34	3.25	0	81.65	0	1	0	0	9.54	0	0	0	0	0	0	-36.13	-36.13
	Inverter Transformer	MV2-2 T	365982	4906654	2	0	0	56.1	56.1	1	3439.32	3.25	0	81.73	0	1.01	0	0	9.59	0	0	0	0	0	0	-36.28	-36.28
	Inverter Transformer	MV3-18 T	367757	4907412	2	0	0	56.1	56.1	1	4739.66	3.25	0	84.51	0	1.53	0	0	11.51	0	0	0	0	0	0	-41.49	-41.49
	Inverter Transformer	MV3-12 T	367674	4907594	2	0	0	56.1	56.1	1	4862.39	3.25	0	84.74	0	1.58	0	0	11.67	0	0	0	0	0	0	-41.93	-41.93
	Inverter Transformer	MV3-21 T	368484	4907206	2	0	0	56.1	56.1	1	4961.69	3.25	0	84.91	0	1.61	0	0	11.8	0	0	0	0	0	0	-42.27	-42.27
	Inverter Transformer	MV3-13 T	367958	4907577	2	0	0	56.1	56.1	1	4981.68	3.25	0	84.95	0	1.62	0	0	11.83	0	0	0	0	0	0	-42.34	-42.34
	Inverter Transformer	MV3-19 T	368352	4907347	2	0	0	56.1	56.1	1	4998.05	3.25	0	84.98	0	1.62	0	0	11.85	0	0	0	0	0	0	-42.39	-42.39
	Inverter Transformer	MV3-17 T	368183	4907472	2	0	0	56.1	56.1	1	5008.12	3.25	0	84.99	0	1.63	0	0	11.86	0	0	0	0	0	0	-42.43	-42.43
	Inverter Transformer	MV3-22 T	368661	4907142	2	0	0	56.1	56.1	1	5020.73	3.25	0	85.02	0	1.63	0	0	11.88	0	0	0	0	0	0	-42.47	-42.47
	Inverter Transformer	MV3-15 T	368351	4907477	2	0	0	56.1	56.1	1	5104.59	3.25	0	85.16	0	1.66	0	0	11.99	0	0	0	0	0	0	-42.76	-42.76
	Inverter Transformer	MV3-7 T	367951	4907754	2	0	0	56.1	56.1	1	5132.8	3.25	0	85.21	0	1.67	0	0	12.03	0	0	0	0	0	0	-42.85	-42.85
	Inverter Transformer	MV3-10 T	368162	4907669	2	0	0	56.1	56.1	1	5164.37	3.25	0	85.26	0	1.68	0	0	12.07	0	0	0	0	0	0	-42.96	-42.96
	Inverter Transformer	MV3-20 T	368683	4907317	2	0	0	56.1	56.1	1	5171.12	3.25	0	85.27	0	1.69	0	0	12.08	0	0	0	0	0	0	-42.98	-42.98
	Inverter Transformer	MV3-16 T	368509	4907475	2	0	0	56.1	56.1	1	5193.2	3.25	0	85.31	0	1.69	0	0	12.11	0	0	0	0	0	0	-43.05	-43.05
	Inverter Transformer	MV3-11 T	368340	4907662	2	0	0	56.1	56.1	1	5252.83	3.25	0	85.41	0	1.72	0	0	12.18	0	0	0	0	0	0	-43.25	-43.25
	Inverter Transformer	MV3-3 T	367944	4907927	2	0	0	56.1	56.1	1	5282	3.25	0	85.46	0	1.73	0	0	12.22	0	0	0	0	0	0	-43.34	-43.34
	Inverter Transformer	MV3-6 T	368156	4907834	2	0	0	56.1	56.1	1	5303.22	3.25	0	85.49	0	1.73	0	0	12.25	0	0	0	0	0	0	-43.41	-43.41
	Inverter Transformer	MV3-14 T	368678	4907498	2	0	0	56.1	56.1	1	5311.64	3.25	0	85.5	0	1.74	0	0	12.26	0	0	0	0	0	0	-43.44	-43.44
	Inverter Transformer	MV3-9 T	368517	4907703	2	0	0	56.1	56.1	1	5384.81	3.25	0	85.62	0	1.76	0	0	12.35	0	0	0	0	0	0	-43.68	-43.68
	Inverter Transformer	MV3-5 T	368335	4907843	2	0	0	56.1	56.1	1	5403.1	3.25	0	85.65	0	1.77	0	0	12.37	0	0	0	0	0	0	-43.74	-43.74
	Inverter Transformer	MV3-1 T	368150	4907976	2	0	0	56.1	56.1	1	5423.48	3.25	0	85.69	0	1.77	0	0	12.4	0	0	0	0	0	0	-43.8	-43.8
	Inverter Transformer	MV3-8 T	368685	4907712	2	0	0	56.1	56.1	1	5488.36	3.25	0	85.79	0	1.8	0	0	12.48	0	0	0	0	0	0	-44.01	-44.01
	Inverter Transformer	MV3-4 T	368507	4907925	2	0	0	56.1	56.1	1	5564.36	3.25	0	85.91	0	1.82	0	0	12.58	0	0	0	0	0	0	-44.25	-44.25
	Inverter Transformer	MV3-2 T	368677	4907928	2	0	0	56.1	56.1	1	5660.84	3.25	0	86.06	0	1.85	0	0	12.69	0	0	0	0	0	0	-44.55	-44.55
	Inverter Transformer	MV6-3 T	370202	4907140	2	0	0	56.1	56.1	1	6110.89	3.25	0	86.72	0	2	0	0	13.23	0	0	0	0	0	0	-45.9	-45.9
	Inverter Transformer	MV6-2 T	370091	4907339	2	0	0	56.1	56.1	1	6156.03	3.25	0	86.79	0	2.01	0	0	13.29	0	0	0	0	0	0	-46.03	-46.03
	Inverter Transformer	MV4-15 T	369170	4908481	2	0	0	56.1	56.1	1	6396.17	3.25	0	87.12	0	2.09	0	0	13.56	0	0	0	0	0	0	-46.71	-46.71
	Inverter Transformer	MV4-14 T	369182	4908507	2	0	0	56.1	56.1	1	6424.34	3.25	0	87.16	0	2.1	0	0	13.59	0	0	0	0	0	0	-46.79	-46.79
	Inverter Transformer	MV4-13 T	369057	4908605	2	0	0	56.1	56.1	1	6434.63	3.25	0	87.17	0	2.1	0	0	13.61	0	0	0	0	0	0	-46.82	-46.82
	Inverter Transformer	MV4-12 T	369049	4908803	2	0	0	56.1	56.1	1	6596	3.25	0	87.39	0	2.15	0	0	13.79	0	0	0	0	0	0	-47.26	-47.26
	Inverter Transformer	MV4-7 T	369040	4909001	2	0	0	56.1	56.1	1	6758.79	3.25	0	87.6	0	2.19	0	0	13.97	0	0	0	0	0	0	-47.7	-47.7
	Inverter Transformer	MV4-11 T	369269	4908855	2	0	0	56.1	56.1	1	6760.34	3.25	0	87.6	0	2.19	0	0	13.97	0	0	0	0	0	0	-47.7	-47.7
	Inverter Transformer	MV4-10 T	369307	4908858	2	0	0	56.1	56.1	1	6784.14	3.25	0	87.63	0	2.2	0	0	14	0	0	0	0	0	0	-47.77	-47.77
	Inverter Transformer	MV4-8 T	369262	4909001	2	0	0	56.1	56.1	1	6878.03	3.25	0	87.75	0	2.23	0	0	14.1	0	0	0	0	0	0	-48.01	-48.01
	Inverter Transformer	MV4-9 T	369284	4909001	2	0	0	56.1	56.1	1	6890.12	3.25	0	87.76	0	2.23	0	0	14.11	0	0	0	0	0	0	-48.05	-48.05
	Inverter Transformer	MV5-6 T	369987	4908507	2	0	0	56.1	56.1	1	6918.52	3.25	0	87.8	0	2.24	0	0	14.14	0	0	0	0	0	0	-48.12	-48.12
	Inverter Transformer	MV4-4 T	369033	4909199	2	0	0	56.1	56.1	1	6924.46	3.25	0	87.81	0	2.24	0	0	14.15	0	0	0	0	0	0	-48.14	-48.14
	Inverter Transformer	MV4-6 T	369249	4909192	2	0	0	56.1	56.1	1	7031.54	3.25	0	87.94	0	2.27	0	0	14.26	0	0	0	0	0	0	-48.41	-48.41
	Inverter Transformer	MV4-5 T	369283	4909199	2	0	0	56.1	56.1	1	7055.68	3.25	0	87.97	0	2.27	0	0	14.29	0	0	0	0	0	0	-48.48	-48.48
	Inverter Transformer	MV5-5 T	370021	4908690	2	0	0	56.1	56.1	1	7080.29	3.25	0	88	0	2.28	0	0	14.32	0	0	0	0	0	0	-48.54	-48.54
	Inverter Transformer	MV4-1 T	369017	4909397	2	0	0	56.1	56.1	1	7087.31	3.25	0	88.01	0	2.28	0	0	14.32	0	0	0	0	0	0	-48.56	-48.56
	Inverter Transformer	MV4-3 T	369234	4909397	2	0	0	56.1	56.1	1	7197.79	3.25	0	88.14	0	2.31	0	0	14.44	0	0	0	0	0	0	-48.84	-48.84
	Inverter Transformer	MV5-2 T	370011	4908853	2	0	0	56.1	56.1	1	7199.99	3.25	0	88.15	0	2.31	0	0	14.44	0	0	0	0	0	0	-48.84	-48.84
	Inverter Transformer	MV4-2 T	369267	4909397	2	0	0	56.1	56.1	1	7215.01	3.25	0	88.16	0	2.32	0	0	14.46	0	0	0	0	0	0	-48.88	-48.88
	Inverter Transformer	MV5-4 T	370330	4908707	2	0	0	56.1	56.1	1	7294.65	3.25	0	88.26	0	2.34	0	0	14.54	0	0	0	0	0	0	-49.08	-49.08
	Inverter Transformer	MV5-3 T	370237	4908851	2	0	0	56.1	56.1	1	7342.51	3.25	0	88.32	0	2.35	0	0	14.59	0	0	0	0	0	0	-49.2	-49.2
	Inverter Transformer	MV5-1 T	370015	4909142	2	0	0	56.1	56.1	1	7429.53	3.25	0	88.42	0	2.37	0	0	14.68	0	0	0	0	0	0	-49.42	-49.42
	Line Reactor	NGR	369421	4908787.5	5	0	0	45.4	45.4	1	6791.34	5.25	0	87.64	0	3.22	1.37	0.1	2.78	0	0	0	0	0	0	-49.65	-49.65
Limit. Valu	0	0																								
Level D/N:	24.0488	24.0488																								

Receiver: Existing Noise Receptor
ID: G-64
X: 365646.2
Y: 4903743.1
Z: 4.5
Ground: 0

ISO	Description	ID	X	Y	Z	Ground	ReflOrd	LxT	LxN	L/A	Dist.	hm	Freq	Adiv	K0b	Agr	Abar	z	Aatm	Afol	Ahous	Cmet	CmetN	Dc	RL	LtotT	LtotN
	Inverter	MV1-15	365315	4904994	2	0	0	100.3	100.3	1	1294.01	3.25	0	73.24	0	-0.11	0	0	11.79	0	0	0	0	0	0	15.4	15.4
	Sol_Luce Substation	S_Substation	369426	4908792	3.5	0	0	112.1	112.1	1	6307	5.25	0	87	0	1.23	2.58	0.28	10.06	0	0	0	0	0	0	11.21	11.21
	Inverter	MV1-12	365038	4905386	2	0	0	100.3	100.3	1	1751.87	3.25	0	75.87	0	0.05	0	0	12.92	0	0	0	0	0	0	11.47	11.47
	Inverter	MV1-11	364655	4905414	2	0	0	100.3	100.3	1	1942.78	3.25	0	76.77	0	0.11	0	0	13.34	0	0	0	0	0	0	10.09	10.09
	Inverter	MV1-14	365163	4905049	2	0	0	97.3	97.3	1	1392.43	3.25	0	73.88	0	-0.07	0	0	12.05	0	0	0	0	0	0	11.46	11.46
	Inverter	MV1-8	364788	4905647	2	0	0	100.3	100.3	1	2088.38	3.25	0	77.4	0	0.15	0	0	13.65	0	0	0	0	0	0	9.12	9.12
	Inverter	MV1-9	364561	4905646	2	0	0	100.3	100.3	1	2190.59	3.25	0	77.81	0	0.18	0	0	13.85	0	0	0	0	0	0	8.47	8.47
	Inverter	MV1-4	364815	4905918	2	0	0	100.3	100.3	1	2328.32	3.25	0	78.34	0	0.22	0	0	14.13	0	0	0	0	0	0	7.63	7.63
	Inverter	MV1-5	364671	4905892	2	0	0	100.3	100.3	1	2359.83	3.25	0	78.46	0	0.22	0	0	14.19	0	0	0	0	0	0	7.44	7.44
	Inverter	MV1-6	364477	4905835	2	0	0	100.3	100.3	1	2396.47	3.25	0	78.59	0	0.23	0	0	14.26	0	0	0	0	0	0	7.23	7.23
	Inverter	MV1-13	364731	4905241	2	0	0	97.3	97.3	1	1755.36	3.25	0	75.89	0	0.05	0	0	12.93	0	0	0	0	0	0	8.44	8.44
	Inverter	MV1-2	364753	4906063	2	0	0	100.3	100.3	1	2485.91	3.25	0	78.91	0	0.25	0	0	14.43	0	0	0	0	0	0	6.72	6.72
	Inverter	MV1-1	364715	4906166	2	0	0	100.3	100.3	1	2595.69	3.25	0	79.29	0	0.28	0	0	14.64	0	0	0	0	0	0	6.11	6.11
	Inverter	MV1-10	365004	4905564	2	0	0	97.3	97.3	1	1930.83	3.25	0	76.71	0	0.11	0	0	13.31	0	0	0	0	0	0	7.17	7.17

Inverter	MV2-4	365586	4906624	2	0	0	100.3	100.3	1	2881.53	3.25	0	80.19	0	0.34	0	0	15.16	0	0	0	0	0	0	4.62	4.62
Inverter	MV2-3	365820	4906641	2	0	0	100.3	100.3	1	2903.11	3.25	0	80.26	0	0.34	0	0	15.2	0	0	0	0	0	0	4.51	4.51
Gardiner Substation	G_Sub	366586.3	4903349.9	2.5	0	0	90.8	90.8	1	1019.02	4.25	0	71.16	0	0.82	5.52	0.31	2.56	0	0	0	0	0	0	10.71	10.71
Inverter	MV1-7	364925	4905782	2	0	0	97.3	97.3	1	2162.69	3.25	0	77.7	0	0.17	0	0	13.8	0	0	0	0	0	0	5.64	5.64
Inverter	MV3-18	367752	4907412	2	0	0	100.3	100.3	1	4230.28	3.25	0	83.53	0	0.56	0	0	17.41	0	0	0	0	0	0	-1.19	-1.19
Inverter	MV3-12	367668	4907594	2	0	0	100.3	100.3	1	4349.38	3.25	0	83.77	0	0.57	0	0	17.6	0	0	0	0	0	0	-1.63	-1.63
Inverter	MV2-1	365842	4906816	2	0	0	97.3	97.3	1	3079.13	3.25	0	80.77	0	0.38	0	0	15.51	0	0	0	0	0	0	0.66	0.66
Inverters	G_Inv1	366526.4	4903225.8	2	0	0	87.7	87.7	1	1020.96	3.25	0	71.18	0	2.45	0	0	1.45	0	0	0	0	0	0	12.57	12.57
Inverter	MV3-21	368478	4907206	2	0	0	100.3	100.3	1	4473.34	3.25	0	84.01	0	0.59	0	0	17.79	0	0	0	0	0	0	-2.08	-2.08
Inverter	MV3-13	367963	4907577	2	0	0	100.3	100.3	1	4479.55	3.25	0	84.02	0	0.59	0	0	17.8	0	0	0	0	0	0	-2.1	-2.1
Inverter	MV3-17	368178	4907472	2	0	0	100.3	100.3	1	4507.18	3.25	0	84.08	0	0.59	0	0	17.84	0	0	0	0	0	0	-2.2	-2.2
Inverter	MV3-19	368357	4907347	2	0	0	100.3	100.3	1	4509.61	3.25	0	84.08	0	0.59	0	0	17.84	0	0	0	0	0	0	-2.21	-2.21
Inverter	MV3-15	368357	4907477	2	0	0	100.3	100.3	1	4614.16	3.25	0	84.28	0	0.6	0	0	18	0	0	0	0	0	0	-2.58	-2.58
Inverter	MV3-7	367945	4907754	2	0	0	100.3	100.3	1	4622.97	3.25	0	84.3	0	0.6	0	0	18.02	0	0	0	0	0	0	-2.61	-2.61
Inverter	MV3-10	368167	4907669	2	0	0	100.3	100.3	1	4665.53	3.25	0	84.38	0	0.61	0	0	18.08	0	0	0	0	0	0	-2.76	-2.76
Inverter	MV3-20	368689	4907317	2	0	0	100.3	100.3	1	4693.76	3.25	0	84.43	0	0.61	0	0	18.12	0	0	0	0	0	0	-2.86	-2.86
Inverter	MV3-16	368514	4907475	2	0	0	100.3	100.3	1	4706.52	3.25	0	84.45	0	0.61	0	0	18.14	0	0	0	0	0	0	-2.9	-2.9
Inverter	MV3-11	368346	4907662	2	0	0	100.3	100.3	1	4758.86	3.25	0	84.55	0	0.62	0	0	18.22	0	0	0	0	0	0	-3.08	-3.08
Inverter	MV3-3	367939	4907927	2	0	0	100.3	100.3	1	4770.95	3.25	0	84.57	0	0.62	0	0	18.24	0	0	0	0	0	0	-3.12	-3.12
Inverter	MV3-6	368162	4907834	2	0	0	100.3	100.3	1	4802.57	3.25	0	84.63	0	0.62	0	0	18.29	0	0	0	0	0	0	-3.23	-3.23
Inverter	MV3-14	368684	4907498	2	0	0	100.3	100.3	1	4829.86	3.25	0	84.68	0	0.63	0	0	18.33	0	0	0	0	0	0	-3.32	-3.32
Inverter	MV3-9	368512	4907703	2	0	0	100.3	100.3	1	4888.11	3.25	0	84.78	0	0.63	0	0	18.41	0	0	0	0	0	0	-3.52	-3.52
Inverters	G_Inv3	366583.7	4903091.4	2	0	0	87.7	87.7	1	1141.76	3.25	0	72.15	0	2.47	0	0	1.61	0	0	0	0	0	0	11.43	11.43
Inverters	G_Inv2	366676.9	4903239.1	2	0	0	87.7	87.7	1	1147.33	3.25	0	72.19	0	2.47	0	0	1.61	0	0	0	0	0	0	11.38	11.38
Inverter	MV3-8	368680	4907712	2	0	0	100.3	100.3	1	4995.61	3.25	0	84.97	0	0.64	0	0	18.57	0	0	0	0	0	0	-3.88	-3.88
Inverters	G_Inv4	366732.8	4903105	2	0	0	87.7	87.7	1	1260.11	3.25	0	73.01	0	2.49	0	0	1.75	0	0	0	0	0	0	10.41	10.41
Inverters	G_Inv5	366638.5	4902958.1	2	0	0	87.7	87.7	1	1265.26	3.25	0	73.04	0	2.49	0	0	1.76	0	0	0	0	0	0	10.37	10.37
Inverter	MV6-3	370207	4907140	2	0	0	100.3	100.3	1	5686.81	3.25	0	86.1	0	0.69	0	0	19.56	0	0	0	0	0	0	-6.04	-6.04
Inverter	MV6-2	370085	4907339	2	0	0	100.3	100.3	1	5712.57	3.25	0	86.14	0	0.69	0	0	19.6	0	0	0	0	0	0	-6.12	-6.12
Inverters	G_Inv6	366788.5	4902972	2	0	0	87.7	87.7	1	1378.21	3.25	0	73.79	0	2.5	0	0	1.9	0	0	0	0	0	0	9.48	9.48
Inverters	G_Inv7	366694.6	4902824.7	2	0	0	87.7	87.7	1	1393.77	3.25	0	73.88	0	2.5	0	0	1.92	0	0	0	0	0	0	9.36	9.36
Inverter	MV4-7	369035	4909001	2	0	0	100.3	100.3	1	6255.36	3.25	0	86.93	0	0.71	0	0	20.34	0	0	0	0	0	0	-7.66	-7.66
Inverter	MV4-11	369264	4908855	2	0	0	100.3	100.3	1	6262.59	3.25	0	86.94	0	0.71	0	0	20.35	0	0	0	0	0	0	-7.68	-7.68
Inverter	MV4-10	369312	4908858	2	0	0	100.3	100.3	1	6292.88	3.25	0	86.98	0	0.71	0	0	20.39	0	0	0	0	0	0	-7.76	-7.76
Inverter	MV4-8	369256	4909001	2	0	0	100.3	100.3	1	6377.79	3.25	0	87.09	0	0.71	0	0	20.5	0	0	0	0	0	0	-7.99	-7.99
Inverter	MV4-9	369289	4909001	2	0	0	100.3	100.3	1	6396.52	3.25	0	87.12	0	0.71	0	0	20.52	0	0	0	0	0	0	-8.04	-8.04
Inverter	MV4-4	369027	4909199	2	0	0	100.3	100.3	1	6418.46	3.25	0	87.15	0	0.71	0	0	20.55	0	0	0	0	0	0	-8.1	-8.1
Inverters	G_Inv8	366844.5	4902838.5	2	0	0	87.7	87.7	1	1501.41	3.25	0	74.53	0	2.52	0	0	2.05	0	0	0	0	0	0	8.57	8.57
Inverter	MV4-6	369243	4909192	2	0	0	100.3	100.3	1	6528.97	3.25	0	87.3	0	0.71	0	0	20.7	0	0	0	0	0	0	-8.4	-8.4
Inverters	G_Inv9	366750.9	4902691.8	2	0	0	87.7	87.7	1	1524.99	3.25	0	74.67	0	2.52	0	0	2.07	0	0	0	0	0	0	8.4	8.4
Inverter	MV4-5	369289	4909199	2	0	0	100.3	100.3	1	6560.25	3.25	0	87.34	0	0.72	0	0	20.74	0	0	0	0	0	0	-8.48	-8.48
Inverter	MV4-1	369011	4909397	2	0	0	100.3	100.3	1	6579.4	3.25	0	87.36	0	0.72	0	0	20.76	0	0	0	0	0	0	-8.53	-8.53
Inverter	MV5-5	370015	4908690	2	0	0	100.3	100.3	1	6599.87	3.25	0	87.39	0	0.72	0	0	20.79	0	0	0	0	0	0	-8.58	-8.58
Inverter	MV4-3	369229	4909397	2	0	0	100.3	100.3	1	6693.51	3.25	0	87.51	0	0.71	0	0	20.91	0	0	0	0	0	0	-8.83	-8.83
Inverter	MV4-2	369272	4909397	2	0	0	100.3	100.3	1	6716.62	3.25	0	87.54	0	0.71	0	0	20.94	0	0	0	0	0	0	-8.88	-8.88
Inverter	MV5-2	370006	4908853	2	0	0	100.3	100.3	1	6717.06	3.25	0	87.54	0	0.71	0	0	20.94	0	0	0	0	0	0	-8.89	-8.89
Inverter	MV5-4	370324	4908707	2	0	0	100.3	100.3	1	6820.71	3.25	0	87.68	0	0.71	0	0	21.07	0	0	0	0	0	0	-9.15	-9.15
Inverter	MV5-3	370231	4908851	2	0	0	100.3	100.3	1	6863.75	3.25	0	87.73	0	0.71	0	0	21.13	0	0	0	0	0	0	-9.26	-9.26
Inverter	MV5-1	370020	4909142	2	0	0	100.3	100.3	1	6948.26	3.25	0	87.84	0	0.71	0	0	21.23	0	0	0	0	0	0	-9.47	-9.47
Inverters	G_Inv10	366900.7	4902704.8	2	0	0	87.7	87.7	1	1628.45	3.25	0	75.24	0	2.54	0	0	2.2	0	0	0	0	0	0	7.69	7.69
Inverter	MV6-1	370235	4907364	2	0	0	97.3	97.3	1	5845.34	3.25	0	86.34	0	0.7	0	0	19.78	0	0	0	0	0	0	-9.5	-9.5
Inverter	MV1-3	364440	4906039	2	0	0	89.1	89.1	1	2593.47	3.25	0	79.28	0	1.05	0	0	8.99	0	0	0	0	0	0	-0.26	-0.26
DSTATCOM - 10 MVAR #2	DSAT2	369403	4908757	2.5	0	0	96.6	96.6	1	6265.2	3.5	0	86.94	0	3.79	0	0	3.97	0	0	0	0	0	0	1.93	1.93
DSTATCOM - 10 MVAR #1	DSAT1	369437	4908757	2.5	0	0	96.6	96.6	1	6285.65	3.5	0	86.97	0	3.79	0	0	3.98	0	0	0	0	0	0	1.89	1.89
Inverter	MV2-2	365977	4906654	2	0	0	89.1	89.1	1	2929.64	3.25	0	80.34	0	1.13	0	0	9.51	0	0	0	0	0	0	-1.92	-1.92
SubstationTransformer	W_ST	369711.17	4906112.3	2.5	0	0	92	92	1	4704.99	4.25	0	84.45	0	1.56	2.41	0.25	8.26	0	0	0	0	0	0	-4.7	-4.7
Inverter	MV3-22	368656	4907142	2	0	0	89.1	89.1	1	4539.98	3.25	0	84.14	0	1.53	0	0	11.84	0	0	0	0	0	0	-8.45	-8.45
Westbrook Inverter Enclosur	W_INV3	369508	4906164	2	0	0	89.1	89.1	1	4557.88	3.25	0	84.18	0	1.53	0	0	11.86	0	0	0	0	0	0	-8.51	-8.51
Westbrook Inverter Enclosur	W_INV2	369374	4906388	2	0	0	89.1	89.1	1	4570.78	3.25	0	84.2	0	1.53	0	0	11.88	0	0	0	0	0	0	-8.56	-8.56
Westbrook Inverter Enclosur	W_INV4	369673	4906164	2	0	0	89.1	89.1	1	4698.5	3.25	0	84.44	0	1.57	0	0	12.06	0	0	0	0	0	0	-9	-9
Inverter	MV3-5	368340	4907843	2	0	0	89.1	89.1	1	4905.68	3.25	0	84.81	0	1.62	0	0	12.34	0	0	0	0	0	0	-9.71	-9.71
Inverter	MV3-1	368156	4907976	2	0	0	89.1	89.1	1	4921.03	3.25	0	84.84	0	1.62	0	0	12.36	0	0	0	0	0	0	-9.76	-9.76
Westbrook Inverter Enclosur	W_INV7	369780	4906417	2	0	0	89.1	89.1	1	4923.22	3.25	0	84.84	0	1.62	0	0	12.36	0	0	0	0	0	0	-9.77	-9.77
Westbrook Inverter Enclosur	W_INV5	369719	4906574	2	0	0	89.1	89.1	1	4960.01	3.25	0	84.91	0	1.63	0	0	12.41	0	0	0	0	0	0	-9.89	-9.89
Inverter	MV3-4	368502	4907925	2	0	0	89.1	89.1	1	5063.98	3.25	0	85.09	0	1.66	0	0	12.55	0	0	0	0	0	0	-10.24	-10.24
Westbrook Inverter Enclosur	W_INV6	369875	4906578	2	0	0	89.1	89.1	1	5091.11	3.25	0	85.14	0	1.66	0	0	12.59	0	0	0	0	0	0	-10.33	-10.33
Inverter	MV3-2	368671	4907928	2	0	0	89.1	89.1	1	5163.6	3.25	0	85.26	0	1.68	0	0	12.68	0	0	0	0	0	0	-10.56	-10.56
Fixed Reactor Bank 1	FRB1	369378	4908755	6	0	0	89.8	89.8	1	6248.64	5.25	0	86.92	0	-0.38	0	0	10	0	0	0	0	0	0	-6.76	-6.76
Fixed Reactor Bank 2	FRB2	369464	4908755	6	0	0	89.8	89.8	1	6300.38	5.25	0	86.99	0	-0.38	0	0	10.06	0	0	0	0	0	0	-6.89	-6.89
Inverter	MV4-15	369176	4908481	2	0	0	89.1	89.1	1	5908.23	3.25	0	86.43	0	1.86	0	0	13.65	0	0	0	0	0	0	-12.88	-12.88
Inverter	MV4-14	369176	4908507	2	0	0	89.1	89.1	1	5929.1	3.25	0	86.46	0	1.87	0	0	13.67	0	0	0	0	0	0	-12.94	-12.94
Inverter	MV4-13	369051	4908605	2	0	0	89.1	89.1	1	5935.55	3.25	0	86.47	0	1.87	0	0	13.68	0	0	0	0	0	0	-12.96	-12.96
Inverter	MV4-12	369043	4908803	2	0	0	89.1	89.1	1	6094.33	3.25	0	86.7	0	1.91	0	0	13.88	0	0	0	0	0	0	-13.43	-13.43
Inverter	MV5-6	369982	4908507	2	0	0	89.1	89.1	1	6441.58	3.25	0	87.18	0	1.99	0	0	14.31	0	0	0	0	0	0	-14.43	-14.43

Westbrook Inverter Enclosur	W_INV1	369409	4906578	2	0	0	86.1	86.1	1	4711.19	3.25	0	84.46	0	1.57	0	0	12.07	0	0	0	0	0	0	-12.05	-12.05
Inverter	MV6-4	370250	4906966	2	0	0	86.1	86.1	1	5619.79	3.25	0	85.99	0	1.79	0	0	13.28	0	0	0	0	0	0	-15.01	-15.01
Inverter Transformer	MV1-14 T	365157	4905049	2	0	0	69.4	69.4	1	1394.52	3.25	0	73.89	0	1.92	0	0	4.31	0	0	0	0	0	0	-10.77	-10.77
Westbrook Inverter Transfor	W_INVTR1	369403	4906578	2	0	0	78.2	78.2	1	4706.4	3.25	0	84.45	0	-3.12	0	0	2.31	0	0	0	0	0	0	-5.41	-5.41
Inverter Transformer	MV1-13 T	364725	4905241	2	0	0	69.4	69.4	1	1758.5	3.25	0	75.9	0	2.08	0	0	4.72	0	0	0	0	0	0	-13.35	-13.35
Westbrook Inverter Transfor	W_INVTR3	369514	4906164	2	0	0	77.3	77.3	1	4562.96	3.25	0	84.18	0	-3.09	0	0	2.26	0	0	0	0	0	0	-6.02	-6.02
Westbrook Inverter Transfor	W_INVTR2	369368	4906388	2	0	0	77.3	77.3	1	4565.88	3.25	0	84.19	0	-3.09	0	0	2.26	0	0	0	0	0	0	-6.02	-6.02
Westbrook Inverter Transfor	W_INVTR4	369679	4906164	2	0	0	77.3	77.3	1	4703.64	3.25	0	84.45	0	-3.12	0	0	2.31	0	0	0	0	0	0	-6.3	-6.3
Inverter Transformer	MV1-10 T	365010	4905564	2	0	0	69.4	69.4	1	1928.84	3.25	0	76.71	0	2.15	0	0	4.89	0	0	0	0	0	0	-14.4	-14.4
Westbrook Inverter Transfor	W_INVTR7	369786	4906417	2	0	0	77.3	77.3	1	4928.25	3.25	0	84.85	0	-3.16	0	0	2.39	0	0	0	0	0	0	-6.74	-6.74
Westbrook Inverter Transfor	W_INVTR5	369725	4906574	2	0	0	77.3	77.3	1	4964.94	3.25	0	84.92	0	-3.17	0	0	2.4	0	0	0	0	0	0	-6.81	-6.81
Westbrook Inverter Transfor	W_INVTR6	369881	4906578	2	0	0	77.3	77.3	1	5096.1	3.25	0	85.14	0	-3.2	0	0	2.45	0	0	0	0	0	0	-7.05	-7.05
Inverter Transformer	MV1-7 T	364919	4905782	2	0	0	69.4	69.4	1	2164.7	3.25	0	77.71	0	2.23	0	0	5.13	0	0	0	0	0	0	-15.72	-15.72
Inverter Transformer	MV2-1 T	365836	4906816	2	0	0	69.4	69.4	1	3078.76	3.25	0	80.77	0	2.53	0	0	5.95	0	0	0	0	0	0	-19.9	-19.9
Inverter Transformer	MV6-4 T	370244	4906966	2	0	0	69.4	69.4	1	5614.88	3.25	0	85.99	0	3.13	0	0	7.78	0	0	0	0	0	0	-27.54	-27.54
Inverter Transformer	MV6-1 T	370230	4907364	2	0	0	69.4	69.4	1	5841.42	3.25	0	86.33	0	3.16	0	0	7.92	0	0	0	0	0	0	-28.06	-28.06
Inverter Transformer	MV1-15 T	365309	4904994	2	0	0	56.1	56.1	1	1295.55	3.25	0	73.25	0	0.12	0	0	5.57	0	0	0	0	0	0	-22.88	-22.88
Inverter Transformer	MV1-12 T	365044	4905386	2	0	0	56.1	56.1	1	1749.79	3.25	0	75.86	0	0.3	0	0	6.54	0	0	0	0	0	0	-26.64	-26.64
Inverter Transformer	MV1-11 T	364649	4905414	2	0	0	56.1	56.1	1	1945.85	3.25	0	76.78	0	0.38	0	0	6.94	0	0	0	0	0	0	-28.04	-28.04
Inverter Transformer	MV1-8 T	364782	4905647	2	0	0	56.1	56.1	1	2090.86	3.25	0	77.41	0	0.44	0	0	7.22	0	0	0	0	0	0	-29.01	-29.01
Inverter Transformer	MV1-9 T	364555	4905646	2	0	0	56.1	56.1	1	2193.57	3.25	0	77.82	0	0.49	0	0	7.42	0	0	0	0	0	0	-29.67	-29.67
Inverter Transformer	MV1-4 T	364821	4905918	2	0	0	56.1	56.1	1	2326.19	3.25	0	78.33	0	0.54	0	0	7.67	0	0	0	0	0	0	-30.49	-30.49
Inverter Transformer	MV1-5 T	364676	4905892	2	0	0	56.1	56.1	1	2357.77	3.25	0	78.45	0	0.56	0	0	7.73	0	0	0	0	0	0	-30.68	-30.68
Inverter Transformer	MV1-6 T	364482	4905835	2	0	0	56.1	56.1	1	2394.04	3.25	0	78.58	0	0.57	0	0	7.8	0	0	0	0	0	0	-30.89	-30.89
Inverter Transformer	MV1-2 T	364759	4906063	2	0	0	56.1	56.1	1	2483.76	3.25	0	78.9	0	0.61	0	0	7.96	0	0	0	0	0	0	-31.41	-31.41
Inverter Transformer	MV1-1 T	364721	4906166	2	0	0	56.1	56.1	1	2593.54	3.25	0	79.28	0	0.66	0	0	8.16	0	0	0	0	0	0	-32.03	-32.03
Inverter Transformer	MV1-3 T	364435	4906039	2	0	0	56.1	56.1	1	2595.8	3.25	0	79.29	0	0.66	0	0	8.16	0	0	0	0	0	0	-32.05	-32.05
Inverter Transformer	MV2-4 T	365590	4906628	2	0	0	56.1	56.1	1	2885.45	3.25	0	80.2	0	0.78	0	0	8.67	0	0	0	0	0	0	-33.6	-33.6
Inverter Transformer	MV2-3 T	365814	4906641	2	0	0	56.1	56.1	1	2902.76	3.25	0	80.26	0	0.79	0	0	8.7	0	0	0	0	0	0	-33.69	-33.69
Inverter Transformer	MV2-2 T	365982	4906654	2	0	0	56.1	56.1	1	2930.21	3.25	0	80.34	0	0.8	0	0	8.75	0	0	0	0	0	0	-33.83	-33.83
Inverter Transformer	MV3-18 T	367757	4907412	2	0	0	56.1	56.1	1	4232.77	3.25	0	83.53	0	1.34	0	0	10.8	0	0	0	0	0	0	-39.61	-39.61
Inverter Transformer	MV3-12 T	367674	4907594	2	0	0	56.1	56.1	1	4352.17	3.25	0	83.77	0	1.38	0	0	10.97	0	0	0	0	0	0	-40.07	-40.07
Inverter Transformer	MV3-13 T	367958	4907577	2	0	0	56.1	56.1	1	4476.96	3.25	0	84.02	0	1.43	0	0	11.14	0	0	0	0	0	0	-40.54	-40.54
Inverter Transformer	MV3-21 T	368484	4907206	2	0	0	56.1	56.1	1	4477.14	3.25	0	84.02	0	1.43	0	0	11.14	0	0	0	0	0	0	-40.54	-40.54
Inverter Transformer	MV3-19 T	368352	4907347	2	0	0	56.1	56.1	1	4506.6	3.25	0	84.08	0	1.44	0	0	11.18	0	0	0	0	0	0	-40.65	-40.65
Inverter Transformer	MV3-17 T	368183	4907472	2	0	0	56.1	56.1	1	4510	3.25	0	84.08	0	1.44	0	0	11.19	0	0	0	0	0	0	-40.66	-40.66
Inverter Transformer	MV3-22 T	368661	4907142	2	0	0	56.1	56.1	1	4543.3	3.25	0	84.15	0	1.46	0	0	11.24	0	0	0	0	0	0	-40.78	-40.78
Inverter Transformer	MV3-15 T	368351	4907477	2	0	0	56.1	56.1	1	4610.64	3.25	0	84.28	0	1.48	0	0	11.33	0	0	0	0	0	0	-41.03	-41.03
Inverter Transformer	MV3-7 T	367951	4907754	2	0	0	56.1	56.1	1	4625.95	3.25	0	84.3	0	1.49	0	0	11.35	0	0	0	0	0	0	-41.08	-41.08
Inverter Transformer	MV3-10 T	368162	4907669	2	0	0	56.1	56.1	1	4662.83	3.25	0	84.37	0	1.5	0	0	11.4	0	0	0	0	0	0	-41.22	-41.22
Inverter Transformer	MV3-20 T	368683	4907317	2	0	0	56.1	56.1	1	4689.87	3.25	0	84.42	0	1.51	0	0	11.44	0	0	0	0	0	0	-41.31	-41.31
Inverter Transformer	MV3-16 T	368509	4907475	2	0	0	56.1	56.1	1	4703.48	3.25	0	84.45	0	1.52	0	0	11.46	0	0	0	0	0	0	-41.36	-41.36
Inverter Transformer	MV3-11 T	368340	4907662	2	0	0	56.1	56.1	1	4755.45	3.25	0	84.54	0	1.54	0	0	11.53	0	0	0	0	0	0	-41.55	-41.55
Inverter Transformer	MV3-3 T	367944	4907927	2	0	0	56.1	56.1	1	4773.35	3.25	0	84.58	0	1.54	0	0	11.55	0	0	0	0	0	0	-41.61	-41.61
Inverter Transformer	MV3-6 T	368156	4907834	2	0	0	56.1	56.1	1	4799.43	3.25	0	84.62	0	1.55	0	0	11.59	0	0	0	0	0	0	-41.7	-41.7
Inverter Transformer	MV3-14 T	368678	4907498	2	0	0	56.1	56.1	1	4826.08	3.25	0	84.67	0	1.56	0	0	11.62	0	0	0	0	0	0	-41.8	-41.8
Inverter Transformer	MV3-9 T	368517	4907703	2	0	0	56.1	56.1	1	4891.04	3.25	0	84.79	0	1.59	0	0	11.71	0	0	0	0	0	0	-42.02	-42.02
Inverter Transformer	MV3-5 T	368335	4907843	2	0	0	56.1	56.1	1	4902.94	3.25	0	84.81	0	1.59	0	0	11.73	0	0	0	0	0	0	-42.07	-42.07
Inverter Transformer	MV3-1 T	368150	4907976	2	0	0	56.1	56.1	1	4917.97	3.25	0	84.84	0	1.6	0	0	11.75	0	0	0	0	0	0	-42.12	-42.12
Inverter Transformer	MV3-8 T	368685	4907712	2	0	0	56.1	56.1	1	4998.65	3.25	0	84.98	0	1.62	0	0	11.85	0	0	0	0	0	0	-42.4	-42.4
Inverter Transformer	MV3-4 T	368507	4907925	2	0	0	56.1	56.1	1	5066.8	3.25	0	85.09	0	1.65	0	0	11.94	0	0	0	0	0	0	-42.63	-42.63
Inverter Transformer	MV3-2 T	368677	4907928	2	0	0	56.1	56.1	1	5167.12	3.25	0	85.26	0	1.69	0	0	12.07	0	0	0	0	0	0	-42.96	-42.96
Inverter Transformer	MV6-3 T	370202	4907140	2	0	0	56.1	56.1	1	5682.8	3.25	0	86.09	0	1.86	0	0	12.72	0	0	0	0	0	0	-44.62	-44.62
Inverter Transformer	MV6-2 T	370091	4907339	2	0	0	56.1	56.1	1	5717.23	3.25	0	86.14	0	1.87	0	0	12.76	0	0	0	0	0	0	-44.72	-44.72
Inverter Transformer	MV4-15 T	369170	4908481	2	0	0	56.1	56.1	1	5904.65	3.25	0	86.42	0	1.93	0	0	12.99	0	0	0	0	0	0	-45.29	-45.29
Inverter Transformer	MV4-14 T	369182	4908507	2	0	0	56.1	56.1	1	5932.67	3.25	0	86.47	0	1.94	0	0	13.02	0	0	0	0	0	0	-45.37	-45.37
Inverter Transformer	MV4-13 T	369057	4908605	2	0	0	56.1	56.1	1	5938.99	3.25	0	86.47	0	1.95	0	0	13.03	0	0	0	0	0	0	-45.39	-45.39
Inverter Transformer	MV4-12 T	369049	4908803	2	0	0	56.1	56.1	1	6097.68	3.25	0	86.7	0	2	0	0	13.22	0	0	0	0	0	0	-45.86	-45.86
Inverter Transformer	MV4-7 T	369040	4909001	2	0	0	56.1	56.1	1	6258.07	3.25	0	86.93	0	2.05	0	0	13.4	0	0	0	0	0	0	-46.32	-46.32
Inverter Transformer	MV4-11 T	369269	4908855	2	0	0	56.1	56.1	1	6265.48	3.25	0	86.94	0	2.05	0	0	13.41	0	0	0	0	0	0	-46.34	-46.34
Inverter Transformer	MV4-10 T	369307	4908858	2	0	0	56.1	56.1	1	6289.97	3.25	0	86.97	0	2.05	0	0	13.44	0	0	0	0	0	0	-46.41	-46.41
Inverter Transformer	MV4-8 T	369262	4909001	2	0	0	56.1	56.1	1	6381.19	3.25	0	87.1	0	2.08	0	0	13.55	0	0	0	0	0	0	-46.67	-46.67
Inverter Transformer	MV4-9 T	369284	4909001	2	0	0	56.1	56.1	1	6393.68	3.25	0	87.12	0	2.09	0	0	13.56	0	0	0	0	0	0	-46.7	-46.7
Inverter Transformer	MV4-4 T	369033	4909199	2	0	0	56.1	56.1	1	6421.62	3.25	0	87.15	0	2.09	0	0	13.59	0	0	0	0	0	0	-46.78	-46.78
Inverter Transformer	MV5-6 T	369987	4908507	2	0	0	56.1	56.1	1	6444.94	3.25	0	87.18	0	2.1	0	0	13.62	0	0	0	0	0	0	-46.85	-46.85
Inverter Transformer	MV4-6 T	369249	4909192	2	0	0	56.1	56.1	1	6532.28	3.25	0	87.3	0	2.13	0	0	13.72	0	0	0	0	0	0	-47.09	-47.09
Inverter Transformer	MV4-5 T	369283	4909199	2	0	0	56.1	56.1	1	6556.92	3.25	0	87.33	0	2.13	0	0	13.74	0	0	0	0	0	0	-47.15	-47.15
Inverter Transformer	MV4-1 T	369017	4909397	2	0	0	56.1	56.1	1	6582.47	3.25	0	87.37	0	2.14	0	0	13.77	0	0	0	0	0	0	-47.22	-47.22
Inverter Transformer	MV5-5 T	370021	4908690	2	0	0	56.1	56.1	1	6603.84	3.25	0	87.4	0	2.15	0	0	13.8	0	0	0	0	0	0	-47.28	-47.28
Inverter Transformer	MV4-3 T	369234	4909397	2	0	0	56.1	56.1	1	6696.19	3.25	0	87.52	0	2.17	0	0	13.9	0	0	0	0	0	0	-47.53	-47.53
Inverter Transformer	MV4-2 T	369267	4909397	2	0	0	56.1	56.1	1	6713.92	3.25	0	87.54	0	2.18	0	0	13.92	0	0	0	0	0	0	-47.58	-47.58
Inverter Transformer	MV5-2 T	370011	4908853	2	0	0	56.1	56.1	1	6720.31	3.25	0	87.55	0	2.18	0	0	13.93	0	0	0	0	0	0	-47.6	-47.6
Inverter Transformer	MV5-4 T	370330	4908707	2	0	0	56.1	56.1	1	6824.83	3.25	0	87.68	0	2.21	0	0	14.04	0	0	0	0	0	0	-47.87	-47.87
Inverter Transformer	MV5-3 T	370237	4908851	2	0	0	56.1	56.1	1	6867.76	3.25	0	87.74	0	2.22	0	0	14.09	0	0	0	0	0	0	-47.99	-47.99

	Inverter Transformer	MV5-1 T	370015	4909142	2	0	0	56.1	56.1	1	6945.11	3.25	0	87.83	0	2.24	0	0	14.17	0	0	0	0	0	0	-48.19	-48.19
	Line Reactor	NGR	369421	4908787.5	5	0	0	45.4	45.4	1	6300.4	5.25	0	86.99	0	3.23	1.36	0.09	2.58	0	0	0	0	0	0	-48.81	-48.81
Limit. Valu	0		0																							
Level D/N:	24.585		24.585																							

Receiver: Existing Noise Receptor
ID: G-65
X: 367312.2
Y: 4904188.1
Z: 4.5
Ground: 0

ISO	Description	ID	X	Y	Z	Ground	ReflOrd	LxT	LxN	L/A	Dist.	hm	Freq	Adiv	K0b	Agr	Abar	z	Aatm	Afol	Ahous	Cmet	CmetN	Dc	RL	LtotT	LtotN
	Sol_Luce Substation	S_Substation	369426	4908792	3.5	0	0	112.1	112.1	1	5065.97	5.25	0	85.09	0	0.92	2.85	0.32	8.7	0	0	0	0	0	0	14.52	14.52
	Inverter	MV1-15	365315	4904994	2	0	0	100.3	100.3	1	2153.67	3.25	0	77.66	0	0.17	0	0	13.78	0	0	0	0	0	0	8.7	8.7
	Inverter	MV1-12	365038	4905386	2	0	0	100.3	100.3	1	2570.4	3.25	0	79.2	0	0.27	0	0	14.59	0	0	0	0	0	0	6.25	6.25
	Inverter	MV2-3	365820	4906641	2	0	0	100.3	100.3	1	2871.13	3.25	0	80.16	0	0.34	0	0	15.14	0	0	0	0	0	0	4.67	4.67
	Inverter	MV1-8	364788	4905647	2	0	0	100.3	100.3	1	2915.47	3.25	0	80.29	0	0.35	0	0	15.22	0	0	0	0	0	0	4.45	4.45
	Inverter	MV1-11	364655	4905414	2	0	0	100.3	100.3	1	2926.35	3.25	0	80.33	0	0.35	0	0	15.24	0	0	0	0	0	0	4.4	4.4
	Inverter	MV2-4	365586	4906624	2	0	0	100.3	100.3	1	2985.53	3.25	0	80.5	0	0.36	0	0	15.35	0	0	0	0	0	0	4.11	4.11
	Inverter	MV1-4	364815	4905918	2	0	0	100.3	100.3	1	3037.86	3.25	0	80.65	0	0.37	0	0	15.44	0	0	0	0	0	0	3.85	3.85
	Inverter	MV1-9	364561	4905646	2	0	0	100.3	100.3	1	3113.61	3.25	0	80.87	0	0.38	0	0	15.57	0	0	0	0	0	0	3.49	3.49
	Inverter	MV1-5	364671	4905892	2	0	0	100.3	100.3	1	3143.12	3.25	0	80.95	0	0.39	0	0	15.62	0	0	0	0	0	0	3.35	3.35
	Inverter	MV1-2	364753	4906063	2	0	0	100.3	100.3	1	3172.5	3.25	0	81.03	0	0.39	0	0	15.67	0	0	0	0	0	0	3.22	3.22
	Inverter	MV3-21	368478	4907206	2	0	0	100.3	100.3	1	3235.25	3.25	0	81.2	0	0.41	0	0	15.78	0	0	0	0	0	0	2.93	2.93
	Inverter	MV3-18	367752	4907412	2	0	0	100.3	100.3	1	3253.76	3.25	0	81.25	0	0.41	0	0	15.81	0	0	0	0	0	0	2.84	2.84
	Inverter	MV1-1	364715	4906166	2	0	0	100.3	100.3	1	3264.59	3.25	0	81.28	0	0.41	0	0	15.83	0	0	0	0	0	0	2.79	2.79
	Inverter	MV1-14	365163	4905049	2	0	0	97.3	97.3	1	2315.21	3.25	0	78.29	0	0.21	0	0	14.1	0	0	0	0	0	0	4.71	4.71
	Inverter	MV1-6	364477	4905835	2	0	0	100.3	100.3	1	3278.82	3.25	0	81.31	0	0.41	0	0	15.86	0	0	0	0	0	0	2.73	2.73
	Gardiner Substation	G_Sub	366586.3	4903349.9	2.5	0	0	90.8	90.8	1	1108.83	4.25	0	71.9	0	0.92	5.82	0.36	2.74	0	0	0	0	0	0	9.4	9.4
	Inverter	MV3-19	368357	4907347	2	0	0	100.3	100.3	1	3327.2	3.25	0	81.44	0	0.42	0	0	15.94	0	0	0	0	0	0	2.51	2.51
	Inverter	MV3-17	368178	4907472	2	0	0	100.3	100.3	1	3396.12	3.25	0	81.62	0	0.43	0	0	16.06	0	0	0	0	0	0	2.2	2.2
	Inverter	MV3-20	368689	4907317	2	0	0	100.3	100.3	1	3418.42	3.25	0	81.68	0	0.44	0	0	16.09	0	0	0	0	0	0	2.1	2.1
	Inverter	MV3-12	367668	4907594	2	0	0	100.3	100.3	1	3424.43	3.25	0	81.69	0	0.44	0	0	16.1	0	0	0	0	0	0	2.08	2.08
	Inverter	MV3-13	367963	4907577	2	0	0	100.3	100.3	1	3450.82	3.25	0	81.76	0	0.44	0	0	16.15	0	0	0	0	0	0	1.96	1.96
	Inverter	MV3-15	368357	4907477	2	0	0	100.3	100.3	1	3450.87	3.25	0	81.76	0	0.44	0	0	16.15	0	0	0	0	0	0	1.96	1.96
	Inverter	MV3-16	368514	4907475	2	0	0	100.3	100.3	1	3499.72	3.25	0	81.88	0	0.45	0	0	16.23	0	0	0	0	0	0	1.75	1.75
	Inverter	MV3-14	368684	4907498	2	0	0	100.3	100.3	1	3582.91	3.25	0	82.08	0	0.46	0	0	16.37	0	0	0	0	0	0	1.39	1.39
	Inverter	MV3-10	368167	4907669	2	0	0	100.3	100.3	1	3584.32	3.25	0	82.09	0	0.46	0	0	16.37	0	0	0	0	0	0	1.39	1.39
	Inverter	MV3-7	367945	4907754	2	0	0	100.3	100.3	1	3621.61	3.25	0	82.18	0	0.47	0	0	16.43	0	0	0	0	0	0	1.23	1.23
	Inverter	MV3-11	368346	4907662	2	0	0	100.3	100.3	1	3624.46	3.25	0	82.18	0	0.47	0	0	16.44	0	0	0	0	0	0	1.22	1.22
	Inverter	MV3-9	368512	4907703	2	0	0	100.3	100.3	1	3714.03	3.25	0	82.4	0	0.49	0	0	16.59	0	0	0	0	0	0	0.84	0.84
	Inverter	MV3-6	368162	4907834	2	0	0	100.3	100.3	1	3743.63	3.25	0	82.47	0	0.49	0	0	16.63	0	0	0	0	0	0	0.72	0.72
	Inverter	MV3-8	368680	4907712	2	0	0	100.3	100.3	1	3780.05	3.25	0	82.55	0	0.5	0	0	16.69	0	0	0	0	0	0	0.57	0.57
	Inverter	MV3-3	367939	4907927	2	0	0	100.3	100.3	1	3791.08	3.25	0	82.58	0	0.5	0	0	16.71	0	0	0	0	0	0	0.53	0.53
	Inverter	MV1-10	365004	4905564	2	0	0	97.3	97.3	1	2687.17	3.25	0	79.59	0	0.3	0	0	14.81	0	0	0	0	0	0	2.62	2.62
	Inverter	MV1-13	364731	4905241	2	0	0	97.3	97.3	1	2787.69	3.25	0	79.9	0	0.32	0	0	14.99	0	0	0	0	0	0	2.1	2.1
	Inverter	MV1-7	364925	4905782	2	0	0	97.3	97.3	1	2870.41	3.25	0	80.16	0	0.34	0	0	15.14	0	0	0	0	0	0	1.68	1.68
	Inverter	MV6-3	370207	4907140	2	0	0	100.3	100.3	1	4134.44	3.25	0	83.33	0	0.55	0	0	17.26	0	0	0	0	0	0	-0.82	-0.82
	Inverter	MV6-2	370085	4907339	2	0	0	100.3	100.3	1	4197.21	3.25	0	83.46	0	0.55	0	0	17.36	0	0	0	0	0	0	-1.06	-1.06
	Inverter	MV2-1	365842	4906816	2	0	0	97.3	97.3	1	3011.2	3.25	0	80.57	0	0.36	0	0	15.39	0	0	0	0	0	0	0.98	0.98
	Inverters	G_Inv2	366676.9	4903239.1	2	0	0	87.7	87.7	1	1142.02	3.25	0	72.15	0	2.47	0	0	1.61	0	0	0	0	0	0	11.43	11.43
	Inverter	MV4-11	369264	4908855	2	0	0	100.3	100.3	1	5058.61	3.25	0	85.08	0	0.65	0	0	18.67	0	0	0	0	0	0	-4.08	-4.08
	Inverter	MV4-10	369312	4908858	2	0	0	100.3	100.3	1	5080.08	3.25	0	85.12	0	0.65	0	0	18.7	0	0	0	0	0	0	-4.15	-4.15
	Inverter	MV4-7	369035	4909001	2	0	0	100.3	100.3	1	5111.95	3.25	0	85.17	0	0.65	0	0	18.74	0	0	0	0	0	0	-4.26	-4.26
	Inverter	MV4-8	369256	4909001	2	0	0	100.3	100.3	1	5190.6	3.25	0	85.3	0	0.66	0	0	18.86	0	0	0	0	0	0	-4.51	-4.51
	Inverter	MV4-9	369289	4909001	2	0	0	100.3	100.3	1	5203.05	3.25	0	85.33	0	0.66	0	0	18.88	0	0	0	0	0	0	-4.55	-4.55
	Inverter	MV5-5	370015	4908690	2	0	0	100.3	100.3	1	5250.93	3.25	0	85.4	0	0.66	0	0	18.95	0	0	0	0	0	0	-4.7	-4.7
	Inverters	G_Inv4	366732.8	4903105	2	0	0	87.7	87.7	1	1228.34	3.25	0	72.79	0	2.48	0	0	1.71	0	0	0	0	0	0	10.68	10.68
	Inverter	MV4-4	369027	4909199	2	0	0	100.3	100.3	1	5296.19	3.25	0	85.48	0	0.67	0	0	19.01	0	0	0	0	0	0	-4.84	-4.84
	Inverters	G_Inv1	366526.4	4903225.8	2	0	0	87.7	87.7	1	1242.38	3.25	0	72.89	0	2.48	0	0	1.73	0	0	0	0	0	0	10.56	10.56
	Inverter	MV4-6	369243	4909192	2	0	0	100.3	100.3	1	5363.49	3.25	0	85.59	0	0.67	0	0	19.11	0	0	0	0	0	0	-5.05	-5.05
	Inverter	MV4-5	369289	4909199	2	0	0	100.3	100.3	1	5386.73	3.25	0	85.63	0	0.67	0	0	19.14	0	0	0	0	0	0	-5.13	-5.13
	Inverter	MV5-2	370006	4908853	2	0	0	100.3	100.3	1	5386.82	3.25	0	85.63	0	0.67	0	0	19.14	0	0	0	0	0	0	-5.13	-5.13
	Inverter	MV5-4	370324	4908707	2	0	0	100.3	100.3	1	5430.6	3.25	0	85.7	0	0.68	0	0	19.2	0	0	0	0	0	0	-5.26	-5.26
	Inverter	MV4-1	369011	4909397	2	0	0	100.3	100.3	1	5478.92	3.25	0	85.77	0	0.68	0	0	19.27	0	0	0	0	0	0	-5.41	-5.41
	Inverter	MV5-3	370231	4908851	2	0	0	100.3	100.3	1	5501.09	3.25	0	85.81	0	0.68	0	0	19.3	0	0	0	0	0	0	-5.48	-5.48
	Inverter	MV4-3	369229	4909397	2	0	0	100.3	100.3	1	5550.38	3.25	0	85.89	0	0.68	0	0	19.37	0	0	0	0	0	0	-5.63	-5.63
	Inverter	MV4-2	369272	4909397	2	0	0	100.3	100.3	1	5565.38	3.25	0	85.91	0	0.68	0	0	19.39	0	0	0	0	0	0	-5.67	-5.67
	Inverter	MV5-1	370020	4909142	2	0	0	100.3	100.3	1	5645.65	3.25	0	86.03	0	0.69	0	0	19.51	0	0	0	0	0	0	-5.92	-5.92
	Inverters	G_Inv3	366583.7	4903091.4	2	0	0	87.7	87.7	1	1316.61	3.25	0	73.39	0	2.49	0	0	1.82	0	0	0	0	0	0	9.96	9.96
	Inverters	G_Inv6	366788.5	4902972	2	0	0	87.7	87.7	1	1324.07	3.25	0	73.44	0	2.5	0	0	1.83	0	0	0	0	0	0	9.9	9.9
	Inverters	G_Inv5	366638.5	4902958.1	2	0	0	87.7	87.7	1	1402.42	3.25	0	73.94	0	2.51	0	0	1.93	0	0	0	0	0	0	9.29	9.29
	Inverter	MV6-1	370235	4907364	2	0	0	97.3	97.3	1	4316.14	3.25	0	83.7	0	0.57	0	0	17.55	0	0	0	0	0	0	-4.51	-4.51

Inverters	G_Inv8	366844.5	4902838.5	2	0	0	87.7	87.7	1	1428.35	3.25	0	74.1	0	2.51	0	0	1.96	0	0	0	0	0	0	9.1	9.1
Inverters	G_Inv7	366694.6	4902824.7	2	0	0	87.7	87.7	1	1496.76	3.25	0	74.5	0	2.52	0	0	2.04	0	0	0	0	0	0	8.6	8.6
Inverters	G_Inv10	366900.7	4902704.8	2	0	0	87.7	87.7	1	1539.32	3.25	0	74.75	0	2.52	0	0	2.09	0	0	0	0	0	0	8.3	8.3
Inverters	G_Inv9	366750.9	4902691.8	2	0	0	87.7	87.7	1	1598.12	3.25	0	75.07	0	2.53	0	0	2.16	0	0	0	0	0	0	7.89	7.89
DSTATCOM - 10 MVAR #2	DSAT2	369403	4908757	2.5	0	0	96.6	96.6	1	5024.57	3.5	0	85.02	0	3.69	0	0	3.36	0	0	0	0	0	0	4.56	4.56
DSTATCOM - 10 MVAR #1	DSAT1	369437	4908757	2.5	0	0	96.6	96.6	1	5038.81	3.5	0	85.05	0	3.69	0	0	3.37	0	0	0	0	0	0	4.52	4.52
SubstationTransformer	W_ST	369711.17	4906112.3	2.5	0	0	92	92	1	3075.3	4.25	0	80.76	0	1.07	2.88	0.23	6.07	0	0	0	0	0	0	1.2	1.2
Inverter	MV2-2	365977	4906654	2	0	0	89.1	89.1	1	2804.18	3.25	0	79.96	0	1.1	0	0	9.32	0	0	0	0	0	0	-1.32	-1.32
Westbrook Inverter Enclosur	W_INV3	369508	4906164	2	0	0	89.1	89.1	1	2953.93	3.25	0	80.41	0	1.14	0	0	9.55	0	0	0	0	0	0	-2.03	-2.03
Westbrook Inverter Enclosur	W_INV2	369374	4906388	2	0	0	89.1	89.1	1	3015.06	3.25	0	80.59	0	1.15	0	0	9.64	0	0	0	0	0	0	-2.32	-2.32
Westbrook Inverter Enclosur	W_INV4	369673	4906164	2	0	0	89.1	89.1	1	3078.57	3.25	0	80.77	0	1.17	0	0	9.74	0	0	0	0	0	0	-2.61	-2.61
Inverter	MV3-22	368656	4907142	2	0	0	89.1	89.1	1	3245.2	3.25	0	81.22	0	1.21	0	0	9.99	0	0	0	0	0	0	-3.36	-3.36
Westbrook Inverter Enclosur	W_INV7	369780	4906417	2	0	0	89.1	89.1	1	3325.36	3.25	0	81.44	0	1.23	0	0	10.1	0	0	0	0	0	0	-3.71	-3.71
Westbrook Inverter Enclosur	W_INV5	369719	4906574	2	0	0	89.1	89.1	1	3388.98	3.25	0	81.6	0	1.24	0	0	10.2	0	0	0	0	0	0	-3.98	-3.98
Inverter	MV1-3	364440	4906039	2	0	0	89.1	89.1	1	3416.92	3.25	0	81.67	0	1.25	0	0	10.24	0	0	0	0	0	0	-4.1	-4.1
Westbrook Inverter Enclosur	W_INV6	369875	4906578	2	0	0	89.1	89.1	1	3504.22	3.25	0	81.89	0	1.27	0	0	10.37	0	0	0	0	0	0	-4.47	-4.47
Inverter	MV3-5	368340	4907843	2	0	0	89.1	89.1	1	3796.67	3.25	0	82.59	0	1.34	0	0	10.79	0	0	0	0	0	0	-5.67	-5.67
Inverter	MV3-1	368156	4907976	2	0	0	89.1	89.1	1	3880.75	3.25	0	82.78	0	1.36	0	0	10.91	0	0	0	0	0	0	-6	-6
Inverter	MV3-4	368502	4907925	2	0	0	89.1	89.1	1	3921.74	3.25	0	82.87	0	1.37	0	0	10.97	0	0	0	0	0	0	-6.16	-6.16
Inverter	MV3-2	368671	4907928	2	0	0	89.1	89.1	1	3979.09	3.25	0	83	0	1.39	0	0	11.05	0	0	0	0	0	0	-6.38	-6.38
Westbrook Inverter Enclosur	W_INV1	369409	4906578	2	0	0	86.1	86.1	1	3179.34	3.25	0	81.05	0	1.19	0	0	9.89	0	0	0	0	0	0	-6.07	-6.07
Fixed Reactor Bank 1	FRB1	369378	4908755	6	0	0	89.8	89.8	1	5012.4	5.25	0	85	0	-0.57	0	0	8.63	0	0	0	0	0	0	-3.29	-3.29
Fixed Reactor Bank 2	FRB2	369464	4908755	6	0	0	89.8	89.8	1	5048.45	5.25	0	85.06	0	-0.56	0	0	8.68	0	0	0	0	0	0	-3.4	-3.4
Inverter	MV4-15	369176	4908481	2	0	0	89.1	89.1	1	4680.04	3.25	0	84.4	0	1.56	0	0	12.03	0	0	0	0	0	0	-8.94	-8.94
Inverter	MV4-14	369176	4908507	2	0	0	89.1	89.1	1	4703.9	3.25	0	84.45	0	1.57	0	0	12.06	0	0	0	0	0	0	-9.02	-9.02
Inverter	MV4-13	369051	4908605	2	0	0	89.1	89.1	1	4746.83	3.25	0	84.53	0	1.58	0	0	12.12	0	0	0	0	0	0	-9.17	-9.17
Inverter	MV4-12	369043	4908803	2	0	0	89.1	89.1	1	4928.79	3.25	0	84.85	0	1.62	0	0	12.37	0	0	0	0	0	0	-9.79	-9.79
Inverter	MV5-6	369982	4908507	2	0	0	89.1	89.1	1	5077.47	3.25	0	85.11	0	1.66	0	0	12.57	0	0	0	0	0	0	-10.28	-10.28
Inverter	MV6-4	370250	4906966	2	0	0	86.1	86.1	1	4043.19	3.25	0	83.13	0	1.4	0	0	11.15	0	0	0	0	0	0	-9.63	-9.63
Westbrook Inverter Transfor	W_INVTR1	369403	4906578	2	0	0	78.2	78.2	1	3175.39	3.25	0	81.04	0	-2.76	0	0	1.73	0	0	0	0	0	0	-1.76	-1.76
Westbrook Inverter Transfor	W_INVTR3	369514	4906164	2	0	0	77.3	77.3	1	2958.4	3.25	0	80.42	0	-2.7	0	0	1.64	0	0	0	0	0	0	-2.02	-2.02
Westbrook Inverter Transfor	W_INVTR2	369368	4906388	2	0	0	77.3	77.3	1	3010.96	3.25	0	80.57	0	-2.72	0	0	1.66	0	0	0	0	0	0	-2.18	-2.18
Westbrook Inverter Transfor	W_INVTR4	369679	4906164	2	0	0	77.3	77.3	1	3083.17	3.25	0	80.78	0	-2.74	0	0	1.69	0	0	0	0	0	0	-2.39	-2.39
Westbrook Inverter Transfor	W_INVTR7	369786	4906417	2	0	0	77.3	77.3	1	3329.82	3.25	0	81.45	0	-2.8	0	0	1.79	0	0	0	0	0	0	-3.1	-3.1
Westbrook Inverter Transfor	W_INVTR5	369725	4906574	2	0	0	77.3	77.3	1	3393.25	3.25	0	81.61	0	-2.82	0	0	1.82	0	0	0	0	0	0	-3.27	-3.27
Westbrook Inverter Transfor	W_INVTR6	369881	4906578	2	0	0	77.3	77.3	1	3508.61	3.25	0	81.9	0	-2.85	0	0	1.86	0	0	0	0	0	0	-3.58	-3.58
Inverter Transformer	MV1-14 T	365157	4905049	2	0	0	69.4	69.4	1	2320.78	3.25	0	78.31	0	2.29	0	0	5.28	0	0	0	0	0	0	-16.53	-16.53
Inverter Transformer	MV1-10 T	365010	4905564	2	0	0	69.4	69.4	1	2682.02	3.25	0	79.57	0	2.41	0	0	5.61	0	0	0	0	0	0	-18.23	-18.23
Inverter Transformer	MV1-13 T	364725	4905241	2	0	0	69.4	69.4	1	2793.24	3.25	0	79.92	0	2.44	0	0	5.7	0	0	0	0	0	0	-18.72	-18.72
Inverter Transformer	MV1-7 T	364919	4905782	2	0	0	69.4	69.4	1	2875.4	3.25	0	80.17	0	2.47	0	0	5.78	0	0	0	0	0	0	-19.07	-19.07
Inverter Transformer	MV2-1 T	365836	4906816	2	0	0	69.4	69.4	1	3014.14	3.25	0	80.58	0	2.51	0	0	5.89	0	0	0	0	0	0	-19.64	-19.64
Inverter Transformer	MV6-4 T	370244	4906966	2	0	0	69.4	69.4	1	4038.83	3.25	0	83.13	0	2.8	0	0	6.71	0	0	0	0	0	0	-23.28	-23.28
Inverter Transformer	MV6-1 T	370230	4907364	2	0	0	69.4	69.4	1	4312.76	3.25	0	83.7	0	2.86	0	0	6.91	0	0	0	0	0	0	-24.11	-24.11
Inverter Transformer	MV1-15 T	365309	4904994	2	0	0	56.1	56.1	1	2159.23	3.25	0	77.69	0	0.47	0	0	7.35	0	0	0	0	0	0	-29.45	-29.45
Inverter Transformer	MV1-12 T	365044	4905386	2	0	0	56.1	56.1	1	2565.09	3.25	0	79.18	0	0.64	0	0	8.11	0	0	0	0	0	0	-31.88	-31.88
Inverter Transformer	MV2-2 T	365982	4906654	2	0	0	56.1	56.1	1	2801.8	3.25	0	79.95	0	0.75	0	0	8.53	0	0	0	0	0	0	-33.16	-33.16
Inverter Transformer	MV2-3 T	365814	4906641	2	0	0	56.1	56.1	1	2874.25	3.25	0	80.17	0	0.78	0	0	8.65	0	0	0	0	0	0	-33.54	-33.54
Inverter Transformer	MV1-8 T	364782	4905647	2	0	0	56.1	56.1	1	2920.67	3.25	0	80.31	0	0.8	0	0	8.73	0	0	0	0	0	0	-33.78	-33.78
Inverter Transformer	MV1-11 T	364649	4905414	2	0	0	56.1	56.1	1	2931.8	3.25	0	80.34	0	0.8	0	0	8.75	0	0	0	0	0	0	-33.84	-33.84
Inverter Transformer	MV2-4 T	365590	4906628	2	0	0	56.1	56.1	1	2986.48	3.25	0	80.5	0	0.82	0	0	8.85	0	0	0	0	0	0	-34.11	-34.11
Inverter Transformer	MV1-4 T	364821	4905918	2	0	0	56.1	56.1	1	3032.93	3.25	0	80.64	0	0.84	0	0	8.92	0	0	0	0	0	0	-34.35	-34.35
Inverter Transformer	MV1-9 T	364555	4905646	2	0	0	56.1	56.1	1	3118.91	3.25	0	80.88	0	0.88	0	0	9.07	0	0	0	0	0	0	-34.77	-34.77
Inverter Transformer	MV1-5 T	364676	4905892	2	0	0	56.1	56.1	1	3138.92	3.25	0	80.94	0	0.89	0	0	9.1	0	0	0	0	0	0	-34.87	-34.87
Inverter Transformer	MV1-2 T	364759	4906063	2	0	0	56.1	56.1	1	3167.66	3.25	0	81.01	0	0.9	0	0	9.15	0	0	0	0	0	0	-35.01	-35.01
Inverter Transformer	MV3-21 T	368484	4907206	2	0	0	56.1	56.1	1	3237.41	3.25	0	81.2	0	0.93	0	0	9.26	0	0	0	0	0	0	-35.34	-35.34
Inverter Transformer	MV3-22 T	368661	4907142	2	0	0	56.1	56.1	1	3247.27	3.25	0	81.23	0	0.93	0	0	9.28	0	0	0	0	0	0	-35.39	-35.39
Inverter Transformer	MV3-18 T	367757	4907412	2	0	0	56.1	56.1	1	3254.44	3.25	0	81.25	0	0.94	0	0	9.29	0	0	0	0	0	0	-35.42	-35.42
Inverter Transformer	MV1-1 T	364721	4906166	2	0	0	56.1	56.1	1	3259.82	3.25	0	81.26	0	0.94	0	0	9.3	0	0	0	0	0	0	-35.45	-35.45
Inverter Transformer	MV1-6 T	364482	4905835	2	0	0	56.1	56.1	1	3274.5	3.25	0	81.3	0	0.95	0	0	9.32	0	0	0	0	0	0	-35.52	-35.52
Inverter Transformer	MV3-19 T	368352	4907347	2	0	0	56.1	56.1	1	3325.63	3.25	0	81.44	0	0.97	0	0	9.41	0	0	0	0	0	0	-35.75	-35.75
Inverter Transformer	MV3-17 T	368183	4907472	2	0	0	56.1	56.1	1	3397.4	3.25	0	81.62	0	1	0	0	9.52	0	0	0	0	0	0	-36.09	-36.09
Inverter Transformer	MV3-20 T	368683	4907317	2	0	0	56.1	56.1	1	3416.01	3.25	0	81.67	0	1.01	0	0	9.55	0	0	0	0	0	0	-36.17	-36.17
Inverter Transformer	MV1-3 T	364435	4906039	2	0	0	56.1	56.1	1	3421.13	3.25	0	81.68	0	1.01	0	0	9.56	0	0	0	0	0	0	-36.19	-36.19
Inverter Transformer	MV3-12 T	367674	4907594	2	0	0	56.1	56.1	1	3425.06	3.25	0	81.69	0	1.01	0	0	9.57	0	0	0	0	0	0	-36.21	-36.21
Inverter Transformer	MV3-15 T	368351	4907477	2	0	0	56.1	56.1	1	3449.05	3.25	0	81.75	0	1.02	0	0	9.61	0	0	0	0	0	0	-36.32	-36.32
Inverter Transformer	MV3-13 T	367958	4907577	2	0	0	56.1	56.1	1	3449.89	3.25	0	81.76	0	1.02	0	0	9.61	0	0	0	0	0	0	-36.32	-36.32
Inverter Transformer	MV3-16 T	368509	4907475	2	0	0	56.1	56.1	1	3498.01	3.25	0	81.88	0	1.04	0	0	9.68	0	0	0	0	0	0	-36.54	-36.54
Inverter Transformer	MV3-14 T	368678	4907498	2	0	0	56.1	56.1	1	3580.62	3.25	0	82.08	0	1.07	0	0	9.81	0	0	0	0	0	0	-36.91	-36.91
Inverter Transformer	MV3-10 T	368162	4907669	2	0	0	56.1	56.1	1	3583.13	3.25	0	82.09	0	1.07	0	0	9.82	0	0	0	0	0	0	-36.92	-36.92
Inverter Transformer	MV3-7 T	367951	4907754	2	0	0	56.1	56.1	1	3622.67	3.25	0	82.18	0	1.09	0	0	9.88	0	0	0	0	0	0	-37.09	-37.09
Inverter Transformer	MV3-11 T	368340	4907662	2	0	0	56.1	56.1	1	3622.76	3.25	0	82.18	0	1.09	0	0	9.88	0	0	0	0	0	0	-37.09	-37.09
Inverter Transformer	MV3-9 T	368517	4907703	2	0	0	56.1	56.1	1	3715.65	3.25	0	82.4	0	1.13	0	0	10.02	0	0	0	0	0	0	-37.5	-37.5
Inverter Transformer	MV3-6 T	368156	4907834	2	0	0	56.1	56.1	1	3742.27	3.25	0	82.46	0	1.14	0	0	10.07	0	0	0	0	0	0	-37.61	-37.61
Inverter Transformer	MV3-8 T	368685	4907712	2	0	0	56.1	56.1	1	3781.86	3.25	0	82.55	0	1.16	0	0	10.13	0	0	0	0	0	0	-37.78	-37.78

	Inverter Transformer	MV3-3 T	367944	4907927	2	0	0	56.1	56.1	1	3791.91	3.25	0	82.58	0	1.16	0	0	10.14	0	0	0	0	0	0	-37.82	-37.82
	Inverter Transformer	MV3-5 T	368335	4907843	2	0	0	56.1	56.1	1	3795.32	3.25	0	82.58	0	1.16	0	0	10.15	0	0	0	0	0	0	-37.83	-37.83
	Inverter Transformer	MV3-1 T	368150	4907976	2	0	0	56.1	56.1	1	3879.45	3.25	0	82.78	0	1.2	0	0	10.27	0	0	0	0	0	0	-38.19	-38.19
	Inverter Transformer	MV3-4 T	368507	4907925	2	0	0	56.1	56.1	1	3923.26	3.25	0	82.87	0	1.21	0	0	10.34	0	0	0	0	0	0	-38.37	-38.37
	Inverter Transformer	MV3-2 T	368677	4907928	2	0	0	56.1	56.1	1	3981.15	3.25	0	83	0	1.24	0	0	10.43	0	0	0	0	0	0	-38.61	-38.61
	Inverter Transformer	MV6-3 T	370202	4907140	2	0	0	56.1	56.1	1	4130.94	3.25	0	83.32	0	1.3	0	0	10.65	0	0	0	0	0	0	-39.21	-39.21
	Inverter Transformer	MV6-2 T	370091	4907339	2	0	0	56.1	56.1	1	4201.18	3.25	0	83.47	0	1.32	0	0	10.75	0	0	0	0	0	0	-39.48	-39.48
	Inverter Transformer	MV4-15 T	369170	4908481	2	0	0	56.1	56.1	1	4677.65	3.25	0	84.4	0	1.51	0	0	11.42	0	0	0	0	0	0	-41.27	-41.27
	Inverter Transformer	MV4-14 T	369182	4908507	2	0	0	56.1	56.1	1	4706.28	3.25	0	84.45	0	1.52	0	0	11.46	0	0	0	0	0	0	-41.37	-41.37
	Inverter Transformer	MV4-13 T	369057	4908605	2	0	0	56.1	56.1	1	4749.04	3.25	0	84.53	0	1.53	0	0	11.52	0	0	0	0	0	0	-41.53	-41.53
	Inverter Transformer	MV4-12 T	369049	4908803	2	0	0	56.1	56.1	1	4930.9	3.25	0	84.86	0	1.6	0	0	11.76	0	0	0	0	0	0	-42.16	-42.16
	Inverter Transformer	MV4-11 T	369269	4908855	2	0	0	56.1	56.1	1	5060.54	3.25	0	85.08	0	1.65	0	0	11.93	0	0	0	0	0	0	-42.61	-42.61
	Inverter Transformer	MV4-10 T	369307	4908858	2	0	0	56.1	56.1	1	5078.11	3.25	0	85.11	0	1.65	0	0	11.96	0	0	0	0	0	0	-42.67	-42.67
	Inverter Transformer	MV5-6 T	369987	4908507	2	0	0	56.1	56.1	1	5080.1	3.25	0	85.12	0	1.65	0	0	11.96	0	0	0	0	0	0	-42.67	-42.67
	Inverter Transformer	MV4-7 T	369040	4909001	2	0	0	56.1	56.1	1	5113.64	3.25	0	85.17	0	1.67	0	0	12	0	0	0	0	0	0	-42.79	-42.79
	Inverter Transformer	MV4-8 T	369262	4909001	2	0	0	56.1	56.1	1	5192.85	3.25	0	85.31	0	1.69	0	0	12.11	0	0	0	0	0	0	-43.05	-43.05
	Inverter Transformer	MV4-9 T	369284	4909001	2	0	0	56.1	56.1	1	5201.15	3.25	0	85.32	0	1.7	0	0	12.12	0	0	0	0	0	0	-43.08	-43.08
	Inverter Transformer	MV5-5 T	370021	4908690	2	0	0	56.1	56.1	1	5254.02	3.25	0	85.41	0	1.72	0	0	12.18	0	0	0	0	0	0	-43.25	-43.25
	Inverter Transformer	MV4-4 T	369033	4909199	2	0	0	56.1	56.1	1	5298.14	3.25	0	85.48	0	1.73	0	0	12.24	0	0	0	0	0	0	-43.4	-43.4
	Inverter Transformer	MV4-6 T	369249	4909192	2	0	0	56.1	56.1	1	5365.65	3.25	0	85.59	0	1.75	0	0	12.33	0	0	0	0	0	0	-43.62	-43.62
	Inverter Transformer	MV4-5 T	369283	4909199	2	0	0	56.1	56.1	1	5384.53	3.25	0	85.62	0	1.76	0	0	12.35	0	0	0	0	0	0	-43.68	-43.68
	Inverter Transformer	MV5-2 T	370011	4908853	2	0	0	56.1	56.1	1	5389.32	3.25	0	85.63	0	1.76	0	0	12.36	0	0	0	0	0	0	-43.69	-43.69
	Inverter Transformer	MV5-4 T	370330	4908707	2	0	0	56.1	56.1	1	5433.93	3.25	0	85.7	0	1.78	0	0	12.41	0	0	0	0	0	0	-43.83	-43.83
	Inverter Transformer	MV4-1 T	369017	4909397	2	0	0	56.1	56.1	1	5480.78	3.25	0	85.78	0	1.79	0	0	12.47	0	0	0	0	0	0	-43.98	-43.98
	Inverter Transformer	MV5-3 T	370237	4908851	2	0	0	56.1	56.1	1	5504.28	3.25	0	85.81	0	1.8	0	0	12.5	0	0	0	0	0	0	-44.06	-44.06
	Inverter Transformer	MV4-3 T	369234	4909397	2	0	0	56.1	56.1	1	5552.11	3.25	0	85.89	0	1.82	0	0	12.56	0	0	0	0	0	0	-44.21	-44.21
	Inverter Transformer	MV4-2 T	369267	4909397	2	0	0	56.1	56.1	1	5563.62	3.25	0	85.91	0	1.82	0	0	12.57	0	0	0	0	0	0	-44.25	-44.25
	Inverter Transformer	MV5-1 T	370015	4909142	2	0	0	56.1	56.1	1	5643.25	3.25	0	86.03	0	1.85	0	0	12.67	0	0	0	0	0	0	-44.49	-44.49
	Line Reactor	NGR	369421	4908787.5	5	0	0	45.4	45.4	1	5059.79	5.25	0	85.08	0	3.26	1.35	0.11	2.07	0	0	0	0	0	0	-46.41	-46.41
Limit. Valu	0	0																								
Level D/N:	23.5341	23.5341																								

Receiver: Existing Noise Receptor
ID: G-66
X: 365807.2
Y: 4902040.1
Z: 4.5
Ground: 0

ISO	Description	ID	X	Y	Z	Ground	ReflOrd	LxT	LxN	L/A	Dist.	hm	Freq	Adiv	K0b	Agr	Abar	z	Aatm	Afol	Ahous	Cmet	CmetN	Dc	RL	LtotT	LtotN
	Sol_Luce Substation	S_Substation	369426	4908792	3.5	0	0	112.1	112.1	1	7660.54	5.25	0	88.69	0	1.5	2.32	0.31	11.36	0	0	0	0	0	0	8.21	8.21
	Inverter	MV1-15	365315	4904994	2	0	0	100.3	100.3	1	2994.63	3.25	0	80.53	0	0.36	0	0	15.36	0	0	0	0	0	0	4.06	4.06
	Inverter	MV1-12	365038	4905386	2	0	0	100.3	100.3	1	3433.18	3.25	0	81.71	0	0.44	0	0	16.12	0	0	0	0	0	0	2.04	2.04
	Inverter	MV1-11	364655	4905414	2	0	0	100.3	100.3	1	3565.22	3.25	0	82.04	0	0.46	0	0	16.34	0	0	0	0	0	0	1.47	1.47
	Inverter	MV1-8	364788	4905647	2	0	0	100.3	100.3	1	3748.13	3.25	0	82.48	0	0.49	0	0	16.64	0	0	0	0	0	0	0.7	0.7
	Inverter	MV1-9	364561	4905646	2	0	0	100.3	100.3	1	3815.17	3.25	0	82.63	0	0.5	0	0	16.75	0	0	0	0	0	0	0.43	0.43
	Inverter	MV1-4	364815	4905918	2	0	0	100.3	100.3	1	4002.82	3.25	0	83.05	0	0.53	0	0	17.05	0	0	0	0	0	0	-0.32	-0.32
	Inverter	MV1-5	364671	4905892	2	0	0	100.3	100.3	1	4015.98	3.25	0	83.08	0	0.53	0	0	17.07	0	0	0	0	0	0	-0.37	-0.37
	Inverter	MV1-6	364477	4905835	2	0	0	100.3	100.3	1	4021.28	3.25	0	83.09	0	0.53	0	0	17.08	0	0	0	0	0	0	-0.39	-0.39
	Inverter	MV1-2	364753	4906063	2	0	0	100.3	100.3	1	4158.73	3.25	0	83.38	0	0.55	0	0	17.3	0	0	0	0	0	0	-0.92	-0.92
	Inverter	MV1-1	364715	4906166	2	0	0	100.3	100.3	1	4268.02	3.25	0	83.6	0	0.56	0	0	17.47	0	0	0	0	0	0	-1.33	-1.33
	Inverter	MV1-14	365163	4905049	2	0	0	97.3	97.3	1	3077.09	3.25	0	80.76	0	0.38	0	0	15.51	0	0	0	0	0	0	0.66	0.66
	Gardiner Substation	G_Sub	366586.3	4903349.9	2.5	0	0	90.8	90.8	1	1524	3.5	0	74.66	0	-0.27	0	0	3.53	0	0	0	0	0	0	12.86	12.86
	Inverter	MV2-4	365586	4906624	2	0	0	100.3	100.3	1	4589.23	3.25	0	84.23	0	0.6	0	0	17.97	0	0	0	0	0	0	-2.49	-2.49
	Inverter	MV2-3	365820	4906641	2	0	0	100.3	100.3	1	4600.92	3.25	0	84.26	0	0.6	0	0	17.98	0	0	0	0	0	0	-2.53	-2.53
	Inverter	MV1-13	364731	4905241	2	0	0	97.3	97.3	1	3376.98	3.25	0	81.57	0	0.43	0	0	16.02	0	0	0	0	0	0	-0.71	-0.71
	Inverters	G_Inv9	366750.9	4902691.8	2	0	0	87.7	87.7	1	1146.86	3.25	0	72.19	0	2.47	0	0	1.61	0	0	0	0	0	0	11.39	11.39
	Inverters	G_Inv7	366694.6	4902824.7	2	0	0	87.7	87.7	1	1184.52	3.25	0	72.47	0	2.48	0	0	1.66	0	0	0	0	0	0	11.06	11.06
	Inverter	MV1-10	365004	4905564	2	0	0	97.3	97.3	1	3614.28	3.25	0	82.16	0	0.47	0	0	16.42	0	0	0	0	0	0	-1.74	-1.74
	Inverters	G_Inv5	366638.5	4902958.1	2	0	0	87.7	87.7	1	1238.46	3.25	0	72.86	0	2.48	0	0	1.73	0	0	0	0	0	0	10.59	10.59
	Inverter	MV1-7	364925	4905782	2	0	0	97.3	97.3	1	3844.49	3.25	0	82.7	0	0.5	0	0	16.8	0	0	0	0	0	0	-2.69	-2.69
	Inverters	G_Inv10	366900.7	4902704.8	2	0	0	87.7	87.7	1	1279.68	3.25	0	73.14	0	2.49	0	0	1.78	0	0	0	0	0	0	10.25	10.25
	Inverters	G_Inv3	366583.7	4903091.4	2	0	0	87.7	87.7	1	1306.98	3.25	0	73.33	0	2.49	0	0	1.81	0	0	0	0	0	0	10.03	10.03
	Inverters	G_Inv8	366844.5	4902838.5	2	0	0	87.7	87.7	1	1308.98	3.25	0	73.34	0	2.49	0	0	1.81	0	0	0	0	0	0	10.02	10.02
	Inverter	MV3-18	367752	4907412	2	0	0	100.3	100.3	1	5713.1	3.25	0	86.14	0	0.69	0	0	19.6	0	0	0	0	0	0	-6.12	-6.12
	Inverters	G_Inv6	366788.5	4902972	2	0	0	87.7	87.7	1	1353.29	3.25	0	73.63	0	2.5	0	0	1.87	0	0	0	0	0	0	9.67	9.67
	Inverter	MV3-21	368478	4907206	2	0	0	100.3	100.3	1	5815.47	3.25	0	86.29	0	0.7	0	0	19.74	0	0	0	0	0	0	-6.42	-6.42
	Inverter	MV3-12	367668	4907594	2	0	0	100.3	100.3	1	5857.34	3.25	0	86.35	0	0.7	0	0	19.8	0	0	0	0	0	0	-6.54	-6.54
	Inverter	MV3-19	368357	4907347	2	0	0	100.3	100.3	1	5887.67	3.25	0	86.4	0	0.7	0	0	19.84	0	0	0	0	0	0	-6.63	-6.63
	Inverter	MV3-17	368178	4907472	2	0	0	100.3	100.3	1	5926.74	3.25	0	86.46	0	0.7	0	0	19.89	0	0	0	0	0	0	-6.74	-6.74
	Inverter	MV3-13	367963	4907577	2	0	0	100.3	100.3	1	5941.78	3.25	0	86.48	0	0.7	0	0	19.91	0	0	0	0	0	0	-6.78	-6.78
	Inverters	G_Inv1	366526.4	4903225.8	2	0	0	87.7	87.7	1	1386.77	3.25	0	73.84	0	2.5	0	0	1.91	0	0	0	0	0	0	9.41	9.41
	Inverter	MV3-15	368357	4907477	2	0	0	100.3	100.3	1	6005.11	3.25	0	86.57	0	0.71	0	0	20	0	0	0	0	0	0	-6.96	-6.96
	Inverter	MV3-20	368689	4907317	2	0	0	100.3	100.3	1	6012.52	3.25	0	86.58	0	0.71	0	0	20.01	0	0	0	0	0	0	-6.98	-6.98

Inverters	G_Inv4	366732.8	4903105	2	0	0	87.7	87.7	1	1410.94	3.25	0	73.99	0	2.51	0	0	1.94	0	0	0	0	0	0	9.23	9.23
Inverter	MV3-16	368514	4907475	2	0	0	100.3	100.3	1	6071.65	3.25	0	86.67	0	0.71	0	0	20.09	0	0	0	0	0	0	-7.15	-7.15
Inverter	MV3-7	367945	4907754	2	0	0	100.3	100.3	1	6100.73	3.25	0	86.71	0	0.71	0	0	20.13	0	0	0	0	0	0	-7.23	-7.23
Inverter	MV3-10	368167	4907669	2	0	0	100.3	100.3	1	6103.54	3.25	0	86.71	0	0.71	0	0	20.13	0	0	0	0	0	0	-7.24	-7.24
Inverter	MV3-11	368346	4907662	2	0	0	100.3	100.3	1	6168.57	3.25	0	86.8	0	0.71	0	0	20.22	0	0	0	0	0	0	-7.42	-7.42
Inverter	MV3-14	368684	4907498	2	0	0	100.3	100.3	1	6169.66	3.25	0	86.81	0	0.71	0	0	20.22	0	0	0	0	0	0	-7.43	-7.43
Inverter	MV3-6	368162	4907834	2	0	0	100.3	100.3	1	6254.15	3.25	0	86.92	0	0.71	0	0	20.33	0	0	0	0	0	0	-7.66	-7.66
Inverter	MV3-3	367939	4907927	2	0	0	100.3	100.3	1	6261	3.25	0	86.93	0	0.71	0	0	20.34	0	0	0	0	0	0	-7.68	-7.68
Inverter	MV3-9	368512	4907703	2	0	0	100.3	100.3	1	6275.7	3.25	0	86.95	0	0.71	0	0	20.36	0	0	0	0	0	0	-7.72	-7.72
Inverters	G_Inv2	366676.9	4903239.1	2	0	0	87.7	87.7	1	1481.21	3.25	0	74.41	0	2.52	0	0	2.02	0	0	0	0	0	0	8.71	8.71
Inverter	MV3-8	368680	4907712	2	0	0	100.3	100.3	1	6357.94	3.25	0	87.07	0	0.71	0	0	20.47	0	0	0	0	0	0	-7.94	-7.94
Inverter	MV6-3	370207	4907140	2	0	0	100.3	100.3	1	6735.52	3.25	0	87.57	0	0.71	0	0	20.96	0	0	0	0	0	0	-8.93	-8.93
Inverter	MV2-1	365842	4906816	2	0	0	97.3	97.3	1	4776.03	3.25	0	84.58	0	0.62	0	0	18.25	0	0	0	0	0	0	-6.14	-6.14
Inverter	MV6-2	370085	4907339	2	0	0	100.3	100.3	1	6810.13	3.25	0	87.66	0	0.71	0	0	21.06	0	0	0	0	0	0	-9.12	-9.12
Inverter	MV4-11	369264	4908855	2	0	0	100.3	100.3	1	7641.49	3.25	0	88.66	0	0.68	0	0	22.08	0	0	0	0	0	0	-11.12	-11.12
Inverter	MV4-10	369312	4908858	2	0	0	100.3	100.3	1	7665.99	3.25	0	88.69	0	0.68	0	0	22.11	0	0	0	0	0	0	-11.17	-11.17
Inverter	MV4-7	369035	4909001	2	0	0	100.3	100.3	1	7672.86	3.25	0	88.7	0	0.68	0	0	22.12	0	0	0	0	0	0	-11.19	-11.19
Inverter	MV4-8	369256	4909001	2	0	0	100.3	100.3	1	7768.42	3.25	0	88.81	0	0.67	0	0	22.23	0	0	0	0	0	0	-11.4	-11.4
Inverter	MV4-9	369289	4909001	2	0	0	100.3	100.3	1	7783.13	3.25	0	88.82	0	0.67	0	0	22.25	0	0	0	0	0	0	-11.43	-11.43
Inverter	MV4-4	369027	4909199	2	0	0	100.3	100.3	1	7849.65	3.25	0	88.9	0	0.67	0	0	22.33	0	0	0	0	0	0	-11.58	-11.58
Inverter	MV5-5	370015	4908690	2	0	0	100.3	100.3	1	7869.36	3.25	0	88.92	0	0.66	0	0	22.35	0	0	0	0	0	0	-11.62	-11.62
Inverter	MV4-6	369243	4909192	2	0	0	100.3	100.3	1	7934.38	3.25	0	88.99	0	0.66	0	0	22.43	0	0	0	0	0	0	-11.77	-11.77
Inverter	MV4-5	369289	4909199	2	0	0	100.3	100.3	1	7960.7	3.25	0	89.02	0	0.66	0	0	22.46	0	0	0	0	0	0	-11.82	-11.82
Inverter	MV5-2	370006	4908853	2	0	0	100.3	100.3	1	8002.85	3.25	0	89.06	0	0.65	0	0	22.51	0	0	0	0	0	0	-11.91	-11.91
Inverter	MV4-1	369011	4909397	2	0	0	100.3	100.3	1	8024.23	3.25	0	89.09	0	0.65	0	0	22.53	0	0	0	0	0	0	-11.96	-11.96
Inverter	MV5-4	370324	4908707	2	0	0	100.3	100.3	1	8052.89	3.25	0	89.12	0	0.65	0	0	22.57	0	0	0	0	0	0	-12.02	-12.02
Inverter	MV4-3	369229	4909397	2	0	0	100.3	100.3	1	8113.74	3.25	0	89.18	0	0.64	0	0	22.64	0	0	0	0	0	0	-12.15	-12.15
Inverter	MV5-3	370231	4908851	2	0	0	100.3	100.3	1	8121.48	3.25	0	89.19	0	0.64	0	0	22.65	0	0	0	0	0	0	-12.17	-12.17
Inverter	MV4-2	369272	4909397	2	0	0	100.3	100.3	1	8131.96	3.25	0	89.2	0	0.64	0	0	22.66	0	0	0	0	0	0	-12.19	-12.19
Inverter	MV5-1	370020	4909142	2	0	0	100.3	100.3	1	8257.4	3.25	0	89.34	0	0.63	0	0	22.8	0	0	0	0	0	0	-12.45	-12.45
Inverter	MV6-1	370235	4907364	2	0	0	97.3	97.3	1	6924.55	3.25	0	87.81	0	0.71	0	0	21.2	0	0	0	0	0	0	-12.41	-12.41
DSTATCOM - 10 MVAR #2	DSAT2	369403	4908757	2.5	0	0	96.6	96.6	1	7618.83	3.5	0	88.64	0	3.87	0	0	4.6	0	0	0	0	0	0	-0.47	-0.47
DSTATCOM - 10 MVAR #1	DSAT1	369437	4908757	2.5	0	0	96.6	96.6	1	7634.93	3.5	0	88.66	0	3.87	0	0	4.6	0	0	0	0	0	0	-0.5	-0.5
SubstationTransformer	W_ST	369711.17	4906112.3	2.5	0	0	92	92	1	5641.24	3.5	0	86.03	0	0.7	0	-0.1	9.35	0	0	0	0	0	0	-4.1	-4.1
Inverter	MV1-3	364440	4906039	2	0	0	89.1	89.1	1	4226.16	3.25	0	83.52	0	1.45	0	0	11.4	0	0	0	0	0	0	-7.31	-7.31
Inverter	MV2-2	365977	4906654	2	0	0	89.1	89.1	1	4617.02	3.25	0	84.29	0	1.54	0	0	11.95	0	0	0	0	0	0	-8.72	-8.72
Westbrook Inverter Enclosur	W_INV3	369508	4906164	2	0	0	89.1	89.1	1	5540.98	3.25	0	85.87	0	1.77	0	0	13.18	0	0	0	0	0	0	-11.76	-11.76
Westbrook Inverter Enclosur	W_INV2	369374	4906388	2	0	0	89.1	89.1	1	5623.73	3.25	0	86	0	1.79	0	0	13.28	0	0	0	0	0	0	-12.02	-12.02
Westbrook Inverter Enclosur	W_INV4	369673	4906164	2	0	0	89.1	89.1	1	5652.52	3.25	0	86.04	0	1.8	0	0	13.32	0	0	0	0	0	0	-12.11	-12.11
Inverter	MV3-22	368656	4907142	2	0	0	89.1	89.1	1	5843.38	3.25	0	86.33	0	1.85	0	0	13.56	0	0	0	0	0	0	-12.69	-12.69
Westbrook Inverter Enclosur	W_INV7	369780	4906417	2	0	0	89.1	89.1	1	5911.04	3.25	0	86.43	0	1.86	0	0	13.65	0	0	0	0	0	0	-12.89	-12.89
Westbrook Inverter Enclosur	W_INV5	369719	4906574	2	0	0	89.1	89.1	1	5988.19	3.25	0	86.55	0	1.88	0	0	13.75	0	0	0	0	0	0	-13.12	-13.12
Westbrook Inverter Enclosur	W_INV6	369875	4906578	2	0	0	89.1	89.1	1	6094.22	3.25	0	86.7	0	1.91	0	0	13.88	0	0	0	0	0	0	-13.43	-13.43
Inverter	MV3-5	368340	4907843	2	0	0	89.1	89.1	1	6331.57	3.25	0	87.03	0	1.97	0	0	14.18	0	0	0	0	0	0	-14.12	-14.12
Inverter	MV3-1	368156	4907976	2	0	0	89.1	89.1	1	6383.71	3.25	0	87.1	0	1.98	0	0	14.24	0	0	0	0	0	0	-14.26	-14.26
Inverter	MV3-4	368502	4907925	2	0	0	89.1	89.1	1	6472.56	3.25	0	87.22	0	2	0	0	14.35	0	0	0	0	0	0	-14.51	-14.51
Inverter	MV3-2	368671	4907928	2	0	0	89.1	89.1	1	6547.42	3.25	0	87.32	0	2.02	0	0	14.44	0	0	0	0	0	0	-14.72	-14.72
Fixed Reactor Bank 1	FRB1	369378	4908755	6	0	0	89.8	89.8	1	7605.29	5.25	0	88.62	0	-0.21	0	0	11.31	0	0	0	0	0	0	-9.94	-9.94
Fixed Reactor Bank 2	FRB2	369464	4908755	6	0	0	89.8	89.8	1	7646.05	5.25	0	88.67	0	-0.21	0	0	11.34	0	0	0	0	0	0	-10.03	-10.03
Inverter	MV4-15	369176	4908481	2	0	0	89.1	89.1	1	7268.7	3.25	0	88.23	0	2.19	0	0	15.3	0	0	0	0	0	0	-16.67	-16.67
Inverter	MV4-14	369176	4908507	2	0	0	89.1	89.1	1	7291.75	3.25	0	88.26	0	2.2	0	0	15.33	0	0	0	0	0	0	-16.73	-16.73
Inverter	MV4-13	369051	4908605	2	0	0	89.1	89.1	1	7322.58	3.25	0	88.29	0	2.2	0	0	15.37	0	0	0	0	0	0	-16.81	-16.81
Inverter	MV4-12	369043	4908803	2	0	0	89.1	89.1	1	7497.15	3.25	0	88.5	0	2.25	0	0	15.57	0	0	0	0	0	0	-17.25	-17.25
Inverter	MV5-6	369982	4908507	2	0	0	89.1	89.1	1	7697.39	3.25	0	88.73	0	2.29	0	0	15.8	0	0	0	0	0	0	-17.76	-17.76
Westbrook Inverter Enclosur	W_INV1	369409	4906578	2	0	0	86.1	86.1	1	5793.57	3.25	0	86.26	0	1.84	0	0	13.5	0	0	0	0	0	0	-15.54	-15.54
Inverter	MV6-4	370250	4906966	2	0	0	86.1	86.1	1	6633.47	3.25	0	87.43	0	2.04	0	0	14.55	0	0	0	0	0	0	-17.96	-17.96
Westbrook Inverter Transfor	W_INVTR1	369403	4906578	2	0	0	78.2	78.2	1	5789.85	3.25	0	86.25	0	-3.33	0	0	2.67	0	0	0	0	0	0	-7.36	-7.36
Westbrook Inverter Transfor	W_INVTR3	369514	4906164	2	0	0	77.3	77.3	1	5544.99	3.25	0	85.88	0	-3.28	0	0	2.6	0	0	0	0	0	0	-7.85	-7.85
Westbrook Inverter Transfor	W_INVTR2	369368	4906388	2	0	0	77.3	77.3	1	5619.92	3.25	0	85.99	0	-3.3	0	0	2.62	0	0	0	0	0	0	-7.97	-7.97
Westbrook Inverter Transfor	W_INVTR4	369679	4906164	2	0	0	77.3	77.3	1	5656.62	3.25	0	86.05	0	-3.3	0	0	2.63	0	0	0	0	0	0	-8.04	-8.04
Westbrook Inverter Transfor	W_INVTR7	369786	4906417	2	0	0	77.3	77.3	1	5915.07	3.25	0	86.44	0	-3.35	0	0	2.71	0	0	0	0	0	0	-8.46	-8.46
Westbrook Inverter Transfor	W_INVTR5	369725	4906574	2	0	0	77.3	77.3	1	5992.11	3.25	0	86.55	0	-3.37	0	0	2.74	0	0	0	0	0	0	-8.58	-8.58
Westbrook Inverter Transfor	W_INVTR6	369881	4906578	2	0	0	77.3	77.3	1	6098.23	3.25	0	86.7	0	-3.39	0	0	2.77	0	0	0	0	0	0	-8.75	-8.75
Inverter Transformer	MV1-14 T	365157	4905049	2	0	0	69.4	69.4	1	3078.35	3.25	0	80.77	0	2.53	0	0	5.95	0	0	0	0	0	0	-19.9	-19.9
Inverter Transformer	MV1-13 T	364725	4905241	2	0	0	69.4	69.4	1	3378.89	3.25	0	81.58	0	2.62	0	0	6.2	0	0	0	0	0	0	-21.04	-21.04
Inverter Transformer	MV1-10 T	365010	4905564	2	0	0	69.4	69.4	1	3612.95	3.25	0	82.16	0	2.68	0	0	6.38	0	0	0	0	0	0	-21.87	-21.87
Inverter Transformer	MV1-7 T	364919	4905782	2	0	0	69.4	69.4	1	3845.87	3.25	0	82.7	0	2.75	0	0	6.56	0	0	0	0	0	0	-22.66	-22.66
Inverter Transformer	MV2-1 T	365836	4906816	2	0	0	69.4	69.4	1	4775.99	3.25	0	84.58	0	2.97	0	0	7.23	0	0	0	0	0	0	-25.43	-25.43
Inverter Transformer	MV6-4 T	370244	4906966	2	0	0	69.4	69.4	1	6629.46	3.25	0	87.43	0	3.27	0	0	8.39	0	0	0	0	0	0	-29.74	-29.74
Inverter Transformer	MV6-1 T	370230	4907364	2	0	0	69.4	69.4	1	6921.35	3.25	0	87.8	0	3.31	0	0	8.56	0	0	0	0	0	0	-30.32	-30.32
Inverter Transformer	MV1-15 T	365309	4904994	2	0	0	56.1	56.1	1	2995.62	3.25	0	80.53	0	0.83	0	0	8.86	0	0	0	0	0	0	-34.16	-34.16
Inverter Transformer	MV1-12 T	365044	4905386	2	0	0	56.1	56.1	1	3431.84	3.25	0	81.71	0	1.01	0	0	9.58	0	0	0	0	0	0	-36.24	-36.24
Inverter Transformer	MV1-11 T	364649	4905414	2	0	0	56.1	56.1	1	3567.16	3.25	0	82.05	0	1.07	0	0	9.79	0	0	0	0	0	0	-36.85	-36.85
Inverter Transformer	MV1-8 T	364782	4905647	2	0	0	56.1	56.1	1	3749.77	3.25	0	82.48	0	1.14	0	0	10.08	0	0	0	0	0	0	-37.64	-37.64

	Inverter Transformer	MV1-9 T	364555	4905646	2	0	0	56.1	56.1	1	3817.14	3.25	0	82.63	0	1.17	0	0	10.18	0	0	0	0	0	0	-37.93	-37.93
	Inverter Transformer	MV1-4 T	364821	4905918	2	0	0	56.1	56.1	1	4001.34	3.25	0	83.04	0	1.24	0	0	10.46	0	0	0	0	0	0	-38.69	-38.69
	Inverter Transformer	MV1-5 T	364676	4905892	2	0	0	56.1	56.1	1	4014.57	3.25	0	83.07	0	1.25	0	0	10.48	0	0	0	0	0	0	-38.74	-38.74
	Inverter Transformer	MV1-6 T	364482	4905835	2	0	0	56.1	56.1	1	4019.63	3.25	0	83.08	0	1.25	0	0	10.48	0	0	0	0	0	0	-38.76	-38.76
	Inverter Transformer	MV1-2 T	364759	4906063	2	0	0	56.1	56.1	1	4157.22	3.25	0	83.38	0	1.31	0	0	10.69	0	0	0	0	0	0	-39.31	-39.31
	Inverter Transformer	MV1-3 T	364435	4906039	2	0	0	56.1	56.1	1	4227.78	3.25	0	83.52	0	1.33	0	0	10.79	0	0	0	0	0	0	-39.59	-39.59
	Inverter Transformer	MV1-1 T	364721	4906166	2	0	0	56.1	56.1	1	4266.48	3.25	0	83.6	0	1.35	0	0	10.84	0	0	0	0	0	0	-39.74	-39.74
	Inverter Transformer	MV2-4 T	365590	4906628	2	0	0	56.1	56.1	1	4593.04	3.25	0	84.24	0	1.47	0	0	11.3	0	0	0	0	0	0	-40.96	-40.96
	Inverter Transformer	MV2-3 T	365814	4906641	2	0	0	56.1	56.1	1	4600.91	3.25	0	84.26	0	1.48	0	0	11.32	0	0	0	0	0	0	-40.99	-40.99
	Inverter Transformer	MV2-2 T	365982	4906654	2	0	0	56.1	56.1	1	4617.21	3.25	0	84.29	0	1.48	0	0	11.34	0	0	0	0	0	0	-41.05	-41.05
	Inverter Transformer	MV3-18 T	367757	4907412	2	0	0	56.1	56.1	1	5714.81	3.25	0	86.14	0	1.87	0	0	12.76	0	0	0	0	0	0	-44.71	-44.71
	Inverter Transformer	MV3-21 T	368484	4907206	2	0	0	56.1	56.1	1	5818.23	3.25	0	86.3	0	1.91	0	0	12.89	0	0	0	0	0	0	-45.03	-45.03
	Inverter Transformer	MV3-22 T	368661	4907142	2	0	0	56.1	56.1	1	5845.82	3.25	0	86.34	0	1.92	0	0	12.92	0	0	0	0	0	0	-45.11	-45.11
	Inverter Transformer	MV3-12 T	367674	4907594	2	0	0	56.1	56.1	1	5859.25	3.25	0	86.36	0	1.92	0	0	12.94	0	0	0	0	0	0	-45.15	-45.15
	Inverter Transformer	MV3-19 T	368352	4907347	2	0	0	56.1	56.1	1	5885.51	3.25	0	86.4	0	1.93	0	0	12.97	0	0	0	0	0	0	-45.23	-45.23
	Inverter Transformer	MV3-17 T	368183	4907472	2	0	0	56.1	56.1	1	5928.74	3.25	0	86.46	0	1.94	0	0	13.02	0	0	0	0	0	0	-45.36	-45.36
	Inverter Transformer	MV3-13 T	367958	4907577	2	0	0	56.1	56.1	1	5939.97	3.25	0	86.48	0	1.95	0	0	13.03	0	0	0	0	0	0	-45.39	-45.39
	Inverter Transformer	MV3-15 T	368351	4907477	2	0	0	56.1	56.1	1	6002.57	3.25	0	86.57	0	1.97	0	0	13.11	0	0	0	0	0	0	-45.58	-45.58
	Inverter Transformer	MV3-20 T	368683	4907317	2	0	0	56.1	56.1	1	6009.65	3.25	0	86.58	0	1.97	0	0	13.11	0	0	0	0	0	0	-45.6	-45.6
	Inverter Transformer	MV3-16 T	368509	4907475	2	0	0	56.1	56.1	1	6069.42	3.25	0	86.66	0	1.99	0	0	13.18	0	0	0	0	0	0	-45.78	-45.78
	Inverter Transformer	MV3-10 T	368162	4907669	2	0	0	56.1	56.1	1	6101.61	3.25	0	86.71	0	2	0	0	13.22	0	0	0	0	0	0	-45.87	-45.87
	Inverter Transformer	MV3-7 T	367951	4907754	2	0	0	56.1	56.1	1	6102.83	3.25	0	86.71	0	2	0	0	13.22	0	0	0	0	0	0	-45.87	-45.87
	Inverter Transformer	MV3-11 T	368340	4907662	2	0	0	56.1	56.1	1	6166.1	3.25	0	86.8	0	2.02	0	0	13.3	0	0	0	0	0	0	-46.06	-46.06
	Inverter Transformer	MV3-14 T	368678	4907498	2	0	0	56.1	56.1	1	6166.86	3.25	0	86.8	0	2.02	0	0	13.3	0	0	0	0	0	0	-46.06	-46.06
	Inverter Transformer	MV3-6 T	368156	4907834	2	0	0	56.1	56.1	1	6251.89	3.25	0	86.92	0	2.04	0	0	13.4	0	0	0	0	0	0	-46.3	-46.3
	Inverter Transformer	MV3-3 T	367944	4907927	2	0	0	56.1	56.1	1	6262.71	3.25	0	86.94	0	2.05	0	0	13.41	0	0	0	0	0	0	-46.33	-46.33
	Inverter Transformer	MV3-9 T	368517	4907703	2	0	0	56.1	56.1	1	6277.85	3.25	0	86.96	0	2.05	0	0	13.43	0	0	0	0	0	0	-46.38	-46.38
	Inverter Transformer	MV3-5 T	368335	4907843	2	0	0	56.1	56.1	1	6329.57	3.25	0	87.03	0	2.07	0	0	13.49	0	0	0	0	0	0	-46.52	-46.52
	Inverter Transformer	MV3-8 T	368685	4907712	2	0	0	56.1	56.1	1	6360.2	3.25	0	87.07	0	2.08	0	0	13.52	0	0	0	0	0	0	-46.61	-46.61
	Inverter Transformer	MV3-1 T	368150	4907976	2	0	0	56.1	56.1	1	6381.51	3.25	0	87.1	0	2.08	0	0	13.55	0	0	0	0	0	0	-46.67	-46.67
	Inverter Transformer	MV3-4 T	368507	4907925	2	0	0	56.1	56.1	1	6474.64	3.25	0	87.22	0	2.11	0	0	13.65	0	0	0	0	0	0	-46.93	-46.93
	Inverter Transformer	MV3-2 T	368677	4907928	2	0	0	56.1	56.1	1	6550.05	3.25	0	87.32	0	2.13	0	0	13.74	0	0	0	0	0	0	-47.14	-47.14
	Inverter Transformer	MV6-3 T	370202	4907140	2	0	0	56.1	56.1	1	6732.25	3.25	0	87.56	0	2.18	0	0	13.94	0	0	0	0	0	0	-47.63	-47.63
	Inverter Transformer	MV6-2 T	370091	4907339	2	0	0	56.1	56.1	1	6813.9	3.25	0	87.67	0	2.21	0	0	14.03	0	0	0	0	0	0	-47.85	-47.85
	Inverter Transformer	MV4-15 T	369170	4908481	2	0	0	56.1	56.1	1	7265.92	3.25	0	88.23	0	2.33	0	0	14.51	0	0	0	0	0	0	-49.01	-49.01
	Inverter Transformer	MV4-14 T	369182	4908507	2	0	0	56.1	56.1	1	7294.52	3.25	0	88.26	0	2.34	0	0	14.54	0	0	0	0	0	0	-49.08	-49.08
	Inverter Transformer	MV4-13 T	369057	4908605	2	0	0	56.1	56.1	1	7325.24	3.25	0	88.3	0	2.35	0	0	14.57	0	0	0	0	0	0	-49.16	-49.16
	Inverter Transformer	MV4-12 T	369049	4908803	2	0	0	56.1	56.1	1	7499.74	3.25	0	88.5	0	2.39	0	0	14.75	0	0	0	0	0	0	-49.59	-49.59
	Inverter Transformer	MV4-11 T	369269	4908855	2	0	0	56.1	56.1	1	7643.75	3.25	0	88.67	0	2.43	0	0	14.9	0	0	0	0	0	0	-49.93	-49.93
	Inverter Transformer	MV4-10 T	369307	4908858	2	0	0	56.1	56.1	1	7663.7	3.25	0	88.69	0	2.43	0	0	14.92	0	0	0	0	0	0	-49.98	-49.98
	Inverter Transformer	MV4-7 T	369040	4909001	2	0	0	56.1	56.1	1	7674.97	3.25	0	88.7	0	2.43	0	0	14.93	0	0	0	0	0	0	-50.01	-50.01
	Inverter Transformer	MV5-6 T	369987	4908507	2	0	0	56.1	56.1	1	7700.1	3.25	0	88.73	0	2.44	0	0	14.96	0	0	0	0	0	0	-50.07	-50.07
	Inverter Transformer	MV4-8 T	369262	4909001	2	0	0	56.1	56.1	1	7771.09	3.25	0	88.81	0	2.46	0	0	15.03	0	0	0	0	0	0	-50.24	-50.24
	Inverter Transformer	MV4-9 T	369284	4909001	2	0	0	56.1	56.1	1	7780.89	3.25	0	88.82	0	2.46	0	0	15.04	0	0	0	0	0	0	-50.26	-50.26
	Inverter Transformer	MV4-4 T	369033	4909199	2	0	0	56.1	56.1	1	7852.11	3.25	0	88.9	0	2.48	0	0	15.11	0	0	0	0	0	0	-50.43	-50.43
	Inverter Transformer	MV5-5 T	370021	4908690	2	0	0	56.1	56.1	1	7872.57	3.25	0	88.92	0	2.48	0	0	15.13	0	0	0	0	0	0	-50.47	-50.47
	Inverter Transformer	MV4-6 T	369249	4909192	2	0	0	56.1	56.1	1	7936.98	3.25	0	88.99	0	2.5	0	0	15.19	0	0	0	0	0	0	-50.62	-50.62
	Inverter Transformer	MV4-5 T	369283	4909199	2	0	0	56.1	56.1	1	7958.08	3.25	0	89.02	0	2.5	0	0	15.22	0	0	0	0	0	0	-50.67	-50.67
	Inverter Transformer	MV5-2 T	370011	4908853	2	0	0	56.1	56.1	1	8005.47	3.25	0	89.07	0	2.51	0	0	15.26	0	0	0	0	0	0	-50.78	-50.78
	Inverter Transformer	MV4-1 T	369017	4909397	2	0	0	56.1	56.1	1	8026.63	3.25	0	89.09	0	2.52	0	0	15.28	0	0	0	0	0	0	-50.83	-50.83
	Inverter Transformer	MV5-4 T	370330	4908707	2	0	0	56.1	56.1	1	8056.26	3.25	0	89.12	0	2.52	0	0	15.31	0	0	0	0	0	0	-50.9	-50.9
	Inverter Transformer	MV4-3 T	369234	4909397	2	0	0	56.1	56.1	1	8115.85	3.25	0	89.19	0	2.54	0	0	15.37	0	0	0	0	0	0	-51.03	-51.03
	Inverter Transformer	MV5-3 T	370237	4908851	2	0	0	56.1	56.1	1	8124.75	3.25	0	89.2	0	2.54	0	0	15.38	0	0	0	0	0	0	-51.05	-51.05
	Inverter Transformer	MV4-2 T	369267	4909397	2	0	0	56.1	56.1	1	8129.83	3.25	0	89.2	0	2.54	0	0	15.38	0	0	0	0	0	0	-51.07	-51.07
	Inverter Transformer	MV5-1 T	370015	4909142	2	0	0	56.1	56.1	1	8254.85	3.25	0	89.33	0	2.57	0	0	15.5	0	0	0	0	0	0	-51.35	-51.35
	Line Reactor	NGR	369421	4908787.5	5	0	0	45.4	45.4	1	7654.21	5.25	0	88.68	0	3.21	1.37	0.1	3.13	0	0	0	0	0	0	-51.03	-51.03
Limit. Valu	0	0																								
Level D/N:	21.8858	21.8858																								

Receiver: Existing Noise Receptor
ID: G-67
X: 365650.2
Y: 4903811
Z: 4.5
Ground: 0

ISO	Description	ID	X	Y	Z	Ground	ReflOrd	LxT	LxN	L/A	Dist.	hm	Freq	Adiv	K0b	Agr	Abar	z	Aatm	Afol	Ahous	Cmet	CmetN	Dc	RL	LtotT	LtotN
	Inverter	MV1-15	365315	4904994	2	0	0	100.3	100.3	1	1229.57	3.25	0	72.8	0	-0.14	0	0	11.61	0	0	0	0	0	0	16.05	16.05
	Sol_Luce Substation	S_Substation	369426	4908792	3.5	0	0	112.1	112.1	1	6250.36	5.25	0	86.92	0	1.22	2.59	0.28	10	0	0	0	0	0	0	11.34	11.34
	Inverter	MV1-12	365038	4905386	2	0	0	100.3	100.3	1	1689.8	3.25	0	75.56	0	0.03	0	0	12.78	0	0	0	0	0	0	11.94	11.94
	Inverter	MV1-14	365163	4905049	2	0	0	97.3	97.3	1	1330.42	3.25	0	73.48	0	-0.1	0	0	11.89	0	0	0	0	0	0	12.04	12.04
	Inverter	MV1-11	364655	4905414	2	0	0	100.3	100.3	1	1886.81	3.25	0	76.51	0	0.1	0	0	13.22	0	0	0	0	0	0	10.48	10.48
	Inverter	MV1-8	364788	4905647	2	0	0	100.3	100.3	1	2028.37	3.25	0	77.14	0	0.14	0	0	13.52	0	0	0	0	0	0	9.51	9.51
	Inverter	MV1-9	364561	4905646	2	0	0	100.3	100.3	1	2133.91	3.25	0	77.58	0	0.17	0	0	13.74	0	0	0	0	0	0	8.82	8.82

Inverter	MV1-4	364815	4905918	2	0	0	100.3	100.3	1	2266.5	3.25	0	78.11	0	0.2	0	0	14.01	0	0	0	0	0	0	8	8
Inverter	MV1-5	364671	4905892	2	0	0	100.3	100.3	1	2299.87	3.25	0	78.23	0	0.21	0	0	14.07	0	0	0	0	0	0	7.8	7.8
Inverter	MV1-6	364477	4905835	2	0	0	100.3	100.3	1	2339.44	3.25	0	78.38	0	0.22	0	0	14.15	0	0	0	0	0	0	7.56	7.56
Inverter	MV1-13	364731	4905241	2	0	0	97.3	97.3	1	1699.95	3.25	0	75.61	0	0.04	0	0	12.8	0	0	0	0	0	0	8.86	8.86
Inverter	MV1-2	364753	4906063	2	0	0	100.3	100.3	1	2424.14	3.25	0	78.69	0	0.24	0	0	14.31	0	0	0	0	0	0	7.07	7.07
Inverter	MV1-1	364715	4906166	2	0	0	100.3	100.3	1	2533.9	3.25	0	79.08	0	0.26	0	0	14.52	0	0	0	0	0	0	6.45	6.45
Inverter	MV1-10	365004	4905564	2	0	0	97.3	97.3	1	1868.31	3.25	0	76.43	0	0.09	0	0	13.18	0	0	0	0	0	0	7.61	7.61
Inverter	MV2-4	365586	4906624	2	0	0	100.3	100.3	1	2813.73	3.25	0	79.99	0	0.33	0	0	15.04	0	0	0	0	0	0	4.96	4.96
Inverter	MV2-3	365820	4906641	2	0	0	100.3	100.3	1	2835.09	3.25	0	80.05	0	0.33	0	0	15.08	0	0	0	0	0	0	4.85	4.85
Inverter	MV1-7	364925	4905782	2	0	0	97.3	97.3	1	2100.18	3.25	0	77.45	0	0.16	0	0	13.67	0	0	0	0	0	0	6.04	6.04
Gardiner Substation	G_Sub	366586.3	4903349.9	2.5	0	0	90.8	90.8	1	1043.5	4.25	0	71.37	0	0.82	5.43	0.3	2.61	0	0	0	0	0	0	10.55	10.55
Inverter	MV3-18	367752	4907412	2	0	0	100.3	100.3	1	4169.5	3.25	0	83.4	0	0.55	0	0	17.32	0	0	0	0	0	0	-0.96	-0.96
Inverter	MV2-1	365842	4906816	2	0	0	97.3	97.3	1	3011.12	3.25	0	80.57	0	0.36	0	0	15.39	0	0	0	0	0	0	0.98	0.98
Inverter	MV3-12	367668	4907594	2	0	0	100.3	100.3	1	4287.49	3.25	0	83.64	0	0.57	0	0	17.5	0	0	0	0	0	0	-1.4	-1.4
Inverter	MV3-21	368478	4907206	2	0	0	100.3	100.3	1	4418.43	3.25	0	83.91	0	0.58	0	0	17.7	0	0	0	0	0	0	-1.88	-1.88
Inverter	MV3-13	367963	4907577	2	0	0	100.3	100.3	1	4419.48	3.25	0	83.91	0	0.58	0	0	17.71	0	0	0	0	0	0	-1.88	-1.88
Inverter	MV3-17	368178	4907472	2	0	0	100.3	100.3	1	4448.9	3.25	0	83.97	0	0.58	0	0	17.75	0	0	0	0	0	0	-1.99	-1.99
Inverter	MV3-19	368357	4907347	2	0	0	100.3	100.3	1	4453.1	3.25	0	83.97	0	0.59	0	0	17.76	0	0	0	0	0	0	-2	-2
Inverters	G_Inv1	366526.4	4903225.8	2	0	0	87.7	87.7	1	1053.66	3.25	0	71.45	0	2.46	0	0	1.49	0	0	0	0	0	0	12.25	12.25
Inverter	MV3-15	368357	4907477	2	0	0	100.3	100.3	1	4557.01	3.25	0	84.17	0	0.6	0	0	17.92	0	0	0	0	0	0	-2.38	-2.38
Inverter	MV3-7	367945	4907754	2	0	0	100.3	100.3	1	4562.17	3.25	0	84.18	0	0.6	0	0	17.93	0	0	0	0	0	0	-2.39	-2.39
Inverter	MV3-10	368167	4907669	2	0	0	100.3	100.3	1	4606.35	3.25	0	84.27	0	0.6	0	0	17.99	0	0	0	0	0	0	-2.55	-2.55
Inverter	MV3-20	368689	4907317	2	0	0	100.3	100.3	1	4639.65	3.25	0	84.33	0	0.61	0	0	18.04	0	0	0	0	0	0	-2.67	-2.67
Inverter	MV3-16	368514	4907475	2	0	0	100.3	100.3	1	4650.4	3.25	0	84.35	0	0.61	0	0	18.06	0	0	0	0	0	0	-2.7	-2.7
Inverter	MV3-11	368346	4907662	2	0	0	100.3	100.3	1	4700.8	3.25	0	84.44	0	0.61	0	0	18.14	0	0	0	0	0	0	-2.88	-2.88
Inverter	MV3-3	367939	4907927	2	0	0	100.3	100.3	1	4709.57	3.25	0	84.46	0	0.61	0	0	18.15	0	0	0	0	0	0	-2.91	-2.91
Inverter	MV3-6	368162	4907834	2	0	0	100.3	100.3	1	4742.75	3.25	0	84.52	0	0.62	0	0	18.2	0	0	0	0	0	0	-3.02	-3.02
Inverter	MV3-14	368684	4907498	2	0	0	100.3	100.3	1	4774.72	3.25	0	84.58	0	0.62	0	0	18.25	0	0	0	0	0	0	-3.13	-3.13
Inverter	MV3-9	368512	4907703	2	0	0	100.3	100.3	1	4830.9	3.25	0	84.68	0	0.63	0	0	18.33	0	0	0	0	0	0	-3.32	-3.32
Inverter	MV3-8	368680	4907712	2	0	0	100.3	100.3	1	4939.38	3.25	0	84.87	0	0.64	0	0	18.49	0	0	0	0	0	0	-3.69	-3.69
Inverters	G_Inv2	366676.9	4903239.1	2	0	0	87.7	87.7	1	1175.24	3.25	0	72.4	0	2.47	0	0	1.65	0	0	0	0	0	0	11.14	11.14
Inverters	G_Inv3	366583.7	4903091.4	2	0	0	87.7	87.7	1	1178.67	3.25	0	72.43	0	2.48	0	0	1.65	0	0	0	0	0	0	11.11	11.11
Inverters	G_Inv4	366732.8	4903105	2	0	0	87.7	87.7	1	1292.46	3.25	0	73.23	0	2.49	0	0	1.79	0	0	0	0	0	0	10.15	10.15
Inverters	G_Inv5	366638.5	4902958.1	2	0	0	87.7	87.7	1	1305.44	3.25	0	73.32	0	2.49	0	0	1.81	0	0	0	0	0	0	10.04	10.04
Inverter	MV6-3	370207	4907140	2	0	0	100.3	100.3	1	5643.29	3.25	0	86.03	0	0.69	0	0	19.5	0	0	0	0	0	0	-5.91	-5.91
Inverter	MV6-2	370085	4907339	2	0	0	100.3	100.3	1	5666.94	3.25	0	86.07	0	0.69	0	0	19.53	0	0	0	0	0	0	-5.98	-5.98
Inverters	G_Inv6	366788.5	4902972	2	0	0	87.7	87.7	1	1414.09	3.25	0	74.01	0	2.51	0	0	1.94	0	0	0	0	0	0	9.2	9.2
Inverters	G_Inv7	366694.6	4902824.7	2	0	0	87.7	87.7	1	1436.51	3.25	0	74.15	0	2.51	0	0	1.97	0	0	0	0	0	0	9.04	9.04
Inverter	MV4-7	369035	4909001	2	0	0	100.3	100.3	1	6196.21	3.25	0	86.84	0	0.71	0	0	20.26	0	0	0	0	0	0	-7.5	-7.5
Inverter	MV4-11	369264	4908855	2	0	0	100.3	100.3	1	6204.96	3.25	0	86.85	0	0.71	0	0	20.27	0	0	0	0	0	0	-7.52	-7.52
Inverter	MV4-10	369312	4908858	2	0	0	100.3	100.3	1	6235.46	3.25	0	86.9	0	0.71	0	0	20.31	0	0	0	0	0	0	-7.61	-7.61
Inverter	MV4-8	369256	4909001	2	0	0	100.3	100.3	1	6319.64	3.25	0	87.01	0	0.71	0	0	20.42	0	0	0	0	0	0	-7.84	-7.84
Inverter	MV4-9	369289	4909001	2	0	0	100.3	100.3	1	6338.53	3.25	0	87.04	0	0.71	0	0	20.45	0	0	0	0	0	0	-7.89	-7.89
Inverter	MV4-4	369027	4909199	2	0	0	100.3	100.3	1	6358.72	3.25	0	87.07	0	0.71	0	0	20.47	0	0	0	0	0	0	-7.94	-7.94
Inverter	MV4-6	369243	4909192	2	0	0	100.3	100.3	1	6470.19	3.25	0	87.22	0	0.71	0	0	20.62	0	0	0	0	0	0	-8.24	-8.24
Inverter	MV4-5	369289	4909199	2	0	0	100.3	100.3	1	6501.65	3.25	0	87.26	0	0.71	0	0	20.66	0	0	0	0	0	0	-8.32	-8.32
Inverter	MV4-1	369011	4909397	2	0	0	100.3	100.3	1	6519.08	3.25	0	87.28	0	0.71	0	0	20.68	0	0	0	0	0	0	-8.37	-8.37
Inverter	MV5-5	370015	4908690	2	0	0	100.3	100.3	1	6546.46	3.25	0	87.32	0	0.71	0	0	20.72	0	0	0	0	0	0	-8.44	-8.44
Inverters	G_Inv8	366844.5	4902838.5	2	0	0	87.7	87.7	1	1540.17	3.25	0	74.75	0	2.52	0	0	2.09	0	0	0	0	0	0	8.29	8.29
Inverter	MV4-3	369229	4909397	2	0	0	100.3	100.3	1	6634.09	3.25	0	87.44	0	0.71	0	0	20.83	0	0	0	0	0	0	-8.67	-8.67
Inverter	MV4-2	369272	4909397	2	0	0	100.3	100.3	1	6657.39	3.25	0	87.47	0	0.71	0	0	20.86	0	0	0	0	0	0	-8.73	-8.73
Inverter	MV5-2	370006	4908853	2	0	0	100.3	100.3	1	6662.94	3.25	0	87.47	0	0.71	0	0	20.87	0	0	0	0	0	0	-8.75	-8.75
Inverters	G_Inv9	366750.9	4902691.8	2	0	0	87.7	87.7	1	1569.76	3.25	0	74.92	0	2.53	0	0	2.13	0	0	0	0	0	0	8.09	8.09
Inverter	MV5-4	370324	4908707	2	0	0	100.3	100.3	1	6768.69	3.25	0	87.61	0	0.71	0	0	21.01	0	0	0	0	0	0	-9.02	-9.02
Inverter	MV5-3	370231	4908851	2	0	0	100.3	100.3	1	6810.68	3.25	0	87.66	0	0.71	0	0	21.06	0	0	0	0	0	0	-9.12	-9.12
Inverter	MV5-1	370020	4909142	2	0	0	100.3	100.3	1	6893.09	3.25	0	87.77	0	0.71	0	0	21.16	0	0	0	0	0	0	-9.33	-9.33
Inverters	G_Inv10	366900.7	4902704.8	2	0	0	87.7	87.7	1	1669.56	3.25	0	75.45	0	2.54	0	0	2.25	0	0	0	0	0	0	7.42	7.42
Inverter	MV6-1	370235	4907364	2	0	0	97.3	97.3	1	5800.36	3.25	0	86.27	0	0.7	0	0	19.72	0	0	0	0	0	0	-9.37	-9.37
Inverter	MV1-3	364440	4906039	2	0	0	89.1	89.1	1	2535.46	3.25	0	79.08	0	1.03	0	0	8.9	0	0	0	0	0	0	0.04	0.04
DSTATCOM - 10 MVAR #2	DSAT2	369403	4908757	2.5	0	0	96.6	96.6	1	6208.58	3.5	0	86.86	0	3.79	0	0	3.94	0	0	0	0	0	0	2.04	2.04
DSTATCOM - 10 MVAR #1	DSAT1	369437	4908757	2.5	0	0	96.6	96.6	1	6229.19	3.5	0	86.89	0	3.79	0	0	3.95	0	0	0	0	0	0	2	2
Inverter	MV2-2	365977	4906654	2	0	0	89.1	89.1	1	2861.72	3.25	0	80.13	0	1.11	0	0	9.41	0	0	0	0	0	0	-1.59	-1.59
SubstationTransformer	W_ST	369711.17	4906112.3	2.5	0	0	92	92	1	4667.69	4.25	0	84.38	0	1.55	2.42	0.25	8.22	0	0	0	0	0	0	-4.59	-4.59
Inverter	MV3-22	368656	4907142	2	0	0	89.1	89.1	1	4486.69	3.25	0	84.04	0	1.51	0	0	11.77	0	0	0	0	0	0	-8.26	-8.26
Westbrook Inverter Enclosur	W_INV3	369508	4906164	2	0	0	89.1	89.1	1	4518.76	3.25	0	84.1	0	1.52	0	0	11.81	0	0	0	0	0	0	-8.37	-8.37
Westbrook Inverter Enclosur	W_INV2	369374	4906388	2	0	0	89.1	89.1	1	4528.53	3.25	0	84.12	0	1.52	0	0	11.82	0	0	0	0	0	0	-8.41	-8.41
Westbrook Inverter Enclosur	W_INV4	369673	4906164	2	0	0	89.1	89.1	1	4660.42	3.25	0	84.37	0	1.56	0	0	12	0	0	0	0	0	0	-8.87	-8.87
Inverter	MV3-5	368340	4907843	2	0	0	89.1	89.1	1	4846.86	3.25	0	84.71	0	1.6	0	0	12.26	0	0	0	0	0	0	-9.51	-9.51
Inverter	MV3-1	368156	4907976	2	0	0	89.1	89.1	1	4860.69	3.25	0	84.73	0	1.61	0	0	12.28	0	0	0	0	0	0	-9.56	-9.56
Westbrook Inverter Enclosur	W_INV7	369780	4906417	2	0	0	89.1	89.1	1	4883.29	3.25	0	84.77	0	1.61	0	0	12.31	0	0	0	0	0	0	-9.63	-9.63
Westbrook Inverter Enclosur	W_INV5	369719	4906574	2	0	0	89.1	89.1	1	4918.26	3.25	0	84.84	0	1.62	0	0	12.35	0	0	0	0	0	0	-9.75	-9.75
Inverter	MV3-4	368502	4907925	2	0	0	89.1	89.1	1	5005.77	3.25	0	84.99	0	1.64	0	0	12.47	0	0	0	0	0	0	-10.04	-10.04
Westbrook Inverter Enclosur	W_INV6	369875	4906578	2	0	0	89.1	89.1	1	5050.27	3.25	0	85.07	0	1.65	0	0	12.53	0	0	0	0	0	0	-10.19	-10.19
Inverter	MV3-2	368671	4907928	2	0	0	89.1	89.1	1	5106.36	3.25	0	85.16	0	1.67	0	0	12.61	0	0	0	0	0	0	-10.38	-10.38

Fixed Reactor Bank 1	FRB1	369378	4908755	6	0	0	89.8	89.8	1	6191.9	5.25	0	86.84	0	-0.39	0	0	9.94	0	0	0	0	0	0	-6.61	-6.61
Fixed Reactor Bank 2	FRB2	369464	4908755	6	0	0	89.8	89.8	1	6244.05	5.25	0	86.91	0	-0.38	0	0	10	0	0	0	0	0	0	-6.75	-6.75
Inverter	MV4-15	369176	4908481	2	0	0	89.1	89.1	1	5851.51	3.25	0	86.35	0	1.85	0	0	13.57	0	0	0	0	0	0	-12.71	-12.71
Inverter	MV4-14	369176	4908507	2	0	0	89.1	89.1	1	5872.28	3.25	0	86.38	0	1.85	0	0	13.6	0	0	0	0	0	0	-12.77	-12.77
Inverter	MV4-13	369051	4908605	2	0	0	89.1	89.1	1	5877.74	3.25	0	86.38	0	1.86	0	0	13.61	0	0	0	0	0	0	-12.79	-12.79
Inverter	MV4-12	369043	4908803	2	0	0	89.1	89.1	1	6035.82	3.25	0	86.61	0	1.89	0	0	13.81	0	0	0	0	0	0	-13.26	-13.26
Inverter	MV5-6	369982	4908507	2	0	0	89.1	89.1	1	6388.81	3.25	0	87.11	0	1.98	0	0	14.25	0	0	0	0	0	0	-14.28	-14.28
Westbrook Inverter Enclosur	W_INV1	369409	4906578	2	0	0	86.1	86.1	1	4667.43	3.25	0	84.38	0	1.56	0	0	12.01	0	0	0	0	0	0	-11.9	-11.9
Inverter	MV6-4	370250	4906966	2	0	0	86.1	86.1	1	5577.83	3.25	0	85.93	0	1.78	0	0	13.22	0	0	0	0	0	0	-14.88	-14.88
Inverter Transformer	MV1-14 T	365157	4905049	2	0	0	69.4	69.4	1	1332.63	3.25	0	73.49	0	1.89	0	0	4.24	0	0	0	0	0	0	-10.28	-10.28
Westbrook Inverter Transfor	W_INVTR1	369403	4906578	2	0	0	78.2	78.2	1	4662.6	3.25	0	84.37	0	-3.11	0	0	2.3	0	0	0	0	0	0	-5.32	-5.32
Inverter Transformer	MV1-13 T	364725	4905241	2	0	0	69.4	69.4	1	1703.2	3.25	0	75.63	0	2.06	0	0	4.66	0	0	0	0	0	0	-12.99	-12.99
Westbrook Inverter Transfor	W_INVTR2	369368	4906388	2	0	0	77.3	77.3	1	4523.6	3.25	0	84.11	0	-3.08	0	0	2.25	0	0	0	0	0	0	-5.94	-5.94
Westbrook Inverter Transfor	W_INVTR3	369514	4906164	2	0	0	77.3	77.3	1	4523.89	3.25	0	84.11	0	-3.08	0	0	2.25	0	0	0	0	0	0	-5.94	-5.94
Westbrook Inverter Transfor	W_INVTR4	369679	4906164	2	0	0	77.3	77.3	1	4665.6	3.25	0	84.38	0	-3.11	0	0	2.3	0	0	0	0	0	0	-6.22	-6.22
Inverter Transformer	MV1-10 T	365010	4905564	2	0	0	69.4	69.4	1	1866.25	3.25	0	76.42	0	2.12	0	0	4.83	0	0	0	0	0	0	-14.02	-14.02
Westbrook Inverter Transfor	W_INVTR7	369786	4906417	2	0	0	77.3	77.3	1	4888.36	3.25	0	84.78	0	-3.15	0	0	2.37	0	0	0	0	0	0	-6.66	-6.66
Westbrook Inverter Transfor	W_INVTR5	369725	4906574	2	0	0	77.3	77.3	1	4923.23	3.25	0	84.84	0	-3.16	0	0	2.39	0	0	0	0	0	0	-6.73	-6.73
Westbrook Inverter Transfor	W_INVTR6	369881	4906578	2	0	0	77.3	77.3	1	5055.29	3.25	0	85.07	0	-3.19	0	0	2.43	0	0	0	0	0	0	-6.98	-6.98
Inverter Transformer	MV1-7 T	364919	4905782	2	0	0	69.4	69.4	1	2102.26	3.25	0	77.45	0	2.21	0	0	5.07	0	0	0	0	0	0	-15.38	-15.38
Inverter Transformer	MV2-1 T	365836	4906816	2	0	0	69.4	69.4	1	3010.74	3.25	0	80.57	0	2.51	0	0	5.89	0	0	0	0	0	0	-19.63	-19.63
Inverter Transformer	MV6-4 T	370244	4906966	2	0	0	69.4	69.4	1	5572.88	3.25	0	85.92	0	3.12	0	0	7.75	0	0	0	0	0	0	-27.44	-27.44
Inverter Transformer	MV1-15 T	365309	4904994	2	0	0	56.1	56.1	1	1231.22	3.25	0	72.81	0	0.1	0	0	5.43	0	0	0	0	0	0	-22.27	-22.27
Inverter Transformer	MV6-1 T	370230	4907364	2	0	0	69.4	69.4	1	5796.41	3.25	0	86.26	0	3.16	0	0	7.89	0	0	0	0	0	0	-27.96	-27.96
Inverter Transformer	MV1-12 T	365044	4905386	2	0	0	56.1	56.1	1	1687.63	3.25	0	75.55	0	0.27	0	0	6.41	0	0	0	0	0	0	-26.17	-26.17
Inverter Transformer	MV1-11 T	364649	4905414	2	0	0	56.1	56.1	1	1889.98	3.25	0	76.53	0	0.36	0	0	6.83	0	0	0	0	0	0	-27.65	-27.65
Inverter Transformer	MV1-8 T	364782	4905647	2	0	0	56.1	56.1	1	2030.93	3.25	0	77.15	0	0.42	0	0	7.1	0	0	0	0	0	0	-28.62	-28.62
Inverter Transformer	MV1-9 T	364555	4905646	2	0	0	56.1	56.1	1	2136.98	3.25	0	77.6	0	0.46	0	0	7.31	0	0	0	0	0	0	-29.31	-29.31
Inverter Transformer	MV1-4 T	364821	4905918	2	0	0	56.1	56.1	1	2264.29	3.25	0	78.1	0	0.52	0	0	7.55	0	0	0	0	0	0	-30.11	-30.11
Inverter Transformer	MV1-5 T	364676	4905892	2	0	0	56.1	56.1	1	2297.75	3.25	0	78.23	0	0.53	0	0	7.62	0	0	0	0	0	0	-30.31	-30.31
Inverter Transformer	MV1-6 T	364482	4905835	2	0	0	56.1	56.1	1	2336.94	3.25	0	78.37	0	0.55	0	0	7.69	0	0	0	0	0	0	-30.55	-30.55
Inverter Transformer	MV1-2 T	364759	4906063	2	0	0	56.1	56.1	1	2421.93	3.25	0	78.68	0	0.58	0	0	7.85	0	0	0	0	0	0	-31.05	-31.05
Inverter Transformer	MV1-1 T	364721	4906166	2	0	0	56.1	56.1	1	2531.69	3.25	0	79.07	0	0.63	0	0	8.05	0	0	0	0	0	0	-31.69	-31.69
Inverter Transformer	MV1-3 T	364435	4906039	2	0	0	56.1	56.1	1	2537.85	3.25	0	79.09	0	0.63	0	0	8.06	0	0	0	0	0	0	-31.72	-31.72
Inverter Transformer	MV2-4 T	365590	4906628	2	0	0	56.1	56.1	1	2817.64	3.25	0	80	0	0.75	0	0	8.55	0	0	0	0	0	0	-33.25	-33.25
Inverter Transformer	MV2-3 T	365814	4906641	2	0	0	56.1	56.1	1	2834.74	3.25	0	80.05	0	0.76	0	0	8.58	0	0	0	0	0	0	-33.34	-33.34
Inverter Transformer	MV2-2 T	365982	4906654	2	0	0	56.1	56.1	1	2862.3	3.25	0	80.13	0	0.77	0	0	8.63	0	0	0	0	0	0	-33.48	-33.48
Inverter Transformer	MV3-18 T	367757	4907412	2	0	0	56.1	56.1	1	4172.03	3.25	0	83.41	0	1.31	0	0	10.71	0	0	0	0	0	0	-39.37	-39.37
Inverter Transformer	MV3-12 T	367674	4907594	2	0	0	56.1	56.1	1	4290.32	3.25	0	83.65	0	1.36	0	0	10.88	0	0	0	0	0	0	-39.83	-39.83
Inverter Transformer	MV3-13 T	367958	4907577	2	0	0	56.1	56.1	1	4416.87	3.25	0	83.9	0	1.41	0	0	11.06	0	0	0	0	0	0	-40.31	-40.31
Inverter Transformer	MV3-21 T	368484	4907206	2	0	0	56.1	56.1	1	4422.27	3.25	0	83.91	0	1.41	0	0	11.07	0	0	0	0	0	0	-40.33	-40.33
Inverter Transformer	MV3-19 T	368352	4907347	2	0	0	56.1	56.1	1	4450.06	3.25	0	83.97	0	1.42	0	0	11.11	0	0	0	0	0	0	-40.43	-40.43
Inverter Transformer	MV3-17 T	368183	4907472	2	0	0	56.1	56.1	1	4451.74	3.25	0	83.97	0	1.42	0	0	11.11	0	0	0	0	0	0	-40.44	-40.44
Inverter Transformer	MV3-22 T	368661	4907142	2	0	0	56.1	56.1	1	4490.04	3.25	0	84.05	0	1.44	0	0	11.16	0	0	0	0	0	0	-40.58	-40.58
Inverter Transformer	MV3-15 T	368351	4907477	2	0	0	56.1	56.1	1	4553.45	3.25	0	84.17	0	1.46	0	0	11.25	0	0	0	0	0	0	-40.82	-40.82
Inverter Transformer	MV3-7 T	367951	4907754	2	0	0	56.1	56.1	1	4565.19	3.25	0	84.19	0	1.46	0	0	11.27	0	0	0	0	0	0	-40.86	-40.86
Inverter Transformer	MV3-10 T	368162	4907669	2	0	0	56.1	56.1	1	4603.62	3.25	0	84.26	0	1.48	0	0	11.32	0	0	0	0	0	0	-41	-41
Inverter Transformer	MV3-20 T	368683	4907317	2	0	0	56.1	56.1	1	4635.72	3.25	0	84.32	0	1.49	0	0	11.36	0	0	0	0	0	0	-41.12	-41.12
Inverter Transformer	MV3-16 T	368509	4907475	2	0	0	56.1	56.1	1	4647.33	3.25	0	84.34	0	1.5	0	0	11.38	0	0	0	0	0	0	-41.16	-41.16
Inverter Transformer	MV3-11 T	368340	4907662	2	0	0	56.1	56.1	1	4697.36	3.25	0	84.44	0	1.51	0	0	11.45	0	0	0	0	0	0	-41.34	-41.34
Inverter Transformer	MV3-3 T	367944	4907927	2	0	0	56.1	56.1	1	4712	3.25	0	84.46	0	1.52	0	0	11.47	0	0	0	0	0	0	-41.39	-41.39
Inverter Transformer	MV3-6 T	368156	4907834	2	0	0	56.1	56.1	1	4739.57	3.25	0	84.51	0	1.53	0	0	11.51	0	0	0	0	0	0	-41.49	-41.49
Inverter Transformer	MV3-14 T	368678	4907498	2	0	0	56.1	56.1	1	4770.91	3.25	0	84.57	0	1.54	0	0	11.55	0	0	0	0	0	0	-41.6	-41.6
Inverter Transformer	MV3-9 T	368517	4907703	2	0	0	56.1	56.1	1	4833.86	3.25	0	84.69	0	1.56	0	0	11.63	0	0	0	0	0	0	-41.83	-41.83
Inverter Transformer	MV3-5 T	368335	4907843	2	0	0	56.1	56.1	1	4844.09	3.25	0	84.7	0	1.57	0	0	11.65	0	0	0	0	0	0	-41.86	-41.86
Inverter Transformer	MV3-1 T	368150	4907976	2	0	0	56.1	56.1	1	4857.6	3.25	0	84.73	0	1.57	0	0	11.66	0	0	0	0	0	0	-41.91	-41.91
Inverter Transformer	MV3-8 T	368685	4907712	2	0	0	56.1	56.1	1	4942.45	3.25	0	84.88	0	1.6	0	0	11.78	0	0	0	0	0	0	-42.2	-42.2
Inverter Transformer	MV3-4 T	368507	4907925	2	0	0	56.1	56.1	1	5008.62	3.25	0	84.99	0	1.63	0	0	11.87	0	0	0	0	0	0	-42.43	-42.43
Inverter Transformer	MV3-2 T	368677	4907928	2	0	0	56.1	56.1	1	5109.91	3.25	0	85.17	0	1.66	0	0	12	0	0	0	0	0	0	-42.77	-42.77
Inverter Transformer	MV6-3 T	370202	4907140	2	0	0	56.1	56.1	1	5639.25	3.25	0	86.02	0	1.85	0	0	12.67	0	0	0	0	0	0	-44.48	-44.48
Inverter Transformer	MV6-2 T	370091	4907339	2	0	0	56.1	56.1	1	5671.64	3.25	0	86.07	0	1.86	0	0	12.71	0	0	0	0	0	0	-44.58	-44.58
Inverter Transformer	MV4-15 T	369170	4908481	2	0	0	56.1	56.1	1	5847.9	3.25	0	86.34	0	1.92	0	0	12.92	0	0	0	0	0	0	-45.12	-45.12
Inverter Transformer	MV4-14 T	369182	4908507	2	0	0	56.1	56.1	1	5875.89	3.25	0	86.38	0	1.93	0	0	12.95	0	0	0	0	0	0	-45.2	-45.2
Inverter Transformer	MV4-13 T	369057	4908605	2	0	0	56.1	56.1	1	5881.22	3.25	0	86.39	0	1.93	0	0	12.96	0	0	0	0	0	0	-45.22	-45.22
Inverter Transformer	MV4-12 T	369049	4908803	2	0	0	56.1	56.1	1	6039.2	3.25	0	86.62	0	1.98	0	0	13.15	0	0	0	0	0	0	-45.69	-45.69
Inverter Transformer	MV4-7 T	369040	4909001	2	0	0	56.1	56.1	1	6198.94	3.25	0	86.85	0	2.03	0	0	13.34	0	0	0	0	0	0	-46.15	-46.15
Inverter Transformer	MV4-11 T	369269	4908855	2	0	0	56.1	56.1	1	6207.87	3.25	0	86.86	0	2.03	0	0	13.35	0	0	0	0	0	0	-46.18	-46.18
Inverter Transformer	MV4-10 T	369307	4908858	2	0	0	56.1	56.1	1	6232.53	3.25	0	86.89	0	2.04	0	0	13.37	0	0	0	0	0	0	-46.25	-46.25
Inverter Transformer	MV4-8 T	369262	4909001	2	0	0	56.1	56.1	1	6323.07	3.25	0	87.02	0	2.06	0	0	13.48	0	0	0	0	0	0	-46.5	-46.5
Inverter Transformer	MV4-9 T	369284	4909001	2	0	0	56.1	56.1	1	6335.66	3.25	0	87.04	0	2.07	0	0	13.49	0	0	0	0	0	0	-46.54	-46.54
Inverter Transformer	MV4-4 T	369033	4909199	2	0	0	56.1	56.1	1	6361.91	3.25	0	87.07	0	2.08	0	0	13.52	0	0	0	0	0	0	-46.61	-46.61
Inverter Transformer	MV5-6 T	369987	4908507	2	0	0	56.1	56.1	1	6392.2	3.25	0	87.11	0	2.09	0	0	13.56	0	0	0	0	0	0	-46.7	-46.7
Inverter Transformer	MV4-6 T	369249	4909192	2	0	0	56.1	56.1	1	6473.53	3.25	0	87.22	0	2.11	0	0	13.65	0	0	0	0	0	0	-46.92	-46.92
Inverter Transformer	MV4-5 T	369283	4909199	2	0	0	56.1	56.1	1	6498.29	3.25	0	87.26	0	2.12	0	0	13.68	0	0	0	0	0	0	-46.99	-46.99

	Inverter Transformer	MV4-1 T	369017	4909397	2	0	0	56.1	56.1	1	6522.17	3.25	0	87.29	0	2.12	0	0	13.7	0	0	0	0	0	0	-47.06	-47.06
	Inverter Transformer	MV5-5 T	370021	4908690	2	0	0	56.1	56.1	1	6550.46	3.25	0	87.33	0	2.13	0	0	13.74	0	0	0	0	0	0	-47.14	-47.14
	Inverter Transformer	MV4-3 T	369234	4909397	2	0	0	56.1	56.1	1	6636.79	3.25	0	87.44	0	2.16	0	0	13.83	0	0	0	0	0	0	-47.37	-47.37
	Inverter Transformer	MV4-2 T	369267	4909397	2	0	0	56.1	56.1	1	6654.67	3.25	0	87.46	0	2.16	0	0	13.85	0	0	0	0	0	0	-47.42	-47.42
	Inverter Transformer	MV5-2 T	370011	4908853	2	0	0	56.1	56.1	1	6666.21	3.25	0	87.48	0	2.17	0	0	13.87	0	0	0	0	0	0	-47.45	-47.45
	Inverter Transformer	MV5-4 T	370330	4908707	2	0	0	56.1	56.1	1	6772.84	3.25	0	87.62	0	2.2	0	0	13.98	0	0	0	0	0	0	-47.74	-47.74
	Inverter Transformer	MV5-3 T	370237	4908851	2	0	0	56.1	56.1	1	6814.71	3.25	0	87.67	0	2.21	0	0	14.03	0	0	0	0	0	0	-47.85	-47.85
	Inverter Transformer	MV5-1 T	370015	4909142	2	0	0	56.1	56.1	1	6889.92	3.25	0	87.76	0	2.23	0	0	14.11	0	0	0	0	0	0	-48.05	-48.05
	Line Reactor	NGR	369421	4908787.5	5	0	0	45.4	45.4	1	6243.76	5.25	0	86.91	0	3.23	1.36	0.09	2.55	0	0	0	0	0	0	-48.7	-48.7
Limit. Valu	0	0																								
Level D/N:	24.7315	24.7315																								

Receiver: Existing Noise Receptor
ID: G-68
X: 366536.2
Y: 4901668.1
Z: 4.5
Ground: 0

ISO	Description	ID	X	Y	Z	Ground	ReflOrd	LxT	LxN	L/A	Dist.	hm	Freq	Adiv	K0b	Agr	Abar	z	Aatm	Afol	Ahous	Cmet	CmetN	Dc	RL	LtotT	LtotN
	Sol_Luce Substation	S_Substation	369426	4908792	3.5	0	0	112.1	112.1	1	7687.71	5.25	0	88.72	0	1.51	2.32	0.33	11.38	0	0	0	0	0	0	8.15	8.15
	Inverter	MV1-15	365315	4904994	2	0	0	100.3	100.3	1	3543.01	3.25	0	81.99	0	0.46	0	0	16.3	0	0	0	0	0	0	1.56	1.56
	Inverter	MV1-12	365038	4905386	2	0	0	100.3	100.3	1	4008.41	3.25	0	83.06	0	0.53	0	0	17.06	0	0	0	0	0	0	-0.34	-0.34
	Inverter	MV1-11	364655	4905414	2	0	0	100.3	100.3	1	4191.74	3.25	0	83.45	0	0.55	0	0	17.35	0	0	0	0	0	0	-1.04	-1.04
	Inverter	MV1-8	364788	4905647	2	0	0	100.3	100.3	1	4346.02	3.25	0	83.76	0	0.57	0	0	17.59	0	0	0	0	0	0	-1.62	-1.62
	Inverter	MV1-9	364561	4905646	2	0	0	100.3	100.3	1	4441.3	3.25	0	83.95	0	0.58	0	0	17.74	0	0	0	0	0	0	-1.96	-1.96
	Inverters	G_Inv9	366750.9	4902691.8	2	0	0	87.7	87.7	1	1045.98	3.25	0	71.39	0	2.46	0	0	1.48	0	0	0	0	0	0	12.33	12.33
	Inverter	MV1-4	364815	4905918	2	0	0	100.3	100.3	1	4585.21	3.25	0	84.23	0	0.6	0	0	17.96	0	0	0	0	0	0	-2.48	-2.48
	Inverter	MV1-5	364671	4905892	2	0	0	100.3	100.3	1	4617.39	3.25	0	84.29	0	0.6	0	0	18.01	0	0	0	0	0	0	-2.59	-2.59
	Inverter	MV1-6	364477	4905835	2	0	0	100.3	100.3	1	4647.94	3.25	0	84.35	0	0.61	0	0	18.06	0	0	0	0	0	0	-2.7	-2.7
	Inverters	G_Inv10	366900.7	4902704.8	2	0	0	87.7	87.7	1	1098.91	3.25	0	71.82	0	2.46	0	0	1.55	0	0	0	0	0	0	11.83	11.83
	Inverter	MV1-2	364753	4906063	2	0	0	100.3	100.3	1	4742.88	3.25	0	84.52	0	0.62	0	0	18.2	0	0	0	0	0	0	-3.02	-3.02
	Inverter	MV1-1	364715	4906166	2	0	0	100.3	100.3	1	4852.62	3.25	0	84.72	0	0.63	0	0	18.36	0	0	0	0	0	0	-3.4	-3.4
	Inverters	G_Inv7	366694.6	4902824.7	2	0	0	87.7	87.7	1	1167.4	3.25	0	72.34	0	2.47	0	0	1.64	0	0	0	0	0	0	11.21	11.21
	Inverter	MV2-3	365820	4906641	2	0	0	100.3	100.3	1	5024.21	3.25	0	85.02	0	0.64	0	0	18.62	0	0	0	0	0	0	-3.97	-3.97
	Gardiner Substation	G_Sub	366586.3	4903349.9	2.5	0	0	90.8	90.8	1	1682.55	3.5	0	75.52	0	-0.24	0	0	3.81	0	0	0	0	0	0	11.68	11.68
	Inverter	MV2-4	365586	4906624	2	0	0	100.3	100.3	1	5046.17	3.25	0	85.06	0	0.65	0	0	18.65	0	0	0	0	0	0	-4.04	-4.04
	Inverter	MV1-14	365163	4905049	2	0	0	97.3	97.3	1	3649.13	3.25	0	82.24	0	0.47	0	0	16.48	0	0	0	0	0	0	-1.89	-1.89
	Inverters	G_Inv8	366844.5	4902838.5	2	0	0	87.7	87.7	1	1210.33	3.25	0	72.66	0	2.48	0	0	1.69	0	0	0	0	0	0	10.83	10.83
	Inverters	G_Inv5	366638.5	4902958.1	2	0	0	87.7	87.7	1	1294.05	3.25	0	73.24	0	2.49	0	0	1.79	0	0	0	0	0	0	10.14	10.14
	Inverter	MV1-13	364731	4905241	2	0	0	97.3	97.3	1	4003.04	3.25	0	83.05	0	0.53	0	0	17.05	0	0	0	0	0	0	-3.32	-3.32
	Inverters	G_Inv6	366788.5	4902972	2	0	0	87.7	87.7	1	1328.09	3.25	0	73.46	0	2.5	0	0	1.84	0	0	0	0	0	0	9.86	9.86
	Inverter	MV3-21	368478	4907206	2	0	0	100.3	100.3	1	5868.47	3.25	0	86.37	0	0.7	0	0	19.81	0	0	0	0	0	0	-6.57	-6.57
	Inverter	MV3-18	367752	4907412	2	0	0	100.3	100.3	1	5871.16	3.25	0	86.37	0	0.7	0	0	19.82	0	0	0	0	0	0	-6.58	-6.58
	Inverter	MV1-10	365004	4905564	2	0	0	97.3	97.3	1	4186.37	3.25	0	83.44	0	0.55	0	0	17.34	0	0	0	0	0	0	-4.02	-4.02
	Inverter	MV3-19	368357	4907347	2	0	0	100.3	100.3	1	5963.66	3.25	0	86.51	0	0.7	0	0	19.94	0	0	0	0	0	0	-6.85	-6.85
	Inverter	MV3-17	368178	4907472	2	0	0	100.3	100.3	1	6031.65	3.25	0	86.61	0	0.71	0	0	20.04	0	0	0	0	0	0	-7.04	-7.04
	Inverter	MV3-12	367668	4907594	2	0	0	100.3	100.3	1	6033.01	3.25	0	86.61	0	0.71	0	0	20.04	0	0	0	0	0	0	-7.04	-7.04
	Inverter	MV3-20	368689	4907317	2	0	0	100.3	100.3	1	6045.22	3.25	0	86.63	0	0.71	0	0	20.05	0	0	0	0	0	0	-7.08	-7.08
	Inverter	MV3-13	367963	4907577	2	0	0	100.3	100.3	1	6078.72	3.25	0	86.68	0	0.71	0	0	20.1	0	0	0	0	0	0	-7.17	-7.17
	Inverter	MV3-15	368357	4907477	2	0	0	100.3	100.3	1	6087.58	3.25	0	86.69	0	0.71	0	0	20.11	0	0	0	0	0	0	-7.2	-7.2
	Inverters	G_Inv3	366583.7	4903091.4	2	0	0	87.7	87.7	1	1424.09	3.25	0	74.07	0	2.51	0	0	1.95	0	0	0	0	0	0	9.13	9.13
	Inverter	MV3-16	368514	4907475	2	0	0	100.3	100.3	1	6134.48	3.25	0	86.76	0	0.71	0	0	20.17	0	0	0	0	0	0	-7.33	-7.33
	Inverter	MV3-14	368684	4907498	2	0	0	100.3	100.3	1	6212.95	3.25	0	86.87	0	0.71	0	0	20.28	0	0	0	0	0	0	-7.54	-7.54
	Inverter	MV3-10	368167	4907669	2	0	0	100.3	100.3	1	6218.55	3.25	0	86.87	0	0.71	0	0	20.29	0	0	0	0	0	0	-7.56	-7.56
	Inverters	G_Inv4	366732.8	4903105	2	0	0	87.7	87.7	1	1450.29	3.25	0	74.23	0	2.51	0	0	1.98	0	0	0	0	0	0	8.94	8.94
	Inverter	MV1-7	364925	4905782	2	0	0	97.3	97.3	1	4418.16	3.25	0	83.9	0	0.58	0	0	17.7	0	0	0	0	0	0	-4.88	-4.88
	Inverter	MV3-7	367945	4907754	2	0	0	100.3	100.3	1	6246.83	3.25	0	86.91	0	0.71	0	0	20.33	0	0	0	0	0	0	-7.64	-7.64
	Inverter	MV3-11	368346	4907662	2	0	0	100.3	100.3	1	6261.17	3.25	0	86.93	0	0.71	0	0	20.34	0	0	0	0	0	0	-7.68	-7.68
	Inverter	MV3-9	368512	4907703	2	0	0	100.3	100.3	1	6350.1	3.25	0	87.06	0	0.71	0	0	20.46	0	0	0	0	0	0	-7.92	-7.92
	Inverter	MV3-6	368162	4907834	2	0	0	100.3	100.3	1	6376.64	3.25	0	87.09	0	0.71	0	0	20.5	0	0	0	0	0	0	-7.99	-7.99
	Inverter	MV3-8	368680	4907712	2	0	0	100.3	100.3	1	6412.85	3.25	0	87.14	0	0.71	0	0	20.54	0	0	0	0	0	0	-8.09	-8.09
	Inverter	MV3-3	367939	4907927	2	0	0	100.3	100.3	1	6414.18	3.25	0	87.14	0	0.71	0	0	20.55	0	0	0	0	0	0	-8.09	-8.09
	Inverter	MV6-3	370207	4907140	2	0	0	100.3	100.3	1	6589.12	3.25	0	87.38	0	0.72	0	0	20.77	0	0	0	0	0	0	-8.55	-8.55
	Inverters	G_Inv1	366526.4	4903225.8	2	0	0	87.7	87.7	1	1557.73	3.25	0	74.85	0	2.53	0	0	2.11	0	0	0	0	0	0	8.17	8.17
	Inverter	MV6-2	370085	4907339	2	0	0	100.3	100.3	1	6689.78	3.25	0	87.51	0	0.71	0	0	20.9	0	0	0	0	0	0	-8.82	-8.82
	Inverters	G_Inv2	366676.9	4903239.1	2	0	0	87.7	87.7	1	1577.29	3.25	0	74.96	0	2.53	0	0	2.14	0	0	0	0	0	0	8.04	8.04
	Inverter	MV2-1	365842	4906816	2	0	0	97.3	97.3	1	5194.5	3.25	0	85.31	0	0.66	0	0	18.86	0	0	0	0	0	0	-7.52	-7.52
	Inverter	MV4-11	369264	4908855	2	0	0	100.3	100.3	1	7687.16	3.25	0	88.72	0	0.68	0	0	22.14	0	0	0	0	0	0	-11.22	-11.22
	Inverter	MV4-10	369312	4908858	2	0	0	100.3	100.3	1	7707.12	3.25	0	88.74	0	0.68	0	0	22.16	0	0	0	0	0	0	-11.26	-11.26
	Inverter	MV4-7	369035	4909001	2	0	0	100.3	100.3	1	7746.96	3.25	0	88.78	0	0.67	0	0	22.21	0	0	0	0	0	0	-11.35	-11.35
	Inverter	MV4-8	369256	4909001	2	0	0	100.3	100.3	1	7821.04	3.25	0	88.87	0	0.67	0	0	22.3	0	0	0	0	0	0	-11.52	-11.52
	Inverter	MV4-9	369289	4909001	2	0	0	100.3	100.3	1	7832.58	3.25	0	88.88	0	0.67	0	0	22.31	0	0	0	0	0	0	-11.54	-11.54
	Inverter	MV5-5	370015	4908690	2	0	0	100.3	100.3	1	7836.4	3.25	0	88.88	0	0.67	0	0	22.31	0	0	0	0	0	0	-11.55	-11.55

Inverter	MV4-4	369027	4909199	2	0	0	100.3	100.3	1	7932.12	3.25	0	88.99	0	0.66	0	0	22.43	0	0	0	0	0	0	-11.76	-11.76
Inverter	MV5-2	370006	4908853	2	0	0	100.3	100.3	1	7978.87	3.25	0	89.04	0	0.66	0	0	22.48	0	0	0	0	0	0	-11.86	-11.86
Inverter	MV5-4	370324	4908707	2	0	0	100.3	100.3	1	7993.34	3.25	0	89.05	0	0.65	0	0	22.5	0	0	0	0	0	0	-11.89	-11.89
Inverter	MV4-6	369243	4909192	2	0	0	100.3	100.3	1	7995.99	3.25	0	89.06	0	0.65	0	0	22.5	0	0	0	0	0	0	-11.9	-11.9
Inverter	MV4-5	369289	4909199	2	0	0	100.3	100.3	1	8018.25	3.25	0	89.08	0	0.65	0	0	22.53	0	0	0	0	0	0	-11.95	-11.95
Inverter	MV5-3	370231	4908851	2	0	0	100.3	100.3	1	8077.48	3.25	0	89.15	0	0.65	0	0	22.6	0	0	0	0	0	0	-12.07	-12.07
Inverter	MV4-1	369011	4909397	2	0	0	100.3	100.3	1	8115.45	3.25	0	89.19	0	0.64	0	0	22.64	0	0	0	0	0	0	-12.16	-12.16
Inverter	MV4-3	369229	4909397	2	0	0	100.3	100.3	1	8184.56	3.25	0	89.26	0	0.64	0	0	22.72	0	0	0	0	0	0	-12.3	-12.3
Inverter	MV4-2	369272	4909397	2	0	0	100.3	100.3	1	8198.81	3.25	0	89.28	0	0.63	0	0	22.73	0	0	0	0	0	0	-12.33	-12.33
Inverter	MV5-1	370020	4909142	2	0	0	100.3	100.3	1	8245.97	3.25	0	89.32	0	0.63	0	0	22.79	0	0	0	0	0	0	-12.43	-12.43
Inverter	MV6-1	370235	4907364	2	0	0	97.3	97.3	1	6791.5	3.25	0	87.64	0	0.71	0	0	21.04	0	0	0	0	0	0	-12.08	-12.08
DSTATCOM - 10 MVAR #2	DSAT2	369403	4908757	2.5	0	0	96.6	96.6	1	7646.64	3.5	0	88.67	0	3.87	0	0	4.61	0	0	0	0	0	0	-0.52	-0.52
DSTATCOM - 10 MVAR #1	DSAT1	369437	4908757	2.5	0	0	96.6	96.6	1	7659.45	3.5	0	88.68	0	3.87	0	0	4.62	0	0	0	0	0	0	-0.54	-0.54
SubstationTransformer	W_ST	369711.17	4906112.3	2.5	0	0	92	92	1	5461.78	3.5	0	85.75	0	0.66	0	-0.12	9.15	0	0	0	0	0	0	-3.58	-3.58
Inverter	MV1-3	364440	4906039	2	0	0	89.1	89.1	1	4847.56	3.25	0	84.71	0	1.6	0	0	12.26	0	0	0	0	0	0	-9.51	-9.51
Inverter	MV2-2	365977	4906654	2	0	0	89.1	89.1	1	5017.16	3.25	0	85.01	0	1.64	0	0	12.49	0	0	0	0	0	0	-10.08	-10.08
Westbrook Inverter Enclosur	W_INV3	369508	4906164	2	0	0	89.1	89.1	1	5389.32	3.25	0	85.63	0	1.74	0	0	12.98	0	0	0	0	0	0	-11.29	-11.29
Westbrook Inverter Enclosur	W_INV4	369673	4906164	2	0	0	89.1	89.1	1	5482.03	3.25	0	85.78	0	1.76	0	0	13.1	0	0	0	0	0	0	-11.58	-11.58
Westbrook Inverter Enclosur	W_INV2	369374	4906388	2	0	0	89.1	89.1	1	5507.32	3.25	0	85.82	0	1.76	0	0	13.13	0	0	0	0	0	0	-11.66	-11.66
Westbrook Inverter Enclosur	W_INV7	369780	4906417	2	0	0	89.1	89.1	1	5751.03	3.25	0	86.19	0	1.82	0	0	13.45	0	0	0	0	0	0	-12.41	-12.41
Westbrook Inverter Enclosur	W_INV5	369719	4906574	2	0	0	89.1	89.1	1	5847.91	3.25	0	86.34	0	1.85	0	0	13.57	0	0	0	0	0	0	-12.7	-12.7
Inverter	MV3-22	368656	4907142	2	0	0	89.1	89.1	1	5870.02	3.25	0	86.37	0	1.85	0	0	13.6	0	0	0	0	0	0	-12.77	-12.77
Westbrook Inverter Enclosur	W_INV6	369875	4906578	2	0	0	89.1	89.1	1	5937.57	3.25	0	86.47	0	1.87	0	0	13.68	0	0	0	0	0	0	-12.97	-12.97
Inverter	MV3-5	368340	4907843	2	0	0	89.1	89.1	1	6432.97	3.25	0	87.17	0	1.99	0	0	14.3	0	0	0	0	0	0	-14.4	-14.4
Inverter	MV3-1	368156	4907976	2	0	0	89.1	89.1	1	6512.55	3.25	0	87.28	0	2.01	0	0	14.4	0	0	0	0	0	0	-14.63	-14.63
Inverter	MV3-4	368502	4907925	2	0	0	89.1	89.1	1	6558.44	3.25	0	87.34	0	2.02	0	0	14.45	0	0	0	0	0	0	-14.75	-14.75
Inverter	MV3-2	368671	4907928	2	0	0	89.1	89.1	1	6613.9	3.25	0	87.41	0	2.04	0	0	14.52	0	0	0	0	0	0	-14.91	-14.91
Fixed Reactor Bank 1	FRB1	369378	4908755	6	0	0	89.8	89.8	1	7635.44	5.25	0	88.66	0	-0.21	0	0	11.33	0	0	0	0	0	0	-10	-10
Fixed Reactor Bank 2	FRB2	369464	4908755	6	0	0	89.8	89.8	1	7667.87	5.25	0	88.69	0	-0.21	0	0	11.36	0	0	0	0	0	0	-10.07	-10.07
Inverter	MV4-15	369176	4908481	2	0	0	89.1	89.1	1	7306.45	3.25	0	88.27	0	2.2	0	0	15.35	0	0	0	0	0	0	-16.76	-16.76
Inverter	MV4-14	369176	4908507	2	0	0	89.1	89.1	1	7330.7	3.25	0	88.3	0	2.21	0	0	15.38	0	0	0	0	0	0	-16.83	-16.83
Inverter	MV4-13	369051	4908605	2	0	0	89.1	89.1	1	7378.67	3.25	0	88.36	0	2.22	0	0	15.43	0	0	0	0	0	0	-16.95	-16.95
Inverter	MV4-12	369043	4908803	2	0	0	89.1	89.1	1	7562.46	3.25	0	88.57	0	2.26	0	0	15.64	0	0	0	0	0	0	-17.42	-17.42
Inverter	MV5-6	369982	4908507	2	0	0	89.1	89.1	1	7657.94	3.25	0	88.68	0	2.28	0	0	15.75	0	0	0	0	0	0	-17.66	-17.66
Westbrook Inverter Enclosur	W_INV1	369409	4906578	2	0	0	86.1	86.1	1	5688.59	3.25	0	86.1	0	1.81	0	0	13.37	0	0	0	0	0	0	-15.22	-15.22
Inverter	MV6-4	370250	4906966	2	0	0	86.1	86.1	1	6469.94	3.25	0	87.22	0	2	0	0	14.35	0	0	0	0	0	0	-17.51	-17.51
Westbrook Inverter Transfor	W_INVTR1	369403	4906578	2	0	0	78.2	78.2	1	5685.57	3.25	0	86.1	0	-3.31	0	0	2.64	0	0	0	0	0	0	-7.18	-7.18
Westbrook Inverter Transfor	W_INVTR3	369514	4906164	2	0	0	77.3	77.3	1	5392.63	3.25	0	85.64	0	-3.25	0	0	2.54	0	0	0	0	0	0	-7.58	-7.58
Westbrook Inverter Transfor	W_INVTR4	369679	4906164	2	0	0	77.3	77.3	1	5485.46	3.25	0	85.78	0	-3.27	0	0	2.58	0	0	0	0	0	0	-7.75	-7.75
Westbrook Inverter Transfor	W_INVTR2	369368	4906388	2	0	0	77.3	77.3	1	5504.23	3.25	0	85.81	0	-3.28	0	0	2.58	0	0	0	0	0	0	-7.78	-7.78
Westbrook Inverter Transfor	W_INVTR7	369786	4906417	2	0	0	77.3	77.3	1	5754.41	3.25	0	86.2	0	-3.32	0	0	2.66	0	0	0	0	0	0	-8.2	-8.2
Westbrook Inverter Transfor	W_INVTR5	369725	4906574	2	0	0	77.3	77.3	1	5851.18	3.25	0	86.34	0	-3.34	0	0	2.69	0	0	0	0	0	0	-8.36	-8.36
Westbrook Inverter Transfor	W_INVTR6	369881	4906578	2	0	0	77.3	77.3	1	5940.94	3.25	0	86.48	0	-3.36	0	0	2.72	0	0	0	0	0	0	-8.5	-8.5
Inverter Transformer	MV1-14 T	365157	4905049	2	0	0	69.4	69.4	1	3651.39	3.25	0	82.25	0	2.69	0	0	6.41	0	0	0	0	0	0	-22	-22
Inverter Transformer	MV1-13 T	364725	4905241	2	0	0	69.4	69.4	1	4005.75	3.25	0	83.05	0	2.79	0	0	6.68	0	0	0	0	0	0	-23.17	-23.17
Inverter Transformer	MV1-10 T	365010	4905564	2	0	0	69.4	69.4	1	4184.18	3.25	0	83.43	0	2.83	0	0	6.81	0	0	0	0	0	0	-23.73	-23.73
Inverter Transformer	MV1-7 T	364919	4905782	2	0	0	69.4	69.4	1	4420.35	3.25	0	83.91	0	2.89	0	0	6.98	0	0	0	0	0	0	-24.43	-24.43
Inverter Transformer	MV2-1 T	365836	4906816	2	0	0	69.4	69.4	1	5195.3	3.25	0	85.31	0	3.05	0	0	7.51	0	0	0	0	0	0	-26.52	-26.52
Inverter Transformer	MV6-4 T	370244	4906966	2	0	0	69.4	69.4	1	6466.49	3.25	0	87.21	0	3.25	0	0	8.3	0	0	0	0	0	0	-29.41	-29.41
Inverter Transformer	MV6-1 T	370230	4907364	2	0	0	69.4	69.4	1	6788.77	3.25	0	87.64	0	3.29	0	0	8.48	0	0	0	0	0	0	-30.06	-30.06
Inverter Transformer	MV1-15 T	365309	4904994	2	0	0	56.1	56.1	1	3545.09	3.25	0	81.99	0	1.06	0	0	9.76	0	0	0	0	0	0	-36.75	-36.75
Inverter Transformer	MV1-12 T	365044	4905386	2	0	0	56.1	56.1	1	4006.18	3.25	0	83.05	0	1.25	0	0	10.46	0	0	0	0	0	0	-38.71	-38.71
Inverter Transformer	MV1-11 T	364649	4905414	2	0	0	56.1	56.1	1	4194.44	3.25	0	83.45	0	1.32	0	0	10.74	0	0	0	0	0	0	-39.46	-39.46
Inverter Transformer	MV1-8 T	364782	4905647	2	0	0	56.1	56.1	1	4348.43	3.25	0	83.77	0	1.38	0	0	10.96	0	0	0	0	0	0	-40.05	-40.05
Inverter Transformer	MV1-9 T	364555	4905646	2	0	0	56.1	56.1	1	4443.97	3.25	0	83.96	0	1.42	0	0	11.1	0	0	0	0	0	0	-40.41	-40.41
Inverter Transformer	MV1-4 T	364821	4905918	2	0	0	56.1	56.1	1	4582.96	3.25	0	84.22	0	1.47	0	0	11.29	0	0	0	0	0	0	-40.93	-40.93
Inverter Transformer	MV1-5 T	364676	4905892	2	0	0	56.1	56.1	1	4615.37	3.25	0	84.28	0	1.48	0	0	11.34	0	0	0	0	0	0	-41.04	-41.04
Inverter Transformer	MV1-6 T	364482	4905835	2	0	0	56.1	56.1	1	4645.73	3.25	0	84.34	0	1.49	0	0	11.38	0	0	0	0	0	0	-41.15	-41.15
Inverter Transformer	MV1-2 T	364759	4906063	2	0	0	56.1	56.1	1	4740.63	3.25	0	84.52	0	1.53	0	0	11.51	0	0	0	0	0	0	-41.5	-41.5
Inverter Transformer	MV1-3 T	364435	4906039	2	0	0	56.1	56.1	1	4849.72	3.25	0	84.71	0	1.57	0	0	11.65	0	0	0	0	0	0	-41.88	-41.88
Inverter Transformer	MV1-1 T	364721	4906166	2	0	0	56.1	56.1	1	4850.37	3.25	0	84.72	0	1.57	0	0	11.66	0	0	0	0	0	0	-41.88	-41.88
Inverter Transformer	MV2-2 T	365982	4906654	2	0	0	56.1	56.1	1	5016.61	3.25	0	85.01	0	1.63	0	0	11.88	0	0	0	0	0	0	-42.46	-42.46
Inverter Transformer	MV2-3 T	365814	4906641	2	0	0	56.1	56.1	1	5025.07	3.25	0	85.02	0	1.63	0	0	11.89	0	0	0	0	0	0	-42.49	-42.49
Inverter Transformer	MV2-4 T	365590	4906628	2	0	0	56.1	56.1	1	5049.35	3.25	0	85.06	0	1.64	0	0	11.92	0	0	0	0	0	0	-42.57	-42.57
Inverter Transformer	MV3-21 T	368484	4907206	2	0	0	56.1	56.1	1	5870.46	3.25	0	86.37	0	1.92	0	0	12.95	0	0	0	0	0	0	-45.19	-45.19
Inverter Transformer	MV3-22 T	368661	4907142	2	0	0	56.1	56.1	1	5871.83	3.25	0	86.38	0	1.92	0	0	12.95	0	0	0	0	0	0	-45.19	-45.19
Inverter Transformer	MV3-18 T	367757	4907412	2	0	0	56.1	56.1	1	5872.2	3.25	0	86.38	0	1.92	0	0	12.95	0	0	0	0	0	0	-45.19	-45.19
Inverter Transformer	MV3-19 T	368352	4907347	2	0	0	56.1	56.1	1	5962.13	3.25	0	86.51	0	1.95	0	0	13.06	0	0	0	0	0	0	-45.46	-45.46
Inverter Transformer	MV3-17 T	368183	4907472	2	0	0	56.1	56.1	1	6033.01	3.25	0	86.61	0	1.98	0	0	13.14	0	0	0	0	0	0	-45.67	-45.67
Inverter Transformer	MV3-12 T	367674	4907594	2	0	0	56.1	56.1	1	6034.14	3.25	0	86.61	0	1.98	0	0	13.14	0	0	0	0	0	0	-45.67	-45.67
Inverter Transformer	MV3-20 T	368683	4907317	2	0	0	56.1	56.1	1	6043.08	3.25	0	86.63	0	1.98	0	0	13.15	0	0	0	0	0	0	-45.7	-45.7
Inverter Transformer	MV3-13 T	367958	4907577	2	0	0	56.1	56.1	1	6077.55	3.25	0	86.67	0	1.99	0	0	13.19	0	0	0	0	0	0	-45.8	-45.8
Inverter Transformer	MV3-15 T	368351	4907477	2	0	0	56.1	56.1	1	6085.79	3.25	0	86.69	0	1.99	0	0	13.2	0	0	0	0	0	0	-45.82	-45.82
Inverter Transformer	MV3-16 T	368509	4907475	2	0	0	56.1	56.1	1	6132.87	3.25	0	86.75	0	2.01	0	0	13.26	0	0	0	0	0	0	-45.96	-45.96

	Inverter Transformer	MV3-14 T	368678	4907498	2	0	0	56.1	56.1	1	6210.88	3.25	0	86.86	0	2.03	0	0	13.35	0	0	0	0	0	0	-46.19	-46.19
	Inverter Transformer	MV3-10 T	368162	4907669	2	0	0	56.1	56.1	1	6217.24	3.25	0	86.87	0	2.03	0	0	13.36	0	0	0	0	0	0	-46.2	-46.2
	Inverter Transformer	MV3-7 T	367951	4907754	2	0	0	56.1	56.1	1	6248.19	3.25	0	86.92	0	2.04	0	0	13.39	0	0	0	0	0	0	-46.29	-46.29
	Inverter Transformer	MV3-11 T	368340	4907662	2	0	0	56.1	56.1	1	6259.44	3.25	0	86.93	0	2.05	0	0	13.41	0	0	0	0	0	0	-46.32	-46.32
	Inverter Transformer	MV3-9 T	368517	4907703	2	0	0	56.1	56.1	1	6351.66	3.25	0	87.06	0	2.07	0	0	13.51	0	0	0	0	0	0	-46.58	-46.58
	Inverter Transformer	MV3-6 T	368156	4907834	2	0	0	56.1	56.1	1	6375.11	3.25	0	87.09	0	2.08	0	0	13.54	0	0	0	0	0	0	-46.65	-46.65
	Inverter Transformer	MV3-8 T	368685	4907712	2	0	0	56.1	56.1	1	6414.52	3.25	0	87.14	0	2.09	0	0	13.58	0	0	0	0	0	0	-46.76	-46.76
	Inverter Transformer	MV3-3 T	367944	4907927	2	0	0	56.1	56.1	1	6415.27	3.25	0	87.14	0	2.09	0	0	13.58	0	0	0	0	0	0	-46.76	-46.76
	Inverter Transformer	MV3-5 T	368335	4907843	2	0	0	56.1	56.1	1	6431.57	3.25	0	87.17	0	2.1	0	0	13.6	0	0	0	0	0	0	-46.81	-46.81
	Inverter Transformer	MV3-1 T	368150	4907976	2	0	0	56.1	56.1	1	6511.06	3.25	0	87.27	0	2.12	0	0	13.69	0	0	0	0	0	0	-47.03	-47.03
	Inverter Transformer	MV3-4 T	368507	4907925	2	0	0	56.1	56.1	1	6559.94	3.25	0	87.34	0	2.14	0	0	13.75	0	0	0	0	0	0	-47.16	-47.16
	Inverter Transformer	MV6-3 T	370202	4907140	2	0	0	56.1	56.1	1	6586.33	3.25	0	87.37	0	2.14	0	0	13.78	0	0	0	0	0	0	-47.23	-47.23
	Inverter Transformer	MV3-2 T	368677	4907928	2	0	0	56.1	56.1	1	6615.84	3.25	0	87.41	0	2.15	0	0	13.81	0	0	0	0	0	0	-47.31	-47.31
	Inverter Transformer	MV6-2 T	370091	4907339	2	0	0	56.1	56.1	1	6692.96	3.25	0	87.51	0	2.17	0	0	13.9	0	0	0	0	0	0	-47.52	-47.52
	Inverter Transformer	MV4-15 T	369170	4908481	2	0	0	56.1	56.1	1	7304.28	3.25	0	88.27	0	2.34	0	0	14.55	0	0	0	0	0	0	-49.11	-49.11
	Inverter Transformer	MV4-14 T	369182	4908507	2	0	0	56.1	56.1	1	7332.86	3.25	0	88.31	0	2.35	0	0	14.58	0	0	0	0	0	0	-49.18	-49.18
	Inverter Transformer	MV4-13 T	369057	4908605	2	0	0	56.1	56.1	1	7380.72	3.25	0	88.36	0	2.36	0	0	14.63	0	0	0	0	0	0	-49.29	-49.29
	Inverter Transformer	MV4-12 T	369049	4908803	2	0	0	56.1	56.1	1	7564.45	3.25	0	88.58	0	2.41	0	0	14.82	0	0	0	0	0	0	-49.74	-49.74
	Inverter Transformer	MV5-6 T	369987	4908507	2	0	0	56.1	56.1	1	7660.19	3.25	0	88.68	0	2.43	0	0	14.92	0	0	0	0	0	0	-49.97	-49.97
	Inverter Transformer	MV4-11 T	369269	4908855	2	0	0	56.1	56.1	1	7688.94	3.25	0	88.72	0	2.44	0	0	14.95	0	0	0	0	0	0	-50.04	-50.04
	Inverter Transformer	MV4-10 T	369307	4908858	2	0	0	56.1	56.1	1	7705.32	3.25	0	88.74	0	2.44	0	0	14.96	0	0	0	0	0	0	-50.08	-50.08
	Inverter Transformer	MV4-7 T	369040	4909001	2	0	0	56.1	56.1	1	7748.58	3.25	0	88.78	0	2.45	0	0	15.01	0	0	0	0	0	0	-50.18	-50.18
	Inverter Transformer	MV4-8 T	369262	4909001	2	0	0	56.1	56.1	1	7823.13	3.25	0	88.87	0	2.47	0	0	15.08	0	0	0	0	0	0	-50.36	-50.36
	Inverter Transformer	MV4-9 T	369284	4909001	2	0	0	56.1	56.1	1	7830.83	3.25	0	88.88	0	2.47	0	0	15.09	0	0	0	0	0	0	-50.38	-50.38
	Inverter Transformer	MV5-5 T	370021	4908690	2	0	0	56.1	56.1	1	7839.06	3.25	0	88.89	0	2.47	0	0	15.1	0	0	0	0	0	0	-50.4	-50.4
	Inverter Transformer	MV4-4 T	369033	4909199	2	0	0	56.1	56.1	1	7934.01	3.25	0	88.99	0	2.49	0	0	15.19	0	0	0	0	0	0	-50.62	-50.62
	Inverter Transformer	MV5-2 T	370011	4908853	2	0	0	56.1	56.1	1	7981.04	3.25	0	89.04	0	2.51	0	0	15.24	0	0	0	0	0	0	-50.73	-50.73
	Inverter Transformer	MV5-4 T	370330	4908707	2	0	0	56.1	56.1	1	7996.19	3.25	0	89.06	0	2.51	0	0	15.25	0	0	0	0	0	0	-50.76	-50.76
	Inverter Transformer	MV4-6 T	369249	4909192	2	0	0	56.1	56.1	1	7998.02	3.25	0	89.06	0	2.51	0	0	15.25	0	0	0	0	0	0	-50.77	-50.77
	Inverter Transformer	MV4-5 T	369283	4909199	2	0	0	56.1	56.1	1	8016.19	3.25	0	89.08	0	2.51	0	0	15.27	0	0	0	0	0	0	-50.81	-50.81
	Inverter Transformer	MV5-3 T	370237	4908851	2	0	0	56.1	56.1	1	8080.22	3.25	0	89.15	0	2.53	0	0	15.33	0	0	0	0	0	0	-50.95	-50.95
	Inverter Transformer	MV4-1 T	369017	4909397	2	0	0	56.1	56.1	1	8117.28	3.25	0	89.19	0	2.54	0	0	15.37	0	0	0	0	0	0	-51.04	-51.04
	Inverter Transformer	MV4-3 T	369234	4909397	2	0	0	56.1	56.1	1	8186.21	3.25	0	89.26	0	2.55	0	0	15.44	0	0	0	0	0	0	-51.19	-51.19
	Inverter Transformer	MV4-2 T	369267	4909397	2	0	0	56.1	56.1	1	8197.14	3.25	0	89.27	0	2.55	0	0	15.45	0	0	0	0	0	0	-51.22	-51.22
	Inverter Transformer	MV5-1 T	370015	4909142	2	0	0	56.1	56.1	1	8243.86	3.25	0	89.32	0	2.56	0	0	15.49	0	0	0	0	0	0	-51.32	-51.32
	Line Reactor	NGR	369421	4908787.5	5	0	0	45.4	45.4	1	7681.66	5.25	0	88.71	0	3.21	1.37	0.11	3.14	0	0	0	0	0	0	-51.07	-51.07
Limit. Valu	0	0																								
Level D/N:	21.6654	21.6654																								

Receiver: Existing Noise Receptor
ID: G-69
X: 366382.2
Y: 4901674.1
Z: 4.5
Ground: 0

ISO	Description	ID	X	Y	Z	Ground	ReflOrd	LxT	LxN	L/A	Dist.	hm	Freq	Adiv	K0b	Agr	Abar	z	Aatm	Afol	Ahous	Cmet	CmetN	Dc	RL	LtotT	LtotN
	Sol_Luce Substation	S_Substation	369426	4908792	3.5	0	0	112.1	112.1	1	7741.4	5.25	0	88.78	0	1.52	2.31	0.32	11.43	0	0	0	0	0	0	8.05	8.05
	Inverter	MV1-15	365315	4904994	2	0	0	100.3	100.3	1	3487.21	3.25	0	81.85	0	0.45	0	0	16.21	0	0	0	0	0	0	1.8	1.8
	Inverter	MV1-12	365038	4905386	2	0	0	100.3	100.3	1	3947.79	3.25	0	82.93	0	0.52	0	0	16.96	0	0	0	0	0	0	-0.1	-0.1
	Inverter	MV1-11	364655	4905414	2	0	0	100.3	100.3	1	4119.48	3.25	0	83.3	0	0.54	0	0	17.24	0	0	0	0	0	0	-0.77	-0.77
	Inverter	MV1-8	364788	4905647	2	0	0	100.3	100.3	1	4280.82	3.25	0	83.63	0	0.56	0	0	17.49	0	0	0	0	0	0	-1.37	-1.37
	Inverter	MV1-9	364561	4905646	2	0	0	100.3	100.3	1	4369.53	3.25	0	83.81	0	0.58	0	0	17.63	0	0	0	0	0	0	-1.7	-1.7
	Inverter	MV1-4	364815	4905918	2	0	0	100.3	100.3	1	4524.03	3.25	0	84.11	0	0.59	0	0	17.87	0	0	0	0	0	0	-2.26	-2.26
	Inverter	MV1-5	364671	4905892	2	0	0	100.3	100.3	1	4551.8	3.25	0	84.16	0	0.6	0	0	17.91	0	0	0	0	0	0	-2.36	-2.36
	Inverter	MV1-6	364477	4905835	2	0	0	100.3	100.3	1	4576.34	3.25	0	84.21	0	0.6	0	0	17.95	0	0	0	0	0	0	-2.44	-2.44
	Inverters	G_Inv9	366750.9	4902691.8	2	0	0	87.7	87.7	1	1082.43	3.25	0	71.69	0	2.46	0	0	1.53	0	0	0	0	0	0	11.98	11.98
	Inverter	MV1-2	364753	4906063	2	0	0	100.3	100.3	1	4681.53	3.25	0	84.41	0	0.61	0	0	18.11	0	0	0	0	0	0	-2.81	-2.81
	Inverter	MV1-1	364715	4906166	2	0	0	100.3	100.3	1	4791.32	3.25	0	84.61	0	0.62	0	0	18.27	0	0	0	0	0	0	-3.19	-3.19
	Inverters	G_Inv10	366900.7	4902704.8	2	0	0	87.7	87.7	1	1153.77	3.25	0	72.24	0	2.47	0	0	1.62	0	0	0	0	0	0	11.33	11.33
	Inverter	MV2-3	365820	4906641	2	0	0	100.3	100.3	1	4998.62	3.25	0	84.98	0	0.64	0	0	18.58	0	0	0	0	0	0	-3.89	-3.89
	Inverter	MV2-4	365586	4906624	2	0	0	100.3	100.3	1	5013.53	3.25	0	85	0	0.64	0	0	18.6	0	0	0	0	0	0	-3.93	-3.93
	Gardiner Substation	G_Sub	366586.3	4903349.9	2.5	0	0	90.8	90.8	1	1688.18	3.5	0	75.55	0	-0.24	0	0	3.82	0	0	0	0	0	0	11.64	11.64
	Inverter	MV1-14	365163	4905049	2	0	0	97.3	97.3	1	3588.37	3.25	0	82.1	0	0.47	0	0	16.38	0	0	0	0	0	0	-1.63	-1.63
	Inverters	G_Inv7	366694.6	4902824.7	2	0	0	87.7	87.7	1	1192.26	3.25	0	72.53	0	2.48	0	0	1.67	0	0	0	0	0	0	10.99	10.99
	Inverters	G_Inv8	366844.5	4902838.5	2	0	0	87.7	87.7	1	1252.82	3.25	0	72.96	0	2.49	0	0	1.74	0	0	0	0	0	0	10.47	10.47
	Inverter	MV1-13	364731	4905241	2	0	0	97.3	97.3	1	3930.55	3.25	0	82.89	0	0.52	0	0	16.94	0	0	0	0	0	0	-3.03	-3.03
	Inverters	G_Inv5	366638.5	4902958.1	2	0	0	87.7	87.7	1	1309.33	3.25	0	73.34	0	2.49	0	0	1.81	0	0	0	0	0	0	10.01	10.01
	Inverter	MV1-10	365004	4905564	2	0	0	97.3	97.3	1	4126.83	3.25	0	83.31	0	0.54	0	0	17.25	0	0	0	0	0	0	-3.79	-3.79
	Inverters	G_Inv6	366788.5	4902972	2	0	0	87.7	87.7	1	1360.01	3.25	0	73.67	0	2.5	0	0	1.87	0	0	0	0	0	0	9.62	9.62
	Inverter	MV3-18	367752	4907412	2	0	0	100.3	100.3	1	5899.14	3.25	0	86.42	0	0.7	0	0	19.86	0	0	0	0	0	0	-6.66	-6.66
	Inverter	MV3-21	368478	4907206	2	0	0	100.3	100.3	1	5915.6	3.25	0	86.44	0	0.7	0	0	19.88	0	0	0	0	0	0	-6.71	-6.71
	Inverter	MV3-19	368357	4907347	2	0	0	100.3	100.3	1	6006.8	3.25	0	86.57	0	0.71	0	0	20	0	0	0	0	0	0	-6.97	-6.97
	Inverter	MV3-12	367668	4907594	2	0	0	100.3	100.3	1	6057.93	3.25	0	86.65	0	0.71	0	0	20.07	0	0	0	0	0	0	-7.11	-7.11

Inverter	MV3-17	368178	4907472	2	0	0	100.3	100.3	1	6069.64	3.25	0	86.66	0	0.71	0	0	20.09	0	0	0	0	0	0	-7.15	-7.15
Inverter	MV3-20	368689	4907317	2	0	0	100.3	100.3	1	6096.2	3.25	0	86.7	0	0.71	0	0	20.12	0	0	0	0	0	0	-7.22	-7.22
Inverter	MV3-13	367963	4907577	2	0	0	100.3	100.3	1	6110.91	3.25	0	86.72	0	0.71	0	0	20.14	0	0	0	0	0	0	-7.26	-7.26
Inverter	MV3-15	368357	4907477	2	0	0	100.3	100.3	1	6129.72	3.25	0	86.75	0	0.71	0	0	20.17	0	0	0	0	0	0	-7.31	-7.31
Inverters	G_Inv3	366583.7	4903091.4	2	0	0	87.7	87.7	1	1431.55	3.25	0	74.12	0	2.51	0	0	1.96	0	0	0	0	0	0	9.07	9.07
Inverter	MV1-7	364925	4905782	2	0	0	97.3	97.3	1	4358.7	3.25	0	83.79	0	0.57	0	0	17.61	0	0	0	0	0	0	-4.66	-4.66
Inverter	MV3-16	368514	4907475	2	0	0	100.3	100.3	1	6180.21	3.25	0	86.82	0	0.71	0	0	20.24	0	0	0	0	0	0	-7.45	-7.45
Inverter	MV3-10	368167	4907669	2	0	0	100.3	100.3	1	6254.95	3.25	0	86.92	0	0.71	0	0	20.34	0	0	0	0	0	0	-7.66	-7.66
Inverter	MV3-14	368684	4907498	2	0	0	100.3	100.3	1	6262.28	3.25	0	86.93	0	0.71	0	0	20.35	0	0	0	0	0	0	-7.68	-7.68
Inverter	MV3-7	367945	4907754	2	0	0	100.3	100.3	1	6277.54	3.25	0	86.96	0	0.71	0	0	20.37	0	0	0	0	0	0	-7.72	-7.72
Inverter	MV3-11	368346	4907662	2	0	0	100.3	100.3	1	6301.7	3.25	0	86.99	0	0.71	0	0	20.4	0	0	0	0	0	0	-7.79	-7.79
Inverters	G_Inv4	366732.8	4903105	2	0	0	87.7	87.7	1	1473.23	3.25	0	74.37	0	2.52	0	0	2.01	0	0	0	0	0	0	8.77	8.77
Inverter	MV3-9	368512	4907703	2	0	0	100.3	100.3	1	6394.04	3.25	0	87.12	0	0.71	0	0	20.52	0	0	0	0	0	0	-8.04	-8.04
Inverter	MV3-6	368162	4907834	2	0	0	100.3	100.3	1	6411.87	3.25	0	87.14	0	0.71	0	0	20.54	0	0	0	0	0	0	-8.09	-8.09
Inverter	MV3-3	367939	4907927	2	0	0	100.3	100.3	1	6443.79	3.25	0	87.18	0	0.71	0	0	20.59	0	0	0	0	0	0	-8.17	-8.17
Inverter	MV3-8	368680	4907712	2	0	0	100.3	100.3	1	6460.35	3.25	0	87.21	0	0.71	0	0	20.61	0	0	0	0	0	0	-8.21	-8.21
Inverter	MV6-3	370207	4907140	2	0	0	100.3	100.3	1	6671.22	3.25	0	87.48	0	0.71	0	0	20.88	0	0	0	0	0	0	-8.77	-8.77
Inverters	G_Inv1	366526.4	4903225.8	2	0	0	87.7	87.7	1	1558.39	3.25	0	74.85	0	2.53	0	0	2.11	0	0	0	0	0	0	8.17	8.17
Inverter	MV6-2	370085	4907339	2	0	0	100.3	100.3	1	6767.7	3.25	0	87.61	0	0.71	0	0	21	0	0	0	0	0	0	-9.02	-9.02
Inverters	G_Inv2	366676.9	4903239.1	2	0	0	87.7	87.7	1	1592.51	3.25	0	75.04	0	2.53	0	0	2.15	0	0	0	0	0	0	7.93	7.93
Inverter	MV2-1	365842	4906816	2	0	0	97.3	97.3	1	5170.2	3.25	0	85.27	0	0.66	0	0	18.83	0	0	0	0	0	0	-7.44	-7.44
Inverter	MV4-11	369264	4908855	2	0	0	100.3	100.3	1	7737.58	3.25	0	88.77	0	0.67	0	0	22.2	0	0	0	0	0	0	-11.33	-11.33
Inverter	MV4-10	369312	4908858	2	0	0	100.3	100.3	1	7758.36	3.25	0	88.8	0	0.67	0	0	22.22	0	0	0	0	0	0	-11.38	-11.38
Inverter	MV4-7	369035	4909001	2	0	0	100.3	100.3	1	7792.36	3.25	0	88.83	0	0.67	0	0	22.26	0	0	0	0	0	0	-11.45	-11.45
Inverter	MV4-8	369256	4909001	2	0	0	100.3	100.3	1	7870.34	3.25	0	88.92	0	0.66	0	0	22.35	0	0	0	0	0	0	-11.63	-11.63
Inverter	MV4-9	369289	4909001	2	0	0	100.3	100.3	1	7882.45	3.25	0	88.93	0	0.66	0	0	22.37	0	0	0	0	0	0	-11.65	-11.65
Inverter	MV5-5	370015	4908690	2	0	0	100.3	100.3	1	7900.64	3.25	0	88.95	0	0.66	0	0	22.39	0	0	0	0	0	0	-11.69	-11.69
Inverter	MV4-4	369027	4909199	2	0	0	100.3	100.3	1	7976.16	3.25	0	89.04	0	0.66	0	0	22.48	0	0	0	0	0	0	-11.86	-11.86
Inverter	MV5-2	370006	4908853	2	0	0	100.3	100.3	1	8041.68	3.25	0	89.11	0	0.65	0	0	22.55	0	0	0	0	0	0	-12	-12
Inverter	MV4-6	369243	4909192	2	0	0	100.3	100.3	1	8043.82	3.25	0	89.11	0	0.65	0	0	22.56	0	0	0	0	0	0	-12	-12
Inverter	MV5-4	370324	4908707	2	0	0	100.3	100.3	1	8062.23	3.25	0	89.13	0	0.65	0	0	22.58	0	0	0	0	0	0	-12.04	-12.04
Inverter	MV4-5	369289	4909199	2	0	0	100.3	100.3	1	8066.82	3.25	0	89.13	0	0.65	0	0	22.58	0	0	0	0	0	0	-12.05	-12.05
Inverter	MV5-3	370231	4908851	2	0	0	100.3	100.3	1	8143.78	3.25	0	89.22	0	0.64	0	0	22.67	0	0	0	0	0	0	-12.22	-12.22
Inverter	MV4-1	369011	4909397	2	0	0	100.3	100.3	1	8158.05	3.25	0	89.23	0	0.64	0	0	22.69	0	0	0	0	0	0	-12.25	-12.25
Inverter	MV4-3	369229	4909397	2	0	0	100.3	100.3	1	8230.88	3.25	0	89.31	0	0.63	0	0	22.77	0	0	0	0	0	0	-12.4	-12.4
Inverter	MV4-2	369272	4909397	2	0	0	100.3	100.3	1	8245.86	3.25	0	89.32	0	0.63	0	0	22.79	0	0	0	0	0	0	-12.43	-12.43
Inverter	MV5-1	370020	4909142	2	0	0	100.3	100.3	1	8306.81	3.25	0	89.39	0	0.62	0	0	22.86	0	0	0	0	0	0	-12.56	-12.56
Inverter	MV6-1	370235	4907364	2	0	0	97.3	97.3	1	6871.61	3.25	0	87.74	0	0.71	0	0	21.14	0	0	0	0	0	0	-12.28	-12.28
DSTATCOM - 10 MVAR #2	DSAT2	369403	4908757	2.5	0	0	96.6	96.6	1	7700.18	3.5	0	88.73	0	3.87	0	0	4.63	0	0	0	0	0	0	-0.6	-0.6
DSTATCOM - 10 MVAR #1	DSAT1	369437	4908757	2.5	0	0	96.6	96.6	1	7713.58	3.5	0	88.75	0	3.87	0	0	4.64	0	0	0	0	0	0	-0.63	-0.63
SubstationTransformer	W_ST	369711.17	4906112.3	2.5	0	0	92	92	1	5547.92	3.5	0	85.88	0	0.68	0	-0.11	9.25	0	0	0	0	0	0	-3.83	-3.83
Inverter	MV1-3	364440	4906039	2	0	0	89.1	89.1	1	4777.5	3.25	0	84.58	0	1.58	0	0	12.16	0	0	0	0	0	0	-9.27	-9.27
Inverter	MV2-2	365977	4906654	2	0	0	89.1	89.1	1	4996.36	3.25	0	84.97	0	1.64	0	0	12.46	0	0	0	0	0	0	-10.01	-10.01
Westbrook Inverter Enclosur	W_INV3	369508	4906164	2	0	0	89.1	89.1	1	5470.82	3.25	0	85.76	0	1.76	0	0	13.08	0	0	0	0	0	0	-11.54	-11.54
Westbrook Inverter Enclosur	W_INV4	369673	4906164	2	0	0	89.1	89.1	1	5566.74	3.25	0	85.91	0	1.78	0	0	13.21	0	0	0	0	0	0	-11.84	-11.84
Westbrook Inverter Enclosur	W_INV2	369374	4906388	2	0	0	89.1	89.1	1	5583.16	3.25	0	85.94	0	1.78	0	0	13.23	0	0	0	0	0	0	-11.89	-11.89
Westbrook Inverter Enclosur	W_INV7	369780	4906417	2	0	0	89.1	89.1	1	5834.39	3.25	0	86.32	0	1.85	0	0	13.55	0	0	0	0	0	0	-12.66	-12.66
Inverter	MV3-22	368656	4907142	2	0	0	89.1	89.1	1	5921.83	3.25	0	86.45	0	1.87	0	0	13.66	0	0	0	0	0	0	-12.92	-12.92
Westbrook Inverter Enclosur	W_INV5	369719	4906574	2	0	0	89.1	89.1	1	5928.18	3.25	0	86.46	0	1.87	0	0	13.67	0	0	0	0	0	0	-12.94	-12.94
Westbrook Inverter Enclosur	W_INV6	369875	4906578	2	0	0	89.1	89.1	1	6020.62	3.25	0	86.59	0	1.89	0	0	13.79	0	0	0	0	0	0	-13.21	-13.21
Inverter	MV3-5	368340	4907843	2	0	0	89.1	89.1	1	6472.12	3.25	0	87.22	0	2	0	0	14.35	0	0	0	0	0	0	-14.51	-14.51
Inverter	MV3-1	368156	4907976	2	0	0	89.1	89.1	1	6546.78	3.25	0	87.32	0	2.02	0	0	14.44	0	0	0	0	0	0	-14.72	-14.72
Inverter	MV3-4	368502	4907925	2	0	0	89.1	89.1	1	6600.55	3.25	0	87.39	0	2.03	0	0	14.51	0	0	0	0	0	0	-14.87	-14.87
Inverter	MV3-2	368671	4907928	2	0	0	89.1	89.1	1	6659.57	3.25	0	87.47	0	2.05	0	0	14.58	0	0	0	0	0	0	-15.03	-15.03
Fixed Reactor Bank 1	FRB1	369378	4908755	6	0	0	89.8	89.8	1	7688.56	5.25	0	88.72	0	-0.21	0	0	11.38	0	0	0	0	0	0	-10.12	-10.12
Fixed Reactor Bank 2	FRB2	369464	4908755	6	0	0	89.8	89.8	1	7722.48	5.25	0	88.76	0	-0.2	0	0	11.41	0	0	0	0	0	0	-10.19	-10.19
Inverter	MV4-15	369176	4908481	2	0	0	89.1	89.1	1	7357.94	3.25	0	88.34	0	2.21	0	0	15.41	0	0	0	0	0	0	-16.9	-16.9
Inverter	MV4-14	369176	4908507	2	0	0	89.1	89.1	1	7381.99	3.25	0	88.36	0	2.22	0	0	15.44	0	0	0	0	0	0	-16.96	-16.96
Inverter	MV4-13	369051	4908605	2	0	0	89.1	89.1	1	7426.97	3.25	0	88.42	0	2.23	0	0	15.49	0	0	0	0	0	0	-17.07	-17.07
Inverter	MV4-12	369043	4908803	2	0	0	89.1	89.1	1	7609.28	3.25	0	88.63	0	2.27	0	0	15.7	0	0	0	0	0	0	-17.54	-17.54
Inverter	MV5-6	369982	4908507	2	0	0	89.1	89.1	1	7723.15	3.25	0	88.76	0	2.3	0	0	15.83	0	0	0	0	0	0	-17.82	-17.82
Westbrook Inverter Enclosur	W_INV1	369409	4906578	2	0	0	86.1	86.1	1	5762.79	3.25	0	86.21	0	1.83	0	0	13.46	0	0	0	0	0	0	-15.44	-15.44
Inverter	MV6-4	370250	4906966	2	0	0	86.1	86.1	1	6554.7	3.25	0	87.33	0	2.02	0	0	14.45	0	0	0	0	0	0	-17.74	-17.74
Westbrook Inverter Transfor	W_INVTR1	369403	4906578	2	0	0	78.2	78.2	1	5759.64	3.25	0	86.21	0	-3.32	0	0	2.66	0	0	0	0	0	0	-7.31	-7.31
Westbrook Inverter Transfor	W_INVTR3	369514	4906164	2	0	0	77.3	77.3	1	5474.25	3.25	0	85.77	0	-3.27	0	0	2.57	0	0	0	0	0	0	-7.73	-7.73
Westbrook Inverter Transfor	W_INVTR4	369679	4906164	2	0	0	77.3	77.3	1	5570.29	3.25	0	85.92	0	-3.29	0	0	2.6	0	0	0	0	0	0	-7.89	-7.89
Westbrook Inverter Transfor	W_INVTR2	369368	4906388	2	0	0	77.3	77.3	1	5579.95	3.25	0	85.93	0	-3.29	0	0	2.61	0	0	0	0	0	0	-7.91	-7.91
Westbrook Inverter Transfor	W_INVTR7	369786	4906417	2	0	0	77.3	77.3	1	5837.89	3.25	0	86.33	0	-3.34	0	0	2.69	0	0	0	0	0	0	-8.33	-8.33
Westbrook Inverter Transfor	W_INVTR5	369725	4906574	2	0	0	77.3	77.3	1	5931.55	3.25	0	86.46	0	-3.36	0	0	2.72	0	0	0	0	0	0	-8.49	-8.49
Westbrook Inverter Transfor	W_INVTR6	369881	4906578	2	0	0	77.3	77.3	1	6024.11	3.25	0	86.6	0	-3.37	0	0	2.75	0	0	0	0	0	0	-8.63	-8.63
Inverter Transformer	MV1-14 T	365157	4905049	2	0	0	69.4	69.4	1	3590.41	3.25	0	82.1	0	2.68	0	0	6.36	0	0	0	0	0	0	-21.79	-21.79
Inverter Transformer	MV1-13 T	364725	4905241	2	0	0	69.4	69.4	1	3933.08	3.25	0	82.89	0	2.77	0	0	6.63	0	0	0	0	0	0	-22.94	-22.94
Inverter Transformer	MV1-10 T	365010	4905564	2	0	0	69.4	69.4	1	4124.83	3.25	0	83.31	0	2.82	0	0	6.77	0	0	0	0	0	0	-23.54	-23.54
Inverter Transformer	MV1-7 T	364919	4905782	2	0	0	69.4	69.4	1	4360.71	3.25	0	83.79	0	2.87	0	0	6.94	0	0	0	0	0	0	-24.25	-24.25

	Inverter Transformer	MV2-1 T	365836	4906816	2	0	0	69.4	69.4	1	5170.83	3.25	0	85.27	0	3.05	0	0	7.49	0	0	0	0	0	0	-26.46	-26.46
	Inverter Transformer	MV6-4 T	370244	4906966	2	0	0	69.4	69.4	1	6551.16	3.25	0	87.33	0	3.26	0	0	8.35	0	0	0	0	0	0	-29.59	-29.59
	Inverter Transformer	MV6-1 T	370230	4907364	2	0	0	69.4	69.4	1	6868.81	3.25	0	87.74	0	3.3	0	0	8.53	0	0	0	0	0	0	-30.22	-30.22
	Inverter Transformer	MV1-15 T	365309	4904994	2	0	0	56.1	56.1	1	3489.05	3.25	0	81.85	0	1.04	0	0	9.67	0	0	0	0	0	0	-36.5	-36.5
	Inverter Transformer	MV1-12 T	365044	4905386	2	0	0	56.1	56.1	1	3945.76	3.25	0	82.92	0	1.22	0	0	10.37	0	0	0	0	0	0	-38.46	-38.46
	Inverter Transformer	MV1-11 T	364649	4905414	2	0	0	56.1	56.1	1	4121.99	3.25	0	83.3	0	1.29	0	0	10.63	0	0	0	0	0	0	-39.17	-39.17
	Inverter Transformer	MV1-8 T	364782	4905647	2	0	0	56.1	56.1	1	4283.06	3.25	0	83.64	0	1.36	0	0	10.87	0	0	0	0	0	0	-39.8	-39.8
	Inverter Transformer	MV1-9 T	364555	4905646	2	0	0	56.1	56.1	1	4372.03	3.25	0	83.81	0	1.39	0	0	11	0	0	0	0	0	0	-40.14	-40.14
	Inverter Transformer	MV1-4 T	364821	4905918	2	0	0	56.1	56.1	1	4521.95	3.25	0	84.11	0	1.45	0	0	11.21	0	0	0	0	0	0	-40.7	-40.7
	Inverter Transformer	MV1-5 T	364676	4905892	2	0	0	56.1	56.1	1	4549.92	3.25	0	84.16	0	1.46	0	0	11.25	0	0	0	0	0	0	-40.81	-40.81
	Inverter Transformer	MV1-6 T	364482	4905835	2	0	0	56.1	56.1	1	4574.26	3.25	0	84.21	0	1.47	0	0	11.28	0	0	0	0	0	0	-40.89	-40.89
	Inverter Transformer	MV1-2 T	364759	4906063	2	0	0	56.1	56.1	1	4679.45	3.25	0	84.4	0	1.51	0	0	11.42	0	0	0	0	0	0	-41.28	-41.28
	Inverter Transformer	MV1-3 T	364435	4906039	2	0	0	56.1	56.1	1	4779.53	3.25	0	84.59	0	1.54	0	0	11.56	0	0	0	0	0	0	-41.63	-41.63
	Inverter Transformer	MV1-1 T	364721	4906166	2	0	0	56.1	56.1	1	4789.23	3.25	0	84.61	0	1.55	0	0	11.57	0	0	0	0	0	0	-41.67	-41.67
	Inverter Transformer	MV2-2 T	365982	4906654	2	0	0	56.1	56.1	1	4995.96	3.25	0	84.97	0	1.62	0	0	11.85	0	0	0	0	0	0	-42.39	-42.39
	Inverter Transformer	MV2-3 T	365814	4906641	2	0	0	56.1	56.1	1	4999.3	3.25	0	84.98	0	1.63	0	0	11.85	0	0	0	0	0	0	-42.4	-42.4
	Inverter Transformer	MV2-4 T	365590	4906628	2	0	0	56.1	56.1	1	5016.84	3.25	0	85.01	0	1.63	0	0	11.88	0	0	0	0	0	0	-42.46	-42.46
	Inverter Transformer	MV3-18 T	367757	4907412	2	0	0	56.1	56.1	1	5900.3	3.25	0	86.42	0	1.93	0	0	12.98	0	0	0	0	0	0	-45.28	-45.28
	Inverter Transformer	MV3-21 T	368484	4907206	2	0	0	56.1	56.1	1	5917.73	3.25	0	86.44	0	1.94	0	0	13.01	0	0	0	0	0	0	-45.33	-45.33
	Inverter Transformer	MV3-22 T	368661	4907142	2	0	0	56.1	56.1	1	5923.75	3.25	0	86.45	0	1.94	0	0	13.01	0	0	0	0	0	0	-45.35	-45.35
	Inverter Transformer	MV3-19 T	368352	4907347	2	0	0	56.1	56.1	1	6005.16	3.25	0	86.57	0	1.97	0	0	13.11	0	0	0	0	0	0	-45.59	-45.59
	Inverter Transformer	MV3-12 T	367674	4907594	2	0	0	56.1	56.1	1	6059.21	3.25	0	86.65	0	1.98	0	0	13.17	0	0	0	0	0	0	-45.75	-45.75
	Inverter Transformer	MV3-17 T	368183	4907472	2	0	0	56.1	56.1	1	6071.12	3.25	0	86.67	0	1.99	0	0	13.19	0	0	0	0	0	0	-45.78	-45.78
	Inverter Transformer	MV3-20 T	368683	4907317	2	0	0	56.1	56.1	1	6093.93	3.25	0	86.7	0	1.99	0	0	13.21	0	0	0	0	0	0	-45.85	-45.85
	Inverter Transformer	MV3-13 T	367958	4907577	2	0	0	56.1	56.1	1	6109.61	3.25	0	86.72	0	2	0	0	13.23	0	0	0	0	0	0	-45.89	-45.89
	Inverter Transformer	MV3-15 T	368351	4907477	2	0	0	56.1	56.1	1	6127.79	3.25	0	86.75	0	2	0	0	13.25	0	0	0	0	0	0	-45.95	-45.95
	Inverter Transformer	MV3-16 T	368509	4907475	2	0	0	56.1	56.1	1	6178.49	3.25	0	86.82	0	2.02	0	0	13.31	0	0	0	0	0	0	-46.09	-46.09
	Inverter Transformer	MV3-10 T	368162	4907669	2	0	0	56.1	56.1	1	6253.52	3.25	0	86.92	0	2.04	0	0	13.4	0	0	0	0	0	0	-46.31	-46.31
	Inverter Transformer	MV3-14 T	368678	4907498	2	0	0	56.1	56.1	1	6260.07	3.25	0	86.93	0	2.05	0	0	13.41	0	0	0	0	0	0	-46.33	-46.33
	Inverter Transformer	MV3-7 T	367951	4907754	2	0	0	56.1	56.1	1	6279.04	3.25	0	86.96	0	2.05	0	0	13.43	0	0	0	0	0	0	-46.38	-46.38
	Inverter Transformer	MV3-11 T	368340	4907662	2	0	0	56.1	56.1	1	6299.84	3.25	0	86.99	0	2.06	0	0	13.45	0	0	0	0	0	0	-46.44	-46.44
	Inverter Transformer	MV3-9 T	368517	4907703	2	0	0	56.1	56.1	1	6395.7	3.25	0	87.12	0	2.09	0	0	13.56	0	0	0	0	0	0	-46.71	-46.71
	Inverter Transformer	MV3-6 T	368156	4907834	2	0	0	56.1	56.1	1	6410.21	3.25	0	87.14	0	2.09	0	0	13.58	0	0	0	0	0	0	-46.75	-46.75
	Inverter Transformer	MV3-3 T	367944	4907927	2	0	0	56.1	56.1	1	6445	3.25	0	87.18	0	2.1	0	0	13.62	0	0	0	0	0	0	-46.85	-46.85
	Inverter Transformer	MV3-8 T	368685	4907712	2	0	0	56.1	56.1	1	6462.13	3.25	0	87.21	0	2.11	0	0	13.64	0	0	0	0	0	0	-46.89	-46.89
	Inverter Transformer	MV3-5 T	368335	4907843	2	0	0	56.1	56.1	1	6470.61	3.25	0	87.22	0	2.11	0	0	13.65	0	0	0	0	0	0	-46.92	-46.92
	Inverter Transformer	MV3-1 T	368150	4907976	2	0	0	56.1	56.1	1	6545.16	3.25	0	87.32	0	2.13	0	0	13.73	0	0	0	0	0	0	-47.12	-47.12
	Inverter Transformer	MV3-4 T	368507	4907925	2	0	0	56.1	56.1	1	6602.16	3.25	0	87.39	0	2.15	0	0	13.79	0	0	0	0	0	0	-47.28	-47.28
	Inverter Transformer	MV3-2 T	368677	4907928	2	0	0	56.1	56.1	1	6661.63	3.25	0	87.47	0	2.16	0	0	13.86	0	0	0	0	0	0	-47.44	-47.44
	Inverter Transformer	MV6-3 T	370202	4907140	2	0	0	56.1	56.1	1	6668.35	3.25	0	87.48	0	2.17	0	0	13.87	0	0	0	0	0	0	-47.46	-47.46
	Inverter Transformer	MV6-2 T	370091	4907339	2	0	0	56.1	56.1	1	6770.99	3.25	0	87.61	0	2.2	0	0	13.98	0	0	0	0	0	0	-47.73	-47.73
	Inverter Transformer	MV4-15 T	369170	4908481	2	0	0	56.1	56.1	1	7355.66	3.25	0	88.33	0	2.35	0	0	14.61	0	0	0	0	0	0	-49.23	-49.23
	Inverter Transformer	MV4-14 T	369182	4908507	2	0	0	56.1	56.1	1	7384.27	3.25	0	88.37	0	2.36	0	0	14.64	0	0	0	0	0	0	-49.3	-49.3
	Inverter Transformer	MV4-13 T	369057	4908605	2	0	0	56.1	56.1	1	7429.13	3.25	0	88.42	0	2.37	0	0	14.68	0	0	0	0	0	0	-49.41	-49.41
	Inverter Transformer	MV4-12 T	369049	4908803	2	0	0	56.1	56.1	1	7611.38	3.25	0	88.63	0	2.42	0	0	14.87	0	0	0	0	0	0	-49.86	-49.86
	Inverter Transformer	MV5-6 T	369987	4908507	2	0	0	56.1	56.1	1	7725.48	3.25	0	88.76	0	2.45	0	0	14.98	0	0	0	0	0	0	-50.13	-50.13
	Inverter Transformer	MV4-11 T	369269	4908855	2	0	0	56.1	56.1	1	7739.44	3.25	0	88.77	0	2.45	0	0	15	0	0	0	0	0	0	-50.16	-50.16
	Inverter Transformer	MV4-10 T	369307	4908858	2	0	0	56.1	56.1	1	7756.47	3.25	0	88.79	0	2.45	0	0	15.01	0	0	0	0	0	0	-50.2	-50.2
	Inverter Transformer	MV4-7 T	369040	4909001	2	0	0	56.1	56.1	1	7794.06	3.25	0	88.84	0	2.46	0	0	15.05	0	0	0	0	0	0	-50.29	-50.29
	Inverter Transformer	MV4-8 T	369262	4909001	2	0	0	56.1	56.1	1	7872.53	3.25	0	88.92	0	2.48	0	0	15.13	0	0	0	0	0	0	-50.47	-50.47
	Inverter Transformer	MV4-9 T	369284	4909001	2	0	0	56.1	56.1	1	7880.6	3.25	0	88.93	0	2.48	0	0	15.14	0	0	0	0	0	0	-50.49	-50.49
	Inverter Transformer	MV5-5 T	370021	4908690	2	0	0	56.1	56.1	1	7903.4	3.25	0	88.96	0	2.49	0	0	15.16	0	0	0	0	0	0	-50.55	-50.55
	Inverter Transformer	MV4-4 T	369033	4909199	2	0	0	56.1	56.1	1	7978.15	3.25	0	89.04	0	2.51	0	0	15.23	0	0	0	0	0	0	-50.72	-50.72
	Inverter Transformer	MV5-2 T	370011	4908853	2	0	0	56.1	56.1	1	8043.93	3.25	0	89.11	0	2.52	0	0	15.3	0	0	0	0	0	0	-50.87	-50.87
	Inverter Transformer	MV4-6 T	369249	4909192	2	0	0	56.1	56.1	1	8045.95	3.25	0	89.11	0	2.52	0	0	15.3	0	0	0	0	0	0	-50.87	-50.87
	Inverter Transformer	MV4-5 T	369283	4909199	2	0	0	56.1	56.1	1	8064.66	3.25	0	89.13	0	2.52	0	0	15.32	0	0	0	0	0	0	-50.92	-50.92
	Inverter Transformer	MV5-4 T	370330	4908707	2	0	0	56.1	56.1	1	8065.16	3.25	0	89.13	0	2.52	0	0	15.32	0	0	0	0	0	0	-50.92	-50.92
	Inverter Transformer	MV5-3 T	370237	4908851	2	0	0	56.1	56.1	1	8146.62	3.25	0	89.22	0	2.54	0	0	15.4	0	0	0	0	0	0	-51.1	-51.1
	Inverter Transformer	MV4-1 T	369017	4909397	2	0	0	56.1	56.1	1	8159.99	3.25	0	89.23	0	2.55	0	0	15.41	0	0	0	0	0	0	-51.13	-51.13
	Inverter Transformer	MV4-3 T	369234	4909397	2	0	0	56.1	56.1	1	8232.62	3.25	0	89.31	0	2.56	0	0	15.48	0	0	0	0	0	0	-51.3	-51.3
	Inverter Transformer	MV4-2 T	369267	4909397	2	0	0	56.1	56.1	1	8244.1	3.25	0	89.32	0	2.56	0	0	15.49	0	0	0	0	0	0	-51.32	-51.32
	Inverter Transformer	MV5-1 T	370015	4909142	2	0	0	56.1	56.1	1	8304.62	3.25	0	89.39	0	2.58	0	0	15.55	0	0	0	0	0	0	-51.46	-51.46
	Line Reactor	NGR	369421	4908787.5	5	0	0	45.4	45.4	1	7735.29	5.25	0	88.77	0	3.2	1.37	0.11	3.16	0	0	0	0	0	0	-51.15	-51.15
Limit. Valu	0	0																								
Level D/N:	21.4851	21.4851																								

Receiver: Existing Noise Receptor
ID: G-70
X: 365526.2
Y: 4903684
Z: 4.5
Ground: 0

ISO	Description	ID	X	Y	Z	Ground	ReflOrd	LxT	LxN	L/A	Dist.	hm	Freq	Adiv	K0b	Agr	Abar	z	Aatm	Afol	Ahous	Cmet	CmetN	Dc	RL	LtotT	LtotN

Inverter	MV1-15	365315	4904994	2	0	0	100.3	100.3	1	1326.92	3.25	0	73.46	0	-0.1	0	0	11.88	0	0	0	0	0	0	15.08	15.08
Sol_Luce Substation	S_Substation	369426	4908792	3.5	0	0	112.1	112.1	1	6426.52	5.25	0	87.16	0	1.26	2.56	0.28	10.18	0	0	0	0	0	0	10.92	10.92
Inverter	MV1-12	365038	4905386	2	0	0	100.3	100.3	1	1770.64	3.25	0	75.96	0	0.06	0	0	12.96	0	0	0	0	0	0	11.33	11.33
Inverter	MV1-11	364655	4905414	2	0	0	100.3	100.3	1	1936.98	3.25	0	76.74	0	0.11	0	0	13.33	0	0	0	0	0	0	10.13	10.13
Inverter	MV1-14	365163	4905049	2	0	0	97.3	97.3	1	1412.5	3.25	0	74	0	-0.07	0	0	12.1	0	0	0	0	0	0	11.28	11.28
Inverter	MV1-8	364788	4905647	2	0	0	100.3	100.3	1	2097.22	3.25	0	77.43	0	0.16	0	0	13.66	0	0	0	0	0	0	9.06	9.06
Inverter	MV1-9	364561	4905646	2	0	0	100.3	100.3	1	2186.56	3.25	0	77.8	0	0.18	0	0	13.85	0	0	0	0	0	0	8.49	8.49
Inverter	MV1-4	364815	4905918	2	0	0	100.3	100.3	1	2344.48	3.25	0	78.4	0	0.22	0	0	14.16	0	0	0	0	0	0	7.53	7.53
Inverter	MV1-5	364671	4905892	2	0	0	100.3	100.3	1	2367.83	3.25	0	78.49	0	0.23	0	0	14.2	0	0	0	0	0	0	7.39	7.39
Inverter	MV1-6	364477	4905835	2	0	0	100.3	100.3	1	2393.25	3.25	0	78.58	0	0.23	0	0	14.25	0	0	0	0	0	0	7.25	7.25
Inverter	MV1-13	364731	4905241	2	0	0	97.3	97.3	1	1748.31	3.25	0	75.85	0	0.05	0	0	12.91	0	0	0	0	0	0	8.49	8.49
Inverter	MV1-2	364753	4906063	2	0	0	100.3	100.3	1	2501.5	3.25	0	78.96	0	0.26	0	0	14.46	0	0	0	0	0	0	6.63	6.63
Inverter	MV1-1	364715	4906166	2	0	0	100.3	100.3	1	2611.2	3.25	0	79.34	0	0.28	0	0	14.67	0	0	0	0	0	0	6.03	6.03
Inverter	MV1-10	365004	4905564	2	0	0	97.3	97.3	1	1951.18	3.25	0	76.81	0	0.12	0	0	13.36	0	0	0	0	0	0	7.03	7.03
Inverter	MV2-4	365586	4906624	2	0	0	100.3	100.3	1	2940.61	3.25	0	80.37	0	0.35	0	0	15.27	0	0	0	0	0	0	4.33	4.33
Inverter	MV2-3	365820	4906641	2	0	0	100.3	100.3	1	2971.56	3.25	0	80.46	0	0.36	0	0	15.32	0	0	0	0	0	0	4.17	4.17
Inverter	MV1-7	364925	4905782	2	0	0	97.3	97.3	1	2182.44	3.25	0	77.78	0	0.18	0	0	13.84	0	0	0	0	0	0	5.52	5.52
Gardiner Substation	G_Sub	366586.3	4903349.9	2.5	0	0	90.8	90.8	1	1111.5	4.25	0	71.92	0	0.83	5.31	0.31	2.74	0	0	0	0	0	0	9.97	9.97
Inverter	MV3-18	367752	4907412	2	0	0	100.3	100.3	1	4341.91	3.25	0	83.75	0	0.57	0	0	17.59	0	0	0	0	0	0	-1.6	-1.6
Inverter	MV2-1	365842	4906816	2	0	0	97.3	97.3	1	3147.88	3.25	0	80.96	0	0.39	0	0	15.63	0	0	0	0	0	0	0.33	0.33
Inverter	MV3-12	367668	4907594	2	0	0	100.3	100.3	1	4458.18	3.25	0	83.98	0	0.59	0	0	17.77	0	0	0	0	0	0	-2.02	-2.02
Inverter	MV3-13	367963	4907577	2	0	0	100.3	100.3	1	4592.76	3.25	0	84.24	0	0.6	0	0	17.97	0	0	0	0	0	0	-2.5	-2.5
Inverter	MV3-21	368478	4907206	2	0	0	100.3	100.3	1	4595.39	3.25	0	84.25	0	0.6	0	0	17.98	0	0	0	0	0	0	-2.51	-2.51
Inverter	MV3-17	368178	4907472	2	0	0	100.3	100.3	1	4623.96	3.25	0	84.3	0	0.6	0	0	18.02	0	0	0	0	0	0	-2.61	-2.61
Inverter	MV3-19	368357	4907347	2	0	0	100.3	100.3	1	4629.36	3.25	0	84.31	0	0.61	0	0	18.03	0	0	0	0	0	0	-2.63	-2.63
Inverters	G_Inv1	366526.4	4903225.8	2	0	0	87.7	87.7	1	1100.16	3.25	0	71.83	0	2.46	0	0	1.55	0	0	0	0	0	0	11.81	11.81
Inverter	MV3-15	368357	4907477	2	0	0	100.3	100.3	1	4732.89	3.25	0	84.5	0	0.62	0	0	18.18	0	0	0	0	0	0	-2.99	-2.99
Inverter	MV3-7	367945	4907754	2	0	0	100.3	100.3	1	4734.5	3.25	0	84.51	0	0.62	0	0	18.19	0	0	0	0	0	0	-3	-3
Inverter	MV3-10	368167	4907669	2	0	0	100.3	100.3	1	4780.59	3.25	0	84.59	0	0.62	0	0	18.25	0	0	0	0	0	0	-3.15	-3.15
Inverter	MV3-20	368689	4907317	2	0	0	100.3	100.3	1	4816.85	3.25	0	84.66	0	0.62	0	0	18.31	0	0	0	0	0	0	-3.28	-3.28
Inverter	MV3-16	368514	4907475	2	0	0	100.3	100.3	1	4826.87	3.25	0	84.67	0	0.63	0	0	18.32	0	0	0	0	0	0	-3.31	-3.31
Inverter	MV3-11	368346	4907662	2	0	0	100.3	100.3	1	4876.04	3.25	0	84.76	0	0.63	0	0	18.4	0	0	0	0	0	0	-3.48	-3.48
Inverter	MV3-3	367939	4907927	2	0	0	100.3	100.3	1	4881.05	3.25	0	84.77	0	0.63	0	0	18.4	0	0	0	0	0	0	-3.49	-3.49
Inverter	MV3-6	368162	4907834	2	0	0	100.3	100.3	1	4916.29	3.25	0	84.83	0	0.63	0	0	18.46	0	0	0	0	0	0	-3.61	-3.61
Inverter	MV3-14	368684	4907498	2	0	0	100.3	100.3	1	4951.6	3.25	0	84.89	0	0.64	0	0	18.51	0	0	0	0	0	0	-3.73	-3.73
Inverter	MV3-9	368512	4907703	2	0	0	100.3	100.3	1	5006.73	3.25	0	84.99	0	0.64	0	0	18.59	0	0	0	0	0	0	-3.91	-3.91
Inverter	MV3-8	368680	4907712	2	0	0	100.3	100.3	1	5115.78	3.25	0	85.18	0	0.65	0	0	18.75	0	0	0	0	0	0	-4.27	-4.27
Inverters	G_Inv3	366583.7	4903091.4	2	0	0	87.7	87.7	1	1212.22	3.25	0	72.67	0	2.48	0	0	1.69	0	0	0	0	0	0	10.82	10.82
Inverters	G_Inv2	366676.9	4903239.1	2	0	0	87.7	87.7	1	1233.72	3.25	0	72.82	0	2.48	0	0	1.72	0	0	0	0	0	0	10.63	10.63
Inverters	G_Inv5	366638.5	4902958.1	2	0	0	87.7	87.7	1	1328.21	3.25	0	73.47	0	2.5	0	0	1.84	0	0	0	0	0	0	9.86	9.86
Inverters	G_Inv4	366732.8	4903105	2	0	0	87.7	87.7	1	1338.33	3.25	0	73.53	0	2.5	0	0	1.85	0	0	0	0	0	0	9.78	9.78
Inverter	MV6-3	370207	4907140	2	0	0	100.3	100.3	1	5818.4	3.25	0	86.3	0	0.7	0	0	19.74	0	0	0	0	0	0	-6.43	-6.43
Inverter	MV6-2	370085	4907339	2	0	0	100.3	100.3	1	5843.09	3.25	0	86.33	0	0.7	0	0	19.78	0	0	0	0	0	0	-6.5	-6.5
Inverters	G_Inv6	366788.5	4902972	2	0	0	87.7	87.7	1	1449.26	3.25	0	74.22	0	2.51	0	0	1.98	0	0	0	0	0	0	8.94	8.94
Inverters	G_Inv7	366694.6	4902824.7	2	0	0	87.7	87.7	1	1450.37	3.25	0	74.23	0	2.51	0	0	1.98	0	0	0	0	0	0	8.93	8.93
Inverter	MV4-7	369035	4909001	2	0	0	100.3	100.3	1	6370.41	3.25	0	87.08	0	0.71	0	0	20.49	0	0	0	0	0	0	-7.97	-7.97
Inverter	MV4-11	369264	4908855	2	0	0	100.3	100.3	1	6380.47	3.25	0	87.1	0	0.71	0	0	20.5	0	0	0	0	0	0	-8	-8
Inverter	MV4-10	369312	4908858	2	0	0	100.3	100.3	1	6411.13	3.25	0	87.14	0	0.71	0	0	20.54	0	0	0	0	0	0	-8.08	-8.08
Inverter	MV4-8	369256	4909001	2	0	0	100.3	100.3	1	6494.76	3.25	0	87.25	0	0.71	0	0	20.65	0	0	0	0	0	0	-8.31	-8.31
Inverter	MV4-9	369289	4909001	2	0	0	100.3	100.3	1	6513.77	3.25	0	87.28	0	0.71	0	0	20.68	0	0	0	0	0	0	-8.36	-8.36
Inverter	MV4-4	369027	4909199	2	0	0	100.3	100.3	1	6532.29	3.25	0	87.3	0	0.71	0	0	20.7	0	0	0	0	0	0	-8.41	-8.41
Inverter	MV4-6	369243	4909192	2	0	0	100.3	100.3	1	6644.75	3.25	0	87.45	0	0.71	0	0	20.85	0	0	0	0	0	0	-8.7	-8.7
Inverter	MV4-5	369289	4909199	2	0	0	100.3	100.3	1	6676.37	3.25	0	87.49	0	0.71	0	0	20.89	0	0	0	0	0	0	-8.78	-8.78
Inverter	MV4-1	369011	4909397	2	0	0	100.3	100.3	1	6691.95	3.25	0	87.51	0	0.71	0	0	20.91	0	0	0	0	0	0	-8.82	-8.82
Inverters	G_Inv8	366844.5	4902838.5	2	0	0	87.7	87.7	1	1566.14	3.25	0	74.9	0	2.53	0	0	2.12	0	0	0	0	0	0	8.11	8.11
Inverter	MV5-5	370015	4908690	2	0	0	100.3	100.3	1	6723.79	3.25	0	87.55	0	0.71	0	0	20.95	0	0	0	0	0	0	-8.9	-8.9
Inverters	G_Inv9	366750.9	4902691.8	2	0	0	87.7	87.7	1	1576.18	3.25	0	74.95	0	2.53	0	0	2.14	0	0	0	0	0	0	8.04	8.04
Inverter	MV4-3	369229	4909397	2	0	0	100.3	100.3	1	6808.02	3.25	0	87.66	0	0.71	0	0	21.06	0	0	0	0	0	0	-9.12	-9.12
Inverter	MV4-2	369272	4909397	2	0	0	100.3	100.3	1	6831.5	3.25	0	87.69	0	0.71	0	0	21.09	0	0	0	0	0	0	-9.18	-9.18
Inverter	MV5-2	370006	4908853	2	0	0	100.3	100.3	1	6840.12	3.25	0	87.7	0	0.71	0	0	21.1	0	0	0	0	0	0	-9.2	-9.2
Inverter	MV5-4	370324	4908707	2	0	0	100.3	100.3	1	6946.18	3.25	0	87.83	0	0.71	0	0	21.23	0	0	0	0	0	0	-9.47	-9.47
Inverter	MV5-3	370231	4908851	2	0	0	100.3	100.3	1	6988.06	3.25	0	87.89	0	0.71	0	0	21.28	0	0	0	0	0	0	-9.57	-9.57
Inverter	MV5-1	370020	4909142	2	0	0	100.3	100.3	1	7069.94	3.25	0	87.99	0	0.71	0	0	21.39	0	0	0	0	0	0	-9.77	-9.77
Inverters	G_Inv10	366900.7	4902704.8	2	0	0	87.7	87.7	1	1687.63	3.25	0	75.55	0	2.54	0	0	2.27	0	0	0	0	0	0	7.3	7.3
Inverter	MV6-1	370235	4907364	2	0	0	97.3	97.3	1	5976.22	3.25	0	86.53	0	0.7	0	0	19.96	0	0	0	0	0	0	-9.88	-9.88
Inverter	MV1-3	364440	4906039	2	0	0	89.1	89.1	1	2593.43	3.25	0	79.28	0	1.05	0	0	8.99	0	0	0	0	0	0	-0.26	-0.26
DSTATCOM - 10 MVAR #2	DSAT2	369403	4908757	2.5	0	0	96.6	96.6	1	6384.74	3.5	0	87.1	0	3.8	0	0	4.02	0	0	0	0	0	0	1.7	1.7
DSTATCOM - 10 MVAR #1	DSAT1	369437	4908757	2.5	0	0	96.6	96.6	1	6405.44	3.5	0	87.13	0	3.8	0	0	4.03	0	0	0	0	0	0	1.67	1.67
Inverter	MV2-2	365977	4906654	2	0	0	89.1	89.1	1	3004.02	3.25	0	80.55	0	1.15	0	0	9.62	0	0	0	0	0	0	-2.27	-2.27
SubstationTransformer	W_ST	369711.17	4906112.3	2.5	0	0	92	92	1	4838.44	4.25	0	84.69	0	1.59	2.37	0.25	8.43	0	0	0	0	0	0	-5.11	-5.11
Inverter	MV3-22	368656	4907142	2	0	0	89.1	89.1	1	4664.06	3.25	0	84.38	0	1.56	0	0	12.01	0	0	0	0	0	0	-8.88	-8.88
Westbrook Inverter Enclosur	W_INV3	369508	4906164	2	0	0	89.1	89.1	1	4690.96	3.25	0	84.43	0	1.56	0	0	12.05	0	0	0	0	0	0	-8.98	-8.98
Westbrook Inverter Enclosur	W_INV2	369374	4906388	2	0	0	89.1	89.1	1	4702.89	3.25	0	84.45	0	1.57	0	0	12.06	0	0	0	0	0	0	-9.02	-9.02
Westbrook Inverter Enclosur	W_INV4	369673	4906164	2	0	0	89.1	89.1	1	4831.81	3.25	0	84.68	0	1.6	0	0	12.24	0	0	0	0	0	0	-9.46	-9.46

Inverter	MV3-5	368340	4907843	2	0	0	89.1	89.1	1	5021.43	3.25	0	85.02	0	1.65	0	0	12.49	0	0	0	0	0	0	-10.1	-10.1
Inverter	MV3-1	368156	4907976	2	0	0	89.1	89.1	1	5033.6	3.25	0	85.04	0	1.65	0	0	12.51	0	0	0	0	0	0	-10.14	-10.14
Westbrook Inverter Enclosur	W_INV7	369780	4906417	2	0	0	89.1	89.1	1	5056.1	3.25	0	85.08	0	1.65	0	0	12.54	0	0	0	0	0	0	-10.21	-10.21
Westbrook Inverter Enclosur	W_INV5	369719	4906574	2	0	0	89.1	89.1	1	5092.32	3.25	0	85.14	0	1.66	0	0	12.59	0	0	0	0	0	0	-10.33	-10.33
Inverter	MV3-4	368502	4907925	2	0	0	89.1	89.1	1	5180.88	3.25	0	85.29	0	1.68	0	0	12.7	0	0	0	0	0	0	-10.62	-10.62
Westbrook Inverter Enclosur	W_INV6	369875	4906578	2	0	0	89.1	89.1	1	5223.73	3.25	0	85.36	0	1.7	0	0	12.76	0	0	0	0	0	0	-10.76	-10.76
Inverter	MV3-2	368671	4907928	2	0	0	89.1	89.1	1	5282.17	3.25	0	85.46	0	1.71	0	0	12.84	0	0	0	0	0	0	-10.95	-10.95
Fixed Reactor Bank 1	FRB1	369378	4908755	6	0	0	89.8	89.8	1	6368	5.25	0	87.08	0	-0.37	0	0	10.13	0	0	0	0	0	0	-7.06	-7.06
Fixed Reactor Bank 2	FRB2	369464	4908755	6	0	0	89.8	89.8	1	6420.38	5.25	0	87.15	0	-0.36	0	0	10.18	0	0	0	0	0	0	-7.19	-7.19
Inverter	MV4-15	369176	4908481	2	0	0	89.1	89.1	1	6027.62	3.25	0	86.6	0	1.89	0	0	13.8	0	0	0	0	0	0	-13.23	-13.23
Inverter	MV4-14	369176	4908507	2	0	0	89.1	89.1	1	6048.34	3.25	0	86.63	0	1.9	0	0	13.82	0	0	0	0	0	0	-13.3	-13.3
Inverter	MV4-13	369051	4908605	2	0	0	89.1	89.1	1	6053.14	3.25	0	86.64	0	1.9	0	0	13.83	0	0	0	0	0	0	-13.31	-13.31
Inverter	MV4-12	369043	4908803	2	0	0	89.1	89.1	1	6210.64	3.25	0	86.86	0	1.94	0	0	14.03	0	0	0	0	0	0	-13.77	-13.77
Inverter	MV5-6	369982	4908507	2	0	0	89.1	89.1	1	6566.24	3.25	0	87.35	0	2.02	0	0	14.46	0	0	0	0	0	0	-14.78	-14.78
Westbrook Inverter Enclosur	W_INV1	369409	4906578	2	0	0	86.1	86.1	1	4842.66	3.25	0	84.7	0	1.6	0	0	12.25	0	0	0	0	0	0	-12.5	-12.5
Inverter	MV6-4	370250	4906966	2	0	0	86.1	86.1	1	5752.03	3.25	0	86.2	0	1.83	0	0	13.45	0	0	0	0	0	0	-15.41	-15.41
Inverter Transformer	MV1-14 T	365157	4905049	2	0	0	69.4	69.4	1	1414.05	3.25	0	74.01	0	1.93	0	0	4.34	0	0	0	0	0	0	-10.93	-10.93
Westbrook Inverter Transfor	W_INVTR1	369403	4906578	2	0	0	78.2	78.2	1	4837.85	3.25	0	84.69	0	-3.14	0	0	2.36	0	0	0	0	0	0	-5.66	-5.66
Inverter Transformer	MV1-13 T	364725	4905241	2	0	0	69.4	69.4	1	1751.05	3.25	0	75.87	0	2.08	0	0	4.71	0	0	0	0	0	0	-13.3	-13.3
Westbrook Inverter Transfor	W_INVTR3	369514	4906164	2	0	0	77.3	77.3	1	4696.06	3.25	0	84.43	0	-3.12	0	0	2.31	0	0	0	0	0	0	-6.29	-6.29
Westbrook Inverter Transfor	W_INVTR2	369368	4906388	2	0	0	77.3	77.3	1	4697.98	3.25	0	84.44	0	-3.12	0	0	2.31	0	0	0	0	0	0	-6.29	-6.29
Westbrook Inverter Transfor	W_INVTR4	369679	4906164	2	0	0	77.3	77.3	1	4836.96	3.25	0	84.69	0	-3.14	0	0	2.36	0	0	0	0	0	0	-6.56	-6.56
Inverter Transformer	MV1-10 T	365010	4905564	2	0	0	69.4	69.4	1	1949.58	3.25	0	76.8	0	2.15	0	0	4.91	0	0	0	0	0	0	-14.52	-14.52
Westbrook Inverter Transfor	W_INVTR7	369786	4906417	2	0	0	77.3	77.3	1	5061.15	3.25	0	85.08	0	-3.19	0	0	2.43	0	0	0	0	0	0	-6.99	-6.99
Westbrook Inverter Transfor	W_INVTR5	369725	4906574	2	0	0	77.3	77.3	1	5097.26	3.25	0	85.15	0	-3.2	0	0	2.45	0	0	0	0	0	0	-7.05	-7.05
Westbrook Inverter Transfor	W_INVTR6	369881	4906578	2	0	0	77.3	77.3	1	5228.72	3.25	0	85.37	0	-3.22	0	0	2.49	0	0	0	0	0	0	-7.29	-7.29
Inverter Transformer	MV1-7 T	364919	4905782	2	0	0	69.4	69.4	1	2184.1	3.25	0	77.79	0	2.24	0	0	5.15	0	0	0	0	0	0	-15.82	-15.82
Inverter Transformer	MV2-1 T	365836	4906816	2	0	0	69.4	69.4	1	3147.29	3.25	0	80.96	0	2.55	0	0	6.01	0	0	0	0	0	0	-20.17	-20.17
Inverter Transformer	MV6-4 T	370244	4906966	2	0	0	69.4	69.4	1	5747.1	3.25	0	86.19	0	3.15	0	0	7.86	0	0	0	0	0	0	-27.85	-27.85
Inverter Transformer	MV6-1 T	370230	4907364	2	0	0	69.4	69.4	1	5972.28	3.25	0	86.52	0	3.18	0	0	8	0	0	0	0	0	0	-28.36	-28.36
Inverter Transformer	MV1-15 T	365309	4904994	2	0	0	56.1	56.1	1	1327.89	3.25	0	73.46	0	0.13	0	0	5.64	0	0	0	0	0	0	-23.18	-23.18
Inverter Transformer	MV1-12 T	365044	4905386	2	0	0	56.1	56.1	1	1768.99	3.25	0	75.95	0	0.31	0	0	6.58	0	0	0	0	0	0	-26.78	-26.78
Inverter Transformer	MV1-11 T	364649	4905414	2	0	0	56.1	56.1	1	1939.69	3.25	0	76.75	0	0.38	0	0	6.92	0	0	0	0	0	0	-28	-28
Inverter Transformer	MV1-8 T	364782	4905647	2	0	0	56.1	56.1	1	2099.34	3.25	0	77.44	0	0.45	0	0	7.24	0	0	0	0	0	0	-29.07	-29.07
Inverter Transformer	MV1-9 T	364555	4905646	2	0	0	56.1	56.1	1	2189.22	3.25	0	77.81	0	0.48	0	0	7.41	0	0	0	0	0	0	-29.64	-29.64
Inverter Transformer	MV1-4 T	364821	4905918	2	0	0	56.1	56.1	1	2342.66	3.25	0	78.39	0	0.55	0	0	7.7	0	0	0	0	0	0	-30.58	-30.58
Inverter Transformer	MV1-5 T	364676	4905892	2	0	0	56.1	56.1	1	2366.03	3.25	0	78.48	0	0.56	0	0	7.74	0	0	0	0	0	0	-30.72	-30.72
Inverter Transformer	MV1-6 T	364482	4905835	2	0	0	56.1	56.1	1	2391.06	3.25	0	78.57	0	0.57	0	0	7.79	0	0	0	0	0	0	-30.87	-30.87
Inverter Transformer	MV1-2 T	364759	4906063	2	0	0	56.1	56.1	1	2499.65	3.25	0	78.96	0	0.62	0	0	7.99	0	0	0	0	0	0	-31.5	-31.5
Inverter Transformer	MV1-3 T	364435	4906039	2	0	0	56.1	56.1	1	2595.52	3.25	0	79.28	0	0.66	0	0	8.16	0	0	0	0	0	0	-32.05	-32.05
Inverter Transformer	MV1-1 T	364721	4906166	2	0	0	56.1	56.1	1	2609.34	3.25	0	79.33	0	0.66	0	0	8.19	0	0	0	0	0	0	-32.12	-32.12
Inverter Transformer	MV2-4 T	365590	4906628	2	0	0	56.1	56.1	1	2944.69	3.25	0	80.38	0	0.81	0	0	8.77	0	0	0	0	0	0	-33.9	-33.9
Inverter Transformer	MV2-3 T	365814	4906641	2	0	0	56.1	56.1	1	2970.97	3.25	0	80.46	0	0.82	0	0	8.82	0	0	0	0	0	0	-34.04	-34.04
Inverter Transformer	MV2-2 T	365982	4906654	2	0	0	56.1	56.1	1	3004.77	3.25	0	80.56	0	0.83	0	0	8.88	0	0	0	0	0	0	-34.21	-34.21
Inverter Transformer	MV3-18 T	367757	4907412	2	0	0	56.1	56.1	1	4344.47	3.25	0	83.76	0	1.38	0	0	10.96	0	0	0	0	0	0	-40.04	-40.04
Inverter Transformer	MV3-12 T	367674	4907594	2	0	0	56.1	56.1	1	4461.07	3.25	0	83.99	0	1.42	0	0	11.12	0	0	0	0	0	0	-40.48	-40.48
Inverter Transformer	MV3-13 T	367958	4907577	2	0	0	56.1	56.1	1	4590.11	3.25	0	84.24	0	1.47	0	0	11.3	0	0	0	0	0	0	-40.95	-40.95
Inverter Transformer	MV3-21 T	368484	4907206	2	0	0	56.1	56.1	1	4599.25	3.25	0	84.25	0	1.48	0	0	11.31	0	0	0	0	0	0	-40.99	-40.99
Inverter Transformer	MV3-19 T	368352	4907347	2	0	0	56.1	56.1	1	4626.31	3.25	0	84.3	0	1.49	0	0	11.35	0	0	0	0	0	0	-41.08	-41.08
Inverter Transformer	MV3-17 T	368183	4907472	2	0	0	56.1	56.1	1	4626.83	3.25	0	84.31	0	1.49	0	0	11.35	0	0	0	0	0	0	-41.09	-41.09
Inverter Transformer	MV3-22 T	368661	4907142	2	0	0	56.1	56.1	1	4667.41	3.25	0	84.38	0	1.5	0	0	11.41	0	0	0	0	0	0	-41.23	-41.23
Inverter Transformer	MV3-15 T	368351	4907477	2	0	0	56.1	56.1	1	4729.31	3.25	0	84.5	0	1.53	0	0	11.49	0	0	0	0	0	0	-41.46	-41.46
Inverter Transformer	MV3-7 T	367951	4907754	2	0	0	56.1	56.1	1	4737.57	3.25	0	84.51	0	1.53	0	0	11.5	0	0	0	0	0	0	-41.48	-41.48
Inverter Transformer	MV3-10 T	368162	4907669	2	0	0	56.1	56.1	1	4777.83	3.25	0	84.58	0	1.54	0	0	11.56	0	0	0	0	0	0	-41.63	-41.63
Inverter Transformer	MV3-20 T	368683	4907317	2	0	0	56.1	56.1	1	4812.91	3.25	0	84.65	0	1.56	0	0	11.6	0	0	0	0	0	0	-41.75	-41.75
Inverter Transformer	MV3-16 T	368509	4907475	2	0	0	56.1	56.1	1	4823.77	3.25	0	84.67	0	1.56	0	0	11.62	0	0	0	0	0	0	-41.79	-41.79
Inverter Transformer	MV3-11 T	368340	4907662	2	0	0	56.1	56.1	1	4872.57	3.25	0	84.76	0	1.58	0	0	11.68	0	0	0	0	0	0	-41.96	-41.96
Inverter Transformer	MV3-3 T	367944	4907927	2	0	0	56.1	56.1	1	4883.52	3.25	0	84.77	0	1.58	0	0	11.7	0	0	0	0	0	0	-42	-42
Inverter Transformer	MV3-6 T	368156	4907834	2	0	0	56.1	56.1	1	4913.08	3.25	0	84.83	0	1.59	0	0	11.74	0	0	0	0	0	0	-42.1	-42.1
Inverter Transformer	MV3-14 T	368678	4907498	2	0	0	56.1	56.1	1	4947.77	3.25	0	84.89	0	1.61	0	0	11.79	0	0	0	0	0	0	-42.22	-42.22
Inverter Transformer	MV3-9 T	368517	4907703	2	0	0	56.1	56.1	1	5009.72	3.25	0	85	0	1.63	0	0	11.87	0	0	0	0	0	0	-42.43	-42.43
Inverter Transformer	MV3-5 T	368335	4907843	2	0	0	56.1	56.1	1	5018.63	3.25	0	85.01	0	1.63	0	0	11.88	0	0	0	0	0	0	-42.46	-42.46
Inverter Transformer	MV3-1 T	368150	4907976	2	0	0	56.1	56.1	1	5030.47	3.25	0	85.03	0	1.64	0	0	11.89	0	0	0	0	0	0	-42.5	-42.5
Inverter Transformer	MV3-8 T	368685	4907712	2	0	0	56.1	56.1	1	5118.87	3.25	0	85.18	0	1.67	0	0	12.01	0	0	0	0	0	0	-42.8	-42.8
Inverter Transformer	MV3-4 T	368507	4907925	2	0	0	56.1	56.1	1	5183.75	3.25	0	85.29	0	1.69	0	0	12.09	0	0	0	0	0	0	-43.02	-43.02
Inverter Transformer	MV3-2 T	368677	4907928	2	0	0	56.1	56.1	1	5285.74	3.25	0	85.46	0	1.73	0	0	12.22	0	0	0	0	0	0	-43.36	-43.36
Inverter Transformer	MV6-3 T	370202	4907140	2	0	0	56.1	56.1	1	5814.38	3.25	0	86.29	0	1.91	0	0	12.88	0	0	0	0	0	0	-45.02	-45.02
Inverter Transformer	MV6-2 T	370091	4907339	2	0	0	56.1	56.1	1	5847.77	3.25	0	86.34	0	1.92	0	0	12.92	0	0	0	0	0	0	-45.12	-45.12
Inverter Transformer	MV4-15 T	369170	4908481	2	0	0	56.1	56.1	1	6023.99	3.25	0	86.6	0	1.97	0	0	13.13	0	0	0	0	0	0	-45.64	-45.64
Inverter Transformer	MV4-14 T	369182	4908507	2	0	0	56.1	56.1	1	6051.96	3.25	0	86.64	0	1.98	0	0	13.16	0	0	0	0	0	0	-45.72	-45.72
Inverter Transformer	MV4-13 T	369057	4908605	2	0	0	56.1	56.1	1	6056.63	3.25	0	86.64	0	1.98	0	0	13.17	0	0	0	0	0	0	-45.74	-45.74
Inverter Transformer	MV4-12 T	369049	4908803	2	0	0	56.1	56.1	1	6214.04	3.25	0	86.87	0	2.03	0	0	13.35	0	0	0	0	0	0	-46.19	-46.19
Inverter Transformer	MV4-7 T	369040	4909001	2	0	0	56.1	56.1	1	6373.17	3.25	0	87.09	0	2.08	0	0	13.54	0	0	0	0	0	0	-46.64	-46.64
Inverter Transformer	MV4-11 T	369269	4908855	2	0	0	56.1	56.1	1	6383.4	3.25	0	87.1	0	2.08	0	0	13.55	0	0	0	0	0	0	-46.67	-46.67

	Inverter Transformer	MV4-10 T	369307	4908858	2	0	0	56.1	56.1	1	6408.18	3.25	0	87.13	0	2.09	0	0	13.58	0	0	0	0	0	0	-46.74	-46.74
	Inverter Transformer	MV4-8 T	369262	4909001	2	0	0	56.1	56.1	1	6498.21	3.25	0	87.26	0	2.12	0	0	13.68	0	0	0	0	0	0	-46.99	-46.99
	Inverter Transformer	MV4-9 T	369284	4909001	2	0	0	56.1	56.1	1	6510.88	3.25	0	87.27	0	2.12	0	0	13.69	0	0	0	0	0	0	-47.03	-47.03
	Inverter Transformer	MV4-4 T	369033	4909199	2	0	0	56.1	56.1	1	6535.51	3.25	0	87.31	0	2.13	0	0	13.72	0	0	0	0	0	0	-47.1	-47.1
	Inverter Transformer	MV5-6 T	369987	4908507	2	0	0	56.1	56.1	1	6569.63	3.25	0	87.35	0	2.14	0	0	13.76	0	0	0	0	0	0	-47.19	-47.19
	Inverter Transformer	MV4-6 T	369249	4909192	2	0	0	56.1	56.1	1	6648.11	3.25	0	87.45	0	2.16	0	0	13.85	0	0	0	0	0	0	-47.4	-47.4
	Inverter Transformer	MV4-5 T	369283	4909199	2	0	0	56.1	56.1	1	6672.99	3.25	0	87.49	0	2.17	0	0	13.87	0	0	0	0	0	0	-47.47	-47.47
	Inverter Transformer	MV4-1 T	369017	4909397	2	0	0	56.1	56.1	1	6695.08	3.25	0	87.52	0	2.17	0	0	13.9	0	0	0	0	0	0	-47.53	-47.53
	Inverter Transformer	MV5-5 T	370021	4908690	2	0	0	56.1	56.1	1	6727.8	3.25	0	87.56	0	2.18	0	0	13.93	0	0	0	0	0	0	-47.62	-47.62
	Inverter Transformer	MV4-3 T	369234	4909397	2	0	0	56.1	56.1	1	6810.74	3.25	0	87.66	0	2.21	0	0	14.02	0	0	0	0	0	0	-47.84	-47.84
	Inverter Transformer	MV4-2 T	369267	4909397	2	0	0	56.1	56.1	1	6828.76	3.25	0	87.69	0	2.21	0	0	14.04	0	0	0	0	0	0	-47.88	-47.88
	Inverter Transformer	MV5-2 T	370011	4908853	2	0	0	56.1	56.1	1	6843.39	3.25	0	87.71	0	2.22	0	0	14.06	0	0	0	0	0	0	-47.92	-47.92
	Inverter Transformer	MV5-4 T	370330	4908707	2	0	0	56.1	56.1	1	6950.33	3.25	0	87.84	0	2.25	0	0	14.18	0	0	0	0	0	0	-48.2	-48.2
	Inverter Transformer	MV5-3 T	370237	4908851	2	0	0	56.1	56.1	1	6992.1	3.25	0	87.89	0	2.26	0	0	14.22	0	0	0	0	0	0	-48.31	-48.31
	Inverter Transformer	MV5-1 T	370015	4909142	2	0	0	56.1	56.1	1	7066.76	3.25	0	87.98	0	2.28	0	0	14.3	0	0	0	0	0	0	-48.5	-48.5
	Line Reactor	NGR	369421	4908787.5	5	0	0	45.4	45.4	1	6419.9	5.25	0	87.15	0	3.23	1.37	0.09	2.62	0	0	0	0	0	0	-49.02	-49.02
Limit. Valu	0	0																								
Level D/N:	24.2409	24.2409																								

Receiver: Existing Noise Receptor
ID: G-71
X: 366329.2
Y: 4901680.1
Z: 4.5
Ground: 0

ISO	Description	ID	X	Y	Z	Ground	ReflOrd	LxT	LxN	L/A	Dist.	hm	Freq	Adiv	K0b	Agr	Abar	z	Aatm	Afol	Ahous	Cmet	CmetN	Dc	RL	LtotT	LtotN
	Sol_Luce Substation	S_Substation	369426	4908792	3.5	0	0	112.1	112.1	1	7756.89	5.25	0	88.79	0	1.52	2.31	0.32	11.44	0	0	0	0	0	0	8.01	8.01
	Inverter	MV1-15	365315	4904994	2	0	0	100.3	100.3	1	3465.62	3.25	0	81.8	0	0.45	0	0	16.17	0	0	0	0	0	0	1.9	1.9
	Inverter	MV1-12	365038	4905386	2	0	0	100.3	100.3	1	3924.4	3.25	0	82.88	0	0.52	0	0	16.93	0	0	0	0	0	0	-0.01	-0.01
	Inverter	MV1-11	364655	4905414	2	0	0	100.3	100.3	1	4092.06	3.25	0	83.24	0	0.54	0	0	17.19	0	0	0	0	0	0	-0.66	-0.66
	Inverter	MV1-8	364788	4905647	2	0	0	100.3	100.3	1	4255.77	3.25	0	83.58	0	0.56	0	0	17.45	0	0	0	0	0	0	-1.28	-1.28
	Inverter	MV1-9	364561	4905646	2	0	0	100.3	100.3	1	4342.22	3.25	0	83.75	0	0.57	0	0	17.59	0	0	0	0	0	0	-1.6	-1.6
	Inverter	MV1-4	364815	4905918	2	0	0	100.3	100.3	1	4500.29	3.25	0	84.06	0	0.59	0	0	17.83	0	0	0	0	0	0	-2.17	-2.17
	Inverter	MV1-5	364671	4905892	2	0	0	100.3	100.3	1	4526.56	3.25	0	84.12	0	0.59	0	0	17.87	0	0	0	0	0	0	-2.27	-2.27
	Inverter	MV1-6	364477	4905835	2	0	0	100.3	100.3	1	4549.05	3.25	0	84.16	0	0.6	0	0	17.91	0	0	0	0	0	0	-2.35	-2.35
	Inverter	MV1-2	364753	4906063	2	0	0	100.3	100.3	1	4657.71	3.25	0	84.36	0	0.61	0	0	18.07	0	0	0	0	0	0	-2.73	-2.73
	Inverters	G_Inv9	366750.9	4902691.8	2	0	0	87.7	87.7	1	1096.07	3.25	0	71.8	0	2.46	0	0	1.55	0	0	0	0	0	0	11.85	11.85
	Inverter	MV1-1	364715	4906166	2	0	0	100.3	100.3	1	4767.49	3.25	0	84.57	0	0.62	0	0	18.24	0	0	0	0	0	0	-3.11	-3.11
	Inverter	MV2-3	365820	4906641	2	0	0	100.3	100.3	1	4986.96	3.25	0	84.96	0	0.64	0	0	18.56	0	0	0	0	0	0	-3.85	-3.85
	Inverter	MV2-4	365586	4906624	2	0	0	100.3	100.3	1	4999.45	3.25	0	84.98	0	0.64	0	0	18.58	0	0	0	0	0	0	-3.89	-3.89
	Inverters	G_Inv10	366900.7	4902704.8	2	0	0	87.7	87.7	1	1173.3	3.25	0	72.39	0	2.47	0	0	1.64	0	0	0	0	0	0	11.15	11.15
	Inverter	MV1-14	365163	4905049	2	0	0	97.3	97.3	1	3565.04	3.25	0	82.04	0	0.46	0	0	16.34	0	0	0	0	0	0	-1.53	-1.53
	Gardiner Substation	G_Sub	366586.3	4903349.9	2.5	0	0	90.8	90.8	1	1689.48	3.5	0	75.56	0	-0.24	0	0	3.83	0	0	0	0	0	0	11.63	11.63
	Inverters	G_Inv7	366694.6	4902824.7	2	0	0	87.7	87.7	1	1201.51	3.25	0	72.59	0	2.48	0	0	1.68	0	0	0	0	0	0	10.91	10.91
	Inverters	G_Inv8	366844.5	4902838.5	2	0	0	87.7	87.7	1	1267.84	3.25	0	73.06	0	2.49	0	0	1.76	0	0	0	0	0	0	10.35	10.35
	Inverter	MV1-13	364731	4905241	2	0	0	97.3	97.3	1	3903.11	3.25	0	82.83	0	0.51	0	0	16.89	0	0	0	0	0	0	-2.92	-2.92
	Inverters	G_Inv5	366638.5	4902958.1	2	0	0	87.7	87.7	1	1314.9	3.25	0	73.38	0	2.49	0	0	1.82	0	0	0	0	0	0	9.97	9.97
	Inverter	MV1-10	365004	4905564	2	0	0	97.3	97.3	1	4103.76	3.25	0	83.26	0	0.54	0	0	17.21	0	0	0	0	0	0	-3.71	-3.71
	Inverters	G_Inv6	366788.5	4902972	2	0	0	87.7	87.7	1	1371.12	3.25	0	73.74	0	2.5	0	0	1.89	0	0	0	0	0	0	9.53	9.53
	Inverter	MV3-18	367752	4907412	2	0	0	100.3	100.3	1	5905.85	3.25	0	86.43	0	0.7	0	0	19.86	0	0	0	0	0	0	-6.68	-6.68
	Inverter	MV3-21	368478	4907206	2	0	0	100.3	100.3	1	5928.99	3.25	0	86.46	0	0.7	0	0	19.9	0	0	0	0	0	0	-6.75	-6.75
	Inverter	MV3-19	368357	4907347	2	0	0	100.3	100.3	1	6018.78	3.25	0	86.59	0	0.71	0	0	20.02	0	0	0	0	0	0	-7	-7
	Inverter	MV3-12	367668	4907594	2	0	0	100.3	100.3	1	6063.55	3.25	0	86.65	0	0.71	0	0	20.08	0	0	0	0	0	0	-7.13	-7.13
	Inverter	MV3-17	368178	4907472	2	0	0	100.3	100.3	1	6079.82	3.25	0	86.68	0	0.71	0	0	20.1	0	0	0	0	0	0	-7.17	-7.17
	Inverter	MV3-20	368689	4907317	2	0	0	100.3	100.3	1	6110.92	3.25	0	86.72	0	0.71	0	0	20.14	0	0	0	0	0	0	-7.26	-7.26
	Inverter	MV3-13	367963	4907577	2	0	0	100.3	100.3	1	6119.05	3.25	0	86.73	0	0.71	0	0	20.15	0	0	0	0	0	0	-7.28	-7.28
	Inverter	MV1-7	364925	4905782	2	0	0	97.3	97.3	1	4335.59	3.25	0	83.74	0	0.57	0	0	17.58	0	0	0	0	0	0	-4.58	-4.58
	Inverter	MV3-15	368357	4907477	2	0	0	100.3	100.3	1	6141.34	3.25	0	86.77	0	0.71	0	0	20.18	0	0	0	0	0	0	-7.35	-7.35
	Inverters	G_Inv3	366583.7	4903091.4	2	0	0	87.7	87.7	1	1434.07	3.25	0	74.13	0	2.51	0	0	1.96	0	0	0	0	0	0	9.05	9.05
	Inverter	MV3-16	368514	4907475	2	0	0	100.3	100.3	1	6193.08	3.25	0	86.84	0	0.71	0	0	20.25	0	0	0	0	0	0	-7.49	-7.49
	Inverter	MV3-10	368167	4907669	2	0	0	100.3	100.3	1	6264.54	3.25	0	86.94	0	0.71	0	0	20.35	0	0	0	0	0	0	-7.69	-7.69
	Inverter	MV3-14	368684	4907498	2	0	0	100.3	100.3	1	6276.39	3.25	0	86.95	0	0.71	0	0	20.36	0	0	0	0	0	0	-7.72	-7.72
	Inverter	MV3-7	367945	4907754	2	0	0	100.3	100.3	1	6285.15	3.25	0	86.97	0	0.71	0	0	20.38	0	0	0	0	0	0	-7.74	-7.74
	Inverter	MV3-11	368346	4907662	2	0	0	100.3	100.3	1	6312.73	3.25	0	87	0	0.71	0	0	20.41	0	0	0	0	0	0	-7.82	-7.82
	Inverters	G_Inv4	366732.8	4903105	2	0	0	87.7	87.7	1	1480.96	3.25	0	74.41	0	2.52	0	0	2.02	0	0	0	0	0	0	8.71	8.71
	Inverter	MV3-9	368512	4907703	2	0	0	100.3	100.3	1	6406.24	3.25	0	87.13	0	0.71	0	0	20.54	0	0	0	0	0	0	-8.07	-8.07
	Inverter	MV3-6	368162	4907834	2	0	0	100.3	100.3	1	6421.03	3.25	0	87.15	0	0.71	0	0	20.56	0	0	0	0	0	0	-8.11	-8.11
	Inverter	MV3-3	367939	4907927	2	0	0	100.3	100.3	1	6450.99	3.25	0	87.19	0	0.71	0	0	20.59	0	0	0	0	0	0	-8.19	-8.19
	Inverter	MV3-8	368680	4907712	2	0	0	100.3	100.3	1	6473.8	3.25	0	87.22	0	0.71	0	0	20.62	0	0	0	0	0	0	-8.25	-8.25
	Inverters	G_Inv1	366526.4	4903225.8	2	0	0	87.7	87.7	1	1558.23	3.25	0	74.85	0	2.53	0	0	2.11	0	0	0	0	0	0	8.17	8.17
	Inverter	MV6-3	370207	4907140	2	0	0	100.3	100.3	1	6696.85	3.25	0	87.52	0	0.71	0	0	20.91	0	0	0	0	0	0	-8.83	-8.83
	Inverter	MV6-2	370085	4907339	2	0	0	100.3	100.3	1	6791.85	3.25	0	87.64	0	0.71	0	0	21.04	0	0	0	0	0	0	-9.08	-9.08
	Inverters	G_Inv2	366676.9	4903239.1	2	0	0	87.7	87.7	1	1597.3	3.25	0	75.07	0	2.53	0	0	2.16	0	0	0	0	0	0	7.9	7.9

Inverter	MV2-1	365842	4906816	2	0	0	97.3	97.3	1	5158.96	3.25	0	85.25	0	0.66	0	0	18.81	0	0	0	0	0	0	-7.41	-7.41
Inverter	MV4-11	369264	4908855	2	0	0	100.3	100.3	1	7751.92	3.25	0	88.79	0	0.67	0	0	22.22	0	0	0	0	0	0	-11.36	-11.36
Inverter	MV4-10	369312	4908858	2	0	0	100.3	100.3	1	7772.99	3.25	0	88.81	0	0.67	0	0	22.24	0	0	0	0	0	0	-11.41	-11.41
Inverter	MV4-7	369035	4909001	2	0	0	100.3	100.3	1	7804.93	3.25	0	88.85	0	0.67	0	0	22.28	0	0	0	0	0	0	-11.48	-11.48
Inverter	MV4-8	369256	4909001	2	0	0	100.3	100.3	1	7884.27	3.25	0	88.94	0	0.66	0	0	22.37	0	0	0	0	0	0	-11.66	-11.66
Inverter	MV4-9	369289	4909001	2	0	0	100.3	100.3	1	7896.58	3.25	0	88.95	0	0.66	0	0	22.39	0	0	0	0	0	0	-11.68	-11.68
Inverter	MV5-5	370015	4908690	2	0	0	100.3	100.3	1	7919.84	3.25	0	88.97	0	0.66	0	0	22.41	0	0	0	0	0	0	-11.73	-11.73
Inverter	MV4-4	369027	4909199	2	0	0	100.3	100.3	1	7988.24	3.25	0	89.05	0	0.65	0	0	22.49	0	0	0	0	0	0	-11.88	-11.88
Inverter	MV4-6	369243	4909192	2	0	0	100.3	100.3	1	8057.23	3.25	0	89.12	0	0.65	0	0	22.57	0	0	0	0	0	0	-12.03	-12.03
Inverter	MV5-2	370006	4908853	2	0	0	100.3	100.3	1	8060.36	3.25	0	89.13	0	0.65	0	0	22.58	0	0	0	0	0	0	-12.04	-12.04
Inverter	MV4-5	369289	4909199	2	0	0	100.3	100.3	1	8080.49	3.25	0	89.15	0	0.65	0	0	22.6	0	0	0	0	0	0	-12.08	-12.08
Inverter	MV5-4	370324	4908707	2	0	0	100.3	100.3	1	8083.05	3.25	0	89.15	0	0.65	0	0	22.6	0	0	0	0	0	0	-12.09	-12.09
Inverter	MV5-3	370231	4908851	2	0	0	100.3	100.3	1	8163.69	3.25	0	89.24	0	0.64	0	0	22.69	0	0	0	0	0	0	-12.26	-12.26
Inverter	MV4-1	369011	4909397	2	0	0	100.3	100.3	1	8169.61	3.25	0	89.24	0	0.64	0	0	22.7	0	0	0	0	0	0	-12.27	-12.27
Inverter	MV4-3	369229	4909397	2	0	0	100.3	100.3	1	8243.75	3.25	0	89.32	0	0.63	0	0	22.79	0	0	0	0	0	0	-12.43	-12.43
Inverter	MV4-2	369272	4909397	2	0	0	100.3	100.3	1	8258.97	3.25	0	89.34	0	0.63	0	0	22.8	0	0	0	0	0	0	-12.46	-12.46
Inverter	MV5-1	370020	4909142	2	0	0	100.3	100.3	1	8324.78	3.25	0	89.41	0	0.62	0	0	22.88	0	0	0	0	0	0	-12.59	-12.59
Inverter	MV6-1	370235	4907364	2	0	0	97.3	97.3	1	6896.52	3.25	0	87.77	0	0.71	0	0	21.17	0	0	0	0	0	0	-12.34	-12.34
DSTATCOM - 10 MVAR #2	DSAT2	369403	4908757	2.5	0	0	96.6	96.6	1	7715.62	3.5	0	88.75	0	3.87	0	0	4.64	0	0	0	0	0	0	-0.63	-0.63
DSTATCOM - 10 MVAR #1	DSAT1	369437	4908757	2.5	0	0	96.6	96.6	1	7729.23	3.5	0	88.76	0	3.87	0	0	4.65	0	0	0	0	0	0	-0.65	-0.65
SubstationTransformer	W_ST	369711.17	4906112.3	2.5	0	0	92	92	1	5575.11	3.5	0	85.93	0	0.68	0	-0.11	9.28	0	0	0	0	0	0	-3.91	-3.91
Inverter	MV1-3	364440	4906039	2	0	0	89.1	89.1	1	4750.69	3.25	0	84.54	0	1.58	0	0	12.13	0	0	0	0	0	0	-9.18	-9.18
Inverter	MV2-2	365977	4906654	2	0	0	89.1	89.1	1	4986.35	3.25	0	84.96	0	1.64	0	0	12.45	0	0	0	0	0	0	-9.98	-9.98
Westbrook Inverter Enclosur	W_INV3	369508	4906164	2	0	0	89.1	89.1	1	5496.37	3.25	0	85.8	0	1.76	0	0	13.12	0	0	0	0	0	0	-11.62	-11.62
Westbrook Inverter Enclosur	W_INV4	369673	4906164	2	0	0	89.1	89.1	1	5593.42	3.25	0	85.95	0	1.79	0	0	13.24	0	0	0	0	0	0	-11.93	-11.93
Westbrook Inverter Enclosur	W_INV2	369374	4906388	2	0	0	89.1	89.1	1	5606.7	3.25	0	85.97	0	1.79	0	0	13.26	0	0	0	0	0	0	-11.97	-11.97
Westbrook Inverter Enclosur	W_INV7	369780	4906417	2	0	0	89.1	89.1	1	5860.57	3.25	0	86.36	0	1.85	0	0	13.59	0	0	0	0	0	0	-12.74	-12.74
Inverter	MV3-22	368656	4907142	2	0	0	89.1	89.1	1	5936.86	3.25	0	86.47	0	1.87	0	0	13.68	0	0	0	0	0	0	-12.97	-12.97
Westbrook Inverter Enclosur	W_INV5	369719	4906574	2	0	0	89.1	89.1	1	5953.24	3.25	0	86.5	0	1.87	0	0	13.7	0	0	0	0	0	0	-13.01	-13.01
Westbrook Inverter Enclosur	W_INV6	369875	4906578	2	0	0	89.1	89.1	1	6046.66	3.25	0	86.63	0	1.9	0	0	13.82	0	0	0	0	0	0	-13.29	-13.29
Inverter	MV3-5	368340	4907843	2	0	0	89.1	89.1	1	6482.64	3.25	0	87.24	0	2	0	0	14.36	0	0	0	0	0	0	-14.54	-14.54
Inverter	MV3-1	368156	4907976	2	0	0	89.1	89.1	1	6555.57	3.25	0	87.33	0	2.02	0	0	14.45	0	0	0	0	0	0	-14.75	-14.75
Inverter	MV3-4	368502	4907925	2	0	0	89.1	89.1	1	6612.1	3.25	0	87.41	0	2.03	0	0	14.52	0	0	0	0	0	0	-14.9	-14.9
Inverter	MV3-2	368671	4907928	2	0	0	89.1	89.1	1	6672.35	3.25	0	87.49	0	2.05	0	0	14.59	0	0	0	0	0	0	-15.07	-15.07
Fixed Reactor Bank 1	FRB1	369378	4908755	6	0	0	89.8	89.8	1	7703.86	5.25	0	88.73	0	-0.2	0	0	11.4	0	0	0	0	0	0	-10.15	-10.15
Fixed Reactor Bank 2	FRB2	369464	4908755	6	0	0	89.8	89.8	1	7738.29	5.25	0	88.77	0	-0.2	0	0	11.43	0	0	0	0	0	0	-10.22	-10.22
Inverter	MV4-15	369176	4908481	2	0	0	89.1	89.1	1	7372.69	3.25	0	88.35	0	2.22	0	0	15.42	0	0	0	0	0	0	-16.94	-16.94
Inverter	MV4-14	369176	4908507	2	0	0	89.1	89.1	1	7396.68	3.25	0	88.38	0	2.22	0	0	15.45	0	0	0	0	0	0	-17	-17
Inverter	MV4-13	369051	4908605	2	0	0	89.1	89.1	1	7440.59	3.25	0	88.43	0	2.23	0	0	15.5	0	0	0	0	0	0	-17.11	-17.11
Inverter	MV4-12	369043	4908803	2	0	0	89.1	89.1	1	7622.36	3.25	0	88.64	0	2.27	0	0	15.71	0	0	0	0	0	0	-17.57	-17.57
Inverter	MV5-6	369982	4908507	2	0	0	89.1	89.1	1	7742.71	3.25	0	88.78	0	2.3	0	0	15.85	0	0	0	0	0	0	-17.87	-17.87
Westbrook Inverter Enclosur	W_INV1	369409	4906578	2	0	0	86.1	86.1	1	5785.72	3.25	0	86.25	0	1.83	0	0	13.49	0	0	0	0	0	0	-15.51	-15.51
Inverter	MV6-4	370250	4906966	2	0	0	86.1	86.1	1	6581.29	3.25	0	87.37	0	2.03	0	0	14.48	0	0	0	0	0	0	-17.82	-17.82
Westbrook Inverter Transfor	W_INVTR1	369403	4906578	2	0	0	78.2	78.2	1	5782.53	3.25	0	86.24	0	-3.33	0	0	2.67	0	0	0	0	0	0	-7.34	-7.34
Westbrook Inverter Transfor	W_INVTR3	369514	4906164	2	0	0	77.3	77.3	1	5499.85	3.25	0	85.81	0	-3.28	0	0	2.58	0	0	0	0	0	0	-7.77	-7.77
Westbrook Inverter Transfor	W_INVTR4	369679	4906164	2	0	0	77.3	77.3	1	5597.01	3.25	0	85.96	0	-3.29	0	0	2.61	0	0	0	0	0	0	-7.94	-7.94
Westbrook Inverter Transfor	W_INVTR2	369368	4906388	2	0	0	77.3	77.3	1	5603.45	3.25	0	85.97	0	-3.29	0	0	2.61	0	0	0	0	0	0	-7.95	-7.95
Westbrook Inverter Transfor	W_INVTR7	369786	4906417	2	0	0	77.3	77.3	1	5864.1	3.25	0	86.36	0	-3.34	0	0	2.7	0	0	0	0	0	0	-8.38	-8.38
Westbrook Inverter Transfor	W_INVTR5	369725	4906574	2	0	0	77.3	77.3	1	5956.65	3.25	0	86.5	0	-3.36	0	0	2.73	0	0	0	0	0	0	-8.53	-8.53
Westbrook Inverter Transfor	W_INVTR6	369881	4906578	2	0	0	77.3	77.3	1	6050.18	3.25	0	86.64	0	-3.38	0	0	2.76	0	0	0	0	0	0	-8.67	-8.67
Inverter Transformer	MV1-14 T	365157	4905049	2	0	0	69.4	69.4	1	3567.01	3.25	0	82.05	0	2.67	0	0	6.34	0	0	0	0	0	0	-21.71	-21.71
Inverter Transformer	MV1-13 T	364725	4905241	2	0	0	69.4	69.4	1	3905.57	3.25	0	82.83	0	2.76	0	0	6.61	0	0	0	0	0	0	-22.85	-22.85
Inverter Transformer	MV1-10 T	365010	4905564	2	0	0	69.4	69.4	1	4101.83	3.25	0	83.26	0	2.81	0	0	6.75	0	0	0	0	0	0	-23.47	-23.47
Inverter Transformer	MV1-7 T	364919	4905782	2	0	0	69.4	69.4	1	4337.54	3.25	0	83.74	0	2.87	0	0	6.92	0	0	0	0	0	0	-24.19	-24.19
Inverter Transformer	MV2-1 T	365836	4906816	2	0	0	69.4	69.4	1	5159.53	3.25	0	85.25	0	3.04	0	0	7.49	0	0	0	0	0	0	-26.43	-26.43
Inverter Transformer	MV6-4 T	370244	4906966	2	0	0	69.4	69.4	1	6577.72	3.25	0	87.36	0	3.27	0	0	8.36	0	0	0	0	0	0	-29.64	-29.64
Inverter Transformer	MV6-1 T	370230	4907364	2	0	0	69.4	69.4	1	6893.69	3.25	0	87.77	0	3.31	0	0	8.54	0	0	0	0	0	0	-30.27	-30.27
Inverter Transformer	MV1-15 T	365309	4904994	2	0	0	56.1	56.1	1	3467.38	3.25	0	81.8	0	1.03	0	0	9.64	0	0	0	0	0	0	-36.4	-36.4
Inverter Transformer	MV1-12 T	365044	4905386	2	0	0	56.1	56.1	1	3922.43	3.25	0	82.87	0	1.21	0	0	10.34	0	0	0	0	0	0	-38.36	-38.36
Inverter Transformer	MV1-11 T	364649	4905414	2	0	0	56.1	56.1	1	4094.52	3.25	0	83.24	0	1.28	0	0	10.59	0	0	0	0	0	0	-39.06	-39.06
Inverter Transformer	MV1-8 T	364782	4905647	2	0	0	56.1	56.1	1	4257.95	3.25	0	83.58	0	1.35	0	0	10.83	0	0	0	0	0	0	-39.7	-39.7
Inverter Transformer	MV1-9 T	364555	4905646	2	0	0	56.1	56.1	1	4344.67	3.25	0	83.76	0	1.38	0	0	10.96	0	0	0	0	0	0	-40.04	-40.04
Inverter Transformer	MV1-4 T	364821	4905918	2	0	0	56.1	56.1	1	4498.27	3.25	0	84.06	0	1.44	0	0	11.17	0	0	0	0	0	0	-40.61	-40.61
Inverter Transformer	MV1-5 T	364676	4905892	2	0	0	56.1	56.1	1	4524.73	3.25	0	84.11	0	1.45	0	0	11.21	0	0	0	0	0	0	-40.71	-40.71
Inverter Transformer	MV1-6 T	364482	4905835	2	0	0	56.1	56.1	1	4547.02	3.25	0	84.15	0	1.46	0	0	11.24	0	0	0	0	0	0	-40.79	-40.79
Inverter Transformer	MV1-2 T	364759	4906063	2	0	0	56.1	56.1	1	4655.68	3.25	0	84.36	0	1.5	0	0	11.39	0	0	0	0	0	0	-41.19	-41.19
Inverter Transformer	MV1-3 T	364435	4906039	2	0	0	56.1	56.1	1	4752.68	3.25	0	84.54	0	1.53	0	0	11.52	0	0	0	0	0	0	-41.54	-41.54
Inverter Transformer	MV1-1 T	364721	4906166	2	0	0	56.1	56.1	1	4765.46	3.25	0	84.56	0	1.54	0	0	11.54	0	0	0	0	0	0	-41.58	-41.58
Inverter Transformer	MV2-2 T	365982	4906654	2	0	0	56.1	56.1	1	4986	3.25	0	84.96	0	1.62	0	0	11.84	0	0	0	0	0	0	-42.35	-42.35
Inverter Transformer	MV2-3 T	365814	4906641	2	0	0	56.1	56.1	1	4987.58	3.25	0	84.96	0	1.62	0	0	11.84	0	0	0	0	0	0	-42.36	-42.36
Inverter Transformer	MV2-4 T	365590	4906628	2	0	0	56.1	56.1	1	5002.81	3.25	0	84.98	0	1.63	0	0	11.86	0	0	0	0	0	0	-42.41	-42.41
Inverter Transformer	MV3-18 T	367757	4907412	2	0	0	56.1	56.1	1	5907.05	3.25	0	86.43	0	1.94	0	0	12.99	0	0	0	0	0	0	-45.3	-45.3
Inverter Transformer	MV3-21 T	368484	4907206	2	0	0	56.1	56.1	1	5931.17	3.25	0	86.46	0	1.94	0	0	13.02	0	0	0	0	0	0	-45.37	-45.37
Inverter Transformer	MV3-22 T	368661	4907142	2	0	0	56.1	56.1	1	5938.83	3.25	0	86.47	0	1.95	0	0	13.03	0	0	0	0	0	0	-45.39	-45.39

	Inverter Transformer	MV3-19 T	368352	4907347	2	0	0	56.1	56.1	1	6017.1	3.25	0	86.59	0	1.97	0	0	13.12	0	0	0	0	0	0	-45.62	-45.62
	Inverter Transformer	MV3-12 T	367674	4907594	2	0	0	56.1	56.1	1	6064.87	3.25	0	86.66	0	1.99	0	0	13.18	0	0	0	0	0	0	-45.76	-45.76
	Inverter Transformer	MV3-17 T	368183	4907472	2	0	0	56.1	56.1	1	6081.34	3.25	0	86.68	0	1.99	0	0	13.2	0	0	0	0	0	0	-45.81	-45.81
	Inverter Transformer	MV3-20 T	368683	4907317	2	0	0	56.1	56.1	1	6108.6	3.25	0	86.72	0	2	0	0	13.23	0	0	0	0	0	0	-45.89	-45.89
	Inverter Transformer	MV3-13 T	367958	4907577	2	0	0	56.1	56.1	1	6117.71	3.25	0	86.73	0	2	0	0	13.24	0	0	0	0	0	0	-45.92	-45.92
	Inverter Transformer	MV3-15 T	368351	4907477	2	0	0	56.1	56.1	1	6139.36	3.25	0	86.76	0	2.01	0	0	13.27	0	0	0	0	0	0	-45.98	-45.98
	Inverter Transformer	MV3-16 T	368509	4907475	2	0	0	56.1	56.1	1	6191.32	3.25	0	86.84	0	2.02	0	0	13.33	0	0	0	0	0	0	-46.13	-46.13
	Inverter Transformer	MV3-10 T	368162	4907669	2	0	0	56.1	56.1	1	6263.07	3.25	0	86.94	0	2.05	0	0	13.41	0	0	0	0	0	0	-46.33	-46.33
	Inverter Transformer	MV3-14 T	368678	4907498	2	0	0	56.1	56.1	1	6274.14	3.25	0	86.95	0	2.05	0	0	13.42	0	0	0	0	0	0	-46.37	-46.37
	Inverter Transformer	MV3-7 T	367951	4907754	2	0	0	56.1	56.1	1	6286.69	3.25	0	86.97	0	2.05	0	0	13.44	0	0	0	0	0	0	-46.4	-46.4
	Inverter Transformer	MV3-11 T	368340	4907662	2	0	0	56.1	56.1	1	6310.82	3.25	0	87	0	2.06	0	0	13.46	0	0	0	0	0	0	-46.47	-46.47
	Inverter Transformer	MV3-9 T	368517	4907703	2	0	0	56.1	56.1	1	6407.95	3.25	0	87.13	0	2.09	0	0	13.58	0	0	0	0	0	0	-46.74	-46.74
	Inverter Transformer	MV3-6 T	368156	4907834	2	0	0	56.1	56.1	1	6419.32	3.25	0	87.15	0	2.09	0	0	13.59	0	0	0	0	0	0	-46.77	-46.77
	Inverter Transformer	MV3-3 T	367944	4907927	2	0	0	56.1	56.1	1	6452.24	3.25	0	87.19	0	2.1	0	0	13.63	0	0	0	0	0	0	-46.87	-46.87
	Inverter Transformer	MV3-8 T	368685	4907712	2	0	0	56.1	56.1	1	6475.62	3.25	0	87.23	0	2.11	0	0	13.65	0	0	0	0	0	0	-46.93	-46.93
	Inverter Transformer	MV3-5 T	368335	4907843	2	0	0	56.1	56.1	1	6481.09	3.25	0	87.23	0	2.11	0	0	13.66	0	0	0	0	0	0	-46.95	-46.95
	Inverter Transformer	MV3-1 T	368150	4907976	2	0	0	56.1	56.1	1	6553.91	3.25	0	87.33	0	2.13	0	0	13.74	0	0	0	0	0	0	-47.15	-47.15
	Inverter Transformer	MV3-4 T	368507	4907925	2	0	0	56.1	56.1	1	6613.74	3.25	0	87.41	0	2.15	0	0	13.81	0	0	0	0	0	0	-47.31	-47.31
	Inverter Transformer	MV3-2 T	368677	4907928	2	0	0	56.1	56.1	1	6674.46	3.25	0	87.49	0	2.17	0	0	13.87	0	0	0	0	0	0	-47.47	-47.47
	Inverter Transformer	MV6-3 T	370202	4907140	2	0	0	56.1	56.1	1	6693.96	3.25	0	87.51	0	2.17	0	0	13.9	0	0	0	0	0	0	-47.53	-47.53
	Inverter Transformer	MV6-2 T	370091	4907339	2	0	0	56.1	56.1	1	6795.17	3.25	0	87.64	0	2.2	0	0	14.01	0	0	0	0	0	0	-47.8	-47.8
	Inverter Transformer	MV4-15 T	369170	4908481	2	0	0	56.1	56.1	1	7370.37	3.25	0	88.35	0	2.36	0	0	14.62	0	0	0	0	0	0	-49.27	-49.27
	Inverter Transformer	MV4-14 T	369182	4908507	2	0	0	56.1	56.1	1	7398.99	3.25	0	88.38	0	2.36	0	0	14.65	0	0	0	0	0	0	-49.34	-49.34
	Inverter Transformer	MV4-13 T	369057	4908605	2	0	0	56.1	56.1	1	7442.79	3.25	0	88.43	0	2.38	0	0	14.7	0	0	0	0	0	0	-49.45	-49.45
	Inverter Transformer	MV4-12 T	369049	4908803	2	0	0	56.1	56.1	1	7624.5	3.25	0	88.64	0	2.42	0	0	14.88	0	0	0	0	0	0	-49.89	-49.89
	Inverter Transformer	MV5-6 T	369987	4908507	2	0	0	56.1	56.1	1	7745.07	3.25	0	88.78	0	2.45	0	0	15	0	0	0	0	0	0	-50.18	-50.18
	Inverter Transformer	MV4-11 T	369269	4908855	2	0	0	56.1	56.1	1	7753.81	3.25	0	88.79	0	2.45	0	0	15.01	0	0	0	0	0	0	-50.2	-50.2
	Inverter Transformer	MV4-10 T	369307	4908858	2	0	0	56.1	56.1	1	7771.07	3.25	0	88.81	0	2.46	0	0	15.03	0	0	0	0	0	0	-50.24	-50.24
	Inverter Transformer	MV4-7 T	369040	4909001	2	0	0	56.1	56.1	1	7806.67	3.25	0	88.85	0	2.46	0	0	15.06	0	0	0	0	0	0	-50.32	-50.32
	Inverter Transformer	MV4-8 T	369262	4909001	2	0	0	56.1	56.1	1	7886.5	3.25	0	88.94	0	2.48	0	0	15.14	0	0	0	0	0	0	-50.51	-50.51
	Inverter Transformer	MV4-9 T	369284	4909001	2	0	0	56.1	56.1	1	7894.71	3.25	0	88.95	0	2.49	0	0	15.15	0	0	0	0	0	0	-50.53	-50.53
	Inverter Transformer	MV5-5 T	370021	4908690	2	0	0	56.1	56.1	1	7922.63	3.25	0	88.98	0	2.49	0	0	15.18	0	0	0	0	0	0	-50.59	-50.59
	Inverter Transformer	MV4-4 T	369033	4909199	2	0	0	56.1	56.1	1	7990.27	3.25	0	89.05	0	2.51	0	0	15.25	0	0	0	0	0	0	-50.75	-50.75
	Inverter Transformer	MV4-6 T	369249	4909192	2	0	0	56.1	56.1	1	8059.4	3.25	0	89.13	0	2.52	0	0	15.31	0	0	0	0	0	0	-50.91	-50.91
	Inverter Transformer	MV5-2 T	370011	4908853	2	0	0	56.1	56.1	1	8062.64	3.25	0	89.13	0	2.52	0	0	15.32	0	0	0	0	0	0	-50.91	-50.91
	Inverter Transformer	MV4-5 T	369283	4909199	2	0	0	56.1	56.1	1	8078.29	3.25	0	89.15	0	2.53	0	0	15.33	0	0	0	0	0	0	-50.95	-50.95
	Inverter Transformer	MV5-4 T	370330	4908707	2	0	0	56.1	56.1	1	8086.02	3.25	0	89.15	0	2.53	0	0	15.34	0	0	0	0	0	0	-50.97	-50.97
	Inverter Transformer	MV5-3 T	370237	4908851	2	0	0	56.1	56.1	1	8166.56	3.25	0	89.24	0	2.55	0	0	15.42	0	0	0	0	0	0	-51.15	-51.15
	Inverter Transformer	MV4-1 T	369017	4909397	2	0	0	56.1	56.1	1	8171.59	3.25	0	89.25	0	2.55	0	0	15.42	0	0	0	0	0	0	-51.16	-51.16
	Inverter Transformer	MV4-3 T	369234	4909397	2	0	0	56.1	56.1	1	8245.51	3.25	0	89.32	0	2.56	0	0	15.49	0	0	0	0	0	0	-51.33	-51.33
	Inverter Transformer	MV4-2 T	369267	4909397	2	0	0	56.1	56.1	1	8257.19	3.25	0	89.34	0	2.57	0	0	15.51	0	0	0	0	0	0	-51.35	-51.35
	Inverter Transformer	MV5-1 T	370015	4909142	2	0	0	56.1	56.1	1	8322.56	3.25	0	89.41	0	2.58	0	0	15.57	0	0	0	0	0	0	-51.5	-51.5
	Line Reactor	NGR	369421	4908787.5	5	0	0	45.4	45.4	1	7750.77	5.25	0	88.79	0	3.2	1.37	0.11	3.17	0	0	0	0	0	0	-51.18	-51.18
Limit. Valu	0	0																								
Level D/N:	21.4256	21.4256																								

Receiver: Existing Noise Receptor
ID: G-72
X: 365500.2
Y: 4903658
Z: 4.5
Ground: 0

ISO	Description	ID	X	Y	Z	Ground	ReflOrd	LxT	LxN	L/A	Dist.	hm	Freq	Adiv	K0b	Agr	Abar	z	Aatm	Afol	Ahous	Cmet	CmetN	Dc	RL	LtotT	LtotN
	Inverter	MV1-15	365315	4904994	2	0	0	100.3	100.3	1	1348.78	3.25	0	73.6	0	-0.09	0	0	11.94	0	0	0	0	0	0	14.87	14.87
	Sol_Luce Substation	S_Substation	369426	4908792	3.5	0	0	112.1	112.1	1	6462.96	5.25	0	87.21	0	1.27	2.55	0.28	10.22	0	0	0	0	0	0	10.83	10.83
	Inverter	MV1-12	365038	4905386	2	0	0	100.3	100.3	1	1788.75	3.25	0	76.05	0	0.07	0	0	13	0	0	0	0	0	0	11.19	11.19
	Inverter	MV1-11	364655	4905414	2	0	0	100.3	100.3	1	1948.82	3.25	0	76.8	0	0.11	0	0	13.35	0	0	0	0	0	0	10.05	10.05
	Inverter	MV1-14	365163	4905049	2	0	0	97.3	97.3	1	1431.29	3.25	0	74.11	0	-0.06	0	0	12.15	0	0	0	0	0	0	11.11	11.11
	Inverter	MV1-8	364788	4905647	2	0	0	100.3	100.3	1	2112.67	3.25	0	77.5	0	0.16	0	0	13.7	0	0	0	0	0	0	8.96	8.96
	Inverter	MV1-9	364561	4905646	2	0	0	100.3	100.3	1	2198.69	3.25	0	77.84	0	0.18	0	0	13.87	0	0	0	0	0	0	8.41	8.41
	Inverter	MV1-4	364815	4905918	2	0	0	100.3	100.3	1	2361.59	3.25	0	78.46	0	0.22	0	0	14.19	0	0	0	0	0	0	7.43	7.43
	Inverter	MV1-5	364671	4905892	2	0	0	100.3	100.3	1	2382.93	3.25	0	78.54	0	0.23	0	0	14.23	0	0	0	0	0	0	7.31	7.31
	Inverter	MV1-6	364477	4905835	2	0	0	100.3	100.3	1	2405.47	3.25	0	78.62	0	0.23	0	0	14.28	0	0	0	0	0	0	7.18	7.18
	Inverter	MV1-13	364731	4905241	2	0	0	97.3	97.3	1	1759.99	3.25	0	75.91	0	0.06	0	0	12.94	0	0	0	0	0	0	8.41	8.41
	Inverter	MV1-2	364753	4906063	2	0	0	100.3	100.3	1	2518.4	3.25	0	79.02	0	0.26	0	0	14.49	0	0	0	0	0	0	6.54	6.54
	Inverter	MV1-1	364715	4906166	2	0	0	100.3	100.3	1	2628.04	3.25	0	79.39	0	0.29	0	0	14.7	0	0	0	0	0	0	5.94	5.94
	Inverter	MV1-10	365004	4905564	2	0	0	97.3	97.3	1	1969.53	3.25	0	76.89	0	0.12	0	0	13.4	0	0	0	0	0	0	6.91	6.91
	Inverter	MV2-4	365586	4906624	2	0	0	100.3	100.3	1	2967.24	3.25	0	80.45	0	0.36	0	0	15.31	0	0	0	0	0	0	4.2	4.2
	Inverter	MV2-3	365820	4906641	2	0	0	100.3	100.3	1	3000.09	3.25	0	80.54	0	0.36	0	0	15.37	0	0	0	0	0	0	4.03	4.03
	Inverter	MV1-7	364925	4905782	2	0	0	97.3	97.3	1	2200.51	3.25	0	77.85	0	0.18	0	0	13.87	0	0	0	0	0	0	5.4	5.4
	Gardiner Substation	G_Sub	366586.3	4903349.9	2.5	0	0	90.8	90.8	1	1128.96	4.25	0	72.05	0	0.83	5.27	0.31	2.78	0	0	0	0	0	0	9.84	9.84
	Inverter	MV3-18	367752	4907412	2	0	0	100.3	100.3	1	4377.57	3.25	0	83.82	0	0.58	0	0	17.64	0	0	0	0	0	0	-1.73	-1.73
	Inverter	MV2-1	365842	4906816	2	0	0	97.3	97.3	1	3176.44	3.25	0	81.04	0	0.4	0	0	15.68	0	0	0	0	0	0	0.2	0.2

Inverter	MV3-12	367668	4907594	2	0	0	100.3	100.3	1	4493.49	3.25	0	84.05	0	0.59	0	0	17.82	0	0	0	0	0	0	-2.15	-2.15
Inverter	MV3-13	367963	4907577	2	0	0	100.3	100.3	1	4628.6	3.25	0	84.31	0	0.61	0	0	18.03	0	0	0	0	0	0	-2.63	-2.63
Inverter	MV3-21	368478	4907206	2	0	0	100.3	100.3	1	4632.02	3.25	0	84.32	0	0.61	0	0	18.03	0	0	0	0	0	0	-2.64	-2.64
Inverter	MV3-17	368178	4907472	2	0	0	100.3	100.3	1	4660.17	3.25	0	84.37	0	0.61	0	0	18.07	0	0	0	0	0	0	-2.74	-2.74
Inverter	MV3-19	368357	4907347	2	0	0	100.3	100.3	1	4665.84	3.25	0	84.38	0	0.61	0	0	18.08	0	0	0	0	0	0	-2.76	-2.76
Inverter	MV3-15	368357	4907477	2	0	0	100.3	100.3	1	4769.28	3.25	0	84.57	0	0.62	0	0	18.24	0	0	0	0	0	0	-3.11	-3.11
Inverter	MV3-7	367945	4907754	2	0	0	100.3	100.3	1	4770.14	3.25	0	84.57	0	0.62	0	0	18.24	0	0	0	0	0	0	-3.12	-3.12
Inverters	G_Inv1	366526.4	4903225.8	2	0	0	87.7	87.7	1	1113.5	3.25	0	71.93	0	2.47	0	0	1.57	0	0	0	0	0	0	11.69	11.69
Inverter	MV3-10	368167	4907669	2	0	0	100.3	100.3	1	4816.63	3.25	0	84.65	0	0.62	0	0	18.31	0	0	0	0	0	0	-3.28	-3.28
Inverter	MV3-20	368689	4907317	2	0	0	100.3	100.3	1	4853.53	3.25	0	84.72	0	0.63	0	0	18.36	0	0	0	0	0	0	-3.4	-3.4
Inverter	MV3-16	368514	4907475	2	0	0	100.3	100.3	1	4863.38	3.25	0	84.74	0	0.63	0	0	18.38	0	0	0	0	0	0	-3.43	-3.43
Inverter	MV3-11	368346	4907662	2	0	0	100.3	100.3	1	4912.29	3.25	0	84.83	0	0.63	0	0	18.45	0	0	0	0	0	0	-3.6	-3.6
Inverter	MV3-3	367939	4907927	2	0	0	100.3	100.3	1	4916.51	3.25	0	84.83	0	0.63	0	0	18.46	0	0	0	0	0	0	-3.61	-3.61
Inverter	MV3-6	368162	4907834	2	0	0	100.3	100.3	1	4952.19	3.25	0	84.9	0	0.64	0	0	18.51	0	0	0	0	0	0	-3.73	-3.73
Inverter	MV3-14	368684	4907498	2	0	0	100.3	100.3	1	4988.2	3.25	0	84.96	0	0.64	0	0	18.56	0	0	0	0	0	0	-3.85	-3.85
Inverter	MV3-9	368512	4907703	2	0	0	100.3	100.3	1	5043.11	3.25	0	85.05	0	0.65	0	0	18.64	0	0	0	0	0	0	-4.03	-4.03
Inverter	MV3-8	368680	4907712	2	0	0	100.3	100.3	1	5152.29	3.25	0	85.24	0	0.66	0	0	18.8	0	0	0	0	0	0	-4.39	-4.39
Inverters	G_Inv3	366583.7	4903091.4	2	0	0	87.7	87.7	1	1222.71	3.25	0	72.75	0	2.48	0	0	1.71	0	0	0	0	0	0	10.73	10.73
Inverters	G_Inv2	366676.9	4903239.1	2	0	0	87.7	87.7	1	1249.04	3.25	0	72.93	0	2.49	0	0	1.74	0	0	0	0	0	0	10.51	10.51
Inverters	G_Inv5	366638.5	4902958.1	2	0	0	87.7	87.7	1	1336.26	3.25	0	73.52	0	2.5	0	0	1.85	0	0	0	0	0	0	9.8	9.8
Inverters	G_Inv4	366732.8	4903105	2	0	0	87.7	87.7	1	1350.97	3.25	0	73.61	0	2.5	0	0	1.86	0	0	0	0	0	0	9.69	9.69
Inverter	MV6-3	370207	4907140	2	0	0	100.3	100.3	1	5854.77	3.25	0	86.35	0	0.7	0	0	19.79	0	0	0	0	0	0	-6.53	-6.53
Inverter	MV6-2	370085	4907339	2	0	0	100.3	100.3	1	5879.64	3.25	0	86.39	0	0.7	0	0	19.83	0	0	0	0	0	0	-6.6	-6.6
Inverters	G_Inv7	366694.6	4902824.7	2	0	0	87.7	87.7	1	1456.36	3.25	0	74.27	0	2.51	0	0	1.99	0	0	0	0	0	0	8.89	8.89
Inverters	G_Inv6	366788.5	4902972	2	0	0	87.7	87.7	1	1459.56	3.25	0	74.28	0	2.51	0	0	1.99	0	0	0	0	0	0	8.87	8.87
Inverter	MV4-7	369035	4909001	2	0	0	100.3	100.3	1	6406.44	3.25	0	87.13	0	0.71	0	0	20.54	0	0	0	0	0	0	-8.07	-8.07
Inverter	MV4-11	369264	4908855	2	0	0	100.3	100.3	1	6416.78	3.25	0	87.15	0	0.71	0	0	20.55	0	0	0	0	0	0	-8.1	-8.1
Inverter	MV4-10	369312	4908858	2	0	0	100.3	100.3	1	6447.47	3.25	0	87.19	0	0.71	0	0	20.59	0	0	0	0	0	0	-8.18	-8.18
Inverter	MV4-8	369256	4909001	2	0	0	100.3	100.3	1	6530.98	3.25	0	87.3	0	0.71	0	0	20.7	0	0	0	0	0	0	-8.4	-8.4
Inverter	MV4-9	369289	4909001	2	0	0	100.3	100.3	1	6550.01	3.25	0	87.32	0	0.71	0	0	20.72	0	0	0	0	0	0	-8.45	-8.45
Inverter	MV4-4	369027	4909199	2	0	0	100.3	100.3	1	6568.18	3.25	0	87.35	0	0.72	0	0	20.75	0	0	0	0	0	0	-8.5	-8.5
Inverter	MV4-6	369243	4909192	2	0	0	100.3	100.3	1	6680.85	3.25	0	87.5	0	0.71	0	0	20.89	0	0	0	0	0	0	-8.79	-8.79
Inverter	MV4-5	369289	4909199	2	0	0	100.3	100.3	1	6712.5	3.25	0	87.54	0	0.71	0	0	20.93	0	0	0	0	0	0	-8.87	-8.87
Inverter	MV4-1	369011	4909397	2	0	0	100.3	100.3	1	6727.69	3.25	0	87.56	0	0.71	0	0	20.95	0	0	0	0	0	0	-8.91	-8.91
Inverters	G_Inv8	366844.5	4902838.5	2	0	0	87.7	87.7	1	1574.4	3.25	0	74.94	0	2.53	0	0	2.13	0	0	0	0	0	0	8.06	8.06
Inverter	MV5-5	370015	4908690	2	0	0	100.3	100.3	1	6760.51	3.25	0	87.6	0	0.71	0	0	21	0	0	0	0	0	0	-9	-9
Inverters	G_Inv9	366750.9	4902691.8	2	0	0	87.7	87.7	1	1580.44	3.25	0	74.98	0	2.53	0	0	2.14	0	0	0	0	0	0	8.01	8.01
Inverter	MV4-3	369229	4909397	2	0	0	100.3	100.3	1	6843.98	3.25	0	87.71	0	0.71	0	0	21.1	0	0	0	0	0	0	-9.21	-9.21
Inverter	MV4-2	369272	4909397	2	0	0	100.3	100.3	1	6867.5	3.25	0	87.74	0	0.71	0	0	21.13	0	0	0	0	0	0	-9.27	-9.27
Inverter	MV5-2	370006	4908853	2	0	0	100.3	100.3	1	6876.79	3.25	0	87.75	0	0.71	0	0	21.14	0	0	0	0	0	0	-9.29	-9.29
Inverter	MV5-4	370324	4908707	2	0	0	100.3	100.3	1	6982.94	3.25	0	87.88	0	0.71	0	0	21.28	0	0	0	0	0	0	-9.56	-9.56
Inverter	MV5-3	370231	4908851	2	0	0	100.3	100.3	1	7024.79	3.25	0	87.93	0	0.71	0	0	21.33	0	0	0	0	0	0	-9.66	-9.66
Inverter	MV5-1	370020	4909142	2	0	0	100.3	100.3	1	7106.54	3.25	0	88.03	0	0.71	0	0	21.43	0	0	0	0	0	0	-9.86	-9.86
Inverters	G_Inv10	366900.7	4902704.8	2	0	0	87.7	87.7	1	1694.11	3.25	0	75.58	0	2.54	0	0	2.28	0	0	0	0	0	0	7.26	7.26
Inverter	MV6-1	370235	4907364	2	0	0	97.3	97.3	1	6012.72	3.25	0	86.58	0	0.71	0	0	20.01	0	0	0	0	0	0	-9.99	-9.99
Inverter	MV1-3	364440	4906039	2	0	0	89.1	89.1	1	2606.38	3.25	0	79.32	0	1.05	0	0	9.01	0	0	0	0	0	0	-0.33	-0.33
DSTATCOM - 10 MVAR #2	DSAT2	369403	4908757	2.5	0	0	96.6	96.6	1	6421.19	3.5	0	87.15	0	3.8	0	0	4.04	0	0	0	0	0	0	1.64	1.64
DSTATCOM - 10 MVAR #1	DSAT1	369437	4908757	2.5	0	0	96.6	96.6	1	6441.91	3.5	0	87.18	0	3.8	0	0	4.05	0	0	0	0	0	0	1.6	1.6
Inverter	MV2-2	365977	4906654	2	0	0	89.1	89.1	1	3033.7	3.25	0	80.64	0	1.15	0	0	9.67	0	0	0	0	0	0	-2.4	-2.4
SubstationTransformer	W_ST	369711.17	4906112.3	2.5	0	0	92	92	1	4873.98	4.25	0	84.76	0	1.6	2.36	0.25	8.47	0	0	0	0	0	0	-5.22	-5.22
Inverter	MV3-22	368656	4907142	2	0	0	89.1	89.1	1	4700.78	3.25	0	84.44	0	1.57	0	0	12.06	0	0	0	0	0	0	-9.01	-9.01
Westbrook Inverter Enclosur	W_INV3	369508	4906164	2	0	0	89.1	89.1	1	4726.79	3.25	0	84.49	0	1.57	0	0	12.1	0	0	0	0	0	0	-9.1	-9.1
Westbrook Inverter Enclosur	W_INV2	369374	4906388	2	0	0	89.1	89.1	1	4739.12	3.25	0	84.51	0	1.58	0	0	12.11	0	0	0	0	0	0	-9.14	-9.14
Westbrook Inverter Enclosur	W_INV4	369673	4906164	2	0	0	89.1	89.1	1	4867.47	3.25	0	84.75	0	1.61	0	0	12.29	0	0	0	0	0	0	-9.58	-9.58
Inverter	MV3-5	368340	4907843	2	0	0	89.1	89.1	1	5057.54	3.25	0	85.08	0	1.65	0	0	12.54	0	0	0	0	0	0	-10.22	-10.22
Inverter	MV3-1	368156	4907976	2	0	0	89.1	89.1	1	5069.36	3.25	0	85.1	0	1.66	0	0	12.56	0	0	0	0	0	0	-10.25	-10.25
Westbrook Inverter Enclosur	W_INV7	369780	4906417	2	0	0	89.1	89.1	1	5092.03	3.25	0	85.14	0	1.66	0	0	12.59	0	0	0	0	0	0	-10.33	-10.33
Westbrook Inverter Enclosur	W_INV5	369719	4906574	2	0	0	89.1	89.1	1	5128.48	3.25	0	85.2	0	1.67	0	0	12.63	0	0	0	0	0	0	-10.45	-10.45
Inverter	MV3-4	368502	4907925	2	0	0	89.1	89.1	1	5217.1	3.25	0	85.35	0	1.69	0	0	12.75	0	0	0	0	0	0	-10.74	-10.74
Westbrook Inverter Enclosur	W_INV6	369875	4906578	2	0	0	89.1	89.1	1	5259.78	3.25	0	85.42	0	1.7	0	0	12.81	0	0	0	0	0	0	-10.87	-10.87
Inverter	MV3-2	368671	4907928	2	0	0	89.1	89.1	1	5318.54	3.25	0	85.52	0	1.72	0	0	12.89	0	0	0	0	0	0	-11.06	-11.06
Fixed Reactor Bank 1	FRB1	369378	4908755	6	0	0	89.8	89.8	1	6404.43	5.25	0	87.13	0	-0.36	0	0	10.16	0	0	0	0	0	0	-7.15	-7.15
Fixed Reactor Bank 2	FRB2	369464	4908755	6	0	0	89.8	89.8	1	6456.87	5.25	0	87.2	0	-0.35	0	0	10.22	0	0	0	0	0	0	-7.28	-7.28
Inverter	MV4-15	369176	4908481	2	0	0	89.1	89.1	1	6064.06	3.25	0	86.66	0	1.9	0	0	13.84	0	0	0	0	0	0	-13.34	-13.34
Inverter	MV4-14	369176	4908507	2	0	0	89.1	89.1	1	6084.76	3.25	0	86.68	0	1.91	0	0	13.87	0	0	0	0	0	0	-13.4	-13.4
Inverter	MV4-13	369051	4908605	2	0	0	89.1	89.1	1	6089.42	3.25	0	86.69	0	1.91	0	0	13.87	0	0	0	0	0	0	-13.42	-13.42
Inverter	MV4-12	369043	4908803	2	0	0	89.1	89.1	1	6246.8	3.25	0	86.91	0	1.95	0	0	14.07	0	0	0	0	0	0	-13.87	-13.87
Inverter	MV5-6	369982	4908507	2	0	0	89.1	89.1	1	6602.98	3.25	0	87.39	0	2.03	0	0	14.51	0	0	0	0	0	0	-14.88	-14.88
Westbrook Inverter Enclosur	W_INV1	369409	4906578	2	0	0	86.1	86.1	1	4879.05	3.25	0	84.77	0	1.61	0	0	12.3	0	0	0	0	0	0	-12.62	-12.62
Inverter	MV6-4	370250	4906966	2	0	0	86.1	86.1	1	5788.22	3.25	0	86.25	0	1.83	0	0	13.49	0	0	0	0	0	0	-15.52	-15.52
Inverter Transformer	MV1-14 T	365157	4905049	2	0	0	69.4	69.4	1	1432.72	3.25	0	74.12	0	1.94	0	0	4.36	0	0	0	0	0	0	-11.07	-11.07
Westbrook Inverter Transfor	W_INVTR1	369403	4906578	2	0	0	78.2	78.2	1	4874.24	3.25	0	84.76	0	-3.15	0	0	2.37	0	0	0	0	0	0	-5.73	-5.73
Inverter Transformer	MV1-13 T	364725	4905241	2	0	0	69.4	69.4	1	1762.62	3.25	0	75.92	0	2.08	0	0	4.72	0	0	0	0	0	0	-13.38	-13.38
Westbrook Inverter Transfor	W_INVTR3	369514	4906164	2	0	0	77.3	77.3	1	4731.87	3.25	0	84.5	0	-3.12	0	0	2.32	0	0	0	0	0	0	-6.36	-6.36

Westbrook Inverter Transfor	W_INVTR2	369368	4906388	2	0	0	77.3	77.3	1	4734.21	3.25	0	84.5	0	-3.12	0	0	2.32	0	0	0	0	0	0	-6.36	-6.36
Westbrook Inverter Transfor	W_INVTR4	369679	4906164	2	0	0	77.3	77.3	1	4872.62	3.25	0	84.76	0	-3.15	0	0	2.37	0	0	0	0	0	0	-6.63	-6.63
Inverter Transformer	MV1-10 T	365010	4905564	2	0	0	69.4	69.4	1	1968.03	3.25	0	76.88	0	2.16	0	0	4.93	0	0	0	0	0	0	-14.62	-14.62
Westbrook Inverter Transfor	W_INVTR7	369786	4906417	2	0	0	77.3	77.3	1	5097.07	3.25	0	85.15	0	-3.2	0	0	2.45	0	0	0	0	0	0	-7.05	-7.05
Westbrook Inverter Transfor	W_INVTR5	369725	4906574	2	0	0	77.3	77.3	1	5133.42	3.25	0	85.21	0	-3.2	0	0	2.46	0	0	0	0	0	0	-7.12	-7.12
Westbrook Inverter Transfor	W_INVTR6	369881	4906578	2	0	0	77.3	77.3	1	5264.77	3.25	0	85.43	0	-3.23	0	0	2.5	0	0	0	0	0	0	-7.36	-7.36
Inverter Transformer	MV1-7 T	364919	4905782	2	0	0	69.4	69.4	1	2202.08	3.25	0	77.86	0	2.25	0	0	5.16	0	0	0	0	0	0	-15.92	-15.92
Inverter Transformer	MV2-1 T	365836	4906816	2	0	0	69.4	69.4	1	3175.8	3.25	0	81.04	0	2.56	0	0	6.03	0	0	0	0	0	0	-20.28	-20.28
Inverter Transformer	MV6-4 T	370244	4906966	2	0	0	69.4	69.4	1	5783.3	3.25	0	86.24	0	3.15	0	0	7.89	0	0	0	0	0	0	-27.93	-27.93
Inverter Transformer	MV6-1 T	370230	4907364	2	0	0	69.4	69.4	1	6008.78	3.25	0	86.58	0	3.19	0	0	8.02	0	0	0	0	0	0	-28.44	-28.44
Inverter Transformer	MV1-15 T	365309	4904994	2	0	0	56.1	56.1	1	1349.61	3.25	0	73.6	0	0.14	0	0	5.69	0	0	0	0	0	0	-23.38	-23.38
Inverter Transformer	MV1-12 T	365044	4905386	2	0	0	56.1	56.1	1	1787.21	3.25	0	76.04	0	0.32	0	0	6.62	0	0	0	0	0	0	-26.92	-26.92
Inverter Transformer	MV1-11 T	364649	4905414	2	0	0	56.1	56.1	1	1951.43	3.25	0	76.81	0	0.38	0	0	6.95	0	0	0	0	0	0	-28.08	-28.08
Inverter Transformer	MV1-8 T	364782	4905647	2	0	0	56.1	56.1	1	2114.7	3.25	0	77.5	0	0.45	0	0	7.27	0	0	0	0	0	0	-29.17	-29.17
Inverter Transformer	MV1-9 T	364555	4905646	2	0	0	56.1	56.1	1	2201.26	3.25	0	77.85	0	0.49	0	0	7.43	0	0	0	0	0	0	-29.72	-29.72
Inverter Transformer	MV1-4 T	364821	4905918	2	0	0	56.1	56.1	1	2359.86	3.25	0	78.46	0	0.56	0	0	7.73	0	0	0	0	0	0	-30.69	-30.69
Inverter Transformer	MV1-5 T	364676	4905892	2	0	0	56.1	56.1	1	2381.19	3.25	0	78.54	0	0.57	0	0	7.77	0	0	0	0	0	0	-30.81	-30.81
Inverter Transformer	MV1-6 T	364482	4905835	2	0	0	56.1	56.1	1	2403.34	3.25	0	78.62	0	0.58	0	0	7.81	0	0	0	0	0	0	-30.95	-30.95
Inverter Transformer	MV1-2 T	364759	4906063	2	0	0	56.1	56.1	1	2516.63	3.25	0	79.02	0	0.62	0	0	8.02	0	0	0	0	0	0	-31.6	-31.6
Inverter Transformer	MV1-3 T	364435	4906039	2	0	0	56.1	56.1	1	2608.41	3.25	0	79.33	0	0.66	0	0	8.19	0	0	0	0	0	0	-32.12	-32.12
Inverter Transformer	MV1-1 T	364721	4906166	2	0	0	56.1	56.1	1	2626.26	3.25	0	79.39	0	0.67	0	0	8.22	0	0	0	0	0	0	-32.22	-32.22
Inverter Transformer	MV2-4 T	365590	4906628	2	0	0	56.1	56.1	1	2971.36	3.25	0	80.46	0	0.82	0	0	8.82	0	0	0	0	0	0	-34.04	-34.04
Inverter Transformer	MV2-3 T	365814	4906641	2	0	0	56.1	56.1	1	2999.46	3.25	0	80.54	0	0.83	0	0	8.87	0	0	0	0	0	0	-34.18	-34.18
Inverter Transformer	MV2-2 T	365982	4906654	2	0	0	56.1	56.1	1	3034.49	3.25	0	80.64	0	0.84	0	0	8.93	0	0	0	0	0	0	-34.35	-34.35
Inverter Transformer	MV3-18 T	367757	4907412	2	0	0	56.1	56.1	1	4380.14	3.25	0	83.83	0	1.39	0	0	11.01	0	0	0	0	0	0	-40.17	-40.17
Inverter Transformer	MV3-12 T	367674	4907594	2	0	0	56.1	56.1	1	4496.39	3.25	0	84.06	0	1.44	0	0	11.17	0	0	0	0	0	0	-40.61	-40.61
Inverter Transformer	MV3-13 T	367958	4907577	2	0	0	56.1	56.1	1	4625.94	3.25	0	84.3	0	1.49	0	0	11.35	0	0	0	0	0	0	-41.08	-41.08
Inverter Transformer	MV3-21 T	368484	4907206	2	0	0	56.1	56.1	1	4635.88	3.25	0	84.32	0	1.49	0	0	11.36	0	0	0	0	0	0	-41.12	-41.12
Inverter Transformer	MV3-19 T	368352	4907347	2	0	0	56.1	56.1	1	4662.78	3.25	0	84.37	0	1.5	0	0	11.4	0	0	0	0	0	0	-41.22	-41.22
Inverter Transformer	MV3-17 T	368183	4907472	2	0	0	56.1	56.1	1	4663.05	3.25	0	84.37	0	1.5	0	0	11.4	0	0	0	0	0	0	-41.22	-41.22
Inverter Transformer	MV3-22 T	368661	4907142	2	0	0	56.1	56.1	1	4704.14	3.25	0	84.45	0	1.52	0	0	11.46	0	0	0	0	0	0	-41.37	-41.37
Inverter Transformer	MV3-15 T	368351	4907477	2	0	0	56.1	56.1	1	4765.69	3.25	0	84.56	0	1.54	0	0	11.54	0	0	0	0	0	0	-41.58	-41.58
Inverter Transformer	MV3-7 T	367951	4907754	2	0	0	56.1	56.1	1	4773.22	3.25	0	84.58	0	1.54	0	0	11.55	0	0	0	0	0	0	-41.61	-41.61
Inverter Transformer	MV3-10 T	368162	4907669	2	0	0	56.1	56.1	1	4813.87	3.25	0	84.65	0	1.56	0	0	11.61	0	0	0	0	0	0	-41.75	-41.75
Inverter Transformer	MV3-20 T	368683	4907317	2	0	0	56.1	56.1	1	4849.59	3.25	0	84.71	0	1.57	0	0	11.65	0	0	0	0	0	0	-41.88	-41.88
Inverter Transformer	MV3-16 T	368509	4907475	2	0	0	56.1	56.1	1	4860.29	3.25	0	84.73	0	1.57	0	0	11.67	0	0	0	0	0	0	-41.92	-41.92
Inverter Transformer	MV3-11 T	368340	4907662	2	0	0	56.1	56.1	1	4908.82	3.25	0	84.82	0	1.59	0	0	11.73	0	0	0	0	0	0	-42.09	-42.09
Inverter Transformer	MV3-3 T	367944	4907927	2	0	0	56.1	56.1	1	4919	3.25	0	84.84	0	1.6	0	0	11.75	0	0	0	0	0	0	-42.12	-42.12
Inverter Transformer	MV3-6 T	368156	4907834	2	0	0	56.1	56.1	1	4948.97	3.25	0	84.89	0	1.61	0	0	11.79	0	0	0	0	0	0	-42.23	-42.23
Inverter Transformer	MV3-14 T	368678	4907498	2	0	0	56.1	56.1	1	4984.38	3.25	0	84.95	0	1.62	0	0	11.83	0	0	0	0	0	0	-42.35	-42.35
Inverter Transformer	MV3-9 T	368517	4907703	2	0	0	56.1	56.1	1	5046.1	3.25	0	85.06	0	1.64	0	0	11.91	0	0	0	0	0	0	-42.56	-42.56
Inverter Transformer	MV3-5 T	368335	4907843	2	0	0	56.1	56.1	1	5054.73	3.25	0	85.07	0	1.65	0	0	11.93	0	0	0	0	0	0	-42.59	-42.59
Inverter Transformer	MV3-1 T	368150	4907976	2	0	0	56.1	56.1	1	5066.22	3.25	0	85.09	0	1.65	0	0	11.94	0	0	0	0	0	0	-42.63	-42.63
Inverter Transformer	MV3-8 T	368685	4907712	2	0	0	56.1	56.1	1	5155.37	3.25	0	85.25	0	1.68	0	0	12.06	0	0	0	0	0	0	-42.93	-42.93
Inverter Transformer	MV3-4 T	368507	4907925	2	0	0	56.1	56.1	1	5219.98	3.25	0	85.35	0	1.7	0	0	12.14	0	0	0	0	0	0	-43.14	-43.14
Inverter Transformer	MV3-2 T	368677	4907928	2	0	0	56.1	56.1	1	5322.12	3.25	0	85.52	0	1.74	0	0	12.27	0	0	0	0	0	0	-43.47	-43.47
Inverter Transformer	MV6-3 T	370202	4907140	2	0	0	56.1	56.1	1	5850.75	3.25	0	86.34	0	1.92	0	0	12.92	0	0	0	0	0	0	-45.13	-45.13
Inverter Transformer	MV6-2 T	370091	4907339	2	0	0	56.1	56.1	1	5884.32	3.25	0	86.39	0	1.93	0	0	12.97	0	0	0	0	0	0	-45.23	-45.23
Inverter Transformer	MV4-15 T	369170	4908481	2	0	0	56.1	56.1	1	6060.43	3.25	0	86.65	0	1.98	0	0	13.17	0	0	0	0	0	0	-45.75	-45.75
Inverter Transformer	MV4-14 T	369182	4908507	2	0	0	56.1	56.1	1	6088.39	3.25	0	86.69	0	1.99	0	0	13.21	0	0	0	0	0	0	-45.83	-45.83
Inverter Transformer	MV4-13 T	369057	4908605	2	0	0	56.1	56.1	1	6092.92	3.25	0	86.7	0	1.99	0	0	13.21	0	0	0	0	0	0	-45.84	-45.84
Inverter Transformer	MV4-12 T	369049	4908803	2	0	0	56.1	56.1	1	6250.2	3.25	0	86.92	0	2.04	0	0	13.4	0	0	0	0	0	0	-46.3	-46.3
Inverter Transformer	MV4-7 T	369040	4909001	2	0	0	56.1	56.1	1	6409.2	3.25	0	87.14	0	2.09	0	0	13.58	0	0	0	0	0	0	-46.75	-46.75
Inverter Transformer	MV4-11 T	369269	4908855	2	0	0	56.1	56.1	1	6419.71	3.25	0	87.15	0	2.09	0	0	13.59	0	0	0	0	0	0	-46.78	-46.78
Inverter Transformer	MV4-10 T	369307	4908858	2	0	0	56.1	56.1	1	6444.51	3.25	0	87.18	0	2.1	0	0	13.62	0	0	0	0	0	0	-46.84	-46.84
Inverter Transformer	MV4-8 T	369262	4909001	2	0	0	56.1	56.1	1	6534.43	3.25	0	87.3	0	2.13	0	0	13.72	0	0	0	0	0	0	-47.09	-47.09
Inverter Transformer	MV4-9 T	369284	4909001	2	0	0	56.1	56.1	1	6547.12	3.25	0	87.32	0	2.13	0	0	13.73	0	0	0	0	0	0	-47.13	-47.13
Inverter Transformer	MV4-4 T	369033	4909199	2	0	0	56.1	56.1	1	6571.4	3.25	0	87.35	0	2.14	0	0	13.76	0	0	0	0	0	0	-47.19	-47.19
Inverter Transformer	MV5-6 T	369987	4908507	2	0	0	56.1	56.1	1	6606.37	3.25	0	87.4	0	2.15	0	0	13.8	0	0	0	0	0	0	-47.29	-47.29
Inverter Transformer	MV4-6 T	369249	4909192	2	0	0	56.1	56.1	1	6684.21	3.25	0	87.5	0	2.17	0	0	13.89	0	0	0	0	0	0	-47.5	-47.5
Inverter Transformer	MV4-5 T	369283	4909199	2	0	0	56.1	56.1	1	6709.12	3.25	0	87.53	0	2.18	0	0	13.91	0	0	0	0	0	0	-47.57	-47.57
Inverter Transformer	MV4-1 T	369017	4909397	2	0	0	56.1	56.1	1	6730.83	3.25	0	87.56	0	2.18	0	0	13.94	0	0	0	0	0	0	-47.62	-47.62
Inverter Transformer	MV5-5 T	370021	4908690	2	0	0	56.1	56.1	1	6764.51	3.25	0	87.6	0	2.19	0	0	13.97	0	0	0	0	0	0	-47.71	-47.71
Inverter Transformer	MV4-3 T	369234	4909397	2	0	0	56.1	56.1	1	6846.71	3.25	0	87.71	0	2.22	0	0	14.06	0	0	0	0	0	0	-47.93	-47.93
Inverter Transformer	MV4-2 T	369267	4909397	2	0	0	56.1	56.1	1	6864.76	3.25	0	87.73	0	2.22	0	0	14.08	0	0	0	0	0	0	-47.98	-47.98
Inverter Transformer	MV5-2 T	370011	4908853	2	0	0	56.1	56.1	1	6880.07	3.25	0	87.75	0	2.23	0	0	14.1	0	0	0	0	0	0	-48.02	-48.02
Inverter Transformer	MV5-4 T	370330	4908707	2	0	0	56.1	56.1	1	6987.09	3.25	0	87.89	0	2.26	0	0	14.22	0	0	0	0	0	0	-48.3	-48.3
Inverter Transformer	MV5-3 T	370237	4908851	2	0	0	56.1	56.1	1	7028.84	3.25	0	87.94	0	2.27	0	0	14.26	0	0	0	0	0	0	-48.41	-48.41
Inverter Transformer	MV5-1 T	370015	4909142	2	0	0	56.1	56.1	1	7103.36	3.25	0	88.03	0	2.29	0	0	14.34	0	0	0	0	0	0	-48.6	-48.6
Line Reactor	NGR	369421	4908787.5	5	0	0	45.4	45.4	1	6456.35	5.25	0	87.2	0	3.23	1.37	0.09	2.64	0	0	0	0	0	0	-49.08	-49.08
Limit. Valu 0	0																								
Level D/N: 24.1287	24.1287																								

Receiver: Existing Noise Receptor

ID: G-73
X: 365512.2
Y: 4903779
Z: 4.5
Ground: 0

ISO	Description	ID	X	Y	Z	Ground	ReflOrd	LxT	LxN	L/A	Dist.	hm	Freq	Adiv	K0b	Agr	Abar	z	Aatm	Afol	Ahous	Cmet	CmetN	Dc	RL	LtotT	LtotN
	Inverter	MV1-15	365315	4904994	2	0	0	100.3	100.3	1	1230.9	3.25	0	72.8	0	-0.14	0	0	11.61	0	0	0	0	0	0	16.03	16.03
	Sol_Luce Substation	S_Substation	369426	4908792	3.5	0	0	112.1	112.1	1	6359.87	5.25	0	87.07	0	1.24	2.57	0.28	10.12	0	0	0	0	0	0	11.08	11.08
	Inverter	MV1-12	365038	4905386	2	0	0	100.3	100.3	1	1675.51	3.25	0	75.48	0	0.03	0	0	12.75	0	0	0	0	0	0	12.05	12.05
	Inverter	MV1-11	364655	4905414	2	0	0	100.3	100.3	1	1846.08	3.25	0	76.33	0	0.08	0	0	13.13	0	0	0	0	0	0	10.77	10.77
	Inverter	MV1-14	365163	4905049	2	0	0	97.3	97.3	1	1317.14	3.25	0	73.39	0	-0.1	0	0	11.85	0	0	0	0	0	0	12.17	12.17
	Inverter	MV1-8	364788	4905647	2	0	0	100.3	100.3	1	2003.47	3.25	0	77.04	0	0.13	0	0	13.47	0	0	0	0	0	0	9.68	9.68
	Inverter	MV1-9	364561	4905646	2	0	0	100.3	100.3	1	2095.35	3.25	0	77.43	0	0.16	0	0	13.66	0	0	0	0	0	0	9.07	9.07
	Inverter	MV1-4	364815	4905918	2	0	0	100.3	100.3	1	2249.76	3.25	0	78.04	0	0.2	0	0	13.97	0	0	0	0	0	0	8.1	8.1
	Inverter	MV1-5	364671	4905892	2	0	0	100.3	100.3	1	2274.29	3.25	0	78.14	0	0.2	0	0	14.02	0	0	0	0	0	0	7.95	7.95
	Inverter	MV1-6	364477	4905835	2	0	0	100.3	100.3	1	2301.91	3.25	0	78.24	0	0.21	0	0	14.08	0	0	0	0	0	0	7.78	7.78
	Inverter	MV1-13	364731	4905241	2	0	0	97.3	97.3	1	1657.63	3.25	0	75.39	0	0.02	0	0	12.7	0	0	0	0	0	0	9.2	9.2
	Inverter	MV1-2	364753	4906063	2	0	0	100.3	100.3	1	2406.87	3.25	0	78.63	0	0.24	0	0	14.28	0	0	0	0	0	0	7.17	7.17
	Inverter	MV1-1	364715	4906166	2	0	0	100.3	100.3	1	2516.61	3.25	0	79.02	0	0.26	0	0	14.49	0	0	0	0	0	0	6.55	6.55
	Inverter	MV1-10	365004	4905564	2	0	0	97.3	97.3	1	1855.94	3.25	0	76.37	0	0.09	0	0	13.15	0	0	0	0	0	0	7.7	7.7
	Inverter	MV2-4	365586	4906624	2	0	0	100.3	100.3	1	2845.96	3.25	0	80.08	0	0.33	0	0	15.1	0	0	0	0	0	0	4.8	4.8
	Inverter	MV2-3	365820	4906641	2	0	0	100.3	100.3	1	2878.51	3.25	0	80.18	0	0.34	0	0	15.16	0	0	0	0	0	0	4.63	4.63
	Inverter	MV1-7	364925	4905782	2	0	0	97.3	97.3	1	2087.3	3.25	0	77.39	0	0.15	0	0	13.64	0	0	0	0	0	0	6.12	6.12
	Gardiner Substation	G_Sub	366586.3	4903349.9	2.5	0	0	90.8	90.8	1	1156.64	4.25	0	72.26	0	0.83	5.19	0.31	2.83	0	0	0	0	0	0	9.66	9.66
	Inverter	MV3-18	367752	4907412	2	0	0	100.3	100.3	1	4267.95	3.25	0	83.6	0	0.56	0	0	17.47	0	0	0	0	0	0	-1.33	-1.33
	Inverter	MV2-1	365842	4906816	2	0	0	97.3	97.3	1	3054.86	3.25	0	80.7	0	0.37	0	0	15.47	0	0	0	0	0	0	0.77	0.77
	Inverter	MV3-12	367668	4907594	2	0	0	100.3	100.3	1	4381.97	3.25	0	83.83	0	0.58	0	0	17.65	0	0	0	0	0	0	-1.75	-1.75
	Inverter	MV3-13	367963	4907577	2	0	0	100.3	100.3	1	4520.09	3.25	0	84.1	0	0.59	0	0	17.86	0	0	0	0	0	0	-2.24	-2.24
	Inverter	MV3-21	368478	4907206	2	0	0	100.3	100.3	1	4532.14	3.25	0	84.13	0	0.59	0	0	17.88	0	0	0	0	0	0	-2.29	-2.29
	Inverter	MV3-17	368178	4907472	2	0	0	100.3	100.3	1	4554.64	3.25	0	84.17	0	0.6	0	0	17.91	0	0	0	0	0	0	-2.37	-2.37
	Inverter	MV3-19	368357	4907347	2	0	0	100.3	100.3	1	4563.28	3.25	0	84.19	0	0.6	0	0	17.93	0	0	0	0	0	0	-2.4	-2.4
	Inverter	MV3-7	367945	4907754	2	0	0	100.3	100.3	1	4660.38	3.25	0	84.37	0	0.61	0	0	18.07	0	0	0	0	0	0	-2.74	-2.74
	Inverter	MV3-15	368357	4907477	2	0	0	100.3	100.3	1	4665.63	3.25	0	84.38	0	0.61	0	0	18.08	0	0	0	0	0	0	-2.76	-2.76
	Inverter	MV3-10	368167	4907669	2	0	0	100.3	100.3	1	4709.57	3.25	0	84.46	0	0.61	0	0	18.15	0	0	0	0	0	0	-2.91	-2.91
	Inverter	MV3-20	368689	4907317	2	0	0	100.3	100.3	1	4754.95	3.25	0	84.54	0	0.62	0	0	18.22	0	0	0	0	0	0	-3.07	-3.07
	Inverter	MV3-16	368514	4907475	2	0	0	100.3	100.3	1	4761.43	3.25	0	84.55	0	0.62	0	0	18.23	0	0	0	0	0	0	-3.09	-3.09
	Inverter	MV3-3	367939	4907927	2	0	0	100.3	100.3	1	4805.75	3.25	0	84.64	0	0.62	0	0	18.29	0	0	0	0	0	0	-3.24	-3.24
	Inverter	MV3-11	368346	4907662	2	0	0	100.3	100.3	1	4807.09	3.25	0	84.64	0	0.62	0	0	18.29	0	0	0	0	0	0	-3.24	-3.24
	Inverter	MV3-6	368162	4907834	2	0	0	100.3	100.3	1	4844.01	3.25	0	84.7	0	0.63	0	0	18.35	0	0	0	0	0	0	-3.37	-3.37
	Inverter	MV3-14	368684	4907498	2	0	0	100.3	100.3	1	4887.87	3.25	0	84.78	0	0.63	0	0	18.41	0	0	0	0	0	0	-3.52	-3.52
	Inverter	MV3-9	368512	4907703	2	0	0	100.3	100.3	1	4939.29	3.25	0	84.87	0	0.64	0	0	18.49	0	0	0	0	0	0	-3.69	-3.69
	Inverters	G_Inv1	366526.4	4903225.8	2	0	0	87.7	87.7	1	1155.27	3.25	0	72.25	0	2.47	0	0	1.62	0	0	0	0	0	0	11.31	11.31
	Inverter	MV3-8	368680	4907712	2	0	0	100.3	100.3	1	5050.09	3.25	0	85.07	0	0.65	0	0	18.65	0	0	0	0	0	0	-4.05	-4.05
	Inverters	G_Inv3	366583.7	4903091.4	2	0	0	87.7	87.7	1	1273.15	3.25	0	73.1	0	2.49	0	0	1.77	0	0	0	0	0	0	10.31	10.31
	Inverters	G_Inv2	366676.9	4903239.1	2	0	0	87.7	87.7	1	1283.75	3.25	0	73.17	0	2.49	0	0	1.78	0	0	0	0	0	0	10.22	10.22
	Inverter	MV6-3	370207	4907140	2	0	0	100.3	100.3	1	5773.86	3.25	0	86.23	0	0.7	0	0	19.68	0	0	0	0	0	0	-6.3	-6.3
	Inverter	MV6-2	370085	4907339	2	0	0	100.3	100.3	1	5795.18	3.25	0	86.26	0	0.7	0	0	19.71	0	0	0	0	0	0	-6.36	-6.36
	Inverters	G_Inv5	366638.5	4902958.1	2	0	0	87.7	87.7	1	1393.71	3.25	0	73.88	0	2.5	0	0	1.92	0	0	0	0	0	0	9.36	9.36
	Inverters	G_Inv4	366732.8	4903105	2	0	0	87.7	87.7	1	1394.33	3.25	0	73.89	0	2.5	0	0	1.92	0	0	0	0	0	0	9.35	9.35
	Inverter	MV4-7	369035	4909001	2	0	0	100.3	100.3	1	6299.16	3.25	0	86.99	0	0.71	0	0	20.39	0	0	0	0	0	0	-7.78	-7.78
	Inverter	MV4-11	369264	4908855	2	0	0	100.3	100.3	1	6312.03	3.25	0	87	0	0.71	0	0	20.41	0	0	0	0	0	0	-7.82	-7.82
	Inverter	MV4-10	369312	4908858	2	0	0	100.3	100.3	1	6343.08	3.25	0	87.05	0	0.71	0	0	20.45	0	0	0	0	0	0	-7.9	-7.9
	Inverter	MV4-8	369256	4909001	2	0	0	100.3	100.3	1	6425.37	3.25	0	87.16	0	0.71	0	0	20.56	0	0	0	0	0	0	-8.12	-8.12
	Inverter	MV4-9	369289	4909001	2	0	0	100.3	100.3	1	6444.65	3.25	0	87.18	0	0.71	0	0	20.59	0	0	0	0	0	0	-8.17	-8.17
	Inverter	MV4-4	369027	4909199	2	0	0	100.3	100.3	1	6459.89	3.25	0	87.2	0	0.71	0	0	20.61	0	0	0	0	0	0	-8.21	-8.21
	Inverters	G_Inv6	366788.5	4902972	2	0	0	87.7	87.7	1	1510.03	3.25	0	74.58	0	2.52	0	0	2.06	0	0	0	0	0	0	8.5	8.5
	Inverters	G_Inv7	366694.6	4902824.7	2	0	0	87.7	87.7	1	1519.46	3.25	0	74.63	0	2.52	0	0	2.07	0	0	0	0	0	0	8.44	8.44
	Inverter	MV4-6	369243	4909192	2	0	0	100.3	100.3	1	6574.15	3.25	0	87.36	0	0.72	0	0	20.76	0	0	0	0	0	0	-8.52	-8.52
	Inverter	MV4-5	369289	4909199	2	0	0	100.3	100.3	1	6606.11	3.25	0	87.4	0	0.72	0	0	20.8	0	0	0	0	0	0	-8.6	-8.6
	Inverter	MV4-1	369011	4909397	2	0	0	100.3	100.3	1	6618.42	3.25	0	87.42	0	0.71	0	0	20.81	0	0	0	0	0	0	-8.63	-8.63
	Inverter	MV5-5	370015	4908690	2	0	0	100.3	100.3	1	6662.82	3.25	0	87.47	0	0.71	0	0	20.87	0	0	0	0	0	0	-8.75	-8.75
	Inverter	MV4-3	369229	4909397	2	0	0	100.3	100.3	1	6736.21	3.25	0	87.57	0	0.71	0	0	20.96	0	0	0	0	0	0	-8.94	-8.94
	Inverter	MV4-2	369272	4909397	2	0	0	100.3	100.3	1	6760.03	3.25	0	87.6	0	0.71	0	0	21	0	0	0	0	0	0	-9	-9
	Inverter	MV5-2	370006	4908853	2	0	0	100.3	100.3	1	6777.88	3.25	0	87.62	0	0.71	0	0	21.02	0	0	0	0	0	0	-9.04	-9.04
	Inverter	MV5-4	370324	4908707	2	0	0	100.3	100.3	1	6887.57	3.25	0	87.76	0	0.71	0	0	21.16	0	0	0	0	0	0	-9.32	-9.32
	Inverter	MV5-3	370231	4908851	2	0	0	100.3	100.3	1	6927.64	3.25	0	87.81	0	0.71	0	0	21.21	0	0	0	0	0	0	-9.42	-9.42
	Inverters	G_Inv8	366844.5	4902838.5	2	0	0	87.7	87.7	1	1630.82	3.25	0	75.25	0	2.54	0	0	2.2	0	0	0	0	0	0	7.68	7.68
	Inverter	MV5-1	370020	4909142	2	0	0	100.3	100.3	1	7005.86	3.25	0	87.91	0	0.71	0	0	21.31	0	0	0	0	0	0	-9.61	-9.61
	Inverters	G_Inv9	366750.9	4902691.8	2	0	0	87.7	87.7	1	1648.15	3.25	0	75.34	0	2.54	0	0	2.22	0	0	0	0	0	0	7.56	7.56
	Inverters	G_Inv10	366900.7	4902704.8	2	0	0	87.7	87.7	1	1755.52	3.25	0	75.89	0	2.55	0	0	2.35	0	0	0	0	0	0	6.87	6.87
	Inverter	MV6-1	370235	4907364	2	0	0	97.3	97.3	1	5929.34	3.25	0	86.46	0	0.7	0	0	19.9	0	0	0	0	0	0	-9.75	-9.75
	Inverter	MV1-3	364440	4906039	2	0	0	89.1	89.1	1	2501.44	3.25	0	78.96	0	1.03	0	0	8.85	0	0	0	0	0	0	0.22	0.22
	DSTATCOM - 10 MVAR #2	DSAT2	369403	4908757	2.5	0	0	96.6	96.6	1	6318.13	3.5	0	87.01	0	3.8	0	0	3.99	0	0	0	0	0	0	1.83	1.83

DSTATCOM - 10 MVAR #1	DSAT1	369437	4908757	2.5	0	0	96.6	96.6	1	6339.13	3.5	0	87.04	0	3.8	0	0	4	0	0	0	0	0	0	1.79	1.79
Inverter	MV2-2	365977	4906654	2	0	0	89.1	89.1	1	2912.33	3.25	0	80.28	0	1.13	0	0	9.48	0	0	0	0	0	0	-1.84	-1.84
SubstationTransformer	W_ST	369711.17	4906112.3	2.5	0	0	92	92	1	4803.7	4.25	0	84.63	0	1.59	2.38	0.25	8.38	0	0	0	0	0	0	-5.01	-5.01
Inverter	MV3-22	368656	4907142	2	0	0	89.1	89.1	1	4603.61	3.25	0	84.26	0	1.54	0	0	11.93	0	0	0	0	0	0	-8.67	-8.67
Westbrook Inverter Enclosur	W_INV3	369508	4906164	2	0	0	89.1	89.1	1	4653.46	3.25	0	84.36	0	1.55	0	0	12	0	0	0	0	0	0	-8.85	-8.85
Westbrook Inverter Enclosur	W_INV2	369374	4906388	2	0	0	89.1	89.1	1	4660.51	3.25	0	84.37	0	1.56	0	0	12	0	0	0	0	0	0	-8.87	-8.87
Westbrook Inverter Enclosur	W_INV4	369673	4906164	2	0	0	89.1	89.1	1	4795.88	3.25	0	84.62	0	1.59	0	0	12.19	0	0	0	0	0	0	-9.34	-9.34
Inverter	MV3-5	368340	4907843	2	0	0	89.1	89.1	1	4951.02	3.25	0	84.89	0	1.63	0	0	12.4	0	0	0	0	0	0	-9.86	-9.86
Inverter	MV3-1	368156	4907976	2	0	0	89.1	89.1	1	4960.29	3.25	0	84.91	0	1.63	0	0	12.41	0	0	0	0	0	0	-9.89	-9.89
Westbrook Inverter Enclosur	W_INV7	369780	4906417	2	0	0	89.1	89.1	1	5017.29	3.25	0	85.01	0	1.64	0	0	12.49	0	0	0	0	0	0	-10.08	-10.08
Westbrook Inverter Enclosur	W_INV5	369719	4906574	2	0	0	89.1	89.1	1	5050.66	3.25	0	85.07	0	1.65	0	0	12.53	0	0	0	0	0	0	-10.19	-10.19
Inverter	MV3-4	368502	4907925	2	0	0	89.1	89.1	1	5111.58	3.25	0	85.17	0	1.67	0	0	12.61	0	0	0	0	0	0	-10.39	-10.39
Westbrook Inverter Enclosur	W_INV6	369875	4906578	2	0	0	89.1	89.1	1	5183.48	3.25	0	85.29	0	1.69	0	0	12.71	0	0	0	0	0	0	-10.63	-10.63
Inverter	MV3-2	368671	4907928	2	0	0	89.1	89.1	1	5214.62	3.25	0	85.34	0	1.69	0	0	12.75	0	0	0	0	0	0	-10.73	-10.73
Fixed Reactor Bank 1	FRB1	369378	4908755	6	0	0	89.8	89.8	1	6301.19	5.25	0	86.99	0	-0.38	0	0	10.06	0	0	0	0	0	0	-6.89	-6.89
Fixed Reactor Bank 2	FRB2	369464	4908755	6	0	0	89.8	89.8	1	6354.31	5.25	0	87.06	0	-0.37	0	0	10.11	0	0	0	0	0	0	-7.03	-7.03
Inverter	MV4-15	369176	4908481	2	0	0	89.1	89.1	1	5960.89	3.25	0	86.51	0	1.88	0	0	13.71	0	0	0	0	0	0	-13.04	-13.04
Inverter	MV4-14	369176	4908507	2	0	0	89.1	89.1	1	5981.42	3.25	0	86.54	0	1.88	0	0	13.74	0	0	0	0	0	0	-13.1	-13.1
Inverter	MV4-13	369051	4908605	2	0	0	89.1	89.1	1	5984.43	3.25	0	86.54	0	1.88	0	0	13.74	0	0	0	0	0	0	-13.11	-13.11
Inverter	MV4-12	369043	4908803	2	0	0	89.1	89.1	1	6140.61	3.25	0	86.76	0	1.92	0	0	13.94	0	0	0	0	0	0	-13.57	-13.57
Inverter	MV5-6	369982	4908507	2	0	0	89.1	89.1	1	6506.39	3.25	0	87.27	0	2.01	0	0	14.39	0	0	0	0	0	0	-14.61	-14.61
Westbrook Inverter Enclosur	W_INV1	369409	4906578	2	0	0	86.1	86.1	1	4797.86	3.25	0	84.62	0	1.59	0	0	12.19	0	0	0	0	0	0	-12.34	-12.34
Inverter	MV6-4	370250	4906966	2	0	0	86.1	86.1	1	5709.97	3.25	0	86.13	0	1.81	0	0	13.39	0	0	0	0	0	0	-15.28	-15.28
Inverter Transformer	MV1-14 T	365157	4905049	2	0	0	69.4	69.4	1	1318.74	3.25	0	73.4	0	1.89	0	0	4.22	0	0	0	0	0	0	-10.16	-10.16
Inverter Transformer	MV1-13 T	364725	4905241	2	0	0	69.4	69.4	1	1660.46	3.25	0	75.4	0	2.04	0	0	4.61	0	0	0	0	0	0	-12.71	-12.71
Westbrook Inverter Transfor	W_INVTR1	369403	4906578	2	0	0	78.2	78.2	1	4792.99	3.25	0	84.61	0	-3.14	0	0	2.34	0	0	0	0	0	0	-5.58	-5.58
Inverter Transformer	MV1-10 T	365010	4905564	2	0	0	69.4	69.4	1	1854.3	3.25	0	76.36	0	2.12	0	0	4.82	0	0	0	0	0	0	-13.95	-13.95
Westbrook Inverter Transfor	W_INVTR2	369368	4906388	2	0	0	77.3	77.3	1	4655.54	3.25	0	84.36	0	-3.11	0	0	2.29	0	0	0	0	0	0	-6.2	-6.2
Westbrook Inverter Transfor	W_INVTR3	369514	4906164	2	0	0	77.3	77.3	1	4658.61	3.25	0	84.37	0	-3.11	0	0	2.29	0	0	0	0	0	0	-6.21	-6.21
Westbrook Inverter Transfor	W_INVTR4	369679	4906164	2	0	0	77.3	77.3	1	4801.09	3.25	0	84.63	0	-3.14	0	0	2.34	0	0	0	0	0	0	-6.49	-6.49
Westbrook Inverter Transfor	W_INVTR7	369786	4906417	2	0	0	77.3	77.3	1	5022.39	3.25	0	85.02	0	-3.18	0	0	2.42	0	0	0	0	0	0	-6.92	-6.92
Westbrook Inverter Transfor	W_INVTR5	369725	4906574	2	0	0	77.3	77.3	1	5055.66	3.25	0	85.08	0	-3.19	0	0	2.43	0	0	0	0	0	0	-6.98	-6.98
Westbrook Inverter Transfor	W_INVTR6	369881	4906578	2	0	0	77.3	77.3	1	5188.53	3.25	0	85.3	0	-3.21	0	0	2.48	0	0	0	0	0	0	-7.22	-7.22
Inverter Transformer	MV1-7 T	364919	4905782	2	0	0	69.4	69.4	1	2089	3.25	0	77.4	0	2.21	0	0	5.05	0	0	0	0	0	0	-15.31	-15.31
Inverter Transformer	MV2-1 T	365836	4906816	2	0	0	69.4	69.4	1	3054.21	3.25	0	80.7	0	2.52	0	0	5.93	0	0	0	0	0	0	-19.8	-19.8
Inverter Transformer	MV1-15 T	365309	4904994	2	0	0	56.1	56.1	1	1231.88	3.25	0	72.81	0	0.1	0	0	5.43	0	0	0	0	0	0	-22.28	-22.28
Inverter Transformer	MV6-4 T	370244	4906966	2	0	0	69.4	69.4	1	5704.99	3.25	0	86.13	0	3.14	0	0	7.84	0	0	0	0	0	0	-27.75	-27.75
Inverter Transformer	MV6-1 T	370230	4907364	2	0	0	69.4	69.4	1	5925.36	3.25	0	86.45	0	3.18	0	0	7.97	0	0	0	0	0	0	-28.25	-28.25
Inverter Transformer	MV1-12 T	365044	4905386	2	0	0	56.1	56.1	1	1673.82	3.25	0	75.47	0	0.27	0	0	6.38	0	0	0	0	0	0	-26.07	-26.07
Inverter Transformer	MV1-11 T	364649	4905414	2	0	0	56.1	56.1	1	1848.88	3.25	0	76.34	0	0.34	0	0	6.74	0	0	0	0	0	0	-27.36	-27.36
Inverter Transformer	MV1-8 T	364782	4905647	2	0	0	56.1	56.1	1	2005.65	3.25	0	77.05	0	0.41	0	0	7.05	0	0	0	0	0	0	-28.45	-28.45
Inverter Transformer	MV1-9 T	364555	4905646	2	0	0	56.1	56.1	1	2098.08	3.25	0	77.44	0	0.45	0	0	7.23	0	0	0	0	0	0	-29.06	-29.06
Inverter Transformer	MV1-4 T	364821	4905918	2	0	0	56.1	56.1	1	2247.91	3.25	0	78.04	0	0.51	0	0	7.52	0	0	0	0	0	0	-30.01	-30.01
Inverter Transformer	MV1-5 T	364676	4905892	2	0	0	56.1	56.1	1	2272.44	3.25	0	78.13	0	0.52	0	0	7.57	0	0	0	0	0	0	-30.16	-30.16
Inverter Transformer	MV1-6 T	364482	4905835	2	0	0	56.1	56.1	1	2299.66	3.25	0	78.23	0	0.53	0	0	7.62	0	0	0	0	0	0	-30.32	-30.32
Inverter Transformer	MV1-2 T	364759	4906063	2	0	0	56.1	56.1	1	2404.99	3.25	0	78.62	0	0.58	0	0	7.82	0	0	0	0	0	0	-30.95	-30.95
Inverter Transformer	MV1-3 T	364435	4906039	2	0	0	56.1	56.1	1	2503.59	3.25	0	78.97	0	0.62	0	0	8	0	0	0	0	0	0	-31.53	-31.53
Inverter Transformer	MV1-1 T	364721	4906166	2	0	0	56.1	56.1	1	2514.71	3.25	0	79.01	0	0.62	0	0	8.02	0	0	0	0	0	0	-31.59	-31.59
Inverter Transformer	MV2-4 T	365590	4906628	2	0	0	56.1	56.1	1	2850.06	3.25	0	80.1	0	0.77	0	0	8.61	0	0	0	0	0	0	-33.42	-33.42
Inverter Transformer	MV2-3 T	365814	4906641	2	0	0	56.1	56.1	1	2877.87	3.25	0	80.18	0	0.78	0	0	8.66	0	0	0	0	0	0	-33.56	-33.56
Inverter Transformer	MV2-2 T	365982	4906654	2	0	0	56.1	56.1	1	2913.13	3.25	0	80.29	0	0.79	0	0	8.72	0	0	0	0	0	0	-33.74	-33.74
Inverter Transformer	MV3-18 T	367757	4907412	2	0	0	56.1	56.1	1	4270.58	3.25	0	83.61	0	1.35	0	0	10.85	0	0	0	0	0	0	-39.75	-39.75
Inverter Transformer	MV3-12 T	367674	4907594	2	0	0	56.1	56.1	1	4384.93	3.25	0	83.84	0	1.4	0	0	11.01	0	0	0	0	0	0	-40.19	-40.19
Inverter Transformer	MV3-13 T	367958	4907577	2	0	0	56.1	56.1	1	4517.38	3.25	0	84.1	0	1.45	0	0	11.2	0	0	0	0	0	0	-40.69	-40.69
Inverter Transformer	MV3-21 T	368484	4907206	2	0	0	56.1	56.1	1	4536.07	3.25	0	84.13	0	1.45	0	0	11.23	0	0	0	0	0	0	-40.75	-40.75
Inverter Transformer	MV3-17 T	368183	4907472	2	0	0	56.1	56.1	1	4557.57	3.25	0	84.17	0	1.46	0	0	11.26	0	0	0	0	0	0	-40.83	-40.83
Inverter Transformer	MV3-19 T	368352	4907347	2	0	0	56.1	56.1	1	4560.16	3.25	0	84.18	0	1.46	0	0	11.26	0	0	0	0	0	0	-40.84	-40.84
Inverter Transformer	MV3-22 T	368661	4907142	2	0	0	56.1	56.1	1	4607.03	3.25	0	84.27	0	1.48	0	0	11.32	0	0	0	0	0	0	-41.01	-41.01
Inverter Transformer	MV3-15 T	368351	4907477	2	0	0	56.1	56.1	1	4661.97	3.25	0	84.37	0	1.5	0	0	11.4	0	0	0	0	0	0	-41.21	-41.21
Inverter Transformer	MV3-7 T	367951	4907754	2	0	0	56.1	56.1	1	4663.52	3.25	0	84.37	0	1.5	0	0	11.4	0	0	0	0	0	0	-41.22	-41.22
Inverter Transformer	MV3-10 T	368162	4907669	2	0	0	56.1	56.1	1	4706.76	3.25	0	84.45	0	1.52	0	0	11.46	0	0	0	0	0	0	-41.37	-41.37
Inverter Transformer	MV3-20 T	368683	4907317	2	0	0	56.1	56.1	1	4750.94	3.25	0	84.54	0	1.53	0	0	11.52	0	0	0	0	0	0	-41.53	-41.53
Inverter Transformer	MV3-16 T	368509	4907475	2	0	0	56.1	56.1	1	4758.28	3.25	0	84.55	0	1.54	0	0	11.53	0	0	0	0	0	0	-41.56	-41.56
Inverter Transformer	MV3-11 T	368340	4907662	2	0	0	56.1	56.1	1	4803.56	3.25	0	84.63	0	1.55	0	0	11.59	0	0	0	0	0	0	-41.72	-41.72
Inverter Transformer	MV3-3 T	367944	4907927	2	0	0	56.1	56.1	1	4808.28	3.25	0	84.64	0	1.56	0	0	11.6	0	0	0	0	0	0	-41.74	-41.74
Inverter Transformer	MV3-6 T	368156	4907834	2	0	0	56.1	56.1	1	4840.73	3.25	0	84.7	0	1.57	0	0	11.64	0	0	0	0	0	0	-41.85	-41.85
Inverter Transformer	MV3-14 T	368678	4907498	2	0	0	56.1	56.1	1	4883.98	3.25	0	84.78	0	1.58	0	0	11.7	0	0	0	0	0	0	-42	-42
Inverter Transformer	MV3-9 T	368517	4907703	2	0	0	56.1	56.1	1	4942.33	3.25	0	84.88	0	1.6	0	0	11.78	0	0	0	0	0	0	-42.2	-42.2
Inverter Transformer	MV3-5 T	368335	4907843	2	0	0	56.1	56.1	1	4948.16	3.25	0	84.89	0	1.61	0	0	11.79	0	0	0	0	0	0	-42.22	-42.22
Inverter Transformer	MV3-1 T	368150	4907976	2	0	0	56.1	56.1	1	4957.1	3.25	0	84.9	0	1.61	0	0	11.8	0	0	0	0	0	0	-42.25	-42.25
Inverter Transformer	MV3-8 T	368685	4907712	2	0	0	56.1	56.1	1	5053.23	3.25	0	85.07	0	1.64	0	0	11.92	0	0	0	0	0	0	-42.58	-42.58
Inverter Transformer	MV3-4 T	368507	4907925	2	0	0	56.1	56.1	1	5114.5	3.25	0	85.18	0	1.67	0	0	12	0	0	0	0	0	0	-42.79	-42.79
Inverter Transformer	MV3-2 T	368677	4907928	2	0	0	56.1	56.1	1	5218.25	3.25	0	85.35	0	1.7	0	0	12.14	0	0	0	0	0	0	-43.13	-43.13
Inverter Transformer	MV6-3 T	370202	4907140	2	0	0	56.1	56.1	1	5769.8	3.25	0	86.22	0	1.89	0	0	12.83	0	0	0	0	0	0	-44.88	-44.88

	Inverter Transformer	MV6-2 T	370091	4907339	2	0	0	56.1	56.1	1	5799.92	3.25	0	86.27	0	1.9	0	0	12.86	0	0	0	0	0	0	-44.97	-44.97
	Inverter Transformer	MV4-15 T	369170	4908481	2	0	0	56.1	56.1	1	5957.21	3.25	0	86.5	0	1.95	0	0	13.05	0	0	0	0	0	0	-45.45	-45.45
	Inverter Transformer	MV4-14 T	369182	4908507	2	0	0	56.1	56.1	1	5985.1	3.25	0	86.54	0	1.96	0	0	13.09	0	0	0	0	0	0	-45.53	-45.53
	Inverter Transformer	MV4-13 T	369057	4908605	2	0	0	56.1	56.1	1	5987.98	3.25	0	86.55	0	1.96	0	0	13.09	0	0	0	0	0	0	-45.54	-45.54
	Inverter Transformer	MV4-12 T	369049	4908803	2	0	0	56.1	56.1	1	6144.07	3.25	0	86.77	0	2.01	0	0	13.27	0	0	0	0	0	0	-45.99	-45.99
	Inverter Transformer	MV4-7 T	369040	4909001	2	0	0	56.1	56.1	1	6301.96	3.25	0	86.99	0	2.06	0	0	13.45	0	0	0	0	0	0	-46.44	-46.44
	Inverter Transformer	MV4-11 T	369269	4908855	2	0	0	56.1	56.1	1	6315.01	3.25	0	87.01	0	2.06	0	0	13.47	0	0	0	0	0	0	-46.48	-46.48
	Inverter Transformer	MV4-10 T	369307	4908858	2	0	0	56.1	56.1	1	6340.09	3.25	0	87.04	0	2.07	0	0	13.5	0	0	0	0	0	0	-46.55	-46.55
	Inverter Transformer	MV4-8 T	369262	4909001	2	0	0	56.1	56.1	1	6428.86	3.25	0	87.16	0	2.1	0	0	13.6	0	0	0	0	0	0	-46.8	-46.8
	Inverter Transformer	MV4-9 T	369284	4909001	2	0	0	56.1	56.1	1	6441.72	3.25	0	87.18	0	2.1	0	0	13.61	0	0	0	0	0	0	-46.84	-46.84
	Inverter Transformer	MV4-4 T	369033	4909199	2	0	0	56.1	56.1	1	6463.16	3.25	0	87.21	0	2.11	0	0	13.64	0	0	0	0	0	0	-46.9	-46.9
	Inverter Transformer	MV5-6 T	369987	4908507	2	0	0	56.1	56.1	1	6509.83	3.25	0	87.27	0	2.12	0	0	13.69	0	0	0	0	0	0	-47.02	-47.02
	Inverter Transformer	MV4-6 T	369249	4909192	2	0	0	56.1	56.1	1	6577.56	3.25	0	87.36	0	2.14	0	0	13.77	0	0	0	0	0	0	-47.21	-47.21
	Inverter Transformer	MV4-5 T	369283	4909199	2	0	0	56.1	56.1	1	6602.68	3.25	0	87.39	0	2.15	0	0	13.8	0	0	0	0	0	0	-47.28	-47.28
	Inverter Transformer	MV4-1 T	369017	4909397	2	0	0	56.1	56.1	1	6621.6	3.25	0	87.42	0	2.15	0	0	13.82	0	0	0	0	0	0	-47.33	-47.33
	Inverter Transformer	MV5-5 T	370021	4908690	2	0	0	56.1	56.1	1	6666.87	3.25	0	87.48	0	2.17	0	0	13.87	0	0	0	0	0	0	-47.45	-47.45
	Inverter Transformer	MV4-3 T	369234	4909397	2	0	0	56.1	56.1	1	6738.97	3.25	0	87.57	0	2.19	0	0	13.95	0	0	0	0	0	0	-47.65	-47.65
	Inverter Transformer	MV4-2 T	369267	4909397	2	0	0	56.1	56.1	1	6757.25	3.25	0	87.6	0	2.19	0	0	13.97	0	0	0	0	0	0	-47.7	-47.7
	Inverter Transformer	MV5-2 T	370011	4908853	2	0	0	56.1	56.1	1	6781.2	3.25	0	87.63	0	2.2	0	0	13.99	0	0	0	0	0	0	-47.76	-47.76
	Inverter Transformer	MV5-4 T	370330	4908707	2	0	0	56.1	56.1	1	6891.76	3.25	0	87.77	0	2.23	0	0	14.11	0	0	0	0	0	0	-48.05	-48.05
	Inverter Transformer	MV5-3 T	370237	4908851	2	0	0	56.1	56.1	1	6931.73	3.25	0	87.82	0	2.24	0	0	14.16	0	0	0	0	0	0	-48.16	-48.16
	Inverter Transformer	MV5-1 T	370015	4909142	2	0	0	56.1	56.1	1	7002.64	3.25	0	87.91	0	2.26	0	0	14.23	0	0	0	0	0	0	-48.34	-48.34
	Line Reactor	NGR	369421	4908787.5	5	0	0	45.4	45.4	1	6353.25	5.25	0	87.06	0	3.23	1.36	0.09	2.6	0	0	0	0	0	0	-48.9	-48.9
Limit. Valu	0	0																								
Level D/N:	24.486	24.486																								

Receiver: Existing Noise Receptor
ID: G-74
X: 366199.2
Y: 4901665.1
Z: 4.5
Ground: 0

ISO	Description	ID	X	Y	Z	Ground	ReflOrd	LxT	LxN	L/A	Dist.	hm	Freq	Adiv	K0b	Agr	Abar	z	Aatm	Afol	Ahous	Cmet	CmetN	Dc	RL	LtotT	LtotN
	Sol_Luce Substation	S_Substation	369426	4908792	3.5	0	0	112.1	112.1	1	7823.36	5.25	0	88.87	0	1.53	2.3	0.32	11.5	0	0	0	0	0	0	7.88	7.88
	Inverter	MV1-15	365315	4904994	2	0	0	100.3	100.3	1	3444.33	3.25	0	81.74	0	0.44	0	0	16.14	0	0	0	0	0	0	1.99	1.99
	Inverter	MV1-12	365038	4905386	2	0	0	100.3	100.3	1	3897.88	3.25	0	82.82	0	0.51	0	0	16.88	0	0	0	0	0	0	0.1	0.1
	Inverter	MV1-11	364655	4905414	2	0	0	100.3	100.3	1	4054.48	3.25	0	83.16	0	0.53	0	0	17.14	0	0	0	0	0	0	-0.52	-0.52
	Inverter	MV1-8	364788	4905647	2	0	0	100.3	100.3	1	4224.57	3.25	0	83.52	0	0.56	0	0	17.4	0	0	0	0	0	0	-1.16	-1.16
	Inverter	MV1-9	364561	4905646	2	0	0	100.3	100.3	1	4304.8	3.25	0	83.68	0	0.57	0	0	17.53	0	0	0	0	0	0	-1.46	-1.46
	Inverter	MV1-4	364815	4905918	2	0	0	100.3	100.3	1	4472.49	3.25	0	84.01	0	0.59	0	0	17.79	0	0	0	0	0	0	-2.07	-2.07
	Inverter	MV1-5	364671	4905892	2	0	0	100.3	100.3	1	4494.67	3.25	0	84.05	0	0.59	0	0	17.82	0	0	0	0	0	0	-2.15	-2.15
	Inverter	MV1-6	364477	4905835	2	0	0	100.3	100.3	1	4511.55	3.25	0	84.09	0	0.59	0	0	17.85	0	0	0	0	0	0	-2.21	-2.21
	Inverter	MV1-2	364753	4906063	2	0	0	100.3	100.3	1	4629.58	3.25	0	84.31	0	0.61	0	0	18.03	0	0	0	0	0	0	-2.63	-2.63
	Inverter	MV1-1	364715	4906166	2	0	0	100.3	100.3	1	4739.3	3.25	0	84.51	0	0.62	0	0	18.19	0	0	0	0	0	0	-3.01	-3.01
	Inverter	MV2-3	365820	4906641	2	0	0	100.3	100.3	1	4990.33	3.25	0	84.96	0	0.64	0	0	18.57	0	0	0	0	0	0	-3.86	-3.86
	Inverter	MV2-4	365586	4906624	2	0	0	100.3	100.3	1	4996.67	3.25	0	84.97	0	0.64	0	0	18.58	0	0	0	0	0	0	-3.88	-3.88
	Inverter	MV1-14	365163	4905049	2	0	0	97.3	97.3	1	3539	3.25	0	81.98	0	0.46	0	0	16.3	0	0	0	0	0	0	-1.42	-1.42
	Inverters	G_Inv9	366750.9	4902691.8	2	0	0	87.7	87.7	1	1165.54	3.25	0	72.33	0	2.47	0	0	1.63	0	0	0	0	0	0	11.22	11.22
	Gardiner Substation	G_Sub	366586.3	4903349.9	2.5	0	0	90.8	90.8	1	1728.7	3.5	0	75.75	0	-0.23	0	0	3.9	0	0	0	0	0	0	11.35	11.35
	Inverters	G_Inv10	366900.7	4902704.8	2	0	0	87.7	87.7	1	1254.23	3.25	0	72.97	0	2.49	0	0	1.74	0	0	0	0	0	0	10.46	10.46
	Inverters	G_Inv7	366694.6	4902824.7	2	0	0	87.7	87.7	1	1260.99	3.25	0	73.01	0	2.49	0	0	1.75	0	0	0	0	0	0	10.41	10.41
	Inverter	MV1-13	364731	4905241	2	0	0	97.3	97.3	1	3865.58	3.25	0	82.74	0	0.51	0	0	16.83	0	0	0	0	0	0	-2.77	-2.77
	Inverters	G_Inv8	366844.5	4902838.5	2	0	0	87.7	87.7	1	1339.14	3.25	0	73.54	0	2.5	0	0	1.85	0	0	0	0	0	0	9.78	9.78
	Inverter	MV1-10	365004	4905564	2	0	0	97.3	97.3	1	4077.98	3.25	0	83.21	0	0.54	0	0	17.17	0	0	0	0	0	0	-3.61	-3.61
	Inverters	G_Inv5	366638.5	4902958.1	2	0	0	87.7	87.7	1	1365.59	3.25	0	73.71	0	2.5	0	0	1.88	0	0	0	0	0	0	9.57	9.57
	Inverter	MV3-18	367752	4907412	2	0	0	100.3	100.3	1	5952.99	3.25	0	86.49	0	0.7	0	0	19.93	0	0	0	0	0	0	-6.81	-6.81
	Inverter	MV3-21	368478	4907206	2	0	0	100.3	100.3	1	5991.2	3.25	0	86.55	0	0.7	0	0	19.98	0	0	0	0	0	0	-6.92	-6.92
	Inverter	MV3-19	368357	4907347	2	0	0	100.3	100.3	1	6077.84	3.25	0	86.67	0	0.71	0	0	20.1	0	0	0	0	0	0	-7.17	-7.17
	Inverter	MV1-7	364925	4905782	2	0	0	97.3	97.3	1	4309.58	3.25	0	83.69	0	0.57	0	0	17.54	0	0	0	0	0	0	-4.48	-4.48
	Inverter	MV3-12	367668	4907594	2	0	0	100.3	100.3	1	6108.13	3.25	0	86.72	0	0.71	0	0	20.14	0	0	0	0	0	0	-7.25	-7.25
	Inverter	MV3-17	368178	4907472	2	0	0	100.3	100.3	1	6134.8	3.25	0	86.76	0	0.71	0	0	20.18	0	0	0	0	0	0	-7.33	-7.33
	Inverters	G_Inv6	366788.5	4902972	2	0	0	87.7	87.7	1	1433.62	3.25	0	74.13	0	2.51	0	0	1.96	0	0	0	0	0	0	9.06	9.06
	Inverter	MV3-13	367963	4907577	2	0	0	100.3	100.3	1	6169.41	3.25	0	86.8	0	0.71	0	0	20.22	0	0	0	0	0	0	-7.42	-7.42
	Inverter	MV3-20	368689	4907317	2	0	0	100.3	100.3	1	6176.01	3.25	0	86.81	0	0.71	0	0	20.23	0	0	0	0	0	0	-7.44	-7.44
	Inverter	MV3-15	368357	4907477	2	0	0	100.3	100.3	1	6199.54	3.25	0	86.85	0	0.71	0	0	20.26	0	0	0	0	0	0	-7.51	-7.51
	Inverter	MV3-16	368514	4907475	2	0	0	100.3	100.3	1	6254.06	3.25	0	86.92	0	0.71	0	0	20.33	0	0	0	0	0	0	-7.66	-7.66
	Inverter	MV3-10	368167	4907669	2	0	0	100.3	100.3	1	6318.15	3.25	0	87.01	0	0.71	0	0	20.42	0	0	0	0	0	0	-7.83	-7.83
	Inverter	MV3-7	367945	4907754	2	0	0	100.3	100.3	1	6334.23	3.25	0	87.03	0	0.71	0	0	20.44	0	0	0	0	0	0	-7.88	-7.88
	Inverters	G_Inv3	366583.7	4903091.4	2	0	0	87.7	87.7	1	1477.22	3.25	0	74.39	0	2.52	0	0	2.02	0	0	0	0	0	0	8.74	8.74
	Inverter	MV3-14	368684	4907498	2	0	0	100.3	100.3	1	6340.11	3.25	0	87.04	0	0.71	0	0	20.45	0	0	0	0	0	0	-7.89	-7.89
	Inverter	MV3-11	368346	4907662	2	0	0	100.3	100.3	1	6369.58	3.25	0	87.08	0	0.71	0	0	20.49	0	0	0	0	0	0	-7.97	-7.97
	Inverter	MV3-9	368512	4907703	2	0	0	100.3	100.3	1	6465.7	3.25	0	87.21	0	0.71	0	0	20.61	0	0	0	0	0	0	-8.23	-8.23
	Inverter	MV3-6	368162	4907834	2	0	0	100.3	100.3	1	6473.63	3.25	0	87.22	0	0.71	0	0	20.62	0	0	0	0	0	0	-8.25	-8.25

Inverter	MV3-3	367939	4907927	2	0	0	100.3	100.3	1	6499.1	3.25	0	87.26	0	0.71	0	0	20.66	0	0	0	0	0	0	-8.32	-8.32
Inverter	MV3-8	368680	4907712	2	0	0	100.3	100.3	1	6536.01	3.25	0	87.31	0	0.71	0	0	20.71	0	0	0	0	0	0	-8.42	-8.42
Inverters	G_Inv4	366732.8	4903105	2	0	0	87.7	87.7	1	1535.59	3.25	0	74.73	0	2.52	0	0	2.09	0	0	0	0	0	0	8.32	8.32
Inverter	MV6-3	370207	4907140	2	0	0	100.3	100.3	1	6785.06	3.25	0	87.63	0	0.71	0	0	21.03	0	0	0	0	0	0	-9.06	-9.06
Inverters	G_Inv1	366526.4	4903225.8	2	0	0	87.7	87.7	1	1594.63	3.25	0	75.05	0	2.53	0	0	2.16	0	0	0	0	0	0	7.92	7.92
Inverter	MV6-2	370085	4907339	2	0	0	100.3	100.3	1	6876.96	3.25	0	87.75	0	0.71	0	0	21.14	0	0	0	0	0	0	-9.29	-9.29
Inverters	G_Inv2	366676.9	4903239.1	2	0	0	87.7	87.7	1	1644.89	3.25	0	75.32	0	2.54	0	0	2.22	0	0	0	0	0	0	7.58	7.58
Inverter	MV2-1	365842	4906816	2	0	0	97.3	97.3	1	5163.27	3.25	0	85.26	0	0.66	0	0	18.82	0	0	0	0	0	0	-7.42	-7.42
Inverter	MV4-11	369264	4908855	2	0	0	100.3	100.3	1	7815.86	3.25	0	88.86	0	0.67	0	0	22.29	0	0	0	0	0	0	-11.51	-11.51
Inverter	MV4-10	369312	4908858	2	0	0	100.3	100.3	1	7837.56	3.25	0	88.88	0	0.67	0	0	22.32	0	0	0	0	0	0	-11.55	-11.55
Inverter	MV4-7	369035	4909001	2	0	0	100.3	100.3	1	7864.93	3.25	0	88.91	0	0.66	0	0	22.35	0	0	0	0	0	0	-11.61	-11.61
Inverter	MV4-8	369256	4909001	2	0	0	100.3	100.3	1	7947.29	3.25	0	89	0	0.66	0	0	22.44	0	0	0	0	0	0	-11.79	-11.79
Inverter	MV4-9	369289	4909001	2	0	0	100.3	100.3	1	7960.04	3.25	0	89.02	0	0.66	0	0	22.46	0	0	0	0	0	0	-11.82	-11.82
Inverter	MV5-5	370015	4908690	2	0	0	100.3	100.3	1	7994.35	3.25	0	89.06	0	0.65	0	0	22.5	0	0	0	0	0	0	-11.9	-11.9
Inverter	MV4-4	369027	4909199	2	0	0	100.3	100.3	1	8047.12	3.25	0	89.11	0	0.65	0	0	22.56	0	0	0	0	0	0	-12.01	-12.01
Inverter	MV4-6	369243	4909192	2	0	0	100.3	100.3	1	8119.05	3.25	0	89.19	0	0.64	0	0	22.64	0	0	0	0	0	0	-12.16	-12.16
Inverter	MV5-2	370006	4908853	2	0	0	100.3	100.3	1	8133.73	3.25	0	89.21	0	0.64	0	0	22.66	0	0	0	0	0	0	-12.19	-12.19
Inverter	MV4-5	369289	4909199	2	0	0	100.3	100.3	1	8142.88	3.25	0	89.22	0	0.64	0	0	22.67	0	0	0	0	0	0	-12.21	-12.21
Inverter	MV5-4	370324	4908707	2	0	0	100.3	100.3	1	8161.03	3.25	0	89.23	0	0.64	0	0	22.69	0	0	0	0	0	0	-12.25	-12.25
Inverter	MV4-1	369011	4909397	2	0	0	100.3	100.3	1	8227.3	3.25	0	89.31	0	0.63	0	0	22.77	0	0	0	0	0	0	-12.39	-12.39
Inverter	MV5-3	370231	4908851	2	0	0	100.3	100.3	1	8239.7	3.25	0	89.32	0	0.63	0	0	22.78	0	0	0	0	0	0	-12.42	-12.42
Inverter	MV4-3	369229	4909397	2	0	0	100.3	100.3	1	8304.33	3.25	0	89.39	0	0.62	0	0	22.85	0	0	0	0	0	0	-12.55	-12.55
Inverter	MV4-2	369272	4909397	2	0	0	100.3	100.3	1	8320.12	3.25	0	89.4	0	0.62	0	0	22.87	0	0	0	0	0	0	-12.58	-12.58
Inverter	MV5-1	370020	4909142	2	0	0	100.3	100.3	1	8396.58	3.25	0	89.48	0	0.61	0	0	22.96	0	0	0	0	0	0	-12.74	-12.74
Inverter	MV6-1	370235	4907364	2	0	0	97.3	97.3	1	6983.2	3.25	0	87.88	0	0.71	0	0	21.28	0	0	0	0	0	0	-12.56	-12.56
DSTATCOM - 10 MVAR #2	DSAT2	369403	4908757	2.5	0	0	96.6	96.6	1	7781.99	3.5	0	88.82	0	3.87	0	0	4.67	0	0	0	0	0	0	-0.74	-0.74
DSTATCOM - 10 MVAR #1	DSAT1	369437	4908757	2.5	0	0	96.6	96.6	1	7796.05	3.5	0	88.84	0	3.88	0	0	4.68	0	0	0	0	0	0	-0.76	-0.76
SubstationTransformer	W_ST	369711.17	4906112.3	2.5	0	0	92	92	1	5666.68	3.5	0	86.07	0	0.7	0	-0.11	9.38	0	0	0	0	0	0	-4.17	-4.17
Inverter	MV1-3	364440	4906039	2	0	0	89.1	89.1	1	4714.42	3.25	0	84.47	0	1.57	0	0	12.08	0	0	0	0	0	0	-9.06	-9.06
Inverter	MV2-2	365977	4906654	2	0	0	89.1	89.1	1	4993.85	3.25	0	84.97	0	1.64	0	0	12.46	0	0	0	0	0	0	-10	-10
Westbrook Inverter Enclosur	W_INV3	369508	4906164	2	0	0	89.1	89.1	1	5584.65	3.25	0	85.94	0	1.78	0	0	13.23	0	0	0	0	0	0	-11.9	-11.9
Westbrook Inverter Enclosur	W_INV4	369673	4906164	2	0	0	89.1	89.1	1	5683.96	3.25	0	86.09	0	1.81	0	0	13.36	0	0	0	0	0	0	-12.2	-12.2
Westbrook Inverter Enclosur	W_INV2	369374	4906388	2	0	0	89.1	89.1	1	5690.79	3.25	0	86.1	0	1.81	0	0	13.37	0	0	0	0	0	0	-12.22	-12.22
Westbrook Inverter Enclosur	W_INV7	369780	4906417	2	0	0	89.1	89.1	1	5950.02	3.25	0	86.49	0	1.87	0	0	13.7	0	0	0	0	0	0	-13.01	-13.01
Inverter	MV3-22	368656	4907142	2	0	0	89.1	89.1	1	6002.69	3.25	0	86.57	0	1.89	0	0	13.77	0	0	0	0	0	0	-13.16	-13.16
Westbrook Inverter Enclosur	W_INV5	369719	4906574	2	0	0	89.1	89.1	1	6040.39	3.25	0	86.62	0	1.9	0	0	13.81	0	0	0	0	0	0	-13.27	-13.27
Westbrook Inverter Enclosur	W_INV6	369875	4906578	2	0	0	89.1	89.1	1	6135.8	3.25	0	86.76	0	1.92	0	0	13.93	0	0	0	0	0	0	-13.55	-13.55
Inverter	MV3-5	368340	4907843	2	0	0	89.1	89.1	1	6538.31	3.25	0	87.31	0	2.02	0	0	14.43	0	0	0	0	0	0	-14.7	-14.7
Inverter	MV3-1	368156	4907976	2	0	0	89.1	89.1	1	6607.31	3.25	0	87.4	0	2.03	0	0	14.51	0	0	0	0	0	0	-14.89	-14.89
Inverter	MV3-4	368502	4907925	2	0	0	89.1	89.1	1	6670.03	3.25	0	87.48	0	2.05	0	0	14.59	0	0	0	0	0	0	-15.06	-15.06
Inverter	MV3-2	368671	4907928	2	0	0	89.1	89.1	1	6733.03	3.25	0	87.56	0	2.06	0	0	14.67	0	0	0	0	0	0	-15.24	-15.24
Fixed Reactor Bank 1	FRB1	369378	4908755	6	0	0	89.8	89.8	1	7769.91	5.25	0	88.81	0	-0.2	0	0	11.45	0	0	0	0	0	0	-10.29	-10.29
Fixed Reactor Bank 2	FRB2	369464	4908755	6	0	0	89.8	89.8	1	7805.49	5.25	0	88.85	0	-0.19	0	0	11.48	0	0	0	0	0	0	-10.36	-10.36
Inverter	MV4-15	369176	4908481	2	0	0	89.1	89.1	1	7437.6	3.25	0	88.43	0	2.23	0	0	15.5	0	0	0	0	0	0	-17.1	-17.1
Inverter	MV4-14	369176	4908507	2	0	0	89.1	89.1	1	7461.43	3.25	0	88.46	0	2.24	0	0	15.53	0	0	0	0	0	0	-17.16	-17.16
Inverter	MV4-13	369051	4908605	2	0	0	89.1	89.1	1	7503	3.25	0	88.5	0	2.25	0	0	15.58	0	0	0	0	0	0	-17.27	-17.27
Inverter	MV4-12	369043	4908803	2	0	0	89.1	89.1	1	7683.54	3.25	0	88.71	0	2.29	0	0	15.78	0	0	0	0	0	0	-17.72	-17.72
Inverter	MV5-6	369982	4908507	2	0	0	89.1	89.1	1	7818	3.25	0	88.86	0	2.32	0	0	15.94	0	0	0	0	0	0	-18.06	-18.06
Westbrook Inverter Enclosur	W_INV1	369409	4906578	2	0	0	86.1	86.1	1	5868.51	3.25	0	86.37	0	1.85	0	0	13.6	0	0	0	0	0	0	-15.76	-15.76
Inverter	MV6-4	370250	4906966	2	0	0	86.1	86.1	1	6671.47	3.25	0	87.48	0	2.05	0	0	14.59	0	0	0	0	0	0	-18.07	-18.07
Westbrook Inverter Transfor	W_INVTR1	369403	4906578	2	0	0	78.2	78.2	1	5865.23	3.25	0	86.37	0	-3.34	0	0	2.7	0	0	0	0	0	0	-7.48	-7.48
Westbrook Inverter Transfor	W_INVTR3	369514	4906164	2	0	0	77.3	77.3	1	5588.2	3.25	0	85.95	0	-3.29	0	0	2.61	0	0	0	0	0	0	-7.92	-7.92
Westbrook Inverter Transfor	W_INVTR2	369368	4906388	2	0	0	77.3	77.3	1	5687.45	3.25	0	86.1	0	-3.31	0	0	2.64	0	0	0	0	0	0	-8.09	-8.09
Westbrook Inverter Transfor	W_INVTR4	369679	4906164	2	0	0	77.3	77.3	1	5687.63	3.25	0	86.1	0	-3.31	0	0	2.64	0	0	0	0	0	0	-8.09	-8.09
Westbrook Inverter Transfor	W_INVTR7	369786	4906417	2	0	0	77.3	77.3	1	5953.63	3.25	0	86.5	0	-3.36	0	0	2.73	0	0	0	0	0	0	-8.52	-8.52
Westbrook Inverter Transfor	W_INVTR5	369725	4906574	2	0	0	77.3	77.3	1	6043.89	3.25	0	86.63	0	-3.38	0	0	2.75	0	0	0	0	0	0	-8.66	-8.66
Westbrook Inverter Transfor	W_INVTR6	369881	4906578	2	0	0	77.3	77.3	1	6139.4	3.25	0	86.76	0	-3.39	0	0	2.78	0	0	0	0	0	0	-8.81	-8.81
Inverter Transformer	MV1-14 T	365157	4905049	2	0	0	69.4	69.4	1	3540.76	3.25	0	81.98	0	2.66	0	0	6.32	0	0	0	0	0	0	-21.62	-21.62
Inverter Transformer	MV1-13 T	364725	4905241	2	0	0	69.4	69.4	1	3867.86	3.25	0	82.75	0	2.75	0	0	6.58	0	0	0	0	0	0	-22.73	-22.73
Inverter Transformer	MV1-10 T	365010	4905564	2	0	0	69.4	69.4	1	4076.23	3.25	0	83.21	0	2.8	0	0	6.73	0	0	0	0	0	0	-23.39	-23.39
Inverter Transformer	MV1-7 T	364919	4905782	2	0	0	69.4	69.4	1	4311.36	3.25	0	83.69	0	2.86	0	0	6.9	0	0	0	0	0	0	-24.11	-24.11
Inverter Transformer	MV2-1 T	365836	4906816	2	0	0	69.4	69.4	1	5163.69	3.25	0	85.26	0	3.04	0	0	7.49	0	0	0	0	0	0	-26.44	-26.44
Inverter Transformer	MV6-4 T	370244	4906966	2	0	0	69.4	69.4	1	6667.83	3.25	0	87.48	0	3.28	0	0	8.41	0	0	0	0	0	0	-29.82	-29.82
Inverter Transformer	MV6-1 T	370230	4907364	2	0	0	69.4	69.4	1	6980.32	3.25	0	87.88	0	3.32	0	0	8.59	0	0	0	0	0	0	-30.43	-30.43
Inverter Transformer	MV1-15 T	365309	4904994	2	0	0	56.1	56.1	1	3445.87	3.25	0	81.75	0	1.02	0	0	9.6	0	0	0	0	0	0	-36.31	-36.31
Inverter Transformer	MV1-12 T	365044	4905386	2	0	0	56.1	56.1	1	3896.1	3.25	0	82.81	0	1.2	0	0	10.3	0	0	0	0	0	0	-38.26	-38.26
Inverter Transformer	MV1-11 T	364649	4905414	2	0	0	56.1	56.1	1	4056.77	3.25	0	83.16	0	1.27	0	0	10.54	0	0	0	0	0	0	-38.91	-38.91
Inverter Transformer	MV1-8 T	364782	4905647	2	0	0	56.1	56.1	1	4226.58	3.25	0	83.52	0	1.33	0	0	10.79	0	0	0	0	0	0	-39.58	-39.58
Inverter Transformer	MV1-9 T	364555	4905646	2	0	0	56.1	56.1	1	4307.08	3.25	0	83.68	0	1.37	0	0	10.9	0	0	0	0	0	0	-39.89	-39.89
Inverter Transformer	MV1-4 T	364821	4905918	2	0	0	56.1	56.1	1	4470.64	3.25	0	84.01	0	1.43	0	0	11.13	0	0	0	0	0	0	-40.51	-40.51
Inverter Transformer	MV1-5 T	364676	4905892	2	0	0	56.1	56.1	1	4492.98	3.25	0	84.05	0	1.44	0	0	11.17	0	0	0	0	0	0	-40.59	-40.59
Inverter Transformer	MV1-6 T	364482	4905835	2	0	0	56.1	56.1	1	4509.64	3.25	0	84.08	0	1.44	0	0	11.19	0	0	0	0	0	0	-40.66	-40.66
Inverter Transformer	MV1-2 T	364759	4906063	2	0	0	56.1	56.1	1	4627.71	3.25	0	84.31	0	1.49	0	0	11.35	0	0	0	0	0	0	-41.09	-41.09
Inverter Transformer	MV1-3 T	364435	4906039	2	0	0	56.1	56.1	1	4716.29	3.25	0	84.47	0	1.52	0	0	11.47	0	0	0	0	0	0	-41.41	-41.41

	Inverter Transformer	MV1-1 T	364721	4906166	2	0	0	56.1	56.1	1	4737.42	3.25	0	84.51	0	1.53	0	0	11.5	0	0	0	0	0	0	-41.48	-41.48
	Inverter Transformer	MV2-3 T	365814	4906641	2	0	0	56.1	56.1	1	4990.79	3.25	0	84.96	0	1.62	0	0	11.84	0	0	0	0	0	0	-42.37	-42.37
	Inverter Transformer	MV2-2 T	365982	4906654	2	0	0	56.1	56.1	1	4993.63	3.25	0	84.97	0	1.62	0	0	11.85	0	0	0	0	0	0	-42.38	-42.38
	Inverter Transformer	MV2-4 T	365590	4906628	2	0	0	56.1	56.1	1	5000.15	3.25	0	84.98	0	1.63	0	0	11.85	0	0	0	0	0	0	-42.4	-42.4
	Inverter Transformer	MV3-18 T	367757	4907412	2	0	0	56.1	56.1	1	5954.29	3.25	0	86.5	0	1.95	0	0	13.05	0	0	0	0	0	0	-45.44	-45.44
	Inverter Transformer	MV3-21 T	368484	4907206	2	0	0	56.1	56.1	1	5993.49	3.25	0	86.55	0	1.96	0	0	13.1	0	0	0	0	0	0	-45.55	-45.55
	Inverter Transformer	MV3-22 T	368661	4907142	2	0	0	56.1	56.1	1	6004.74	3.25	0	86.57	0	1.97	0	0	13.11	0	0	0	0	0	0	-45.59	-45.59
	Inverter Transformer	MV3-19 T	368352	4907347	2	0	0	56.1	56.1	1	6076.06	3.25	0	86.67	0	1.99	0	0	13.19	0	0	0	0	0	0	-45.8	-45.8
	Inverter Transformer	MV3-12 T	367674	4907594	2	0	0	56.1	56.1	1	6109.57	3.25	0	86.72	0	2	0	0	13.23	0	0	0	0	0	0	-45.89	-45.89
	Inverter Transformer	MV3-17 T	368183	4907472	2	0	0	56.1	56.1	1	6136.41	3.25	0	86.76	0	2.01	0	0	13.26	0	0	0	0	0	0	-45.97	-45.97
	Inverter Transformer	MV3-13 T	367958	4907577	2	0	0	56.1	56.1	1	6167.98	3.25	0	86.8	0	2.02	0	0	13.3	0	0	0	0	0	0	-46.06	-46.06
	Inverter Transformer	MV3-20 T	368683	4907317	2	0	0	56.1	56.1	1	6173.59	3.25	0	86.81	0	2.02	0	0	13.31	0	0	0	0	0	0	-46.08	-46.08
	Inverter Transformer	MV3-15 T	368351	4907477	2	0	0	56.1	56.1	1	6197.45	3.25	0	86.84	0	2.03	0	0	13.33	0	0	0	0	0	0	-46.15	-46.15
	Inverter Transformer	MV3-16 T	368509	4907475	2	0	0	56.1	56.1	1	6252.21	3.25	0	86.92	0	2.04	0	0	13.4	0	0	0	0	0	0	-46.3	-46.3
	Inverter Transformer	MV3-10 T	368162	4907669	2	0	0	56.1	56.1	1	6316.6	3.25	0	87.01	0	2.06	0	0	13.47	0	0	0	0	0	0	-46.49	-46.49
	Inverter Transformer	MV3-7 T	367951	4907754	2	0	0	56.1	56.1	1	6335.89	3.25	0	87.04	0	2.07	0	0	13.49	0	0	0	0	0	0	-46.54	-46.54
	Inverter Transformer	MV3-14 T	368678	4907498	2	0	0	56.1	56.1	1	6337.76	3.25	0	87.04	0	2.07	0	0	13.5	0	0	0	0	0	0	-46.55	-46.55
	Inverter Transformer	MV3-11 T	368340	4907662	2	0	0	56.1	56.1	1	6367.56	3.25	0	87.08	0	2.08	0	0	13.53	0	0	0	0	0	0	-46.63	-46.63
	Inverter Transformer	MV3-9 T	368517	4907703	2	0	0	56.1	56.1	1	6467.49	3.25	0	87.21	0	2.11	0	0	13.64	0	0	0	0	0	0	-46.91	-46.91
	Inverter Transformer	MV3-6 T	368156	4907834	2	0	0	56.1	56.1	1	6471.82	3.25	0	87.22	0	2.11	0	0	13.65	0	0	0	0	0	0	-46.92	-46.92
	Inverter Transformer	MV3-3 T	367944	4907927	2	0	0	56.1	56.1	1	6500.44	3.25	0	87.26	0	2.12	0	0	13.68	0	0	0	0	0	0	-47	-47
	Inverter Transformer	MV3-5 T	368335	4907843	2	0	0	56.1	56.1	1	6536.67	3.25	0	87.31	0	2.13	0	0	13.72	0	0	0	0	0	0	-47.1	-47.1
	Inverter Transformer	MV3-8 T	368685	4907712	2	0	0	56.1	56.1	1	6537.91	3.25	0	87.31	0	2.13	0	0	13.72	0	0	0	0	0	0	-47.1	-47.1
	Inverter Transformer	MV3-1 T	368150	4907976	2	0	0	56.1	56.1	1	6605.53	3.25	0	87.4	0	2.15	0	0	13.8	0	0	0	0	0	0	-47.29	-47.29
	Inverter Transformer	MV3-4 T	368507	4907925	2	0	0	56.1	56.1	1	6671.75	3.25	0	87.48	0	2.17	0	0	13.87	0	0	0	0	0	0	-47.47	-47.47
	Inverter Transformer	MV3-2 T	368677	4907928	2	0	0	56.1	56.1	1	6735.24	3.25	0	87.57	0	2.19	0	0	13.94	0	0	0	0	0	0	-47.64	-47.64
	Inverter Transformer	MV6-3 T	370202	4907140	2	0	0	56.1	56.1	1	6782.1	3.25	0	87.63	0	2.2	0	0	13.99	0	0	0	0	0	0	-47.76	-47.76
	Inverter Transformer	MV6-2 T	370091	4907339	2	0	0	56.1	56.1	1	6880.35	3.25	0	87.75	0	2.23	0	0	14.1	0	0	0	0	0	0	-48.02	-48.02
	Inverter Transformer	MV4-15 T	369170	4908481	2	0	0	56.1	56.1	1	7435.2	3.25	0	88.43	0	2.37	0	0	14.69	0	0	0	0	0	0	-49.43	-49.43
	Inverter Transformer	MV4-14 T	369182	4908507	2	0	0	56.1	56.1	1	7463.83	3.25	0	88.46	0	2.38	0	0	14.72	0	0	0	0	0	0	-49.5	-49.5
	Inverter Transformer	MV4-13 T	369057	4908605	2	0	0	56.1	56.1	1	7505.28	3.25	0	88.51	0	2.39	0	0	14.76	0	0	0	0	0	0	-49.6	-49.6
	Inverter Transformer	MV4-12 T	369049	4908803	2	0	0	56.1	56.1	1	7685.76	3.25	0	88.71	0	2.44	0	0	14.94	0	0	0	0	0	0	-50.03	-50.03
	Inverter Transformer	MV4-11 T	369269	4908855	2	0	0	56.1	56.1	1	7817.82	3.25	0	88.86	0	2.47	0	0	15.08	0	0	0	0	0	0	-50.35	-50.35
	Inverter Transformer	MV5-6 T	369987	4908507	2	0	0	56.1	56.1	1	7820.42	3.25	0	88.86	0	2.47	0	0	15.08	0	0	0	0	0	0	-50.35	-50.35
	Inverter Transformer	MV4-10 T	369307	4908858	2	0	0	56.1	56.1	1	7835.58	3.25	0	88.88	0	2.47	0	0	15.09	0	0	0	0	0	0	-50.39	-50.39
	Inverter Transformer	MV4-7 T	369040	4909001	2	0	0	56.1	56.1	1	7866.74	3.25	0	88.92	0	2.48	0	0	15.12	0	0	0	0	0	0	-50.46	-50.46
	Inverter Transformer	MV4-8 T	369262	4909001	2	0	0	56.1	56.1	1	7949.6	3.25	0	89.01	0	2.5	0	0	15.21	0	0	0	0	0	0	-50.65	-50.65
	Inverter Transformer	MV4-9 T	369284	4909001	2	0	0	56.1	56.1	1	7958.1	3.25	0	89.02	0	2.5	0	0	15.22	0	0	0	0	0	0	-50.67	-50.67
	Inverter Transformer	MV5-5 T	370021	4908690	2	0	0	56.1	56.1	1	7997.21	3.25	0	89.06	0	2.51	0	0	15.25	0	0	0	0	0	0	-50.76	-50.76
	Inverter Transformer	MV4-4 T	369033	4909199	2	0	0	56.1	56.1	1	8049.23	3.25	0	89.12	0	2.52	0	0	15.3	0	0	0	0	0	0	-50.88	-50.88
	Inverter Transformer	MV4-6 T	369249	4909192	2	0	0	56.1	56.1	1	8121.3	3.25	0	89.19	0	2.54	0	0	15.37	0	0	0	0	0	0	-51.05	-51.05
	Inverter Transformer	MV5-2 T	370011	4908853	2	0	0	56.1	56.1	1	8136.08	3.25	0	89.21	0	2.54	0	0	15.39	0	0	0	0	0	0	-51.08	-51.08
	Inverter Transformer	MV4-5 T	369283	4909199	2	0	0	56.1	56.1	1	8140.61	3.25	0	89.21	0	2.54	0	0	15.39	0	0	0	0	0	0	-51.09	-51.09
	Inverter Transformer	MV5-4 T	370330	4908707	2	0	0	56.1	56.1	1	8164.06	3.25	0	89.24	0	2.55	0	0	15.42	0	0	0	0	0	0	-51.14	-51.14
	Inverter Transformer	MV4-1 T	369017	4909397	2	0	0	56.1	56.1	1	8229.35	3.25	0	89.31	0	2.56	0	0	15.48	0	0	0	0	0	0	-51.29	-51.29
	Inverter Transformer	MV5-3 T	370237	4908851	2	0	0	56.1	56.1	1	8242.63	3.25	0	89.32	0	2.56	0	0	15.49	0	0	0	0	0	0	-51.32	-51.32
	Inverter Transformer	MV4-3 T	369234	4909397	2	0	0	56.1	56.1	1	8306.16	3.25	0	89.39	0	2.58	0	0	15.55	0	0	0	0	0	0	-51.46	-51.46
	Inverter Transformer	MV4-2 T	369267	4909397	2	0	0	56.1	56.1	1	8318.27	3.25	0	89.4	0	2.58	0	0	15.56	0	0	0	0	0	0	-51.49	-51.49
	Inverter Transformer	MV5-1 T	370015	4909142	2	0	0	56.1	56.1	1	8394.31	3.25	0	89.48	0	2.6	0	0	15.64	0	0	0	0	0	0	-51.66	-51.66
	Line Reactor	NGR	369421	4908787.5	5	0	0	45.4	45.4	1	7817.2	5.25	0	88.86	0	3.2	1.37	0.11	3.19	0	0	0	0	0	0	-51.28	-51.28
Limit. Valu	0	0																								
Level D/N:	21.0471	21.0471																								

Receiver: Existing Noise Receptor
ID: G-75
X: 366245.2
Y: 4901600.1
Z: 4.5
Ground: 0

ISO	Description	ID	X	Y	Z	Ground	ReflOrd	LxT	LxN	L/A	Dist.	hm	Freq	Adiv	K0b	Agr	Abar	z	Aatm	Afol	Ahous	Cmet	CmetN	Dc	RL	LtotT	LtotN
	Sol_Luce Substation	S_Substation	369426	4908792	3.5	0	0	112.1	112.1	1	7863.9	5.25	0	88.91	0	1.54	2.29	0.32	11.54	0	0	0	0	0	0	7.8	7.8
	Inverter	MV1-15	365315	4904994	2	0	0	100.3	100.3	1	3519.07	3.25	0	81.93	0	0.45	0	0	16.26	0	0	0	0	0	0	1.67	1.67
	Inverter	MV1-12	365038	4905386	2	0	0	100.3	100.3	1	3973.71	3.25	0	82.98	0	0.52	0	0	17.01	0	0	0	0	0	0	-0.2	-0.2
	Inverter	MV1-11	364655	4905414	2	0	0	100.3	100.3	1	4132.14	3.25	0	83.32	0	0.55	0	0	17.26	0	0	0	0	0	0	-0.81	-0.81
	Inverter	MV1-8	364788	4905647	2	0	0	100.3	100.3	1	4301.26	3.25	0	83.67	0	0.57	0	0	17.52	0	0	0	0	0	0	-1.45	-1.45
	Inverter	MV1-9	364561	4905646	2	0	0	100.3	100.3	1	4382.45	3.25	0	83.83	0	0.58	0	0	17.65	0	0	0	0	0	0	-1.75	-1.75
	Inverter	MV1-4	364815	4905918	2	0	0	100.3	100.3	1	4548.6	3.25	0	84.16	0	0.6	0	0	17.9	0	0	0	0	0	0	-2.35	-2.35
	Inverter	MV1-5	364671	4905892	2	0	0	100.3	100.3	1	4571.49	3.25	0	84.2	0	0.6	0	0	17.94	0	0	0	0	0	0	-2.43	-2.43
	Inverter	MV1-6	364477	4905835	2	0	0	100.3	100.3	1	4589.22	3.25	0	84.23	0	0.6	0	0	17.97	0	0	0	0	0	0	-2.49	-2.49
	Inverter	MV1-2	364753	4906063	2	0	0	100.3	100.3	1	4705.76	3.25	0	84.45	0	0.61	0	0	18.14	0	0	0	0	0	0	-2.9	-2.9
	Inverter	MV1-1	364715	4906166	2	0	0	100.3	100.3	1	4815.49	3.25	0	84.65	0	0.62	0	0	18.31	0	0	0	0	0	0	-3.27	-3.27
	Inverter	MV2-3	365820	4906641	2	0	0	100.3	100.3	1	5058.8	3.25	0	85.08	0	0.65	0	0	18.67	0	0	0	0	0	0	-4.08	-4.08
	Inverter	MV2-4	365586	4906624	2	0	0	100.3	100.3	1	5066.96	3.25	0	85.09	0	0.65	0	0	18.68	0	0	0	0	0	0	-4.11	-4.11

Inverter	MV1-14	365163	4905049	2	0	0	97.3	97.3	1	3614.7	3.25	0	82.16	0	0.47	0	0	16.42	0	0	0	0	0	0	-1.74	-1.74
Inverters	G_Inv9	366750.9	4902691.8	2	0	0	87.7	87.7	1	1203.14	3.25	0	72.61	0	2.48	0	0	1.68	0	0	0	0	0	0	10.89	10.89
Gardiner Substation	G_Sub	366586.3	4903349.9	2.5	0	0	90.8	90.8	1	1782.74	3.5	0	76.02	0	-0.22	0	0	3.99	0	0	0	0	0	0	10.98	10.98
Inverters	G_Inv10	366900.7	4902704.8	2	0	0	87.7	87.7	1	1284.54	3.25	0	73.17	0	2.49	0	0	1.78	0	0	0	0	0	0	10.21	10.21
Inverter	MV1-13	364731	4905241	2	0	0	97.3	97.3	1	3943.22	3.25	0	82.92	0	0.52	0	0	16.96	0	0	0	0	0	0	-3.08	-3.08
Inverters	G_Inv7	366694.6	4902824.7	2	0	0	87.7	87.7	1	1304.46	3.25	0	73.31	0	2.49	0	0	1.81	0	0	0	0	0	0	10.05	10.05
Inverter	MV1-10	365004	4905564	2	0	0	97.3	97.3	1	4153.68	3.25	0	83.37	0	0.55	0	0	17.29	0	0	0	0	0	0	-3.9	-3.9
Inverters	G_Inv8	366844.5	4902838.5	2	0	0	87.7	87.7	1	1375.79	3.25	0	73.77	0	2.5	0	0	1.89	0	0	0	0	0	0	9.49	9.49
Inverter	MV3-18	367752	4907412	2	0	0	100.3	100.3	1	6004.05	3.25	0	86.57	0	0.7	0	0	20	0	0	0	0	0	0	-6.96	-6.96
Inverter	MV3-21	368478	4907206	2	0	0	100.3	100.3	1	6034.2	3.25	0	86.61	0	0.71	0	0	20.04	0	0	0	0	0	0	-7.05	-7.05
Inverters	G_Inv5	366638.5	4902958.1	2	0	0	87.7	87.7	1	1413.81	3.25	0	74.01	0	2.51	0	0	1.94	0	0	0	0	0	0	9.21	9.21
Inverter	MV3-19	368357	4907347	2	0	0	100.3	100.3	1	6122.63	3.25	0	86.74	0	0.71	0	0	20.16	0	0	0	0	0	0	-7.29	-7.29
Inverter	MV3-12	367668	4907594	2	0	0	100.3	100.3	1	6160.45	3.25	0	86.79	0	0.71	0	0	20.21	0	0	0	0	0	0	-7.4	-7.4
Inverter	MV3-17	368178	4907472	2	0	0	100.3	100.3	1	6181.82	3.25	0	86.82	0	0.71	0	0	20.24	0	0	0	0	0	0	-7.46	-7.46
Inverter	MV1-7	364925	4905782	2	0	0	97.3	97.3	1	4385.34	3.25	0	83.84	0	0.58	0	0	17.65	0	0	0	0	0	0	-4.76	-4.76
Inverter	MV3-20	368689	4907317	2	0	0	100.3	100.3	1	6217.32	3.25	0	86.87	0	0.71	0	0	20.29	0	0	0	0	0	0	-7.56	-7.56
Inverter	MV3-13	367963	4907577	2	0	0	100.3	100.3	1	6218.86	3.25	0	86.87	0	0.71	0	0	20.29	0	0	0	0	0	0	-7.56	-7.56
Inverter	MV3-15	368357	4907477	2	0	0	100.3	100.3	1	6244.81	3.25	0	86.91	0	0.71	0	0	20.32	0	0	0	0	0	0	-7.63	-7.63
Inverter	MV3-16	368514	4907475	2	0	0	100.3	100.3	1	6297.77	3.25	0	86.98	0	0.71	0	0	20.39	0	0	0	0	0	0	-7.78	-7.78
Inverters	G_Inv6	366788.5	4902972	2	0	0	87.7	87.7	1	1475.56	3.25	0	74.38	0	2.52	0	0	2.01	0	0	0	0	0	0	8.75	8.75
Inverter	MV3-10	368167	4907669	2	0	0	100.3	100.3	1	6365.91	3.25	0	87.08	0	0.71	0	0	20.48	0	0	0	0	0	0	-7.96	-7.96
Inverter	MV3-14	368684	4907498	2	0	0	100.3	100.3	1	6382.24	3.25	0	87.1	0	0.71	0	0	20.5	0	0	0	0	0	0	-8.01	-8.01
Inverter	MV3-7	367945	4907754	2	0	0	100.3	100.3	1	6384.34	3.25	0	87.1	0	0.71	0	0	20.51	0	0	0	0	0	0	-8.01	-8.01
Inverter	MV3-11	368346	4907662	2	0	0	100.3	100.3	1	6415.61	3.25	0	87.14	0	0.71	0	0	20.55	0	0	0	0	0	0	-8.1	-8.1
Inverter	MV3-9	368512	4907703	2	0	0	100.3	100.3	1	6510.28	3.25	0	87.27	0	0.71	0	0	20.67	0	0	0	0	0	0	-8.35	-8.35
Inverter	MV3-6	368162	4907834	2	0	0	100.3	100.3	1	6521.94	3.25	0	87.29	0	0.71	0	0	20.69	0	0	0	0	0	0	-8.38	-8.38
Inverter	MV3-3	367939	4907927	2	0	0	100.3	100.3	1	6549.7	3.25	0	87.32	0	0.71	0	0	20.72	0	0	0	0	0	0	-8.45	-8.45
Inverters	G_Inv3	366583.7	4903091.4	2	0	0	87.7	87.7	1	1529.24	3.25	0	74.69	0	2.52	0	0	2.08	0	0	0	0	0	0	8.37	8.37
Inverter	MV3-8	368680	4907712	2	0	0	100.3	100.3	1	6579.03	3.25	0	87.36	0	0.72	0	0	20.76	0	0	0	0	0	0	-8.53	-8.53
Inverters	G_Inv4	366732.8	4903105	2	0	0	87.7	87.7	1	1581.92	3.25	0	74.98	0	2.53	0	0	2.14	0	0	0	0	0	0	8	8
Inverter	MV6-3	370207	4907140	2	0	0	100.3	100.3	1	6810.75	3.25	0	87.66	0	0.71	0	0	21.06	0	0	0	0	0	0	-9.13	-9.13
Inverter	MV6-2	370085	4907339	2	0	0	100.3	100.3	1	6905	3.25	0	87.78	0	0.71	0	0	21.18	0	0	0	0	0	0	-9.36	-9.36
Inverters	G_Inv1	366526.4	4903225.8	2	0	0	87.7	87.7	1	1649.84	3.25	0	75.35	0	2.54	0	0	2.22	0	0	0	0	0	0	7.55	7.55
Inverters	G_Inv2	366676.9	4903239.1	2	0	0	87.7	87.7	1	1694.9	3.25	0	75.58	0	2.54	0	0	2.28	0	0	0	0	0	0	7.26	7.26
Inverter	MV2-1	365842	4906816	2	0	0	97.3	97.3	1	5231.46	3.25	0	85.37	0	0.66	0	0	18.92	0	0	0	0	0	0	-7.64	-7.64
Inverter	MV4-11	369264	4908855	2	0	0	100.3	100.3	1	7857.91	3.25	0	88.91	0	0.67	0	0	22.34	0	0	0	0	0	0	-11.6	-11.6
Inverter	MV4-10	369312	4908858	2	0	0	100.3	100.3	1	7879.24	3.25	0	88.93	0	0.66	0	0	22.37	0	0	0	0	0	0	-11.65	-11.65
Inverter	MV4-7	369035	4909001	2	0	0	100.3	100.3	1	7909.25	3.25	0	88.96	0	0.66	0	0	22.4	0	0	0	0	0	0	-11.71	-11.71
Inverter	MV4-8	369256	4909001	2	0	0	100.3	100.3	1	7989.88	3.25	0	89.05	0	0.65	0	0	22.49	0	0	0	0	0	0	-11.89	-11.89
Inverter	MV4-9	369289	4909001	2	0	0	100.3	100.3	1	8002.38	3.25	0	89.06	0	0.65	0	0	22.51	0	0	0	0	0	0	-11.91	-11.91
Inverter	MV5-5	370015	4908690	2	0	0	100.3	100.3	1	8029.82	3.25	0	89.09	0	0.65	0	0	22.54	0	0	0	0	0	0	-11.97	-11.97
Inverter	MV4-4	369027	4909199	2	0	0	100.3	100.3	1	8092.08	3.25	0	89.16	0	0.64	0	0	22.61	0	0	0	0	0	0	-12.11	-12.11
Inverter	MV4-6	369243	4909192	2	0	0	100.3	100.3	1	8162.34	3.25	0	89.24	0	0.64	0	0	22.69	0	0	0	0	0	0	-12.26	-12.26
Inverter	MV5-2	370006	4908853	2	0	0	100.3	100.3	1	8169.96	3.25	0	89.24	0	0.64	0	0	22.7	0	0	0	0	0	0	-12.27	-12.27
Inverter	MV4-5	369289	4909199	2	0	0	100.3	100.3	1	8185.84	3.25	0	89.26	0	0.64	0	0	22.72	0	0	0	0	0	0	-12.3	-12.3
Inverter	MV5-4	370324	4908707	2	0	0	100.3	100.3	1	8194.18	3.25	0	89.27	0	0.64	0	0	22.73	0	0	0	0	0	0	-12.32	-12.32
Inverter	MV4-1	369011	4909397	2	0	0	100.3	100.3	1	8272.93	3.25	0	89.35	0	0.63	0	0	22.82	0	0	0	0	0	0	-12.49	-12.49
Inverter	MV5-3	370231	4908851	2	0	0	100.3	100.3	1	8274.19	3.25	0	89.35	0	0.63	0	0	22.82	0	0	0	0	0	0	-12.49	-12.49
Inverter	MV4-3	369229	4909397	2	0	0	100.3	100.3	1	8348.34	3.25	0	89.43	0	0.62	0	0	22.9	0	0	0	0	0	0	-12.64	-12.64
Inverter	MV4-2	369272	4909397	2	0	0	100.3	100.3	1	8363.8	3.25	0	89.45	0	0.62	0	0	22.92	0	0	0	0	0	0	-12.67	-12.67
Inverter	MV5-1	370020	4909142	2	0	0	100.3	100.3	1	8433.82	3.25	0	89.52	0	0.61	0	0	23	0	0	0	0	0	0	-12.82	-12.82
Inverter	MV6-1	370235	4907364	2	0	0	97.3	97.3	1	7010.07	3.25	0	87.91	0	0.71	0	0	21.31	0	0	0	0	0	0	-12.62	-12.62
DSTATCOM - 10 MVAR #2	DSAT2	369403	4908757	2.5	0	0	96.6	96.6	1	7822.59	3.5	0	88.87	0	3.88	0	0	4.69	0	0	0	0	0	0	-0.8	-0.8
DSTATCOM - 10 MVAR #1	DSAT1	369437	4908757	2.5	0	0	96.6	96.6	1	7836.38	3.5	0	88.88	0	3.88	0	0	4.7	0	0	0	0	0	0	-0.82	-0.82
SubstationTransformer	W_ST	369711.17	4906112.3	2.5	0	0	92	92	1	5689.7	3.5	0	86.1	0	0.7	0	-0.11	9.41	0	0	0	0	0	0	-4.24	-4.24
Inverter	MV1-3	364440	4906039	2	0	0	89.1	89.1	1	4791.93	3.25	0	84.61	0	1.59	0	0	12.18	0	0	0	0	0	0	-9.32	-9.32
Inverter	MV2-2	365977	4906654	2	0	0	89.1	89.1	1	5061.01	3.25	0	85.08	0	1.65	0	0	12.55	0	0	0	0	0	0	-10.23	-10.23
Westbrook Inverter Enclosur	W_INV3	369508	4906164	2	0	0	89.1	89.1	1	5610.26	3.25	0	85.98	0	1.79	0	0	13.27	0	0	0	0	0	0	-11.98	-11.98
Westbrook Inverter Enclosur	W_INV4	369673	4906164	2	0	0	89.1	89.1	1	5707.8	3.25	0	86.13	0	1.81	0	0	13.39	0	0	0	0	0	0	-12.28	-12.28
Westbrook Inverter Enclosur	W_INV2	369374	4906388	2	0	0	89.1	89.1	1	5719.56	3.25	0	86.15	0	1.82	0	0	13.41	0	0	0	0	0	0	-12.31	-12.31
Westbrook Inverter Enclosur	W_INV7	369780	4906417	2	0	0	89.1	89.1	1	5974.73	3.25	0	86.53	0	1.88	0	0	13.73	0	0	0	0	0	0	-13.08	-13.08
Inverter	MV3-22	368656	4907142	2	0	0	89.1	89.1	1	6043.56	3.25	0	86.63	0	1.9	0	0	13.82	0	0	0	0	0	0	-13.28	-13.28
Westbrook Inverter Enclosur	W_INV5	369719	4906574	2	0	0	89.1	89.1	1	6066.88	3.25	0	86.66	0	1.9	0	0	13.85	0	0	0	0	0	0	-13.35	-13.35
Westbrook Inverter Enclosur	W_INV6	369875	4906578	2	0	0	89.1	89.1	1	6160.76	3.25	0	86.79	0	1.93	0	0	13.96	0	0	0	0	0	0	-13.62	-13.62
Inverter	MV3-5	368340	4907843	2	0	0	89.1	89.1	1	6584.98	3.25	0	87.37	0	2.03	0	0	14.49	0	0	0	0	0	0	-14.83	-14.83
Inverter	MV3-1	368156	4907976	2	0	0	89.1	89.1	1	6656.07	3.25	0	87.46	0	2.05	0	0	14.57	0	0	0	0	0	0	-15.03	-15.03
Inverter	MV3-4	368502	4907925	2	0	0	89.1	89.1	1	6715.47	3.25	0	87.54	0	2.06	0	0	14.65	0	0	0	0	0	0	-15.19	-15.19
Inverter	MV3-2	368671	4907928	2	0	0	89.1	89.1	1	6776.93	3.25	0	87.62	0	2.07	0	0	14.72	0	0	0	0	0	0	-15.36	-15.36
Fixed Reactor Bank 1	FRB1	369378	4908755	6	0	0	89.8	89.8	1	7810.7	5.25	0	88.85	0	-0.19	0	0	11.49	0	0	0	0	0	0	-10.37	-10.37
Fixed Reactor Bank 2	FRB2	369464	4908755	6	0	0	89.8	89.8	1	7845.59	5.25	0	88.89	0	-0.19	0	0	11.52	0	0	0	0	0	0	-10.45	-10.45
Inverter	MV4-15	369176	4908481	2	0	0	89.1	89.1	1	7479.06	3.25	0	88.48	0	2.24	0	0	15.55	0	0	0	0	0	0	-17.21	-17.21
Inverter	MV4-14	369176	4908507	2	0	0	89.1	89.1	1	7502.99	3.25	0	88.5	0	2.25	0	0	15.58	0	0	0	0	0	0	-17.27	-17.27
Inverter	MV4-13	369051	4908605	2	0	0	89.1	89.1	1	7545.94	3.25	0	88.55	0	2.26	0	0	15.63	0	0	0	0	0	0	-17.38	-17.38
Inverter	MV4-12	369043	4908803	2	0	0	89.1	89.1	1	7727.19	3.25	0	88.76	0	2.3	0	0	15.83	0	0	0	0	0	0	-17.83	-17.83

Inverter	MV5-6	369982	4908507	2	0	0	89.1	89.1	1	7852.96	3.25	0	88.9	0	2.33	0	0	15.98	0	0	0	0	0	0	-18.15	-18.15
Westbrook Inverter Enclosur	W_INV1	369409	4906578	2	0	0	86.1	86.1	1	5898.23	3.25	0	86.41	0	1.86	0	0	13.63	0	0	0	0	0	0	-15.85	-15.85
Inverter	MV6-4	370250	4906966	2	0	0	86.1	86.1	1	6695.62	3.25	0	87.52	0	2.05	0	0	14.62	0	0	0	0	0	0	-18.13	-18.13
Westbrook Inverter Transfor	W_INVTR1	369403	4906578	2	0	0	78.2	78.2	1	5895.01	3.25	0	86.41	0	-3.35	0	0	2.71	0	0	0	0	0	0	-7.53	-7.53
Westbrook Inverter Transfor	W_INVTR3	369514	4906164	2	0	0	77.3	77.3	1	5613.75	3.25	0	85.99	0	-3.3	0	0	2.62	0	0	0	0	0	0	-7.96	-7.96
Westbrook Inverter Transfor	W_INVTR4	369679	4906164	2	0	0	77.3	77.3	1	5711.41	3.25	0	86.13	0	-3.31	0	0	2.65	0	0	0	0	0	0	-8.13	-8.13
Westbrook Inverter Transfor	W_INVTR2	369368	4906388	2	0	0	77.3	77.3	1	5716.28	3.25	0	86.14	0	-3.32	0	0	2.65	0	0	0	0	0	0	-8.14	-8.14
Westbrook Inverter Transfor	W_INVTR7	369786	4906417	2	0	0	77.3	77.3	1	5978.28	3.25	0	86.53	0	-3.36	0	0	2.73	0	0	0	0	0	0	-8.56	-8.56
Westbrook Inverter Transfor	W_INVTR5	369725	4906574	2	0	0	77.3	77.3	1	6070.31	3.25	0	86.66	0	-3.38	0	0	2.76	0	0	0	0	0	0	-8.71	-8.71
Westbrook Inverter Transfor	W_INVTR6	369881	4906578	2	0	0	77.3	77.3	1	6164.3	3.25	0	86.8	0	-3.4	0	0	2.79	0	0	0	0	0	0	-8.85	-8.85
Inverter Transformer	MV1-14 T	365157	4905049	2	0	0	69.4	69.4	1	3616.5	3.25	0	82.17	0	2.69	0	0	6.38	0	0	0	0	0	0	-21.88	-21.88
Inverter Transformer	MV1-13 T	364725	4905241	2	0	0	69.4	69.4	1	3945.52	3.25	0	82.92	0	2.77	0	0	6.64	0	0	0	0	0	0	-22.98	-22.98
Inverter Transformer	MV1-10 T	365010	4905564	2	0	0	69.4	69.4	1	4151.89	3.25	0	83.36	0	2.82	0	0	6.79	0	0	0	0	0	0	-23.63	-23.63
Inverter Transformer	MV1-7 T	364919	4905782	2	0	0	69.4	69.4	1	4387.15	3.25	0	83.84	0	2.88	0	0	6.96	0	0	0	0	0	0	-24.33	-24.33
Inverter Transformer	MV2-1 T	365836	4906816	2	0	0	69.4	69.4	1	5231.93	3.25	0	85.37	0	3.06	0	0	7.53	0	0	0	0	0	0	-26.62	-26.62
Inverter Transformer	MV6-4 T	370244	4906966	2	0	0	69.4	69.4	1	6692.03	3.25	0	87.51	0	3.28	0	0	8.43	0	0	0	0	0	0	-29.87	-29.87
Inverter Transformer	MV6-1 T	370230	4907364	2	0	0	69.4	69.4	1	7007.22	3.25	0	87.91	0	3.32	0	0	8.61	0	0	0	0	0	0	-30.48	-30.48
Inverter Transformer	MV1-15 T	365309	4904994	2	0	0	56.1	56.1	1	3520.66	3.25	0	81.93	0	1.05	0	0	9.72	0	0	0	0	0	0	-36.64	-36.64
Inverter Transformer	MV1-12 T	365044	4905386	2	0	0	56.1	56.1	1	3971.89	3.25	0	82.98	0	1.23	0	0	10.41	0	0	0	0	0	0	-38.57	-38.57
Inverter Transformer	MV1-11 T	364649	4905414	2	0	0	56.1	56.1	1	4134.45	3.25	0	83.33	0	1.3	0	0	10.65	0	0	0	0	0	0	-39.22	-39.22
Inverter Transformer	MV1-8 T	364782	4905647	2	0	0	56.1	56.1	1	4303.3	3.25	0	83.68	0	1.36	0	0	10.9	0	0	0	0	0	0	-39.88	-39.88
Inverter Transformer	MV1-9 T	364555	4905646	2	0	0	56.1	56.1	1	4384.76	3.25	0	83.84	0	1.4	0	0	11.01	0	0	0	0	0	0	-40.19	-40.19
Inverter Transformer	MV1-4 T	364821	4905918	2	0	0	56.1	56.1	1	4546.71	3.25	0	84.15	0	1.46	0	0	11.24	0	0	0	0	0	0	-40.79	-40.79
Inverter Transformer	MV1-5 T	364676	4905892	2	0	0	56.1	56.1	1	4569.77	3.25	0	84.2	0	1.47	0	0	11.27	0	0	0	0	0	0	-40.88	-40.88
Inverter Transformer	MV1-6 T	364482	4905835	2	0	0	56.1	56.1	1	4587.29	3.25	0	84.23	0	1.47	0	0	11.3	0	0	0	0	0	0	-40.94	-40.94
Inverter Transformer	MV1-2 T	364759	4906063	2	0	0	56.1	56.1	1	4703.86	3.25	0	84.45	0	1.52	0	0	11.46	0	0	0	0	0	0	-41.36	-41.36
Inverter Transformer	MV1-3 T	364435	4906039	2	0	0	56.1	56.1	1	4793.82	3.25	0	84.61	0	1.55	0	0	11.58	0	0	0	0	0	0	-41.68	-41.68
Inverter Transformer	MV1-1 T	364721	4906166	2	0	0	56.1	56.1	1	4813.59	3.25	0	84.65	0	1.56	0	0	11.61	0	0	0	0	0	0	-41.75	-41.75
Inverter Transformer	MV2-3 T	365814	4906641	2	0	0	56.1	56.1	1	5059.31	3.25	0	85.08	0	1.65	0	0	11.93	0	0	0	0	0	0	-42.6	-42.6
Inverter Transformer	MV2-2 T	365982	4906654	2	0	0	56.1	56.1	1	5060.75	3.25	0	85.08	0	1.65	0	0	11.93	0	0	0	0	0	0	-42.61	-42.61
Inverter Transformer	MV2-4 T	365590	4906628	2	0	0	56.1	56.1	1	5070.41	3.25	0	85.1	0	1.65	0	0	11.95	0	0	0	0	0	0	-42.64	-42.64
Inverter Transformer	MV3-18 T	367757	4907412	2	0	0	56.1	56.1	1	6005.31	3.25	0	86.57	0	1.97	0	0	13.11	0	0	0	0	0	0	-45.59	-45.59
Inverter Transformer	MV3-21 T	368484	4907206	2	0	0	56.1	56.1	1	6036.42	3.25	0	86.62	0	1.98	0	0	13.15	0	0	0	0	0	0	-45.68	-45.68
Inverter Transformer	MV3-22 T	368661	4907142	2	0	0	56.1	56.1	1	6045.56	3.25	0	86.63	0	1.98	0	0	13.16	0	0	0	0	0	0	-45.71	-45.71
Inverter Transformer	MV3-19 T	368352	4907347	2	0	0	56.1	56.1	1	6120.9	3.25	0	86.74	0	2	0	0	13.25	0	0	0	0	0	0	-45.93	-45.93
Inverter Transformer	MV3-12 T	367674	4907594	2	0	0	56.1	56.1	1	6161.84	3.25	0	86.79	0	2.02	0	0	13.29	0	0	0	0	0	0	-46.04	-46.04
Inverter Transformer	MV3-17 T	368183	4907472	2	0	0	56.1	56.1	1	6183.39	3.25	0	86.82	0	2.02	0	0	13.32	0	0	0	0	0	0	-46.11	-46.11
Inverter Transformer	MV3-20 T	368683	4907317	2	0	0	56.1	56.1	1	6214.97	3.25	0	86.87	0	2.03	0	0	13.35	0	0	0	0	0	0	-46.2	-46.2
Inverter Transformer	MV3-13 T	367958	4907577	2	0	0	56.1	56.1	1	6217.48	3.25	0	86.87	0	2.03	0	0	13.36	0	0	0	0	0	0	-46.2	-46.2
Inverter Transformer	MV3-15 T	368351	4907477	2	0	0	56.1	56.1	1	6242.78	3.25	0	86.91	0	2.04	0	0	13.39	0	0	0	0	0	0	-46.28	-46.28
Inverter Transformer	MV3-16 T	368509	4907475	2	0	0	56.1	56.1	1	6295.97	3.25	0	86.98	0	2.06	0	0	13.45	0	0	0	0	0	0	-46.43	-46.43
Inverter Transformer	MV3-10 T	368162	4907669	2	0	0	56.1	56.1	1	6364.41	3.25	0	87.08	0	2.08	0	0	13.53	0	0	0	0	0	0	-46.62	-46.62
Inverter Transformer	MV3-14 T	368678	4907498	2	0	0	56.1	56.1	1	6379.95	3.25	0	87.1	0	2.08	0	0	13.54	0	0	0	0	0	0	-46.66	-46.66
Inverter Transformer	MV3-7 T	367951	4907754	2	0	0	56.1	56.1	1	6385.94	3.25	0	87.1	0	2.08	0	0	13.55	0	0	0	0	0	0	-46.68	-46.68
Inverter Transformer	MV3-11 T	368340	4907662	2	0	0	56.1	56.1	1	6413.64	3.25	0	87.14	0	2.09	0	0	13.58	0	0	0	0	0	0	-46.76	-46.76
Inverter Transformer	MV3-9 T	368517	4907703	2	0	0	56.1	56.1	1	6512.03	3.25	0	87.27	0	2.12	0	0	13.69	0	0	0	0	0	0	-47.03	-47.03
Inverter Transformer	MV3-6 T	368156	4907834	2	0	0	56.1	56.1	1	6520.17	3.25	0	87.29	0	2.12	0	0	13.7	0	0	0	0	0	0	-47.05	-47.05
Inverter Transformer	MV3-3 T	367944	4907927	2	0	0	56.1	56.1	1	6551	3.25	0	87.33	0	2.13	0	0	13.74	0	0	0	0	0	0	-47.14	-47.14
Inverter Transformer	MV3-8 T	368685	4907712	2	0	0	56.1	56.1	1	6580.88	3.25	0	87.37	0	2.14	0	0	13.77	0	0	0	0	0	0	-47.22	-47.22
Inverter Transformer	MV3-5 T	368335	4907843	2	0	0	56.1	56.1	1	6583.39	3.25	0	87.37	0	2.14	0	0	13.77	0	0	0	0	0	0	-47.23	-47.23
Inverter Transformer	MV3-1 T	368150	4907976	2	0	0	56.1	56.1	1	6654.35	3.25	0	87.46	0	2.16	0	0	13.85	0	0	0	0	0	0	-47.42	-47.42
Inverter Transformer	MV3-4 T	368507	4907925	2	0	0	56.1	56.1	1	6717.15	3.25	0	87.54	0	2.18	0	0	13.92	0	0	0	0	0	0	-47.59	-47.59
Inverter Transformer	MV3-2 T	368677	4907928	2	0	0	56.1	56.1	1	6779.08	3.25	0	87.62	0	2.2	0	0	13.99	0	0	0	0	0	0	-47.75	-47.75
Inverter Transformer	MV6-3 T	370202	4907140	2	0	0	56.1	56.1	1	6807.85	3.25	0	87.66	0	2.21	0	0	14.02	0	0	0	0	0	0	-47.83	-47.83
Inverter Transformer	MV6-2 T	370091	4907339	2	0	0	56.1	56.1	1	6908.34	3.25	0	87.79	0	2.23	0	0	14.13	0	0	0	0	0	0	-48.09	-48.09
Inverter Transformer	MV4-15 T	369170	4908481	2	0	0	56.1	56.1	1	7476.71	3.25	0	88.47	0	2.38	0	0	14.73	0	0	0	0	0	0	-49.53	-49.53
Inverter Transformer	MV4-14 T	369182	4908507	2	0	0	56.1	56.1	1	7505.34	3.25	0	88.51	0	2.39	0	0	14.76	0	0	0	0	0	0	-49.6	-49.6
Inverter Transformer	MV4-13 T	369057	4908605	2	0	0	56.1	56.1	1	7548.17	3.25	0	88.56	0	2.4	0	0	14.8	0	0	0	0	0	0	-49.7	-49.7
Inverter Transformer	MV4-12 T	369049	4908803	2	0	0	56.1	56.1	1	7729.36	3.25	0	88.76	0	2.45	0	0	14.99	0	0	0	0	0	0	-50.14	-50.14
Inverter Transformer	MV5-6 T	369987	4908507	2	0	0	56.1	56.1	1	7855.34	3.25	0	88.9	0	2.48	0	0	15.11	0	0	0	0	0	0	-50.43	-50.43
Inverter Transformer	MV4-11 T	369269	4908855	2	0	0	56.1	56.1	1	7859.83	3.25	0	88.91	0	2.48	0	0	15.12	0	0	0	0	0	0	-50.45	-50.45
Inverter Transformer	MV4-10 T	369307	4908858	2	0	0	56.1	56.1	1	7877.29	3.25	0	88.93	0	2.48	0	0	15.14	0	0	0	0	0	0	-50.49	-50.49
Inverter Transformer	MV4-7 T	369040	4909001	2	0	0	56.1	56.1	1	7911.02	3.25	0	88.96	0	2.49	0	0	15.17	0	0	0	0	0	0	-50.56	-50.56
Inverter Transformer	MV4-8 T	369262	4909001	2	0	0	56.1	56.1	1	7992.15	3.25	0	89.05	0	2.51	0	0	15.25	0	0	0	0	0	0	-50.75	-50.75
Inverter Transformer	MV4-9 T	369284	4909001	2	0	0	56.1	56.1	1	8000.48	3.25	0	89.06	0	2.51	0	0	15.26	0	0	0	0	0	0	-50.77	-50.77
Inverter Transformer	MV5-5 T	370021	4908690	2	0	0	56.1	56.1	1	8032.64	3.25	0	89.1	0	2.52	0	0	15.29	0	0	0	0	0	0	-50.84	-50.84
Inverter Transformer	MV4-4 T	369033	4909199	2	0	0	56.1	56.1	1	8094.14	3.25	0	89.16	0	2.53	0	0	15.35	0	0	0	0	0	0	-50.98	-50.98
Inverter Transformer	MV4-6 T	369249	4909192	2	0	0	56.1	56.1	1	8164.54	3.25	0	89.24	0	2.55	0	0	15.42	0	0	0	0	0	0	-51.14	-51.14
Inverter Transformer	MV5-2 T	370011	4908853	2	0	0	56.1	56.1	1	8172.26	3.25	0	89.25	0	2.55	0	0	15.42	0	0	0	0	0	0	-51.16	-51.16
Inverter Transformer	MV4-5 T	369283	4909199	2	0	0	56.1	56.1	1	8183.61	3.25	0	89.26	0	2.55	0	0	15.44	0	0	0	0	0	0	-51.19	-51.19
Inverter Transformer	MV5-4 T	370330	4908707	2	0	0	56.1	56.1	1	8197.17	3.25	0	89.27	0	2.55	0	0	15.45	0	0	0	0	0	0	-51.22	-51.22
Inverter Transformer	MV4-1 T	369017	4909397	2	0	0	56.1	56.1	1	8274.93	3.25	0	89.36	0	2.57	0	0	15.52	0	0	0	0	0	0	-51.39	-51.39
Inverter Transformer	MV5-3 T	370237	4908851	2	0	0	56.1	56.1	1	8277.08	3.25	0	89.36	0	2.57	0	0	15.53	0	0	0	0	0	0	-51.4	-51.4
Inverter Transformer	MV4-3 T	369234	4909397	2	0	0	56.1	56.1	1	8350.12	3.25	0	89.43	0	2.59	0	0	15.6	0	0	0	0	0	0	-51.56	-51.56

	Inverter Transformer	MV4-2 T	369267	4909397	2	0	0	56.1	56.1	1	8361.99	3.25	0	89.45	0	2.59	0	0	15.61	0	0	0	0	0	0	-51.58	-51.58
	Inverter Transformer	MV5-1 T	370015	4909142	2	0	0	56.1	56.1	1	8431.59	3.25	0	89.52	0	2.6	0	0	15.67	0	0	0	0	0	0	-51.74	-51.74
	Line Reactor	NGR	369421	4908787.5	5	0	0	45.4	45.4	1	7857.76	5.25	0	88.91	0	3.2	1.38	0.11	3.21	0	0	0	0	0	0	-51.34	-51.34
Limit. Valu	0		0																							
Level D/N:	20.7484		20.7484																							

Receiver: Existing Noise Receptor
ID: G-76
X: 366085.2
Y: 4901666.1
Z: 4.5
Ground: 0

ISO	Description	ID	X	Y	Z	Ground	ReflOrd	LxT	LxN	L/A	Dist.	hm	Freq	Adiv	K0b	Agr	Abar	z	Aatm	Afol	Ahous	Cmet	CmetN	Dc	RL	LtotT	LtotN
	Sol_Luce Substation	S_Substation	369426	4908792	3.5	0	0	112.1	112.1	1	7870.16	5.25	0	88.92	0	1.54	2.29	0.32	11.54	0	0	0	0	0	0	7.79	7.79
	Inverter	MV1-15	365315	4904994	2	0	0	100.3	100.3	1	3415.86	3.25	0	81.67	0	0.44	0	0	16.09	0	0	0	0	0	0	2.12	2.12
	Inverter	MV1-12	365038	4905386	2	0	0	100.3	100.3	1	3864.49	3.25	0	82.74	0	0.51	0	0	16.83	0	0	0	0	0	0	0.23	0.23
	Inverter	MV1-11	364655	4905414	2	0	0	100.3	100.3	1	4011.51	3.25	0	83.07	0	0.53	0	0	17.07	0	0	0	0	0	0	-0.35	-0.35
	Inverter	MV1-8	364788	4905647	2	0	0	100.3	100.3	1	4186.92	3.25	0	83.44	0	0.55	0	0	17.34	0	0	0	0	0	0	-1.02	-1.02
	Inverter	MV1-9	364561	4905646	2	0	0	100.3	100.3	1	4261.78	3.25	0	83.59	0	0.56	0	0	17.46	0	0	0	0	0	0	-1.3	-1.3
	Inverter	MV1-4	364815	4905918	2	0	0	100.3	100.3	1	4437.57	3.25	0	83.94	0	0.58	0	0	17.73	0	0	0	0	0	0	-1.95	-1.95
	Inverter	MV1-5	364671	4905892	2	0	0	100.3	100.3	1	4456.25	3.25	0	83.98	0	0.59	0	0	17.76	0	0	0	0	0	0	-2.02	-2.02
	Inverter	MV1-6	364477	4905835	2	0	0	100.3	100.3	1	4468.34	3.25	0	84	0	0.59	0	0	17.78	0	0	0	0	0	0	-2.06	-2.06
	Inverter	MV1-2	364753	4906063	2	0	0	100.3	100.3	1	4594.29	3.25	0	84.24	0	0.6	0	0	17.97	0	0	0	0	0	0	-2.51	-2.51
	Inverter	MV1-1	364715	4906166	2	0	0	100.3	100.3	1	4703.89	3.25	0	84.45	0	0.61	0	0	18.14	0	0	0	0	0	0	-2.89	-2.89
	Inverter	MV1-14	365163	4905049	2	0	0	97.3	97.3	1	3506.35	3.25	0	81.9	0	0.45	0	0	16.24	0	0	0	0	0	0	-1.28	-1.28
	Inverter	MV2-3	365820	4906641	2	0	0	100.3	100.3	1	4981.96	3.25	0	84.95	0	0.64	0	0	18.55	0	0	0	0	0	0	-3.83	-3.83
	Inverter	MV2-4	365586	4906624	2	0	0	100.3	100.3	1	4982.97	3.25	0	84.95	0	0.64	0	0	18.56	0	0	0	0	0	0	-3.83	-3.83
	Inverters	G_Inv9	366750.9	4902691.8	2	0	0	87.7	87.7	1	1222.79	3.25	0	72.75	0	2.48	0	0	1.71	0	0	0	0	0	0	10.73	10.73
	Gardiner Substation	G_Sub	366586.3	4903349.9	2.5	0	0	90.8	90.8	1	1756.78	3.5	0	75.89	0	-0.22	0	0	3.95	0	0	0	0	0	0	11.16	11.16
	Inverter	MV1-13	364731	4905241	2	0	0	97.3	97.3	1	3822.8	3.25	0	82.65	0	0.5	0	0	16.76	0	0	0	0	0	0	-2.6	-2.6
	Inverters	G_Inv7	366694.6	4902824.7	2	0	0	87.7	87.7	1	1309.09	3.25	0	73.34	0	2.49	0	0	1.81	0	0	0	0	0	0	10.02	10.02
	Inverters	G_Inv10	366900.7	4902704.8	2	0	0	87.7	87.7	1	1320.58	3.25	0	73.42	0	2.49	0	0	1.83	0	0	0	0	0	0	9.92	9.92
	Inverter	MV1-10	365004	4905564	2	0	0	97.3	97.3	1	4045.07	3.25	0	83.14	0	0.53	0	0	17.12	0	0	0	0	0	0	-3.48	-3.48
	Inverter	MV3-18	367752	4907412	2	0	0	100.3	100.3	1	5982.77	3.25	0	86.54	0	0.7	0	0	19.97	0	0	0	0	0	0	-6.9	-6.9
	Inverters	G_Inv8	366844.5	4902838.5	2	0	0	87.7	87.7	1	1396.81	3.25	0	73.9	0	2.51	0	0	1.92	0	0	0	0	0	0	9.33	9.33
	Inverters	G_Inv5	366638.5	4902958.1	2	0	0	87.7	87.7	1	1405.49	3.25	0	73.96	0	2.51	0	0	1.93	0	0	0	0	0	0	9.27	9.27
	Inverter	MV3-21	368478	4907206	2	0	0	100.3	100.3	1	6034.57	3.25	0	86.61	0	0.71	0	0	20.04	0	0	0	0	0	0	-7.05	-7.05
	Inverter	MV1-7	364925	4905782	2	0	0	97.3	97.3	1	4276.3	3.25	0	83.62	0	0.56	0	0	17.48	0	0	0	0	0	0	-4.36	-4.36
	Inverter	MV3-19	368357	4907347	2	0	0	100.3	100.3	1	6118.31	3.25	0	86.73	0	0.71	0	0	20.15	0	0	0	0	0	0	-7.28	-7.28
	Inverter	MV3-12	367668	4907594	2	0	0	100.3	100.3	1	6135.57	3.25	0	86.76	0	0.71	0	0	20.18	0	0	0	0	0	0	-7.33	-7.33
	Inverter	MV3-17	368178	4907472	2	0	0	100.3	100.3	1	6171.57	3.25	0	86.81	0	0.71	0	0	20.22	0	0	0	0	0	0	-7.43	-7.43
	Inverter	MV3-13	367963	4907577	2	0	0	100.3	100.3	1	6202.01	3.25	0	86.85	0	0.71	0	0	20.27	0	0	0	0	0	0	-7.51	-7.51
	Inverter	MV3-20	368689	4907317	2	0	0	100.3	100.3	1	6221.93	3.25	0	86.88	0	0.71	0	0	20.29	0	0	0	0	0	0	-7.57	-7.57
	Inverter	MV3-15	368357	4907477	2	0	0	100.3	100.3	1	6239.2	3.25	0	86.9	0	0.71	0	0	20.31	0	0	0	0	0	0	-7.62	-7.62
	Inverter	MV3-16	368514	4907475	2	0	0	100.3	100.3	1	6296.22	3.25	0	86.98	0	0.71	0	0	20.39	0	0	0	0	0	0	-7.77	-7.77
	Inverter	MV3-10	368167	4907669	2	0	0	100.3	100.3	1	6353.64	3.25	0	87.06	0	0.71	0	0	20.47	0	0	0	0	0	0	-7.93	-7.93
	Inverters	G_Inv6	366788.5	4902972	2	0	0	87.7	87.7	1	1483.24	3.25	0	74.42	0	2.52	0	0	2.02	0	0	0	0	0	0	8.7	8.7
	Inverter	MV3-7	367945	4907754	2	0	0	100.3	100.3	1	6365.64	3.25	0	87.08	0	0.71	0	0	20.48	0	0	0	0	0	0	-7.96	-7.96
	Inverter	MV3-14	368684	4907498	2	0	0	100.3	100.3	1	6384.73	3.25	0	87.1	0	0.71	0	0	20.51	0	0	0	0	0	0	-8.01	-8.01
	Inverter	MV3-11	368346	4907662	2	0	0	100.3	100.3	1	6407.97	3.25	0	87.13	0	0.71	0	0	20.54	0	0	0	0	0	0	-8.07	-8.07
	Inverters	G_Inv3	366583.7	4903091.4	2	0	0	87.7	87.7	1	1509.96	3.25	0	74.58	0	2.52	0	0	2.06	0	0	0	0	0	0	8.5	8.5
	Inverter	MV3-9	368512	4907703	2	0	0	100.3	100.3	1	6506.42	3.25	0	87.27	0	0.71	0	0	20.67	0	0	0	0	0	0	-8.34	-8.34
	Inverter	MV3-6	368162	4907834	2	0	0	100.3	100.3	1	6508.16	3.25	0	87.27	0	0.71	0	0	20.67	0	0	0	0	0	0	-8.34	-8.34
	Inverter	MV3-3	367939	4907927	2	0	0	100.3	100.3	1	6529.58	3.34	0	87.3	0	1.74	2.39	0	20.7	0	0	0	0	0	0	-11.81	-11.81
	Inverter	MV3-8	368680	4907712	2	0	0	100.3	100.3	1	6579.2	3.25	0	87.36	0	0.72	0	0	20.76	0	0	0	0	0	0	-8.53	-8.53
	Inverters	G_Inv4	366732.8	4903105	2	0	0	87.7	87.7	1	1577.92	3.25	0	74.96	0	2.53	0	0	2.14	0	0	0	0	0	0	8.03	8.03
	Inverter	MV6-3	370207	4907140	2	0	0	100.3	100.3	1	6852.21	3.25	0	87.72	0	0.71	0	0	21.11	0	0	0	0	0	0	-9.23	-9.23
	Inverter	MV6-2	370085	4907339	2	0	0	100.3	100.3	1	6941.2	3.25	0	87.83	0	0.71	0	0	21.23	0	0	0	0	0	0	-9.45	-9.45
	Inverters	G_Inv1	366526.4	4903225.8	2	0	0	87.7	87.7	1	1620.9	3.25	0	75.2	0	2.53	0	0	2.19	0	0	0	0	0	0	7.74	7.74
	Inverters	G_Inv2	366676.9	4903239.1	2	0	0	87.7	87.7	1	1680.61	3.25	0	75.51	0	2.54	0	0	2.26	0	0	0	0	0	0	7.35	7.35
	Inverter	MV2-1	365842	4906816	2	0	0	97.3	97.3	1	5155.64	3.25	0	85.25	0	0.66	0	0	18.81	0	0	0	0	0	0	-7.4	-7.4
	Inverter	MV4-11	369264	4908855	2	0	0	100.3	100.3	1	7860.35	3.25	0	88.91	0	0.66	0	0	22.34	0	0	0	0	0	0	-11.6	-11.6
	Inverter	MV4-10	369312	4908858	2	0	0	100.3	100.3	1	7882.62	3.25	0	88.93	0	0.66	0	0	22.37	0	0	0	0	0	0	-11.65	-11.65
	Inverter	MV4-7	369035	4909001	2	0	0	100.3	100.3	1	7905.83	3.25	0	88.96	0	0.66	0	0	22.4	0	0	0	0	0	0	-11.7	-11.7
	Inverter	MV4-8	369256	4909001	2	0	0	100.3	100.3	1	7990.92	3.25	0	89.05	0	0.65	0	0	22.5	0	0	0	0	0	0	-11.89	-11.89
	Inverter	MV4-9	369289	4909001	2	0	0	100.3	100.3	1	8004.07	3.25	0	89.07	0	0.65	0	0	22.51	0	0	0	0	0	0	-11.92	-11.92
	Inverter	MV5-5	370015	4908690	2	0	0	100.3	100.3	1	8048.51	3.25	0	89.11	0	0.65	0	0	22.56	0	0	0	0	0	0	-12.01	-12.01
	Inverter	MV4-4	369027	4909199	2	0	0	100.3	100.3	1	8086.95	3.25	0	89.16	0	0.65	0	0	22.61	0	0	0	0	0	0	-12.1	-12.1
	Inverter	MV4-6	369243	4909192	2	0	0	100.3	100.3	1	8161.55	3.25	0	89.24	0	0.64	0	0	22.69	0	0	0	0	0	0	-12.25	-12.25
	Inverter	MV4-5	369289	4909199	2	0	0	100.3	100.3	1	8185.9	3.25	0	89.26	0	0.64	0	0	22.72	0	0	0	0	0	0	-12.3	-12.3
	Inverter	MV5-2	370006	4908853	2	0	0	100.3	100.3	1	8186.83	3.25	0	89.26	0	0.64	0	0	22.72	0	0	0	0	0	0	-12.31	-12.31
	Inverter	MV5-4	370324	4908707	2	0	0	100.3	100.3	1	8218.38	3.25	0	89.3	0	0.63	0	0	22.76	0	0	0	0	0	0	-12.37	-12.37
	Inverter	MV4-1	369011	4909397	2	0	0	100.3	100.3	1	8266.02	3.25	0	89.35	0	0.63	0	0	22.81	0	0	0	0	0	0	-12.47	-12.47

Inverter	MV5-3	370231	4908851	2	0	0	100.3	100.3	1	8295.21	3.25	0	89.38	0	0.62	0	0	22.84	0	0	0	0	0	0	-12.53	-12.53
Inverter	MV4-3	369229	4909397	2	0	0	100.3	100.3	1	8345.68	3.25	0	89.43	0	0.62	0	0	22.9	0	0	0	0	0	0	-12.64	-12.64
Inverter	MV4-2	369272	4909397	2	0	0	100.3	100.3	1	8361.97	3.25	0	89.45	0	0.62	0	0	22.92	0	0	0	0	0	0	-12.67	-12.67
Inverter	MV5-1	370020	4909142	2	0	0	100.3	100.3	1	8448.18	3.25	0	89.54	0	0.61	0	0	23.02	0	0	0	0	0	0	-12.85	-12.85
Inverter	MV6-1	370235	4907364	2	0	0	97.3	97.3	1	7048.89	3.25	0	87.96	0	0.71	0	0	21.36	0	0	0	0	0	0	-12.72	-12.72
DSTATCOM - 10 MVAR #2	DSAT2	369403	4908757	2.5	0	0	96.6	96.6	1	7828.71	3.5	0	88.87	0	3.88	0	0	4.69	0	0	0	0	0	0	-0.81	-0.81
DSTATCOM - 10 MVAR #1	DSAT1	369437	4908757	2.5	0	0	96.6	96.6	1	7843.18	3.5	0	88.89	0	3.88	0	0	4.7	0	0	0	0	0	0	-0.84	-0.84
SubstationTransformer	W_ST	369711.17	4906112.3	2.5	0	0	92	92	1	5737.25	3.5	0	86.17	0	0.71	0	-0.11	9.46	0	0	0	0	0	0	-4.37	-4.37
Inverter	MV1-3	364440	4906039	2	0	0	89.1	89.1	1	4672.15	3.25	0	84.39	0	1.56	0	0	12.02	0	0	0	0	0	0	-8.91	-8.91
Inverter	MV2-2	365977	4906654	2	0	0	89.1	89.1	1	4989.07	3.25	0	84.96	0	1.64	0	0	12.45	0	0	0	0	0	0	-9.99	-9.99
Westbrook Inverter Enclosur	W_INV3	369508	4906164	2	0	0	89.1	89.1	1	5652.14	3.25	0	86.04	0	1.8	0	0	13.32	0	0	0	0	0	0	-12.11	-12.11
Westbrook Inverter Enclosur	W_INV4	369673	4906164	2	0	0	89.1	89.1	1	5753.56	3.25	0	86.2	0	1.83	0	0	13.45	0	0	0	0	0	0	-12.42	-12.42
Westbrook Inverter Enclosur	W_INV2	369374	4906388	2	0	0	89.1	89.1	1	5754.35	3.25	0	86.2	0	1.83	0	0	13.45	0	0	0	0	0	0	-12.42	-12.42
Westbrook Inverter Enclosur	W_INV7	369780	4906417	2	0	0	89.1	89.1	1	6018.52	3.25	0	86.59	0	1.89	0	0	13.79	0	0	0	0	0	0	-13.21	-13.21
Inverter	MV3-22	368656	4907142	2	0	0	89.1	89.1	1	6049.34	3.25	0	86.63	0	1.9	0	0	13.82	0	0	0	0	0	0	-13.3	-13.3
Westbrook Inverter Enclosur	W_INV5	369719	4906574	2	0	0	89.1	89.1	1	6106.72	3.25	0	86.72	0	1.91	0	0	13.9	0	0	0	0	0	0	-13.47	-13.47
Westbrook Inverter Enclosur	W_INV6	369875	4906578	2	0	0	89.1	89.1	1	6203.98	3.25	0	86.85	0	1.94	0	0	14.02	0	0	0	0	0	0	-13.75	-13.75
Inverter	MV3-5	368340	4907843	2	0	0	89.1	89.1	1	6575.58	3.25	0	87.36	0	2.03	0	0	14.48	0	0	0	0	0	0	-14.8	-14.8
Inverter	MV3-1	368156	4907976	2	0	0	89.1	89.1	1	6641.01	3.25	0	87.44	0	2.04	0	0	14.56	0	0	0	0	0	0	-14.98	-14.98
Inverter	MV3-4	368502	4907925	2	0	0	89.1	89.1	1	6709.3	3.25	0	87.53	0	2.06	0	0	14.64	0	0	0	0	0	0	-15.17	-15.17
Inverter	MV3-2	368671	4907928	2	0	0	89.1	89.1	1	6774.79	3.25	0	87.62	0	2.07	0	0	14.72	0	0	0	0	0	0	-15.35	-15.35
Fixed Reactor Bank 1	FRB1	369378	4908755	6	0	0	89.8	89.8	1	7816.33	5.25	0	88.86	0	-0.19	0	0	11.49	0	0	0	0	0	0	-10.39	-10.39
Fixed Reactor Bank 2	FRB2	369464	4908755	6	0	0	89.8	89.8	1	7852.95	5.25	0	88.9	0	-0.19	0	0	11.53	0	0	0	0	0	0	-10.46	-10.46
Inverter	MV4-15	369176	4908481	2	0	0	89.1	89.1	1	7483.04	3.25	0	88.48	0	2.24	0	0	15.55	0	0	0	0	0	0	-17.22	-17.22
Inverter	MV4-14	369176	4908507	2	0	0	89.1	89.1	1	7506.73	3.25	0	88.51	0	2.25	0	0	15.58	0	0	0	0	0	0	-17.28	-17.28
Inverter	MV4-13	369051	4908605	2	0	0	89.1	89.1	1	7546.15	3.25	0	88.55	0	2.26	0	0	15.63	0	0	0	0	0	0	-17.38	-17.38
Inverter	MV4-12	369043	4908803	2	0	0	89.1	89.1	1	7725.54	3.25	0	88.76	0	2.3	0	0	15.83	0	0	0	0	0	0	-17.83	-17.83
Inverter	MV5-6	369982	4908507	2	0	0	89.1	89.1	1	7872.93	3.25	0	88.92	0	2.33	0	0	16	0	0	0	0	0	0	-18.2	-18.2
Westbrook Inverter Enclosur	W_INV1	369409	4906578	2	0	0	86.1	86.1	1	5930.8	3.25	0	86.46	0	1.87	0	0	13.67	0	0	0	0	0	0	-15.95	-15.95
Inverter	MV6-4	370250	4906966	2	0	0	86.1	86.1	1	6740.51	3.25	0	87.57	0	2.07	0	0	14.68	0	0	0	0	0	0	-18.26	-18.26
Westbrook Inverter Transfor	W_INVTR1	369403	4906578	2	0	0	78.2	78.2	1	5927.44	3.25	0	86.46	0	-3.35	0	0	2.72	0	0	0	0	0	0	-7.58	-7.58
Westbrook Inverter Transfor	W_INVTR3	369514	4906164	2	0	0	77.3	77.3	1	5655.77	3.25	0	86.05	0	-3.3	0	0	2.63	0	0	0	0	0	0	-8.03	-8.03
Westbrook Inverter Transfor	W_INVTR2	369368	4906388	2	0	0	77.3	77.3	1	5750.92	3.25	0	86.19	0	-3.32	0	0	2.66	0	0	0	0	0	0	-8.19	-8.19
Westbrook Inverter Transfor	W_INVTR4	369679	4906164	2	0	0	77.3	77.3	1	5757.3	3.25	0	86.2	0	-3.32	0	0	2.66	0	0	0	0	0	0	-8.2	-8.2
Westbrook Inverter Transfor	W_INVTR7	369786	4906417	2	0	0	77.3	77.3	1	6022.21	3.25	0	86.6	0	-3.37	0	0	2.75	0	0	0	0	0	0	-8.63	-8.63
Westbrook Inverter Transfor	W_INVTR5	369725	4906574	2	0	0	77.3	77.3	1	6110.29	3.25	0	86.72	0	-3.39	0	0	2.78	0	0	0	0	0	0	-8.77	-8.77
Westbrook Inverter Transfor	W_INVTR6	369881	4906578	2	0	0	77.3	77.3	1	6207.65	3.25	0	86.86	0	-3.4	0	0	2.81	0	0	0	0	0	0	-8.92	-8.92
Inverter Transformer	MV1-14 T	365157	4905049	2	0	0	69.4	69.4	1	3507.93	3.25	0	81.9	0	2.66	0	0	6.3	0	0	0	0	0	0	-21.5	-21.5
Inverter Transformer	MV1-13 T	364725	4905241	2	0	0	69.4	69.4	1	3824.93	3.25	0	82.65	0	2.74	0	0	6.54	0	0	0	0	0	0	-22.59	-22.59
Inverter Transformer	MV1-10 T	365010	4905564	2	0	0	69.4	69.4	1	4043.47	3.25	0	83.14	0	2.8	0	0	6.71	0	0	0	0	0	0	-23.29	-23.29
Inverter Transformer	MV1-7 T	364919	4905782	2	0	0	69.4	69.4	1	4277.93	3.25	0	83.62	0	2.85	0	0	6.88	0	0	0	0	0	0	-24.01	-24.01
Inverter Transformer	MV2-1 T	365836	4906816	2	0	0	69.4	69.4	1	5155.93	3.25	0	85.25	0	3.04	0	0	7.49	0	0	0	0	0	0	-26.42	-26.42
Inverter Transformer	MV6-4 T	370244	4906966	2	0	0	69.4	69.4	1	6736.81	3.25	0	87.57	0	3.29	0	0	8.45	0	0	0	0	0	0	-29.96	-29.96
Inverter Transformer	MV6-1 T	370230	4907364	2	0	0	69.4	69.4	1	7045.95	3.25	0	87.96	0	3.32	0	0	8.63	0	0	0	0	0	0	-30.56	-30.56
Inverter Transformer	MV1-15 T	365309	4904994	2	0	0	56.1	56.1	1	3417.22	3.25	0	81.67	0	1.01	0	0	9.56	0	0	0	0	0	0	-36.18	-36.18
Inverter Transformer	MV1-12 T	365044	4905386	2	0	0	56.1	56.1	1	3862.87	3.25	0	82.74	0	1.19	0	0	10.25	0	0	0	0	0	0	-38.12	-38.12
Inverter Transformer	MV1-11 T	364649	4905414	2	0	0	56.1	56.1	1	4013.66	3.25	0	83.07	0	1.25	0	0	10.48	0	0	0	0	0	0	-38.74	-38.74
Inverter Transformer	MV1-8 T	364782	4905647	2	0	0	56.1	56.1	1	4188.78	3.25	0	83.44	0	1.32	0	0	10.73	0	0	0	0	0	0	-39.43	-39.43
Inverter Transformer	MV1-9 T	364555	4905646	2	0	0	56.1	56.1	1	4263.93	3.25	0	83.6	0	1.35	0	0	10.84	0	0	0	0	0	0	-39.73	-39.73
Inverter Transformer	MV1-4 T	364821	4905918	2	0	0	56.1	56.1	1	4435.86	3.25	0	83.94	0	1.41	0	0	11.09	0	0	0	0	0	0	-40.38	-40.38
Inverter Transformer	MV1-5 T	364676	4905892	2	0	0	56.1	56.1	1	4454.67	3.25	0	83.98	0	1.42	0	0	11.11	0	0	0	0	0	0	-40.45	-40.45
Inverter Transformer	MV1-6 T	364482	4905835	2	0	0	56.1	56.1	1	4466.54	3.25	0	84	0	1.43	0	0	11.13	0	0	0	0	0	0	-40.5	-40.5
Inverter Transformer	MV1-2 T	364759	4906063	2	0	0	56.1	56.1	1	4592.55	3.25	0	84.24	0	1.47	0	0	11.3	0	0	0	0	0	0	-40.96	-40.96
Inverter Transformer	MV1-3 T	364435	4906039	2	0	0	56.1	56.1	1	4673.91	3.25	0	84.39	0	1.51	0	0	11.42	0	0	0	0	0	0	-41.26	-41.26
Inverter Transformer	MV1-1 T	364721	4906166	2	0	0	56.1	56.1	1	4702.14	3.25	0	84.45	0	1.52	0	0	11.45	0	0	0	0	0	0	-41.36	-41.36
Inverter Transformer	MV2-3 T	365814	4906641	2	0	0	56.1	56.1	1	4982.29	3.25	0	84.95	0	1.62	0	0	11.83	0	0	0	0	0	0	-42.34	-42.34
Inverter Transformer	MV2-4 T	365590	4906628	2	0	0	56.1	56.1	1	4986.55	3.25	0	84.96	0	1.62	0	0	11.84	0	0	0	0	0	0	-42.35	-42.35
Inverter Transformer	MV2-2 T	365982	4906654	2	0	0	56.1	56.1	1	4988.97	3.25	0	84.96	0	1.62	0	0	11.84	0	0	0	0	0	0	-42.36	-42.36
Inverter Transformer	MV3-18 T	367757	4907412	2	0	0	56.1	56.1	1	5984.17	3.25	0	86.54	0	1.96	0	0	13.08	0	0	0	0	0	0	-45.53	-45.53
Inverter Transformer	MV3-21 T	368484	4907206	2	0	0	56.1	56.1	1	6036.95	3.25	0	86.62	0	1.98	0	0	13.15	0	0	0	0	0	0	-45.68	-45.68
Inverter Transformer	MV3-22 T	368661	4907142	2	0	0	56.1	56.1	1	6051.47	3.25	0	86.64	0	1.98	0	0	13.16	0	0	0	0	0	0	-45.72	-45.72
Inverter Transformer	MV3-19 T	368352	4907347	2	0	0	56.1	56.1	1	6116.45	3.25	0	86.73	0	2	0	0	13.24	0	0	0	0	0	0	-45.91	-45.91
Inverter Transformer	MV3-12 T	367674	4907594	2	0	0	56.1	56.1	1	6137.12	3.25	0	86.76	0	2.01	0	0	13.26	0	0	0	0	0	0	-45.97	-45.97
Inverter Transformer	MV3-17 T	368183	4907472	2	0	0	56.1	56.1	1	6173.27	3.25	0	86.81	0	2.02	0	0	13.31	0	0	0	0	0	0	-46.08	-46.08
Inverter Transformer	MV3-13 T	367958	4907577	2	0	0	56.1	56.1	1	6200.49	3.25	0	86.85	0	2.03	0	0	13.34	0	0	0	0	0	0	-46.16	-46.16
Inverter Transformer	MV3-20 T	368683	4907317	2	0	0	56.1	56.1	1	6219.42	3.25	0	86.88	0	2.03	0	0	13.36	0	0	0	0	0	0	-46.21	-46.21
Inverter Transformer	MV3-15 T	368351	4907477	2	0	0	56.1	56.1	1	6237.02	3.25	0	86.9	0	2.04	0	0	13.38	0	0	0	0	0	0	-46.26	-46.26
Inverter Transformer	MV3-16 T	368509	4907475	2	0	0	56.1	56.1	1	6294.29	3.25	0	86.98	0	2.06	0	0	13.45	0	0	0	0	0	0	-46.42	-46.42
Inverter Transformer	MV3-10 T	368162	4907669	2	0	0	56.1	56.1	1	6352	3.25	0	87.06	0	2.07	0	0	13.51	0	0	0	0	0	0	-46.59	-46.59
Inverter Transformer	MV3-7 T	367951	4907754	2	0	0	56.1	56.1	1	6367.4	3.25	0	87.08	0	2.08	0	0	13.53	0	0	0	0	0	0	-46.63	-46.63
Inverter Transformer	MV3-14 T	368678	4907498	2	0	0	56.1	56.1	1	6382.29	3.25	0	87.1	0	2.08	0	0	13.55	0	0	0	0	0	0	-46.67	-46.67
Inverter Transformer	MV3-11 T	368340	4907662	2	0	0	56.1	56.1	1	6405.85	3.25	0	87.13	0	2.09	0	0	13.57	0	0	0	0	0	0	-46.74	-46.74
Inverter Transformer	MV3-6 T	368156	4907834	2	0	0	56.1	56.1	1	6506.24	3.25	0	87.27	0	2.12	0	0	13.69	0	0	0	0	0	0	-47.01	-47.01
Inverter Transformer	MV3-9 T	368517	4907703	2	0	0	56.1	56.1	1	6508.29	3.25	0	87.27	0	2.12	0	0	13.69	0	0	0	0	0	0	-47.02	-47.02

	Inverter Transformer	MV3-3 T	367944	4907927	2	0	0	56.1	56.1	1	6531	3.34	0	87.3	0	2.94	1.68	0	13.71	0	0	0	0	0	0	-49.57	-49.57
	Inverter Transformer	MV3-5 T	368335	4907843	2	0	0	56.1	56.1	1	6573.86	3.25	0	87.36	0	2.14	0	0	13.76	0	0	0	0	0	0	-47.2	-47.2
	Inverter Transformer	MV3-8 T	368685	4907712	2	0	0	56.1	56.1	1	6581.18	3.25	0	87.37	0	2.14	0	0	13.77	0	0	0	0	0	0	-47.22	-47.22
	Inverter Transformer	MV3-1 T	368150	4907976	2	0	0	56.1	56.1	1	6639.14	3.25	0	87.44	0	2.16	0	0	13.84	0	0	0	0	0	0	-47.38	-47.38
	Inverter Transformer	MV3-4 T	368507	4907925	2	0	0	56.1	56.1	1	6711.11	3.25	0	87.54	0	2.18	0	0	13.92	0	0	0	0	0	0	-47.57	-47.57
	Inverter Transformer	MV3-2 T	368677	4907928	2	0	0	56.1	56.1	1	6777.08	3.25	0	87.62	0	2.2	0	0	13.99	0	0	0	0	0	0	-47.75	-47.75
	Inverter Transformer	MV6-3 T	370202	4907140	2	0	0	56.1	56.1	1	6849.21	3.25	0	87.71	0	2.22	0	0	14.07	0	0	0	0	0	0	-47.94	-47.94
	Inverter Transformer	MV6-2 T	370091	4907339	2	0	0	56.1	56.1	1	6944.66	3.25	0	87.83	0	2.24	0	0	14.17	0	0	0	0	0	0	-48.19	-48.19
	Inverter Transformer	MV4-15 T	369170	4908481	2	0	0	56.1	56.1	1	7480.57	3.25	0	88.48	0	2.39	0	0	14.73	0	0	0	0	0	0	-49.54	-49.54
	Inverter Transformer	MV4-14 T	369182	4908507	2	0	0	56.1	56.1	1	7509.2	3.25	0	88.51	0	2.39	0	0	14.76	0	0	0	0	0	0	-49.61	-49.61
	Inverter Transformer	MV4-13 T	369057	4908605	2	0	0	56.1	56.1	1	7548.51	3.25	0	88.56	0	2.4	0	0	14.8	0	0	0	0	0	0	-49.71	-49.71
	Inverter Transformer	MV4-12 T	369049	4908803	2	0	0	56.1	56.1	1	7727.84	3.25	0	88.76	0	2.45	0	0	14.99	0	0	0	0	0	0	-50.13	-50.13
	Inverter Transformer	MV4-11 T	369269	4908855	2	0	0	56.1	56.1	1	7862.37	3.25	0	88.91	0	2.48	0	0	15.12	0	0	0	0	0	0	-50.45	-50.45
	Inverter Transformer	MV5-6 T	369987	4908507	2	0	0	56.1	56.1	1	7875.4	3.25	0	88.93	0	2.48	0	0	15.13	0	0	0	0	0	0	-50.48	-50.48
	Inverter Transformer	MV4-10 T	369307	4908858	2	0	0	56.1	56.1	1	7880.57	3.25	0	88.93	0	2.48	0	0	15.14	0	0	0	0	0	0	-50.49	-50.49
	Inverter Transformer	MV4-7 T	369040	4909001	2	0	0	56.1	56.1	1	7907.69	3.25	0	88.96	0	2.49	0	0	15.17	0	0	0	0	0	0	-50.56	-50.56
	Inverter Transformer	MV4-8 T	369262	4909001	2	0	0	56.1	56.1	1	7993.3	3.25	0	89.05	0	2.51	0	0	15.25	0	0	0	0	0	0	-50.75	-50.75
	Inverter Transformer	MV4-9 T	369284	4909001	2	0	0	56.1	56.1	1	8002.07	3.25	0	89.06	0	2.51	0	0	15.26	0	0	0	0	0	0	-50.77	-50.77
	Inverter Transformer	MV5-5 T	370021	4908690	2	0	0	56.1	56.1	1	8051.44	3.25	0	89.12	0	2.52	0	0	15.31	0	0	0	0	0	0	-50.89	-50.89
	Inverter Transformer	MV4-4 T	369033	4909199	2	0	0	56.1	56.1	1	8089.14	3.25	0	89.16	0	2.53	0	0	15.34	0	0	0	0	0	0	-50.97	-50.97
	Inverter Transformer	MV4-6 T	369249	4909192	2	0	0	56.1	56.1	1	8163.87	3.25	0	89.24	0	2.55	0	0	15.42	0	0	0	0	0	0	-51.14	-51.14
	Inverter Transformer	MV4-5 T	369283	4909199	2	0	0	56.1	56.1	1	8183.55	3.25	0	89.26	0	2.55	0	0	15.44	0	0	0	0	0	0	-51.19	-51.19
	Inverter Transformer	MV5-2 T	370011	4908853	2	0	0	56.1	56.1	1	8189.23	3.25	0	89.26	0	2.55	0	0	15.44	0	0	0	0	0	0	-51.2	-51.2
	Inverter Transformer	MV5-4 T	370330	4908707	2	0	0	56.1	56.1	1	8221.47	3.25	0	89.3	0	2.56	0	0	15.47	0	0	0	0	0	0	-51.27	-51.27
	Inverter Transformer	MV4-1 T	369017	4909397	2	0	0	56.1	56.1	1	8268.15	3.25	0	89.35	0	2.57	0	0	15.52	0	0	0	0	0	0	-51.38	-51.38
	Inverter Transformer	MV5-3 T	370237	4908851	2	0	0	56.1	56.1	1	8298.21	3.25	0	89.38	0	2.58	0	0	15.55	0	0	0	0	0	0	-51.44	-51.44
	Inverter Transformer	MV4-3 T	369234	4909397	2	0	0	56.1	56.1	1	8347.56	3.25	0	89.43	0	2.59	0	0	15.59	0	0	0	0	0	0	-51.55	-51.55
	Inverter Transformer	MV4-2 T	369267	4909397	2	0	0	56.1	56.1	1	8360.06	3.25	0	89.44	0	2.59	0	0	15.6	0	0	0	0	0	0	-51.58	-51.58
	Inverter Transformer	MV5-1 T	370015	4909142	2	0	0	56.1	56.1	1	8445.85	3.25	0	89.53	0	2.61	0	0	15.69	0	0	0	0	0	0	-51.77	-51.77
	Line Reactor	NGR	369421	4908787.5	5	0	0	45.4	45.4	1	7863.96	5.25	0	88.91	0	3.2	1.38	0.11	3.21	0	0	0	0	0	0	-51.35	-51.35
Limit. Valu	0	0																								
Level D/N:	20.7684	20.7684																								

Receiver: Existing Noise Receptor
ID: G-77
X: 366069.2
Y: 4901660.1
Z: 4.5
Ground: 0

ISO	Description	ID	X	Y	Z	Ground	ReflOrd	LxT	LxN	L/A	Dist.	hm	Freq	Adiv	K0b	Agr	Abar	z	Aatm	Afol	Ahous	Cmet	CmetN	Dc	RL	LtotT	LtotN
	Sol_Luce Substation	S_Substation	369426	4908792	3.5	0	0	112.1	112.1	1	7882.39	5.25	0	88.93	0	1.54	2.29	0.32	11.55	0	0	0	0	0	0	7.77	7.77
	Inverter	MV1-15	365315	4904994	2	0	0	100.3	100.3	1	3418.14	3.25	0	81.68	0	0.44	0	0	16.09	0	0	0	0	0	0	2.11	2.11
	Inverter	MV1-12	365038	4905386	2	0	0	100.3	100.3	1	3865.97	3.25	0	82.75	0	0.51	0	0	16.83	0	0	0	0	0	0	0.23	0.23
	Inverter	MV1-11	364655	4905414	2	0	0	100.3	100.3	1	4011.45	3.25	0	83.07	0	0.53	0	0	17.07	0	0	0	0	0	0	-0.35	-0.35
	Inverter	MV1-8	364788	4905647	2	0	0	100.3	100.3	1	4187.7	3.25	0	83.44	0	0.55	0	0	17.35	0	0	0	0	0	0	-1.03	-1.03
	Inverter	MV1-9	364561	4905646	2	0	0	100.3	100.3	1	4261.7	3.25	0	83.59	0	0.56	0	0	17.46	0	0	0	0	0	0	-1.3	-1.3
	Inverter	MV1-4	364815	4905918	2	0	0	100.3	100.3	1	4438.78	3.25	0	83.95	0	0.58	0	0	17.74	0	0	0	0	0	0	-1.95	-1.95
	Inverter	MV1-5	364671	4905892	2	0	0	100.3	100.3	1	4456.9	3.25	0	83.98	0	0.59	0	0	17.76	0	0	0	0	0	0	-2.02	-2.02
	Inverter	MV1-6	364477	4905835	2	0	0	100.3	100.3	1	4468.21	3.25	0	84	0	0.59	0	0	17.78	0	0	0	0	0	0	-2.06	-2.06
	Inverter	MV1-2	364753	4906063	2	0	0	100.3	100.3	1	4595.42	3.25	0	84.25	0	0.6	0	0	17.98	0	0	0	0	0	0	-2.51	-2.51
	Inverter	MV1-1	364715	4906166	2	0	0	100.3	100.3	1	4705	3.25	0	84.45	0	0.61	0	0	18.14	0	0	0	0	0	0	-2.89	-2.89
	Inverter	MV1-14	365163	4905049	2	0	0	97.3	97.3	1	3507.97	3.25	0	81.9	0	0.45	0	0	16.24	0	0	0	0	0	0	-1.29	-1.29
	Inverter	MV2-3	365820	4906641	2	0	0	100.3	100.3	1	4987.13	3.25	0	84.96	0	0.64	0	0	18.56	0	0	0	0	0	0	-3.85	-3.85
	Inverter	MV2-4	365586	4906624	2	0	0	100.3	100.3	1	4987.36	3.25	0	84.96	0	0.64	0	0	18.56	0	0	0	0	0	0	-3.85	-3.85
	Gardiner Substation	G_Sub	366586.3	4903349.9	2.5	0	0	90.8	90.8	1	1767.15	3.5	0	75.95	0	-0.22	0	0	3.96	0	0	0	0	0	0	11.09	11.09
	Inverters	G_Inv9	366750.9	4902691.8	2	0	0	87.7	87.7	1	1236.58	3.25	0	72.84	0	2.48	0	0	1.72	0	0	0	0	0	0	10.61	10.61
	Inverter	MV1-13	364731	4905241	2	0	0	97.3	97.3	1	3822.78	3.25	0	82.65	0	0.5	0	0	16.76	0	0	0	0	0	0	-2.6	-2.6
	Inverters	G_Inv7	366694.6	4902824.7	2	0	0	87.7	87.7	1	1321.9	3.25	0	73.42	0	2.5	0	0	1.83	0	0	0	0	0	0	9.91	9.91
	Inverter	MV1-10	365004	4905564	2	0	0	97.3	97.3	1	4046.61	3.25	0	83.14	0	0.53	0	0	17.12	0	0	0	0	0	0	-3.49	-3.49
	Inverters	G_Inv10	366900.7	4902704.8	2	0	0	87.7	87.7	1	1335.21	3.25	0	73.51	0	2.5	0	0	1.84	0	0	0	0	0	0	9.81	9.81
	Inverter	MV3-18	367752	4907412	2	0	0	100.3	100.3	1	5993.01	3.25	0	86.55	0	0.7	0	0	19.98	0	0	0	0	0	0	-6.93	-6.93
	Inverter	MV1-7	364925	4905782	2	0	0	97.3	97.3	1	4277.76	3.25	0	83.62	0	0.56	0	0	17.49	0	0	0	0	0	0	-4.36	-4.36
	Inverter	MV3-21	368478	4907206	2	0	0	100.3	100.3	1	6046.43	3.25	0	86.63	0	0.71	0	0	20.06	0	0	0	0	0	0	-7.08	-7.08
	Inverters	G_Inv8	366844.5	4902838.5	2	0	0	87.7	87.7	1	1410.58	3.25	0	73.99	0	2.51	0	0	1.94	0	0	0	0	0	0	9.23	9.23
	Inverters	G_Inv5	366638.5	4902958.1	2	0	0	87.7	87.7	1	1417.36	3.25	0	74.03	0	2.51	0	0	1.94	0	0	0	0	0	0	9.18	9.18
	Inverter	MV3-19	368357	4907347	2	0	0	100.3	100.3	1	6129.83	3.25	0	86.75	0	0.71	0	0	20.17	0	0	0	0	0	0	-7.31	-7.31
	Inverter	MV3-12	367668	4907594	2	0	0	100.3	100.3	1	6145.51	3.25	0	86.77	0	0.71	0	0	20.19	0	0	0	0	0	0	-7.36	-7.36
	Inverter	MV3-17	368178	4907472	2	0	0	100.3	100.3	1	6182.66	3.25	0	86.82	0	0.71	0	0	20.24	0	0	0	0	0	0	-7.46	-7.46
	Inverter	MV3-13	367963	4907577	2	0	0	100.3	100.3	1	6212.58	3.25	0	86.87	0	0.71	0	0	20.28	0	0	0	0	0	0	-7.54	-7.54
	Inverter	MV3-20	368689	4907317	2	0	0	100.3	100.3	1	6234.09	3.25	0	86.9	0	0.71	0	0	20.31	0	0	0	0	0	0	-7.6	-7.6
	Inverter	MV3-15	368357	4907477	2	0	0	100.3	100.3	1	6250.63	3.25	0	86.92	0	0.71	0	0	20.33	0	0	0	0	0	0	-7.65	-7.65
	Inverter	MV3-16	368514	4907475	2	0	0	100.3	100.3	1	6307.94	3.25	0	87	0	0.71	0	0	20.41	0	0	0	0	0	0	-7.8	-7.8
	Inverter	MV3-10	368167	4907669	2	0	0	100.3	100.3	1	6364.56	3.25	0	87.08	0	0.71	0	0	20.48	0	0	0	0	0	0	-7.96	-7.96

Inverter	MV3-7	367945	4907754	2	0	0	100.3	100.3	1	6376.07	3.35	0	87.09	0	1.72	2.42	0	20.5	0	0	0	0	0	0	-11.42	-11.42
Inverter	MV3-14	368684	4907498	2	0	0	100.3	100.3	1	6396.74	3.25	0	87.12	0	0.71	0	0	20.52	0	0	0	0	0	0	-8.04	-8.04
Inverter	MV3-11	368346	4907662	2	0	0	100.3	100.3	1	6419.24	3.25	0	87.15	0	0.71	0	0	20.55	0	0	0	0	0	0	-8.11	-8.11
Inverters	G_Inv6	366788.5	4902972	2	0	0	87.7	87.7	1	1496.16	3.25	0	74.5	0	2.52	0	0	2.04	0	0	0	0	0	0	8.6	8.6
Inverter	MV3-9	368512	4907703	2	0	0	100.3	100.3	1	6517.97	3.25	0	87.28	0	0.71	0	0	20.68	0	0	0	0	0	0	-8.37	-8.37
Inverter	MV3-6	368162	4907834	2	0	0	100.3	100.3	1	6518.96	3.25	0	87.28	0	0.71	0	0	20.68	0	0	0	0	0	0	-8.37	-8.37
Inverters	G_Inv3	366583.7	4903091.4	2	0	0	87.7	87.7	1	1520.97	3.25	0	74.64	0	2.52	0	0	2.07	0	0	0	0	0	0	8.43	8.43
Inverter	MV3-3	367939	4907927	2	0	0	100.3	100.3	1	6539.89	3.25	0	87.31	0	0.71	0	0	20.71	0	0	0	0	0	0	-8.43	-8.43
Inverter	MV3-8	368680	4907712	2	0	0	100.3	100.3	1	6591.04	3.25	0	87.38	0	0.72	0	0	20.78	0	0	0	0	0	0	-8.56	-8.56
Inverters	G_Inv4	366732.8	4903105	2	0	0	87.7	87.7	1	1590	3.25	0	75.03	0	2.53	0	0	2.15	0	0	0	0	0	0	7.95	7.95
Inverter	MV6-3	370207	4907140	2	0	0	100.3	100.3	1	6866.64	3.25	0	87.73	0	0.71	0	0	21.13	0	0	0	0	0	0	-9.27	-9.27
Inverter	MV6-2	370085	4907339	2	0	0	100.3	100.3	1	6955.33	3.25	0	87.85	0	0.71	0	0	21.24	0	0	0	0	0	0	-9.49	-9.49
Inverters	G_Inv1	366526.4	4903225.8	2	0	0	87.7	87.7	1	1631.09	3.25	0	75.25	0	2.54	0	0	2.2	0	0	0	0	0	0	7.67	7.67
Inverters	G_Inv2	366676.9	4903239.1	2	0	0	87.7	87.7	1	1691.91	3.25	0	75.57	0	2.54	0	0	2.27	0	0	0	0	0	0	7.28	7.28
Inverter	MV2-1	365842	4906816	2	0	0	97.3	97.3	1	5160.9	3.25	0	85.25	0	0.66	0	0	18.82	0	0	0	0	0	0	-7.41	-7.41
Inverter	MV4-11	369264	4908855	2	0	0	100.3	100.3	1	7872.31	3.25	0	88.92	0	0.66	0	0	22.36	0	0	0	0	0	0	-11.63	-11.63
Inverter	MV4-10	369312	4908858	2	0	0	100.3	100.3	1	7894.65	3.25	0	88.95	0	0.66	0	0	22.38	0	0	0	0	0	0	-11.68	-11.68
Inverter	MV4-7	369035	4909001	2	0	0	100.3	100.3	1	7917.37	3.25	0	88.97	0	0.66	0	0	22.41	0	0	0	0	0	0	-11.73	-11.73
Inverter	MV4-8	369256	4909001	2	0	0	100.3	100.3	1	8002.78	3.25	0	89.06	0	0.65	0	0	22.51	0	0	0	0	0	0	-11.91	-11.91
Inverter	MV4-9	369289	4909001	2	0	0	100.3	100.3	1	8015.98	3.25	0	89.08	0	0.65	0	0	22.52	0	0	0	0	0	0	-11.94	-11.94
Inverter	MV5-5	370015	4908690	2	0	0	100.3	100.3	1	8061.57	3.25	0	89.13	0	0.65	0	0	22.58	0	0	0	0	0	0	-12.04	-12.04
Inverter	MV4-4	369027	4909199	2	0	0	100.3	100.3	1	8098.37	3.25	0	89.17	0	0.64	0	0	22.62	0	0	0	0	0	0	-12.12	-12.12
Inverter	MV4-6	369243	4909192	2	0	0	100.3	100.3	1	8173.28	3.25	0	89.25	0	0.64	0	0	22.71	0	0	0	0	0	0	-12.28	-12.28
Inverter	MV4-5	369289	4909199	2	0	0	100.3	100.3	1	8197.69	3.25	0	89.27	0	0.63	0	0	22.73	0	0	0	0	0	0	-12.33	-12.33
Inverter	MV5-2	370006	4908853	2	0	0	100.3	100.3	1	8199.77	3.25	0	89.28	0	0.63	0	0	22.74	0	0	0	0	0	0	-12.33	-12.33
Inverter	MV5-4	370324	4908707	2	0	0	100.3	100.3	1	8231.78	3.25	0	89.31	0	0.63	0	0	22.77	0	0	0	0	0	0	-12.4	-12.4
Inverter	MV4-1	369011	4909397	2	0	0	100.3	100.3	1	8277.31	3.25	0	89.36	0	0.63	0	0	22.82	0	0	0	0	0	0	-12.5	-12.5
Inverter	MV5-3	370231	4908851	2	0	0	100.3	100.3	1	8308.41	3.25	0	89.39	0	0.62	0	0	22.86	0	0	0	0	0	0	-12.56	-12.56
Inverter	MV4-3	369229	4909397	2	0	0	100.3	100.3	1	8357.27	3.25	0	89.44	0	0.62	0	0	22.91	0	0	0	0	0	0	-12.66	-12.66
Inverter	MV4-2	369272	4909397	2	0	0	100.3	100.3	1	8373.62	3.25	0	89.46	0	0.62	0	0	22.93	0	0	0	0	0	0	-12.69	-12.69
Inverter	MV5-1	370020	4909142	2	0	0	100.3	100.3	1	8460.95	3.25	0	89.55	0	0.61	0	0	23.03	0	0	0	0	0	0	-12.87	-12.87
Inverter	MV6-1	370235	4907364	2	0	0	97.3	97.3	1	7063.17	3.25	0	87.98	0	0.71	0	0	21.38	0	0	0	0	0	0	-12.75	-12.75
DSTATCOM - 10 MVAR #2	DSAT2	369403	4908757	2.5	0	0	96.6	96.6	1	7840.93	3.5	0	88.89	0	3.88	0	0	4.7	0	0	0	0	0	0	-0.83	-0.83
DSTATCOM - 10 MVAR #1	DSAT1	369437	4908757	2.5	0	0	96.6	96.6	1	7855.45	3.5	0	88.9	0	3.88	0	0	4.7	0	0	0	0	0	0	-0.85	-0.85
SubstationTransformer	W_ST	369711.17	4906112.3	2.5	0	0	92	92	1	5752.02	3.5	0	86.2	0	0.72	0	-0.11	9.48	0	0	0	0	0	0	-4.41	-4.41
Inverter	MV1-3	364440	4906039	2	0	0	89.1	89.1	1	4672.16	3.25	0	84.39	0	1.56	0	0	12.02	0	0	0	0	0	0	-8.91	-8.91
Inverter	MV2-2	365977	4906654	2	0	0	89.1	89.1	1	4994.75	3.25	0	84.97	0	1.64	0	0	12.46	0	0	0	0	0	0	-10.01	-10.01
Westbrook Inverter Enclosur	W_INV3	369508	4906164	2	0	0	89.1	89.1	1	5666.61	3.25	0	86.07	0	1.8	0	0	13.34	0	0	0	0	0	0	-12.15	-12.15
Westbrook Inverter Enclosur	W_INV4	369673	4906164	2	0	0	89.1	89.1	1	5768.23	3.25	0	86.22	0	1.83	0	0	13.47	0	0	0	0	0	0	-12.46	-12.46
Westbrook Inverter Enclosur	W_INV2	369374	4906388	2	0	0	89.1	89.1	1	5768.43	3.25	0	86.22	0	1.83	0	0	13.47	0	0	0	0	0	0	-12.46	-12.46
Westbrook Inverter Enclosur	W_INV7	369780	4906417	2	0	0	89.1	89.1	1	6033.09	3.25	0	86.61	0	1.89	0	0	13.8	0	0	0	0	0	0	-13.25	-13.25
Inverter	MV3-22	368656	4907142	2	0	0	89.1	89.1	1	6061.58	3.25	0	86.65	0	1.9	0	0	13.84	0	0	0	0	0	0	-13.33	-13.33
Westbrook Inverter Enclosur	W_INV5	369719	4906574	2	0	0	89.1	89.1	1	6121.07	3.25	0	86.74	0	1.92	0	0	13.91	0	0	0	0	0	0	-13.51	-13.51
Westbrook Inverter Enclosur	W_INV6	369875	4906578	2	0	0	89.1	89.1	1	6218.51	3.25	0	86.87	0	1.94	0	0	14.04	0	0	0	0	0	0	-13.79	-13.79
Inverter	MV3-5	368340	4907843	2	0	0	89.1	89.1	1	6586.71	3.25	0	87.37	0	2.03	0	0	14.49	0	0	0	0	0	0	-14.83	-14.83
Inverter	MV3-1	368156	4907976	2	0	0	89.1	89.1	1	6651.72	3.25	0	87.46	0	2.04	0	0	14.57	0	0	0	0	0	0	-15.01	-15.01
Inverter	MV3-4	368502	4907925	2	0	0	89.1	89.1	1	6720.68	3.25	0	87.55	0	2.06	0	0	14.65	0	0	0	0	0	0	-15.2	-15.2
Inverter	MV3-2	368671	4907928	2	0	0	89.1	89.1	1	6786.45	3.25	0	87.63	0	2.08	0	0	14.73	0	0	0	0	0	0	-15.38	-15.38
Fixed Reactor Bank 1	FRB1	369378	4908755	6	0	0	89.8	89.8	1	7828.52	5.25	0	88.87	0	-0.19	0	0	11.51	0	0	0	0	0	0	-10.41	-10.41
Fixed Reactor Bank 2	FRB2	369464	4908755	6	0	0	89.8	89.8	1	7865.26	5.25	0	88.91	0	-0.19	0	0	11.54	0	0	0	0	0	0	-10.49	-10.49
Inverter	MV4-15	369176	4908481	2	0	0	89.1	89.1	1	7495.12	3.25	0	88.5	0	2.24	0	0	15.57	0	0	0	0	0	0	-17.25	-17.25
Inverter	MV4-14	369176	4908507	2	0	0	89.1	89.1	1	7518.79	3.25	0	88.52	0	2.25	0	0	15.59	0	0	0	0	0	0	-17.31	-17.31
Inverter	MV4-13	369051	4908605	2	0	0	89.1	89.1	1	7557.96	3.25	0	88.57	0	2.26	0	0	15.64	0	0	0	0	0	0	-17.41	-17.41
Inverter	MV4-12	369043	4908803	2	0	0	89.1	89.1	1	7737.22	3.25	0	88.77	0	2.3	0	0	15.84	0	0	0	0	0	0	-17.86	-17.86
Inverter	MV5-6	369982	4908507	2	0	0	89.1	89.1	1	7886.07	3.25	0	88.94	0	2.34	0	0	16.01	0	0	0	0	0	0	-18.23	-18.23
Westbrook Inverter Enclosur	W_INV1	369409	4906578	2	0	0	86.1	86.1	1	5944.75	3.25	0	86.48	0	1.87	0	0	13.69	0	0	0	0	0	0	-15.99	-15.99
Inverter	MV6-4	370250	4906966	2	0	0	86.1	86.1	1	6755.12	3.25	0	87.59	0	2.07	0	0	14.69	0	0	0	0	0	0	-18.3	-18.3
Westbrook Inverter Transfor	W_INVTR1	369403	4906578	2	0	0	78.2	78.2	1	5941.38	3.25	0	86.48	0	-3.36	0	0	2.72	0	0	0	0	0	0	-7.6	-7.6
Westbrook Inverter Transfor	W_INVTR3	369514	4906164	2	0	0	77.3	77.3	1	5670.25	3.25	0	86.07	0	-3.31	0	0	2.64	0	0	0	0	0	0	-8.06	-8.06
Westbrook Inverter Transfor	W_INVTR2	369368	4906388	2	0	0	77.3	77.3	1	5764.99	3.25	0	86.22	0	-3.32	0	0	2.67	0	0	0	0	0	0	-8.22	-8.22
Westbrook Inverter Transfor	W_INVTR4	369679	4906164	2	0	0	77.3	77.3	1	5771.98	3.25	0	86.23	0	-3.33	0	0	2.67	0	0	0	0	0	0	-8.23	-8.23
Westbrook Inverter Transfor	W_INVTR7	369786	4906417	2	0	0	77.3	77.3	1	6036.78	3.25	0	86.62	0	-3.37	0	0	2.75	0	0	0	0	0	0	-8.65	-8.65
Westbrook Inverter Transfor	W_INVTR5	369725	4906574	2	0	0	77.3	77.3	1	6124.65	3.25	0	86.74	0	-3.39	0	0	2.78	0	0	0	0	0	0	-8.79	-8.79
Westbrook Inverter Transfor	W_INVTR6	369881	4906578	2	0	0	77.3	77.3	1	6222.18	3.25	0	86.88	0	-3.41	0	0	2.81	0	0	0	0	0	0	-8.94	-8.94
Inverter Transformer	MV1-14 T	365157	4905049	2	0	0	69.4	69.4	1	3509.52	3.25	0	81.9	0	2.66	0	0	6.3	0	0	0	0	0	0	-21.51	-21.51
Inverter Transformer	MV1-13 T	364725	4905241	2	0	0	69.4	69.4	1	3824.88	3.25	0	82.65	0	2.74	0	0	6.54	0	0	0	0	0	0	-22.59	-22.59
Inverter Transformer	MV1-10 T	365010	4905564	2	0	0	69.4	69.4	1	4045.04	3.25	0	83.14	0	2.8	0	0	6.71	0	0	0	0	0	0	-23.3	-23.3
Inverter Transformer	MV1-7 T	364919	4905782	2	0	0	69.4	69.4	1	4279.37	3.25	0	83.63	0	2.85	0	0	6.88	0	0	0	0	0	0	-24.01	-24.01
Inverter Transformer	MV2-1 T	365836	4906816	2	0	0	69.4	69.4	1	5161.17	3.25	0	85.25	0	3.04	0	0	7.49	0	0	0	0	0	0	-26.44	-26.44
Inverter Transformer	MV6-4 T	370244	4906966	2	0	0	69.4	69.4	1	6751.41	3.25	0	87.59	0	3.29	0	0	8.46	0	0	0	0	0	0	-29.99	-29.99
Inverter Transformer	MV6-1 T	370230	4907364	2	0	0	69.4	69.4	1	7060.22	3.25	0	87.98	0	3.32	0	0	8.64	0	0	0	0	0	0	-30.58	-30.58
Inverter Transformer	MV1-15 T	365309	4904994	2	0	0	56.1	56.1	1	3419.47	3.25	0	81.68	0	1.01	0	0	9.56	0	0	0	0	0	0	-36.19	-36.19
Inverter Transformer	MV1-12 T	365044	4905386	2	0	0	56.1	56.1	1	3864.37	3.25	0	82.74	0	1.19	0	0	10.25	0	0	0	0	0	0	-38.12	-38.12
Inverter Transformer	MV1-11 T	364649	4905414	2	0	0	56.1	56.1	1	4013.57	3.25	0	83.07	0	1.25	0	0	10.48	0	0	0	0	0	0	-38.74	-38.74

	Inverter Transformer	MV1-8 T	364782	4905647	2	0	0	56.1	56.1	1	4189.54	3.25	0	83.44	0	1.32	0	0	10.73	0	0	0	0	0	0	-39.44	-39.44
	Inverter Transformer	MV1-9 T	364555	4905646	2	0	0	56.1	56.1	1	4263.83	3.25	0	83.6	0	1.35	0	0	10.84	0	0	0	0	0	0	-39.73	-39.73
	Inverter Transformer	MV1-4 T	364821	4905918	2	0	0	56.1	56.1	1	4437.08	3.25	0	83.94	0	1.42	0	0	11.09	0	0	0	0	0	0	-40.39	-40.39
	Inverter Transformer	MV1-5 T	364676	4905892	2	0	0	56.1	56.1	1	4455.33	3.25	0	83.98	0	1.42	0	0	11.11	0	0	0	0	0	0	-40.45	-40.45
	Inverter Transformer	MV1-6 T	364482	4905835	2	0	0	56.1	56.1	1	4466.43	3.25	0	84	0	1.43	0	0	11.13	0	0	0	0	0	0	-40.5	-40.5
	Inverter Transformer	MV1-2 T	364759	4906063	2	0	0	56.1	56.1	1	4593.71	3.25	0	84.24	0	1.48	0	0	11.31	0	0	0	0	0	0	-40.97	-40.97
	Inverter Transformer	MV1-3 T	364435	4906039	2	0	0	56.1	56.1	1	4673.9	3.25	0	84.39	0	1.51	0	0	11.42	0	0	0	0	0	0	-41.26	-41.26
	Inverter Transformer	MV1-1 T	364721	4906166	2	0	0	56.1	56.1	1	4703.27	3.25	0	84.45	0	1.52	0	0	11.46	0	0	0	0	0	0	-41.36	-41.36
	Inverter Transformer	MV2-3 T	365814	4906641	2	0	0	56.1	56.1	1	4987.43	3.25	0	84.96	0	1.62	0	0	11.84	0	0	0	0	0	0	-42.36	-42.36
	Inverter Transformer	MV2-4 T	365590	4906628	2	0	0	56.1	56.1	1	4990.96	3.25	0	84.96	0	1.62	0	0	11.84	0	0	0	0	0	0	-42.37	-42.37
	Inverter Transformer	MV2-2 T	365982	4906654	2	0	0	56.1	56.1	1	4994.66	3.25	0	84.97	0	1.62	0	0	11.85	0	0	0	0	0	0	-42.38	-42.38
	Inverter Transformer	MV3-18 T	367757	4907412	2	0	0	56.1	56.1	1	5994.42	3.25	0	86.55	0	1.96	0	0	13.1	0	0	0	0	0	0	-45.56	-45.56
	Inverter Transformer	MV3-21 T	368484	4907206	2	0	0	56.1	56.1	1	6048.82	3.25	0	86.63	0	1.98	0	0	13.16	0	0	0	0	0	0	-45.72	-45.72
	Inverter Transformer	MV3-22 T	368661	4907142	2	0	0	56.1	56.1	1	6063.72	3.25	0	86.65	0	1.98	0	0	13.18	0	0	0	0	0	0	-45.76	-45.76
	Inverter Transformer	MV3-19 T	368352	4907347	2	0	0	56.1	56.1	1	6127.97	3.25	0	86.75	0	2	0	0	13.25	0	0	0	0	0	0	-45.95	-45.95
	Inverter Transformer	MV3-12 T	367674	4907594	2	0	0	56.1	56.1	1	6147.08	3.25	0	86.77	0	2.01	0	0	13.28	0	0	0	0	0	0	-46	-46
	Inverter Transformer	MV3-17 T	368183	4907472	2	0	0	56.1	56.1	1	6184.36	3.25	0	86.83	0	2.02	0	0	13.32	0	0	0	0	0	0	-46.11	-46.11
	Inverter Transformer	MV3-13 T	367958	4907577	2	0	0	56.1	56.1	1	6211.06	3.25	0	86.86	0	2.03	0	0	13.35	0	0	0	0	0	0	-46.19	-46.19
	Inverter Transformer	MV3-20 T	368683	4907317	2	0	0	56.1	56.1	1	6231.57	3.25	0	86.89	0	2.04	0	0	13.37	0	0	0	0	0	0	-46.24	-46.24
	Inverter Transformer	MV3-15 T	368351	4907477	2	0	0	56.1	56.1	1	6248.44	3.25	0	86.92	0	2.04	0	0	13.39	0	0	0	0	0	0	-46.29	-46.29
	Inverter Transformer	MV3-16 T	368509	4907475	2	0	0	56.1	56.1	1	6306	3.25	0	87	0	2.06	0	0	13.46	0	0	0	0	0	0	-46.46	-46.46
	Inverter Transformer	MV3-10 T	368162	4907669	2	0	0	56.1	56.1	1	6362.92	3.25	0	87.07	0	2.08	0	0	13.52	0	0	0	0	0	0	-46.62	-46.62
	Inverter Transformer	MV3-7 T	367951	4907754	2	0	0	56.1	56.1	1	6377.84	3.25	0	87.09	0	2.08	0	0	13.54	0	0	0	0	0	0	-46.66	-46.66
	Inverter Transformer	MV3-14 T	368678	4907498	2	0	0	56.1	56.1	1	6394.29	3.25	0	87.12	0	2.09	0	0	13.56	0	0	0	0	0	0	-46.7	-46.7
	Inverter Transformer	MV3-11 T	368340	4907662	2	0	0	56.1	56.1	1	6417.11	3.25	0	87.15	0	2.09	0	0	13.59	0	0	0	0	0	0	-46.77	-46.77
	Inverter Transformer	MV3-6 T	368156	4907834	2	0	0	56.1	56.1	1	6517.04	3.25	0	87.28	0	2.12	0	0	13.7	0	0	0	0	0	0	-47.04	-47.04
	Inverter Transformer	MV3-9 T	368517	4907703	2	0	0	56.1	56.1	1	6519.84	3.25	0	87.28	0	2.12	0	0	13.7	0	0	0	0	0	0	-47.05	-47.05
	Inverter Transformer	MV3-3 T	367944	4907927	2	0	0	56.1	56.1	1	6541.32	3.25	0	87.31	0	2.13	0	0	13.73	0	0	0	0	0	0	-47.11	-47.11
	Inverter Transformer	MV3-5 T	368335	4907843	2	0	0	56.1	56.1	1	6584.99	3.25	0	87.37	0	2.14	0	0	13.78	0	0	0	0	0	0	-47.23	-47.23
	Inverter Transformer	MV3-8 T	368685	4907712	2	0	0	56.1	56.1	1	6593.02	3.25	0	87.38	0	2.14	0	0	13.78	0	0	0	0	0	0	-47.25	-47.25
	Inverter Transformer	MV3-1 T	368150	4907976	2	0	0	56.1	56.1	1	6649.84	3.25	0	87.46	0	2.16	0	0	13.85	0	0	0	0	0	0	-47.41	-47.41
	Inverter Transformer	MV3-4 T	368507	4907925	2	0	0	56.1	56.1	1	6722.49	3.25	0	87.55	0	2.18	0	0	13.93	0	0	0	0	0	0	-47.6	-47.6
	Inverter Transformer	MV3-2 T	368677	4907928	2	0	0	56.1	56.1	1	6788.76	3.25	0	87.64	0	2.2	0	0	14	0	0	0	0	0	0	-47.78	-47.78
	Inverter Transformer	MV6-3 T	370202	4907140	2	0	0	56.1	56.1	1	6863.62	3.25	0	87.73	0	2.22	0	0	14.08	0	0	0	0	0	0	-47.98	-47.98
	Inverter Transformer	MV6-2 T	370091	4907339	2	0	0	56.1	56.1	1	6958.79	3.25	0	87.85	0	2.25	0	0	14.19	0	0	0	0	0	0	-48.23	-48.23
	Inverter Transformer	MV4-15 T	369170	4908481	2	0	0	56.1	56.1	1	7492.64	3.25	0	88.49	0	2.39	0	0	14.75	0	0	0	0	0	0	-49.57	-49.57
	Inverter Transformer	MV4-14 T	369182	4908507	2	0	0	56.1	56.1	1	7521.27	3.25	0	88.53	0	2.4	0	0	14.78	0	0	0	0	0	0	-49.64	-49.64
	Inverter Transformer	MV4-13 T	369057	4908605	2	0	0	56.1	56.1	1	7560.33	3.25	0	88.57	0	2.41	0	0	14.82	0	0	0	0	0	0	-49.73	-49.73
	Inverter Transformer	MV4-12 T	369049	4908803	2	0	0	56.1	56.1	1	7739.52	3.25	0	88.77	0	2.45	0	0	15	0	0	0	0	0	0	-50.16	-50.16
	Inverter Transformer	MV4-11 T	369269	4908855	2	0	0	56.1	56.1	1	7874.35	3.25	0	88.92	0	2.48	0	0	15.13	0	0	0	0	0	0	-50.48	-50.48
	Inverter Transformer	MV5-6 T	369987	4908507	2	0	0	56.1	56.1	1	7888.55	3.25	0	88.94	0	2.48	0	0	15.15	0	0	0	0	0	0	-50.51	-50.51
	Inverter Transformer	MV4-10 T	369307	4908858	2	0	0	56.1	56.1	1	7892.6	3.25	0	88.94	0	2.49	0	0	15.15	0	0	0	0	0	0	-50.52	-50.52
	Inverter Transformer	MV4-7 T	369040	4909001	2	0	0	56.1	56.1	1	7919.25	3.25	0	88.97	0	2.49	0	0	15.18	0	0	0	0	0	0	-50.58	-50.58
	Inverter Transformer	MV4-8 T	369262	4909001	2	0	0	56.1	56.1	1	8005.17	3.25	0	89.07	0	2.51	0	0	15.26	0	0	0	0	0	0	-50.78	-50.78
	Inverter Transformer	MV4-9 T	369284	4909001	2	0	0	56.1	56.1	1	8013.97	3.25	0	89.08	0	2.51	0	0	15.27	0	0	0	0	0	0	-50.8	-50.8
	Inverter Transformer	MV5-5 T	370021	4908690	2	0	0	56.1	56.1	1	8064.5	3.25	0	89.13	0	2.52	0	0	15.32	0	0	0	0	0	0	-50.92	-50.92
	Inverter Transformer	MV4-4 T	369033	4909199	2	0	0	56.1	56.1	1	8100.56	3.25	0	89.17	0	2.53	0	0	15.35	0	0	0	0	0	0	-51	-51
	Inverter Transformer	MV4-6 T	369249	4909192	2	0	0	56.1	56.1	1	8175.61	3.25	0	89.25	0	2.55	0	0	15.43	0	0	0	0	0	0	-51.17	-51.17
	Inverter Transformer	MV4-5 T	369283	4909199	2	0	0	56.1	56.1	1	8195.34	3.25	0	89.27	0	2.55	0	0	15.45	0	0	0	0	0	0	-51.21	-51.21
	Inverter Transformer	MV5-2 T	370011	4908853	2	0	0	56.1	56.1	1	8202.17	3.25	0	89.28	0	2.56	0	0	15.45	0	0	0	0	0	0	-51.23	-51.23
	Inverter Transformer	MV5-4 T	370330	4908707	2	0	0	56.1	56.1	1	8234.88	3.25	0	89.31	0	2.56	0	0	15.48	0	0	0	0	0	0	-51.3	-51.3
	Inverter Transformer	MV4-1 T	369017	4909397	2	0	0	56.1	56.1	1	8279.44	3.25	0	89.36	0	2.57	0	0	15.53	0	0	0	0	0	0	-51.4	-51.4
	Inverter Transformer	MV5-3 T	370237	4908851	2	0	0	56.1	56.1	1	8311.41	3.25	0	89.39	0	2.58	0	0	15.56	0	0	0	0	0	0	-51.47	-51.47
	Inverter Transformer	MV4-3 T	369234	4909397	2	0	0	56.1	56.1	1	8359.16	3.25	0	89.44	0	2.59	0	0	15.6	0	0	0	0	0	0	-51.58	-51.58
	Inverter Transformer	MV4-2 T	369267	4909397	2	0	0	56.1	56.1	1	8371.71	3.25	0	89.46	0	2.59	0	0	15.62	0	0	0	0	0	0	-51.61	-51.61
	Inverter Transformer	MV5-1 T	370015	4909142	2	0	0	56.1	56.1	1	8458.62	3.25	0	89.55	0	2.61	0	0	15.7	0	0	0	0	0	0	-51.8	-51.8
	Line Reactor	NGR	369421	4908787.5	5	0	0	45.4	45.4	1	7876.19	5.25	0	88.93	0	3.2	1.38	0.11	3.22	0	0	0	0	0	0	-51.37	-51.37
Limit. Valu	0	0																								
Level D/N:	20.692	20.692																								

Receiver: Existing Noise Receptor
ID: G-78
X: 366190.2
Y: 4901603.1
Z: 4.5
Ground: 0

ISO	Description	ID	X	Y	Z	Ground	ReflOrd	LxT	LxN	L/A	Dist.	hm	Freq	Adiv	K0b	Agr	Abar	z	Aatm	Afol	Ahous	Cmet	CmetN	Dc	RL	LtotT	LtotN
	Sol_Luce Substation	S_Substation	369426	4908792	3.5	0	0	112.1	112.1	1	7883.57	5.25	0	88.93	0	1.54	2.29	0.32	11.55	0	0	0	0	0	0	7.76	7.76
	Inverter	MV1-15	365315	4904994	2	0	0	100.3	100.3	1	3502.03	3.25	0	81.89	0	0.45	0	0	16.23	0	0	0	0	0	0	1.74	1.74
	Inverter	MV1-12	365038	4905386	2	0	0	100.3	100.3	1	3954.48	3.25	0	82.94	0	0.52	0	0	16.98	0	0	0	0	0	0	-0.13	-0.13
	Inverter	MV1-11	364655	4905414	2	0	0	100.3	100.3	1	4108.5	3.25	0	83.27	0	0.54	0	0	17.22	0	0	0	0	0	0	-0.72	-0.72
	Inverter	MV1-8	364788	4905647	2	0	0	100.3	100.3	1	4280.1	3.25	0	83.63	0	0.56	0	0	17.49	0	0	0	0	0	0	-1.37	-1.37
	Inverter	MV1-9	364561	4905646	2	0	0	100.3	100.3	1	4358.82	3.25	0	83.79	0	0.57	0	0	17.61	0	0	0	0	0	0	-1.66	-1.66

Inverter	MV1-4	364815	4905918	2	0	0	100.3	100.3	1	4528.75	3.25	0	84.12	0	0.59	0	0	17.87	0	0	0	0	0	0	-2.28	-2.28
Inverter	MV1-5	364671	4905892	2	0	0	100.3	100.3	1	4550.02	3.25	0	84.16	0	0.6	0	0	17.91	0	0	0	0	0	0	-2.35	-2.35
Inverter	MV1-6	364477	4905835	2	0	0	100.3	100.3	1	4565.53	3.25	0	84.19	0	0.6	0	0	17.93	0	0	0	0	0	0	-2.41	-2.41
Inverter	MV1-2	364753	4906063	2	0	0	100.3	100.3	1	4685.75	3.25	0	84.42	0	0.61	0	0	18.11	0	0	0	0	0	0	-2.83	-2.83
Inverter	MV1-1	364715	4906166	2	0	0	100.3	100.3	1	4795.44	3.25	0	84.62	0	0.62	0	0	18.28	0	0	0	0	0	0	-3.2	-3.2
Inverter	MV2-3	365820	4906641	2	0	0	100.3	100.3	1	5051.48	3.25	0	85.07	0	0.65	0	0	18.66	0	0	0	0	0	0	-4.06	-4.06
Inverter	MV2-4	365586	4906624	2	0	0	100.3	100.3	1	5057.12	3.25	0	85.08	0	0.65	0	0	18.66	0	0	0	0	0	0	-4.08	-4.08
Inverter	MV1-14	365163	4905049	2	0	0	97.3	97.3	1	3595.74	3.25	0	82.12	0	0.47	0	0	16.39	0	0	0	0	0	0	-1.66	-1.66
Inverters	G_Inv9	366750.9	4902691.8	2	0	0	87.7	87.7	1	1224.61	3.25	0	72.76	0	2.48	0	0	1.71	0	0	0	0	0	0	10.71	10.71
Gardiner Substation	G_Sub	366586.3	4903349.9	2.5	0	0	90.8	90.8	1	1791.15	3.5	0	76.06	0	-0.21	0	0	4.01	0	0	0	0	0	0	10.92	10.92
Inverter	MV1-13	364731	4905241	2	0	0	97.3	97.3	1	3919.64	3.25	0	82.86	0	0.52	0	0	16.92	0	0	0	0	0	0	-2.99	-2.99
Inverters	G_Inv10	366900.7	4902704.8	2	0	0	87.7	87.7	1	1310.94	3.25	0	73.35	0	2.49	0	0	1.81	0	0	0	0	0	0	10	10
Inverters	G_Inv7	366694.6	4902824.7	2	0	0	87.7	87.7	1	1321.64	3.25	0	73.42	0	2.49	0	0	1.83	0	0	0	0	0	0	9.92	9.92
Inverter	MV1-10	365004	4905564	2	0	0	97.3	97.3	1	4134.71	3.25	0	83.33	0	0.55	0	0	17.26	0	0	0	0	0	0	-3.82	-3.82
Inverters	G_Inv8	366844.5	4902838.5	2	0	0	87.7	87.7	1	1397.97	3.25	0	73.91	0	2.51	0	0	1.92	0	0	0	0	0	0	9.32	9.32
Inverter	MV3-18	367752	4907412	2	0	0	100.3	100.3	1	6015.19	3.25	0	86.58	0	0.71	0	0	20.01	0	0	0	0	0	0	-6.99	-6.99
Inverter	MV3-21	368478	4907206	2	0	0	100.3	100.3	1	6051.99	3.25	0	86.64	0	0.71	0	0	20.06	0	0	0	0	0	0	-7.1	-7.1
Inverters	G_Inv5	366638.5	4902958.1	2	0	0	87.7	87.7	1	1427.24	3.25	0	74.09	0	2.51	0	0	1.96	0	0	0	0	0	0	9.11	9.11
Inverter	MV3-19	368357	4907347	2	0	0	100.3	100.3	1	6139.01	3.25	0	86.76	0	0.71	0	0	20.18	0	0	0	0	0	0	-7.34	-7.34
Inverter	MV1-7	364925	4905782	2	0	0	97.3	97.3	1	4366.23	3.25	0	83.8	0	0.57	0	0	17.62	0	0	0	0	0	0	-4.69	-4.69
Inverter	MV3-12	367668	4907594	2	0	0	100.3	100.3	1	6170.48	3.25	0	86.81	0	0.71	0	0	20.22	0	0	0	0	0	0	-7.43	-7.43
Inverter	MV3-17	368178	4907472	2	0	0	100.3	100.3	1	6196.4	3.25	0	86.84	0	0.71	0	0	20.26	0	0	0	0	0	0	-7.5	-7.5
Inverter	MV3-13	367963	4907577	2	0	0	100.3	100.3	1	6231.4	3.25	0	86.89	0	0.71	0	0	20.3	0	0	0	0	0	0	-7.6	-7.6
Inverter	MV3-20	368689	4907317	2	0	0	100.3	100.3	1	6236.4	3.25	0	86.9	0	0.71	0	0	20.31	0	0	0	0	0	0	-7.61	-7.61
Inverter	MV3-15	368357	4907477	2	0	0	100.3	100.3	1	6260.81	3.25	0	86.93	0	0.71	0	0	20.34	0	0	0	0	0	0	-7.68	-7.68
Inverter	MV3-16	368514	4907475	2	0	0	100.3	100.3	1	6315	3.25	0	87.01	0	0.71	0	0	20.42	0	0	0	0	0	0	-7.82	-7.82
Inverter	MV3-10	368167	4907669	2	0	0	100.3	100.3	1	6379.88	3.25	0	87.1	0	0.71	0	0	20.5	0	0	0	0	0	0	-8	-8
Inverter	MV3-7	367945	4907754	2	0	0	100.3	100.3	1	6396.32	3.25	0	87.12	0	0.71	0	0	20.52	0	0	0	0	0	0	-8.04	-8.04
Inverter	MV3-14	368684	4907498	2	0	0	100.3	100.3	1	6400.69	3.25	0	87.12	0	0.71	0	0	20.53	0	0	0	0	0	0	-8.06	-8.06
Inverters	G_Inv6	366788.5	4902972	2	0	0	87.7	87.7	1	1493.94	3.25	0	74.49	0	2.52	0	0	2.04	0	0	0	0	0	0	8.62	8.62
Inverter	MV3-11	368346	4907662	2	0	0	100.3	100.3	1	6431	3.25	0	87.17	0	0.71	0	0	20.57	0	0	0	0	0	0	-8.14	-8.14
Inverter	MV3-9	368512	4907703	2	0	0	100.3	100.3	1	6526.83	3.25	0	87.29	0	0.71	0	0	20.69	0	0	0	0	0	0	-8.39	-8.39
Inverter	MV3-6	368162	4907834	2	0	0	100.3	100.3	1	6535.45	3.25	0	87.31	0	0.71	0	0	20.71	0	0	0	0	0	0	-8.41	-8.41
Inverter	MV3-3	367939	4907927	2	0	0	100.3	100.3	1	6561.25	3.25	0	87.34	0	0.72	0	0	20.74	0	0	0	0	0	0	-8.48	-8.48
Inverter	MV3-8	368680	4907712	2	0	0	100.3	100.3	1	6596.8	3.25	0	87.39	0	0.72	0	0	20.78	0	0	0	0	0	0	-8.57	-8.57
Inverters	G_Inv3	366583.7	4903091.4	2	0	0	87.7	87.7	1	1539.44	3.25	0	74.75	0	2.52	0	0	2.09	0	0	0	0	0	0	8.3	8.3
Inverter	MV6-3	370207	4907140	2	0	0	100.3	100.3	1	6840.46	3.25	0	87.7	0	0.71	0	0	21.1	0	0	0	0	0	0	-9.2	-9.2
Inverters	G_Inv4	366732.8	4903105	2	0	0	87.7	87.7	1	1596.91	3.25	0	75.07	0	2.53	0	0	2.16	0	0	0	0	0	0	7.9	7.9
Inverter	MV6-2	370085	4907339	2	0	0	100.3	100.3	1	6933.25	3.25	0	87.82	0	0.71	0	0	21.22	0	0	0	0	0	0	-9.43	-9.43
Inverters	G_Inv1	366526.4	4903225.8	2	0	0	87.7	87.7	1	1657.16	3.25	0	75.39	0	2.54	0	0	2.23	0	0	0	0	0	0	7.5	7.5
Inverters	G_Inv2	366676.9	4903239.1	2	0	0	87.7	87.7	1	1706.86	3.25	0	75.64	0	2.55	0	0	2.29	0	0	0	0	0	0	7.18	7.18
Inverter	MV2-1	365842	4906816	2	0	0	97.3	97.3	1	5224.52	3.25	0	85.36	0	0.66	0	0	18.91	0	0	0	0	0	0	-7.62	-7.62
Inverter	MV4-11	369264	4908855	2	0	0	100.3	100.3	1	7876.44	3.25	0	88.93	0	0.66	0	0	22.36	0	0	0	0	0	0	-11.64	-11.64
Inverter	MV4-10	369312	4908858	2	0	0	100.3	100.3	1	7898.05	3.25	0	88.95	0	0.66	0	0	22.39	0	0	0	0	0	0	-11.69	-11.69
Inverter	MV4-7	369035	4909001	2	0	0	100.3	100.3	1	7926.02	3.25	0	88.98	0	0.66	0	0	22.42	0	0	0	0	0	0	-11.75	-11.75
Inverter	MV4-8	369256	4909001	2	0	0	100.3	100.3	1	8008	3.25	0	89.07	0	0.65	0	0	22.51	0	0	0	0	0	0	-11.93	-11.93
Inverter	MV4-9	369289	4909001	2	0	0	100.3	100.3	1	8020.69	3.25	0	89.08	0	0.65	0	0	22.53	0	0	0	0	0	0	-11.95	-11.95
Inverter	MV5-5	370015	4908690	2	0	0	100.3	100.3	1	8053.15	3.25	0	89.12	0	0.65	0	0	22.57	0	0	0	0	0	0	-12.02	-12.02
Inverter	MV4-4	369027	4909199	2	0	0	100.3	100.3	1	8108.34	3.25	0	89.18	0	0.64	0	0	22.63	0	0	0	0	0	0	-12.14	-12.14
Inverter	MV4-6	369243	4909192	2	0	0	100.3	100.3	1	8179.91	3.25	0	89.25	0	0.64	0	0	22.71	0	0	0	0	0	0	-12.29	-12.29
Inverter	MV5-2	370006	4908853	2	0	0	100.3	100.3	1	8192.76	3.25	0	89.27	0	0.64	0	0	22.73	0	0	0	0	0	0	-12.32	-12.32
Inverter	MV4-5	369289	4909199	2	0	0	100.3	100.3	1	8203.67	3.25	0	89.28	0	0.63	0	0	22.74	0	0	0	0	0	0	-12.34	-12.34
Inverter	MV5-4	370324	4908707	2	0	0	100.3	100.3	1	8219.11	3.25	0	89.3	0	0.63	0	0	22.76	0	0	0	0	0	0	-12.37	-12.37
Inverter	MV4-1	369011	4909397	2	0	0	100.3	100.3	1	8288.65	3.25	0	89.37	0	0.63	0	0	22.84	0	0	0	0	0	0	-12.52	-12.52
Inverter	MV5-3	370231	4908851	2	0	0	100.3	100.3	1	8298.2	3.25	0	89.38	0	0.62	0	0	22.85	0	0	0	0	0	0	-12.54	-12.54
Inverter	MV4-3	369229	4909397	2	0	0	100.3	100.3	1	8365.36	3.25	0	89.45	0	0.62	0	0	22.92	0	0	0	0	0	0	-12.68	-12.68
Inverter	MV4-2	369272	4909397	2	0	0	100.3	100.3	1	8381.07	3.25	0	89.47	0	0.62	0	0	22.94	0	0	0	0	0	0	-12.71	-12.71
Inverter	MV5-1	370020	4909142	2	0	0	100.3	100.3	1	8455.91	3.25	0	89.54	0	0.61	0	0	23.02	0	0	0	0	0	0	-12.86	-12.86
Inverter	MV6-1	370235	4907364	2	0	0	97.3	97.3	1	7039.06	3.25	0	87.95	0	0.71	0	0	21.35	0	0	0	0	0	0	-12.7	-12.7
DSTATCOM - 10 MVAR #2	DSAT2	369403	4908757	2.5	0	0	96.6	96.6	1	7842.22	3.5	0	88.89	0	3.88	0	0	4.7	0	0	0	0	0	0	-0.83	-0.83
DSTATCOM - 10 MVAR #1	DSAT1	369437	4908757	2.5	0	0	96.6	96.6	1	7856.21	3.5	0	88.9	0	3.88	0	0	4.7	0	0	0	0	0	0	-0.86	-0.86
SubstationTransformer	W_ST	369711.17	4906112.3	2.5	0	0	92	92	1	5721	3.5	0	86.15	0	0.71	0	-0.11	9.44	0	0	0	0	0	0	-4.33	-4.33
Inverter	MV1-3	364440	4906039	2	0	0	89.1	89.1	1	4768.69	3.25	0	84.57	0	1.58	0	0	12.15	0	0	0	0	0	0	-9.24	-9.24
Inverter	MV2-2	365977	4906654	2	0	0	89.1	89.1	1	5055.4	3.25	0	85.08	0	1.65	0	0	12.54	0	0	0	0	0	0	-10.21	-10.21
Westbrook Inverter Enclosur	W_INV3	369508	4906164	2	0	0	89.1	89.1	1	5640	3.25	0	86.03	0	1.8	0	0	13.3	0	0	0	0	0	0	-12.07	-12.07
Westbrook Inverter Enclosur	W_INV4	369673	4906164	2	0	0	89.1	89.1	1	5738.62	3.25	0	86.18	0	1.82	0	0	13.43	0	0	0	0	0	0	-12.37	-12.37
Westbrook Inverter Enclosur	W_INV2	369374	4906388	2	0	0	89.1	89.1	1	5747.33	3.25	0	86.19	0	1.82	0	0	13.44	0	0	0	0	0	0	-12.4	-12.4
Westbrook Inverter Enclosur	W_INV7	369780	4906417	2	0	0	89.1	89.1	1	6005.02	3.25	0	86.57	0	1.89	0	0	13.77	0	0	0	0	0	0	-13.17	-13.17
Inverter	MV3-22	368656	4907142	2	0	0	89.1	89.1	1	6062.97	3.25	0	86.65	0	1.9	0	0	13.84	0	0	0	0	0	0	-13.34	-13.34
Westbrook Inverter Enclosur	W_INV5	369719	4906574	2	0	0	89.1	89.1	1	6096.09	3.25	0	86.7	0	1.91	0	0	13.88	0	0	0	0	0	0	-13.44	-13.44
Westbrook Inverter Enclosur	W_INV6	369875	4906578	2	0	0	89.1	89.1	1	6190.91	3.25	0	86.84	0	1.93	0	0	14	0	0	0	0	0	0	-13.71	-13.71
Inverter	MV3-5	368340	4907843	2	0	0	89.1	89.1	1	6599.85	3.25	0	87.39	0	2.03	0	0	14.51	0	0	0	0	0	0	-14.87	-14.87
Inverter	MV3-1	368156	4907976	2	0	0	89.1	89.1	1	6669.2	3.25	0	87.48	0	2.05	0	0	14.59	0	0	0	0	0	0	-15.06	-15.06
Inverter	MV3-4	368502	4907925	2	0	0	89.1	89.1	1	6731.33	3.25	0	87.56	0	2.06	0	0	14.66	0	0	0	0	0	0	-15.23	-15.23

Inverter	MV3-2	368671	4907928	2	0	0	89.1	89.1	1	6794.02	3.25	0	87.64	0	2.08	0	0	14.74	0	0	0	0	0	0	-15.4	-15.4
Fixed Reactor Bank 1	FRB1	369378	4908755	6	0	0	89.8	89.8	1	7830.18	5.25	0	88.88	0	-0.19	0	0	11.51	0	0	0	0	0	0	-10.41	-10.41
Fixed Reactor Bank 2	FRB2	369464	4908755	6	0	0	89.8	89.8	1	7865.59	5.25	0	88.91	0	-0.19	0	0	11.54	0	0	0	0	0	0	-10.49	-10.49
Inverter	MV4-15	369176	4908481	2	0	0	89.1	89.1	1	7498.03	3.25	0	88.5	0	2.25	0	0	15.57	0	0	0	0	0	0	-17.26	-17.26
Inverter	MV4-14	369176	4908507	2	0	0	89.1	89.1	1	7521.89	3.25	0	88.53	0	2.25	0	0	15.6	0	0	0	0	0	0	-17.32	-17.32
Inverter	MV4-13	369051	4908605	2	0	0	89.1	89.1	1	7563.78	3.25	0	88.57	0	2.26	0	0	15.65	0	0	0	0	0	0	-17.42	-17.42
Inverter	MV4-12	369043	4908803	2	0	0	89.1	89.1	1	7744.48	3.25	0	88.78	0	2.3	0	0	15.85	0	0	0	0	0	0	-17.88	-17.88
Inverter	MV5-6	369982	4908507	2	0	0	89.1	89.1	1	7876.65	3.25	0	88.93	0	2.33	0	0	16	0	0	0	0	0	0	-18.2	-18.2
Westbrook Inverter Enclosur	W_INV1	369409	4906578	2	0	0	86.1	86.1	1	5925.4	3.25	0	86.45	0	1.87	0	0	13.67	0	0	0	0	0	0	-15.93	-15.93
Inverter	MV6-4	370250	4906966	2	0	0	86.1	86.1	1	6726.27	3.25	0	87.56	0	2.06	0	0	14.66	0	0	0	0	0	0	-18.22	-18.22
Westbrook Inverter Transfor	W_INVTR1	369403	4906578	2	0	0	78.2	78.2	1	5922.14	3.25	0	86.45	0	-3.35	0	0	2.72	0	0	0	0	0	0	-7.57	-7.57
Westbrook Inverter Transfor	W_INVTR3	369514	4906164	2	0	0	77.3	77.3	1	5643.53	3.25	0	86.03	0	-3.3	0	0	2.63	0	0	0	0	0	0	-8.01	-8.01
Westbrook Inverter Transfor	W_INVTR4	369679	4906164	2	0	0	77.3	77.3	1	5742.26	3.25	0	86.18	0	-3.32	0	0	2.66	0	0	0	0	0	0	-8.18	-8.18
Westbrook Inverter Transfor	W_INVTR2	369368	4906388	2	0	0	77.3	77.3	1	5744.01	3.25	0	86.18	0	-3.32	0	0	2.66	0	0	0	0	0	0	-8.18	-8.18
Westbrook Inverter Transfor	W_INVTR7	369786	4906417	2	0	0	77.3	77.3	1	6008.61	3.25	0	86.58	0	-3.37	0	0	2.74	0	0	0	0	0	0	-8.61	-8.61
Westbrook Inverter Transfor	W_INVTR5	369725	4906574	2	0	0	77.3	77.3	1	6099.56	3.25	0	86.71	0	-3.39	0	0	2.77	0	0	0	0	0	0	-8.75	-8.75
Westbrook Inverter Transfor	W_INVTR6	369881	4906578	2	0	0	77.3	77.3	1	6194.48	3.25	0	86.84	0	-3.4	0	0	2.8	0	0	0	0	0	0	-8.9	-8.9
Inverter Transformer	MV1-14 T	365157	4905049	2	0	0	69.4	69.4	1	3597.46	3.25	0	82.12	0	2.68	0	0	6.37	0	0	0	0	0	0	-21.82	-21.82
Inverter Transformer	MV1-13 T	364725	4905241	2	0	0	69.4	69.4	1	3921.88	3.25	0	82.87	0	2.77	0	0	6.62	0	0	0	0	0	0	-22.9	-22.9
Inverter Transformer	MV1-10 T	365010	4905564	2	0	0	69.4	69.4	1	4132.99	3.25	0	83.33	0	2.82	0	0	6.77	0	0	0	0	0	0	-23.57	-23.57
Inverter Transformer	MV1-7 T	364919	4905782	2	0	0	69.4	69.4	1	4367.97	3.25	0	83.81	0	2.88	0	0	6.95	0	0	0	0	0	0	-24.28	-24.28
Inverter Transformer	MV2-1 T	365836	4906816	2	0	0	69.4	69.4	1	5224.92	3.25	0	85.36	0	3.06	0	0	7.53	0	0	0	0	0	0	-26.6	-26.6
Inverter Transformer	MV6-4 T	370244	4906966	2	0	0	69.4	69.4	1	6722.65	3.25	0	87.55	0	3.29	0	0	8.44	0	0	0	0	0	0	-29.93	-29.93
Inverter Transformer	MV6-1 T	370230	4907364	2	0	0	69.4	69.4	1	7036.19	3.25	0	87.95	0	3.32	0	0	8.62	0	0	0	0	0	0	-30.54	-30.54
Inverter Transformer	MV1-15 T	365309	4904994	2	0	0	56.1	56.1	1	3503.53	3.25	0	81.89	0	1.04	0	0	9.69	0	0	0	0	0	0	-36.57	-36.57
Inverter Transformer	MV1-12 T	365044	4905386	2	0	0	56.1	56.1	1	3952.73	3.25	0	82.94	0	1.22	0	0	10.38	0	0	0	0	0	0	-38.49	-38.49
Inverter Transformer	MV1-11 T	364649	4905414	2	0	0	56.1	56.1	1	4110.75	3.25	0	83.28	0	1.29	0	0	10.62	0	0	0	0	0	0	-39.13	-39.13
Inverter Transformer	MV1-8 T	364782	4905647	2	0	0	56.1	56.1	1	4282.07	3.25	0	83.63	0	1.36	0	0	10.87	0	0	0	0	0	0	-39.8	-39.8
Inverter Transformer	MV1-9 T	364555	4905646	2	0	0	56.1	56.1	1	4361.07	3.25	0	83.79	0	1.39	0	0	10.98	0	0	0	0	0	0	-40.1	-40.1
Inverter Transformer	MV1-4 T	364821	4905918	2	0	0	56.1	56.1	1	4526.93	3.25	0	84.12	0	1.45	0	0	11.21	0	0	0	0	0	0	-40.72	-40.72
Inverter Transformer	MV1-5 T	364676	4905892	2	0	0	56.1	56.1	1	4548.35	3.25	0	84.16	0	1.46	0	0	11.24	0	0	0	0	0	0	-40.8	-40.8
Inverter Transformer	MV1-6 T	364482	4905835	2	0	0	56.1	56.1	1	4563.65	3.25	0	84.19	0	1.46	0	0	11.26	0	0	0	0	0	0	-40.86	-40.86
Inverter Transformer	MV1-2 T	364759	4906063	2	0	0	56.1	56.1	1	4683.91	3.25	0	84.41	0	1.51	0	0	11.43	0	0	0	0	0	0	-41.29	-41.29
Inverter Transformer	MV1-3 T	364435	4906039	2	0	0	56.1	56.1	1	4770.53	3.25	0	84.57	0	1.54	0	0	11.55	0	0	0	0	0	0	-41.6	-41.6
Inverter Transformer	MV1-1 T	364721	4906166	2	0	0	56.1	56.1	1	4793.6	3.25	0	84.61	0	1.55	0	0	11.58	0	0	0	0	0	0	-41.68	-41.68
Inverter Transformer	MV2-3 T	365814	4906641	2	0	0	56.1	56.1	1	5051.93	3.25	0	85.07	0	1.64	0	0	11.92	0	0	0	0	0	0	-42.58	-42.58
Inverter Transformer	MV2-2 T	365982	4906654	2	0	0	56.1	56.1	1	5055.19	3.25	0	85.07	0	1.65	0	0	11.93	0	0	0	0	0	0	-42.59	-42.59
Inverter Transformer	MV2-4 T	365590	4906628	2	0	0	56.1	56.1	1	5060.62	3.25	0	85.08	0	1.65	0	0	11.93	0	0	0	0	0	0	-42.61	-42.61
Inverter Transformer	MV3-18 T	367757	4907412	2	0	0	56.1	56.1	1	6016.49	3.25	0	86.59	0	1.97	0	0	13.12	0	0	0	0	0	0	-45.62	-45.62
Inverter Transformer	MV3-21 T	368484	4907206	2	0	0	56.1	56.1	1	6054.26	3.25	0	86.64	0	1.98	0	0	13.17	0	0	0	0	0	0	-45.73	-45.73
Inverter Transformer	MV3-22 T	368661	4907142	2	0	0	56.1	56.1	1	6065	3.25	0	86.66	0	1.99	0	0	13.18	0	0	0	0	0	0	-45.76	-45.76
Inverter Transformer	MV3-19 T	368352	4907347	2	0	0	56.1	56.1	1	6137.24	3.25	0	86.76	0	2.01	0	0	13.26	0	0	0	0	0	0	-45.97	-45.97
Inverter Transformer	MV3-12 T	367674	4907594	2	0	0	56.1	56.1	1	6171.92	3.25	0	86.81	0	2.02	0	0	13.3	0	0	0	0	0	0	-46.07	-46.07
Inverter Transformer	MV3-17 T	368183	4907472	2	0	0	56.1	56.1	1	6198	3.25	0	86.85	0	2.03	0	0	13.33	0	0	0	0	0	0	-46.15	-46.15
Inverter Transformer	MV3-13 T	367958	4907577	2	0	0	56.1	56.1	1	6229.98	3.25	0	86.89	0	2.04	0	0	13.37	0	0	0	0	0	0	-46.24	-46.24
Inverter Transformer	MV3-20 T	368683	4907317	2	0	0	56.1	56.1	1	6234	3.25	0	86.9	0	2.04	0	0	13.38	0	0	0	0	0	0	-46.25	-46.25
Inverter Transformer	MV3-15 T	368351	4907477	2	0	0	56.1	56.1	1	6258.74	3.25	0	86.93	0	2.05	0	0	13.41	0	0	0	0	0	0	-46.32	-46.32
Inverter Transformer	MV3-16 T	368509	4907475	2	0	0	56.1	56.1	1	6313.16	3.25	0	87	0	2.06	0	0	13.47	0	0	0	0	0	0	-46.48	-46.48
Inverter Transformer	MV3-10 T	368162	4907669	2	0	0	56.1	56.1	1	6378.33	3.25	0	87.09	0	2.08	0	0	13.54	0	0	0	0	0	0	-46.66	-46.66
Inverter Transformer	MV3-7 T	367951	4907754	2	0	0	56.1	56.1	1	6397.97	3.25	0	87.12	0	2.09	0	0	13.56	0	0	0	0	0	0	-46.71	-46.71
Inverter Transformer	MV3-14 T	368678	4907498	2	0	0	56.1	56.1	1	6398.36	3.25	0	87.12	0	2.09	0	0	13.56	0	0	0	0	0	0	-46.72	-46.72
Inverter Transformer	MV3-11 T	368340	4907662	2	0	0	56.1	56.1	1	6428.99	3.25	0	87.16	0	2.1	0	0	13.6	0	0	0	0	0	0	-46.8	-46.8
Inverter Transformer	MV3-9 T	368517	4907703	2	0	0	56.1	56.1	1	6528.61	3.25	0	87.3	0	2.13	0	0	13.71	0	0	0	0	0	0	-47.08	-47.08
Inverter Transformer	MV3-6 T	368156	4907834	2	0	0	56.1	56.1	1	6533.64	3.25	0	87.3	0	2.13	0	0	13.72	0	0	0	0	0	0	-47.09	-47.09
Inverter Transformer	MV3-3 T	367944	4907927	2	0	0	56.1	56.1	1	6562.59	3.25	0	87.34	0	2.14	0	0	13.75	0	0	0	0	0	0	-47.17	-47.17
Inverter Transformer	MV3-5 T	368335	4907843	2	0	0	56.1	56.1	1	6598.22	3.25	0	87.39	0	2.15	0	0	13.79	0	0	0	0	0	0	-47.27	-47.27
Inverter Transformer	MV3-8 T	368685	4907712	2	0	0	56.1	56.1	1	6598.69	3.25	0	87.39	0	2.15	0	0	13.79	0	0	0	0	0	0	-47.27	-47.27
Inverter Transformer	MV3-1 T	368150	4907976	2	0	0	56.1	56.1	1	6667.43	3.25	0	87.48	0	2.17	0	0	13.87	0	0	0	0	0	0	-47.45	-47.45
Inverter Transformer	MV3-4 T	368507	4907925	2	0	0	56.1	56.1	1	6733.05	3.25	0	87.56	0	2.19	0	0	13.94	0	0	0	0	0	0	-47.63	-47.63
Inverter Transformer	MV3-2 T	368677	4907928	2	0	0	56.1	56.1	1	6796.22	3.25	0	87.65	0	2.2	0	0	14.01	0	0	0	0	0	0	-47.8	-47.8
Inverter Transformer	MV6-3 T	370202	4907140	2	0	0	56.1	56.1	1	6837.53	3.25	0	87.7	0	2.21	0	0	14.05	0	0	0	0	0	0	-47.91	-47.91
Inverter Transformer	MV6-2 T	370091	4907339	2	0	0	56.1	56.1	1	6936.63	3.25	0	87.82	0	2.24	0	0	14.16	0	0	0	0	0	0	-48.17	-48.17
Inverter Transformer	MV4-15 T	369170	4908481	2	0	0	56.1	56.1	1	7495.65	3.25	0	88.5	0	2.39	0	0	14.75	0	0	0	0	0	0	-49.58	-49.58
Inverter Transformer	MV4-14 T	369182	4908507	2	0	0	56.1	56.1	1	7524.27	3.25	0	88.53	0	2.4	0	0	14.78	0	0	0	0	0	0	-49.65	-49.65
Inverter Transformer	MV4-13 T	369057	4908605	2	0	0	56.1	56.1	1	7566.05	3.25	0	88.58	0	2.41	0	0	14.82	0	0	0	0	0	0	-49.75	-49.75
Inverter Transformer	MV4-12 T	369049	4908803	2	0	0	56.1	56.1	1	7746.7	3.25	0	88.78	0	2.45	0	0	15	0	0	0	0	0	0	-50.18	-50.18
Inverter Transformer	MV4-11 T	369269	4908855	2	0	0	56.1	56.1	1	7878.39	3.25	0	88.93	0	2.48	0	0	15.14	0	0	0	0	0	0	-50.49	-50.49
Inverter Transformer	MV5-6 T	369987	4908507	2	0	0	56.1	56.1	1	7879.06	3.25	0	88.93	0	2.48	0	0	15.14	0	0	0	0	0	0	-50.49	-50.49
Inverter Transformer	MV4-10 T	369307	4908858	2	0	0	56.1	56.1	1	7896.08	3.25	0	88.95	0	2.49	0	0	15.15	0	0	0	0	0	0	-50.53	-50.53
Inverter Transformer	MV4-7 T	369040	4909001	2	0	0	56.1	56.1	1	7927.82	3.25	0	88.98	0	2.49	0	0	15.19	0	0	0	0	0	0	-50.6	-50.6
Inverter Transformer	MV4-8 T	369262	4909001	2	0	0	56.1	56.1	1	8010.3	3.25	0	89.07	0	2.51	0	0	15.27	0	0	0	0	0	0	-50.79	-50.79
Inverter Transformer	MV4-9 T	369284	4909001	2	0	0	56.1	56.1	1	8018.76	3.25	0	89.08	0	2.51	0	0	15.27	0	0	0	0	0	0	-50.81	-50.81
Inverter Transformer	MV5-5 T	370021	4908690	2	0	0	56.1	56.1	1	8056	3.25	0	89.12	0	2.52	0	0	15.31	0	0	0	0	0	0	-50.9	-50.9
Inverter Transformer	MV4-4 T	369033	4909199	2	0	0	56.1	56.1	1	8110.44	3.25	0	89.18	0	2.54	0	0	15.36	0	0	0	0	0	0	-51.02	-51.02

	Inverter Transformer	MV4-6 T	369249	4909192	2	0	0	56.1	56.1	1	8182.16	3.25	0	89.26	0	2.55	0	0	15.43	0	0	0	0	0	0	-51.18	-51.18
	Inverter Transformer	MV5-2 T	370011	4908853	2	0	0	56.1	56.1	1	8195.09	3.25	0	89.27	0	2.55	0	0	15.45	0	0	0	0	0	0	-51.21	-51.21
	Inverter Transformer	MV4-5 T	369283	4909199	2	0	0	56.1	56.1	1	8201.41	3.25	0	89.28	0	2.56	0	0	15.45	0	0	0	0	0	0	-51.23	-51.23
	Inverter Transformer	MV5-4 T	370330	4908707	2	0	0	56.1	56.1	1	8222.13	3.25	0	89.3	0	2.56	0	0	15.47	0	0	0	0	0	0	-51.27	-51.27
	Inverter Transformer	MV4-1 T	369017	4909397	2	0	0	56.1	56.1	1	8290.7	3.25	0	89.37	0	2.57	0	0	15.54	0	0	0	0	0	0	-51.43	-51.43
	Inverter Transformer	MV5-3 T	370237	4908851	2	0	0	56.1	56.1	1	8301.12	3.25	0	89.38	0	2.58	0	0	15.55	0	0	0	0	0	0	-51.45	-51.45
	Inverter Transformer	MV4-3 T	369234	4909397	2	0	0	56.1	56.1	1	8367.17	3.25	0	89.45	0	2.59	0	0	15.61	0	0	0	0	0	0	-51.6	-51.6
	Inverter Transformer	MV4-2 T	369267	4909397	2	0	0	56.1	56.1	1	8379.24	3.25	0	89.46	0	2.59	0	0	15.62	0	0	0	0	0	0	-51.62	-51.62
	Inverter Transformer	MV5-1 T	370015	4909142	2	0	0	56.1	56.1	1	8453.65	3.25	0	89.54	0	2.61	0	0	15.69	0	0	0	0	0	0	-51.79	-51.79
	Line Reactor	NGR	369421	4908787.5	5	0	0	45.4	45.4	1	7877.42	5.25	0	88.93	0	3.2	1.38	0.11	3.22	0	0	0	0	0	0	-51.37	-51.37
Limit. Valu	0	0																								
Level D/N:	20.6517	20.6517																								

Receiver: Existing Noise Receptor
ID: G-79
X: 365415.2
Y: 4903793
Z: 4.5
Ground: 0

ISO	Description	ID	X	Y	Z	Ground	ReflOrd	LxT	LxN	L/A	Dist.	hm	Freq	Adiv	K0b	Agr	Abar	z	Aatm	Afol	Ahous	Cmet	CmetN	Dc	RL	LtotT	LtotN
	Inverter	MV1-15	365315	4904994	2	0	0	100.3	100.3	1	1205.18	3.25	0	72.62	0	-0.15	0	0	11.54	0	0	0	0	0	0	16.3	16.3
	Inverter	MV1-12	365038	4905386	2	0	0	100.3	100.3	1	1637.05	3.25	0	75.28	0	0.02	0	0	12.66	0	0	0	0	0	0	12.36	12.36
	Sol_Luce Substation	S_Substation	369426	4908792	3.5	0	0	112.1	112.1	1	6409.1	5.25	0	87.14	0	1.26	2.56	0.28	10.17	0	0	0	0	0	0	10.96	10.96
	Inverter	MV1-11	364655	4905414	2	0	0	100.3	100.3	1	1790.41	3.25	0	76.06	0	0.07	0	0	13.01	0	0	0	0	0	0	11.18	11.18
	Inverter	MV1-14	365163	4905049	2	0	0	97.3	97.3	1	1281.07	3.25	0	73.15	0	-0.12	0	0	11.75	0	0	0	0	0	0	12.53	12.53
	Inverter	MV1-8	364788	4905647	2	0	0	100.3	100.3	1	1957.22	3.25	0	76.83	0	0.12	0	0	13.37	0	0	0	0	0	0	9.99	9.99
	Inverter	MV1-9	364561	4905646	2	0	0	100.3	100.3	1	2040.41	3.25	0	77.19	0	0.14	0	0	13.55	0	0	0	0	0	0	9.43	9.43
	Inverter	MV1-4	364815	4905918	2	0	0	100.3	100.3	1	2208.14	3.25	0	77.88	0	0.19	0	0	13.89	0	0	0	0	0	0	8.36	8.36
	Inverter	MV1-5	364671	4905892	2	0	0	100.3	100.3	1	2227.03	3.25	0	77.95	0	0.19	0	0	13.93	0	0	0	0	0	0	8.24	8.24
	Inverter	MV1-6	364477	4905835	2	0	0	100.3	100.3	1	2247.22	3.25	0	78.03	0	0.2	0	0	13.97	0	0	0	0	0	0	8.12	8.12
	Inverter	MV1-13	364731	4905241	2	0	0	97.3	97.3	1	1601.51	3.25	0	75.09	0	0	0	0	12.57	0	0	0	0	0	0	9.65	9.65
	Inverter	MV1-2	364753	4906063	2	0	0	100.3	100.3	1	2364.62	3.25	0	78.48	0	0.23	0	0	14.2	0	0	0	0	0	0	7.41	7.41
	Inverter	MV1-1	364715	4906166	2	0	0	100.3	100.3	1	2474.15	3.25	0	78.87	0	0.25	0	0	14.41	0	0	0	0	0	0	6.78	6.78
	Inverter	MV1-10	365004	4905564	2	0	0	97.3	97.3	1	1818.11	3.25	0	76.19	0	0.07	0	0	13.07	0	0	0	0	0	0	7.98	7.98
	Inverter	MV2-4	365586	4906624	2	0	0	100.3	100.3	1	2836.15	3.25	0	80.05	0	0.33	0	0	15.08	0	0	0	0	0	0	4.85	4.85
	Inverter	MV2-3	365820	4906641	2	0	0	100.3	100.3	1	2876.63	3.25	0	80.18	0	0.34	0	0	15.15	0	0	0	0	0	0	4.64	4.64
	Inverter	MV1-7	364925	4905782	2	0	0	97.3	97.3	1	2048.52	3.25	0	77.23	0	0.14	0	0	13.56	0	0	0	0	0	0	6.38	6.38
	Gardiner Substation	G_Sub	366586.3	4903349.9	2.5	0	0	90.8	90.8	1	1252.12	4.25	0	72.95	0	0.83	4.99	0.31	3.02	0	0	0	0	0	0	8.99	8.99
	Inverter	MV3-18	367752	4907412	2	0	0	100.3	100.3	1	4307.88	3.25	0	83.69	0	0.57	0	0	17.53	0	0	0	0	0	0	-1.47	-1.47
	Inverter	MV2-1	365842	4906816	2	0	0	97.3	97.3	1	3052.98	3.25	0	80.69	0	0.37	0	0	15.47	0	0	0	0	0	0	0.78	0.78
	Inverter	MV3-12	367668	4907594	2	0	0	100.3	100.3	1	4418.45	3.25	0	83.91	0	0.58	0	0	17.7	0	0	0	0	0	0	-1.88	-1.88
	Inverter	MV3-13	367963	4907577	2	0	0	100.3	100.3	1	4561.79	3.25	0	84.18	0	0.6	0	0	17.92	0	0	0	0	0	0	-2.39	-2.39
	Inverter	MV3-21	368478	4907206	2	0	0	100.3	100.3	1	4585.77	3.25	0	84.23	0	0.6	0	0	17.96	0	0	0	0	0	0	-2.48	-2.48
	Inverter	MV3-17	368178	4907472	2	0	0	100.3	100.3	1	4600.88	3.25	0	84.26	0	0.6	0	0	17.98	0	0	0	0	0	0	-2.53	-2.53
	Inverter	MV3-19	368357	4907347	2	0	0	100.3	100.3	1	4613.58	3.25	0	84.28	0	0.6	0	0	18	0	0	0	0	0	0	-2.58	-2.58
	Inverter	MV3-7	367945	4907754	2	0	0	100.3	100.3	1	4699.94	3.25	0	84.44	0	0.61	0	0	18.13	0	0	0	0	0	0	-2.88	-2.88
	Inverter	MV3-15	368357	4907477	2	0	0	100.3	100.3	1	4714.45	3.25	0	84.47	0	0.61	0	0	18.16	0	0	0	0	0	0	-2.93	-2.93
	Inverter	MV3-10	368167	4907669	2	0	0	100.3	100.3	1	4753.5	3.25	0	84.54	0	0.62	0	0	18.21	0	0	0	0	0	0	-3.06	-3.06
	Inverter	MV3-20	368689	4907317	2	0	0	100.3	100.3	1	4810.03	3.25	0	84.64	0	0.62	0	0	18.3	0	0	0	0	0	0	-3.25	-3.25
	Inverter	MV3-16	368514	4907475	2	0	0	100.3	100.3	1	4812.45	3.25	0	84.65	0	0.62	0	0	18.3	0	0	0	0	0	0	-3.26	-3.26
	Inverter	MV3-3	367939	4907927	2	0	0	100.3	100.3	1	4843.5	3.25	0	84.7	0	0.63	0	0	18.35	0	0	0	0	0	0	-3.37	-3.37
	Inverter	MV3-11	368346	4907662	2	0	0	100.3	100.3	1	4853.74	3.25	0	84.72	0	0.63	0	0	18.36	0	0	0	0	0	0	-3.4	-3.4
	Inverter	MV3-6	368162	4907834	2	0	0	100.3	100.3	1	4886.16	3.25	0	84.78	0	0.63	0	0	18.41	0	0	0	0	0	0	-3.51	-3.51
	Inverter	MV3-14	368684	4907498	2	0	0	100.3	100.3	1	4940.86	3.25	0	84.88	0	0.64	0	0	18.49	0	0	0	0	0	0	-3.69	-3.69
	Inverter	MV3-9	368512	4907703	2	0	0	100.3	100.3	1	4987.81	3.25	0	84.96	0	0.64	0	0	18.56	0	0	0	0	0	0	-3.85	-3.85
	Inverter	MV3-8	368680	4907712	2	0	0	100.3	100.3	1	5100.73	3.25	0	85.15	0	0.65	0	0	18.73	0	0	0	0	0	0	-4.22	-4.22
	Inverters	G_Inv1	366526.4	4903225.8	2	0	0	87.7	87.7	1	1247.59	3.25	0	72.92	0	2.48	0	0	1.74	0	0	0	0	0	0	10.52	10.52
	Inverter	MV6-3	370207	4907140	2	0	0	100.3	100.3	1	5844.98	3.25	0	86.34	0	0.7	0	0	19.78	0	0	0	0	0	0	-6.5	-6.5
	Inverters	G_Inv3	366583.7	4903091.4	2	0	0	87.7	87.7	1	1362.95	3.25	0	73.69	0	2.5	0	0	1.88	0	0	0	0	0	0	9.59	9.59
	Inverter	MV6-2	370085	4907339	2	0	0	100.3	100.3	1	5863.54	3.25	0	86.36	0	0.7	0	0	19.81	0	0	0	0	0	0	-6.56	-6.56
	Inverters	G_Inv2	366676.9	4903239.1	2	0	0	87.7	87.7	1	1377.93	3.25	0	73.78	0	2.5	0	0	1.9	0	0	0	0	0	0	9.48	9.48
	Inverter	MV4-7	369035	4909001	2	0	0	100.3	100.3	1	6342.41	3.25	0	87.05	0	0.71	0	0	20.45	0	0	0	0	0	0	-7.9	-7.9
	Inverters	G_Inv5	366638.5	4902958.1	2	0	0	87.7	87.7	1	1481.06	3.25	0	74.41	0	2.52	0	0	2.02	0	0	0	0	0	0	8.71	8.71
	Inverter	MV4-11	369264	4908855	2	0	0	100.3	100.3	1	6359.02	3.25	0	87.07	0	0.71	0	0	20.47	0	0	0	0	0	0	-7.94	-7.94
	Inverters	G_Inv4	366732.8	4903105	2	0	0	87.7	87.7	1	1486.41	3.25	0	74.44	0	2.52	0	0	2.03	0	0	0	0	0	0	8.67	8.67
	Inverter	MV4-10	369312	4908858	2	0	0	100.3	100.3	1	6390.56	3.25	0	87.11	0	0.71	0	0	20.52	0	0	0	0	0	0	-8.03	-8.03
	Inverter	MV4-8	369256	4909001	2	0	0	100.3	100.3	1	6471.09	3.25	0	87.22	0	0.71	0	0	20.62	0	0	0	0	0	0	-8.24	-8.24
	Inverter	MV4-9	369289	4909001	2	0	0	100.3	100.3	1	6490.73	3.25	0	87.25	0	0.71	0	0	20.65	0	0	0	0	0	0	-8.3	-8.3
	Inverter	MV4-4	369027	4909199	2	0	0	100.3	100.3	1	6501.53	3.25	0	87.26	0	0.71	0	0	20.66	0	0	0	0	0	0	-8.32	-8.32
	Inverter	MV4-6	369243	4909192	2	0	0	100.3	100.3	1	6618.25	3.25	0	87.41	0	0.71	0	0	20.81	0	0	0	0	0	0	-8.63	-8.63
	Inverter	MV4-5	369289	4909199	2	0	0	100.3	100.3	1	6650.65	3.25	0	87.46	0	0.71	0	0	20.85	0	0	0	0	0	0	-8.71	-8.71
	Inverter	MV4-1	369011	4909397	2	0	0	100.3	100.3	1	6658.42	3.25	0	87.47	0	0.71	0	0	20.86	0	0	0	0	0	0	-8.73	-8.73
	Inverter	MV5-5	370015	4908690	2	0	0	100.3	100.3	1	6718.54	3.25	0	87.55	0	0.71	0	0	20.94	0	0	0	0	0	0	-8.89	-8.89

Inverter	MV4-3	369229	4909397	2	0	0	100.3	100.3	1	6778.64	3.25	0	87.62	0	0.71	0	0	21.02	0	0	0	0	0	0	-9.04	-9.04
Inverter	MV4-2	369272	4909397	2	0	0	100.3	100.3	1	6802.92	3.25	0	87.65	0	0.71	0	0	21.05	0	0	0	0	0	0	-9.11	-9.11
Inverter	MV5-2	370006	4908853	2	0	0	100.3	100.3	1	6832.21	3.25	0	87.69	0	0.71	0	0	21.09	0	0	0	0	0	0	-9.18	-9.18
Inverters	G_Inv6	366788.5	4902972	2	0	0	87.7	87.7	1	1600	3.25	0	75.08	0	2.53	0	0	2.16	0	0	0	0	0	0	7.88	7.88
Inverters	G_Inv7	366694.6	4902824.7	2	0	0	87.7	87.7	1	1604.52	3.25	0	75.11	0	2.53	0	0	2.17	0	0	0	0	0	0	7.85	7.85
Inverter	MV5-4	370324	4908707	2	0	0	100.3	100.3	1	6945.77	3.25	0	87.83	0	0.71	0	0	21.23	0	0	0	0	0	0	-9.46	-9.46
Inverter	MV5-3	370231	4908851	2	0	0	100.3	100.3	1	6983.93	3.25	0	87.88	0	0.71	0	0	21.28	0	0	0	0	0	0	-9.56	-9.56
Inverter	MV5-1	370020	4909142	2	0	0	100.3	100.3	1	7058.04	3.25	0	87.97	0	0.71	0	0	21.37	0	0	0	0	0	0	-9.74	-9.74
Inverters	G_Inv8	366844.5	4902838.5	2	0	0	87.7	87.7	1	1718.71	3.25	0	75.7	0	2.55	0	0	2.3	0	0	0	0	0	0	7.1	7.1
Inverters	G_Inv9	366750.9	4902691.8	2	0	0	87.7	87.7	1	1731.11	3.25	0	75.77	0	2.55	0	0	2.32	0	0	0	0	0	0	7.02	7.02
Inverters	G_Inv10	366900.7	4902704.8	2	0	0	87.7	87.7	1	1841.44	3.25	0	76.3	0	2.56	0	0	2.45	0	0	0	0	0	0	6.34	6.34
Inverter	MV6-1	370235	4907364	2	0	0	97.3	97.3	1	5998.54	3.25	0	86.56	0	0.7	0	0	19.99	0	0	0	0	0	0	-9.94	-9.94
Inverter	MV1-3	364440	4906039	2	0	0	89.1	89.1	1	2448.58	3.25	0	78.78	0	1.01	0	0	8.76	0	0	0	0	0	0	0.5	0.5
DSTATCOM - 10 MVAR #2	DSAT2	369403	4908757	2.5	0	0	96.6	96.6	1	6367.41	3.5	0	87.08	0	3.8	0	0	4.01	0	0	0	0	0	0	1.74	1.74
DSTATCOM - 10 MVAR #1	DSAT1	369437	4908757	2.5	0	0	96.6	96.6	1	6388.75	3.5	0	87.11	0	3.8	0	0	4.02	0	0	0	0	0	0	1.7	1.7
Inverter	MV2-2	365977	4906654	2	0	0	89.1	89.1	1	2915.64	3.25	0	80.29	0	1.13	0	0	9.49	0	0	0	0	0	0	-1.85	-1.85
SubstationTransformer	W_ST	369711.17	4906112.3	2.5	0	0	92	92	1	4882.05	4.25	0	84.77	0	1.61	2.36	0.26	8.48	0	0	0	0	0	0	-5.24	-5.24
Inverter	MV3-22	368656	4907142	2	0	0	89.1	89.1	1	4660.32	3.25	0	84.37	0	1.56	0	0	12	0	0	0	0	0	0	-8.87	-8.87
Westbrook Inverter Enclosur	W_INV3	369508	4906164	2	0	0	89.1	89.1	1	4729.97	3.25	0	84.5	0	1.57	0	0	12.1	0	0	0	0	0	0	-9.11	-9.11
Westbrook Inverter Enclosur	W_INV2	369374	4906388	2	0	0	89.1	89.1	1	4733.51	3.25	0	84.5	0	1.57	0	0	12.1	0	0	0	0	0	0	-9.12	-9.12
Westbrook Inverter Enclosur	W_INV4	369673	4906164	2	0	0	89.1	89.1	1	4873.45	3.25	0	84.76	0	1.61	0	0	12.29	0	0	0	0	0	0	-9.6	-9.6
Inverter	MV3-5	368340	4907843	2	0	0	89.1	89.1	1	4995.69	3.25	0	84.97	0	1.64	0	0	12.46	0	0	0	0	0	0	-10.01	-10.01
Inverter	MV3-1	368156	4907976	2	0	0	89.1	89.1	1	5000.95	3.25	0	84.98	0	1.64	0	0	12.46	0	0	0	0	0	0	-10.03	-10.03
Westbrook Inverter Enclosur	W_INV7	369780	4906417	2	0	0	89.1	89.1	1	5092.82	3.25	0	85.14	0	1.66	0	0	12.59	0	0	0	0	0	0	-10.33	-10.33
Westbrook Inverter Enclosur	W_INV5	369719	4906574	2	0	0	89.1	89.1	1	5124.13	3.25	0	85.19	0	1.67	0	0	12.63	0	0	0	0	0	0	-10.43	-10.43
Inverter	MV3-4	368502	4907925	2	0	0	89.1	89.1	1	5157.69	3.25	0	85.25	0	1.68	0	0	12.67	0	0	0	0	0	0	-10.54	-10.54
Westbrook Inverter Enclosur	W_INV6	369875	4906578	2	0	0	89.1	89.1	1	5257.95	3.25	0	85.42	0	1.7	0	0	12.81	0	0	0	0	0	0	-10.87	-10.87
Inverter	MV3-2	368671	4907928	2	0	0	89.1	89.1	1	5262.93	3.25	0	85.42	0	1.7	0	0	12.81	0	0	0	0	0	0	-10.88	-10.88
Fixed Reactor Bank 1	FRB1	369378	4908755	6	0	0	89.8	89.8	1	6350.21	5.25	0	87.06	0	-0.37	0	0	10.11	0	0	0	0	0	0	-7.02	-7.02
Fixed Reactor Bank 2	FRB2	369464	4908755	6	0	0	89.8	89.8	1	6404.24	5.25	0	87.13	0	-0.36	0	0	10.16	0	0	0	0	0	0	-7.15	-7.15
Inverter	MV4-15	369176	4908481	2	0	0	89.1	89.1	1	6010.07	3.25	0	86.58	0	1.89	0	0	13.77	0	0	0	0	0	0	-13.18	-13.18
Inverter	MV4-14	369176	4908507	2	0	0	89.1	89.1	1	6030.37	3.25	0	86.61	0	1.89	0	0	13.8	0	0	0	0	0	0	-13.24	-13.24
Inverter	MV4-13	369051	4908605	2	0	0	89.1	89.1	1	6031.12	3.25	0	86.61	0	1.89	0	0	13.8	0	0	0	0	0	0	-13.25	-13.25
Inverter	MV4-12	369043	4908803	2	0	0	89.1	89.1	1	6185.55	3.25	0	86.83	0	1.93	0	0	13.99	0	0	0	0	0	0	-13.7	-13.7
Inverter	MV5-6	369982	4908507	2	0	0	89.1	89.1	1	6563.34	3.25	0	87.34	0	2.02	0	0	14.46	0	0	0	0	0	0	-14.77	-14.77
Westbrook Inverter Enclosur	W_INV1	369409	4906578	2	0	0	86.1	86.1	1	4868.95	3.25	0	84.75	0	1.61	0	0	12.29	0	0	0	0	0	0	-12.59	-12.59
Inverter	MV6-4	370250	4906966	2	0	0	86.1	86.1	1	5783.01	3.25	0	86.24	0	1.83	0	0	13.49	0	0	0	0	0	0	-15.5	-15.5
Inverter Transformer	MV1-14 T	365157	4905049	2	0	0	69.4	69.4	1	1282.27	3.25	0	73.16	0	1.87	0	0	4.18	0	0	0	0	0	0	-9.85	-9.85
Inverter Transformer	MV1-13 T	364725	4905241	2	0	0	69.4	69.4	1	1604.08	3.25	0	75.1	0	2.02	0	0	4.55	0	0	0	0	0	0	-12.32	-12.32
Westbrook Inverter Transfor	W_INVTR1	369403	4906578	2	0	0	78.2	78.2	1	4864.03	3.25	0	84.74	0	-3.15	0	0	2.37	0	0	0	0	0	0	-5.71	-5.71
Inverter Transformer	MV1-10 T	365010	4905564	2	0	0	69.4	69.4	1	1816.76	3.25	0	76.19	0	2.1	0	0	4.78	0	0	0	0	0	0	-13.72	-13.72
Westbrook Inverter Transfor	W_INVTR2	369368	4906388	2	0	0	77.3	77.3	1	4728.49	3.25	0	84.49	0	-3.12	0	0	2.32	0	0	0	0	0	0	-6.35	-6.35
Westbrook Inverter Transfor	W_INVTR3	369514	4906164	2	0	0	77.3	77.3	1	4735.17	3.25	0	84.51	0	-3.12	0	0	2.32	0	0	0	0	0	0	-6.36	-6.36
Westbrook Inverter Transfor	W_INVTR4	369679	4906164	2	0	0	77.3	77.3	1	4878.69	3.25	0	84.77	0	-3.15	0	0	2.37	0	0	0	0	0	0	-6.64	-6.64
Westbrook Inverter Transfor	W_INVTR7	369786	4906417	2	0	0	77.3	77.3	1	5097.97	3.25	0	85.15	0	-3.2	0	0	2.45	0	0	0	0	0	0	-7.06	-7.06
Westbrook Inverter Transfor	W_INVTR5	369725	4906574	2	0	0	77.3	77.3	1	5129.17	3.25	0	85.2	0	-3.2	0	0	2.46	0	0	0	0	0	0	-7.11	-7.11
Inverter Transformer	MV1-7 T	364919	4905782	2	0	0	69.4	69.4	1	2049.96	3.25	0	77.23	0	2.19	0	0	5.02	0	0	0	0	0	0	-15.09	-15.09
Westbrook Inverter Transfor	W_INVTR6	369881	4906578	2	0	0	77.3	77.3	1	5263.04	3.25	0	85.42	0	-3.23	0	0	2.5	0	0	0	0	0	0	-7.36	-7.36
Inverter Transformer	MV2-1 T	365836	4906816	2	0	0	69.4	69.4	1	3052.15	3.25	0	80.69	0	2.52	0	0	5.93	0	0	0	0	0	0	-19.79	-19.79
Inverter Transformer	MV1-15 T	365309	4904994	2	0	0	56.1	56.1	1	1205.69	3.25	0	72.62	0	0.09	0	0	5.37	0	0	0	0	0	0	-22.02	-22.02
Inverter Transformer	MV6-4 T	370244	4906966	2	0	0	69.4	69.4	1	5778	3.25	0	86.24	0	3.15	0	0	7.88	0	0	0	0	0	0	-27.92	-27.92
Inverter Transformer	MV6-1 T	370230	4907364	2	0	0	69.4	69.4	1	5994.53	3.25	0	86.56	0	3.19	0	0	8.01	0	0	0	0	0	0	-28.41	-28.41
Inverter Transformer	MV1-12 T	365044	4905386	2	0	0	56.1	56.1	1	1635.68	3.25	0	75.27	0	0.25	0	0	6.31	0	0	0	0	0	0	-25.77	-25.77
Inverter Transformer	MV1-11 T	364649	4905414	2	0	0	56.1	56.1	1	1792.96	3.25	0	76.07	0	0.32	0	0	6.63	0	0	0	0	0	0	-26.96	-26.96
Inverter Transformer	MV1-8 T	364782	4905647	2	0	0	56.1	56.1	1	1959.15	3.25	0	76.84	0	0.39	0	0	6.96	0	0	0	0	0	0	-28.13	-28.13
Inverter Transformer	MV1-9 T	364555	4905646	2	0	0	56.1	56.1	1	2042.93	3.25	0	77.21	0	0.42	0	0	7.13	0	0	0	0	0	0	-28.7	-28.7
Inverter Transformer	MV1-4 T	364821	4905918	2	0	0	56.1	56.1	1	2206.51	3.25	0	77.87	0	0.49	0	0	7.44	0	0	0	0	0	0	-29.75	-29.75
Inverter Transformer	MV1-5 T	364676	4905892	2	0	0	56.1	56.1	1	2225.36	3.25	0	77.95	0	0.5	0	0	7.48	0	0	0	0	0	0	-29.87	-29.87
Inverter Transformer	MV1-6 T	364482	4905835	2	0	0	56.1	56.1	1	2245.14	3.25	0	78.02	0	0.51	0	0	7.52	0	0	0	0	0	0	-29.99	-29.99
Inverter Transformer	MV1-2 T	364759	4906063	2	0	0	56.1	56.1	1	2362.94	3.25	0	78.47	0	0.56	0	0	7.74	0	0	0	0	0	0	-30.71	-30.71
Inverter Transformer	MV1-3 T	364435	4906039	2	0	0	56.1	56.1	1	2450.57	3.25	0	78.79	0	0.6	0	0	7.9	0	0	0	0	0	0	-31.22	-31.22
Inverter Transformer	MV1-1 T	364721	4906166	2	0	0	56.1	56.1	1	2472.46	3.25	0	78.86	0	0.6	0	0	7.94	0	0	0	0	0	0	-31.35	-31.35
Inverter Transformer	MV2-4 T	365590	4906628	2	0	0	56.1	56.1	1	2840.38	3.25	0	80.07	0	0.76	0	0	8.59	0	0	0	0	0	0	-33.37	-33.37
Inverter Transformer	MV2-3 T	365814	4906641	2	0	0	56.1	56.1	1	2875.79	3.25	0	80.18	0	0.78	0	0	8.66	0	0	0	0	0	0	-33.55	-33.55
Inverter Transformer	MV2-2 T	365982	4906654	2	0	0	56.1	56.1	1	2916.61	3.25	0	80.3	0	0.79	0	0	8.73	0	0	0	0	0	0	-33.76	-33.76
Inverter Transformer	MV3-18 T	367757	4907412	2	0	0	56.1	56.1	1	4310.59	3.25	0	83.69	0	1.37	0	0	10.91	0	0	0	0	0	0	-39.91	-39.91
Inverter Transformer	MV3-12 T	367674	4907594	2	0	0	56.1	56.1	1	4421.51	3.25	0	83.91	0	1.41	0	0	11.07	0	0	0	0	0	0	-40.33	-40.33
Inverter Transformer	MV3-13 T	367958	4907577	2	0	0	56.1	56.1	1	4559	3.25	0	84.18	0	1.46	0	0	11.26	0	0	0	0	0	0	-40.84	-40.84
Inverter Transformer	MV3-21 T	368484	4907206	2	0	0	56.1	56.1	1	4589.78	3.25	0	84.24	0	1.47	0	0	11.3	0	0	0	0	0	0	-40.95	-40.95
Inverter Transformer	MV3-17 T	368183	4907472	2	0	0	56.1	56.1	1	4603.89	3.25	0	84.26	0	1.48	0	0	11.32	0	0	0	0	0	0	-41	-41
Inverter Transformer	MV3-19 T	368352	4907347	2	0	0	56.1	56.1	1	4610.39	3.25	0	84.27	0	1.48	0	0	11.33	0	0	0	0	0	0	-41.03	-41.03
Inverter Transformer	MV3-22 T	368661	4907142	2	0	0	56.1	56.1	1	4663.8	3.25	0	84.37	0	1.5	0	0	11.4	0	0	0	0	0	0	-41.22	-41.22
Inverter Transformer	MV3-7 T	367951	4907754	2	0	0	56.1	56.1	1	4703.17	3.25	0	84.45	0	1.52	0	0	11.46	0	0	0	0	0	0	-41.36	-41.36
Inverter Transformer	MV3-15 T	368351	4907477	2	0	0	56.1	56.1	1	4710.71	3.25	0	84.46	0	1.52	0	0	11.47	0	0	0	0	0	0	-41.39	-41.39

	Inverter Transformer	MV3-10 T	368162	4907669	2	0	0	56.1	56.1	1	4750.61	3.25	0	84.53	0	1.53	0	0	11.52	0	0	0	0	0	0	-41.53	-41.53
	Inverter Transformer	MV3-20 T	368683	4907317	2	0	0	56.1	56.1	1	4805.94	3.25	0	84.64	0	1.55	0	0	11.6	0	0	0	0	0	0	-41.73	-41.73
	Inverter Transformer	MV3-16 T	368509	4907475	2	0	0	56.1	56.1	1	4809.23	3.25	0	84.64	0	1.56	0	0	11.6	0	0	0	0	0	0	-41.74	-41.74
	Inverter Transformer	MV3-3 T	367944	4907927	2	0	0	56.1	56.1	1	4846.11	3.25	0	84.71	0	1.57	0	0	11.65	0	0	0	0	0	0	-41.87	-41.87
	Inverter Transformer	MV3-11 T	368340	4907662	2	0	0	56.1	56.1	1	4850.12	3.25	0	84.72	0	1.57	0	0	11.65	0	0	0	0	0	0	-41.88	-41.88
	Inverter Transformer	MV3-6 T	368156	4907834	2	0	0	56.1	56.1	1	4882.79	3.25	0	84.77	0	1.58	0	0	11.7	0	0	0	0	0	0	-42	-42
	Inverter Transformer	MV3-14 T	368678	4907498	2	0	0	56.1	56.1	1	4936.89	3.25	0	84.87	0	1.6	0	0	11.77	0	0	0	0	0	0	-42.18	-42.18
	Inverter Transformer	MV3-9 T	368517	4907703	2	0	0	56.1	56.1	1	4990.92	3.25	0	84.96	0	1.62	0	0	11.84	0	0	0	0	0	0	-42.37	-42.37
	Inverter Transformer	MV3-5 T	368335	4907843	2	0	0	56.1	56.1	1	4992.77	3.25	0	84.97	0	1.62	0	0	11.84	0	0	0	0	0	0	-42.38	-42.38
	Inverter Transformer	MV3-1 T	368150	4907976	2	0	0	56.1	56.1	1	4997.66	3.25	0	84.98	0	1.62	0	0	11.85	0	0	0	0	0	0	-42.39	-42.39
	Inverter Transformer	MV3-8 T	368685	4907712	2	0	0	56.1	56.1	1	5103.94	3.25	0	85.16	0	1.66	0	0	11.99	0	0	0	0	0	0	-42.75	-42.75
	Inverter Transformer	MV3-4 T	368507	4907925	2	0	0	56.1	56.1	1	5160.68	3.25	0	85.25	0	1.68	0	0	12.06	0	0	0	0	0	0	-42.94	-42.94
	Inverter Transformer	MV3-2 T	368677	4907928	2	0	0	56.1	56.1	1	5266.65	3.25	0	85.43	0	1.72	0	0	12.2	0	0	0	0	0	0	-43.29	-43.29
	Inverter Transformer	MV6-3 T	370202	4907140	2	0	0	56.1	56.1	1	5840.88	3.25	0	86.33	0	1.91	0	0	12.91	0	0	0	0	0	0	-45.1	-45.1
	Inverter Transformer	MV6-2 T	370091	4907339	2	0	0	56.1	56.1	1	5868.32	3.25	0	86.37	0	1.92	0	0	12.95	0	0	0	0	0	0	-45.18	-45.18
	Inverter Transformer	MV4-15 T	369170	4908481	2	0	0	56.1	56.1	1	6006.32	3.25	0	86.57	0	1.97	0	0	13.11	0	0	0	0	0	0	-45.59	-45.59
	Inverter Transformer	MV4-14 T	369182	4908507	2	0	0	56.1	56.1	1	6034.12	3.25	0	86.61	0	1.98	0	0	13.14	0	0	0	0	0	0	-45.67	-45.67
	Inverter Transformer	MV4-13 T	369057	4908605	2	0	0	56.1	56.1	1	6034.74	3.25	0	86.61	0	1.98	0	0	13.14	0	0	0	0	0	0	-45.67	-45.67
	Inverter Transformer	MV4-12 T	369049	4908803	2	0	0	56.1	56.1	1	6189.07	3.25	0	86.83	0	2.02	0	0	13.32	0	0	0	0	0	0	-46.12	-46.12
	Inverter Transformer	MV4-7 T	369040	4909001	2	0	0	56.1	56.1	1	6345.27	3.25	0	87.05	0	2.07	0	0	13.5	0	0	0	0	0	0	-46.57	-46.57
	Inverter Transformer	MV4-11 T	369269	4908855	2	0	0	56.1	56.1	1	6362.05	3.25	0	87.07	0	2.08	0	0	13.52	0	0	0	0	0	0	-46.61	-46.61
	Inverter Transformer	MV4-10 T	369307	4908858	2	0	0	56.1	56.1	1	6387.51	3.25	0	87.11	0	2.08	0	0	13.55	0	0	0	0	0	0	-46.69	-46.69
	Inverter Transformer	MV4-8 T	369262	4909001	2	0	0	56.1	56.1	1	6474.65	3.25	0	87.22	0	2.11	0	0	13.65	0	0	0	0	0	0	-46.93	-46.93
	Inverter Transformer	MV4-9 T	369284	4909001	2	0	0	56.1	56.1	1	6487.75	3.25	0	87.24	0	2.11	0	0	13.67	0	0	0	0	0	0	-46.96	-46.96
	Inverter Transformer	MV4-4 T	369033	4909199	2	0	0	56.1	56.1	1	6504.87	3.25	0	87.26	0	2.12	0	0	13.69	0	0	0	0	0	0	-47.01	-47.01
	Inverter Transformer	MV5-6 T	369987	4908507	2	0	0	56.1	56.1	1	6566.82	3.25	0	87.35	0	2.14	0	0	13.75	0	0	0	0	0	0	-47.18	-47.18
	Inverter Transformer	MV4-6 T	369249	4909192	2	0	0	56.1	56.1	1	6621.72	3.25	0	87.42	0	2.15	0	0	13.82	0	0	0	0	0	0	-47.33	-47.33
	Inverter Transformer	MV4-5 T	369283	4909199	2	0	0	56.1	56.1	1	6647.16	3.25	0	87.45	0	2.16	0	0	13.84	0	0	0	0	0	0	-47.4	-47.4
	Inverter Transformer	MV4-1 T	369017	4909397	2	0	0	56.1	56.1	1	6661.67	3.25	0	87.47	0	2.16	0	0	13.86	0	0	0	0	0	0	-47.44	-47.44
	Inverter Transformer	MV5-5 T	370021	4908690	2	0	0	56.1	56.1	1	6722.65	3.25	0	87.55	0	2.18	0	0	13.93	0	0	0	0	0	0	-47.6	-47.6
	Inverter Transformer	MV4-3 T	369234	4909397	2	0	0	56.1	56.1	1	6781.45	3.25	0	87.63	0	2.2	0	0	13.99	0	0	0	0	0	0	-47.76	-47.76
	Inverter Transformer	MV4-2 T	369267	4909397	2	0	0	56.1	56.1	1	6800.09	3.25	0	87.65	0	2.2	0	0	14.01	0	0	0	0	0	0	-47.81	-47.81
	Inverter Transformer	MV5-2 T	370011	4908853	2	0	0	56.1	56.1	1	6835.57	3.25	0	87.7	0	2.21	0	0	14.05	0	0	0	0	0	0	-47.9	-47.9
	Inverter Transformer	MV5-4 T	370330	4908707	2	0	0	56.1	56.1	1	6950.01	3.25	0	87.84	0	2.25	0	0	14.18	0	0	0	0	0	0	-48.2	-48.2
	Inverter Transformer	MV5-3 T	370237	4908851	2	0	0	56.1	56.1	1	6988.07	3.25	0	87.89	0	2.26	0	0	14.22	0	0	0	0	0	0	-48.3	-48.3
	Inverter Transformer	MV5-1 T	370015	4909142	2	0	0	56.1	56.1	1	7054.78	3.25	0	87.97	0	2.27	0	0	14.29	0	0	0	0	0	0	-48.47	-48.47
	Line Reactor	NGR	369421	4908787.5	5	0	0	45.4	45.4	1	6402.46	5.25	0	87.13	0	3.23	1.36	0.09	2.62	0	0	0	0	0	0	-48.99	-48.99
Limit. Valu	0	0																								
Level D/N:	24.4419	24.4419																								

Receiver: Existing Noise Receptor
ID: G-80
X: 366139.2
Y: 4901589.1
Z: 4.5
Ground: 0

ISO	Description	ID	X	Y	Z	Ground	ReflOrd	LxT	LxN	L/A	Dist.	hm	Freq	Adiv	K0b	Agr	Abar	z	Aatm	Afol	Ahous	Cmet	CmetN	Dc	RL	LtotT	LtotN
	Sol_Luce Substation	S_Substation	369426	4908792	3.5	0	0	112.1	112.1	1	7917.37	5.25	0	88.97	0	1.54	2.28	0.32	11.58	0	0	0	0	0	0	7.7	7.7
	Inverter	MV1-15	365315	4904994	2	0	0	100.3	100.3	1	3503.24	3.25	0	81.89	0	0.45	0	0	16.24	0	0	0	0	0	0	1.73	1.73
	Inverter	MV1-12	365038	4905386	2	0	0	100.3	100.3	1	3953.37	3.25	0	82.94	0	0.52	0	0	16.97	0	0	0	0	0	0	-0.12	-0.12
	Inverter	MV1-11	364655	4905414	2	0	0	100.3	100.3	1	4102.77	3.25	0	83.26	0	0.54	0	0	17.21	0	0	0	0	0	0	-0.7	-0.7
	Inverter	MV1-8	364788	4905647	2	0	0	100.3	100.3	1	4276.95	3.25	0	83.62	0	0.56	0	0	17.49	0	0	0	0	0	0	-1.36	-1.36
	Inverter	MV1-9	364561	4905646	2	0	0	100.3	100.3	1	4353.06	3.25	0	83.78	0	0.57	0	0	17.6	0	0	0	0	0	0	-1.64	-1.64
	Inverter	MV1-4	364815	4905918	2	0	0	100.3	100.3	1	4526.91	3.25	0	84.12	0	0.59	0	0	17.87	0	0	0	0	0	0	-2.27	-2.27
	Inverter	MV1-5	364671	4905892	2	0	0	100.3	100.3	1	4546.49	3.25	0	84.15	0	0.6	0	0	17.9	0	0	0	0	0	0	-2.34	-2.34
	Inverter	MV1-6	364477	4905835	2	0	0	100.3	100.3	1	4559.67	3.25	0	84.18	0	0.6	0	0	17.92	0	0	0	0	0	0	-2.39	-2.39
	Inverter	MV1-2	364753	4906063	2	0	0	100.3	100.3	1	4683.73	3.25	0	84.41	0	0.61	0	0	18.11	0	0	0	0	0	0	-2.82	-2.82
	Inverter	MV1-1	364715	4906166	2	0	0	100.3	100.3	1	4793.37	3.25	0	84.61	0	0.62	0	0	18.27	0	0	0	0	0	0	-3.2	-3.2
	Inverter	MV2-3	365820	4906641	2	0	0	100.3	100.3	1	5061.97	3.25	0	85.09	0	0.65	0	0	18.67	0	0	0	0	0	0	-4.09	-4.09
	Inverter	MV2-4	365586	4906624	2	0	0	100.3	100.3	1	5065.2	3.25	0	85.09	0	0.65	0	0	18.68	0	0	0	0	0	0	-4.1	-4.1
	Inverter	MV1-14	365163	4905049	2	0	0	97.3	97.3	1	3594.98	3.25	0	82.11	0	0.47	0	0	16.39	0	0	0	0	0	0	-1.66	-1.66
	Inverters	G_Inv9	366750.9	4902691.8	2	0	0	87.7	87.7	1	1261	3.25	0	73.01	0	2.49	0	0	1.75	0	0	0	0	0	0	10.41	10.41
	Gardiner Substation	G_Sub	366586.3	4903349.9	2.5	0	0	90.8	90.8	1	1816.68	3.5	0	76.19	0	-0.21	0	0	4.05	0	0	0	0	0	0	10.75	10.75
	Inverter	MV1-13	364731	4905241	2	0	0	97.3	97.3	1	3914	3.25	0	82.85	0	0.51	0	0	16.91	0	0	0	0	0	0	-2.97	-2.97
	Inverters	G_Inv10	366900.7	4902704.8	2	0	0	87.7	87.7	1	1350.81	3.25	0	73.61	0	2.5	0	0	1.86	0	0	0	0	0	0	9.69	9.69
	Inverters	G_Inv7	366694.6	4902824.7	2	0	0	87.7	87.7	1	1354.69	3.25	0	73.64	0	2.5	0	0	1.87	0	0	0	0	0	0	9.66	9.66
	Inverter	MV1-10	365004	4905564	2	0	0	97.3	97.3	1	4133.83	3.25	0	83.33	0	0.55	0	0	17.26	0	0	0	0	0	0	-3.82	-3.82
	Inverter	MV3-18	367752	4907412	2	0	0	100.3	100.3	1	6042.13	3.25	0	86.62	0	0.71	0	0	20.05	0	0	0	0	0	0	-7.07	-7.07
	Inverter	MV3-21	368478	4907206	2	0	0	100.3	100.3	1	6084.37	3.25	0	86.68	0	0.71	0	0	20.11	0	0	0	0	0	0	-7.19	-7.19
	Inverters	G_Inv8	366844.5	4902838.5	2	0	0	87.7	87.7	1	1434.73	3.25	0	74.14	0	2.51	0	0	1.96	0	0	0	0	0	0	9.05	9.05
	Inverter	MV1-7	364925	4905782	2	0	0	97.3	97.3	1	4365.17	3.25	0	83.8	0	0.57	0	0	17.62	0	0	0	0	0	0	-4.69	-4.69
	Inverter	MV3-19	368357	4907347	2	0	0	100.3	100.3	1	6170.26	3.25	0	86.81	0	0.71	0	0	20.22	0	0	0	0	0	0	-7.43	-7.43
	Inverter	MV3-12	367668	4907594	2	0	0	100.3	100.3	1	6196.46	3.37	0	86.84	0	1.71	2.46	0	20.26	0	0	0	0	0	0	-10.95	-10.95

Inverter	MV3-17	368178	4907472	2	0	0	100.3	100.3	1	6226.17	3.25	0	86.88	0	0.71	0	0	20.3	0	0	0	0	0	0	-7.58	-7.58
Inverters	G_Inv5	366638.5	4902958.1	2	0	0	87.7	87.7	1	1457.21	3.25	0	74.27	0	2.51	0	0	1.99	0	0	0	0	0	0	8.88	8.88
Inverter	MV3-13	367963	4907577	2	0	0	100.3	100.3	1	6259.49	3.25	0	86.93	0	0.71	0	0	20.34	0	0	0	0	0	0	-7.67	-7.67
Inverter	MV3-20	368689	4907317	2	0	0	100.3	100.3	1	6269.79	3.25	0	86.95	0	0.71	0	0	20.36	0	0	0	0	0	0	-7.7	-7.7
Inverter	MV3-15	368357	4907477	2	0	0	100.3	100.3	1	6291.74	3.25	0	86.98	0	0.71	0	0	20.38	0	0	0	0	0	0	-7.76	-7.76
Inverter	MV3-16	368514	4907475	2	0	0	100.3	100.3	1	6346.93	3.25	0	87.05	0	0.71	0	0	20.46	0	0	0	0	0	0	-7.91	-7.91
Inverter	MV3-10	368167	4907669	2	0	0	100.3	100.3	1	6409.15	3.25	0	87.14	0	0.71	0	0	20.54	0	0	0	0	0	0	-8.08	-8.08
Inverter	MV3-7	367945	4907754	2	0	0	100.3	100.3	1	6423.93	3.25	0	87.16	0	0.71	0	0	20.56	0	0	0	0	0	0	-8.12	-8.12
Inverter	MV3-14	368684	4907498	2	0	0	100.3	100.3	1	6433.59	3.25	0	87.17	0	0.71	0	0	20.57	0	0	0	0	0	0	-8.14	-8.14
Inverter	MV3-11	368346	4907662	2	0	0	100.3	100.3	1	6461.43	3.25	0	87.21	0	0.71	0	0	20.61	0	0	0	0	0	0	-8.22	-8.22
Inverters	G_Inv6	366788.5	4902972	2	0	0	87.7	87.7	1	1527.75	3.25	0	74.68	0	2.52	0	0	2.08	0	0	0	0	0	0	8.38	8.38
Inverter	MV3-9	368512	4907703	2	0	0	100.3	100.3	1	6558.2	3.25	0	87.34	0	0.72	0	0	20.73	0	0	0	0	0	0	-8.47	-8.47
Inverter	MV3-6	368162	4907834	2	0	0	100.3	100.3	1	6564.34	3.25	0	87.34	0	0.72	0	0	20.74	0	0	0	0	0	0	-8.49	-8.49
Inverter	MV3-3	367939	4907927	2	0	0	100.3	100.3	1	6588.49	3.25	0	87.38	0	0.72	0	0	20.77	0	0	0	0	0	0	-8.55	-8.55
Inverter	MV3-8	368680	4907712	2	0	0	100.3	100.3	1	6629.15	3.25	0	87.43	0	0.71	0	0	20.83	0	0	0	0	0	0	-8.66	-8.66
Inverters	G_Inv3	366583.7	4903091.4	2	0	0	87.7	87.7	1	1566.68	3.25	0	74.9	0	2.53	0	0	2.12	0	0	0	0	0	0	8.11	8.11
Inverter	MV6-3	370207	4907140	2	0	0	100.3	100.3	1	6881.82	3.25	0	87.75	0	0.71	0	0	21.15	0	0	0	0	0	0	-9.3	-9.3
Inverter	MV6-2	370085	4907339	2	0	0	100.3	100.3	1	6973.57	3.25	0	87.87	0	0.71	0	0	21.27	0	0	0	0	0	0	-9.53	-9.53
Inverters	G_Inv4	366732.8	4903105	2	0	0	87.7	87.7	1	1627.98	3.25	0	75.23	0	2.54	0	0	2.2	0	0	0	0	0	0	7.69	7.69
Inverters	G_Inv1	366526.4	4903225.8	2	0	0	87.7	87.7	1	1681.88	3.25	0	75.52	0	2.54	0	0	2.26	0	0	0	0	0	0	7.34	7.34
Inverter	MV2-1	365842	4906816	2	0	0	97.3	97.3	1	5235.34	3.25	0	85.38	0	0.66	0	0	18.92	0	0	0	0	0	0	-7.65	-7.65
Inverters	G_Inv2	366676.9	4903239.1	2	0	0	87.7	87.7	1	1735.4	3.25	0	75.79	0	2.55	0	0	2.32	0	0	0	0	0	0	7	7
Inverter	MV4-11	369264	4908855	2	0	0	100.3	100.3	1	7909.34	3.25	0	88.96	0	0.66	0	0	22.4	0	0	0	0	0	0	-11.71	-11.71
Inverter	MV4-10	369312	4908858	2	0	0	100.3	100.3	1	7931.18	3.25	0	88.99	0	0.66	0	0	22.43	0	0	0	0	0	0	-11.76	-11.76
Inverter	MV4-7	369035	4909001	2	0	0	100.3	100.3	1	7957.51	3.25	0	89.02	0	0.66	0	0	22.46	0	0	0	0	0	0	-11.82	-11.82
Inverter	MV4-8	369256	4909001	2	0	0	100.3	100.3	1	8040.57	3.25	0	89.11	0	0.65	0	0	22.55	0	0	0	0	0	0	-12	-12
Inverter	MV4-9	369289	4909001	2	0	0	100.3	100.3	1	8053.42	3.25	0	89.12	0	0.65	0	0	22.57	0	0	0	0	0	0	-12.02	-12.02
Inverter	MV5-5	370015	4908690	2	0	0	100.3	100.3	1	8089.78	3.25	0	89.16	0	0.65	0	0	22.61	0	0	0	0	0	0	-12.1	-12.1
Inverter	MV4-4	369027	4909199	2	0	0	100.3	100.3	1	8139.41	3.25	0	89.21	0	0.64	0	0	22.67	0	0	0	0	0	0	-12.21	-12.21
Inverter	MV4-6	369243	4909192	2	0	0	100.3	100.3	1	8212.04	3.25	0	89.29	0	0.63	0	0	22.75	0	0	0	0	0	0	-12.36	-12.36
Inverter	MV5-2	370006	4908853	2	0	0	100.3	100.3	1	8229	3.25	0	89.31	0	0.63	0	0	22.77	0	0	0	0	0	0	-12.4	-12.4
Inverter	MV4-5	369289	4909199	2	0	0	100.3	100.3	1	8236.01	3.25	0	89.31	0	0.63	0	0	22.78	0	0	0	0	0	0	-12.41	-12.41
Inverter	MV5-4	370324	4908707	2	0	0	100.3	100.3	1	8256.94	3.25	0	89.34	0	0.63	0	0	22.8	0	0	0	0	0	0	-12.45	-12.45
Inverter	MV4-1	369011	4909397	2	0	0	100.3	100.3	1	8319.29	3.25	0	89.4	0	0.62	0	0	22.87	0	0	0	0	0	0	-12.58	-12.58
Inverter	MV5-3	370231	4908851	2	0	0	100.3	100.3	1	8335.35	3.25	0	89.42	0	0.62	0	0	22.89	0	0	0	0	0	0	-12.62	-12.62
Inverter	MV4-3	369229	4909397	2	0	0	100.3	100.3	1	8397.03	3.25	0	89.48	0	0.61	0	0	22.96	0	0	0	0	0	0	-12.74	-12.74
Inverter	MV4-2	369272	4909397	2	0	0	100.3	100.3	1	8412.95	3.25	0	89.5	0	0.61	0	0	22.98	0	0	0	0	0	0	-12.78	-12.78
Inverter	MV5-1	370020	4909142	2	0	0	100.3	100.3	1	8491.58	3.25	0	89.58	0	0.6	0	0	23.06	0	0	0	0	0	0	-12.93	-12.93
Inverter	MV6-1	370235	4907364	2	0	0	97.3	97.3	1	7079.9	3.25	0	88	0	0.71	0	0	21.4	0	0	0	0	0	0	-12.8	-12.8
DSTATCOM - 10 MVAR #2	DSAT2	369403	4908757	2.5	0	0	96.6	96.6	1	7875.99	3.5	0	88.93	0	3.88	0	0	4.71	0	0	0	0	0	0	-0.89	-0.89
DSTATCOM - 10 MVAR #1	DSAT1	369437	4908757	2.5	0	0	96.6	96.6	1	7890.14	3.5	0	88.94	0	3.88	0	0	4.72	0	0	0	0	0	0	-0.91	-0.91
SubstationTransformer	W_ST	369711.17	4906112.3	2.5	0	0	92	92	1	5763.51	3.5	0	86.21	0	0.72	0	-0.11	9.49	0	0	0	0	0	0	-4.44	-4.44
Inverter	MV1-3	364440	4906039	2	0	0	89.1	89.1	1	4763.29	3.25	0	84.56	0	1.58	0	0	12.14	0	0	0	0	0	0	-9.23	-9.23
Inverter	MV2-2	365977	4906654	2	0	0	89.1	89.1	1	5067.5	3.25	0	85.1	0	1.66	0	0	12.55	0	0	0	0	0	0	-10.25	-10.25
Westbrook Inverter Enclosur	W_INV3	369508	4906164	2	0	0	89.1	89.1	1	5681.42	3.25	0	86.09	0	1.81	0	0	13.36	0	0	0	0	0	0	-12.2	-12.2
Westbrook Inverter Enclosur	W_INV4	369673	4906164	2	0	0	89.1	89.1	1	5780.78	3.25	0	86.24	0	1.83	0	0	13.48	0	0	0	0	0	0	-12.5	-12.5
Westbrook Inverter Enclosur	W_INV2	369374	4906388	2	0	0	89.1	89.1	1	5787.35	3.25	0	86.25	0	1.83	0	0	13.49	0	0	0	0	0	0	-12.52	-12.52
Westbrook Inverter Enclosur	W_INV7	369780	4906417	2	0	0	89.1	89.1	1	6046.82	3.25	0	86.63	0	1.9	0	0	13.82	0	0	0	0	0	0	-13.29	-13.29
Inverter	MV3-22	368656	4907142	2	0	0	89.1	89.1	1	6096.64	3.25	0	86.7	0	1.91	0	0	13.88	0	0	0	0	0	0	-13.44	-13.44
Westbrook Inverter Enclosur	W_INV5	369719	4906574	2	0	0	89.1	89.1	1	6137.12	3.25	0	86.76	0	1.92	0	0	13.93	0	0	0	0	0	0	-13.56	-13.56
Westbrook Inverter Enclosur	W_INV6	369875	4906578	2	0	0	89.1	89.1	1	6232.6	3.25	0	86.89	0	1.94	0	0	14.05	0	0	0	0	0	0	-13.83	-13.83
Inverter	MV3-5	368340	4907843	2	0	0	89.1	89.1	1	6629.84	3.25	0	87.43	0	2.04	0	0	14.54	0	0	0	0	0	0	-14.95	-14.95
Inverter	MV3-1	368156	4907976	2	0	0	89.1	89.1	1	6697.76	3.25	0	87.52	0	2.06	0	0	14.62	0	0	0	0	0	0	-15.14	-15.14
Inverter	MV3-4	368502	4907925	2	0	0	89.1	89.1	1	6762.13	3.25	0	87.6	0	2.07	0	0	14.7	0	0	0	0	0	0	-15.32	-15.32
Inverter	MV3-2	368671	4907928	2	0	0	89.1	89.1	1	6825.81	3.25	0	87.68	0	2.09	0	0	14.78	0	0	0	0	0	0	-15.49	-15.49
Fixed Reactor Bank 1	FRB1	369378	4908755	6	0	0	89.8	89.8	1	7863.84	5.25	0	88.91	0	-0.19	0	0	11.54	0	0	0	0	0	0	-10.49	-10.49
Fixed Reactor Bank 2	FRB2	369464	4908755	6	0	0	89.8	89.8	1	7899.65	5.25	0	88.95	0	-0.18	0	0	11.57	0	0	0	0	0	0	-10.56	-10.56
Inverter	MV4-15	369176	4908481	2	0	0	89.1	89.1	1	7531.3	3.25	0	88.54	0	2.25	0	0	15.61	0	0	0	0	0	0	-17.34	-17.34
Inverter	MV4-14	369176	4908507	2	0	0	89.1	89.1	1	7555.1	3.25	0	88.56	0	2.26	0	0	15.64	0	0	0	0	0	0	-17.4	-17.4
Inverter	MV4-13	369051	4908605	2	0	0	89.1	89.1	1	7596.15	3.25	0	88.61	0	2.27	0	0	15.68	0	0	0	0	0	0	-17.51	-17.51
Inverter	MV4-12	369043	4908803	2	0	0	89.1	89.1	1	7776.4	3.25	0	88.82	0	2.31	0	0	15.89	0	0	0	0	0	0	-17.96	-17.96
Inverter	MV5-6	369982	4908507	2	0	0	89.1	89.1	1	7913.56	3.25	0	88.97	0	2.34	0	0	16.04	0	0	0	0	0	0	-18.3	-18.3
Westbrook Inverter Enclosur	W_INV1	369409	4906578	2	0	0	86.1	86.1	1	5964.96	3.25	0	86.51	0	1.88	0	0	13.72	0	0	0	0	0	0	-16.05	-16.05
Inverter	MV6-4	370250	4906966	2	0	0	86.1	86.1	1	6768.29	3.25	0	87.61	0	2.07	0	0	14.71	0	0	0	0	0	0	-18.33	-18.33
Westbrook Inverter Transfor	W_INVTR1	369403	4906578	2	0	0	78.2	78.2	1	5961.67	3.25	0	86.51	0	-3.36	0	0	2.73	0	0	0	0	0	0	-7.63	-7.63
Westbrook Inverter Transfor	W_INVTR3	369514	4906164	2	0	0	77.3	77.3	1	5684.98	3.25	0	86.09	0	-3.31	0	0	2.64	0	0	0	0	0	0	-8.08	-8.08
Westbrook Inverter Transfor	W_INVTR2	369368	4906388	2	0	0	77.3	77.3	1	5783.99	3.25	0	86.24	0	-3.33	0	0	2.67	0	0	0	0	0	0	-8.25	-8.25
Westbrook Inverter Transfor	W_INVTR4	369679	4906164	2	0	0	77.3	77.3	1	5784.45	3.25	0	86.25	0	-3.33	0	0	2.67	0	0	0	0	0	0	-8.25	-8.25
Westbrook Inverter Transfor	W_INVTR7	369786	4906417	2	0	0	77.3	77.3	1	6050.44	3.25	0	86.64	0	-3.38	0	0	2.76	0	0	0	0	0	0	-8.67	-8.67
Westbrook Inverter Transfor	W_INVTR5	369725	4906574	2	0	0	77.3	77.3	1	6140.62	3.25	0	86.76	0	-3.39	0	0	2.79	0	0	0	0	0	0	-8.81	-8.81
Westbrook Inverter Transfor	W_INVTR6	369881	4906578	2	0	0	77.3	77.3	1	6236.2	3.25	0	86.9	0	-3.41	0	0	2.81	0	0	0	0	0	0	-8.96	-8.96
Inverter Transformer	MV1-14 T	365157	4905049	2	0	0	69.4	69.4	1	3596.61	3.25	0	82.12	0	2.68	0	0	6.37	0	0	0	0	0	0	-21.82	-21.82
Inverter Transformer	MV1-13 T	364725	4905241	2	0	0	69.4	69.4	1	3916.16	3.25	0	82.86	0	2.76	0	0	6.61	0	0	0	0	0	0	-22.88	-22.88
Inverter Transformer	MV1-10 T	365010	4905564	2	0	0	69.4	69.4	1	4132.18	3.25	0	83.32	0	2.82	0	0	6.77	0	0	0	0	0	0	-23.57	-23.57

Inverter Transformer	MV1-7 T	364919	4905782	2	0	0	69.4	69.4	1	4366.84	3.25	0	83.8	0	2.87	0	0	6.94	0	0	0	0	0	0	-24.27	-24.27
Inverter Transformer	MV2-1 T	365836	4906816	2	0	0	69.4	69.4	1	5235.69	3.25	0	85.38	0	3.06	0	0	7.54	0	0	0	0	0	0	-26.62	-26.62
Inverter Transformer	MV6-4 T	370244	4906966	2	0	0	69.4	69.4	1	6764.65	3.25	0	87.6	0	3.29	0	0	8.47	0	0	0	0	0	0	-30.01	-30.01
Inverter Transformer	MV6-1 T	370230	4907364	2	0	0	69.4	69.4	1	7077.01	3.25	0	88	0	3.33	0	0	8.64	0	0	0	0	0	0	-30.62	-30.62
Inverter Transformer	MV1-15 T	365309	4904994	2	0	0	56.1	56.1	1	3504.65	3.25	0	81.89	0	1.04	0	0	9.7	0	0	0	0	0	0	-36.57	-36.57
Inverter Transformer	MV1-12 T	365044	4905386	2	0	0	56.1	56.1	1	3951.7	3.25	0	82.94	0	1.22	0	0	10.38	0	0	0	0	0	0	-38.48	-38.48
Inverter Transformer	MV1-11 T	364649	4905414	2	0	0	56.1	56.1	1	4104.94	3.25	0	83.27	0	1.29	0	0	10.61	0	0	0	0	0	0	-39.1	-39.1
Inverter Transformer	MV1-8 T	364782	4905647	2	0	0	56.1	56.1	1	4278.85	3.25	0	83.63	0	1.35	0	0	10.86	0	0	0	0	0	0	-39.78	-39.78
Inverter Transformer	MV1-9 T	364555	4905646	2	0	0	56.1	56.1	1	4355.24	3.25	0	83.78	0	1.38	0	0	10.97	0	0	0	0	0	0	-40.08	-40.08
Inverter Transformer	MV1-4 T	364821	4905918	2	0	0	56.1	56.1	1	4525.16	3.25	0	84.11	0	1.45	0	0	11.21	0	0	0	0	0	0	-40.71	-40.71
Inverter Transformer	MV1-5 T	364676	4905892	2	0	0	56.1	56.1	1	4544.88	3.25	0	84.15	0	1.46	0	0	11.24	0	0	0	0	0	0	-40.79	-40.79
Inverter Transformer	MV1-6 T	364482	4905835	2	0	0	56.1	56.1	1	4557.85	3.25	0	84.18	0	1.46	0	0	11.26	0	0	0	0	0	0	-40.83	-40.83
Inverter Transformer	MV1-2 T	364759	4906063	2	0	0	56.1	56.1	1	4681.96	3.25	0	84.41	0	1.51	0	0	11.43	0	0	0	0	0	0	-41.29	-41.29
Inverter Transformer	MV1-3 T	364435	4906039	2	0	0	56.1	56.1	1	4765.07	3.25	0	84.56	0	1.54	0	0	11.54	0	0	0	0	0	0	-41.58	-41.58
Inverter Transformer	MV1-1 T	364721	4906166	2	0	0	56.1	56.1	1	4791.59	3.25	0	84.61	0	1.55	0	0	11.58	0	0	0	0	0	0	-41.68	-41.68
Inverter Transformer	MV2-3 T	365814	4906641	2	0	0	56.1	56.1	1	5062.36	3.25	0	85.09	0	1.65	0	0	11.94	0	0	0	0	0	0	-42.61	-42.61
Inverter Transformer	MV2-2 T	365982	4906654	2	0	0	56.1	56.1	1	5067.34	3.25	0	85.1	0	1.65	0	0	11.94	0	0	0	0	0	0	-42.63	-42.63
Inverter Transformer	MV2-4 T	365590	4906628	2	0	0	56.1	56.1	1	5068.74	3.25	0	85.1	0	1.65	0	0	11.94	0	0	0	0	0	0	-42.63	-42.63
Inverter Transformer	MV3-18 T	367757	4907412	2	0	0	56.1	56.1	1	6043.46	3.25	0	86.63	0	1.98	0	0	13.15	0	0	0	0	0	0	-45.7	-45.7
Inverter Transformer	MV3-21 T	368484	4907206	2	0	0	56.1	56.1	1	6086.68	3.25	0	86.69	0	1.99	0	0	13.2	0	0	0	0	0	0	-45.83	-45.83
Inverter Transformer	MV3-22 T	368661	4907142	2	0	0	56.1	56.1	1	6098.7	3.25	0	86.7	0	2	0	0	13.22	0	0	0	0	0	0	-45.86	-45.86
Inverter Transformer	MV3-19 T	368352	4907347	2	0	0	56.1	56.1	1	6168.46	3.25	0	86.8	0	2.02	0	0	13.3	0	0	0	0	0	0	-46.06	-46.06
Inverter Transformer	MV3-12 T	367674	4907594	2	0	0	56.1	56.1	1	6197.94	3.37	0	86.84	0	2.86	1.74	0	13.33	0	0	0	0	0	0	-48.73	-48.73
Inverter Transformer	MV3-17 T	368183	4907472	2	0	0	56.1	56.1	1	6227.81	3.25	0	86.89	0	2.04	0	0	13.37	0	0	0	0	0	0	-46.23	-46.23
Inverter Transformer	MV3-13 T	367958	4907577	2	0	0	56.1	56.1	1	6258.03	3.25	0	86.93	0	2.05	0	0	13.4	0	0	0	0	0	0	-46.32	-46.32
Inverter Transformer	MV3-20 T	368683	4907317	2	0	0	56.1	56.1	1	6267.36	3.25	0	86.94	0	2.05	0	0	13.42	0	0	0	0	0	0	-46.35	-46.35
Inverter Transformer	MV3-15 T	368351	4907477	2	0	0	56.1	56.1	1	6289.63	3.25	0	86.97	0	2.05	0	0	13.44	0	0	0	0	0	0	-46.41	-46.41
Inverter Transformer	MV3-16 T	368509	4907475	2	0	0	56.1	56.1	1	6345.06	3.25	0	87.05	0	2.07	0	0	13.5	0	0	0	0	0	0	-46.57	-46.57
Inverter Transformer	MV3-10 T	368162	4907669	2	0	0	56.1	56.1	1	6407.57	3.25	0	87.13	0	2.09	0	0	13.58	0	0	0	0	0	0	-46.74	-46.74
Inverter Transformer	MV3-7 T	367951	4907754	2	0	0	56.1	56.1	1	6425.62	3.25	0	87.16	0	2.1	0	0	13.6	0	0	0	0	0	0	-46.79	-46.79
Inverter Transformer	MV3-14 T	368678	4907498	2	0	0	56.1	56.1	1	6431.22	3.25	0	87.17	0	2.1	0	0	13.6	0	0	0	0	0	0	-46.81	-46.81
Inverter Transformer	MV3-11 T	368340	4907662	2	0	0	56.1	56.1	1	6459.38	3.25	0	87.2	0	2.11	0	0	13.63	0	0	0	0	0	0	-46.89	-46.89
Inverter Transformer	MV3-9 T	368517	4907703	2	0	0	56.1	56.1	1	6560.01	3.25	0	87.34	0	2.14	0	0	13.75	0	0	0	0	0	0	-47.16	-47.16
Inverter Transformer	MV3-6 T	368156	4907834	2	0	0	56.1	56.1	1	6562.49	3.25	0	87.34	0	2.14	0	0	13.75	0	0	0	0	0	0	-47.17	-47.17
Inverter Transformer	MV3-3 T	367944	4907927	2	0	0	56.1	56.1	1	6589.86	3.25	0	87.38	0	2.14	0	0	13.78	0	0	0	0	0	0	-47.24	-47.24
Inverter Transformer	MV3-5 T	368335	4907843	2	0	0	56.1	56.1	1	6628.18	3.25	0	87.43	0	2.16	0	0	13.82	0	0	0	0	0	0	-47.35	-47.35
Inverter Transformer	MV3-8 T	368685	4907712	2	0	0	56.1	56.1	1	6631.06	3.25	0	87.43	0	2.16	0	0	13.83	0	0	0	0	0	0	-47.36	-47.36
Inverter Transformer	MV3-1 T	368150	4907976	2	0	0	56.1	56.1	1	6695.96	3.25	0	87.52	0	2.17	0	0	13.9	0	0	0	0	0	0	-47.53	-47.53
Inverter Transformer	MV3-4 T	368507	4907925	2	0	0	56.1	56.1	1	6763.88	3.25	0	87.6	0	2.19	0	0	13.97	0	0	0	0	0	0	-47.71	-47.71
Inverter Transformer	MV3-2 T	368677	4907928	2	0	0	56.1	56.1	1	6828.04	3.25	0	87.69	0	2.21	0	0	14.04	0	0	0	0	0	0	-47.88	-47.88
Inverter Transformer	MV6-3 T	370202	4907140	2	0	0	56.1	56.1	1	6878.87	3.25	0	87.75	0	2.23	0	0	14.1	0	0	0	0	0	0	-48.02	-48.02
Inverter Transformer	MV6-2 T	370091	4907339	2	0	0	56.1	56.1	1	6976.97	3.25	0	87.87	0	2.25	0	0	14.2	0	0	0	0	0	0	-48.27	-48.27
Inverter Transformer	MV4-15 T	369170	4908481	2	0	0	56.1	56.1	1	7528.88	3.25	0	88.53	0	2.4	0	0	14.78	0	0	0	0	0	0	-49.66	-49.66
Inverter Transformer	MV4-14 T	369182	4908507	2	0	0	56.1	56.1	1	7557.51	3.25	0	88.57	0	2.4	0	0	14.81	0	0	0	0	0	0	-49.73	-49.73
Inverter Transformer	MV4-13 T	369057	4908605	2	0	0	56.1	56.1	1	7598.45	3.25	0	88.61	0	2.41	0	0	14.85	0	0	0	0	0	0	-49.83	-49.83
Inverter Transformer	MV4-12 T	369049	4908803	2	0	0	56.1	56.1	1	7778.64	3.25	0	88.82	0	2.46	0	0	15.04	0	0	0	0	0	0	-50.25	-50.25
Inverter Transformer	MV4-11 T	369269	4908855	2	0	0	56.1	56.1	1	7911.32	3.25	0	88.96	0	2.49	0	0	15.17	0	0	0	0	0	0	-50.56	-50.56
Inverter Transformer	MV5-6 T	369987	4908507	2	0	0	56.1	56.1	1	7915.99	3.25	0	88.97	0	2.49	0	0	15.17	0	0	0	0	0	0	-50.58	-50.58
Inverter Transformer	MV4-10 T	369307	4908858	2	0	0	56.1	56.1	1	7929.18	3.25	0	88.98	0	2.49	0	0	15.19	0	0	0	0	0	0	-50.61	-50.61
Inverter Transformer	MV4-7 T	369040	4909001	2	0	0	56.1	56.1	1	7959.33	3.25	0	89.02	0	2.5	0	0	15.22	0	0	0	0	0	0	-50.68	-50.68
Inverter Transformer	MV4-8 T	369262	4909001	2	0	0	56.1	56.1	1	8042.89	3.25	0	89.11	0	2.52	0	0	15.3	0	0	0	0	0	0	-50.87	-50.87
Inverter Transformer	MV4-9 T	369284	4909001	2	0	0	56.1	56.1	1	8051.46	3.25	0	89.12	0	2.52	0	0	15.31	0	0	0	0	0	0	-50.89	-50.89
Inverter Transformer	MV5-5 T	370021	4908690	2	0	0	56.1	56.1	1	8092.66	3.25	0	89.16	0	2.53	0	0	15.35	0	0	0	0	0	0	-50.98	-50.98
Inverter Transformer	MV4-4 T	369033	4909199	2	0	0	56.1	56.1	1	8141.54	3.25	0	89.21	0	2.54	0	0	15.39	0	0	0	0	0	0	-51.09	-51.09
Inverter Transformer	MV4-6 T	369249	4909192	2	0	0	56.1	56.1	1	8214.31	3.25	0	89.29	0	2.56	0	0	15.46	0	0	0	0	0	0	-51.26	-51.26
Inverter Transformer	MV5-2 T	370011	4908853	2	0	0	56.1	56.1	1	8231.35	3.25	0	89.31	0	2.56	0	0	15.48	0	0	0	0	0	0	-51.29	-51.29
Inverter Transformer	MV4-5 T	369283	4909199	2	0	0	56.1	56.1	1	8233.71	3.25	0	89.31	0	2.56	0	0	15.48	0	0	0	0	0	0	-51.3	-51.3
Inverter Transformer	MV5-4 T	370330	4908707	2	0	0	56.1	56.1	1	8259.98	3.25	0	89.34	0	2.57	0	0	15.51	0	0	0	0	0	0	-51.36	-51.36
Inverter Transformer	MV4-1 T	369017	4909397	2	0	0	56.1	56.1	1	8321.36	3.25	0	89.4	0	2.58	0	0	15.57	0	0	0	0	0	0	-51.49	-51.49
Inverter Transformer	MV5-3 T	370237	4908851	2	0	0	56.1	56.1	1	8338.29	3.25	0	89.42	0	2.59	0	0	15.58	0	0	0	0	0	0	-51.53	-51.53
Inverter Transformer	MV4-3 T	369234	4909397	2	0	0	56.1	56.1	1	8398.87	3.25	0	89.48	0	2.6	0	0	15.64	0	0	0	0	0	0	-51.67	-51.67
Inverter Transformer	MV4-2 T	369267	4909397	2	0	0	56.1	56.1	1	8411.09	3.25	0	89.5	0	2.6	0	0	15.65	0	0	0	0	0	0	-51.69	-51.69
Inverter Transformer	MV5-1 T	370015	4909142	2	0	0	56.1	56.1	1	8489.3	3.25	0	89.58	0	2.62	0	0	15.73	0	0	0	0	0	0	-51.86	-51.86
Line Reactor	NGR	369421	4908787.5	5	0	0	45.4	45.4	1	7911.21	5.25	0	88.96	0	3.2	1.38	0.11	3.23	0	0	0	0	0	0	-51.42	-51.42
Limit. Valu 0	0																									
Level D/N: 20.4537	20.4537																									

Receiver: Existing Noise Receptor
ID: G-81
X: 366016.2
Y: 4901609.1
Z: 4.5
Ground: 0

ISO	Description	ID	X	Y	Z	Ground	ReflOrd	LxT	LxN	L/A	Dist.	hm	Freq	Adiv	K0b	Agr	Abar	z	Aatm	Afol	Ahous	Cmet	CmetN	Dc	RL	LtotT	LtotN
	Sol_Luce Substation	S_Substation	369426	4908792	3.5	0	0	112.1	112.1	1	7951.15	5.25	0	89.01	0	1.55	2.28	0.32	11.61	0	0	0	0	0	0	7.63	7.63
	Inverter	MV1-15	365315	4904994	2	0	0	100.3	100.3	1	3456.77	3.25	0	81.77	0	0.44	0	0	16.16	0	0	0	0	0	0	1.94	1.94
	Inverter	MV1-12	365038	4905386	2	0	0	100.3	100.3	1	3901.52	3.25	0	82.82	0	0.51	0	0	16.89	0	0	0	0	0	0	0.08	0.08
	Inverter	MV1-11	364655	4905414	2	0	0	100.3	100.3	1	4041.06	3.25	0	83.13	0	0.53	0	0	17.11	0	0	0	0	0	0	-0.46	-0.46
	Inverter	MV1-8	364788	4905647	2	0	0	100.3	100.3	1	4220.56	3.25	0	83.51	0	0.56	0	0	17.4	0	0	0	0	0	0	-1.15	-1.15
	Inverter	MV1-9	364561	4905646	2	0	0	100.3	100.3	1	4291.17	3.25	0	83.65	0	0.57	0	0	17.51	0	0	0	0	0	0	-1.41	-1.41
	Inverter	MV1-4	364815	4905918	2	0	0	100.3	100.3	1	4473.2	3.25	0	84.01	0	0.59	0	0	17.79	0	0	0	0	0	0	-2.08	-2.08
	Inverter	MV1-5	364671	4905892	2	0	0	100.3	100.3	1	4489.19	3.25	0	84.04	0	0.59	0	0	17.81	0	0	0	0	0	0	-2.13	-2.13
	Inverter	MV1-6	364477	4905835	2	0	0	100.3	100.3	1	4497.49	3.25	0	84.06	0	0.59	0	0	17.83	0	0	0	0	0	0	-2.16	-2.16
	Inverter	MV1-2	364753	4906063	2	0	0	100.3	100.3	1	4629.57	3.25	0	84.31	0	0.61	0	0	18.03	0	0	0	0	0	0	-2.63	-2.63
	Inverter	MV1-1	364715	4906166	2	0	0	100.3	100.3	1	4739.04	3.25	0	84.51	0	0.62	0	0	18.19	0	0	0	0	0	0	-3.01	-3.01
	Inverter	MV1-14	365163	4905049	2	0	0	97.3	97.3	1	3544.13	3.25	0	81.99	0	0.46	0	0	16.31	0	0	0	0	0	0	-1.44	-1.44
	Inverter	MV2-4	365586	4906624	2	0	0	100.3	100.3	1	5033.32	3.25	0	85.04	0	0.65	0	0	18.63	0	0	0	0	0	0	-4	-4
	Inverter	MV2-3	365820	4906641	2	0	0	100.3	100.3	1	5035.72	3.25	0	85.04	0	0.65	0	0	18.63	0	0	0	0	0	0	-4.01	-4.01
	Inverter	MV1-13	364731	4905241	2	0	0	97.3	97.3	1	3852.59	3.25	0	82.72	0	0.51	0	0	16.81	0	0	0	0	0	0	-2.72	-2.72
	Gardiner Substation	G_Sub	366586.3	4903349.9	2.5	0	0	90.8	90.8	1	1831.78	3.5	0	76.26	0	-0.2	0	0	4.08	0	0	0	0	0	0	10.65	10.65
	Inverters	G_Inv9	366750.9	4902691.8	2	0	0	87.7	87.7	1	1308.45	3.25	0	73.34	0	2.49	0	0	1.81	0	0	0	0	0	0	10.02	10.02
	Inverter	MV1-10	365004	4905564	2	0	0	97.3	97.3	1	4082.38	3.25	0	83.22	0	0.54	0	0	17.18	0	0	0	0	0	0	-3.62	-3.62
	Inverters	G_Inv7	366694.6	4902824.7	2	0	0	87.7	87.7	1	1392.09	3.25	0	73.87	0	2.5	0	0	1.91	0	0	0	0	0	0	9.37	9.37
	Inverters	G_Inv10	366900.7	4902704.8	2	0	0	87.7	87.7	1	1408.16	3.25	0	73.97	0	2.51	0	0	1.93	0	0	0	0	0	0	9.25	9.25
	Inverter	MV3-18	367752	4907412	2	0	0	100.3	100.3	1	6056.95	3.25	0	86.65	0	0.71	0	0	20.07	0	0	0	0	0	0	-7.11	-7.11
	Inverter	MV1-7	364925	4905782	2	0	0	97.3	97.3	1	4313.21	3.25	0	83.7	0	0.57	0	0	17.54	0	0	0	0	0	0	-4.49	-4.49
	Inverter	MV3-21	368478	4907206	2	0	0	100.3	100.3	1	6114.39	3.25	0	86.73	0	0.71	0	0	20.15	0	0	0	0	0	0	-7.27	-7.27
	Inverter	MV3-19	368357	4907347	2	0	0	100.3	100.3	1	6197	3.25	0	86.84	0	0.71	0	0	20.26	0	0	0	0	0	0	-7.5	-7.5
	Inverter	MV3-12	367668	4907594	2	0	0	100.3	100.3	1	6208.66	3.25	0	86.86	0	0.71	0	0	20.27	0	0	0	0	0	0	-7.53	-7.53
	Inverter	MV3-17	368178	4907472	2	0	0	100.3	100.3	1	6248.76	3.25	0	86.92	0	0.71	0	0	20.33	0	0	0	0	0	0	-7.64	-7.64
	Inverter	MV3-13	367963	4907577	2	0	0	100.3	100.3	1	6277.41	3.37	0	86.96	0	1.72	2.44	0	20.37	0	0	0	0	0	0	-11.17	-11.17
	Inverter	MV3-20	368689	4907317	2	0	0	100.3	100.3	1	6302.7	3.25	0	86.99	0	0.71	0	0	20.4	0	0	0	0	0	0	-7.79	-7.79
	Inverter	MV3-15	368357	4907477	2	0	0	100.3	100.3	1	6317.56	3.25	0	87.01	0	0.71	0	0	20.42	0	0	0	0	0	0	-7.83	-7.83
	Inverters	G_Inv8	366844.5	4902838.5	2	0	0	87.7	87.7	1	1482.4	3.25	0	74.42	0	2.52	0	0	2.02	0	0	0	0	0	0	8.7	8.7
	Inverters	G_Inv5	366638.5	4902958.1	2	0	0	87.7	87.7	1	1485.62	3.25	0	74.44	0	2.52	0	0	2.03	0	0	0	0	0	0	8.68	8.68
	Inverter	MV3-16	368514	4907475	2	0	0	100.3	100.3	1	6375.56	3.25	0	87.09	0	0.71	0	0	20.5	0	0	0	0	0	0	-7.99	-7.99
	Inverter	MV3-10	368167	4907669	2	0	0	100.3	100.3	1	6430.27	3.25	0	87.16	0	0.71	0	0	20.57	0	0	0	0	0	0	-8.13	-8.13
	Inverter	MV3-7	367945	4907754	2	0	0	100.3	100.3	1	6440.5	3.25	0	87.18	0	0.71	0	0	20.58	0	0	0	0	0	0	-8.16	-8.16
	Inverter	MV3-14	368684	4907498	2	0	0	100.3	100.3	1	6465.01	3.25	0	87.21	0	0.71	0	0	20.61	0	0	0	0	0	0	-8.23	-8.23
	Inverter	MV3-11	368346	4907662	2	0	0	100.3	100.3	1	6485.8	3.25	0	87.24	0	0.71	0	0	20.64	0	0	0	0	0	0	-8.28	-8.28
	Inverter	MV3-6	368162	4907834	2	0	0	100.3	100.3	1	6584.36	3.25	0	87.37	0	0.72	0	0	20.77	0	0	0	0	0	0	-8.54	-8.54
	Inverter	MV3-9	368512	4907703	2	0	0	100.3	100.3	1	6585.18	3.25	0	87.37	0	0.72	0	0	20.77	0	0	0	0	0	0	-8.54	-8.54
	Inverter	MV3-3	367939	4907927	2	0	0	100.3	100.3	1	6604.02	3.25	0	87.4	0	0.72	0	0	20.79	0	0	0	0	0	0	-8.59	-8.59
	Inverter	MV3-8	368680	4907712	2	0	0	100.3	100.3	1	6658.92	3.25	0	87.47	0	0.71	0	0	20.87	0	0	0	0	0	0	-8.74	-8.74
	Inverters	G_Inv6	366788.5	4902972	2	0	0	87.7	87.7	1	1566.51	3.25	0	74.9	0	2.53	0	0	2.12	0	0	0	0	0	0	8.11	8.11
	Inverters	G_Inv3	366583.7	4903091.4	2	0	0	87.7	87.7	1	1587.22	3.25	0	75.01	0	2.53	0	0	2.15	0	0	0	0	0	0	7.97	7.97
	Inverter	MV6-3	370207	4907140	2	0	0	100.3	100.3	1	6939.28	3.25	0	87.83	0	0.71	0	0	21.22	0	0	0	0	0	0	-9.45	-9.45
	Inverter	MV6-2	370085	4907339	2	0	0	100.3	100.3	1	7027.58	3.25	0	87.94	0	0.71	0	0	21.33	0	0	0	0	0	0	-9.67	-9.67
	Inverters	G_Inv4	366732.8	4903105	2	0	0	87.7	87.7	1	1658.69	3.25	0	75.4	0	2.54	0	0	2.23	0	0	0	0	0	0	7.49	7.49
	Inverters	G_Inv1	366526.4	4903225.8	2	0	0	87.7	87.7	1	1695.3	3.25	0	75.58	0	2.54	0	0	2.28	0	0	0	0	0	0	7.25	7.25
	Inverter	MV2-1	365842	4906816	2	0	0	97.3	97.3	1	5209.81	3.25	0	85.34	0	0.66	0	0	18.89	0	0	0	0	0	0	-7.57	-7.57
	Inverters	G_Inv2	366676.9	4903239.1	2	0	0	87.7	87.7	1	1758.82	3.25	0	75.9	0	2.55	0	0	2.35	0	0	0	0	0	0	6.85	6.85
	Inverter	MV4-11	369264	4908855	2	0	0	100.3	100.3	1	7940.48	3.25	0	89	0	0.66	0	0	22.44	0	0	0	0	0	0	-11.78	-11.78
	Inverter	MV4-10	369312	4908858	2	0	0	100.3	100.3	1	7962.97	3.25	0	89.02	0	0.66	0	0	22.46	0	0	0	0	0	0	-11.83	-11.83
	Inverter	MV4-7	369035	4909001	2	0	0	100.3	100.3	1	7984.57	3.25	0	89.05	0	0.65	0	0	22.49	0	0	0	0	0	0	-11.88	-11.88
	Inverter	MV4-8	369256	4909001	2	0	0	100.3	100.3	1	8070.72	3.25	0	89.14	0	0.65	0	0	22.59	0	0	0	0	0	0	-12.06	-12.06
	Inverter	MV4-9	369289	4909001	2	0	0	100.3	100.3	1	8084.02	3.25	0	89.15	0	0.65	0	0	22.6	0	0	0	0	0	0	-12.09	-12.09
	Inverter	MV5-5	370015	4908690	2	0	0	100.3	100.3	1	8132.01	3.25	0	89.2	0	0.64	0	0	22.66	0	0	0	0	0	0	-12.19	-12.19
	Inverter	MV4-4	369027	4909199	2	0	0	100.3	100.3	1	8165.26	3.25	0	89.24	0	0.64	0	0	22.7	0	0	0	0	0	0	-12.26	-12.26
	Inverter	MV4-6	369243	4909192	2	0	0	100.3	100.3	1	8240.91	3.25	0	89.32	0	0.63	0	0	22.78	0	0	0	0	0	0	-12.42	-12.42
	Inverter	MV4-5	369289	4909199	2	0	0	100.3	100.3	1	8265.46	3.25	0	89.35	0	0.63	0	0	22.81	0	0	0	0	0	0	-12.47	-12.47
	Inverter	MV5-2	370006	4908853	2	0	0	100.3	100.3	1	8269.98	3.25	0	89.35	0	0.63	0	0	22.82	0	0	0	0	0	0	-12.48	-12.48
	Inverter	MV5-4	370324	4908707	2	0	0	100.3	100.3	1	8302.85	3.25	0	89.38	0	0.62	0	0	22.85	0	0	0	0	0	0	-12.55	-12.55
	Inverter	MV4-1	369011	4909397	2	0	0	100.3	100.3	1	8343.87	3.25	0	89.43	0	0.62	0	0	22.9	0	0	0	0	0	0	-12.63	-12.63
	Inverter	MV5-3	370231	4908851	2	0	0	100.3	100.3	1	8379.12	3.25	0	89.46	0	0.62	0	0	22.94	0	0	0	0	0	0	-12.71	-12.71
	Inverter	MV4-3	369229	4909397	2	0	0	100.3	100.3	1	8424.58	3.25	0	89.51	0	0.61	0	0	22.99	0	0	0	0	0	0	-12.8	-12.8
	Inverter	MV4-2	369272	4909397	2	0	0	100.3	100.3	1	8441.07	3.25	0	89.53	0	0.61	0	0	23.01	0	0	0	0	0	0	-12.83	-12.83
	Inverter	MV5-1	370020	4909142	2	0	0	100.3	100.3	1	8530.83	3.25	0	89.62	0	0.6	0	0	23.11	0	0	0	0	0	0	-13.01	-13.01
	Inverter	MV6-1	370235	4907364	2	0	0	97.3	97.3	1	7135.63	3.25	0	88.07	0	0.71	0	0	21.47	0	0	0	0	0	0	-12.93	-12.93
	DSTATCOM - 10 MVAR #2	DSAT2	369403	4908757	2.5	0	0	96.6	96.6	1	7909.67	3.5	0	88.96	0	3.88	0	0	4.73	0	0	0	0	0	0	-0.94	-0.94
	DSTATCOM - 10 MVAR #1	DSAT1	369437	4908757	2.5	0	0	96.6	96.6	1	7924.29	3.5	0	88.98	0	3.88	0	0	4.74	0	0	0	0	0	0	-0.96	-0.96
	SubstationTransformer	W_ST	369711.17	4906112.3	2.5	0	0	92	92	1	5825.06	3.5	0	86.31	0	0.73	0	-0.11	9.55	0	0	0	0	0	0	-4.61	-4.61
	Inverter	MV1-3	364440	4906039	2	0	0	89.1	89.1	1	4701.96	3.25	0	84.45	0	1.57	0	0	12.06	0	0	0	0	0	0	-9.01	-9.01
	Inverter	MV2-2	365977	4906654	2	0	0	89.1	89.1	1	5045.05	3.25	0	85.06	0	1.65	0	0	12.52	0	0	0	0	0	0	-10.17	-10.17
	Westbrook Inverter Enclosur	W_INV3	369508	4906164	2	0	0	89.1	89.1	1	5739.32	3.25	0	86.18	0	1.82	0	0	13.43	0	0	0	0	0	0	-12.37	-12.37
	Westbrook Inverter Enclosur	W_INV2	369374	4906388	2	0	0	89.1	89.1	1	5840.61	3.25	0	86.33	0	1.85	0	0	13.56	0	0	0	0	0	0	-12.68	-12.68
	Westbrook Inverter Enclosur	W_INV4	369673	4906164	2	0	0	89.1	89.1	1	5841.17	3.25	0	86.33	0	1.85	0	0	13.56	0	0	0	0	0	0	-12.68	-12.68

Westbrook Inverter Enclosur	W_INV7	369780	4906417	2	0	0	89.1	89.1	1	6105.91	3.25	0	86.72	0	1.91	0	0	13.9	0	0	0	0	0	0	-13.46	-13.46
Inverter	MV3-22	368656	4907142	2	0	0	89.1	89.1	1	6130.38	3.25	0	86.75	0	1.92	0	0	13.93	0	0	0	0	0	0	-13.54	-13.54
Westbrook Inverter Enclosur	W_INV5	369719	4906574	2	0	0	89.1	89.1	1	6193.62	3.25	0	86.84	0	1.93	0	0	14	0	0	0	0	0	0	-13.72	-13.72
Westbrook Inverter Enclosur	W_INV6	369875	4906578	2	0	0	89.1	89.1	1	6291.29	3.25	0	86.97	0	1.96	0	0	14.13	0	0	0	0	0	0	-14	-14
Inverter	MV3-5	368340	4907843	2	0	0	89.1	89.1	1	6652.94	3.25	0	87.46	0	2.04	0	0	14.57	0	0	0	0	0	0	-15.02	-15.02
Inverter	MV3-1	368156	4907976	2	0	0	89.1	89.1	1	6716.86	3.25	0	87.54	0	2.06	0	0	14.65	0	0	0	0	0	0	-15.19	-15.19
Inverter	MV3-4	368502	4907925	2	0	0	89.1	89.1	1	6787.47	3.25	0	87.63	0	2.08	0	0	14.73	0	0	0	0	0	0	-15.39	-15.39
Inverter	MV3-2	368671	4907928	2	0	0	89.1	89.1	1	6853.94	3.25	0	87.72	0	2.09	0	0	14.81	0	0	0	0	0	0	-15.57	-15.57
Fixed Reactor Bank 1	FRB1	369378	4908755	6	0	0	89.8	89.8	1	7897.19	5.25	0	88.95	0	-0.18	0	0	11.56	0	0	0	0	0	0	-10.55	-10.55
Fixed Reactor Bank 2	FRB2	369464	4908755	6	0	0	89.8	89.8	1	7934.18	5.25	0	88.99	0	-0.18	0	0	11.6	0	0	0	0	0	0	-10.63	-10.63
Inverter	MV4-15	369176	4908481	2	0	0	89.1	89.1	1	7563.55	3.25	0	88.57	0	2.26	0	0	15.65	0	0	0	0	0	0	-17.42	-17.42
Inverter	MV4-14	369176	4908507	2	0	0	89.1	89.1	1	7587.18	3.25	0	88.6	0	2.27	0	0	15.67	0	0	0	0	0	0	-17.48	-17.48
Inverter	MV4-13	369051	4908605	2	0	0	89.1	89.1	1	7625.79	3.25	0	88.65	0	2.28	0	0	15.72	0	0	0	0	0	0	-17.58	-17.58
Inverter	MV4-12	369043	4908803	2	0	0	89.1	89.1	1	7804.72	3.25	0	88.85	0	2.32	0	0	15.92	0	0	0	0	0	0	-18.03	-18.03
Inverter	MV5-6	369982	4908507	2	0	0	89.1	89.1	1	7956.67	3.25	0	89.01	0	2.35	0	0	16.09	0	0	0	0	0	0	-18.4	-18.4
Westbrook Inverter Enclosur	W_INV1	369409	4906578	2	0	0	86.1	86.1	1	6016.73	3.25	0	86.59	0	1.89	0	0	13.78	0	0	0	0	0	0	-16.2	-16.2
Inverter	MV6-4	370250	4906966	2	0	0	86.1	86.1	1	6827.99	3.25	0	87.69	0	2.09	0	0	14.78	0	0	0	0	0	0	-18.5	-18.5
Westbrook Inverter Transfor	W_INVTR1	369403	4906578	2	0	0	78.2	78.2	1	6013.35	3.25	0	86.58	0	-3.37	0	0	2.75	0	0	0	0	0	0	-7.72	-7.72
Westbrook Inverter Transfor	W_INVTR3	369514	4906164	2	0	0	77.3	77.3	1	5742.97	3.25	0	86.18	0	-3.32	0	0	2.66	0	0	0	0	0	0	-8.18	-8.18
Westbrook Inverter Transfor	W_INVTR2	369368	4906388	2	0	0	77.3	77.3	1	5837.16	3.25	0	86.32	0	-3.34	0	0	2.69	0	0	0	0	0	0	-8.33	-8.33
Westbrook Inverter Transfor	W_INVTR4	369679	4906164	2	0	0	77.3	77.3	1	5844.93	3.25	0	86.34	0	-3.34	0	0	2.69	0	0	0	0	0	0	-8.35	-8.35
Westbrook Inverter Transfor	W_INVTR7	369786	4906417	2	0	0	77.3	77.3	1	6109.61	3.25	0	86.72	0	-3.39	0	0	2.78	0	0	0	0	0	0	-8.77	-8.77
Westbrook Inverter Transfor	W_INVTR5	369725	4906574	2	0	0	77.3	77.3	1	6197.21	3.25	0	86.84	0	-3.4	0	0	2.8	0	0	0	0	0	0	-8.9	-8.9
Westbrook Inverter Transfor	W_INVTR6	369881	4906578	2	0	0	77.3	77.3	1	6294.97	3.25	0	86.98	0	-3.42	0	0	2.83	0	0	0	0	0	0	-9.05	-9.05
Inverter Transformer	MV1-14 T	365157	4905049	2	0	0	69.4	69.4	1	3545.58	3.25	0	81.99	0	2.67	0	0	6.33	0	0	0	0	0	0	-21.64	-21.64
Inverter Transformer	MV1-13 T	364725	4905241	2	0	0	69.4	69.4	1	3854.59	3.25	0	82.72	0	2.75	0	0	6.57	0	0	0	0	0	0	-22.68	-22.68
Inverter Transformer	MV1-10 T	365010	4905564	2	0	0	69.4	69.4	1	4080.89	3.25	0	83.22	0	2.81	0	0	6.74	0	0	0	0	0	0	-23.41	-23.41
Inverter Transformer	MV1-7 T	364919	4905782	2	0	0	69.4	69.4	1	4314.74	3.25	0	83.7	0	2.86	0	0	6.91	0	0	0	0	0	0	-24.12	-24.12
Inverter Transformer	MV2-1 T	365836	4906816	2	0	0	69.4	69.4	1	5210.02	3.25	0	85.34	0	3.05	0	0	7.52	0	0	0	0	0	0	-26.56	-26.56
Inverter Transformer	MV6-4 T	370244	4906966	2	0	0	69.4	69.4	1	6824.27	3.25	0	87.68	0	3.3	0	0	8.5	0	0	0	0	0	0	-30.13	-30.13
Inverter Transformer	MV6-1 T	370230	4907364	2	0	0	69.4	69.4	1	7132.67	3.25	0	88.07	0	3.33	0	0	8.68	0	0	0	0	0	0	-30.72	-30.72
Inverter Transformer	MV1-15 T	365309	4904994	2	0	0	56.1	56.1	1	3457.99	3.25	0	81.78	0	1.02	0	0	9.62	0	0	0	0	0	0	-36.36	-36.36
Inverter Transformer	MV1-12 T	365044	4905386	2	0	0	56.1	56.1	1	3900.02	3.25	0	82.82	0	1.2	0	0	10.31	0	0	0	0	0	0	-38.27	-38.27
Inverter Transformer	MV1-11 T	364649	4905414	2	0	0	56.1	56.1	1	4043.08	3.25	0	83.13	0	1.26	0	0	10.52	0	0	0	0	0	0	-38.86	-38.86
Inverter Transformer	MV1-8 T	364782	4905647	2	0	0	56.1	56.1	1	4222.31	3.25	0	83.51	0	1.33	0	0	10.78	0	0	0	0	0	0	-39.57	-39.57
Inverter Transformer	MV1-9 T	364555	4905646	2	0	0	56.1	56.1	1	4293.21	3.25	0	83.66	0	1.36	0	0	10.88	0	0	0	0	0	0	-39.84	-39.84
Inverter Transformer	MV1-4 T	364821	4905918	2	0	0	56.1	56.1	1	4471.59	3.25	0	84.01	0	1.43	0	0	11.14	0	0	0	0	0	0	-40.52	-40.52
Inverter Transformer	MV1-5 T	364676	4905892	2	0	0	56.1	56.1	1	4487.69	3.25	0	84.04	0	1.43	0	0	11.16	0	0	0	0	0	0	-40.58	-40.58
Inverter Transformer	MV1-6 T	364482	4905835	2	0	0	56.1	56.1	1	4495.78	3.25	0	84.06	0	1.44	0	0	11.17	0	0	0	0	0	0	-40.61	-40.61
Inverter Transformer	MV1-2 T	364759	4906063	2	0	0	56.1	56.1	1	4627.94	3.25	0	84.31	0	1.49	0	0	11.35	0	0	0	0	0	0	-41.09	-41.09
Inverter Transformer	MV1-3 T	364435	4906039	2	0	0	56.1	56.1	1	4703.64	3.25	0	84.45	0	1.52	0	0	11.46	0	0	0	0	0	0	-41.36	-41.36
Inverter Transformer	MV1-1 T	364721	4906166	2	0	0	56.1	56.1	1	4737.39	3.25	0	84.51	0	1.53	0	0	11.5	0	0	0	0	0	0	-41.48	-41.48
Inverter Transformer	MV2-3 T	365814	4906641	2	0	0	56.1	56.1	1	5035.96	3.25	0	85.04	0	1.64	0	0	11.9	0	0	0	0	0	0	-42.52	-42.52
Inverter Transformer	MV2-4 T	365590	4906628	2	0	0	56.1	56.1	1	5036.96	3.25	0	85.04	0	1.64	0	0	11.9	0	0	0	0	0	0	-42.53	-42.53
Inverter Transformer	MV2-2 T	365982	4906654	2	0	0	56.1	56.1	1	5045.02	3.25	0	85.06	0	1.64	0	0	11.91	0	0	0	0	0	0	-42.55	-42.55
Inverter Transformer	MV3-18 T	367757	4907412	2	0	0	56.1	56.1	1	6058.39	3.25	0	86.65	0	1.98	0	0	13.17	0	0	0	0	0	0	-45.74	-45.74
Inverter Transformer	MV3-21 T	368484	4907206	2	0	0	56.1	56.1	1	6116.81	3.25	0	86.73	0	2	0	0	13.24	0	0	0	0	0	0	-45.91	-45.91
Inverter Transformer	MV3-22 T	368661	4907142	2	0	0	56.1	56.1	1	6132.53	3.25	0	86.75	0	2.01	0	0	13.26	0	0	0	0	0	0	-45.96	-45.96
Inverter Transformer	MV3-19 T	368352	4907347	2	0	0	56.1	56.1	1	6195.12	3.25	0	86.84	0	2.03	0	0	13.33	0	0	0	0	0	0	-46.14	-46.14
Inverter Transformer	MV3-12 T	367674	4907594	2	0	0	56.1	56.1	1	6210.26	3.25	0	86.86	0	2.03	0	0	13.35	0	0	0	0	0	0	-46.18	-46.18
Inverter Transformer	MV3-17 T	368183	4907472	2	0	0	56.1	56.1	1	6250.49	3.25	0	86.92	0	2.04	0	0	13.4	0	0	0	0	0	0	-46.3	-46.3
Inverter Transformer	MV3-13 T	367958	4907577	2	0	0	56.1	56.1	1	6275.86	3.37	0	86.95	0	2.88	1.73	0	13.42	0	0	0	0	0	0	-48.93	-48.93
Inverter Transformer	MV3-20 T	368683	4907317	2	0	0	56.1	56.1	1	6300.15	3.25	0	86.99	0	2.06	0	0	13.45	0	0	0	0	0	0	-46.44	-46.44
Inverter Transformer	MV3-15 T	368351	4907477	2	0	0	56.1	56.1	1	6315.34	3.25	0	87.01	0	2.06	0	0	13.47	0	0	0	0	0	0	-46.48	-46.48
Inverter Transformer	MV3-16 T	368509	4907475	2	0	0	56.1	56.1	1	6373.61	3.25	0	87.09	0	2.08	0	0	13.54	0	0	0	0	0	0	-46.65	-46.65
Inverter Transformer	MV3-10 T	368162	4907669	2	0	0	56.1	56.1	1	6428.6	3.25	0	87.16	0	2.1	0	0	13.6	0	0	0	0	0	0	-46.8	-46.8
Inverter Transformer	MV3-7 T	367951	4907754	2	0	0	56.1	56.1	1	6442.3	3.25	0	87.18	0	2.1	0	0	13.61	0	0	0	0	0	0	-46.84	-46.84
Inverter Transformer	MV3-14 T	368678	4907498	2	0	0	56.1	56.1	1	6462.53	3.25	0	87.21	0	2.11	0	0	13.64	0	0	0	0	0	0	-46.89	-46.89
Inverter Transformer	MV3-11 T	368340	4907662	2	0	0	56.1	56.1	1	6483.64	3.25	0	87.24	0	2.11	0	0	13.66	0	0	0	0	0	0	-46.95	-46.95
Inverter Transformer	MV3-6 T	368156	4907834	2	0	0	56.1	56.1	1	6582.41	3.25	0	87.37	0	2.14	0	0	13.77	0	0	0	0	0	0	-47.22	-47.22
Inverter Transformer	MV3-9 T	368517	4907703	2	0	0	56.1	56.1	1	6587.08	3.25	0	87.37	0	2.14	0	0	13.78	0	0	0	0	0	0	-47.24	-47.24
Inverter Transformer	MV3-3 T	367944	4907927	2	0	0	56.1	56.1	1	6605.47	3.25	0	87.4	0	2.15	0	0	13.8	0	0	0	0	0	0	-47.29	-47.29
Inverter Transformer	MV3-5 T	368335	4907843	2	0	0	56.1	56.1	1	6651.19	3.25	0	87.46	0	2.16	0	0	13.85	0	0	0	0	0	0	-47.41	-47.41
Inverter Transformer	MV3-8 T	368685	4907712	2	0	0	56.1	56.1	1	6660.92	3.25	0	87.47	0	2.16	0	0	13.86	0	0	0	0	0	0	-47.44	-47.44
Inverter Transformer	MV3-1 T	368150	4907976	2	0	0	56.1	56.1	1	6714.95	3.25	0	87.54	0	2.18	0	0	13.92	0	0	0	0	0	0	-47.58	-47.58
Inverter Transformer	MV3-4 T	368507	4907925	2	0	0	56.1	56.1	1	6789.31	3.25	0	87.64	0	2.2	0	0	14	0	0	0	0	0	0	-47.78	-47.78
Inverter Transformer	MV3-2 T	368677	4907928	2	0	0	56.1	56.1	1	6856.26	3.25	0	87.72	0	2.22	0	0	14.07	0	0	0	0	0	0	-47.96	-47.96
Inverter Transformer	MV6-3 T	370202	4907140	2	0	0	56.1	56.1	1	6936.27	3.25	0	87.82	0	2.24	0	0	14.16	0	0	0	0	0	0	-48.17	-48.17
Inverter Transformer	MV6-2 T	370091	4907339	2	0	0	56.1	56.1	1	7031.06	3.25	0	87.94	0	2.27	0	0	14.26	0	0	0	0	0	0	-48.41	-48.41
Inverter Transformer	MV4-15 T	369170	4908481	2	0	0	56.1	56.1	1	7561.05	3.25	0	88.57	0	2.41	0	0	14.82	0	0	0	0	0	0	-49.74	-49.74
Inverter Transformer	MV4-14 T	369182	4908507	2	0	0	56.1	56.1	1	7589.69	3.25	0	88.6	0	2.41	0	0	14.85	0	0	0	0	0	0	-49.8	-49.8
Inverter Transformer	MV4-13 T	369057	4908605	2	0	0	56.1	56.1	1	7628.18	3.25	0	88.65	0	2.42	0	0	14.89	0	0	0	0	0	0	-49.9	-49.9
Inverter Transformer	MV4-12 T	369049	4908803	2	0	0	56.1	56.1	1	7807.05	3.25	0	88.85	0	2.47	0	0	15.07	0	0	0	0	0	0	-50.32	-50.32
Inverter Transformer	MV4-11 T	369269	4908855	2	0	0	56.1	56.1	1	7942.53	3.25	0	89	0	2.5	0	0	15.2	0	0	0	0	0	0	-50.64	-50.64

	Inverter Transformer	MV5-6 T	369987	4908507	2	0	0	56.1	56.1	1	7959.16	3.25	0	89.02	0	2.5	0	0	15.22	0	0	0	0	0	0	-50.68	-50.68
	Inverter Transformer	MV4-10 T	369307	4908858	2	0	0	56.1	56.1	1	7960.9	3.25	0	89.02	0	2.5	0	0	15.22	0	0	0	0	0	0	-50.68	-50.68
	Inverter Transformer	MV4-7 T	369040	4909001	2	0	0	56.1	56.1	1	7986.46	3.25	0	89.05	0	2.51	0	0	15.24	0	0	0	0	0	0	-50.74	-50.74
	Inverter Transformer	MV4-8 T	369262	4909001	2	0	0	56.1	56.1	1	8073.13	3.25	0	89.14	0	2.53	0	0	15.33	0	0	0	0	0	0	-50.94	-50.94
	Inverter Transformer	MV4-9 T	369284	4909001	2	0	0	56.1	56.1	1	8082	3.25	0	89.15	0	2.53	0	0	15.34	0	0	0	0	0	0	-50.96	-50.96
	Inverter Transformer	MV5-5 T	370021	4908690	2	0	0	56.1	56.1	1	8134.96	3.25	0	89.21	0	2.54	0	0	15.39	0	0	0	0	0	0	-51.08	-51.08
	Inverter Transformer	MV4-4 T	369033	4909199	2	0	0	56.1	56.1	1	8167.48	3.25	0	89.24	0	2.55	0	0	15.42	0	0	0	0	0	0	-51.15	-51.15
	Inverter Transformer	MV4-6 T	369249	4909192	2	0	0	56.1	56.1	1	8243.26	3.25	0	89.32	0	2.56	0	0	15.49	0	0	0	0	0	0	-51.32	-51.32
	Inverter Transformer	MV4-5 T	369283	4909199	2	0	0	56.1	56.1	1	8263.08	3.25	0	89.34	0	2.57	0	0	15.51	0	0	0	0	0	0	-51.37	-51.37
	Inverter Transformer	MV5-2 T	370011	4908853	2	0	0	56.1	56.1	1	8272.4	3.25	0	89.35	0	2.57	0	0	15.52	0	0	0	0	0	0	-51.39	-51.39
	Inverter Transformer	MV5-4 T	370330	4908707	2	0	0	56.1	56.1	1	8305.97	3.25	0	89.39	0	2.58	0	0	15.55	0	0	0	0	0	0	-51.46	-51.46
	Inverter Transformer	MV4-1 T	369017	4909397	2	0	0	56.1	56.1	1	8346.03	3.25	0	89.43	0	2.59	0	0	15.59	0	0	0	0	0	0	-51.55	-51.55
	Inverter Transformer	MV5-3 T	370237	4908851	2	0	0	56.1	56.1	1	8382.14	3.25	0	89.47	0	2.59	0	0	15.63	0	0	0	0	0	0	-51.63	-51.63
	Inverter Transformer	MV4-3 T	369234	4909397	2	0	0	56.1	56.1	1	8426.48	3.25	0	89.51	0	2.6	0	0	15.67	0	0	0	0	0	0	-51.73	-51.73
	Inverter Transformer	MV4-2 T	369267	4909397	2	0	0	56.1	56.1	1	8439.14	3.25	0	89.53	0	2.61	0	0	15.68	0	0	0	0	0	0	-51.75	-51.75
	Inverter Transformer	MV5-1 T	370015	4909142	2	0	0	56.1	56.1	1	8528.48	3.25	0	89.62	0	2.63	0	0	15.76	0	0	0	0	0	0	-51.95	-51.95
	Line Reactor	NGR	369421	4908787.5	5	0	0	45.4	45.4	1	7944.94	5.25	0	89	0	3.2	1.38	0.11	3.25	0	0	0	0	0	0	-51.47	-51.47
Limit. Valu	0	0																								
Level D/N:	20.2717	20.2717																								

Receiver: Existing Noise Receptor
ID: G-82
X: 366826.2
Y: 4901429.1
Z: 4.5
Ground: 0

ISO	Description	ID	X	Y	Z	Ground	ReflOrd	LxT	LxN	L/A	Dist.	hm	Freq	Adiv	K0b	Agr	Abar	z	Aatm	Afol	Ahous	Cmet	CmetN	Dc	RL	LtotT	LtotN
	Sol_Luce Substation	S_Substation	369426	4908792	3.5	0	0	112.1	112.1	1	7808.41	5.25	0	88.85	0	1.53	2.3	0.33	11.49	0	0	0	0	0	0	7.91	7.91
	Inverter	MV1-15	365315	4904994	2	0	0	100.3	100.3	1	3871.98	3.25	0	82.76	0	0.51	0	0	16.84	0	0	0	0	0	0	0.2	0.2
	Inverter	MV1-12	365038	4905386	2	0	0	100.3	100.3	1	4342.2	3.25	0	83.75	0	0.57	0	0	17.59	0	0	0	0	0	0	-1.6	-1.6
	Inverter	MV1-11	364655	4905414	2	0	0	100.3	100.3	1	4538.01	3.25	0	84.14	0	0.6	0	0	17.89	0	0	0	0	0	0	-2.31	-2.31
	Inverter	MV1-8	364788	4905647	2	0	0	100.3	100.3	1	4684.54	3.25	0	84.41	0	0.61	0	0	18.11	0	0	0	0	0	0	-2.82	-2.82
	Inverter	MV1-9	364561	4905646	2	0	0	100.3	100.3	1	4786.79	3.25	0	84.6	0	0.62	0	0	18.26	0	0	0	0	0	0	-3.17	-3.17
	Inverter	MV1-4	364815	4905918	2	0	0	100.3	100.3	1	4918.86	3.25	0	84.84	0	0.63	0	0	18.46	0	0	0	0	0	0	-3.62	-3.62
	Inverter	MV1-5	364671	4905892	2	0	0	100.3	100.3	1	4956.04	3.25	0	84.9	0	0.64	0	0	18.52	0	0	0	0	0	0	-3.74	-3.74
	Inverter	MV1-6	364477	4905835	2	0	0	100.3	100.3	1	4993.07	3.25	0	84.97	0	0.64	0	0	18.57	0	0	0	0	0	0	-3.87	-3.87
	Inverter	MV1-2	364753	4906063	2	0	0	100.3	100.3	1	5076.53	3.25	0	85.11	0	0.65	0	0	18.69	0	0	0	0	0	0	-4.14	-4.14
	Inverter	MV1-1	364715	4906166	2	0	0	100.3	100.3	1	5186.08	3.25	0	85.3	0	0.66	0	0	18.85	0	0	0	0	0	0	-4.49	-4.49
	Inverter	MV2-3	365820	4906641	2	0	0	100.3	100.3	1	5308.14	3.25	0	85.5	0	0.67	0	0	19.03	0	0	0	0	0	0	-4.88	-4.88
	Inverter	MV2-4	365586	4906624	2	0	0	100.3	100.3	1	5340.89	3.25	0	85.55	0	0.67	0	0	19.07	0	0	0	0	0	0	-4.98	-4.98
	Inverters	G_Inv9	366750.9	4902691.8	2	0	0	87.7	87.7	1	1264.95	3.25	0	73.04	0	2.49	0	0	1.76	0	0	0	0	0	0	10.37	10.37
	Inverters	G_Inv10	366900.7	4902704.8	2	0	0	87.7	87.7	1	1277.88	3.25	0	73.13	0	2.49	0	0	1.77	0	0	0	0	0	0	10.27	10.27
	Inverter	MV1-14	365163	4905049	2	0	0	97.3	97.3	1	3983.71	3.25	0	83.01	0	0.52	0	0	17.02	0	0	0	0	0	0	-3.24	-3.24
	Gardiner Substation	G_Sub	366586.3	4903349.9	2.5	0	0	90.8	90.8	1	1935.72	3.5	0	76.74	0	-0.18	0	0	4.26	0	0	0	0	0	0	9.96	9.96
	Inverter	MV3-21	368478	4907206	2	0	0	100.3	100.3	1	6008.41	3.25	0	86.58	0	0.71	0	0	20	0	0	0	0	0	0	-6.97	-6.97
	Inverters	G_Inv7	366694.6	4902824.7	2	0	0	87.7	87.7	1	1401.79	3.25	0	73.93	0	2.51	0	0	1.92	0	0	0	0	0	0	9.3	9.3
	Inverters	G_Inv8	366844.5	4902838.5	2	0	0	87.7	87.7	1	1409.52	3.25	0	73.98	0	2.51	0	0	1.93	0	0	0	0	0	0	9.24	9.24
	Inverter	MV3-18	367752	4907412	2	0	0	100.3	100.3	1	6054.11	3.25	0	86.64	0	0.71	0	0	20.07	0	0	0	0	0	0	-7.1	-7.1
	Inverter	MV3-19	368357	4907347	2	0	0	100.3	100.3	1	6112.68	3.25	0	86.72	0	0.71	0	0	20.15	0	0	0	0	0	0	-7.27	-7.27
	Inverter	MV1-13	364731	4905241	2	0	0	97.3	97.3	1	4349.76	3.25	0	83.77	0	0.57	0	0	17.6	0	0	0	0	0	0	-4.63	-4.63
	Inverter	MV3-20	368689	4907317	2	0	0	100.3	100.3	1	6175.55	3.25	0	86.81	0	0.71	0	0	20.23	0	0	0	0	0	0	-7.44	-7.44
	Inverter	MV3-17	368178	4907472	2	0	0	100.3	100.3	1	6192.25	3.25	0	86.84	0	0.71	0	0	20.25	0	0	0	0	0	0	-7.49	-7.49
	Inverter	MV3-12	367668	4907594	2	0	0	100.3	100.3	1	6222.11	3.25	0	86.88	0	0.71	0	0	20.29	0	0	0	0	0	0	-7.57	-7.57
	Inverter	MV3-15	368357	4907477	2	0	0	100.3	100.3	1	6238.63	3.25	0	86.9	0	0.71	0	0	20.31	0	0	0	0	0	0	-7.62	-7.62
	Inverter	MV3-13	367963	4907577	2	0	0	100.3	100.3	1	6252.12	3.25	0	86.92	0	0.71	0	0	20.33	0	0	0	0	0	0	-7.65	-7.65
	Inverter	MV3-16	368514	4907475	2	0	0	100.3	100.3	1	6277.07	3.25	0	86.96	0	0.71	0	0	20.37	0	0	0	0	0	0	-7.72	-7.72
	Inverter	MV3-14	368684	4907498	2	0	0	100.3	100.3	1	6346.89	3.25	0	87.05	0	0.71	0	0	20.46	0	0	0	0	0	0	-7.91	-7.91
	Inverter	MV3-10	368167	4907669	2	0	0	100.3	100.3	1	6382.33	3.25	0	87.1	0	0.71	0	0	20.5	0	0	0	0	0	0	-8.01	-8.01
	Inverter	MV1-10	365004	4905564	2	0	0	97.3	97.3	1	4518.61	3.25	0	84.1	0	0.59	0	0	17.86	0	0	0	0	0	0	-5.24	-5.24
	Inverter	MV3-11	368346	4907662	2	0	0	100.3	100.3	1	6415.52	3.25	0	87.14	0	0.71	0	0	20.55	0	0	0	0	0	0	-8.1	-8.1
	Inverter	MV3-7	367945	4907754	2	0	0	100.3	100.3	1	6423.09	3.25	0	87.15	0	0.71	0	0	20.56	0	0	0	0	0	0	-8.12	-8.12
	Inverter	MV3-9	368512	4907703	2	0	0	100.3	100.3	1	6496.44	3.25	0	87.25	0	0.71	0	0	20.65	0	0	0	0	0	0	-8.31	-8.31
	Inverter	MV3-6	368162	4907834	2	0	0	100.3	100.3	1	6542.71	3.25	0	87.32	0	0.71	0	0	20.71	0	0	0	0	0	0	-8.43	-8.43
	Inverter	MV3-8	368680	4907712	2	0	0	100.3	100.3	1	6550.68	3.25	0	87.33	0	0.71	0	0	20.73	0	0	0	0	0	0	-8.45	-8.45
	Inverter	MV3-3	367939	4907927	2	0	0	100.3	100.3	1	6592.5	3.25	0	87.38	0	0.72	0	0	20.78	0	0	0	0	0	0	-8.56	-8.56
	Inverters	G_Inv5	366638.5	4902958.1	2	0	0	87.7	87.7	1	1540.48	3.25	0	74.75	0	2.52	0	0	2.09	0	0	0	0	0	0	8.29	8.29
	Inverters	G_Inv6	366788.5	4902972	2	0	0	87.7	87.7	1	1543.36	3.25	0	74.77	0	2.52	0	0	2.1	0	0	0	0	0	0	8.27	8.27
	Inverter	MV6-3	370207	4907140	2	0	0	100.3	100.3	1	6636.58	3.25	0	87.44	0	0.71	0	0	20.84	0	0	0	0	0	0	-8.68	-8.68
	Inverter	MV1-7	364925	4905782	2	0	0	97.3	97.3	1	4749.98	3.25	0	84.53	0	0.62	0	0	18.21	0	0	0	0	0	0	-6.05	-6.05
	Inverter	MV6-2	370085	4907339	2	0	0	100.3	100.3	1	6748.83	3.25	0	87.58	0	0.71	0	0	20.98	0	0	0	0	0	0	-8.97	-8.97
	Inverters	G_Inv4	366732.8	4903105	2	0	0	87.7	87.7	1	1678.5	3.25	0	75.5	0	2.54	0	0	2.26	0	0	0	0	0	0	7.36	7.36
	Inverters	G_Inv3	366583.7	4903091.4	2	0	0	87.7	87.7	1	1679.9	3.25	0	75.51	0	2.54	0	0	2.26	0	0	0	0	0	0	7.35	7.35
	Inverter	MV2-1	365842	4906816	2	0	0	97.3	97.3	1	5476.07	3.25	0	85.77	0	0.68	0	0	19.27	0	0	0	0	0	0	-8.4	-8.4

Inverters	G_Inv2	366676.9	4903239.1	2	0	0	87.7	87.7	1	1816.15	3.25	0	76.18	0	2.56	0	0	2.42	0	0	0	0	0	0	6.5	6.5
Inverter	MV4-11	369264	4908855	2	0	0	100.3	100.3	1	7815.81	3.25	0	88.86	0	0.67	0	0	22.29	0	0	0	0	0	0	-11.51	-11.51
Inverters	G_Inv1	366526.4	4903225.8	2	0	0	87.7	87.7	1	1821.54	3.25	0	76.21	0	2.56	0	0	2.43	0	0	0	0	0	0	6.46	6.46
Inverter	MV4-10	369312	4908858	2	0	0	100.3	100.3	1	7833.76	3.25	0	88.88	0	0.67	0	0	22.31	0	0	0	0	0	0	-11.55	-11.55
Inverter	MV4-7	369035	4909001	2	0	0	100.3	100.3	1	7887.49	3.25	0	88.94	0	0.66	0	0	22.37	0	0	0	0	0	0	-11.66	-11.66
Inverter	MV5-5	370015	4908690	2	0	0	100.3	100.3	1	7930.27	3.25	0	88.99	0	0.66	0	0	22.42	0	0	0	0	0	0	-11.76	-11.76
Inverter	MV4-8	369256	4909001	2	0	0	100.3	100.3	1	7952.21	3.25	0	89.01	0	0.66	0	0	22.45	0	0	0	0	0	0	-11.81	-11.81
Inverter	MV4-9	369289	4909001	2	0	0	100.3	100.3	1	7962.35	3.25	0	89.02	0	0.66	0	0	22.46	0	0	0	0	0	0	-11.83	-11.83
Inverter	MV5-4	370324	4908707	2	0	0	100.3	100.3	1	8074.8	3.25	0	89.14	0	0.65	0	0	22.59	0	0	0	0	0	0	-12.07	-12.07
Inverter	MV4-4	369027	4909199	2	0	0	100.3	100.3	1	8075.57	3.25	0	89.14	0	0.65	0	0	22.59	0	0	0	0	0	0	-12.07	-12.07
Inverter	MV5-2	370006	4908853	2	0	0	100.3	100.3	1	8076.23	3.25	0	89.14	0	0.65	0	0	22.59	0	0	0	0	0	0	-12.07	-12.07
Inverter	MV4-6	369243	4909192	2	0	0	100.3	100.3	1	8130.41	3.25	0	89.2	0	0.64	0	0	22.66	0	0	0	0	0	0	-12.19	-12.19
Inverter	MV4-5	369289	4909199	2	0	0	100.3	100.3	1	8150.87	3.25	0	89.22	0	0.64	0	0	22.68	0	0	0	0	0	0	-12.23	-12.23
Inverter	MV5-3	370231	4908851	2	0	0	100.3	100.3	1	8165.62	3.25	0	89.24	0	0.64	0	0	22.7	0	0	0	0	0	0	-12.26	-12.26
Inverter	MV4-1	369011	4909397	2	0	0	100.3	100.3	1	8262.01	3.25	0	89.34	0	0.63	0	0	22.81	0	0	0	0	0	0	-12.46	-12.46
Inverter	MV4-3	369229	4909397	2	0	0	100.3	100.3	1	8322.31	3.25	0	89.4	0	0.62	0	0	22.87	0	0	0	0	0	0	-12.59	-12.59
Inverter	MV4-2	369272	4909397	2	0	0	100.3	100.3	1	8334.83	3.25	0	89.42	0	0.62	0	0	22.89	0	0	0	0	0	0	-12.61	-12.61
Inverter	MV5-1	370020	4909142	2	0	0	100.3	100.3	1	8348.01	3.25	0	89.43	0	0.62	0	0	22.9	0	0	0	0	0	0	-12.64	-12.64
Inverter	MV6-1	370235	4907364	2	0	0	97.3	97.3	1	6844.19	3.25	0	87.71	0	0.71	0	0	21.1	0	0	0	0	0	0	-12.21	-12.21
DSTATCOM - 10 MVAR #2	DSAT2	369403	4908757	2.5	0	0	96.6	96.6	1	7767.76	3.5	0	88.81	0	3.87	0	0	4.66	0	0	0	0	0	0	-0.71	-0.71
DSTATCOM - 10 MVAR #1	DSAT1	369437	4908757	2.5	0	0	96.6	96.6	1	7779.1	3.5	0	88.82	0	3.87	0	0	4.67	0	0	0	0	0	0	-0.73	-0.73
SubstationTransformer	W_ST	369711.17	4906112.3	2.5	0	0	92	92	1	5500.47	3.5	0	85.81	0	0.67	0	-0.12	9.2	0	0	0	0	0	0	-3.7	-3.7
Inverter	MV1-3	364440	4906039	2	0	0	89.1	89.1	1	5190.87	3.25	0	85.3	0	1.69	0	0	12.72	0	0	0	0	0	0	-10.65	-10.65
Inverter	MV2-2	365977	4906654	2	0	0	89.1	89.1	1	5293.46	3.25	0	85.47	0	1.71	0	0	12.85	0	0	0	0	0	0	-10.98	-10.98
Westbrook Inverter Enclosur	W_INV3	369508	4906164	2	0	0	89.1	89.1	1	5441.63	3.25	0	85.71	0	1.75	0	0	13.05	0	0	0	0	0	0	-11.45	-11.45
Westbrook Inverter Enclosur	W_INV4	369673	4906164	2	0	0	89.1	89.1	1	5524.81	3.25	0	85.85	0	1.77	0	0	13.15	0	0	0	0	0	0	-11.71	-11.71
Westbrook Inverter Enclosur	W_INV2	369374	4906388	2	0	0	89.1	89.1	1	5575.12	3.25	0	85.93	0	1.78	0	0	13.22	0	0	0	0	0	0	-11.87	-11.87
Westbrook Inverter Enclosur	W_INV7	369780	4906417	2	0	0	89.1	89.1	1	5796.9	3.25	0	86.26	0	1.84	0	0	13.5	0	0	0	0	0	0	-12.55	-12.55
Westbrook Inverter Enclosur	W_INV5	369719	4906574	2	0	0	89.1	89.1	1	5902.4	3.25	0	86.42	0	1.86	0	0	13.64	0	0	0	0	0	0	-12.86	-12.86
Westbrook Inverter Enclosur	W_INV6	369875	4906578	2	0	0	89.1	89.1	1	5983.84	3.25	0	86.54	0	1.88	0	0	13.74	0	0	0	0	0	0	-13.11	-13.11
Inverter	MV3-22	368656	4907142	2	0	0	89.1	89.1	1	5998.78	3.25	0	86.56	0	1.89	0	0	13.76	0	0	0	0	0	0	-13.15	-13.15
Inverter	MV3-5	368340	4907843	2	0	0	89.1	89.1	1	6590.12	3.25	0	87.38	0	2.03	0	0	14.49	0	0	0	0	0	0	-14.84	-14.84
Inverter	MV3-1	368156	4907976	2	0	0	89.1	89.1	1	6680.59	3.25	0	87.5	0	2.05	0	0	14.6	0	0	0	0	0	0	-15.09	-15.09
Inverter	MV3-4	368502	4907925	2	0	0	89.1	89.1	1	6708.58	3.25	0	87.53	0	2.06	0	0	14.64	0	0	0	0	0	0	-15.17	-15.17
Inverter	MV3-2	368671	4907928	2	0	0	89.1	89.1	1	6755.66	3.25	0	87.59	0	2.07	0	0	14.69	0	0	0	0	0	0	-15.3	-15.3
Fixed Reactor Bank 1	FRB1	369378	4908755	6	0	0	89.8	89.8	1	7757.61	5.25	0	88.79	0	-0.2	0	0	11.44	0	0	0	0	0	0	-10.26	-10.26
Fixed Reactor Bank 2	FRB2	369464	4908755	6	0	0	89.8	89.8	1	7786.32	5.25	0	88.83	0	-0.2	0	0	11.47	0	0	0	0	0	0	-10.32	-10.32
Inverter	MV4-15	369176	4908481	2	0	0	89.1	89.1	1	7433.09	3.25	0	88.42	0	2.23	0	0	15.49	0	0	0	0	0	0	-17.09	-17.09
Inverter	MV4-14	369176	4908507	2	0	0	89.1	89.1	1	7457.76	3.25	0	88.45	0	2.24	0	0	15.52	0	0	0	0	0	0	-17.15	-17.15
Inverter	MV4-13	369051	4908605	2	0	0	89.1	89.1	1	7512.87	3.25	0	88.52	0	2.25	0	0	15.59	0	0	0	0	0	0	-17.29	-17.29
Inverter	MV4-12	369043	4908803	2	0	0	89.1	89.1	1	7699.91	3.25	0	88.73	0	2.29	0	0	15.8	0	0	0	0	0	0	-17.77	-17.77
Inverter	MV5-6	369982	4908507	2	0	0	89.1	89.1	1	7749.56	3.25	0	88.79	0	2.3	0	0	15.86	0	0	0	0	0	0	-17.89	-17.89
Westbrook Inverter Enclosur	W_INV1	369409	4906578	2	0	0	86.1	86.1	1	5760.38	3.25	0	86.21	0	1.83	0	0	13.46	0	0	0	0	0	0	-15.44	-15.44
Inverter	MV6-4	370250	4906966	2	0	0	86.1	86.1	1	6509.97	3.25	0	87.27	0	2.01	0	0	14.4	0	0	0	0	0	0	-17.62	-17.62
Westbrook Inverter Transfor	W_INVTR1	369403	4906578	2	0	0	78.2	78.2	1	5757.7	3.25	0	86.2	0	-3.32	0	0	2.66	0	0	0	0	0	0	-7.3	-7.3
Westbrook Inverter Transfor	W_INVTR3	369514	4906164	2	0	0	77.3	77.3	1	5444.59	3.25	0	85.72	0	-3.26	0	0	2.56	0	0	0	0	0	0	-7.68	-7.68
Westbrook Inverter Transfor	W_INVTR4	369679	4906164	2	0	0	77.3	77.3	1	5527.91	3.25	0	85.85	0	-3.28	0	0	2.59	0	0	0	0	0	0	-7.82	-7.82
Westbrook Inverter Transfor	W_INVTR2	369368	4906388	2	0	0	77.3	77.3	1	5572.38	3.25	0	85.92	0	-3.29	0	0	2.6	0	0	0	0	0	0	-7.89	-7.89
Westbrook Inverter Transfor	W_INVTR7	369786	4906417	2	0	0	77.3	77.3	1	5799.96	3.25	0	86.27	0	-3.33	0	0	2.68	0	0	0	0	0	0	-8.27	-8.27
Westbrook Inverter Transfor	W_INVTR5	369725	4906574	2	0	0	77.3	77.3	1	5905.34	3.25	0	86.42	0	-3.35	0	0	2.71	0	0	0	0	0	0	-8.44	-8.44
Westbrook Inverter Transfor	W_INVTR6	369881	4906578	2	0	0	77.3	77.3	1	5986.9	3.25	0	86.54	0	-3.37	0	0	2.74	0	0	0	0	0	0	-8.57	-8.57
Inverter Transformer	MV1-14 T	365157	4905049	2	0	0	69.4	69.4	1	3986.22	3.25	0	83.01	0	2.78	0	0	6.67	0	0	0	0	0	0	-23.11	-23.11
Inverter Transformer	MV1-13 T	364725	4905241	2	0	0	69.4	69.4	1	4352.66	3.25	0	83.78	0	2.87	0	0	6.93	0	0	0	0	0	0	-24.23	-24.23
Inverter Transformer	MV1-10 T	365010	4905564	2	0	0	69.4	69.4	1	4516.19	3.25	0	84.1	0	2.91	0	0	7.05	0	0	0	0	0	0	-24.7	-24.7
Inverter Transformer	MV1-7 T	364919	4905782	2	0	0	69.4	69.4	1	4752.38	3.25	0	84.54	0	2.96	0	0	7.21	0	0	0	0	0	0	-25.36	-25.36
Inverter Transformer	MV2-1 T	365836	4906816	2	0	0	69.4	69.4	1	5477.15	3.25	0	85.77	0	3.1	0	0	7.69	0	0	0	0	0	0	-27.22	-27.22
Inverter Transformer	MV6-4 T	370244	4906966	2	0	0	69.4	69.4	1	6506.81	4.06	0	87.27	0	3.89	0.71	0	8.32	0	0	0	0	0	0	-30.83	-30.83
Inverter Transformer	MV6-1 T	370230	4907364	2	0	0	69.4	69.4	1	6841.7	3.25	0	87.7	0	3.3	0	0	8.51	0	0	0	0	0	0	-30.16	-30.16
Inverter Transformer	MV1-15 T	365309	4904994	2	0	0	56.1	56.1	1	3874.33	3.25	0	82.76	0	1.19	0	0	10.27	0	0	0	0	0	0	-38.17	-38.17
Inverter Transformer	MV1-12 T	365044	4905386	2	0	0	56.1	56.1	1	4339.74	3.25	0	83.75	0	1.38	0	0	10.95	0	0	0	0	0	0	-40.02	-40.02
Inverter Transformer	MV1-11 T	364649	4905414	2	0	0	56.1	56.1	1	4540.88	3.25	0	84.14	0	1.46	0	0	11.23	0	0	0	0	0	0	-40.77	-40.77
Inverter Transformer	MV1-8 T	364782	4905647	2	0	0	56.1	56.1	1	4687.16	3.25	0	84.42	0	1.51	0	0	11.43	0	0	0	0	0	0	-41.3	-41.3
Inverter Transformer	MV1-9 T	364555	4905646	2	0	0	56.1	56.1	1	4789.63	3.25	0	84.61	0	1.55	0	0	11.57	0	0	0	0	0	0	-41.67	-41.67
Inverter Transformer	MV1-4 T	364821	4905918	2	0	0	56.1	56.1	1	4916.41	3.25	0	84.83	0	1.6	0	0	11.74	0	0	0	0	0	0	-42.11	-42.11
Inverter Transformer	MV1-5 T	364676	4905892	2	0	0	56.1	56.1	1	4953.87	3.25	0	84.9	0	1.61	0	0	11.79	0	0	0	0	0	0	-42.24	-42.24
Inverter Transformer	MV1-6 T	364482	4905835	2	0	0	56.1	56.1	1	4990.71	3.25	0	84.96	0	1.62	0	0	11.84	0	0	0	0	0	0	-42.37	-42.37
Inverter Transformer	MV1-2 T	364759	4906063	2	0	0	56.1	56.1	1	5074.09	3.25	0	85.11	0	1.65	0	0	11.95	0	0	0	0	0	0	-42.65	-42.65
Inverter Transformer	MV1-1 T	364721	4906166	2	0	0	56.1	56.1	1	5183.64	3.25	0	85.29	0	1.69	0	0	12.09	0	0	0	0	0	0	-43.02	-43.02
Inverter Transformer	MV1-3 T	364435	4906039	2	0	0	56.1	56.1	1	5193.17	3.25	0	85.31	0	1.69	0	0	12.11	0	0	0	0	0	0	-43.05	-43.05
Inverter Transformer	MV2-2 T	365982	4906654	2	0	0	56.1	56.1	1	5292.66	3.25	0	85.47	0	1.73	0	0	12.23	0	0	0	0	0	0	-43.38	-43.38
Inverter Transformer	MV2-3 T	365814	4906641	2	0	0	56.1	56.1	1	5309.28	3.25	0	85.5	0	1.74	0	0	12.25	0	0	0	0	0	0	-43.43	-43.43
Inverter Transformer	MV2-4 T	365590	4906628	2	0	0	56.1	56.1	1	5343.85	3.25	0	85.56	0	1.75	0	0	12.3	0	0	0	0	0	0	-43.54	-43.54
Inverter Transformer	MV3-22 T	368661	4907142	2	0	0	56.1	56.1	1	6000.31	3.25	0	86.56	0	1.96	0	0	13.1	0	0	0	0	0	0	-45.57	-45.57
Inverter Transformer	MV3-21 T	368484	4907206	2	0	0	56.1	56.1	1	6010.06	3.25	0	86.58	0	1.97	0	0	13.11	0	0	0	0	0	0	-45.6	-45.6

	Inverter Transformer	MV3-18 T	367757	4907412	2	0	0	56.1	56.1	1	6054.87	3.25	0	86.64	0	1.98	0	0	13.17	0	0	0	0	0	0	-45.73	-45.73
	Inverter Transformer	MV3-19 T	368352	4907347	2	0	0	56.1	56.1	1	6111.43	3.25	0	86.72	0	2	0	0	13.23	0	0	0	0	0	0	-45.9	-45.9
	Inverter Transformer	MV3-20 T	368683	4907317	2	0	0	56.1	56.1	1	6173.74	3.25	0	86.81	0	2.02	0	0	13.31	0	0	0	0	0	0	-46.08	-46.08
	Inverter Transformer	MV3-17 T	368183	4907472	2	0	0	56.1	56.1	1	6193.35	3.25	0	86.84	0	2.03	0	0	13.33	0	0	0	0	0	0	-46.13	-46.13
	Inverter Transformer	MV3-12 T	367674	4907594	2	0	0	56.1	56.1	1	6222.92	3.25	0	86.88	0	2.03	0	0	13.36	0	0	0	0	0	0	-46.22	-46.22
	Inverter Transformer	MV3-15 T	368351	4907477	2	0	0	56.1	56.1	1	6237.16	3.25	0	86.9	0	2.04	0	0	13.38	0	0	0	0	0	0	-46.26	-46.26
	Inverter Transformer	MV3-13 T	367958	4907577	2	0	0	56.1	56.1	1	6251.21	3.25	0	86.92	0	2.04	0	0	13.4	0	0	0	0	0	0	-46.3	-46.3
	Inverter Transformer	MV3-16 T	368509	4907475	2	0	0	56.1	56.1	1	6275.73	3.25	0	86.95	0	2.05	0	0	13.42	0	0	0	0	0	0	-46.37	-46.37
	Inverter Transformer	MV3-14 T	368678	4907498	2	0	0	56.1	56.1	1	6345.13	3.25	0	87.05	0	2.07	0	0	13.5	0	0	0	0	0	0	-46.57	-46.57
	Inverter Transformer	MV3-10 T	368162	4907669	2	0	0	56.1	56.1	1	6381.28	3.25	0	87.1	0	2.08	0	0	13.55	0	0	0	0	0	0	-46.67	-46.67
	Inverter Transformer	MV3-11 T	368340	4907662	2	0	0	56.1	56.1	1	6414.1	3.25	0	87.14	0	2.09	0	0	13.58	0	0	0	0	0	0	-46.76	-46.76
	Inverter Transformer	MV3-7 T	367951	4907754	2	0	0	56.1	56.1	1	6424.14	3.25	0	87.16	0	2.1	0	0	13.59	0	0	0	0	0	0	-46.79	-46.79
	Inverter Transformer	MV3-9 T	368517	4907703	2	0	0	56.1	56.1	1	6497.74	3.25	0	87.26	0	2.12	0	0	13.68	0	0	0	0	0	0	-46.99	-46.99
	Inverter Transformer	MV3-6 T	368156	4907834	2	0	0	56.1	56.1	1	6541.49	3.25	0	87.31	0	2.13	0	0	13.73	0	0	0	0	0	0	-47.11	-47.11
	Inverter Transformer	MV3-8 T	368685	4907712	2	0	0	56.1	56.1	1	6552.1	3.25	0	87.33	0	2.13	0	0	13.74	0	0	0	0	0	0	-47.14	-47.14
	Inverter Transformer	MV3-5 T	368335	4907843	2	0	0	56.1	56.1	1	6588.98	3.25	0	87.38	0	2.14	0	0	13.78	0	0	0	0	0	0	-47.24	-47.24
	Inverter Transformer	MV3-3 T	367944	4907927	2	0	0	56.1	56.1	1	6593.34	3.25	0	87.38	0	2.15	0	0	13.78	0	0	0	0	0	0	-47.25	-47.25
	Inverter Transformer	MV6-3 T	370202	4907140	2	0	0	56.1	56.1	1	6634.03	3.25	0	87.44	0	2.16	0	0	13.83	0	0	0	0	0	0	-47.36	-47.36
	Inverter Transformer	MV3-1 T	368150	4907976	2	0	0	56.1	56.1	1	6679.4	3.25	0	87.49	0	2.17	0	0	13.88	0	0	0	0	0	0	-47.49	-47.49
	Inverter Transformer	MV3-4 T	368507	4907925	2	0	0	56.1	56.1	1	6709.83	3.25	0	87.53	0	2.18	0	0	13.91	0	0	0	0	0	0	-47.57	-47.57
	Inverter Transformer	MV6-2 T	370091	4907339	2	0	0	56.1	56.1	1	6751.73	3.25	0	87.59	0	2.19	0	0	13.96	0	0	0	0	0	0	-47.68	-47.68
	Inverter Transformer	MV3-2 T	368677	4907928	2	0	0	56.1	56.1	1	6757.3	3.25	0	87.6	0	2.19	0	0	13.97	0	0	0	0	0	0	-47.7	-47.7
	Inverter Transformer	MV4-15 T	369170	4908481	2	0	0	56.1	56.1	1	7431.2	3.25	0	88.42	0	2.37	0	0	14.68	0	0	0	0	0	0	-49.42	-49.42
	Inverter Transformer	MV4-14 T	369182	4908507	2	0	0	56.1	56.1	1	7459.66	3.25	0	88.45	0	2.38	0	0	14.71	0	0	0	0	0	0	-49.49	-49.49
	Inverter Transformer	MV4-13 T	369057	4908605	2	0	0	56.1	56.1	1	7514.65	3.25	0	88.52	0	2.39	0	0	14.77	0	0	0	0	0	0	-49.62	-49.62
	Inverter Transformer	MV4-12 T	369049	4908803	2	0	0	56.1	56.1	1	7701.64	3.25	0	88.73	0	2.44	0	0	14.96	0	0	0	0	0	0	-50.07	-50.07
	Inverter Transformer	MV5-6 T	369987	4908507	2	0	0	56.1	56.1	1	7751.6	3.25	0	88.79	0	2.45	0	0	15.01	0	0	0	0	0	0	-50.19	-50.19
	Inverter Transformer	MV4-11 T	369269	4908855	2	0	0	56.1	56.1	1	7817.37	3.25	0	88.86	0	2.47	0	0	15.08	0	0	0	0	0	0	-50.35	-50.35
	Inverter Transformer	MV4-10 T	369307	4908858	2	0	0	56.1	56.1	1	7832.17	3.25	0	88.88	0	2.47	0	0	15.09	0	0	0	0	0	0	-50.38	-50.38
	Inverter Transformer	MV4-7 T	369040	4909001	2	0	0	56.1	56.1	1	7888.89	3.25	0	88.94	0	2.48	0	0	15.15	0	0	0	0	0	0	-50.51	-50.51
	Inverter Transformer	MV5-5 T	370021	4908690	2	0	0	56.1	56.1	1	7932.68	3.25	0	88.99	0	2.49	0	0	15.19	0	0	0	0	0	0	-50.61	-50.61
	Inverter Transformer	MV4-8 T	369262	4909001	2	0	0	56.1	56.1	1	7954.04	3.25	0	89.01	0	2.5	0	0	15.21	0	0	0	0	0	0	-50.66	-50.66
	Inverter Transformer	MV4-9 T	369284	4909001	2	0	0	56.1	56.1	1	7960.81	3.25	0	89.02	0	2.5	0	0	15.22	0	0	0	0	0	0	-50.68	-50.68
	Inverter Transformer	MV4-4 T	369033	4909199	2	0	0	56.1	56.1	1	8077.21	3.25	0	89.15	0	2.53	0	0	15.33	0	0	0	0	0	0	-50.95	-50.95
	Inverter Transformer	MV5-4 T	370330	4908707	2	0	0	56.1	56.1	1	8077.4	3.25	0	89.15	0	2.53	0	0	15.33	0	0	0	0	0	0	-50.95	-50.95
	Inverter Transformer	MV5-2 T	370011	4908853	2	0	0	56.1	56.1	1	8078.2	3.25	0	89.15	0	2.53	0	0	15.33	0	0	0	0	0	0	-50.95	-50.95
	Inverter Transformer	MV4-6 T	369249	4909192	2	0	0	56.1	56.1	1	8132.19	3.25	0	89.2	0	2.54	0	0	15.39	0	0	0	0	0	0	-51.07	-51.07
	Inverter Transformer	MV4-5 T	369283	4909199	2	0	0	56.1	56.1	1	8149.06	3.25	0	89.22	0	2.54	0	0	15.4	0	0	0	0	0	0	-51.11	-51.11
	Inverter Transformer	MV5-3 T	370237	4908851	2	0	0	56.1	56.1	1	8168.12	3.25	0	89.24	0	2.55	0	0	15.42	0	0	0	0	0	0	-51.15	-51.15
	Inverter Transformer	MV4-1 T	369017	4909397	2	0	0	56.1	56.1	1	8263.6	3.25	0	89.34	0	2.57	0	0	15.51	0	0	0	0	0	0	-51.37	-51.37
	Inverter Transformer	MV4-3 T	369234	4909397	2	0	0	56.1	56.1	1	8323.76	3.25	0	89.41	0	2.58	0	0	15.57	0	0	0	0	0	0	-51.5	-51.5
	Inverter Transformer	MV4-2 T	369267	4909397	2	0	0	56.1	56.1	1	8333.36	3.25	0	89.42	0	2.58	0	0	15.58	0	0	0	0	0	0	-51.52	-51.52
	Inverter Transformer	MV5-1 T	370015	4909142	2	0	0	56.1	56.1	1	8346.09	3.25	0	89.43	0	2.59	0	0	15.59	0	0	0	0	0	0	-51.55	-51.55
	Line Reactor	NGR	369421	4908787.5	5	0	0	45.4	45.4	1	7802.5	5.25	0	88.84	0	3.2	1.37	0.11	3.19	0	0	0	0	0	0	-51.26	-51.26
Limit. Valu	0	0																								
Level D/N:	20.1571	20.1571																								

Receiver: Existing Noise Receptor
ID: G-83
X: 365991.2
Y: 4901610.1
Z: 4.5
Ground: 0

ISO	Description	ID	X	Y	Z	Ground	ReflOrd	LxT	LxN	L/A	Dist.	hm	Freq	Adiv	K0b	Agr	Abar	z	Aatm	Afol	Ahous	Cmet	CmetN	Dc	RL	LtotT	LtotN
	Sol_Luce Substation	S_Substation	369426	4908792	3.5	0	0	112.1	112.1	1	7961	5.25	0	89.02	0	1.55	2.27	0.32	11.62	0	0	0	0	0	0	7.61	7.61
	Inverter	MV1-15	365315	4904994	2	0	0	100.3	100.3	1	3450.8	3.25	0	81.76	0	0.44	0	0	16.15	0	0	0	0	0	0	1.96	1.96
	Inverter	MV1-12	365038	4905386	2	0	0	100.3	100.3	1	3894.36	3.25	0	82.81	0	0.51	0	0	16.88	0	0	0	0	0	0	0.11	0.11
	Inverter	MV1-11	364655	4905414	2	0	0	100.3	100.3	1	4031.76	3.25	0	83.11	0	0.53	0	0	17.1	0	0	0	0	0	0	-0.43	-0.43
	Inverter	MV1-8	364788	4905647	2	0	0	100.3	100.3	1	4212.39	3.25	0	83.49	0	0.56	0	0	17.38	0	0	0	0	0	0	-1.12	-1.12
	Inverter	MV1-9	364561	4905646	2	0	0	100.3	100.3	1	4281.82	3.25	0	83.63	0	0.56	0	0	17.49	0	0	0	0	0	0	-1.38	-1.38
	Inverter	MV1-4	364815	4905918	2	0	0	100.3	100.3	1	4465.59	3.25	0	84	0	0.59	0	0	17.78	0	0	0	0	0	0	-2.05	-2.05
	Inverter	MV1-5	364671	4905892	2	0	0	100.3	100.3	1	4480.8	3.25	0	84.03	0	0.59	0	0	17.8	0	0	0	0	0	0	-2.1	-2.1
	Inverter	MV1-6	364477	4905835	2	0	0	100.3	100.3	1	4488.05	3.25	0	84.04	0	0.59	0	0	17.81	0	0	0	0	0	0	-2.13	-2.13
	Inverter	MV1-2	364753	4906063	2	0	0	100.3	100.3	1	4621.85	3.25	0	84.3	0	0.6	0	0	18.02	0	0	0	0	0	0	-2.6	-2.6
	Inverter	MV1-1	364715	4906166	2	0	0	100.3	100.3	1	4731.27	3.25	0	84.5	0	0.62	0	0	18.18	0	0	0	0	0	0	-2.98	-2.98
	Inverter	MV1-14	365163	4905049	2	0	0	97.3	97.3	1	3537.22	3.25	0	81.97	0	0.46	0	0	16.29	0	0	0	0	0	0	-1.41	-1.41
	Inverter	MV2-4	365586	4906624	2	0	0	100.3	100.3	1	5030.25	3.25	0	85.03	0	0.64	0	0	18.62	0	0	0	0	0	0	-3.99	-3.99
	Inverter	MV2-3	365820	4906641	2	0	0	100.3	100.3	1	5033.81	3.25	0	85.04	0	0.65	0	0	18.63	0	0	0	0	0	0	-4	-4
	Inverter	MV1-13	364731	4905241	2	0	0	97.3	97.3	1	3843.38	3.25	0	82.69	0	0.5	0	0	16.8	0	0	0	0	0	0	-2.68	-2.68
	Gardiner Substation	G_Sub	366586.3	4903349.9	2.5	0	0	90.8	90.8	1	1838.76	3.5	0	76.29	0	-0.2	0	0	4.09	0	0	0	0	0	0	10.6	10.6
	Inverters	G_Inv9	366750.9	4902691.8	2	0	0	87.7	87.7	1	1321.83	3.25	0	73.42	0	2.5	0	0	1.83	0	0	0	0	0	0	9.91	9.91
	Inverter	MV1-10	365004	4905564	2	0	0	97.3	97.3	1	4075.28	3.25	0	83.2	0	0.54	0	0	17.17	0	0	0	0	0	0	-3.6	-3.6
	Inverters	G_Inv7	366694.6	4902824.7	2	0	0	87.7	87.7	1	1403.58	3.25	0	73.94	0	2.51	0	0	1.93	0	0	0	0	0	0	9.28	9.28

Inverter	MV3-18	367752	4907412	2	0	0	100.3	100.3	1	6063.21	3.25	0	86.65	0	0.71	0	0	20.08	0	0	0	0	0	0	-7.13	-7.13
Inverter	MV1-7	364925	4905782	2	0	0	97.3	97.3	1	4305.99	3.25	0	83.68	0	0.57	0	0	17.53	0	0	0	0	0	0	-4.47	-4.47
Inverters	G_Inv10	366900.7	4902704.8	2	0	0	87.7	87.7	1	1423.22	3.25	0	74.07	0	2.51	0	0	1.95	0	0	0	0	0	0	9.14	9.14
Inverter	MV3-21	368478	4907206	2	0	0	100.3	100.3	1	6123.58	3.25	0	86.74	0	0.71	0	0	20.16	0	0	0	0	0	0	-7.3	-7.3
Inverter	MV3-19	368357	4907347	2	0	0	100.3	100.3	1	6205.57	3.25	0	86.86	0	0.71	0	0	20.27	0	0	0	0	0	0	-7.52	-7.52
Inverter	MV3-12	367668	4907594	2	0	0	100.3	100.3	1	6214.4	3.25	0	86.87	0	0.71	0	0	20.28	0	0	0	0	0	0	-7.55	-7.55
Inverter	MV3-17	368178	4907472	2	0	0	100.3	100.3	1	6256.51	3.25	0	86.93	0	0.71	0	0	20.34	0	0	0	0	0	0	-7.66	-7.66
Inverter	MV3-13	367963	4907577	2	0	0	100.3	100.3	1	6284.26	3.25	0	86.97	0	0.71	0	0	20.37	0	0	0	0	0	0	-7.74	-7.74
Inverter	MV3-20	368689	4907317	2	0	0	100.3	100.3	1	6312.44	3.25	0	87	0	0.71	0	0	20.41	0	0	0	0	0	0	-7.82	-7.82
Inverter	MV3-15	368357	4907477	2	0	0	100.3	100.3	1	6325.94	3.25	0	87.02	0	0.71	0	0	20.43	0	0	0	0	0	0	-7.85	-7.85
Inverter	MV3-16	368514	4907475	2	0	0	100.3	100.3	1	6384.48	3.25	0	87.1	0	0.71	0	0	20.51	0	0	0	0	0	0	-8.01	-8.01
Inverters	G_Inv5	366638.5	4902958.1	2	0	0	87.7	87.7	1	1495.36	3.25	0	74.49	0	2.52	0	0	2.04	0	0	0	0	0	0	8.61	8.61
Inverters	G_Inv8	366844.5	4902838.5	2	0	0	87.7	87.7	1	1495.69	3.25	0	74.5	0	2.52	0	0	2.04	0	0	0	0	0	0	8.61	8.61
Inverter	MV3-10	368167	4907669	2	0	0	100.3	100.3	1	6437.73	3.25	0	87.17	0	0.71	0	0	20.58	0	0	0	0	0	0	-8.15	-8.15
Inverter	MV3-7	367945	4907754	2	0	0	100.3	100.3	1	6447.08	3.25	0	87.19	0	0.71	0	0	20.59	0	0	0	0	0	0	-8.18	-8.18
Inverter	MV3-14	368684	4907498	2	0	0	100.3	100.3	1	6474.45	3.25	0	87.22	0	0.71	0	0	20.63	0	0	0	0	0	0	-8.25	-8.25
Inverter	MV3-11	368346	4907662	2	0	0	100.3	100.3	1	6493.89	3.25	0	87.25	0	0.71	0	0	20.65	0	0	0	0	0	0	-8.3	-8.3
Inverter	MV3-6	368162	4907834	2	0	0	100.3	100.3	1	6591.61	3.25	0	87.38	0	0.72	0	0	20.78	0	0	0	0	0	0	-8.56	-8.56
Inverter	MV3-9	368512	4907703	2	0	0	100.3	100.3	1	6593.78	3.25	0	87.38	0	0.72	0	0	20.78	0	0	0	0	0	0	-8.57	-8.57
Inverter	MV3-3	367939	4907927	2	0	0	100.3	100.3	1	6610.38	3.25	0	87.4	0	0.72	0	0	20.8	0	0	0	0	0	0	-8.61	-8.61
Inverter	MV3-8	368680	4907712	2	0	0	100.3	100.3	1	6668.05	3.25	0	87.48	0	0.71	0	0	20.88	0	0	0	0	0	0	-8.76	-8.76
Inverters	G_Inv6	366788.5	4902972	2	0	0	87.7	87.7	1	1578.12	3.25	0	74.96	0	2.53	0	0	2.14	0	0	0	0	0	0	8.03	8.03
Inverters	G_Inv3	366583.7	4903091.4	2	0	0	87.7	87.7	1	1595.4	3.25	0	75.06	0	2.53	0	0	2.16	0	0	0	0	0	0	7.91	7.91
Inverter	MV6-3	370207	4907140	2	0	0	100.3	100.3	1	6953.62	3.25	0	87.84	0	0.71	0	0	21.24	0	0	0	0	0	0	-9.48	-9.48
Inverter	MV6-2	370085	4907339	2	0	0	100.3	100.3	1	7041.27	3.25	0	87.95	0	0.71	0	0	21.35	0	0	0	0	0	0	-9.7	-9.7
Inverters	G_Inv4	366732.8	4903105	2	0	0	87.7	87.7	1	1668.74	3.25	0	75.45	0	2.54	0	0	2.25	0	0	0	0	0	0	7.43	7.43
Inverters	G_Inv1	366526.4	4903225.8	2	0	0	87.7	87.7	1	1702.04	3.25	0	75.62	0	2.55	0	0	2.29	0	0	0	0	0	0	7.21	7.21
Inverter	MV2-1	365842	4906816	2	0	0	97.3	97.3	1	5208.04	3.25	0	85.33	0	0.66	0	0	18.88	0	0	0	0	0	0	-7.56	-7.56
Inverters	G_Inv2	366676.9	4903239.1	2	0	0	87.7	87.7	1	1767.44	3.25	0	75.95	0	2.55	0	0	2.36	0	0	0	0	0	0	6.8	6.8
Inverter	MV4-11	369264	4908855	2	0	0	100.3	100.3	1	7949.83	3.25	0	89.01	0	0.66	0	0	22.45	0	0	0	0	0	0	-11.8	-11.8
Inverter	MV4-10	369312	4908858	2	0	0	100.3	100.3	1	7972.44	3.25	0	89.03	0	0.66	0	0	22.47	0	0	0	0	0	0	-11.85	-11.85
Inverter	MV4-7	369035	4909001	2	0	0	100.3	100.3	1	7993.13	3.25	0	89.05	0	0.65	0	0	22.5	0	0	0	0	0	0	-11.89	-11.89
Inverter	MV4-8	369256	4909001	2	0	0	100.3	100.3	1	8079.87	3.25	0	89.15	0	0.65	0	0	22.6	0	0	0	0	0	0	-12.08	-12.08
Inverter	MV4-9	369289	4909001	2	0	0	100.3	100.3	1	8093.26	3.25	0	89.16	0	0.64	0	0	22.61	0	0	0	0	0	0	-12.11	-12.11
Inverter	MV5-5	370015	4908690	2	0	0	100.3	100.3	1	8143.46	3.25	0	89.22	0	0.64	0	0	22.67	0	0	0	0	0	0	-12.22	-12.22
Inverter	MV4-4	369027	4909199	2	0	0	100.3	100.3	1	8173.58	3.25	0	89.25	0	0.64	0	0	22.71	0	0	0	0	0	0	-12.28	-12.28
Inverter	MV4-6	369243	4909192	2	0	0	100.3	100.3	1	8249.81	3.25	0	89.33	0	0.63	0	0	22.79	0	0	0	0	0	0	-12.44	-12.44
Inverter	MV4-5	369289	4909199	2	0	0	100.3	100.3	1	8274.47	3.25	0	89.35	0	0.63	0	0	22.82	0	0	0	0	0	0	-12.49	-12.49
Inverter	MV5-2	370006	4908853	2	0	0	100.3	100.3	1	8281.2	3.25	0	89.36	0	0.63	0	0	22.83	0	0	0	0	0	0	-12.5	-12.5
Inverter	MV5-4	370324	4908707	2	0	0	100.3	100.3	1	8315	3.25	0	89.4	0	0.62	0	0	22.87	0	0	0	0	0	0	-12.57	-12.57
Inverter	MV4-1	369011	4909397	2	0	0	100.3	100.3	1	8351.95	3.25	0	89.44	0	0.62	0	0	22.91	0	0	0	0	0	0	-12.65	-12.65
Inverter	MV5-3	370231	4908851	2	0	0	100.3	100.3	1	8390.86	3.25	0	89.48	0	0.61	0	0	22.95	0	0	0	0	0	0	-12.73	-12.73
Inverter	MV4-3	369229	4909397	2	0	0	100.3	100.3	1	8433.22	3.25	0	89.52	0	0.61	0	0	23	0	0	0	0	0	0	-12.82	-12.82
Inverter	MV4-2	369272	4909397	2	0	0	100.3	100.3	1	8449.82	3.25	0	89.54	0	0.61	0	0	23.02	0	0	0	0	0	0	-12.85	-12.85
Inverter	MV5-1	370020	4909142	2	0	0	100.3	100.3	1	8541.71	3.25	0	89.63	0	0.6	0	0	23.12	0	0	0	0	0	0	-13.04	-13.04
Inverter	MV6-1	370235	4907364	2	0	0	97.3	97.3	1	7149.63	3.25	0	88.09	0	0.71	0	0	21.49	0	0	0	0	0	0	-12.96	-12.96
DSTATCOM - 10 MVAR #2	DSAT2	369403	4908757	2.5	0	0	96.6	96.6	1	7919.51	3.5	0	88.97	0	3.88	0	0	4.73	0	0	0	0	0	0	-0.96	-0.96
DSTATCOM - 10 MVAR #1	DSAT1	369437	4908757	2.5	0	0	96.6	96.6	1	7934.21	3.5	0	88.99	0	3.88	0	0	4.74	0	0	0	0	0	0	-0.98	-0.98
SubstationTransformer	W_ST	369711.17	4906112.3	2.5	0	0	92	92	1	5840.18	3.5	0	86.33	0	0.73	0	-0.11	9.57	0	0	0	0	0	0	-4.66	-4.66
Inverter	MV1-3	364440	4906039	2	0	0	89.1	89.1	1	4692.69	3.25	0	84.43	0	1.56	0	0	12.05	0	0	0	0	0	0	-8.98	-8.98
Inverter	MV2-2	365977	4906654	2	0	0	89.1	89.1	1	5043.92	3.25	0	85.06	0	1.65	0	0	12.52	0	0	0	0	0	0	-10.17	-10.17
Westbrook Inverter Enclosur	W_INV3	369508	4906164	2	0	0	89.1	89.1	1	5753.77	3.25	0	86.2	0	1.83	0	0	13.45	0	0	0	0	0	0	-12.42	-12.42
Westbrook Inverter Enclosur	W_INV2	369374	4906388	2	0	0	89.1	89.1	1	5854.2	3.25	0	86.35	0	1.85	0	0	13.58	0	0	0	0	0	0	-12.72	-12.72
Westbrook Inverter Enclosur	W_INV4	369673	4906164	2	0	0	89.1	89.1	1	5856.08	3.25	0	86.35	0	1.85	0	0	13.58	0	0	0	0	0	0	-12.72	-12.72
Westbrook Inverter Enclosur	W_INV7	369780	4906417	2	0	0	89.1	89.1	1	6120.56	3.25	0	86.74	0	1.92	0	0	13.91	0	0	0	0	0	0	-13.51	-13.51
Inverter	MV3-22	368656	4907142	2	0	0	89.1	89.1	1	6140.28	3.25	0	86.76	0	1.92	0	0	13.94	0	0	0	0	0	0	-13.56	-13.56
Westbrook Inverter Enclosur	W_INV5	369719	4906574	2	0	0	89.1	89.1	1	6207.8	3.25	0	86.86	0	1.94	0	0	14.02	0	0	0	0	0	0	-13.76	-13.76
Westbrook Inverter Enclosur	W_INV6	369875	4906578	2	0	0	89.1	89.1	1	6305.87	3.25	0	86.99	0	1.96	0	0	14.14	0	0	0	0	0	0	-14.04	-14.04
Inverter	MV3-5	368340	4907843	2	0	0	89.1	89.1	1	6660.77	3.25	0	87.47	0	2.05	0	0	14.58	0	0	0	0	0	0	-15.04	-15.04
Inverter	MV3-1	368156	4907976	2	0	0	89.1	89.1	1	6723.92	3.34	0	87.55	0	2.78	1.92	0	14.66	0	0	0	0	0	0	-17.85	-17.85
Inverter	MV3-4	368502	4907925	2	0	0	89.1	89.1	1	6795.74	3.25	0	87.64	0	2.08	0	0	14.74	0	0	0	0	0	0	-15.41	-15.41
Inverter	MV3-2	368671	4907928	2	0	0	89.1	89.1	1	6862.74	3.25	0	87.73	0	2.09	0	0	14.82	0	0	0	0	0	0	-15.59	-15.59
Fixed Reactor Bank 1	FRB1	369378	4908755	6	0	0	89.8	89.8	1	7906.96	5.25	0	88.96	0	-0.18	0	0	11.57	0	0	0	0	0	0	-10.57	-10.57
Fixed Reactor Bank 2	FRB2	369464	4908755	6	0	0	89.8	89.8	1	7944.18	5.25	0	89	0	-0.18	0	0	11.61	0	0	0	0	0	0	-10.65	-10.65
Inverter	MV4-15	369176	4908481	2	0	0	89.1	89.1	1	7573.13	3.25	0	88.59	0	2.26	0	0	15.66	0	0	0	0	0	0	-17.45	-17.45
Inverter	MV4-14	369176	4908507	2	0	0	89.1	89.1	1	7596.72	3.25	0	88.61	0	2.27	0	0	15.68	0	0	0	0	0	0	-17.51	-17.51
Inverter	MV4-13	369051	4908605	2	0	0	89.1	89.1	1	7634.85	3.25	0	88.66	0	2.28	0	0	15.73	0	0	0	0	0	0	-17.6	-17.6
Inverter	MV4-12	369043	4908803	2	0	0	89.1	89.1	1	7813.53	3.25	0	88.86	0	2.32	0	0	15.93	0	0	0	0	0	0	-18.05	-18.05
Inverter	MV5-6	369982	4908507	2	0	0	89.1	89.1	1	7968.29	3.25	0	89.03	0	2.35	0	0	16.11	0	0	0	0	0	0	-18.43	-18.43
Westbrook Inverter Enclosur	W_INV1	369409	4906578	2	0	0	86.1	86.1	1	6030.04	3.25	0	86.61	0	1.89	0	0	13.8	0	0	0	0	0	0	-16.24	-16.24
Inverter	MV6-4	370250	4906966	2	0	0	86.1	86.1	1	6842.74	3.25	0	87.7	0	2.09	0	0	14.8	0	0	0	0	0	0	-18.54	-18.54
Westbrook Inverter Transfor	W_INVTR1	369403	4906578	2	0	0	78.2	78.2	1	6026.64	3.25	0	86.6	0	-3.37	0	0	2.75	0	0	0	0	0	0	-7.74	-7.74
Westbrook Inverter Transfor	W_INVTR3	369514	4906164	2	0	0	77.3	77.3	1	5757.44	3.25	0	86.2	0	-3.32	0	0	2.66	0	0	0	0	0	0	-8.2	-8.2
Westbrook Inverter Transfor	W_INVTR2	369368	4906388	2	0	0	77.3	77.3	1	5850.74	3.25	0	86.34	0	-3.34	0	0	2.69	0	0	0	0	0	0	-8.36	-8.36

Westbrook Inverter Transfor	W_INVTR4	369679	4906164	2	0	0	77.3	77.3	1	5859.85	3.25	0	86.36	0	-3.34	0	0	2.7	0	0	0	0	0	0	-8.37	-8.37
Westbrook Inverter Transfor	W_INVTR7	369786	4906417	2	0	0	77.3	77.3	1	6124.28	3.25	0	86.74	0	-3.39	0	0	2.78	0	0	0	0	0	0	-8.79	-8.79
Westbrook Inverter Transfor	W_INVTR5	369725	4906574	2	0	0	77.3	77.3	1	6211.41	3.25	0	86.86	0	-3.41	0	0	2.81	0	0	0	0	0	0	-8.92	-8.92
Westbrook Inverter Transfor	W_INVTR6	369881	4906578	2	0	0	77.3	77.3	1	6309.56	3.25	0	87	0	-3.42	0	0	2.84	0	0	0	0	0	0	-9.07	-9.07
Inverter Transformer	MV1-14 T	365157	4905049	2	0	0	69.4	69.4	1	3538.63	3.25	0	81.98	0	2.66	0	0	6.32	0	0	0	0	0	0	-21.61	-21.61
Inverter Transformer	MV1-13 T	364725	4905241	2	0	0	69.4	69.4	1	3845.35	3.25	0	82.7	0	2.75	0	0	6.56	0	0	0	0	0	0	-22.65	-22.65
Inverter Transformer	MV1-10 T	365010	4905564	2	0	0	69.4	69.4	1	4073.83	3.25	0	83.2	0	2.8	0	0	6.73	0	0	0	0	0	0	-23.39	-23.39
Inverter Transformer	MV1-7 T	364919	4905782	2	0	0	69.4	69.4	1	4307.48	3.25	0	83.68	0	2.86	0	0	6.9	0	0	0	0	0	0	-24.1	-24.1
Inverter Transformer	MV2-1 T	365836	4906816	2	0	0	69.4	69.4	1	5208.21	3.25	0	85.33	0	3.05	0	0	7.52	0	0	0	0	0	0	-26.56	-26.56
Inverter Transformer	MV6-4 T	370244	4906966	2	0	0	69.4	69.4	1	6839	3.25	0	87.7	0	3.3	0	0	8.51	0	0	0	0	0	0	-30.16	-30.16
Inverter Transformer	MV6-1 T	370230	4907364	2	0	0	69.4	69.4	1	7146.66	3.25	0	88.08	0	3.33	0	0	8.68	0	0	0	0	0	0	-30.75	-30.75
Inverter Transformer	MV1-15 T	365309	4904994	2	0	0	56.1	56.1	1	3451.98	3.25	0	81.76	0	1.02	0	0	9.61	0	0	0	0	0	0	-36.33	-36.33
Inverter Transformer	MV1-12 T	365044	4905386	2	0	0	56.1	56.1	1	3892.89	3.25	0	82.81	0	1.2	0	0	10.29	0	0	0	0	0	0	-38.24	-38.24
Inverter Transformer	MV1-11 T	364649	4905414	2	0	0	56.1	56.1	1	4033.75	3.25	0	83.11	0	1.26	0	0	10.51	0	0	0	0	0	0	-38.82	-38.82
Inverter Transformer	MV1-8 T	364782	4905647	2	0	0	56.1	56.1	1	4214.11	3.25	0	83.49	0	1.33	0	0	10.77	0	0	0	0	0	0	-39.53	-39.53
Inverter Transformer	MV1-9 T	364555	4905646	2	0	0	56.1	56.1	1	4283.83	3.25	0	83.64	0	1.36	0	0	10.87	0	0	0	0	0	0	-39.8	-39.8
Inverter Transformer	MV1-4 T	364821	4905918	2	0	0	56.1	56.1	1	4464.01	3.25	0	83.99	0	1.43	0	0	11.13	0	0	0	0	0	0	-40.49	-40.49
Inverter Transformer	MV1-5 T	364676	4905892	2	0	0	56.1	56.1	1	4479.33	3.25	0	84.02	0	1.43	0	0	11.15	0	0	0	0	0	0	-40.54	-40.54
Inverter Transformer	MV1-6 T	364482	4905835	2	0	0	56.1	56.1	1	4486.36	3.25	0	84.04	0	1.43	0	0	11.16	0	0	0	0	0	0	-40.57	-40.57
Inverter Transformer	MV1-2 T	364759	4906063	2	0	0	56.1	56.1	1	4620.24	3.25	0	84.29	0	1.49	0	0	11.34	0	0	0	0	0	0	-41.06	-41.06
Inverter Transformer	MV1-3 T	364435	4906039	2	0	0	56.1	56.1	1	4694.35	3.25	0	84.43	0	1.51	0	0	11.44	0	0	0	0	0	0	-41.33	-41.33
Inverter Transformer	MV1-1 T	364721	4906166	2	0	0	56.1	56.1	1	4729.66	3.25	0	84.5	0	1.53	0	0	11.49	0	0	0	0	0	0	-41.46	-41.46
Inverter Transformer	MV2-4 T	365590	4906628	2	0	0	56.1	56.1	1	5033.91	3.25	0	85.04	0	1.64	0	0	11.9	0	0	0	0	0	0	-42.52	-42.52
Inverter Transformer	MV2-3 T	365814	4906641	2	0	0	56.1	56.1	1	5034.02	3.25	0	85.04	0	1.64	0	0	11.9	0	0	0	0	0	0	-42.52	-42.52
Inverter Transformer	MV2-2 T	365982	4906654	2	0	0	56.1	56.1	1	5043.91	3.25	0	85.06	0	1.64	0	0	11.91	0	0	0	0	0	0	-42.55	-42.55
Inverter Transformer	MV3-18 T	367757	4907412	2	0	0	56.1	56.1	1	6064.66	3.25	0	86.66	0	1.99	0	0	13.18	0	0	0	0	0	0	-45.76	-45.76
Inverter Transformer	MV3-21 T	368484	4907206	2	0	0	56.1	56.1	1	6126.02	3.25	0	86.74	0	2	0	0	13.25	0	0	0	0	0	0	-45.94	-45.94
Inverter Transformer	MV3-22 T	368661	4907142	2	0	0	56.1	56.1	1	6142.46	3.25	0	86.77	0	2.01	0	0	13.27	0	0	0	0	0	0	-45.99	-45.99
Inverter Transformer	MV3-19 T	368352	4907347	2	0	0	56.1	56.1	1	6203.66	3.25	0	86.85	0	2.03	0	0	13.34	0	0	0	0	0	0	-46.16	-46.16
Inverter Transformer	MV3-12 T	367674	4907594	2	0	0	56.1	56.1	1	6216.02	3.25	0	86.87	0	2.03	0	0	13.36	0	0	0	0	0	0	-46.2	-46.2
Inverter Transformer	MV3-17 T	368183	4907472	2	0	0	56.1	56.1	1	6258.26	3.25	0	86.93	0	2.05	0	0	13.4	0	0	0	0	0	0	-46.32	-46.32
Inverter Transformer	MV3-13 T	367958	4907577	2	0	0	56.1	56.1	1	6282.69	3.25	0	86.96	0	2.05	0	0	13.43	0	0	0	0	0	0	-46.39	-46.39
Inverter Transformer	MV3-20 T	368683	4907317	2	0	0	56.1	56.1	1	6309.87	3.25	0	87	0	2.06	0	0	13.46	0	0	0	0	0	0	-46.47	-46.47
Inverter Transformer	MV3-15 T	368351	4907477	2	0	0	56.1	56.1	1	6323.7	3.25	0	87.02	0	2.07	0	0	13.48	0	0	0	0	0	0	-46.51	-46.51
Inverter Transformer	MV3-16 T	368509	4907475	2	0	0	56.1	56.1	1	6382.51	3.25	0	87.1	0	2.08	0	0	13.55	0	0	0	0	0	0	-46.67	-46.67
Inverter Transformer	MV3-10 T	368162	4907669	2	0	0	56.1	56.1	1	6436.04	3.25	0	87.17	0	2.1	0	0	13.61	0	0	0	0	0	0	-46.82	-46.82
Inverter Transformer	MV3-7 T	367951	4907754	2	0	0	56.1	56.1	1	6448.9	3.25	0	87.19	0	2.1	0	0	13.62	0	0	0	0	0	0	-46.86	-46.86
Inverter Transformer	MV3-14 T	368678	4907498	2	0	0	56.1	56.1	1	6471.96	3.25	0	87.22	0	2.11	0	0	13.65	0	0	0	0	0	0	-46.92	-46.92
Inverter Transformer	MV3-11 T	368340	4907662	2	0	0	56.1	56.1	1	6491.71	3.25	0	87.25	0	2.12	0	0	13.67	0	0	0	0	0	0	-46.97	-46.97
Inverter Transformer	MV3-6 T	368156	4907834	2	0	0	56.1	56.1	1	6589.64	3.25	0	87.38	0	2.14	0	0	13.78	0	0	0	0	0	0	-47.24	-47.24
Inverter Transformer	MV3-9 T	368517	4907703	2	0	0	56.1	56.1	1	6595.69	3.25	0	87.39	0	2.15	0	0	13.79	0	0	0	0	0	0	-47.26	-47.26
Inverter Transformer	MV3-3 T	367944	4907927	2	0	0	56.1	56.1	1	6611.86	3.25	0	87.41	0	2.15	0	0	13.81	0	0	0	0	0	0	-47.3	-47.3
Inverter Transformer	MV3-5 T	368335	4907843	2	0	0	56.1	56.1	1	6659.01	3.25	0	87.47	0	2.16	0	0	13.86	0	0	0	0	0	0	-47.43	-47.43
Inverter Transformer	MV3-8 T	368685	4907712	2	0	0	56.1	56.1	1	6670.06	3.25	0	87.48	0	2.17	0	0	13.87	0	0	0	0	0	0	-47.46	-47.46
Inverter Transformer	MV3-1 T	368150	4907976	2	0	0	56.1	56.1	1	6721.99	3.25	0	87.55	0	2.18	0	0	13.93	0	0	0	0	0	0	-47.6	-47.6
Inverter Transformer	MV3-4 T	368507	4907925	2	0	0	56.1	56.1	1	6797.59	3.25	0	87.65	0	2.2	0	0	14.01	0	0	0	0	0	0	-47.8	-47.8
Inverter Transformer	MV3-2 T	368677	4907928	2	0	0	56.1	56.1	1	6865.08	3.25	0	87.73	0	2.22	0	0	14.08	0	0	0	0	0	0	-47.98	-47.98
Inverter Transformer	MV6-3 T	370202	4907140	2	0	0	56.1	56.1	1	6950.59	3.25	0	87.84	0	2.25	0	0	14.18	0	0	0	0	0	0	-48.2	-48.2
Inverter Transformer	MV6-2 T	370091	4907339	2	0	0	56.1	56.1	1	7044.76	3.25	0	87.96	0	2.27	0	0	14.28	0	0	0	0	0	0	-48.45	-48.45
Inverter Transformer	MV4-15 T	369170	4908481	2	0	0	56.1	56.1	1	7570.6	3.25	0	88.58	0	2.41	0	0	14.83	0	0	0	0	0	0	-49.76	-49.76
Inverter Transformer	MV4-14 T	369182	4908507	2	0	0	56.1	56.1	1	7599.24	3.25	0	88.62	0	2.41	0	0	14.86	0	0	0	0	0	0	-49.83	-49.83
Inverter Transformer	MV4-13 T	369057	4908605	2	0	0	56.1	56.1	1	7637.26	3.25	0	88.66	0	2.42	0	0	14.89	0	0	0	0	0	0	-49.92	-49.92
Inverter Transformer	MV4-12 T	369049	4908803	2	0	0	56.1	56.1	1	7815.88	3.25	0	88.86	0	2.47	0	0	15.07	0	0	0	0	0	0	-50.34	-50.34
Inverter Transformer	MV4-11 T	369269	4908855	2	0	0	56.1	56.1	1	7951.89	3.25	0	89.01	0	2.5	0	0	15.21	0	0	0	0	0	0	-50.66	-50.66
Inverter Transformer	MV4-10 T	369307	4908858	2	0	0	56.1	56.1	1	7970.36	3.25	0	89.03	0	2.5	0	0	15.23	0	0	0	0	0	0	-50.7	-50.7
Inverter Transformer	MV5-6 T	369987	4908507	2	0	0	56.1	56.1	1	7970.8	3.25	0	89.03	0	2.5	0	0	15.23	0	0	0	0	0	0	-50.7	-50.7
Inverter Transformer	MV4-7 T	369040	4909001	2	0	0	56.1	56.1	1	7995.04	3.25	0	89.06	0	2.51	0	0	15.25	0	0	0	0	0	0	-50.76	-50.76
Inverter Transformer	MV4-8 T	369262	4909001	2	0	0	56.1	56.1	1	8082.3	3.25	0	89.15	0	2.53	0	0	15.34	0	0	0	0	0	0	-50.96	-50.96
Inverter Transformer	MV4-9 T	369284	4909001	2	0	0	56.1	56.1	1	8091.23	3.25	0	89.16	0	2.53	0	0	15.35	0	0	0	0	0	0	-50.98	-50.98
Inverter Transformer	MV5-5 T	370021	4908690	2	0	0	56.1	56.1	1	8146.43	3.25	0	89.22	0	2.54	0	0	15.4	0	0	0	0	0	0	-51.1	-51.1
Inverter Transformer	MV4-4 T	369033	4909199	2	0	0	56.1	56.1	1	8175.82	3.25	0	89.25	0	2.55	0	0	15.43	0	0	0	0	0	0	-51.17	-51.17
Inverter Transformer	MV4-6 T	369249	4909192	2	0	0	56.1	56.1	1	8252.18	3.25	0	89.33	0	2.57	0	0	15.5	0	0	0	0	0	0	-51.34	-51.34
Inverter Transformer	MV4-5 T	369283	4909199	2	0	0	56.1	56.1	1	8272.08	3.25	0	89.35	0	2.57	0	0	15.52	0	0	0	0	0	0	-51.39	-51.39
Inverter Transformer	MV5-2 T	370011	4908853	2	0	0	56.1	56.1	1	8283.62	3.25	0	89.36	0	2.57	0	0	15.53	0	0	0	0	0	0	-51.41	-51.41
Inverter Transformer	MV5-4 T	370330	4908707	2	0	0	56.1	56.1	1	8318.12	3.25	0	89.4	0	2.58	0	0	15.56	0	0	0	0	0	0	-51.49	-51.49
Inverter Transformer	MV4-1 T	369017	4909397	2	0	0	56.1	56.1	1	8354.12	3.25	0	89.44	0	2.59	0	0	15.6	0	0	0	0	0	0	-51.57	-51.57
Inverter Transformer	MV5-3 T	370237	4908851	2	0	0	56.1	56.1	1	8393.89	3.25	0	89.48	0	2.6	0	0	15.64	0	0	0	0	0	0	-51.65	-51.65
Inverter Transformer	MV4-3 T	369234	4909397	2	0	0	56.1	56.1	1	8435.14	3.25	0	89.52	0	2.61	0	0	15.68	0	0	0	0	0	0	-51.75	-51.75
Inverter Transformer	MV4-2 T	369267	4909397	2	0	0	56.1	56.1	1	8447.88	3.25	0	89.53	0	2.61	0	0	15.69	0	0	0	0	0	0	-51.77	-51.77
Inverter Transformer	MV5-1 T	370015	4909142	2	0	0	56.1	56.1	1	8539.35	3.25	0	89.63	0	2.63	0	0	15.77	0	0	0	0	0	0	-51.97	-51.97
Line Reactor	NGR	369421	4908787.5	5	0	0	45.4	45.4	1	7954.78	5.25	0	89.01	0	3.2	1.38	0.11	3.25	0	0	0	0	0	0	-51.48	-51.48
Limit. Valu 0	0																								
Level D/N: 20.2166	20.2166																								

Receiver: Existing Noise Receptor
ID: G-84
X: 367679.2
Y: 4901743.1
Z: 4.5
Ground: 0

ISO	Description	ID	X	Y	Z	Ground	ReflOrd	LxT	LxN	L/A	Dist.	hm	Freq	Adiv	K0b	Agr	Abar	z	Aatm	Afol	Ahous	Cmet	CmetN	Dc	RL	LtotT	LtotN
	Sol_Luce Substation	S_Substation	369426	4908792	3.5	0	0	112.1	112.1	1	7262.11	5.25	0	88.22	0	1.43	2.39	0.34	10.99	0	0	0	0	0	0	9.03	9.03
	Inverter	MV1-15	365315	4904994	2	0	0	100.3	100.3	1	4019.68	3.25	0	83.08	0	0.53	0	0	17.08	0	0	0	0	0	0	-0.38	-0.38
	Inverter	MV1-12	365038	4905386	2	0	0	100.3	100.3	1	4499.63	3.25	0	84.06	0	0.59	0	0	17.83	0	0	0	0	0	0	-2.17	-2.17
	Inverter	MV1-11	364655	4905414	2	0	0	100.3	100.3	1	4756.19	3.25	0	84.55	0	0.62	0	0	18.22	0	0	0	0	0	0	-3.07	-3.07
	Inverter	MV1-8	364788	4905647	2	0	0	100.3	100.3	1	4857.93	3.25	0	84.73	0	0.63	0	0	18.37	0	0	0	0	0	0	-3.42	-3.42
	Inverter	MV1-9	364561	4905646	2	0	0	100.3	100.3	1	4995.58	3.25	0	84.97	0	0.64	0	0	18.57	0	0	0	0	0	0	-3.88	-3.88
	Inverter	MV1-4	364815	4905918	2	0	0	100.3	100.3	1	5062.95	3.25	0	85.09	0	0.65	0	0	18.67	0	0	0	0	0	0	-4.1	-4.1
	Inverter	MV1-5	364671	4905892	2	0	0	100.3	100.3	1	5124.71	3.25	0	85.19	0	0.65	0	0	18.76	0	0	0	0	0	0	-4.3	-4.3
	Inverter	MV1-6	364477	4905835	2	0	0	100.3	100.3	1	5195.93	3.25	0	85.31	0	0.66	0	0	18.87	0	0	0	0	0	0	-4.53	-4.53
	Inverter	MV1-2	364753	4906063	2	0	0	100.3	100.3	1	5217.68	3.47	0	85.35	0	1.59	2.66	0	18.9	0	0	0	0	0	0	-8.19	-8.19
	Inverter	MV2-3	365820	4906641	2	0	0	100.3	100.3	1	5238.9	3.25	0	85.38	0	0.66	0	0	18.93	0	0	0	0	0	0	-4.66	-4.66
	Inverters	G_Inv10	366900.7	4902704.8	2	0	0	87.7	87.7	1	1237.31	3.25	0	72.85	0	2.48	0	0	1.72	0	0	0	0	0	0	10.6	10.6
	Inverter	MV2-4	365586	4906624	2	0	0	100.3	100.3	1	5310.81	3.25	0	85.5	0	0.67	0	0	19.03	0	0	0	0	0	0	-4.89	-4.89
	Inverter	MV1-1	364715	4906166	2	0	0	100.3	100.3	1	5324.33	3.25	0	85.53	0	0.67	0	0	19.05	0	0	0	0	0	0	-4.93	-4.93
	Inverter	MV3-21	368478	4907206	2	0	0	100.3	100.3	1	5520.99	3.25	0	85.84	0	0.68	0	0	19.33	0	0	0	0	0	0	-5.54	-5.54
	Inverter	MV3-19	368357	4907347	2	0	0	100.3	100.3	1	5644.74	3.25	0	86.03	0	0.69	0	0	19.5	0	0	0	0	0	0	-5.91	-5.91
	Inverter	MV3-20	368689	4907317	2	0	0	100.3	100.3	1	5664.63	3.25	0	86.06	0	0.69	0	0	19.53	0	0	0	0	0	0	-5.97	-5.97
	Inverter	MV3-18	367752	4907412	2	0	0	100.3	100.3	1	5669.37	3.25	0	86.07	0	0.69	0	0	19.54	0	0	0	0	0	0	-5.99	-5.99
	Inverters	G_Inv9	366750.9	4902691.8	2	0	0	87.7	87.7	1	1327.32	3.25	0	73.46	0	2.5	0	0	1.83	0	0	0	0	0	0	9.87	9.87
	Inverter	MV3-17	368178	4907472	2	0	0	100.3	100.3	1	5750.57	3.25	0	86.19	0	0.69	0	0	19.65	0	0	0	0	0	0	-6.23	-6.23
	Inverter	MV3-15	368357	4907477	2	0	0	100.3	100.3	1	5773.82	3.25	0	86.23	0	0.7	0	0	19.68	0	0	0	0	0	0	-6.3	-6.3
	Inverter	MV3-16	368514	4907475	2	0	0	100.3	100.3	1	5792.37	3.25	0	86.26	0	0.7	0	0	19.71	0	0	0	0	0	0	-6.35	-6.35
	Gardiner Substation	G_Sub	366586.3	4903349.9	2.5	0	0	90.8	90.8	1	1943.26	3.5	0	76.77	0	-0.18	0	0	4.27	0	0	0	0	0	0	9.91	9.91
	Inverter	MV3-13	367963	4907577	2	0	0	100.3	100.3	1	5840.8	3.25	0	86.33	0	0.7	0	0	19.78	0	0	0	0	0	0	-6.49	-6.49
	Inverter	MV3-14	368684	4907498	2	0	0	100.3	100.3	1	5841.96	3.25	0	86.33	0	0.7	0	0	19.78	0	0	0	0	0	0	-6.49	-6.49
	Inverter	MV3-12	367668	4907594	2	0	0	100.3	100.3	1	5850.91	3.25	0	86.34	0	0.7	0	0	19.79	0	0	0	0	0	0	-6.52	-6.52
	Inverter	MV1-14	365163	4905049	2	0	0	97.3	97.3	1	4154.54	3.25	0	83.37	0	0.55	0	0	17.29	0	0	0	0	0	0	-3.9	-3.9
	Inverters	G_Inv8	366844.5	4902838.5	2	0	0	87.7	87.7	1	1377.18	3.25	0	73.78	0	2.5	0	0	1.9	0	0	0	0	0	0	9.48	9.48
	Inverter	MV3-10	368167	4907669	2	0	0	100.3	100.3	1	5945.94	3.25	0	86.48	0	0.7	0	0	19.92	0	0	0	0	0	0	-6.79	-6.79
	Inverter	MV3-11	368346	4907662	2	0	0	100.3	100.3	1	5956.34	3.25	0	86.5	0	0.7	0	0	19.93	0	0	0	0	0	0	-6.82	-6.82
	Inverter	MV6-3	370207	4907140	2	0	0	100.3	100.3	1	5959.56	3.25	0	86.5	0	0.7	0	0	19.94	0	0	0	0	0	0	-6.83	-6.83
	Inverter	MV3-7	367945	4907754	2	0	0	100.3	100.3	1	6016.77	3.25	0	86.59	0	0.71	0	0	20.02	0	0	0	0	0	0	-7	-7
	Inverter	MV3-9	368512	4907703	2	0	0	100.3	100.3	1	6017.8	3.25	0	86.59	0	0.71	0	0	20.02	0	0	0	0	0	0	-7	-7
	Inverter	MV3-8	368680	4907712	2	0	0	100.3	100.3	1	6052.22	3.25	0	86.64	0	0.71	0	0	20.06	0	0	0	0	0	0	-7.1	-7.1
	Inverter	MV6-2	370085	4907339	2	0	0	100.3	100.3	1	6091.14	3.25	0	86.69	0	0.71	0	0	20.12	0	0	0	0	0	0	-7.21	-7.21
	Inverter	MV3-6	368162	4907834	2	0	0	100.3	100.3	1	6110.01	3.25	0	86.72	0	0.71	0	0	20.14	0	0	0	0	0	0	-7.26	-7.26
	Inverter	MV3-3	367939	4907927	2	0	0	100.3	100.3	1	6189.36	3.25	0	86.83	0	0.71	0	0	20.25	0	0	0	0	0	0	-7.48	-7.48
	Inverters	G_Inv7	366694.6	4902824.7	2	0	0	87.7	87.7	1	1462.64	3.25	0	74.3	0	2.51	0	0	2	0	0	0	0	0	0	8.84	8.84
	Inverter	MV1-13	364731	4905241	2	0	0	97.3	97.3	1	4574.63	3.25	0	84.21	0	0.6	0	0	17.94	0	0	0	0	0	0	-5.44	-5.44
	Inverters	G_Inv6	366788.5	4902972	2	0	0	87.7	87.7	1	1517.74	3.25	0	74.62	0	2.52	0	0	2.07	0	0	0	0	0	0	8.45	8.45
	Inverter	MV1-10	365004	4905564	2	0	0	97.3	97.3	1	4664.33	3.25	0	84.38	0	0.61	0	0	18.08	0	0	0	0	0	0	-5.75	-5.75
	Inverters	G_Inv5	366638.5	4902958.1	2	0	0	87.7	87.7	1	1599.78	3.25	0	75.08	0	2.53	0	0	2.16	0	0	0	0	0	0	7.88	7.88
	Inverter	MV1-7	364925	4905782	2	0	0	97.3	97.3	1	4888.59	3.5	0	84.78	0	1.54	2.74	0	18.42	0	0	0	0	0	0	-10.16	-10.16
	Inverters	G_Inv4	366732.8	4903105	2	0	0	87.7	87.7	1	1658.45	3.25	0	75.39	0	2.54	0	0	2.23	0	0	0	0	0	0	7.49	7.49
	Inverter	MV4-11	369264	4908855	2	0	0	100.3	100.3	1	7286.34	3.25	0	88.25	0	0.7	0	0	21.65	0	0	0	0	0	0	-10.29	-10.29
	Inverter	MV4-10	369312	4908858	2	0	0	100.3	100.3	1	7299.85	3.25	0	88.27	0	0.7	0	0	21.67	0	0	0	0	0	0	-10.32	-10.32
	Inverter	MV5-5	370015	4908690	2	0	0	100.3	100.3	1	7329.08	3.25	0	88.3	0	0.7	0	0	21.71	0	0	0	0	0	0	-10.39	-10.39
	Inverter	MV4-7	369035	4909001	2	0	0	100.3	100.3	1	7383.45	3.25	0	88.37	0	0.7	0	0	21.77	0	0	0	0	0	0	-10.52	-10.52
	Inverter	MV4-8	369256	4909001	2	0	0	100.3	100.3	1	7427.21	3.25	0	88.42	0	0.69	0	0	21.83	0	0	0	0	0	0	-10.62	-10.62
	Inverter	MV4-9	369289	4909001	2	0	0	100.3	100.3	1	7434.28	3.25	0	88.42	0	0.69	0	0	21.83	0	0	0	0	0	0	-10.64	-10.64
	Inverter	MV5-4	370324	4908707	2	0	0	100.3	100.3	1	7449.22	3.25	0	88.44	0	0.69	0	0	21.85	0	0	0	0	0	0	-10.68	-10.68
	Inverters	G_Inv3	366583.7	4903091.4	2	0	0	87.7	87.7	1	1737.25	3.25	0	75.8	0	2.55	0	0	2.33	0	0	0	0	0	0	6.99	6.99
	Inverter	MV5-2	370006	4908853	2	0	0	100.3	100.3	1	7480.95	3.25	0	88.48	0	0.69	0	0	21.89	0	0	0	0	0	0	-10.75	-10.75
	Inverter	MV5-3	370231	4908851	2	0	0	100.3	100.3	1	7552.08	3.25	0	88.56	0	0.69	0	0	21.98	0	0	0	0	0	0	-10.91	-10.91
	Inverter	MV4-4	369027	4909199	2	0	0	100.3	100.3	1	7576.74	3.25	0	88.59	0	0.68	0	0	22.01	0	0	0	0	0	0	-10.97	-10.97
	Inverter	MV4-6	369243	4909192	2	0	0	100.3	100.3	1	7611.28	3.25	0	88.63	0	0.68	0	0	22.05	0	0	0	0	0	0	-11.05	-11.05
	Inverter	MV2-1	365842	4906816	2	0	0	97.3	97.3	1	5395.33	3.25	0	85.64	0	0.67	0	0	19.15	0	0	0	0	0	0	-8.15	-8.15
	Inverter	MV4-5	369289	4909199	2	0	0	100.3	100.3	1	7627.71	3.25	0	88.65	0	0.68	0	0	22.07	0	0	0	0	0	0	-11.09	-11.09
	Inverters	G_Inv2	366676.9	4903239.1	2	0	0	87.7	87.7	1	1800.73	3.25	0	76.11	0	2.56	0	0	2.4	0	0	0	0	0	0	6.59	6.59
	Inverter	MV5-1	370020	4909142	2	0	0	100.3	100.3	1	7760.35	3.25	0	88.8	0	0.67	0	0	22.23	0	0	0	0	0	0	-11.38	-11.38
	Inverter	MV4-1	369011	4909397	2	0	0	100.3	100.3	1	7768.9	3.25	0	88.81	0	0.67	0	0	22.24	0	0	0	0	0	0	-11.4	-11.4
	Inverter	MV4-3	369229	4909397	2	0	0	100.3	100.3	1	7809.23	3.25	0	88.85	0	0.67	0	0	22.28	0	0	0	0	0	0	-11.49	-11.49
	Inverter	MV4-2	369272	4909397	2	0	0	100.3	100.3	1	7817.88	3.25	0	88.86	0	0.67	0	0	22.29	0	0	0	0	0	0	-11.51	-11.51
	Inverters	G_Inv1	366526.4	4903225.8	2	0	0	87.7	87.7	1	1878.12	3.25	0	76.47	0	2.57	0	0	2.49	0	0	0	0	0	0	6.12	6.12
	Inverter	MV6-1	370235	4907364	2	0	0	97.3	97.3	1	6174.68	3.25	0	86.81	0	0.71	0	0	20.23	0	0	0	0	0	0	-10.44	-10.44
	DSTATCOM - 10 MVAR #2	DSAT2	369403	4908757	2.5	0	0	96.6	96.6	1	7222.62	3.5	0	88.17	0	3.85	0	0	4.41	0	0	0	0	0	0	0.19	0.19

DSTATCOM - 10 MVAR #1	DSAT1	369437	4908757	2.5	0	0	96.6	96.6	1	7230.81	3.5	0	88.18	0	3.85	0	0	4.42	0	0	0	0	0	0	0.18	0.18
SubstationTransformer	W_ST	369711.17	4906112.3	2.5	0	0	92	92	1	4818.56	3.5	0	84.66	0	0.52	0	-0.13	8.4	0	0	0	0	0	0	-1.61	-1.61
Westbrook Inverter Enclosur	W_INV3	369508	4906164	2	0	0	89.1	89.1	1	4784.23	3.25	0	84.6	0	1.59	0	0	12.17	0	0	0	0	0	0	-9.3	-9.3
Westbrook Inverter Enclosur	W_INV4	369673	4906164	2	0	0	89.1	89.1	1	4849.7	3.25	0	84.71	0	1.6	0	0	12.26	0	0	0	0	0	0	-9.52	-9.52
Westbrook Inverter Enclosur	W_INV2	369374	4906388	2	0	0	89.1	89.1	1	4944.44	3.25	0	84.88	0	1.63	0	0	12.39	0	0	0	0	0	0	-9.84	-9.84
Westbrook Inverter Enclosur	W_INV7	369780	4906417	2	0	0	89.1	89.1	1	5124.33	3.25	0	85.19	0	1.67	0	0	12.63	0	0	0	0	0	0	-10.43	-10.43
Inverter	MV2-2	365977	4906654	2	0	0	89.1	89.1	1	5197.54	3.25	0	85.32	0	1.69	0	0	12.73	0	0	0	0	0	0	-10.67	-10.67
Westbrook Inverter Enclosur	W_INV5	369719	4906574	2	0	0	89.1	89.1	1	5243.89	3.25	0	85.39	0	1.7	0	0	12.79	0	0	0	0	0	0	-10.82	-10.82
Westbrook Inverter Enclosur	W_INV6	369875	4906578	2	0	0	89.1	89.1	1	5310.16	3.25	0	85.5	0	1.72	0	0	12.87	0	0	0	0	0	0	-11.04	-11.04
Inverter	MV1-3	364440	4906039	2	0	0	89.1	89.1	1	5380.26	3.25	0	85.62	0	1.73	0	0	12.97	0	0	0	0	0	0	-11.26	-11.26
Inverter	MV3-22	368656	4907142	2	0	0	89.1	89.1	1	5486.55	3.25	0	85.79	0	1.76	0	0	13.11	0	0	0	0	0	0	-11.59	-11.59
Inverter	MV3-5	368340	4907843	2	0	0	89.1	89.1	1	6135.59	3.25	0	86.76	0	1.92	0	0	13.93	0	0	0	0	0	0	-13.55	-13.55
Inverter	MV3-4	368502	4907925	2	0	0	89.1	89.1	1	6236.42	3.25	0	86.9	0	1.94	0	0	14.06	0	0	0	0	0	0	-13.84	-13.84
Inverter	MV3-1	368156	4907976	2	0	0	89.1	89.1	1	6251.11	3.25	0	86.92	0	1.95	0	0	14.08	0	0	0	0	0	0	-13.88	-13.88
Inverter	MV3-2	368671	4907928	2	0	0	89.1	89.1	1	6263.92	3.25	0	86.94	0	1.95	0	0	14.09	0	0	0	0	0	0	-13.92	-13.92
Fixed Reactor Bank 1	FRB1	369378	4908755	6	0	0	89.8	89.8	1	7214.75	5.25	0	88.16	0	-0.26	0	0	10.95	0	0	0	0	0	0	-9.08	-9.08
Fixed Reactor Bank 2	FRB2	369464	4908755	6	0	0	89.8	89.8	1	7235.49	5.25	0	88.19	0	-0.26	0	0	10.97	0	0	0	0	0	0	-9.13	-9.13
Inverter	MV4-15	369176	4908481	2	0	0	89.1	89.1	1	6902.15	3.25	0	87.78	0	2.1	0	0	14.87	0	0	0	0	0	0	-15.7	-15.7
Inverter	MV4-14	369176	4908507	2	0	0	89.1	89.1	1	6927.54	3.25	0	87.81	0	2.11	0	0	14.9	0	0	0	0	0	0	-15.76	-15.76
Inverter	MV4-13	369051	4908605	2	0	0	89.1	89.1	1	6997.68	3.25	0	87.9	0	2.13	0	0	14.98	0	0	0	0	0	0	-15.95	-15.95
Inverter	MV5-6	369982	4908507	2	0	0	89.1	89.1	1	7145.15	3.25	0	88.08	0	2.16	0	0	15.16	0	0	0	0	0	0	-16.34	-16.34
Inverter	MV4-12	369043	4908803	2	0	0	89.1	89.1	1	7190.42	3.25	0	88.14	0	2.17	0	0	15.21	0	0	0	0	0	0	-16.46	-16.46
Westbrook Inverter Enclosur	W_INV1	369409	4906578	2	0	0	86.1	86.1	1	5135.02	3.25	0	85.21	0	1.67	0	0	12.64	0	0	0	0	0	0	-13.47	-13.47
Inverter	MV6-4	370250	4906966	2	0	0	86.1	86.1	1	5821.31	3.25	0	86.3	0	1.84	0	0	13.54	0	0	0	0	0	0	-15.62	-15.62
Westbrook Inverter Transfor	W_INVTR1	369403	4906578	2	0	0	78.2	78.2	1	5133.01	3.25	0	85.21	0	-3.2	0	0	2.46	0	0	0	0	0	0	-6.22	-6.22
Westbrook Inverter Transfor	W_INVTR3	369514	4906164	2	0	0	77.3	77.3	1	4786.53	3.25	0	84.6	0	-3.13	0	0	2.34	0	0	0	0	0	0	-6.46	-6.46
Westbrook Inverter Transfor	W_INVTR4	369679	4906164	2	0	0	77.3	77.3	1	4852.17	3.25	0	84.72	0	-3.15	0	0	2.36	0	0	0	0	0	0	-6.59	-6.59
Westbrook Inverter Transfor	W_INVTR2	369368	4906388	2	0	0	77.3	77.3	1	4942.38	3.25	0	84.88	0	-3.17	0	0	2.39	0	0	0	0	0	0	-6.76	-6.76
Westbrook Inverter Transfor	W_INVTR7	369786	4906417	2	0	0	77.3	77.3	1	5126.79	3.25	0	85.2	0	-3.2	0	0	2.46	0	0	0	0	0	0	-7.11	-7.11
Westbrook Inverter Transfor	W_INVTR5	369725	4906574	2	0	0	77.3	77.3	1	5246.23	3.25	0	85.4	0	-3.23	0	0	2.5	0	0	0	0	0	0	-7.33	-7.33
Westbrook Inverter Transfor	W_INVTR6	369881	4906578	2	0	0	77.3	77.3	1	5312.64	3.25	0	85.51	0	-3.24	0	0	2.52	0	0	0	0	0	0	-7.44	-7.44
Inverter Transformer	MV1-14 T	365157	4905049	2	0	0	69.4	69.4	1	4158.18	3.25	0	83.38	0	2.83	0	0	6.79	0	0	0	0	0	0	-23.65	-23.65
Inverter Transformer	MV1-13 T	364725	4905241	2	0	0	69.4	69.4	1	4578.49	3.25	0	84.21	0	2.92	0	0	7.09	0	0	0	0	0	0	-24.88	-24.88
Inverter Transformer	MV1-10 T	365010	4905564	2	0	0	69.4	69.4	1	4660.89	3.25	0	84.37	0	2.94	0	0	7.15	0	0	0	0	0	0	-25.11	-25.11
Inverter Transformer	MV1-7 T	364919	4905782	2	0	0	69.4	69.4	1	4891.98	3.25	0	84.79	0	2.99	0	0	7.31	0	0	0	0	0	0	-25.74	-25.74
Inverter Transformer	MV2-1 T	365836	4906816	2	0	0	69.4	69.4	1	5397.38	3.25	0	85.64	0	3.09	0	0	7.64	0	0	0	0	0	0	-27.02	-27.02
Inverter Transformer	MV6-4 T	370244	4906966	2	0	0	69.4	69.4	1	5818.67	3.25	0	86.3	0	3.16	0	0	7.91	0	0	0	0	0	0	-28.01	-28.01
Inverter Transformer	MV6-1 T	370230	4907364	2	0	0	69.4	69.4	1	6172.61	3.25	0	86.81	0	3.21	0	0	8.12	0	0	0	0	0	0	-28.8	-28.8
Inverter Transformer	MV1-15 T	365309	4904994	2	0	0	56.1	56.1	1	4023.21	3.25	0	83.09	0	1.25	0	0	10.49	0	0	0	0	0	0	-38.78	-38.78
Inverter Transformer	MV1-12 T	365044	4905386	2	0	0	56.1	56.1	1	4496.11	3.25	0	84.06	0	1.44	0	0	11.17	0	0	0	0	0	0	-40.61	-40.61
Inverter Transformer	MV1-11 T	364649	4905414	2	0	0	56.1	56.1	1	4760	3.25	0	84.55	0	1.54	0	0	11.53	0	0	0	0	0	0	-41.56	-41.56
Inverter Transformer	MV1-8 T	364782	4905647	2	0	0	56.1	56.1	1	4861.5	3.25	0	84.74	0	1.57	0	0	11.67	0	0	0	0	0	0	-41.92	-41.92
Inverter Transformer	MV1-9 T	364555	4905646	2	0	0	56.1	56.1	1	4999.33	3.25	0	84.98	0	1.63	0	0	11.85	0	0	0	0	0	0	-42.4	-42.4
Inverter Transformer	MV1-4 T	364821	4905918	2	0	0	56.1	56.1	1	5059.56	3.25	0	85.08	0	1.65	0	0	11.93	0	0	0	0	0	0	-42.6	-42.6
Inverter Transformer	MV1-5 T	364676	4905892	2	0	0	56.1	56.1	1	5121.78	3.25	0	85.19	0	1.67	0	0	12.01	0	0	0	0	0	0	-42.81	-42.81
Inverter Transformer	MV1-6 T	364482	4905835	2	0	0	56.1	56.1	1	5192.85	3.25	0	85.31	0	1.69	0	0	12.11	0	0	0	0	0	0	-43.05	-43.05
Inverter Transformer	MV2-2 T	365982	4906654	2	0	0	56.1	56.1	1	5195.91	3.25	0	85.31	0	1.7	0	0	12.11	0	0	0	0	0	0	-43.06	-43.06
Inverter Transformer	MV1-2 T	364759	4906063	2	0	0	56.1	56.1	1	5214.32	3.25	0	85.34	0	1.7	0	0	12.13	0	0	0	0	0	0	-43.12	-43.12
Inverter Transformer	MV2-3 T	365814	4906641	2	0	0	56.1	56.1	1	5241.03	3.25	0	85.39	0	1.71	0	0	12.17	0	0	0	0	0	0	-43.21	-43.21
Inverter Transformer	MV2-4 T	365590	4906628	2	0	0	56.1	56.1	1	5312.91	3.25	0	85.51	0	1.74	0	0	12.26	0	0	0	0	0	0	-43.44	-43.44
Inverter Transformer	MV1-1 T	364721	4906166	2	0	0	56.1	56.1	1	5321	3.25	0	85.52	0	1.74	0	0	12.27	0	0	0	0	0	0	-43.47	-43.47
Inverter Transformer	MV1-3 T	364435	4906039	2	0	0	56.1	56.1	1	5383.27	3.25	0	85.62	0	1.76	0	0	12.35	0	0	0	0	0	0	-43.67	-43.67
Inverter Transformer	MV3-22 T	368661	4907142	2	0	0	56.1	56.1	1	5487.45	3.25	0	85.79	0	1.8	0	0	12.48	0	0	0	0	0	0	-44.01	-44.01
Inverter Transformer	MV3-21 T	368484	4907206	2	0	0	56.1	56.1	1	5521.86	3.25	0	85.84	0	1.81	0	0	12.52	0	0	0	0	0	0	-44.11	-44.11
Inverter Transformer	MV3-19 T	368352	4907347	2	0	0	56.1	56.1	1	5644.14	3.25	0	86.03	0	1.85	0	0	12.67	0	0	0	0	0	0	-44.5	-44.5
Inverter Transformer	MV3-20 T	368683	4907317	2	0	0	56.1	56.1	1	5663.57	3.25	0	86.06	0	1.86	0	0	12.7	0	0	0	0	0	0	-44.56	-44.56
Inverter Transformer	MV3-18 T	367757	4907412	2	0	0	56.1	56.1	1	5669.43	3.25	0	86.07	0	1.86	0	0	12.7	0	0	0	0	0	0	-44.57	-44.57
Inverter Transformer	MV3-17 T	368183	4907472	2	0	0	56.1	56.1	1	5751.01	3.25	0	86.19	0	1.88	0	0	12.8	0	0	0	0	0	0	-44.83	-44.83
Inverter Transformer	MV3-15 T	368351	4907477	2	0	0	56.1	56.1	1	5773.12	3.25	0	86.23	0	1.89	0	0	12.83	0	0	0	0	0	0	-44.89	-44.89
Inverter Transformer	MV3-16 T	368509	4907475	2	0	0	56.1	56.1	1	5791.65	3.25	0	86.26	0	1.9	0	0	12.85	0	0	0	0	0	0	-44.95	-44.95
Inverter Transformer	MV3-13 T	367958	4907577	2	0	0	56.1	56.1	1	5840.56	3.25	0	86.33	0	1.91	0	0	12.91	0	0	0	0	0	0	-45.1	-45.1
Inverter Transformer	MV3-14 T	368678	4907498	2	0	0	56.1	56.1	1	5840.93	3.25	0	86.33	0	1.91	0	0	12.91	0	0	0	0	0	0	-45.1	-45.1
Inverter Transformer	MV3-12 T	367674	4907594	2	0	0	56.1	56.1	1	5850.9	3.25	0	86.34	0	1.92	0	0	12.92	0	0	0	0	0	0	-45.13	-45.13
Inverter Transformer	MV3-10 T	368162	4907669	2	0	0	56.1	56.1	1	5945.54	3.25	0	86.48	0	1.95	0	0	13.04	0	0	0	0	0	0	-45.41	-45.41
Inverter Transformer	MV3-11 T	368340	4907662	2	0	0	56.1	56.1	1	5955.67	3.25	0	86.5	0	1.95	0	0	13.05	0	0	0	0	0	0	-45.44	-45.44
Inverter Transformer	MV6-3 T	370202	4907140	2	0	0	56.1	56.1	1	5957.44	3.25	0	86.5	0	1.95	0	0	13.05	0	0	0	0	0	0	-45.45	-45.45
Inverter Transformer	MV3-7 T	367951	4907754	2	0	0	56.1	56.1	1	6017.04	3.25	0	86.59	0	1.97	0	0	13.12	0	0	0	0	0	0	-45.62	-45.62
Inverter Transformer	MV3-9 T	368517	4907703	2	0	0	56.1	56.1	1	6018.5	3.25	0	86.59	0	1.97	0	0	13.12	0	0	0	0	0	0	-45.63	-45.63
Inverter Transformer	MV3-8 T	368685	4907712	2	0	0	56.1	56.1	1	6053.05	3.25	0	86.64	0	1.98	0	0	13.17	0	0	0	0	0	0	-45.73	-45.73
Inverter Transformer	MV6-2 T	370091	4907339	2	0	0	56.1	56.1	1	6093.51	3.25	0	86.7	0	1.99	0	0	13.21	0	0	0	0	0	0	-45.85	-45.85
Inverter Transformer	MV3-6 T	368156	4907834	2	0	0	56.1	56.1	1	6109.53	3.25	0	86.72	0	2	0	0	13.23	0	0	0	0	0	0	-45.89	-45.89
Inverter Transformer	MV3-5 T	368335	4907843	2	0	0	56.1	56.1	1	6135.05	3.25	0	86.76	0	2.01	0	0	13.26	0	0	0	0	0	0	-45.97	-45.97
Inverter Transformer	MV3-3 T	367944	4907927	2	0	0	56.1	56.1	1	6189.57	3.25	0	86.83	0	2.02	0	0	13.33	0	0	0	0	0	0	-46.12	-46.12
Inverter Transformer	MV3-4 T	368507	4907925	2	0	0	56.1	56.1	1	6237.08	3.25	0	86.9	0	2.04	0	0	13.38	0	0	0	0	0	0	-46.26	-46.26

	Inverter Transformer	MV3-1 T	368150	4907976	2	0	0	56.1	56.1	1	6250.66	3.25	0	86.92	0	2.04	0	0	13.4	0	0	0	0	0	0	-46.3	-46.3
	Inverter Transformer	MV3-2 T	368677	4907928	2	0	0	56.1	56.1	1	6264.87	3.25	0	86.94	0	2.05	0	0	13.41	0	0	0	0	0	0	-46.34	-46.34
	Inverter Transformer	MV4-15 T	369170	4908481	2	0	0	56.1	56.1	1	6900.85	3.25	0	87.78	0	2.23	0	0	14.12	0	0	0	0	0	0	-48.07	-48.07
	Inverter Transformer	MV4-14 T	369182	4908507	2	0	0	56.1	56.1	1	6928.84	3.25	0	87.81	0	2.24	0	0	14.15	0	0	0	0	0	0	-48.15	-48.15
	Inverter Transformer	MV4-13 T	369057	4908605	2	0	0	56.1	56.1	1	6998.86	3.25	0	87.9	0	2.26	0	0	14.23	0	0	0	0	0	0	-48.33	-48.33
	Inverter Transformer	MV5-6 T	369987	4908507	2	0	0	56.1	56.1	1	7146.77	3.25	0	88.08	0	2.3	0	0	14.39	0	0	0	0	0	0	-48.71	-48.71
	Inverter Transformer	MV4-12 T	369049	4908803	2	0	0	56.1	56.1	1	7191.56	3.25	0	88.14	0	2.31	0	0	14.43	0	0	0	0	0	0	-48.82	-48.82
	Inverter Transformer	MV4-11 T	369269	4908855	2	0	0	56.1	56.1	1	7287.43	3.25	0	88.25	0	2.34	0	0	14.53	0	0	0	0	0	0	-49.06	-49.06
	Inverter Transformer	MV4-10 T	369307	4908858	2	0	0	56.1	56.1	1	7298.74	3.25	0	88.26	0	2.34	0	0	14.55	0	0	0	0	0	0	-49.09	-49.09
	Inverter Transformer	MV5-5 T	370021	4908690	2	0	0	56.1	56.1	1	7330.99	3.25	0	88.3	0	2.35	0	0	14.58	0	0	0	0	0	0	-49.17	-49.17
	Inverter Transformer	MV4-7 T	369040	4909001	2	0	0	56.1	56.1	1	7384.37	3.25	0	88.37	0	2.36	0	0	14.64	0	0	0	0	0	0	-49.3	-49.3
	Inverter Transformer	MV4-8 T	369262	4909001	2	0	0	56.1	56.1	1	7428.48	3.25	0	88.42	0	2.37	0	0	14.68	0	0	0	0	0	0	-49.41	-49.41
	Inverter Transformer	MV4-9 T	369284	4909001	2	0	0	56.1	56.1	1	7433.2	3.25	0	88.42	0	2.37	0	0	14.69	0	0	0	0	0	0	-49.42	-49.42
	Inverter Transformer	MV5-4 T	370330	4908707	2	0	0	56.1	56.1	1	7451.35	3.25	0	88.44	0	2.38	0	0	14.7	0	0	0	0	0	0	-49.47	-49.47
	Inverter Transformer	MV5-2 T	370011	4908853	2	0	0	56.1	56.1	1	7482.51	3.25	0	88.48	0	2.39	0	0	14.74	0	0	0	0	0	0	-49.54	-49.54
	Inverter Transformer	MV5-3 T	370237	4908851	2	0	0	56.1	56.1	1	7554.11	3.25	0	88.56	0	2.4	0	0	14.81	0	0	0	0	0	0	-49.72	-49.72
	Inverter Transformer	MV4-4 T	369033	4909199	2	0	0	56.1	56.1	1	7577.81	3.25	0	88.59	0	2.41	0	0	14.83	0	0	0	0	0	0	-49.78	-49.78
	Inverter Transformer	MV4-6 T	369249	4909192	2	0	0	56.1	56.1	1	7612.52	3.25	0	88.63	0	2.42	0	0	14.87	0	0	0	0	0	0	-49.86	-49.86
	Inverter Transformer	MV4-5 T	369283	4909199	2	0	0	56.1	56.1	1	7626.44	3.25	0	88.65	0	2.42	0	0	14.88	0	0	0	0	0	0	-49.89	-49.89
	Inverter Transformer	MV5-1 T	370015	4909142	2	0	0	56.1	56.1	1	7758.85	3.25	0	88.8	0	2.45	0	0	15.02	0	0	0	0	0	0	-50.21	-50.21
	Inverter Transformer	MV4-1 T	369017	4909397	2	0	0	56.1	56.1	1	7769.94	3.25	0	88.81	0	2.46	0	0	15.03	0	0	0	0	0	0	-50.23	-50.23
	Inverter Transformer	MV4-3 T	369234	4909397	2	0	0	56.1	56.1	1	7810.22	3.25	0	88.85	0	2.47	0	0	15.07	0	0	0	0	0	0	-50.33	-50.33
	Inverter Transformer	MV4-2 T	369267	4909397	2	0	0	56.1	56.1	1	7816.86	3.25	0	88.86	0	2.47	0	0	15.07	0	0	0	0	0	0	-50.34	-50.34
	Line Reactor	NGR	369421	4908787.5	5	0	0	45.4	45.4	1	7256.54	5.25	0	88.21	0	3.21	1.37	0.11	2.96	0	0	0	0	0	0	-50.41	-50.41
Limit. Valu	0	0																								
Level D/N:	20.2356	20.2356																								

Receiver: Existing Noise Receptor
ID: G-85
X: 367768.2
Y: 4901816.1
Z: 4.5
Ground: 0

ISO	Description	ID	X	Y	Z	Ground	ReflOrd	LxT	LxN	L/A	Dist.	hm	Freq	Adiv	K0b	Agr	Abar	z	Aatm	Afol	Ahous	Cmet	CmetN	Dc	RL	LtotT	LtotN
	Sol_Luce Substation	S_Substation	369426	4908792	3.5	0	0	112.1	112.1	1	7170.18	5.25	0	88.11	0	1.41	2.41	0.34	10.91	0	0	0	0	0	0	9.23	9.23
	Inverter	MV1-15	365315	4904994	2	0	0	100.3	100.3	1	4014.63	3.6	0	83.07	0	1.37	2.94	0	17.07	0	0	0	0	0	0	-4.14	-4.14
	Inverter	MV1-12	365038	4905386	2	0	0	100.3	100.3	1	4494.24	3.25	0	84.05	0	0.59	0	0	17.82	0	0	0	0	0	0	-2.15	-2.15
	Inverter	MV1-11	364655	4905414	2	0	0	100.3	100.3	1	4757.83	3.25	0	84.55	0	0.62	0	0	18.22	0	0	0	0	0	0	-3.08	-3.08
	Inverter	MV1-8	364788	4905647	2	0	0	100.3	100.3	1	4853.6	3.25	0	84.72	0	0.63	0	0	18.36	0	0	0	0	0	0	-3.4	-3.4
	Inverter	MV1-9	364561	4905646	2	0	0	100.3	100.3	1	4995.43	3.25	0	84.97	0	0.64	0	0	18.57	0	0	0	0	0	0	-3.87	-3.87
	Inverter	MV1-4	364815	4905918	2	0	0	100.3	100.3	1	5054.4	3.25	0	85.07	0	0.65	0	0	18.66	0	0	0	0	0	0	-4.07	-4.07
	Inverter	MV1-5	364671	4905892	2	0	0	100.3	100.3	1	5119.14	3.25	0	85.18	0	0.65	0	0	18.75	0	0	0	0	0	0	-4.28	-4.28
	Inverter	MV1-6	364477	4905835	2	0	0	100.3	100.3	1	5194.57	3.25	0	85.31	0	0.66	0	0	18.86	0	0	0	0	0	0	-4.52	-4.52
	Inverter	MV2-3	365820	4906641	2	0	0	100.3	100.3	1	5203.38	3.25	0	85.33	0	0.66	0	0	18.88	0	0	0	0	0	0	-4.55	-4.55
	Inverter	MV1-2	364753	4906063	2	0	0	100.3	100.3	1	5208.42	3.25	0	85.33	0	0.66	0	0	18.88	0	0	0	0	0	0	-4.57	-4.57
	Inverter	MV2-4	365586	4906624	2	0	0	100.3	100.3	1	5279.95	3.25	0	85.45	0	0.67	0	0	18.99	0	0	0	0	0	0	-4.79	-4.79
	Inverter	MV1-1	364715	4906166	2	0	0	100.3	100.3	1	5314.48	3.25	0	85.51	0	0.67	0	0	19.04	0	0	0	0	0	0	-4.9	-4.9
	Inverters	G_Inv10	366900.7	4902704.8	2	0	0	87.7	87.7	1	1241.91	3.25	0	72.88	0	2.48	0	0	1.73	0	0	0	0	0	0	10.57	10.57
	Inverter	MV3-21	368478	4907206	2	0	0	100.3	100.3	1	5436.44	3.25	0	85.71	0	0.68	0	0	19.21	0	0	0	0	0	0	-5.28	-5.28
	Inverter	MV3-19	368357	4907347	2	0	0	100.3	100.3	1	5562.15	3.25	0	85.9	0	0.68	0	0	19.39	0	0	0	0	0	0	-5.67	-5.67
	Inverter	MV3-20	368689	4907317	2	0	0	100.3	100.3	1	5577.43	3.25	0	85.93	0	0.69	0	0	19.41	0	0	0	0	0	0	-5.71	-5.71
	Inverter	MV3-18	367752	4907412	2	0	0	100.3	100.3	1	5595.92	3.25	0	85.96	0	0.69	0	0	19.44	0	0	0	0	0	0	-5.77	-5.77
	Inverter	MV3-17	368178	4907472	2	0	0	100.3	100.3	1	5670.73	3.25	0	86.07	0	0.69	0	0	19.54	0	0	0	0	0	0	-5.99	-5.99
	Inverter	MV3-15	368357	4907477	2	0	0	100.3	100.3	1	5691.44	3.25	0	86.1	0	0.69	0	0	19.57	0	0	0	0	0	0	-6.05	-6.05
	Inverter	MV3-16	368514	4907475	2	0	0	100.3	100.3	1	5707.83	3.25	0	86.13	0	0.69	0	0	19.59	0	0	0	0	0	0	-6.1	-6.1
	Inverter	MV3-14	368684	4907498	2	0	0	100.3	100.3	1	5755.23	3.25	0	86.2	0	0.69	0	0	19.66	0	0	0	0	0	0	-6.24	-6.24
	Inverters	G_Inv9	366750.9	4902691.8	2	0	0	87.7	87.7	1	1342.3	3.25	0	73.56	0	2.5	0	0	1.85	0	0	0	0	0	0	9.75	9.75
	Inverter	MV3-13	367963	4907577	2	0	0	100.3	100.3	1	5764.19	3.25	0	86.21	0	0.7	0	0	19.67	0	0	0	0	0	0	-6.27	-6.27
	Inverter	MV3-12	367668	4907594	2	0	0	100.3	100.3	1	5778.77	3.25	0	86.24	0	0.7	0	0	19.69	0	0	0	0	0	0	-6.31	-6.31
	Gardiner Substation	G_Sub	366586.3	4903349.9	2.5	0	0	90.8	90.8	1	1936.35	3.5	0	76.74	0	-0.18	0	0	4.26	0	0	0	0	0	0	9.96	9.96
	Inverter	MV6-3	370207	4907140	2	0	0	100.3	100.3	1	5855.91	3.25	0	86.35	0	0.7	0	0	19.8	0	0	0	0	0	0	-6.54	-6.54
	Inverter	MV1-14	365163	4905049	2	0	0	97.3	97.3	1	4151.95	3.25	0	83.37	0	0.55	0	0	17.29	0	0	0	0	0	0	-3.89	-3.89
	Inverter	MV3-10	368167	4907669	2	0	0	100.3	100.3	1	5866.47	3.25	0	86.37	0	0.7	0	0	19.81	0	0	0	0	0	0	-6.57	-6.57
	Inverter	MV3-11	368346	4907662	2	0	0	100.3	100.3	1	5874.39	3.25	0	86.38	0	0.7	0	0	19.82	0	0	0	0	0	0	-6.59	-6.59
	Inverters	G_Inv8	366844.5	4902838.5	2	0	0	87.7	87.7	1	1377.87	3.25	0	73.78	0	2.5	0	0	1.9	0	0	0	0	0	0	9.48	9.48
	Inverter	MV3-9	368512	4907703	2	0	0	100.3	100.3	1	5933.7	3.25	0	86.47	0	0.7	0	0	19.9	0	0	0	0	0	0	-6.76	-6.76
	Inverter	MV3-7	367945	4907754	2	0	0	100.3	100.3	1	5940.53	3.25	0	86.48	0	0.7	0	0	19.91	0	0	0	0	0	0	-6.78	-6.78
	Inverter	MV3-8	368680	4907712	2	0	0	100.3	100.3	1	5965.99	3.25	0	86.51	0	0.7	0	0	19.95	0	0	0	0	0	0	-6.85	-6.85
	Inverter	MV6-2	370085	4907339	2	0	0	100.3	100.3	1	5989.16	3.25	0	86.55	0	0.7	0	0	19.98	0	0	0	0	0	0	-6.92	-6.92
	Inverter	MV3-6	368162	4907834	2	0	0	100.3	100.3	1	6030.77	3.25	0	86.61	0	0.71	0	0	20.03	0	0	0	0	0	0	-7.04	-7.04
	Inverter	MV3-3	367939	4907927	2	0	0	100.3	100.3	1	6113.29	3.25	0	86.73	0	0.71	0	0	20.15	0	0	0	0	0	0	-7.27	-7.27
	Inverters	G_Inv7	366694.6	4902824.7	2	0	0	87.7	87.7	1	1473.06	3.25	0	74.36	0	2.52	0	0	2.01	0	0	0	0	0	0	8.77	8.77
	Inverter	MV1-13	364731	4905241	2	0	0	97.3	97.3	1	4577.61	3.25	0	84.21	0	0.6	0	0	17.95	0	0	0	0	0	0	-5.45	-5.45

Inverters	G_Inv6	366788.5	4902972	2	0	0	87.7	87.7	1	1515.23	3.25	0	74.61	0	2.52	0	0	2.06	0	0	0	0	0	0	8.47	8.47
Inverter	MV1-10	365004	4905564	2	0	0	97.3	97.3	1	4656.99	3.25	0	84.36	0	0.61	0	0	18.07	0	0	0	0	0	0	-5.73	-5.73
Inverter	MV1-7	364925	4905782	2	0	0	97.3	97.3	1	4879.77	3.25	0	84.77	0	0.63	0	0	18.4	0	0	0	0	0	0	-6.49	-6.49
Inverters	G_Inv5	366638.5	4902958.1	2	0	0	87.7	87.7	1	1606.36	3.25	0	75.12	0	2.53	0	0	2.17	0	0	0	0	0	0	7.84	7.84
Inverters	G_Inv4	366732.8	4903105	2	0	0	87.7	87.7	1	1653.28	3.25	0	75.37	0	2.54	0	0	2.23	0	0	0	0	0	0	7.53	7.53
Inverter	MV4-11	369264	4908855	2	0	0	100.3	100.3	1	7196.08	3.25	0	88.14	0	0.7	0	0	21.54	0	0	0	0	0	0	-10.08	-10.08
Inverter	MV4-10	369312	4908858	2	0	0	100.3	100.3	1	7209.14	3.25	0	88.16	0	0.7	0	0	21.56	0	0	0	0	0	0	-10.11	-10.11
Inverter	MV5-5	370015	4908690	2	0	0	100.3	100.3	1	7231.78	3.25	0	88.18	0	0.7	0	0	21.59	0	0	0	0	0	0	-10.16	-10.16
Inverter	MV4-7	369035	4909001	2	0	0	100.3	100.3	1	7295.72	3.25	0	88.26	0	0.7	0	0	21.67	0	0	0	0	0	0	-10.31	-10.31
Inverter	MV4-8	369256	4909001	2	0	0	100.3	100.3	1	7337.33	3.25	0	88.31	0	0.7	0	0	21.72	0	0	0	0	0	0	-10.41	-10.41
Inverter	MV4-9	369289	4909001	2	0	0	100.3	100.3	1	7344.09	3.25	0	88.32	0	0.7	0	0	21.73	0	0	0	0	0	0	-10.43	-10.43
Inverter	MV5-4	370324	4908707	2	0	0	100.3	100.3	1	7349.6	3.25	0	88.33	0	0.7	0	0	21.73	0	0	0	0	0	0	-10.44	-10.44
Inverter	MV5-2	370006	4908853	2	0	0	100.3	100.3	1	7384.15	3.25	0	88.37	0	0.7	0	0	21.77	0	0	0	0	0	0	-10.52	-10.52
Inverter	MV5-3	370231	4908851	2	0	0	100.3	100.3	1	7453.54	3.25	0	88.45	0	0.69	0	0	21.86	0	0	0	0	0	0	-10.69	-10.69
Inverters	G_Inv3	366583.7	4903091.4	2	0	0	87.7	87.7	1	1740.53	3.25	0	75.81	0	2.55	0	0	2.33	0	0	0	0	0	0	6.97	6.97
Inverter	MV4-4	369027	4909199	2	0	0	100.3	100.3	1	7489.45	3.25	0	88.49	0	0.69	0	0	21.9	0	0	0	0	0	0	-10.77	-10.77
Inverter	MV4-6	369243	4909192	2	0	0	100.3	100.3	1	7521.9	3.25	0	88.53	0	0.69	0	0	21.94	0	0	0	0	0	0	-10.84	-10.84
Inverter	MV4-5	369289	4909199	2	0	0	100.3	100.3	1	7537.91	3.25	0	88.55	0	0.69	0	0	21.96	0	0	0	0	0	0	-10.88	-10.88
Inverter	MV2-1	365842	4906816	2	0	0	97.3	97.3	1	5358.1	3.25	0	85.58	0	0.67	0	0	19.1	0	0	0	0	0	0	-8.04	-8.04
Inverter	MV5-1	370020	4909142	2	0	0	100.3	100.3	1	7664.16	3.25	0	88.69	0	0.68	0	0	22.11	0	0	0	0	0	0	-11.17	-11.17
Inverter	MV4-1	369011	4909397	2	0	0	100.3	100.3	1	7682.1	3.25	0	88.71	0	0.68	0	0	22.13	0	0	0	0	0	0	-11.21	-11.21
Inverters	G_Inv2	366676.9	4903239.1	2	0	0	87.7	87.7	1	1793.28	3.25	0	76.07	0	2.56	0	0	2.39	0	0	0	0	0	0	6.64	6.64
Inverter	MV4-3	369229	4909397	2	0	0	100.3	100.3	1	7720.36	3.25	0	88.75	0	0.68	0	0	22.18	0	0	0	0	0	0	-11.29	-11.29
Inverter	MV4-2	369272	4909397	2	0	0	100.3	100.3	1	7728.61	3.25	0	88.76	0	0.67	0	0	22.19	0	0	0	0	0	0	-11.31	-11.31
Inverters	G_Inv1	366526.4	4903225.8	2	0	0	87.7	87.7	1	1878.65	3.25	0	76.48	0	2.57	0	0	2.49	0	0	0	0	0	0	6.12	6.12
Inverter	MV6-1	370235	4907364	2	0	0	97.3	97.3	1	6071.6	3.25	0	86.67	0	0.71	0	0	20.09	0	0	0	0	0	0	-10.15	-10.15
DSTATCOM - 10 MVAR #2	DSAT2	369403	4908757	2.5	0	0	96.6	96.6	1	7130.83	3.5	0	88.06	0	3.84	0	0	4.37	0	0	0	0	0	0	0.35	0.35
DSTATCOM - 10 MVAR #1	DSAT1	369437	4908757	2.5	0	0	96.6	96.6	1	7138.7	3.5	0	88.07	0	3.84	0	0	4.38	0	0	0	0	0	0	0.34	0.34
SubstationTransformer	W_ST	369711.17	4906112.3	2.5	0	0	92	92	1	4715.1	3.5	0	84.47	0	0.5	0	-0.13	8.28	0	0	0	0	0	0	-1.27	-1.27
Westbrook Inverter Enclosur	W_INV3	369508	4906164	2	0	0	89.1	89.1	1	4683.07	3.25	0	84.41	0	1.56	0	0	12.04	0	0	0	0	0	0	-8.95	-8.95
Westbrook Inverter Enclosur	W_INV4	369673	4906164	2	0	0	89.1	89.1	1	4746.84	3.25	0	84.53	0	1.58	0	0	12.12	0	0	0	0	0	0	-9.17	-9.17
Westbrook Inverter Enclosur	W_INV2	369374	4906388	2	0	0	89.1	89.1	1	4845.71	3.25	0	84.71	0	1.6	0	0	12.26	0	0	0	0	0	0	-9.51	-9.51
Westbrook Inverter Enclosur	W_INV7	369780	4906417	2	0	0	89.1	89.1	1	5021.52	3.25	0	85.02	0	1.65	0	0	12.49	0	0	0	0	0	0	-10.1	-10.1
Westbrook Inverter Enclosur	W_INV5	369719	4906574	2	0	0	89.1	89.1	1	5142.3	3.25	0	85.22	0	1.67	0	0	12.65	0	0	0	0	0	0	-10.49	-10.49
Inverter	MV2-2	365977	4906654	2	0	0	89.1	89.1	1	5158.84	3.25	0	85.25	0	1.68	0	0	12.68	0	0	0	0	0	0	-10.55	-10.55
Westbrook Inverter Enclosur	W_INV6	369875	4906578	2	0	0	89.1	89.1	1	5207.14	3.25	0	85.33	0	1.69	0	0	12.74	0	0	0	0	0	0	-10.7	-10.7
Inverter	MV1-3	364440	4906039	2	0	0	89.1	89.1	1	5376.78	3.25	0	85.61	0	1.73	0	0	12.96	0	0	0	0	0	0	-11.25	-11.25
Inverter	MV3-22	368656	4907142	2	0	0	89.1	89.1	1	5399.39	3.25	0	85.65	0	1.74	0	0	12.99	0	0	0	0	0	0	-11.32	-11.32
Inverter	MV3-5	368340	4907843	2	0	0	89.1	89.1	1	6053.96	3.25	0	86.64	0	1.9	0	0	13.83	0	0	0	0	0	0	-13.31	-13.31
Inverter	MV3-4	368502	4907925	2	0	0	89.1	89.1	1	6152.81	3.25	0	86.78	0	1.92	0	0	13.95	0	0	0	0	0	0	-13.6	-13.6
Inverter	MV3-1	368156	4907976	2	0	0	89.1	89.1	1	6172.1	3.25	0	86.81	0	1.93	0	0	13.98	0	0	0	0	0	0	-13.66	-13.66
Inverter	MV3-2	368671	4907928	2	0	0	89.1	89.1	1	6178.22	3.25	0	86.82	0	1.93	0	0	13.99	0	0	0	0	0	0	-13.67	-13.67
Fixed Reactor Bank 1	FRB1	369378	4908755	6	0	0	89.8	89.8	1	7123.19	5.25	0	88.05	0	-0.27	0	0	10.87	0	0	0	0	0	0	-8.87	-8.87
Fixed Reactor Bank 2	FRB2	369464	4908755	6	0	0	89.8	89.8	1	7143.11	5.25	0	88.08	0	-0.27	0	0	10.88	0	0	0	0	0	0	-8.92	-8.92
Inverter	MV4-15	369176	4908481	2	0	0	89.1	89.1	1	6811.96	3.25	0	87.67	0	2.08	0	0	14.76	0	0	0	0	0	0	-15.45	-15.45
Inverter	MV4-14	369176	4908507	2	0	0	89.1	89.1	1	6837.4	3.25	0	87.7	0	2.09	0	0	14.79	0	0	0	0	0	0	-15.52	-15.52
Inverter	MV4-13	369051	4908605	2	0	0	89.1	89.1	1	6909.03	3.25	0	87.79	0	2.11	0	0	14.88	0	0	0	0	0	0	-15.71	-15.71
Inverter	MV5-6	369982	4908507	2	0	0	89.1	89.1	1	7047.63	3.25	0	87.96	0	2.14	0	0	15.04	0	0	0	0	0	0	-16.09	-16.09
Inverter	MV4-12	369043	4908803	2	0	0	89.1	89.1	1	7102.25	3.25	0	88.03	0	2.15	0	0	15.11	0	0	0	0	0	0	-16.23	-16.23
Westbrook Inverter Enclosur	W_INV1	369409	4906578	2	0	0	86.1	86.1	1	5036.66	3.25	0	85.04	0	1.65	0	0	12.51	0	0	0	0	0	0	-13.15	-13.15
Inverter	MV6-4	370250	4906966	2	0	0	86.1	86.1	1	5716.71	3.25	0	86.14	0	1.82	0	0	13.4	0	0	0	0	0	0	-15.3	-15.3
Westbrook Inverter Transfor	W_INVTR1	369403	4906578	2	0	0	78.2	78.2	1	5034.71	3.25	0	85.04	0	-3.18	0	0	2.42	0	0	0	0	0	0	-6.04	-6.04
Westbrook Inverter Transfor	W_INVTR3	369514	4906164	2	0	0	77.3	77.3	1	4685.3	3.25	0	84.41	0	-3.11	0	0	2.3	0	0	0	0	0	0	-6.26	-6.26
Westbrook Inverter Transfor	W_INVTR4	369679	4906164	2	0	0	77.3	77.3	1	4749.25	3.25	0	84.53	0	-3.13	0	0	2.33	0	0	0	0	0	0	-6.39	-6.39
Westbrook Inverter Transfor	W_INVTR2	369368	4906388	2	0	0	77.3	77.3	1	4843.72	3.25	0	84.7	0	-3.15	0	0	2.36	0	0	0	0	0	0	-6.58	-6.58
Westbrook Inverter Transfor	W_INVTR7	369786	4906417	2	0	0	77.3	77.3	1	5023.92	3.25	0	85.02	0	-3.18	0	0	2.42	0	0	0	0	0	0	-6.92	-6.92
Westbrook Inverter Transfor	W_INVTR5	369725	4906574	2	0	0	77.3	77.3	1	5144.58	3.25	0	85.23	0	-3.21	0	0	2.46	0	0	0	0	0	0	-7.14	-7.14
Westbrook Inverter Transfor	W_INVTR6	369881	4906578	2	0	0	77.3	77.3	1	5209.57	3.25	0	85.34	0	-3.22	0	0	2.48	0	0	0	0	0	0	-7.26	-7.26
Inverter Transformer	MV1-14 T	365157	4905049	2	0	0	69.4	69.4	1	4155.72	3.25	0	83.37	0	2.82	0	0	6.79	0	0	0	0	0	0	-23.64	-23.64
Inverter Transformer	MV1-13 T	364725	4905241	2	0	0	69.4	69.4	1	4581.59	3.25	0	84.22	0	2.92	0	0	7.1	0	0	0	0	0	0	-24.89	-24.89
Inverter Transformer	MV1-10 T	365010	4905564	2	0	0	69.4	69.4	1	4653.43	3.25	0	84.36	0	2.94	0	0	7.15	0	0	0	0	0	0	-25.09	-25.09
Inverter Transformer	MV1-7 T	364919	4905782	2	0	0	69.4	69.4	1	4883.27	3.25	0	84.77	0	2.99	0	0	7.3	0	0	0	0	0	0	-25.72	-25.72
Inverter Transformer	MV2-1 T	365836	4906816	2	0	0	69.4	69.4	1	5360.26	3.25	0	85.58	0	3.08	0	0	7.62	0	0	0	0	0	0	-26.93	-26.93
Inverter Transformer	MV6-4 T	370244	4906966	2	0	0	69.4	69.4	1	5714.11	3.25	0	86.14	0	3.14	0	0	7.84	0	0	0	0	0	0	-27.77	-27.77
Inverter Transformer	MV6-1 T	370230	4907364	2	0	0	69.4	69.4	1	6069.57	3.25	0	86.66	0	3.2	0	0	8.06	0	0	0	0	0	0	-28.57	-28.57
Inverter Transformer	MV1-15 T	365309	4904994	2	0	0	56.1	56.1	1	4018.3	3.25	0	83.08	0	1.25	0	0	10.48	0	0	0	0	0	0	-38.76	-38.76
Inverter Transformer	MV1-12 T	365044	4905386	2	0	0	56.1	56.1	1	4490.6	3.25	0	84.05	0	1.44	0	0	11.16	0	0	0	0	0	0	-40.59	-40.59
Inverter Transformer	MV1-11 T	364649	4905414	2	0	0	56.1	56.1	1	4761.75	3.25	0	84.56	0	1.54	0	0	11.54	0	0	0	0	0	0	-41.57	-41.57
Inverter Transformer	MV1-8 T	364782	4905647	2	0	0	56.1	56.1	1	4857.28	3.25	0	84.73	0	1.57	0	0	11.66	0	0	0	0	0	0	-41.91	-41.91
Inverter Transformer	MV1-9 T	364555	4905646	2	0	0	56.1	56.1	1	4999.28	3.25	0	84.98	0	1.63	0	0	11.85	0	0	0	0	0	0	-42.4	-42.4
Inverter Transformer	MV1-4 T	364821	4905918	2	0	0	56.1	56.1	1	5050.9	3.25	0	85.07	0	1.64	0	0	11.92	0	0	0	0	0	0	-42.57	-42.57
Inverter Transformer	MV1-5 T	364676	4905892	2	0	0	56.1	56.1	1	5116.12	3.25	0	85.18	0	1.67	0	0	12.01	0	0	0	0	0	0	-42.79	-42.79
Inverter Transformer	MV2-2 T	365982	4906654	2	0	0	56.1	56.1	1	5157.11	3.25	0	85.25	0	1.68	0	0	12.06	0	0	0	0	0	0	-42.93	-42.93
Inverter Transformer	MV1-6 T	364482	4905835	2	0	0	56.1	56.1	1	5191.4	3.25	0	85.31	0	1.69	0	0	12.1	0	0	0	0	0	0	-43.04	-43.04

	Inverter Transformer	MV1-2 T	364759	4906063	2	0	0	56.1	56.1	1	5204.94	3.25	0	85.33	0	1.7	0	0	12.12	0	0	0	0	0	0	-43.09	-43.09
	Inverter Transformer	MV2-3 T	365814	4906641	2	0	0	56.1	56.1	1	5205.63	3.25	0	85.33	0	1.7	0	0	12.12	0	0	0	0	0	0	-43.09	-43.09
	Inverter Transformer	MV2-4 T	365590	4906628	2	0	0	56.1	56.1	1	5281.95	3.25	0	85.46	0	1.73	0	0	12.22	0	0	0	0	0	0	-43.34	-43.34
	Inverter Transformer	MV1-1 T	364721	4906166	2	0	0	56.1	56.1	1	5311.03	3.25	0	85.5	0	1.74	0	0	12.26	0	0	0	0	0	0	-43.44	-43.44
	Inverter Transformer	MV1-3 T	364435	4906039	2	0	0	56.1	56.1	1	5379.88	3.25	0	85.62	0	1.76	0	0	12.34	0	0	0	0	0	0	-43.66	-43.66
	Inverter Transformer	MV3-22 T	368661	4907142	2	0	0	56.1	56.1	1	5400.21	3.25	0	85.65	0	1.77	0	0	12.37	0	0	0	0	0	0	-43.73	-43.73
	Inverter Transformer	MV3-21 T	368484	4907206	2	0	0	56.1	56.1	1	5437.22	3.25	0	85.71	0	1.78	0	0	12.42	0	0	0	0	0	0	-43.85	-43.85
	Inverter Transformer	MV3-19 T	368352	4907347	2	0	0	56.1	56.1	1	5561.63	3.25	0	85.9	0	1.82	0	0	12.57	0	0	0	0	0	0	-44.24	-44.24
	Inverter Transformer	MV3-20 T	368683	4907317	2	0	0	56.1	56.1	1	5576.45	3.25	0	85.93	0	1.83	0	0	12.59	0	0	0	0	0	0	-44.29	-44.29
	Inverter Transformer	MV3-18 T	367757	4907412	2	0	0	56.1	56.1	1	5595.91	3.25	0	85.96	0	1.83	0	0	12.61	0	0	0	0	0	0	-44.35	-44.35
	Inverter Transformer	MV3-17 T	368183	4907472	2	0	0	56.1	56.1	1	5671.09	3.25	0	86.07	0	1.86	0	0	12.71	0	0	0	0	0	0	-44.58	-44.58
	Inverter Transformer	MV3-15 T	368351	4907477	2	0	0	56.1	56.1	1	5690.82	3.25	0	86.1	0	1.86	0	0	12.73	0	0	0	0	0	0	-44.64	-44.64
	Inverter Transformer	MV3-16 T	368509	4907475	2	0	0	56.1	56.1	1	5707.18	3.25	0	86.13	0	1.87	0	0	12.75	0	0	0	0	0	0	-44.69	-44.69
	Inverter Transformer	MV3-14 T	368678	4907498	2	0	0	56.1	56.1	1	5754.28	3.25	0	86.2	0	1.89	0	0	12.81	0	0	0	0	0	0	-44.84	-44.84
	Inverter Transformer	MV3-13 T	367958	4907577	2	0	0	56.1	56.1	1	5764.03	3.25	0	86.21	0	1.89	0	0	12.82	0	0	0	0	0	0	-44.86	-44.86
	Inverter Transformer	MV3-12 T	367674	4907594	2	0	0	56.1	56.1	1	5778.67	3.25	0	86.24	0	1.89	0	0	12.84	0	0	0	0	0	0	-44.91	-44.91
	Inverter Transformer	MV6-3 T	370202	4907140	2	0	0	56.1	56.1	1	5853.83	3.25	0	86.35	0	1.92	0	0	12.93	0	0	0	0	0	0	-45.14	-45.14
	Inverter Transformer	MV3-10 T	368162	4907669	2	0	0	56.1	56.1	1	5866.13	3.25	0	86.37	0	1.92	0	0	12.94	0	0	0	0	0	0	-45.17	-45.17
	Inverter Transformer	MV3-11 T	368340	4907662	2	0	0	56.1	56.1	1	5873.8	3.25	0	86.38	0	1.92	0	0	12.95	0	0	0	0	0	0	-45.2	-45.2
	Inverter Transformer	MV3-9 T	368517	4907703	2	0	0	56.1	56.1	1	5934.33	3.25	0	86.47	0	1.94	0	0	13.02	0	0	0	0	0	0	-45.38	-45.38
	Inverter Transformer	MV3-7 T	367951	4907754	2	0	0	56.1	56.1	1	5940.71	3.25	0	86.48	0	1.95	0	0	13.03	0	0	0	0	0	0	-45.4	-45.4
	Inverter Transformer	MV3-8 T	368685	4907712	2	0	0	56.1	56.1	1	5966.76	3.25	0	86.51	0	1.95	0	0	13.06	0	0	0	0	0	0	-45.47	-45.47
	Inverter Transformer	MV6-2 T	370091	4907339	2	0	0	56.1	56.1	1	5991.48	3.25	0	86.55	0	1.96	0	0	13.09	0	0	0	0	0	0	-45.55	-45.55
	Inverter Transformer	MV3-6 T	368156	4907834	2	0	0	56.1	56.1	1	6030.38	3.25	0	86.61	0	1.97	0	0	13.14	0	0	0	0	0	0	-45.66	-45.66
	Inverter Transformer	MV3-5 T	368335	4907843	2	0	0	56.1	56.1	1	6053.49	3.25	0	86.64	0	1.98	0	0	13.17	0	0	0	0	0	0	-45.73	-45.73
	Inverter Transformer	MV3-3 T	367944	4907927	2	0	0	56.1	56.1	1	6113.43	3.25	0	86.73	0	2	0	0	13.24	0	0	0	0	0	0	-45.9	-45.9
	Inverter Transformer	MV3-4 T	368507	4907925	2	0	0	56.1	56.1	1	6153.41	3.25	0	86.78	0	2.01	0	0	13.28	0	0	0	0	0	0	-46.02	-46.02
	Inverter Transformer	MV3-1 T	368150	4907976	2	0	0	56.1	56.1	1	6171.72	3.25	0	86.81	0	2.02	0	0	13.3	0	0	0	0	0	0	-46.07	-46.07
	Inverter Transformer	MV3-2 T	368677	4907928	2	0	0	56.1	56.1	1	6179.1	3.25	0	86.82	0	2.02	0	0	13.31	0	0	0	0	0	0	-46.09	-46.09
	Inverter Transformer	MV4-15 T	369170	4908481	2	0	0	56.1	56.1	1	6810.72	3.25	0	87.66	0	2.21	0	0	14.02	0	0	0	0	0	0	-47.84	-47.84
	Inverter Transformer	MV4-14 T	369182	4908507	2	0	0	56.1	56.1	1	6838.64	3.25	0	87.7	0	2.21	0	0	14.06	0	0	0	0	0	0	-47.91	-47.91
	Inverter Transformer	MV4-13 T	369057	4908605	2	0	0	56.1	56.1	1	6910.15	3.25	0	87.79	0	2.23	0	0	14.13	0	0	0	0	0	0	-48.1	-48.1
	Inverter Transformer	MV5-6 T	369987	4908507	2	0	0	56.1	56.1	1	7049.2	3.25	0	87.96	0	2.27	0	0	14.28	0	0	0	0	0	0	-48.46	-48.46
	Inverter Transformer	MV4-12 T	369049	4908803	2	0	0	56.1	56.1	1	7103.33	3.25	0	88.03	0	2.29	0	0	14.34	0	0	0	0	0	0	-48.6	-48.6
	Inverter Transformer	MV4-11 T	369269	4908855	2	0	0	56.1	56.1	1	7197.12	3.25	0	88.14	0	2.31	0	0	14.44	0	0	0	0	0	0	-48.84	-48.84
	Inverter Transformer	MV4-10 T	369307	4908858	2	0	0	56.1	56.1	1	7208.07	3.25	0	88.16	0	2.32	0	0	14.45	0	0	0	0	0	0	-48.86	-48.86
	Inverter Transformer	MV5-5 T	370021	4908690	2	0	0	56.1	56.1	1	7233.64	3.25	0	88.19	0	2.32	0	0	14.48	0	0	0	0	0	0	-48.93	-48.93
	Inverter Transformer	MV4-7 T	369040	4909001	2	0	0	56.1	56.1	1	7296.59	3.25	0	88.26	0	2.34	0	0	14.54	0	0	0	0	0	0	-49.09	-49.09
	Inverter Transformer	MV4-8 T	369262	4909001	2	0	0	56.1	56.1	1	7338.54	3.25	0	88.31	0	2.35	0	0	14.59	0	0	0	0	0	0	-49.19	-49.19
	Inverter Transformer	MV4-9 T	369284	4909001	2	0	0	56.1	56.1	1	7343.05	3.25	0	88.32	0	2.35	0	0	14.59	0	0	0	0	0	0	-49.2	-49.2
	Inverter Transformer	MV5-4 T	370330	4908707	2	0	0	56.1	56.1	1	7351.69	3.25	0	88.33	0	2.35	0	0	14.6	0	0	0	0	0	0	-49.22	-49.22
	Inverter Transformer	MV5-2 T	370011	4908853	2	0	0	56.1	56.1	1	7385.67	3.25	0	88.37	0	2.36	0	0	14.64	0	0	0	0	0	0	-49.31	-49.31
	Inverter Transformer	MV5-3 T	370237	4908851	2	0	0	56.1	56.1	1	7455.52	3.25	0	88.45	0	2.38	0	0	14.71	0	0	0	0	0	0	-49.48	-49.48
	Inverter Transformer	MV4-4 T	369033	4909199	2	0	0	56.1	56.1	1	7490.46	3.25	0	88.49	0	2.39	0	0	14.74	0	0	0	0	0	0	-49.56	-49.56
	Inverter Transformer	MV4-6 T	369249	4909192	2	0	0	56.1	56.1	1	7523.08	3.25	0	88.53	0	2.4	0	0	14.78	0	0	0	0	0	0	-49.64	-49.64
	Inverter Transformer	MV4-5 T	369283	4909199	2	0	0	56.1	56.1	1	7536.7	3.25	0	88.54	0	2.4	0	0	14.79	0	0	0	0	0	0	-49.68	-49.68
	Inverter Transformer	MV5-1 T	370015	4909142	2	0	0	56.1	56.1	1	7662.7	3.25	0	88.69	0	2.43	0	0	14.92	0	0	0	0	0	0	-49.98	-49.98
	Inverter Transformer	MV4-1 T	369017	4909397	2	0	0	56.1	56.1	1	7683.07	3.25	0	88.71	0	2.44	0	0	14.94	0	0	0	0	0	0	-50.03	-50.03
	Inverter Transformer	MV4-3 T	369234	4909397	2	0	0	56.1	56.1	1	7721.31	3.25	0	88.75	0	2.44	0	0	14.98	0	0	0	0	0	0	-50.12	-50.12
	Inverter Transformer	MV4-2 T	369267	4909397	2	0	0	56.1	56.1	1	7727.64	3.25	0	88.76	0	2.45	0	0	14.99	0	0	0	0	0	0	-50.13	-50.13
	Line Reactor	NGR	369421	4908787.5	5	0	0	45.4	45.4	1	7164.65	5.25	0	88.1	0	3.22	1.37	0.11	2.93	0	0	0	0	0	0	-50.26	-50.26
Limit. Valu	0	0																								
Level D/N:	20.2531	20.2531																								

Receiver: Existing Noise Receptor
ID: G-86
X: 366861.2
Y: 4901414.1
Z: 4.5
Ground: 0

ISO	Description	ID	X	Y	Z	Ground	ReflOrd	LxT	LxN	L/A	Dist.	hm	Freq	Adiv	K0b	Agr	Abar	z	Aatm	Afol	Ahous	Cmet	CmetN	Dc	RL	LtotT	LtotN
	Sol_Luce Substation	S_Substation	369426	4908792	3.5	0	0	112.1	112.1	1	7810.99	5.25	0	88.85	0	1.53	2.3	0.33	11.49	0	0	0	0	0	0	7.91	7.91
	Inverter	MV1-15	365315	4904994	2	0	0	100.3	100.3	1	3899.54	3.25	0	82.82	0	0.51	0	0	16.89	0	0	0	0	0	0	0.09	0.09
	Inverter	MV1-12	365038	4905386	2	0	0	100.3	100.3	1	4370.36	3.25	0	83.81	0	0.58	0	0	17.63	0	0	0	0	0	0	-1.7	-1.7
	Inverter	MV1-11	364655	4905414	2	0	0	100.3	100.3	1	4567.99	3.25	0	84.19	0	0.6	0	0	17.93	0	0	0	0	0	0	-2.42	-2.42
	Inverter	MV1-8	364788	4905647	2	0	0	100.3	100.3	1	4713.34	3.25	0	84.47	0	0.61	0	0	18.15	0	0	0	0	0	0	-2.92	-2.92
	Inverter	MV1-9	364561	4905646	2	0	0	100.3	100.3	1	4816.63	3.25	0	84.65	0	0.62	0	0	18.31	0	0	0	0	0	0	-3.28	-3.28
	Inverter	MV1-4	364815	4905918	2	0	0	100.3	100.3	1	4946.92	3.25	0	84.89	0	0.64	0	0	18.5	0	0	0	0	0	0	-3.71	-3.71
	Inverter	MV1-5	364671	4905892	2	0	0	100.3	100.3	1	4984.83	3.25	0	84.95	0	0.64	0	0	18.56	0	0	0	0	0	0	-3.84	-3.84
	Inverter	MV1-6	364477	4905835	2	0	0	100.3	100.3	1	5022.83	3.25	0	85.02	0	0.64	0	0	18.61	0	0	0	0	0	0	-3.96	-3.96
	Inverter	MV1-2	364753	4906063	2	0	0	100.3	100.3	1	5104.58	3.25	0	85.16	0	0.65	0	0	18.73	0	0	0	0	0	0	-4.23	-4.23
	Inverter	MV1-1	364715	4906166	2	0	0	100.3	100.3	1	5214.09	3.25	0	85.34	0	0.66	0	0	18.89	0	0	0	0	0	0	-4.58	-4.58
	Inverter	MV2-3	365820	4906641	2	0	0	100.3	100.3	1	5329.6	3.25	0	85.53	0	0.67	0	0	19.06	0	0	0	0	0	0	-4.95	-4.95

Inverter	MV2-4	365586	4906624	2	0	0	100.3	100.3	1	5363.69	3.25	0	85.59	0	0.67	0	0	19.11	0	0	0	0	0	0	-5.06	-5.06
Inverters	G_Inv9	366750.9	4902691.8	2	0	0	87.7	87.7	1	1282.45	3.25	0	73.16	0	2.49	0	0	1.78	0	0	0	0	0	0	10.23	10.23
Inverters	G_Inv10	366900.7	4902704.8	2	0	0	87.7	87.7	1	1291.31	3.25	0	73.22	0	2.49	0	0	1.79	0	0	0	0	0	0	10.16	10.16
Inverter	MV1-14	365163	4905049	2	0	0	97.3	97.3	1	4012.03	3.25	0	83.07	0	0.53	0	0	17.07	0	0	0	0	0	0	-3.35	-3.35
Gardiner Substation	G_Sub	366586.3	4903349.9	2.5	0	0	90.8	90.8	1	1955.22	3.5	0	76.82	0	-0.18	0	0	4.29	0	0	0	0	0	0	9.84	9.84
Inverter	MV3-21	368478	4907206	2	0	0	100.3	100.3	1	6013.33	3.25	0	86.58	0	0.71	0	0	20.01	0	0	0	0	0	0	-6.99	-6.99
Inverter	MV3-18	367752	4907412	2	0	0	100.3	100.3	1	6063.69	3.25	0	86.65	0	0.71	0	0	20.08	0	0	0	0	0	0	-7.13	-7.13
Inverters	G_Inv7	366694.6	4902824.7	2	0	0	87.7	87.7	1	1420.41	3.25	0	74.05	0	2.51	0	0	1.95	0	0	0	0	0	0	9.16	9.16
Inverters	G_Inv8	366844.5	4902838.5	2	0	0	87.7	87.7	1	1424.5	3.25	0	74.07	0	2.51	0	0	1.95	0	0	0	0	0	0	9.13	9.13
Inverter	MV3-19	368357	4907347	2	0	0	100.3	100.3	1	6118.56	3.25	0	86.73	0	0.71	0	0	20.15	0	0	0	0	0	0	-7.28	-7.28
Inverter	MV3-20	368689	4907317	2	0	0	100.3	100.3	1	6179.41	3.25	0	86.82	0	0.71	0	0	20.24	0	0	0	0	0	0	-7.45	-7.45
Inverter	MV1-13	364731	4905241	2	0	0	97.3	97.3	1	4379.83	3.25	0	83.83	0	0.58	0	0	17.65	0	0	0	0	0	0	-4.74	-4.74
Inverter	MV3-17	368178	4907472	2	0	0	100.3	100.3	1	6199.36	3.25	0	86.85	0	0.71	0	0	20.26	0	0	0	0	0	0	-7.51	-7.51
Inverter	MV3-12	367668	4907594	2	0	0	100.3	100.3	1	6232.34	3.25	0	86.89	0	0.71	0	0	20.31	0	0	0	0	0	0	-7.6	-7.6
Inverter	MV3-15	368357	4907477	2	0	0	100.3	100.3	1	6244.69	3.25	0	86.91	0	0.71	0	0	20.32	0	0	0	0	0	0	-7.63	-7.63
Inverter	MV3-13	367963	4907577	2	0	0	100.3	100.3	1	6260.62	3.25	0	86.93	0	0.71	0	0	20.34	0	0	0	0	0	0	-7.68	-7.68
Inverter	MV3-16	368514	4907475	2	0	0	100.3	100.3	1	6282.22	3.25	0	86.96	0	0.71	0	0	20.37	0	0	0	0	0	0	-7.73	-7.73
Inverter	MV3-14	368684	4907498	2	0	0	100.3	100.3	1	6351.1	3.25	0	87.06	0	0.71	0	0	20.46	0	0	0	0	0	0	-7.92	-7.92
Inverter	MV3-10	368167	4907669	2	0	0	100.3	100.3	1	6389.75	3.25	0	87.11	0	0.71	0	0	20.51	0	0	0	0	0	0	-8.03	-8.03
Inverter	MV3-11	368346	4907662	2	0	0	100.3	100.3	1	6421.91	3.25	0	87.15	0	0.71	0	0	20.56	0	0	0	0	0	0	-8.11	-8.11
Inverter	MV1-10	365004	4905564	2	0	0	97.3	97.3	1	4546.52	3.25	0	84.15	0	0.6	0	0	17.9	0	0	0	0	0	0	-5.34	-5.34
Inverter	MV3-7	367945	4907754	2	0	0	100.3	100.3	1	6431.87	3.25	0	87.17	0	0.71	0	0	20.57	0	0	0	0	0	0	-8.14	-8.14
Inverter	MV3-9	368512	4907703	2	0	0	100.3	100.3	1	6501.95	3.25	0	87.26	0	0.71	0	0	20.66	0	0	0	0	0	0	-8.33	-8.33
Inverter	MV3-6	368162	4907834	2	0	0	100.3	100.3	1	6550.36	3.25	0	87.33	0	0.71	0	0	20.72	0	0	0	0	0	0	-8.45	-8.45
Inverter	MV3-8	368680	4907712	2	0	0	100.3	100.3	1	6555.27	3.25	0	87.33	0	0.71	0	0	20.73	0	0	0	0	0	0	-8.47	-8.47
Inverter	MV3-3	367939	4907927	2	0	0	100.3	100.3	1	6601.48	3.25	0	87.39	0	0.72	0	0	20.79	0	0	0	0	0	0	-8.59	-8.59
Inverter	MV6-3	370207	4907140	2	0	0	100.3	100.3	1	6631.77	3.25	0	87.43	0	0.71	0	0	20.83	0	0	0	0	0	0	-8.67	-8.67
Inverters	G_Inv6	366788.5	4902972	2	0	0	87.7	87.7	1	1559.6	3.25	0	74.86	0	2.53	0	0	2.12	0	0	0	0	0	0	8.16	8.16
Inverters	G_Inv5	366638.5	4902958.1	2	0	0	87.7	87.7	1	1559.98	3.25	0	74.86	0	2.53	0	0	2.12	0	0	0	0	0	0	8.16	8.16
Inverter	MV6-2	370085	4907339	2	0	0	100.3	100.3	1	6745.17	3.25	0	87.58	0	0.71	0	0	20.98	0	0	0	0	0	0	-8.96	-8.96
Inverter	MV1-7	364925	4905782	2	0	0	97.3	97.3	1	4777.81	3.25	0	84.58	0	0.62	0	0	18.25	0	0	0	0	0	0	-6.14	-6.14
Inverters	G_Inv4	366732.8	4903105	2	0	0	87.7	87.7	1	1695.77	3.25	0	75.59	0	2.54	0	0	2.28	0	0	0	0	0	0	7.25	7.25
Inverters	G_Inv3	366583.7	4903091.4	2	0	0	87.7	87.7	1	1700.1	3.25	0	75.61	0	2.55	0	0	2.28	0	0	0	0	0	0	7.22	7.22
Inverter	MV2-1	365842	4906816	2	0	0	97.3	97.3	1	5497.21	3.25	0	85.8	0	0.68	0	0	19.3	0	0	0	0	0	0	-8.47	-8.47
Inverter	MV4-11	369264	4908855	2	0	0	100.3	100.3	1	7819.24	3.25	0	88.86	0	0.67	0	0	22.29	0	0	0	0	0	0	-11.51	-11.51
Inverter	MV4-10	369312	4908858	2	0	0	100.3	100.3	1	7836.97	3.25	0	88.88	0	0.67	0	0	22.32	0	0	0	0	0	0	-11.55	-11.55
Inverters	G_Inv2	366676.9	4903239.1	2	0	0	87.7	87.7	1	1834.28	3.25	0	76.27	0	2.56	0	0	2.44	0	0	0	0	0	0	6.39	6.39
Inverter	MV4-7	369035	4909001	2	0	0	100.3	100.3	1	7892.18	3.25	0	88.94	0	0.66	0	0	22.38	0	0	0	0	0	0	-11.67	-11.67
Inverters	G_Inv1	366526.4	4903225.8	2	0	0	87.7	87.7	1	1842.38	3.25	0	76.31	0	2.56	0	0	2.45	0	0	0	0	0	0	6.34	6.34
Inverter	MV5-5	370015	4908690	2	0	0	100.3	100.3	1	7930.02	3.25	0	88.99	0	0.66	0	0	22.42	0	0	0	0	0	0	-11.76	-11.76
Inverter	MV4-8	369256	4909001	2	0	0	100.3	100.3	1	7955.89	3.25	0	89.01	0	0.66	0	0	22.45	0	0	0	0	0	0	-11.81	-11.81
Inverter	MV4-9	369289	4909001	2	0	0	100.3	100.3	1	7965.88	3.25	0	89.02	0	0.66	0	0	22.47	0	0	0	0	0	0	-11.83	-11.83
Inverter	MV5-4	370324	4908707	2	0	0	100.3	100.3	1	8073.25	3.25	0	89.14	0	0.65	0	0	22.59	0	0	0	0	0	0	-12.07	-12.07
Inverter	MV5-2	370006	4908853	2	0	0	100.3	100.3	1	8076.32	3.25	0	89.14	0	0.65	0	0	22.59	0	0	0	0	0	0	-12.07	-12.07
Inverter	MV4-4	369027	4909199	2	0	0	100.3	100.3	1	8080.55	3.25	0	89.15	0	0.65	0	0	22.6	0	0	0	0	0	0	-12.08	-12.08
Inverter	MV4-6	369243	4909192	2	0	0	100.3	100.3	1	8134.41	3.25	0	89.21	0	0.64	0	0	22.66	0	0	0	0	0	0	-12.2	-12.2
Inverter	MV4-5	369289	4909199	2	0	0	100.3	100.3	1	8154.68	3.25	0	89.23	0	0.64	0	0	22.68	0	0	0	0	0	0	-12.24	-12.24
Inverter	MV5-3	370231	4908851	2	0	0	100.3	100.3	1	8164.74	3.25	0	89.24	0	0.64	0	0	22.7	0	0	0	0	0	0	-12.26	-12.26
Inverter	MV4-1	369011	4909397	2	0	0	100.3	100.3	1	8267.31	3.25	0	89.35	0	0.63	0	0	22.81	0	0	0	0	0	0	-12.47	-12.47
Inverter	MV4-3	369229	4909397	2	0	0	100.3	100.3	1	8326.65	3.25	0	89.41	0	0.62	0	0	22.88	0	0	0	0	0	0	-12.6	-12.6
Inverter	MV4-2	369272	4909397	2	0	0	100.3	100.3	1	8338.98	3.25	0	89.42	0	0.62	0	0	22.89	0	0	0	0	0	0	-12.62	-12.62
Inverter	MV5-1	370020	4909142	2	0	0	100.3	100.3	1	8348.56	3.25	0	89.43	0	0.62	0	0	22.9	0	0	0	0	0	0	-12.64	-12.64
Inverter	MV6-1	370235	4907364	2	0	0	97.3	97.3	1	6839.87	3.25	0	87.7	0	0.71	0	0	21.1	0	0	0	0	0	0	-12.2	-12.2
DSTATCOM - 10 MVAR #2	DSAT2	369403	4908757	2.5	0	0	96.6	96.6	1	7770.39	3.5	0	88.81	0	3.87	0	0	4.67	0	0	0	0	0	0	-0.72	-0.72
DSTATCOM - 10 MVAR #1	DSAT1	369437	4908757	2.5	0	0	96.6	96.6	1	7781.58	3.5	0	88.82	0	3.87	0	0	4.67	0	0	0	0	0	0	-0.74	-0.74
SubstationTransformer	W_ST	369711.17	4906112.3	2.5	0	0	92	92	1	5495.01	3.5	0	85.8	0	0.67	0	-0.12	9.19	0	0	0	0	0	0	-3.68	-3.68
Inverter	MV1-3	364440	4906039	2	0	0	89.1	89.1	1	5220.34	3.25	0	85.35	0	1.69	0	0	12.76	0	0	0	0	0	0	-10.75	-10.75
Inverter	MV2-2	365977	4906654	2	0	0	89.1	89.1	1	5313.98	3.25	0	85.51	0	1.72	0	0	12.88	0	0	0	0	0	0	-11.05	-11.05
Westbrook Inverter Enclosur	W_INV3	369508	4906164	2	0	0	89.1	89.1	1	5437.56	3.25	0	85.71	0	1.75	0	0	13.04	0	0	0	0	0	0	-11.44	-11.44
Westbrook Inverter Enclosur	W_INV4	369673	4906164	2	0	0	89.1	89.1	1	5519.76	3.25	0	85.84	0	1.77	0	0	13.15	0	0	0	0	0	0	-11.7	-11.7
Westbrook Inverter Enclosur	W_INV2	369374	4906388	2	0	0	89.1	89.1	1	5572.6	3.25	0	85.92	0	1.78	0	0	13.22	0	0	0	0	0	0	-11.86	-11.86
Westbrook Inverter Enclosur	W_INV7	369780	4906417	2	0	0	89.1	89.1	1	5792.1	3.25	0	86.26	0	1.83	0	0	13.5	0	0	0	0	0	0	-12.53	-12.53
Westbrook Inverter Enclosur	W_INV5	369719	4906574	2	0	0	89.1	89.1	1	5898.44	3.25	0	86.41	0	1.86	0	0	13.63	0	0	0	0	0	0	-12.85	-12.85
Westbrook Inverter Enclosur	W_INV6	369875	4906578	2	0	0	89.1	89.1	1	5979.04	3.25	0	86.53	0	1.88	0	0	13.74	0	0	0	0	0	0	-13.09	-13.09
Inverter	MV3-22	368656	4907142	2	0	0	89.1	89.1	1	6002.51	3.25	0	86.57	0	1.89	0	0	13.77	0	0	0	0	0	0	-13.16	-13.16
Inverter	MV3-5	368340	4907843	2	0	0	89.1	89.1	1	6596.79	3.25	0	87.39	0	2.03	0	0	14.5	0	0	0	0	0	0	-14.86	-14.86
Inverter	MV3-1	368156	4907976	2	0	0	89.1	89.1	1	6688.43	3.25	0	87.51	0	2.05	0	0	14.61	0	0	0	0	0	0	-15.11	-15.11
Inverter	MV3-4	368502	4907925	2	0	0	89.1	89.1	1	6714.47	3.25	0	87.54	0	2.06	0	0	14.64	0	0	0	0	0	0	-15.19	-15.19
Inverter	MV3-2	368671	4907928	2	0	0	89.1	89.1	1	6760.64	3.25	0	87.6	0	2.07	0	0	14.7	0	0	0	0	0	0	-15.31	-15.31
Fixed Reactor Bank 1	FRB1	369378	4908755	6	0	0	89.8	89.8	1	7760.35	5.25	0	88.8	0	-0.2	0	0	11.45	0	0	0	0	0	0	-10.27	-10.27
Fixed Reactor Bank 2	FRB2	369464	4908755	6	0	0	89.8	89.8	1	7788.67	5.25	0	88.83	0	-0.19	0	0	11.47	0	0	0	0	0	0	-10.33	-10.33
Inverter	MV4-15	369176	4908481	2	0	0	89.1	89.1	1	7436.36	3.25	0	88.43	0	2.23	0	0	15.5	0	0	0	0	0	0	-17.1	-17.1
Inverter	MV4-14	369176	4908507	2	0	0	89.1	89.1	1	7461.07	3.25	0	88.46	0	2.24	0	0	15.53	0	0	0	0	0	0	-17.16	-17.16
Inverter	MV4-13	369051	4908605	2	0	0	89.1	89.1	1	7516.93	3.25	0	88.52	0	2.25	0	0	15.59	0	0	0	0	0	0	-17.3	-17.3

Inverter	MV4-12	369043	4908803	2	0	0	89.1	89.1	1	7704.29	3.25	0	88.73	0	2.29	0	0	15.81	0	0	0	0	0	0	-17.78	-17.78
Inverter	MV5-6	369982	4908507	2	0	0	89.1	89.1	1	7749.11	3.25	0	88.79	0	2.3	0	0	15.86	0	0	0	0	0	0	-17.89	-17.89
Westbrook Inverter Enclosur	W_INV1	369409	4906578	2	0	0	86.1	86.1	1	5758.22	3.25	0	86.21	0	1.83	0	0	13.46	0	0	0	0	0	0	-15.43	-15.43
Inverter	MV6-4	370250	4906966	2	0	0	86.1	86.1	1	6504.43	3.25	0	87.26	0	2.01	0	0	14.39	0	0	0	0	0	0	-17.6	-17.6
Westbrook Inverter Transfor	W_INVTR1	369403	4906578	2	0	0	78.2	78.2	1	5755.57	3.25	0	86.2	0	-3.32	0	0	2.66	0	0	0	0	0	0	-7.3	-7.3
Westbrook Inverter Transfor	W_INVTR3	369514	4906164	2	0	0	77.3	77.3	1	5440.49	3.25	0	85.71	0	-3.26	0	0	2.56	0	0	0	0	0	0	-7.67	-7.67
Westbrook Inverter Transfor	W_INVTR4	369679	4906164	2	0	0	77.3	77.3	1	5522.82	3.25	0	85.84	0	-3.28	0	0	2.59	0	0	0	0	0	0	-7.81	-7.81
Westbrook Inverter Transfor	W_INVTR2	369368	4906388	2	0	0	77.3	77.3	1	5569.9	3.25	0	85.92	0	-3.29	0	0	2.6	0	0	0	0	0	0	-7.89	-7.89
Westbrook Inverter Transfor	W_INVTR7	369786	4906417	2	0	0	77.3	77.3	1	5795.12	3.25	0	86.26	0	-3.33	0	0	2.68	0	0	0	0	0	0	-8.27	-8.27
Westbrook Inverter Transfor	W_INVTR5	369725	4906574	2	0	0	77.3	77.3	1	5901.35	3.25	0	86.42	0	-3.35	0	0	2.71	0	0	0	0	0	0	-8.44	-8.44
Westbrook Inverter Transfor	W_INVTR6	369881	4906578	2	0	0	77.3	77.3	1	5982.06	3.25	0	86.54	0	-3.36	0	0	2.74	0	0	0	0	0	0	-8.57	-8.57
Inverter Transformer	MV1-14 T	365157	4905049	2	0	0	69.4	69.4	1	4014.57	3.25	0	83.07	0	2.79	0	0	6.69	0	0	0	0	0	0	-23.2	-23.2
Inverter Transformer	MV1-13 T	364725	4905241	2	0	0	69.4	69.4	1	4382.75	3.25	0	83.83	0	2.88	0	0	6.96	0	0	0	0	0	0	-24.32	-24.32
Inverter Transformer	MV1-10 T	365010	4905564	2	0	0	69.4	69.4	1	4544.08	3.25	0	84.15	0	2.92	0	0	7.07	0	0	0	0	0	0	-24.78	-24.78
Inverter Transformer	MV1-7 T	364919	4905782	2	0	0	69.4	69.4	1	4780.24	3.25	0	84.59	0	2.97	0	0	7.23	0	0	0	0	0	0	-25.44	-25.44
Inverter Transformer	MV2-1 T	365836	4906816	2	0	0	69.4	69.4	1	5498.32	3.25	0	85.8	0	3.11	0	0	7.71	0	0	0	0	0	0	-27.27	-27.27
Inverter Transformer	MV6-4 T	370244	4906966	2	0	0	69.4	69.4	1	6501.3	3.25	0	87.26	0	3.26	0	0	8.32	0	0	0	0	0	0	-29.48	-29.48
Inverter Transformer	MV6-1 T	370230	4907364	2	0	0	69.4	69.4	1	6837.41	3.25	0	87.7	0	3.3	0	0	8.51	0	0	0	0	0	0	-30.16	-30.16
Inverter Transformer	MV1-15 T	365309	4904994	2	0	0	56.1	56.1	1	3901.92	3.25	0	82.83	0	1.2	0	0	10.31	0	0	0	0	0	0	-38.28	-38.28
Inverter Transformer	MV1-12 T	365044	4905386	2	0	0	56.1	56.1	1	4367.86	3.25	0	83.81	0	1.39	0	0	10.99	0	0	0	0	0	0	-40.13	-40.13
Inverter Transformer	MV1-11 T	364649	4905414	2	0	0	56.1	56.1	1	4570.89	3.25	0	84.2	0	1.47	0	0	11.27	0	0	0	0	0	0	-40.88	-40.88
Inverter Transformer	MV1-8 T	364782	4905647	2	0	0	56.1	56.1	1	4715.99	3.25	0	84.47	0	1.52	0	0	11.47	0	0	0	0	0	0	-41.41	-41.41
Inverter Transformer	MV1-9 T	364555	4905646	2	0	0	56.1	56.1	1	4819.5	3.25	0	84.66	0	1.56	0	0	11.61	0	0	0	0	0	0	-41.77	-41.77
Inverter Transformer	MV1-4 T	364821	4905918	2	0	0	56.1	56.1	1	4944.45	3.25	0	84.88	0	1.61	0	0	11.78	0	0	0	0	0	0	-42.21	-42.21
Inverter Transformer	MV1-5 T	364676	4905892	2	0	0	56.1	56.1	1	4982.64	3.25	0	84.95	0	1.62	0	0	11.83	0	0	0	0	0	0	-42.34	-42.34
Inverter Transformer	MV1-6 T	364482	4905835	2	0	0	56.1	56.1	1	5020.45	3.25	0	85.01	0	1.63	0	0	11.88	0	0	0	0	0	0	-42.47	-42.47
Inverter Transformer	MV1-2 T	364759	4906063	2	0	0	56.1	56.1	1	5102.11	3.25	0	85.15	0	1.66	0	0	11.99	0	0	0	0	0	0	-42.75	-42.75
Inverter Transformer	MV1-1 T	364721	4906166	2	0	0	56.1	56.1	1	5211.62	3.25	0	85.34	0	1.7	0	0	12.13	0	0	0	0	0	0	-43.11	-43.11
Inverter Transformer	MV1-3 T	364435	4906039	2	0	0	56.1	56.1	1	5222.66	3.25	0	85.36	0	1.7	0	0	12.14	0	0	0	0	0	0	-43.15	-43.15
Inverter Transformer	MV2-2 T	365982	4906654	2	0	0	56.1	56.1	1	5313.15	3.25	0	85.51	0	1.74	0	0	12.26	0	0	0	0	0	0	-43.44	-43.44
Inverter Transformer	MV2-3 T	365814	4906641	2	0	0	56.1	56.1	1	5330.77	3.25	0	85.54	0	1.74	0	0	12.28	0	0	0	0	0	0	-43.5	-43.5
Inverter Transformer	MV2-4 T	365590	4906628	2	0	0	56.1	56.1	1	5366.63	3.25	0	85.59	0	1.75	0	0	12.33	0	0	0	0	0	0	-43.62	-43.62
Inverter Transformer	MV3-22 T	368661	4907142	2	0	0	56.1	56.1	1	6004.01	3.25	0	86.57	0	1.97	0	0	13.11	0	0	0	0	0	0	-45.58	-45.58
Inverter Transformer	MV3-21 T	368484	4907206	2	0	0	56.1	56.1	1	6014.95	3.25	0	86.58	0	1.97	0	0	13.12	0	0	0	0	0	0	-45.62	-45.62
Inverter Transformer	MV3-18 T	367757	4907412	2	0	0	56.1	56.1	1	6064.43	3.25	0	86.66	0	1.99	0	0	13.18	0	0	0	0	0	0	-45.76	-45.76
Inverter Transformer	MV3-19 T	368352	4907347	2	0	0	56.1	56.1	1	6117.34	3.25	0	86.73	0	2	0	0	13.24	0	0	0	0	0	0	-45.92	-45.92
Inverter Transformer	MV3-20 T	368683	4907317	2	0	0	56.1	56.1	1	6177.64	3.25	0	86.82	0	2.02	0	0	13.31	0	0	0	0	0	0	-46.09	-46.09
Inverter Transformer	MV3-17 T	368183	4907472	2	0	0	56.1	56.1	1	6200.43	3.25	0	86.85	0	2.03	0	0	13.34	0	0	0	0	0	0	-46.16	-46.16
Inverter Transformer	MV3-12 T	367674	4907594	2	0	0	56.1	56.1	1	6233.12	3.25	0	86.89	0	2.04	0	0	13.38	0	0	0	0	0	0	-46.25	-46.25
Inverter Transformer	MV3-15 T	368351	4907477	2	0	0	56.1	56.1	1	6243.26	3.25	0	86.91	0	2.04	0	0	13.39	0	0	0	0	0	0	-46.28	-46.28
Inverter Transformer	MV3-13 T	367958	4907577	2	0	0	56.1	56.1	1	6259.74	3.25	0	86.93	0	2.05	0	0	13.41	0	0	0	0	0	0	-46.32	-46.32
Inverter Transformer	MV3-16 T	368509	4907475	2	0	0	56.1	56.1	1	6280.9	3.25	0	86.96	0	2.05	0	0	13.43	0	0	0	0	0	0	-46.38	-46.38
Inverter Transformer	MV3-14 T	368678	4907498	2	0	0	56.1	56.1	1	6349.38	3.25	0	87.05	0	2.07	0	0	13.51	0	0	0	0	0	0	-46.58	-46.58
Inverter Transformer	MV3-10 T	368162	4907669	2	0	0	56.1	56.1	1	6388.73	3.25	0	87.11	0	2.08	0	0	13.55	0	0	0	0	0	0	-46.69	-46.69
Inverter Transformer	MV3-11 T	368340	4907662	2	0	0	56.1	56.1	1	6420.52	3.25	0	87.15	0	2.09	0	0	13.59	0	0	0	0	0	0	-46.78	-46.78
Inverter Transformer	MV3-7 T	367951	4907754	2	0	0	56.1	56.1	1	6432.88	3.25	0	87.17	0	2.1	0	0	13.6	0	0	0	0	0	0	-46.81	-46.81
Inverter Transformer	MV3-9 T	368517	4907703	2	0	0	56.1	56.1	1	6503.23	3.25	0	87.26	0	2.12	0	0	13.68	0	0	0	0	0	0	-47.01	-47.01
Inverter Transformer	MV3-6 T	368156	4907834	2	0	0	56.1	56.1	1	6549.17	3.25	0	87.32	0	2.13	0	0	13.74	0	0	0	0	0	0	-47.13	-47.13
Inverter Transformer	MV3-8 T	368685	4907712	2	0	0	56.1	56.1	1	6556.66	3.25	0	87.33	0	2.13	0	0	13.74	0	0	0	0	0	0	-47.15	-47.15
Inverter Transformer	MV3-5 T	368335	4907843	2	0	0	56.1	56.1	1	6595.67	3.25	0	87.39	0	2.15	0	0	13.79	0	0	0	0	0	0	-47.26	-47.26
Inverter Transformer	MV3-3 T	367944	4907927	2	0	0	56.1	56.1	1	6602.3	3.25	0	87.39	0	2.15	0	0	13.79	0	0	0	0	0	0	-47.28	-47.28
Inverter Transformer	MV6-3 T	370202	4907140	2	0	0	56.1	56.1	1	6629.24	3.25	0	87.43	0	2.16	0	0	13.82	0	0	0	0	0	0	-47.35	-47.35
Inverter Transformer	MV3-1 T	368150	4907976	2	0	0	56.1	56.1	1	6687.27	3.25	0	87.5	0	2.17	0	0	13.89	0	0	0	0	0	0	-47.51	-47.51
Inverter Transformer	MV3-4 T	368507	4907925	2	0	0	56.1	56.1	1	6715.69	3.25	0	87.54	0	2.18	0	0	13.92	0	0	0	0	0	0	-47.58	-47.58
Inverter Transformer	MV6-2 T	370091	4907339	2	0	0	56.1	56.1	1	6748.04	3.25	0	87.58	0	2.19	0	0	13.96	0	0	0	0	0	0	-47.67	-47.67
Inverter Transformer	MV3-2 T	368677	4907928	2	0	0	56.1	56.1	1	6762.25	3.25	0	87.6	0	2.19	0	0	13.97	0	0	0	0	0	0	-47.71	-47.71
Inverter Transformer	MV4-15 T	369170	4908481	2	0	0	56.1	56.1	1	7434.49	3.25	0	88.43	0	2.37	0	0	14.69	0	0	0	0	0	0	-49.43	-49.43
Inverter Transformer	MV4-14 T	369182	4908507	2	0	0	56.1	56.1	1	7462.93	3.25	0	88.46	0	2.38	0	0	14.72	0	0	0	0	0	0	-49.5	-49.5
Inverter Transformer	MV4-13 T	369057	4908605	2	0	0	56.1	56.1	1	7518.68	3.25	0	88.52	0	2.39	0	0	14.77	0	0	0	0	0	0	-49.63	-49.63
Inverter Transformer	MV4-12 T	369049	4908803	2	0	0	56.1	56.1	1	7705.99	3.25	0	88.74	0	2.44	0	0	14.96	0	0	0	0	0	0	-50.08	-50.08
Inverter Transformer	MV5-6 T	369987	4908507	2	0	0	56.1	56.1	1	7751.12	3.25	0	88.79	0	2.45	0	0	15.01	0	0	0	0	0	0	-50.19	-50.19
Inverter Transformer	MV4-11 T	369269	4908855	2	0	0	56.1	56.1	1	7820.77	3.25	0	88.86	0	2.47	0	0	15.08	0	0	0	0	0	0	-50.35	-50.35
Inverter Transformer	MV4-10 T	369307	4908858	2	0	0	56.1	56.1	1	7835.41	3.25	0	88.88	0	2.47	0	0	15.09	0	0	0	0	0	0	-50.39	-50.39
Inverter Transformer	MV4-7 T	369040	4909001	2	0	0	56.1	56.1	1	7893.56	3.25	0	88.95	0	2.49	0	0	15.15	0	0	0	0	0	0	-50.52	-50.52
Inverter Transformer	MV5-5 T	370021	4908690	2	0	0	56.1	56.1	1	7932.41	3.25	0	88.99	0	2.49	0	0	15.19	0	0	0	0	0	0	-50.61	-50.61
Inverter Transformer	MV4-8 T	369262	4909001	2	0	0	56.1	56.1	1	7957.69	3.25	0	89.02	0	2.5	0	0	15.21	0	0	0	0	0	0	-50.67	-50.67
Inverter Transformer	MV4-9 T	369284	4909001	2	0	0	56.1	56.1	1	7964.36	3.25	0	89.02	0	2.5	0	0	15.22	0	0	0	0	0	0	-50.69	-50.69
Inverter Transformer	MV5-4 T	370330	4908707	2	0	0	56.1	56.1	1	8075.83	3.25	0	89.14	0	2.53	0	0	15.33	0	0	0	0	0	0	-50.94	-50.94
Inverter Transformer	MV5-2 T	370011	4908853	2	0	0	56.1	56.1	1	8078.27	3.25	0	89.15	0	2.53	0	0	15.33	0	0	0	0	0	0	-50.95	-50.95
Inverter Transformer	MV4-4 T	369033	4909199	2	0	0	56.1	56.1	1	8082.16	3.25	0	89.15	0	2.53	0	0	15.34	0	0	0	0	0	0	-50.96	-50.96
Inverter Transformer	MV4-6 T	369249	4909192	2	0	0	56.1	56.1	1	8136.17	3.25	0	89.21	0	2.54	0	0	15.39	0	0	0	0	0	0	-51.08	-51.08
Inverter Transformer	MV4-5 T	369283	4909199	2	0	0	56.1	56.1	1	8152.9	3.25	0	89.23	0	2.54	0	0	15.41	0	0	0	0	0	0	-51.12	-51.12
Inverter Transformer	MV5-3 T	370237	4908851	2	0	0	56.1	56.1	1	8167.22	3.25	0	89.24	0	2.55	0	0	15.42	0	0	0	0	0	0	-51.15	-51.15
Inverter Transformer	MV4-1 T	369017	4909397	2	0	0	56.1	56.1	1	8268.87	3.25	0	89.35	0	2.57	0	0	15.52	0	0	0	0	0	0	-51.38	-51.38

	Inverter Transformer	MV4-3 T	369234	4909397	2	0	0	56.1	56.1	1	8328.08	3.25	0	89.41	0	2.58	0	0	15.57	0	0	0	0	0	0	-51.51	-51.51
	Inverter Transformer	MV4-2 T	369267	4909397	2	0	0	56.1	56.1	1	8337.54	3.25	0	89.42	0	2.58	0	0	15.58	0	0	0	0	0	0	-51.53	-51.53
	Inverter Transformer	MV5-1 T	370015	4909142	2	0	0	56.1	56.1	1	8346.67	3.25	0	89.43	0	2.59	0	0	15.59	0	0	0	0	0	0	-51.55	-51.55
	Line Reactor	NGR	369421	4908787.5	5	0	0	45.4	45.4	1	7805.1	5.25	0	88.85	0	3.2	1.37	0.11	3.19	0	0	0	0	0	0	-51.26	-51.26
Limit. Valu	0	0																								
Level D/N:	20.0517	20.0517																								

Receiver: Existing Noise Receptor
ID: G-87
X: 365339.2
Y: 4903808
Z: 4.5
Ground: 0

ISO	Description	ID	X	Y	Z	Ground	ReflOrd	LxT	LxN	L/A	Dist.	hm	Freq	Adiv	K0b	Agr	Abar	z	Aatm	Afol	Ahous	Cmet	CmetN	Dc	RL	LtotT	LtotN
	Inverter	MV1-15	365315	4904994	2	0	0	100.3	100.3	1	1186.25	3.25	0	72.48	0	-0.16	0	0	11.49	0	0	0	0	0	0	16.5	16.5
	Inverter	MV1-12	365038	4905386	2	0	0	100.3	100.3	1	1606.49	3.25	0	75.12	0	0	0	0	12.58	0	0	0	0	0	0	12.61	12.61
	Sol_Luce Substation	S_Substation	369426	4908792	3.5	0	0	112.1	112.1	1	6445.32	5.25	0	87.18	0	1.26	2.55	0.27	10.2	0	0	0	0	0	0	10.87	10.87
	Inverter	MV1-11	364655	4905414	2	0	0	100.3	100.3	1	1745.67	3.25	0	75.84	0	0.05	0	0	12.91	0	0	0	0	0	0	11.51	11.51
	Inverter	MV1-14	365163	4905049	2	0	0	97.3	97.3	1	1253.45	3.25	0	72.96	0	-0.13	0	0	11.68	0	0	0	0	0	0	12.8	12.8
	Inverter	MV1-8	364788	4905647	2	0	0	100.3	100.3	1	1919.83	3.25	0	76.67	0	0.11	0	0	13.29	0	0	0	0	0	0	10.25	10.25
	Inverter	MV1-9	364561	4905646	2	0	0	100.3	100.3	1	1995.96	3.25	0	77	0	0.13	0	0	13.45	0	0	0	0	0	0	9.73	9.73
	Inverter	MV1-4	364815	4905918	2	0	0	100.3	100.3	1	2174.14	3.25	0	77.75	0	0.18	0	0	13.82	0	0	0	0	0	0	8.57	8.57
	Inverter	MV1-5	364671	4905892	2	0	0	100.3	100.3	1	2188.5	3.25	0	77.8	0	0.18	0	0	13.85	0	0	0	0	0	0	8.48	8.48
	Inverter	MV1-13	364731	4905241	2	0	0	97.3	97.3	1	1556.73	3.25	0	74.84	0	-0.01	0	0	12.46	0	0	0	0	0	0	10.02	10.02
	Inverter	MV1-6	364477	4905835	2	0	0	100.3	100.3	1	2202.75	3.25	0	77.86	0	0.18	0	0	13.88	0	0	0	0	0	0	8.39	8.39
	Inverter	MV1-2	364753	4906063	2	0	0	100.3	100.3	1	2329.95	3.25	0	78.35	0	0.22	0	0	14.13	0	0	0	0	0	0	7.62	7.62
	Inverter	MV1-1	364715	4906166	2	0	0	100.3	100.3	1	2439.22	3.25	0	78.75	0	0.24	0	0	14.34	0	0	0	0	0	0	6.98	6.98
	Inverter	MV1-10	365004	4905564	2	0	0	97.3	97.3	1	1787.71	3.25	0	76.05	0	0.07	0	0	13	0	0	0	0	0	0	8.2	8.2
	Inverter	MV2-4	365586	4906624	2	0	0	100.3	100.3	1	2826.8	3.25	0	80.03	0	0.33	0	0	15.06	0	0	0	0	0	0	4.9	4.9
	Inverter	MV1-7	364925	4905782	2	0	0	97.3	97.3	1	2016.99	3.25	0	77.09	0	0.13	0	0	13.5	0	0	0	0	0	0	6.59	6.59
	Inverter	MV2-3	365820	4906641	2	0	0	100.3	100.3	1	2873.51	3.25	0	80.17	0	0.34	0	0	15.15	0	0	0	0	0	0	4.66	4.66
	Gardiner Substation	G_Sub	366586.3	4903349.9	2.5	0	0	90.8	90.8	1	1328.58	4.25	0	73.47	0	0.83	4.84	0.31	3.16	0	0	0	0	0	0	8.48	8.48
	Inverter	MV2-1	365842	4906816	2	0	0	97.3	97.3	1	3049.73	3.25	0	80.69	0	0.37	0	0	15.46	0	0	0	0	0	0	0.8	0.8
	Inverter	MV3-18	367752	4907412	2	0	0	100.3	100.3	1	4337.1	3.25	0	83.74	0	0.57	0	0	17.58	0	0	0	0	0	0	-1.58	-1.58
	Inverter	MV3-12	367668	4907594	2	0	0	100.3	100.3	1	4444.9	3.25	0	83.96	0	0.58	0	0	17.75	0	0	0	0	0	0	-1.98	-1.98
	Inverter	MV3-13	367963	4907577	2	0	0	100.3	100.3	1	4592.35	3.25	0	84.24	0	0.6	0	0	17.97	0	0	0	0	0	0	-2.5	-2.5
	Inverter	MV3-21	368478	4907206	2	0	0	100.3	100.3	1	4625.85	3.25	0	84.3	0	0.6	0	0	18.02	0	0	0	0	0	0	-2.62	-2.62
	Inverter	MV3-17	368178	4907472	2	0	0	100.3	100.3	1	4635.05	3.25	0	84.32	0	0.61	0	0	18.04	0	0	0	0	0	0	-2.65	-2.65
	Inverter	MV3-19	368357	4907347	2	0	0	100.3	100.3	1	4650.98	3.25	0	84.35	0	0.61	0	0	18.06	0	0	0	0	0	0	-2.71	-2.71
	Inverter	MV3-7	367945	4907754	2	0	0	100.3	100.3	1	4728.75	3.25	0	84.49	0	0.62	0	0	18.18	0	0	0	0	0	0	-2.98	-2.98
	Inverter	MV3-15	368357	4907477	2	0	0	100.3	100.3	1	4750.65	3.25	0	84.54	0	0.62	0	0	18.21	0	0	0	0	0	0	-3.05	-3.05
	Inverter	MV3-10	368167	4907669	2	0	0	100.3	100.3	1	4785.79	3.25	0	84.6	0	0.62	0	0	18.26	0	0	0	0	0	0	-3.17	-3.17
	Inverter	MV3-16	368514	4907475	2	0	0	100.3	100.3	1	4850.39	3.25	0	84.72	0	0.63	0	0	18.36	0	0	0	0	0	0	-3.39	-3.39
	Inverter	MV3-20	368689	4907317	2	0	0	100.3	100.3	1	4851.21	3.25	0	84.72	0	0.63	0	0	18.36	0	0	0	0	0	0	-3.39	-3.39
	Inverter	MV3-3	367939	4907927	2	0	0	100.3	100.3	1	4870.84	3.25	0	84.75	0	0.63	0	0	18.39	0	0	0	0	0	0	-3.46	-3.46
	Inverter	MV3-11	368346	4907662	2	0	0	100.3	100.3	1	4888.17	3.25	0	84.78	0	0.63	0	0	18.42	0	0	0	0	0	0	-3.52	-3.52
	Inverter	MV3-6	368162	4907834	2	0	0	100.3	100.3	1	4917	3.25	0	84.83	0	0.63	0	0	18.46	0	0	0	0	0	0	-3.61	-3.61
	Inverter	MV3-14	368684	4907498	2	0	0	100.3	100.3	1	4980.34	3.25	0	84.95	0	0.64	0	0	18.55	0	0	0	0	0	0	-3.82	-3.82
	Inverter	MV3-9	368512	4907703	2	0	0	100.3	100.3	1	5023.71	3.25	0	85.02	0	0.64	0	0	18.61	0	0	0	0	0	0	-3.97	-3.97
	Inverter	MV3-8	368680	4907712	2	0	0	100.3	100.3	1	5138.3	3.25	0	85.22	0	0.65	0	0	18.78	0	0	0	0	0	0	-4.34	-4.34
	Inverters	G_Inv1	366526.4	4903225.8	2	0	0	87.7	87.7	1	1322.27	3.25	0	73.43	0	2.5	0	0	1.83	0	0	0	0	0	0	9.91	9.91
	Inverter	MV6-3	370207	4907140	2	0	0	100.3	100.3	1	5898.96	3.25	0	86.42	0	0.7	0	0	19.86	0	0	0	0	0	0	-6.66	-6.66
	Inverter	MV6-2	370085	4907339	2	0	0	100.3	100.3	1	5915.28	3.25	0	86.44	0	0.7	0	0	19.88	0	0	0	0	0	0	-6.71	-6.71
	Inverters	G_Inv3	366583.7	4903091.4	2	0	0	87.7	87.7	1	1436.07	3.25	0	74.14	0	2.51	0	0	1.97	0	0	0	0	0	0	9.04	9.04
	Inverters	G_Inv2	366676.9	4903239.1	2	0	0	87.7	87.7	1	1453.65	3.25	0	74.25	0	2.51	0	0	1.99	0	0	0	0	0	0	8.91	8.91
	Inverter	MV4-7	369035	4909001	2	0	0	100.3	100.3	1	6373.87	3.25	0	87.09	0	0.71	0	0	20.49	0	0	0	0	0	0	-7.98	-7.98
	Inverter	MV4-11	369264	4908855	2	0	0	100.3	100.3	1	6393.46	3.25	0	87.11	0	0.71	0	0	20.52	0	0	0	0	0	0	-8.04	-8.04
	Inverter	MV4-10	369312	4908858	2	0	0	100.3	100.3	1	6425.39	3.25	0	87.16	0	0.71	0	0	20.56	0	0	0	0	0	0	-8.12	-8.12
	Inverter	MV4-8	369256	4909001	2	0	0	100.3	100.3	1	6504.5	3.25	0	87.26	0	0.71	0	0	20.66	0	0	0	0	0	0	-8.33	-8.33
	Inverter	MV4-9	369289	4909001	2	0	0	100.3	100.3	1	6524.43	3.25	0	87.29	0	0.71	0	0	20.69	0	0	0	0	0	0	-8.38	-8.38
	Inverter	MV4-4	369027	4909199	2	0	0	100.3	100.3	1	6531.67	3.25	0	87.3	0	0.71	0	0	20.7	0	0	0	0	0	0	-8.4	-8.4
	Inverter	MV4-6	369243	4909192	2	0	0	100.3	100.3	1	6650.35	3.25	0	87.46	0	0.71	0	0	20.85	0	0	0	0	0	0	-8.71	-8.71
	Inverters	G_Inv5	366638.5	4902958.1	2	0	0	87.7	87.7	1	1552.58	3.25	0	74.82	0	2.53	0	0	2.11	0	0	0	0	0	0	8.21	8.21
	Inverter	MV4-5	369289	4909199	2	0	0	100.3	100.3	1	6683.1	3.25	0	87.5	0	0.71	0	0	20.9	0	0	0	0	0	0	-8.8	-8.8
	Inverter	MV4-1	369011	4909397	2	0	0	100.3	100.3	1	6687.23	3.25	0	87.5	0	0.71	0	0	20.9	0	0	0	0	0	0	-8.81	-8.81
	Inverters	G_Inv4	366732.8	4903105	2	0	0	87.7	87.7	1	1560.88	3.25	0	74.87	0	2.53	0	0	2.12	0	0	0	0	0	0	8.15	8.15
	Inverter	MV5-5	370015	4908690	2	0	0	100.3	100.3	1	6759.96	3.25	0	87.6	0	0.71	0	0	20.99	0	0	0	0	0	0	-9	-9
	Inverter	MV4-3	369229	4909397	2	0	0	100.3	100.3	1	6809.37	3.25	0	87.66	0	0.71	0	0	21.06	0	0	0	0	0	0	-9.12	-9.12
	Inverter	MV4-2	369272	4909397	2	0	0	100.3	100.3	1	6834.02	3.25	0	87.69	0	0.71	0	0	21.09	0	0	0	0	0	0	-9.18	-9.18
	Inverter	MV5-2	370006	4908853	2	0	0	100.3	100.3	1	6872.49	3.25	0	87.74	0	0.71	0	0	21.14	0	0	0	0	0	0	-9.28	-9.28
	Inverter	MV5-4	370324	4908707	2	0	0	100.3	100.3	1	6989.17	3.25	0	87.89	0	0.71	0	0	21.29	0	0	0	0	0	0	-9.57	-9.57
	Inverter	MV5-3	370231	4908851	2	0	0	100.3	100.3	1	7025.78	3.25	0	87.93	0	0.71	0	0	21.33	0	0	0	0	0	0	-9.66	-9.66
	Inverter	MV5-1	370020	4909142	2	0	0	100.3	100.3	1	7096.58	3.25	0	88.02	0	0.71	0	0	21.42	0	0	0	0	0	0	-9.84	-9.84

Inverters	G_Inv6	366788.5	4902972	2	0	0	87.7	87.7	1	1673.13	3.25	0	75.47	0	2.54	0	0	2.25	0	0	0	0	0	0	7.4	7.4
Inverters	G_Inv7	366694.6	4902824.7	2	0	0	87.7	87.7	1	1674.51	3.25	0	75.48	0	2.54	0	0	2.25	0	0	0	0	0	0	7.39	7.39
Inverters	G_Inv8	366844.5	4902838.5	2	0	0	87.7	87.7	1	1790.49	3.25	0	76.06	0	2.56	0	0	2.39	0	0	0	0	0	0	6.65	6.65
Inverters	G_Inv9	366750.9	4902691.8	2	0	0	87.7	87.7	1	1799.67	3.25	0	76.1	0	2.56	0	0	2.4	0	0	0	0	0	0	6.6	6.6
Inverters	G_Inv10	366900.7	4902704.8	2	0	0	87.7	87.7	1	1911.89	3.25	0	76.63	0	2.57	0	0	2.53	0	0	0	0	0	0	5.93	5.93
Inverter	MV6-1	370235	4907364	2	0	0	97.3	97.3	1	6050.95	3.25	0	86.64	0	0.71	0	0	20.06	0	0	0	0	0	0	-10.09	-10.09
Inverter	MV1-3	364440	4906039	2	0	0	89.1	89.1	1	2405.4	3.25	0	78.62	0	1	0	0	8.7	0	0	0	0	0	0	0.73	0.73
DSTATCOM - 10 MVAR #2	DSAT2	369403	4908757	2.5	0	0	96.6	96.6	1	6403.68	3.5	0	87.13	0	3.8	0	0	4.03	0	0	0	0	0	0	1.67	1.67
DSTATCOM - 10 MVAR #1	DSAT1	369437	4908757	2.5	0	0	96.6	96.6	1	6425.31	3.5	0	87.16	0	3.8	0	0	4.04	0	0	0	0	0	0	1.63	1.63
Inverter	MV2-2	365977	4906654	2	0	0	89.1	89.1	1	2916.59	3.25	0	80.3	0	1.13	0	0	9.49	0	0	0	0	0	0	-1.86	-1.86
SubstationTransformer	W_ST	369711.17	4906112.3	2.5	0	0	92	92	1	4942.04	4.25	0	84.88	0	1.62	2.35	0.26	8.55	0	0	0	0	0	0	-5.42	-5.42
Inverter	MV3-22	368656	4907142	2	0	0	89.1	89.1	1	4702.84	3.25	0	84.45	0	1.57	0	0	12.06	0	0	0	0	0	0	-9.02	-9.02
Westbrook Inverter Enclosur	W_INV3	369508	4906164	2	0	0	89.1	89.1	1	4788.49	3.25	0	84.6	0	1.59	0	0	12.18	0	0	0	0	0	0	-9.31	-9.31
Westbrook Inverter Enclosur	W_INV2	369374	4906388	2	0	0	89.1	89.1	1	4789.16	3.25	0	84.61	0	1.59	0	0	12.18	0	0	0	0	0	0	-9.31	-9.31
Westbrook Inverter Enclosur	W_INV4	369673	4906164	2	0	0	89.1	89.1	1	4932.8	3.25	0	84.86	0	1.62	0	0	12.37	0	0	0	0	0	0	-9.8	-9.8
Inverter	MV3-5	368340	4907843	2	0	0	89.1	89.1	1	5028.52	3.25	0	85.03	0	1.65	0	0	12.5	0	0	0	0	0	0	-10.12	-10.12
Inverter	MV3-1	368156	4907976	2	0	0	89.1	89.1	1	5030.57	3.25	0	85.03	0	1.65	0	0	12.5	0	0	0	0	0	0	-10.13	-10.13
Westbrook Inverter Enclosur	W_INV7	369780	4906417	2	0	0	89.1	89.1	1	5150.49	3.25	0	85.24	0	1.68	0	0	12.66	0	0	0	0	0	0	-10.52	-10.52
Westbrook Inverter Enclosur	W_INV5	369719	4906574	2	0	0	89.1	89.1	1	5180.1	3.25	0	85.29	0	1.68	0	0	12.7	0	0	0	0	0	0	-10.62	-10.62
Inverter	MV3-4	368502	4907925	2	0	0	89.1	89.1	1	5191.63	3.25	0	85.31	0	1.69	0	0	12.72	0	0	0	0	0	0	-10.65	-10.65
Inverter	MV3-2	368671	4907928	2	0	0	89.1	89.1	1	5298.61	3.25	0	85.48	0	1.71	0	0	12.86	0	0	0	0	0	0	-11	-11
Westbrook Inverter Enclosur	W_INV6	369875	4906578	2	0	0	89.1	89.1	1	5314.73	3.25	0	85.51	0	1.72	0	0	12.88	0	0	0	0	0	0	-11.05	-11.05
Fixed Reactor Bank 1	FRB1	369378	4908755	6	0	0	89.8	89.8	1	6386.29	5.25	0	87.1	0	-0.36	0	0	10.14	0	0	0	0	0	0	-7.11	-7.11
Fixed Reactor Bank 2	FRB2	369464	4908755	6	0	0	89.8	89.8	1	6441.02	5.25	0	87.18	0	-0.36	0	0	10.2	0	0	0	0	0	0	-7.25	-7.25
Inverter	MV4-15	369176	4908481	2	0	0	89.1	89.1	1	6046.32	3.25	0	86.63	0	1.9	0	0	13.82	0	0	0	0	0	0	-13.29	-13.29
Inverter	MV4-13	369051	4908605	2	0	0	89.1	89.1	1	6065.37	3.25	0	86.66	0	1.9	0	0	13.84	0	0	0	0	0	0	-13.35	-13.35
Inverter	MV4-14	369176	4908507	2	0	0	89.1	89.1	1	6066.44	3.25	0	86.66	0	1.9	0	0	13.85	0	0	0	0	0	0	-13.35	-13.35
Inverter	MV4-12	369043	4908803	2	0	0	89.1	89.1	1	6218.37	3.25	0	86.87	0	1.94	0	0	14.04	0	0	0	0	0	0	-13.79	-13.79
Inverter	MV5-6	369982	4908507	2	0	0	89.1	89.1	1	6605.77	3.25	0	87.4	0	2.03	0	0	14.51	0	0	0	0	0	0	-14.89	-14.89
Westbrook Inverter Enclosur	W_INV1	369409	4906578	2	0	0	86.1	86.1	1	4923.03	3.25	0	84.84	0	1.62	0	0	12.36	0	0	0	0	0	0	-12.77	-12.77
Inverter	MV6-4	370250	4906966	2	0	0	86.1	86.1	1	5838.57	3.25	0	86.33	0	1.85	0	0	13.56	0	0	0	0	0	0	-15.67	-15.67
Inverter Transformer	MV1-14 T	365157	4905049	2	0	0	69.4	69.4	1	1254.31	3.25	0	72.97	0	1.85	0	0	4.14	0	0	0	0	0	0	-9.61	-9.61
Inverter Transformer	MV1-13 T	364725	4905241	2	0	0	69.4	69.4	1	1559.08	3.25	0	74.86	0	2	0	0	4.5	0	0	0	0	0	0	-12.01	-12.01
Westbrook Inverter Transfor	W_INVTR1	369403	4906578	2	0	0	78.2	78.2	1	4918.07	3.25	0	84.84	0	-3.16	0	0	2.38	0	0	0	0	0	0	-5.82	-5.82
Inverter Transformer	MV1-10 T	365010	4905564	2	0	0	69.4	69.4	1	1786.59	3.25	0	76.04	0	2.09	0	0	4.75	0	0	0	0	0	0	-13.53	-13.53
Westbrook Inverter Transfor	W_INVTR2	369368	4906388	2	0	0	77.3	77.3	1	4784.1	3.25	0	84.6	0	-3.13	0	0	2.34	0	0	0	0	0	0	-6.46	-6.46
Westbrook Inverter Transfor	W_INVTR3	369514	4906164	2	0	0	77.3	77.3	1	4793.71	3.25	0	84.61	0	-3.14	0	0	2.34	0	0	0	0	0	0	-6.48	-6.48
Westbrook Inverter Transfor	W_INVTR4	369679	4906164	2	0	0	77.3	77.3	1	4938.08	3.25	0	84.87	0	-3.16	0	0	2.39	0	0	0	0	0	0	-6.76	-6.76
Inverter Transformer	MV1-7 T	364919	4905782	2	0	0	69.4	69.4	1	2018.23	3.25	0	77.1	0	2.18	0	0	4.98	0	0	0	0	0	0	-14.91	-14.91
Westbrook Inverter Transfor	W_INVTR7	369786	4906417	2	0	0	77.3	77.3	1	5155.67	3.25	0	85.25	0	-3.21	0	0	2.47	0	0	0	0	0	0	-7.16	-7.16
Westbrook Inverter Transfor	W_INVTR5	369725	4906574	2	0	0	77.3	77.3	1	5185.17	3.25	0	85.3	0	-3.21	0	0	2.48	0	0	0	0	0	0	-7.22	-7.22
Westbrook Inverter Transfor	W_INVTR6	369881	4906578	2	0	0	77.3	77.3	1	5319.85	3.25	0	85.52	0	-3.24	0	0	2.52	0	0	0	0	0	0	-7.46	-7.46
Inverter Transformer	MV2-1 T	365836	4906816	2	0	0	69.4	69.4	1	3048.75	3.25	0	80.68	0	2.52	0	0	5.92	0	0	0	0	0	0	-19.78	-19.78
Inverter Transformer	MV1-15 T	365309	4904994	2	0	0	56.1	56.1	1	1186.39	3.25	0	72.48	0	0.08	0	0	5.32	0	0	0	0	0	0	-21.83	-21.83
Inverter Transformer	MV6-4 T	370244	4906966	2	0	0	69.4	69.4	1	5833.53	3.25	0	86.32	0	3.16	0	0	7.92	0	0	0	0	0	0	-28.05	-28.05
Inverter Transformer	MV6-1 T	370230	4907364	2	0	0	69.4	69.4	1	6046.91	3.25	0	86.63	0	3.2	0	0	8.05	0	0	0	0	0	0	-28.52	-28.52
Inverter Transformer	MV1-12 T	365044	4905386	2	0	0	56.1	56.1	1	1605.38	3.25	0	75.11	0	0.24	0	0	6.24	0	0	0	0	0	0	-25.54	-25.54
Inverter Transformer	MV1-11 T	364649	4905414	2	0	0	56.1	56.1	1	1748.03	3.25	0	75.85	0	0.3	0	0	6.54	0	0	0	0	0	0	-26.63	-26.63
Inverter Transformer	MV1-8 T	364782	4905647	2	0	0	56.1	56.1	1	1921.56	3.25	0	76.67	0	0.37	0	0	6.89	0	0	0	0	0	0	-27.87	-27.87
Inverter Transformer	MV1-9 T	364555	4905646	2	0	0	56.1	56.1	1	1998.3	3.25	0	77.01	0	0.4	0	0	7.04	0	0	0	0	0	0	-28.4	-28.4
Inverter Transformer	MV1-4 T	364821	4905918	2	0	0	56.1	56.1	1	2172.7	3.25	0	77.74	0	0.48	0	0	7.38	0	0	0	0	0	0	-29.54	-29.54
Inverter Transformer	MV1-5 T	364676	4905892	2	0	0	56.1	56.1	1	2186.98	3.25	0	77.8	0	0.48	0	0	7.41	0	0	0	0	0	0	-29.63	-29.63
Inverter Transformer	MV1-6 T	364482	4905835	2	0	0	56.1	56.1	1	2200.8	3.25	0	77.85	0	0.49	0	0	7.43	0	0	0	0	0	0	-29.71	-29.71
Inverter Transformer	MV1-2 T	364759	4906063	2	0	0	56.1	56.1	1	2328.45	3.25	0	78.34	0	0.54	0	0	7.67	0	0	0	0	0	0	-30.5	-30.5
Inverter Transformer	MV1-3 T	364435	4906039	2	0	0	56.1	56.1	1	2407.27	3.25	0	78.63	0	0.58	0	0	7.82	0	0	0	0	0	0	-30.97	-30.97
Inverter Transformer	MV1-1 T	364721	4906166	2	0	0	56.1	56.1	1	2437.69	3.25	0	78.74	0	0.59	0	0	7.88	0	0	0	0	0	0	-31.15	-31.15
Inverter Transformer	MV2-4 T	365590	4906628	2	0	0	56.1	56.1	1	2831.13	3.25	0	80.04	0	0.76	0	0	8.58	0	0	0	0	0	0	-33.32	-33.32
Inverter Transformer	MV2-3 T	365814	4906641	2	0	0	56.1	56.1	1	2872.51	3.25	0	80.17	0	0.78	0	0	8.65	0	0	0	0	0	0	-33.53	-33.53
Inverter Transformer	MV2-2 T	365982	4906654	2	0	0	56.1	56.1	1	2917.69	3.25	0	80.3	0	0.79	0	0	8.73	0	0	0	0	0	0	-33.76	-33.76
Inverter Transformer	MV3-18 T	367757	4907412	2	0	0	56.1	56.1	1	4339.88	3.25	0	83.75	0	1.38	0	0	10.95	0	0	0	0	0	0	-40.02	-40.02
Inverter Transformer	MV3-12 T	367674	4907594	2	0	0	56.1	56.1	1	4448.04	3.25	0	83.96	0	1.42	0	0	11.1	0	0	0	0	0	0	-40.43	-40.43
Inverter Transformer	MV3-13 T	367958	4907577	2	0	0	56.1	56.1	1	4589.5	3.25	0	84.24	0	1.47	0	0	11.3	0	0	0	0	0	0	-40.95	-40.95
Inverter Transformer	MV3-21 T	368484	4907206	2	0	0	56.1	56.1	1	4629.92	3.25	0	84.31	0	1.49	0	0	11.36	0	0	0	0	0	0	-41.1	-41.1
Inverter Transformer	MV3-17 T	368183	4907472	2	0	0	56.1	56.1	1	4638.11	3.25	0	84.33	0	1.49	0	0	11.37	0	0	0	0	0	0	-41.13	-41.13
Inverter Transformer	MV3-19 T	368352	4907347	2	0	0	56.1	56.1	1	4647.74	3.25	0	84.34	0	1.5	0	0	11.38	0	0	0	0	0	0	-41.16	-41.16
Inverter Transformer	MV3-22 T	368661	4907142	2	0	0	56.1	56.1	1	4706.37	3.25	0	84.45	0	1.52	0	0	11.46	0	0	0	0	0	0	-41.37	-41.37
Inverter Transformer	MV3-7 T	367951	4907754	2	0	0	56.1	56.1	1	4732.06	3.25	0	84.5	0	1.53	0	0	11.5	0	0	0	0	0	0	-41.47	-41.47
Inverter Transformer	MV3-15 T	368351	4907477	2	0	0	56.1	56.1	1	4746.84	3.25	0	84.53	0	1.53	0	0	11.52	0	0	0	0	0	0	-41.52	-41.52
Inverter Transformer	MV3-10 T	368162	4907669	2	0	0	56.1	56.1	1	4782.84	3.25	0	84.59	0	1.55	0	0	11.56	0	0	0	0	0	0	-41.65	-41.65
Inverter Transformer	MV3-20 T	368683	4907317	2	0	0	56.1	56.1	1	4847.07	3.25	0	84.71	0	1.57	0	0	11.65	0	0	0	0	0	0	-41.87	-41.87
Inverter Transformer	MV3-16 T	368509	4907475	2	0	0	56.1	56.1	1	4847.12	3.25	0	84.71	0	1.57	0	0	11.65	0	0	0	0	0	0	-41.87	-41.87
Inverter Transformer	MV3-3 T	367944	4907927	2	0	0	56.1	56.1	1	4873.52	3.25	0	84.76	0	1.58	0	0	11.69	0	0	0	0	0	0	-41.96	-41.96
Inverter Transformer	MV3-11 T	368340	4907662	2	0	0	56.1	56.1	1	4884.48	3.25	0	84.78	0	1.58	0	0	11.7	0	0	0	0	0	0	-42	-42
Inverter Transformer	MV3-6 T	368156	4907834	2	0	0	56.1	56.1	1	4913.56	3.25	0	84.83	0	1.59	0	0	11.74	0	0	0	0	0	0	-42.1	-42.1

	Inverter Transformer	MV3-14 T	368678	4907498	2	0	0	56.1	56.1	1	4976.31	3.25	0	84.94	0	1.62	0	0	11.82	0	0	0	0	0	0	-42.32	-42.32
	Inverter Transformer	MV3-5 T	368335	4907843	2	0	0	56.1	56.1	1	5025.54	3.25	0	85.02	0	1.63	0	0	11.89	0	0	0	0	0	0	-42.49	-42.49
	Inverter Transformer	MV3-9 T	368517	4907703	2	0	0	56.1	56.1	1	5026.87	3.25	0	85.03	0	1.64	0	0	11.89	0	0	0	0	0	0	-42.49	-42.49
	Inverter Transformer	MV3-1 T	368150	4907976	2	0	0	56.1	56.1	1	5027.21	3.25	0	85.03	0	1.64	0	0	11.89	0	0	0	0	0	0	-42.49	-42.49
	Inverter Transformer	MV3-8 T	368685	4907712	2	0	0	56.1	56.1	1	5141.56	3.25	0	85.22	0	1.68	0	0	12.04	0	0	0	0	0	0	-42.88	-42.88
	Inverter Transformer	MV3-4 T	368507	4907925	2	0	0	56.1	56.1	1	5194.68	3.25	0	85.31	0	1.69	0	0	12.11	0	0	0	0	0	0	-43.06	-43.06
	Inverter Transformer	MV3-2 T	368677	4907928	2	0	0	56.1	56.1	1	5302.39	3.25	0	85.49	0	1.73	0	0	12.25	0	0	0	0	0	0	-43.41	-43.41
	Inverter Transformer	MV6-3 T	370202	4907140	2	0	0	56.1	56.1	1	5894.83	3.25	0	86.41	0	1.93	0	0	12.98	0	0	0	0	0	0	-45.26	-45.26
	Inverter Transformer	MV6-2 T	370091	4907339	2	0	0	56.1	56.1	1	5920.1	3.25	0	86.45	0	1.94	0	0	13.01	0	0	0	0	0	0	-45.34	-45.34
	Inverter Transformer	MV4-15 T	369170	4908481	2	0	0	56.1	56.1	1	6042.51	3.25	0	86.62	0	1.98	0	0	13.15	0	0	0	0	0	0	-45.7	-45.7
	Inverter Transformer	MV4-13 T	369057	4908605	2	0	0	56.1	56.1	1	6069.04	3.25	0	86.66	0	1.99	0	0	13.18	0	0	0	0	0	0	-45.77	-45.77
	Inverter Transformer	MV4-14 T	369182	4908507	2	0	0	56.1	56.1	1	6070.23	3.25	0	86.66	0	1.99	0	0	13.19	0	0	0	0	0	0	-45.78	-45.78
	Inverter Transformer	MV4-12 T	369049	4908803	2	0	0	56.1	56.1	1	6221.95	3.25	0	86.88	0	2.03	0	0	13.36	0	0	0	0	0	0	-46.22	-46.22
	Inverter Transformer	MV4-7 T	369040	4909001	2	0	0	56.1	56.1	1	6376.77	3.25	0	87.09	0	2.08	0	0	13.54	0	0	0	0	0	0	-46.66	-46.66
	Inverter Transformer	MV4-11 T	369269	4908855	2	0	0	56.1	56.1	1	6396.53	3.25	0	87.12	0	2.09	0	0	13.56	0	0	0	0	0	0	-46.71	-46.71
	Inverter Transformer	MV4-10 T	369307	4908858	2	0	0	56.1	56.1	1	6422.3	3.25	0	87.15	0	2.09	0	0	13.59	0	0	0	0	0	0	-46.78	-46.78
	Inverter Transformer	MV4-8 T	369262	4909001	2	0	0	56.1	56.1	1	6508.12	3.25	0	87.27	0	2.12	0	0	13.69	0	0	0	0	0	0	-47.02	-47.02
	Inverter Transformer	MV4-9 T	369284	4909001	2	0	0	56.1	56.1	1	6521.4	3.25	0	87.29	0	2.12	0	0	13.7	0	0	0	0	0	0	-47.06	-47.06
	Inverter Transformer	MV4-4 T	369033	4909199	2	0	0	56.1	56.1	1	6535.06	3.25	0	87.3	0	2.13	0	0	13.72	0	0	0	0	0	0	-47.09	-47.09
	Inverter Transformer	MV5-6 T	369987	4908507	2	0	0	56.1	56.1	1	6609.29	3.25	0	87.4	0	2.15	0	0	13.8	0	0	0	0	0	0	-47.3	-47.3
	Inverter Transformer	MV4-6 T	369249	4909192	2	0	0	56.1	56.1	1	6653.87	3.25	0	87.46	0	2.16	0	0	13.85	0	0	0	0	0	0	-47.42	-47.42
	Inverter Transformer	MV4-5 T	369283	4909199	2	0	0	56.1	56.1	1	6679.55	3.25	0	87.49	0	2.17	0	0	13.88	0	0	0	0	0	0	-47.49	-47.49
	Inverter Transformer	MV4-1 T	369017	4909397	2	0	0	56.1	56.1	1	6690.53	3.25	0	87.51	0	2.17	0	0	13.89	0	0	0	0	0	0	-47.52	-47.52
	Inverter Transformer	MV5-5 T	370021	4908690	2	0	0	56.1	56.1	1	6764.11	3.25	0	87.6	0	2.19	0	0	13.97	0	0	0	0	0	0	-47.71	-47.71
	Inverter Transformer	MV4-3 T	369234	4909397	2	0	0	56.1	56.1	1	6812.22	3.25	0	87.67	0	2.21	0	0	14.03	0	0	0	0	0	0	-47.84	-47.84
	Inverter Transformer	MV4-2 T	369267	4909397	2	0	0	56.1	56.1	1	6831.14	3.25	0	87.69	0	2.21	0	0	14.05	0	0	0	0	0	0	-47.89	-47.89
	Inverter Transformer	MV5-2 T	370011	4908853	2	0	0	56.1	56.1	1	6875.88	3.25	0	87.75	0	2.23	0	0	14.1	0	0	0	0	0	0	-48.01	-48.01
	Inverter Transformer	MV5-4 T	370330	4908707	2	0	0	56.1	56.1	1	6993.45	3.25	0	87.89	0	2.26	0	0	14.22	0	0	0	0	0	0	-48.32	-48.32
	Inverter Transformer	MV5-3 T	370237	4908851	2	0	0	56.1	56.1	1	7029.96	3.25	0	87.94	0	2.27	0	0	14.26	0	0	0	0	0	0	-48.41	-48.41
	Inverter Transformer	MV5-1 T	370015	4909142	2	0	0	56.1	56.1	1	7093.28	3.25	0	88.02	0	2.28	0	0	14.33	0	0	0	0	0	0	-48.57	-48.57
	Line Reactor	NGR	369421	4908787.5	5	0	0	45.4	45.4	1	6438.67	5.25	0	87.18	0	3.23	1.37	0.09	2.63	0	0	0	0	0	0	-49.05	-49.05
Limit. Valu	0	0																								
Level D/N:	24.4436	24.4436																								

Receiver: Existing Noise Receptor
ID: G-88
X: 367795.2
Y: 4901814.1
Z: 4.5
Ground: 0

ISO	Description	ID	X	Y	Z	Ground	ReflOrd	LxT	LxN	L/A	Dist.	hm	Freq	Adiv	K0b	Agr	Abar	z	Aatm	Afol	Ahous	Cmet	CmetN	Dc	RL	LtotT	LtotN
	Sol_Luce Substation	S_Substation	369426	4908792	3.5	0	0	112.1	112.1	1	7165.93	5.25	0	88.11	0	1.41	2.41	0.34	10.91	0	0	0	0	0	0	9.24	9.24
	Inverter	MV1-15	365315	4904994	2	0	0	100.3	100.3	1	4032.76	3.25	0	83.11	0	0.53	0	0	17.1	0	0	0	0	0	0	-0.43	-0.43
	Inverter	MV1-12	365038	4905386	2	0	0	100.3	100.3	1	4512.28	3.25	0	84.09	0	0.59	0	0	17.85	0	0	0	0	0	0	-2.22	-2.22
	Inverter	MV1-11	364655	4905414	2	0	0	100.3	100.3	1	4777.04	3.25	0	84.58	0	0.62	0	0	18.25	0	0	0	0	0	0	-3.14	-3.14
	Inverter	MV1-8	364788	4905647	2	0	0	100.3	100.3	1	4871.79	3.5	0	84.75	0	1.53	2.74	0	18.39	0	0	0	0	0	0	-7.11	-7.11
	Inverter	MV1-9	364561	4905646	2	0	0	100.3	100.3	1	5014.33	3.25	0	85	0	0.64	0	0	18.6	0	0	0	0	0	0	-3.94	-3.94
	Inverter	MV1-4	364815	4905918	2	0	0	100.3	100.3	1	5071.84	3.25	0	85.1	0	0.65	0	0	18.69	0	0	0	0	0	0	-4.13	-4.13
	Inverter	MV1-5	364671	4905892	2	0	0	100.3	100.3	1	5137.11	3.25	0	85.21	0	0.65	0	0	18.78	0	0	0	0	0	0	-4.34	-4.34
	Inverter	MV1-6	364477	4905835	2	0	0	100.3	100.3	1	5213.26	3.25	0	85.34	0	0.66	0	0	18.89	0	0	0	0	0	0	-4.58	-4.58
	Inverter	MV2-3	365820	4906641	2	0	0	100.3	100.3	1	5215.4	3.25	0	85.35	0	0.66	0	0	18.89	0	0	0	0	0	0	-4.59	-4.59
	Inverter	MV1-2	364753	4906063	2	0	0	100.3	100.3	1	5225.72	3.25	0	85.36	0	0.66	0	0	18.91	0	0	0	0	0	0	-4.62	-4.62
	Inverter	MV2-4	365586	4906624	2	0	0	100.3	100.3	1	5292.99	3.25	0	85.47	0	0.67	0	0	19.01	0	0	0	0	0	0	-4.83	-4.83
	Inverter	MV1-1	364715	4906166	2	0	0	100.3	100.3	1	5331.67	3.25	0	85.54	0	0.67	0	0	19.06	0	0	0	0	0	0	-4.96	-4.96
	Inverters	G_Inv10	366900.7	4902704.8	2	0	0	87.7	87.7	1	1262.33	3.25	0	73.02	0	2.49	0	0	1.75	0	0	0	0	0	0	10.4	10.4
	Inverter	MV3-21	368478	4907206	2	0	0	100.3	100.3	1	5434.96	3.25	0	85.7	0	0.68	0	0	19.21	0	0	0	0	0	0	-5.28	-5.28
	Inverter	MV3-19	368357	4907347	2	0	0	100.3	100.3	1	5561.35	3.25	0	85.9	0	0.68	0	0	19.39	0	0	0	0	0	0	-5.66	-5.66
	Inverter	MV3-20	368689	4907317	2	0	0	100.3	100.3	1	5575.02	3.25	0	85.92	0	0.68	0	0	19.41	0	0	0	0	0	0	-5.7	-5.7
	Inverter	MV3-18	367752	4907412	2	0	0	100.3	100.3	1	5598.07	3.25	0	85.96	0	0.69	0	0	19.44	0	0	0	0	0	0	-5.77	-5.77
	Inverter	MV3-17	368178	4907472	2	0	0	100.3	100.3	1	5670.84	3.25	0	86.07	0	0.69	0	0	19.54	0	0	0	0	0	0	-5.99	-5.99
	Inverter	MV3-15	368357	4907477	2	0	0	100.3	100.3	1	5690.7	3.25	0	86.1	0	0.69	0	0	19.57	0	0	0	0	0	0	-6.05	-6.05
	Inverter	MV3-16	368514	4907475	2	0	0	100.3	100.3	1	5706.35	3.25	0	86.13	0	0.69	0	0	19.59	0	0	0	0	0	0	-6.1	-6.1
	Inverter	MV3-14	368684	4907498	2	0	0	100.3	100.3	1	5752.97	3.25	0	86.2	0	0.69	0	0	19.65	0	0	0	0	0	0	-6.23	-6.23
	Inverter	MV3-13	367963	4907577	2	0	0	100.3	100.3	1	5765.34	3.25	0	86.22	0	0.7	0	0	19.67	0	0	0	0	0	0	-6.27	-6.27
	Inverter	MV3-12	367668	4907594	2	0	0	100.3	100.3	1	5781.3	3.25	0	86.24	0	0.7	0	0	19.69	0	0	0	0	0	0	-6.32	-6.32
	Inverter	MV6-3	370207	4907140	2	0	0	100.3	100.3	1	5846.54	3.25	0	86.34	0	0.7	0	0	19.78	0	0	0	0	0	0	-6.51	-6.51
	Inverters	G_Inv9	366750.9	4902691.8	2	0	0	87.7	87.7	1	1364.16	3.25	0	73.7	0	2.5	0	0	1.88	0	0	0	0	0	0	9.58	9.58
	Gardiner Substation	G_Sub	366586.3	4903349.9	2.5	0	0	90.8	90.8	1	1954.51	3.5	0	76.82	0	-0.18	0	0	4.29	0	0	0	0	0	0	9.84	9.84
	Inverter	MV3-10	368167	4907669	2	0	0	100.3	100.3	1	5866.69	3.25	0	86.37	0	0.7	0	0	19.81	0	0	0	0	0	0	-6.57	-6.57
	Inverter	MV3-11	368346	4907662	2	0	0	100.3	100.3	1	5873.78	3.25	0	86.38	0	0.7	0	0	19.82	0	0	0	0	0	0	-6.59	-6.59
	Inverter	MV1-14	365163	4905049	2	0	0	97.3	97.3	1	4170.5	3.25	0	83.4	0	0.55	0	0	17.32	0	0	0	0	0	0	-3.96	-3.96
	Inverter	MV3-9	368512	4907703	2	0	0	100.3	100.3	1	5932.36	3.25	0	86.46	0	0.7	0	0	19.9	0	0	0	0	0	0	-6.76	-6.76
	Inverter	MV3-7	367945	4907754	2	0	0	100.3	100.3	1	5941.79	3.25	0	86.48	0	0.7	0	0	19.91	0	0	0	0	0	0	-6.78	-6.78

Inverter	MV3-8	368680	4907712	2	0	0	100.3	100.3	1	5963.9	3.25	0	86.51	0	0.7	0	0	19.94	0	0	0	0	0	0	-6.85	-6.85
Inverter	MV6-2	370085	4907339	2	0	0	100.3	100.3	1	5980.61	3.25	0	86.53	0	0.7	0	0	19.97	0	0	0	0	0	0	-6.89	-6.89
Inverters	G_Inv8	366844.5	4902838.5	2	0	0	87.7	87.7	1	1397.58	3.25	0	73.91	0	2.51	0	0	1.92	0	0	0	0	0	0	9.33	9.33
Inverter	MV3-6	368162	4907834	2	0	0	100.3	100.3	1	6031.06	3.25	0	86.61	0	0.71	0	0	20.04	0	0	0	0	0	0	-7.04	-7.04
Inverter	MV3-3	367939	4907927	2	0	0	100.3	100.3	1	6114.59	3.25	0	86.73	0	0.71	0	0	20.15	0	0	0	0	0	0	-7.27	-7.27
Inverters	G_Inv7	366694.6	4902824.7	2	0	0	87.7	87.7	1	1494.2	3.25	0	74.49	0	2.52	0	0	2.04	0	0	0	0	0	0	8.62	8.62
Inverter	MV1-13	364731	4905241	2	0	0	97.3	97.3	1	4597.06	3.25	0	84.25	0	0.6	0	0	17.98	0	0	0	0	0	0	-5.52	-5.52
Inverters	G_Inv6	366788.5	4902972	2	0	0	87.7	87.7	1	1534.33	3.25	0	74.72	0	2.52	0	0	2.08	0	0	0	0	0	0	8.33	8.33
Inverter	MV1-10	365004	4905564	2	0	0	97.3	97.3	1	4674.67	3.25	0	84.4	0	0.61	0	0	18.1	0	0	0	0	0	0	-5.79	-5.79
Inverter	MV1-7	364925	4905782	2	0	0	97.3	97.3	1	4897.17	3.25	0	84.8	0	0.63	0	0	18.43	0	0	0	0	0	0	-6.55	-6.55
Inverters	G_Inv5	366638.5	4902958.1	2	0	0	87.7	87.7	1	1626.87	3.25	0	75.23	0	2.54	0	0	2.2	0	0	0	0	0	0	7.7	7.7
Inverters	G_Inv4	366732.8	4903105	2	0	0	87.7	87.7	1	1671.86	3.25	0	75.46	0	2.54	0	0	2.25	0	0	0	0	0	0	7.41	7.41
Inverter	MV4-11	369264	4908855	2	0	0	100.3	100.3	1	7192.47	3.25	0	88.14	0	0.7	0	0	21.54	0	0	0	0	0	0	-10.07	-10.07
Inverter	MV4-10	369312	4908858	2	0	0	100.3	100.3	1	7205.36	3.25	0	88.15	0	0.7	0	0	21.55	0	0	0	0	0	0	-10.1	-10.1
Inverter	MV5-5	370015	4908690	2	0	0	100.3	100.3	1	7225.34	3.25	0	88.18	0	0.7	0	0	21.58	0	0	0	0	0	0	-10.15	-10.15
Inverter	MV4-7	369035	4909001	2	0	0	100.3	100.3	1	7293.05	3.25	0	88.26	0	0.7	0	0	21.66	0	0	0	0	0	0	-10.31	-10.31
Inverter	MV4-8	369256	4909001	2	0	0	100.3	100.3	1	7333.86	3.25	0	88.31	0	0.7	0	0	21.71	0	0	0	0	0	0	-10.41	-10.41
Inverter	MV4-9	369289	4909001	2	0	0	100.3	100.3	1	7340.5	3.25	0	88.31	0	0.7	0	0	21.72	0	0	0	0	0	0	-10.42	-10.42
Inverter	MV5-4	370324	4908707	2	0	0	100.3	100.3	1	7342.13	3.25	0	88.32	0	0.7	0	0	21.72	0	0	0	0	0	0	-10.42	-10.42
Inverter	MV5-2	370006	4908853	2	0	0	100.3	100.3	1	7377.92	3.25	0	88.36	0	0.7	0	0	21.77	0	0	0	0	0	0	-10.51	-10.51
Inverter	MV5-3	370231	4908851	2	0	0	100.3	100.3	1	7446.55	3.25	0	88.44	0	0.69	0	0	21.85	0	0	0	0	0	0	-10.67	-10.67
Inverter	MV4-4	369027	4909199	2	0	0	100.3	100.3	1	7486.93	3.25	0	88.49	0	0.69	0	0	21.9	0	0	0	0	0	0	-10.76	-10.76
Inverter	MV4-6	369243	4909192	2	0	0	100.3	100.3	1	7518.61	3.25	0	88.52	0	0.69	0	0	21.94	0	0	0	0	0	0	-10.84	-10.84
Inverter	MV4-5	369289	4909199	2	0	0	100.3	100.3	1	7534.47	3.25	0	88.54	0	0.69	0	0	21.96	0	0	0	0	0	0	-10.87	-10.87
Inverters	G_Inv3	366583.7	4903091.4	2	0	0	87.7	87.7	1	1760.46	3.25	0	75.91	0	2.55	0	0	2.35	0	0	0	0	0	0	6.84	6.84
Inverter	MV2-1	365842	4906816	2	0	0	97.3	97.3	1	5369.73	3.25	0	85.6	0	0.67	0	0	19.12	0	0	0	0	0	0	-8.07	-8.07
Inverter	MV5-1	370020	4909142	2	0	0	100.3	100.3	1	7658.19	3.25	0	88.68	0	0.68	0	0	22.1	0	0	0	0	0	0	-11.15	-11.15
Inverter	MV4-1	369011	4909397	2	0	0	100.3	100.3	1	7679.75	3.25	0	88.71	0	0.68	0	0	22.13	0	0	0	0	0	0	-11.2	-11.2
Inverter	MV4-3	369229	4909397	2	0	0	100.3	100.3	1	7717.26	3.25	0	88.75	0	0.68	0	0	22.17	0	0	0	0	0	0	-11.29	-11.29
Inverter	MV4-2	369272	4909397	2	0	0	100.3	100.3	1	7725.37	3.25	0	88.76	0	0.67	0	0	22.18	0	0	0	0	0	0	-11.31	-11.31
Inverters	G_Inv2	366676.9	4903239.1	2	0	0	87.7	87.7	1	1811.42	3.25	0	76.16	0	2.56	0	0	2.41	0	0	0	0	0	0	6.53	6.53
Inverters	G_Inv1	366526.4	4903225.8	2	0	0	87.7	87.7	1	1898.09	3.25	0	76.57	0	2.57	0	0	2.52	0	0	0	0	0	0	6.01	6.01
Inverter	MV6-1	370235	4907364	2	0	0	97.3	97.3	1	6062.51	3.25	0	86.65	0	0.71	0	0	20.08	0	0	0	0	0	0	-10.13	-10.13
DSTATCOM - 10 MVAR #2	DSAT2	369403	4908757	2.5	0	0	96.6	96.6	1	7126.63	3.5	0	88.06	0	3.84	0	0	4.37	0	0	0	0	0	0	0.36	0.36
DSTATCOM - 10 MVAR #1	DSAT1	369437	4908757	2.5	0	0	96.6	96.6	1	7134.38	3.5	0	88.07	0	3.84	0	0	4.37	0	0	0	0	0	0	0.35	0.35
SubstationTransformer	W_ST	369711.17	4906112.3	2.5	0	0	92	92	1	4705.87	3.5	0	84.45	0	0.5	0	-0.13	8.27	0	0	0	0	0	0	-1.24	-1.24
Westbrook Inverter Enclosur	W_INV3	369508	4906164	2	0	0	89.1	89.1	1	4674.97	3.25	0	84.4	0	1.56	0	0	12.02	0	0	0	0	0	0	-8.92	-8.92
Westbrook Inverter Enclosur	W_INV4	369673	4906164	2	0	0	89.1	89.1	1	4737.91	3.25	0	84.51	0	1.57	0	0	12.11	0	0	0	0	0	0	-9.14	-9.14
Westbrook Inverter Enclosur	W_INV2	369374	4906388	2	0	0	89.1	89.1	1	4838.72	3.25	0	84.69	0	1.6	0	0	12.25	0	0	0	0	0	0	-9.48	-9.48
Westbrook Inverter Enclosur	W_INV7	369780	4906417	2	0	0	89.1	89.1	1	5012.6	3.25	0	85	0	1.64	0	0	12.48	0	0	0	0	0	0	-10.07	-10.07
Westbrook Inverter Enclosur	W_INV5	369719	4906574	2	0	0	89.1	89.1	1	5133.97	3.25	0	85.21	0	1.67	0	0	12.64	0	0	0	0	0	0	-10.47	-10.47
Inverter	MV2-2	365977	4906654	2	0	0	89.1	89.1	1	5170.15	3.25	0	85.27	0	1.68	0	0	12.69	0	0	0	0	0	0	-10.58	-10.58
Westbrook Inverter Enclosur	W_INV6	369875	4906578	2	0	0	89.1	89.1	1	5198.11	3.25	0	85.32	0	1.69	0	0	12.73	0	0	0	0	0	0	-10.67	-10.67
Inverter	MV1-3	364440	4906039	2	0	0	89.1	89.1	1	5395.1	3.25	0	85.64	0	1.74	0	0	12.99	0	0	0	0	0	0	-11.31	-11.31
Inverter	MV3-22	368656	4907142	2	0	0	89.1	89.1	1	5396.99	3.25	0	85.64	0	1.74	0	0	12.99	0	0	0	0	0	0	-11.31	-11.31
Inverter	MV3-5	368340	4907843	2	0	0	89.1	89.1	1	6053.47	3.25	0	86.64	0	1.9	0	0	13.83	0	0	0	0	0	0	-13.31	-13.31
Inverter	MV3-4	368502	4907925	2	0	0	89.1	89.1	1	6151.64	3.25	0	86.78	0	1.92	0	0	13.95	0	0	0	0	0	0	-13.6	-13.6
Inverter	MV3-1	368156	4907976	2	0	0	89.1	89.1	1	6172.45	3.25	0	86.81	0	1.93	0	0	13.98	0	0	0	0	0	0	-13.66	-13.66
Inverter	MV3-2	368671	4907928	2	0	0	89.1	89.1	1	6176.31	3.25	0	86.81	0	1.93	0	0	13.98	0	0	0	0	0	0	-13.67	-13.67
Fixed Reactor Bank 1	FRB1	369378	4908755	6	0	0	89.8	89.8	1	7119.08	5.25	0	88.05	0	-0.27	0	0	10.86	0	0	0	0	0	0	-8.86	-8.86
Fixed Reactor Bank 2	FRB2	369464	4908755	6	0	0	89.8	89.8	1	7138.7	5.25	0	88.07	0	-0.27	0	0	10.88	0	0	0	0	0	0	-8.91	-8.91
Inverter	MV4-15	369176	4908481	2	0	0	89.1	89.1	1	6808.39	3.25	0	87.66	0	2.08	0	0	14.76	0	0	0	0	0	0	-15.44	-15.44
Inverter	MV4-14	369176	4908507	2	0	0	89.1	89.1	1	6833.85	3.25	0	87.69	0	2.09	0	0	14.79	0	0	0	0	0	0	-15.51	-15.51
Inverter	MV4-13	369051	4908605	2	0	0	89.1	89.1	1	6906.04	3.25	0	87.78	0	2.11	0	0	14.87	0	0	0	0	0	0	-15.71	-15.71
Inverter	MV5-6	369982	4908507	2	0	0	89.1	89.1	1	7041.09	3.25	0	87.95	0	2.14	0	0	15.04	0	0	0	0	0	0	-16.07	-16.07
Inverter	MV4-12	369043	4908803	2	0	0	89.1	89.1	1	7099.42	3.25	0	88.02	0	2.15	0	0	15.1	0	0	0	0	0	0	-16.22	-16.22
Westbrook Inverter Enclosur	W_INV1	369409	4906578	2	0	0	86.1	86.1	1	5029.82	3.25	0	85.03	0	1.65	0	0	12.5	0	0	0	0	0	0	-13.12	-13.12
Inverter	MV6-4	370250	4906966	2	0	0	86.1	86.1	1	5706.85	3.25	0	86.13	0	1.81	0	0	13.39	0	0	0	0	0	0	-15.27	-15.27
Westbrook Inverter Transfor	W_INVTR1	369403	4906578	2	0	0	78.2	78.2	1	5027.9	3.25	0	85.03	0	-3.18	0	0	2.42	0	0	0	0	0	0	-6.03	-6.03
Westbrook Inverter Transfor	W_INVTR3	369514	4906164	2	0	0	77.3	77.3	1	4677.17	3.25	0	84.4	0	-3.11	0	0	2.3	0	0	0	0	0	0	-6.25	-6.25
Westbrook Inverter Transfor	W_INVTR4	369679	4906164	2	0	0	77.3	77.3	1	4740.29	3.25	0	84.52	0	-3.12	0	0	2.32	0	0	0	0	0	0	-6.37	-6.37
Westbrook Inverter Transfor	W_INVTR2	369368	4906388	2	0	0	77.3	77.3	1	4836.76	3.25	0	84.69	0	-3.14	0	0	2.36	0	0	0	0	0	0	-6.56	-6.56
Westbrook Inverter Transfor	W_INVTR7	369786	4906417	2	0	0	77.3	77.3	1	5014.98	3.25	0	85.01	0	-3.18	0	0	2.42	0	0	0	0	0	0	-6.9	-6.9
Westbrook Inverter Transfor	W_INVTR5	369725	4906574	2	0	0	77.3	77.3	1	5136.22	3.25	0	85.21	0	-3.2	0	0	2.46	0	0	0	0	0	0	-7.13	-7.13
Westbrook Inverter Transfor	W_INVTR6	369881	4906578	2	0	0	77.3	77.3	1	5200.51	3.25	0	85.32	0	-3.22	0	0	2.48	0	0	0	0	0	0	-7.24	-7.24
Inverter Transformer	MV1-14 T	365157	4905049	2	0	0	69.4	69.4	1	4174.29	3.25	0	83.41	0	2.83	0	0	6.81	0	0	0	0	0	0	-23.7	-23.7
Inverter Transformer	MV1-13 T	364725	4905241	2	0	0	69.4	69.4	1	4601.06	3.25	0	84.26	0	2.93	0	0	7.11	0	0	0	0	0	0	-24.94	-24.94
Inverter Transformer	MV1-10 T	365010	4905564	2	0	0	69.4	69.4	1	4671.09	3.25	0	84.39	0	2.94	0	0	7.16	0	0	0	0	0	0	-25.14	-25.14
Inverter Transformer	MV1-7 T	364919	4905782	2	0	0	69.4	69.4	1	4900.69	3.25	0	84.81	0	2.99	0	0	7.32	0	0	0	0	0	0	-25.76	-25.76
Inverter Transformer	MV2-1 T	365836	4906816	2	0	0	69.4	69.4	1	5371.92	3.25	0	85.6	0	3.08	0	0	7.63	0	0	0	0	0	0	-26.96	-26.96
Inverter Transformer	MV6-4 T	370244	4906966	2	0	0	69.4	69.4	1	5704.27	3.25	0	86.12	0	3.14	0	0	7.84	0	0	0	0	0	0	-27.75	-27.75
Inverter Transformer	MV6-1 T	370230	4907364	2	0	0	69.4	69.4	1	6060.5	3.25	0	86.65	0	3.2	0	0	8.05	0	0	0	0	0	0	-28.55	-28.55
Inverter Transformer	MV1-15 T	365309	4904994	2	0	0	56.1	56.1	1	4036.45	3.25	0	83.12	0	1.26	0	0	10.51	0	0	0	0	0	0	-38.83	-38.83
Inverter Transformer	MV1-12 T	365044	4905386	2	0	0	56.1	56.1	1	4508.61	3.25	0	84.08	0	1.44	0	0	11.19	0	0	0	0	0	0	-40.65	-40.65

	Inverter Transformer	MV1-11 T	364649	4905414	2	0	0	56.1	56.1	1	4780.99	3.25	0	84.59	0	1.55	0	0	11.56	0	0	0	0	0	0	-41.64	-41.64
	Inverter Transformer	MV1-8 T	364782	4905647	2	0	0	56.1	56.1	1	4875.5	3.5	0	84.76	0	2.49	2.06	0	11.69	0	0	0	0	0	0	-44.94	-44.94
	Inverter Transformer	MV1-9 T	364555	4905646	2	0	0	56.1	56.1	1	5018.2	3.25	0	85.01	0	1.63	0	0	11.88	0	0	0	0	0	0	-42.46	-42.46
	Inverter Transformer	MV1-4 T	364821	4905918	2	0	0	56.1	56.1	1	5068.32	3.25	0	85.1	0	1.65	0	0	11.94	0	0	0	0	0	0	-42.63	-42.63
	Inverter Transformer	MV1-5 T	364676	4905892	2	0	0	56.1	56.1	1	5134.07	3.25	0	85.21	0	1.67	0	0	12.03	0	0	0	0	0	0	-42.85	-42.85
	Inverter Transformer	MV2-2 T	365982	4906654	2	0	0	56.1	56.1	1	5168.4	3.25	0	85.27	0	1.69	0	0	12.07	0	0	0	0	0	0	-42.97	-42.97
	Inverter Transformer	MV1-6 T	364482	4905835	2	0	0	56.1	56.1	1	5210.08	3.25	0	85.34	0	1.7	0	0	12.13	0	0	0	0	0	0	-43.11	-43.11
	Inverter Transformer	MV2-3 T	365814	4906641	2	0	0	56.1	56.1	1	5217.67	3.25	0	85.35	0	1.7	0	0	12.14	0	0	0	0	0	0	-43.13	-43.13
	Inverter Transformer	MV1-2 T	364759	4906063	2	0	0	56.1	56.1	1	5222.23	3.25	0	85.36	0	1.7	0	0	12.14	0	0	0	0	0	0	-43.15	-43.15
	Inverter Transformer	MV2-4 T	365590	4906628	2	0	0	56.1	56.1	1	5294.95	3.25	0	85.48	0	1.73	0	0	12.24	0	0	0	0	0	0	-43.39	-43.39
	Inverter Transformer	MV1-1 T	364721	4906166	2	0	0	56.1	56.1	1	5328.2	3.25	0	85.53	0	1.74	0	0	12.28	0	0	0	0	0	0	-43.49	-43.49
	Inverter Transformer	MV3-22 T	368661	4907142	2	0	0	56.1	56.1	1	5397.79	3.25	0	85.64	0	1.77	0	0	12.37	0	0	0	0	0	0	-43.72	-43.72
	Inverter Transformer	MV1-3 T	364435	4906039	2	0	0	56.1	56.1	1	5398.22	3.25	0	85.65	0	1.77	0	0	12.37	0	0	0	0	0	0	-43.72	-43.72
	Inverter Transformer	MV3-21 T	368484	4907206	2	0	0	56.1	56.1	1	5435.72	3.25	0	85.71	0	1.78	0	0	12.41	0	0	0	0	0	0	-43.84	-43.84
	Inverter Transformer	MV3-19 T	368352	4907347	2	0	0	56.1	56.1	1	5560.85	3.25	0	85.9	0	1.82	0	0	12.57	0	0	0	0	0	0	-44.24	-44.24
	Inverter Transformer	MV3-20 T	368683	4907317	2	0	0	56.1	56.1	1	5574.06	3.25	0	85.92	0	1.83	0	0	12.59	0	0	0	0	0	0	-44.28	-44.28
	Inverter Transformer	MV3-18 T	367757	4907412	2	0	0	56.1	56.1	1	5598.03	3.25	0	85.96	0	1.83	0	0	12.62	0	0	0	0	0	0	-44.35	-44.35
	Inverter Transformer	MV3-17 T	368183	4907472	2	0	0	56.1	56.1	1	5671.18	3.25	0	86.07	0	1.86	0	0	12.71	0	0	0	0	0	0	-44.58	-44.58
	Inverter Transformer	MV3-15 T	368351	4907477	2	0	0	56.1	56.1	1	5690.11	3.25	0	86.1	0	1.86	0	0	12.73	0	0	0	0	0	0	-44.64	-44.64
	Inverter Transformer	MV3-16 T	368509	4907475	2	0	0	56.1	56.1	1	5705.73	3.25	0	86.13	0	1.87	0	0	12.75	0	0	0	0	0	0	-44.69	-44.69
	Inverter Transformer	MV3-14 T	368678	4907498	2	0	0	56.1	56.1	1	5752.05	3.25	0	86.2	0	1.88	0	0	12.81	0	0	0	0	0	0	-44.83	-44.83
	Inverter Transformer	MV3-13 T	367958	4907577	2	0	0	56.1	56.1	1	5765.2	3.25	0	86.22	0	1.89	0	0	12.82	0	0	0	0	0	0	-44.87	-44.87
	Inverter Transformer	MV3-12 T	367674	4907594	2	0	0	56.1	56.1	1	5781.17	3.25	0	86.24	0	1.89	0	0	12.84	0	0	0	0	0	0	-44.92	-44.92
	Inverter Transformer	MV6-3 T	370202	4907140	2	0	0	56.1	56.1	1	5844.48	3.25	0	86.33	0	1.91	0	0	12.92	0	0	0	0	0	0	-45.11	-45.11
	Inverter Transformer	MV3-10 T	368162	4907669	2	0	0	56.1	56.1	1	5866.38	3.25	0	86.37	0	1.92	0	0	12.94	0	0	0	0	0	0	-45.17	-45.17
	Inverter Transformer	MV3-11 T	368340	4907662	2	0	0	56.1	56.1	1	5873.22	3.25	0	86.38	0	1.92	0	0	12.95	0	0	0	0	0	0	-45.2	-45.2
	Inverter Transformer	MV3-9 T	368517	4907703	2	0	0	56.1	56.1	1	5932.97	3.25	0	86.47	0	1.94	0	0	13.02	0	0	0	0	0	0	-45.37	-45.37
	Inverter Transformer	MV3-7 T	367951	4907754	2	0	0	56.1	56.1	1	5941.94	3.25	0	86.48	0	1.95	0	0	13.03	0	0	0	0	0	0	-45.4	-45.4
	Inverter Transformer	MV3-8 T	368685	4907712	2	0	0	56.1	56.1	1	5964.64	3.25	0	86.51	0	1.95	0	0	13.06	0	0	0	0	0	0	-45.47	-45.47
	Inverter Transformer	MV6-2 T	370091	4907339	2	0	0	56.1	56.1	1	5982.91	3.25	0	86.54	0	1.96	0	0	13.08	0	0	0	0	0	0	-45.52	-45.52
	Inverter Transformer	MV3-6 T	368156	4907834	2	0	0	56.1	56.1	1	6030.7	3.25	0	86.61	0	1.97	0	0	13.14	0	0	0	0	0	0	-45.66	-45.66
	Inverter Transformer	MV3-5 T	368335	4907843	2	0	0	56.1	56.1	1	6053.02	3.25	0	86.64	0	1.98	0	0	13.17	0	0	0	0	0	0	-45.73	-45.73
	Inverter Transformer	MV3-3 T	367944	4907927	2	0	0	56.1	56.1	1	6114.71	3.25	0	86.73	0	2	0	0	13.24	0	0	0	0	0	0	-45.91	-45.91
	Inverter Transformer	MV3-4 T	368507	4907925	2	0	0	56.1	56.1	1	6152.22	3.25	0	86.78	0	2.01	0	0	13.28	0	0	0	0	0	0	-46.02	-46.02
	Inverter Transformer	MV3-1 T	368150	4907976	2	0	0	56.1	56.1	1	6172.11	3.25	0	86.81	0	2.02	0	0	13.3	0	0	0	0	0	0	-46.07	-46.07
	Inverter Transformer	MV3-2 T	368677	4907928	2	0	0	56.1	56.1	1	6177.16	3.25	0	86.82	0	2.02	0	0	13.31	0	0	0	0	0	0	-46.09	-46.09
	Inverter Transformer	MV4-15 T	369170	4908481	2	0	0	56.1	56.1	1	6807.18	3.25	0	87.66	0	2.21	0	0	14.02	0	0	0	0	0	0	-47.83	-47.83
	Inverter Transformer	MV4-14 T	369182	4908507	2	0	0	56.1	56.1	1	6835.07	3.25	0	87.69	0	2.21	0	0	14.05	0	0	0	0	0	0	-47.9	-47.9
	Inverter Transformer	MV4-13 T	369057	4908605	2	0	0	56.1	56.1	1	6907.13	3.25	0	87.79	0	2.23	0	0	14.13	0	0	0	0	0	0	-48.09	-48.09
	Inverter Transformer	MV5-6 T	369987	4908507	2	0	0	56.1	56.1	1	7042.65	3.25	0	87.95	0	2.27	0	0	14.28	0	0	0	0	0	0	-48.44	-48.44
	Inverter Transformer	MV4-12 T	369049	4908803	2	0	0	56.1	56.1	1	7100.47	3.25	0	88.03	0	2.29	0	0	14.34	0	0	0	0	0	0	-48.59	-48.59
	Inverter Transformer	MV4-11 T	369269	4908855	2	0	0	56.1	56.1	1	7193.49	3.25	0	88.14	0	2.31	0	0	14.44	0	0	0	0	0	0	-48.83	-48.83
	Inverter Transformer	MV4-10 T	369307	4908858	2	0	0	56.1	56.1	1	7204.31	3.25	0	88.15	0	2.31	0	0	14.45	0	0	0	0	0	0	-48.85	-48.85
	Inverter Transformer	MV5-5 T	370021	4908690	2	0	0	56.1	56.1	1	7227.18	3.25	0	88.18	0	2.32	0	0	14.47	0	0	0	0	0	0	-48.91	-48.91
	Inverter Transformer	MV4-7 T	369040	4909001	2	0	0	56.1	56.1	1	7293.91	3.25	0	88.26	0	2.34	0	0	14.54	0	0	0	0	0	0	-49.08	-49.08
	Inverter Transformer	MV4-8 T	369262	4909001	2	0	0	56.1	56.1	1	7335.06	3.25	0	88.31	0	2.35	0	0	14.58	0	0	0	0	0	0	-49.18	-49.18
	Inverter Transformer	MV4-9 T	369284	4909001	2	0	0	56.1	56.1	1	7339.49	3.25	0	88.31	0	2.35	0	0	14.59	0	0	0	0	0	0	-49.19	-49.19
	Inverter Transformer	MV5-4 T	370330	4908707	2	0	0	56.1	56.1	1	7344.2	3.25	0	88.32	0	2.35	0	0	14.59	0	0	0	0	0	0	-49.2	-49.2
	Inverter Transformer	MV5-2 T	370011	4908853	2	0	0	56.1	56.1	1	7379.42	3.25	0	88.36	0	2.36	0	0	14.63	0	0	0	0	0	0	-49.29	-49.29
	Inverter Transformer	MV5-3 T	370237	4908851	2	0	0	56.1	56.1	1	7448.51	3.25	0	88.44	0	2.38	0	0	14.7	0	0	0	0	0	0	-49.46	-49.46
	Inverter Transformer	MV4-4 T	369033	4909199	2	0	0	56.1	56.1	1	7487.92	3.25	0	88.49	0	2.39	0	0	14.74	0	0	0	0	0	0	-49.56	-49.56
	Inverter Transformer	MV4-6 T	369249	4909192	2	0	0	56.1	56.1	1	7519.77	3.25	0	88.52	0	2.4	0	0	14.77	0	0	0	0	0	0	-49.64	-49.64
	Inverter Transformer	MV4-5 T	369283	4909199	2	0	0	56.1	56.1	1	7533.28	3.25	0	88.54	0	2.4	0	0	14.79	0	0	0	0	0	0	-49.67	-49.67
	Inverter Transformer	MV5-1 T	370015	4909142	2	0	0	56.1	56.1	1	7656.74	3.25	0	88.68	0	2.43	0	0	14.91	0	0	0	0	0	0	-49.97	-49.97
	Inverter Transformer	MV4-1 T	369017	4909397	2	0	0	56.1	56.1	1	7680.7	3.25	0	88.71	0	2.43	0	0	14.94	0	0	0	0	0	0	-50.02	-50.02
	Inverter Transformer	MV4-3 T	369234	4909397	2	0	0	56.1	56.1	1	7718.19	3.25	0	88.75	0	2.44	0	0	14.98	0	0	0	0	0	0	-50.11	-50.11
	Inverter Transformer	MV4-2 T	369267	4909397	2	0	0	56.1	56.1	1	7724.41	3.25	0	88.76	0	2.45	0	0	14.98	0	0	0	0	0	0	-50.13	-50.13
	Line Reactor	NGR	369421	4908787.5	5	0	0	45.4	45.4	1	7160.41	5.25	0	88.1	0	3.22	1.37	0.11	2.93	0	0	0	0	0	0	-50.26	-50.26
Limit. Valu	0	0																								
Level D/N:	20.1572	20.1572																								

Receiver: Existing Noise Receptor
ID: G-89
X: 367715.2
Y: 4901725.1
Z: 4.5
Ground: 0

ISO	Description	ID	X	Y	Z	Ground	ReflOrd	LxT	LxN	L/A	Dist.	hm	Freq	Adiv	K0b	Agr	Abar	z	Aatm	Afol	Ahous	Cmet	CmetN	Dc	RL	LtotT	LtotN
	Sol_Luce Substation	S_Substation	369426	4908792	3.5	0	0	112.1	112.1	1	7271.03	5.25	0	88.23	0	1.43	2.39	0.34	11	0	0	0	0	0	0	9.01	9.01
	Inverter	MV1-15	365315	4904994	2	0	0	100.3	100.3	1	4055.45	3.25	0	83.16	0	0.53	0	0	17.14	0	0	0	0	0	0	-0.52	-0.52
	Inverter	MV1-12	365038	4905386	2	0	0	100.3	100.3	1	4535.37	3.25	0	84.13	0	0.59	0	0	17.88	0	0	0	0	0	0	-2.3	-2.3
	Inverter	MV1-11	364655	4905414	2	0	0	100.3	100.3	1	4793	3.25	0	84.61	0	0.62	0	0	18.27	0	0	0	0	0	0	-3.2	-3.2
	Inverter	MV1-8	364788	4905647	2	0	0	100.3	100.3	1	4893.85	3.25	0	84.79	0	0.63	0	0	18.42	0	0	0	0	0	0	-3.54	-3.54

Inverter	MV1-9	364561	4905646	2	0	0	100.3	100.3	1	5032.14	3.25	0	85.04	0	0.64	0	0	18.63	0	0	0	0	0	0	-4	-4
Inverter	MV1-4	364815	4905918	2	0	0	100.3	100.3	1	5098.19	3.48	0	85.15	0	1.57	2.69	0	18.72	0	0	0	0	0	0	-7.82	-7.82
Inverter	MV1-5	364671	4905892	2	0	0	100.3	100.3	1	5160.45	3.25	0	85.25	0	0.66	0	0	18.81	0	0	0	0	0	0	-4.41	-4.41
Inverter	MV1-6	364477	4905835	2	0	0	100.3	100.3	1	5232.32	3.25	0	85.37	0	0.66	0	0	18.92	0	0	0	0	0	0	-4.64	-4.64
Inverter	MV1-2	364753	4906063	2	0	0	100.3	100.3	1	5252.81	3.25	0	85.41	0	0.66	0	0	18.95	0	0	0	0	0	0	-4.71	-4.71
Inverter	MV2-3	365820	4906641	2	0	0	100.3	100.3	1	5268.57	3.25	0	85.43	0	0.66	0	0	18.97	0	0	0	0	0	0	-4.76	-4.76
Inverter	MV2-4	365586	4906624	2	0	0	100.3	100.3	1	5341.6	3.25	0	85.55	0	0.67	0	0	19.08	0	0	0	0	0	0	-4.99	-4.99
Inverter	MV1-1	364715	4906166	2	0	0	100.3	100.3	1	5359.37	3.25	0	85.58	0	0.67	0	0	19.1	0	0	0	0	0	0	-5.04	-5.04
Inverters	G_Inv10	366900.7	4902704.8	2	0	0	87.7	87.7	1	1274.06	3.25	0	73.1	0	2.49	0	0	1.77	0	0	0	0	0	0	10.3	10.3
Inverter	MV3-21	368478	4907206	2	0	0	100.3	100.3	1	5533.73	3.25	0	85.86	0	0.68	0	0	19.35	0	0	0	0	0	0	-5.58	-5.58
Inverter	MV3-19	368357	4907347	2	0	0	100.3	100.3	1	5658.42	3.25	0	86.05	0	0.69	0	0	19.52	0	0	0	0	0	0	-5.95	-5.95
Inverter	MV3-20	368689	4907317	2	0	0	100.3	100.3	1	5676.06	3.25	0	86.08	0	0.69	0	0	19.55	0	0	0	0	0	0	-6.01	-6.01
Inverter	MV3-18	367752	4907412	2	0	0	100.3	100.3	1	5687.02	3.25	0	86.1	0	0.69	0	0	19.56	0	0	0	0	0	0	-6.04	-6.04
Inverter	MV3-17	368178	4907472	2	0	0	100.3	100.3	1	5765.51	3.25	0	86.22	0	0.7	0	0	19.67	0	0	0	0	0	0	-6.27	-6.27
Inverter	MV3-15	368357	4907477	2	0	0	100.3	100.3	1	5787.6	3.25	0	86.25	0	0.7	0	0	19.7	0	0	0	0	0	0	-6.34	-6.34
Inverter	MV3-16	368514	4907475	2	0	0	100.3	100.3	1	5805.12	3.25	0	86.28	0	0.7	0	0	19.73	0	0	0	0	0	0	-6.39	-6.39
Inverter	MV3-14	368684	4907498	2	0	0	100.3	100.3	1	5853.63	3.25	0	86.35	0	0.7	0	0	19.79	0	0	0	0	0	0	-6.53	-6.53
Inverter	MV3-13	367963	4907577	2	0	0	100.3	100.3	1	5857.14	3.25	0	86.35	0	0.7	0	0	19.8	0	0	0	0	0	0	-6.54	-6.54
Inverters	G_Inv9	366750.9	4902691.8	2	0	0	87.7	87.7	1	1365.43	3.25	0	73.71	0	2.5	0	0	1.88	0	0	0	0	0	0	9.57	9.57
Inverter	MV3-12	367668	4907594	2	0	0	100.3	100.3	1	5869.09	3.25	0	86.37	0	0.7	0	0	19.81	0	0	0	0	0	0	-6.57	-6.57
Inverter	MV1-14	365163	4905049	2	0	0	97.3	97.3	1	4190.71	3.25	0	83.45	0	0.55	0	0	17.35	0	0	0	0	0	0	-4.04	-4.04
Gardiner Substation	G_Sub	366586.3	4903349.9	2.5	0	0	90.8	90.8	1	1978.48	3.5	0	76.93	0	-0.17	0	0	4.33	0	0	0	0	0	0	9.69	9.69
Inverter	MV6-3	370207	4907140	2	0	0	100.3	100.3	1	5960.72	3.25	0	86.51	0	0.7	0	0	19.94	0	0	0	0	0	0	-6.84	-6.84
Inverter	MV3-10	368167	4907669	2	0	0	100.3	100.3	1	5961.05	3.25	0	86.51	0	0.7	0	0	19.94	0	0	0	0	0	0	-6.84	-6.84
Inverter	MV3-11	368346	4907662	2	0	0	100.3	100.3	1	5970.32	3.25	0	86.52	0	0.7	0	0	19.95	0	0	0	0	0	0	-6.86	-6.86
Inverter	MV3-9	368512	4907703	2	0	0	100.3	100.3	1	6030.77	3.25	0	86.61	0	0.71	0	0	20.03	0	0	0	0	0	0	-7.04	-7.04
Inverter	MV3-7	367945	4907754	2	0	0	100.3	100.3	1	6033.28	3.25	0	86.61	0	0.71	0	0	20.04	0	0	0	0	0	0	-7.04	-7.04
Inverter	MV3-8	368680	4907712	2	0	0	100.3	100.3	1	6064.14	3.25	0	86.66	0	0.71	0	0	20.08	0	0	0	0	0	0	-7.13	-7.13
Inverters	G_Inv8	366844.5	4902838.5	2	0	0	87.7	87.7	1	1413.43	3.25	0	74.01	0	2.51	0	0	1.94	0	0	0	0	0	0	9.21	9.21
Inverter	MV6-2	370085	4907339	2	0	0	100.3	100.3	1	6093.59	3.25	0	86.7	0	0.71	0	0	20.12	0	0	0	0	0	0	-7.21	-7.21
Inverter	MV3-6	368162	4907834	2	0	0	100.3	100.3	1	6125.22	3.25	0	86.74	0	0.71	0	0	20.16	0	0	0	0	0	0	-7.3	-7.3
Inverter	MV3-3	367939	4907927	2	0	0	100.3	100.3	1	6205.94	3.25	0	86.86	0	0.71	0	0	20.27	0	0	0	0	0	0	-7.53	-7.53
Inverters	G_Inv7	366694.6	4902824.7	2	0	0	87.7	87.7	1	1500.25	3.25	0	74.52	0	2.52	0	0	2.04	0	0	0	0	0	0	8.57	8.57
Inverter	MV1-13	364731	4905241	2	0	0	97.3	97.3	1	4611.62	3.25	0	84.28	0	0.6	0	0	18	0	0	0	0	0	0	-5.57	-5.57
Inverter	MV1-10	365004	4905564	2	0	0	97.3	97.3	1	4699.76	3.25	0	84.44	0	0.61	0	0	18.13	0	0	0	0	0	0	-5.88	-5.88
Inverters	G_Inv6	366788.5	4902972	2	0	0	87.7	87.7	1	1553.56	3.25	0	74.83	0	2.53	0	0	2.11	0	0	0	0	0	0	8.2	8.2
Inverter	MV1-7	364925	4905782	2	0	0	97.3	97.3	1	4923.79	3.25	0	84.85	0	0.64	0	0	18.47	0	0	0	0	0	0	-6.64	-6.64
Inverters	G_Inv5	366638.5	4902958.1	2	0	0	87.7	87.7	1	1636.94	3.25	0	75.28	0	2.54	0	0	2.21	0	0	0	0	0	0	7.63	7.63
Inverters	G_Inv4	366732.8	4903105	2	0	0	87.7	87.7	1	1693.88	3.25	0	75.58	0	2.54	0	0	2.28	0	0	0	0	0	0	7.26	7.26
Inverter	MV4-11	369264	4908855	2	0	0	100.3	100.3	1	7296.18	3.25	0	88.26	0	0.7	0	0	21.67	0	0	0	0	0	0	-10.32	-10.32
Inverter	MV4-10	369312	4908858	2	0	0	100.3	100.3	1	7309.45	3.25	0	88.28	0	0.7	0	0	21.68	0	0	0	0	0	0	-10.35	-10.35
Inverter	MV5-5	370015	4908690	2	0	0	100.3	100.3	1	7334.77	3.25	0	88.31	0	0.7	0	0	21.71	0	0	0	0	0	0	-10.41	-10.41
Inverter	MV4-7	369035	4909001	2	0	0	100.3	100.3	1	7394.63	3.25	0	88.38	0	0.69	0	0	21.79	0	0	0	0	0	0	-10.55	-10.55
Inverter	MV4-8	369256	4909001	2	0	0	100.3	100.3	1	7437.26	3.25	0	88.43	0	0.69	0	0	21.84	0	0	0	0	0	0	-10.65	-10.65
Inverter	MV4-9	369289	4909001	2	0	0	100.3	100.3	1	7444.16	3.25	0	88.44	0	0.69	0	0	21.85	0	0	0	0	0	0	-10.66	-10.66
Inverter	MV5-4	370324	4908707	2	0	0	100.3	100.3	1	7453.37	3.25	0	88.45	0	0.69	0	0	21.86	0	0	0	0	0	0	-10.68	-10.68
Inverter	MV5-2	370006	4908853	2	0	0	100.3	100.3	1	7486.97	3.25	0	88.49	0	0.69	0	0	21.9	0	0	0	0	0	0	-10.76	-10.76
Inverter	MV5-3	370231	4908851	2	0	0	100.3	100.3	1	7556.96	3.25	0	88.57	0	0.69	0	0	21.98	0	0	0	0	0	0	-10.92	-10.92
Inverter	MV4-4	369027	4909199	2	0	0	100.3	100.3	1	7588.15	3.25	0	88.6	0	0.68	0	0	22.02	0	0	0	0	0	0	-11	-11
Inverters	G_Inv3	366583.7	4903091.4	2	0	0	87.7	87.7	1	1774	3.25	0	75.98	0	2.55	0	0	2.37	0	0	0	0	0	0	6.76	6.76
Inverter	MV4-6	369243	4909192	2	0	0	100.3	100.3	1	7621.6	3.25	0	88.64	0	0.68	0	0	22.06	0	0	0	0	0	0	-11.07	-11.07
Inverter	MV4-5	369289	4909199	2	0	0	100.3	100.3	1	7637.8	3.25	0	88.66	0	0.68	0	0	22.08	0	0	0	0	0	0	-11.11	-11.11
Inverter	MV2-1	365842	4906816	2	0	0	97.3	97.3	1	5424.59	3.25	0	85.69	0	0.68	0	0	19.19	0	0	0	0	0	0	-8.24	-8.24
Inverter	MV5-1	370020	4909142	2	0	0	100.3	100.3	1	7766.76	3.25	0	88.8	0	0.67	0	0	22.23	0	0	0	0	0	0	-11.4	-11.4
Inverter	MV4-1	369011	4909397	2	0	0	100.3	100.3	1	7780.56	3.25	0	88.82	0	0.67	0	0	22.25	0	0	0	0	0	0	-11.43	-11.43
Inverter	MV4-3	369229	4909397	2	0	0	100.3	100.3	1	7819.82	3.25	0	88.86	0	0.67	0	0	22.3	0	0	0	0	0	0	-11.52	-11.52
Inverter	MV4-2	369272	4909397	2	0	0	100.3	100.3	1	7828.26	3.25	0	88.87	0	0.67	0	0	22.31	0	0	0	0	0	0	-11.53	-11.53
Inverters	G_Inv2	366676.9	4903239.1	2	0	0	87.7	87.7	1	1835.83	3.25	0	76.28	0	2.56	0	0	2.44	0	0	0	0	0	0	6.38	6.38
Inverters	G_Inv1	366526.4	4903225.8	2	0	0	87.7	87.7	1	1914.51	3.25	0	76.64	0	2.57	0	0	2.54	0	0	0	0	0	0	5.91	5.91
Inverter	MV6-1	370235	4907364	2	0	0	97.3	97.3	1	6176.29	3.25	0	86.81	0	0.71	0	0	20.23	0	0	0	0	0	0	-10.44	-10.44
DSTATCOM - 10 MVAR #2	DSAT2	369403	4908757	2.5	0	0	96.6	96.6	1	7231.62	3.5	0	88.18	0	3.85	0	0	4.42	0	0	0	0	0	0	0.18	0.18
DSTATCOM - 10 MVAR #1	DSAT1	369437	4908757	2.5	0	0	96.6	96.6	1	7239.63	3.5	0	88.19	0	3.85	0	0	4.42	0	0	0	0	0	0	0.16	0.16
SubstationTransformer	W_ST	369711.17	4906112.3	2.5	0	0	92	92	1	4819.87	3.5	0	84.66	0	0.52	0	-0.13	8.4	0	0	0	0	0	0	-1.61	-1.61
Westbrook Inverter Enclosur	W_INV3	369508	4906164	2	0	0	89.1	89.1	1	4787.27	3.25	0	84.6	0	1.59	0	0	12.18	0	0	0	0	0	0	-9.31	-9.31
Westbrook Inverter Enclosur	W_INV4	369673	4906164	2	0	0	89.1	89.1	1	4851.48	3.25	0	84.72	0	1.6	0	0	12.26	0	0	0	0	0	0	-9.53	-9.53
Westbrook Inverter Enclosur	W_INV2	369374	4906388	2	0	0	89.1	89.1	1	4949.17	3.25	0	84.89	0	1.63	0	0	12.4	0	0	0	0	0	0	-9.86	-9.86
Westbrook Inverter Enclosur	W_INV7	369780	4906417	2	0	0	89.1	89.1	1	5126.14	3.25	0	85.2	0	1.67	0	0	12.63	0	0	0	0	0	0	-10.44	-10.44
Inverter	MV2-2	365977	4906654	2	0	0	89.1	89.1	1	5226.41	3.25	0	85.36	0	1.7	0	0	12.76	0	0	0	0	0	0	-10.77	-10.77
Westbrook Inverter Enclosur	W_INV5	369719	4906574	2	0	0	89.1	89.1	1	5246.62	3.25	0	85.4	0	1.7	0	0	12.79	0	0	0	0	0	0	-10.83	-10.83
Westbrook Inverter Enclosur	W_INV6	369875	4906578	2	0	0	89.1	89.1	1	5311.82	3.25	0	85.5	0	1.72	0	0	12.88	0	0	0	0	0	0	-11.04	-11.04
Inverter	MV1-3	364440	4906039	2	0	0	89.1	89.1	1	5416.33	3.25	0	85.67	0	1.74	0	0	13.01	0	0	0	0	0	0	-11.37	-11.37
Inverter	MV3-22	368656	4907142	2	0	0	89.1	89.1	1	5497.99	3.25	0	85.8	0	1.76	0	0	13.12	0	0	0	0	0	0	-11.63	-11.63
Inverter	MV3-5	368340	4907843	2	0	0	89.1	89.1	1	6149.72	3.25	0	86.78	0	1.92	0	0	13.95	0	0	0	0	0	0	-13.59	-13.59
Inverter	MV3-4	368502	4907925	2	0	0	89.1	89.1	1	6249.63	3.25	0	86.92	0	1.95	0	0	14.07	0	0	0	0	0	0	-13.88	-13.88

Inverter	MV3-1	368156	4907976	2	0	0	89.1	89.1	1	6266.42	3.25	0	86.94	0	1.95	0	0	14.1	0	0	0	0	0	0	-13.93	-13.93
Inverter	MV3-2	368671	4907928	2	0	0	89.1	89.1	1	6276.11	3.25	0	86.95	0	1.95	0	0	14.11	0	0	0	0	0	0	-13.96	-13.96
Fixed Reactor Bank 1	FRB1	369378	4908755	6	0	0	89.8	89.8	1	7223.88	5.25	0	88.18	0	-0.26	0	0	10.96	0	0	0	0	0	0	-9.1	-9.1
Fixed Reactor Bank 2	FRB2	369464	4908755	6	0	0	89.8	89.8	1	7244.16	5.25	0	88.2	0	-0.25	0	0	10.98	0	0	0	0	0	0	-9.15	-9.15
Inverter	MV4-15	369176	4908481	2	0	0	89.1	89.1	1	6912.03	3.25	0	87.79	0	2.11	0	0	14.88	0	0	0	0	0	0	-15.72	-15.72
Inverter	MV4-14	369176	4908507	2	0	0	89.1	89.1	1	6937.44	3.25	0	87.82	0	2.11	0	0	14.91	0	0	0	0	0	0	-15.79	-15.79
Inverter	MV4-13	369051	4908605	2	0	0	89.1	89.1	1	7008.38	3.25	0	87.91	0	2.13	0	0	15	0	0	0	0	0	0	-15.98	-15.98
Inverter	MV5-6	369982	4908507	2	0	0	89.1	89.1	1	7150.7	3.25	0	88.09	0	2.16	0	0	15.16	0	0	0	0	0	0	-16.36	-16.36
Inverter	MV4-12	369043	4908803	2	0	0	89.1	89.1	1	7201.37	3.25	0	88.15	0	2.18	0	0	15.22	0	0	0	0	0	0	-16.49	-16.49
Westbrook Inverter Enclosur	W_INV1	369409	4906578	2	0	0	86.1	86.1	1	5140	3.25	0	85.22	0	1.67	0	0	12.65	0	0	0	0	0	0	-13.49	-13.49
Inverter	MV6-4	370250	4906966	2	0	0	86.1	86.1	1	5821.71	3.25	0	86.3	0	1.84	0	0	13.54	0	0	0	0	0	0	-15.62	-15.62
Westbrook Inverter Transfor	W_INVTR1	369403	4906578	2	0	0	78.2	78.2	1	5138.03	3.25	0	85.22	0	-3.2	0	0	2.46	0	0	0	0	0	0	-6.23	-6.23
Westbrook Inverter Transfor	W_INVTR3	369514	4906164	2	0	0	77.3	77.3	1	4789.52	3.25	0	84.61	0	-3.13	0	0	2.34	0	0	0	0	0	0	-6.47	-6.47
Westbrook Inverter Transfor	W_INVTR4	369679	4906164	2	0	0	77.3	77.3	1	4853.9	3.25	0	84.72	0	-3.15	0	0	2.36	0	0	0	0	0	0	-6.6	-6.6
Westbrook Inverter Transfor	W_INVTR2	369368	4906388	2	0	0	77.3	77.3	1	4947.16	3.25	0	84.89	0	-3.17	0	0	2.39	0	0	0	0	0	0	-6.77	-6.77
Westbrook Inverter Transfor	W_INVTR7	369786	4906417	2	0	0	77.3	77.3	1	5128.56	3.25	0	85.2	0	-3.2	0	0	2.46	0	0	0	0	0	0	-7.11	-7.11
Westbrook Inverter Transfor	W_INVTR5	369725	4906574	2	0	0	77.3	77.3	1	5248.92	3.25	0	85.4	0	-3.23	0	0	2.5	0	0	0	0	0	0	-7.33	-7.33
Westbrook Inverter Transfor	W_INVTR6	369881	4906578	2	0	0	77.3	77.3	1	5314.26	3.25	0	85.51	0	-3.24	0	0	2.52	0	0	0	0	0	0	-7.45	-7.45
Inverter Transformer	MV1-14 T	365157	4905049	2	0	0	69.4	69.4	1	4194.37	3.25	0	83.45	0	2.83	0	0	6.82	0	0	0	0	0	0	-23.76	-23.76
Inverter Transformer	MV1-13 T	364725	4905241	2	0	0	69.4	69.4	1	4615.5	3.25	0	84.28	0	2.93	0	0	7.12	0	0	0	0	0	0	-24.98	-24.98
Inverter Transformer	MV1-10 T	365010	4905564	2	0	0	69.4	69.4	1	4696.3	3.25	0	84.44	0	2.95	0	0	7.18	0	0	0	0	0	0	-25.21	-25.21
Inverter Transformer	MV1-7 T	364919	4905782	2	0	0	69.4	69.4	1	4927.19	3.25	0	84.85	0	3	0	0	7.33	0	0	0	0	0	0	-25.83	-25.83
Inverter Transformer	MV2-1 T	365836	4906816	2	0	0	69.4	69.4	1	5426.66	3.25	0	85.69	0	3.09	0	0	7.66	0	0	0	0	0	0	-27.09	-27.09
Inverter Transformer	MV6-4 T	370244	4906966	2	0	0	69.4	69.4	1	5819.1	3.25	0	86.3	0	3.16	0	0	7.91	0	0	0	0	0	0	-28.01	-28.01
Inverter Transformer	MV6-1 T	370230	4907364	2	0	0	69.4	69.4	1	6174.25	3.25	0	86.81	0	3.21	0	0	8.12	0	0	0	0	0	0	-28.8	-28.8
Inverter Transformer	MV1-15 T	365309	4904994	2	0	0	56.1	56.1	1	4059	3.25	0	83.17	0	1.27	0	0	10.54	0	0	0	0	0	0	-38.92	-38.92
Inverter Transformer	MV1-12 T	365044	4905386	2	0	0	56.1	56.1	1	4531.83	3.25	0	84.13	0	1.45	0	0	11.22	0	0	0	0	0	0	-40.74	-40.74
Inverter Transformer	MV1-11 T	364649	4905414	2	0	0	56.1	56.1	1	4796.83	3.25	0	84.62	0	1.55	0	0	11.58	0	0	0	0	0	0	-41.69	-41.69
Inverter Transformer	MV1-8 T	364782	4905647	2	0	0	56.1	56.1	1	4897.45	3.25	0	84.8	0	1.59	0	0	11.72	0	0	0	0	0	0	-42.05	-42.05
Inverter Transformer	MV1-9 T	364555	4905646	2	0	0	56.1	56.1	1	5035.9	3.25	0	85.04	0	1.64	0	0	11.9	0	0	0	0	0	0	-42.52	-42.52
Inverter Transformer	MV1-4 T	364821	4905918	2	0	0	56.1	56.1	1	5094.78	3.25	0	85.14	0	1.66	0	0	11.98	0	0	0	0	0	0	-42.72	-42.72
Inverter Transformer	MV1-5 T	364676	4905892	2	0	0	56.1	56.1	1	5157.5	3.25	0	85.25	0	1.68	0	0	12.06	0	0	0	0	0	0	-42.93	-42.93
Inverter Transformer	MV2-2 T	365982	4906654	2	0	0	56.1	56.1	1	5224.75	3.25	0	85.36	0	1.71	0	0	12.15	0	0	0	0	0	0	-43.16	-43.16
Inverter Transformer	MV1-6 T	364482	4905835	2	0	0	56.1	56.1	1	5229.23	3.25	0	85.37	0	1.71	0	0	12.15	0	0	0	0	0	0	-43.17	-43.17
Inverter Transformer	MV1-2 T	364759	4906063	2	0	0	56.1	56.1	1	5249.43	3.25	0	85.4	0	1.71	0	0	12.18	0	0	0	0	0	0	-43.24	-43.24
Inverter Transformer	MV2-3 T	365814	4906641	2	0	0	56.1	56.1	1	5270.73	3.25	0	85.44	0	1.72	0	0	12.21	0	0	0	0	0	0	-43.31	-43.31
Inverter Transformer	MV2-4 T	365590	4906628	2	0	0	56.1	56.1	1	5343.68	3.25	0	85.56	0	1.75	0	0	12.3	0	0	0	0	0	0	-43.54	-43.54
Inverter Transformer	MV1-1 T	364721	4906166	2	0	0	56.1	56.1	1	5356.01	3.25	0	85.58	0	1.75	0	0	12.31	0	0	0	0	0	0	-43.58	-43.58
Inverter Transformer	MV1-3 T	364435	4906039	2	0	0	56.1	56.1	1	5419.36	3.25	0	85.68	0	1.77	0	0	12.39	0	0	0	0	0	0	-43.79	-43.79
Inverter Transformer	MV3-22 T	368661	4907142	2	0	0	56.1	56.1	1	5498.85	3.25	0	85.81	0	1.8	0	0	12.49	0	0	0	0	0	0	-44.04	-44.04
Inverter Transformer	MV3-21 T	368484	4907206	2	0	0	56.1	56.1	1	5534.56	3.25	0	85.86	0	1.81	0	0	12.54	0	0	0	0	0	0	-44.15	-44.15
Inverter Transformer	MV3-19 T	368352	4907347	2	0	0	56.1	56.1	1	5657.85	3.25	0	86.05	0	1.85	0	0	12.69	0	0	0	0	0	0	-44.54	-44.54
Inverter Transformer	MV3-20 T	368683	4907317	2	0	0	56.1	56.1	1	5675.03	3.25	0	86.08	0	1.86	0	0	12.71	0	0	0	0	0	0	-44.59	-44.59
Inverter Transformer	MV3-18 T	367757	4907412	2	0	0	56.1	56.1	1	5687.05	3.25	0	86.1	0	1.86	0	0	12.73	0	0	0	0	0	0	-44.63	-44.63
Inverter Transformer	MV3-17 T	368183	4907472	2	0	0	56.1	56.1	1	5765.91	3.25	0	86.22	0	1.89	0	0	12.82	0	0	0	0	0	0	-44.87	-44.87
Inverter Transformer	MV3-15 T	368351	4907477	2	0	0	56.1	56.1	1	5786.93	3.25	0	86.25	0	1.9	0	0	12.85	0	0	0	0	0	0	-44.93	-44.93
Inverter Transformer	MV3-16 T	368509	4907475	2	0	0	56.1	56.1	1	5804.44	3.25	0	86.28	0	1.9	0	0	12.87	0	0	0	0	0	0	-44.99	-44.99
Inverter Transformer	MV3-14 T	368678	4907498	2	0	0	56.1	56.1	1	5852.64	3.25	0	86.35	0	1.92	0	0	12.93	0	0	0	0	0	0	-45.13	-45.13
Inverter Transformer	MV3-13 T	367958	4907577	2	0	0	56.1	56.1	1	5856.94	3.25	0	86.35	0	1.92	0	0	12.93	0	0	0	0	0	0	-45.15	-45.15
Inverter Transformer	MV3-12 T	367674	4907594	2	0	0	56.1	56.1	1	5869.05	3.25	0	86.37	0	1.92	0	0	12.95	0	0	0	0	0	0	-45.18	-45.18
Inverter Transformer	MV6-3 T	370202	4907140	2	0	0	56.1	56.1	1	5958.63	3.25	0	86.5	0	1.95	0	0	13.05	0	0	0	0	0	0	-45.45	-45.45
Inverter Transformer	MV3-10 T	368162	4907669	2	0	0	56.1	56.1	1	5960.67	3.25	0	86.51	0	1.95	0	0	13.06	0	0	0	0	0	0	-45.46	-45.46
Inverter Transformer	MV3-11 T	368340	4907662	2	0	0	56.1	56.1	1	5969.69	3.25	0	86.52	0	1.96	0	0	13.07	0	0	0	0	0	0	-45.48	-45.48
Inverter Transformer	MV3-9 T	368517	4907703	2	0	0	56.1	56.1	1	6031.43	3.25	0	86.61	0	1.97	0	0	13.14	0	0	0	0	0	0	-45.66	-45.66
Inverter Transformer	MV3-7 T	367951	4907754	2	0	0	56.1	56.1	1	6033.51	3.25	0	86.61	0	1.98	0	0	13.14	0	0	0	0	0	0	-45.67	-45.67
Inverter Transformer	MV3-8 T	368685	4907712	2	0	0	56.1	56.1	1	6064.94	3.25	0	86.66	0	1.99	0	0	13.18	0	0	0	0	0	0	-45.76	-45.76
Inverter Transformer	MV6-2 T	370091	4907339	2	0	0	56.1	56.1	1	6095.93	3.25	0	86.7	0	1.99	0	0	13.22	0	0	0	0	0	0	-45.85	-45.85
Inverter Transformer	MV3-6 T	368156	4907834	2	0	0	56.1	56.1	1	6124.78	3.25	0	86.74	0	2	0	0	13.25	0	0	0	0	0	0	-45.94	-45.94
Inverter Transformer	MV3-5 T	368335	4907843	2	0	0	56.1	56.1	1	6149.22	3.25	0	86.78	0	2.01	0	0	13.28	0	0	0	0	0	0	-46.01	-46.01
Inverter Transformer	MV3-3 T	367944	4907927	2	0	0	56.1	56.1	1	6206.12	3.25	0	86.86	0	2.03	0	0	13.34	0	0	0	0	0	0	-46.17	-46.17
Inverter Transformer	MV3-4 T	368507	4907925	2	0	0	56.1	56.1	1	6250.26	3.25	0	86.92	0	2.04	0	0	13.4	0	0	0	0	0	0	-46.3	-46.3
Inverter Transformer	MV3-1 T	368150	4907976	2	0	0	56.1	56.1	1	6266	3.25	0	86.94	0	2.05	0	0	13.41	0	0	0	0	0	0	-46.34	-46.34
Inverter Transformer	MV3-2 T	368677	4907928	2	0	0	56.1	56.1	1	6277.02	3.25	0	86.96	0	2.05	0	0	13.43	0	0	0	0	0	0	-46.37	-46.37
Inverter Transformer	MV4-15 T	369170	4908481	2	0	0	56.1	56.1	1	6910.76	3.25	0	87.79	0	2.23	0	0	14.13	0	0	0	0	0	0	-48.1	-48.1
Inverter Transformer	MV4-14 T	369182	4908507	2	0	0	56.1	56.1	1	6938.71	3.25	0	87.83	0	2.24	0	0	14.16	0	0	0	0	0	0	-48.17	-48.17
Inverter Transformer	MV4-13 T	369057	4908605	2	0	0	56.1	56.1	1	7009.53	3.25	0	87.91	0	2.26	0	0	14.24	0	0	0	0	0	0	-48.36	-48.36
Inverter Transformer	MV5-6 T	369987	4908507	2	0	0	56.1	56.1	1	7152.29	3.25	0	88.09	0	2.3	0	0	14.39	0	0	0	0	0	0	-48.72	-48.72
Inverter Transformer	MV4-12 T	369049	4908803	2	0	0	56.1	56.1	1	7202.48	3.25	0	88.15	0	2.31	0	0	14.45	0	0	0	0	0	0	-48.85	-48.85
Inverter Transformer	MV4-11 T	369269	4908855	2	0	0	56.1	56.1	1	7297.24	3.25	0	88.26	0	2.34	0	0	14.54	0	0	0	0	0	0	-49.09	-49.09
Inverter Transformer	MV4-10 T	369307	4908858	2	0	0	56.1	56.1	1	7308.36	3.25	0	88.28	0	2.34	0	0	14.56	0	0	0	0	0	0	-49.12	-49.12
Inverter Transformer	MV5-5 T	370021	4908690	2	0	0	56.1	56.1	1	7336.66	3.25	0	88.31	0	2.35	0	0	14.59	0	0	0	0	0	0	-49.19	-49.19
Inverter Transformer	MV4-7 T	369040	4909001	2	0	0	56.1	56.1	1	7395.53	3.25	0	88.38	0	2.36	0	0	14.65	0	0	0	0	0	0	-49.33	-49.33
Inverter Transformer	MV4-8 T	369262	4909001	2	0	0	56.1	56.1	1	7438.5	3.25	0	88.43	0	2.37	0	0	14.69	0	0	0	0	0	0	-49.44	-49.44
Inverter Transformer	MV4-9 T	369284	4909001	2	0	0	56.1	56.1	1	7443.11	3.25	0	88.44	0	2.38	0	0	14.7	0	0	0	0	0	0	-49.45	-49.45

	Inverter Transformer	MV5-4 T	370330	4908707	2	0	0	56.1	56.1	1	7455.48	3.25	0	88.45	0	2.38	0	0	14.71	0	0	0	0	0	0	-49.48	-49.48
	Inverter Transformer	MV5-2 T	370011	4908853	2	0	0	56.1	56.1	1	7488.5	3.25	0	88.49	0	2.39	0	0	14.74	0	0	0	0	0	0	-49.56	-49.56
	Inverter Transformer	MV5-3 T	370237	4908851	2	0	0	56.1	56.1	1	7558.96	3.25	0	88.57	0	2.4	0	0	14.81	0	0	0	0	0	0	-49.73	-49.73
	Inverter Transformer	MV4-4 T	369033	4909199	2	0	0	56.1	56.1	1	7589.19	3.25	0	88.6	0	2.41	0	0	14.85	0	0	0	0	0	0	-49.8	-49.8
	Inverter Transformer	MV4-6 T	369249	4909192	2	0	0	56.1	56.1	1	7622.8	3.25	0	88.64	0	2.42	0	0	14.88	0	0	0	0	0	0	-49.88	-49.88
	Inverter Transformer	MV4-5 T	369283	4909199	2	0	0	56.1	56.1	1	7636.57	3.25	0	88.66	0	2.42	0	0	14.89	0	0	0	0	0	0	-49.92	-49.92
	Inverter Transformer	MV5-1 T	370015	4909142	2	0	0	56.1	56.1	1	7765.27	3.25	0	88.8	0	2.46	0	0	15.02	0	0	0	0	0	0	-50.22	-50.22
	Inverter Transformer	MV4-1 T	369017	4909397	2	0	0	56.1	56.1	1	7781.56	3.25	0	88.82	0	2.46	0	0	15.04	0	0	0	0	0	0	-50.26	-50.26
	Inverter Transformer	MV4-3 T	369234	4909397	2	0	0	56.1	56.1	1	7820.79	3.25	0	88.87	0	2.47	0	0	15.08	0	0	0	0	0	0	-50.35	-50.35
	Inverter Transformer	MV4-2 T	369267	4909397	2	0	0	56.1	56.1	1	7827.27	3.25	0	88.87	0	2.47	0	0	15.09	0	0	0	0	0	0	-50.37	-50.37
	Line Reactor	NGR	369421	4908787.5	5	0	0	45.4	45.4	1	7265.48	5.25	0	88.23	0	3.21	1.37	0.11	2.97	0	0	0	0	0	0	-50.42	-50.42
Limit. Valu	0	0																								
Level D/N:	20.0339	20.0339																								

Receiver: Existing Noise Receptor
ID: G-90
X: 365815.2
Y: 4901666.1
Z: 4.5
Ground: 0

ISO	Description	ID	X	Y	Z	Ground	ReflOrd	LxT	LxN	L/A	Dist.	hm	Freq	Adiv	K0b	Agr	Abar	z	Aatm	Afol	Ahous	Cmet	CmetN	Dc	RL	LtotT	LtotN
	Sol_Luce Substation	S_Substation	369426	4908792	3.5	0	0	112.1	112.1	1	7988.51	5.25	0	89.05	0	1.56	2.27	0.32	11.64	0	0	0	0	0	0	7.56	7.56
	Inverter	MV1-15	365315	4904994	2	0	0	100.3	100.3	1	3365.28	3.25	0	81.54	0	0.43	0	0	16	0	0	0	0	0	0	2.34	2.34
	Inverter	MV1-12	365038	4905386	2	0	0	100.3	100.3	1	3800.22	3.25	0	82.6	0	0.5	0	0	16.73	0	0	0	0	0	0	0.49	0.49
	Inverter	MV1-11	364655	4905414	2	0	0	100.3	100.3	1	3923.37	3.25	0	82.87	0	0.52	0	0	16.93	0	0	0	0	0	0	0	0
	Inverter	MV1-8	364788	4905647	2	0	0	100.3	100.3	1	4111.29	3.25	0	83.28	0	0.54	0	0	17.23	0	0	0	0	0	0	-0.74	-0.74
	Inverter	MV1-9	364561	4905646	2	0	0	100.3	100.3	1	4172.84	3.25	0	83.41	0	0.55	0	0	17.32	0	0	0	0	0	0	-0.97	-0.97
	Inverter	MV1-4	364815	4905918	2	0	0	100.3	100.3	1	4367.96	3.25	0	83.81	0	0.58	0	0	17.63	0	0	0	0	0	0	-1.7	-1.7
	Inverter	MV1-5	364671	4905892	2	0	0	100.3	100.3	1	4378.06	3.25	0	83.83	0	0.58	0	0	17.64	0	0	0	0	0	0	-1.73	-1.73
	Inverter	MV1-6	364477	4905835	2	0	0	100.3	100.3	1	4378.41	3.25	0	83.83	0	0.58	0	0	17.64	0	0	0	0	0	0	-1.73	-1.73
	Inverter	MV1-2	364753	4906063	2	0	0	100.3	100.3	1	4523.38	3.25	0	84.11	0	0.59	0	0	17.87	0	0	0	0	0	0	-2.26	-2.26
	Inverter	MV1-1	364715	4906166	2	0	0	100.3	100.3	1	4632.44	3.25	0	84.32	0	0.61	0	0	18.03	0	0	0	0	0	0	-2.64	-2.64
	Inverter	MV1-14	365163	4905049	2	0	0	97.3	97.3	1	3445.2	3.25	0	81.74	0	0.44	0	0	16.14	0	0	0	0	0	0	-1.01	-1.01
	Inverter	MV2-4	365586	4906624	2	0	0	100.3	100.3	1	4963.2	3.25	0	84.92	0	0.64	0	0	18.53	0	0	0	0	0	0	-3.77	-3.77
	Inverter	MV2-3	365820	4906641	2	0	0	100.3	100.3	1	4974.9	3.25	0	84.94	0	0.64	0	0	18.54	0	0	0	0	0	0	-3.81	-3.81
	Inverter	MV1-13	364731	4905241	2	0	0	97.3	97.3	1	3735.69	3.25	0	82.45	0	0.49	0	0	16.62	0	0	0	0	0	0	-2.25	-2.25
	Gardiner Substation	G_Sub	366586.3	4903349.9	2.5	0	0	90.8	90.8	1	1851.97	3.5	0	76.35	0	-0.2	0	0	4.11	0	0	0	0	0	0	10.51	10.51
	Inverter	MV1-10	365004	4905564	2	0	0	97.3	97.3	1	3981.42	3.25	0	83	0	0.52	0	0	17.02	0	0	0	0	0	0	-3.23	-3.23
	Inverter	MV1-7	364925	4905782	2	0	0	97.3	97.3	1	4211.07	3.25	0	83.49	0	0.56	0	0	17.38	0	0	0	0	0	0	-4.11	-4.11
	Inverters	G_Inv9	366750.9	4902691.8	2	0	0	87.7	87.7	1	1388.38	3.25	0	73.85	0	2.5	0	0	1.91	0	0	0	0	0	0	9.4	9.4
	Inverter	MV3-18	367752	4907412	2	0	0	100.3	100.3	1	6063.54	3.25	0	86.65	0	0.71	0	0	20.08	0	0	0	0	0	0	-7.13	-7.13
	Inverter	MV3-21	368478	4907206	2	0	0	100.3	100.3	1	6146.63	3.25	0	86.77	0	0.71	0	0	20.19	0	0	0	0	0	0	-7.36	-7.36
	Inverter	MV3-12	367668	4907594	2	0	0	100.3	100.3	1	6210.71	3.25	0	86.86	0	0.71	0	0	20.28	0	0	0	0	0	0	-7.54	-7.54
	Inverter	MV3-19	368357	4907347	2	0	0	100.3	100.3	1	6223.61	3.25	0	86.88	0	0.71	0	0	20.29	0	0	0	0	0	0	-7.57	-7.57
	Inverters	G_Inv7	366694.6	4902824.7	2	0	0	87.7	87.7	1	1454.55	3.25	0	74.25	0	2.51	0	0	1.99	0	0	0	0	0	0	8.9	8.9
	Inverter	MV3-17	368178	4907472	2	0	0	100.3	100.3	1	6268.28	3.25	0	86.94	0	0.71	0	0	20.35	0	0	0	0	0	0	-7.7	-7.7
	Inverter	MV3-13	367963	4907577	2	0	0	100.3	100.3	1	6289.02	3.25	0	86.97	0	0.71	0	0	20.38	0	0	0	0	0	0	-7.75	-7.75
	Inverter	MV3-20	368689	4907317	2	0	0	100.3	100.3	1	6339.67	3.25	0	87.04	0	0.71	0	0	20.45	0	0	0	0	0	0	-7.89	-7.89
	Inverter	MV3-15	368357	4907477	2	0	0	100.3	100.3	1	6342.5	3.25	0	87.05	0	0.71	0	0	20.45	0	0	0	0	0	0	-7.9	-7.9
	Inverter	MV3-16	368514	4907475	2	0	0	100.3	100.3	1	6405.22	3.25	0	87.13	0	0.71	0	0	20.53	0	0	0	0	0	0	-8.07	-8.07
	Inverter	MV3-10	368167	4907669	2	0	0	100.3	100.3	1	6447.15	3.25	0	87.19	0	0.71	0	0	20.59	0	0	0	0	0	0	-8.18	-8.18
	Inverters	G_Inv10	366900.7	4902704.8	2	0	0	87.7	87.7	1	1502.4	3.25	0	74.54	0	2.52	0	0	2.05	0	0	0	0	0	0	8.56	8.56
	Inverter	MV3-7	367945	4907754	2	0	0	100.3	100.3	1	6449.7	3.25	0	87.19	0	0.71	0	0	20.59	0	0	0	0	0	0	-8.19	-8.19
	Inverter	MV3-14	368684	4907498	2	0	0	100.3	100.3	1	6499.31	3.25	0	87.26	0	0.71	0	0	20.66	0	0	0	0	0	0	-8.32	-8.32
	Inverter	MV3-11	368346	4907662	2	0	0	100.3	100.3	1	6508.13	3.25	0	87.27	0	0.71	0	0	20.67	0	0	0	0	0	0	-8.34	-8.34
	Inverters	G_Inv5	366638.5	4902958.1	2	0	0	87.7	87.7	1	1532.02	3.25	0	74.71	0	2.52	0	0	2.08	0	0	0	0	0	0	8.35	8.35
	Inverter	MV3-6	368162	4907834	2	0	0	100.3	100.3	1	6599.28	3.25	0	87.39	0	0.72	0	0	20.79	0	0	0	0	0	0	-8.58	-8.58
	Inverter	MV3-3	367939	4907927	2	0	0	100.3	100.3	1	6611.31	3.25	0	87.41	0	0.72	0	0	20.8	0	0	0	0	0	0	-8.61	-8.61
	Inverter	MV3-9	368512	4907703	2	0	0	100.3	100.3	1	6611.88	3.25	0	87.41	0	0.71	0	0	20.8	0	0	0	0	0	0	-8.61	-8.61
	Inverter	MV3-8	368680	4907712	2	0	0	100.3	100.3	1	6690.29	3.25	0	87.51	0	0.71	0	0	20.91	0	0	0	0	0	0	-8.82	-8.82
	Inverters	G_Inv8	366844.5	4902838.5	2	0	0	87.7	87.7	1	1560.12	3.25	0	74.86	0	2.53	0	0	2.12	0	0	0	0	0	0	8.15	8.15
	Inverters	G_Inv3	366583.7	4903091.4	2	0	0	87.7	87.7	1	1619.28	3.25	0	75.19	0	2.53	0	0	2.19	0	0	0	0	0	0	7.75	7.75
	Inverters	G_Inv6	366788.5	4902972	2	0	0	87.7	87.7	1	1628.71	3.25	0	75.24	0	2.54	0	0	2.2	0	0	0	0	0	0	7.69	7.69
	Inverter	MV6-3	370207	4907140	2	0	0	100.3	100.3	1	7017.94	3.25	0	87.92	0	0.71	0	0	21.32	0	0	0	0	0	0	-9.64	-9.64
	Inverter	MV6-2	370085	4907339	2	0	0	100.3	100.3	1	7100.21	3.25	0	88.03	0	0.71	0	0	21.42	0	0	0	0	0	0	-9.84	-9.84
	Inverter	MV2-1	365842	4906816	2	0	0	97.3	97.3	1	5149.97	3.25	0	85.24	0	0.65	0	0	18.8	0	0	0	0	0	0	-7.38	-7.38
	Inverters	G_Inv4	366732.8	4903105	2	0	0	87.7	87.7	1	1706.58	3.25	0	75.64	0	2.55	0	0	2.29	0	0	0	0	0	0	7.18	7.18
	Inverters	G_Inv1	366526.4	4903225.8	2	0	0	87.7	87.7	1	1714.2	3.25	0	75.68	0	2.55	0	0	2.3	0	0	0	0	0	0	7.13	7.13
	Inverters	G_Inv2	366676.9	4903239.1	2	0	0	87.7	87.7	1	1793.56	3.25	0	76.07	0	2.56	0	0	2.39	0	0	0	0	0	0	6.64	6.64
	Inverter	MV4-11	369264	4908855	2	0	0	100.3	100.3	1	7973.36	3.25	0	89.03	0	0.66	0	0	22.47	0	0	0	0	0	0	-11.85	-11.85
	Inverter	MV4-10	369312	4908858	2	0	0	100.3	100.3	1	7996.94	3.25	0	89.06	0	0.65	0	0	22.5	0	0	0	0	0	0	-11.9	-11.9
	Inverter	MV4-7	369035	4909001	2	0	0	100.3	100.3	1	8010.49	3.25	0	89.07	0	0.65	0	0	22.52	0	0	0	0	0	0	-11.93	-11.93
	Inverter	MV4-8	369256	4909001	2	0	0	100.3	100.3	1	8101.84	3.25	0	89.17	0	0.64	0	0	22.62	0	0	0	0	0	0	-12.13	-12.13

Inverter	MV4-9	369289	4909001	2	0	0	100.3	100.3	1	8115.91	3.25	0	89.19	0	0.64	0	0	22.64	0	0	0	0	0	0	-12.16	-12.16
Inverter	MV5-5	370015	4908690	2	0	0	100.3	100.3	1	8183.73	3.25	0	89.26	0	0.64	0	0	22.72	0	0	0	0	0	0	-12.3	-12.3
Inverter	MV4-4	369027	4909199	2	0	0	100.3	100.3	1	8189.03	3.25	0	89.26	0	0.64	0	0	22.72	0	0	0	0	0	0	-12.31	-12.31
Inverter	MV4-6	369243	4909192	2	0	0	100.3	100.3	1	8269.76	3.28	0	89.35	0	1.8	2.09	0	22.81	0	0	0	0	0	0	-15.74	-15.74
Inverter	MV4-5	369289	4909199	2	0	0	100.3	100.3	1	8295.29	3.25	0	89.38	0	0.62	0	0	22.84	0	0	0	0	0	0	-12.53	-12.53
Inverter	MV5-2	370006	4908853	2	0	0	100.3	100.3	1	8319.52	3.25	0	89.4	0	0.62	0	0	22.87	0	0	0	0	0	0	-12.58	-12.58
Inverter	MV5-4	370324	4908707	2	0	0	100.3	100.3	1	8360.83	3.25	0	89.44	0	0.62	0	0	22.92	0	0	0	0	0	0	-12.67	-12.67
Inverter	MV4-1	369011	4909397	2	0	0	100.3	100.3	1	8365.4	3.25	0	89.45	0	0.62	0	0	22.92	0	0	0	0	0	0	-12.68	-12.68
Inverter	MV5-3	370231	4908851	2	0	0	100.3	100.3	1	8433.39	3.25	0	89.52	0	0.61	0	0	23	0	0	0	0	0	0	-12.82	-12.82
Inverter	MV4-3	369229	4909397	2	0	0	100.3	100.3	1	8451.09	3.25	0	89.54	0	0.61	0	0	23.02	0	0	0	0	0	0	-12.85	-12.85
Inverter	MV4-2	369272	4909397	2	0	0	100.3	100.3	1	8468.55	3.25	0	89.56	0	0.61	0	0	23.04	0	0	0	0	0	0	-12.89	-12.89
Inverter	MV5-1	370020	4909142	2	0	0	100.3	100.3	1	8577.26	3.25	0	89.67	0	0.59	0	0	23.16	0	0	0	0	0	0	-13.11	-13.11
Inverter	MV6-1	370235	4907364	2	0	0	97.3	97.3	1	7211.15	3.25	0	88.16	0	0.7	0	0	21.56	0	0	0	0	0	0	-13.11	-13.11
DSTATCOM - 10 MVAR #2	DSAT2	369403	4908757	2.5	0	0	96.6	96.6	1	7946.9	3.5	0	89	0	3.88	0	0	4.75	0	0	0	0	0	0	-1	-1
DSTATCOM - 10 MVAR #1	DSAT1	369437	4908757	2.5	0	0	96.6	96.6	1	7962.31	3.5	0	89.02	0	3.88	0	0	4.75	0	0	0	0	0	0	-1.03	-1.03
SubstationTransformer	W_ST	369711.17	4906112.3	2.5	0	0	92	92	1	5911.6	3.5	0	86.43	0	0.75	0	-0.11	9.65	0	0	0	0	0	0	-4.85	-4.85
Inverter	MV1-3	364440	4906039	2	0	0	89.1	89.1	1	4584.04	3.25	0	84.22	0	1.54	0	0	11.9	0	0	0	0	0	0	-8.6	-8.6
Inverter	MV2-2	365977	4906654	2	0	0	89.1	89.1	1	4990.52	3.25	0	84.96	0	1.64	0	0	12.45	0	0	0	0	0	0	-9.99	-9.99
Westbrook Inverter Enclosur	W_INV3	369508	4906164	2	0	0	89.1	89.1	1	5819.61	3.25	0	86.3	0	1.84	0	0	13.53	0	0	0	0	0	0	-12.62	-12.62
Westbrook Inverter Enclosur	W_INV2	369374	4906388	2	0	0	89.1	89.1	1	5912.82	3.25	0	86.44	0	1.86	0	0	13.65	0	0	0	0	0	0	-12.89	-12.89
Westbrook Inverter Enclosur	W_INV4	369673	4906164	2	0	0	89.1	89.1	1	5925.68	3.25	0	86.45	0	1.87	0	0	13.67	0	0	0	0	0	0	-12.93	-12.93
Inverter	MV3-22	368656	4907142	2	0	0	89.1	89.1	1	6168.92	3.25	0	86.8	0	1.93	0	0	13.97	0	0	0	0	0	0	-13.65	-13.65
Westbrook Inverter Enclosur	W_INV7	369780	4906417	2	0	0	89.1	89.1	1	6187.95	3.25	0	86.83	0	1.93	0	0	14	0	0	0	0	0	0	-13.7	-13.7
Westbrook Inverter Enclosur	W_INV5	369719	4906574	2	0	0	89.1	89.1	1	6271.14	3.25	0	86.95	0	1.95	0	0	14.1	0	0	0	0	0	0	-13.94	-13.94
Westbrook Inverter Enclosur	W_INV6	369875	4906578	2	0	0	89.1	89.1	1	6372.5	3.25	0	87.09	0	1.98	0	0	14.23	0	0	0	0	0	0	-14.23	-14.23
Inverter	MV3-5	368340	4907843	2	0	0	89.1	89.1	1	6672.98	3.25	0	87.49	0	2.05	0	0	14.59	0	0	0	0	0	0	-15.07	-15.07
Inverter	MV3-1	368156	4907976	2	0	0	89.1	89.1	1	6730.1	3.25	0	87.56	0	2.06	0	0	14.66	0	0	0	0	0	0	-15.23	-15.23
Inverter	MV3-4	368502	4907925	2	0	0	89.1	89.1	1	6811.22	3.25	0	87.66	0	2.08	0	0	14.76	0	0	0	0	0	0	-15.45	-15.45
Inverter	MV3-2	368671	4907928	2	0	0	89.1	89.1	1	6882.37	3.34	0	87.75	0	2.81	1.89	0	14.85	0	0	0	0	0	0	-18.24	-18.24
Fixed Reactor Bank 1	FRB1	369378	4908755	6	0	0	89.8	89.8	1	7933.85	5.25	0	88.99	0	-0.18	0	0	11.6	0	0	0	0	0	0	-10.63	-10.63
Fixed Reactor Bank 2	FRB2	369464	4908755	6	0	0	89.8	89.8	1	7972.84	5.25	0	89.03	0	-0.18	0	0	11.63	0	0	0	0	0	0	-10.71	-10.71
Inverter	MV4-15	369176	4908481	2	0	0	89.1	89.1	1	7598.54	3.25	0	88.61	0	2.27	0	0	15.69	0	0	0	0	0	0	-17.51	-17.51
Inverter	MV4-14	369176	4908507	2	0	0	89.1	89.1	1	7621.87	3.25	0	88.64	0	2.27	0	0	15.71	0	0	0	0	0	0	-17.57	-17.57
Inverter	MV4-13	369051	4908605	2	0	0	89.1	89.1	1	7656.29	3.25	0	88.68	0	2.28	0	0	15.75	0	0	0	0	0	0	-17.66	-17.66
Inverter	MV4-12	369043	4908803	2	0	0	89.1	89.1	1	7832.88	3.25	0	88.88	0	2.32	0	0	15.95	0	0	0	0	0	0	-18.1	-18.1
Inverter	MV5-6	369982	4908507	2	0	0	89.1	89.1	1	8010	3.25	0	89.07	0	2.36	0	0	16.15	0	0	0	0	0	0	-18.53	-18.53
Westbrook Inverter Enclosur	W_INV1	369409	4906578	2	0	0	86.1	86.1	1	6086.23	3.25	0	86.69	0	1.91	0	0	13.87	0	0	0	0	0	0	-16.41	-16.41
Inverter	MV6-4	370250	4906966	2	0	0	86.1	86.1	1	6910.6	3.25	0	87.79	0	2.11	0	0	14.88	0	0	0	0	0	0	-18.72	-18.72
Westbrook Inverter Transfor	W_INVTR1	369403	4906578	2	0	0	78.2	78.2	1	6082.69	3.25	0	86.68	0	-3.38	0	0	2.77	0	0	0	0	0	0	-7.82	-7.82
Westbrook Inverter Transfor	W_INVTR3	369514	4906164	2	0	0	77.3	77.3	1	5823.42	3.25	0	86.3	0	-3.34	0	0	2.68	0	0	0	0	0	0	-8.31	-8.31
Westbrook Inverter Transfor	W_INVTR2	369368	4906388	2	0	0	77.3	77.3	1	5909.21	3.25	0	86.43	0	-3.35	0	0	2.71	0	0	0	0	0	0	-8.45	-8.45
Westbrook Inverter Transfor	W_INVTR4	369679	4906164	2	0	0	77.3	77.3	1	5929.59	3.25	0	86.46	0	-3.36	0	0	2.72	0	0	0	0	0	0	-8.48	-8.48
Westbrook Inverter Transfor	W_INVTR7	369786	4906417	2	0	0	77.3	77.3	1	6191.79	3.25	0	86.84	0	-3.4	0	0	2.8	0	0	0	0	0	0	-8.89	-8.89
Westbrook Inverter Transfor	W_INVTR5	369725	4906574	2	0	0	77.3	77.3	1	6274.87	3.25	0	86.95	0	-3.42	0	0	2.83	0	0	0	0	0	0	-9.02	-9.02
Westbrook Inverter Transfor	W_INVTR6	369881	4906578	2	0	0	77.3	77.3	1	6376.32	3.25	0	87.09	0	-3.43	0	0	2.86	0	0	0	0	0	0	-9.17	-9.17
Inverter Transformer	MV1-14 T	365157	4905049	2	0	0	69.4	69.4	1	3446.34	3.25	0	81.75	0	2.64	0	0	6.25	0	0	0	0	0	0	-21.28	-21.28
Inverter Transformer	MV1-13 T	364725	4905241	2	0	0	69.4	69.4	1	3737.44	3.25	0	82.45	0	2.72	0	0	6.48	0	0	0	0	0	0	-22.3	-22.3
Inverter Transformer	MV1-10 T	365010	4905564	2	0	0	69.4	69.4	1	3980.2	3.25	0	83	0	2.78	0	0	6.66	0	0	0	0	0	0	-23.09	-23.09
Inverter Transformer	MV1-7 T	364919	4905782	2	0	0	69.4	69.4	1	4212.34	3.25	0	83.49	0	2.84	0	0	6.83	0	0	0	0	0	0	-23.81	-23.81
Inverter Transformer	MV2-1 T	365836	4906816	2	0	0	69.4	69.4	1	5149.94	3.25	0	85.24	0	3.04	0	0	7.48	0	0	0	0	0	0	-26.41	-26.41
Inverter Transformer	MV6-4 T	370244	4906966	2	0	0	69.4	69.4	1	6906.75	3.25	0	87.79	0	3.31	0	0	8.55	0	0	0	0	0	0	-30.29	-30.29
Inverter Transformer	MV6-1 T	370230	4907364	2	0	0	69.4	69.4	1	7208.09	3.25	0	88.16	0	3.34	0	0	8.72	0	0	0	0	0	0	-30.86	-30.86
Inverter Transformer	MV1-15 T	365309	4904994	2	0	0	56.1	56.1	1	3366.18	3.25	0	81.54	0	0.98	0	0	9.47	0	0	0	0	0	0	-35.94	-35.94
Inverter Transformer	MV1-12 T	365044	4905386	2	0	0	56.1	56.1	1	3799	3.25	0	82.59	0	1.16	0	0	10.15	0	0	0	0	0	0	-37.85	-37.85
Inverter Transformer	MV1-11 T	364649	4905414	2	0	0	56.1	56.1	1	3925.15	3.25	0	82.88	0	1.21	0	0	10.34	0	0	0	0	0	0	-38.38	-38.38
Inverter Transformer	MV1-8 T	364782	4905647	2	0	0	56.1	56.1	1	4112.79	3.25	0	83.28	0	1.29	0	0	10.62	0	0	0	0	0	0	-39.13	-39.13
Inverter Transformer	MV1-9 T	364555	4905646	2	0	0	56.1	56.1	1	4174.65	3.25	0	83.41	0	1.31	0	0	10.71	0	0	0	0	0	0	-39.38	-39.38
Inverter Transformer	MV1-4 T	364821	4905918	2	0	0	56.1	56.1	1	4366.59	3.25	0	83.8	0	1.39	0	0	10.99	0	0	0	0	0	0	-40.12	-40.12
Inverter Transformer	MV1-5 T	364676	4905892	2	0	0	56.1	56.1	1	4376.76	3.25	0	83.82	0	1.39	0	0	11	0	0	0	0	0	0	-40.16	-40.16
Inverter Transformer	MV1-6 T	364482	4905835	2	0	0	56.1	56.1	1	4376.89	3.25	0	83.82	0	1.39	0	0	11	0	0	0	0	0	0	-40.16	-40.16
Inverter Transformer	MV1-2 T	364759	4906063	2	0	0	56.1	56.1	1	4521.98	3.25	0	84.11	0	1.45	0	0	11.21	0	0	0	0	0	0	-40.7	-40.7
Inverter Transformer	MV1-3 T	364435	4906039	2	0	0	56.1	56.1	1	4585.54	3.25	0	84.23	0	1.47	0	0	11.29	0	0	0	0	0	0	-40.94	-40.94
Inverter Transformer	MV1-1 T	364721	4906166	2	0	0	56.1	56.1	1	4631.02	3.25	0	84.31	0	1.49	0	0	11.36	0	0	0	0	0	0	-41.1	-41.1
Inverter Transformer	MV2-4 T	365590	4906628	2	0	0	56.1	56.1	1	4967.01	3.25	0	84.92	0	1.61	0	0	11.81	0	0	0	0	0	0	-42.29	-42.29
Inverter Transformer	MV2-3 T	365814	4906641	2	0	0	56.1	56.1	1	4974.9	3.25	0	84.94	0	1.62	0	0	11.82	0	0	0	0	0	0	-42.31	-42.31
Inverter Transformer	MV2-2 T	365982	4906654	2	0	0	56.1	56.1	1	4990.69	3.25	0	84.96	0	1.62	0	0	11.84	0	0	0	0	0	0	-42.37	-42.37
Inverter Transformer	MV3-18 T	367757	4907412	2	0	0	56.1	56.1	1	6065.14	3.25	0	86.66	0	1.99	0	0	13.18	0	0	0	0	0	0	-45.76	-45.76
Inverter Transformer	MV3-21 T	368484	4907206	2	0	0	56.1	56.1	1	6149.23	3.25	0	86.78	0	2.01	0	0	13.28	0	0	0	0	0	0	-46.01	-46.01
Inverter Transformer	MV3-22 T	368661	4907142	2	0	0	56.1	56.1	1	6171.23	3.25	0	86.81	0	2.02	0	0	13.3	0	0	0	0	0	0	-46.07	-46.07
Inverter Transformer	MV3-12 T	367674	4907594	2	0	0	56.1	56.1	1	6212.5	3.25	0	86.87	0	2.03	0	0	13.35	0	0	0	0	0	0	-46.19	-46.19
Inverter Transformer	MV3-19 T	368352	4907347	2	0	0	56.1	56.1	1	6221.57	3.25	0	86.88	0	2.03	0	0	13.36	0	0	0	0	0	0	-46.22	-46.22
Inverter Transformer	MV3-17 T	368183	4907472	2	0	0	56.1	56.1	1	6270.16	3.25	0	86.95	0	2.05	0	0	13.42	0	0	0	0	0	0	-46.35	-46.35
Inverter Transformer	MV3-13 T	367958	4907577	2	0	0	56.1	56.1	1	6287.32	3.25	0	86.97	0	2.05	0	0	13.44	0	0	0	0	0	0	-46.4	-46.4
Inverter Transformer	MV3-20 T	368683	4907317	2	0	0	56.1	56.1	1	6336.95	3.25	0	87.04	0	2.07	0	0	13.49	0	0	0	0	0	0	-46.54	-46.54

	Inverter Transformer	MV3-15 T	368351	4907477	2	0	0	56.1	56.1	1	6340.1	3.25	0	87.04	0	2.07	0	0	13.5	0	0	0	0	0	0	-46.55	-46.55
	Inverter Transformer	MV3-16 T	368509	4907475	2	0	0	56.1	56.1	1	6403.12	3.25	0	87.13	0	2.09	0	0	13.57	0	0	0	0	0	0	-46.73	-46.73
	Inverter Transformer	MV3-10 T	368162	4907669	2	0	0	56.1	56.1	1	6445.33	3.25	0	87.18	0	2.1	0	0	13.62	0	0	0	0	0	0	-46.85	-46.85
	Inverter Transformer	MV3-7 T	367951	4907754	2	0	0	56.1	56.1	1	6451.68	3.25	0	87.19	0	2.1	0	0	13.63	0	0	0	0	0	0	-46.86	-46.86
	Inverter Transformer	MV3-14 T	368678	4907498	2	0	0	56.1	56.1	1	6496.67	3.25	0	87.25	0	2.12	0	0	13.68	0	0	0	0	0	0	-46.99	-46.99
	Inverter Transformer	MV3-11 T	368340	4907662	2	0	0	56.1	56.1	1	6505.8	3.25	0	87.27	0	2.12	0	0	13.69	0	0	0	0	0	0	-47.01	-47.01
	Inverter Transformer	MV3-6 T	368156	4907834	2	0	0	56.1	56.1	1	6597.15	3.25	0	87.39	0	2.15	0	0	13.79	0	0	0	0	0	0	-47.26	-47.26
	Inverter Transformer	MV3-3 T	367944	4907927	2	0	0	56.1	56.1	1	6612.92	3.25	0	87.41	0	2.15	0	0	13.81	0	0	0	0	0	0	-47.31	-47.31
	Inverter Transformer	MV3-9 T	368517	4907703	2	0	0	56.1	56.1	1	6613.92	3.25	0	87.41	0	2.15	0	0	13.81	0	0	0	0	0	0	-47.31	-47.31
	Inverter Transformer	MV3-5 T	368335	4907843	2	0	0	56.1	56.1	1	6671.09	3.25	0	87.48	0	2.17	0	0	13.87	0	0	0	0	0	0	-47.46	-47.46
	Inverter Transformer	MV3-8 T	368685	4907712	2	0	0	56.1	56.1	1	6692.43	3.25	0	87.51	0	2.17	0	0	13.89	0	0	0	0	0	0	-47.52	-47.52
	Inverter Transformer	MV3-1 T	368150	4907976	2	0	0	56.1	56.1	1	6728.01	3.25	0	87.56	0	2.18	0	0	13.93	0	0	0	0	0	0	-47.62	-47.62
	Inverter Transformer	MV3-4 T	368507	4907925	2	0	0	56.1	56.1	1	6813.19	3.25	0	87.67	0	2.21	0	0	14.03	0	0	0	0	0	0	-47.84	-47.84
	Inverter Transformer	MV3-2 T	368677	4907928	2	0	0	56.1	56.1	1	6884.86	3.34	0	87.76	0	3.02	1.6	0	14.11	0	0	0	0	0	0	-50.43	-50.43
	Inverter Transformer	MV6-3 T	370202	4907140	2	0	0	56.1	56.1	1	7014.81	3.25	0	87.92	0	2.26	0	0	14.25	0	0	0	0	0	0	-48.37	-48.37
	Inverter Transformer	MV6-2 T	370091	4907339	2	0	0	56.1	56.1	1	7103.82	3.25	0	88.03	0	2.29	0	0	14.34	0	0	0	0	0	0	-48.6	-48.6
	Inverter Transformer	MV4-15 T	369170	4908481	2	0	0	56.1	56.1	1	7595.89	3.25	0	88.61	0	2.41	0	0	14.85	0	0	0	0	0	0	-49.82	-49.82
	Inverter Transformer	MV4-14 T	369182	4908507	2	0	0	56.1	56.1	1	7624.52	3.25	0	88.64	0	2.42	0	0	14.88	0	0	0	0	0	0	-49.89	-49.89
	Inverter Transformer	MV4-13 T	369057	4908605	2	0	0	56.1	56.1	1	7658.83	3.25	0	88.68	0	2.43	0	0	14.92	0	0	0	0	0	0	-49.97	-49.97
	Inverter Transformer	MV4-12 T	369049	4908803	2	0	0	56.1	56.1	1	7835.36	3.25	0	88.88	0	2.47	0	0	15.09	0	0	0	0	0	0	-50.39	-50.39
	Inverter Transformer	MV4-11 T	369269	4908855	2	0	0	56.1	56.1	1	7975.53	3.25	0	89.04	0	2.5	0	0	15.23	0	0	0	0	0	0	-50.71	-50.71
	Inverter Transformer	MV4-10 T	369307	4908858	2	0	0	56.1	56.1	1	7994.75	3.25	0	89.06	0	2.51	0	0	15.25	0	0	0	0	0	0	-50.76	-50.76
	Inverter Transformer	MV4-7 T	369040	4909001	2	0	0	56.1	56.1	1	8012.5	3.25	0	89.08	0	2.51	0	0	15.27	0	0	0	0	0	0	-50.8	-50.8
	Inverter Transformer	MV5-6 T	369987	4908507	2	0	0	56.1	56.1	1	8012.6	3.25	0	89.08	0	2.51	0	0	15.27	0	0	0	0	0	0	-50.8	-50.8
	Inverter Transformer	MV4-8 T	369262	4909001	2	0	0	56.1	56.1	1	8104.39	3.25	0	89.17	0	2.53	0	0	15.36	0	0	0	0	0	0	-51.01	-51.01
	Inverter Transformer	MV4-9 T	369284	4909001	2	0	0	56.1	56.1	1	8113.77	3.25	0	89.18	0	2.54	0	0	15.37	0	0	0	0	0	0	-51.03	-51.03
	Inverter Transformer	MV5-5 T	370021	4908690	2	0	0	56.1	56.1	1	8186.81	3.25	0	89.26	0	2.55	0	0	15.44	0	0	0	0	0	0	-51.19	-51.19
	Inverter Transformer	MV4-4 T	369033	4909199	2	0	0	56.1	56.1	1	8191.39	3.25	0	89.27	0	2.55	0	0	15.44	0	0	0	0	0	0	-51.2	-51.2
	Inverter Transformer	MV4-6 T	369249	4909192	2	0	0	56.1	56.1	1	8272.25	3.28	0	89.35	0	3.27	1.37	0	15.52	0	0	0	0	0	0	-53.45	-53.45
	Inverter Transformer	MV4-5 T	369283	4909199	2	0	0	56.1	56.1	1	8292.78	3.25	0	89.37	0	2.58	0	0	15.54	0	0	0	0	0	0	-51.43	-51.43
	Inverter Transformer	MV5-2 T	370011	4908853	2	0	0	56.1	56.1	1	8322.04	3.25	0	89.4	0	2.58	0	0	15.57	0	0	0	0	0	0	-51.5	-51.5
	Inverter Transformer	MV5-4 T	370330	4908707	2	0	0	56.1	56.1	1	8364.07	3.25	0	89.45	0	2.59	0	0	15.61	0	0	0	0	0	0	-51.59	-51.59
	Inverter Transformer	MV4-1 T	369017	4909397	2	0	0	56.1	56.1	1	8367.7	3.25	0	89.45	0	2.59	0	0	15.61	0	0	0	0	0	0	-51.6	-51.6
	Inverter Transformer	MV5-3 T	370237	4908851	2	0	0	56.1	56.1	1	8436.53	3.25	0	89.52	0	2.61	0	0	15.68	0	0	0	0	0	0	-51.75	-51.75
	Inverter Transformer	MV4-3 T	369234	4909397	2	0	0	56.1	56.1	1	8453.11	3.25	0	89.54	0	2.61	0	0	15.69	0	0	0	0	0	0	-51.78	-51.78
	Inverter Transformer	MV4-2 T	369267	4909397	2	0	0	56.1	56.1	1	8466.51	3.25	0	89.55	0	2.61	0	0	15.71	0	0	0	0	0	0	-51.81	-51.81
	Inverter Transformer	MV5-1 T	370015	4909142	2	0	0	56.1	56.1	1	8574.81	3.25	0	89.66	0	2.63	0	0	15.81	0	0	0	0	0	0	-52.05	-52.05
	Line Reactor	NGR	369421	4908787.5	5	0	0	45.4	45.4	1	7982.24	5.25	0	89.04	0	3.2	1.38	0.11	3.26	0	0	0	0	0	0	-51.52	-51.52
Limit. Valu	0	0																								
Level D/N:	20.0179	20.0179																								

Receiver: Existing Noise Receptor
ID: G-91
X: 366875.2
Y: 4901385.1
Z: 4.5
Ground: 0

ISO	Description	ID	X	Y	Z	Ground	ReflOrd	LxT	LxN	L/A	Dist.	hm	Freq	Adiv	K0b	Agr	Abar	z	Aatm	Afol	Ahous	Cmet	CmetN	Dc	RL	LtotT	LtotN
	Sol_Luce Substation	S_Substation	369426	4908792	3.5	0	0	112.1	112.1	1	7833.82	5.25	0	88.88	0	1.53	2.29	0.33	11.51	0	0	0	0	0	0	7.86	7.86
	Inverter	MV1-15	365315	4904994	2	0	0	100.3	100.3	1	3931.72	3.25	0	82.89	0	0.52	0	0	16.94	0	0	0	0	0	0	-0.04	-0.04
	Inverter	MV1-12	365038	4905386	2	0	0	100.3	100.3	1	4402.56	3.25	0	83.87	0	0.58	0	0	17.68	0	0	0	0	0	0	-1.82	-1.82
	Inverter	MV1-11	364655	4905414	2	0	0	100.3	100.3	1	4600.14	3.25	0	84.26	0	0.6	0	0	17.98	0	0	0	0	0	0	-2.53	-2.53
	Inverter	MV1-8	364788	4905647	2	0	0	100.3	100.3	1	4745.55	3.25	0	84.53	0	0.62	0	0	18.2	0	0	0	0	0	0	-3.03	-3.03
	Inverter	MV1-9	364561	4905646	2	0	0	100.3	100.3	1	4848.79	3.25	0	84.71	0	0.63	0	0	18.36	0	0	0	0	0	0	-3.39	-3.39
	Inverter	MV1-4	364815	4905918	2	0	0	100.3	100.3	1	4979.12	3.25	0	84.94	0	0.64	0	0	18.55	0	0	0	0	0	0	-3.82	-3.82
	Inverter	MV1-5	364671	4905892	2	0	0	100.3	100.3	1	5017.04	3.25	0	85.01	0	0.64	0	0	18.61	0	0	0	0	0	0	-3.95	-3.95
	Inverter	MV1-6	364477	4905835	2	0	0	100.3	100.3	1	5055	3.25	0	85.07	0	0.65	0	0	18.66	0	0	0	0	0	0	-4.07	-4.07
	Inverter	MV1-2	364753	4906063	2	0	0	100.3	100.3	1	5136.78	3.25	0	85.21	0	0.65	0	0	18.78	0	0	0	0	0	0	-4.34	-4.34
	Inverter	MV1-1	364715	4906166	2	0	0	100.3	100.3	1	5246.28	3.25	0	85.4	0	0.66	0	0	18.94	0	0	0	0	0	0	-4.69	-4.69
	Inverter	MV2-3	365820	4906641	2	0	0	100.3	100.3	1	5360.78	3.25	0	85.58	0	0.67	0	0	19.1	0	0	0	0	0	0	-5.05	-5.05
	Inverter	MV2-4	365586	4906624	2	0	0	100.3	100.3	1	5395.19	3.25	0	85.64	0	0.67	0	0	19.15	0	0	0	0	0	0	-5.15	-5.15
	Inverters	G_Inv9	366750.9	4902691.8	2	0	0	87.7	87.7	1	1312.6	3.25	0	73.36	0	2.49	0	0	1.82	0	0	0	0	0	0	9.99	9.99
	Inverters	G_Inv10	366900.7	4902704.8	2	0	0	87.7	87.7	1	1319.95	3.25	0	73.41	0	2.49	0	0	1.83	0	0	0	0	0	0	9.93	9.93
	Inverter	MV1-14	365163	4905049	2	0	0	97.3	97.3	1	4044.23	3.25	0	83.14	0	0.53	0	0	17.12	0	0	0	0	0	0	-3.48	-3.48
	Gardiner Substation	G_Sub	366586.3	4903349.9	2.5	0	0	90.8	90.8	1	1985.93	3.5	0	76.96	0	-0.17	0	0	4.34	0	0	0	0	0	0	9.64	9.64
	Inverter	MV3-21	368478	4907206	2	0	0	100.3	100.3	1	6037.54	3.25	0	86.62	0	0.71	0	0	20.04	0	0	0	0	0	0	-7.06	-7.06
	Inverter	MV3-18	367752	4907412	2	0	0	100.3	100.3	1	6090.35	3.25	0	86.69	0	0.71	0	0	20.12	0	0	0	0	0	0	-7.2	-7.2
	Inverter	MV3-19	368357	4907347	2	0	0	100.3	100.3	1	6143.29	3.25	0	86.77	0	0.71	0	0	20.19	0	0	0	0	0	0	-7.35	-7.35
	Inverter	MV3-20	368689	4907317	2	0	0	100.3	100.3	1	6203.01	3.25	0	86.85	0	0.71	0	0	20.27	0	0	0	0	0	0	-7.52	-7.52
	Inverter	MV3-17	368178	4907472	2	0	0	100.3	100.3	1	6224.76	3.25	0	86.88	0	0.71	0	0	20.3	0	0	0	0	0	0	-7.58	-7.58
	Inverters	G_Inv7	366694.6	4902824.7	2	0	0	87.7	87.7	1	1450.89	3.25	0	74.23	0	2.51	0	0	1.98	0	0	0	0	0	0	8.93	8.93
	Inverter	MV1-13	364731	4905241	2	0	0	97.3	97.3	1	4411.98	3.25	0	83.89	0	0.58	0	0	17.7	0	0	0	0	0	0	-4.86	-4.86
	Inverters	G_Inv8	366844.5	4902838.5	2	0	0	87.7	87.7	1	1453.73	3.25	0	74.25	0	2.51	0	0	1.99	0	0	0	0	0	0	8.91	8.91

Inverter	MV3-12	367668	4907594	2	0	0	100.3	100.3	1	6259.31	3.25	0	86.93	0	0.71	0	0	20.34	0	0	0	0	0	0	-7.67	-7.67
Inverter	MV3-15	368357	4907477	2	0	0	100.3	100.3	1	6269.53	3.25	0	86.94	0	0.71	0	0	20.36	0	0	0	0	0	0	-7.7	-7.7
Inverter	MV3-13	367963	4907577	2	0	0	100.3	100.3	1	6286.73	3.25	0	86.97	0	0.71	0	0	20.38	0	0	0	0	0	0	-7.75	-7.75
Inverter	MV3-16	368514	4907475	2	0	0	100.3	100.3	1	6306.55	3.25	0	87	0	0.71	0	0	20.4	0	0	0	0	0	0	-7.8	-7.8
Inverter	MV3-14	368684	4907498	2	0	0	100.3	100.3	1	6374.9	3.25	0	87.09	0	0.71	0	0	20.49	0	0	0	0	0	0	-7.99	-7.99
Inverter	MV3-10	368167	4907669	2	0	0	100.3	100.3	1	6415.31	3.25	0	87.14	0	0.71	0	0	20.55	0	0	0	0	0	0	-8.09	-8.09
Inverter	MV3-11	368346	4907662	2	0	0	100.3	100.3	1	6446.92	3.25	0	87.19	0	0.71	0	0	20.59	0	0	0	0	0	0	-8.18	-8.18
Inverter	MV3-7	367945	4907754	2	0	0	100.3	100.3	1	6458.12	3.25	0	87.2	0	0.71	0	0	20.6	0	0	0	0	0	0	-8.21	-8.21
Inverter	MV1-10	365004	4905564	2	0	0	97.3	97.3	1	4578.71	3.25	0	84.21	0	0.6	0	0	17.95	0	0	0	0	0	0	-5.45	-5.45
Inverter	MV3-9	368512	4907703	2	0	0	100.3	100.3	1	6526.48	3.25	0	87.29	0	0.71	0	0	20.69	0	0	0	0	0	0	-8.39	-8.39
Inverter	MV3-6	368162	4907834	2	0	0	100.3	100.3	1	6576.03	3.25	0	87.36	0	0.72	0	0	20.76	0	0	0	0	0	0	-8.52	-8.52
Inverter	MV3-8	368680	4907712	2	0	0	100.3	100.3	1	6579.28	3.25	0	87.36	0	0.72	0	0	20.76	0	0	0	0	0	0	-8.53	-8.53
Inverter	MV3-3	367939	4907927	2	0	0	100.3	100.3	1	6627.83	3.25	0	87.43	0	0.71	0	0	20.83	0	0	0	0	0	0	-8.66	-8.66
Inverter	MV6-3	370207	4907140	2	0	0	100.3	100.3	1	6649.79	3.25	0	87.46	0	0.71	0	0	20.85	0	0	0	0	0	0	-8.71	-8.71
Inverter	MV6-2	370085	4907339	2	0	0	100.3	100.3	1	6764	3.25	0	87.6	0	0.71	0	0	21	0	0	0	0	0	0	-9.01	-9.01
Inverter	MV1-7	364925	4905782	2	0	0	97.3	97.3	1	4809.99	3.25	0	84.64	0	0.62	0	0	18.3	0	0	0	0	0	0	-6.25	-6.25
Inverters	G_Inv6	366788.5	4902972	2	0	0	87.7	87.7	1	1589.27	3.25	0	75.02	0	2.53	0	0	2.15	0	0	0	0	0	0	7.95	7.95
Inverters	G_Inv5	366638.5	4902958.1	2	0	0	87.7	87.7	1	1590.71	3.25	0	75.03	0	2.53	0	0	2.15	0	0	0	0	0	0	7.94	7.94
Inverters	G_Inv4	366732.8	4903105	2	0	0	87.7	87.7	1	1725.79	3.25	0	75.74	0	2.55	0	0	2.31	0	0	0	0	0	0	7.06	7.06
Inverters	G_Inv3	366583.7	4903091.4	2	0	0	87.7	87.7	1	1731.02	3.25	0	75.77	0	2.55	0	0	2.32	0	0	0	0	0	0	7.03	7.03
Inverter	MV2-1	365842	4906816	2	0	0	97.3	97.3	1	5528.31	3.25	0	85.85	0	0.68	0	0	19.34	0	0	0	0	0	0	-8.56	-8.56
Inverter	MV4-11	369264	4908855	2	0	0	100.3	100.3	1	7842.56	3.25	0	88.89	0	0.67	0	0	22.32	0	0	0	0	0	0	-11.57	-11.57
Inverter	MV4-10	369312	4908858	2	0	0	100.3	100.3	1	7860.17	3.25	0	88.91	0	0.66	0	0	22.34	0	0	0	0	0	0	-11.6	-11.6
Inverter	MV4-7	369035	4909001	2	0	0	100.3	100.3	1	7916.23	3.25	0	88.97	0	0.66	0	0	22.41	0	0	0	0	0	0	-11.73	-11.73
Inverter	MV5-5	370015	4908690	2	0	0	100.3	100.3	1	7951.1	3.25	0	89.01	0	0.66	0	0	22.45	0	0	0	0	0	0	-11.8	-11.8
Inverter	MV4-8	369256	4909001	2	0	0	100.3	100.3	1	7979.36	3.25	0	89.04	0	0.66	0	0	22.48	0	0	0	0	0	0	-11.86	-11.86
Inverter	MV4-9	369289	4909001	2	0	0	100.3	100.3	1	7989.27	3.25	0	89.05	0	0.65	0	0	22.49	0	0	0	0	0	0	-11.89	-11.89
Inverters	G_Inv2	366676.9	4903239.1	2	0	0	87.7	87.7	1	1864.58	3.25	0	76.41	0	2.57	0	0	2.48	0	0	0	0	0	0	6.21	6.21
Inverters	G_Inv1	366526.4	4903225.8	2	0	0	87.7	87.7	1	1873.46	3.25	0	76.45	0	2.57	0	0	2.49	0	0	0	0	0	0	6.15	6.15
Inverter	MV5-4	370324	4908707	2	0	0	100.3	100.3	1	8093.48	3.25	0	89.16	0	0.64	0	0	22.61	0	0	0	0	0	0	-12.11	-12.11
Inverter	MV5-2	370006	4908853	2	0	0	100.3	100.3	1	8097.62	3.25	0	89.17	0	0.64	0	0	22.62	0	0	0	0	0	0	-12.12	-12.12
Inverter	MV4-4	369027	4909199	2	0	0	100.3	100.3	1	8104.77	3.25	0	89.17	0	0.64	0	0	22.63	0	0	0	0	0	0	-12.13	-12.13
Inverter	MV4-6	369243	4909192	2	0	0	100.3	100.3	1	8158.07	3.25	0	89.23	0	0.64	0	0	22.69	0	0	0	0	0	0	-12.25	-12.25
Inverter	MV4-5	369289	4909199	2	0	0	100.3	100.3	1	8178.23	3.25	0	89.25	0	0.64	0	0	22.71	0	0	0	0	0	0	-12.29	-12.29
Inverter	MV5-3	370231	4908851	2	0	0	100.3	100.3	1	8185.42	3.25	0	89.26	0	0.64	0	0	22.72	0	0	0	0	0	0	-12.3	-12.3
Inverter	MV4-1	369011	4909397	2	0	0	100.3	100.3	1	8291.69	3.25	0	89.37	0	0.63	0	0	22.84	0	0	0	0	0	0	-12.53	-12.53
Inverter	MV4-3	369229	4909397	2	0	0	100.3	100.3	1	8350.5	3.25	0	89.43	0	0.62	0	0	22.91	0	0	0	0	0	0	-12.65	-12.65
Inverter	MV4-2	369272	4909397	2	0	0	100.3	100.3	1	8362.73	3.25	0	89.45	0	0.62	0	0	22.92	0	0	0	0	0	0	-12.67	-12.67
Inverter	MV5-1	370020	4909142	2	0	0	100.3	100.3	1	8370.14	3.25	0	89.45	0	0.62	0	0	22.93	0	0	0	0	0	0	-12.69	-12.69
Inverter	MV6-1	370235	4907364	2	0	0	97.3	97.3	1	6858.24	3.25	0	87.72	0	0.71	0	0	21.12	0	0	0	0	0	0	-12.25	-12.25
DSTATCOM - 10 MVAR #2	DSAT2	369403	4908757	2.5	0	0	96.6	96.6	1	7793.25	3.5	0	88.83	0	3.87	0	0	4.68	0	0	0	0	0	0	-0.75	-0.75
DSTATCOM - 10 MVAR #1	DSAT1	369437	4908757	2.5	0	0	96.6	96.6	1	7804.34	3.5	0	88.85	0	3.88	0	0	4.68	0	0	0	0	0	0	-0.77	-0.77
SubstationTransformer	W_ST	369711.17	4906112.3	2.5	0	0	92	92	1	5512.61	3.5	0	85.83	0	0.67	0	-0.12	9.21	0	0	0	0	0	0	-3.73	-3.73
Inverter	MV1-3	364440	4906039	2	0	0	89.1	89.1	1	5252.52	3.25	0	85.41	0	1.7	0	0	12.8	0	0	0	0	0	0	-10.85	-10.85
Inverter	MV2-2	365977	4906654	2	0	0	89.1	89.1	1	5344.91	3.25	0	85.56	0	1.72	0	0	12.92	0	0	0	0	0	0	-11.15	-11.15
Westbrook Inverter Enclosur	W_INV3	369508	4906164	2	0	0	89.1	89.1	1	5456.15	3.25	0	85.74	0	1.75	0	0	13.07	0	0	0	0	0	0	-11.5	-11.5
Westbrook Inverter Enclosur	W_INV4	369673	4906164	2	0	0	89.1	89.1	1	5537.65	3.25	0	85.87	0	1.77	0	0	13.17	0	0	0	0	0	0	-11.75	-11.75
Westbrook Inverter Enclosur	W_INV2	369374	4906388	2	0	0	89.1	89.1	1	5592.23	3.25	0	85.95	0	1.79	0	0	13.24	0	0	0	0	0	0	-11.92	-11.92
Westbrook Inverter Enclosur	W_INV7	369780	4906417	2	0	0	89.1	89.1	1	5810.15	3.25	0	86.28	0	1.84	0	0	13.52	0	0	0	0	0	0	-12.59	-12.59
Westbrook Inverter Enclosur	W_INV5	369719	4906574	2	0	0	89.1	89.1	1	5917.08	3.25	0	86.44	0	1.87	0	0	13.66	0	0	0	0	0	0	-12.91	-12.91
Westbrook Inverter Enclosur	W_INV6	369875	4906578	2	0	0	89.1	89.1	1	5997.08	3.25	0	86.56	0	1.89	0	0	13.76	0	0	0	0	0	0	-13.14	-13.14
Inverter	MV3-22	368656	4907142	2	0	0	89.1	89.1	1	6026.04	3.25	0	86.6	0	1.89	0	0	13.8	0	0	0	0	0	0	-13.23	-13.23
Inverter	MV3-5	368340	4907843	2	0	0	89.1	89.1	1	6621.94	3.25	0	87.42	0	2.04	0	0	14.53	0	0	0	0	0	0	-14.93	-14.93
Inverter	MV3-1	368156	4907976	2	0	0	89.1	89.1	1	6714.2	3.25	0	87.54	0	2.06	0	0	14.64	0	0	0	0	0	0	-15.19	-15.19
Inverter	MV3-4	368502	4907925	2	0	0	89.1	89.1	1	6739.2	3.25	0	87.57	0	2.07	0	0	14.67	0	0	0	0	0	0	-15.25	-15.25
Inverter	MV3-2	368671	4907928	2	0	0	89.1	89.1	1	6784.87	3.25	0	87.63	0	2.08	0	0	14.73	0	0	0	0	0	0	-15.38	-15.38
Fixed Reactor Bank 1	FRB1	369378	4908755	6	0	0	89.8	89.8	1	7783.28	5.25	0	88.82	0	-0.2	0	0	11.47	0	0	0	0	0	0	-10.32	-10.32
Fixed Reactor Bank 2	FRB2	369464	4908755	6	0	0	89.8	89.8	1	7811.36	5.25	0	88.85	0	-0.19	0	0	11.49	0	0	0	0	0	0	-10.38	-10.38
Inverter	MV4-15	369176	4908481	2	0	0	89.1	89.1	1	7459.59	3.25	0	88.45	0	2.24	0	0	15.53	0	0	0	0	0	0	-17.16	-17.16
Inverter	MV4-14	369176	4908507	2	0	0	89.1	89.1	1	7484.33	3.25	0	88.48	0	2.24	0	0	15.55	0	0	0	0	0	0	-17.22	-17.22
Inverter	MV4-13	369051	4908605	2	0	0	89.1	89.1	1	7540.63	3.25	0	88.55	0	2.26	0	0	15.62	0	0	0	0	0	0	-17.36	-17.36
Inverter	MV4-12	369043	4908803	2	0	0	89.1	89.1	1	7728.17	3.25	0	88.76	0	2.3	0	0	15.83	0	0	0	0	0	0	-17.84	-17.84
Inverter	MV5-6	369982	4908507	2	0	0	89.1	89.1	1	7770.05	3.25	0	88.81	0	2.31	0	0	15.88	0	0	0	0	0	0	-17.94	-17.94
Westbrook Inverter Enclosur	W_INV1	369409	4906578	2	0	0	86.1	86.1	1	5778.09	3.25	0	86.24	0	1.83	0	0	13.48	0	0	0	0	0	0	-15.49	-15.49
Inverter	MV6-4	370250	4906966	2	0	0	86.1	86.1	1	6521.94	3.25	0	87.29	0	2.01	0	0	14.41	0	0	0	0	0	0	-17.65	-17.65
Westbrook Inverter Transfor	W_INVTR1	369403	4906578	2	0	0	78.2	78.2	1	5775.46	3.25	0	86.23	0	-3.33	0	0	2.67	0	0	0	0	0	0	-7.33	-7.33
Westbrook Inverter Transfor	W_INVTR3	369514	4906164	2	0	0	77.3	77.3	1	5459.04	3.25	0	85.74	0	-3.27	0	0	2.57	0	0	0	0	0	0	-7.7	-7.7
Westbrook Inverter Transfor	W_INVTR4	369679	4906164	2	0	0	77.3	77.3	1	5540.68	3.25	0	85.87	0	-3.28	0	0	2.59	0	0	0	0	0	0	-7.84	-7.84
Westbrook Inverter Transfor	W_INVTR2	369368	4906388	2	0	0	77.3	77.3	1	5589.55	3.25	0	85.95	0	-3.29	0	0	2.61	0	0	0	0	0	0	-7.92	-7.92
Westbrook Inverter Transfor	W_INVTR7	369786	4906417	2	0	0	77.3	77.3	1	5813.16	3.25	0	86.29	0	-3.33	0	0	2.68	0	0	0	0	0	0	-8.29	-8.29
Westbrook Inverter Transfor	W_INVTR5	369725	4906574	2	0	0	77.3	77.3	1	5919.97	3.25	0	86.45	0	-3.35	0	0	2.72	0	0	0	0	0	0	-8.47	-8.47
Westbrook Inverter Transfor	W_INVTR6	369881	4906578	2	0	0	77.3	77.3	1	6000.09	3.25	0	86.56	0	-3.37	0	0	2.74	0	0	0	0	0	0	-8.59	-8.59
Inverter Transformer	MV1-14 T	365157	4905049	2	0	0	69.4	69.4	1	4046.77	3.25	0	83.14	0	2.8	0	0	6.71	0	0	0	0	0	0	-23.3	-23.3
Inverter Transformer	MV1-13 T	364725	4905241	2	0	0	69.4	69.4	1	4414.9	3.25	0	83.9	0	2.89	0	0	6.98	0	0	0	0	0	0	-24.41	-24.41

Inverter Transformer	MV1-10 T	365010	4905564	2	0	0	69.4	69.4	1	4576.26	3.25	0	84.21	0	2.92	0	0	7.09	0	0	0	0	0	0	-24.87	-24.87
Inverter Transformer	MV1-7 T	364919	4905782	2	0	0	69.4	69.4	1	4812.43	3.25	0	84.65	0	2.97	0	0	7.26	0	0	0	0	0	0	-25.53	-25.53
Inverter Transformer	MV2-1 T	365836	4906816	2	0	0	69.4	69.4	1	5529.43	3.25	0	85.85	0	3.11	0	0	7.73	0	0	0	0	0	0	-27.34	-27.34
Inverter Transformer	MV6-4 T	370244	4906966	2	0	0	69.4	69.4	1	6518.84	3.25	0	87.28	0	3.26	0	0	8.33	0	0	0	0	0	0	-29.52	-29.52
Inverter Transformer	MV6-1 T	370230	4907364	2	0	0	69.4	69.4	1	6855.8	3.25	0	87.72	0	3.3	0	0	8.52	0	0	0	0	0	0	-30.19	-30.19
Inverter Transformer	MV1-15 T	365309	4904994	2	0	0	56.1	56.1	1	3934.1	3.25	0	82.9	0	1.22	0	0	10.36	0	0	0	0	0	0	-38.41	-38.41
Inverter Transformer	MV1-12 T	365044	4905386	2	0	0	56.1	56.1	1	4400.06	3.25	0	83.87	0	1.4	0	0	11.03	0	0	0	0	0	0	-40.25	-40.25
Inverter Transformer	MV1-11 T	364649	4905414	2	0	0	56.1	56.1	1	4603.04	3.25	0	84.26	0	1.48	0	0	11.32	0	0	0	0	0	0	-41	-41
Inverter Transformer	MV1-8 T	364782	4905647	2	0	0	56.1	56.1	1	4748.19	3.25	0	84.53	0	1.53	0	0	11.52	0	0	0	0	0	0	-41.52	-41.52
Inverter Transformer	MV1-9 T	364555	4905646	2	0	0	56.1	56.1	1	4851.66	3.25	0	84.72	0	1.57	0	0	11.66	0	0	0	0	0	0	-41.89	-41.89
Inverter Transformer	MV1-4 T	364821	4905918	2	0	0	56.1	56.1	1	4976.64	3.25	0	84.94	0	1.62	0	0	11.82	0	0	0	0	0	0	-42.32	-42.32
Inverter Transformer	MV1-5 T	364676	4905892	2	0	0	56.1	56.1	1	5014.84	3.25	0	85.01	0	1.63	0	0	11.87	0	0	0	0	0	0	-42.45	-42.45
Inverter Transformer	MV1-6 T	364482	4905835	2	0	0	56.1	56.1	1	5052.63	3.25	0	85.07	0	1.64	0	0	11.92	0	0	0	0	0	0	-42.58	-42.58
Inverter Transformer	MV1-2 T	364759	4906063	2	0	0	56.1	56.1	1	5134.3	3.25	0	85.21	0	1.67	0	0	12.03	0	0	0	0	0	0	-42.85	-42.85
Inverter Transformer	MV1-1 T	364721	4906166	2	0	0	56.1	56.1	1	5243.81	3.25	0	85.39	0	1.71	0	0	12.17	0	0	0	0	0	0	-43.22	-43.22
Inverter Transformer	MV1-3 T	364435	4906039	2	0	0	56.1	56.1	1	5254.84	3.25	0	85.41	0	1.72	0	0	12.19	0	0	0	0	0	0	-43.25	-43.25
Inverter Transformer	MV2-2 T	365982	4906654	2	0	0	56.1	56.1	1	5344.07	3.25	0	85.56	0	1.75	0	0	12.3	0	0	0	0	0	0	-43.55	-43.55
Inverter Transformer	MV2-3 T	365814	4906641	2	0	0	56.1	56.1	1	5361.96	3.25	0	85.59	0	1.75	0	0	12.32	0	0	0	0	0	0	-43.6	-43.6
Inverter Transformer	MV2-4 T	365590	4906628	2	0	0	56.1	56.1	1	5398.12	3.25	0	85.64	0	1.77	0	0	12.37	0	0	0	0	0	0	-43.72	-43.72
Inverter Transformer	MV3-22 T	368661	4907142	2	0	0	56.1	56.1	1	6027.52	3.25	0	86.6	0	1.97	0	0	13.14	0	0	0	0	0	0	-45.65	-45.65
Inverter Transformer	MV3-21 T	368484	4907206	2	0	0	56.1	56.1	1	6039.13	3.25	0	86.62	0	1.98	0	0	13.15	0	0	0	0	0	0	-45.69	-45.69
Inverter Transformer	MV3-18 T	367757	4907412	2	0	0	56.1	56.1	1	6091.07	3.25	0	86.69	0	1.99	0	0	13.21	0	0	0	0	0	0	-45.84	-45.84
Inverter Transformer	MV3-19 T	368352	4907347	2	0	0	56.1	56.1	1	6142.08	3.25	0	86.77	0	2.01	0	0	13.27	0	0	0	0	0	0	-45.99	-45.99
Inverter Transformer	MV3-20 T	368683	4907317	2	0	0	56.1	56.1	1	6201.26	3.25	0	86.85	0	2.03	0	0	13.34	0	0	0	0	0	0	-46.16	-46.16
Inverter Transformer	MV3-17 T	368183	4907472	2	0	0	56.1	56.1	1	6225.81	3.25	0	86.88	0	2.04	0	0	13.37	0	0	0	0	0	0	-46.23	-46.23
Inverter Transformer	MV3-12 T	367674	4907594	2	0	0	56.1	56.1	1	6260.07	3.25	0	86.93	0	2.05	0	0	13.41	0	0	0	0	0	0	-46.33	-46.33
Inverter Transformer	MV3-15 T	368351	4907477	2	0	0	56.1	56.1	1	6268.11	3.25	0	86.94	0	2.05	0	0	13.42	0	0	0	0	0	0	-46.35	-46.35
Inverter Transformer	MV3-13 T	367958	4907577	2	0	0	56.1	56.1	1	6285.86	3.25	0	86.97	0	2.05	0	0	13.44	0	0	0	0	0	0	-46.4	-46.4
Inverter Transformer	MV3-16 T	368509	4907475	2	0	0	56.1	56.1	1	6305.25	3.25	0	86.99	0	2.06	0	0	13.46	0	0	0	0	0	0	-46.45	-46.45
Inverter Transformer	MV3-14 T	368678	4907498	2	0	0	56.1	56.1	1	6373.2	3.25	0	87.09	0	2.08	0	0	13.54	0	0	0	0	0	0	-46.65	-46.65
Inverter Transformer	MV3-10 T	368162	4907669	2	0	0	56.1	56.1	1	6414.3	3.25	0	87.14	0	2.09	0	0	13.58	0	0	0	0	0	0	-46.76	-46.76
Inverter Transformer	MV3-11 T	368340	4907662	2	0	0	56.1	56.1	1	6445.55	3.25	0	87.19	0	2.1	0	0	13.62	0	0	0	0	0	0	-46.85	-46.85
Inverter Transformer	MV3-7 T	367951	4907754	2	0	0	56.1	56.1	1	6459.12	3.25	0	87.2	0	2.11	0	0	13.63	0	0	0	0	0	0	-46.88	-46.88
Inverter Transformer	MV3-9 T	368517	4907703	2	0	0	56.1	56.1	1	6527.74	3.25	0	87.3	0	2.13	0	0	13.71	0	0	0	0	0	0	-47.07	-47.07
Inverter Transformer	MV3-6 T	368156	4907834	2	0	0	56.1	56.1	1	6574.86	3.25	0	87.36	0	2.14	0	0	13.76	0	0	0	0	0	0	-47.2	-47.2
Inverter Transformer	MV3-8 T	368685	4907712	2	0	0	56.1	56.1	1	6580.66	3.25	0	87.37	0	2.14	0	0	13.77	0	0	0	0	0	0	-47.22	-47.22
Inverter Transformer	MV3-5 T	368335	4907843	2	0	0	56.1	56.1	1	6620.84	3.25	0	87.42	0	2.15	0	0	13.82	0	0	0	0	0	0	-47.33	-47.33
Inverter Transformer	MV3-3 T	367944	4907927	2	0	0	56.1	56.1	1	6628.63	3.25	0	87.43	0	2.16	0	0	13.82	0	0	0	0	0	0	-47.35	-47.35
Inverter Transformer	MV6-3 T	370202	4907140	2	0	0	56.1	56.1	1	6647.29	3.25	0	87.45	0	2.16	0	0	13.84	0	0	0	0	0	0	-47.4	-47.4
Inverter Transformer	MV3-1 T	368150	4907976	2	0	0	56.1	56.1	1	6713.05	3.25	0	87.54	0	2.18	0	0	13.92	0	0	0	0	0	0	-47.58	-47.58
Inverter Transformer	MV3-4 T	368507	4907925	2	0	0	56.1	56.1	1	6740.41	3.25	0	87.57	0	2.19	0	0	13.95	0	0	0	0	0	0	-47.65	-47.65
Inverter Transformer	MV6-2 T	370091	4907339	2	0	0	56.1	56.1	1	6766.85	3.25	0	87.61	0	2.19	0	0	13.98	0	0	0	0	0	0	-47.72	-47.72
Inverter Transformer	MV3-2 T	368677	4907928	2	0	0	56.1	56.1	1	6786.46	3.25	0	87.63	0	2.2	0	0	14	0	0	0	0	0	0	-47.77	-47.77
Inverter Transformer	MV4-15 T	369170	4908481	2	0	0	56.1	56.1	1	7457.74	3.25	0	88.45	0	2.38	0	0	14.71	0	0	0	0	0	0	-49.48	-49.48
Inverter Transformer	MV4-14 T	369182	4908507	2	0	0	56.1	56.1	1	7486.17	3.25	0	88.49	0	2.39	0	0	14.74	0	0	0	0	0	0	-49.55	-49.55
Inverter Transformer	MV4-13 T	369057	4908605	2	0	0	56.1	56.1	1	7542.36	3.25	0	88.55	0	2.4	0	0	14.8	0	0	0	0	0	0	-49.69	-49.69
Inverter Transformer	MV4-12 T	369049	4908803	2	0	0	56.1	56.1	1	7729.85	3.25	0	88.76	0	2.45	0	0	14.99	0	0	0	0	0	0	-50.14	-50.14
Inverter Transformer	MV5-6 T	369987	4908507	2	0	0	56.1	56.1	1	7772.05	3.25	0	88.81	0	2.46	0	0	15.03	0	0	0	0	0	0	-50.24	-50.24
Inverter Transformer	MV4-11 T	369269	4908855	2	0	0	56.1	56.1	1	7844.09	3.25	0	88.89	0	2.47	0	0	15.1	0	0	0	0	0	0	-50.41	-50.41
Inverter Transformer	MV4-10 T	369307	4908858	2	0	0	56.1	56.1	1	7858.62	3.25	0	88.91	0	2.48	0	0	15.12	0	0	0	0	0	0	-50.44	-50.44
Inverter Transformer	MV4-7 T	369040	4909001	2	0	0	56.1	56.1	1	7917.59	3.25	0	88.97	0	2.49	0	0	15.18	0	0	0	0	0	0	-50.58	-50.58
Inverter Transformer	MV5-5 T	370021	4908690	2	0	0	56.1	56.1	1	7953.47	3.25	0	89.01	0	2.5	0	0	15.21	0	0	0	0	0	0	-50.66	-50.66
Inverter Transformer	MV4-8 T	369262	4909001	2	0	0	56.1	56.1	1	7981.15	3.25	0	89.04	0	2.51	0	0	15.24	0	0	0	0	0	0	-50.73	-50.73
Inverter Transformer	MV4-9 T	369284	4909001	2	0	0	56.1	56.1	1	7987.76	3.25	0	89.05	0	2.51	0	0	15.24	0	0	0	0	0	0	-50.74	-50.74
Inverter Transformer	MV5-4 T	370330	4908707	2	0	0	56.1	56.1	1	8096.04	3.25	0	89.17	0	2.53	0	0	15.35	0	0	0	0	0	0	-50.99	-50.99
Inverter Transformer	MV5-2 T	370011	4908853	2	0	0	56.1	56.1	1	8099.55	3.25	0	89.17	0	2.53	0	0	15.35	0	0	0	0	0	0	-51	-51
Inverter Transformer	MV4-4 T	369033	4909199	2	0	0	56.1	56.1	1	8106.36	3.25	0	89.18	0	2.53	0	0	15.36	0	0	0	0	0	0	-51.01	-51.01
Inverter Transformer	MV4-6 T	369249	4909192	2	0	0	56.1	56.1	1	8159.82	3.25	0	89.23	0	2.55	0	0	15.41	0	0	0	0	0	0	-51.13	-51.13
Inverter Transformer	MV4-5 T	369283	4909199	2	0	0	56.1	56.1	1	8176.46	3.25	0	89.25	0	2.55	0	0	15.43	0	0	0	0	0	0	-51.17	-51.17
Inverter Transformer	MV5-3 T	370237	4908851	2	0	0	56.1	56.1	1	8187.88	3.25	0	89.26	0	2.55	0	0	15.44	0	0	0	0	0	0	-51.2	-51.2
Inverter Transformer	MV4-1 T	369017	4909397	2	0	0	56.1	56.1	1	8293.24	3.25	0	89.37	0	2.58	0	0	15.54	0	0	0	0	0	0	-51.43	-51.43
Inverter Transformer	MV4-3 T	369234	4909397	2	0	0	56.1	56.1	1	8351.92	3.25	0	89.44	0	2.59	0	0	15.6	0	0	0	0	0	0	-51.56	-51.56
Inverter Transformer	MV4-2 T	369267	4909397	2	0	0	56.1	56.1	1	8361.3	3.25	0	89.45	0	2.59	0	0	15.61	0	0	0	0	0	0	-51.58	-51.58
Inverter Transformer	MV5-1 T	370015	4909142	2	0	0	56.1	56.1	1	8368.26	3.25	0	89.45	0	2.59	0	0	15.61	0	0	0	0	0	0	-51.6	-51.6
Line Reactor	NGR	369421	4908787.5	5	0	0	45.4	45.4	1	7827.94	5.25	0	88.87	0	3.2	1.38	0.11	3.2	0	0	0	0	0	0	-51.29	-51.29
Limit. Valu 0	0																								
Level D/N: 19.8709	19.8709																								

Receiver: Existing Noise Receptor
ID: G-92
X: 365271.2
Y: 4903752
Z: 4.5
Ground: 0

ISO	Description	ID	X	Y	Z	Ground	ReflOrd	LxT	LxN	L/A	Dist.	hm	Freq	Adiv	K0b	Agr	Abar	z	Aatm	Afol	Ahous	Cmet	CmetN	Dc	RL	LtotT	LtotN
	Inverter	MV1-15	365315	4904994	2	0	0	100.3	100.3	1	1242.77	3.25	0	72.89	0	-0.14	0	0	11.65	0	0	0	0	0	0	15.91	15.91
	Inverter	MV1-12	365038	4905386	2	0	0	100.3	100.3	1	1650.56	3.25	0	75.35	0	0.02	0	0	12.69	0	0	0	0	0	0	12.25	12.25
	Sol_Luce Substation	S_Substation	369426	4908792	3.5	0	0	112.1	112.1	1	6531.77	5.25	0	87.3	0	1.28	2.53	0.27	10.29	0	0	0	0	0	0	10.67	10.67
	Inverter	MV1-11	364655	4905414	2	0	0	100.3	100.3	1	1772.56	3.25	0	75.97	0	0.06	0	0	12.97	0	0	0	0	0	0	11.31	11.31
	Inverter	MV1-14	365163	4905049	2	0	0	97.3	97.3	1	1301.51	3.25	0	73.29	0	-0.11	0	0	11.81	0	0	0	0	0	0	12.32	12.32
	Inverter	MV1-8	364788	4905647	2	0	0	100.3	100.3	1	1955.64	3.25	0	76.83	0	0.12	0	0	13.37	0	0	0	0	0	0	10	10
	Inverter	MV1-9	364561	4905646	2	0	0	100.3	100.3	1	2022.78	3.25	0	77.12	0	0.14	0	0	13.51	0	0	0	0	0	0	9.55	9.55
	Inverter	MV1-4	364815	4905918	2	0	0	100.3	100.3	1	2213.52	3.25	0	77.9	0	0.19	0	0	13.9	0	0	0	0	0	0	8.32	8.32
	Inverter	MV1-5	364671	4905892	2	0	0	100.3	100.3	1	2222.58	3.25	0	77.94	0	0.19	0	0	13.92	0	0	0	0	0	0	8.27	8.27
	Inverter	MV1-6	364477	4905835	2	0	0	100.3	100.3	1	2229.27	3.25	0	77.96	0	0.19	0	0	13.93	0	0	0	0	0	0	8.23	8.23
	Inverter	MV1-13	364731	4905241	2	0	0	97.3	97.3	1	1583.96	3.25	0	74.99	0	0	0	0	12.53	0	0	0	0	0	0	9.79	9.79
	Inverter	MV1-2	364753	4906063	2	0	0	100.3	100.3	1	2368.39	3.25	0	78.49	0	0.23	0	0	14.21	0	0	0	0	0	0	7.39	7.39
	Inverter	MV1-1	364715	4906166	2	0	0	100.3	100.3	1	2477.25	3.25	0	78.88	0	0.25	0	0	14.41	0	0	0	0	0	0	6.77	6.77
	Inverter	MV1-10	365004	4905564	2	0	0	97.3	97.3	1	1831.6	3.25	0	76.26	0	0.08	0	0	13.1	0	0	0	0	0	0	7.88	7.88
	Inverter	MV2-4	365586	4906624	2	0	0	100.3	100.3	1	2889.2	3.25	0	80.22	0	0.34	0	0	15.18	0	0	0	0	0	0	4.58	4.58
	Inverter	MV1-7	364925	4905782	2	0	0	97.3	97.3	1	2059.31	3.25	0	77.27	0	0.15	0	0	13.59	0	0	0	0	0	0	6.31	6.31
	Inverter	MV2-3	365820	4906641	2	0	0	100.3	100.3	1	2940.66	3.25	0	80.37	0	0.35	0	0	15.27	0	0	0	0	0	0	4.33	4.33
	Gardiner Substation	G_Sub	366586.3	4903349.9	2.5	0	0	90.8	90.8	1	1375.2	4.25	0	73.77	0	0.83	4.75	0.31	3.25	0	0	0	0	0	0	8.17	8.17
	Inverter	MV2-1	365842	4906816	2	0	0	97.3	97.3	1	3116.72	3.25	0	80.87	0	0.38	0	0	15.58	0	0	0	0	0	0	0.48	0.48
	Inverter	MV3-18	367752	4907412	2	0	0	100.3	100.3	1	4421.54	3.25	0	83.91	0	0.58	0	0	17.71	0	0	0	0	0	0	-1.89	-1.89
	Inverter	MV3-12	367668	4907594	2	0	0	100.3	100.3	1	4528.31	3.25	0	84.12	0	0.59	0	0	17.87	0	0	0	0	0	0	-2.27	-2.27
	Inverter	MV3-13	367963	4907577	2	0	0	100.3	100.3	1	4677.22	3.25	0	84.4	0	0.61	0	0	18.1	0	0	0	0	0	0	-2.8	-2.8
	Inverter	MV3-21	368478	4907206	2	0	0	100.3	100.3	1	4713.14	3.25	0	84.47	0	0.61	0	0	18.15	0	0	0	0	0	0	-2.92	-2.92
	Inverter	MV3-17	368178	4907472	2	0	0	100.3	100.3	1	4721.01	3.25	0	84.48	0	0.62	0	0	18.17	0	0	0	0	0	0	-2.95	-2.95
	Inverter	MV3-19	368357	4907347	2	0	0	100.3	100.3	1	4737.74	3.25	0	84.51	0	0.62	0	0	18.19	0	0	0	0	0	0	-3.01	-3.01
	Inverter	MV3-7	367945	4907754	2	0	0	100.3	100.3	1	4813.03	3.25	0	84.65	0	0.62	0	0	18.3	0	0	0	0	0	0	-3.26	-3.26
	Inverter	MV3-15	368357	4907477	2	0	0	100.3	100.3	1	4837.13	3.25	0	84.69	0	0.63	0	0	18.34	0	0	0	0	0	0	-3.35	-3.35
	Inverter	MV3-10	368167	4907669	2	0	0	100.3	100.3	1	4871.2	3.25	0	84.75	0	0.63	0	0	18.39	0	0	0	0	0	0	-3.46	-3.46
	Inverter	MV3-16	368514	4907475	2	0	0	100.3	100.3	1	4937.26	3.25	0	84.87	0	0.64	0	0	18.49	0	0	0	0	0	0	-3.68	-3.68
	Inverter	MV3-20	368689	4907317	2	0	0	100.3	100.3	1	4938.68	3.25	0	84.87	0	0.64	0	0	18.49	0	0	0	0	0	0	-3.69	-3.69
	Inverter	MV3-3	367939	4907927	2	0	0	100.3	100.3	1	4954.57	3.25	0	84.9	0	0.64	0	0	18.51	0	0	0	0	0	0	-3.74	-3.74
	Inverter	MV3-11	368346	4907662	2	0	0	100.3	100.3	1	4974.18	3.25	0	84.93	0	0.64	0	0	18.54	0	0	0	0	0	0	-3.8	-3.8
	Inverter	MV3-6	368162	4907834	2	0	0	100.3	100.3	1	5001.95	3.25	0	84.98	0	0.64	0	0	18.58	0	0	0	0	0	0	-3.9	-3.9
	Inverter	MV3-14	368684	4907498	2	0	0	100.3	100.3	1	5067.52	3.25	0	85.1	0	0.65	0	0	18.68	0	0	0	0	0	0	-4.11	-4.11
	Inverter	MV3-9	368512	4907703	2	0	0	100.3	100.3	1	5110.11	3.25	0	85.17	0	0.65	0	0	18.74	0	0	0	0	0	0	-4.25	-4.25
	Inverter	MV3-8	368680	4907712	2	0	0	100.3	100.3	1	5225.09	3.25	0	85.36	0	0.66	0	0	18.91	0	0	0	0	0	0	-4.62	-4.62
	Inverters	G_Inv1	366526.4	4903225.8	2	0	0	87.7	87.7	1	1361.04	3.25	0	73.68	0	2.5	0	0	1.88	0	0	0	0	0	0	9.61	9.61
	Inverter	MV6-3	370207	4907140	2	0	0	100.3	100.3	1	5986.71	3.25	0	86.54	0	0.7	0	0	19.98	0	0	0	0	0	0	-6.91	-6.91
	Inverter	MV6-2	370085	4907339	2	0	0	100.3	100.3	1	6003.27	3.25	0	86.57	0	0.7	0	0	20	0	0	0	0	0	0	-6.96	-6.96
	Inverters	G_Inv3	366583.7	4903091.4	2	0	0	87.7	87.7	1	1469.37	3.25	0	74.34	0	2.51	0	0	2.01	0	0	0	0	0	0	8.8	8.8
	Inverters	G_Inv2	366676.9	4903239.1	2	0	0	87.7	87.7	1	1496.35	3.25	0	74.5	0	2.52	0	0	2.04	0	0	0	0	0	0	8.6	8.6
	Inverter	MV4-7	369035	4909001	2	0	0	100.3	100.3	1	6458.96	3.25	0	87.2	0	0.71	0	0	20.61	0	0	0	0	0	0	-8.21	-8.21
	Inverter	MV4-11	369264	4908855	2	0	0	100.3	100.3	1	6479.43	3.25	0	87.23	0	0.71	0	0	20.63	0	0	0	0	0	0	-8.27	-8.27
	Inverter	MV4-10	369312	4908858	2	0	0	100.3	100.3	1	6511.48	3.25	0	87.27	0	0.71	0	0	20.67	0	0	0	0	0	0	-8.35	-8.35
	Inverter	MV4-8	369256	4909001	2	0	0	100.3	100.3	1	6590.19	3.25	0	87.38	0	0.72	0	0	20.78	0	0	0	0	0	0	-8.56	-8.56
	Inverter	MV4-9	369289	4909001	2	0	0	100.3	100.3	1	6610.2	3.25	0	87.4	0	0.72	0	0	20.8	0	0	0	0	0	0	-8.61	-8.61
	Inverter	MV4-4	369027	4909199	2	0	0	100.3	100.3	1	6616.33	3.25	0	87.41	0	0.71	0	0	20.81	0	0	0	0	0	0	-8.63	-8.63
	Inverter	MV4-6	369243	4909192	2	0	0	100.3	100.3	1	6735.64	3.25	0	87.57	0	0.71	0	0	20.96	0	0	0	0	0	0	-8.93	-8.93
	Inverter	MV4-5	369289	4909199	2	0	0	100.3	100.3	1	6768.5	3.25	0	87.61	0	0.71	0	0	21.01	0	0	0	0	0	0	-9.02	-9.02
	Inverter	MV4-1	369011	4909397	2	0	0	100.3	100.3	1	6771.42	3.25	0	87.61	0	0.71	0	0	21.01	0	0	0	0	0	0	-9.03	-9.03
	Inverters	G_Inv5	366638.5	4902958.1	2	0	0	87.7	87.7	1	1581.07	3.25	0	74.98	0	2.53	0	0	2.14	0	0	0	0	0	0	8.01	8.01
	Inverter	MV5-5	370015	4908690	2	0	0	100.3	100.3	1	6847.44	3.25	0	87.71	0	0.71	0	0	21.11	0	0	0	0	0	0	-9.22	-9.22
	Inverters	G_Inv4	366732.8	4903105	2	0	0	87.7	87.7	1	1598.4	3.25	0	75.07	0	2.53	0	0	2.16	0	0	0	0	0	0	7.89	7.89
	Inverter	MV4-3	369229	4909397	2	0	0	100.3	100.3	1	6894.22	3.25	0	87.77	0	0.71	0	0	21.17	0	0	0	0	0	0	-9.34	-9.34
	Inverter	MV4-2	369272	4909397	2	0	0	100.3	100.3	1	6918.99	3.25	0	87.8	0	0.71	0	0	21.2	0	0	0	0	0	0	-9.4	-9.4
	Inverter	MV5-2	370006	4908853	2	0	0	100.3	100.3	1	6959.78	3.25	0	87.85	0	0.71	0	0	21.25	0	0	0	0	0	0	-9.5	-9.5
	Inverter	MV5-4	370324	4908707	2	0	0	100.3	100.3	1	7076.92	3.25	0	88	0	0.71	0	0	21.4	0	0	0	0	0	0	-9.79	-9.79
	Inverter	MV5-3	370231	4908851	2	0	0	100.3	100.3	1	7113.33	3.25	0	88.04	0	0.71	0	0	21.44	0	0	0	0	0	0	-9.88	-9.88
	Inverter	MV5-1	370020	4909142	2	0	0	100.3	100.3	1	7183.54	3.25	0	88.13	0	0.7	0	0	21.53	0	0	0	0	0	0	-10.05	-10.05
	Inverters	G_Inv7	366694.6	4902824.7	2	0	0	87.7	87.7	1	1698.81	3.25	0	75.6	0	2.55	0	0	2.28	0	0	0	0	0	0	7.23	7.23
	Inverters	G_Inv6	366788.5	4902972	2	0	0	87.7	87.7	1	1706.05	3.25	0	75.64	0	2.55	0	0	2.29	0	0	0	0	0	0	7.18	7.18
	Inverters	G_Inv8	366844.5	4902838.5	2	0	0	87.7	87.7	1	1819.27	3.25	0	76.2	0	2.56	0	0	2.42	0	0	0	0	0	0	6.48	6.48
	Inverters	G_Inv9	366750.9	4902691.8	2	0	0	87.7	87.7	1	1820.31	3.25	0	76.2	0	2.56	0	0	2.42	0	0	0	0	0	0	6.47	6.47
	Inverters	G_Inv10	366900.7	4902704.8	2	0	0	87.7	87.7	1	1936.98	3.25	0	76.74	0	2.58	0	0	2.56	0	0	0	0	0	0	5.78	5.78
	Inverter	MV6-1	370235	4907364	2	0	0	97.3	97.3	1	6138.88	3.25	0	86.76	0	0.71	0	0	20.18	0	0	0	0	0	0	-10.34	-10.34
	Inverter	MV1-3	364440	4906039	2	0	0	89.1	89.1	1	2433.37	3.25	0	78.72	0	1.01	0	0	8.74	0	0	0	0	0	0	0.58	0.58
	DSTATCOM - 10 MVAR #2	DSAT2	369403	4908757	2.5	0	0	96.6	96.6	1	6490.13	3.5	0	87.25	0	3.81	0	0	4.07	0	0	0	0	0	0	1.51	1.51
	DSTATCOM - 10 MVAR #1	DSAT1	369437	4908757	2.5	0	0	96.6	96.6	1	6511.83	3.5	0	87.27	0	3.81	0	0	4.08	0	0	0	0	0	0	1.47	1.47
	Inverter	MV2-2	365977	4906654	2	0	0	89.1	89.1	1	2986.6	3.25	0	80.5	0	1.14	0	0	9.6	0	0	0	0	0	0	-2.19	-2.19
	SubstationTransformer	W_ST	369711.17	4906112.3	2.5	0	0	92	92	1	5028.34	4.25	0	85.03	0	1.64	2.32	0.26	8.65	0	0	0	0	0	0	-5.67	-5.67
	Inverter	MV3-22	368656	4907142	2	0	0	89.1	89.1	1	4790.51	3.25	0	84.61	0	1.59	0	0	12.18	0	0	0	0	0	0	-9.32	-9.32
	Westbrook Inverter Enclosur	W_INV3	369508	4906164	2	0	0	89.1	89.1	1	4875.27	3.25	0	84.76	0	1.61	0	0	12.3	0	0	0	0	0	0	-9.61	-9.61

Westbrook Inverter Enclosur	W_INV2	369374	4906388	2	0	0	89.1	89.1	1	4876.62	3.25	0	84.76	0	1.61	0	0	12.3	0	0	0	0	0	0	-9.61	-9.61
Westbrook Inverter Enclosur	W_INV4	369673	4906164	2	0	0	89.1	89.1	1	5019.32	3.25	0	85.01	0	1.64	0	0	12.49	0	0	0	0	0	0	-10.09	-10.09
Inverter	MV3-5	368340	4907843	2	0	0	89.1	89.1	1	5114.08	3.25	0	85.18	0	1.67	0	0	12.62	0	0	0	0	0	0	-10.4	-10.4
Inverter	MV3-1	368156	4907976	2	0	0	89.1	89.1	1	5115.1	3.25	0	85.18	0	1.67	0	0	12.62	0	0	0	0	0	0	-10.4	-10.4
Westbrook Inverter Enclosur	W_INV7	369780	4906417	2	0	0	89.1	89.1	1	5237.51	3.25	0	85.38	0	1.7	0	0	12.78	0	0	0	0	0	0	-10.8	-10.8
Westbrook Inverter Enclosur	W_INV5	369719	4906574	2	0	0	89.1	89.1	1	5267.51	3.25	0	85.43	0	1.71	0	0	12.82	0	0	0	0	0	0	-10.9	-10.9
Inverter	MV3-4	368502	4907925	2	0	0	89.1	89.1	1	5277.5	3.25	0	85.45	0	1.71	0	0	12.83	0	0	0	0	0	0	-10.93	-10.93
Inverter	MV3-2	368671	4907928	2	0	0	89.1	89.1	1	5384.94	3.25	0	85.62	0	1.73	0	0	12.97	0	0	0	0	0	0	-11.27	-11.27
Westbrook Inverter Enclosur	W_INV6	369875	4906578	2	0	0	89.1	89.1	1	5401.97	3.25	0	85.65	0	1.74	0	0	12.99	0	0	0	0	0	0	-11.33	-11.33
Fixed Reactor Bank 1	FRB1	369378	4908755	6	0	0	89.8	89.8	1	6472.7	5.25	0	87.22	0	-0.35	0	0	10.23	0	0	0	0	0	0	-7.32	-7.32
Fixed Reactor Bank 2	FRB2	369464	4908755	6	0	0	89.8	89.8	1	6527.6	5.25	0	87.3	0	-0.34	0	0	10.29	0	0	0	0	0	0	-7.46	-7.46
Inverter	MV4-15	369176	4908481	2	0	0	89.1	89.1	1	6132.77	3.25	0	86.75	0	1.92	0	0	13.93	0	0	0	0	0	0	-13.54	-13.54
Inverter	MV4-13	369051	4908605	2	0	0	89.1	89.1	1	6151.3	3.25	0	86.78	0	1.92	0	0	13.95	0	0	0	0	0	0	-13.6	-13.6
Inverter	MV4-14	369176	4908507	2	0	0	89.1	89.1	1	6152.84	3.25	0	86.78	0	1.92	0	0	13.95	0	0	0	0	0	0	-13.6	-13.6
Inverter	MV4-12	369043	4908803	2	0	0	89.1	89.1	1	6303.89	3.25	0	86.99	0	1.96	0	0	14.14	0	0	0	0	0	0	-14.04	-14.04
Inverter	MV5-6	369982	4908507	2	0	0	89.1	89.1	1	6693.4	3.25	0	87.51	0	2.05	0	0	14.62	0	0	0	0	0	0	-15.13	-15.13
Westbrook Inverter Enclosur	W_INV1	369409	4906578	2	0	0	86.1	86.1	1	5010.76	3.25	0	85	0	1.64	0	0	12.48	0	0	0	0	0	0	-13.06	-13.06
Inverter	MV6-4	370250	4906966	2	0	0	86.1	86.1	1	5926.07	3.25	0	86.46	0	1.87	0	0	13.67	0	0	0	0	0	0	-15.93	-15.93
Inverter Transformer	MV1-14 T	365157	4905049	2	0	0	69.4	69.4	1	1302.02	3.25	0	73.29	0	1.88	0	0	4.2	0	0	0	0	0	0	-10.02	-10.02
Inverter Transformer	MV1-13 T	364725	4905241	2	0	0	69.4	69.4	1	1586.02	3.25	0	75.01	0	2.01	0	0	4.53	0	0	0	0	0	0	-12.2	-12.2
Westbrook Inverter Transfor	W_INVTR1	369403	4906578	2	0	0	78.2	78.2	1	5005.8	3.25	0	84.99	0	-3.18	0	0	2.41	0	0	0	0	0	0	-5.98	-5.98
Inverter Transformer	MV1-10 T	365010	4905564	2	0	0	69.4	69.4	1	1830.73	3.25	0	76.25	0	2.11	0	0	4.79	0	0	0	0	0	0	-13.8	-13.8
Westbrook Inverter Transfor	W_INVTR2	369368	4906388	2	0	0	77.3	77.3	1	4871.58	3.25	0	84.75	0	-3.15	0	0	2.37	0	0	0	0	0	0	-6.63	-6.63
Westbrook Inverter Transfor	W_INVTR3	369514	4906164	2	0	0	77.3	77.3	1	4880.48	3.25	0	84.77	0	-3.15	0	0	2.37	0	0	0	0	0	0	-6.65	-6.65
Westbrook Inverter Transfor	W_INVTR4	369679	4906164	2	0	0	77.3	77.3	1	5024.58	3.25	0	85.02	0	-3.18	0	0	2.42	0	0	0	0	0	0	-6.92	-6.92
Inverter Transformer	MV1-7 T	364919	4905782	2	0	0	69.4	69.4	1	2060.33	3.25	0	77.28	0	2.2	0	0	5.03	0	0	0	0	0	0	-15.15	-15.15
Westbrook Inverter Transfor	W_INVTR7	369786	4906417	2	0	0	77.3	77.3	1	5242.68	3.25	0	85.39	0	-3.23	0	0	2.5	0	0	0	0	0	0	-7.32	-7.32
Westbrook Inverter Transfor	W_INVTR5	369725	4906574	2	0	0	77.3	77.3	1	5272.57	3.25	0	85.44	0	-3.23	0	0	2.51	0	0	0	0	0	0	-7.37	-7.37
Westbrook Inverter Transfor	W_INVTR6	369881	4906578	2	0	0	77.3	77.3	1	5407.08	3.25	0	85.66	0	-3.26	0	0	2.55	0	0	0	0	0	0	-7.61	-7.61
Inverter Transformer	MV2-1 T	365836	4906816	2	0	0	69.4	69.4	1	3115.62	3.25	0	80.87	0	2.54	0	0	5.98	0	0	0	0	0	0	-20.04	-20.04
Inverter Transformer	MV1-15 T	365309	4904994	2	0	0	56.1	56.1	1	1242.58	3.25	0	72.89	0	0.1	0	0	5.45	0	0	0	0	0	0	-22.38	-22.38
Inverter Transformer	MV6-4 T	370244	4906966	2	0	0	69.4	69.4	1	5921.03	3.25	0	86.45	0	3.18	0	0	7.97	0	0	0	0	0	0	-28.24	-28.24
Inverter Transformer	MV6-1 T	370230	4907364	2	0	0	69.4	69.4	1	6134.84	3.25	0	86.76	0	3.21	0	0	8.1	0	0	0	0	0	0	-28.71	-28.71
Inverter Transformer	MV1-12 T	365044	4905386	2	0	0	56.1	56.1	1	1649.72	3.25	0	75.35	0	0.26	0	0	6.33	0	0	0	0	0	0	-25.88	-25.88
Inverter Transformer	MV1-11 T	364649	4905414	2	0	0	56.1	56.1	1	1774.65	3.25	0	75.98	0	0.31	0	0	6.59	0	0	0	0	0	0	-26.83	-26.83
Inverter Transformer	MV1-8 T	364782	4905647	2	0	0	56.1	56.1	1	1957.13	3.25	0	76.83	0	0.39	0	0	6.96	0	0	0	0	0	0	-28.12	-28.12
Inverter Transformer	MV1-9 T	364555	4905646	2	0	0	56.1	56.1	1	2024.89	3.25	0	77.13	0	0.41	0	0	7.09	0	0	0	0	0	0	-28.58	-28.58
Inverter Transformer	MV1-4 T	364821	4905918	2	0	0	56.1	56.1	1	2212.29	3.25	0	77.9	0	0.49	0	0	7.45	0	0	0	0	0	0	-29.79	-29.79
Inverter Transformer	MV1-5 T	364676	4905892	2	0	0	56.1	56.1	1	2221.23	3.25	0	77.93	0	0.5	0	0	7.47	0	0	0	0	0	0	-29.84	-29.84
Inverter Transformer	MV1-6 T	364482	4905835	2	0	0	56.1	56.1	1	2227.49	3.25	0	77.96	0	0.5	0	0	7.48	0	0	0	0	0	0	-29.88	-29.88
Inverter Transformer	MV1-2 T	364759	4906063	2	0	0	56.1	56.1	1	2367.08	3.25	0	78.48	0	0.56	0	0	7.75	0	0	0	0	0	0	-30.73	-30.73
Inverter Transformer	MV1-3 T	364435	4906039	2	0	0	56.1	56.1	1	2435.08	3.25	0	78.73	0	0.59	0	0	7.87	0	0	0	0	0	0	-31.13	-31.13
Inverter Transformer	MV1-1 T	364721	4906166	2	0	0	56.1	56.1	1	2475.91	3.25	0	78.87	0	0.61	0	0	7.95	0	0	0	0	0	0	-31.37	-31.37
Inverter Transformer	MV2-4 T	365590	4906628	2	0	0	56.1	56.1	1	2893.62	3.25	0	80.23	0	0.78	0	0	8.69	0	0	0	0	0	0	-33.64	-33.64
Inverter Transformer	MV2-3 T	365814	4906641	2	0	0	56.1	56.1	1	2939.55	3.25	0	80.37	0	0.8	0	0	8.77	0	0	0	0	0	0	-33.88	-33.88
Inverter Transformer	MV2-2 T	365982	4906654	2	0	0	56.1	56.1	1	2987.78	3.25	0	80.51	0	0.82	0	0	8.85	0	0	0	0	0	0	-34.12	-34.12
Inverter Transformer	MV3-18 T	367757	4907412	2	0	0	56.1	56.1	1	4424.34	3.25	0	83.92	0	1.41	0	0	11.07	0	0	0	0	0	0	-40.34	-40.34
Inverter Transformer	MV3-12 T	367674	4907594	2	0	0	56.1	56.1	1	4531.49	3.25	0	84.12	0	1.45	0	0	11.22	0	0	0	0	0	0	-40.74	-40.74
Inverter Transformer	MV3-13 T	367958	4907577	2	0	0	56.1	56.1	1	4674.35	3.25	0	84.39	0	1.51	0	0	11.42	0	0	0	0	0	0	-41.26	-41.26
Inverter Transformer	MV3-21 T	368484	4907206	2	0	0	56.1	56.1	1	4717.22	3.25	0	84.47	0	1.52	0	0	11.48	0	0	0	0	0	0	-41.41	-41.41
Inverter Transformer	MV3-17 T	368183	4907472	2	0	0	56.1	56.1	1	4724.09	3.25	0	84.49	0	1.52	0	0	11.48	0	0	0	0	0	0	-41.44	-41.44
Inverter Transformer	MV3-19 T	368352	4907347	2	0	0	56.1	56.1	1	4734.49	3.25	0	84.51	0	1.53	0	0	11.5	0	0	0	0	0	0	-41.47	-41.47
Inverter Transformer	MV3-22 T	368661	4907142	2	0	0	56.1	56.1	1	4794.04	3.25	0	84.61	0	1.55	0	0	11.58	0	0	0	0	0	0	-41.69	-41.69
Inverter Transformer	MV3-7 T	367951	4907754	2	0	0	56.1	56.1	1	4816.36	3.25	0	84.65	0	1.56	0	0	11.61	0	0	0	0	0	0	-41.76	-41.76
Inverter Transformer	MV3-15 T	368351	4907477	2	0	0	56.1	56.1	1	4833.3	3.25	0	84.68	0	1.56	0	0	11.63	0	0	0	0	0	0	-41.82	-41.82
Inverter Transformer	MV3-10 T	368162	4907669	2	0	0	56.1	56.1	1	4868.23	3.25	0	84.75	0	1.58	0	0	11.68	0	0	0	0	0	0	-41.95	-41.95
Inverter Transformer	MV3-16 T	368509	4907475	2	0	0	56.1	56.1	1	4933.97	3.25	0	84.86	0	1.6	0	0	11.77	0	0	0	0	0	0	-42.17	-42.17
Inverter Transformer	MV3-20 T	368683	4907317	2	0	0	56.1	56.1	1	4934.53	3.25	0	84.86	0	1.6	0	0	11.77	0	0	0	0	0	0	-42.18	-42.18
Inverter Transformer	MV3-3 T	367944	4907927	2	0	0	56.1	56.1	1	4957.27	3.25	0	84.9	0	1.61	0	0	11.8	0	0	0	0	0	0	-42.25	-42.25
Inverter Transformer	MV3-11 T	368340	4907662	2	0	0	56.1	56.1	1	4970.48	3.25	0	84.93	0	1.61	0	0	11.82	0	0	0	0	0	0	-42.3	-42.3
Inverter Transformer	MV3-6 T	368156	4907834	2	0	0	56.1	56.1	1	4998.48	3.25	0	84.98	0	1.62	0	0	11.85	0	0	0	0	0	0	-42.4	-42.4
Inverter Transformer	MV3-14 T	368678	4907498	2	0	0	56.1	56.1	1	5063.48	3.25	0	85.09	0	1.65	0	0	11.94	0	0	0	0	0	0	-42.62	-42.62
Inverter Transformer	MV3-5 T	368335	4907843	2	0	0	56.1	56.1	1	5111.08	3.25	0	85.17	0	1.67	0	0	12	0	0	0	0	0	0	-42.78	-42.78
Inverter Transformer	MV3-1 T	368150	4907976	2	0	0	56.1	56.1	1	5111.72	3.25	0	85.17	0	1.67	0	0	12	0	0	0	0	0	0	-42.78	-42.78
Inverter Transformer	MV3-9 T	368517	4907703	2	0	0	56.1	56.1	1	5113.28	3.25	0	85.17	0	1.67	0	0	12	0	0	0	0	0	0	-42.78	-42.78
Inverter Transformer	MV3-8 T	368685	4907712	2	0	0	56.1	56.1	1	5228.35	3.25	0	85.37	0	1.71	0	0	12.15	0	0	0	0	0	0	-43.17	-43.17
Inverter Transformer	MV3-4 T	368507	4907925	2	0	0	56.1	56.1	1	5280.56	3.25	0	85.45	0	1.73	0	0	12.22	0	0	0	0	0	0	-43.34	-43.34
Inverter Transformer	MV3-2 T	368677	4907928	2	0	0	56.1	56.1	1	5388.73	3.25	0	85.63	0	1.76	0	0	12.36	0	0	0	0	0	0	-43.69	-43.69
Inverter Transformer	MV6-3 T	370202	4907140	2	0	0	56.1	56.1	1	5982.59	3.25	0	86.54	0	1.96	0	0	13.08	0	0	0	0	0	0	-45.52	-45.52
Inverter Transformer	MV6-2 T	370091	4907339	2	0	0	56.1	56.1	1	6008.08	3.25	0	86.57	0	1.97	0	0	13.11	0	0	0	0	0	0	-45.6	-45.6
Inverter Transformer	MV4-15 T	369170	4908481	2	0	0	56.1	56.1	1	6128.95	3.25	0	86.75	0	2.01	0	0	13.25	0	0	0	0	0	0	-45.95	-45.95
Inverter Transformer	MV4-13 T	369057	4908605	2	0	0	56.1	56.1	1	6154.99	3.25	0	86.78	0	2.01	0	0	13.28	0	0	0	0	0	0	-46.02	-46.02
Inverter Transformer	MV4-14 T	369182	4908507	2	0	0	56.1	56.1	1	6156.65	3.25	0	86.79	0	2.01	0	0	13.29	0	0	0	0	0	0	-46.03	-46.03
Inverter Transformer	MV4-12 T	369049	4908803	2	0	0	56.1	56.1	1	6307.49	3.25	0	87	0	2.06	0	0	13.46	0	0	0	0	0	0	-46.46	-46.46

	Inverter Transformer	MV4-7 T	369040	4909001	2	0	0	56.1	56.1	1	6461.88	3.25	0	87.21	0	2.11	0	0	13.64	0	0	0	0	0	0	-46.89	-46.89
	Inverter Transformer	MV4-11 T	369269	4908855	2	0	0	56.1	56.1	1	6482.52	3.25	0	87.23	0	2.11	0	0	13.66	0	0	0	0	0	0	-46.95	-46.95
	Inverter Transformer	MV4-10 T	369307	4908858	2	0	0	56.1	56.1	1	6508.37	3.25	0	87.27	0	2.12	0	0	13.69	0	0	0	0	0	0	-47.02	-47.02
	Inverter Transformer	MV4-8 T	369262	4909001	2	0	0	56.1	56.1	1	6593.82	3.25	0	87.38	0	2.15	0	0	13.79	0	0	0	0	0	0	-47.25	-47.25
	Inverter Transformer	MV4-9 T	369284	4909001	2	0	0	56.1	56.1	1	6607.16	3.25	0	87.4	0	2.15	0	0	13.8	0	0	0	0	0	0	-47.29	-47.29
	Inverter Transformer	MV4-4 T	369033	4909199	2	0	0	56.1	56.1	1	6619.74	3.25	0	87.42	0	2.15	0	0	13.81	0	0	0	0	0	0	-47.33	-47.33
	Inverter Transformer	MV5-6 T	369987	4908507	2	0	0	56.1	56.1	1	6696.92	3.25	0	87.52	0	2.17	0	0	13.9	0	0	0	0	0	0	-47.53	-47.53
	Inverter Transformer	MV4-6 T	369249	4909192	2	0	0	56.1	56.1	1	6739.18	3.25	0	87.57	0	2.19	0	0	13.95	0	0	0	0	0	0	-47.65	-47.65
	Inverter Transformer	MV4-5 T	369283	4909199	2	0	0	56.1	56.1	1	6764.94	3.25	0	87.61	0	2.19	0	0	13.97	0	0	0	0	0	0	-47.72	-47.72
	Inverter Transformer	MV4-1 T	369017	4909397	2	0	0	56.1	56.1	1	6774.74	3.25	0	87.62	0	2.2	0	0	13.99	0	0	0	0	0	0	-47.74	-47.74
	Inverter Transformer	MV5-5 T	370021	4908690	2	0	0	56.1	56.1	1	6851.6	3.25	0	87.72	0	2.22	0	0	14.07	0	0	0	0	0	0	-47.95	-47.95
	Inverter Transformer	MV4-3 T	369234	4909397	2	0	0	56.1	56.1	1	6897.09	3.25	0	87.77	0	2.23	0	0	14.12	0	0	0	0	0	0	-48.06	-48.06
	Inverter Transformer	MV4-2 T	369267	4909397	2	0	0	56.1	56.1	1	6916.1	3.25	0	87.8	0	2.24	0	0	14.14	0	0	0	0	0	0	-48.11	-48.11
	Inverter Transformer	MV5-2 T	370011	4908853	2	0	0	56.1	56.1	1	6963.18	3.25	0	87.86	0	2.25	0	0	14.19	0	0	0	0	0	0	-48.24	-48.24
	Inverter Transformer	MV5-4 T	370330	4908707	2	0	0	56.1	56.1	1	7081.21	3.25	0	88	0	2.28	0	0	14.32	0	0	0	0	0	0	-48.54	-48.54
	Inverter Transformer	MV5-3 T	370237	4908851	2	0	0	56.1	56.1	1	7117.51	3.25	0	88.05	0	2.29	0	0	14.36	0	0	0	0	0	0	-48.63	-48.63
	Inverter Transformer	MV5-1 T	370015	4909142	2	0	0	56.1	56.1	1	7180.23	3.25	0	88.12	0	2.31	0	0	14.42	0	0	0	0	0	0	-48.79	-48.79
	Line Reactor	NGR	369421	4908787.5	5	0	0	45.4	45.4	1	6525.11	5.25	0	87.29	0	3.23	1.37	0.09	2.67	0	0	0	0	0	0	-49.2	-49.2
Limit. Valu	0	0																								
Level D/N:	24.1308	24.1308																								

Receiver: Existing Noise Receptor
ID: G-93
X: 365766.2
Y: 4901673.1
Z: 4.5
Ground: 0

ISO	Description	ID	X	Y	Z	Ground	ReflOrd	LxT	LxN	L/A	Dist.	hm	Freq	Adiv	K0b	Agr	Abar	z	Aatm	Afol	Ahous	Cmet	CmetN	Dc	RL	LtotT	LtotN
	Sol_Luce Substation	S_Substation	369426	4908792	3.5	0	0	112.1	112.1	1	8004.55	5.25	0	89.07	0	1.56	2.27	0.31	11.66	0	0	0	0	0	0	7.53	7.53
	Inverter	MV1-15	365315	4904994	2	0	0	100.3	100.3	1	3351.41	3.25	0	81.5	0	0.43	0	0	15.98	0	0	0	0	0	0	2.4	2.4
	Inverter	MV1-12	365038	4905386	2	0	0	100.3	100.3	1	3783.64	3.25	0	82.56	0	0.5	0	0	16.7	0	0	0	0	0	0	0.56	0.56
	Inverter	MV1-11	364655	4905414	2	0	0	100.3	100.3	1	3902.45	3.25	0	82.83	0	0.51	0	0	16.89	0	0	0	0	0	0	0.08	0.08
	Inverter	MV1-8	364788	4905647	2	0	0	100.3	100.3	1	4092.53	3.25	0	83.24	0	0.54	0	0	17.2	0	0	0	0	0	0	-0.66	-0.66
	Inverter	MV1-9	364561	4905646	2	0	0	100.3	100.3	1	4151.68	3.25	0	83.36	0	0.55	0	0	17.29	0	0	0	0	0	0	-0.89	-0.89
	Inverter	MV1-4	364815	4905918	2	0	0	100.3	100.3	1	4350.17	3.25	0	83.77	0	0.57	0	0	17.6	0	0	0	0	0	0	-1.63	-1.63
	Inverter	MV1-6	364477	4905835	2	0	0	100.3	100.3	1	4357	3.25	0	83.78	0	0.57	0	0	17.61	0	0	0	0	0	0	-1.66	-1.66
	Inverter	MV1-5	364671	4905892	2	0	0	100.3	100.3	1	4358.74	3.25	0	83.79	0	0.57	0	0	17.61	0	0	0	0	0	0	-1.66	-1.66
	Inverter	MV1-2	364753	4906063	2	0	0	100.3	100.3	1	4505.31	3.25	0	84.07	0	0.59	0	0	17.84	0	0	0	0	0	0	-2.19	-2.19
	Inverter	MV1-1	364715	4906166	2	0	0	100.3	100.3	1	4614.24	3.25	0	84.28	0	0.6	0	0	18	0	0	0	0	0	0	-2.58	-2.58
	Inverter	MV1-14	365163	4905049	2	0	0	97.3	97.3	1	3429.37	3.25	0	81.7	0	0.44	0	0	16.11	0	0	0	0	0	0	-0.94	-0.94
	Inverter	MV2-4	365586	4906624	2	0	0	100.3	100.3	1	4954.18	3.25	0	84.9	0	0.64	0	0	18.51	0	0	0	0	0	0	-3.74	-3.74
	Inverter	MV2-3	365820	4906641	2	0	0	100.3	100.3	1	4968.19	3.25	0	84.92	0	0.64	0	0	18.53	0	0	0	0	0	0	-3.78	-3.78
	Inverter	MV1-13	364731	4905241	2	0	0	97.3	97.3	1	3715.04	3.25	0	82.4	0	0.49	0	0	16.59	0	0	0	0	0	0	-2.16	-2.16
	Gardiner Substation	G_Sub	366586.3	4903349.9	2.5	0	0	90.8	90.8	1	1866.61	3.5	0	76.42	0	-0.2	0	0	4.14	0	0	0	0	0	0	10.41	10.41
	Inverter	MV1-10	365004	4905564	2	0	0	97.3	97.3	1	3964.85	3.25	0	82.96	0	0.52	0	0	16.99	0	0	0	0	0	0	-3.17	-3.17
	Inverter	MV1-7	364925	4905782	2	0	0	97.3	97.3	1	4194.12	3.25	0	83.45	0	0.55	0	0	17.36	0	0	0	0	0	0	-4.05	-4.05
	Inverter	MV3-18	367752	4907412	2	0	0	100.3	100.3	1	6072.76	3.25	0	86.67	0	0.71	0	0	20.09	0	0	0	0	0	0	-7.15	-7.15
	Inverters	G_Inv9	366750.9	4902691.8	2	0	0	87.7	87.7	1	1416.82	3.25	0	74.03	0	2.51	0	0	1.94	0	0	0	0	0	0	9.18	9.18
	Inverter	MV3-21	368478	4907206	2	0	0	100.3	100.3	1	6161.72	3.38	0	86.79	0	1.7	2.46	0	20.21	0	0	0	0	0	0	-10.86	-10.86
	Inverter	MV3-12	367668	4907594	2	0	0	100.3	100.3	1	6218.83	3.25	0	86.87	0	0.71	0	0	20.29	0	0	0	0	0	0	-7.56	-7.56
	Inverter	MV3-19	368357	4907347	2	0	0	100.3	100.3	1	6237.42	3.25	0	86.9	0	0.71	0	0	20.31	0	0	0	0	0	0	-7.61	-7.61
	Inverter	MV3-17	368178	4907472	2	0	0	100.3	100.3	1	6280.45	3.25	0	86.96	0	0.71	0	0	20.37	0	0	0	0	0	0	-7.73	-7.73
	Inverter	MV3-13	367963	4907577	2	0	0	100.3	100.3	1	6299.36	3.25	0	86.99	0	0.71	0	0	20.39	0	0	0	0	0	0	-7.78	-7.78
	Inverters	G_Inv7	366694.6	4902824.7	2	0	0	87.7	87.7	1	1479.23	3.25	0	74.4	0	2.52	0	0	2.02	0	0	0	0	0	0	8.72	8.72
	Inverter	MV3-20	368689	4907317	2	0	0	100.3	100.3	1	6355.81	3.25	0	87.06	0	0.71	0	0	20.47	0	0	0	0	0	0	-7.93	-7.93
	Inverter	MV3-15	368357	4907477	2	0	0	100.3	100.3	1	6355.9	3.25	0	87.06	0	0.71	0	0	20.47	0	0	0	0	0	0	-7.93	-7.93
	Inverter	MV3-16	368514	4907475	2	0	0	100.3	100.3	1	6419.69	3.25	0	87.15	0	0.71	0	0	20.55	0	0	0	0	0	0	-8.11	-8.11
	Inverter	MV3-10	368167	4907669	2	0	0	100.3	100.3	1	6458.69	3.25	0	87.2	0	0.71	0	0	20.6	0	0	0	0	0	0	-8.21	-8.21
	Inverter	MV3-7	367945	4907754	2	0	0	100.3	100.3	1	6459.45	3.25	0	87.2	0	0.71	0	0	20.61	0	0	0	0	0	0	-8.21	-8.21
	Inverter	MV3-14	368684	4907498	2	0	0	100.3	100.3	1	6514.83	3.25	0	87.28	0	0.71	0	0	20.68	0	0	0	0	0	0	-8.36	-8.36
	Inverter	MV3-11	368346	4907662	2	0	0	100.3	100.3	1	6520.91	3.25	0	87.29	0	0.71	0	0	20.69	0	0	0	0	0	0	-8.38	-8.38
	Inverters	G_Inv10	366900.7	4902704.8	2	0	0	87.7	87.7	1	1533.46	3.25	0	74.71	0	2.52	0	0	2.08	0	0	0	0	0	0	8.34	8.34
	Inverter	MV3-6	368162	4907834	2	0	0	100.3	100.3	1	6610.34	3.25	0	87.4	0	0.72	0	0	20.8	0	0	0	0	0	0	-8.61	-8.61
	Inverter	MV3-3	367939	4907927	2	0	0	100.3	100.3	1	6620.6	3.25	0	87.42	0	0.71	0	0	20.82	0	0	0	0	0	0	-8.64	-8.64
	Inverter	MV3-9	368512	4907703	2	0	0	100.3	100.3	1	6625.64	3.25	0	87.42	0	0.71	0	0	20.82	0	0	0	0	0	0	-8.65	-8.65
	Inverters	G_Inv5	366638.5	4902958.1	2	0	0	87.7	87.7	1	1553.11	3.25	0	74.82	0	2.53	0	0	2.11	0	0	0	0	0	0	8.2	8.2
	Inverter	MV3-8	368680	4907712	2	0	0	100.3	100.3	1	6705.11	3.25	0	87.53	0	0.71	0	0	20.92	0	0	0	0	0	0	-8.86	-8.86
	Inverters	G_Inv8	366844.5	4902838.5	2	0	0	87.7	87.7	1	1587.73	3.25	0	75.02	0	2.53	0	0	2.15	0	0	0	0	0	0	7.97	7.97
	Inverters	G_Inv3	366583.7	4903091.4	2	0	0	87.7	87.7	1	1637.04	3.25	0	75.28	0	2.54	0	0	2.21	0	0	0	0	0	0	7.63	7.63
	Inverter	MV6-3	370207	4907140	2	0	0	100.3	100.3	1	7043.27	3.25	0	87.96	0	0.71	0	0	21.35	0	0	0	0	0	0	-9.71	-9.71
	Inverters	G_Inv6	366788.5	4902972	2	0	0	87.7	87.7	1	1652.95	3.25	0	75.37	0	2.54	0	0	2.23	0	0	0	0	0	0	7.53	7.53
	Inverter	MV6-2	370085	4907339	2	0	0	100.3	100.3	1	7124.22	3.25	0	88.05	0	0.71	0	0	21.45	0	0	0	0	0	0	-9.9	-9.9
	Inverter	MV2-1	365842	4906816	2	0	0	97.3	97.3	1	5143.46	3.25	0	85.23	0	0.65	0	0	18.79	0	0	0	0	0	0	-7.36	-7.36

Inverters	G_Inv4	366732.8	4903105	2	0	0	87.7	87.7	1	1727.62	3.25	0	75.75	0	2.55	0	0	2.32	0	0	0	0	0	0	7.05	7.05
Inverters	G_Inv1	366526.4	4903225.8	2	0	0	87.7	87.7	1	1728.81	3.25	0	75.75	0	2.55	0	0	2.32	0	0	0	0	0	0	7.04	7.04
Inverters	G_Inv2	366676.9	4903239.1	2	0	0	87.7	87.7	1	1811.56	3.25	0	76.16	0	2.56	0	0	2.41	0	0	0	0	0	0	6.52	6.52
Inverter	MV4-11	369264	4908855	2	0	0	100.3	100.3	1	7988.39	3.29	0	89.05	0	1.8	2.14	0	22.49	0	0	0	0	0	0	-15.16	-15.16
Inverter	MV4-10	369312	4908858	2	0	0	100.3	100.3	1	8012.21	3.25	0	89.08	0	0.65	0	0	22.52	0	0	0	0	0	0	-11.93	-11.93
Inverter	MV4-7	369035	4909001	2	0	0	100.3	100.3	1	8023.91	3.25	0	89.09	0	0.65	0	0	22.53	0	0	0	0	0	0	-11.96	-11.96
Inverter	MV4-8	369256	4909001	2	0	0	100.3	100.3	1	8116.45	3.25	0	89.19	0	0.64	0	0	22.64	0	0	0	0	0	0	-12.16	-12.16
Inverter	MV4-9	369289	4909001	2	0	0	100.3	100.3	1	8130.7	3.25	0	89.2	0	0.64	0	0	22.66	0	0	0	0	0	0	-12.19	-12.19
Inverter	MV4-4	369027	4909199	2	0	0	100.3	100.3	1	8201.95	3.25	0	89.28	0	0.63	0	0	22.74	0	0	0	0	0	0	-12.34	-12.34
Inverter	MV5-5	370015	4908690	2	0	0	100.3	100.3	1	8203	3.25	0	89.28	0	0.63	0	0	22.74	0	0	0	0	0	0	-12.34	-12.34
Inverter	MV4-6	369243	4909192	2	0	0	100.3	100.3	1	8283.84	3.25	0	89.36	0	0.63	0	0	22.83	0	0	0	0	0	0	-12.51	-12.51
Inverter	MV4-5	369289	4909199	2	0	0	100.3	100.3	1	8309.59	3.25	0	89.39	0	0.62	0	0	22.86	0	0	0	0	0	0	-12.56	-12.56
Inverter	MV5-2	370006	4908853	2	0	0	100.3	100.3	1	8338.28	3.25	0	89.42	0	0.62	0	0	22.89	0	0	0	0	0	0	-12.62	-12.62
Inverter	MV4-1	369011	4909397	2	0	0	100.3	100.3	1	8377.79	3.25	0	89.46	0	0.62	0	0	22.94	0	0	0	0	0	0	-12.7	-12.7
Inverter	MV5-4	370324	4908707	2	0	0	100.3	100.3	1	8381.49	3.25	0	89.47	0	0.62	0	0	22.94	0	0	0	0	0	0	-12.71	-12.71
Inverter	MV5-3	370231	4908851	2	0	0	100.3	100.3	1	8453.21	3.25	0	89.54	0	0.61	0	0	23.02	0	0	0	0	0	0	-12.86	-12.86
Inverter	MV4-3	369229	4909397	2	0	0	100.3	100.3	1	8464.61	3.25	0	89.55	0	0.61	0	0	23.03	0	0	0	0	0	0	-12.88	-12.88
Inverter	MV4-2	369272	4909397	2	0	0	100.3	100.3	1	8482.29	3.25	0	89.57	0	0.6	0	0	23.05	0	0	0	0	0	0	-12.92	-12.92
Inverter	MV5-1	370020	4909142	2	0	0	100.3	100.3	1	8595.31	3.25	0	89.69	0	0.59	0	0	23.18	0	0	0	0	0	0	-13.14	-13.14
Inverter	MV6-1	370235	4907364	2	0	0	97.3	97.3	1	7235.78	3.25	0	88.19	0	0.7	0	0	21.59	0	0	0	0	0	0	-13.17	-13.17
DSTATCOM - 10 MVAR #2	DSAT2	369403	4908757	2.5	0	0	96.6	96.6	1	7962.91	3.5	0	89.02	0	3.88	0	0	4.75	0	0	0	0	0	0	-1.03	-1.03
DSTATCOM - 10 MVAR #1	DSAT1	369437	4908757	2.5	0	0	96.6	96.6	1	7978.5	3.5	0	89.04	0	3.88	0	0	4.76	0	0	0	0	0	0	-1.05	-1.05
SubstationTransformer	W_ST	369711.17	4906112.3	2.5	0	0	92	92	1	5938.77	3.5	0	86.47	0	0.75	0	-0.11	9.68	0	0	0	0	0	0	-4.93	-4.93
Inverter	MV1-3	364440	4906039	2	0	0	89.1	89.1	1	4562.88	3.25	0	84.18	0	1.53	0	0	11.87	0	0	0	0	0	0	-8.53	-8.53
Inverter	MV2-2	365977	4906654	2	0	0	89.1	89.1	1	4985.36	3.25	0	84.95	0	1.64	0	0	12.44	0	0	0	0	0	0	-9.98	-9.98
Westbrook Inverter Enclosur	W_INV3	369508	4906164	2	0	0	89.1	89.1	1	5845.45	3.25	0	86.34	0	1.85	0	0	13.57	0	0	0	0	0	0	-12.69	-12.69
Westbrook Inverter Enclosur	W_INV2	369374	4906388	2	0	0	89.1	89.1	1	5936.88	3.25	0	86.47	0	1.87	0	0	13.68	0	0	0	0	0	0	-12.97	-12.97
Westbrook Inverter Enclosur	W_INV4	369673	4906164	2	0	0	89.1	89.1	1	5952.42	3.25	0	86.49	0	1.87	0	0	13.7	0	0	0	0	0	0	-13.01	-13.01
Inverter	MV3-22	368656	4907142	2	0	0	89.1	89.1	1	6185.45	3.25	0	86.83	0	1.93	0	0	13.99	0	0	0	0	0	0	-13.7	-13.7
Westbrook Inverter Enclosur	W_INV7	369780	4906417	2	0	0	89.1	89.1	1	6214.11	3.25	0	86.87	0	1.94	0	0	14.03	0	0	0	0	0	0	-13.78	-13.78
Westbrook Inverter Enclosur	W_INV5	369719	4906574	2	0	0	89.1	89.1	1	6296.3	3.25	0	86.98	0	1.96	0	0	14.13	0	0	0	0	0	0	-14.01	-14.01
Westbrook Inverter Enclosur	W_INV6	369875	4906578	2	0	0	89.1	89.1	1	6398.46	3.25	0	87.12	0	1.98	0	0	14.26	0	0	0	0	0	0	-14.31	-14.31
Inverter	MV3-5	368340	4907843	2	0	0	89.1	89.1	1	6685.22	3.25	0	87.5	0	2.05	0	0	14.61	0	0	0	0	0	0	-15.11	-15.11
Inverter	MV3-1	368156	4907976	2	0	0	89.1	89.1	1	6740.75	3.25	0	87.57	0	2.07	0	0	14.68	0	0	0	0	0	0	-15.26	-15.26
Inverter	MV3-4	368502	4907925	2	0	0	89.1	89.1	1	6824.28	3.25	0	87.68	0	2.09	0	0	14.78	0	0	0	0	0	0	-15.49	-15.49
Inverter	MV3-2	368671	4907928	2	0	0	89.1	89.1	1	6896.5	3.25	0	87.77	0	2.1	0	0	14.86	0	0	0	0	0	0	-15.68	-15.68
Fixed Reactor Bank 1	FRB1	369378	4908755	6	0	0	89.8	89.8	1	7949.74	5.25	0	89.01	0	-0.18	0	0	11.61	0	0	0	0	0	0	-10.66	-10.66
Fixed Reactor Bank 2	FRB2	369464	4908755	6	0	0	89.8	89.8	1	7989.18	5.25	0	89.05	0	-0.17	0	0	11.64	0	0	0	0	0	0	-10.74	-10.74
Inverter	MV4-15	369176	4908481	2	0	0	89.1	89.1	1	7614.08	3.25	0	88.63	0	2.27	0	0	15.7	0	0	0	0	0	0	-17.55	-17.55
Inverter	MV4-14	369176	4908507	2	0	0	89.1	89.1	1	7637.34	3.25	0	88.66	0	2.28	0	0	15.73	0	0	0	0	0	0	-17.61	-17.61
Inverter	MV4-13	369051	4908605	2	0	0	89.1	89.1	1	7670.8	3.25	0	88.7	0	2.29	0	0	15.77	0	0	0	0	0	0	-17.69	-17.69
Inverter	MV4-12	369043	4908803	2	0	0	89.1	89.1	1	7846.84	3.25	0	88.89	0	2.33	0	0	15.97	0	0	0	0	0	0	-18.13	-18.13
Inverter	MV5-6	369982	4908507	2	0	0	89.1	89.1	1	8029.64	3.25	0	89.09	0	2.37	0	0	16.17	0	0	0	0	0	0	-18.58	-18.58
Westbrook Inverter Enclosur	W_INV1	369409	4906578	2	0	0	86.1	86.1	1	6109.67	3.25	0	86.72	0	1.91	0	0	13.9	0	0	0	0	0	0	-16.48	-16.48
Inverter	MV6-4	370250	4906966	2	0	0	86.1	86.1	1	6936.8	3.25	0	87.82	0	2.11	0	0	14.91	0	0	0	0	0	0	-18.79	-18.79
Westbrook Inverter Transfor	W_INVTR1	369403	4906578	2	0	0	78.2	78.2	1	6106.09	3.25	0	86.72	0	-3.39	0	0	2.77	0	0	0	0	0	0	-7.86	-7.86
Westbrook Inverter Transfor	W_INVTR3	369514	4906164	2	0	0	77.3	77.3	1	5849.29	3.25	0	86.34	0	-3.34	0	0	2.69	0	0	0	0	0	0	-8.35	-8.35
Westbrook Inverter Transfor	W_INVTR2	369368	4906388	2	0	0	77.3	77.3	1	5933.23	3.25	0	86.47	0	-3.36	0	0	2.72	0	0	0	0	0	0	-8.49	-8.49
Westbrook Inverter Transfor	W_INVTR4	369679	4906164	2	0	0	77.3	77.3	1	5956.36	3.25	0	86.5	0	-3.36	0	0	2.73	0	0	0	0	0	0	-8.53	-8.53
Westbrook Inverter Transfor	W_INVTR7	369786	4906417	2	0	0	77.3	77.3	1	6217.99	3.25	0	86.87	0	-3.41	0	0	2.81	0	0	0	0	0	0	-8.93	-8.93
Westbrook Inverter Transfor	W_INVTR5	369725	4906574	2	0	0	77.3	77.3	1	6300.07	3.25	0	86.99	0	-3.42	0	0	2.83	0	0	0	0	0	0	-9.06	-9.06
Westbrook Inverter Transfor	W_INVTR6	369881	4906578	2	0	0	77.3	77.3	1	6402.31	3.25	0	87.13	0	-3.44	0	0	2.87	0	0	0	0	0	0	-9.21	-9.21
Inverter Transformer	MV1-14 T	365157	4905049	2	0	0	69.4	69.4	1	3430.43	3.25	0	81.71	0	2.63	0	0	6.24	0	0	0	0	0	0	-21.23	-21.23
Inverter Transformer	MV1-13 T	364725	4905241	2	0	0	69.4	69.4	1	3716.72	3.25	0	82.4	0	2.71	0	0	6.46	0	0	0	0	0	0	-22.23	-22.23
Inverter Transformer	MV1-10 T	365010	4905564	2	0	0	69.4	69.4	1	3963.7	3.25	0	82.96	0	2.78	0	0	6.65	0	0	0	0	0	0	-23.04	-23.04
Inverter Transformer	MV1-7 T	364919	4905782	2	0	0	69.4	69.4	1	4195.33	3.25	0	83.46	0	2.83	0	0	6.82	0	0	0	0	0	0	-23.76	-23.76
Inverter Transformer	MV2-1 T	365836	4906816	2	0	0	69.4	69.4	1	5143.37	3.25	0	85.22	0	3.04	0	0	7.48	0	0	0	0	0	0	-26.39	-26.39
Inverter Transformer	MV6-4 T	370244	4906966	2	0	0	69.4	69.4	1	6932.93	3.25	0	87.82	0	3.31	0	0	8.56	0	0	0	0	0	0	-30.34	-30.34
Inverter Transformer	MV6-1 T	370230	4907364	2	0	0	69.4	69.4	1	7232.69	3.25	0	88.19	0	3.34	0	0	8.73	0	0	0	0	0	0	-30.91	-30.91
Inverter Transformer	MV1-15 T	365309	4904994	2	0	0	56.1	56.1	1	3352.23	3.25	0	81.51	0	0.98	0	0	9.45	0	0	0	0	0	0	-35.88	-35.88
Inverter Transformer	MV1-12 T	365044	4905386	2	0	0	56.1	56.1	1	3782.49	3.25	0	82.56	0	1.16	0	0	10.13	0	0	0	0	0	0	-37.78	-37.78
Inverter Transformer	MV1-11 T	364649	4905414	2	0	0	56.1	56.1	1	3904.16	3.25	0	82.83	0	1.21	0	0	10.31	0	0	0	0	0	0	-38.29	-38.29
Inverter Transformer	MV1-8 T	364782	4905647	2	0	0	56.1	56.1	1	4093.96	3.25	0	83.24	0	1.28	0	0	10.59	0	0	0	0	0	0	-39.06	-39.06
Inverter Transformer	MV1-9 T	364555	4905646	2	0	0	56.1	56.1	1	4153.43	3.25	0	83.37	0	1.3	0	0	10.68	0	0	0	0	0	0	-39.3	-39.3
Inverter Transformer	MV1-4 T	364821	4905918	2	0	0	56.1	56.1	1	4348.86	3.25	0	83.77	0	1.38	0	0	10.96	0	0	0	0	0	0	-40.05	-40.05
Inverter Transformer	MV1-6 T	364482	4905835	2	0	0	56.1	56.1	1	4355.52	3.25	0	83.78	0	1.38	0	0	10.97	0	0	0	0	0	0	-40.08	-40.08
Inverter Transformer	MV1-5 T	364676	4905892	2	0	0	56.1	56.1	1	4357.48	3.25	0	83.78	0	1.38	0	0	10.97	0	0	0	0	0	0	-40.09	-40.09
Inverter Transformer	MV1-2 T	364759	4906063	2	0	0	56.1	56.1	1	4503.96	3.25	0	84.07	0	1.44	0	0	11.18	0	0	0	0	0	0	-40.64	-40.64
Inverter Transformer	MV1-3 T	364435	4906039	2	0	0	56.1	56.1	1	4564.34	3.25	0	84.19	0	1.46	0	0	11.27	0	0	0	0	0	0	-40.86	-40.86
Inverter Transformer	MV1-1 T	364721	4906166	2	0	0	56.1	56.1	1	4612.87	3.25	0	84.28	0	1.48	0	0	11.33	0	0	0	0	0	0	-41.04	-41.04
Inverter Transformer	MV2-4 T	365590	4906628	2	0	0	56.1	56.1	1	4958.03	3.25	0	84.91	0	1.61	0	0	11.8	0	0	0	0	0	0	-42.26	-42.26
Inverter Transformer	MV2-3 T	365814	4906641	2	0	0	56.1	56.1	1	4968.13	3.25	0	84.92	0	1.61	0	0	11.81	0	0	0	0	0	0	-42.29	-42.29
Inverter Transformer	MV2-2 T	365982	4906654	2	0	0	56.1	56.1	1	4985.57	3.25	0	84.95	0	1.62	0	0	11.84	0	0	0	0	0	0	-42.35	-42.35
Inverter Transformer	MV3-18 T	367757	4907412	2	0	0	56.1	56.1	1	6074.39	3.25	0	86.67	0	1.99	0	0	13.19	0	0	0	0	0	0	-45.79	-45.79

	Inverter Transformer	MV3-21 T	368484	4907206	2	0	0	56.1	56.1	1	6164.37	3.38	0	86.8	0	2.85	1.75	0	13.3	0	0	0	0	0	0	-48.64	-48.64
	Inverter Transformer	MV3-22 T	368661	4907142	2	0	0	56.1	56.1	1	6187.79	3.25	0	86.83	0	2.02	0	0	13.32	0	0	0	0	0	0	-46.12	-46.12
	Inverter Transformer	MV3-12 T	367674	4907594	2	0	0	56.1	56.1	1	6220.67	3.25	0	86.88	0	2.03	0	0	13.36	0	0	0	0	0	0	-46.21	-46.21
	Inverter Transformer	MV3-19 T	368352	4907347	2	0	0	56.1	56.1	1	6235.34	3.25	0	86.9	0	2.04	0	0	13.38	0	0	0	0	0	0	-46.26	-46.26
	Inverter Transformer	MV3-17 T	368183	4907472	2	0	0	56.1	56.1	1	6282.37	3.25	0	86.96	0	2.05	0	0	13.43	0	0	0	0	0	0	-46.39	-46.39
	Inverter Transformer	MV3-13 T	367958	4907577	2	0	0	56.1	56.1	1	6297.62	3.25	0	86.98	0	2.06	0	0	13.45	0	0	0	0	0	0	-46.43	-46.43
	Inverter Transformer	MV3-20 T	368683	4907317	2	0	0	56.1	56.1	1	6353.06	3.25	0	87.06	0	2.07	0	0	13.51	0	0	0	0	0	0	-46.59	-46.59
	Inverter Transformer	MV3-15 T	368351	4907477	2	0	0	56.1	56.1	1	6353.46	3.25	0	87.06	0	2.07	0	0	13.51	0	0	0	0	0	0	-46.59	-46.59
	Inverter Transformer	MV3-16 T	368509	4907475	2	0	0	56.1	56.1	1	6417.55	3.25	0	87.15	0	2.09	0	0	13.59	0	0	0	0	0	0	-46.77	-46.77
	Inverter Transformer	MV3-10 T	368162	4907669	2	0	0	56.1	56.1	1	6456.83	3.25	0	87.2	0	2.1	0	0	13.63	0	0	0	0	0	0	-46.88	-46.88
	Inverter Transformer	MV3-7 T	367951	4907754	2	0	0	56.1	56.1	1	6461.48	3.25	0	87.21	0	2.11	0	0	13.64	0	0	0	0	0	0	-46.89	-46.89
	Inverter Transformer	MV3-14 T	368678	4907498	2	0	0	56.1	56.1	1	6512.15	3.25	0	87.27	0	2.12	0	0	13.69	0	0	0	0	0	0	-47.03	-47.03
	Inverter Transformer	MV3-11 T	368340	4907662	2	0	0	56.1	56.1	1	6518.54	3.25	0	87.28	0	2.12	0	0	13.7	0	0	0	0	0	0	-47.05	-47.05
	Inverter Transformer	MV3-6 T	368156	4907834	2	0	0	56.1	56.1	1	6608.16	3.25	0	87.4	0	2.15	0	0	13.8	0	0	0	0	0	0	-47.29	-47.29
	Inverter Transformer	MV3-3 T	367944	4907927	2	0	0	56.1	56.1	1	6622.24	3.25	0	87.42	0	2.15	0	0	13.82	0	0	0	0	0	0	-47.33	-47.33
	Inverter Transformer	MV3-9 T	368517	4907703	2	0	0	56.1	56.1	1	6627.71	3.25	0	87.43	0	2.15	0	0	13.82	0	0	0	0	0	0	-47.35	-47.35
	Inverter Transformer	MV3-5 T	368335	4907843	2	0	0	56.1	56.1	1	6683.29	3.25	0	87.5	0	2.17	0	0	13.88	0	0	0	0	0	0	-47.5	-47.5
	Inverter Transformer	MV3-8 T	368685	4907712	2	0	0	56.1	56.1	1	6707.29	3.25	0	87.53	0	2.18	0	0	13.91	0	0	0	0	0	0	-47.56	-47.56
	Inverter Transformer	MV3-1 T	368150	4907976	2	0	0	56.1	56.1	1	6738.62	3.25	0	87.57	0	2.19	0	0	13.95	0	0	0	0	0	0	-47.65	-47.65
	Inverter Transformer	MV3-4 T	368507	4907925	2	0	0	56.1	56.1	1	6826.29	3.25	0	87.68	0	2.21	0	0	14.04	0	0	0	0	0	0	-47.88	-47.88
	Inverter Transformer	MV3-2 T	368677	4907928	2	0	0	56.1	56.1	1	6899.02	3.25	0	87.78	0	2.23	0	0	14.12	0	0	0	0	0	0	-48.07	-48.07
	Inverter Transformer	MV6-3 T	370202	4907140	2	0	0	56.1	56.1	1	7040.12	3.25	0	87.95	0	2.27	0	0	14.27	0	0	0	0	0	0	-48.44	-48.44
	Inverter Transformer	MV6-2 T	370091	4907339	2	0	0	56.1	56.1	1	7127.86	3.25	0	88.06	0	2.29	0	0	14.37	0	0	0	0	0	0	-48.66	-48.66
	Inverter Transformer	MV4-15 T	369170	4908481	2	0	0	56.1	56.1	1	7611.4	3.25	0	88.63	0	2.42	0	0	14.87	0	0	0	0	0	0	-49.86	-49.86
	Inverter Transformer	MV4-14 T	369182	4908507	2	0	0	56.1	56.1	1	7640.02	3.25	0	88.66	0	2.42	0	0	14.9	0	0	0	0	0	0	-49.93	-49.93
	Inverter Transformer	MV4-13 T	369057	4908605	2	0	0	56.1	56.1	1	7673.37	3.25	0	88.7	0	2.43	0	0	14.93	0	0	0	0	0	0	-50.01	-50.01
	Inverter Transformer	MV4-12 T	369049	4908803	2	0	0	56.1	56.1	1	7849.35	3.25	0	88.9	0	2.48	0	0	15.11	0	0	0	0	0	0	-50.42	-50.42
	Inverter Transformer	MV4-11 T	369269	4908855	2	0	0	56.1	56.1	1	7990.58	3.29	0	89.05	0	3.22	1.41	0	15.25	0	0	0	0	0	0	-52.87	-52.87
	Inverter Transformer	MV4-10 T	369307	4908858	2	0	0	56.1	56.1	1	8010	3.25	0	89.07	0	2.51	0	0	15.27	0	0	0	0	0	0	-50.79	-50.79
	Inverter Transformer	MV4-7 T	369040	4909001	2	0	0	56.1	56.1	1	8025.95	3.25	0	89.09	0	2.52	0	0	15.28	0	0	0	0	0	0	-50.83	-50.83
	Inverter Transformer	MV5-6 T	369987	4908507	2	0	0	56.1	56.1	1	8032.27	3.25	0	89.1	0	2.52	0	0	15.29	0	0	0	0	0	0	-50.84	-50.84
	Inverter Transformer	MV4-8 T	369262	4909001	2	0	0	56.1	56.1	1	8119.04	3.25	0	89.19	0	2.54	0	0	15.37	0	0	0	0	0	0	-51.04	-51.04
	Inverter Transformer	MV4-9 T	369284	4909001	2	0	0	56.1	56.1	1	8128.53	3.25	0	89.2	0	2.54	0	0	15.38	0	0	0	0	0	0	-51.06	-51.06
	Inverter Transformer	MV4-4 T	369033	4909199	2	0	0	56.1	56.1	1	8204.34	3.25	0	89.28	0	2.56	0	0	15.46	0	0	0	0	0	0	-51.23	-51.23
	Inverter Transformer	MV5-5 T	370021	4908690	2	0	0	56.1	56.1	1	8206.11	3.25	0	89.28	0	2.56	0	0	15.46	0	0	0	0	0	0	-51.24	-51.24
	Inverter Transformer	MV4-6 T	369249	4909192	2	0	0	56.1	56.1	1	8286.36	3.25	0	89.37	0	2.57	0	0	15.53	0	0	0	0	0	0	-51.42	-51.42
	Inverter Transformer	MV4-5 T	369283	4909199	2	0	0	56.1	56.1	1	8307.05	3.25	0	89.39	0	2.58	0	0	15.55	0	0	0	0	0	0	-51.46	-51.46
	Inverter Transformer	MV5-2 T	370011	4908853	2	0	0	56.1	56.1	1	8340.82	3.25	0	89.42	0	2.59	0	0	15.59	0	0	0	0	0	0	-51.54	-51.54
	Inverter Transformer	MV4-1 T	369017	4909397	2	0	0	56.1	56.1	1	8380.12	3.25	0	89.47	0	2.59	0	0	15.62	0	0	0	0	0	0	-51.62	-51.62
	Inverter Transformer	MV5-4 T	370330	4908707	2	0	0	56.1	56.1	1	8384.75	3.25	0	89.47	0	2.6	0	0	15.63	0	0	0	0	0	0	-51.63	-51.63
	Inverter Transformer	MV5-3 T	370237	4908851	2	0	0	56.1	56.1	1	8456.38	3.25	0	89.54	0	2.61	0	0	15.7	0	0	0	0	0	0	-51.79	-51.79
	Inverter Transformer	MV4-3 T	369234	4909397	2	0	0	56.1	56.1	1	8466.66	3.25	0	89.55	0	2.61	0	0	15.71	0	0	0	0	0	0	-51.81	-51.81
	Inverter Transformer	MV4-2 T	369267	4909397	2	0	0	56.1	56.1	1	8480.23	3.25	0	89.57	0	2.62	0	0	15.72	0	0	0	0	0	0	-51.84	-51.84
	Inverter Transformer	MV5-1 T	370015	4909142	2	0	0	56.1	56.1	1	8592.83	3.25	0	89.68	0	2.64	0	0	15.82	0	0	0	0	0	0	-52.09	-52.09
	Line Reactor	NGR	369421	4908787.5	5	0	0	45.4	45.4	1	7998.27	5.25	0	89.06	0	3.2	1.38	0.1	3.27	0	0	0	0	0	0	-51.55	-51.55
Limit. Valu	0	0																								
Level D/N:	19.9037	19.9037																								

Receiver: Existing Noise Receptor
ID: G-94
X: 365288.2
Y: 4903813
Z: 4.5
Ground: 0

ISO	Description	ID	X	Y	Z	Ground	ReflOrd	LxT	LxN	L/A	Dist.	hm	Freq	Adiv	K0b	Agr	Abar	z	Aatm	Afol	Ahous	Cmet	CmetN	Dc	RL	LtotT	LtotN
	Inverter	MV1-15	365315	4904994	2	0	0	100.3	100.3	1	1181.31	3.25	0	72.45	0	-0.16	0	0	11.47	0	0	0	0	0	0	16.56	16.56
	Inverter	MV1-12	365038	4905386	2	0	0	100.3	100.3	1	1592.78	3.25	0	75.04	0	0	0	0	12.55	0	0	0	0	0	0	12.72	12.72
	Sol_Luce Substation	S_Substation	369426	4908792	3.5	0	0	112.1	112.1	1	6473.93	5.25	0	87.22	0	1.27	2.55	0.27	10.23	0	0	0	0	0	0	10.8	10.8
	Inverter	MV1-11	364655	4905414	2	0	0	100.3	100.3	1	1721.67	3.25	0	75.72	0	0.04	0	0	12.85	0	0	0	0	0	0	11.7	11.7
	Inverter	MV1-14	365163	4905049	2	0	0	97.3	97.3	1	1242.33	3.25	0	72.88	0	-0.14	0	0	11.65	0	0	0	0	0	0	12.92	12.92
	Inverter	MV1-8	364788	4905647	2	0	0	100.3	100.3	1	1900.99	3.25	0	76.58	0	0.1	0	0	13.25	0	0	0	0	0	0	10.38	10.38
	Inverter	MV1-9	364561	4905646	2	0	0	100.3	100.3	1	1971.98	3.25	0	76.9	0	0.12	0	0	13.4	0	0	0	0	0	0	9.89	9.89
	Inverter	MV1-4	364815	4905918	2	0	0	100.3	100.3	1	2157.53	3.25	0	77.68	0	0.17	0	0	13.79	0	0	0	0	0	0	8.67	8.67
	Inverter	MV1-13	364731	4905241	2	0	0	97.3	97.3	1	1532.86	3.25	0	74.71	0	-0.02	0	0	12.41	0	0	0	0	0	0	10.22	10.22
	Inverter	MV1-5	364671	4905892	2	0	0	100.3	100.3	1	2168.68	3.25	0	77.72	0	0.18	0	0	13.81	0	0	0	0	0	0	8.6	8.6
	Inverter	MV1-6	364477	4905835	2	0	0	100.3	100.3	1	2178.65	3.25	0	77.76	0	0.18	0	0	13.83	0	0	0	0	0	0	8.54	8.54
	Inverter	MV1-2	364753	4906063	2	0	0	100.3	100.3	1	2312.78	3.25	0	78.28	0	0.21	0	0	14.1	0	0	0	0	0	0	7.72	7.72
	Inverter	MV1-1	364715	4906166	2	0	0	100.3	100.3	1	2421.81	3.25	0	78.68	0	0.24	0	0	14.31	0	0	0	0	0	0	7.08	7.08
	Inverter	MV1-10	365004	4905564	2	0	0	97.3	97.3	1	1773.92	3.25	0	75.98	0	0.06	0	0	12.97	0	0	0	0	0	0	8.3	8.3
	Inverter	MV2-4	365586	4906624	2	0	0	100.3	100.3	1	2826.73	3.25	0	80.03	0	0.33	0	0	15.06	0	0	0	0	0	0	4.9	4.9
	Inverter	MV1-7	364925	4905782	2	0	0	97.3	97.3	1	2002.22	3.25	0	77.03	0	0.13	0	0	13.47	0	0	0	0	0	0	6.69	6.69
	Inverter	MV2-3	365820	4906641	2	0	0	100.3	100.3	1	2877.57	3.25	0	80.18	0	0.34	0	0	15.15	0	0	0	0	0	0	4.64	4.64
	Gardiner Substation	G_Sub	366586.3	4903349.9	2.5	0	0	90.8	90.8	1	1378.23	4.25	0	73.79	0	0.83	4.74	0.31	3.26	0	0	0	0	0	0	8.16	8.16

Inverter	MV2-1	365842	4906816	2	0	0	97.3	97.3	1	3053.64	3.25	0	80.7	0	0.37	0	0	15.47	0	0	0	0	0	0	0.78	0.78
Inverter	MV3-18	367752	4907412	2	0	0	100.3	100.3	1	4361.55	3.25	0	83.79	0	0.57	0	0	17.62	0	0	0	0	0	0	-1.67	-1.67
Inverter	MV3-12	367668	4907594	2	0	0	100.3	100.3	1	4467.6	3.25	0	84	0	0.59	0	0	17.78	0	0	0	0	0	0	-2.06	-2.06
Inverter	MV3-13	367963	4907577	2	0	0	100.3	100.3	1	4617.6	3.25	0	84.29	0	0.6	0	0	18.01	0	0	0	0	0	0	-2.59	-2.59
Inverter	MV3-21	368478	4907206	2	0	0	100.3	100.3	1	4656.96	3.25	0	84.36	0	0.61	0	0	18.07	0	0	0	0	0	0	-2.73	-2.73
Inverter	MV3-17	368178	4907472	2	0	0	100.3	100.3	1	4662.53	3.25	0	84.37	0	0.61	0	0	18.08	0	0	0	0	0	0	-2.75	-2.75
Inverter	MV3-19	368357	4907347	2	0	0	100.3	100.3	1	4680.46	3.25	0	84.41	0	0.61	0	0	18.1	0	0	0	0	0	0	-2.81	-2.81
Inverter	MV3-7	367945	4907754	2	0	0	100.3	100.3	1	4752.9	3.25	0	84.54	0	0.62	0	0	18.21	0	0	0	0	0	0	-3.06	-3.06
Inverter	MV3-15	368357	4907477	2	0	0	100.3	100.3	1	4779.38	3.25	0	84.59	0	0.62	0	0	18.25	0	0	0	0	0	0	-3.15	-3.15
Inverter	MV3-10	368167	4907669	2	0	0	100.3	100.3	1	4812.09	3.25	0	84.65	0	0.62	0	0	18.3	0	0	0	0	0	0	-3.26	-3.26
Inverter	MV3-16	368514	4907475	2	0	0	100.3	100.3	1	4880.17	3.25	0	84.77	0	0.63	0	0	18.4	0	0	0	0	0	0	-3.49	-3.49
Inverter	MV3-20	368689	4907317	2	0	0	100.3	100.3	1	4882.98	3.25	0	84.77	0	0.63	0	0	18.41	0	0	0	0	0	0	-3.5	-3.5
Inverter	MV3-3	367939	4907927	2	0	0	100.3	100.3	1	4894.05	3.25	0	84.79	0	0.63	0	0	18.42	0	0	0	0	0	0	-3.54	-3.54
Inverter	MV3-11	368346	4907662	2	0	0	100.3	100.3	1	4915.79	3.25	0	84.83	0	0.63	0	0	18.46	0	0	0	0	0	0	-3.61	-3.61
Inverter	MV3-6	368162	4907834	2	0	0	100.3	100.3	1	4942.39	3.25	0	84.88	0	0.64	0	0	18.5	0	0	0	0	0	0	-3.7	-3.7
Inverter	MV3-14	368684	4907498	2	0	0	100.3	100.3	1	5011.06	3.25	0	85	0	0.64	0	0	18.6	0	0	0	0	0	0	-3.93	-3.93
Inverter	MV3-9	368512	4907703	2	0	0	100.3	100.3	1	5052.23	3.25	0	85.07	0	0.65	0	0	18.66	0	0	0	0	0	0	-4.06	-4.06
Inverter	MV3-8	368680	4907712	2	0	0	100.3	100.3	1	5167.83	3.25	0	85.27	0	0.66	0	0	18.83	0	0	0	0	0	0	-4.44	-4.44
Inverters	G_Inv1	366526.4	4903225.8	2	0	0	87.7	87.7	1	1370.38	3.25	0	73.74	0	2.5	0	0	1.89	0	0	0	0	0	0	9.54	9.54
Inverter	MV6-3	370207	4907140	2	0	0	100.3	100.3	1	5938.31	3.25	0	86.47	0	0.7	0	0	19.91	0	0	0	0	0	0	-6.77	-6.77
Inverter	MV6-2	370085	4907339	2	0	0	100.3	100.3	1	5953.32	3.25	0	86.5	0	0.7	0	0	19.93	0	0	0	0	0	0	-6.82	-6.82
Inverters	G_Inv3	366583.7	4903091.4	2	0	0	87.7	87.7	1	1482.91	3.25	0	74.42	0	2.52	0	0	2.02	0	0	0	0	0	0	8.7	8.7
Inverter	MV4-7	369035	4909001	2	0	0	100.3	100.3	1	6399.52	3.25	0	87.12	0	0.71	0	0	20.53	0	0	0	0	0	0	-8.05	-8.05
Inverter	MV4-11	369264	4908855	2	0	0	100.3	100.3	1	6420.96	3.25	0	87.15	0	0.71	0	0	20.56	0	0	0	0	0	0	-8.11	-8.11
Inverters	G_Inv2	366676.9	4903239.1	2	0	0	87.7	87.7	1	1502.62	3.25	0	74.54	0	2.52	0	0	2.05	0	0	0	0	0	0	8.56	8.56
Inverter	MV4-10	369312	4908858	2	0	0	100.3	100.3	1	6453.14	3.25	0	87.2	0	0.71	0	0	20.6	0	0	0	0	0	0	-8.2	-8.2
Inverter	MV4-8	369256	4909001	2	0	0	100.3	100.3	1	6531.37	3.25	0	87.3	0	0.71	0	0	20.7	0	0	0	0	0	0	-8.4	-8.4
Inverter	MV4-9	369289	4909001	2	0	0	100.3	100.3	1	6551.47	3.25	0	87.33	0	0.71	0	0	20.73	0	0	0	0	0	0	-8.46	-8.46
Inverter	MV4-4	369027	4909199	2	0	0	100.3	100.3	1	6556.5	3.25	0	87.33	0	0.71	0	0	20.73	0	0	0	0	0	0	-8.47	-8.47
Inverter	MV4-6	369243	4909192	2	0	0	100.3	100.3	1	6676.38	3.25	0	87.49	0	0.71	0	0	20.89	0	0	0	0	0	0	-8.78	-8.78
Inverter	MV4-5	369289	4909199	2	0	0	100.3	100.3	1	6709.35	3.25	0	87.53	0	0.71	0	0	20.93	0	0	0	0	0	0	-8.87	-8.87
Inverter	MV4-1	369011	4909397	2	0	0	100.3	100.3	1	6711.21	3.25	0	87.54	0	0.71	0	0	20.93	0	0	0	0	0	0	-8.87	-8.87
Inverter	MV5-5	370015	4908690	2	0	0	100.3	100.3	1	6791.74	3.25	0	87.64	0	0.71	0	0	21.04	0	0	0	0	0	0	-9.08	-9.08
Inverter	MV4-3	369229	4909397	2	0	0	100.3	100.3	1	6834.54	3.25	0	87.69	0	0.71	0	0	21.09	0	0	0	0	0	0	-9.19	-9.19
Inverters	G_Inv5	366638.5	4902958.1	2	0	0	87.7	87.7	1	1598.18	3.25	0	75.07	0	2.53	0	0	2.16	0	0	0	0	0	0	7.89	7.89
Inverter	MV4-2	369272	4909397	2	0	0	100.3	100.3	1	6859.43	3.25	0	87.73	0	0.71	0	0	21.12	0	0	0	0	0	0	-9.25	-9.25
Inverter	MV5-2	370006	4908853	2	0	0	100.3	100.3	1	6903.57	3.25	0	87.78	0	0.71	0	0	21.18	0	0	0	0	0	0	-9.36	-9.36
Inverters	G_Inv4	366732.8	4903105	2	0	0	87.7	87.7	1	1608.77	3.25	0	75.13	0	2.53	0	0	2.17	0	0	0	0	0	0	7.82	7.82
Inverter	MV5-4	370324	4908707	2	0	0	100.3	100.3	1	7022.15	3.25	0	87.93	0	0.71	0	0	21.33	0	0	0	0	0	0	-9.65	-9.65
Inverter	MV5-3	370231	4908851	2	0	0	100.3	100.3	1	7057.81	3.25	0	87.97	0	0.71	0	0	21.37	0	0	0	0	0	0	-9.74	-9.74
Inverter	MV5-1	370020	4909142	2	0	0	100.3	100.3	1	7126.58	3.25	0	88.06	0	0.71	0	0	21.46	0	0	0	0	0	0	-9.91	-9.91
Inverters	G_Inv7	366694.6	4902824.7	2	0	0	87.7	87.7	1	1718.93	3.25	0	75.71	0	2.55	0	0	2.31	0	0	0	0	0	0	7.1	7.1
Inverters	G_Inv6	366788.5	4902972	2	0	0	87.7	87.7	1	1719.94	3.25	0	75.71	0	2.55	0	0	2.31	0	0	0	0	0	0	7.1	7.1
Inverters	G_Inv8	366844.5	4902838.5	2	0	0	87.7	87.7	1	1836.23	3.25	0	76.28	0	2.56	0	0	2.44	0	0	0	0	0	0	6.38	6.38
Inverters	G_Inv9	366750.9	4902691.8	2	0	0	87.7	87.7	1	1842.98	3.25	0	76.31	0	2.56	0	0	2.45	0	0	0	0	0	0	6.33	6.33
Inverters	G_Inv10	366900.7	4902704.8	2	0	0	87.7	87.7	1	1956.6	3.25	0	76.83	0	2.58	0	0	2.58	0	0	0	0	0	0	5.67	5.67
Inverter	MV6-1	370235	4907364	2	0	0	97.3	97.3	1	6089.37	3.25	0	86.69	0	0.71	0	0	20.11	0	0	0	0	0	0	-10.2	-10.2
Inverter	MV1-3	364440	4906039	2	0	0	89.1	89.1	1	2382.13	3.25	0	78.54	0	1	0	0	8.66	0	0	0	0	0	0	0.86	0.86
DSTATCOM - 10 MVAR #2	DSAT2	369403	4908757	2.5	0	0	96.6	96.6	1	6432.32	3.5	0	87.17	0	3.8	0	0	4.05	0	0	0	0	0	0	1.61	1.61
DSTATCOM - 10 MVAR #1	DSAT1	369437	4908757	2.5	0	0	96.6	96.6	1	6454.12	3.5	0	87.2	0	3.8	0	0	4.06	0	0	0	0	0	0	1.57	1.57
Inverter	MV2-2	365977	4906654	2	0	0	89.1	89.1	1	2923.31	3.25	0	80.32	0	1.13	0	0	9.5	0	0	0	0	0	0	-1.89	-1.89
SubstationTransformer	W_ST	369711.17	4906112.3	2.5	0	0	92	92	1	4984.91	4.25	0	84.95	0	1.63	2.33	0.26	8.6	0	0	0	0	0	0	-5.55	-5.55
Inverter	MV3-22	368656	4907142	2	0	0	89.1	89.1	1	4735.43	3.25	0	84.51	0	1.57	0	0	12.11	0	0	0	0	0	0	-9.13	-9.13
Westbrook Inverter Enclosur	W_INV2	369374	4906388	2	0	0	89.1	89.1	1	4829.53	3.25	0	84.68	0	1.6	0	0	12.23	0	0	0	0	0	0	-9.45	-9.45
Westbrook Inverter Enclosur	W_INV3	369508	4906164	2	0	0	89.1	89.1	1	4830.52	3.25	0	84.68	0	1.6	0	0	12.24	0	0	0	0	0	0	-9.46	-9.46
Westbrook Inverter Enclosur	W_INV4	369673	4906164	2	0	0	89.1	89.1	1	4975.31	3.25	0	84.94	0	1.63	0	0	12.43	0	0	0	0	0	0	-9.94	-9.94
Inverter	MV3-5	368340	4907843	2	0	0	89.1	89.1	1	5055.13	3.25	0	85.07	0	1.65	0	0	12.54	0	0	0	0	0	0	-10.21	-10.21
Inverter	MV3-1	368156	4907976	2	0	0	89.1	89.1	1	5055.18	3.25	0	85.07	0	1.65	0	0	12.54	0	0	0	0	0	0	-10.21	-10.21
Westbrook Inverter Enclosur	W_INV7	369780	4906417	2	0	0	89.1	89.1	1	5192.02	3.25	0	85.31	0	1.69	0	0	12.72	0	0	0	0	0	0	-10.65	-10.65
Inverter	MV3-4	368502	4907925	2	0	0	89.1	89.1	1	5218.91	3.25	0	85.35	0	1.69	0	0	12.75	0	0	0	0	0	0	-10.74	-10.74
Westbrook Inverter Enclosur	W_INV5	369719	4906574	2	0	0	89.1	89.1	1	5220.64	3.25	0	85.35	0	1.69	0	0	12.76	0	0	0	0	0	0	-10.75	-10.75
Inverter	MV3-2	368671	4907928	2	0	0	89.1	89.1	1	5326.97	3.25	0	85.53	0	1.72	0	0	12.9	0	0	0	0	0	0	-11.09	-11.09
Westbrook Inverter Enclosur	W_INV6	369875	4906578	2	0	0	89.1	89.1	1	5355.74	3.25	0	85.58	0	1.73	0	0	12.93	0	0	0	0	0	0	-11.18	-11.18
Fixed Reactor Bank 1	FRB1	369378	4908755	6	0	0	89.8	89.8	1	6414.81	5.25	0	87.14	0	-0.36	0	0	10.17	0	0	0	0	0	0	-7.18	-7.18
Fixed Reactor Bank 2	FRB2	369464	4908755	6	0	0	89.8	89.8	1	6469.98	5.25	0	87.22	0	-0.35	0	0	10.23	0	0	0	0	0	0	-7.32	-7.32
Inverter	MV4-15	369176	4908481	2	0	0	89.1	89.1	1	6074.97	3.25	0	86.67	0	1.9	0	0	13.86	0	0	0	0	0	0	-13.37	-13.37
Inverter	MV4-13	369051	4908605	2	0	0	89.1	89.1	1	6092.78	3.25	0	86.7	0	1.91	0	0	13.88	0	0	0	0	0	0	-13.43	-13.43
Inverter	MV4-14	369176	4908507	2	0	0	89.1	89.1	1	6094.97	3.25	0	86.7	0	1.91	0	0	13.88	0	0	0	0	0	0	-13.43	-13.43
Inverter	MV4-12	369043	4908803	2	0	0	89.1	89.1	1	6244.89	3.25	0	86.91	0	1.95	0	0	14.07	0	0	0	0	0	0	-13.87	-13.87
Inverter	MV5-6	369982	4908507	2	0	0	89.1	89.1	1	6638.18	3.25	0	87.44	0	2.04	0	0	14.55	0	0	0	0	0	0	-14.98	-14.98
Westbrook Inverter Enclosur	W_INV1	369409	4906578	2	0	0	86.1	86.1	1	4962.48	3.25	0	84.91	0	1.63	0	0	12.41	0	0	0	0	0	0	-12.9	-12.9
Inverter	MV6-4	370250	4906966	2	0	0	86.1	86.1	1	5878.85	3.25	0	86.39	0	1.86	0	0	13.61	0	0	0	0	0	0	-15.79	-15.79
Inverter Transformer	MV1-14 T	365157	4905049	2	0	0	69.4	69.4	1	1242.95	3.25	0	72.89	0	1.85	0	0	4.13	0	0	0	0	0	0	-9.51	-9.51
Inverter Transformer	MV1-13 T	364725	4905241	2	0	0	69.4	69.4	1	1535.05	3.25	0	74.72	0	1.99	0	0	4.47	0	0	0	0	0	0	-11.83	-11.83

Inverter Transformer	MV1-10 T	365010	4905564	2	0	0	69.4	69.4	1	1772.96	3.25	0	75.97	0	2.09	0	0	4.73	0	0	0	0	0	0	-13.44	-13.44
Westbrook Inverter Transfor	W_INVTR1	369403	4906578	2	0	0	78.2	78.2	1	4957.5	3.25	0	84.91	0	-3.17	0	0	2.4	0	0	0	0	0	0	-5.89	-5.89
Westbrook Inverter Transfor	W_INVTR2	369368	4906388	2	0	0	77.3	77.3	1	4824.46	3.25	0	84.67	0	-3.14	0	0	2.35	0	0	0	0	0	0	-6.54	-6.54
Westbrook Inverter Transfor	W_INVTR3	369514	4906164	2	0	0	77.3	77.3	1	4835.76	3.25	0	84.69	0	-3.14	0	0	2.36	0	0	0	0	0	0	-6.56	-6.56
Westbrook Inverter Transfor	W_INVTR4	369679	4906164	2	0	0	77.3	77.3	1	4980.6	3.25	0	84.95	0	-3.17	0	0	2.41	0	0	0	0	0	0	-6.84	-6.84
Inverter Transformer	MV1-7 T	364919	4905782	2	0	0	69.4	69.4	1	2003.32	3.25	0	77.03	0	2.17	0	0	4.97	0	0	0	0	0	0	-14.83	-14.83
Westbrook Inverter Transfor	W_INVTR7	369786	4906417	2	0	0	77.3	77.3	1	5197.21	3.25	0	85.32	0	-3.22	0	0	2.48	0	0	0	0	0	0	-7.24	-7.24
Westbrook Inverter Transfor	W_INVTR5	369725	4906574	2	0	0	77.3	77.3	1	5225.74	3.25	0	85.36	0	-3.22	0	0	2.49	0	0	0	0	0	0	-7.29	-7.29
Westbrook Inverter Transfor	W_INVTR6	369881	4906578	2	0	0	77.3	77.3	1	5360.88	3.25	0	85.58	0	-3.25	0	0	2.53	0	0	0	0	0	0	-7.53	-7.53
Inverter Transformer	MV2-1 T	365836	4906816	2	0	0	69.4	69.4	1	3052.56	3.25	0	80.69	0	2.52	0	0	5.93	0	0	0	0	0	0	-19.79	-19.79
Inverter Transformer	MV1-15 T	365309	4904994	2	0	0	56.1	56.1	1	1181.19	3.25	0	72.45	0	0.08	0	0	5.31	0	0	0	0	0	0	-21.78	-21.78
Inverter Transformer	MV6-4 T	370244	4906966	2	0	0	69.4	69.4	1	5873.79	3.25	0	86.38	0	3.17	0	0	7.94	0	0	0	0	0	0	-28.14	-28.14
Inverter Transformer	MV6-1 T	370230	4907364	2	0	0	69.4	69.4	1	6085.31	3.25	0	86.69	0	3.2	0	0	8.07	0	0	0	0	0	0	-28.61	-28.61
Inverter Transformer	MV1-12 T	365044	4905386	2	0	0	56.1	56.1	1	1591.84	3.25	0	75.04	0	0.24	0	0	6.21	0	0	0	0	0	0	-25.43	-25.43
Inverter Transformer	MV1-11 T	364649	4905414	2	0	0	56.1	56.1	1	1723.89	3.25	0	75.73	0	0.29	0	0	6.49	0	0	0	0	0	0	-26.45	-26.45
Inverter Transformer	MV1-8 T	364782	4905647	2	0	0	56.1	56.1	1	1902.58	3.25	0	76.59	0	0.36	0	0	6.85	0	0	0	0	0	0	-27.74	-27.74
Inverter Transformer	MV1-9 T	364555	4905646	2	0	0	56.1	56.1	1	1974.2	3.25	0	76.91	0	0.39	0	0	6.99	0	0	0	0	0	0	-28.24	-28.24
Inverter Transformer	MV1-4 T	364821	4905918	2	0	0	56.1	56.1	1	2156.23	3.25	0	77.67	0	0.47	0	0	7.35	0	0	0	0	0	0	-29.43	-29.43
Inverter Transformer	MV1-5 T	364676	4905892	2	0	0	56.1	56.1	1	2167.26	3.25	0	77.72	0	0.47	0	0	7.37	0	0	0	0	0	0	-29.5	-29.5
Inverter Transformer	MV1-6 T	364482	4905835	2	0	0	56.1	56.1	1	2176.8	3.25	0	77.76	0	0.48	0	0	7.39	0	0	0	0	0	0	-29.56	-29.56
Inverter Transformer	MV1-2 T	364759	4906063	2	0	0	56.1	56.1	1	2311.4	3.25	0	78.28	0	0.54	0	0	7.64	0	0	0	0	0	0	-30.4	-30.4
Inverter Transformer	MV1-3 T	364435	4906039	2	0	0	56.1	56.1	1	2383.91	3.25	0	78.55	0	0.57	0	0	7.78	0	0	0	0	0	0	-30.83	-30.83
Inverter Transformer	MV1-1 T	364721	4906166	2	0	0	56.1	56.1	1	2420.4	3.25	0	78.68	0	0.58	0	0	7.84	0	0	0	0	0	0	-31.05	-31.05
Inverter Transformer	MV2-4 T	365590	4906628	2	0	0	56.1	56.1	1	2831.13	3.25	0	80.04	0	0.76	0	0	8.58	0	0	0	0	0	0	-33.32	-33.32
Inverter Transformer	MV2-3 T	365814	4906641	2	0	0	56.1	56.1	1	2876.47	3.25	0	80.18	0	0.78	0	0	8.66	0	0	0	0	0	0	-33.55	-33.55
Inverter Transformer	MV2-2 T	365982	4906654	2	0	0	56.1	56.1	1	2924.49	3.25	0	80.32	0	0.8	0	0	8.74	0	0	0	0	0	0	-33.8	-33.8
Inverter Transformer	MV3-18 T	367757	4907412	2	0	0	56.1	56.1	1	4364.38	3.25	0	83.8	0	1.39	0	0	10.98	0	0	0	0	0	0	-40.11	-40.11
Inverter Transformer	MV3-12 T	367674	4907594	2	0	0	56.1	56.1	1	4470.8	3.25	0	84.01	0	1.43	0	0	11.13	0	0	0	0	0	0	-40.51	-40.51
Inverter Transformer	MV3-13 T	367958	4907577	2	0	0	56.1	56.1	1	4614.71	3.25	0	84.28	0	1.48	0	0	11.33	0	0	0	0	0	0	-41.04	-41.04
Inverter Transformer	MV3-21 T	368484	4907206	2	0	0	56.1	56.1	1	4661.07	3.25	0	84.37	0	1.5	0	0	11.4	0	0	0	0	0	0	-41.21	-41.21
Inverter Transformer	MV3-17 T	368183	4907472	2	0	0	56.1	56.1	1	4665.64	3.25	0	84.38	0	1.5	0	0	11.4	0	0	0	0	0	0	-41.23	-41.23
Inverter Transformer	MV3-19 T	368352	4907347	2	0	0	56.1	56.1	1	4677.18	3.25	0	84.4	0	1.51	0	0	11.42	0	0	0	0	0	0	-41.27	-41.27
Inverter Transformer	MV3-22 T	368661	4907142	2	0	0	56.1	56.1	1	4738.99	3.25	0	84.51	0	1.53	0	0	11.5	0	0	0	0	0	0	-41.49	-41.49
Inverter Transformer	MV3-7 T	367951	4907754	2	0	0	56.1	56.1	1	4756.26	3.25	0	84.55	0	1.54	0	0	11.53	0	0	0	0	0	0	-41.55	-41.55
Inverter Transformer	MV3-15 T	368351	4907477	2	0	0	56.1	56.1	1	4775.53	3.25	0	84.58	0	1.54	0	0	11.55	0	0	0	0	0	0	-41.62	-41.62
Inverter Transformer	MV3-10 T	368162	4907669	2	0	0	56.1	56.1	1	4809.1	3.25	0	84.64	0	1.56	0	0	11.6	0	0	0	0	0	0	-41.74	-41.74
Inverter Transformer	MV3-16 T	368509	4907475	2	0	0	56.1	56.1	1	4876.86	3.25	0	84.76	0	1.58	0	0	11.69	0	0	0	0	0	0	-41.98	-41.98
Inverter Transformer	MV3-20 T	368683	4907317	2	0	0	56.1	56.1	1	4878.8	3.25	0	84.77	0	1.58	0	0	11.69	0	0	0	0	0	0	-41.98	-41.98
Inverter Transformer	MV3-3 T	367944	4907927	2	0	0	56.1	56.1	1	4896.76	3.25	0	84.8	0	1.59	0	0	11.72	0	0	0	0	0	0	-42.04	-42.04
Inverter Transformer	MV3-11 T	368340	4907662	2	0	0	56.1	56.1	1	4912.06	3.25	0	84.83	0	1.59	0	0	11.74	0	0	0	0	0	0	-42.1	-42.1
Inverter Transformer	MV3-6 T	368156	4907834	2	0	0	56.1	56.1	1	4938.9	3.25	0	84.87	0	1.6	0	0	11.77	0	0	0	0	0	0	-42.19	-42.19
Inverter Transformer	MV3-14 T	368678	4907498	2	0	0	56.1	56.1	1	5006.99	3.25	0	84.99	0	1.63	0	0	11.86	0	0	0	0	0	0	-42.42	-42.42
Inverter Transformer	MV3-1 T	368150	4907976	2	0	0	56.1	56.1	1	5051.78	3.25	0	85.07	0	1.64	0	0	11.92	0	0	0	0	0	0	-42.58	-42.58
Inverter Transformer	MV3-5 T	368335	4907843	2	0	0	56.1	56.1	1	5052.12	3.25	0	85.07	0	1.64	0	0	11.92	0	0	0	0	0	0	-42.58	-42.58
Inverter Transformer	MV3-9 T	368517	4907703	2	0	0	56.1	56.1	1	5055.42	3.25	0	85.08	0	1.65	0	0	11.93	0	0	0	0	0	0	-42.59	-42.59
Inverter Transformer	MV3-8 T	368685	4907712	2	0	0	56.1	56.1	1	5171.12	3.25	0	85.27	0	1.69	0	0	12.08	0	0	0	0	0	0	-42.98	-42.98
Inverter Transformer	MV3-4 T	368507	4907925	2	0	0	56.1	56.1	1	5221.99	3.25	0	85.36	0	1.7	0	0	12.14	0	0	0	0	0	0	-43.15	-43.15
Inverter Transformer	MV3-2 T	368677	4907928	2	0	0	56.1	56.1	1	5330.78	3.25	0	85.54	0	1.74	0	0	12.28	0	0	0	0	0	0	-43.5	-43.5
Inverter Transformer	MV6-3 T	370202	4907140	2	0	0	56.1	56.1	1	5934.17	3.25	0	86.47	0	1.94	0	0	13.02	0	0	0	0	0	0	-45.38	-45.38
Inverter Transformer	MV6-2 T	370091	4907339	2	0	0	56.1	56.1	1	5958.15	3.25	0	86.5	0	1.95	0	0	13.05	0	0	0	0	0	0	-45.45	-45.45
Inverter Transformer	MV4-15 T	369170	4908481	2	0	0	56.1	56.1	1	6071.13	3.25	0	86.67	0	1.99	0	0	13.19	0	0	0	0	0	0	-45.78	-45.78
Inverter Transformer	MV4-13 T	369057	4908605	2	0	0	56.1	56.1	1	6096.48	3.25	0	86.7	0	2	0	0	13.22	0	0	0	0	0	0	-45.85	-45.85
Inverter Transformer	MV4-14 T	369182	4908507	2	0	0	56.1	56.1	1	6098.8	3.25	0	86.7	0	2	0	0	13.22	0	0	0	0	0	0	-45.86	-45.86
Inverter Transformer	MV4-12 T	369049	4908803	2	0	0	56.1	56.1	1	6248.5	3.25	0	86.92	0	2.04	0	0	13.39	0	0	0	0	0	0	-46.29	-46.29
Inverter Transformer	MV4-7 T	369040	4909001	2	0	0	56.1	56.1	1	6402.45	3.25	0	87.13	0	2.09	0	0	13.57	0	0	0	0	0	0	-46.73	-46.73
Inverter Transformer	MV4-11 T	369269	4908855	2	0	0	56.1	56.1	1	6424.06	3.25	0	87.16	0	2.1	0	0	13.59	0	0	0	0	0	0	-46.79	-46.79
Inverter Transformer	MV4-10 T	369307	4908858	2	0	0	56.1	56.1	1	6450.02	3.25	0	87.19	0	2.1	0	0	13.62	0	0	0	0	0	0	-46.86	-46.86
Inverter Transformer	MV4-8 T	369262	4909001	2	0	0	56.1	56.1	1	6535.02	3.25	0	87.3	0	2.13	0	0	13.72	0	0	0	0	0	0	-47.09	-47.09
Inverter Transformer	MV4-9 T	369284	4909001	2	0	0	56.1	56.1	1	6548.42	3.25	0	87.32	0	2.13	0	0	13.73	0	0	0	0	0	0	-47.13	-47.13
Inverter Transformer	MV4-4 T	369033	4909199	2	0	0	56.1	56.1	1	6559.92	3.25	0	87.34	0	2.14	0	0	13.75	0	0	0	0	0	0	-47.16	-47.16
Inverter Transformer	MV5-6 T	369987	4908507	2	0	0	56.1	56.1	1	6641.71	3.25	0	87.45	0	2.16	0	0	13.84	0	0	0	0	0	0	-47.38	-47.38
Inverter Transformer	MV4-6 T	369249	4909192	2	0	0	56.1	56.1	1	6679.94	3.25	0	87.5	0	2.17	0	0	13.88	0	0	0	0	0	0	-47.49	-47.49
Inverter Transformer	MV4-5 T	369283	4909199	2	0	0	56.1	56.1	1	6705.78	3.25	0	87.53	0	2.18	0	0	13.91	0	0	0	0	0	0	-47.56	-47.56
Inverter Transformer	MV4-1 T	369017	4909397	2	0	0	56.1	56.1	1	6714.54	3.25	0	87.54	0	2.18	0	0	13.92	0	0	0	0	0	0	-47.58	-47.58
Inverter Transformer	MV5-5 T	370021	4908690	2	0	0	56.1	56.1	1	6795.92	3.25	0	87.64	0	2.2	0	0	14.01	0	0	0	0	0	0	-47.8	-47.8
Inverter Transformer	MV4-3 T	369234	4909397	2	0	0	56.1	56.1	1	6837.43	3.25	0	87.7	0	2.21	0	0	14.05	0	0	0	0	0	0	-47.91	-47.91
Inverter Transformer	MV4-2 T	369267	4909397	2	0	0	56.1	56.1	1	6856.52	3.25	0	87.72	0	2.22	0	0	14.07	0	0	0	0	0	0	-47.96	-47.96
Inverter Transformer	MV5-2 T	370011	4908853	2	0	0	56.1	56.1	1	6906.99	3.25	0	87.79	0	2.23	0	0	14.13	0	0	0	0	0	0	-48.09	-48.09
Inverter Transformer	MV5-4 T	370330	4908707	2	0	0	56.1	56.1	1	7026.45	3.25	0	87.93	0	2.27	0	0	14.26	0	0	0	0	0	0	-48.4	-48.4
Inverter Transformer	MV5-3 T	370237	4908851	2	0	0	56.1	56.1	1	7062.02	3.25	0	87.98	0	2.28	0	0	14.3	0	0	0	0	0	0	-48.49	-48.49
Inverter Transformer	MV5-1 T	370015	4909142	2	0	0	56.1	56.1	1	7123.26	3.25	0	88.05	0	2.29	0	0	14.36	0	0	0	0	0	0	-48.65	-48.65
Line Reactor	NGR	369421	4908787.5	5	0	0	45.4	45.4	1	6467.28	5.25	0	87.21	0	3.23	1.37	0.09	2.64	0	0	0	0	0	0	-49.1	-49.1
Limit. Valu 0	0																									
Level D/N: 24.4274	24.4274																									

Receiver: Existing Noise Receptor
ID: G-95
X: 365265.2
Y: 4903816
Z: 4.5
Ground: 0

ISO	Description	ID	X	Y	Z	Ground	ReflOrd	LxT	LxN	L/A	Dist.	hm	Freq	Adiv	K0b	Agr	Abar	z	Aatm	Afol	Ahous	Cmet	CmetN	Dc	RL	LtotT	LtotN
	Inverter	MV1-15	365315	4904994	2	0	0	100.3	100.3	1	1179.05	3.25	0	72.43	0	-0.16	0	0	11.46	0	0	0	0	0	0	16.58	16.58
	Inverter	MV1-12	365038	4905386	2	0	0	100.3	100.3	1	1586.36	3.25	0	75.01	0	0	0	0	12.54	0	0	0	0	0	0	12.77	12.77
	Sol_Luce Substation	S_Substation	369426	4908792	3.5	0	0	112.1	112.1	1	6486.36	5.25	0	87.24	0	1.27	2.54	0.27	10.25	0	0	0	0	0	0	10.78	10.78
	Inverter	MV1-11	364655	4905414	2	0	0	100.3	100.3	1	1710.54	3.25	0	75.66	0	0.04	0	0	12.83	0	0	0	0	0	0	11.78	11.78
	Inverter	MV1-14	365163	4905049	2	0	0	97.3	97.3	1	1237.23	3.25	0	72.85	0	-0.14	0	0	11.63	0	0	0	0	0	0	12.97	12.97
	Inverter	MV1-8	364788	4905647	2	0	0	100.3	100.3	1	1892.16	3.25	0	76.54	0	0.1	0	0	13.23	0	0	0	0	0	0	10.44	10.44
	Inverter	MV1-9	364561	4905646	2	0	0	100.3	100.3	1	1960.82	3.25	0	76.85	0	0.12	0	0	13.38	0	0	0	0	0	0	9.97	9.97
	Inverter	MV1-13	364731	4905241	2	0	0	97.3	97.3	1	1521.84	3.25	0	74.65	0	-0.03	0	0	12.38	0	0	0	0	0	0	10.31	10.31
	Inverter	MV1-4	364815	4905918	2	0	0	100.3	100.3	1	2149.67	3.25	0	77.65	0	0.17	0	0	13.77	0	0	0	0	0	0	8.72	8.72
	Inverter	MV1-5	364671	4905892	2	0	0	100.3	100.3	1	2159.36	3.25	0	77.69	0	0.17	0	0	13.79	0	0	0	0	0	0	8.66	8.66
	Inverter	MV1-6	364477	4905835	2	0	0	100.3	100.3	1	2167.4	3.25	0	77.72	0	0.18	0	0	13.81	0	0	0	0	0	0	8.61	8.61
	Inverter	MV1-2	364753	4906063	2	0	0	100.3	100.3	1	2304.64	3.25	0	78.25	0	0.21	0	0	14.08	0	0	0	0	0	0	7.77	7.77
	Inverter	MV1-1	364715	4906166	2	0	0	100.3	100.3	1	2413.55	3.25	0	78.65	0	0.24	0	0	14.29	0	0	0	0	0	0	7.13	7.13
	Inverter	MV1-10	365004	4905564	2	0	0	97.3	97.3	1	1767.41	3.25	0	75.95	0	0.06	0	0	12.96	0	0	0	0	0	0	8.35	8.35
	Inverter	MV1-7	364925	4905782	2	0	0	97.3	97.3	1	1995.22	3.25	0	77	0	0.13	0	0	13.45	0	0	0	0	0	0	6.73	6.73
	Inverter	MV2-4	365586	4906624	2	0	0	100.3	100.3	1	2826.27	3.25	0	80.02	0	0.33	0	0	15.06	0	0	0	0	0	0	4.9	4.9
	Inverter	MV2-3	365820	4906641	2	0	0	100.3	100.3	1	2878.96	3.25	0	80.18	0	0.34	0	0	15.16	0	0	0	0	0	0	4.63	4.63
	Gardiner Substation	G_Sub	366586.3	4903349.9	2.5	0	0	90.8	90.8	1	1400.91	4.25	0	73.93	0	0.83	4.7	0.31	3.3	0	0	0	0	0	0	8.01	8.01
	Inverter	MV2-1	365842	4906816	2	0	0	97.3	97.3	1	3054.95	3.25	0	80.7	0	0.37	0	0	15.47	0	0	0	0	0	0	0.77	0.77
	Inverter	MV3-18	367752	4907412	2	0	0	100.3	100.3	1	4372.12	3.25	0	83.81	0	0.58	0	0	17.63	0	0	0	0	0	0	-1.71	-1.71
	Inverter	MV3-12	367668	4907594	2	0	0	100.3	100.3	1	4477.36	3.25	0	84.02	0	0.59	0	0	17.8	0	0	0	0	0	0	-2.09	-2.09
	Inverter	MV3-13	367963	4907577	2	0	0	100.3	100.3	1	4628.53	3.25	0	84.31	0	0.61	0	0	18.03	0	0	0	0	0	0	-2.63	-2.63
	Inverter	MV3-21	368478	4907206	2	0	0	100.3	100.3	1	4670.57	3.25	0	84.39	0	0.61	0	0	18.09	0	0	0	0	0	0	-2.77	-2.77
	Inverter	MV3-17	368178	4907472	2	0	0	100.3	100.3	1	4674.48	3.25	0	84.39	0	0.61	0	0	18.1	0	0	0	0	0	0	-2.79	-2.79
	Inverter	MV3-19	368357	4907347	2	0	0	100.3	100.3	1	4693.31	3.25	0	84.43	0	0.61	0	0	18.12	0	0	0	0	0	0	-2.85	-2.85
	Inverter	MV3-7	367945	4907754	2	0	0	100.3	100.3	1	4763.32	3.25	0	84.56	0	0.62	0	0	18.23	0	0	0	0	0	0	-3.09	-3.09
	Inverter	MV3-15	368357	4907477	2	0	0	100.3	100.3	1	4791.88	3.25	0	84.61	0	0.62	0	0	18.27	0	0	0	0	0	0	-3.19	-3.19
	Inverter	MV3-10	368167	4907669	2	0	0	100.3	100.3	1	4823.49	3.25	0	84.67	0	0.63	0	0	18.32	0	0	0	0	0	0	-3.3	-3.3
	Inverter	MV3-16	368514	4907475	2	0	0	100.3	100.3	1	4893.16	3.25	0	84.79	0	0.63	0	0	18.42	0	0	0	0	0	0	-3.53	-3.53
	Inverter	MV3-20	368689	4907317	2	0	0	100.3	100.3	1	4896.88	3.25	0	84.8	0	0.63	0	0	18.43	0	0	0	0	0	0	-3.55	-3.55
	Inverter	MV3-3	367939	4907927	2	0	0	100.3	100.3	1	4904.03	3.25	0	84.81	0	0.63	0	0	18.44	0	0	0	0	0	0	-3.57	-3.57
	Inverter	MV3-11	368346	4907662	2	0	0	100.3	100.3	1	4927.78	3.25	0	84.85	0	0.64	0	0	18.47	0	0	0	0	0	0	-3.65	-3.65
	Inverter	MV3-6	368162	4907834	2	0	0	100.3	100.3	1	4953.36	3.25	0	84.9	0	0.64	0	0	18.51	0	0	0	0	0	0	-3.74	-3.74
	Inverter	MV3-14	368684	4907498	2	0	0	100.3	100.3	1	5024.47	3.25	0	85.02	0	0.64	0	0	18.62	0	0	0	0	0	0	-3.97	-3.97
	Inverter	MV3-9	368512	4907703	2	0	0	100.3	100.3	1	5064.63	3.25	0	85.09	0	0.65	0	0	18.67	0	0	0	0	0	0	-4.1	-4.1
	Inverter	MV3-8	368680	4907712	2	0	0	100.3	100.3	1	5180.7	3.25	0	85.29	0	0.66	0	0	18.84	0	0	0	0	0	0	-4.48	-4.48
	Inverter	MV6-3	370207	4907140	2	0	0	100.3	100.3	1	5955.7	3.25	0	86.5	0	0.7	0	0	19.93	0	0	0	0	0	0	-6.82	-6.82
	Inverter	MV6-2	370085	4907339	2	0	0	100.3	100.3	1	5970.09	3.25	0	86.52	0	0.7	0	0	19.95	0	0	0	0	0	0	-6.86	-6.86
	Inverters	G_Inv1	366526.4	4903225.8	2	0	0	87.7	87.7	1	1392.47	3.25	0	73.88	0	2.5	0	0	1.91	0	0	0	0	0	0	9.37	9.37
	Inverter	MV4-7	369035	4909001	2	0	0	100.3	100.3	1	6410.59	3.25	0	87.14	0	0.71	0	0	20.54	0	0	0	0	0	0	-8.08	-8.08
	Inverter	MV4-11	369264	4908855	2	0	0	100.3	100.3	1	6432.88	3.25	0	87.17	0	0.71	0	0	20.57	0	0	0	0	0	0	-8.14	-8.14
	Inverters	G_Inv3	366583.7	4903091.4	2	0	0	87.7	87.7	1	1504.49	3.25	0	74.55	0	2.52	0	0	2.05	0	0	0	0	0	0	8.54	8.54
	Inverter	MV4-10	369312	4908858	2	0	0	100.3	100.3	1	6465.17	3.25	0	87.21	0	0.71	0	0	20.61	0	0	0	0	0	0	-8.23	-8.23
	Inverter	MV4-8	369256	4909001	2	0	0	100.3	100.3	1	6542.99	3.25	0	87.32	0	0.71	0	0	20.72	0	0	0	0	0	0	-8.43	-8.43
	Inverters	G_Inv2	366676.9	4903239.1	2	0	0	87.7	87.7	1	1525.03	3.25	0	74.67	0	2.52	0	0	2.07	0	0	0	0	0	0	8.4	8.4
	Inverter	MV4-9	369289	4909001	2	0	0	100.3	100.3	1	6563.17	3.25	0	87.34	0	0.72	0	0	20.74	0	0	0	0	0	0	-8.49	-8.49
	Inverter	MV4-4	369027	4909199	2	0	0	100.3	100.3	1	6567.18	3.25	0	87.35	0	0.72	0	0	20.75	0	0	0	0	0	0	-8.5	-8.5
	Inverter	MV4-6	369243	4909192	2	0	0	100.3	100.3	1	6687.62	3.25	0	87.51	0	0.71	0	0	20.9	0	0	0	0	0	0	-8.81	-8.81
	Inverter	MV4-5	369289	4909199	2	0	0	100.3	100.3	1	6720.69	3.25	0	87.55	0	0.71	0	0	20.94	0	0	0	0	0	0	-8.9	-8.9
	Inverter	MV4-1	369011	4909397	2	0	0	100.3	100.3	1	6721.5	3.25	0	87.55	0	0.71	0	0	20.95	0	0	0	0	0	0	-8.9	-8.9
	Inverter	MV5-5	370015	4908690	2	0	0	100.3	100.3	1	6805.62	3.25	0	87.66	0	0.71	0	0	21.05	0	0	0	0	0	0	-9.11	-9.11
	Inverter	MV4-3	369229	4909397	2	0	0	100.3	100.3	1	6845.38	3.25	0	87.71	0	0.71	0	0	21.1	0	0	0	0	0	0	-9.21	-9.21
	Inverter	MV4-2	369272	4909397	2	0	0	100.3	100.3	1	6870.37	3.25	0	87.74	0	0.71	0	0	21.14	0	0	0	0	0	0	-9.28	-9.28
	Inverter	MV5-2	370006	4908853	2	0	0	100.3	100.3	1	6917.12	3.25	0	87.8	0	0.71	0	0	21.19	0	0	0	0	0	0	-9.39	-9.39
	Inverters	G_Inv5	366638.5	4902958.1	2	0	0	87.7	87.7	1	1619.24	3.25	0	75.19	0	2.53	0	0	2.19	0	0	0	0	0	0	7.75	7.75
	Inverters	G_Inv4	366732.8	4903105	2	0	0	87.7	87.7	1	1630.76	3.25	0	75.25	0	2.54	0	0	2.2	0	0	0	0	0	0	7.68	7.68
	Inverter	MV5-4	370324	4908707	2	0	0	100.3	100.3	1	7036.57	3.25	0	87.95	0	0.71	0	0	21.34	0	0	0	0	0	0	-9.69	-9.69
	Inverter	MV5-3	370231	4908851	2	0	0	100.3	100.3	1	7071.8	3.25	0	87.99	0	0.71	0	0	21.39	0	0	0	0	0	0	-9.78	-9.78
	Inverter	MV5-1	370020	4909142	2	0	0	100.3	100.3	1	7139.64	3.25	0	88.07	0	0.71	0	0	21.47	0	0	0	0	0	0	-9.94	-9.94
	Inverters	G_Inv7	366694.6	4902824.7	2	0	0	87.7	87.7	1	1739.5	3.25	0	75.81	0	2.55	0	0	2.33	0	0	0	0	0	0	6.97	6.97
	Inverters	G_Inv6	366788.5	4902972	2	0	0	87.7	87.7	1	1741.49	3.25	0	75.82	0	2.55	0	0	2.33	0	0	0	0	0	0	6.96	6.96
	Inverters	G_Inv8	366844.5	4902838.5	2	0	0	87.7	87.7	1	1857.34	3.25	0	76.38	0	2.57	0	0	2.47	0	0	0	0	0	0	6.25	6.25
	Inverters	G_Inv9	366750.9	4902691.8	2	0	0	87.7	87.7	1	1863.1	3.25	0	76.4	0	2.57	0	0	2.48	0	0	0	0	0	0	6.21	6.21
	Inverters	G_Inv10	366900.7	4902704.8	2	0	0	87.7	87.7	1	1977.28	3.25	0	76.92	0	2.58	0	0	2.61	0	0	0	0	0	0	5.55	5.55
	Inverter	MV6-1	370235	4907364	2	0	0	97.3	97.3	1	6106.33	3.25	0	86.72	0	0.71	0	0	20.14	0	0	0	0	0	0	-10.25	-10.25

Inverter	MV1-3	364440	4906039	2	0	0	89.1	89.1	1	2371.22	3.25	0	78.5	0	0.99	0	0	8.64	0	0	0	0	0	0	0.92	0.92
DSTATCOM - 10 MVAR #2	DSAT2	369403	4908757	2.5	0	0	96.6	96.6	1	6444.76	3.5	0	87.18	0	3.8	0	0	4.05	0	0	0	0	0	0	1.59	1.59
DSTATCOM - 10 MVAR #1	DSAT1	369437	4908757	2.5	0	0	96.6	96.6	1	6466.64	3.5	0	87.21	0	3.81	0	0	4.06	0	0	0	0	0	0	1.55	1.55
Inverter	MV2-2	365977	4906654	2	0	0	89.1	89.1	1	2925.9	3.25	0	80.33	0	1.13	0	0	9.5	0	0	0	0	0	0	-1.9	-1.9
SubstationTransformer	W_ST	369711.17	4906112.3	2.5	0	0	92	92	1	5003.95	4.25	0	84.99	0	1.64	2.33	0.26	8.62	0	0	0	0	0	0	-5.6	-5.6
Inverter	MV3-22	368656	4907142	2	0	0	89.1	89.1	1	4749.72	3.25	0	84.53	0	1.58	0	0	12.13	0	0	0	0	0	0	-9.18	-9.18
Westbrook Inverter Enclosur	W_INV2	369374	4906388	2	0	0	89.1	89.1	1	4847.41	3.25	0	84.71	0	1.6	0	0	12.26	0	0	0	0	0	0	-9.51	-9.51
Westbrook Inverter Enclosur	W_INV3	369508	4906164	2	0	0	89.1	89.1	1	4849.17	3.25	0	84.71	0	1.6	0	0	12.26	0	0	0	0	0	0	-9.52	-9.52
Westbrook Inverter Enclosur	W_INV4	369673	4906164	2	0	0	89.1	89.1	1	4994.18	3.25	0	84.97	0	1.64	0	0	12.46	0	0	0	0	0	0	-10.01	-10.01
Inverter	MV3-1	368156	4907976	2	0	0	89.1	89.1	1	5065.8	3.25	0	85.09	0	1.66	0	0	12.55	0	0	0	0	0	0	-10.24	-10.24
Inverter	MV3-5	368340	4907843	2	0	0	89.1	89.1	1	5066.67	3.25	0	85.09	0	1.66	0	0	12.55	0	0	0	0	0	0	-10.25	-10.25
Westbrook Inverter Enclosur	W_INV7	369780	4906417	2	0	0	89.1	89.1	1	5210.43	3.25	0	85.34	0	1.69	0	0	12.74	0	0	0	0	0	0	-10.71	-10.71
Inverter	MV3-4	368502	4907925	2	0	0	89.1	89.1	1	5230.75	3.25	0	85.37	0	1.7	0	0	12.77	0	0	0	0	0	0	-10.78	-10.78
Westbrook Inverter Enclosur	W_INV5	369719	4906574	2	0	0	89.1	89.1	1	5238.6	3.25	0	85.38	0	1.7	0	0	12.78	0	0	0	0	0	0	-10.81	-10.81
Inverter	MV3-2	368671	4907928	2	0	0	89.1	89.1	1	5339.29	3.25	0	85.55	0	1.72	0	0	12.91	0	0	0	0	0	0	-11.13	-11.13
Westbrook Inverter Enclosur	W_INV6	369875	4906578	2	0	0	89.1	89.1	1	5373.91	3.25	0	85.61	0	1.73	0	0	12.96	0	0	0	0	0	0	-11.24	-11.24
Fixed Reactor Bank 1	FRB1	369378	4908755	6	0	0	89.8	89.8	1	6427.2	5.25	0	87.16	0	-0.36	0	0	10.19	0	0	0	0	0	0	-7.21	-7.21
Fixed Reactor Bank 2	FRB2	369464	4908755	6	0	0	89.8	89.8	1	6482.56	5.25	0	87.23	0	-0.35	0	0	10.24	0	0	0	0	0	0	-7.35	-7.35
Inverter	MV4-15	369176	4908481	2	0	0	89.1	89.1	1	6087.41	3.25	0	86.69	0	1.91	0	0	13.87	0	0	0	0	0	0	-13.41	-13.41
Inverter	MV4-13	369051	4908605	2	0	0	89.1	89.1	1	6104.65	3.25	0	86.71	0	1.91	0	0	13.89	0	0	0	0	0	0	-13.46	-13.46
Inverter	MV4-14	369176	4908507	2	0	0	89.1	89.1	1	6107.36	3.25	0	86.72	0	1.91	0	0	13.9	0	0	0	0	0	0	-13.47	-13.47
Inverter	MV4-12	369043	4908803	2	0	0	89.1	89.1	1	6256.35	3.25	0	86.93	0	1.95	0	0	14.08	0	0	0	0	0	0	-13.9	-13.9
Inverter	MV5-6	369982	4908507	2	0	0	89.1	89.1	1	6652.34	3.25	0	87.46	0	2.04	0	0	14.57	0	0	0	0	0	0	-15.01	-15.01
Westbrook Inverter Enclosur	W_INV1	369409	4906578	2	0	0	86.1	86.1	1	4979.93	3.25	0	84.94	0	1.63	0	0	12.44	0	0	0	0	0	0	-12.96	-12.96
Inverter	MV6-4	370250	4906966	2	0	0	86.1	86.1	1	5896.67	3.25	0	86.41	0	1.86	0	0	13.63	0	0	0	0	0	0	-15.85	-15.85
Inverter Transformer	MV1-14 T	365157	4905049	2	0	0	69.4	69.4	1	1237.74	3.25	0	72.85	0	1.84	0	0	4.12	0	0	0	0	0	0	-9.47	-9.47
Inverter Transformer	MV1-13 T	364725	4905241	2	0	0	69.4	69.4	1	1523.96	3.25	0	74.66	0	1.98	0	0	4.46	0	0	0	0	0	0	-11.75	-11.75
Inverter Transformer	MV1-10 T	365010	4905564	2	0	0	69.4	69.4	1	1766.53	3.25	0	75.94	0	2.08	0	0	4.73	0	0	0	0	0	0	-13.4	-13.4
Westbrook Inverter Transfor	W_INVTR1	369403	4906578	2	0	0	78.2	78.2	1	4974.94	3.25	0	84.94	0	-3.17	0	0	2.4	0	0	0	0	0	0	-5.93	-5.93
Westbrook Inverter Transfor	W_INVTR2	369368	4906388	2	0	0	77.3	77.3	1	4842.33	3.25	0	84.7	0	-3.15	0	0	2.36	0	0	0	0	0	0	-6.57	-6.57
Westbrook Inverter Transfor	W_INVTR3	369514	4906164	2	0	0	77.3	77.3	1	4854.42	3.25	0	84.72	0	-3.15	0	0	2.36	0	0	0	0	0	0	-6.6	-6.6
Westbrook Inverter Transfor	W_INVTR4	369679	4906164	2	0	0	77.3	77.3	1	4999.47	3.25	0	84.98	0	-3.18	0	0	2.41	0	0	0	0	0	0	-6.87	-6.87
Inverter Transformer	MV1-7 T	364919	4905782	2	0	0	69.4	69.4	1	1996.25	3.25	0	77	0	2.17	0	0	4.96	0	0	0	0	0	0	-14.79	-14.79
Westbrook Inverter Transfor	W_INVTR7	369786	4906417	2	0	0	77.3	77.3	1	5215.63	3.25	0	85.35	0	-3.22	0	0	2.49	0	0	0	0	0	0	-7.27	-7.27
Westbrook Inverter Transfor	W_INVTR5	369725	4906574	2	0	0	77.3	77.3	1	5243.7	3.25	0	85.39	0	-3.23	0	0	2.5	0	0	0	0	0	0	-7.32	-7.32
Westbrook Inverter Transfor	W_INVTR6	369881	4906578	2	0	0	77.3	77.3	1	5379.06	3.25	0	85.61	0	-3.25	0	0	2.54	0	0	0	0	0	0	-7.56	-7.56
Inverter Transformer	MV2-1 T	365836	4906816	2	0	0	69.4	69.4	1	3053.82	3.25	0	80.7	0	2.52	0	0	5.93	0	0	0	0	0	0	-19.8	-19.8
Inverter Transformer	MV1-15 T	365309	4904994	2	0	0	56.1	56.1	1	1178.82	3.25	0	72.43	0	0.08	0	0	5.31	0	0	0	0	0	0	-21.75	-21.75
Inverter Transformer	MV6-4 T	370244	4906966	2	0	0	69.4	69.4	1	5891.6	3.25	0	86.4	0	3.17	0	0	7.95	0	0	0	0	0	0	-28.18	-28.18
Inverter Transformer	MV6-1 T	370230	4907364	2	0	0	69.4	69.4	1	6102.26	3.25	0	86.71	0	3.2	0	0	8.08	0	0	0	0	0	0	-28.64	-28.64
Inverter Transformer	MV1-12 T	365044	4905386	2	0	0	56.1	56.1	1	1585.51	3.25	0	75	0	0.23	0	0	6.2	0	0	0	0	0	0	-25.38	-25.38
Inverter Transformer	MV1-11 T	364649	4905414	2	0	0	56.1	56.1	1	1712.69	3.25	0	75.67	0	0.28	0	0	6.47	0	0	0	0	0	0	-26.36	-26.36
Inverter Transformer	MV1-8 T	364782	4905647	2	0	0	56.1	56.1	1	1893.69	3.25	0	76.55	0	0.36	0	0	6.83	0	0	0	0	0	0	-27.68	-27.68
Inverter Transformer	MV1-9 T	364555	4905646	2	0	0	56.1	56.1	1	1962.98	3.25	0	76.86	0	0.39	0	0	6.97	0	0	0	0	0	0	-28.16	-28.16
Inverter Transformer	MV1-4 T	364821	4905918	2	0	0	56.1	56.1	1	2148.42	3.25	0	77.64	0	0.47	0	0	7.33	0	0	0	0	0	0	-29.38	-29.38
Inverter Transformer	MV1-5 T	364676	4905892	2	0	0	56.1	56.1	1	2157.99	3.25	0	77.68	0	0.47	0	0	7.35	0	0	0	0	0	0	-29.44	-29.44
Inverter Transformer	MV1-6 T	364482	4905835	2	0	0	56.1	56.1	1	2165.59	3.25	0	77.71	0	0.47	0	0	7.36	0	0	0	0	0	0	-29.49	-29.49
Inverter Transformer	MV1-2 T	364759	4906063	2	0	0	56.1	56.1	1	2303.31	3.25	0	78.25	0	0.53	0	0	7.63	0	0	0	0	0	0	-30.35	-30.35
Inverter Transformer	MV1-3 T	364435	4906039	2	0	0	56.1	56.1	1	2372.97	3.25	0	78.51	0	0.56	0	0	7.76	0	0	0	0	0	0	-30.77	-30.77
Inverter Transformer	MV1-1 T	364721	4906166	2	0	0	56.1	56.1	1	2412.19	3.25	0	78.65	0	0.58	0	0	7.83	0	0	0	0	0	0	-31	-31
Inverter Transformer	MV2-4 T	365590	4906628	2	0	0	56.1	56.1	1	2830.7	3.25	0	80.04	0	0.76	0	0	8.58	0	0	0	0	0	0	-33.31	-33.31
Inverter Transformer	MV2-3 T	365814	4906641	2	0	0	56.1	56.1	1	2877.81	3.25	0	80.18	0	0.78	0	0	8.66	0	0	0	0	0	0	-33.56	-33.56
Inverter Transformer	MV2-2 T	365982	4906654	2	0	0	56.1	56.1	1	2927.12	3.25	0	80.33	0	0.8	0	0	8.74	0	0	0	0	0	0	-33.81	-33.81
Inverter Transformer	MV3-18 T	367757	4907412	2	0	0	56.1	56.1	1	4374.96	3.25	0	83.82	0	1.39	0	0	11	0	0	0	0	0	0	-40.15	-40.15
Inverter Transformer	MV3-12 T	367674	4907594	2	0	0	56.1	56.1	1	4480.58	3.25	0	84.03	0	1.43	0	0	11.15	0	0	0	0	0	0	-40.55	-40.55
Inverter Transformer	MV3-13 T	367958	4907577	2	0	0	56.1	56.1	1	4625.61	3.25	0	84.3	0	1.49	0	0	11.35	0	0	0	0	0	0	-41.08	-41.08
Inverter Transformer	MV3-21 T	368484	4907206	2	0	0	56.1	56.1	1	4674.7	3.25	0	84.4	0	1.51	0	0	11.42	0	0	0	0	0	0	-41.26	-41.26
Inverter Transformer	MV3-17 T	368183	4907472	2	0	0	56.1	56.1	1	4677.6	3.25	0	84.4	0	1.51	0	0	11.42	0	0	0	0	0	0	-41.27	-41.27
Inverter Transformer	MV3-19 T	368352	4907347	2	0	0	56.1	56.1	1	4690.02	3.25	0	84.42	0	1.51	0	0	11.44	0	0	0	0	0	0	-41.31	-41.31
Inverter Transformer	MV3-22 T	368661	4907142	2	0	0	56.1	56.1	1	4753.29	3.25	0	84.54	0	1.53	0	0	11.52	0	0	0	0	0	0	-41.54	-41.54
Inverter Transformer	MV3-7 T	367951	4907754	2	0	0	56.1	56.1	1	4766.69	3.25	0	84.56	0	1.54	0	0	11.54	0	0	0	0	0	0	-41.59	-41.59
Inverter Transformer	MV3-15 T	368351	4907477	2	0	0	56.1	56.1	1	4788.02	3.25	0	84.6	0	1.55	0	0	11.57	0	0	0	0	0	0	-41.66	-41.66
Inverter Transformer	MV3-10 T	368162	4907669	2	0	0	56.1	56.1	1	4820.48	3.25	0	84.66	0	1.56	0	0	11.61	0	0	0	0	0	0	-41.78	-41.78
Inverter Transformer	MV3-16 T	368509	4907475	2	0	0	56.1	56.1	1	4889.84	3.25	0	84.79	0	1.59	0	0	11.71	0	0	0	0	0	0	-42.02	-42.02
Inverter Transformer	MV3-20 T	368683	4907317	2	0	0	56.1	56.1	1	4892.68	3.25	0	84.79	0	1.59	0	0	11.71	0	0	0	0	0	0	-42.03	-42.03
Inverter Transformer	MV3-3 T	367944	4907927	2	0	0	56.1	56.1	1	4906.76	3.25	0	84.82	0	1.59	0	0	11.73	0	0	0	0	0	0	-42.08	-42.08
Inverter Transformer	MV3-11 T	368340	4907662	2	0	0	56.1	56.1	1	4924.03	3.25	0	84.85	0	1.6	0	0	11.75	0	0	0	0	0	0	-42.14	-42.14
Inverter Transformer	MV3-6 T	368156	4907834	2	0	0	56.1	56.1	1	4949.85	3.25	0	84.89	0	1.61	0	0	11.79	0	0	0	0	0	0	-42.23	-42.23
Inverter Transformer	MV3-14 T	368678	4907498	2	0	0	56.1	56.1	1	5020.39	3.25	0	85.01	0	1.63	0	0	11.88	0	0	0	0	0	0	-42.47	-42.47
Inverter Transformer	MV3-1 T	368150	4907976	2	0	0	56.1	56.1	1	5062.38	3.25	0	85.09	0	1.65	0	0	11.94	0	0	0	0	0	0	-42.61	-42.61
Inverter Transformer	MV3-5 T	368335	4907843	2	0	0	56.1	56.1	1	5063.64	3.25	0	85.09	0	1.65	0	0	11.94	0	0	0	0	0	0	-42.62	-42.62
Inverter Transformer	MV3-9 T	368517	4907703	2	0	0	56.1	56.1	1	5067.84	3.25	0	85.1	0	1.65	0	0	11.94	0	0	0	0	0	0	-42.63	-42.63
Inverter Transformer	MV3-8 T	368685	4907712	2	0	0	56.1	56.1	1	5184	3.25	0	85.29	0	1.69	0	0	12.09	0	0	0	0	0	0	-43.02	-43.02
Inverter Transformer	MV3-4 T	368507	4907925	2	0	0	56.1	56.1	1	5233.85	3.25	0	85.38	0	1.71	0	0	12.16	0	0	0	0	0	0	-43.19	-43.19

	Inverter Transformer	MV3-2 T	368677	4907928	2	0	0	56.1	56.1	1	5343.12	3.25	0	85.56	0	1.75	0	0	12.3	0	0	0	0	0	0	-43.54	-43.54
	Inverter Transformer	MV6-3 T	370202	4907140	2	0	0	56.1	56.1	1	5951.55	3.25	0	86.49	0	1.95	0	0	13.05	0	0	0	0	0	0	-45.43	-45.43
	Inverter Transformer	MV6-2 T	370091	4907339	2	0	0	56.1	56.1	1	5974.94	3.25	0	86.53	0	1.96	0	0	13.07	0	0	0	0	0	0	-45.5	-45.5
	Inverter Transformer	MV4-15 T	369170	4908481	2	0	0	56.1	56.1	1	6083.56	3.25	0	86.68	0	1.99	0	0	13.2	0	0	0	0	0	0	-45.82	-45.82
	Inverter Transformer	MV4-13 T	369057	4908605	2	0	0	56.1	56.1	1	6108.38	3.25	0	86.72	0	2	0	0	13.23	0	0	0	0	0	0	-45.89	-45.89
	Inverter Transformer	MV4-14 T	369182	4908507	2	0	0	56.1	56.1	1	6111.2	3.25	0	86.72	0	2	0	0	13.23	0	0	0	0	0	0	-45.9	-45.9
	Inverter Transformer	MV4-12 T	369049	4908803	2	0	0	56.1	56.1	1	6259.98	3.25	0	86.93	0	2.05	0	0	13.41	0	0	0	0	0	0	-46.33	-46.33
	Inverter Transformer	MV4-7 T	369040	4909001	2	0	0	56.1	56.1	1	6413.53	3.25	0	87.14	0	2.09	0	0	13.58	0	0	0	0	0	0	-46.76	-46.76
	Inverter Transformer	MV4-11 T	369269	4908855	2	0	0	56.1	56.1	1	6435.99	3.25	0	87.17	0	2.1	0	0	13.61	0	0	0	0	0	0	-46.82	-46.82
	Inverter Transformer	MV4-10 T	369307	4908858	2	0	0	56.1	56.1	1	6462.04	3.25	0	87.21	0	2.11	0	0	13.64	0	0	0	0	0	0	-46.89	-46.89
	Inverter Transformer	MV4-8 T	369262	4909001	2	0	0	56.1	56.1	1	6546.65	3.25	0	87.32	0	2.13	0	0	13.73	0	0	0	0	0	0	-47.13	-47.13
	Inverter Transformer	MV4-9 T	369284	4909001	2	0	0	56.1	56.1	1	6560.11	3.25	0	87.34	0	2.14	0	0	13.75	0	0	0	0	0	0	-47.16	-47.16
	Inverter Transformer	MV4-4 T	369033	4909199	2	0	0	56.1	56.1	1	6570.62	3.25	0	87.35	0	2.14	0	0	13.76	0	0	0	0	0	0	-47.19	-47.19
	Inverter Transformer	MV5-6 T	369987	4908507	2	0	0	56.1	56.1	1	6655.89	3.25	0	87.46	0	2.16	0	0	13.85	0	0	0	0	0	0	-47.42	-47.42
	Inverter Transformer	MV4-6 T	369249	4909192	2	0	0	56.1	56.1	1	6691.19	3.25	0	87.51	0	2.17	0	0	13.89	0	0	0	0	0	0	-47.52	-47.52
	Inverter Transformer	MV4-5 T	369283	4909199	2	0	0	56.1	56.1	1	6717.1	3.25	0	87.54	0	2.18	0	0	13.92	0	0	0	0	0	0	-47.59	-47.59
	Inverter Transformer	MV4-1 T	369017	4909397	2	0	0	56.1	56.1	1	6724.85	3.25	0	87.55	0	2.18	0	0	13.93	0	0	0	0	0	0	-47.61	-47.61
	Inverter Transformer	MV5-5 T	370021	4908690	2	0	0	56.1	56.1	1	6809.81	3.25	0	87.66	0	2.21	0	0	14.02	0	0	0	0	0	0	-47.83	-47.83
	Inverter Transformer	MV4-3 T	369234	4909397	2	0	0	56.1	56.1	1	6848.28	3.25	0	87.71	0	2.22	0	0	14.07	0	0	0	0	0	0	-47.94	-47.94
	Inverter Transformer	MV4-2 T	369267	4909397	2	0	0	56.1	56.1	1	6867.46	3.25	0	87.74	0	2.22	0	0	14.09	0	0	0	0	0	0	-47.99	-47.99
	Inverter Transformer	MV5-2 T	370011	4908853	2	0	0	56.1	56.1	1	6920.55	3.25	0	87.8	0	2.24	0	0	14.14	0	0	0	0	0	0	-48.13	-48.13
	Inverter Transformer	MV5-4 T	370330	4908707	2	0	0	56.1	56.1	1	7040.89	3.25	0	87.95	0	2.27	0	0	14.27	0	0	0	0	0	0	-48.44	-48.44
	Inverter Transformer	MV5-3 T	370237	4908851	2	0	0	56.1	56.1	1	7076.02	3.25	0	88	0	2.28	0	0	14.31	0	0	0	0	0	0	-48.53	-48.53
	Inverter Transformer	MV5-1 T	370015	4909142	2	0	0	56.1	56.1	1	7136.31	3.25	0	88.07	0	2.3	0	0	14.38	0	0	0	0	0	0	-48.68	-48.68
	Line Reactor	NGR	369421	4908787.5	5	0	0	45.4	45.4	1	6479.7	5.25	0	87.23	0	3.23	1.37	0.09	2.65	0	0	0	0	0	0	-49.12	-49.12
Limit. Valu	0	0																									
Level D/N:	24.4241	24.4241																									

Receiver: Existing Noise Receptor
ID: G-96
X: 365270.2
Y: 4903845
Z: 4.5
Ground: 0

ISO	Description	ID	X	Y	Z	Ground	ReflOrd	LxT	LxN	L/A	Dist.	hm	Freq	Adiv	K0b	Agr	Abar	z	Aatm	Afol	Ahous	Cmet	CmetN	Dc	RL	LtotT	LtotN
	Inverter	MV1-15	365315	4904994	2	0	0	100.3	100.3	1	1149.88	3.25	0	72.21	0	-0.18	0	0	11.38	0	0	0	0	0	0	16.9	16.9
	Inverter	MV1-12	365038	4905386	2	0	0	100.3	100.3	1	1558.4	3.25	0	74.85	0	-0.01	0	0	12.47	0	0	0	0	0	0	13	13
	Sol_Luce Substation	S_Substation	369426	4908792	3.5	0	0	112.1	112.1	1	6460.92	5.25	0	87.21	0	1.27	2.55	0.27	10.22	0	0	0	0	0	0	10.84	10.84
	Inverter	MV1-11	364655	4905414	2	0	0	100.3	100.3	1	1685.3	3.25	0	75.53	0	0.03	0	0	12.77	0	0	0	0	0	0	11.98	11.98
	Inverter	MV1-14	365163	4905049	2	0	0	97.3	97.3	1	1208.77	3.25	0	72.65	0	-0.15	0	0	11.55	0	0	0	0	0	0	13.26	13.26
	Inverter	MV1-8	364788	4905647	2	0	0	100.3	100.3	1	1865.4	3.25	0	76.42	0	0.09	0	0	13.17	0	0	0	0	0	0	10.63	10.63
	Inverter	MV1-9	364561	4905646	2	0	0	100.3	100.3	1	1935.61	3.25	0	76.74	0	0.11	0	0	13.33	0	0	0	0	0	0	10.14	10.14
	Inverter	MV1-13	364731	4905241	2	0	0	97.3	97.3	1	1496.52	3.25	0	74.5	0	-0.03	0	0	12.32	0	0	0	0	0	0	10.53	10.53
	Inverter	MV1-4	364815	4905918	2	0	0	100.3	100.3	1	2122.39	3.25	0	77.54	0	0.16	0	0	13.72	0	0	0	0	0	0	8.9	8.9
	Inverter	MV1-5	364671	4905892	2	0	0	100.3	100.3	1	2132.9	3.25	0	77.58	0	0.17	0	0	13.74	0	0	0	0	0	0	8.83	8.83
	Inverter	MV1-6	364477	4905835	2	0	0	100.3	100.3	1	2142.26	3.25	0	77.62	0	0.17	0	0	13.76	0	0	0	0	0	0	8.77	8.77
	Inverter	MV1-2	364753	4906063	2	0	0	100.3	100.3	1	2277.5	3.25	0	78.15	0	0.2	0	0	14.03	0	0	0	0	0	0	7.93	7.93
	Inverter	MV1-1	364715	4906166	2	0	0	100.3	100.3	1	2386.48	3.25	0	78.56	0	0.23	0	0	14.24	0	0	0	0	0	0	7.29	7.29
	Inverter	MV1-10	365004	4905564	2	0	0	97.3	97.3	1	1739.49	3.25	0	75.81	0	0.05	0	0	12.89	0	0	0	0	0	0	8.56	8.56
	Inverter	MV1-7	364925	4905782	2	0	0	97.3	97.3	1	1967.52	3.25	0	76.88	0	0.12	0	0	13.39	0	0	0	0	0	0	6.92	6.92
	Inverter	MV2-4	365586	4906624	2	0	0	100.3	100.3	1	2796.89	3.25	0	79.93	0	0.32	0	0	15.01	0	0	0	0	0	0	5.05	5.05
	Inverter	MV2-3	365820	4906641	2	0	0	100.3	100.3	1	2849.54	3.25	0	80.1	0	0.33	0	0	15.1	0	0	0	0	0	0	4.78	4.78
	Gardiner Substation	G_Sub	366586.3	4903349.9	2.5	0	0	90.8	90.8	1	1406.15	4.25	0	73.96	0	0.83	4.69	0.31	3.31	0	0	0	0	0	0	7.98	7.98
	Inverter	MV2-1	365842	4906816	2	0	0	97.3	97.3	1	3025.53	3.25	0	80.62	0	0.37	0	0	15.42	0	0	0	0	0	0	0.91	0.91
	Inverter	MV3-18	367752	4907412	2	0	0	100.3	100.3	1	4345.44	3.25	0	83.76	0	0.57	0	0	17.59	0	0	0	0	0	0	-1.61	-1.61
	Inverter	MV3-12	367668	4907594	2	0	0	100.3	100.3	1	4450.22	3.25	0	83.97	0	0.58	0	0	17.75	0	0	0	0	0	0	-1.99	-1.99
	Inverter	MV3-13	367963	4907577	2	0	0	100.3	100.3	1	4602.06	3.25	0	84.26	0	0.6	0	0	17.99	0	0	0	0	0	0	-2.54	-2.54
	Inverter	MV3-21	368478	4907206	2	0	0	100.3	100.3	1	4646.11	3.25	0	84.34	0	0.61	0	0	18.05	0	0	0	0	0	0	-2.69	-2.69
	Inverter	MV3-17	368178	4907472	2	0	0	100.3	100.3	1	4648.7	3.25	0	84.35	0	0.61	0	0	18.06	0	0	0	0	0	0	-2.7	-2.7
	Inverter	MV3-19	368357	4907347	2	0	0	100.3	100.3	1	4668.23	3.25	0	84.38	0	0.61	0	0	18.09	0	0	0	0	0	0	-2.77	-2.77
	Inverter	MV3-7	367945	4907754	2	0	0	100.3	100.3	1	4736.54	3.25	0	84.51	0	0.62	0	0	18.19	0	0	0	0	0	0	-3	-3
	Inverter	MV3-15	368357	4907477	2	0	0	100.3	100.3	1	4766.53	3.25	0	84.56	0	0.62	0	0	18.23	0	0	0	0	0	0	-3.11	-3.11
	Inverter	MV3-10	368167	4907669	2	0	0	100.3	100.3	1	4797.34	3.25	0	84.62	0	0.62	0	0	18.28	0	0	0	0	0	0	-3.21	-3.21
	Inverter	MV3-16	368514	4907475	2	0	0	100.3	100.3	1	4868.18	3.25	0	84.75	0	0.63	0	0	18.39	0	0	0	0	0	0	-3.45	-3.45
	Inverter	MV3-20	368689	4907317	2	0	0	100.3	100.3	1	4872.68	3.25	0	84.76	0	0.63	0	0	18.39	0	0	0	0	0	0	-3.47	-3.47
	Inverter	MV3-3	367939	4907927	2	0	0	100.3	100.3	1	4877.01	3.25	0	84.76	0	0.63	0	0	18.4	0	0	0	0	0	0	-3.48	-3.48
	Inverter	MV3-11	368346	4907662	2	0	0	100.3	100.3	1	4902.04	3.25	0	84.81	0	0.63	0	0	18.44	0	0	0	0	0	0	-3.56	-3.56
	Inverter	MV3-6	368162	4907834	2	0	0	100.3	100.3	1	4926.93	3.25	0	84.85	0	0.64	0	0	18.47	0	0	0	0	0	0	-3.65	-3.65
	Inverter	MV3-14	368684	4907498	2	0	0	100.3	100.3	1	4999.84	3.25	0	84.98	0	0.64	0	0	18.58	0	0	0	0	0	0	-3.89	-3.89
	Inverter	MV3-9	368512	4907703	2	0	0	100.3	100.3	1	5039.19	3.25	0	85.05	0	0.65	0	0	18.64	0	0	0	0	0	0	-4.02	-4.02
	Inverter	MV3-8	368680	4907712	2	0	0	100.3	100.3	1	5155.62	3.25	0	85.25	0	0.66	0	0	18.81	0	0	0	0	0	0	-4.4	-4.4
	Inverter	MV6-3	370207	4907140	2	0	0	100.3	100.3	1	5935.4	3.25	0	86.47	0	0.7	0	0	19.91	0	0	0	0	0	0	-6.76	-6.76
	Inverter	MV6-2	370085	4907339	2	0	0	100.3	100.3	1	5948.98	3.25	0	86.49	0	0.7	0	0	19.92	0	0	0	0	0	0	-6.8	-6.8

Inverters	G_Inv1	366526.4	4903225.8	2	0	0	87.7	87.7	1	1400.52	3.25	0	73.93	0	2.51	0	0	1.92	0	0	0	0	0	0	9.31	9.31
Inverter	MV4-7	369035	4909001	2	0	0	100.3	100.3	1	6384.2	3.25	0	87.1	0	0.71	0	0	20.51	0	0	0	0	0	0	-8.01	-8.01
Inverter	MV4-11	369264	4908855	2	0	0	100.3	100.3	1	6407.07	3.25	0	87.13	0	0.71	0	0	20.54	0	0	0	0	0	0	-8.07	-8.07
Inverter	MV4-10	369312	4908858	2	0	0	100.3	100.3	1	6439.43	3.25	0	87.18	0	0.71	0	0	20.58	0	0	0	0	0	0	-8.16	-8.16
Inverters	G_Inv3	366583.7	4903091.4	2	0	0	87.7	87.7	1	1514.33	3.25	0	74.6	0	2.52	0	0	2.06	0	0	0	0	0	0	8.47	8.47
Inverter	MV4-8	369256	4909001	2	0	0	100.3	100.3	1	6516.97	3.25	0	87.28	0	0.71	0	0	20.68	0	0	0	0	0	0	-8.36	-8.36
Inverter	MV4-9	369289	4909001	2	0	0	100.3	100.3	1	6537.21	3.25	0	87.31	0	0.71	0	0	20.71	0	0	0	0	0	0	-8.42	-8.42
Inverter	MV4-4	369027	4909199	2	0	0	100.3	100.3	1	6540.56	3.25	0	87.31	0	0.71	0	0	20.71	0	0	0	0	0	0	-8.43	-8.43
Inverters	G_Inv2	366676.9	4903239.1	2	0	0	87.7	87.7	1	1531.64	3.25	0	74.7	0	2.52	0	0	2.08	0	0	0	0	0	0	8.35	8.35
Inverter	MV4-6	369243	4909192	2	0	0	100.3	100.3	1	6661.35	3.25	0	87.47	0	0.71	0	0	20.87	0	0	0	0	0	0	-8.74	-8.74
Inverter	MV4-5	369289	4909199	2	0	0	100.3	100.3	1	6694.48	3.25	0	87.51	0	0.71	0	0	20.91	0	0	0	0	0	0	-8.83	-8.83
Inverter	MV4-1	369011	4909397	2	0	0	100.3	100.3	1	6694.65	3.25	0	87.51	0	0.71	0	0	20.91	0	0	0	0	0	0	-8.83	-8.83
Inverter	MV5-5	370015	4908690	2	0	0	100.3	100.3	1	6781.38	3.25	0	87.63	0	0.71	0	0	21.02	0	0	0	0	0	0	-9.05	-9.05
Inverter	MV4-3	369229	4909397	2	0	0	100.3	100.3	1	6818.86	3.25	0	87.67	0	0.71	0	0	21.07	0	0	0	0	0	0	-9.15	-9.15
Inverter	MV4-2	369272	4909397	2	0	0	100.3	100.3	1	6843.91	3.25	0	87.71	0	0.71	0	0	21.1	0	0	0	0	0	0	-9.21	-9.21
Inverter	MV5-2	370006	4908853	2	0	0	100.3	100.3	1	6892.6	3.25	0	87.77	0	0.71	0	0	21.16	0	0	0	0	0	0	-9.33	-9.33
Inverters	G_Inv5	366638.5	4902958.1	2	0	0	87.7	87.7	1	1630.6	3.25	0	75.25	0	2.54	0	0	2.2	0	0	0	0	0	0	7.68	7.68
Inverter	MV5-4	370324	4908707	2	0	0	100.3	100.3	1	7012.84	3.25	0	87.92	0	0.71	0	0	21.32	0	0	0	0	0	0	-9.63	-9.63
Inverters	G_Inv4	366732.8	4903105	2	0	0	87.7	87.7	1	1639.15	3.25	0	75.29	0	2.54	0	0	2.21	0	0	0	0	0	0	7.62	7.62
Inverter	MV5-3	370231	4908851	2	0	0	100.3	100.3	1	7047.66	3.25	0	87.96	0	0.71	0	0	21.36	0	0	0	0	0	0	-9.72	-9.72
Inverter	MV5-1	370020	4909142	2	0	0	100.3	100.3	1	7114.69	3.25	0	88.04	0	0.71	0	0	21.44	0	0	0	0	0	0	-9.88	-9.88
Inverters	G_Inv6	366788.5	4902972	2	0	0	87.7	87.7	1	1751.39	3.25	0	75.87	0	2.55	0	0	2.34	0	0	0	0	0	0	6.9	6.9
Inverters	G_Inv7	366694.6	4902824.7	2	0	0	87.7	87.7	1	1752.12	3.25	0	75.87	0	2.55	0	0	2.34	0	0	0	0	0	0	6.89	6.89
Inverters	G_Inv8	366844.5	4902838.5	2	0	0	87.7	87.7	1	1868.55	3.25	0	76.43	0	2.57	0	0	2.48	0	0	0	0	0	0	6.18	6.18
Inverters	G_Inv9	366750.9	4902691.8	2	0	0	87.7	87.7	1	1876.79	3.25	0	76.47	0	2.57	0	0	2.49	0	0	0	0	0	0	6.13	6.13
Inverters	G_Inv10	366900.7	4902704.8	2	0	0	87.7	87.7	1	1989.62	3.25	0	76.98	0	2.58	0	0	2.62	0	0	0	0	0	0	5.48	5.48
Inverter	MV1-3	364440	4906039	2	0	0	89.1	89.1	1	2345.82	3.25	0	78.41	0	0.99	0	0	8.6	0	0	0	0	0	0	1.06	1.06
Inverter	MV6-1	370235	4907364	2	0	0	97.3	97.3	1	6085.44	3.25	0	86.69	0	0.71	0	0	20.11	0	0	0	0	0	0	-10.19	-10.19
DSTATCOM - 10 MVAR #2	DSAT2	369403	4908757	2.5	0	0	96.6	96.6	1	6419.33	3.5	0	87.15	0	3.8	0	0	4.04	0	0	0	0	0	0	1.64	1.64
DSTATCOM - 10 MVAR #1	DSAT1	369437	4908757	2.5	0	0	96.6	96.6	1	6441.27	3.5	0	87.18	0	3.8	0	0	4.05	0	0	0	0	0	0	1.6	1.6
Inverter	MV2-2	365977	4906654	2	0	0	89.1	89.1	1	2896.56	3.25	0	80.24	0	1.12	0	0	9.46	0	0	0	0	0	0	-1.76	-1.76
SubstationTransformer	W_ST	369711.17	4906112.3	2.5	0	0	92	92	1	4986.25	4.25	0	84.96	0	1.63	2.33	0.26	8.6	0	0	0	0	0	0	-5.55	-5.55
Inverter	MV3-22	368656	4907142	2	0	0	89.1	89.1	1	4725.87	3.25	0	84.49	0	1.57	0	0	12.09	0	0	0	0	0	0	-9.1	-9.1
Westbrook Inverter Enclosur	W_INV2	369374	4906388	2	0	0	89.1	89.1	1	4827.84	3.25	0	84.68	0	1.6	0	0	12.23	0	0	0	0	0	0	-9.45	-9.45
Westbrook Inverter Enclosur	W_INV3	369508	4906164	2	0	0	89.1	89.1	1	4830.81	3.25	0	84.68	0	1.6	0	0	12.24	0	0	0	0	0	0	-9.46	-9.46
Westbrook Inverter Enclosur	W_INV4	369673	4906164	2	0	0	89.1	89.1	1	4976.18	3.25	0	84.94	0	1.63	0	0	12.43	0	0	0	0	0	0	-9.95	-9.95
Inverter	MV3-1	368156	4907976	2	0	0	89.1	89.1	1	5039.15	3.25	0	85.05	0	1.65	0	0	12.52	0	0	0	0	0	0	-10.15	-10.15
Inverter	MV3-5	368340	4907843	2	0	0	89.1	89.1	1	5040.6	3.25	0	85.05	0	1.65	0	0	12.52	0	0	0	0	0	0	-10.16	-10.16
Westbrook Inverter Enclosur	W_INV7	369780	4906417	2	0	0	89.1	89.1	1	5191.67	3.25	0	85.31	0	1.69	0	0	12.72	0	0	0	0	0	0	-10.65	-10.65
Inverter	MV3-4	368502	4907925	2	0	0	89.1	89.1	1	5204.9	3.25	0	85.33	0	1.69	0	0	12.74	0	0	0	0	0	0	-10.7	-10.7
Westbrook Inverter Enclosur	W_INV5	369719	4906574	2	0	0	89.1	89.1	1	5219.13	3.25	0	85.35	0	1.69	0	0	12.75	0	0	0	0	0	0	-10.74	-10.74
Inverter	MV3-2	368671	4907928	2	0	0	89.1	89.1	1	5313.79	3.25	0	85.51	0	1.72	0	0	12.88	0	0	0	0	0	0	-11.05	-11.05
Westbrook Inverter Enclosur	W_INV6	369875	4906578	2	0	0	89.1	89.1	1	5354.76	3.25	0	85.57	0	1.73	0	0	12.93	0	0	0	0	0	0	-11.18	-11.18
Fixed Reactor Bank 1	FRB1	369378	4908755	6	0	0	89.8	89.8	1	6401.73	5.25	0	87.13	0	-0.36	0	0	10.16	0	0	0	0	0	0	-7.15	-7.15
Fixed Reactor Bank 2	FRB2	369464	4908755	6	0	0	89.8	89.8	1	6457.25	5.25	0	87.2	0	-0.35	0	0	10.22	0	0	0	0	0	0	-7.29	-7.29
Inverter	MV4-15	369176	4908481	2	0	0	89.1	89.1	1	6061.99	3.25	0	86.65	0	1.9	0	0	13.84	0	0	0	0	0	0	-13.34	-13.34
Inverter	MV4-13	369051	4908605	2	0	0	89.1	89.1	1	6078.82	3.25	0	86.68	0	1.91	0	0	13.86	0	0	0	0	0	0	-13.39	-13.39
Inverter	MV4-14	369176	4908507	2	0	0	89.1	89.1	1	6081.9	3.25	0	86.68	0	1.91	0	0	13.87	0	0	0	0	0	0	-13.39	-13.39
Inverter	MV4-12	369043	4908803	2	0	0	89.1	89.1	1	6230.23	3.25	0	86.89	0	1.94	0	0	14.05	0	0	0	0	0	0	-13.82	-13.82
Inverter	MV5-6	369982	4908507	2	0	0	89.1	89.1	1	6628.37	3.25	0	87.43	0	2.04	0	0	14.54	0	0	0	0	0	0	-14.95	-14.95
Westbrook Inverter Enclosur	W_INV1	369409	4906578	2	0	0	86.1	86.1	1	4959.73	3.25	0	84.91	0	1.63	0	0	12.41	0	0	0	0	0	0	-12.89	-12.89
Inverter	MV6-4	370250	4906966	2	0	0	86.1	86.1	1	5876.99	3.25	0	86.38	0	1.86	0	0	13.61	0	0	0	0	0	0	-15.79	-15.79
Inverter Transformer	MV1-14 T	365157	4905049	2	0	0	69.4	69.4	1	1209.31	3.25	0	72.65	0	1.83	0	0	4.09	0	0	0	0	0	0	-9.21	-9.21
Inverter Transformer	MV1-13 T	364725	4905241	2	0	0	69.4	69.4	1	1498.69	3.25	0	74.51	0	1.97	0	0	4.43	0	0	0	0	0	0	-11.57	-11.57
Inverter Transformer	MV1-10 T	365010	4905564	2	0	0	69.4	69.4	1	1738.58	3.25	0	75.8	0	2.07	0	0	4.7	0	0	0	0	0	0	-13.22	-13.22
Westbrook Inverter Transfor	W_INVTR1	369403	4906578	2	0	0	78.2	78.2	1	4954.73	3.25	0	84.9	0	-3.17	0	0	2.4	0	0	0	0	0	0	-5.89	-5.89
Westbrook Inverter Transfor	W_INVTR2	369368	4906388	2	0	0	77.3	77.3	1	4822.74	3.25	0	84.67	0	-3.14	0	0	2.35	0	0	0	0	0	0	-6.53	-6.53
Westbrook Inverter Transfor	W_INVTR3	369514	4906164	2	0	0	77.3	77.3	1	4836.07	3.25	0	84.69	0	-3.14	0	0	2.36	0	0	0	0	0	0	-6.56	-6.56
Inverter Transformer	MV1-7 T	364919	4905782	2	0	0	69.4	69.4	1	1968.58	3.25	0	76.88	0	2.16	0	0	4.93	0	0	0	0	0	0	-14.63	-14.63
Westbrook Inverter Transfor	W_INVTR4	369679	4906164	2	0	0	77.3	77.3	1	4981.49	3.25	0	84.95	0	-3.17	0	0	2.41	0	0	0	0	0	0	-6.84	-6.84
Westbrook Inverter Transfor	W_INVTR7	369786	4906417	2	0	0	77.3	77.3	1	5196.89	3.25	0	85.31	0	-3.22	0	0	2.48	0	0	0	0	0	0	-7.24	-7.24
Westbrook Inverter Transfor	W_INVTR5	369725	4906574	2	0	0	77.3	77.3	1	5224.24	3.25	0	85.36	0	-3.22	0	0	2.49	0	0	0	0	0	0	-7.29	-7.29
Westbrook Inverter Transfor	W_INVTR6	369881	4906578	2	0	0	77.3	77.3	1	5359.92	3.25	0	85.58	0	-3.25	0	0	2.53	0	0	0	0	0	0	-7.53	-7.53
Inverter Transformer	MV2-1 T	365836	4906816	2	0	0	69.4	69.4	1	3024.4	3.25	0	80.61	0	2.51	0	0	5.9	0	0	0	0	0	0	-19.68	-19.68
Inverter Transformer	MV1-15 T	365309	4904994	2	0	0	56.1	56.1	1	1149.66	3.25	0	72.21	0	0.07	0	0	5.24	0	0	0	0	0	0	-21.46	-21.46
Inverter Transformer	MV6-4 T	370244	4906966	2	0	0	69.4	69.4	1	5871.91	3.25	0	86.38	0	3.17	0	0	7.94	0	0	0	0	0	0	-28.13	-28.13
Inverter Transformer	MV6-1 T	370230	4907364	2	0	0	69.4	69.4	1	6081.36	3.25	0	86.68	0	3.2	0	0	8.07	0	0	0	0	0	0	-28.6	-28.6
Inverter Transformer	MV1-12 T	365044	4905386	2	0	0	56.1	56.1	1	1557.52	3.25	0	74.85	0	0.22	0	0	6.14	0	0	0	0	0	0	-25.15	-25.15
Inverter Transformer	MV1-11 T	364649	4905414	2	0	0	56.1	56.1	1	1687.5	3.25	0	75.54	0	0.27	0	0	6.41	0	0	0	0	0	0	-26.17	-26.17
Inverter Transformer	MV1-8 T	364782	4905647	2	0	0	56.1	56.1	1	1866.96	3.25	0	76.42	0	0.35	0	0	6.78	0	0	0	0	0	0	-27.49	-27.49
Inverter Transformer	MV1-9 T	364555	4905646	2	0	0	56.1	56.1	1	1937.81	3.25	0	76.75	0	0.38	0	0	6.92	0	0	0	0	0	0	-27.99	-27.99
Inverter Transformer	MV1-4 T	364821	4905918	2	0	0	56.1	56.1	1	2121.11	3.25	0	77.53	0	0.46	0	0	7.28	0	0	0	0	0	0	-29.21	-29.21
Inverter Transformer	MV1-5 T	364676	4905892	2	0	0	56.1	56.1	1	2131.5	3.25	0	77.57	0	0.46	0	0	7.3	0	0	0	0	0	0	-29.27	-29.27
Inverter Transformer	MV1-6 T	364482	4905835	2	0	0	56.1	56.1	1	2140.41	3.25	0	77.61	0	0.46	0	0	7.32	0	0	0	0	0	0	-29.33	-29.33

Inverter Transformer	MV1-2 T	364759	4906063	2	0	0	56.1	56.1	1	2276.15	3.25	0	78.14	0	0.52	0	0	7.57	0	0	0	0	0	0	-30.18	-30.18
Inverter Transformer	MV1-3 T	364435	4906039	2	0	0	56.1	56.1	1	2347.59	3.25	0	78.41	0	0.55	0	0	7.71	0	0	0	0	0	0	-30.61	-30.61
Inverter Transformer	MV1-1 T	364721	4906166	2	0	0	56.1	56.1	1	2385.09	3.25	0	78.55	0	0.57	0	0	7.78	0	0	0	0	0	0	-30.84	-30.84
Inverter Transformer	MV2-4 T	365590	4906628	2	0	0	56.1	56.1	1	2801.32	3.25	0	79.95	0	0.75	0	0	8.53	0	0	0	0	0	0	-33.16	-33.16
Inverter Transformer	MV2-3 T	365814	4906641	2	0	0	56.1	56.1	1	2848.39	3.25	0	80.09	0	0.77	0	0	8.61	0	0	0	0	0	0	-33.41	-33.41
Inverter Transformer	MV2-2 T	365982	4906654	2	0	0	56.1	56.1	1	2897.78	3.25	0	80.24	0	0.79	0	0	8.69	0	0	0	0	0	0	-33.66	-33.66
Inverter Transformer	MV3-18 T	367757	4907412	2	0	0	56.1	56.1	1	4348.3	3.25	0	83.77	0	1.38	0	0	10.96	0	0	0	0	0	0	-40.05	-40.05
Inverter Transformer	MV3-12 T	367674	4907594	2	0	0	56.1	56.1	1	4453.46	3.25	0	83.97	0	1.42	0	0	11.11	0	0	0	0	0	0	-40.45	-40.45
Inverter Transformer	MV3-13 T	367958	4907577	2	0	0	56.1	56.1	1	4599.14	3.25	0	84.25	0	1.48	0	0	11.31	0	0	0	0	0	0	-40.99	-40.99
Inverter Transformer	MV3-21 T	368484	4907206	2	0	0	56.1	56.1	1	4650.25	3.25	0	84.35	0	1.5	0	0	11.38	0	0	0	0	0	0	-41.17	-41.17
Inverter Transformer	MV3-17 T	368183	4907472	2	0	0	56.1	56.1	1	4651.83	3.25	0	84.35	0	1.5	0	0	11.39	0	0	0	0	0	0	-41.18	-41.18
Inverter Transformer	MV3-19 T	368352	4907347	2	0	0	56.1	56.1	1	4664.92	3.25	0	84.38	0	1.5	0	0	11.4	0	0	0	0	0	0	-41.22	-41.22
Inverter Transformer	MV3-22 T	368661	4907142	2	0	0	56.1	56.1	1	4729.45	3.25	0	84.5	0	1.53	0	0	11.49	0	0	0	0	0	0	-41.46	-41.46
Inverter Transformer	MV3-7 T	367951	4907754	2	0	0	56.1	56.1	1	4739.93	3.25	0	84.52	0	1.53	0	0	11.51	0	0	0	0	0	0	-41.49	-41.49
Inverter Transformer	MV3-15 T	368351	4907477	2	0	0	56.1	56.1	1	4762.64	3.25	0	84.56	0	1.54	0	0	11.54	0	0	0	0	0	0	-41.57	-41.57
Inverter Transformer	MV3-10 T	368162	4907669	2	0	0	56.1	56.1	1	4794.32	3.25	0	84.61	0	1.55	0	0	11.58	0	0	0	0	0	0	-41.69	-41.69
Inverter Transformer	MV3-16 T	368509	4907475	2	0	0	56.1	56.1	1	4864.85	3.25	0	84.74	0	1.58	0	0	11.67	0	0	0	0	0	0	-41.93	-41.93
Inverter Transformer	MV3-20 T	368683	4907317	2	0	0	56.1	56.1	1	4868.47	3.25	0	84.75	0	1.58	0	0	11.68	0	0	0	0	0	0	-41.95	-41.95
Inverter Transformer	MV3-3 T	367944	4907927	2	0	0	56.1	56.1	1	4879.75	3.25	0	84.77	0	1.58	0	0	11.69	0	0	0	0	0	0	-41.99	-41.99
Inverter Transformer	MV3-11 T	368340	4907662	2	0	0	56.1	56.1	1	4898.28	3.25	0	84.8	0	1.59	0	0	11.72	0	0	0	0	0	0	-42.05	-42.05
Inverter Transformer	MV3-6 T	368156	4907834	2	0	0	56.1	56.1	1	4923.41	3.25	0	84.85	0	1.6	0	0	11.75	0	0	0	0	0	0	-42.14	-42.14
Inverter Transformer	MV3-14 T	368678	4907498	2	0	0	56.1	56.1	1	4995.75	3.25	0	84.97	0	1.62	0	0	11.85	0	0	0	0	0	0	-42.39	-42.39
Inverter Transformer	MV3-1 T	368150	4907976	2	0	0	56.1	56.1	1	5035.71	3.25	0	85.04	0	1.64	0	0	11.9	0	0	0	0	0	0	-42.52	-42.52
Inverter Transformer	MV3-5 T	368335	4907843	2	0	0	56.1	56.1	1	5037.56	3.25	0	85.04	0	1.64	0	0	11.9	0	0	0	0	0	0	-42.53	-42.53
Inverter Transformer	MV3-9 T	368517	4907703	2	0	0	56.1	56.1	1	5042.41	3.25	0	85.05	0	1.64	0	0	11.91	0	0	0	0	0	0	-42.54	-42.54
Inverter Transformer	MV3-8 T	368685	4907712	2	0	0	56.1	56.1	1	5158.93	3.25	0	85.25	0	1.68	0	0	12.06	0	0	0	0	0	0	-42.94	-42.94
Inverter Transformer	MV3-4 T	368507	4907925	2	0	0	56.1	56.1	1	5208	3.25	0	85.33	0	1.7	0	0	12.13	0	0	0	0	0	0	-43.1	-43.1
Inverter Transformer	MV3-2 T	368677	4907928	2	0	0	56.1	56.1	1	5317.63	3.25	0	85.51	0	1.74	0	0	12.27	0	0	0	0	0	0	-43.46	-43.46
Inverter Transformer	MV6-3 T	370202	4907140	2	0	0	56.1	56.1	1	5931.25	3.25	0	86.46	0	1.94	0	0	13.02	0	0	0	0	0	0	-45.37	-45.37
Inverter Transformer	MV6-2 T	370091	4907339	2	0	0	56.1	56.1	1	5953.84	3.25	0	86.5	0	1.95	0	0	13.05	0	0	0	0	0	0	-45.44	-45.44
Inverter Transformer	MV4-15 T	369170	4908481	2	0	0	56.1	56.1	1	6058.13	3.25	0	86.65	0	1.98	0	0	13.17	0	0	0	0	0	0	-45.74	-45.74
Inverter Transformer	MV4-13 T	369057	4908605	2	0	0	56.1	56.1	1	6082.55	3.25	0	86.68	0	1.99	0	0	13.2	0	0	0	0	0	0	-45.81	-45.81
Inverter Transformer	MV4-14 T	369182	4908507	2	0	0	56.1	56.1	1	6085.76	3.25	0	86.69	0	1.99	0	0	13.2	0	0	0	0	0	0	-45.82	-45.82
Inverter Transformer	MV4-12 T	369049	4908803	2	0	0	56.1	56.1	1	6233.87	3.25	0	86.9	0	2.04	0	0	13.38	0	0	0	0	0	0	-46.25	-46.25
Inverter Transformer	MV4-7 T	369040	4909001	2	0	0	56.1	56.1	1	6387.15	3.25	0	87.11	0	2.08	0	0	13.55	0	0	0	0	0	0	-46.68	-46.68
Inverter Transformer	MV4-11 T	369269	4908855	2	0	0	56.1	56.1	1	6410.19	3.25	0	87.14	0	2.09	0	0	13.58	0	0	0	0	0	0	-46.75	-46.75
Inverter Transformer	MV4-10 T	369307	4908858	2	0	0	56.1	56.1	1	6436.3	3.25	0	87.17	0	2.1	0	0	13.61	0	0	0	0	0	0	-46.82	-46.82
Inverter Transformer	MV4-8 T	369262	4909001	2	0	0	56.1	56.1	1	6520.64	3.25	0	87.29	0	2.12	0	0	13.7	0	0	0	0	0	0	-47.05	-47.05
Inverter Transformer	MV4-9 T	369284	4909001	2	0	0	56.1	56.1	1	6534.14	3.25	0	87.3	0	2.13	0	0	13.72	0	0	0	0	0	0	-47.09	-47.09
Inverter Transformer	MV4-4 T	369033	4909199	2	0	0	56.1	56.1	1	6544	3.25	0	87.32	0	2.13	0	0	13.73	0	0	0	0	0	0	-47.12	-47.12
Inverter Transformer	MV5-6 T	369987	4908507	2	0	0	56.1	56.1	1	6631.93	3.25	0	87.43	0	2.16	0	0	13.83	0	0	0	0	0	0	-47.36	-47.36
Inverter Transformer	MV4-6 T	369249	4909192	2	0	0	56.1	56.1	1	6664.93	3.25	0	87.48	0	2.17	0	0	13.86	0	0	0	0	0	0	-47.45	-47.45
Inverter Transformer	MV4-5 T	369283	4909199	2	0	0	56.1	56.1	1	6690.88	3.25	0	87.51	0	2.17	0	0	13.89	0	0	0	0	0	0	-47.52	-47.52
Inverter Transformer	MV4-1 T	369017	4909397	2	0	0	56.1	56.1	1	6698	3.25	0	87.52	0	2.18	0	0	13.9	0	0	0	0	0	0	-47.54	-47.54
Inverter Transformer	MV5-5 T	370021	4908690	2	0	0	56.1	56.1	1	6785.58	3.25	0	87.63	0	2.2	0	0	14	0	0	0	0	0	0	-47.77	-47.77
Inverter Transformer	MV4-3 T	369234	4909397	2	0	0	56.1	56.1	1	6821.76	3.25	0	87.68	0	2.21	0	0	14.04	0	0	0	0	0	0	-47.87	-47.87
Inverter Transformer	MV4-2 T	369267	4909397	2	0	0	56.1	56.1	1	6840.99	3.25	0	87.7	0	2.22	0	0	14.06	0	0	0	0	0	0	-47.92	-47.92
Inverter Transformer	MV5-2 T	370011	4908853	2	0	0	56.1	56.1	1	6896.03	3.25	0	87.77	0	2.23	0	0	14.12	0	0	0	0	0	0	-48.06	-48.06
Inverter Transformer	MV5-4 T	370330	4908707	2	0	0	56.1	56.1	1	7017.17	3.25	0	87.92	0	2.26	0	0	14.25	0	0	0	0	0	0	-48.38	-48.38
Inverter Transformer	MV5-3 T	370237	4908851	2	0	0	56.1	56.1	1	7051.89	3.25	0	87.97	0	2.27	0	0	14.29	0	0	0	0	0	0	-48.47	-48.47
Inverter Transformer	MV5-1 T	370015	4909142	2	0	0	56.1	56.1	1	7111.35	3.25	0	88.04	0	2.29	0	0	14.35	0	0	0	0	0	0	-48.62	-48.62
Line Reactor	NGR	369421	4908787.5	5	0	0	45.4	45.4	1	6454.26	5.25	0	87.2	0	3.23	1.37	0.09	2.64	0	0	0	0	0	0	-49.08	-49.08
Limit. Valu	0	0																							
Level D/N:	24.5741	24.5741																							

Receiver: Existing Noise Receptor
ID: G-97
X: 367907.2
Y: 4901809.1
Z: 4.5
Ground: 0

ISO	Description	ID	X	Y	Z	Ground	ReflOrd	LxT	LxN	L/A	Dist.	hm	Freq	Adiv	K0b	Agr	Abar	z	Aatm	Afol	Ahous	Cmet	CmetN	Dc	RL	LtotT	LtotN
	Sol_Luce Substation	S_Substation	369426	4908792	3.5	0	0	112.1	112.1	1	7146.16	5.25	0	88.08	0	1.41	2.42	0.34	10.89	0	0	0	0	0	0	9.28	9.28
	Inverter	MV1-15	365315	4904994	2	0	0	100.3	100.3	1	4106.47	3.25	0	83.27	0	0.54	0	0	17.22	0	0	0	0	0	0	-0.72	-0.72
	Inverter	MV1-12	365038	4905386	2	0	0	100.3	100.3	1	4585.47	3.25	0	84.23	0	0.6	0	0	17.96	0	0	0	0	0	0	-2.48	-2.48
	Inverter	MV1-11	364655	4905414	2	0	0	100.3	100.3	1	4855.11	3.25	0	84.72	0	0.63	0	0	18.37	0	0	0	0	0	0	-3.41	-3.41
	Inverter	MV1-8	364788	4905647	2	0	0	100.3	100.3	1	4945.59	3.25	0	84.88	0	0.64	0	0	18.5	0	0	0	0	0	0	-3.71	-3.71
	Inverter	MV1-9	364561	4905646	2	0	0	100.3	100.3	1	5091.06	3.25	0	85.14	0	0.65	0	0	18.71	0	0	0	0	0	0	-4.19	-4.19
	Inverter	MV1-4	364815	4905918	2	0	0	100.3	100.3	1	5142.45	3.25	0	85.22	0	0.65	0	0	18.79	0	0	0	0	0	0	-4.35	-4.35
	Inverter	MV1-5	364671	4905892	2	0	0	100.3	100.3	1	5209.9	3.25	0	85.34	0	0.66	0	0	18.89	0	0	0	0	0	0	-4.57	-4.57
	Inverter	MV2-3	365820	4906641	2	0	0	100.3	100.3	1	5263.43	3.25	0	85.43	0	0.66	0	0	18.96	0	0	0	0	0	0	-4.74	-4.74
	Inverter	MV1-6	364477	4905835	2	0	0	100.3	100.3	1	5289.06	3.25	0	85.47	0	0.67	0	0	19	0	0	0	0	0	0	-4.82	-4.82
	Inverter	MV1-2	364753	4906063	2	0	0	100.3	100.3	1	5295.72	3.25	0	85.48	0	0.67	0	0	19.01	0	0	0	0	0	0	-4.84	-4.84

Inverter	MV2-4	365586	4906624	2	0	0	100.3	100.3	1	5345.21	3.25	0	85.56	0	0.67	0	0	19.08	0	0	0	0	0	0	-5	-5
Inverter	MV1-1	364715	4906166	2	0	0	100.3	100.3	1	5401.18	3.25	0	85.65	0	0.67	0	0	19.16	0	0	0	0	0	0	-5.17	-5.17
Inverter	MV3-21	368478	4907206	2	0	0	100.3	100.3	1	5427	3.25	0	85.69	0	0.68	0	0	19.2	0	0	0	0	0	0	-5.25	-5.25
Inverter	MV3-19	368357	4907347	2	0	0	100.3	100.3	1	5556.14	3.25	0	85.9	0	0.68	0	0	19.38	0	0	0	0	0	0	-5.65	-5.65
Inverter	MV3-20	368689	4907317	2	0	0	100.3	100.3	1	5563.11	3.25	0	85.91	0	0.68	0	0	19.39	0	0	0	0	0	0	-5.67	-5.67
Inverter	MV3-18	367752	4907412	2	0	0	100.3	100.3	1	5605.05	3.25	0	85.97	0	0.69	0	0	19.45	0	0	0	0	0	0	-5.79	-5.79
Inverter	MV3-17	368178	4907472	2	0	0	100.3	100.3	1	5669.37	3.25	0	86.07	0	0.69	0	0	19.54	0	0	0	0	0	0	-5.99	-5.99
Inverter	MV3-15	368357	4907477	2	0	0	100.3	100.3	1	5685.72	3.25	0	86.1	0	0.69	0	0	19.56	0	0	0	0	0	0	-6.04	-6.04
Inverter	MV3-16	368514	4907475	2	0	0	100.3	100.3	1	5698.3	3.25	0	86.11	0	0.69	0	0	19.58	0	0	0	0	0	0	-6.07	-6.07
Inverter	MV3-14	368684	4907498	2	0	0	100.3	100.3	1	5741.69	3.25	0	86.18	0	0.69	0	0	19.64	0	0	0	0	0	0	-6.2	-6.2
Inverter	MV3-13	367963	4907577	2	0	0	100.3	100.3	1	5768.17	3.25	0	86.22	0	0.7	0	0	19.68	0	0	0	0	0	0	-6.28	-6.28
Inverters	G_Inv10	366900.7	4902704.8	2	0	0	87.7	87.7	1	1347.34	3.25	0	73.59	0	2.5	0	0	1.86	0	0	0	0	0	0	9.71	9.71
Inverter	MV3-12	367668	4907594	2	0	0	100.3	100.3	1	5789.84	3.25	0	86.25	0	0.7	0	0	19.71	0	0	0	0	0	0	-6.34	-6.34
Inverter	MV6-3	370207	4907140	2	0	0	100.3	100.3	1	5805.82	3.25	0	86.28	0	0.7	0	0	19.73	0	0	0	0	0	0	-6.39	-6.39
Inverter	MV3-10	368167	4907669	2	0	0	100.3	100.3	1	5865.66	3.25	0	86.37	0	0.7	0	0	19.81	0	0	0	0	0	0	-6.56	-6.56
Inverter	MV3-11	368346	4907662	2	0	0	100.3	100.3	1	5869.33	3.25	0	86.37	0	0.7	0	0	19.81	0	0	0	0	0	0	-6.57	-6.57
Inverter	MV3-9	368512	4907703	2	0	0	100.3	100.3	1	5924.85	3.25	0	86.45	0	0.7	0	0	19.89	0	0	0	0	0	0	-6.73	-6.73
Inverter	MV6-2	370085	4907339	2	0	0	100.3	100.3	1	5943.28	3.25	0	86.48	0	0.7	0	0	19.92	0	0	0	0	0	0	-6.79	-6.79
Inverter	MV3-7	367945	4907754	2	0	0	100.3	100.3	1	5945.02	3.25	0	86.48	0	0.7	0	0	19.92	0	0	0	0	0	0	-6.79	-6.79
Inverter	MV3-8	368680	4907712	2	0	0	100.3	100.3	1	5953.27	3.25	0	86.5	0	0.7	0	0	19.93	0	0	0	0	0	0	-6.82	-6.82
Inverter	MV1-14	365163	4905049	2	0	0	97.3	97.3	1	4245.89	3.25	0	83.56	0	0.56	0	0	17.44	0	0	0	0	0	0	-4.24	-4.24
Inverter	MV3-6	368162	4907834	2	0	0	100.3	100.3	1	6030.29	3.25	0	86.61	0	0.71	0	0	20.03	0	0	0	0	0	0	-7.03	-7.03
Gardiner Substation	G_Sub	366586.3	4903349.9	2.5	0	0	90.8	90.8	1	2029.49	3.5	0	77.15	0	-0.16	0	0	4.42	0	0	0	0	0	0	9.37	9.37
Inverter	MV3-3	367939	4907927	2	0	0	100.3	100.3	1	6117.98	3.25	0	86.73	0	0.71	0	0	20.15	0	0	0	0	0	0	-7.28	-7.28
Inverters	G_Inv9	366750.9	4902691.8	2	0	0	87.7	87.7	1	1454.71	3.25	0	74.26	0	2.51	0	0	1.99	0	0	0	0	0	0	8.9	8.9
Inverters	G_Inv8	366844.5	4902838.5	2	0	0	87.7	87.7	1	1479.53	3.25	0	74.4	0	2.52	0	0	2.02	0	0	0	0	0	0	8.72	8.72
Inverter	MV1-13	364731	4905241	2	0	0	97.3	97.3	1	4676.13	3.25	0	84.4	0	0.61	0	0	18.1	0	0	0	0	0	0	-5.79	-5.79
Inverter	MV1-10	365004	4905564	2	0	0	97.3	97.3	1	4746.35	3.25	0	84.53	0	0.62	0	0	18.2	0	0	0	0	0	0	-6.04	-6.04
Inverters	G_Inv7	366694.6	4902824.7	2	0	0	87.7	87.7	1	1581.72	3.25	0	74.98	0	2.53	0	0	2.14	0	0	0	0	0	0	8.01	8.01
Inverters	G_Inv6	366788.5	4902972	2	0	0	87.7	87.7	1	1613.64	3.25	0	75.16	0	2.53	0	0	2.18	0	0	0	0	0	0	7.79	7.79
Inverter	MV1-7	364925	4905782	2	0	0	97.3	97.3	1	4967.64	3.25	0	84.92	0	0.64	0	0	18.53	0	0	0	0	0	0	-6.78	-6.78
Inverter	MV4-11	369264	4908855	2	0	0	100.3	100.3	1	7175.35	3.25	0	88.12	0	0.7	0	0	21.52	0	0	0	0	0	0	-10.03	-10.03
Inverter	MV4-10	369312	4908858	2	0	0	100.3	100.3	1	7187.52	3.25	0	88.13	0	0.7	0	0	21.53	0	0	0	0	0	0	-10.06	-10.06
Inverter	MV5-5	370015	4908690	2	0	0	100.3	100.3	1	7196.5	3.25	0	88.14	0	0.7	0	0	21.54	0	0	0	0	0	0	-10.08	-10.08
Inverter	MV4-7	369035	4909001	2	0	0	100.3	100.3	1	7279.79	3.25	0	88.24	0	0.7	0	0	21.65	0	0	0	0	0	0	-10.28	-10.28
Inverter	MV5-4	370324	4908707	2	0	0	100.3	100.3	1	7309.03	3.25	0	88.28	0	0.7	0	0	21.68	0	0	0	0	0	0	-10.35	-10.35
Inverter	MV4-8	369256	4909001	2	0	0	100.3	100.3	1	7317.29	3.25	0	88.29	0	0.7	0	0	21.69	0	0	0	0	0	0	-10.37	-10.37
Inverter	MV4-9	369289	4909001	2	0	0	100.3	100.3	1	7323.44	3.25	0	88.29	0	0.7	0	0	21.7	0	0	0	0	0	0	-10.38	-10.38
Inverters	G_Inv5	366638.5	4902958.1	2	0	0	87.7	87.7	1	1711.67	3.25	0	75.67	0	2.55	0	0	2.3	0	0	0	0	0	0	7.15	7.15
Inverter	MV5-2	370006	4908853	2	0	0	100.3	100.3	1	7349.93	3.25	0	88.33	0	0.7	0	0	21.73	0	0	0	0	0	0	-10.44	-10.44
Inverter	MV5-3	370231	4908851	2	0	0	100.3	100.3	1	7415.42	3.25	0	88.4	0	0.69	0	0	21.81	0	0	0	0	0	0	-10.6	-10.6
Inverter	MV4-4	369027	4909199	2	0	0	100.3	100.3	1	7474.26	3.25	0	88.47	0	0.69	0	0	21.88	0	0	0	0	0	0	-10.73	-10.73
Inverter	MV4-6	369243	4909192	2	0	0	100.3	100.3	1	7502.77	3.25	0	88.5	0	0.69	0	0	21.92	0	0	0	0	0	0	-10.8	-10.8
Inverters	G_Inv4	366732.8	4903105	2	0	0	87.7	87.7	1	1748.88	3.25	0	75.86	0	2.55	0	0	2.34	0	0	0	0	0	0	6.91	6.91
Inverter	MV4-5	369289	4909199	2	0	0	100.3	100.3	1	7517.98	3.25	0	88.52	0	0.69	0	0	21.94	0	0	0	0	0	0	-10.83	-10.83
Inverter	MV5-1	370020	4909142	2	0	0	100.3	100.3	1	7631.21	3.25	0	88.65	0	0.68	0	0	22.07	0	0	0	0	0	0	-11.09	-11.09
Inverter	MV2-1	365842	4906816	2	0	0	97.3	97.3	1	5416.1	3.25	0	85.67	0	0.67	0	0	19.18	0	0	0	0	0	0	-8.22	-8.22
Inverter	MV4-1	369011	4909397	2	0	0	100.3	100.3	1	7667.76	3.25	0	88.69	0	0.68	0	0	22.12	0	0	0	0	0	0	-11.18	-11.18
Inverter	MV4-3	369229	4909397	2	0	0	100.3	100.3	1	7702.17	3.25	0	88.73	0	0.68	0	0	22.16	0	0	0	0	0	0	-11.25	-11.25
Inverter	MV4-2	369272	4909397	2	0	0	100.3	100.3	1	7709.66	3.25	0	88.74	0	0.68	0	0	22.17	0	0	0	0	0	0	-11.27	-11.27
Inverters	G_Inv3	366583.7	4903091.4	2	0	0	87.7	87.7	1	1842.81	3.25	0	76.31	0	2.56	0	0	2.45	0	0	0	0	0	0	6.34	6.34
Inverters	G_Inv2	366676.9	4903239.1	2	0	0	87.7	87.7	1	1886.41	3.25	0	76.51	0	2.57	0	0	2.5	0	0	0	0	0	0	6.08	6.08
Inverters	G_Inv1	366526.4	4903225.8	2	0	0	87.7	87.7	1	1978.3	3.25	0	76.93	0	2.58	0	0	2.61	0	0	0	0	0	0	5.54	5.54
Inverter	MV6-1	370235	4907364	2	0	0	97.3	97.3	1	6022.92	3.25	0	86.6	0	0.71	0	0	20.02	0	0	0	0	0	0	-10.01	-10.01
DSTATCOM - 10 MVAR #2	DSAT2	369403	4908757	2.5	0	0	96.6	96.6	1	7107.09	3.5	0	88.03	0	3.84	0	0	4.36	0	0	0	0	0	0	0.39	0.39
DSTATCOM - 10 MVAR #1	DSAT1	369437	4908757	2.5	0	0	96.6	96.6	1	7114.32	3.5	0	88.04	0	3.84	0	0	4.36	0	0	0	0	0	0	0.38	0.38
SubstationTransformer	W_ST	369711.17	4906112.3	2.5	0	0	92	92	1	4666	3.5	0	84.38	0	0.49	0	-0.13	8.22	0	0	0	0	0	0	-1.11	-1.11
Westbrook Inverter Enclosur	W_INV3	369508	4906164	2	0	0	89.1	89.1	1	4639.8	3.25	0	84.33	0	1.55	0	0	11.98	0	0	0	0	0	0	-8.8	-8.8
Westbrook Inverter Enclosur	W_INV4	369673	4906164	2	0	0	89.1	89.1	1	4699.28	3.25	0	84.44	0	1.57	0	0	12.06	0	0	0	0	0	0	-9.01	-9.01
Westbrook Inverter Enclosur	W_INV2	369374	4906388	2	0	0	89.1	89.1	1	4808.1	3.25	0	84.64	0	1.59	0	0	12.21	0	0	0	0	0	0	-9.38	-9.38
Westbrook Inverter Enclosur	W_INV7	369780	4906417	2	0	0	89.1	89.1	1	4973.94	3.25	0	84.93	0	1.63	0	0	12.43	0	0	0	0	0	0	-9.94	-9.94
Westbrook Inverter Enclosur	W_INV5	369719	4906574	2	0	0	89.1	89.1	1	5097.73	3.25	0	85.15	0	1.66	0	0	12.59	0	0	0	0	0	0	-10.35	-10.35
Westbrook Inverter Enclosur	W_INV6	369875	4906578	2	0	0	89.1	89.1	1	5158.94	3.25	0	85.25	0	1.68	0	0	12.68	0	0	0	0	0	0	-10.55	-10.55
Inverter	MV2-2	365977	4906654	2	0	0	89.1	89.1	1	5215.24	3.25	0	85.35	0	1.69	0	0	12.75	0	0	0	0	0	0	-10.73	-10.73
Inverter	MV3-22	368656	4907142	2	0	0	89.1	89.1	1	5385.21	3.25	0	85.62	0	1.73	0	0	12.97	0	0	0	0	0	0	-11.27	-11.27
Inverter	MV1-3	364440	4906039	2	0	0	89.1	89.1	1	5469.33	3.25	0	85.76	0	1.76	0	0	13.08	0	0	0	0	0	0	-11.54	-11.54
Inverter	MV3-5	368340	4907843	2	0	0	89.1	89.1	1	6049.4	3.25	0	86.63	0	1.9	0	0	13.82	0	0	0	0	0	0	-13.3	-13.3
Inverter	MV3-4	368502	4907925	2	0	0	89.1	89.1	1	6144.76	3.25	0	86.77	0	1.92	0	0	13.94	0	0	0	0	0	0	-13.58	-13.58
Inverter	MV3-2	368671	4907928	2	0	0	89.1	89.1	1	6166.39	3.25	0	86.8	0	1.93	0	0	13.97	0	0	0	0	0	0	-13.64	-13.64
Inverter	MV3-1	368156	4907976	2	0	0	89.1	89.1	1	6171.92	3.25	0	86.81	0	1.93	0	0	13.98	0	0	0	0	0	0	-13.66	-13.66
Fixed Reactor Bank 1	FRB1	369378	4908755	6	0	0	89.8	89.8	1	7099.91	5.25	0	88.03	0	-0.27	0	0	10.84	0	0	0	0	0	0	-8.82	-8.82
Fixed Reactor Bank 2	FRB2	369464	4908755	6	0	0	89.8	89.8	1	7118.23	5.25	0	88.05	0	-0.27	0	0	10.86	0	0	0	0	0	0	-8.86	-8.86
Inverter	MV4-15	369176	4908481	2	0	0	89.1	89.1	1	6791.47	3.25	0	87.64	0	2.08	0	0	14.74	0	0	0	0	0	0	-15.4	-15.4
Inverter	MV4-14	369176	4908507	2	0	0	89.1	89.1	1	6817.02	3.25	0	87.67	0	2.08	0	0	14.77	0	0	0	0	0	0	-15.47	-15.47

Inverter	MV4-13	369051	4908605	2	0	0	89.1	89.1	1	6891.48	3.25	0	87.77	0	2.1	0	0	14.86	0	0	0	0	0	0	-15.67	-15.67
Inverter	MV5-6	369982	4908507	2	0	0	89.1	89.1	1	7011.89	3.25	0	87.92	0	2.13	0	0	15	0	0	0	0	0	0	-15.99	-15.99
Westbrook Inverter Enclosur	W_INV1	369409	4906578	2	0	0	86.1	86.1	1	4999.78	3.25	0	84.98	0	1.64	0	0	12.46	0	0	0	0	0	0	-13.02	-13.02
Inverter	MV4-12	369043	4908803	2	0	0	89.1	89.1	1	7085.53	3.25	0	88.01	0	2.15	0	0	15.09	0	0	0	0	0	0	-16.19	-16.19
Inverter	MV6-4	370250	4906966	2	0	0	86.1	86.1	1	5664.13	3.25	0	86.06	0	1.8	0	0	13.33	0	0	0	0	0	0	-15.14	-15.14
Westbrook Inverter Transfor	W_INVTR1	369403	4906578	2	0	0	78.2	78.2	1	4997.98	3.25	0	84.98	0	-3.18	0	0	2.41	0	0	0	0	0	0	-5.97	-5.97
Westbrook Inverter Transfor	W_INVTR3	369514	4906164	2	0	0	77.3	77.3	1	4641.87	3.25	0	84.33	0	-3.1	0	0	2.29	0	0	0	0	0	0	-6.18	-6.18
Westbrook Inverter Transfor	W_INVTR4	369679	4906164	2	0	0	77.3	77.3	1	4701.54	3.25	0	84.44	0	-3.12	0	0	2.31	0	0	0	0	0	0	-6.3	-6.3
Westbrook Inverter Transfor	W_INVTR2	369368	4906388	2	0	0	77.3	77.3	1	4806.27	3.25	0	84.64	0	-3.14	0	0	2.35	0	0	0	0	0	0	-6.5	-6.5
Westbrook Inverter Transfor	W_INVTR7	369786	4906417	2	0	0	77.3	77.3	1	4976.21	3.25	0	84.94	0	-3.17	0	0	2.4	0	0	0	0	0	0	-6.83	-6.83
Westbrook Inverter Transfor	W_INVTR5	369725	4906574	2	0	0	77.3	77.3	1	5099.87	3.25	0	85.15	0	-3.2	0	0	2.45	0	0	0	0	0	0	-7.06	-7.06
Westbrook Inverter Transfor	W_INVTR6	369881	4906578	2	0	0	77.3	77.3	1	5161.23	3.25	0	85.26	0	-3.21	0	0	2.47	0	0	0	0	0	0	-7.17	-7.17
Inverter Transformer	MV1-14 T	365157	4905049	2	0	0	69.4	69.4	1	4249.77	3.25	0	83.57	0	2.85	0	0	6.86	0	0	0	0	0	0	-23.92	-23.92
Inverter Transformer	MV1-13 T	364725	4905241	2	0	0	69.4	69.4	1	4680.21	3.25	0	84.41	0	2.95	0	0	7.16	0	0	0	0	0	0	-25.16	-25.16
Inverter Transformer	MV1-10 T	365010	4905564	2	0	0	69.4	69.4	1	4742.68	3.25	0	84.52	0	2.96	0	0	7.21	0	0	0	0	0	0	-25.34	-25.34
Inverter Transformer	MV1-7 T	364919	4905782	2	0	0	69.4	69.4	1	4971.25	3.25	0	84.93	0	3.01	0	0	7.36	0	0	0	0	0	0	-25.95	-25.95
Inverter Transformer	MV2-1 T	365836	4906816	2	0	0	69.4	69.4	1	5418.39	3.25	0	85.68	0	3.09	0	0	7.66	0	0	0	0	0	0	-27.07	-27.07
Inverter Transformer	MV6-4 T	370244	4906966	2	0	0	69.4	69.4	1	5661.65	3.25	0	86.06	0	3.13	0	0	7.81	0	0	0	0	0	0	-27.65	-27.65
Inverter Transformer	MV6-1 T	370230	4907364	2	0	0	69.4	69.4	1	6020.99	3.97	0	86.59	0	3.85	0.75	0	8.03	0	0	0	0	0	0	-29.88	-29.88
Inverter Transformer	MV1-15 T	365309	4904994	2	0	0	56.1	56.1	1	4110.26	3.25	0	83.28	0	1.29	0	0	10.62	0	0	0	0	0	0	-39.12	-39.12
Inverter Transformer	MV1-12 T	365044	4905386	2	0	0	56.1	56.1	1	4581.72	3.25	0	84.22	0	1.47	0	0	11.29	0	0	0	0	0	0	-40.92	-40.92
Inverter Transformer	MV1-11 T	364649	4905414	2	0	0	56.1	56.1	1	4859.13	3.25	0	84.73	0	1.57	0	0	11.67	0	0	0	0	0	0	-41.91	-41.91
Inverter Transformer	MV1-8 T	364782	4905647	2	0	0	56.1	56.1	1	4949.38	3.25	0	84.89	0	1.61	0	0	11.79	0	0	0	0	0	0	-42.23	-42.23
Inverter Transformer	MV1-9 T	364555	4905646	2	0	0	56.1	56.1	1	5095	3.25	0	85.14	0	1.66	0	0	11.98	0	0	0	0	0	0	-42.72	-42.72
Inverter Transformer	MV1-4 T	364821	4905918	2	0	0	56.1	56.1	1	5138.84	3.25	0	85.22	0	1.68	0	0	12.04	0	0	0	0	0	0	-42.87	-42.87
Inverter Transformer	MV1-5 T	364676	4905892	2	0	0	56.1	56.1	1	5206.8	3.25	0	85.33	0	1.7	0	0	12.12	0	0	0	0	0	0	-43.1	-43.1
Inverter Transformer	MV2-2 T	365982	4906654	2	0	0	56.1	56.1	1	5213.39	3.25	0	85.34	0	1.7	0	0	12.13	0	0	0	0	0	0	-43.12	-43.12
Inverter Transformer	MV2-3 T	365814	4906641	2	0	0	56.1	56.1	1	5265.81	3.25	0	85.43	0	1.72	0	0	12.2	0	0	0	0	0	0	-43.29	-43.29
Inverter Transformer	MV1-6 T	364482	4905835	2	0	0	56.1	56.1	1	5285.82	3.25	0	85.46	0	1.73	0	0	12.22	0	0	0	0	0	0	-43.36	-43.36
Inverter Transformer	MV1-2 T	364759	4906063	2	0	0	56.1	56.1	1	5292.15	3.25	0	85.47	0	1.73	0	0	12.23	0	0	0	0	0	0	-43.38	-43.38
Inverter Transformer	MV2-4 T	365590	4906628	2	0	0	56.1	56.1	1	5347.08	3.25	0	85.56	0	1.75	0	0	12.3	0	0	0	0	0	0	-43.56	-43.56
Inverter Transformer	MV3-22 T	368661	4907142	2	0	0	56.1	56.1	1	5385.91	3.25	0	85.63	0	1.76	0	0	12.35	0	0	0	0	0	0	-43.68	-43.68
Inverter Transformer	MV1-1 T	364721	4906166	2	0	0	56.1	56.1	1	5397.63	3.25	0	85.64	0	1.77	0	0	12.37	0	0	0	0	0	0	-43.72	-43.72
Inverter Transformer	MV3-21 T	368484	4907206	2	0	0	56.1	56.1	1	5427.64	3.25	0	85.69	0	1.78	0	0	12.4	0	0	0	0	0	0	-43.81	-43.81
Inverter Transformer	MV1-3 T	364435	4906039	2	0	0	56.1	56.1	1	5472.5	3.25	0	85.76	0	1.79	0	0	12.46	0	0	0	0	0	0	-43.96	-43.96
Inverter Transformer	MV3-19 T	368352	4907347	2	0	0	56.1	56.1	1	5555.73	3.25	0	85.89	0	1.82	0	0	12.56	0	0	0	0	0	0	-44.22	-44.22
Inverter Transformer	MV3-20 T	368683	4907317	2	0	0	56.1	56.1	1	5562.27	3.25	0	85.91	0	1.82	0	0	12.57	0	0	0	0	0	0	-44.24	-44.24
Inverter Transformer	MV3-18 T	367757	4907412	2	0	0	56.1	56.1	1	5604.91	3.25	0	85.97	0	1.84	0	0	12.63	0	0	0	0	0	0	-44.37	-44.37
Inverter Transformer	MV3-17 T	368183	4907472	2	0	0	56.1	56.1	1	5669.61	3.25	0	86.07	0	1.86	0	0	12.71	0	0	0	0	0	0	-44.58	-44.58
Inverter Transformer	MV3-15 T	368351	4907477	2	0	0	56.1	56.1	1	5685.25	3.25	0	86.09	0	1.86	0	0	12.72	0	0	0	0	0	0	-44.62	-44.62
Inverter Transformer	MV3-16 T	368509	4907475	2	0	0	56.1	56.1	1	5697.77	3.25	0	86.11	0	1.87	0	0	12.74	0	0	0	0	0	0	-44.66	-44.66
Inverter Transformer	MV3-14 T	368678	4907498	2	0	0	56.1	56.1	1	5740.88	3.25	0	86.18	0	1.88	0	0	12.79	0	0	0	0	0	0	-44.79	-44.79
Inverter Transformer	MV3-13 T	367958	4907577	2	0	0	56.1	56.1	1	5768.12	3.25	0	86.22	0	1.89	0	0	12.83	0	0	0	0	0	0	-44.88	-44.88
Inverter Transformer	MV3-12 T	367674	4907594	2	0	0	56.1	56.1	1	5789.6	3.25	0	86.25	0	1.9	0	0	12.85	0	0	0	0	0	0	-44.94	-44.94
Inverter Transformer	MV6-3 T	370202	4907140	2	0	0	56.1	56.1	1	5803.84	3.25	0	86.27	0	1.9	0	0	12.87	0	0	0	0	0	0	-44.99	-44.99
Inverter Transformer	MV3-10 T	368162	4907669	2	0	0	56.1	56.1	1	5865.44	3.25	0	86.37	0	1.92	0	0	12.94	0	0	0	0	0	0	-45.17	-45.17
Inverter Transformer	MV3-11 T	368340	4907662	2	0	0	56.1	56.1	1	5868.88	3.25	0	86.37	0	1.92	0	0	12.95	0	0	0	0	0	0	-45.18	-45.18
Inverter Transformer	MV3-9 T	368517	4907703	2	0	0	56.1	56.1	1	5925.36	3.25	0	86.45	0	1.94	0	0	13.01	0	0	0	0	0	0	-45.35	-45.35
Inverter Transformer	MV3-7 T	367951	4907754	2	0	0	56.1	56.1	1	5945.06	3.25	0	86.48	0	1.95	0	0	13.04	0	0	0	0	0	0	-45.41	-45.41
Inverter Transformer	MV6-2 T	370091	4907339	2	0	0	56.1	56.1	1	5945.48	3.25	0	86.48	0	1.95	0	0	13.04	0	0	0	0	0	0	-45.41	-45.41
Inverter Transformer	MV3-8 T	368685	4907712	2	0	0	56.1	56.1	1	5953.92	3.25	0	86.5	0	1.95	0	0	13.05	0	0	0	0	0	0	-45.44	-45.44
Inverter Transformer	MV3-6 T	368156	4907834	2	0	0	56.1	56.1	1	6030.04	3.25	0	86.61	0	1.97	0	0	13.14	0	0	0	0	0	0	-45.66	-45.66
Inverter Transformer	MV3-5 T	368335	4907843	2	0	0	56.1	56.1	1	6049.05	3.25	0	86.63	0	1.98	0	0	13.16	0	0	0	0	0	0	-45.72	-45.72
Inverter Transformer	MV3-3 T	367944	4907927	2	0	0	56.1	56.1	1	6118.01	3.25	0	86.73	0	2	0	0	13.24	0	0	0	0	0	0	-45.92	-45.92
Inverter Transformer	MV3-4 T	368507	4907925	2	0	0	56.1	56.1	1	6145.24	3.25	0	86.77	0	2.01	0	0	13.27	0	0	0	0	0	0	-46	-46
Inverter Transformer	MV3-2 T	368677	4907928	2	0	0	56.1	56.1	1	6167.13	3.25	0	86.8	0	2.02	0	0	13.3	0	0	0	0	0	0	-46.06	-46.06
Inverter Transformer	MV3-1 T	368150	4907976	2	0	0	56.1	56.1	1	6171.68	3.25	0	86.81	0	2.02	0	0	13.3	0	0	0	0	0	0	-46.07	-46.07
Inverter Transformer	MV4-15 T	369170	4908481	2	0	0	56.1	56.1	1	6790.35	3.25	0	87.64	0	2.2	0	0	14	0	0	0	0	0	0	-47.78	-47.78
Inverter Transformer	MV4-14 T	369182	4908507	2	0	0	56.1	56.1	1	6818.14	3.25	0	87.67	0	2.21	0	0	14.03	0	0	0	0	0	0	-47.86	-47.86
Inverter Transformer	MV4-13 T	369057	4908605	2	0	0	56.1	56.1	1	6892.48	3.25	0	87.77	0	2.23	0	0	14.11	0	0	0	0	0	0	-48.05	-48.05
Inverter Transformer	MV5-6 T	369987	4908507	2	0	0	56.1	56.1	1	7013.38	3.25	0	87.92	0	2.26	0	0	14.24	0	0	0	0	0	0	-48.37	-48.37
Inverter Transformer	MV4-12 T	369049	4908803	2	0	0	56.1	56.1	1	7086.49	3.25	0	88.01	0	2.28	0	0	14.32	0	0	0	0	0	0	-48.56	-48.56
Inverter Transformer	MV4-11 T	369269	4908855	2	0	0	56.1	56.1	1	7176.3	3.25	0	88.12	0	2.31	0	0	14.42	0	0	0	0	0	0	-48.78	-48.78
Inverter Transformer	MV4-10 T	369307	4908858	2	0	0	56.1	56.1	1	7186.55	3.25	0	88.13	0	2.31	0	0	14.43	0	0	0	0	0	0	-48.81	-48.81
Inverter Transformer	MV5-5 T	370021	4908690	2	0	0	56.1	56.1	1	7198.26	3.25	0	88.14	0	2.31	0	0	14.44	0	0	0	0	0	0	-48.84	-48.84
Inverter Transformer	MV4-7 T	369040	4909001	2	0	0	56.1	56.1	1	7280.57	3.25	0	88.24	0	2.33	0	0	14.53	0	0	0	0	0	0	-49.05	-49.05
Inverter Transformer	MV5-4 T	370330	4908707	2	0	0	56.1	56.1	1	7311.02	3.25	0	88.28	0	2.34	0	0	14.56	0	0	0	0	0	0	-49.12	-49.12
Inverter Transformer	MV4-8 T	369262	4909001	2	0	0	56.1	56.1	1	7318.4	3.25	0	88.29	0	2.34	0	0	14.57	0	0	0	0	0	0	-49.14	-49.14
Inverter Transformer	MV4-9 T	369284	4909001	2	0	0	56.1	56.1	1	7322.5	3.25	0	88.29	0	2.35	0	0	14.57	0	0	0	0	0	0	-49.15	-49.15
Inverter Transformer	MV5-2 T	370011	4908853	2	0	0	56.1	56.1	1	7351.36	3.25	0	88.33	0	2.35	0	0	14.6	0	0	0	0	0	0	-49.22	-49.22
Inverter Transformer	MV5-3 T	370237	4908851	2	0	0	56.1	56.1	1	7417.3	3.25	0	88.4	0	2.37	0	0	14.67	0	0	0	0	0	0	-49.39	-49.39
Inverter Transformer	MV4-4 T	369033	4909199	2	0	0	56.1	56.1	1	7475.16	3.25	0	88.47	0	2.38	0	0	14.73	0	0	0	0	0	0	-49.53	-49.53
Inverter Transformer	MV4-6 T	369249	4909192	2	0	0	56.1	56.1	1	7503.84	3.25	0	88.51	0	2.39	0	0	14.76	0	0	0	0	0	0	-49.6	-49.6
Inverter Transformer	MV4-5 T	369283	4909199	2	0	0	56.1	56.1	1	7516.88	3.25	0	88.52	0	2.39	0	0	14.77	0	0	0	0	0	0	-49.63	-49.63

	Inverter Transformer	MV5-1 T	370015	4909142	2	0	0	56.1	56.1	1	7629.83	3.25	0	88.65	0	2.42	0	0	14.89	0	0	0	0	0	0	-49.9	-49.9
	Inverter Transformer	MV4-1 T	369017	4909397	2	0	0	56.1	56.1	1	7668.63	3.25	0	88.69	0	2.43	0	0	14.93	0	0	0	0	0	0	-49.99	-49.99
	Inverter Transformer	MV4-3 T	369234	4909397	2	0	0	56.1	56.1	1	7703.03	3.25	0	88.73	0	2.44	0	0	14.96	0	0	0	0	0	0	-50.08	-50.08
	Inverter Transformer	MV4-2 T	369267	4909397	2	0	0	56.1	56.1	1	7708.78	3.25	0	88.74	0	2.44	0	0	14.97	0	0	0	0	0	0	-50.09	-50.09
	Line Reactor	NGR	369421	4908787.5	5	0	0	45.4	45.4	1	7140.7	5.25	0	88.07	0	3.22	1.37	0.11	2.92	0	0	0	0	0	0	-50.22	-50.22
Limit. Valu	0	0																								
Level D/N:	19.7472	19.7472																								

Receiver: Existing Noise Receptor
ID: G-98
X: 365215.2
Y: 4903835
Z: 4.5
Ground: 0

ISO	Description	ID	X	Y	Z	Ground	ReflOrd	LxT	LxN	L/A	Dist.	hm	Freq	Adiv	K0b	Agr	Abar	z	Aatm	Afol	Ahous	Cmet	CmetN	Dc	RL	LtotT	LtotN
	Inverter	MV1-15	365315	4904994	2	0	0	100.3	100.3	1	1163.29	3.25	0	72.31	0	-0.17	0	0	11.42	0	0	0	0	0	0	16.75	16.75
	Inverter	MV1-12	365038	4905386	2	0	0	100.3	100.3	1	1561.09	3.25	0	74.87	0	-0.01	0	0	12.47	0	0	0	0	0	0	12.98	12.98
	Inverter	MV1-11	364655	4905414	2	0	0	100.3	100.3	1	1675.43	3.25	0	75.48	0	0.03	0	0	12.75	0	0	0	0	0	0	12.06	12.06
	Sol_Luce Substation	S_Substation	369426	4908792	3.5	0	0	112.1	112.1	1	6504.05	5.25	0	87.26	0	1.28	2.54	0.27	10.26	0	0	0	0	0	0	10.73	10.73
	Inverter	MV1-14	365163	4905049	2	0	0	97.3	97.3	1	1215.12	3.25	0	72.69	0	-0.15	0	0	11.57	0	0	0	0	0	0	13.2	13.2
	Inverter	MV1-8	364788	4905647	2	0	0	100.3	100.3	1	1861.68	3.25	0	76.4	0	0.09	0	0	13.17	0	0	0	0	0	0	10.66	10.66
	Inverter	MV1-9	364561	4905646	2	0	0	100.3	100.3	1	1925.54	3.25	0	76.69	0	0.11	0	0	13.3	0	0	0	0	0	0	10.21	10.21
	Inverter	MV1-13	364731	4905241	2	0	0	97.3	97.3	1	1487.04	3.25	0	74.45	0	-0.04	0	0	12.29	0	0	0	0	0	0	10.61	10.61
	Inverter	MV1-4	364815	4905918	2	0	0	100.3	100.3	1	2121.1	3.25	0	77.53	0	0.16	0	0	13.71	0	0	0	0	0	0	8.9	8.9
	Inverter	MV1-5	364671	4905892	2	0	0	100.3	100.3	1	2127.77	3.25	0	77.56	0	0.16	0	0	13.73	0	0	0	0	0	0	8.86	8.86
	Inverter	MV1-6	364477	4905835	2	0	0	100.3	100.3	1	2131.89	3.25	0	77.58	0	0.17	0	0	13.74	0	0	0	0	0	0	8.84	8.84
	Inverter	MV1-2	364753	4906063	2	0	0	100.3	100.3	1	2275.44	3.25	0	78.14	0	0.2	0	0	14.02	0	0	0	0	0	0	7.94	7.94
	Inverter	MV1-1	364715	4906166	2	0	0	100.3	100.3	1	2384.07	3.25	0	78.55	0	0.23	0	0	14.24	0	0	0	0	0	0	7.3	7.3
	Inverter	MV1-10	365004	4905564	2	0	0	97.3	97.3	1	1741.85	3.25	0	75.82	0	0.05	0	0	12.9	0	0	0	0	0	0	8.54	8.54
	Inverter	MV1-7	364925	4905782	2	0	0	97.3	97.3	1	1968.51	3.25	0	76.88	0	0.12	0	0	13.4	0	0	0	0	0	0	6.91	6.91
	Inverter	MV2-4	365586	4906624	2	0	0	100.3	100.3	1	2813.54	3.25	0	79.99	0	0.32	0	0	15.04	0	0	0	0	0	0	4.96	4.96
	Inverter	MV2-3	365820	4906641	2	0	0	100.3	100.3	1	2870.44	3.25	0	80.16	0	0.34	0	0	15.14	0	0	0	0	0	0	4.68	4.68
	Inverter	MV2-1	365842	4906816	2	0	0	97.3	97.3	1	3046.19	3.25	0	80.68	0	0.37	0	0	15.45	0	0	0	0	0	0	0.81	0.81
	Gardiner Substation	G_Sub	366586.3	4903349.9	2.5	0	0	90.8	90.8	1	1454.39	4.25	0	74.25	0	0.84	4.61	0.31	3.4	0	0	0	0	0	0	7.68	7.68
	Inverter	MV3-18	367752	4907412	2	0	0	100.3	100.3	1	4385.24	3.25	0	83.84	0	0.58	0	0	17.65	0	0	0	0	0	0	-1.76	-1.76
	Inverter	MV3-12	367668	4907594	2	0	0	100.3	100.3	1	4488.46	3.25	0	84.04	0	0.59	0	0	17.81	0	0	0	0	0	0	-2.13	-2.13
	Inverter	MV3-13	367963	4907577	2	0	0	100.3	100.3	1	4642.52	3.25	0	84.34	0	0.61	0	0	18.05	0	0	0	0	0	0	-2.68	-2.68
	Inverter	MV3-17	368178	4907472	2	0	0	100.3	100.3	1	4691.05	3.25	0	84.43	0	0.61	0	0	18.12	0	0	0	0	0	0	-2.85	-2.85
	Inverter	MV3-21	368478	4907206	2	0	0	100.3	100.3	1	4691.43	3.25	0	84.43	0	0.61	0	0	18.12	0	0	0	0	0	0	-2.85	-2.85
	Inverter	MV3-19	368357	4907347	2	0	0	100.3	100.3	1	4712.22	3.25	0	84.46	0	0.61	0	0	18.15	0	0	0	0	0	0	-2.92	-2.92
	Inverter	MV3-7	367945	4907754	2	0	0	100.3	100.3	1	4776.02	3.25	0	84.58	0	0.62	0	0	18.25	0	0	0	0	0	0	-3.14	-3.14
	Inverter	MV3-15	368357	4907477	2	0	0	100.3	100.3	1	4809.89	3.25	0	84.64	0	0.62	0	0	18.3	0	0	0	0	0	0	-3.25	-3.25
	Inverter	MV3-10	368167	4907669	2	0	0	100.3	100.3	1	4838.67	3.25	0	84.69	0	0.63	0	0	18.34	0	0	0	0	0	0	-3.35	-3.35
	Inverter	MV3-16	368514	4907475	2	0	0	100.3	100.3	1	4912.4	3.25	0	84.83	0	0.63	0	0	18.45	0	0	0	0	0	0	-3.6	-3.6
	Inverter	MV3-3	367939	4907927	2	0	0	100.3	100.3	1	4915.64	3.25	0	84.83	0	0.63	0	0	18.46	0	0	0	0	0	0	-3.61	-3.61
	Inverter	MV3-20	368689	4907317	2	0	0	100.3	100.3	1	4918.5	3.25	0	84.84	0	0.63	0	0	18.46	0	0	0	0	0	0	-3.62	-3.62
	Inverter	MV3-11	368346	4907662	2	0	0	100.3	100.3	1	4944.48	3.25	0	84.88	0	0.64	0	0	18.5	0	0	0	0	0	0	-3.71	-3.71
	Inverter	MV3-6	368162	4907834	2	0	0	100.3	100.3	1	4967.46	3.25	0	84.92	0	0.64	0	0	18.53	0	0	0	0	0	0	-3.78	-3.78
	Inverter	MV3-14	368684	4907498	2	0	0	100.3	100.3	1	5044.81	3.25	0	85.06	0	0.65	0	0	18.65	0	0	0	0	0	0	-4.04	-4.04
	Inverter	MV3-9	368512	4907703	2	0	0	100.3	100.3	1	5082.35	3.25	0	85.12	0	0.65	0	0	18.7	0	0	0	0	0	0	-4.16	-4.16
	Inverter	MV3-8	368680	4907712	2	0	0	100.3	100.3	1	5199.61	3.25	0	85.32	0	0.66	0	0	18.87	0	0	0	0	0	0	-4.54	-4.54
	Inverter	MV6-3	370207	4907140	2	0	0	100.3	100.3	1	5986.74	3.25	0	86.54	0	0.7	0	0	19.98	0	0	0	0	0	0	-6.91	-6.91
	Inverter	MV6-2	370085	4907339	2	0	0	100.3	100.3	1	5999.41	3.25	0	86.56	0	0.7	0	0	19.99	0	0	0	0	0	0	-6.95	-6.95
	Inverters	G_Inv1	366526.4	4903225.8	2	0	0	87.7	87.7	1	1445.81	3.25	0	74.2	0	2.51	0	0	1.98	0	0	0	0	0	0	8.97	8.97
	Inverter	MV4-7	369035	4909001	2	0	0	100.3	100.3	1	6424.83	3.25	0	87.16	0	0.71	0	0	20.56	0	0	0	0	0	0	-8.12	-8.12
	Inverter	MV4-11	369264	4908855	2	0	0	100.3	100.3	1	6449.28	3.25	0	87.19	0	0.71	0	0	20.59	0	0	0	0	0	0	-8.19	-8.19
	Inverter	MV4-10	369312	4908858	2	0	0	100.3	100.3	1	6481.84	3.25	0	87.23	0	0.71	0	0	20.64	0	0	0	0	0	0	-8.27	-8.27
	Inverter	MV4-8	369256	4909001	2	0	0	100.3	100.3	1	6558.63	3.25	0	87.34	0	0.72	0	0	20.74	0	0	0	0	0	0	-8.47	-8.47
	Inverter	MV4-9	369289	4909001	2	0	0	100.3	100.3	1	6579.01	3.25	0	87.36	0	0.72	0	0	20.76	0	0	0	0	0	0	-8.53	-8.53
	Inverter	MV4-4	369027	4909199	2	0	0	100.3	100.3	1	6580.45	3.25	0	87.37	0	0.72	0	0	20.76	0	0	0	0	0	0	-8.53	-8.53
	Inverters	G_Inv3	366583.7	4903091.4	2	0	0	87.7	87.7	1	1557.48	3.25	0	74.85	0	2.53	0	0	2.11	0	0	0	0	0	0	8.17	8.17
	Inverter	MV4-6	369243	4909192	2	0	0	100.3	100.3	1	6702.29	3.25	0	87.52	0	0.71	0	0	20.92	0	0	0	0	0	0	-8.85	-8.85
	Inverter	MV4-1	369011	4909397	2	0	0	100.3	100.3	1	6733.79	3.25	0	87.57	0	0.71	0	0	20.96	0	0	0	0	0	0	-8.93	-8.93
	Inverter	MV4-5	369289	4909199	2	0	0	100.3	100.3	1	6735.6	3.25	0	87.57	0	0.71	0	0	20.96	0	0	0	0	0	0	-8.93	-8.93
	Inverters	G_Inv2	366676.9	4903239.1	2	0	0	87.7	87.7	1	1578.5	3.25	0	74.96	0	2.53	0	0	2.14	0	0	0	0	0	0	8.03	8.03
	Inverter	MV5-5	370015	4908690	2	0	0	100.3	100.3	1	6827.09	3.25	0	87.68	0	0.71	0	0	21.08	0	0	0	0	0	0	-9.17	-9.17
	Inverter	MV4-3	369229	4909397	2	0	0	100.3	100.3	1	6859.04	3.25	0	87.73	0	0.71	0	0	21.12	0	0	0	0	0	0	-9.25	-9.25
	Inverter	MV4-2	369272	4909397	2	0	0	100.3	100.3	1	6884.29	3.25	0	87.76	0	0.71	0	0	21.15	0	0	0	0	0	0	-9.31	-9.31
	Inverter	MV5-2	370006	4908853	2	0	0	100.3	100.3	1	6937.73	3.25	0	87.82	0	0.71	0	0	21.22	0	0	0	0	0	0	-9.44	-9.44
	Inverter	MV5-4	370324	4908707	2	0	0	100.3	100.3	1	7059.48	3.25	0	87.98	0	0.71	0	0	21.37	0	0	0	0	0	0	-9.75	-9.75
	Inverter	MV5-3	370231	4908851	2	0	0	100.3	100.3	1	7093.55	3.25	0	88.02	0	0.71	0	0	21.42	0	0	0	0	0	0	-9.83	-9.83
	Inverter	MV5-1	370020	4909142	2	0	0	100.3	100.3	1	7158.94	3.25	0	88.1	0	0.7	0	0	21.5	0	0	0	0	0	0	-9.99	-9.99
	Inverters	G_Inv5	366638.5	4902958.1	2	0	0	87.7	87.7	1	1671.75	3.25	0	75.46	0	2.54	0	0	2.25	0	0	0	0	0	0	7.41	7.41

Inverters	G_Inv4	366732.8	4903105	2	0	0	87.7	87.7	1	1684.05	3.25	0	75.53	0	2.54	0	0	2.26	0	0	0	0	0	0	7.33	7.33
Inverters	G_Inv7	366694.6	4902824.7	2	0	0	87.7	87.7	1	1791.46	3.25	0	76.06	0	2.56	0	0	2.39	0	0	0	0	0	0	6.65	6.65
Inverters	G_Inv6	366788.5	4902972	2	0	0	87.7	87.7	1	1794.45	3.25	0	76.08	0	2.56	0	0	2.39	0	0	0	0	0	0	6.63	6.63
Inverters	G_Inv8	366844.5	4902838.5	2	0	0	87.7	87.7	1	1909.88	3.25	0	76.62	0	2.57	0	0	2.53	0	0	0	0	0	0	5.94	5.94
Inverters	G_Inv9	366750.9	4902691.8	2	0	0	87.7	87.7	1	1914.49	3.25	0	76.64	0	2.57	0	0	2.54	0	0	0	0	0	0	5.91	5.91
Inverter	MV1-3	364440	4906039	2	0	0	89.1	89.1	1	2336.36	3.25	0	78.37	0	0.99	0	0	8.59	0	0	0	0	0	0	1.11	1.11
Inverter	MV6-1	370235	4907364	2	0	0	97.3	97.3	1	6136.14	3.25	0	86.76	0	0.71	0	0	20.18	0	0	0	0	0	0	-10.33	-10.33
Inverters	G_Inv10	366900.7	4902704.8	2	0	0	87.7	87.7	1	2029.35	3.25	0	77.15	0	2.59	0	0	2.67	0	0	0	0	0	0	5.26	5.26
DSTATCOM - 10 MVAR #2	DSAT2	369403	4908757	2.5	0	0	96.6	96.6	1	6462.49	3.5	0	87.21	0	3.81	0	0	4.06	0	0	0	0	0	0	1.56	1.56
DSTATCOM - 10 MVAR #1	DSAT1	369437	4908757	2.5	0	0	96.6	96.6	1	6484.57	3.5	0	87.24	0	3.81	0	0	4.07	0	0	0	0	0	0	1.52	1.52
Inverter	MV2-2	365977	4906654	2	0	0	89.1	89.1	1	2920.12	3.25	0	80.31	0	1.13	0	0	9.5	0	0	0	0	0	0	-1.87	-1.87
SubstationTransformer	W_ST	369711.17	4906112.3	2.5	0	0	92	92	1	5039.81	4.25	0	85.05	0	1.65	2.32	0.26	8.67	0	0	0	0	0	0	-5.71	-5.71
Inverter	MV3-22	368656	4907142	2	0	0	89.1	89.1	1	4772.35	3.25	0	84.57	0	1.58	0	0	12.16	0	0	0	0	0	0	-9.26	-9.26
Westbrook Inverter Enclosur	W_INV2	369374	4906388	2	0	0	89.1	89.1	1	4879.9	3.25	0	84.77	0	1.61	0	0	12.3	0	0	0	0	0	0	-9.62	-9.62
Westbrook Inverter Enclosur	W_INV3	369508	4906164	2	0	0	89.1	89.1	1	4883.89	3.25	0	84.78	0	1.61	0	0	12.31	0	0	0	0	0	0	-9.64	-9.64
Westbrook Inverter Enclosur	W_INV4	369673	4906164	2	0	0	89.1	89.1	1	5029.54	3.25	0	85.03	0	1.65	0	0	12.5	0	0	0	0	0	0	-10.12	-10.12
Inverter	MV3-1	368156	4907976	2	0	0	89.1	89.1	1	5079	3.25	0	85.12	0	1.66	0	0	12.57	0	0	0	0	0	0	-10.29	-10.29
Inverter	MV3-5	368340	4907843	2	0	0	89.1	89.1	1	5082.17	3.25	0	85.12	0	1.66	0	0	12.57	0	0	0	0	0	0	-10.3	-10.3
Westbrook Inverter Enclosur	W_INV7	369780	4906417	2	0	0	89.1	89.1	1	5244.44	3.25	0	85.39	0	1.7	0	0	12.79	0	0	0	0	0	0	-10.82	-10.82
Inverter	MV3-4	368502	4907925	2	0	0	89.1	89.1	1	5247.01	3.25	0	85.4	0	1.7	0	0	12.79	0	0	0	0	0	0	-10.83	-10.83
Westbrook Inverter Enclosur	W_INV5	369719	4906574	2	0	0	89.1	89.1	1	5271.28	3.25	0	85.44	0	1.71	0	0	12.82	0	0	0	0	0	0	-10.91	-10.91
Inverter	MV3-2	368671	4907928	2	0	0	89.1	89.1	1	5356.79	3.25	0	85.58	0	1.73	0	0	12.94	0	0	0	0	0	0	-11.18	-11.18
Westbrook Inverter Enclosur	W_INV6	369875	4906578	2	0	0	89.1	89.1	1	5407.2	3.25	0	85.66	0	1.74	0	0	13	0	0	0	0	0	0	-11.34	-11.34
Fixed Reactor Bank 1	FRB1	369378	4908755	6	0	0	89.8	89.8	1	6444.79	5.25	0	87.18	0	-0.36	0	0	10.2	0	0	0	0	0	0	-7.25	-7.25
Fixed Reactor Bank 2	FRB2	369464	4908755	6	0	0	89.8	89.8	1	6500.67	5.25	0	87.26	0	-0.35	0	0	10.26	0	0	0	0	0	0	-7.39	-7.39
Inverter	MV4-15	369176	4908481	2	0	0	89.1	89.1	1	6105.18	3.25	0	86.71	0	1.91	0	0	13.89	0	0	0	0	0	0	-13.46	-13.46
Inverter	MV4-13	369051	4908605	2	0	0	89.1	89.1	1	6120.97	3.25	0	86.74	0	1.92	0	0	13.91	0	0	0	0	0	0	-13.51	-13.51
Inverter	MV4-14	369176	4908507	2	0	0	89.1	89.1	1	6124.99	3.25	0	86.74	0	1.92	0	0	13.92	0	0	0	0	0	0	-13.52	-13.52
Inverter	MV4-12	369043	4908803	2	0	0	89.1	89.1	1	6271.61	3.25	0	86.95	0	1.95	0	0	14.1	0	0	0	0	0	0	-13.94	-13.94
Inverter	MV5-6	369982	4908507	2	0	0	89.1	89.1	1	6674.58	3.25	0	87.49	0	2.05	0	0	14.6	0	0	0	0	0	0	-15.08	-15.08
Westbrook Inverter Enclosur	W_INV1	369409	4906578	2	0	0	86.1	86.1	1	5011.19	3.25	0	85	0	1.64	0	0	12.48	0	0	0	0	0	0	-13.06	-13.06
Inverter	MV6-4	370250	4906966	2	0	0	86.1	86.1	1	5928.94	3.25	0	86.46	0	1.87	0	0	13.67	0	0	0	0	0	0	-15.94	-15.94
Inverter Transformer	MV1-14 T	365157	4905049	2	0	0	69.4	69.4	1	1215.4	3.25	0	72.69	0	1.83	0	0	4.09	0	0	0	0	0	0	-9.27	-9.27
Inverter Transformer	MV1-13 T	364725	4905241	2	0	0	69.4	69.4	1	1489.01	3.25	0	74.46	0	1.97	0	0	4.42	0	0	0	0	0	0	-11.5	-11.5
Inverter Transformer	MV1-10 T	365010	4905564	2	0	0	69.4	69.4	1	1741.14	3.25	0	75.82	0	2.07	0	0	4.7	0	0	0	0	0	0	-13.24	-13.24
Westbrook Inverter Transfor	W_INVTR1	369403	4906578	2	0	0	78.2	78.2	1	5006.17	3.25	0	84.99	0	-3.18	0	0	2.42	0	0	0	0	0	0	-5.99	-5.99
Westbrook Inverter Transfor	W_INVTR2	369368	4906388	2	0	0	77.3	77.3	1	4874.79	3.25	0	84.76	0	-3.15	0	0	2.37	0	0	0	0	0	0	-6.64	-6.64
Westbrook Inverter Transfor	W_INVTR3	369514	4906164	2	0	0	77.3	77.3	1	4889.16	3.25	0	84.78	0	-3.15	0	0	2.37	0	0	0	0	0	0	-6.66	-6.66
Inverter Transformer	MV1-7 T	364919	4905782	2	0	0	69.4	69.4	1	1969.4	3.25	0	76.89	0	2.16	0	0	4.93	0	0	0	0	0	0	-14.63	-14.63
Westbrook Inverter Transfor	W_INVTR4	369679	4906164	2	0	0	77.3	77.3	1	5034.85	3.25	0	85.04	0	-3.18	0	0	2.42	0	0	0	0	0	0	-6.94	-6.94
Westbrook Inverter Transfor	W_INVTR7	369786	4906417	2	0	0	77.3	77.3	1	5249.66	3.25	0	85.4	0	-3.23	0	0	2.5	0	0	0	0	0	0	-7.33	-7.33
Westbrook Inverter Transfor	W_INVTR5	369725	4906574	2	0	0	77.3	77.3	1	5276.4	3.25	0	85.45	0	-3.23	0	0	2.51	0	0	0	0	0	0	-7.38	-7.38
Westbrook Inverter Transfor	W_INVTR6	369881	4906578	2	0	0	77.3	77.3	1	5412.37	3.25	0	85.67	0	-3.26	0	0	2.55	0	0	0	0	0	0	-7.62	-7.62
Inverter Transformer	MV2-1 T	365836	4906816	2	0	0	69.4	69.4	1	3044.96	3.25	0	80.67	0	2.52	0	0	5.92	0	0	0	0	0	0	-19.76	-19.76
Inverter Transformer	MV1-15 T	365309	4904994	2	0	0	56.1	56.1	1	1162.79	3.25	0	72.31	0	0.07	0	0	5.27	0	0	0	0	0	0	-21.59	-21.59
Inverter Transformer	MV6-4 T	370244	4906966	2	0	0	69.4	69.4	1	5923.85	3.25	0	86.45	0	3.18	0	0	7.97	0	0	0	0	0	0	-28.25	-28.25
Inverter Transformer	MV6-1 T	370230	4907364	2	0	0	69.4	69.4	1	6132.05	3.25	0	86.75	0	3.21	0	0	8.1	0	0	0	0	0	0	-28.71	-28.71
Inverter Transformer	MV1-12 T	365044	4905386	2	0	0	56.1	56.1	1	1560.42	3.25	0	74.86	0	0.22	0	0	6.15	0	0	0	0	0	0	-25.18	-25.18
Inverter Transformer	MV1-11 T	364649	4905414	2	0	0	56.1	56.1	1	1677.45	3.25	0	75.49	0	0.27	0	0	6.39	0	0	0	0	0	0	-26.1	-26.1
Inverter Transformer	MV1-8 T	364782	4905647	2	0	0	56.1	56.1	1	1863.07	3.25	0	76.4	0	0.35	0	0	6.77	0	0	0	0	0	0	-27.46	-27.46
Inverter Transformer	MV1-9 T	364555	4905646	2	0	0	56.1	56.1	1	1927.59	3.25	0	76.7	0	0.37	0	0	6.9	0	0	0	0	0	0	-27.92	-27.92
Inverter Transformer	MV1-4 T	364821	4905918	2	0	0	56.1	56.1	1	2119.97	3.25	0	77.53	0	0.45	0	0	7.28	0	0	0	0	0	0	-29.2	-29.2
Inverter Transformer	MV1-5 T	364676	4905892	2	0	0	56.1	56.1	1	2126.5	3.25	0	77.55	0	0.46	0	0	7.29	0	0	0	0	0	0	-29.24	-29.24
Inverter Transformer	MV1-6 T	364482	4905835	2	0	0	56.1	56.1	1	2130.16	3.25	0	77.57	0	0.46	0	0	7.3	0	0	0	0	0	0	-29.27	-29.27
Inverter Transformer	MV1-2 T	364759	4906063	2	0	0	56.1	56.1	1	2274.23	3.25	0	78.14	0	0.52	0	0	7.57	0	0	0	0	0	0	-30.17	-30.17
Inverter Transformer	MV1-3 T	364435	4906039	2	0	0	56.1	56.1	1	2338.02	3.25	0	78.38	0	0.55	0	0	7.69	0	0	0	0	0	0	-30.56	-30.56
Inverter Transformer	MV1-1 T	364721	4906166	2	0	0	56.1	56.1	1	2382.81	3.25	0	78.54	0	0.57	0	0	7.77	0	0	0	0	0	0	-30.82	-30.82
Inverter Transformer	MV2-4 T	365590	4906628	2	0	0	56.1	56.1	1	2818.04	3.25	0	80	0	0.75	0	0	8.56	0	0	0	0	0	0	-33.25	-33.25
Inverter Transformer	MV2-3 T	365814	4906641	2	0	0	56.1	56.1	1	2869.18	3.25	0	80.16	0	0.77	0	0	8.64	0	0	0	0	0	0	-33.52	-33.52
Inverter Transformer	MV2-2 T	365982	4906654	2	0	0	56.1	56.1	1	2921.43	3.25	0	80.31	0	0.8	0	0	8.73	0	0	0	0	0	0	-33.78	-33.78
Inverter Transformer	MV3-18 T	367757	4907412	2	0	0	56.1	56.1	1	4388.13	3.25	0	83.85	0	1.4	0	0	11.02	0	0	0	0	0	0	-40.2	-40.2
Inverter Transformer	MV3-12 T	367674	4907594	2	0	0	56.1	56.1	1	4491.75	3.25	0	84.05	0	1.44	0	0	11.16	0	0	0	0	0	0	-40.59	-40.59
Inverter Transformer	MV3-13 T	367958	4907577	2	0	0	56.1	56.1	1	4639.56	3.25	0	84.33	0	1.49	0	0	11.37	0	0	0	0	0	0	-41.13	-41.13
Inverter Transformer	MV3-17 T	368183	4907472	2	0	0	56.1	56.1	1	4694.21	3.25	0	84.43	0	1.51	0	0	11.44	0	0	0	0	0	0	-41.33	-41.33
Inverter Transformer	MV3-21 T	368484	4907206	2	0	0	56.1	56.1	1	4695.6	3.25	0	84.43	0	1.51	0	0	11.45	0	0	0	0	0	0	-41.33	-41.33
Inverter Transformer	MV3-19 T	368352	4907347	2	0	0	56.1	56.1	1	4708.89	3.25	0	84.46	0	1.52	0	0	11.46	0	0	0	0	0	0	-41.38	-41.38
Inverter Transformer	MV3-22 T	368661	4907142	2	0	0	56.1	56.1	1	4775.96	3.25	0	84.58	0	1.54	0	0	11.55	0	0	0	0	0	0	-41.62	-41.62
Inverter Transformer	MV3-7 T	367951	4907754	2	0	0	56.1	56.1	1	4779.45	3.25	0	84.59	0	1.54	0	0	11.56	0	0	0	0	0	0	-41.63	-41.63
Inverter Transformer	MV3-15 T	368351	4907477	2	0	0	56.1	56.1	1	4805.98	3.25	0	84.64	0	1.55	0	0	11.6	0	0	0	0	0	0	-41.73	-41.73
Inverter Transformer	MV3-10 T	368162	4907669	2	0	0	56.1	56.1	1	4835.62	3.25	0	84.69	0	1.57	0	0	11.64	0	0	0	0	0	0	-41.83	-41.83
Inverter Transformer	MV3-16 T	368509	4907475	2	0	0	56.1	56.1	1	4909.05	3.25	0	84.82	0	1.59	0	0	11.73	0	0	0	0	0	0	-42.09	-42.09
Inverter Transformer	MV3-20 T	368683	4907317	2	0	0	56.1	56.1	1	4914.26	3.25	0	84.83	0	1.59	0	0	11.74	0	0	0	0	0	0	-42.11	-42.11
Inverter Transformer	MV3-3 T	367944	4907927	2	0	0	56.1	56.1	1	4918.42	3.25	0	84.84	0	1.6	0	0	11.75	0	0	0	0	0	0	-42.12	-42.12
Inverter Transformer	MV3-11 T	368340	4907662	2	0	0	56.1	56.1	1	4940.68	3.25	0	84.88	0	1.6	0	0	11.78	0	0	0	0	0	0	-42.2	-42.2

	Inverter Transformer	MV3-6 T	368156	4907834	2	0	0	56.1	56.1	1	4963.9	3.25	0	84.92	0	1.61	0	0	11.81	0	0	0	0	0	0	-42.28	-42.28
	Inverter Transformer	MV3-14 T	368678	4907498	2	0	0	56.1	56.1	1	5040.69	3.25	0	85.05	0	1.64	0	0	11.91	0	0	0	0	0	0	-42.54	-42.54
	Inverter Transformer	MV3-1 T	368150	4907976	2	0	0	56.1	56.1	1	5075.52	3.25	0	85.11	0	1.65	0	0	11.95	0	0	0	0	0	0	-42.66	-42.66
	Inverter Transformer	MV3-5 T	368335	4907843	2	0	0	56.1	56.1	1	5079.1	3.25	0	85.12	0	1.65	0	0	11.96	0	0	0	0	0	0	-42.67	-42.67
	Inverter Transformer	MV3-9 T	368517	4907703	2	0	0	56.1	56.1	1	5085.6	3.25	0	85.13	0	1.66	0	0	11.97	0	0	0	0	0	0	-42.69	-42.69
	Inverter Transformer	MV3-8 T	368685	4907712	2	0	0	56.1	56.1	1	5202.95	3.25	0	85.32	0	1.7	0	0	12.12	0	0	0	0	0	0	-43.08	-43.08
	Inverter Transformer	MV3-4 T	368507	4907925	2	0	0	56.1	56.1	1	5250.15	3.25	0	85.4	0	1.71	0	0	12.18	0	0	0	0	0	0	-43.24	-43.24
	Inverter Transformer	MV3-2 T	368677	4907928	2	0	0	56.1	56.1	1	5360.66	3.25	0	85.58	0	1.75	0	0	12.32	0	0	0	0	0	0	-43.6	-43.6
	Inverter Transformer	MV6-3 T	370202	4907140	2	0	0	56.1	56.1	1	5982.58	3.25	0	86.54	0	1.96	0	0	13.08	0	0	0	0	0	0	-45.52	-45.52
	Inverter Transformer	MV6-2 T	370091	4907339	2	0	0	56.1	56.1	1	6004.29	3.25	0	86.57	0	1.97	0	0	13.11	0	0	0	0	0	0	-45.58	-45.58
	Inverter Transformer	MV4-15 T	369170	4908481	2	0	0	56.1	56.1	1	6101.29	3.25	0	86.71	0	2	0	0	13.22	0	0	0	0	0	0	-45.87	-45.87
	Inverter Transformer	MV4-13 T	369057	4908605	2	0	0	56.1	56.1	1	6124.73	3.25	0	86.74	0	2	0	0	13.25	0	0	0	0	0	0	-45.94	-45.94
	Inverter Transformer	MV4-14 T	369182	4908507	2	0	0	56.1	56.1	1	6128.87	3.25	0	86.75	0	2.01	0	0	13.25	0	0	0	0	0	0	-45.95	-45.95
	Inverter Transformer	MV4-12 T	369049	4908803	2	0	0	56.1	56.1	1	6275.27	3.25	0	86.95	0	2.05	0	0	13.42	0	0	0	0	0	0	-46.37	-46.37
	Inverter Transformer	MV4-7 T	369040	4909001	2	0	0	56.1	56.1	1	6427.8	3.25	0	87.16	0	2.1	0	0	13.6	0	0	0	0	0	0	-46.8	-46.8
	Inverter Transformer	MV4-11 T	369269	4908855	2	0	0	56.1	56.1	1	6452.42	3.25	0	87.19	0	2.1	0	0	13.63	0	0	0	0	0	0	-46.87	-46.87
	Inverter Transformer	MV4-10 T	369307	4908858	2	0	0	56.1	56.1	1	6478.69	3.25	0	87.23	0	2.11	0	0	13.66	0	0	0	0	0	0	-46.94	-46.94
	Inverter Transformer	MV4-8 T	369262	4909001	2	0	0	56.1	56.1	1	6562.33	3.25	0	87.34	0	2.14	0	0	13.75	0	0	0	0	0	0	-47.17	-47.17
	Inverter Transformer	MV4-9 T	369284	4909001	2	0	0	56.1	56.1	1	6575.92	3.25	0	87.36	0	2.14	0	0	13.77	0	0	0	0	0	0	-47.21	-47.21
	Inverter Transformer	MV4-4 T	369033	4909199	2	0	0	56.1	56.1	1	6583.93	3.25	0	87.37	0	2.14	0	0	13.77	0	0	0	0	0	0	-47.23	-47.23
	Inverter Transformer	MV5-6 T	369987	4908507	2	0	0	56.1	56.1	1	6678.15	3.25	0	87.49	0	2.17	0	0	13.88	0	0	0	0	0	0	-47.48	-47.48
	Inverter Transformer	MV4-6 T	369249	4909192	2	0	0	56.1	56.1	1	6705.89	3.25	0	87.53	0	2.18	0	0	13.91	0	0	0	0	0	0	-47.56	-47.56
	Inverter Transformer	MV4-5 T	369283	4909199	2	0	0	56.1	56.1	1	6731.98	3.25	0	87.56	0	2.18	0	0	13.94	0	0	0	0	0	0	-47.63	-47.63
	Inverter Transformer	MV4-1 T	369017	4909397	2	0	0	56.1	56.1	1	6737.18	3.25	0	87.57	0	2.19	0	0	13.94	0	0	0	0	0	0	-47.64	-47.64
	Inverter Transformer	MV5-5 T	370021	4908690	2	0	0	56.1	56.1	1	6831.31	3.25	0	87.69	0	2.21	0	0	14.05	0	0	0	0	0	0	-47.89	-47.89
	Inverter Transformer	MV4-3 T	369234	4909397	2	0	0	56.1	56.1	1	6861.97	3.25	0	87.73	0	2.22	0	0	14.08	0	0	0	0	0	0	-47.97	-47.97
	Inverter Transformer	MV4-2 T	369267	4909397	2	0	0	56.1	56.1	1	6881.35	3.25	0	87.75	0	2.23	0	0	14.1	0	0	0	0	0	0	-48.02	-48.02
	Inverter Transformer	MV5-2 T	370011	4908853	2	0	0	56.1	56.1	1	6941.18	3.25	0	87.83	0	2.24	0	0	14.17	0	0	0	0	0	0	-48.18	-48.18
	Inverter Transformer	MV5-4 T	370330	4908707	2	0	0	56.1	56.1	1	7063.82	3.25	0	87.98	0	2.28	0	0	14.3	0	0	0	0	0	0	-48.5	-48.5
	Inverter Transformer	MV5-3 T	370237	4908851	2	0	0	56.1	56.1	1	7097.8	3.25	0	88.02	0	2.29	0	0	14.33	0	0	0	0	0	0	-48.58	-48.58
	Inverter Transformer	MV5-1 T	370015	4909142	2	0	0	56.1	56.1	1	7155.58	3.25	0	88.09	0	2.3	0	0	14.4	0	0	0	0	0	0	-48.73	-48.73
	Line Reactor	NGR	369421	4908787.5	5	0	0	45.4	45.4	1	6497.38	5.25	0	87.25	0	3.23	1.37	0.09	2.66	0	0	0	0	0	0	-49.15	-49.15
Limit. Valu	0	0																								
Level D/N:	24.4825	24.4825																								

Receiver: Existing Noise Receptor
ID: G-99
X: 365213.2
Y: 4903857
Z: 4.5
Ground: 0

ISO	Description	ID	X	Y	Z	Ground	ReflOrd	LxT	LxN	L/A	Dist.	hm	Freq	Adiv	K0b	Agr	Abar	z	Aatm	Afol	Ahous	Cmet	CmetN	Dc	RL	LtotT	LtotN
	Inverter	MV1-15	365315	4904994	2	0	0	100.3	100.3	1	1141.55	3.25	0	72.15	0	-0.18	0	0	11.35	0	0	0	0	0	0	16.99	16.99
	Inverter	MV1-12	365038	4905386	2	0	0	100.3	100.3	1	1539.01	3.25	0	74.74	0	-0.02	0	0	12.42	0	0	0	0	0	0	13.17	13.17
	Inverter	MV1-11	364655	4905414	2	0	0	100.3	100.3	1	1654.04	3.25	0	75.37	0	0.02	0	0	12.7	0	0	0	0	0	0	12.22	12.22
	Sol_Luce Substation	S_Substation	369426	4908792	3.5	0	0	112.1	112.1	1	6488.6	5.25	0	87.24	0	1.27	2.54	0.27	10.25	0	0	0	0	0	0	10.77	10.77
	Inverter	MV1-14	365163	4905049	2	0	0	97.3	97.3	1	1193.06	3.25	0	72.53	0	-0.16	0	0	11.51	0	0	0	0	0	0	13.43	13.43
	Inverter	MV1-8	364788	4905647	2	0	0	100.3	100.3	1	1839.81	3.25	0	76.3	0	0.08	0	0	13.12	0	0	0	0	0	0	10.82	10.82
	Inverter	MV1-9	364561	4905646	2	0	0	100.3	100.3	1	1904.18	3.25	0	76.59	0	0.1	0	0	13.26	0	0	0	0	0	0	10.36	10.36
	Inverter	MV1-13	364731	4905241	2	0	0	97.3	97.3	1	1465.6	3.25	0	74.32	0	-0.05	0	0	12.24	0	0	0	0	0	0	10.8	10.8
	Inverter	MV1-4	364815	4905918	2	0	0	100.3	100.3	1	2099.12	3.25	0	77.44	0	0.16	0	0	13.67	0	0	0	0	0	0	9.05	9.05
	Inverter	MV1-5	364671	4905892	2	0	0	100.3	100.3	1	2105.99	3.25	0	77.47	0	0.16	0	0	13.68	0	0	0	0	0	0	9	9
	Inverter	MV1-6	364477	4905835	2	0	0	100.3	100.3	1	2110.56	3.25	0	77.49	0	0.16	0	0	13.69	0	0	0	0	0	0	8.97	8.97
	Inverter	MV1-2	364753	4906063	2	0	0	100.3	100.3	1	2253.49	3.25	0	78.06	0	0.2	0	0	13.98	0	0	0	0	0	0	8.08	8.08
	Inverter	MV1-1	364715	4906166	2	0	0	100.3	100.3	1	2362.14	3.25	0	78.47	0	0.22	0	0	14.19	0	0	0	0	0	0	7.43	7.43
	Inverter	MV1-10	365004	4905564	2	0	0	97.3	97.3	1	1719.77	3.25	0	75.71	0	0.04	0	0	12.85	0	0	0	0	0	0	8.71	8.71
	Inverter	MV1-7	364925	4905782	2	0	0	97.3	97.3	1	1946.46	3.25	0	76.78	0	0.11	0	0	13.35	0	0	0	0	0	0	7.07	7.07
	Inverter	MV2-4	365586	4906624	2	0	0	100.3	100.3	1	2792	3.25	0	79.92	0	0.32	0	0	15	0	0	0	0	0	0	5.07	5.07
	Inverter	MV2-3	365820	4906641	2	0	0	100.3	100.3	1	2849.36	3.25	0	80.09	0	0.33	0	0	15.1	0	0	0	0	0	0	4.78	4.78
	Inverter	MV2-1	365842	4906816	2	0	0	97.3	97.3	1	3025.07	3.25	0	80.61	0	0.37	0	0	15.42	0	0	0	0	0	0	0.91	0.91
	Inverter	MV3-18	367752	4907412	2	0	0	100.3	100.3	1	4368.47	3.25	0	83.81	0	0.58	0	0	17.63	0	0	0	0	0	0	-1.7	-1.7
	Gardiner Substation	G_Sub	366586.3	4903349.9	2.5	0	0	90.8	90.8	1	1463.75	4.25	0	74.31	0	0.83	4.59	0.31	3.42	0	0	0	0	0	0	7.63	7.63
	Inverter	MV3-12	367668	4907594	2	0	0	100.3	100.3	1	4471.15	3.25	0	84.01	0	0.59	0	0	17.79	0	0	0	0	0	0	-2.07	-2.07
	Inverter	MV3-13	367963	4907577	2	0	0	100.3	100.3	1	4625.99	3.25	0	84.3	0	0.6	0	0	18.02	0	0	0	0	0	0	-2.62	-2.62
	Inverter	MV3-17	368178	4907472	2	0	0	100.3	100.3	1	4675.28	3.25	0	84.4	0	0.61	0	0	18.1	0	0	0	0	0	0	-2.79	-2.79
	Inverter	MV3-21	368478	4907206	2	0	0	100.3	100.3	1	4677.04	3.25	0	84.4	0	0.61	0	0	18.1	0	0	0	0	0	0	-2.8	-2.8
	Inverter	MV3-19	368357	4907347	2	0	0	100.3	100.3	1	4697.19	3.25	0	84.44	0	0.61	0	0	18.13	0	0	0	0	0	0	-2.87	-2.87
	Inverter	MV3-7	367945	4907754	2	0	0	100.3	100.3	1	4759.13	3.25	0	84.55	0	0.62	0	0	18.22	0	0	0	0	0	0	-3.08	-3.08
	Inverter	MV3-15	368357	4907477	2	0	0	100.3	100.3	1	4794.57	3.25	0	84.61	0	0.62	0	0	18.28	0	0	0	0	0	0	-3.2	-3.2
	Inverter	MV3-10	368167	4907669	2	0	0	100.3	100.3	1	4822.48	3.25	0	84.67	0	0.63	0	0	18.32	0	0	0	0	0	0	-3.3	-3.3
	Inverter	MV3-16	368514	4907475	2	0	0	100.3	100.3	1	4897.47	3.25	0	84.8	0	0.63	0	0	18.43	0	0	0	0	0	0	-3.55	-3.55
	Inverter	MV3-3	367939	4907927	2	0	0	100.3	100.3	1	4898.46	3.25	0	84.8	0	0.63	0	0	18.43	0	0	0	0	0	0	-3.55	-3.55
	Inverter	MV3-20	368689	4907317	2	0	0	100.3	100.3	1	4904.36	3.25	0	84.81	0	0.63	0	0	18.44	0	0	0	0	0	0	-3.57	-3.57

Inverter	MV3-11	368346	4907662	2	0	0	100.3	100.3	1	4928.74	3.25	0	84.85	0	0.64	0	0	18.48	0	0	0	0	0	0	-3.65	-3.65
Inverter	MV3-6	368162	4907834	2	0	0	100.3	100.3	1	4950.96	3.25	0	84.89	0	0.64	0	0	18.51	0	0	0	0	0	0	-3.73	-3.73
Inverter	MV3-14	368684	4907498	2	0	0	100.3	100.3	1	5030.24	3.25	0	85.03	0	0.64	0	0	18.62	0	0	0	0	0	0	-3.99	-3.99
Inverter	MV3-9	368512	4907703	2	0	0	100.3	100.3	1	5066.93	3.25	0	85.09	0	0.65	0	0	18.68	0	0	0	0	0	0	-4.11	-4.11
Inverter	MV3-8	368680	4907712	2	0	0	100.3	100.3	1	5184.57	3.25	0	85.29	0	0.66	0	0	18.85	0	0	0	0	0	0	-4.49	-4.49
Inverter	MV6-3	370207	4907140	2	0	0	100.3	100.3	1	5976.3	3.25	0	86.53	0	0.7	0	0	19.96	0	0	0	0	0	0	-6.88	-6.88
Inverter	MV6-2	370085	4907339	2	0	0	100.3	100.3	1	5988.22	3.25	0	86.55	0	0.7	0	0	19.98	0	0	0	0	0	0	-6.92	-6.92
Inverters	G_Inv1	366526.4	4903225.8	2	0	0	87.7	87.7	1	1457.02	3.25	0	74.27	0	2.51	0	0	1.99	0	0	0	0	0	0	8.89	8.89
Inverter	MV4-7	369035	4909001	2	0	0	100.3	100.3	1	6408.35	3.25	0	87.13	0	0.71	0	0	20.54	0	0	0	0	0	0	-8.08	-8.08
Inverter	MV4-11	369264	4908855	2	0	0	100.3	100.3	1	6433.43	3.25	0	87.17	0	0.71	0	0	20.57	0	0	0	0	0	0	-8.14	-8.14
Inverter	MV4-10	369312	4908858	2	0	0	100.3	100.3	1	6466.08	3.25	0	87.21	0	0.71	0	0	20.61	0	0	0	0	0	0	-8.23	-8.23
Inverter	MV4-8	369256	4909001	2	0	0	100.3	100.3	1	6542.55	3.25	0	87.31	0	0.71	0	0	20.71	0	0	0	0	0	0	-8.43	-8.43
Inverter	MV4-9	369289	4909001	2	0	0	100.3	100.3	1	6562.99	3.25	0	87.34	0	0.72	0	0	20.74	0	0	0	0	0	0	-8.49	-8.49
Inverter	MV4-4	369027	4909199	2	0	0	100.3	100.3	1	6563.69	3.25	0	87.34	0	0.72	0	0	20.74	0	0	0	0	0	0	-8.49	-8.49
Inverter	MV4-6	369243	4909192	2	0	0	100.3	100.3	1	6685.92	3.25	0	87.5	0	0.71	0	0	20.9	0	0	0	0	0	0	-8.81	-8.81
Inverter	MV4-1	369011	4909397	2	0	0	100.3	100.3	1	6716.76	3.25	0	87.54	0	0.71	0	0	20.94	0	0	0	0	0	0	-8.89	-8.89
Inverter	MV4-5	369289	4909199	2	0	0	100.3	100.3	1	6719.31	3.25	0	87.55	0	0.71	0	0	20.94	0	0	0	0	0	0	-8.89	-8.89
Inverters	G_Inv3	366583.7	4903091.4	2	0	0	87.7	87.7	1	1569.85	3.25	0	74.92	0	2.53	0	0	2.13	0	0	0	0	0	0	8.09	8.09
Inverter	MV5-5	370015	4908690	2	0	0	100.3	100.3	1	6812.87	3.25	0	87.67	0	0.71	0	0	21.06	0	0	0	0	0	0	-9.13	-9.13
Inverters	G_Inv2	366676.9	4903239.1	2	0	0	87.7	87.7	1	1588.78	3.25	0	75.02	0	2.53	0	0	2.15	0	0	0	0	0	0	7.96	7.96
Inverter	MV4-3	369229	4909397	2	0	0	100.3	100.3	1	6842.39	3.25	0	87.7	0	0.71	0	0	21.1	0	0	0	0	0	0	-9.21	-9.21
Inverter	MV4-2	369272	4909397	2	0	0	100.3	100.3	1	6867.71	3.25	0	87.74	0	0.71	0	0	21.13	0	0	0	0	0	0	-9.27	-9.27
Inverter	MV5-2	370006	4908853	2	0	0	100.3	100.3	1	6923.22	3.25	0	87.81	0	0.71	0	0	21.2	0	0	0	0	0	0	-9.41	-9.41
Inverter	MV5-4	370324	4908707	2	0	0	100.3	100.3	1	7045.76	3.25	0	87.96	0	0.71	0	0	21.36	0	0	0	0	0	0	-9.71	-9.71
Inverter	MV5-3	370231	4908851	2	0	0	100.3	100.3	1	7079.43	3.25	0	88	0	0.71	0	0	21.4	0	0	0	0	0	0	-9.79	-9.79
Inverter	MV5-1	370020	4909142	2	0	0	100.3	100.3	1	7143.99	3.25	0	88.08	0	0.71	0	0	21.48	0	0	0	0	0	0	-9.95	-9.95
Inverters	G_Inv5	366638.5	4902958.1	2	0	0	87.7	87.7	1	1685.08	3.25	0	75.53	0	2.54	0	0	2.27	0	0	0	0	0	0	7.32	7.32
Inverters	G_Inv4	366732.8	4903105	2	0	0	87.7	87.7	1	1695.49	3.25	0	75.59	0	2.54	0	0	2.28	0	0	0	0	0	0	7.25	7.25
Inverters	G_Inv7	366694.6	4902824.7	2	0	0	87.7	87.7	1	1805.6	3.25	0	76.13	0	2.56	0	0	2.41	0	0	0	0	0	0	6.56	6.56
Inverters	G_Inv6	366788.5	4902972	2	0	0	87.7	87.7	1	1806.88	3.25	0	76.14	0	2.56	0	0	2.41	0	0	0	0	0	0	6.55	6.55
Inverters	G_Inv8	366844.5	4902838.5	2	0	0	87.7	87.7	1	1923.15	3.25	0	76.68	0	2.57	0	0	2.55	0	0	0	0	0	0	5.86	5.86
Inverters	G_Inv9	366750.9	4902691.8	2	0	0	87.7	87.7	1	1929.31	3.25	0	76.71	0	2.57	0	0	2.55	0	0	0	0	0	0	5.82	5.82
Inverter	MV1-3	364440	4906039	2	0	0	89.1	89.1	1	2314.94	3.25	0	78.29	0	0.98	0	0	8.55	0	0	0	0	0	0	1.23	1.23
Inverter	MV6-1	370235	4907364	2	0	0	97.3	97.3	1	6125.16	3.25	0	86.74	0	0.71	0	0	20.16	0	0	0	0	0	0	-10.3	-10.3
Inverters	G_Inv10	366900.7	4902704.8	2	0	0	87.7	87.7	1	2043.34	3.25	0	77.21	0	2.59	0	0	2.69	0	0	0	0	0	0	5.18	5.18
DSTATCOM - 10 MVAR #2	DSAT2	369403	4908757	2.5	0	0	96.6	96.6	1	6447.05	3.5	0	87.19	0	3.8	0	0	4.05	0	0	0	0	0	0	1.59	1.59
DSTATCOM - 10 MVAR #1	DSAT1	369437	4908757	2.5	0	0	96.6	96.6	1	6469.2	3.5	0	87.22	0	3.81	0	0	4.06	0	0	0	0	0	0	1.55	1.55
Inverter	MV2-2	365977	4906654	2	0	0	89.1	89.1	1	2899.41	3.25	0	80.25	0	1.12	0	0	9.46	0	0	0	0	0	0	-1.77	-1.77
SubstationTransformer	W_ST	369711.17	4906112.3	2.5	0	0	92	92	1	5031.7	4.25	0	85.03	0	1.65	2.32	0.26	8.66	0	0	0	0	0	0	-5.68	-5.68
Inverter	MV3-22	368656	4907142	2	0	0	89.1	89.1	1	4758.58	3.25	0	84.55	0	1.58	0	0	12.14	0	0	0	0	0	0	-9.21	-9.21
Westbrook Inverter Enclosur	W_INV2	369374	4906388	2	0	0	89.1	89.1	1	4870.14	3.25	0	84.75	0	1.61	0	0	12.29	0	0	0	0	0	0	-9.59	-9.59
Westbrook Inverter Enclosur	W_INV3	369508	4906164	2	0	0	89.1	89.1	1	4875.2	3.25	0	84.76	0	1.61	0	0	12.3	0	0	0	0	0	0	-9.61	-9.61
Westbrook Inverter Enclosur	W_INV4	369673	4906164	2	0	0	89.1	89.1	1	5021.16	3.25	0	85.02	0	1.64	0	0	12.49	0	0	0	0	0	0	-10.1	-10.1
Inverter	MV3-1	368156	4907976	2	0	0	89.1	89.1	1	5062.24	3.25	0	85.09	0	1.66	0	0	12.55	0	0	0	0	0	0	-10.23	-10.23
Inverter	MV3-5	368340	4907843	2	0	0	89.1	89.1	1	5066.07	3.25	0	85.09	0	1.66	0	0	12.55	0	0	0	0	0	0	-10.24	-10.24
Inverter	MV3-4	368502	4907925	2	0	0	89.1	89.1	1	5231.14	3.25	0	85.37	0	1.7	0	0	12.77	0	0	0	0	0	0	-10.78	-10.78
Westbrook Inverter Enclosur	W_INV7	369780	4906417	2	0	0	89.1	89.1	1	5235.39	3.25	0	85.38	0	1.7	0	0	12.78	0	0	0	0	0	0	-10.8	-10.8
Westbrook Inverter Enclosur	W_INV5	369719	4906574	2	0	0	89.1	89.1	1	5261.59	3.25	0	85.42	0	1.7	0	0	12.81	0	0	0	0	0	0	-10.88	-10.88
Inverter	MV3-2	368671	4907928	2	0	0	89.1	89.1	1	5341.29	3.25	0	85.55	0	1.72	0	0	12.92	0	0	0	0	0	0	-11.13	-11.13
Westbrook Inverter Enclosur	W_INV6	369875	4906578	2	0	0	89.1	89.1	1	5397.8	3.25	0	85.64	0	1.74	0	0	12.99	0	0	0	0	0	0	-11.31	-11.31
Fixed Reactor Bank 1	FRB1	369378	4908755	6	0	0	89.8	89.8	1	6429.31	5.25	0	87.16	0	-0.36	0	0	10.19	0	0	0	0	0	0	-7.22	-7.22
Fixed Reactor Bank 2	FRB2	369464	4908755	6	0	0	89.8	89.8	1	6485.35	5.25	0	87.24	0	-0.35	0	0	10.24	0	0	0	0	0	0	-7.36	-7.36
Inverter	MV4-15	369176	4908481	2	0	0	89.1	89.1	1	6089.76	3.25	0	86.69	0	1.91	0	0	13.88	0	0	0	0	0	0	-13.42	-13.42
Inverter	MV4-13	369051	4908605	2	0	0	89.1	89.1	1	6105.1	3.25	0	86.71	0	1.91	0	0	13.89	0	0	0	0	0	0	-13.46	-13.46
Inverter	MV4-14	369176	4908507	2	0	0	89.1	89.1	1	6109.52	3.25	0	86.72	0	1.91	0	0	13.9	0	0	0	0	0	0	-13.47	-13.47
Inverter	MV4-12	369043	4908803	2	0	0	89.1	89.1	1	6255.42	3.25	0	86.93	0	1.95	0	0	14.08	0	0	0	0	0	0	-13.9	-13.9
Inverter	MV5-6	369982	4908507	2	0	0	89.1	89.1	1	6660.63	3.25	0	87.47	0	2.05	0	0	14.58	0	0	0	0	0	0	-15.04	-15.04
Westbrook Inverter Enclosur	W_INV1	369409	4906578	2	0	0	86.1	86.1	1	5000.86	3.25	0	84.98	0	1.64	0	0	12.46	0	0	0	0	0	0	-13.03	-13.03
Inverter	MV6-4	370250	4906966	2	0	0	86.1	86.1	1	5919.06	3.25	0	86.45	0	1.87	0	0	13.66	0	0	0	0	0	0	-15.91	-15.91
Inverter Transformer	MV1-14 T	365157	4905049	2	0	0	69.4	69.4	1	1193.33	3.25	0	72.54	0	1.82	0	0	4.07	0	0	0	0	0	0	-9.07	-9.07
Inverter Transformer	MV1-13 T	364725	4905241	2	0	0	69.4	69.4	1	1467.58	3.25	0	74.33	0	1.96	0	0	4.4	0	0	0	0	0	0	-11.34	-11.34
Inverter Transformer	MV1-10 T	365010	4905564	2	0	0	69.4	69.4	1	1719.05	3.25	0	75.71	0	2.07	0	0	4.68	0	0	0	0	0	0	-13.1	-13.1
Westbrook Inverter Transfor	W_INVTR1	369403	4906578	2	0	0	78.2	78.2	1	4995.83	3.25	0	84.97	0	-3.18	0	0	2.41	0	0	0	0	0	0	-5.97	-5.97
Westbrook Inverter Transfor	W_INVTR2	369368	4906388	2	0	0	77.3	77.3	1	4865.01	3.25	0	84.74	0	-3.15	0	0	2.37	0	0	0	0	0	0	-6.62	-6.62
Westbrook Inverter Transfor	W_INVTR3	369514	4906164	2	0	0	77.3	77.3	1	4880.49	3.25	0	84.77	0	-3.15	0	0	2.37	0	0	0	0	0	0	-6.65	-6.65
Inverter Transformer	MV1-7 T	364919	4905782	2	0	0	69.4	69.4	1	1947.35	3.25	0	76.79	0	2.15	0	0	4.91	0	0	0	0	0	0	-14.5	-14.5
Westbrook Inverter Transfor	W_INVTR4	369679	4906164	2	0	0	77.3	77.3	1	5026.49	3.25	0	85.03	0	-3.18	0	0	2.42	0	0	0	0	0	0	-6.92	-6.92
Westbrook Inverter Transfor	W_INVTR7	369786	4906417	2	0	0	77.3	77.3	1	5240.62	3.25	0	85.39	0	-3.23	0	0	2.49	0	0	0	0	0	0	-7.32	-7.32
Westbrook Inverter Transfor	W_INVTR5	369725	4906574	2	0	0	77.3	77.3	1	5266.73	3.25	0	85.43	0	-3.23	0	0	2.5	0	0	0	0	0	0	-7.36	-7.36
Westbrook Inverter Transfor	W_INVTR6	369881	4906578	2	0	0	77.3	77.3	1	5402.98	3.25	0	85.65	0	-3.26	0	0	2.55	0	0	0	0	0	0	-7.6	-7.6
Inverter Transformer	MV2-1 T	365836	4906816	2	0	0	69.4	69.4	1	3023.83	3.25	0	80.61	0	2.51	0	0	5.9	0	0	0	0	0	0	-19.68	-19.68
Inverter Transformer	MV1-15 T	365309	4904994	2	0	0	56.1	56.1	1	1141.03	3.25	0	72.15	0	0.06	0	0	5.22	0	0	0	0	0	0	-21.37	-21.37
Inverter Transformer	MV6-4 T	370244	4906966	2	0	0	69.4	69.4	1	5913.95	3.25	0	86.44	0	3.18	0	0	7.97	0	0	0	0	0	0	-28.23	-28.23
Inverter Transformer	MV6-1 T	370230	4907364	2	0	0	69.4	69.4	1	6121.06	3.25	0	86.74	0	3.21	0	0	8.09	0	0	0	0	0	0	-28.68	-28.68

	Inverter Transformer	MV1-12 T	365044	4905386	2	0	0	56.1	56.1	1	1538.34	3.25	0	74.74	0	0.21	0	0	6.1	0	0	0	0	0	0	-25	-25
	Inverter Transformer	MV1-11 T	364649	4905414	2	0	0	56.1	56.1	1	1656.07	3.25	0	75.38	0	0.26	0	0	6.35	0	0	0	0	0	0	-25.93	-25.93
	Inverter Transformer	MV1-8 T	364782	4905647	2	0	0	56.1	56.1	1	1841.21	3.25	0	76.3	0	0.34	0	0	6.73	0	0	0	0	0	0	-27.31	-27.31
	Inverter Transformer	MV1-9 T	364555	4905646	2	0	0	56.1	56.1	1	1906.24	3.25	0	76.6	0	0.36	0	0	6.86	0	0	0	0	0	0	-27.77	-27.77
	Inverter Transformer	MV1-4 T	364821	4905918	2	0	0	56.1	56.1	1	2097.99	3.25	0	77.44	0	0.45	0	0	7.23	0	0	0	0	0	0	-29.06	-29.06
	Inverter Transformer	MV1-5 T	364676	4905892	2	0	0	56.1	56.1	1	2104.71	3.25	0	77.46	0	0.45	0	0	7.25	0	0	0	0	0	0	-29.1	-29.1
	Inverter Transformer	MV1-6 T	364482	4905835	2	0	0	56.1	56.1	1	2108.83	3.25	0	77.48	0	0.45	0	0	7.26	0	0	0	0	0	0	-29.13	-29.13
	Inverter Transformer	MV1-2 T	364759	4906063	2	0	0	56.1	56.1	1	2252.27	3.25	0	78.05	0	0.51	0	0	7.53	0	0	0	0	0	0	-30.03	-30.03
	Inverter Transformer	MV1-3 T	364435	4906039	2	0	0	56.1	56.1	1	2316.62	3.25	0	78.3	0	0.54	0	0	7.65	0	0	0	0	0	0	-30.43	-30.43
	Inverter Transformer	MV1-1 T	364721	4906166	2	0	0	56.1	56.1	1	2360.88	3.25	0	78.46	0	0.56	0	0	7.73	0	0	0	0	0	0	-30.69	-30.69
	Inverter Transformer	MV2-4 T	365590	4906628	2	0	0	56.1	56.1	1	2796.5	3.25	0	79.93	0	0.74	0	0	8.52	0	0	0	0	0	0	-33.14	-33.14
	Inverter Transformer	MV2-3 T	365814	4906641	2	0	0	56.1	56.1	1	2848.09	3.25	0	80.09	0	0.77	0	0	8.61	0	0	0	0	0	0	-33.41	-33.41
	Inverter Transformer	MV2-2 T	365982	4906654	2	0	0	56.1	56.1	1	2900.74	3.25	0	80.25	0	0.79	0	0	8.7	0	0	0	0	0	0	-33.68	-33.68
	Inverter Transformer	MV3-18 T	367757	4907412	2	0	0	56.1	56.1	1	4371.38	3.25	0	83.81	0	1.39	0	0	10.99	0	0	0	0	0	0	-40.14	-40.14
	Inverter Transformer	MV3-12 T	367674	4907594	2	0	0	56.1	56.1	1	4474.45	3.25	0	84.01	0	1.43	0	0	11.14	0	0	0	0	0	0	-40.53	-40.53
	Inverter Transformer	MV3-13 T	367958	4907577	2	0	0	56.1	56.1	1	4623.02	3.25	0	84.3	0	1.49	0	0	11.35	0	0	0	0	0	0	-41.07	-41.07
	Inverter Transformer	MV3-17 T	368183	4907472	2	0	0	56.1	56.1	1	4678.46	3.25	0	84.4	0	1.51	0	0	11.42	0	0	0	0	0	0	-41.27	-41.27
	Inverter Transformer	MV3-21 T	368484	4907206	2	0	0	56.1	56.1	1	4681.23	3.25	0	84.41	0	1.51	0	0	11.43	0	0	0	0	0	0	-41.28	-41.28
	Inverter Transformer	MV3-19 T	368352	4907347	2	0	0	56.1	56.1	1	4693.84	3.25	0	84.43	0	1.51	0	0	11.44	0	0	0	0	0	0	-41.33	-41.33
	Inverter Transformer	MV3-22 T	368661	4907142	2	0	0	56.1	56.1	1	4762.2	3.25	0	84.56	0	1.54	0	0	11.54	0	0	0	0	0	0	-41.57	-41.57
	Inverter Transformer	MV3-7 T	367951	4907754	2	0	0	56.1	56.1	1	4762.58	3.25	0	84.56	0	1.54	0	0	11.54	0	0	0	0	0	0	-41.57	-41.57
	Inverter Transformer	MV3-15 T	368351	4907477	2	0	0	56.1	56.1	1	4790.64	3.25	0	84.61	0	1.55	0	0	11.57	0	0	0	0	0	0	-41.67	-41.67
	Inverter Transformer	MV3-10 T	368162	4907669	2	0	0	56.1	56.1	1	4819.42	3.25	0	84.66	0	1.56	0	0	11.61	0	0	0	0	0	0	-41.77	-41.77
	Inverter Transformer	MV3-16 T	368509	4907475	2	0	0	56.1	56.1	1	4894.1	3.25	0	84.79	0	1.59	0	0	11.71	0	0	0	0	0	0	-42.04	-42.04
	Inverter Transformer	MV3-20 T	368683	4907317	2	0	0	56.1	56.1	1	4900.11	3.25	0	84.8	0	1.59	0	0	11.72	0	0	0	0	0	0	-42.06	-42.06
	Inverter Transformer	MV3-3 T	367944	4907927	2	0	0	56.1	56.1	1	4901.24	3.25	0	84.81	0	1.59	0	0	11.72	0	0	0	0	0	0	-42.06	-42.06
	Inverter Transformer	MV3-11 T	368340	4907662	2	0	0	56.1	56.1	1	4924.93	3.25	0	84.85	0	1.6	0	0	11.75	0	0	0	0	0	0	-42.14	-42.14
	Inverter Transformer	MV3-6 T	368156	4907834	2	0	0	56.1	56.1	1	4947.38	3.25	0	84.89	0	1.61	0	0	11.78	0	0	0	0	0	0	-42.22	-42.22
	Inverter Transformer	MV3-14 T	368678	4907498	2	0	0	56.1	56.1	1	5026.1	3.25	0	85.02	0	1.63	0	0	11.89	0	0	0	0	0	0	-42.49	-42.49
	Inverter Transformer	MV3-1 T	368150	4907976	2	0	0	56.1	56.1	1	5058.75	3.25	0	85.08	0	1.65	0	0	11.93	0	0	0	0	0	0	-42.6	-42.6
	Inverter Transformer	MV3-5 T	368335	4907843	2	0	0	56.1	56.1	1	5062.99	3.25	0	85.09	0	1.65	0	0	11.94	0	0	0	0	0	0	-42.61	-42.61
	Inverter Transformer	MV3-9 T	368517	4907703	2	0	0	56.1	56.1	1	5070.19	3.25	0	85.1	0	1.65	0	0	11.95	0	0	0	0	0	0	-42.64	-42.64
	Inverter Transformer	MV3-8 T	368685	4907712	2	0	0	56.1	56.1	1	5187.91	3.25	0	85.3	0	1.69	0	0	12.1	0	0	0	0	0	0	-43.03	-43.03
	Inverter Transformer	MV3-4 T	368507	4907925	2	0	0	56.1	56.1	1	5234.29	3.25	0	85.38	0	1.71	0	0	12.16	0	0	0	0	0	0	-43.19	-43.19
	Inverter Transformer	MV3-2 T	368677	4907928	2	0	0	56.1	56.1	1	5345.18	3.25	0	85.56	0	1.75	0	0	12.3	0	0	0	0	0	0	-43.55	-43.55
	Inverter Transformer	MV6-3 T	370202	4907140	2	0	0	56.1	56.1	1	5972.12	3.25	0	86.52	0	1.96	0	0	13.07	0	0	0	0	0	0	-45.49	-45.49
	Inverter Transformer	MV6-2 T	370091	4907339	2	0	0	56.1	56.1	1	5993.1	3.25	0	86.55	0	1.96	0	0	13.09	0	0	0	0	0	0	-45.55	-45.55
	Inverter Transformer	MV4-15 T	369170	4908481	2	0	0	56.1	56.1	1	6085.86	3.25	0	86.69	0	1.99	0	0	13.2	0	0	0	0	0	0	-45.82	-45.82
	Inverter Transformer	MV4-13 T	369057	4908605	2	0	0	56.1	56.1	1	6108.87	3.25	0	86.72	0	2	0	0	13.23	0	0	0	0	0	0	-45.89	-45.89
	Inverter Transformer	MV4-14 T	369182	4908507	2	0	0	56.1	56.1	1	6113.42	3.25	0	86.73	0	2	0	0	13.24	0	0	0	0	0	0	-45.9	-45.9
	Inverter Transformer	MV4-12 T	369049	4908803	2	0	0	56.1	56.1	1	6259.1	3.25	0	86.93	0	2.05	0	0	13.41	0	0	0	0	0	0	-46.32	-46.32
	Inverter Transformer	MV4-7 T	369040	4909001	2	0	0	56.1	56.1	1	6411.33	3.25	0	87.14	0	2.09	0	0	13.58	0	0	0	0	0	0	-46.75	-46.75
	Inverter Transformer	MV4-11 T	369269	4908855	2	0	0	56.1	56.1	1	6436.58	3.25	0	87.17	0	2.1	0	0	13.61	0	0	0	0	0	0	-46.82	-46.82
	Inverter Transformer	MV4-10 T	369307	4908858	2	0	0	56.1	56.1	1	6462.91	3.25	0	87.21	0	2.11	0	0	13.64	0	0	0	0	0	0	-46.9	-46.9
	Inverter Transformer	MV4-8 T	369262	4909001	2	0	0	56.1	56.1	1	6546.26	3.25	0	87.32	0	2.13	0	0	13.73	0	0	0	0	0	0	-47.12	-47.12
	Inverter Transformer	MV4-9 T	369284	4909001	2	0	0	56.1	56.1	1	6559.89	3.25	0	87.34	0	2.14	0	0	13.75	0	0	0	0	0	0	-47.16	-47.16
	Inverter Transformer	MV4-4 T	369033	4909199	2	0	0	56.1	56.1	1	6567.18	3.25	0	87.35	0	2.14	0	0	13.76	0	0	0	0	0	0	-47.18	-47.18
	Inverter Transformer	MV5-6 T	369987	4908507	2	0	0	56.1	56.1	1	6664.21	3.25	0	87.47	0	2.17	0	0	13.86	0	0	0	0	0	0	-47.45	-47.45
	Inverter Transformer	MV4-6 T	369249	4909192	2	0	0	56.1	56.1	1	6689.54	3.25	0	87.51	0	2.17	0	0	13.89	0	0	0	0	0	0	-47.51	-47.51
	Inverter Transformer	MV4-5 T	369283	4909199	2	0	0	56.1	56.1	1	6715.67	3.25	0	87.54	0	2.18	0	0	13.92	0	0	0	0	0	0	-47.58	-47.58
	Inverter Transformer	MV4-1 T	369017	4909397	2	0	0	56.1	56.1	1	6720.16	3.25	0	87.55	0	2.18	0	0	13.93	0	0	0	0	0	0	-47.6	-47.6
	Inverter Transformer	MV5-5 T	370021	4908690	2	0	0	56.1	56.1	1	6817.1	3.25	0	87.67	0	2.21	0	0	14.03	0	0	0	0	0	0	-47.85	-47.85
	Inverter Transformer	MV4-3 T	369234	4909397	2	0	0	56.1	56.1	1	6845.32	3.25	0	87.71	0	2.22	0	0	14.06	0	0	0	0	0	0	-47.93	-47.93
	Inverter Transformer	MV4-2 T	369267	4909397	2	0	0	56.1	56.1	1	6864.76	3.25	0	87.73	0	2.22	0	0	14.08	0	0	0	0	0	0	-47.98	-47.98
	Inverter Transformer	MV5-2 T	370011	4908853	2	0	0	56.1	56.1	1	6926.68	3.25	0	87.81	0	2.24	0	0	14.15	0	0	0	0	0	0	-48.14	-48.14
	Inverter Transformer	MV5-4 T	370330	4908707	2	0	0	56.1	56.1	1	7050.12	3.25	0	87.96	0	2.27	0	0	14.28	0	0	0	0	0	0	-48.46	-48.46
	Inverter Transformer	MV5-3 T	370237	4908851	2	0	0	56.1	56.1	1	7083.69	3.25	0	88.01	0	2.28	0	0	14.32	0	0	0	0	0	0	-48.55	-48.55
	Inverter Transformer	MV5-1 T	370015	4909142	2	0	0	56.1	56.1	1	7140.62	3.25	0	88.07	0	2.3	0	0	14.38	0	0	0	0	0	0	-48.69	-48.69
	Line Reactor	NGR	369421	4908787.5	5	0	0	45.4	45.4	1	6481.93	5.25	0	87.23	0	3.23	1.37	0.09	2.65	0	0	0	0	0	0	-49.12	-49.12
Limit. Valu	0	0																								
Level D/N:	24.5996	24.5996																								

Receiver: Existing Noise Receptor
ID: G-100
X: 368194.2
Y: 4902084.1
Z: 4.5
Ground: 0

ISO	Description	ID	X	Y	Z	Ground	ReflOrd	LxT	LxN	L/A	Dist.	hm	Freq	Adiv	K0b	Agr	Abar	z	Aatm	Afol	Ahous	Cmet	CmetN	Dc	RL	LtotT	LtotN
	Sol_Luce Substation	S_Substation	369426	4908792	3.5	0	0	112.1	112.1	1	6820.06	5.25	0	87.68	0	1.34	2.48	0.35	10.58	0	0	0	0	0	0	10	10
	Inverter	MV1-15	365315	4904994	2	0	0	100.3	100.3	1	4093.57	3.25	0	83.24	0	0.54	0	0	17.2	0	0	0	0	0	0	-0.67	-0.67
	Inverter	MV1-12	365038	4905386	2	0	0	100.3	100.3	1	4567.73	3.25	0	84.19	0	0.6	0	0	17.93	0	0	0	0	0	0	-2.41	-2.41
	Inverter	MV1-11	364655	4905414	2	0	0	100.3	100.3	1	4859.44	3.25	0	84.73	0	0.63	0	0	18.37	0	0	0	0	0	0	-3.42	-3.42

Inverter	MV1-8	364788	4905647	2	0	0	100.3	100.3	1	4929.14	3.25	0	84.86	0	0.64	0	0	18.48	0	0	0	0	0	0	-3.65	-3.65
Inverter	MV1-9	364561	4905646	2	0	0	100.3	100.3	1	5087.95	3.25	0	85.13	0	0.65	0	0	18.71	0	0	0	0	0	0	-4.18	-4.18
Inverter	MV1-4	364815	4905918	2	0	0	100.3	100.3	1	5110.56	3.25	0	85.17	0	0.65	0	0	18.74	0	0	0	0	0	0	-4.25	-4.25
Inverter	MV3-21	368478	4907206	2	0	0	100.3	100.3	1	5129.76	3.25	0	85.2	0	0.65	0	0	18.77	0	0	0	0	0	0	-4.31	-4.31
Inverter	MV2-3	365820	4906641	2	0	0	100.3	100.3	1	5138.3	3.25	0	85.22	0	0.65	0	0	18.78	0	0	0	0	0	0	-4.34	-4.34
Inverter	MV1-5	364671	4905892	2	0	0	100.3	100.3	1	5187.78	3.25	0	85.3	0	0.66	0	0	18.85	0	0	0	0	0	0	-4.5	-4.5
Inverter	MV2-4	365586	4906624	2	0	0	100.3	100.3	1	5235.78	3.25	0	85.38	0	0.66	0	0	18.92	0	0	0	0	0	0	-4.65	-4.65
Inverter	MV3-20	368689	4907317	2	0	0	100.3	100.3	1	5256.24	3.25	0	85.41	0	0.66	0	0	18.95	0	0	0	0	0	0	-4.72	-4.72
Inverter	MV1-2	364753	4906063	2	0	0	100.3	100.3	1	5260.56	3.25	0	85.42	0	0.66	0	0	18.96	0	0	0	0	0	0	-4.73	-4.73
Inverter	MV3-19	368357	4907347	2	0	0	100.3	100.3	1	5265.42	3.25	0	85.43	0	0.66	0	0	18.97	0	0	0	0	0	0	-4.75	-4.75
Inverter	MV1-6	364477	4905835	2	0	0	100.3	100.3	1	5280.8	3.25	0	85.45	0	0.67	0	0	18.99	0	0	0	0	0	0	-4.8	-4.8
Inverter	MV3-18	367752	4907412	2	0	0	100.3	100.3	1	5346.22	3.25	0	85.56	0	0.67	0	0	19.08	0	0	0	0	0	0	-5	-5
Inverter	MV1-1	364715	4906166	2	0	0	100.3	100.3	1	5363.46	3.25	0	85.59	0	0.67	0	0	19.11	0	0	0	0	0	0	-5.05	-5.05
Inverter	MV3-17	368178	4907472	2	0	0	100.3	100.3	1	5387.92	3.25	0	85.63	0	0.67	0	0	19.14	0	0	0	0	0	0	-5.13	-5.13
Inverter	MV3-15	368357	4907477	2	0	0	100.3	100.3	1	5395.36	3.25	0	85.64	0	0.67	0	0	19.15	0	0	0	0	0	0	-5.15	-5.15
Inverter	MV3-16	368514	4907475	2	0	0	100.3	100.3	1	5400.38	3.25	0	85.65	0	0.67	0	0	19.16	0	0	0	0	0	0	-5.17	-5.17
Inverter	MV3-14	368684	4907498	2	0	0	100.3	100.3	1	5436.01	3.25	0	85.71	0	0.68	0	0	19.21	0	0	0	0	0	0	-5.28	-5.28
Inverter	MV6-3	370207	4907140	2	0	0	100.3	100.3	1	5441.83	3.25	0	85.71	0	0.68	0	0	19.22	0	0	0	0	0	0	-5.3	-5.3
Inverter	MV3-13	367963	4907577	2	0	0	100.3	100.3	1	5497.76	3.25	0	85.8	0	0.68	0	0	19.3	0	0	0	0	0	0	-5.47	-5.47
Inverter	MV3-12	367668	4907594	2	0	0	100.3	100.3	1	5534.97	3.25	0	85.86	0	0.68	0	0	19.35	0	0	0	0	0	0	-5.58	-5.58
Inverter	MV3-11	368346	4907662	2	0	0	100.3	100.3	1	5579.97	3.25	0	85.93	0	0.69	0	0	19.41	0	0	0	0	0	0	-5.72	-5.72
Inverter	MV6-2	370085	4907339	2	0	0	100.3	100.3	1	5584.72	3.25	0	85.94	0	0.69	0	0	19.42	0	0	0	0	0	0	-5.73	-5.73
Inverter	MV3-10	368167	4907669	2	0	0	100.3	100.3	1	5584.97	3.25	0	85.94	0	0.69	0	0	19.42	0	0	0	0	0	0	-5.73	-5.73
Inverter	MV3-9	368512	4907703	2	0	0	100.3	100.3	1	5627.88	3.25	0	86.01	0	0.69	0	0	19.48	0	0	0	0	0	0	-5.86	-5.86
Inverter	MV3-8	368680	4907712	2	0	0	100.3	100.3	1	5648.83	3.25	0	86.04	0	0.69	0	0	19.51	0	0	0	0	0	0	-5.93	-5.93
Inverter	MV3-7	367945	4907754	2	0	0	100.3	100.3	1	5675.37	3.25	0	86.08	0	0.69	0	0	19.55	0	0	0	0	0	0	-6.01	-6.01
Inverter	MV3-6	368162	4907834	2	0	0	100.3	100.3	1	5749.99	3.25	0	86.19	0	0.69	0	0	19.65	0	0	0	0	0	0	-6.23	-6.23
Inverter	MV3-3	367939	4907927	2	0	0	100.3	100.3	1	5848.47	3.25	0	86.34	0	0.7	0	0	19.79	0	0	0	0	0	0	-6.51	-6.51
Inverter	MV1-14	365163	4905049	2	0	0	97.3	97.3	1	4240.14	3.25	0	83.55	0	0.56	0	0	17.43	0	0	0	0	0	0	-4.22	-4.22
Gardiner Substation	G_Sub	366586.3	4903349.9	2.5	0	0	90.8	90.8	1	2046.36	3.5	0	77.22	0	-0.15	0	0	4.45	0	0	0	0	0	0	9.27	9.27
Inverters	G_Inv10	366900.7	4902704.8	2	0	0	87.7	87.7	1	1434.72	3.25	0	74.14	0	2.51	0	0	1.96	0	0	0	0	0	0	9.05	9.05
Inverter	MV1-13	364731	4905241	2	0	0	97.3	97.3	1	4686.13	3.25	0	84.42	0	0.61	0	0	18.11	0	0	0	0	0	0	-5.83	-5.83
Inverters	G_Inv8	366844.5	4902838.5	2	0	0	87.7	87.7	1	1546.23	3.25	0	74.79	0	2.53	0	0	2.1	0	0	0	0	0	0	8.25	8.25
Inverter	MV1-10	365004	4905564	2	0	0	97.3	97.3	1	4720.92	3.25	0	84.48	0	0.62	0	0	18.17	0	0	0	0	0	0	-5.95	-5.95
Inverters	G_Inv9	366750.9	4902691.8	2	0	0	87.7	87.7	1	1566.02	3.25	0	74.9	0	2.53	0	0	2.12	0	0	0	0	0	0	8.11	8.11
Inverter	MV5-5	370015	4908690	2	0	0	100.3	100.3	1	6852.24	3.25	0	87.72	0	0.71	0	0	21.11	0	0	0	0	0	0	-9.23	-9.23
Inverter	MV4-11	369264	4908855	2	0	0	100.3	100.3	1	6854.89	3.25	0	87.72	0	0.71	0	0	21.12	0	0	0	0	0	0	-9.24	-9.24
Inverter	MV4-10	369312	4908858	2	0	0	100.3	100.3	1	6865.51	3.25	0	87.73	0	0.71	0	0	21.13	0	0	0	0	0	0	-9.26	-9.26
Inverter	MV5-4	370324	4908707	2	0	0	100.3	100.3	1	6956.93	3.25	0	87.85	0	0.71	0	0	21.25	0	0	0	0	0	0	-9.49	-9.49
Inverter	MV4-7	369035	4909001	2	0	0	100.3	100.3	1	6967.82	3.25	0	87.86	0	0.71	0	0	21.26	0	0	0	0	0	0	-9.52	-9.52
Inverter	MV1-7	364925	4905782	2	0	0	97.3	97.3	1	4935.8	3.25	0	84.87	0	0.64	0	0	18.49	0	0	0	0	0	0	-6.68	-6.68
Inverter	MV4-8	369256	4909001	2	0	0	100.3	100.3	1	6997.92	3.25	0	87.9	0	0.71	0	0	21.3	0	0	0	0	0	0	-9.59	-9.59
Inverter	MV4-9	369289	4909001	2	0	0	100.3	100.3	1	7003.01	3.25	0	87.91	0	0.71	0	0	21.3	0	0	0	0	0	0	-9.61	-9.61
Inverter	MV5-2	370006	4908853	2	0	0	100.3	100.3	1	7007.18	3.25	0	87.91	0	0.71	0	0	21.31	0	0	0	0	0	0	-9.62	-9.62
Inverter	MV5-3	370231	4908851	2	0	0	100.3	100.3	1	7066.79	3.25	0	87.98	0	0.71	0	0	21.38	0	0	0	0	0	0	-9.76	-9.76
Inverters	G_Inv6	366788.5	4902972	2	0	0	87.7	87.7	1	1662.64	3.25	0	75.42	0	2.54	0	0	2.24	0	0	0	0	0	0	7.47	7.47
Inverter	MV4-4	369027	4909199	2	0	0	100.3	100.3	1	7163.47	3.25	0	88.1	0	0.7	0	0	21.5	0	0	0	0	0	0	-10	-10
Inverters	G_Inv7	366694.6	4902824.7	2	0	0	87.7	87.7	1	1672.51	3.25	0	75.47	0	2.54	0	0	2.25	0	0	0	0	0	0	7.4	7.4
Inverter	MV4-6	369243	4909192	2	0	0	100.3	100.3	1	7184.86	3.25	0	88.13	0	0.7	0	0	21.53	0	0	0	0	0	0	-10.05	-10.05
Inverter	MV4-5	369289	4909199	2	0	0	100.3	100.3	1	7198.64	3.25	0	88.15	0	0.7	0	0	21.55	0	0	0	0	0	0	-10.08	-10.08
Inverter	MV5-1	370020	4909142	2	0	0	100.3	100.3	1	7290.23	3.25	0	88.25	0	0.7	0	0	21.66	0	0	0	0	0	0	-10.3	-10.3
Inverter	MV4-1	369011	4909397	2	0	0	100.3	100.3	1	7358.37	3.25	0	88.34	0	0.7	0	0	21.74	0	0	0	0	0	0	-10.46	-10.46
Inverter	MV4-3	369229	4909397	2	0	0	100.3	100.3	1	7385.75	3.25	0	88.37	0	0.7	0	0	21.78	0	0	0	0	0	0	-10.53	-10.53
Inverter	MV4-2	369272	4909397	2	0	0	100.3	100.3	1	7391.9	3.25	0	88.38	0	0.7	0	0	21.78	0	0	0	0	0	0	-10.54	-10.54
Inverter	MV2-1	365842	4906816	2	0	0	97.3	97.3	1	5284.29	3.25	0	85.46	0	0.67	0	0	18.99	0	0	0	0	0	0	-7.81	-7.81
Inverters	G_Inv4	366732.8	4903105	2	0	0	87.7	87.7	1	1782.68	3.25	0	76.02	0	2.56	0	0	2.38	0	0	0	0	0	0	6.7	6.7
Inverters	G_Inv5	366638.5	4902958.1	2	0	0	87.7	87.7	1	1784.4	3.25	0	76.03	0	2.56	0	0	2.38	0	0	0	0	0	0	6.69	6.69
Inverter	MV6-1	370235	4907364	2	0	0	97.3	97.3	1	5660.58	3.25	0	86.06	0	0.69	0	0	19.53	0	0	0	0	0	0	-8.96	-8.96
Inverters	G_Inv3	366583.7	4903091.4	2	0	0	87.7	87.7	1	1899.57	3.25	0	76.57	0	2.57	0	0	2.52	0	0	0	0	0	0	6	6
Inverters	G_Inv2	366676.9	4903239.1	2	0	0	87.7	87.7	1	1906.89	3.25	0	76.61	0	2.57	0	0	2.53	0	0	0	0	0	0	5.96	5.96
Inverters	G_Inv1	366526.4	4903225.8	2	0	0	87.7	87.7	1	2021.15	3.25	0	77.11	0	2.59	0	0	2.66	0	0	0	0	0	0	5.3	5.3
DSTATCOM - 10 MVAR #2	DSAT2	369403	4908757	2.5	0	0	96.6	96.6	1	6781.5	3.5	0	87.63	0	3.82	0	0	4.21	0	0	0	0	0	0	0.97	0.97
DSTATCOM - 10 MVAR #1	DSAT1	369437	4908757	2.5	0	0	96.6	96.6	1	6787.65	3.5	0	87.63	0	3.83	0	0	4.21	0	0	0	0	0	0	0.96	0.96
SubstationTransformer	W_ST	369711.17	4906112.3	2.5	0	0	92	92	1	4304.34	3.5	0	83.68	0	0.4	0	-0.13	7.76	0	0	0	0	0	0	0.13	0.13
Westbrook Inverter Enclosur	W_INV3	369508	4906164	2	0	0	89.1	89.1	1	4286.22	3.25	0	83.64	0	1.46	0	0	11.49	0	0	0	0	0	0	-7.53	-7.53
Westbrook Inverter Enclosur	W_INV4	369673	4906164	2	0	0	89.1	89.1	1	4339.64	3.25	0	83.75	0	1.48	0	0	11.56	0	0	0	0	0	0	-7.73	-7.73
Westbrook Inverter Enclosur	W_INV2	369374	4906388	2	0	0	89.1	89.1	1	4462.68	3.25	0	83.99	0	1.51	0	0	11.73	0	0	0	0	0	0	-8.17	-8.17
Westbrook Inverter Enclosur	W_INV7	369780	4906417	2	0	0	89.1	89.1	1	4613.98	3.25	0	84.28	0	1.54	0	0	11.94	0	0	0	0	0	0	-8.71	-8.71
Westbrook Inverter Enclosur	W_INV5	369719	4906574	2	0	0	89.1	89.1	1	4741.75	3.25	0	84.52	0	1.58	0	0	12.12	0	0	0	0	0	0	-9.15	-9.15
Westbrook Inverter Enclosur	W_INV6	369875	4906578	2	0	0	89.1	89.1	1	4797.94	3.25	0	84.62	0	1.59	0	0	12.19	0	0	0	0	0	0	-9.34	-9.34
Inverter	MV3-22	368656	4907142	2	0	0	89.1	89.1	1	5078.94	3.25	0	85.12	0	1.66	0	0	12.57	0	0	0	0	0	0	-10.29	-10.29
Inverter	MV2-2	365977	4906654	2	0	0	89.1	89.1	1	5079.37	3.25	0	85.12	0	1.66	0	0	12.57	0	0	0	0	0	0	-10.29	-10.29
Inverter	MV1-3	364440	4906039	2	0	0	89.1	89.1	1	5453	3.25	0	85.73	0	1.75	0	0	13.06	0	0	0	0	0	0	-11.49	-11.49
Inverter	MV3-5	368340	4907843	2	0	0	89.1	89.1	1	5760.75	3.25	0	86.21	0	1.83	0	0	13.46	0	0	0	0	0	0	-12.44	-12.44

Inverter	MV3-4	368502	4907925	2	0	0	89.1	89.1	1	5849.01	3.25	0	86.34	0	1.85	0	0	13.57	0	0	0	0	0	0	-12.7	-12.7
Inverter	MV3-2	368671	4907928	2	0	0	89.1	89.1	1	5863.32	3.25	0	86.36	0	1.85	0	0	13.59	0	0	0	0	0	0	-12.75	-12.75
Inverter	MV3-1	368156	4907976	2	0	0	89.1	89.1	1	5892.02	3.25	0	86.41	0	1.86	0	0	13.63	0	0	0	0	0	0	-12.83	-12.83
Fixed Reactor Bank 1	FRB1	369378	4908755	6	0	0	89.8	89.8	1	6775.12	5.25	0	87.62	0	-0.31	0	0	10.53	0	0	0	0	0	0	-8.06	-8.06
Fixed Reactor Bank 2	FRB2	369464	4908755	6	0	0	89.8	89.8	1	6790.68	5.25	0	87.64	0	-0.31	0	0	10.55	0	0	0	0	0	0	-8.1	-8.1
Inverter	MV4-15	369176	4908481	2	0	0	89.1	89.1	1	6471.81	3.25	0	87.22	0	2	0	0	14.35	0	0	0	0	0	0	-14.51	-14.51
Inverter	MV4-14	369176	4908507	2	0	0	89.1	89.1	1	6497.51	3.25	0	87.25	0	2.01	0	0	14.38	0	0	0	0	0	0	-14.58	-14.58
Westbrook Inverter Enclosur	W_INV1	369409	4906578	2	0	0	86.1	86.1	1	4655.2	3.25	0	84.36	0	1.55	0	0	12	0	0	0	0	0	0	-11.85	-11.85
Inverter	MV4-13	369051	4908605	2	0	0	89.1	89.1	1	6576.95	3.25	0	87.36	0	2.03	0	0	14.48	0	0	0	0	0	0	-14.81	-14.81
Inverter	MV5-6	369982	4908507	2	0	0	89.1	89.1	1	6667.07	3.25	0	87.48	0	2.05	0	0	14.59	0	0	0	0	0	0	-15.06	-15.06
Inverter	MV4-12	369043	4908803	2	0	0	89.1	89.1	1	6772.3	3.25	0	87.61	0	2.07	0	0	14.71	0	0	0	0	0	0	-15.34	-15.34
Inverter	MV6-4	370250	4906966	2	0	0	86.1	86.1	1	5297.1	3.25	0	85.48	0	1.71	0	0	12.86	0	0	0	0	0	0	-13.99	-13.99
Westbrook Inverter Transfor	W_INVTR1	369403	4906578	2	0	0	78.2	78.2	1	4653.64	3.25	0	84.36	0	-3.11	0	0	2.29	0	0	0	0	0	0	-5.3	-5.3
Westbrook Inverter Transfor	W_INVTR3	369514	4906164	2	0	0	77.3	77.3	1	4288.06	3.25	0	83.65	0	-3.03	0	0	2.16	0	0	0	0	0	0	-5.44	-5.44
Westbrook Inverter Transfor	W_INVTR4	369679	4906164	2	0	0	77.3	77.3	1	4341.68	3.25	0	83.75	0	-3.04	0	0	2.18	0	0	0	0	0	0	-5.55	-5.55
Westbrook Inverter Transfor	W_INVTR2	369368	4906388	2	0	0	77.3	77.3	1	4461.09	3.25	0	83.99	0	-3.07	0	0	2.22	0	0	0	0	0	0	-5.81	-5.81
Westbrook Inverter Transfor	W_INVTR7	369786	4906417	2	0	0	77.3	77.3	1	4616.04	3.25	0	84.29	0	-3.1	0	0	2.28	0	0	0	0	0	0	-6.13	-6.13
Westbrook Inverter Transfor	W_INVTR5	369725	4906574	2	0	0	77.3	77.3	1	4743.69	3.25	0	84.52	0	-3.13	0	0	2.32	0	0	0	0	0	0	-6.38	-6.38
Westbrook Inverter Transfor	W_INVTR6	369881	4906578	2	0	0	77.3	77.3	1	4800.05	4.12	0	84.62	0	-1.1	2.13	0	2.34	0	0	0	0	0	0	-10.65	-10.65
Inverter Transformer	MV1-14 T	365157	4905049	2	0	0	69.4	69.4	1	4244.43	3.25	0	83.56	0	2.85	0	0	6.86	0	0	0	0	0	0	-23.91	-23.91
Inverter Transformer	MV1-13 T	364725	4905241	2	0	0	69.4	69.4	1	4690.56	3.25	0	84.42	0	2.95	0	0	7.17	0	0	0	0	0	0	-25.19	-25.19
Inverter Transformer	MV1-10 T	365010	4905564	2	0	0	69.4	69.4	1	4716.87	3.25	0	84.47	0	2.95	0	0	7.19	0	0	0	0	0	0	-25.27	-25.27
Inverter Transformer	MV1-7 T	364919	4905782	2	0	0	69.4	69.4	1	4939.78	3.25	0	84.87	0	3	0	0	7.34	0	0	0	0	0	0	-25.87	-25.87
Inverter Transformer	MV2-1 T	365836	4906816	2	0	0	69.4	69.4	1	5286.96	3.25	0	85.46	0	3.07	0	0	7.57	0	0	0	0	0	0	-26.75	-26.75
Inverter Transformer	MV6-4 T	370244	4906966	2	0	0	69.4	69.4	1	5294.77	3.25	0	85.48	0	3.07	0	0	7.58	0	0	0	0	0	0	-26.77	-26.77
Inverter Transformer	MV6-1 T	370230	4907364	2	0	0	69.4	69.4	1	5658.78	3.25	0	86.05	0	3.13	0	0	7.81	0	0	0	0	0	0	-27.65	-27.65
Inverter Transformer	MV1-15 T	365309	4904994	2	0	0	56.1	56.1	1	4097.79	3.25	0	83.25	0	1.28	0	0	10.6	0	0	0	0	0	0	-39.07	-39.07
Inverter Transformer	MV1-12 T	365044	4905386	2	0	0	56.1	56.1	1	4563.59	3.25	0	84.19	0	1.46	0	0	11.26	0	0	0	0	0	0	-40.86	-40.86
Inverter Transformer	MV1-11 T	364649	4905414	2	0	0	56.1	56.1	1	4863.81	3.25	0	84.74	0	1.58	0	0	11.67	0	0	0	0	0	0	-41.93	-41.93
Inverter Transformer	MV1-8 T	364782	4905647	2	0	0	56.1	56.1	1	4933.29	3.25	0	84.86	0	1.6	0	0	11.77	0	0	0	0	0	0	-42.17	-42.17
Inverter Transformer	MV2-2 T	365982	4906654	2	0	0	56.1	56.1	1	5077.19	3.25	0	85.11	0	1.65	0	0	11.96	0	0	0	0	0	0	-42.66	-42.66
Inverter Transformer	MV3-22 T	368661	4907142	2	0	0	56.1	56.1	1	5079.4	3.25	0	85.12	0	1.65	0	0	11.96	0	0	0	0	0	0	-42.67	-42.67
Inverter Transformer	MV1-9 T	364555	4905646	2	0	0	56.1	56.1	1	5092.24	3.25	0	85.14	0	1.66	0	0	11.98	0	0	0	0	0	0	-42.71	-42.71
Inverter Transformer	MV1-4 T	364821	4905918	2	0	0	56.1	56.1	1	5106.59	3.25	0	85.16	0	1.66	0	0	11.99	0	0	0	0	0	0	-42.76	-42.76
Inverter Transformer	MV3-21 T	368484	4907206	2	0	0	56.1	56.1	1	5130.09	3.25	0	85.2	0	1.67	0	0	12.02	0	0	0	0	0	0	-42.84	-42.84
Inverter Transformer	MV2-3 T	365814	4906641	2	0	0	56.1	56.1	1	5141.08	3.25	0	85.22	0	1.68	0	0	12.04	0	0	0	0	0	0	-42.88	-42.88
Inverter Transformer	MV1-5 T	364676	4905892	2	0	0	56.1	56.1	1	5184.38	3.25	0	85.29	0	1.69	0	0	12.09	0	0	0	0	0	0	-43.02	-43.02
Inverter Transformer	MV2-4 T	365590	4906628	2	0	0	56.1	56.1	1	5237.26	3.25	0	85.38	0	1.71	0	0	12.16	0	0	0	0	0	0	-43.2	-43.2
Inverter Transformer	MV3-20 T	368683	4907317	2	0	0	56.1	56.1	1	5255.68	3.25	0	85.41	0	1.72	0	0	12.19	0	0	0	0	0	0	-43.26	-43.26
Inverter Transformer	MV1-2 T	364759	4906063	2	0	0	56.1	56.1	1	5256.64	3.25	0	85.41	0	1.72	0	0	12.19	0	0	0	0	0	0	-43.26	-43.26
Inverter Transformer	MV3-19 T	368352	4907347	2	0	0	56.1	56.1	1	5265.27	3.25	0	85.43	0	1.72	0	0	12.2	0	0	0	0	0	0	-43.29	-43.29
Inverter Transformer	MV1-6 T	364482	4905835	2	0	0	56.1	56.1	1	5277.28	3.25	0	85.45	0	1.72	0	0	12.21	0	0	0	0	0	0	-43.33	-43.33
Inverter Transformer	MV3-18 T	367757	4907412	2	0	0	56.1	56.1	1	5345.81	3.25	0	85.56	0	1.75	0	0	12.3	0	0	0	0	0	0	-43.55	-43.55
Inverter Transformer	MV1-1 T	364721	4906166	2	0	0	56.1	56.1	1	5359.57	3.25	0	85.58	0	1.75	0	0	12.32	0	0	0	0	0	0	-43.6	-43.6
Inverter Transformer	MV3-17 T	368183	4907472	2	0	0	56.1	56.1	1	5387.91	3.25	0	85.63	0	1.76	0	0	12.35	0	0	0	0	0	0	-43.69	-43.69
Inverter Transformer	MV3-15 T	368351	4907477	2	0	0	56.1	56.1	1	5395.18	3.25	0	85.64	0	1.76	0	0	12.36	0	0	0	0	0	0	-43.71	-43.71
Inverter Transformer	MV3-16 T	368509	4907475	2	0	0	56.1	56.1	1	5400.08	3.25	0	85.65	0	1.77	0	0	12.37	0	0	0	0	0	0	-43.73	-43.73
Inverter Transformer	MV3-14 T	368678	4907498	2	0	0	56.1	56.1	1	5435.47	3.25	0	85.7	0	1.78	0	0	12.41	0	0	0	0	0	0	-43.84	-43.84
Inverter Transformer	MV6-3 T	370202	4907140	2	0	0	56.1	56.1	1	5439.98	3.25	0	85.71	0	1.78	0	0	12.42	0	0	0	0	0	0	-43.85	-43.85
Inverter Transformer	MV1-3 T	364435	4906039	2	0	0	56.1	56.1	1	5456.45	3.25	0	85.74	0	1.79	0	0	12.44	0	0	0	0	0	0	-43.91	-43.91
Inverter Transformer	MV3-13 T	367958	4907577	2	0	0	56.1	56.1	1	5497.98	3.25	0	85.8	0	1.8	0	0	12.49	0	0	0	0	0	0	-44.04	-44.04
Inverter Transformer	MV3-12 T	367674	4907594	2	0	0	56.1	56.1	1	5534.4	3.25	0	85.86	0	1.81	0	0	12.54	0	0	0	0	0	0	-44.15	-44.15
Inverter Transformer	MV3-11 T	368340	4907662	2	0	0	56.1	56.1	1	5579.81	3.25	0	85.93	0	1.83	0	0	12.59	0	0	0	0	0	0	-44.3	-44.3
Inverter Transformer	MV3-10 T	368162	4907669	2	0	0	56.1	56.1	1	5584.99	3.25	0	85.94	0	1.83	0	0	12.6	0	0	0	0	0	0	-44.31	-44.31
Inverter Transformer	MV6-2 T	370091	4907339	2	0	0	56.1	56.1	1	5586.75	3.25	0	85.94	0	1.83	0	0	12.6	0	0	0	0	0	0	-44.32	-44.32
Inverter Transformer	MV3-9 T	368517	4907703	2	0	0	56.1	56.1	1	5628.17	3.25	0	86.01	0	1.84	0	0	12.65	0	0	0	0	0	0	-44.45	-44.45
Inverter Transformer	MV3-8 T	368685	4907712	2	0	0	56.1	56.1	1	5649.26	3.25	0	86.04	0	1.85	0	0	12.68	0	0	0	0	0	0	-44.51	-44.51
Inverter Transformer	MV3-7 T	367951	4907754	2	0	0	56.1	56.1	1	5675.11	3.25	0	86.08	0	1.86	0	0	12.71	0	0	0	0	0	0	-44.59	-44.59
Inverter Transformer	MV3-6 T	368156	4907834	2	0	0	56.1	56.1	1	5750.03	3.25	0	86.19	0	1.88	0	0	12.8	0	0	0	0	0	0	-44.82	-44.82
Inverter Transformer	MV3-5 T	368335	4907843	2	0	0	56.1	56.1	1	5760.62	3.25	0	86.21	0	1.89	0	0	12.82	0	0	0	0	0	0	-44.85	-44.85
Inverter Transformer	MV3-3 T	367944	4907927	2	0	0	56.1	56.1	1	5848.26	3.25	0	86.34	0	1.92	0	0	12.92	0	0	0	0	0	0	-45.12	-45.12
Inverter Transformer	MV3-4 T	368507	4907925	2	0	0	56.1	56.1	1	5849.27	3.25	0	86.34	0	1.92	0	0	12.92	0	0	0	0	0	0	-45.12	-45.12
Inverter Transformer	MV3-2 T	368677	4907928	2	0	0	56.1	56.1	1	5863.81	3.25	0	86.36	0	1.92	0	0	12.94	0	0	0	0	0	0	-45.17	-45.17
Inverter Transformer	MV3-1 T	368150	4907976	2	0	0	56.1	56.1	1	5892.07	3.25	0	86.41	0	1.93	0	0	12.97	0	0	0	0	0	0	-45.25	-45.25
Inverter Transformer	MV4-15 T	369170	4908481	2	0	0	56.1	56.1	1	6470.9	3.25	0	87.22	0	2.11	0	0	13.65	0	0	0	0	0	0	-46.92	-46.92
Inverter Transformer	MV4-14 T	369182	4908507	2	0	0	56.1	56.1	1	6498.42	3.25	0	87.26	0	2.12	0	0	13.68	0	0	0	0	0	0	-46.99	-46.99
Inverter Transformer	MV4-13 T	369057	4908605	2	0	0	56.1	56.1	1	6577.73	3.25	0	87.36	0	2.14	0	0	13.77	0	0	0	0	0	0	-47.21	-47.21
Inverter Transformer	MV5-6 T	369987	4908507	2	0	0	56.1	56.1	1	6668.42	3.25	0	87.48	0	2.17	0	0	13.87	0	0	0	0	0	0	-47.46	-47.46
Inverter Transformer	MV4-12 T	369049	4908803	2	0	0	56.1	56.1	1	6773.06	3.25	0	87.62	0	2.2	0	0	13.98	0	0	0	0	0	0	-47.74	-47.74
Inverter Transformer	MV5-5 T	370021	4908690	2	0	0	56.1	56.1	1	6853.84	3.25	0	87.72	0	2.22	0	0	14.07	0	0	0	0	0	0	-47.95	-47.95
Inverter Transformer	MV4-11 T	369269	4908855	2	0	0	56.1	56.1	1	6855.68	3.25	0	87.72	0	2.22	0	0	14.07	0	0	0	0	0	0	-47.96	-47.96
Inverter Transformer	MV4-10 T	369307	4908858	2	0	0	56.1	56.1	1	6864.7	3.25	0	87.73	0	2.22	0	0	14.08	0	0	0	0	0	0	-47.98	-47.98
Inverter Transformer	MV5-4 T	370330	4908707	2	0	0	56.1	56.1	1	6958.77	3.25	0	87.85	0	2.25	0	0	14.19	0	0	0	0	0	0	-48.23	-48.23
Inverter Transformer	MV4-7 T	369040	4909001	2	0	0	56.1	56.1	1	6968.42	3.25	0	87.86	0	2.25	0	0	14.2	0	0	0	0	0	0	-48.25	-48.25

	Inverter Transformer	MV4-8 T	369262	4909001	2	0	0	56.1	56.1	1	6998.84	3.25	0	87.9	0	2.26	0	0	14.23	0	0	0	0	0	0	-48.33	-48.33
	Inverter Transformer	MV4-9 T	369284	4909001	2	0	0	56.1	56.1	1	7002.23	3.25	0	87.9	0	2.26	0	0	14.23	0	0	0	0	0	0	-48.34	-48.34
	Inverter Transformer	MV5-2 T	370011	4908853	2	0	0	56.1	56.1	1	7008.48	3.25	0	87.91	0	2.26	0	0	14.24	0	0	0	0	0	0	-48.35	-48.35
	Inverter Transformer	MV5-3 T	370237	4908851	2	0	0	56.1	56.1	1	7068.52	3.25	0	87.99	0	2.28	0	0	14.3	0	0	0	0	0	0	-48.51	-48.51
	Inverter Transformer	MV4-4 T	369033	4909199	2	0	0	56.1	56.1	1	7164.17	3.25	0	88.1	0	2.3	0	0	14.4	0	0	0	0	0	0	-48.75	-48.75
	Inverter Transformer	MV4-6 T	369249	4909192	2	0	0	56.1	56.1	1	7185.74	3.25	0	88.13	0	2.31	0	0	14.43	0	0	0	0	0	0	-48.81	-48.81
	Inverter Transformer	MV4-5 T	369283	4909199	2	0	0	56.1	56.1	1	7197.73	3.25	0	88.14	0	2.31	0	0	14.44	0	0	0	0	0	0	-48.84	-48.84
	Inverter Transformer	MV5-1 T	370015	4909142	2	0	0	56.1	56.1	1	7288.98	3.25	0	88.25	0	2.34	0	0	14.54	0	0	0	0	0	0	-49.07	-49.07
	Inverter Transformer	MV4-1 T	369017	4909397	2	0	0	56.1	56.1	1	7359.04	3.25	0	88.34	0	2.35	0	0	14.61	0	0	0	0	0	0	-49.24	-49.24
	Inverter Transformer	MV4-3 T	369234	4909397	2	0	0	56.1	56.1	1	7386.45	3.25	0	88.37	0	2.36	0	0	14.64	0	0	0	0	0	0	-49.31	-49.31
	Inverter Transformer	MV4-2 T	369267	4909397	2	0	0	56.1	56.1	1	7391.17	3.25	0	88.37	0	2.36	0	0	14.64	0	0	0	0	0	0	-49.32	-49.32
	Line Reactor	NGR	369421	4908787.5	5	0	0	45.4	45.4	1	6814.73	5.25	0	87.67	0	3.22	1.37	0.12	2.78	0	0	0	0	0	0	-49.69	-49.69
Limit. Valu	0	0																								
Level D/N:	19.6467	19.6467																								

Receiver: Existing Noise Receptor
ID: G-101
X: 365178.2
Y: 4903844
Z: 4.5
Ground: 0

ISO	Description	ID	X	Y	Z	Ground	ReflOrd	LxT	LxN	L/A	Dist.	hm	Freq	Adiv	K0b	Agr	Abar	z	Aatm	Afol	Ahous	Cmet	CmetN	Dc	RL	LtotT	LtotN
	Inverter	MV1-15	365315	4904994	2	0	0	100.3	100.3	1	1158.11	3.25	0	72.28	0	-0.17	0	0	11.4	0	0	0	0	0	0	16.81	16.81
	Inverter	MV1-12	365038	4905386	2	0	0	100.3	100.3	1	1548.36	3.25	0	74.8	0	-0.02	0	0	12.44	0	0	0	0	0	0	13.09	13.09
	Inverter	MV1-11	364655	4905414	2	0	0	100.3	100.3	1	1654.89	3.25	0	75.38	0	0.02	0	0	12.7	0	0	0	0	0	0	12.22	12.22
	Sol_Luce Substation	S_Substation	369426	4908792	3.5	0	0	112.1	112.1	1	6521.24	5.25	0	87.29	0	1.28	2.54	0.27	10.28	0	0	0	0	0	0	10.69	10.69
	Inverter	MV1-14	365163	4905049	2	0	0	97.3	97.3	1	1205.1	3.25	0	72.62	0	-0.15	0	0	11.54	0	0	0	0	0	0	13.3	13.3
	Inverter	MV1-8	364788	4905647	2	0	0	100.3	100.3	1	1844.74	3.25	0	76.32	0	0.08	0	0	13.13	0	0	0	0	0	0	10.78	10.78
	Inverter	MV1-9	364561	4905646	2	0	0	100.3	100.3	1	1904.77	3.25	0	76.6	0	0.1	0	0	13.26	0	0	0	0	0	0	10.35	10.35
	Inverter	MV1-13	364731	4905241	2	0	0	97.3	97.3	1	1466.83	3.25	0	74.33	0	-0.05	0	0	12.24	0	0	0	0	0	0	10.79	10.79
	Inverter	MV1-4	364815	4905918	2	0	0	100.3	100.3	1	2105.56	3.25	0	77.47	0	0.16	0	0	13.68	0	0	0	0	0	0	9	9
	Inverter	MV1-5	364671	4905892	2	0	0	100.3	100.3	1	2109.87	3.25	0	77.49	0	0.16	0	0	13.69	0	0	0	0	0	0	8.98	8.98
	Inverter	MV1-6	364477	4905835	2	0	0	100.3	100.3	1	2110.87	3.25	0	77.49	0	0.16	0	0	13.69	0	0	0	0	0	0	8.97	8.97
	Inverter	MV1-2	364753	4906063	2	0	0	100.3	100.3	1	2259.37	3.25	0	78.08	0	0.2	0	0	13.99	0	0	0	0	0	0	8.04	8.04
	Inverter	MV1-1	364715	4906166	2	0	0	100.3	100.3	1	2367.75	3.25	0	78.49	0	0.23	0	0	14.2	0	0	0	0	0	0	7.4	7.4
	Inverter	MV1-10	365004	4905564	2	0	0	97.3	97.3	1	1728.8	3.25	0	75.75	0	0.05	0	0	12.87	0	0	0	0	0	0	8.64	8.64
	Inverter	MV1-7	364925	4905782	2	0	0	97.3	97.3	1	1954.47	3.25	0	76.82	0	0.12	0	0	13.37	0	0	0	0	0	0	7.01	7.01
	Inverter	MV2-4	365586	4906624	2	0	0	100.3	100.3	1	2809.75	3.25	0	79.97	0	0.32	0	0	15.03	0	0	0	0	0	0	4.98	4.98
	Inverter	MV2-3	365820	4906641	2	0	0	100.3	100.3	1	2869.69	3.25	0	80.16	0	0.34	0	0	15.14	0	0	0	0	0	0	4.68	4.68
	Inverter	MV2-1	365842	4906816	2	0	0	97.3	97.3	1	3045.23	3.25	0	80.67	0	0.37	0	0	15.45	0	0	0	0	0	0	0.82	0.82
	Inverter	MV3-18	367752	4907412	2	0	0	100.3	100.3	1	4399.44	3.25	0	83.87	0	0.58	0	0	17.68	0	0	0	0	0	0	-1.81	-1.81
	Gardiner Substation	G_Sub	366586.3	4903349.9	2.5	0	0	90.8	90.8	1	1492.27	4.25	0	74.48	0	0.84	4.54	0.31	3.47	0	0	0	0	0	0	7.45	7.45
	Inverter	MV3-12	367668	4907594	2	0	0	100.3	100.3	1	4501.29	3.25	0	84.07	0	0.59	0	0	17.83	0	0	0	0	0	0	-2.18	-2.18
	Inverter	MV3-13	367963	4907577	2	0	0	100.3	100.3	1	4657.3	3.25	0	84.36	0	0.61	0	0	18.07	0	0	0	0	0	0	-2.73	-2.73
	Inverter	MV3-17	368178	4907472	2	0	0	100.3	100.3	1	4707.57	3.25	0	84.46	0	0.61	0	0	18.15	0	0	0	0	0	0	-2.9	-2.9
	Inverter	MV3-21	368478	4907206	2	0	0	100.3	100.3	1	4710.81	3.25	0	84.46	0	0.61	0	0	18.15	0	0	0	0	0	0	-2.91	-2.91
	Inverter	MV3-19	368357	4907347	2	0	0	100.3	100.3	1	4730.3	3.25	0	84.5	0	0.62	0	0	18.18	0	0	0	0	0	0	-2.98	-2.98
	Inverter	MV3-7	367945	4907754	2	0	0	100.3	100.3	1	4789.92	3.25	0	84.61	0	0.62	0	0	18.27	0	0	0	0	0	0	-3.19	-3.19
	Inverter	MV3-15	368357	4907477	2	0	0	100.3	100.3	1	4827.37	3.25	0	84.67	0	0.63	0	0	18.32	0	0	0	0	0	0	-3.31	-3.31
	Inverter	MV3-10	368167	4907669	2	0	0	100.3	100.3	1	4854.23	3.25	0	84.72	0	0.63	0	0	18.36	0	0	0	0	0	0	-3.4	-3.4
	Inverter	MV3-3	367939	4907927	2	0	0	100.3	100.3	1	4928.78	3.25	0	84.85	0	0.64	0	0	18.48	0	0	0	0	0	0	-3.65	-3.65
	Inverter	MV3-16	368514	4907475	2	0	0	100.3	100.3	1	4930.69	3.25	0	84.86	0	0.64	0	0	18.48	0	0	0	0	0	0	-3.66	-3.66
	Inverter	MV3-20	368689	4907317	2	0	0	100.3	100.3	1	4938.37	3.25	0	84.87	0	0.64	0	0	18.49	0	0	0	0	0	0	-3.69	-3.69
	Inverter	MV3-11	368346	4907662	2	0	0	100.3	100.3	1	4961.06	3.25	0	84.91	0	0.64	0	0	18.52	0	0	0	0	0	0	-3.76	-3.76
	Inverter	MV3-6	368162	4907834	2	0	0	100.3	100.3	1	4982.29	3.25	0	84.95	0	0.64	0	0	18.55	0	0	0	0	0	0	-3.83	-3.83
	Inverter	MV3-14	368684	4907498	2	0	0	100.3	100.3	1	5063.83	3.25	0	85.09	0	0.65	0	0	18.67	0	0	0	0	0	0	-4.1	-4.1
	Inverter	MV3-9	368512	4907703	2	0	0	100.3	100.3	1	5099.62	3.25	0	85.15	0	0.65	0	0	18.73	0	0	0	0	0	0	-4.22	-4.22
	Inverter	MV3-8	368680	4907712	2	0	0	100.3	100.3	1	5217.67	3.25	0	85.35	0	0.66	0	0	18.9	0	0	0	0	0	0	-4.6	-4.6
	Inverter	MV6-3	370207	4907140	2	0	0	100.3	100.3	1	6012.69	3.25	0	86.58	0	0.71	0	0	20.01	0	0	0	0	0	0	-6.98	-6.98
	Inverter	MV6-2	370085	4907339	2	0	0	100.3	100.3	1	6024.26	3.25	0	86.6	0	0.71	0	0	20.03	0	0	0	0	0	0	-7.02	-7.02
	Inverters	G_Inv1	366526.4	4903225.8	2	0	0	87.7	87.7	1	1483.18	3.25	0	74.42	0	2.52	0	0	2.02	0	0	0	0	0	0	8.7	8.7
	Inverter	MV4-7	369035	4909001	2	0	0	100.3	100.3	1	6439.69	3.25	0	87.18	0	0.71	0	0	20.58	0	0	0	0	0	0	-8.16	-8.16
	Inverter	MV4-11	369264	4908855	2	0	0	100.3	100.3	1	6465.59	3.25	0	87.21	0	0.71	0	0	20.61	0	0	0	0	0	0	-8.23	-8.23
	Inverter	MV4-10	369312	4908858	2	0	0	100.3	100.3	1	6498.35	3.25	0	87.26	0	0.71	0	0	20.66	0	0	0	0	0	0	-8.32	-8.32
	Inverter	MV4-8	369256	4909001	2	0	0	100.3	100.3	1	6574.43	3.25	0	87.36	0	0.72	0	0	20.76	0	0	0	0	0	0	-8.52	-8.52
	Inverter	MV4-4	369027	4909199	2	0	0	100.3	100.3	1	6594.64	3.25	0	87.38	0	0.72	0	0	20.78	0	0	0	0	0	0	-8.57	-8.57
	Inverter	MV4-9	369289	4909001	2	0	0	100.3	100.3	1	6594.95	3.25	0	87.38	0	0.72	0	0	20.78	0	0	0	0	0	0	-8.57	-8.57
	Inverter	MV4-6	369243	4909192	2	0	0	100.3	100.3	1	6717.42	3.25	0	87.54	0	0.71	0	0	20.94	0	0	0	0	0	0	-8.89	-8.89
	Inverter	MV4-1	369011	4909397	2	0	0	100.3	100.3	1	6747.31	3.25	0	87.58	0	0.71	0	0	20.98	0	0	0	0	0	0	-8.96	-8.96
	Inverter	MV4-5	369289	4909199	2	0	0	100.3	100.3	1	6750.9	3.25	0	87.59	0	0.71	0	0	20.98	0	0	0	0	0	0	-8.97	-8.97
	Inverters	G_Inv3	366583.7	4903091.4	2	0	0	87.7	87.7	1	1594.32	3.25	0	75.05	0	2.53	0	0	2.16	0	0	0	0	0	0	7.92	7.92
	Inverter	MV5-5	370015	4908690	2	0	0	100.3	100.3	1	6846.78	3.25	0	87.71	0	0.71	0	0	21.11	0	0	0	0	0	0	-9.22	-9.22
	Inverter	MV4-3	369229	4909397	2	0	0	100.3	100.3	1	6873.48	3.25	0	87.74	0	0.71	0	0	21.14	0	0	0	0	0	0	-9.28	-9.28

Inverter	MV4-2	369272	4909397	2	0	0	100.3	100.3	1	6898.91	3.25	0	87.78	0	0.71	0	0	21.17	0	0	0	0	0	0	-9.35	-9.35
Inverters	G_Inv2	366676.9	4903239.1	2	0	0	87.7	87.7	1	1616.17	3.25	0	75.17	0	2.53	0	0	2.18	0	0	0	0	0	0	7.77	7.77
Inverter	MV5-2	370006	4908853	2	0	0	100.3	100.3	1	6956.85	3.25	0	87.85	0	0.71	0	0	21.24	0	0	0	0	0	0	-9.49	-9.49
Inverter	MV5-4	370324	4908707	2	0	0	100.3	100.3	1	7080.12	3.25	0	88	0	0.71	0	0	21.4	0	0	0	0	0	0	-9.8	-9.8
Inverter	MV5-3	370231	4908851	2	0	0	100.3	100.3	1	7113.43	3.25	0	88.04	0	0.71	0	0	21.44	0	0	0	0	0	0	-9.88	-9.88
Inverter	MV5-1	370020	4909142	2	0	0	100.3	100.3	1	7177.17	3.25	0	88.12	0	0.7	0	0	21.52	0	0	0	0	0	0	-10.03	-10.03
Inverters	G_Inv5	366638.5	4902958.1	2	0	0	87.7	87.7	1	1708.01	3.25	0	75.65	0	2.55	0	0	2.29	0	0	0	0	0	0	7.17	7.17
Inverters	G_Inv4	366732.8	4903105	2	0	0	87.7	87.7	1	1721.31	3.25	0	75.72	0	2.55	0	0	2.31	0	0	0	0	0	0	7.09	7.09
Inverters	G_Inv7	366694.6	4902824.7	2	0	0	87.7	87.7	1	1827.14	3.25	0	76.24	0	2.56	0	0	2.43	0	0	0	0	0	0	6.43	6.43
Inverters	G_Inv6	366788.5	4902972	2	0	0	87.7	87.7	1	1831.24	3.25	0	76.25	0	2.56	0	0	2.44	0	0	0	0	0	0	6.41	6.41
Inverters	G_Inv8	366844.5	4902838.5	2	0	0	87.7	87.7	1	1946.17	3.25	0	76.78	0	2.58	0	0	2.57	0	0	0	0	0	0	5.73	5.73
Inverters	G_Inv9	366750.9	4902691.8	2	0	0	87.7	87.7	1	1949.6	3.25	0	76.8	0	2.58	0	0	2.58	0	0	0	0	0	0	5.71	5.71
Inverter	MV1-3	364440	4906039	2	0	0	89.1	89.1	1	2315.81	3.25	0	78.29	0	0.98	0	0	8.55	0	0	0	0	0	0	1.23	1.23
Inverter	MV6-1	370235	4907364	2	0	0	97.3	97.3	1	6161.3	3.25	0	86.79	0	0.71	0	0	20.21	0	0	0	0	0	0	-10.4	-10.4
Inverters	G_Inv10	366900.7	4902704.8	2	0	0	87.7	87.7	1	2065.14	3.25	0	77.3	0	2.59	0	0	2.71	0	0	0	0	0	0	5.06	5.06
DSTATCOM - 10 MVAR #2	DSAT2	369403	4908757	2.5	0	0	96.6	96.6	1	6479.7	3.5	0	87.23	0	3.81	0	0	4.07	0	0	0	0	0	0	1.53	1.53
DSTATCOM - 10 MVAR #1	DSAT1	369437	4908757	2.5	0	0	96.6	96.6	1	6501.92	3.5	0	87.26	0	3.81	0	0	4.08	0	0	0	0	0	0	1.48	1.48
Inverter	MV2-2	365977	4906654	2	0	0	89.1	89.1	1	2921.33	3.25	0	80.31	0	1.13	0	0	9.5	0	0	0	0	0	0	-1.88	-1.88
SubstationTransformer	W_ST	369711.17	4906112.3	2.5	0	0	92	92	1	5068.81	4.25	0	85.1	0	1.66	2.31	0.26	8.7	0	0	0	0	0	0	-5.79	-5.79
Inverter	MV3-22	368656	4907142	2	0	0	89.1	89.1	1	4792.9	3.25	0	84.61	0	1.59	0	0	12.18	0	0	0	0	0	0	-9.33	-9.33
Westbrook Inverter Enclosur	W_INV2	369374	4906388	2	0	0	89.1	89.1	1	4906.8	3.25	0	84.82	0	1.62	0	0	12.34	0	0	0	0	0	0	-9.71	-9.71
Westbrook Inverter Enclosur	W_INV3	369508	4906164	2	0	0	89.1	89.1	1	4912.19	3.25	0	84.83	0	1.62	0	0	12.35	0	0	0	0	0	0	-9.73	-9.73
Westbrook Inverter Enclosur	W_INV4	369673	4906164	2	0	0	89.1	89.1	1	5058.22	3.25	0	85.08	0	1.65	0	0	12.54	0	0	0	0	0	0	-10.22	-10.22
Inverter	MV3-1	368156	4907976	2	0	0	89.1	89.1	1	5093.2	3.25	0	85.14	0	1.66	0	0	12.59	0	0	0	0	0	0	-10.33	-10.33
Inverter	MV3-5	368340	4907843	2	0	0	89.1	89.1	1	5097.94	3.25	0	85.15	0	1.66	0	0	12.59	0	0	0	0	0	0	-10.35	-10.35
Inverter	MV3-4	368502	4907925	2	0	0	89.1	89.1	1	5263.29	3.25	0	85.43	0	1.7	0	0	12.81	0	0	0	0	0	0	-10.89	-10.89
Westbrook Inverter Enclosur	W_INV7	369780	4906417	2	0	0	89.1	89.1	1	5272.28	3.25	0	85.44	0	1.71	0	0	12.82	0	0	0	0	0	0	-10.91	-10.91
Westbrook Inverter Enclosur	W_INV5	369719	4906574	2	0	0	89.1	89.1	1	5298.28	3.25	0	85.48	0	1.71	0	0	12.86	0	0	0	0	0	0	-11	-11
Inverter	MV3-2	368671	4907928	2	0	0	89.1	89.1	1	5373.89	3.25	0	85.61	0	1.73	0	0	12.96	0	0	0	0	0	0	-11.24	-11.24
Westbrook Inverter Enclosur	W_INV6	369875	4906578	2	0	0	89.1	89.1	1	5434.58	3.25	0	85.7	0	1.75	0	0	13.04	0	0	0	0	0	0	-11.43	-11.43
Fixed Reactor Bank 1	FRB1	369378	4908755	6	0	0	89.8	89.8	1	6461.91	5.25	0	87.21	0	-0.35	0	0	10.22	0	0	0	0	0	0	-7.3	-7.3
Fixed Reactor Bank 2	FRB2	369464	4908755	6	0	0	89.8	89.8	1	6518.13	5.25	0	87.28	0	-0.35	0	0	10.28	0	0	0	0	0	0	-7.44	-7.44
Inverter	MV4-15	369176	4908481	2	0	0	89.1	89.1	1	6122.43	3.25	0	86.74	0	1.92	0	0	13.92	0	0	0	0	0	0	-13.51	-13.51
Inverter	MV4-13	369051	4908605	2	0	0	89.1	89.1	1	6137.24	3.25	0	86.76	0	1.92	0	0	13.93	0	0	0	0	0	0	-13.56	-13.56
Inverter	MV4-14	369176	4908507	2	0	0	89.1	89.1	1	6142.15	3.25	0	86.77	0	1.92	0	0	13.94	0	0	0	0	0	0	-13.57	-13.57
Inverter	MV4-12	369043	4908803	2	0	0	89.1	89.1	1	6287.16	3.25	0	86.97	0	1.96	0	0	14.12	0	0	0	0	0	0	-13.99	-13.99
Inverter	MV5-6	369982	4908507	2	0	0	89.1	89.1	1	6694.78	3.25	0	87.51	0	2.05	0	0	14.62	0	0	0	0	0	0	-15.13	-15.13
Westbrook Inverter Enclosur	W_INV1	369409	4906578	2	0	0	86.1	86.1	1	5037.3	3.25	0	85.04	0	1.65	0	0	12.51	0	0	0	0	0	0	-13.15	-13.15
Inverter	MV6-4	370250	4906966	2	0	0	86.1	86.1	1	5955.67	3.25	0	86.5	0	1.88	0	0	13.71	0	0	0	0	0	0	-16.02	-16.02
Inverter Transformer	MV1-14 T	365157	4905049	2	0	0	69.4	69.4	1	1205.19	3.25	0	72.62	0	1.82	0	0	4.08	0	0	0	0	0	0	-9.18	-9.18
Inverter Transformer	MV1-13 T	364725	4905241	2	0	0	69.4	69.4	1	1468.67	3.25	0	74.34	0	1.96	0	0	4.4	0	0	0	0	0	0	-11.35	-11.35
Inverter Transformer	MV1-10 T	365010	4905564	2	0	0	69.4	69.4	1	1728.21	3.25	0	75.75	0	2.07	0	0	4.69	0	0	0	0	0	0	-13.16	-13.16
Westbrook Inverter Transfor	W_INVTR1	369403	4906578	2	0	0	78.2	78.2	1	5032.27	3.25	0	85.04	0	-3.18	0	0	2.42	0	0	0	0	0	0	-6.03	-6.03
Westbrook Inverter Transfor	W_INVTR2	369368	4906388	2	0	0	77.3	77.3	1	4901.67	3.25	0	84.81	0	-3.16	0	0	2.38	0	0	0	0	0	0	-6.69	-6.69
Inverter Transformer	MV1-7 T	364919	4905782	2	0	0	69.4	69.4	1	1955.26	3.25	0	76.82	0	2.16	0	0	4.92	0	0	0	0	0	0	-14.55	-14.55
Westbrook Inverter Transfor	W_INVTR3	369514	4906164	2	0	0	77.3	77.3	1	4917.48	3.25	0	84.83	0	-3.16	0	0	2.38	0	0	0	0	0	0	-6.72	-6.72
Westbrook Inverter Transfor	W_INVTR4	369679	4906164	2	0	0	77.3	77.3	1	5063.56	3.25	0	85.09	0	-3.19	0	0	2.43	0	0	0	0	0	0	-6.99	-6.99
Westbrook Inverter Transfor	W_INVTR7	369786	4906417	2	0	0	77.3	77.3	1	5277.51	3.25	0	85.45	0	-3.23	0	0	2.51	0	0	0	0	0	0	-7.38	-7.38
Westbrook Inverter Transfor	W_INVTR5	369725	4906574	2	0	0	77.3	77.3	1	5303.42	3.25	0	85.49	0	-3.24	0	0	2.52	0	0	0	0	0	0	-7.43	-7.43
Westbrook Inverter Transfor	W_INVTR6	369881	4906578	2	0	0	77.3	77.3	1	5439.77	3.25	0	85.71	0	-3.26	0	0	2.56	0	0	0	0	0	0	-7.67	-7.67
Inverter Transformer	MV2-1 T	365836	4906816	2	0	0	69.4	69.4	1	3043.93	3.25	0	80.67	0	2.52	0	0	5.92	0	0	0	0	0	0	-19.76	-19.76
Inverter Transformer	MV1-15 T	365309	4904994	2	0	0	56.1	56.1	1	1157.42	3.25	0	72.27	0	0.07	0	0	5.26	0	0	0	0	0	0	-21.54	-21.54
Inverter Transformer	MV6-4 T	370244	4906966	2	0	0	69.4	69.4	1	5950.56	3.25	0	86.49	0	3.18	0	0	7.99	0	0	0	0	0	0	-28.31	-28.31
Inverter Transformer	MV6-1 T	370230	4907364	2	0	0	69.4	69.4	1	6157.2	3.25	0	86.79	0	3.21	0	0	8.11	0	0	0	0	0	0	-28.76	-28.76
Inverter Transformer	MV1-12 T	365044	4905386	2	0	0	56.1	56.1	1	1547.83	3.25	0	74.79	0	0.22	0	0	6.12	0	0	0	0	0	0	-25.07	-25.07
Inverter Transformer	MV1-11 T	364649	4905414	2	0	0	56.1	56.1	1	1656.79	3.25	0	75.39	0	0.26	0	0	6.35	0	0	0	0	0	0	-25.94	-25.94
Inverter Transformer	MV1-8 T	364782	4905647	2	0	0	56.1	56.1	1	1846.02	3.25	0	76.32	0	0.34	0	0	6.74	0	0	0	0	0	0	-27.34	-27.34
Inverter Transformer	MV1-9 T	364555	4905646	2	0	0	56.1	56.1	1	1906.72	3.25	0	76.61	0	0.36	0	0	6.86	0	0	0	0	0	0	-27.77	-27.77
Inverter Transformer	MV1-4 T	364821	4905918	2	0	0	56.1	56.1	1	2104.54	3.25	0	77.46	0	0.45	0	0	7.25	0	0	0	0	0	0	-29.1	-29.1
Inverter Transformer	MV1-5 T	364676	4905892	2	0	0	56.1	56.1	1	2108.68	3.25	0	77.48	0	0.45	0	0	7.26	0	0	0	0	0	0	-29.13	-29.13
Inverter Transformer	MV1-6 T	364482	4905835	2	0	0	56.1	56.1	1	2109.21	3.25	0	77.48	0	0.45	0	0	7.26	0	0	0	0	0	0	-29.13	-29.13
Inverter Transformer	MV1-2 T	364759	4906063	2	0	0	56.1	56.1	1	2258.25	3.25	0	78.08	0	0.51	0	0	7.54	0	0	0	0	0	0	-30.07	-30.07
Inverter Transformer	MV1-3 T	364435	4906039	2	0	0	56.1	56.1	1	2317.41	3.25	0	78.3	0	0.54	0	0	7.65	0	0	0	0	0	0	-30.43	-30.43
Inverter Transformer	MV1-1 T	364721	4906166	2	0	0	56.1	56.1	1	2366.58	3.25	0	78.48	0	0.56	0	0	7.74	0	0	0	0	0	0	-30.73	-30.73
Inverter Transformer	MV2-4 T	365590	4906628	2	0	0	56.1	56.1	1	2814.29	3.25	0	79.99	0	0.75	0	0	8.55	0	0	0	0	0	0	-33.23	-33.23
Inverter Transformer	MV2-3 T	365814	4906641	2	0	0	56.1	56.1	1	2868.35	3.25	0	80.15	0	0.77	0	0	8.64	0	0	0	0	0	0	-33.51	-33.51
Inverter Transformer	MV2-2 T	365982	4906654	2	0	0	56.1	56.1	1	2922.7	3.25	0	80.32	0	0.8	0	0	8.74	0	0	0	0	0	0	-33.79	-33.79
Inverter Transformer	MV3-18 T	367757	4907412	2	0	0	56.1	56.1	1	4402.37	3.25	0	83.87	0	1.4	0	0	11.04	0	0	0	0	0	0	-40.26	-40.26
Inverter Transformer	MV3-12 T	367674	4907594	2	0	0	56.1	56.1	1	4504.61	3.25	0	84.07	0	1.44	0	0	11.18	0	0	0	0	0	0	-40.64	-40.64
Inverter Transformer	MV3-13 T	367958	4907577	2	0	0	56.1	56.1	1	4654.31	3.25	0	84.36	0	1.5	0	0	11.39	0	0	0	0	0	0	-41.19	-41.19
Inverter Transformer	MV3-17 T	368183	4907472	2	0	0	56.1	56.1	1	4710.76	3.25	0	84.46	0	1.52	0	0	11.47	0	0	0	0	0	0	-41.39	-41.39
Inverter Transformer	MV3-21 T	368484	4907206	2	0	0	56.1	56.1	1	4715.01	3.25	0	84.47	0	1.52	0	0	11.47	0	0	0	0	0	0	-41.4	-41.4
Inverter Transformer	MV3-19 T	368352	4907347	2	0	0	56.1	56.1	1	4726.95	3.25	0	84.49	0	1.53	0	0	11.49	0	0	0	0	0	0	-41.45	-41.45
Inverter Transformer	MV3-7 T	367951	4907754	2	0	0	56.1	56.1	1	4793.38	3.25	0	84.61	0	1.55	0	0	11.58	0	0	0	0	0	0	-41.68	-41.68

	Inverter Transformer	MV3-22 T	368661	4907142	2	0	0	56.1	56.1	1	4796.53	3.25	0	84.62	0	1.55	0	0	11.58	0	0	0	0	0	0	-41.69	-41.69
	Inverter Transformer	MV3-15 T	368351	4907477	2	0	0	56.1	56.1	1	4823.42	3.25	0	84.67	0	1.56	0	0	11.62	0	0	0	0	0	0	-41.79	-41.79
	Inverter Transformer	MV3-10 T	368162	4907669	2	0	0	56.1	56.1	1	4851.15	3.25	0	84.72	0	1.57	0	0	11.66	0	0	0	0	0	0	-41.89	-41.89
	Inverter Transformer	MV3-16 T	368509	4907475	2	0	0	56.1	56.1	1	4927.31	3.25	0	84.85	0	1.6	0	0	11.76	0	0	0	0	0	0	-42.15	-42.15
	Inverter Transformer	MV3-3 T	367944	4907927	2	0	0	56.1	56.1	1	4931.59	3.25	0	84.86	0	1.6	0	0	11.76	0	0	0	0	0	0	-42.17	-42.17
	Inverter Transformer	MV3-20 T	368683	4907317	2	0	0	56.1	56.1	1	4934.1	3.25	0	84.86	0	1.6	0	0	11.77	0	0	0	0	0	0	-42.17	-42.17
	Inverter Transformer	MV3-11 T	368340	4907662	2	0	0	56.1	56.1	1	4957.23	3.25	0	84.9	0	1.61	0	0	11.8	0	0	0	0	0	0	-42.25	-42.25
	Inverter Transformer	MV3-6 T	368156	4907834	2	0	0	56.1	56.1	1	4978.69	3.25	0	84.94	0	1.62	0	0	11.83	0	0	0	0	0	0	-42.33	-42.33
	Inverter Transformer	MV3-14 T	368678	4907498	2	0	0	56.1	56.1	1	5059.68	3.25	0	85.08	0	1.65	0	0	11.93	0	0	0	0	0	0	-42.6	-42.6
	Inverter Transformer	MV3-1 T	368150	4907976	2	0	0	56.1	56.1	1	5089.7	3.25	0	85.13	0	1.66	0	0	11.97	0	0	0	0	0	0	-42.7	-42.7
	Inverter Transformer	MV3-5 T	368335	4907843	2	0	0	56.1	56.1	1	5094.84	3.25	0	85.14	0	1.66	0	0	11.98	0	0	0	0	0	0	-42.72	-42.72
	Inverter Transformer	MV3-9 T	368517	4907703	2	0	0	56.1	56.1	1	5102.89	3.25	0	85.16	0	1.66	0	0	11.99	0	0	0	0	0	0	-42.75	-42.75
	Inverter Transformer	MV3-8 T	368685	4907712	2	0	0	56.1	56.1	1	5221.02	3.25	0	85.36	0	1.7	0	0	12.14	0	0	0	0	0	0	-43.14	-43.14
	Inverter Transformer	MV3-4 T	368507	4907925	2	0	0	56.1	56.1	1	5266.45	3.25	0	85.43	0	1.72	0	0	12.2	0	0	0	0	0	0	-43.29	-43.29
	Inverter Transformer	MV3-2 T	368677	4907928	2	0	0	56.1	56.1	1	5377.79	3.25	0	85.61	0	1.76	0	0	12.34	0	0	0	0	0	0	-43.65	-43.65
	Inverter Transformer	MV6-3 T	370202	4907140	2	0	0	56.1	56.1	1	6008.51	3.25	0	86.58	0	1.97	0	0	13.11	0	0	0	0	0	0	-45.6	-45.6
	Inverter Transformer	MV6-2 T	370091	4907339	2	0	0	56.1	56.1	1	6029.15	3.25	0	86.61	0	1.97	0	0	13.14	0	0	0	0	0	0	-45.66	-45.66
	Inverter Transformer	MV4-15 T	369170	4908481	2	0	0	56.1	56.1	1	6118.52	3.25	0	86.73	0	2	0	0	13.24	0	0	0	0	0	0	-45.92	-45.92
	Inverter Transformer	MV4-13 T	369057	4908605	2	0	0	56.1	56.1	1	6141.03	3.25	0	86.76	0	2.01	0	0	13.27	0	0	0	0	0	0	-45.98	-45.98
	Inverter Transformer	MV4-14 T	369182	4908507	2	0	0	56.1	56.1	1	6146.05	3.25	0	86.77	0	2.01	0	0	13.27	0	0	0	0	0	0	-46	-46
	Inverter Transformer	MV4-12 T	369049	4908803	2	0	0	56.1	56.1	1	6290.85	3.25	0	86.97	0	2.06	0	0	13.44	0	0	0	0	0	0	-46.41	-46.41
	Inverter Transformer	MV4-7 T	369040	4909001	2	0	0	56.1	56.1	1	6442.68	3.25	0	87.18	0	2.1	0	0	13.62	0	0	0	0	0	0	-46.84	-46.84
	Inverter Transformer	MV4-11 T	369269	4908855	2	0	0	56.1	56.1	1	6468.75	3.25	0	87.22	0	2.11	0	0	13.64	0	0	0	0	0	0	-46.91	-46.91
	Inverter Transformer	MV4-10 T	369307	4908858	2	0	0	56.1	56.1	1	6495.17	3.25	0	87.25	0	2.12	0	0	13.67	0	0	0	0	0	0	-46.98	-46.98
	Inverter Transformer	MV4-8 T	369262	4909001	2	0	0	56.1	56.1	1	6578.15	3.25	0	87.36	0	2.14	0	0	13.77	0	0	0	0	0	0	-47.21	-47.21
	Inverter Transformer	MV4-9 T	369284	4909001	2	0	0	56.1	56.1	1	6591.83	3.25	0	87.38	0	2.14	0	0	13.78	0	0	0	0	0	0	-47.25	-47.25
	Inverter Transformer	MV4-4 T	369033	4909199	2	0	0	56.1	56.1	1	6598.14	3.25	0	87.39	0	2.15	0	0	13.79	0	0	0	0	0	0	-47.27	-47.27
	Inverter Transformer	MV5-6 T	369987	4908507	2	0	0	56.1	56.1	1	6698.37	3.25	0	87.52	0	2.18	0	0	13.9	0	0	0	0	0	0	-47.54	-47.54
	Inverter Transformer	MV4-6 T	369249	4909192	2	0	0	56.1	56.1	1	6721.05	3.25	0	87.55	0	2.18	0	0	13.93	0	0	0	0	0	0	-47.6	-47.6
	Inverter Transformer	MV4-5 T	369283	4909199	2	0	0	56.1	56.1	1	6747.25	3.25	0	87.58	0	2.19	0	0	13.96	0	0	0	0	0	0	-47.67	-47.67
	Inverter Transformer	MV4-1 T	369017	4909397	2	0	0	56.1	56.1	1	6750.72	3.25	0	87.59	0	2.19	0	0	13.96	0	0	0	0	0	0	-47.68	-47.68
	Inverter Transformer	MV5-5 T	370021	4908690	2	0	0	56.1	56.1	1	6851.02	3.25	0	87.72	0	2.22	0	0	14.07	0	0	0	0	0	0	-47.94	-47.94
	Inverter Transformer	MV4-3 T	369234	4909397	2	0	0	56.1	56.1	1	6876.43	3.25	0	87.75	0	2.23	0	0	14.1	0	0	0	0	0	0	-48.01	-48.01
	Inverter Transformer	MV4-2 T	369267	4909397	2	0	0	56.1	56.1	1	6895.95	3.25	0	87.77	0	2.23	0	0	14.12	0	0	0	0	0	0	-48.06	-48.06
	Inverter Transformer	MV5-2 T	370011	4908853	2	0	0	56.1	56.1	1	6960.32	3.25	0	87.85	0	2.25	0	0	14.19	0	0	0	0	0	0	-48.23	-48.23
	Inverter Transformer	MV5-4 T	370330	4908707	2	0	0	56.1	56.1	1	7084.48	3.25	0	88.01	0	2.28	0	0	14.32	0	0	0	0	0	0	-48.55	-48.55
	Inverter Transformer	MV5-3 T	370237	4908851	2	0	0	56.1	56.1	1	7117.69	3.25	0	88.05	0	2.29	0	0	14.36	0	0	0	0	0	0	-48.63	-48.63
	Inverter Transformer	MV5-1 T	370015	4909142	2	0	0	56.1	56.1	1	7173.8	3.25	0	88.11	0	2.31	0	0	14.41	0	0	0	0	0	0	-48.78	-48.78
	Line Reactor	NGR	369421	4908787.5	5	0	0	45.4	45.4	1	6514.56	5.25	0	87.28	0	3.23	1.37	0.09	2.66	0	0	0	0	0	0	-49.18	-49.18
Limit. Valu	0	0																								
Level D/N:	24.5018	24.5018																								

Receiver: Existing Noise Receptor
ID: G-102
X: 365123.2
Y: 4903732
Z: 4.5
Ground: 0

ISO	Description	ID	X	Y	Z	Ground	ReflOrd	LxT	LxN	L/A	Dist.	hm	Freq	Adiv	K0b	Agr	Abar	z	Aatm	Afol	Ahous	Cmet	CmetN	Dc	RL	LtotT	LtotN
	Inverter	MV1-15	365315	4904994	2	0	0	100.3	100.3	1	1276.49	3.25	0	73.12	0	-0.12	0	0	11.74	0	0	0	0	0	0	15.57	15.57
	Inverter	MV1-12	365038	4905386	2	0	0	100.3	100.3	1	1656.19	3.25	0	75.38	0	0.02	0	0	12.7	0	0	0	0	0	0	12.21	12.21
	Sol_Luce Substation	S_Substation	369426	4908792	3.5	0	0	112.1	112.1	1	6642.11	5.25	0	87.45	0	1.31	2.51	0.27	10.4	0	0	0	0	0	0	10.41	10.41
	Inverter	MV1-11	364655	4905414	2	0	0	100.3	100.3	1	1745.95	3.25	0	75.84	0	0.05	0	0	12.91	0	0	0	0	0	0	11.51	11.51
	Inverter	MV1-14	365163	4905049	2	0	0	97.3	97.3	1	1317.6	3.25	0	73.4	0	-0.1	0	0	11.85	0	0	0	0	0	0	12.17	12.17
	Inverter	MV1-8	364788	4905647	2	0	0	100.3	100.3	1	1944.12	3.25	0	76.77	0	0.11	0	0	13.34	0	0	0	0	0	0	10.08	10.08
	Inverter	MV1-9	364561	4905646	2	0	0	100.3	100.3	1	1994.86	3.25	0	77	0	0.13	0	0	13.45	0	0	0	0	0	0	9.73	9.73
	Inverter	MV1-6	364477	4905835	2	0	0	100.3	100.3	1	2200.04	3.25	0	77.85	0	0.18	0	0	13.87	0	0	0	0	0	0	8.41	8.41
	Inverter	MV1-13	364731	4905241	2	0	0	97.3	97.3	1	1559.14	3.25	0	74.86	0	-0.01	0	0	12.47	0	0	0	0	0	0	10	10
	Inverter	MV1-5	364671	4905892	2	0	0	100.3	100.3	1	2206.83	3.25	0	77.88	0	0.19	0	0	13.89	0	0	0	0	0	0	8.36	8.36
	Inverter	MV1-4	364815	4905918	2	0	0	100.3	100.3	1	2207.62	3.25	0	77.88	0	0.19	0	0	13.89	0	0	0	0	0	0	8.36	8.36
	Inverter	MV1-2	364753	4906063	2	0	0	100.3	100.3	1	2360.22	3.25	0	78.46	0	0.22	0	0	14.19	0	0	0	0	0	0	7.44	7.44
	Inverter	MV1-1	364715	4906166	2	0	0	100.3	100.3	1	2467.99	3.25	0	78.85	0	0.25	0	0	14.4	0	0	0	0	0	0	6.82	6.82
	Inverter	MV1-10	365004	4905564	2	0	0	97.3	97.3	1	1835.88	3.25	0	76.28	0	0.08	0	0	13.11	0	0	0	0	0	0	7.85	7.85
	Inverter	MV1-7	364925	4905782	2	0	0	97.3	97.3	1	2059.56	3.25	0	77.28	0	0.15	0	0	13.59	0	0	0	0	0	0	6.3	6.3
	Inverter	MV2-4	365586	4906624	2	0	0	100.3	100.3	1	2928.8	3.25	0	80.33	0	0.35	0	0	15.25	0	0	0	0	0	0	4.38	4.38
	Inverter	MV2-3	365820	4906641	2	0	0	100.3	100.3	1	2991.29	3.25	0	80.52	0	0.36	0	0	15.36	0	0	0	0	0	0	4.08	4.08
	Inverter	MV2-1	365842	4906816	2	0	0	97.3	97.3	1	3166.66	3.25	0	81.01	0	0.39	0	0	15.66	0	0	0	0	0	0	0.24	0.24
	Inverter	MV3-18	367752	4907412	2	0	0	100.3	100.3	1	4522.5	3.25	0	84.11	0	0.59	0	0	17.86	0	0	0	0	0	0	-2.25	-2.25
	Gardiner Substation	G_Sub	366586.3	4903349.9	2.5	0	0	90.8	90.8	1	1512.17	4.25	0	74.59	0	0.84	4.51	0.31	3.51	0	0	0	0	0	0	7.33	7.33
	Inverter	MV3-12	367668	4907594	2	0	0	100.3	100.3	1	4625.05	3.25	0	84.3	0	0.6	0	0	18.02	0	0	0	0	0	0	-2.62	-2.62
	Inverter	MV3-13	367963	4907577	2	0	0	100.3	100.3	1	4780.01	3.25	0	84.59	0	0.62	0	0	18.25	0	0	0	0	0	0	-3.15	-3.15
	Inverter	MV3-17	368178	4907472	2	0	0	100.3	100.3	1	4829.02	3.25	0	84.68	0	0.63	0	0	18.33	0	0	0	0	0	0	-3.32	-3.32
	Inverter	MV3-21	368478	4907206	2	0	0	100.3	100.3	1	4829.43	3.25	0	84.68	0	0.63	0	0	18.33	0	0	0	0	0	0	-3.32	-3.32

Inverter	MV3-19	368357	4907347	2	0	0	100.3	100.3	1	4850.33	3.25	0	84.72	0	0.63	0	0	18.36	0	0	0	0	0	0	-3.39	-3.39
Inverter	MV3-7	367945	4907754	2	0	0	100.3	100.3	1	4913.15	3.25	0	84.83	0	0.63	0	0	18.45	0	0	0	0	0	0	-3.6	-3.6
Inverter	MV3-15	368357	4907477	2	0	0	100.3	100.3	1	4947.98	3.25	0	84.89	0	0.64	0	0	18.5	0	0	0	0	0	0	-3.72	-3.72
Inverter	MV3-10	368167	4907669	2	0	0	100.3	100.3	1	4976.41	3.25	0	84.94	0	0.64	0	0	18.55	0	0	0	0	0	0	-3.81	-3.81
Inverter	MV3-16	368514	4907475	2	0	0	100.3	100.3	1	5050.5	3.25	0	85.07	0	0.65	0	0	18.65	0	0	0	0	0	0	-4.06	-4.06
Inverter	MV3-3	367939	4907927	2	0	0	100.3	100.3	1	5052.4	3.25	0	85.07	0	0.65	0	0	18.66	0	0	0	0	0	0	-4.06	-4.06
Inverter	MV3-20	368689	4907317	2	0	0	100.3	100.3	1	5056.4	3.25	0	85.08	0	0.65	0	0	18.66	0	0	0	0	0	0	-4.07	-4.07
Inverter	MV3-11	368346	4907662	2	0	0	100.3	100.3	1	5082.45	3.25	0	85.12	0	0.65	0	0	18.7	0	0	0	0	0	0	-4.16	-4.16
Inverter	MV3-6	368162	4907834	2	0	0	100.3	100.3	1	5104.97	3.25	0	85.16	0	0.65	0	0	18.73	0	0	0	0	0	0	-4.23	-4.23
Inverter	MV3-14	368684	4907498	2	0	0	100.3	100.3	1	5182.86	3.25	0	85.29	0	0.66	0	0	18.85	0	0	0	0	0	0	-4.48	-4.48
Inverter	MV3-9	368512	4907703	2	0	0	100.3	100.3	1	5220.42	3.25	0	85.35	0	0.66	0	0	18.9	0	0	0	0	0	0	-4.6	-4.6
Inverter	MV3-8	368680	4907712	2	0	0	100.3	100.3	1	5337.72	3.25	0	85.55	0	0.67	0	0	19.07	0	0	0	0	0	0	-4.97	-4.97
Inverter	MV6-3	370207	4907140	2	0	0	100.3	100.3	1	6120.42	3.25	0	86.74	0	0.71	0	0	20.16	0	0	0	0	0	0	-7.29	-7.29
Inverter	MV6-2	370085	4907339	2	0	0	100.3	100.3	1	6134.32	3.25	0	86.76	0	0.71	0	0	20.17	0	0	0	0	0	0	-7.33	-7.33
Inverters	G_Inv1	366526.4	4903225.8	2	0	0	87.7	87.7	1	1491.72	3.25	0	74.47	0	2.52	0	0	2.03	0	0	0	0	0	0	8.63	8.63
Inverter	MV4-7	369035	4909001	2	0	0	100.3	100.3	1	6562.36	3.25	0	87.34	0	0.72	0	0	20.74	0	0	0	0	0	0	-8.48	-8.48
Inverter	MV4-11	369264	4908855	2	0	0	100.3	100.3	1	6587.21	3.25	0	87.37	0	0.72	0	0	20.77	0	0	0	0	0	0	-8.55	-8.55
Inverter	MV4-10	369312	4908858	2	0	0	100.3	100.3	1	6619.81	3.25	0	87.42	0	0.71	0	0	20.81	0	0	0	0	0	0	-8.63	-8.63
Inverter	MV4-8	369256	4909001	2	0	0	100.3	100.3	1	6696.45	3.25	0	87.52	0	0.71	0	0	20.91	0	0	0	0	0	0	-8.83	-8.83
Inverter	MV4-9	369289	4909001	2	0	0	100.3	100.3	1	6716.86	3.25	0	87.54	0	0.71	0	0	20.94	0	0	0	0	0	0	-8.89	-8.89
Inverter	MV4-4	369027	4909199	2	0	0	100.3	100.3	1	6717.72	3.25	0	87.54	0	0.71	0	0	20.94	0	0	0	0	0	0	-8.89	-8.89
Inverter	MV4-6	369243	4909192	2	0	0	100.3	100.3	1	6839.91	3.25	0	87.7	0	0.71	0	0	21.1	0	0	0	0	0	0	-9.2	-9.2
Inverters	G_Inv3	366583.7	4903091.4	2	0	0	87.7	87.7	1	1594.81	3.25	0	75.05	0	2.53	0	0	2.16	0	0	0	0	0	0	7.92	7.92
Inverter	MV4-1	369011	4909397	2	0	0	100.3	100.3	1	6870.75	3.25	0	87.74	0	0.71	0	0	21.14	0	0	0	0	0	0	-9.28	-9.28
Inverter	MV4-5	369289	4909199	2	0	0	100.3	100.3	1	6873.28	3.25	0	87.74	0	0.71	0	0	21.14	0	0	0	0	0	0	-9.28	-9.28
Inverter	MV5-5	370015	4908690	2	0	0	100.3	100.3	1	6965.02	3.25	0	87.86	0	0.71	0	0	21.26	0	0	0	0	0	0	-9.51	-9.51
Inverters	G_Inv2	366676.9	4903239.1	2	0	0	87.7	87.7	1	1630.01	3.25	0	75.24	0	2.54	0	0	2.2	0	0	0	0	0	0	7.68	7.68
Inverter	MV4-3	369229	4909397	2	0	0	100.3	100.3	1	6996.42	3.25	0	87.9	0	0.71	0	0	21.29	0	0	0	0	0	0	-9.59	-9.59
Inverter	MV4-2	369272	4909397	2	0	0	100.3	100.3	1	7021.74	3.25	0	87.93	0	0.71	0	0	21.33	0	0	0	0	0	0	-9.65	-9.65
Inverter	MV5-2	370006	4908853	2	0	0	100.3	100.3	1	7075.76	3.25	0	88	0	0.71	0	0	21.39	0	0	0	0	0	0	-9.79	-9.79
Inverter	MV5-4	370324	4908707	2	0	0	100.3	100.3	1	7197.15	3.25	0	88.14	0	0.7	0	0	21.54	0	0	0	0	0	0	-10.08	-10.08
Inverter	MV5-3	370231	4908851	2	0	0	100.3	100.3	1	7231.44	3.25	0	88.18	0	0.7	0	0	21.59	0	0	0	0	0	0	-10.16	-10.16
Inverter	MV5-1	370020	4909142	2	0	0	100.3	100.3	1	7297.04	3.25	0	88.26	0	0.7	0	0	21.67	0	0	0	0	0	0	-10.32	-10.32
Inverters	G_Inv5	366638.5	4902958.1	2	0	0	87.7	87.7	1	1701.49	3.25	0	75.62	0	2.55	0	0	2.28	0	0	0	0	0	0	7.21	7.21
Inverters	G_Inv4	366732.8	4903105	2	0	0	87.7	87.7	1	1727.41	3.25	0	75.75	0	2.55	0	0	2.32	0	0	0	0	0	0	7.05	7.05
Inverters	G_Inv7	366694.6	4902824.7	2	0	0	87.7	87.7	1	1814.52	3.25	0	76.18	0	2.56	0	0	2.42	0	0	0	0	0	0	6.51	6.51
Inverters	G_Inv6	366788.5	4902972	2	0	0	87.7	87.7	1	1830.53	3.25	0	76.25	0	2.56	0	0	2.44	0	0	0	0	0	0	6.41	6.41
Inverters	G_Inv9	366750.9	4902691.8	2	0	0	87.7	87.7	1	1931.69	3.25	0	76.72	0	2.57	0	0	2.56	0	0	0	0	0	0	5.81	5.81
Inverters	G_Inv8	366844.5	4902838.5	2	0	0	87.7	87.7	1	1939.39	3.25	0	76.75	0	2.58	0	0	2.56	0	0	0	0	0	0	5.77	5.77
Inverter	MV1-3	364440	4906039	2	0	0	89.1	89.1	1	2406.04	3.25	0	78.63	0	1	0	0	8.7	0	0	0	0	0	0	0.73	0.73
Inverters	G_Inv10	366900.7	4902704.8	2	0	0	87.7	87.7	1	2052.96	3.25	0	77.25	0	2.59	0	0	2.7	0	0	0	0	0	0	5.13	5.13
Inverter	MV6-1	370235	4907364	2	0	0	97.3	97.3	1	6270.72	3.25	0	86.95	0	0.71	0	0	20.36	0	0	0	0	0	0	-10.7	-10.7
DSTATCOM - 10 MVAR #2	DSAT2	369403	4908757	2.5	0	0	96.6	96.6	1	6600.55	3.5	0	87.39	0	3.81	0	0	4.12	0	0	0	0	0	0	1.3	1.3
DSTATCOM - 10 MVAR #1	DSAT1	369437	4908757	2.5	0	0	96.6	96.6	1	6622.65	3.5	0	87.42	0	3.82	0	0	4.13	0	0	0	0	0	0	1.26	1.26
Inverter	MV2-2	365977	4906654	2	0	0	89.1	89.1	1	3044.19	3.25	0	80.67	0	1.16	0	0	9.68	0	0	0	0	0	0	-2.45	-2.45
SubstationTransformer	W_ST	369711.17	4906112.3	2.5	0	0	92	92	1	5168.67	4.25	0	85.27	0	1.68	2.29	0.26	8.82	0	0	0	0	0	0	-6.08	-6.08
Inverter	MV3-22	368656	4907142	2	0	0	89.1	89.1	1	4910.07	3.25	0	84.82	0	1.62	0	0	12.34	0	0	0	0	0	0	-9.72	-9.72
Westbrook Inverter Enclosur	W_INV2	369374	4906388	2	0	0	89.1	89.1	1	5012.35	3.25	0	85	0	1.64	0	0	12.48	0	0	0	0	0	0	-10.07	-10.07
Westbrook Inverter Enclosur	W_INV3	369508	4906164	2	0	0	89.1	89.1	1	5014.09	3.25	0	85	0	1.64	0	0	12.48	0	0	0	0	0	0	-10.07	-10.07
Westbrook Inverter Enclosur	W_INV4	369673	4906164	2	0	0	89.1	89.1	1	5159	3.25	0	85.25	0	1.68	0	0	12.68	0	0	0	0	0	0	-10.55	-10.55
Inverter	MV3-1	368156	4907976	2	0	0	89.1	89.1	1	5216.26	3.25	0	85.35	0	1.69	0	0	12.75	0	0	0	0	0	0	-10.73	-10.73
Inverter	MV3-5	368340	4907843	2	0	0	89.1	89.1	1	5219.97	3.25	0	85.35	0	1.69	0	0	12.76	0	0	0	0	0	0	-10.75	-10.75
Westbrook Inverter Enclosur	W_INV7	369780	4906417	2	0	0	89.1	89.1	1	5375.41	3.25	0	85.61	0	1.73	0	0	12.96	0	0	0	0	0	0	-11.24	-11.24
Inverter	MV3-4	368502	4907925	2	0	0	89.1	89.1	1	5384.94	3.25	0	85.62	0	1.73	0	0	12.97	0	0	0	0	0	0	-11.27	-11.27
Westbrook Inverter Enclosur	W_INV5	369719	4906574	2	0	0	89.1	89.1	1	5403.55	3.25	0	85.65	0	1.74	0	0	13	0	0	0	0	0	0	-11.33	-11.33
Inverter	MV3-2	368671	4907928	2	0	0	89.1	89.1	1	5494.84	3.25	0	85.8	0	1.76	0	0	13.12	0	0	0	0	0	0	-11.62	-11.62
Westbrook Inverter Enclosur	W_INV6	369875	4906578	2	0	0	89.1	89.1	1	5538.89	3.25	0	85.87	0	1.77	0	0	13.17	0	0	0	0	0	0	-11.76	-11.76
Fixed Reactor Bank 1	FRB1	369378	4908755	6	0	0	89.8	89.8	1	6582.85	5.25	0	87.37	0	-0.34	0	0	10.34	0	0	0	0	0	0	-7.6	-7.6
Fixed Reactor Bank 2	FRB2	369464	4908755	6	0	0	89.8	89.8	1	6638.76	5.25	0	87.44	0	-0.33	0	0	10.4	0	0	0	0	0	0	-7.73	-7.73
Inverter	MV4-15	369176	4908481	2	0	0	89.1	89.1	1	6243.25	3.25	0	86.91	0	1.95	0	0	14.07	0	0	0	0	0	0	-13.86	-13.86
Inverter	MV4-13	369051	4908605	2	0	0	89.1	89.1	1	6258.89	3.25	0	86.93	0	1.95	0	0	14.09	0	0	0	0	0	0	-13.91	-13.91
Inverter	MV4-14	369176	4908507	2	0	0	89.1	89.1	1	6263.05	3.25	0	86.94	0	1.95	0	0	14.09	0	0	0	0	0	0	-13.92	-13.92
Inverter	MV4-12	369043	4908803	2	0	0	89.1	89.1	1	6409.36	3.25	0	87.14	0	1.99	0	0	14.27	0	0	0	0	0	0	-14.34	-14.34
Inverter	MV5-6	369982	4908507	2	0	0	89.1	89.1	1	6812.38	3.25	0	87.67	0	2.08	0	0	14.76	0	0	0	0	0	0	-15.45	-15.45
Westbrook Inverter Enclosur	W_INV1	369409	4906578	2	0	0	86.1	86.1	1	5144.69	3.25	0	85.23	0	1.68	0	0	12.66	0	0	0	0	0	0	-13.5	-13.5
Inverter	MV6-4	370250	4906966	2	0	0	86.1	86.1	1	6061.59	3.25	0	86.65	0	1.9	0	0	13.84	0	0	0	0	0	0	-16.33	-16.33
Inverter Transformer	MV1-14 T	365157	4905049	2	0	0	69.4	69.4	1	1317.44	3.25	0	73.39	0	1.89	0	0	4.22	0	0	0	0	0	0	-10.15	-10.15
Inverter Transformer	MV1-13 T	364725	4905241	2	0	0	69.4	69.4	1	1560.66	3.25	0	74.87	0	2	0	0	4.5	0	0	0	0	0	0	-12.02	-12.02
Inverter Transformer	MV1-10 T	365010	4905564	2	0	0	69.4	69.4	1	1835.5	3.25	0	76.28	0	2.11	0	0	4.8	0	0	0	0	0	0	-13.83	-13.83
Westbrook Inverter Transfor	W_INVTR1	369403	4906578	2	0	0	78.2	78.2	1	5139.69	3.25	0	85.22	0	-3.21	0	0	2.46	0	0	0	0	0	0	-6.23	-6.23
Westbrook Inverter Transfor	W_INVTR2	369368	4906388	2	0	0	77.3	77.3	1	5007.26	3.25	0	84.99	0	-3.18	0	0	2.42	0	0	0	0	0	0	-6.89	-6.89
Westbrook Inverter Transfor	W_INVTR3	369514	4906164	2	0	0	77.3	77.3	1	5019.34	3.25	0	85.01	0	-3.18	0	0	2.42	0	0	0	0	0	0	-6.91	-6.91
Westbrook Inverter Transfor	W_INVTR4	369679	4906164	2	0	0	77.3	77.3	1	5164.3	3.25	0	85.26	0	-3.21	0	0	2.47	0	0	0	0	0	0	-7.18	-7.18
Inverter Transformer	MV1-7 T	364919	4905782	2	0	0	69.4	69.4	1	2060.15	3.25	0	77.28	0	2.2	0	0	5.03	0	0	0	0	0	0	-15.15	-15.15

Westbrook Inverter Transfor	W_INVTR7	369786	4906417	2	0	0	77.3	77.3	1	5380.61	3.25	0	85.62	0	-3.25	0	0	2.54	0	0	0	0	0	0	-7.56	-7.56
Westbrook Inverter Transfor	W_INVTR5	369725	4906574	2	0	0	77.3	77.3	1	5408.65	3.25	0	85.66	0	-3.26	0	0	2.55	0	0	0	0	0	0	-7.61	-7.61
Westbrook Inverter Transfor	W_INVTR6	369881	4906578	2	0	0	77.3	77.3	1	5544.04	3.25	0	85.88	0	-3.28	0	0	2.59	0	0	0	0	0	0	-7.85	-7.85
Inverter Transformer	MV2-1 T	365836	4906816	2	0	0	69.4	69.4	1	3165.3	3.25	0	81.01	0	2.56	0	0	6.02	0	0	0	0	0	0	-20.24	-20.24
Inverter Transformer	MV1-15 T	365309	4904994	2	0	0	56.1	56.1	1	1275.61	3.25	0	73.11	0	0.11	0	0	5.53	0	0	0	0	0	0	-22.69	-22.69
Inverter Transformer	MV6-4 T	370244	4906966	2	0	0	69.4	69.4	1	6056.51	3.25	0	86.64	0	3.2	0	0	8.05	0	0	0	0	0	0	-28.54	-28.54
Inverter Transformer	MV6-1 T	370230	4907364	2	0	0	69.4	69.4	1	6266.64	3.25	0	86.94	0	3.23	0	0	8.18	0	0	0	0	0	0	-29	-29
Inverter Transformer	MV1-12 T	365044	4905386	2	0	0	56.1	56.1	1	1655.9	3.25	0	75.38	0	0.26	0	0	6.35	0	0	0	0	0	0	-25.93	-25.93
Inverter Transformer	MV1-11 T	364649	4905414	2	0	0	56.1	56.1	1	1747.57	3.25	0	75.85	0	0.3	0	0	6.54	0	0	0	0	0	0	-26.63	-26.63
Inverter Transformer	MV1-8 T	364782	4905647	2	0	0	56.1	56.1	1	1945.16	3.25	0	76.78	0	0.38	0	0	6.94	0	0	0	0	0	0	-28.04	-28.04
Inverter Transformer	MV1-9 T	364555	4905646	2	0	0	56.1	56.1	1	1996.56	3.25	0	77.01	0	0.4	0	0	7.04	0	0	0	0	0	0	-28.39	-28.39
Inverter Transformer	MV1-6 T	364482	4905835	2	0	0	56.1	56.1	1	2198.58	3.25	0	77.84	0	0.49	0	0	7.43	0	0	0	0	0	0	-29.7	-29.7
Inverter Transformer	MV1-5 T	364676	4905892	2	0	0	56.1	56.1	1	2205.81	3.25	0	77.87	0	0.49	0	0	7.44	0	0	0	0	0	0	-29.75	-29.75
Inverter Transformer	MV1-4 T	364821	4905918	2	0	0	56.1	56.1	1	2206.79	3.25	0	77.88	0	0.49	0	0	7.44	0	0	0	0	0	0	-29.75	-29.75
Inverter Transformer	MV1-2 T	364759	4906063	2	0	0	56.1	56.1	1	2359.28	3.25	0	78.46	0	0.56	0	0	7.73	0	0	0	0	0	0	-30.68	-30.68
Inverter Transformer	MV1-3 T	364435	4906039	2	0	0	56.1	56.1	1	2407.46	3.25	0	78.63	0	0.58	0	0	7.82	0	0	0	0	0	0	-30.97	-30.97
Inverter Transformer	MV1-1 T	364721	4906166	2	0	0	56.1	56.1	1	2467.01	3.25	0	78.84	0	0.6	0	0	7.93	0	0	0	0	0	0	-31.32	-31.32
Inverter Transformer	MV2-4 T	365590	4906628	2	0	0	56.1	56.1	1	2933.38	3.25	0	80.35	0	0.8	0	0	8.75	0	0	0	0	0	0	-33.85	-33.85
Inverter Transformer	MV2-3 T	365814	4906641	2	0	0	56.1	56.1	1	2989.9	3.25	0	80.51	0	0.83	0	0	8.85	0	0	0	0	0	0	-34.13	-34.13
Inverter Transformer	MV2-2 T	365982	4906654	2	0	0	56.1	56.1	1	3045.59	3.25	0	80.67	0	0.85	0	0	8.95	0	0	0	0	0	0	-34.41	-34.41
Inverter Transformer	MV3-18 T	367757	4907412	2	0	0	56.1	56.1	1	4525.41	3.25	0	84.11	0	1.45	0	0	11.21	0	0	0	0	0	0	-40.71	-40.71
Inverter Transformer	MV3-12 T	367674	4907594	2	0	0	56.1	56.1	1	4628.35	3.25	0	84.31	0	1.49	0	0	11.35	0	0	0	0	0	0	-41.09	-41.09
Inverter Transformer	MV3-13 T	367958	4907577	2	0	0	56.1	56.1	1	4777.04	3.25	0	84.58	0	1.54	0	0	11.56	0	0	0	0	0	0	-41.62	-41.62
Inverter Transformer	MV3-17 T	368183	4907472	2	0	0	56.1	56.1	1	4832.18	3.25	0	84.68	0	1.56	0	0	11.63	0	0	0	0	0	0	-41.82	-41.82
Inverter Transformer	MV3-21 T	368484	4907206	2	0	0	56.1	56.1	1	4833.6	3.25	0	84.69	0	1.56	0	0	11.63	0	0	0	0	0	0	-41.82	-41.82
Inverter Transformer	MV3-19 T	368352	4907347	2	0	0	56.1	56.1	1	4847	3.25	0	84.71	0	1.57	0	0	11.65	0	0	0	0	0	0	-41.87	-41.87
Inverter Transformer	MV3-22 T	368661	4907142	2	0	0	56.1	56.1	1	4913.67	3.25	0	84.83	0	1.59	0	0	11.74	0	0	0	0	0	0	-42.1	-42.1
Inverter Transformer	MV3-7 T	367951	4907754	2	0	0	56.1	56.1	1	4916.6	3.25	0	84.83	0	1.6	0	0	11.74	0	0	0	0	0	0	-42.11	-42.11
Inverter Transformer	MV3-15 T	368351	4907477	2	0	0	56.1	56.1	1	4944.06	3.25	0	84.88	0	1.61	0	0	11.78	0	0	0	0	0	0	-42.21	-42.21
Inverter Transformer	MV3-10 T	368162	4907669	2	0	0	56.1	56.1	1	4973.36	3.25	0	84.93	0	1.62	0	0	11.82	0	0	0	0	0	0	-42.31	-42.31
Inverter Transformer	MV3-16 T	368509	4907475	2	0	0	56.1	56.1	1	5047.15	3.25	0	85.06	0	1.64	0	0	11.92	0	0	0	0	0	0	-42.56	-42.56
Inverter Transformer	MV3-20 T	368683	4907317	2	0	0	56.1	56.1	1	5052.17	3.25	0	85.07	0	1.64	0	0	11.92	0	0	0	0	0	0	-42.58	-42.58
Inverter Transformer	MV3-3 T	367944	4907927	2	0	0	56.1	56.1	1	5055.19	3.25	0	85.07	0	1.65	0	0	11.93	0	0	0	0	0	0	-42.59	-42.59
Inverter Transformer	MV3-11 T	368340	4907662	2	0	0	56.1	56.1	1	5078.65	3.25	0	85.11	0	1.65	0	0	11.96	0	0	0	0	0	0	-42.67	-42.67
Inverter Transformer	MV3-6 T	368156	4907834	2	0	0	56.1	56.1	1	5101.4	3.25	0	85.15	0	1.66	0	0	11.99	0	0	0	0	0	0	-42.74	-42.74
Inverter Transformer	MV3-14 T	368678	4907498	2	0	0	56.1	56.1	1	5178.74	3.25	0	85.28	0	1.69	0	0	12.09	0	0	0	0	0	0	-43	-43
Inverter Transformer	MV3-1 T	368150	4907976	2	0	0	56.1	56.1	1	5212.78	3.25	0	85.34	0	1.7	0	0	12.13	0	0	0	0	0	0	-43.12	-43.12
Inverter Transformer	MV3-5 T	368335	4907843	2	0	0	56.1	56.1	1	5216.89	3.25	0	85.35	0	1.7	0	0	12.14	0	0	0	0	0	0	-43.13	-43.13
Inverter Transformer	MV3-9 T	368517	4907703	2	0	0	56.1	56.1	1	5223.67	3.25	0	85.36	0	1.71	0	0	12.15	0	0	0	0	0	0	-43.15	-43.15
Inverter Transformer	MV3-8 T	368685	4907712	2	0	0	56.1	56.1	1	5341.05	3.25	0	85.55	0	1.75	0	0	12.3	0	0	0	0	0	0	-43.54	-43.54
Inverter Transformer	MV3-4 T	368507	4907925	2	0	0	56.1	56.1	1	5388.08	3.25	0	85.63	0	1.76	0	0	12.35	0	0	0	0	0	0	-43.69	-43.69
Inverter Transformer	MV3-2 T	368677	4907928	2	0	0	56.1	56.1	1	5498.72	3.25	0	85.81	0	1.8	0	0	12.49	0	0	0	0	0	0	-44.04	-44.04
Inverter Transformer	MV6-3 T	370202	4907140	2	0	0	56.1	56.1	1	6116.26	3.25	0	86.73	0	2	0	0	13.24	0	0	0	0	0	0	-45.91	-45.91
Inverter Transformer	MV6-2 T	370091	4907339	2	0	0	56.1	56.1	1	6139.18	3.25	0	86.76	0	2.01	0	0	13.27	0	0	0	0	0	0	-45.98	-45.98
Inverter Transformer	MV4-15 T	369170	4908481	2	0	0	56.1	56.1	1	6239.36	3.25	0	86.9	0	2.04	0	0	13.38	0	0	0	0	0	0	-46.27	-46.27
Inverter Transformer	MV4-13 T	369057	4908605	2	0	0	56.1	56.1	1	6262.66	3.25	0	86.94	0	2.05	0	0	13.41	0	0	0	0	0	0	-46.33	-46.33
Inverter Transformer	MV4-14 T	369182	4908507	2	0	0	56.1	56.1	1	6266.94	3.25	0	86.94	0	2.05	0	0	13.41	0	0	0	0	0	0	-46.35	-46.35
Inverter Transformer	MV4-12 T	369049	4908803	2	0	0	56.1	56.1	1	6413.03	3.25	0	87.14	0	2.09	0	0	13.58	0	0	0	0	0	0	-46.76	-46.76
Inverter Transformer	MV4-7 T	369040	4909001	2	0	0	56.1	56.1	1	6565.34	3.25	0	87.35	0	2.14	0	0	13.75	0	0	0	0	0	0	-47.18	-47.18
Inverter Transformer	MV4-11 T	369269	4908855	2	0	0	56.1	56.1	1	6590.36	3.25	0	87.38	0	2.14	0	0	13.78	0	0	0	0	0	0	-47.25	-47.25
Inverter Transformer	MV4-10 T	369307	4908858	2	0	0	56.1	56.1	1	6616.65	3.25	0	87.41	0	2.15	0	0	13.81	0	0	0	0	0	0	-47.32	-47.32
Inverter Transformer	MV4-8 T	369262	4909001	2	0	0	56.1	56.1	1	6700.15	3.25	0	87.52	0	2.18	0	0	13.9	0	0	0	0	0	0	-47.54	-47.54
Inverter Transformer	MV4-9 T	369284	4909001	2	0	0	56.1	56.1	1	6713.76	3.25	0	87.54	0	2.18	0	0	13.92	0	0	0	0	0	0	-47.58	-47.58
Inverter Transformer	MV4-4 T	369033	4909199	2	0	0	56.1	56.1	1	6721.21	3.25	0	87.55	0	2.18	0	0	13.93	0	0	0	0	0	0	-47.6	-47.6
Inverter Transformer	MV5-6 T	369987	4908507	2	0	0	56.1	56.1	1	6815.95	3.25	0	87.67	0	2.21	0	0	14.03	0	0	0	0	0	0	-47.85	-47.85
Inverter Transformer	MV4-6 T	369249	4909192	2	0	0	56.1	56.1	1	6843.52	3.25	0	87.71	0	2.22	0	0	14.06	0	0	0	0	0	0	-47.92	-47.92
Inverter Transformer	MV4-5 T	369283	4909199	2	0	0	56.1	56.1	1	6869.65	3.25	0	87.74	0	2.22	0	0	14.09	0	0	0	0	0	0	-47.99	-47.99
Inverter Transformer	MV4-1 T	369017	4909397	2	0	0	56.1	56.1	1	6874.15	3.25	0	87.74	0	2.22	0	0	14.09	0	0	0	0	0	0	-48	-48
Inverter Transformer	MV5-5 T	370021	4908690	2	0	0	56.1	56.1	1	6969.23	3.25	0	87.86	0	2.25	0	0	14.2	0	0	0	0	0	0	-48.25	-48.25
Inverter Transformer	MV4-3 T	369234	4909397	2	0	0	56.1	56.1	1	6999.35	3.25	0	87.9	0	2.26	0	0	14.23	0	0	0	0	0	0	-48.33	-48.33
Inverter Transformer	MV4-2 T	369267	4909397	2	0	0	56.1	56.1	1	7018.78	3.25	0	87.93	0	2.26	0	0	14.25	0	0	0	0	0	0	-48.38	-48.38
Inverter Transformer	MV5-2 T	370011	4908853	2	0	0	56.1	56.1	1	7079.21	3.25	0	88	0	2.28	0	0	14.31	0	0	0	0	0	0	-48.54	-48.54
Inverter Transformer	MV5-4 T	370330	4908707	2	0	0	56.1	56.1	1	7201.49	3.25	0	88.15	0	2.31	0	0	14.44	0	0	0	0	0	0	-48.85	-48.85
Inverter Transformer	MV5-3 T	370237	4908851	2	0	0	56.1	56.1	1	7235.68	3.25	0	88.19	0	2.32	0	0	14.48	0	0	0	0	0	0	-48.93	-48.93
Inverter Transformer	MV5-1 T	370015	4909142	2	0	0	56.1	56.1	1	7293.68	3.25	0	88.26	0	2.34	0	0	14.54	0	0	0	0	0	0	-49.08	-49.08
Line Reactor	NGR	369421	4908787.5	5	0	0	45.4	45.4	1	6635.45	5.25	0	87.44	0	3.23	1.37	0.09	2.71	0	0	0	0	0	0	-49.39	-49.39
Limit. Valu 0	0																								
Level D/N: 23.8709	23.8709																								

Receiver: Existing Noise Receptor
ID: G-103
X: 365110.2
Y: 4903782
Z: 4.5

Ground: 0

ISO	Description	ID	X	Y	Z	Ground	ReflOrd	LxT	LxN	L/A	Dist.	hm	Freq	Adiv	K0b	Agr	Abar	z	Aatm	Afol	Ahous	Cmet	CmetN	Dc	RL	LtotT	LtotN
	Inverter	MV1-15	365315	4904994	2	0	0	100.3	100.3	1	1229.18	3.25	0	72.79	0	-0.14	0	0	11.61	0	0	0	0	0	0	16.05	16.05
	Inverter	MV1-12	365038	4905386	2	0	0	100.3	100.3	1	1605.63	3.25	0	75.11	0	0	0	0	12.58	0	0	0	0	0	0	12.61	12.61
	Inverter	MV1-11	364655	4905414	2	0	0	100.3	100.3	1	1694.3	3.25	0	75.58	0	0.03	0	0	12.79	0	0	0	0	0	0	11.91	11.91
	Sol_Luce Substation	S_Substation	369426	4908792	3.5	0	0	112.1	112.1	1	6612.58	5.25	0	87.41	0	1.3	2.52	0.27	10.37	0	0	0	0	0	0	10.48	10.48
	Inverter	MV1-14	365163	4905049	2	0	0	97.3	97.3	1	1268.1	3.25	0	73.06	0	-0.13	0	0	11.72	0	0	0	0	0	0	12.66	12.66
	Inverter	MV1-8	364788	4905647	2	0	0	100.3	100.3	1	1892.63	3.25	0	76.54	0	0.1	0	0	13.23	0	0	0	0	0	0	10.44	10.44
	Inverter	MV1-9	364561	4905646	2	0	0	100.3	100.3	1	1943.22	3.25	0	76.77	0	0.11	0	0	13.34	0	0	0	0	0	0	10.09	10.09
	Inverter	MV1-13	364731	4905241	2	0	0	97.3	97.3	1	1507.47	3.25	0	74.57	0	-0.03	0	0	12.34	0	0	0	0	0	0	10.43	10.43
	Inverter	MV1-6	364477	4905835	2	0	0	100.3	100.3	1	2148.43	3.25	0	77.64	0	0.17	0	0	13.77	0	0	0	0	0	0	8.73	8.73
	Inverter	MV1-5	364671	4905892	2	0	0	100.3	100.3	1	2155.23	3.25	0	77.67	0	0.17	0	0	13.78	0	0	0	0	0	0	8.69	8.69
	Inverter	MV1-4	364815	4905918	2	0	0	100.3	100.3	1	2156.3	3.25	0	77.67	0	0.17	0	0	13.78	0	0	0	0	0	0	8.68	8.68
	Inverter	MV1-2	364753	4906063	2	0	0	100.3	100.3	1	2308.8	3.25	0	78.27	0	0.21	0	0	14.09	0	0	0	0	0	0	7.74	7.74
	Inverter	MV1-1	364715	4906166	2	0	0	100.3	100.3	1	2416.54	3.25	0	78.66	0	0.24	0	0	14.3	0	0	0	0	0	0	7.11	7.11
	Inverter	MV1-10	365004	4905564	2	0	0	97.3	97.3	1	1785.16	3.25	0	76.03	0	0.06	0	0	13	0	0	0	0	0	0	8.22	8.22
	Inverter	MV1-7	364925	4905782	2	0	0	97.3	97.3	1	2008.56	3.25	0	77.06	0	0.13	0	0	13.48	0	0	0	0	0	0	6.64	6.64
	Inverter	MV2-4	365586	4906624	2	0	0	100.3	100.3	1	2881.55	3.25	0	80.19	0	0.34	0	0	15.16	0	0	0	0	0	0	4.62	4.62
	Inverter	MV2-3	365820	4906641	2	0	0	100.3	100.3	1	2945.79	3.25	0	80.38	0	0.35	0	0	15.28	0	0	0	0	0	0	4.3	4.3
	Inverter	MV2-1	365842	4906816	2	0	0	97.3	97.3	1	3121.01	3.25	0	80.89	0	0.38	0	0	15.58	0	0	0	0	0	0	0.46	0.46
	Inverter	MV3-18	367752	4907412	2	0	0	100.3	100.3	1	4489.54	3.25	0	84.04	0	0.59	0	0	17.81	0	0	0	0	0	0	-2.14	-2.14
	Inverter	MV3-12	367668	4907594	2	0	0	100.3	100.3	1	4590.61	3.25	0	84.24	0	0.6	0	0	17.97	0	0	0	0	0	0	-2.49	-2.49
	Gardiner Substation	G_Sub	366586.3	4903349.9	2.5	0	0	90.8	90.8	1	1538.05	4.25	0	74.74	0	0.84	4.47	0.31	3.55	0	0	0	0	0	0	7.18	7.18
	Inverter	MV3-13	367963	4907577	2	0	0	100.3	100.3	1	4747.68	3.25	0	84.53	0	0.62	0	0	18.21	0	0	0	0	0	0	-3.04	-3.04
	Inverter	MV3-17	368178	4907472	2	0	0	100.3	100.3	1	4798.7	3.25	0	84.62	0	0.62	0	0	18.28	0	0	0	0	0	0	-3.22	-3.22
	Inverter	MV3-21	368478	4907206	2	0	0	100.3	100.3	1	4802.69	3.25	0	84.63	0	0.62	0	0	18.29	0	0	0	0	0	0	-3.23	-3.23
	Inverter	MV3-19	368357	4907347	2	0	0	100.3	100.3	1	4821.92	3.25	0	84.66	0	0.63	0	0	18.32	0	0	0	0	0	0	-3.29	-3.29
	Inverter	MV3-7	367945	4907754	2	0	0	100.3	100.3	1	4879.84	3.25	0	84.77	0	0.63	0	0	18.4	0	0	0	0	0	0	-3.49	-3.49
	Inverter	MV3-15	368357	4907477	2	0	0	100.3	100.3	1	4918.82	3.25	0	84.84	0	0.63	0	0	18.46	0	0	0	0	0	0	-3.62	-3.62
	Inverter	MV3-10	368167	4907669	2	0	0	100.3	100.3	1	4944.98	3.25	0	84.88	0	0.64	0	0	18.5	0	0	0	0	0	0	-3.71	-3.71
	Inverter	MV3-3	367939	4907927	2	0	0	100.3	100.3	1	5018.28	3.25	0	85.01	0	0.64	0	0	18.61	0	0	0	0	0	0	-3.95	-3.95
	Inverter	MV3-16	368514	4907475	2	0	0	100.3	100.3	1	5022.36	3.25	0	85.02	0	0.64	0	0	18.61	0	0	0	0	0	0	-3.96	-3.96
	Inverter	MV3-20	368689	4907317	2	0	0	100.3	100.3	1	5030.31	3.25	0	85.03	0	0.64	0	0	18.62	0	0	0	0	0	0	-3.99	-3.99
	Inverter	MV3-11	368346	4907662	2	0	0	100.3	100.3	1	5052.21	3.25	0	85.07	0	0.65	0	0	18.66	0	0	0	0	0	0	-4.06	-4.06
	Inverter	MV3-6	368162	4907834	2	0	0	100.3	100.3	1	5072.69	3.25	0	85.1	0	0.65	0	0	18.69	0	0	0	0	0	0	-4.13	-4.13
	Inverter	MV3-14	368684	4907498	2	0	0	100.3	100.3	1	5155.65	3.25	0	85.25	0	0.66	0	0	18.81	0	0	0	0	0	0	-4.4	-4.4
	Inverter	MV3-9	368512	4907703	2	0	0	100.3	100.3	1	5191	3.25	0	85.31	0	0.66	0	0	18.86	0	0	0	0	0	0	-4.51	-4.51
	Inverter	MV3-8	368680	4907712	2	0	0	100.3	100.3	1	5309.27	3.25	0	85.5	0	0.67	0	0	19.03	0	0	0	0	0	0	-4.89	-4.89
	Inverter	MV6-3	370207	4907140	2	0	0	100.3	100.3	1	6103.57	3.25	0	86.71	0	0.71	0	0	20.13	0	0	0	0	0	0	-7.24	-7.24
	Inverter	MV6-2	370085	4907339	2	0	0	100.3	100.3	1	6115.63	3.25	0	86.73	0	0.71	0	0	20.15	0	0	0	0	0	0	-7.27	-7.27
	Inverters	G_Inv1	366526.4	4903225.8	2	0	0	87.7	87.7	1	1521.51	3.25	0	74.65	0	2.52	0	0	2.07	0	0	0	0	0	0	8.42	8.42
	Inverter	MV4-7	369035	4909001	2	0	0	100.3	100.3	1	6530.09	3.25	0	87.3	0	0.71	0	0	20.7	0	0	0	0	0	0	-8.4	-8.4
	Inverter	MV4-11	369264	4908855	2	0	0	100.3	100.3	1	6556.63	3.25	0	87.33	0	0.71	0	0	20.73	0	0	0	0	0	0	-8.47	-8.47
	Inverter	MV4-10	369312	4908858	2	0	0	100.3	100.3	1	6589.45	3.25	0	87.38	0	0.72	0	0	20.78	0	0	0	0	0	0	-8.56	-8.56
	Inverter	MV4-8	369256	4909001	2	0	0	100.3	100.3	1	6665.26	3.25	0	87.48	0	0.71	0	0	20.87	0	0	0	0	0	0	-8.75	-8.75
	Inverter	MV4-4	369027	4909199	2	0	0	100.3	100.3	1	6684.7	3.25	0	87.5	0	0.71	0	0	20.9	0	0	0	0	0	0	-8.8	-8.8
	Inverter	MV4-9	369289	4909001	2	0	0	100.3	100.3	1	6685.83	3.25	0	87.5	0	0.71	0	0	20.9	0	0	0	0	0	0	-8.81	-8.81
	Inverter	MV4-6	369243	4909192	2	0	0	100.3	100.3	1	6807.95	3.25	0	87.66	0	0.71	0	0	21.06	0	0	0	0	0	0	-9.12	-9.12
	Inverter	MV4-1	369011	4909397	2	0	0	100.3	100.3	1	6836.99	3.25	0	87.7	0	0.71	0	0	21.09	0	0	0	0	0	0	-9.19	-9.19
	Inverter	MV4-5	369289	4909199	2	0	0	100.3	100.3	1	6841.51	3.25	0	87.7	0	0.71	0	0	21.1	0	0	0	0	0	0	-9.2	-9.2
	Inverter	MV5-5	370015	4908690	2	0	0	100.3	100.3	1	6938.7	3.25	0	87.83	0	0.71	0	0	21.22	0	0	0	0	0	0	-9.45	-9.45
	Inverter	MV4-3	369229	4909397	2	0	0	100.3	100.3	1	6963.67	3.25	0	87.86	0	0.71	0	0	21.25	0	0	0	0	0	0	-9.51	-9.51
	Inverters	G_Inv3	366583.7	4903091.4	2	0	0	87.7	87.7	1	1627.31	3.25	0	75.23	0	2.54	0	0	2.2	0	0	0	0	0	0	7.7	7.7
	Inverter	MV4-2	369272	4909397	2	0	0	100.3	100.3	1	6989.19	3.25	0	87.89	0	0.71	0	0	21.29	0	0	0	0	0	0	-9.57	-9.57
	Inverter	MV5-2	370006	4908853	2	0	0	100.3	100.3	1	7048.68	3.25	0	87.96	0	0.71	0	0	21.36	0	0	0	0	0	0	-9.72	-9.72
	Inverters	G_Inv2	366676.9	4903239.1	2	0	0	87.7	87.7	1	1658.1	3.25	0	75.39	0	2.54	0	0	2.23	0	0	0	0	0	0	7.5	7.5
	Inverter	MV5-4	370324	4908707	2	0	0	100.3	100.3	1	7172.12	3.25	0	88.11	0	0.7	0	0	21.51	0	0	0	0	0	0	-10.02	-10.02
	Inverter	MV5-3	370231	4908851	2	0	0	100.3	100.3	1	7205.37	3.25	0	88.15	0	0.7	0	0	21.55	0	0	0	0	0	0	-10.1	-10.1
	Inverter	MV5-1	370020	4909142	2	0	0	100.3	100.3	1	7268.82	3.25	0	88.23	0	0.7	0	0	21.63	0	0	0	0	0	0	-10.25	-10.25
	Inverters	G_Inv5	366638.5	4902958.1	2	0	0	87.7	87.7	1	1736.24	3.25	0	75.79	0	2.55	0	0	2.33	0	0	0	0	0	0	6.99	6.99
	Inverters	G_Inv4	366732.8	4903105	2	0	0	87.7	87.7	1	1758.17	3.25	0	75.9	0	2.55	0	0	2.35	0	0	0	0	0	0	6.85	6.85
	Inverters	G_Inv7	366694.6	4902824.7	2	0	0	87.7	87.7	1	1851.15	3.25	0	76.35	0	2.56	0	0	2.46	0	0	0	0	0	0	6.29	6.29
	Inverters	G_Inv6	366788.5	4902972	2	0	0	87.7	87.7	1	1863.54	3.25	0	76.41	0	2.57	0	0	2.48	0	0	0	0	0	0	6.21	6.21
	Inverters	G_Inv9	366750.9	4902691.8	2	0	0	87.7	87.7	1	1969.88	3.25	0	76.89	0	2.58	0	0	2.6	0	0	0	0	0	0	5.59	5.59
	Inverters	G_Inv8	366844.5	4902838.5	2	0	0	87.7	87.7	1	1974.33	3.25	0	76.91	0	2.58	0	0	2.61	0	0	0	0	0	0	5.57	5.57
	Inverter	MV1-3	364440	4906039	2	0	0	89.1	89.1	1	2354.41	3.25	0	78.44	0	0.99	0	0	8.62	0	0	0	0	0	0	1.01	1.01
	Inverter	MV6-1	370235	4907364	2	0	0	97.3	97.3	1	6252.54	3.25	0	86.92	0	0.71	0	0	20.33	0	0	0	0	0	0	-10.65	-10.65
	Inverters	G_Inv10	366900.7	4902704.8	2	0	0	87.7	87.7	1	2089.56	3.25	0	77.4	0	2.59	0	0	2.74	0	0	0	0	0	0	4.92	4.92
	DSTATCOM - 10 MVAR #2	DSAT2	369403	4908757	2.5	0	0	96.6	96.6	1	6571.05	3.5	0	87.35	0	3.81	0	0	4.11	0	0	0	0	0	0	1.35	1.35
	DSTATCOM - 10 MVAR #1	DSAT1	369437	4908757	2.5	0	0	96.6	96.6	1	6593.32	3.5	0	87.38	0	3.81	0	0	4.12	0	0	0	0	0	0	1.31	1.31
	Inverter	MV2-2	365977	4906654	2	0	0	89.1	89.1	1	2999.96	3.25	0	80.54	0	1.15	0	0	9.62	0	0	0	0	0	0	-2.25	-2.25
	SubstationTransformer	W_ST	369711.17	4906112.3	2.5	0	0	92	92	1	5157.43	4.25	0	85.25	0	1.68	2.29	0.26	8.81	0	0	0	0	0	0	-6.05	-6.05
	Inverter	MV3-22	368656	4907142	2	0	0	89.1	89.1	1	4884.91	3.25	0	84.78	0	1.61	0	0	12.31	0	0	0	0	0	0	-9.64	-9.64

Westbrook Inverter Enclosur	W_INV2	369374	4906388	2	0	0	89.1	89.1	1	4997.12	3.25	0	84.97	0	1.64	0	0	12.46	0	0	0	0	0	0	-10.02	-10.02
Westbrook Inverter Enclosur	W_INV3	369508	4906164	2	0	0	89.1	89.1	1	5001.46	3.25	0	84.98	0	1.64	0	0	12.47	0	0	0	0	0	0	-10.03	-10.03
Westbrook Inverter Enclosur	W_INV4	369673	4906164	2	0	0	89.1	89.1	1	5147.14	3.25	0	85.23	0	1.68	0	0	12.66	0	0	0	0	0	0	-10.51	-10.51
Inverter	MV3-1	368156	4907976	2	0	0	89.1	89.1	1	5183.29	3.25	0	85.29	0	1.69	0	0	12.71	0	0	0	0	0	0	-10.63	-10.63
Inverter	MV3-5	368340	4907843	2	0	0	89.1	89.1	1	5188.77	3.25	0	85.3	0	1.69	0	0	12.71	0	0	0	0	0	0	-10.64	-10.64
Inverter	MV3-4	368502	4907925	2	0	0	89.1	89.1	1	5354.32	3.25	0	85.57	0	1.73	0	0	12.93	0	0	0	0	0	0	-11.18	-11.18
Westbrook Inverter Enclosur	W_INV7	369780	4906417	2	0	0	89.1	89.1	1	5361.93	3.25	0	85.59	0	1.73	0	0	12.94	0	0	0	0	0	0	-11.2	-11.2
Westbrook Inverter Enclosur	W_INV5	369719	4906574	2	0	0	89.1	89.1	1	5388.53	3.25	0	85.63	0	1.74	0	0	12.98	0	0	0	0	0	0	-11.28	-11.28
Inverter	MV3-2	368671	4907928	2	0	0	89.1	89.1	1	5465.22	3.25	0	85.75	0	1.75	0	0	13.08	0	0	0	0	0	0	-11.53	-11.53
Westbrook Inverter Enclosur	W_INV6	369875	4906578	2	0	0	89.1	89.1	1	5524.58	3.25	0	85.85	0	1.77	0	0	13.15	0	0	0	0	0	0	-11.71	-11.71
Fixed Reactor Bank 1	FRB1	369378	4908755	6	0	0	89.8	89.8	1	6553.23	5.25	0	87.33	0	-0.34	0	0	10.31	0	0	0	0	0	0	-7.52	-7.52
Fixed Reactor Bank 2	FRB2	369464	4908755	6	0	0	89.8	89.8	1	6609.56	5.25	0	87.4	0	-0.33	0	0	10.37	0	0	0	0	0	0	-7.66	-7.66
Inverter	MV4-15	369176	4908481	2	0	0	89.1	89.1	1	6213.8	3.25	0	86.87	0	1.94	0	0	14.03	0	0	0	0	0	0	-13.78	-13.78
Inverter	MV4-13	369051	4908605	2	0	0	89.1	89.1	1	6228.26	3.25	0	86.89	0	1.94	0	0	14.05	0	0	0	0	0	0	-13.82	-13.82
Inverter	MV4-14	369176	4908507	2	0	0	89.1	89.1	1	6233.49	3.25	0	86.89	0	1.94	0	0	14.05	0	0	0	0	0	0	-13.83	-13.83
Inverter	MV4-12	369043	4908803	2	0	0	89.1	89.1	1	6377.88	3.25	0	87.09	0	1.98	0	0	14.23	0	0	0	0	0	0	-14.25	-14.25
Inverter	MV5-6	369982	4908507	2	0	0	89.1	89.1	1	6786.76	3.25	0	87.63	0	2.08	0	0	14.73	0	0	0	0	0	0	-15.38	-15.38
Westbrook Inverter Enclosur	W_INV1	369409	4906578	2	0	0	86.1	86.1	1	5128.09	3.25	0	85.2	0	1.67	0	0	12.63	0	0	0	0	0	0	-13.45	-13.45
Inverter	MV6-4	370250	4906966	2	0	0	86.1	86.1	1	6046.11	3.25	0	86.63	0	1.9	0	0	13.82	0	0	0	0	0	0	-16.29	-16.29
Inverter Transformer	MV1-14 T	365157	4905049	2	0	0	69.4	69.4	1	1267.87	3.25	0	73.06	0	1.86	0	0	4.16	0	0	0	0	0	0	-9.73	-9.73
Inverter Transformer	MV1-13 T	364725	4905241	2	0	0	69.4	69.4	1	1509	3.25	0	74.57	0	1.98	0	0	4.44	0	0	0	0	0	0	-11.64	-11.64
Inverter Transformer	MV1-10 T	365010	4905564	2	0	0	69.4	69.4	1	1784.82	3.25	0	76.03	0	2.09	0	0	4.74	0	0	0	0	0	0	-13.52	-13.52
Westbrook Inverter Transfor	W_INVTR1	369403	4906578	2	0	0	78.2	78.2	1	5123.06	3.25	0	85.19	0	-3.2	0	0	2.45	0	0	0	0	0	0	-6.2	-6.2
Westbrook Inverter Transfor	W_INVTR2	369368	4906388	2	0	0	77.3	77.3	1	4992	3.25	0	84.97	0	-3.18	0	0	2.41	0	0	0	0	0	0	-6.86	-6.86
Westbrook Inverter Transfor	W_INVTR3	369514	4906164	2	0	0	77.3	77.3	1	5006.73	3.25	0	84.99	0	-3.18	0	0	2.42	0	0	0	0	0	0	-6.89	-6.89
Inverter Transformer	MV1-7 T	364919	4905782	2	0	0	69.4	69.4	1	2009.12	3.25	0	77.06	0	2.18	0	0	4.97	0	0	0	0	0	0	-14.86	-14.86
Westbrook Inverter Transfor	W_INVTR4	369679	4906164	2	0	0	77.3	77.3	1	5152.46	3.25	0	85.24	0	-3.21	0	0	2.46	0	0	0	0	0	0	-7.16	-7.16
Westbrook Inverter Transfor	W_INVTR7	369786	4906417	2	0	0	77.3	77.3	1	5367.15	3.25	0	85.59	0	-3.25	0	0	2.54	0	0	0	0	0	0	-7.54	-7.54
Westbrook Inverter Transfor	W_INVTR5	369725	4906574	2	0	0	77.3	77.3	1	5393.67	3.25	0	85.64	0	-3.25	0	0	2.55	0	0	0	0	0	0	-7.59	-7.59
Westbrook Inverter Transfor	W_INVTR6	369881	4906578	2	0	0	77.3	77.3	1	5529.75	3.25	0	85.85	0	-3.28	0	0	2.59	0	0	0	0	0	0	-7.82	-7.82
Inverter Transformer	MV2-1 T	365836	4906816	2	0	0	69.4	69.4	1	3119.61	3.25	0	80.88	0	2.54	0	0	5.98	0	0	0	0	0	0	-20.06	-20.06
Inverter Transformer	MV1-15 T	365309	4904994	2	0	0	56.1	56.1	1	1228.2	3.25	0	72.79	0	0.09	0	0	5.42	0	0	0	0	0	0	-22.24	-22.24
Inverter Transformer	MV6-4 T	370244	4906966	2	0	0	69.4	69.4	1	6041.01	3.25	0	86.62	0	3.19	0	0	8.04	0	0	0	0	0	0	-28.51	-28.51
Inverter Transformer	MV6-1 T	370230	4907364	2	0	0	69.4	69.4	1	6248.45	3.25	0	86.92	0	3.22	0	0	8.17	0	0	0	0	0	0	-28.96	-28.96
Inverter Transformer	MV1-12 T	365044	4905386	2	0	0	56.1	56.1	1	1605.37	3.25	0	75.11	0	0.24	0	0	6.24	0	0	0	0	0	0	-25.54	-25.54
Inverter Transformer	MV1-11 T	364649	4905414	2	0	0	56.1	56.1	1	1695.92	3.25	0	75.59	0	0.28	0	0	6.43	0	0	0	0	0	0	-26.24	-26.24
Inverter Transformer	MV1-8 T	364782	4905647	2	0	0	56.1	56.1	1	1893.66	3.25	0	76.55	0	0.36	0	0	6.83	0	0	0	0	0	0	-27.68	-27.68
Inverter Transformer	MV1-9 T	364555	4905646	2	0	0	56.1	56.1	1	1944.93	3.25	0	76.78	0	0.38	0	0	6.93	0	0	0	0	0	0	-28.04	-28.04
Inverter Transformer	MV1-6 T	364482	4905835	2	0	0	56.1	56.1	1	2146.96	3.25	0	77.64	0	0.47	0	0	7.33	0	0	0	0	0	0	-29.37	-29.37
Inverter Transformer	MV1-5 T	364676	4905892	2	0	0	56.1	56.1	1	2154.21	3.25	0	77.67	0	0.47	0	0	7.34	0	0	0	0	0	0	-29.42	-29.42
Inverter Transformer	MV1-4 T	364821	4905918	2	0	0	56.1	56.1	1	2155.49	3.25	0	77.67	0	0.47	0	0	7.35	0	0	0	0	0	0	-29.43	-29.43
Inverter Transformer	MV1-2 T	364759	4906063	2	0	0	56.1	56.1	1	2307.88	3.25	0	78.26	0	0.53	0	0	7.63	0	0	0	0	0	0	-30.37	-30.37
Inverter Transformer	MV1-3 T	364435	4906039	2	0	0	56.1	56.1	1	2355.83	3.25	0	78.44	0	0.55	0	0	7.72	0	0	0	0	0	0	-30.66	-30.66
Inverter Transformer	MV1-1 T	364721	4906166	2	0	0	56.1	56.1	1	2415.56	3.25	0	78.66	0	0.58	0	0	7.83	0	0	0	0	0	0	-31.02	-31.02
Inverter Transformer	MV2-4 T	365590	4906628	2	0	0	56.1	56.1	1	2886.16	3.25	0	80.21	0	0.78	0	0	8.67	0	0	0	0	0	0	-33.6	-33.6
Inverter Transformer	MV2-3 T	365814	4906641	2	0	0	56.1	56.1	1	2944.35	3.25	0	80.38	0	0.81	0	0	8.77	0	0	0	0	0	0	-33.9	-33.9
Inverter Transformer	MV2-2 T	365982	4906654	2	0	0	56.1	56.1	1	3001.4	3.25	0	80.55	0	0.83	0	0	8.87	0	0	0	0	0	0	-34.19	-34.19
Inverter Transformer	MV3-18 T	367757	4907412	2	0	0	56.1	56.1	1	4492.49	3.25	0	84.05	0	1.44	0	0	11.16	0	0	0	0	0	0	-40.59	-40.59
Inverter Transformer	MV3-12 T	367674	4907594	2	0	0	56.1	56.1	1	4593.95	3.25	0	84.24	0	1.48	0	0	11.31	0	0	0	0	0	0	-40.97	-40.97
Inverter Transformer	MV3-13 T	367958	4907577	2	0	0	56.1	56.1	1	4744.68	3.25	0	84.52	0	1.53	0	0	11.51	0	0	0	0	0	0	-41.51	-41.51
Inverter Transformer	MV3-17 T	368183	4907472	2	0	0	56.1	56.1	1	4801.9	3.25	0	84.63	0	1.55	0	0	11.59	0	0	0	0	0	0	-41.71	-41.71
Inverter Transformer	MV3-21 T	368484	4907206	2	0	0	56.1	56.1	1	4806.9	3.25	0	84.64	0	1.55	0	0	11.6	0	0	0	0	0	0	-41.73	-41.73
Inverter Transformer	MV3-19 T	368352	4907347	2	0	0	56.1	56.1	1	4818.56	3.25	0	84.66	0	1.56	0	0	11.61	0	0	0	0	0	0	-41.77	-41.77
Inverter Transformer	MV3-7 T	367951	4907754	2	0	0	56.1	56.1	1	4883.33	3.25	0	84.77	0	1.58	0	0	11.7	0	0	0	0	0	0	-42	-42
Inverter Transformer	MV3-22 T	368661	4907142	2	0	0	56.1	56.1	1	4888.54	3.25	0	84.78	0	1.58	0	0	11.71	0	0	0	0	0	0	-42.02	-42.02
Inverter Transformer	MV3-15 T	368351	4907477	2	0	0	56.1	56.1	1	4914.86	3.25	0	84.83	0	1.59	0	0	11.74	0	0	0	0	0	0	-42.11	-42.11
Inverter Transformer	MV3-10 T	368162	4907669	2	0	0	56.1	56.1	1	4941.89	3.25	0	84.88	0	1.6	0	0	11.78	0	0	0	0	0	0	-42.2	-42.2
Inverter Transformer	MV3-16 T	368509	4907475	2	0	0	56.1	56.1	1	5018.97	3.25	0	85.01	0	1.63	0	0	11.88	0	0	0	0	0	0	-42.47	-42.47
Inverter Transformer	MV3-3 T	367944	4907927	2	0	0	56.1	56.1	1	5021.1	3.25	0	85.02	0	1.63	0	0	11.88	0	0	0	0	0	0	-42.47	-42.47
Inverter Transformer	MV3-20 T	368683	4907317	2	0	0	56.1	56.1	1	5026.05	3.25	0	85.02	0	1.63	0	0	11.89	0	0	0	0	0	0	-42.49	-42.49
Inverter Transformer	MV3-11 T	368340	4907662	2	0	0	56.1	56.1	1	5048.37	3.25	0	85.06	0	1.64	0	0	11.92	0	0	0	0	0	0	-42.57	-42.57
Inverter Transformer	MV3-6 T	368156	4907834	2	0	0	56.1	56.1	1	5069.08	3.25	0	85.1	0	1.65	0	0	11.94	0	0	0	0	0	0	-42.64	-42.64
Inverter Transformer	MV3-14 T	368678	4907498	2	0	0	56.1	56.1	1	5151.49	3.25	0	85.24	0	1.68	0	0	12.05	0	0	0	0	0	0	-42.91	-42.91
Inverter Transformer	MV3-1 T	368150	4907976	2	0	0	56.1	56.1	1	5179.77	3.25	0	85.29	0	1.69	0	0	12.09	0	0	0	0	0	0	-43.01	-43.01
Inverter Transformer	MV3-5 T	368335	4907843	2	0	0	56.1	56.1	1	5185.66	3.25	0	85.3	0	1.69	0	0	12.1	0	0	0	0	0	0	-43.03	-43.03
Inverter Transformer	MV3-9 T	368517	4907703	2	0	0	56.1	56.1	1	5194.28	3.25	0	85.31	0	1.69	0	0	12.11	0	0	0	0	0	0	-43.05	-43.05
Inverter Transformer	MV3-8 T	368685	4907712	2	0	0	56.1	56.1	1	5312.64	3.25	0	85.51	0	1.74	0	0	12.26	0	0	0	0	0	0	-43.44	-43.44
Inverter Transformer	MV3-4 T	368507	4907925	2	0	0	56.1	56.1	1	5357.49	3.25	0	85.58	0	1.75	0	0	12.32	0	0	0	0	0	0	-43.59	-43.59
Inverter Transformer	MV3-2 T	368677	4907928	2	0	0	56.1	56.1	1	5469.13	3.25	0	85.76	0	1.79	0	0	12.46	0	0	0	0	0	0	-43.95	-43.95
Inverter Transformer	MV6-3 T	370202	4907140	2	0	0	56.1	56.1	1	6099.39	3.25	0	86.71	0	2	0	0	13.22	0	0	0	0	0	0	-45.86	-45.86
Inverter Transformer	MV6-2 T	370091	4907339	2	0	0	56.1	56.1	1	6120.51	3.25	0	86.74	0	2	0	0	13.24	0	0	0	0	0	0	-45.92	-45.92
Inverter Transformer	MV4-15 T	369170	4908481	2	0	0	56.1	56.1	1	6209.88	3.25	0	86.86	0	2.03	0	0	13.35	0	0	0	0	0	0	-46.18	-46.18
Inverter Transformer	MV4-13 T	369057	4908605	2	0	0	56.1	56.1	1	6232.06	3.25	0	86.89	0	2.04	0	0	13.37	0	0	0	0	0	0	-46.25	-46.25
Inverter Transformer	MV4-14 T	369182	4908507	2	0	0	56.1	56.1	1	6237.4	3.25	0	86.9	0	2.04	0	0	13.38	0	0	0	0	0	0	-46.26	-46.26

	Inverter Transformer	MV4-12 T	369049	4908803	2	0	0	56.1	56.1	1	6381.58	3.25	0	87.1	0	2.08	0	0	13.55	0	0	0	0	0	0	-46.67	-46.67
	Inverter Transformer	MV4-7 T	369040	4909001	2	0	0	56.1	56.1	1	6533.09	3.25	0	87.3	0	2.13	0	0	13.72	0	0	0	0	0	0	-47.09	-47.09
	Inverter Transformer	MV4-11 T	369269	4908855	2	0	0	56.1	56.1	1	6559.8	3.25	0	87.34	0	2.14	0	0	13.75	0	0	0	0	0	0	-47.16	-47.16
	Inverter Transformer	MV4-10 T	369307	4908858	2	0	0	56.1	56.1	1	6586.27	3.25	0	87.37	0	2.14	0	0	13.78	0	0	0	0	0	0	-47.23	-47.23
	Inverter Transformer	MV4-8 T	369262	4909001	2	0	0	56.1	56.1	1	6668.99	3.25	0	87.48	0	2.17	0	0	13.87	0	0	0	0	0	0	-47.46	-47.46
	Inverter Transformer	MV4-9 T	369284	4909001	2	0	0	56.1	56.1	1	6682.71	3.25	0	87.5	0	2.17	0	0	13.88	0	0	0	0	0	0	-47.5	-47.5
	Inverter Transformer	MV4-4 T	369033	4909199	2	0	0	56.1	56.1	1	6688.22	3.25	0	87.51	0	2.17	0	0	13.89	0	0	0	0	0	0	-47.51	-47.51
	Inverter Transformer	MV5-6 T	369987	4908507	2	0	0	56.1	56.1	1	6790.35	3.25	0	87.64	0	2.2	0	0	14	0	0	0	0	0	0	-47.78	-47.78
	Inverter Transformer	MV4-6 T	369249	4909192	2	0	0	56.1	56.1	1	6811.59	3.25	0	87.66	0	2.21	0	0	14.03	0	0	0	0	0	0	-47.84	-47.84
	Inverter Transformer	MV4-5 T	369283	4909199	2	0	0	56.1	56.1	1	6837.85	3.25	0	87.7	0	2.21	0	0	14.05	0	0	0	0	0	0	-47.91	-47.91
	Inverter Transformer	MV4-1 T	369017	4909397	2	0	0	56.1	56.1	1	6840.42	3.25	0	87.7	0	2.22	0	0	14.06	0	0	0	0	0	0	-47.92	-47.92
	Inverter Transformer	MV5-5 T	370021	4908690	2	0	0	56.1	56.1	1	6942.94	3.25	0	87.83	0	2.24	0	0	14.17	0	0	0	0	0	0	-48.18	-48.18
	Inverter Transformer	MV4-3 T	369234	4909397	2	0	0	56.1	56.1	1	6966.63	3.25	0	87.86	0	2.25	0	0	14.19	0	0	0	0	0	0	-48.25	-48.25
	Inverter Transformer	MV4-2 T	369267	4909397	2	0	0	56.1	56.1	1	6986.22	3.25	0	87.88	0	2.26	0	0	14.21	0	0	0	0	0	0	-48.3	-48.3
	Inverter Transformer	MV5-2 T	370011	4908853	2	0	0	56.1	56.1	1	7052.15	3.25	0	87.97	0	2.27	0	0	14.29	0	0	0	0	0	0	-48.47	-48.47
	Inverter Transformer	MV5-4 T	370330	4908707	2	0	0	56.1	56.1	1	7176.49	3.25	0	88.12	0	2.31	0	0	14.42	0	0	0	0	0	0	-48.78	-48.78
	Inverter Transformer	MV5-3 T	370237	4908851	2	0	0	56.1	56.1	1	7209.64	3.25	0	88.16	0	2.32	0	0	14.45	0	0	0	0	0	0	-48.87	-48.87
	Inverter Transformer	MV5-1 T	370015	4909142	2	0	0	56.1	56.1	1	7265.44	3.25	0	88.23	0	2.33	0	0	14.51	0	0	0	0	0	0	-49.01	-49.01
	Line Reactor	NGR	369421	4908787.5	5	0	0	45.4	45.4	1	6605.91	5.25	0	87.4	0	3.23	1.37	0.09	2.7	0	0	0	0	0	0	-49.34	-49.34
Limit. Valu	0	0																								
Level D/N:	24.1058	24.1058																								

Receiver: Existing Noise Receptor
ID: G-104
X: 368362.2
Y: 4902275.1
Z: 4.5
Ground: 0

ISO	Description	ID	X	Y	Z	Ground	ReflOrd	LxT	LxN	L/A	Dist.	hm	Freq	Adiv	K0b	Agr	Abar	z	Aatm	Afol	Ahous	Cmet	CmetN	Dc	RL	LtotT	LtotN
	Sol_Luce Substation	S_Substation	369426	4908792	3.5	0	0	112.1	112.1	1	6603.16	5.25	0	87.4	0	1.3	2.52	0.35	10.36	0	0	0	0	0	0	10.5	10.5
	Inverter	MV1-15	365315	4904994	2	0	0	100.3	100.3	1	4083.85	3.25	0	83.22	0	0.54	0	0	17.18	0	0	0	0	0	0	-0.63	-0.63
	Inverter	MV1-12	365038	4905386	2	0	0	100.3	100.3	1	4552.8	3.25	0	84.17	0	0.6	0	0	17.91	0	0	0	0	0	0	-2.36	-2.36
	Inverter	MV1-11	364655	4905414	2	0	0	100.3	100.3	1	4857.57	3.25	0	84.73	0	0.63	0	0	18.37	0	0	0	0	0	0	-3.41	-3.41
	Inverter	MV1-8	364788	4905647	2	0	0	100.3	100.3	1	4913.72	3.25	0	84.83	0	0.63	0	0	18.45	0	0	0	0	0	0	-3.6	-3.6
	Inverter	MV3-21	368478	4907206	2	0	0	100.3	100.3	1	4932.26	3.25	0	84.86	0	0.64	0	0	18.48	0	0	0	0	0	0	-3.67	-3.67
	Inverter	MV2-3	365820	4906641	2	0	0	100.3	100.3	1	5052.12	3.25	0	85.07	0	0.65	0	0	18.66	0	0	0	0	0	0	-4.06	-4.06
	Inverter	MV3-20	368689	4907317	2	0	0	100.3	100.3	1	5052.48	3.25	0	85.07	0	0.65	0	0	18.66	0	0	0	0	0	0	-4.06	-4.06
	Inverter	MV3-19	368357	4907347	2	0	0	100.3	100.3	1	5071.9	3.25	0	85.1	0	0.65	0	0	18.69	0	0	0	0	0	0	-4.13	-4.13
	Inverter	MV1-9	364561	4905646	2	0	0	100.3	100.3	1	5080.56	3.25	0	85.12	0	0.65	0	0	18.7	0	0	0	0	0	0	-4.15	-4.15
	Inverter	MV1-4	364815	4905918	2	0	0	100.3	100.3	1	5084.62	3.25	0	85.13	0	0.65	0	0	18.7	0	0	0	0	0	0	-4.17	-4.17
	Inverter	MV2-4	365586	4906624	2	0	0	100.3	100.3	1	5159.48	3.25	0	85.25	0	0.66	0	0	18.81	0	0	0	0	0	0	-4.41	-4.41
	Inverter	MV1-5	364671	4905892	2	0	0	100.3	100.3	1	5167.87	3.25	0	85.27	0	0.66	0	0	18.83	0	0	0	0	0	0	-4.44	-4.44
	Inverter	MV3-18	367752	4907412	2	0	0	100.3	100.3	1	5173.02	3.25	0	85.27	0	0.66	0	0	18.83	0	0	0	0	0	0	-4.45	-4.45
	Inverter	MV3-17	368178	4907472	2	0	0	100.3	100.3	1	5200.16	3.25	0	85.32	0	0.66	0	0	18.87	0	0	0	0	0	0	-4.54	-4.54
	Inverter	MV3-15	368357	4907477	2	0	0	100.3	100.3	1	5201.9	3.25	0	85.32	0	0.66	0	0	18.87	0	0	0	0	0	0	-4.54	-4.54
	Inverter	MV3-16	368514	4907475	2	0	0	100.3	100.3	1	5202.12	3.25	0	85.32	0	0.66	0	0	18.87	0	0	0	0	0	0	-4.55	-4.55
	Inverter	MV6-3	370207	4907140	2	0	0	100.3	100.3	1	5202.94	3.25	0	85.32	0	0.66	0	0	18.88	0	0	0	0	0	0	-4.55	-4.55
	Inverter	MV1-2	364753	4906063	2	0	0	100.3	100.3	1	5232.07	3.25	0	85.37	0	0.66	0	0	18.92	0	0	0	0	0	0	-4.64	-4.64
	Inverter	MV3-14	368684	4907498	2	0	0	100.3	100.3	1	5232.8	3.25	0	85.37	0	0.66	0	0	18.92	0	0	0	0	0	0	-4.64	-4.64
	Inverter	MV1-6	364477	4905835	2	0	0	100.3	100.3	1	5269.5	3.25	0	85.44	0	0.66	0	0	18.97	0	0	0	0	0	0	-4.76	-4.76
	Inverter	MV3-13	367963	4907577	2	0	0	100.3	100.3	1	5316.91	3.25	0	85.51	0	0.67	0	0	19.04	0	0	0	0	0	0	-4.91	-4.91
	Inverter	MV1-1	364715	4906166	2	0	0	100.3	100.3	1	5333.03	3.25	0	85.54	0	0.67	0	0	19.06	0	0	0	0	0	0	-4.96	-4.96
	Inverter	MV6-2	370085	4907339	2	0	0	100.3	100.3	1	5348.94	3.25	0	85.57	0	0.67	0	0	19.09	0	0	0	0	0	0	-5.01	-5.01
	Inverter	MV3-12	367668	4907594	2	0	0	100.3	100.3	1	5364.01	3.25	0	85.59	0	0.67	0	0	19.11	0	0	0	0	0	0	-5.06	-5.06
	Inverter	MV3-11	368346	4907662	2	0	0	100.3	100.3	1	5386.92	3.25	0	85.63	0	0.67	0	0	19.14	0	0	0	0	0	0	-5.13	-5.13
	Inverter	MV3-10	368167	4907669	2	0	0	100.3	100.3	1	5397.43	3.25	0	85.64	0	0.67	0	0	19.16	0	0	0	0	0	0	-5.16	-5.16
	Inverter	MV3-9	368512	4907703	2	0	0	100.3	100.3	1	5429.97	3.25	0	85.7	0	0.68	0	0	19.2	0	0	0	0	0	0	-5.26	-5.26
	Inverter	MV3-8	368680	4907712	2	0	0	100.3	100.3	1	5446.18	3.25	0	85.72	0	0.68	0	0	19.22	0	0	0	0	0	0	-5.31	-5.31
	Inverter	MV3-7	367945	4907754	2	0	0	100.3	100.3	1	5494.76	3.25	0	85.8	0	0.68	0	0	19.29	0	0	0	0	0	0	-5.46	-5.46
	Inverter	MV3-6	368162	4907834	2	0	0	100.3	100.3	1	5562.5	3.25	0	85.91	0	0.68	0	0	19.39	0	0	0	0	0	0	-5.67	-5.67
	Inverter	MV3-3	367939	4907927	2	0	0	100.3	100.3	1	5667.72	3.25	0	86.07	0	0.69	0	0	19.54	0	0	0	0	0	0	-5.98	-5.98
	Inverter	MV1-14	365163	4905049	2	0	0	97.3	97.3	1	4234.31	3.25	0	83.54	0	0.56	0	0	17.42	0	0	0	0	0	0	-4.2	-4.2
	Gardiner Substation	G_Sub	366586.3	4903349.9	2.5	0	0	90.8	90.8	1	2075.82	3.5	0	77.34	0	-0.15	0	0	4.49	0	0	0	0	0	0	9.08	9.08
	Inverters	G_Inv10	366900.7	4902704.8	2	0	0	87.7	87.7	1	1523.36	3.25	0	74.66	0	2.52	0	0	2.07	0	0	0	0	0	0	8.41	8.41
	Inverter	MV1-13	364731	4905241	2	0	0	97.3	97.3	1	4688.52	3.25	0	84.42	0	0.61	0	0	18.12	0	0	0	0	0	0	-5.84	-5.84
	Inverter	MV5-5	370015	4908690	2	0	0	100.3	100.3	1	6624.4	3.25	0	87.42	0	0.71	0	0	20.82	0	0	0	0	0	0	-8.65	-8.65
	Inverter	MV1-10	365004	4905564	2	0	0	97.3	97.3	1	4700.47	3.25	0	84.44	0	0.61	0	0	18.13	0	0	0	0	0	0	-5.88	-5.88
	Inverter	MV4-11	369264	4908855	2	0	0	100.3	100.3	1	6641.41	3.25	0	87.45	0	0.71	0	0	20.84	0	0	0	0	0	0	-8.69	-8.69
	Inverter	MV4-10	369312	4908858	2	0	0	100.3	100.3	1	6651.07	3.25	0	87.46	0	0.71	0	0	20.86	0	0	0	0	0	0	-8.72	-8.72
	Inverter	MV5-4	370324	4908707	2	0	0	100.3	100.3	1	6724.43	3.25	0	87.55	0	0.71	0	0	20.95	0	0	0	0	0	0	-8.9	-8.9
	Inverter	MV4-7	369035	4909001	2	0	0	100.3	100.3	1	6759.47	3.25	0	87.6	0	0.71	0	0	20.99	0	0	0	0	0	0	-8.99	-8.99
	Inverter	MV5-2	370006	4908853	2	0	0	100.3	100.3	1	6780.18	3.25	0	87.62	0	0.71	0	0	21.02	0	0	0	0	0	0	-9.05	-9.05
	Inverter	MV4-8	369256	4909001	2	0	0	100.3	100.3	1	6785.03	3.25	0	87.63	0	0.71	0	0	21.03	0	0	0	0	0	0	-9.06	-9.06

Inverter	MV4-9	369289	4909001	2	0	0	100.3	100.3	1	6789.45	3.25	0	87.64	0	0.71	0	0	21.03	0	0	0	0	0	0	-9.07	-9.07
Inverter	MV5-3	370231	4908851	2	0	0	100.3	100.3	1	6836.29	3.25	0	87.7	0	0.71	0	0	21.09	0	0	0	0	0	0	-9.19	-9.19
Inverter	MV1-7	364925	4905782	2	0	0	97.3	97.3	1	4910.47	3.25	0	84.82	0	0.63	0	0	18.45	0	0	0	0	0	0	-6.59	-6.59
Inverters	G_Inv8	366844.5	4902838.5	2	0	0	87.7	87.7	1	1618.9	3.25	0	75.18	0	2.53	0	0	2.19	0	0	0	0	0	0	7.75	7.75
Inverter	MV4-4	369027	4909199	2	0	0	100.3	100.3	1	6955.74	3.25	0	87.85	0	0.71	0	0	21.24	0	0	0	0	0	0	-9.49	-9.49
Inverter	MV4-6	369243	4909192	2	0	0	100.3	100.3	1	6972.76	3.25	0	87.87	0	0.71	0	0	21.26	0	0	0	0	0	0	-9.53	-9.53
Inverter	MV4-5	369289	4909199	2	0	0	100.3	100.3	1	6985.65	3.25	0	87.88	0	0.71	0	0	21.28	0	0	0	0	0	0	-9.56	-9.56
Inverter	MV5-1	370020	4909142	2	0	0	100.3	100.3	1	7064.18	3.25	0	87.98	0	0.71	0	0	21.38	0	0	0	0	0	0	-9.76	-9.76
Inverters	G_Inv9	366750.9	4902691.8	2	0	0	87.7	87.7	1	1664.31	3.25	0	75.42	0	2.54	0	0	2.24	0	0	0	0	0	0	7.45	7.45
Inverter	MV4-1	369011	4909397	2	0	0	100.3	100.3	1	7151.39	3.25	0	88.09	0	0.71	0	0	21.49	0	0	0	0	0	0	-9.97	-9.97
Inverter	MV4-3	369229	4909397	2	0	0	100.3	100.3	1	7174.46	3.25	0	88.12	0	0.7	0	0	21.52	0	0	0	0	0	0	-10.02	-10.02
Inverter	MV4-2	369272	4909397	2	0	0	100.3	100.3	1	7179.78	3.25	0	88.12	0	0.7	0	0	21.52	0	0	0	0	0	0	-10.04	-10.04
Inverter	MV2-1	365842	4906816	2	0	0	97.3	97.3	1	5193.38	3.25	0	85.31	0	0.66	0	0	18.86	0	0	0	0	0	0	-7.52	-7.52
Inverters	G_Inv6	366788.5	4902972	2	0	0	87.7	87.7	1	1721.11	3.25	0	75.72	0	2.55	0	0	2.31	0	0	0	0	0	0	7.09	7.09
Inverters	G_Inv7	366694.6	4902824.7	2	0	0	87.7	87.7	1	1755.83	3.25	0	75.89	0	2.55	0	0	2.35	0	0	0	0	0	0	6.87	6.87
Inverter	MV6-1	370235	4907364	2	0	0	97.3	97.3	1	5422.57	3.25	0	85.68	0	0.68	0	0	19.19	0	0	0	0	0	0	-8.24	-8.24
Inverters	G_Inv4	366732.8	4903105	2	0	0	87.7	87.7	1	1828.57	3.25	0	76.24	0	2.56	0	0	2.43	0	0	0	0	0	0	6.42	6.42
Inverters	G_Inv5	366638.5	4902958.1	2	0	0	87.7	87.7	1	1854.09	3.25	0	76.36	0	2.57	0	0	2.46	0	0	0	0	0	0	6.27	6.27
Inverters	G_Inv2	366676.9	4903239.1	2	0	0	87.7	87.7	1	1941.53	3.25	0	76.76	0	2.58	0	0	2.57	0	0	0	0	0	0	5.75	5.75
Inverters	G_Inv3	366583.7	4903091.4	2	0	0	87.7	87.7	1	1956.89	3.25	0	76.83	0	2.58	0	0	2.59	0	0	0	0	0	0	5.67	5.67
Inverters	G_Inv1	366526.4	4903225.8	2	0	0	87.7	87.7	1	2067.37	3.25	0	77.31	0	2.59	0	0	2.71	0	0	0	0	0	0	5.05	5.05
DSTATCOM - 10 MVAR #2	DSAT2	369403	4908757	2.5	0	0	96.6	96.6	1	6564.93	3.5	0	87.34	0	3.81	0	0	4.11	0	0	0	0	0	0	1.37	1.37
DSTATCOM - 10 MVAR #1	DSAT1	369437	4908757	2.5	0	0	96.6	96.6	1	6570.41	3.5	0	87.35	0	3.81	0	0	4.11	0	0	0	0	0	0	1.36	1.36
SubstationTransformer	W_ST	369711.17	4906112.3	2.5	0	0	92	92	1	4067.38	3.5	0	83.19	0	0.35	0	-0.13	7.45	0	0	0	0	0	0	0.99	0.99
Westbrook Inverter Enclosur	W_INV3	369508	4906164	2	0	0	89.1	89.1	1	4054.18	3.25	0	83.16	0	1.41	0	0	11.16	0	0	0	0	0	0	-6.67	-6.67
Westbrook Inverter Enclosur	W_INV4	369673	4906164	2	0	0	89.1	89.1	1	4103.87	3.25	0	83.26	0	1.42	0	0	11.23	0	0	0	0	0	0	-6.86	-6.86
Westbrook Inverter Enclosur	W_INV2	369374	4906388	2	0	0	89.1	89.1	1	4235.53	3.25	0	83.54	0	1.45	0	0	11.42	0	0	0	0	0	0	-7.35	-7.35
Westbrook Inverter Enclosur	W_INV7	369780	4906417	2	0	0	89.1	89.1	1	4377.84	3.25	0	83.83	0	1.49	0	0	11.62	0	0	0	0	0	0	-7.87	-7.87
Westbrook Inverter Enclosur	W_INV5	369719	4906574	2	0	0	89.1	89.1	1	4507.93	3.25	0	84.08	0	1.52	0	0	11.8	0	0	0	0	0	0	-8.34	-8.34
Westbrook Inverter Enclosur	W_INV6	369875	4906578	2	0	0	89.1	89.1	1	4561.09	3.25	0	84.18	0	1.53	0	0	11.87	0	0	0	0	0	0	-8.52	-8.52
Inverter	MV3-22	368656	4907142	2	0	0	89.1	89.1	1	4875.76	3.25	0	84.76	0	1.61	0	0	12.3	0	0	0	0	0	0	-9.61	-9.61
Inverter	MV2-2	365977	4906654	2	0	0	89.1	89.1	1	4986.38	3.25	0	84.96	0	1.64	0	0	12.45	0	0	0	0	0	0	-9.98	-9.98
Inverter	MV1-3	364440	4906039	2	0	0	89.1	89.1	1	5436.05	3.25	0	85.71	0	1.75	0	0	13.04	0	0	0	0	0	0	-11.43	-11.43
Inverter	MV3-5	368340	4907843	2	0	0	89.1	89.1	1	5567.94	3.25	0	85.91	0	1.78	0	0	13.21	0	0	0	0	0	0	-11.85	-11.85
Inverter	MV3-4	368502	4907925	2	0	0	89.1	89.1	1	5651.63	3.25	0	86.04	0	1.8	0	0	13.32	0	0	0	0	0	0	-12.1	-12.1
Inverter	MV3-2	368671	4907928	2	0	0	89.1	89.1	1	5661.33	3.25	0	86.06	0	1.8	0	0	13.33	0	0	0	0	0	0	-12.13	-12.13
Inverter	MV3-1	368156	4907976	2	0	0	89.1	89.1	1	5704.63	3.25	0	86.12	0	1.81	0	0	13.39	0	0	0	0	0	0	-12.27	-12.27
Fixed Reactor Bank 1	FRB1	369378	4908755	6	0	0	89.8	89.8	1	6559.04	5.25	0	87.34	0	-0.34	0	0	10.32	0	0	0	0	0	0	-7.54	-7.54
Fixed Reactor Bank 2	FRB2	369464	4908755	6	0	0	89.8	89.8	1	6572.9	5.25	0	87.36	0	-0.34	0	0	10.33	0	0	0	0	0	0	-7.57	-7.57
Westbrook Inverter Enclosur	W_INV1	369409	4906578	2	0	0	86.1	86.1	1	4428.4	3.25	0	83.92	0	1.5	0	0	11.69	0	0	0	0	0	0	-11.05	-11.05
Inverter	MV4-15	369176	4908481	2	0	0	89.1	89.1	1	6259.03	3.25	0	86.93	0	1.95	0	0	14.09	0	0	0	0	0	0	-13.91	-13.91
Inverter	MV4-14	369176	4908507	2	0	0	89.1	89.1	1	6284.81	3.25	0	86.97	0	1.96	0	0	14.12	0	0	0	0	0	0	-13.98	-13.98
Inverter	MV4-13	369051	4908605	2	0	0	89.1	89.1	1	6367.27	3.25	0	87.08	0	1.98	0	0	14.22	0	0	0	0	0	0	-14.22	-14.22
Inverter	MV5-6	369982	4908507	2	0	0	89.1	89.1	1	6438.97	3.25	0	87.18	0	1.99	0	0	14.31	0	0	0	0	0	0	-14.42	-14.42
Inverter	MV4-12	369043	4908803	2	0	0	89.1	89.1	1	6563.31	3.25	0	87.34	0	2.02	0	0	14.46	0	0	0	0	0	0	-14.77	-14.77
Inverter	MV6-4	370250	4906966	2	0	0	86.1	86.1	1	5056.51	3.25	0	85.08	0	1.65	0	0	12.54	0	0	0	0	0	0	-13.21	-13.21
Westbrook Inverter Transfor	W_INVTR1	369403	4906578	2	0	0	78.2	78.2	1	4426.99	3.25	0	83.92	0	-3.06	0	0	2.21	0	0	0	0	0	0	-4.83	-4.83
Westbrook Inverter Transfor	W_INVTR3	369514	4906164	2	0	0	77.3	77.3	1	4055.88	3.25	0	83.16	0	-2.98	0	0	2.08	0	0	0	0	0	0	-4.92	-4.92
Westbrook Inverter Transfor	W_INVTR4	369679	4906164	2	0	0	77.3	77.3	1	4105.79	3.25	0	83.27	0	-2.99	0	0	2.09	0	0	0	0	0	0	-5.03	-5.03
Westbrook Inverter Transfor	W_INVTR2	369368	4906388	2	0	0	77.3	77.3	1	4234.1	3.25	0	83.54	0	-3.02	0	0	2.14	0	0	0	0	0	0	-5.32	-5.32
Westbrook Inverter Transfor	W_INVTR7	369786	4906417	2	0	0	77.3	77.3	1	4379.79	3.25	0	83.83	0	-3.05	0	0	2.19	0	0	0	0	0	0	-5.63	-5.63
Westbrook Inverter Transfor	W_INVTR5	369725	4906574	2	0	0	77.3	77.3	1	4509.74	3.25	0	84.08	0	-3.08	0	0	2.24	0	0	0	0	0	0	-5.91	-5.91
Westbrook Inverter Transfor	W_INVTR6	369881	4906578	2	0	0	77.3	77.3	1	4563.08	3.25	0	84.19	0	-3.09	0	0	2.26	0	0	0	0	0	0	-6.02	-6.02
Inverter Transformer	MV1-14 T	365157	4905049	2	0	0	69.4	69.4	1	4238.85	3.25	0	83.54	0	2.84	0	0	6.85	0	0	0	0	0	0	-23.89	-23.89
Inverter Transformer	MV1-13 T	364725	4905241	2	0	0	69.4	69.4	1	4693.16	3.25	0	84.43	0	2.95	0	0	7.17	0	0	0	0	0	0	-25.2	-25.2
Inverter Transformer	MV1-10 T	365010	4905564	2	0	0	69.4	69.4	1	4696.18	3.25	0	84.43	0	2.95	0	0	7.18	0	0	0	0	0	0	-25.21	-25.21
Inverter Transformer	MV1-7 T	364919	4905782	2	0	0	69.4	69.4	1	4914.67	3.25	0	84.83	0	3	0	0	7.32	0	0	0	0	0	0	-25.8	-25.8
Inverter Transformer	MV6-4 T	370244	4906966	2	0	0	69.4	69.4	1	5054.28	3.25	0	85.07	0	3.02	0	0	7.42	0	0	0	0	0	0	-26.16	-26.16
Inverter Transformer	MV2-1 T	365836	4906816	2	0	0	69.4	69.4	1	5196.29	3.25	0	85.31	0	3.05	0	0	7.51	0	0	0	0	0	0	-26.53	-26.53
Inverter Transformer	MV6-1 T	370230	4907364	2	0	0	69.4	69.4	1	5420.85	3.25	0	85.68	0	3.09	0	0	7.66	0	0	0	0	0	0	-27.08	-27.08
Inverter Transformer	MV1-15 T	365309	4904994	2	0	0	56.1	56.1	1	4088.33	3.25	0	83.23	0	1.28	0	0	10.59	0	0	0	0	0	0	-39.04	-39.04
Inverter Transformer	MV1-12 T	365044	4905386	2	0	0	56.1	56.1	1	4548.42	3.25	0	84.16	0	1.46	0	0	11.24	0	0	0	0	0	0	-40.8	-40.8
Inverter Transformer	MV1-11 T	364649	4905414	2	0	0	56.1	56.1	1	4862.16	3.25	0	84.74	0	1.58	0	0	11.67	0	0	0	0	0	0	-41.92	-41.92
Inverter Transformer	MV3-22 T	368661	4907142	2	0	0	56.1	56.1	1	4876.06	3.25	0	84.76	0	1.58	0	0	11.69	0	0	0	0	0	0	-41.97	-41.97
Inverter Transformer	MV1-8 T	364782	4905647	2	0	0	56.1	56.1	1	4918.08	3.25	0	84.84	0	1.6	0	0	11.75	0	0	0	0	0	0	-42.12	-42.12
Inverter Transformer	MV3-21 T	368484	4907206	2	0	0	56.1	56.1	1	4932.4	3.25	0	84.86	0	1.6	0	0	11.76	0	0	0	0	0	0	-42.17	-42.17
Inverter Transformer	MV2-2 T	365982	4906654	2	0	0	56.1	56.1	1	4983.99	3.25	0	84.95	0	1.62	0	0	11.83	0	0	0	0	0	0	-42.35	-42.35
Inverter Transformer	MV3-20 T	368683	4907317	2	0	0	56.1	56.1	1	5052.1	3.25	0	85.07	0	1.64	0	0	11.92	0	0	0	0	0	0	-42.58	-42.58
Inverter Transformer	MV2-3 T	365814	4906641	2	0	0	56.1	56.1	1	5055.14	3.25	0	85.07	0	1.65	0	0	11.93	0	0	0	0	0	0	-42.59	-42.59
Inverter Transformer	MV3-19 T	368352	4907347	2	0	0	56.1	56.1	1	5071.91	3.25	0	85.1	0	1.65	0	0	11.95	0	0	0	0	0	0	-42.64	-42.64
Inverter Transformer	MV1-4 T	364821	4905918	2	0	0	56.1	56.1	1	5080.44	3.25	0	85.12	0	1.65	0	0	11.96	0	0	0	0	0	0	-42.67	-42.67
Inverter Transformer	MV1-9 T	364555	4905646	2	0	0	56.1	56.1	1	5085.05	3.25	0	85.13	0	1.66	0	0	11.97	0	0	0	0	0	0	-42.69	-42.69
Inverter Transformer	MV2-4 T	365590	4906628	2	0	0	56.1	56.1	1	5160.7	3.25	0	85.25	0	1.68	0	0	12.06	0	0	0	0	0	0	-42.94	-42.94
Inverter Transformer	MV1-5 T	364676	4905892	2	0	0	56.1	56.1	1	5164.3	3.25	0	85.26	0	1.68	0	0	12.07	0	0	0	0	0	0	-42.95	-42.95

	Inverter Transformer	MV3-18 T	367757	4907412	2	0	0	56.1	56.1	1	5172.43	3.25	0	85.27	0	1.69	0	0	12.08	0	0	0	0	0	0	-42.98	-42.98
	Inverter Transformer	MV3-17 T	368183	4907472	2	0	0	56.1	56.1	1	5199.99	3.25	0	85.32	0	1.7	0	0	12.11	0	0	0	0	0	0	-43.07	-43.07
	Inverter Transformer	MV6-3 T	370202	4907140	2	0	0	56.1	56.1	1	5201.17	3.25	0	85.32	0	1.7	0	0	12.12	0	0	0	0	0	0	-43.08	-43.08
	Inverter Transformer	MV3-15 T	368351	4907477	2	0	0	56.1	56.1	1	5201.91	3.25	0	85.32	0	1.7	0	0	12.12	0	0	0	0	0	0	-43.08	-43.08
	Inverter Transformer	MV3-16 T	368509	4907475	2	0	0	56.1	56.1	1	5201.97	3.25	0	85.32	0	1.7	0	0	12.12	0	0	0	0	0	0	-43.08	-43.08
	Inverter Transformer	MV1-2 T	364759	4906063	2	0	0	56.1	56.1	1	5227.93	3.25	0	85.37	0	1.71	0	0	12.15	0	0	0	0	0	0	-43.17	-43.17
	Inverter Transformer	MV3-14 T	368678	4907498	2	0	0	56.1	56.1	1	5232.44	3.25	0	85.37	0	1.71	0	0	12.16	0	0	0	0	0	0	-43.18	-43.18
	Inverter Transformer	MV1-6 T	364482	4905835	2	0	0	56.1	56.1	1	5265.82	3.25	0	85.43	0	1.72	0	0	12.2	0	0	0	0	0	0	-43.29	-43.29
	Inverter Transformer	MV3-13 T	367958	4907577	2	0	0	56.1	56.1	1	5317.29	3.25	0	85.51	0	1.74	0	0	12.27	0	0	0	0	0	0	-43.46	-43.46
	Inverter Transformer	MV1-1 T	364721	4906166	2	0	0	56.1	56.1	1	5328.93	3.25	0	85.53	0	1.74	0	0	12.28	0	0	0	0	0	0	-43.5	-43.5
	Inverter Transformer	MV6-2 T	370091	4907339	2	0	0	56.1	56.1	1	5350.87	3.25	0	85.57	0	1.75	0	0	12.31	0	0	0	0	0	0	-43.57	-43.57
	Inverter Transformer	MV3-12 T	367674	4907594	2	0	0	56.1	56.1	1	5363.24	3.25	0	85.59	0	1.75	0	0	12.32	0	0	0	0	0	0	-43.61	-43.61
	Inverter Transformer	MV3-11 T	368340	4907662	2	0	0	56.1	56.1	1	5386.95	3.25	0	85.63	0	1.76	0	0	12.35	0	0	0	0	0	0	-43.68	-43.68
	Inverter Transformer	MV3-10 T	368162	4907669	2	0	0	56.1	56.1	1	5397.61	3.25	0	85.64	0	1.77	0	0	12.37	0	0	0	0	0	0	-43.72	-43.72
	Inverter Transformer	MV3-9 T	368517	4907703	2	0	0	56.1	56.1	1	5430.11	3.25	0	85.7	0	1.78	0	0	12.41	0	0	0	0	0	0	-43.82	-43.82
	Inverter Transformer	MV1-3 T	364435	4906039	2	0	0	56.1	56.1	1	5439.66	3.25	0	85.71	0	1.78	0	0	12.42	0	0	0	0	0	0	-43.85	-43.85
	Inverter Transformer	MV3-8 T	368685	4907712	2	0	0	56.1	56.1	1	5446.47	3.25	0	85.72	0	1.78	0	0	12.43	0	0	0	0	0	0	-43.87	-43.87
	Inverter Transformer	MV3-7 T	367951	4907754	2	0	0	56.1	56.1	1	5494.31	3.25	0	85.8	0	1.8	0	0	12.49	0	0	0	0	0	0	-44.03	-44.03
	Inverter Transformer	MV3-6 T	368156	4907834	2	0	0	56.1	56.1	1	5562.72	3.25	0	85.91	0	1.82	0	0	12.57	0	0	0	0	0	0	-44.24	-44.24
	Inverter Transformer	MV3-5 T	368335	4907843	2	0	0	56.1	56.1	1	5567.97	3.25	0	85.91	0	1.82	0	0	12.58	0	0	0	0	0	0	-44.26	-44.26
	Inverter Transformer	MV3-4 T	368507	4907925	2	0	0	56.1	56.1	1	5651.76	3.25	0	86.04	0	1.85	0	0	12.68	0	0	0	0	0	0	-44.52	-44.52
	Inverter Transformer	MV3-2 T	368677	4907928	2	0	0	56.1	56.1	1	5661.66	3.25	0	86.06	0	1.85	0	0	12.7	0	0	0	0	0	0	-44.55	-44.55
	Inverter Transformer	MV3-3 T	367944	4907927	2	0	0	56.1	56.1	1	5667.35	3.25	0	86.07	0	1.86	0	0	12.7	0	0	0	0	0	0	-44.57	-44.57
	Inverter Transformer	MV3-1 T	368150	4907976	2	0	0	56.1	56.1	1	5704.85	3.25	0	86.12	0	1.87	0	0	12.75	0	0	0	0	0	0	-44.68	-44.68
	Inverter Transformer	MV4-15 T	369170	4908481	2	0	0	56.1	56.1	1	6258.25	3.25	0	86.93	0	2.05	0	0	13.4	0	0	0	0	0	0	-46.32	-46.32
	Inverter Transformer	MV4-14 T	369182	4908507	2	0	0	56.1	56.1	1	6285.59	3.25	0	86.97	0	2.05	0	0	13.44	0	0	0	0	0	0	-46.4	-46.4
	Inverter Transformer	MV4-13 T	369057	4908605	2	0	0	56.1	56.1	1	6367.92	3.25	0	87.08	0	2.08	0	0	13.53	0	0	0	0	0	0	-46.63	-46.63
	Inverter Transformer	MV5-6 T	369987	4908507	2	0	0	56.1	56.1	1	6440.23	3.25	0	87.18	0	2.1	0	0	13.61	0	0	0	0	0	0	-46.83	-46.83
	Inverter Transformer	MV4-12 T	369049	4908803	2	0	0	56.1	56.1	1	6563.93	3.25	0	87.34	0	2.14	0	0	13.75	0	0	0	0	0	0	-47.17	-47.17
	Inverter Transformer	MV5-5 T	370021	4908690	2	0	0	56.1	56.1	1	6625.9	3.25	0	87.42	0	2.15	0	0	13.82	0	0	0	0	0	0	-47.34	-47.34
	Inverter Transformer	MV4-11 T	369269	4908855	2	0	0	56.1	56.1	1	6642.09	3.25	0	87.45	0	2.16	0	0	13.84	0	0	0	0	0	0	-47.39	-47.39
	Inverter Transformer	MV4-10 T	369307	4908858	2	0	0	56.1	56.1	1	6650.36	3.25	0	87.46	0	2.16	0	0	13.85	0	0	0	0	0	0	-47.41	-47.41
	Inverter Transformer	MV5-4 T	370330	4908707	2	0	0	56.1	56.1	1	6726.19	3.25	0	87.56	0	2.18	0	0	13.93	0	0	0	0	0	0	-47.61	-47.61
	Inverter Transformer	MV4-7 T	369040	4909001	2	0	0	56.1	56.1	1	6759.97	3.25	0	87.6	0	2.19	0	0	13.97	0	0	0	0	0	0	-47.7	-47.7
	Inverter Transformer	MV5-2 T	370011	4908853	2	0	0	56.1	56.1	1	6781.39	3.25	0	87.63	0	2.2	0	0	13.99	0	0	0	0	0	0	-47.76	-47.76
	Inverter Transformer	MV4-8 T	369262	4909001	2	0	0	56.1	56.1	1	6785.82	3.25	0	87.63	0	2.2	0	0	14	0	0	0	0	0	0	-47.77	-47.77
	Inverter Transformer	MV4-9 T	369284	4909001	2	0	0	56.1	56.1	1	6788.77	3.25	0	87.64	0	2.2	0	0	14	0	0	0	0	0	0	-47.78	-47.78
	Inverter Transformer	MV5-3 T	370237	4908851	2	0	0	56.1	56.1	1	6837.93	3.25	0	87.7	0	2.21	0	0	14.05	0	0	0	0	0	0	-47.91	-47.91
	Inverter Transformer	MV4-4 T	369033	4909199	2	0	0	56.1	56.1	1	6956.32	3.25	0	87.85	0	2.25	0	0	14.18	0	0	0	0	0	0	-48.22	-48.22
	Inverter Transformer	MV4-6 T	369249	4909192	2	0	0	56.1	56.1	1	6973.52	3.25	0	87.87	0	2.25	0	0	14.2	0	0	0	0	0	0	-48.26	-48.26
	Inverter Transformer	MV4-5 T	369283	4909199	2	0	0	56.1	56.1	1	6984.86	3.25	0	87.88	0	2.26	0	0	14.21	0	0	0	0	0	0	-48.29	-48.29
	Inverter Transformer	MV5-1 T	370015	4909142	2	0	0	56.1	56.1	1	7063.01	3.25	0	87.98	0	2.28	0	0	14.3	0	0	0	0	0	0	-48.5	-48.5
	Inverter Transformer	MV4-1 T	369017	4909397	2	0	0	56.1	56.1	1	7151.94	3.25	0	88.09	0	2.3	0	0	14.39	0	0	0	0	0	0	-48.72	-48.72
	Inverter Transformer	MV4-3 T	369234	4909397	2	0	0	56.1	56.1	1	7175.06	3.25	0	88.12	0	2.31	0	0	14.42	0	0	0	0	0	0	-48.78	-48.78
	Inverter Transformer	MV4-2 T	369267	4909397	2	0	0	56.1	56.1	1	7179.15	3.25	0	88.12	0	2.31	0	0	14.42	0	0	0	0	0	0	-48.79	-48.79
	Line Reactor	NGR	369421	4908787.5	5	0	0	45.4	45.4	1	6597.91	5.25	0	87.39	0	3.23	1.37	0.12	2.7	0	0	0	0	0	0	-49.32	-49.32
Limit. Valu	0	0																								
Level D/N:	19.5504	19.5504																								

Receiver: Existing Noise Receptor
ID: G-105
X: 365135.2
Y: 4903856
Z: 4.5
Ground: 0

ISO	Description	ID	X	Y	Z	Ground	ReflOrd	LxT	LxN	L/A	Dist.	hm	Freq	Adiv	K0b	Agr	Abar	z	Aatm	Afol	Ahous	Cmet	CmetN	Dc	RL	LtotT	LtotN
	Inverter	MV1-15	365315	4904994	2	0	0	100.3	100.3	1	1152.12	3.25	0	72.23	0	-0.18	0	0	11.39	0	0	0	0	0	0	16.87	16.87
	Inverter	MV1-12	365038	4905386	2	0	0	100.3	100.3	1	1533.09	3.25	0	74.71	0	-0.02	0	0	12.41	0	0	0	0	0	0	13.22	13.22
	Inverter	MV1-11	364655	4905414	2	0	0	100.3	100.3	1	1630.33	3.25	0	75.25	0	0.01	0	0	12.64	0	0	0	0	0	0	12.41	12.41
	Inverter	MV1-14	365163	4905049	2	0	0	97.3	97.3	1	1193.33	3.25	0	72.54	0	-0.16	0	0	11.51	0	0	0	0	0	0	13.43	13.43
	Sol_Luce Substation	S_Substation	369426	4908792	3.5	0	0	112.1	112.1	1	6540.26	5.25	0	87.31	0	1.29	2.53	0.27	10.3	0	0	0	0	0	0	10.65	10.65
	Inverter	MV1-8	364788	4905647	2	0	0	100.3	100.3	1	1824.35	3.25	0	76.22	0	0.08	0	0	13.08	0	0	0	0	0	0	10.93	10.93
	Inverter	MV1-9	364561	4905646	2	0	0	100.3	100.3	1	1879.84	3.25	0	76.48	0	0.09	0	0	13.2	0	0	0	0	0	0	10.53	10.53
	Inverter	MV1-13	364731	4905241	2	0	0	97.3	97.3	1	1442.78	3.25	0	74.18	0	-0.06	0	0	12.18	0	0	0	0	0	0	11	11
	Inverter	MV1-6	364477	4905835	2	0	0	100.3	100.3	1	2085.59	3.25	0	77.38	0	0.15	0	0	13.64	0	0	0	0	0	0	9.13	9.13
	Inverter	MV1-4	364815	4905918	2	0	0	100.3	100.3	1	2086.71	3.25	0	77.39	0	0.15	0	0	13.64	0	0	0	0	0	0	9.13	9.13
	Inverter	MV1-5	364671	4905892	2	0	0	100.3	100.3	1	2088.25	3.25	0	77.4	0	0.15	0	0	13.65	0	0	0	0	0	0	9.12	9.12
	Inverter	MV1-2	364753	4906063	2	0	0	100.3	100.3	1	2239.85	3.25	0	78	0	0.19	0	0	13.95	0	0	0	0	0	0	8.16	8.16
	Inverter	MV1-1	364715	4906166	2	0	0	100.3	100.3	1	2347.91	3.25	0	78.41	0	0.22	0	0	14.17	0	0	0	0	0	0	7.51	7.51
	Inverter	MV1-10	365004	4905564	2	0	0	97.3	97.3	1	1713.03	3.25	0	75.68	0	0.04	0	0	12.83	0	0	0	0	0	0	8.76	8.76
	Inverter	MV1-7	364925	4905782	2	0	0	97.3	97.3	1	1937.44	3.25	0	76.74	0	0.11	0	0	13.33	0	0	0	0	0	0	7.13	7.13
	Inverter	MV2-4	365586	4906624	2	0	0	100.3	100.3	1	2804.47	3.25	0	79.96	0	0.32	0	0	15.02	0	0	0	0	0	0	5.01	5.01
	Inverter	MV2-3	365820	4906641	2	0	0	100.3	100.3	1	2867.96	3.25	0	80.15	0	0.34	0	0	15.14	0	0	0	0	0	0	4.69	4.69

Inverter	MV2-1	365842	4906816	2	0	0	97.3	97.3	1	3043.22	3.25	0	80.67	0	0.37	0	0	15.45	0	0	0	0	0	0	0.83	0.83
Inverter	MV3-18	367752	4907412	2	0	0	100.3	100.3	1	4415.06	3.25	0	83.9	0	0.58	0	0	17.7	0	0	0	0	0	0	-1.87	-1.87
Inverter	MV3-12	367668	4907594	2	0	0	100.3	100.3	1	4515.28	3.25	0	84.09	0	0.59	0	0	17.85	0	0	0	0	0	0	-2.23	-2.23
Gardiner Substation	G_Sub	366586.3	4903349.9	2.5	0	0	90.8	90.8	1	1536.83	4.25	0	74.73	0	0.84	4.47	0.31	3.55	0	0	0	0	0	0	7.19	7.19
Inverter	MV3-13	367963	4907577	2	0	0	100.3	100.3	1	4673.57	3.25	0	84.39	0	0.61	0	0	18.09	0	0	0	0	0	0	-2.79	-2.79
Inverter	MV3-17	368178	4907472	2	0	0	100.3	100.3	1	4725.9	3.25	0	84.49	0	0.62	0	0	18.17	0	0	0	0	0	0	-2.97	-2.97
Inverter	MV3-21	368478	4907206	2	0	0	100.3	100.3	1	4732.53	3.25	0	84.5	0	0.62	0	0	18.18	0	0	0	0	0	0	-2.99	-2.99
Inverter	MV3-19	368357	4907347	2	0	0	100.3	100.3	1	4750.48	3.25	0	84.53	0	0.62	0	0	18.21	0	0	0	0	0	0	-3.05	-3.05
Inverter	MV3-7	367945	4907754	2	0	0	100.3	100.3	1	4805.14	3.25	0	84.63	0	0.62	0	0	18.29	0	0	0	0	0	0	-3.24	-3.24
Inverter	MV3-15	368357	4907477	2	0	0	100.3	100.3	1	4846.82	3.25	0	84.71	0	0.63	0	0	18.35	0	0	0	0	0	0	-3.38	-3.38
Inverter	MV3-10	368167	4907669	2	0	0	100.3	100.3	1	4871.43	3.25	0	84.75	0	0.63	0	0	18.39	0	0	0	0	0	0	-3.46	-3.46
Inverter	MV3-3	367939	4907927	2	0	0	100.3	100.3	1	4943.11	3.25	0	84.88	0	0.64	0	0	18.5	0	0	0	0	0	0	-3.7	-3.7
Inverter	MV3-16	368514	4907475	2	0	0	100.3	100.3	1	4951.11	3.25	0	84.89	0	0.64	0	0	18.51	0	0	0	0	0	0	-3.73	-3.73
Inverter	MV3-20	368689	4907317	2	0	0	100.3	100.3	1	4960.65	3.25	0	84.91	0	0.64	0	0	18.52	0	0	0	0	0	0	-3.76	-3.76
Inverter	MV3-11	368346	4907662	2	0	0	100.3	100.3	1	4979.45	3.25	0	84.94	0	0.64	0	0	18.55	0	0	0	0	0	0	-3.82	-3.82
Inverter	MV3-6	368162	4907834	2	0	0	100.3	100.3	1	4998.6	3.25	0	84.98	0	0.64	0	0	18.58	0	0	0	0	0	0	-3.89	-3.89
Inverter	MV3-14	368684	4907498	2	0	0	100.3	100.3	1	5085.09	3.25	0	85.13	0	0.65	0	0	18.7	0	0	0	0	0	0	-4.17	-4.17
Inverter	MV3-9	368512	4907703	2	0	0	100.3	100.3	1	5118.81	3.25	0	85.18	0	0.65	0	0	18.75	0	0	0	0	0	0	-4.28	-4.28
Inverter	MV3-8	368680	4907712	2	0	0	100.3	100.3	1	5237.78	3.25	0	85.38	0	0.66	0	0	18.93	0	0	0	0	0	0	-4.66	-4.66
Inverter	MV6-3	370207	4907140	2	0	0	100.3	100.3	1	6042.17	3.25	0	86.62	0	0.71	0	0	20.05	0	0	0	0	0	0	-7.07	-7.07
Inverter	MV6-2	370085	4907339	2	0	0	100.3	100.3	1	6052.42	3.25	0	86.64	0	0.71	0	0	20.06	0	0	0	0	0	0	-7.1	-7.1
Inverter	MV4-7	369035	4909001	2	0	0	100.3	100.3	1	6455.96	3.25	0	87.2	0	0.71	0	0	20.6	0	0	0	0	0	0	-8.2	-8.2
Inverter	MV4-11	369264	4908855	2	0	0	100.3	100.3	1	6483.59	3.25	0	87.24	0	0.71	0	0	20.64	0	0	0	0	0	0	-8.28	-8.28
Inverter	MV4-10	369312	4908858	2	0	0	100.3	100.3	1	6516.57	3.25	0	87.28	0	0.71	0	0	20.68	0	0	0	0	0	0	-8.36	-8.36
Inverters	G_Inv1	366526.4	4903225.8	2	0	0	87.7	87.7	1	1527.28	3.25	0	74.68	0	2.52	0	0	2.08	0	0	0	0	0	0	8.38	8.38
Inverter	MV4-8	369256	4909001	2	0	0	100.3	100.3	1	6591.81	3.25	0	87.38	0	0.72	0	0	20.78	0	0	0	0	0	0	-8.56	-8.56
Inverter	MV4-4	369027	4909199	2	0	0	100.3	100.3	1	6610.13	3.25	0	87.4	0	0.72	0	0	20.8	0	0	0	0	0	0	-8.61	-8.61
Inverter	MV4-9	369289	4909001	2	0	0	100.3	100.3	1	6612.49	3.25	0	87.41	0	0.71	0	0	20.81	0	0	0	0	0	0	-8.62	-8.62
Inverter	MV4-6	369243	4909192	2	0	0	100.3	100.3	1	6734.01	3.25	0	87.57	0	0.71	0	0	20.96	0	0	0	0	0	0	-8.93	-8.93
Inverter	MV4-1	369011	4909397	2	0	0	100.3	100.3	1	6761.99	3.25	0	87.6	0	0.71	0	0	21	0	0	0	0	0	0	-9	-9
Inverter	MV4-5	369289	4909199	2	0	0	100.3	100.3	1	6767.7	3.25	0	87.61	0	0.71	0	0	21	0	0	0	0	0	0	-9.02	-9.02
Inverter	MV5-5	370015	4908690	2	0	0	100.3	100.3	1	6868.77	3.25	0	87.74	0	0.71	0	0	21.13	0	0	0	0	0	0	-9.27	-9.27
Inverter	MV4-3	369229	4909397	2	0	0	100.3	100.3	1	6889.26	3.25	0	87.76	0	0.71	0	0	21.16	0	0	0	0	0	0	-9.32	-9.32
Inverter	MV4-2	369272	4909397	2	0	0	100.3	100.3	1	6914.9	3.25	0	87.8	0	0.71	0	0	21.19	0	0	0	0	0	0	-9.39	-9.39
Inverter	MV5-2	370006	4908853	2	0	0	100.3	100.3	1	6978.16	3.25	0	87.87	0	0.71	0	0	21.27	0	0	0	0	0	0	-9.54	-9.54
Inverters	G_Inv3	366583.7	4903091.4	2	0	0	87.7	87.7	1	1637.92	3.25	0	75.29	0	2.54	0	0	2.21	0	0	0	0	0	0	7.63	7.63
Inverter	MV5-4	370324	4908707	2	0	0	100.3	100.3	1	7103.23	3.25	0	88.03	0	0.71	0	0	21.43	0	0	0	0	0	0	-9.85	-9.85
Inverters	G_Inv2	366676.9	4903239.1	2	0	0	87.7	87.7	1	1660.55	3.25	0	75.41	0	2.54	0	0	2.24	0	0	0	0	0	0	7.48	7.48
Inverter	MV5-3	370231	4908851	2	0	0	100.3	100.3	1	7135.63	3.25	0	88.07	0	0.71	0	0	21.47	0	0	0	0	0	0	-9.93	-9.93
Inverter	MV5-1	370020	4909142	2	0	0	100.3	100.3	1	7197.44	3.25	0	88.14	0	0.7	0	0	21.55	0	0	0	0	0	0	-10.08	-10.08
Inverters	G_Inv5	366638.5	4902958.1	2	0	0	87.7	87.7	1	1751.04	3.25	0	75.87	0	2.55	0	0	2.34	0	0	0	0	0	0	6.9	6.9
Inverters	G_Inv4	366732.8	4903105	2	0	0	87.7	87.7	1	1765.31	3.25	0	75.94	0	2.55	0	0	2.36	0	0	0	0	0	0	6.81	6.81
Inverters	G_Inv7	366694.6	4902824.7	2	0	0	87.7	87.7	1	1869.58	3.25	0	76.43	0	2.57	0	0	2.48	0	0	0	0	0	0	6.18	6.18
Inverters	G_Inv6	366788.5	4902972	2	0	0	87.7	87.7	1	1874.8	3.25	0	76.46	0	2.57	0	0	2.49	0	0	0	0	0	0	6.14	6.14
Inverter	MV1-3	364440	4906039	2	0	0	89.1	89.1	1	2291.03	3.25	0	78.2	0	0.98	0	0	8.52	0	0	0	0	0	0	1.37	1.37
Inverters	G_Inv8	366844.5	4902838.5	2	0	0	87.7	87.7	1	1989.23	3.25	0	76.97	0	2.58	0	0	2.62	0	0	0	0	0	0	5.48	5.48
Inverters	G_Inv9	366750.9	4902691.8	2	0	0	87.7	87.7	1	1991.45	3.25	0	76.98	0	2.58	0	0	2.63	0	0	0	0	0	0	5.47	5.47
Inverter	MV6-1	370235	4907364	2	0	0	97.3	97.3	1	6189.83	3.25	0	86.83	0	0.71	0	0	20.25	0	0	0	0	0	0	-10.48	-10.48
Inverters	G_Inv10	366900.7	4902704.8	2	0	0	87.7	87.7	1	2107.67	3.25	0	77.48	0	2.6	0	0	2.76	0	0	0	0	0	0	4.83	4.83
DSTATCOM - 10 MVAR #2	DSAT2	369403	4908757	2.5	0	0	96.6	96.6	1	6498.76	3.5	0	87.26	0	3.81	0	0	4.08	0	0	0	0	0	0	1.49	1.49
DSTATCOM - 10 MVAR #1	DSAT1	369437	4908757	2.5	0	0	96.6	96.6	1	6521.14	3.5	0	87.29	0	3.81	0	0	4.09	0	0	0	0	0	0	1.45	1.45
Inverter	MV2-2	365977	4906654	2	0	0	89.1	89.1	1	2921.89	3.25	0	80.31	0	1.13	0	0	9.5	0	0	0	0	0	0	-1.88	-1.88
SubstationTransformer	W_ST	369711.17	4906112.3	2.5	0	0	92	92	1	5101.99	4.25	0	85.15	0	1.66	2.31	0.26	8.74	0	0	0	0	0	0	-5.89	-5.89
Inverter	MV3-22	368656	4907142	2	0	0	89.1	89.1	1	4816	3.25	0	84.65	0	1.59	0	0	12.22	0	0	0	0	0	0	-9.41	-9.41
Westbrook Inverter Enclosur	W_INV2	369374	4906388	2	0	0	89.1	89.1	1	4937.45	3.25	0	84.87	0	1.62	0	0	12.38	0	0	0	0	0	0	-9.82	-9.82
Westbrook Inverter Enclosur	W_INV3	369508	4906164	2	0	0	89.1	89.1	1	4944.52	3.25	0	84.88	0	1.63	0	0	12.39	0	0	0	0	0	0	-9.84	-9.84
Westbrook Inverter Enclosur	W_INV4	369673	4906164	2	0	0	89.1	89.1	1	5091.02	3.25	0	85.14	0	1.66	0	0	12.59	0	0	0	0	0	0	-10.33	-10.33
Inverter	MV3-1	368156	4907976	2	0	0	89.1	89.1	1	5108.78	3.25	0	85.17	0	1.67	0	0	12.61	0	0	0	0	0	0	-10.38	-10.38
Inverter	MV3-5	368340	4907843	2	0	0	89.1	89.1	1	5115.36	3.25	0	85.18	0	1.67	0	0	12.62	0	0	0	0	0	0	-10.41	-10.41
Inverter	MV3-4	368502	4907925	2	0	0	89.1	89.1	1	5281.3	3.25	0	85.45	0	1.71	0	0	12.84	0	0	0	0	0	0	-10.94	-10.94
Westbrook Inverter Enclosur	W_INV7	369780	4906417	2	0	0	89.1	89.1	1	5304.05	3.25	0	85.49	0	1.71	0	0	12.87	0	0	0	0	0	0	-11.02	-11.02
Westbrook Inverter Enclosur	W_INV5	369719	4906574	2	0	0	89.1	89.1	1	5329.05	3.25	0	85.53	0	1.72	0	0	12.9	0	0	0	0	0	0	-11.1	-11.1
Inverter	MV3-2	368671	4907928	2	0	0	89.1	89.1	1	5392.87	3.25	0	85.64	0	1.74	0	0	12.98	0	0	0	0	0	0	-11.3	-11.3
Westbrook Inverter Enclosur	W_INV6	369875	4906578	2	0	0	89.1	89.1	1	5465.8	3.25	0	85.75	0	1.75	0	0	13.08	0	0	0	0	0	0	-11.53	-11.53
Fixed Reactor Bank 1	FRB1	369378	4908755	6	0	0	89.8	89.8	1	6480.86	5.25	0	87.23	0	-0.35	0	0	10.24	0	0	0	0	0	0	-7.34	-7.34
Fixed Reactor Bank 2	FRB2	369464	4908755	6	0	0	89.8	89.8	1	6537.49	5.25	0	87.31	0	-0.34	0	0	10.3	0	0	0	0	0	0	-7.48	-7.48
Inverter	MV4-15	369176	4908481	2	0	0	89.1	89.1	1	6141.55	3.25	0	86.77	0	1.92	0	0	13.94	0	0	0	0	0	0	-13.57	-13.57
Inverter	MV4-13	369051	4908605	2	0	0	89.1	89.1	1	6155.2	3.25	0	86.78	0	1.92	0	0	13.96	0	0	0	0	0	0	-13.61	-13.61
Inverter	MV4-14	369176	4908507	2	0	0	89.1	89.1	1	6161.16	3.25	0	86.79	0	1.93	0	0	13.96	0	0	0	0	0	0	-13.63	-13.63
Inverter	MV4-12	369043	4908803	2	0	0	89.1	89.1	1	6304.26	3.25	0	86.99	0	1.96	0	0	14.14	0	0	0	0	0	0	-14.04	-14.04
Inverter	MV5-6	369982	4908507	2	0	0	89.1	89.1	1	6717.39	3.25	0	87.54	0	2.06	0	0	14.65	0	0	0	0	0	0	-15.19	-15.19
Westbrook Inverter Enclosur	W_INV1	369409	4906578	2	0	0	86.1	86.1	1	5067.02	3.25	0	85.1	0	1.66	0	0	12.55	0	0	0	0	0	0	-13.25	-13.25
Inverter	MV6-4	370250	4906966	2	0	0	86.1	86.1	1	5986.09	3.25	0	86.54	0	1.88	0	0	13.74	0	0	0	0	0	0	-16.11	-16.11
Inverter Transformer	MV1-14 T	365157	4905049	2	0	0	69.4	69.4	1	1193.2	3.25	0	72.53	0	1.82	0	0	4.07	0	0	0	0	0	0	-9.07	-9.07

Inverter Transformer	MV1-13 T	364725	4905241	2	0	0	69.4	69.4	1	1444.47	3.25	0	74.19	0	1.95	0	0	4.37	0	0	0	0	0	0	-11.16	-11.16
Inverter Transformer	MV1-10 T	365010	4905564	2	0	0	69.4	69.4	1	1712.58	3.25	0	75.67	0	2.06	0	0	4.67	0	0	0	0	0	0	-13.05	-13.05
Westbrook Inverter Transfor	W_INVTR1	369403	4906578	2	0	0	78.2	78.2	1	5061.96	3.25	0	85.09	0	-3.19	0	0	2.43	0	0	0	0	0	0	-6.09	-6.09
Inverter Transformer	MV1-7 T	364919	4905782	2	0	0	69.4	69.4	1	1938.1	3.25	0	76.75	0	2.15	0	0	4.9	0	0	0	0	0	0	-14.45	-14.45
Westbrook Inverter Transfor	W_INVTR2	369368	4906388	2	0	0	77.3	77.3	1	4932.3	3.25	0	84.86	0	-3.16	0	0	2.39	0	0	0	0	0	0	-6.75	-6.75
Westbrook Inverter Transfor	W_INVTR3	369514	4906164	2	0	0	77.3	77.3	1	4949.82	3.25	0	84.89	0	-3.17	0	0	2.4	0	0	0	0	0	0	-6.78	-6.78
Westbrook Inverter Transfor	W_INVTR4	369679	4906164	2	0	0	77.3	77.3	1	5096.37	3.25	0	85.15	0	-3.2	0	0	2.45	0	0	0	0	0	0	-7.05	-7.05
Westbrook Inverter Transfor	W_INVTR7	369786	4906417	2	0	0	77.3	77.3	1	5309.3	3.25	0	85.5	0	-3.24	0	0	2.52	0	0	0	0	0	0	-7.44	-7.44
Westbrook Inverter Transfor	W_INVTR5	369725	4906574	2	0	0	77.3	77.3	1	5334.21	3.25	0	85.54	0	-3.24	0	0	2.53	0	0	0	0	0	0	-7.48	-7.48
Westbrook Inverter Transfor	W_INVTR6	369881	4906578	2	0	0	77.3	77.3	1	5471.01	3.25	0	85.76	0	-3.27	0	0	2.57	0	0	0	0	0	0	-7.72	-7.72
Inverter Transformer	MV2-1 T	365836	4906816	2	0	0	69.4	69.4	1	3041.83	3.25	0	80.66	0	2.52	0	0	5.92	0	0	0	0	0	0	-19.75	-19.75
Inverter Transformer	MV1-15 T	365309	4904994	2	0	0	56.1	56.1	1	1151.2	3.25	0	72.22	0	0.07	0	0	5.24	0	0	0	0	0	0	-21.47	-21.47
Inverter Transformer	MV6-4 T	370244	4906966	2	0	0	69.4	69.4	1	5980.97	3.25	0	86.54	0	3.19	0	0	8.01	0	0	0	0	0	0	-28.38	-28.38
Inverter Transformer	MV6-1 T	370230	4907364	2	0	0	69.4	69.4	1	6185.71	3.25	0	86.83	0	3.22	0	0	8.13	0	0	0	0	0	0	-28.82	-28.82
Inverter Transformer	MV1-12 T	365044	4905386	2	0	0	56.1	56.1	1	1532.72	3.25	0	74.71	0	0.21	0	0	6.09	0	0	0	0	0	0	-24.95	-24.95
Inverter Transformer	MV1-11 T	364649	4905414	2	0	0	56.1	56.1	1	1632.1	3.25	0	75.25	0	0.25	0	0	6.3	0	0	0	0	0	0	-25.75	-25.75
Inverter Transformer	MV1-8 T	364782	4905647	2	0	0	56.1	56.1	1	1825.5	3.25	0	76.23	0	0.33	0	0	6.7	0	0	0	0	0	0	-27.2	-27.2
Inverter Transformer	MV1-9 T	364555	4905646	2	0	0	56.1	56.1	1	1881.68	3.25	0	76.49	0	0.35	0	0	6.81	0	0	0	0	0	0	-27.6	-27.6
Inverter Transformer	MV1-6 T	364482	4905835	2	0	0	56.1	56.1	1	2084.01	3.25	0	77.38	0	0.44	0	0	7.21	0	0	0	0	0	0	-28.97	-28.97
Inverter Transformer	MV1-4 T	364821	4905918	2	0	0	56.1	56.1	1	2085.8	3.25	0	77.39	0	0.44	0	0	7.21	0	0	0	0	0	0	-28.98	-28.98
Inverter Transformer	MV1-5 T	364676	4905892	2	0	0	56.1	56.1	1	2087.14	3.25	0	77.39	0	0.44	0	0	7.21	0	0	0	0	0	0	-28.99	-28.99
Inverter Transformer	MV1-2 T	364759	4906063	2	0	0	56.1	56.1	1	2238.83	3.25	0	78	0	0.51	0	0	7.5	0	0	0	0	0	0	-29.95	-29.95
Inverter Transformer	MV1-3 T	364435	4906039	2	0	0	56.1	56.1	1	2292.55	3.25	0	78.21	0	0.53	0	0	7.61	0	0	0	0	0	0	-30.28	-30.28
Inverter Transformer	MV1-1 T	364721	4906166	2	0	0	56.1	56.1	1	2346.84	3.25	0	78.41	0	0.55	0	0	7.71	0	0	0	0	0	0	-30.61	-30.61
Inverter Transformer	MV2-4 T	365590	4906628	2	0	0	56.1	56.1	1	2809.06	3.25	0	79.97	0	0.75	0	0	8.54	0	0	0	0	0	0	-33.2	-33.2
Inverter Transformer	MV2-3 T	365814	4906641	2	0	0	56.1	56.1	1	2866.53	3.25	0	80.15	0	0.77	0	0	8.64	0	0	0	0	0	0	-33.5	-33.5
Inverter Transformer	MV2-2 T	365982	4906654	2	0	0	56.1	56.1	1	2923.33	3.25	0	80.32	0	0.8	0	0	8.74	0	0	0	0	0	0	-33.79	-33.79
Inverter Transformer	MV3-18 T	367757	4907412	2	0	0	56.1	56.1	1	4418.03	3.25	0	83.9	0	1.41	0	0	11.06	0	0	0	0	0	0	-40.31	-40.31
Inverter Transformer	MV3-12 T	367674	4907594	2	0	0	56.1	56.1	1	4518.65	3.25	0	84.1	0	1.45	0	0	11.2	0	0	0	0	0	0	-40.69	-40.69
Inverter Transformer	MV3-13 T	367958	4907577	2	0	0	56.1	56.1	1	4670.55	3.25	0	84.39	0	1.5	0	0	11.41	0	0	0	0	0	0	-41.24	-41.24
Inverter Transformer	MV3-17 T	368183	4907472	2	0	0	56.1	56.1	1	4729.12	3.25	0	84.5	0	1.53	0	0	11.49	0	0	0	0	0	0	-41.45	-41.45
Inverter Transformer	MV3-21 T	368484	4907206	2	0	0	56.1	56.1	1	4736.77	3.25	0	84.51	0	1.53	0	0	11.5	0	0	0	0	0	0	-41.48	-41.48
Inverter Transformer	MV3-19 T	368352	4907347	2	0	0	56.1	56.1	1	4747.09	3.25	0	84.53	0	1.53	0	0	11.52	0	0	0	0	0	0	-41.52	-41.52
Inverter Transformer	MV3-7 T	367951	4907754	2	0	0	56.1	56.1	1	4808.65	3.25	0	84.64	0	1.56	0	0	11.6	0	0	0	0	0	0	-41.74	-41.74
Inverter Transformer	MV3-22 T	368661	4907142	2	0	0	56.1	56.1	1	4819.65	3.25	0	84.66	0	1.56	0	0	11.61	0	0	0	0	0	0	-41.78	-41.78
Inverter Transformer	MV3-15 T	368351	4907477	2	0	0	56.1	56.1	1	4842.83	3.25	0	84.7	0	1.57	0	0	11.65	0	0	0	0	0	0	-41.86	-41.86
Inverter Transformer	MV3-10 T	368162	4907669	2	0	0	56.1	56.1	1	4868.32	3.25	0	84.75	0	1.58	0	0	11.68	0	0	0	0	0	0	-41.95	-41.95
Inverter Transformer	MV3-3 T	367944	4907927	2	0	0	56.1	56.1	1	4945.95	3.25	0	84.88	0	1.61	0	0	11.78	0	0	0	0	0	0	-42.22	-42.22
Inverter Transformer	MV3-16 T	368509	4907475	2	0	0	56.1	56.1	1	4947.7	3.25	0	84.89	0	1.61	0	0	11.78	0	0	0	0	0	0	-42.22	-42.22
Inverter Transformer	MV3-20 T	368683	4907317	2	0	0	56.1	56.1	1	4956.35	3.25	0	84.9	0	1.61	0	0	11.8	0	0	0	0	0	0	-42.25	-42.25
Inverter Transformer	MV3-11 T	368340	4907662	2	0	0	56.1	56.1	1	4975.58	3.25	0	84.94	0	1.62	0	0	11.82	0	0	0	0	0	0	-42.32	-42.32
Inverter Transformer	MV3-6 T	368156	4907834	2	0	0	56.1	56.1	1	4994.97	3.25	0	84.97	0	1.62	0	0	11.85	0	0	0	0	0	0	-42.38	-42.38
Inverter Transformer	MV3-14 T	368678	4907498	2	0	0	56.1	56.1	1	5080.91	3.25	0	85.12	0	1.65	0	0	11.96	0	0	0	0	0	0	-42.68	-42.68
Inverter Transformer	MV3-1 T	368150	4907976	2	0	0	56.1	56.1	1	5105.24	3.25	0	85.16	0	1.66	0	0	11.99	0	0	0	0	0	0	-42.76	-42.76
Inverter Transformer	MV3-5 T	368335	4907843	2	0	0	56.1	56.1	1	5112.23	3.25	0	85.17	0	1.67	0	0	12	0	0	0	0	0	0	-42.78	-42.78
Inverter Transformer	MV3-9 T	368517	4907703	2	0	0	56.1	56.1	1	5122.11	3.25	0	85.19	0	1.67	0	0	12.01	0	0	0	0	0	0	-42.81	-42.81
Inverter Transformer	MV3-8 T	368685	4907712	2	0	0	56.1	56.1	1	5241.17	3.25	0	85.39	0	1.71	0	0	12.17	0	0	0	0	0	0	-43.21	-43.21
Inverter Transformer	MV3-4 T	368507	4907925	2	0	0	56.1	56.1	1	5284.49	3.25	0	85.46	0	1.73	0	0	12.22	0	0	0	0	0	0	-43.35	-43.35
Inverter Transformer	MV3-2 T	368677	4907928	2	0	0	56.1	56.1	1	5396.81	3.25	0	85.64	0	1.77	0	0	12.37	0	0	0	0	0	0	-43.72	-43.72
Inverter Transformer	MV6-3 T	370202	4907140	2	0	0	56.1	56.1	1	6037.97	3.25	0	86.62	0	1.98	0	0	13.15	0	0	0	0	0	0	-45.68	-45.68
Inverter Transformer	MV6-2 T	370091	4907339	2	0	0	56.1	56.1	1	6057.33	3.25	0	86.65	0	1.98	0	0	13.17	0	0	0	0	0	0	-45.74	-45.74
Inverter Transformer	MV4-15 T	369170	4908481	2	0	0	56.1	56.1	1	6137.61	3.25	0	86.76	0	2.01	0	0	13.26	0	0	0	0	0	0	-45.97	-45.97
Inverter Transformer	MV4-13 T	369057	4908605	2	0	0	56.1	56.1	1	6159.02	3.25	0	86.79	0	2.01	0	0	13.29	0	0	0	0	0	0	-46.04	-46.04
Inverter Transformer	MV4-14 T	369182	4908507	2	0	0	56.1	56.1	1	6165.1	3.25	0	86.8	0	2.02	0	0	13.3	0	0	0	0	0	0	-46.05	-46.05
Inverter Transformer	MV4-12 T	369049	4908803	2	0	0	56.1	56.1	1	6307.98	3.25	0	87	0	2.06	0	0	13.46	0	0	0	0	0	0	-46.46	-46.46
Inverter Transformer	MV4-7 T	369040	4909001	2	0	0	56.1	56.1	1	6458.99	3.25	0	87.2	0	2.11	0	0	13.63	0	0	0	0	0	0	-46.88	-46.88
Inverter Transformer	MV4-11 T	369269	4908855	2	0	0	56.1	56.1	1	6486.78	3.25	0	87.24	0	2.11	0	0	13.67	0	0	0	0	0	0	-46.96	-46.96
Inverter Transformer	MV4-10 T	369307	4908858	2	0	0	56.1	56.1	1	6513.37	3.25	0	87.28	0	2.12	0	0	13.7	0	0	0	0	0	0	-47.03	-47.03
Inverter Transformer	MV4-8 T	369262	4909001	2	0	0	56.1	56.1	1	6595.57	3.25	0	87.39	0	2.15	0	0	13.79	0	0	0	0	0	0	-47.26	-47.26
Inverter Transformer	MV4-9 T	369284	4909001	2	0	0	56.1	56.1	1	6609.35	3.25	0	87.4	0	2.15	0	0	13.8	0	0	0	0	0	0	-47.3	-47.3
Inverter Transformer	MV4-4 T	369033	4909199	2	0	0	56.1	56.1	1	6613.66	3.25	0	87.41	0	2.15	0	0	13.81	0	0	0	0	0	0	-47.31	-47.31
Inverter Transformer	MV5-6 T	369987	4908507	2	0	0	56.1	56.1	1	6720.99	3.25	0	87.55	0	2.18	0	0	13.93	0	0	0	0	0	0	-47.6	-47.6
Inverter Transformer	MV4-6 T	369249	4909192	2	0	0	56.1	56.1	1	6737.67	3.25	0	87.57	0	2.19	0	0	13.94	0	0	0	0	0	0	-47.64	-47.64
Inverter Transformer	MV4-5 T	369283	4909199	2	0	0	56.1	56.1	1	6764.02	3.25	0	87.6	0	2.19	0	0	13.97	0	0	0	0	0	0	-47.71	-47.71
Inverter Transformer	MV4-1 T	369017	4909397	2	0	0	56.1	56.1	1	6765.43	3.25	0	87.61	0	2.19	0	0	13.98	0	0	0	0	0	0	-47.72	-47.72
Inverter Transformer	MV5-5 T	370021	4908690	2	0	0	56.1	56.1	1	6873.03	3.25	0	87.74	0	2.22	0	0	14.09	0	0	0	0	0	0	-48	-48
Inverter Transformer	MV4-3 T	369234	4909397	2	0	0	56.1	56.1	1	6892.23	3.25	0	87.77	0	2.23	0	0	14.11	0	0	0	0	0	0	-48.05	-48.05
Inverter Transformer	MV4-2 T	369267	4909397	2	0	0	56.1	56.1	1	6911.91	3.25	0	87.79	0	2.24	0	0	14.13	0	0	0	0	0	0	-48.1	-48.1
Inverter Transformer	MV5-2 T	370011	4908853	2	0	0	56.1	56.1	1	6981.65	3.25	0	87.88	0	2.25	0	0	14.21	0	0	0	0	0	0	-48.29	-48.29
Inverter Transformer	MV5-4 T	370330	4908707	2	0	0	56.1	56.1	1	7107.61	3.25	0	88.03	0	2.29	0	0	14.34	0	0	0	0	0	0	-48.61	-48.61
Inverter Transformer	MV5-3 T	370237	4908851	2	0	0	56.1	56.1	1	7139.92	3.25	0	88.07	0	2.3	0	0	14.38	0	0	0	0	0	0	-48.69	-48.69
Inverter Transformer	MV5-1 T	370015	4909142	2	0	0	56.1	56.1	1	7194.04	3.25	0	88.14	0	2.31	0	0	14.44	0	0	0	0	0	0	-48.83	-48.83
Line Reactor	NGR	369421	4908787.5	5	0	0	45.4	45.4	1	6533.59	5.25	0	87.3	0	3.23	1.37	0.09	2.67	0	0	0	0	0	0	-49.21	-49.21
Limit. Valu 0	0																									

Level D/N: 24.5333 24.5333

Receiver: Existing Noise Receptor
ID: G-106
X: 365118.2
Y: 4903868
Z: 4.5
Ground: 0

ISO	Description	ID	X	Y	Z	Ground	ReflOrd	LxT	LxN	L/A	Dist.	hm	Freq	Adiv	K0b	Agr	Abar	z	Aatm	Afol	Ahous	Cmet	CmetN	Dc	RL	LtotT	LtotN
	Inverter	MV1-15	365315	4904994	2	0	0	100.3	100.3	1	1143.07	3.25	0	72.16	0	-0.18	0	0	11.36	0	0	0	0	0	0	16.97	16.97
	Inverter	MV1-12	365038	4905386	2	0	0	100.3	100.3	1	1520.12	3.25	0	74.64	0	-0.03	0	0	12.37	0	0	0	0	0	0	13.33	13.33
	Inverter	MV1-11	364655	4905414	2	0	0	100.3	100.3	1	1613.9	3.25	0	75.16	0	0.01	0	0	12.6	0	0	0	0	0	0	12.55	12.55
	Inverter	MV1-14	365163	4905049	2	0	0	97.3	97.3	1	1181.85	3.25	0	72.45	0	-0.16	0	0	11.47	0	0	0	0	0	0	13.55	13.55
	Sol_Luce Substation	S_Substation	369426	4908792	3.5	0	0	112.1	112.1	1	6542.39	5.25	0	87.31	0	1.29	2.53	0.27	10.3	0	0	0	0	0	0	10.64	10.64
	Inverter	MV1-8	364788	4905647	2	0	0	100.3	100.3	1	1809.39	3.25	0	76.15	0	0.07	0	0	13.05	0	0	0	0	0	0	11.04	11.04
	Inverter	MV1-9	364561	4905646	2	0	0	100.3	100.3	1	1863.27	3.25	0	76.41	0	0.09	0	0	13.17	0	0	0	0	0	0	10.65	10.65
	Inverter	MV1-13	364731	4905241	2	0	0	97.3	97.3	1	1426.55	3.25	0	74.09	0	-0.06	0	0	12.14	0	0	0	0	0	0	11.15	11.15
	Inverter	MV1-6	364477	4905835	2	0	0	100.3	100.3	1	2068.87	3.25	0	77.31	0	0.15	0	0	13.61	0	0	0	0	0	0	9.24	9.24
	Inverter	MV1-4	364815	4905918	2	0	0	100.3	100.3	1	2072.3	3.25	0	77.33	0	0.15	0	0	13.61	0	0	0	0	0	0	9.22	9.22
	Inverter	MV1-5	364671	4905892	2	0	0	100.3	100.3	1	2072.82	3.25	0	77.33	0	0.15	0	0	13.61	0	0	0	0	0	0	9.22	9.22
	Inverter	MV1-2	364753	4906063	2	0	0	100.3	100.3	1	2225.17	3.25	0	77.95	0	0.19	0	0	13.92	0	0	0	0	0	0	8.25	8.25
	Inverter	MV1-1	364715	4906166	2	0	0	100.3	100.3	1	2333.11	3.25	0	78.36	0	0.22	0	0	14.14	0	0	0	0	0	0	7.6	7.6
	Inverter	MV1-10	365004	4905564	2	0	0	97.3	97.3	1	1699.84	3.25	0	75.61	0	0.04	0	0	12.8	0	0	0	0	0	0	8.87	8.87
	Inverter	MV1-7	364925	4905782	2	0	0	97.3	97.3	1	1923.73	3.25	0	76.68	0	0.11	0	0	13.3	0	0	0	0	0	0	7.22	7.22
	Inverter	MV2-4	365586	4906624	2	0	0	100.3	100.3	1	2795.42	3.25	0	79.93	0	0.32	0	0	15.01	0	0	0	0	0	0	5.06	5.06
	Inverter	MV2-3	365820	4906641	2	0	0	100.3	100.3	1	2860.43	3.25	0	80.13	0	0.33	0	0	15.12	0	0	0	0	0	0	4.73	4.73
	Inverter	MV2-1	365842	4906816	2	0	0	97.3	97.3	1	3035.56	3.25	0	80.64	0	0.37	0	0	15.43	0	0	0	0	0	0	0.86	0.86
	Inverter	MV3-18	367752	4907412	2	0	0	100.3	100.3	1	4415.52	3.25	0	83.9	0	0.58	0	0	17.7	0	0	0	0	0	0	-1.87	-1.87
	Inverter	MV3-12	367668	4907594	2	0	0	100.3	100.3	1	4514.93	3.25	0	84.09	0	0.59	0	0	17.85	0	0	0	0	0	0	-2.23	-2.23
	Gardiner Substation	G_Sub	366586.3	4903349.9	2.5	0	0	90.8	90.8	1	1556.84	4.25	0	74.84	0	0.84	4.43	0.31	3.59	0	0	0	0	0	0	7.07	7.07
	Inverter	MV3-13	367963	4907577	2	0	0	100.3	100.3	1	4674.35	3.25	0	84.39	0	0.61	0	0	18.1	0	0	0	0	0	0	-2.79	-2.79
	Inverter	MV3-17	368178	4907472	2	0	0	100.3	100.3	1	4727.71	3.25	0	84.49	0	0.62	0	0	18.18	0	0	0	0	0	0	-2.97	-2.97
	Inverter	MV3-21	368478	4907206	2	0	0	100.3	100.3	1	4736.09	3.25	0	84.51	0	0.62	0	0	18.19	0	0	0	0	0	0	-3	-3
	Inverter	MV3-19	368357	4907347	2	0	0	100.3	100.3	1	4753.24	3.25	0	84.54	0	0.62	0	0	18.21	0	0	0	0	0	0	-3.06	-3.06
	Inverter	MV3-7	367945	4907754	2	0	0	100.3	100.3	1	4805.39	3.25	0	84.63	0	0.62	0	0	18.29	0	0	0	0	0	0	-3.24	-3.24
	Inverter	MV3-15	368357	4907477	2	0	0	100.3	100.3	1	4849.2	3.25	0	84.71	0	0.63	0	0	18.36	0	0	0	0	0	0	-3.39	-3.39
	Inverter	MV3-10	368167	4907669	2	0	0	100.3	100.3	1	4872.66	3.25	0	84.76	0	0.63	0	0	18.39	0	0	0	0	0	0	-3.47	-3.47
	Inverter	MV3-3	367939	4907927	2	0	0	100.3	100.3	1	4942.91	3.25	0	84.88	0	0.64	0	0	18.5	0	0	0	0	0	0	-3.7	-3.7
	Inverter	MV3-16	368514	4907475	2	0	0	100.3	100.3	1	4953.98	3.25	0	84.9	0	0.64	0	0	18.51	0	0	0	0	0	0	-3.74	-3.74
	Inverter	MV3-20	368689	4907317	2	0	0	100.3	100.3	1	4964.5	3.25	0	84.92	0	0.64	0	0	18.53	0	0	0	0	0	0	-3.77	-3.77
	Inverter	MV3-11	368346	4907662	2	0	0	100.3	100.3	1	4981.28	3.25	0	84.95	0	0.64	0	0	18.55	0	0	0	0	0	0	-3.83	-3.83
	Inverter	MV3-6	368162	4907834	2	0	0	100.3	100.3	1	4999.39	3.25	0	84.98	0	0.64	0	0	18.58	0	0	0	0	0	0	-3.89	-3.89
	Inverter	MV3-14	368684	4907498	2	0	0	100.3	100.3	1	5088.4	3.25	0	85.13	0	0.65	0	0	18.71	0	0	0	0	0	0	-4.18	-4.18
	Inverter	MV3-9	368512	4907703	2	0	0	100.3	100.3	1	5121.05	3.25	0	85.19	0	0.65	0	0	18.76	0	0	0	0	0	0	-4.28	-4.28
	Inverter	MV3-8	368680	4907712	2	0	0	100.3	100.3	1	5240.49	3.25	0	85.39	0	0.66	0	0	18.93	0	0	0	0	0	0	-4.67	-4.67
	Inverter	MV6-3	370207	4907140	2	0	0	100.3	100.3	1	6049.95	3.25	0	86.64	0	0.71	0	0	20.06	0	0	0	0	0	0	-7.09	-7.09
	Inverter	MV6-2	370085	4907339	2	0	0	100.3	100.3	1	6059.45	3.25	0	86.65	0	0.71	0	0	20.07	0	0	0	0	0	0	-7.12	-7.12
	Inverter	MV4-7	369035	4909001	2	0	0	100.3	100.3	1	6456.7	3.25	0	87.2	0	0.71	0	0	20.6	0	0	0	0	0	0	-8.21	-8.21
	Inverter	MV4-11	369264	4908855	2	0	0	100.3	100.3	1	6485.2	3.25	0	87.24	0	0.71	0	0	20.64	0	0	0	0	0	0	-8.28	-8.28
	Inverter	MV4-10	369312	4908858	2	0	0	100.3	100.3	1	6518.29	3.25	0	87.28	0	0.71	0	0	20.68	0	0	0	0	0	0	-8.37	-8.37
	Inverter	MV4-8	369256	4909001	2	0	0	100.3	100.3	1	6593.11	3.25	0	87.38	0	0.72	0	0	20.78	0	0	0	0	0	0	-8.56	-8.56
	Inverter	MV4-4	369027	4909199	2	0	0	100.3	100.3	1	6610.47	3.25	0	87.4	0	0.72	0	0	20.8	0	0	0	0	0	0	-8.61	-8.61
	Inverter	MV4-9	369289	4909001	2	0	0	100.3	100.3	1	6613.87	3.25	0	87.41	0	0.71	0	0	20.81	0	0	0	0	0	0	-8.62	-8.62
	Inverters	G_Inv1	366526.4	4903225.8	2	0	0	87.7	87.7	1	1547.73	3.25	0	74.79	0	2.53	0	0	2.1	0	0	0	0	0	0	8.24	8.24
	Inverter	MV4-6	369243	4909192	2	0	0	100.3	100.3	1	6734.91	3.25	0	87.57	0	0.71	0	0	20.96	0	0	0	0	0	0	-8.93	-8.93
	Inverter	MV4-1	369011	4909397	2	0	0	100.3	100.3	1	6761.93	3.25	0	87.6	0	0.71	0	0	21	0	0	0	0	0	0	-9	-9
	Inverter	MV4-5	369289	4909199	2	0	0	100.3	100.3	1	6768.69	3.25	0	87.61	0	0.71	0	0	21.01	0	0	0	0	0	0	-9.02	-9.02
	Inverter	MV5-5	370015	4908690	2	0	0	100.3	100.3	1	6872.43	3.25	0	87.74	0	0.71	0	0	21.14	0	0	0	0	0	0	-9.28	-9.28
	Inverter	MV4-3	369229	4909397	2	0	0	100.3	100.3	1	6889.74	3.25	0	87.76	0	0.71	0	0	21.16	0	0	0	0	0	0	-9.32	-9.32
	Inverter	MV4-2	369272	4909397	2	0	0	100.3	100.3	1	6915.48	3.25	0	87.8	0	0.71	0	0	21.19	0	0	0	0	0	0	-9.39	-9.39
	Inverter	MV5-2	370006	4908853	2	0	0	100.3	100.3	1	6981.46	3.25	0	87.88	0	0.71	0	0	21.28	0	0	0	0	0	0	-9.55	-9.55
	Inverter	MV5-4	370324	4908707	2	0	0	100.3	100.3	1	7107.48	3.25	0	88.03	0	0.71	0	0	21.43	0	0	0	0	0	0	-9.86	-9.86
	Inverters	G_Inv3	366583.7	4903091.4	2	0	0	87.7	87.7	1	1658.55	3.25	0	75.39	0	2.54	0	0	2.23	0	0	0	0	0	0	7.49	7.49
	Inverter	MV5-3	370231	4908851	2	0	0	100.3	100.3	1	7139.4	3.25	0	88.07	0	0.71	0	0	21.47	0	0	0	0	0	0	-9.94	-9.94
	Inverter	MV5-1	370020	4909142	2	0	0	100.3	100.3	1	7200.19	3.25	0	88.15	0	0.7	0	0	21.55	0	0	0	0	0	0	-10.09	-10.09
	Inverters	G_Inv2	366676.9	4903239.1	2	0	0	87.7	87.7	1	1680.79	3.25	0	75.51	0	2.54	0	0	2.26	0	0	0	0	0	0	7.35	7.35
	Inverters	G_Inv5	366638.5	4902958.1	2	0	0	87.7	87.7	1	1771.79	3.25	0	75.97	0	2.55	0	0	2.37	0	0	0	0	0	0	6.77	6.77
	Inverters	G_Inv4	366732.8	4903105	2	0	0	87.7	87.7	1	1785.81	3.25	0	76.04	0	2.56	0	0	2.38	0	0	0	0	0	0	6.68	6.68
	Inverters	G_Inv7	366694.6	4902824.7	2	0	0	87.7	87.7	1	1890.38	3.25	0	76.53	0	2.57	0	0	2.51	0	0	0	0	0	0	6.05	6.05
	Inverters	G_Inv6	366788.5	4902972	2	0	0	87.7	87.7	1	1895.45	3.25	0	76.55	0	2.57	0	0	2.51	0	0	0	0	0	0	6.02	6.02
	Inverter	MV1-3	364440	4906039	2	0	0	89.1	89.1	1	2274.47	3.25	0	78.14	0	0.97	0	0	8.49	0	0	0	0	0	0	1.46	1.46
	Inverters	G_Inv8	366844.5	4902838.5	2	0	0	87.7	87.7	1	2009.97	3.25	0	77.06	0	2.58	0	0	2.65	0	0	0	0	0	0	5.36	5.36
	Inverters	G_Inv9	366750.9	4902691.8	2	0	0	87.7	87.7	1	2012.25	3.25	0	77.07	0	2.59	0	0	2.65	0	0	0	0	0	0	5.35	5.35

Inverter	MV6-1	370235	4907364	2	0	0	97.3	97.3	1	6197.07	3.25	0	86.84	0	0.71	0	0	20.26	0	0	0	0	0	0	-10.5	-10.5
Inverters	G_Inv10	366900.7	4902704.8	2	0	0	87.7	87.7	1	2128.46	3.25	0	77.56	0	2.6	0	0	2.78	0	0	0	0	0	0	4.71	4.71
DSTATCOM - 10 MVAR #2	DSAT2	369403	4908757	2.5	0	0	96.6	96.6	1	6500.91	3.5	0	87.26	0	3.81	0	0	4.08	0	0	0	0	0	0	1.49	1.49
DSTATCOM - 10 MVAR #1	DSAT1	369437	4908757	2.5	0	0	96.6	96.6	1	6523.37	3.5	0	87.29	0	3.81	0	0	4.09	0	0	0	0	0	0	1.44	1.44
Inverter	MV2-2	365977	4906654	2	0	0	89.1	89.1	1	2915.36	3.25	0	80.29	0	1.13	0	0	9.49	0	0	0	0	0	0	-1.85	-1.85
SubstationTransformer	W_ST	369711.17	4906112.3	2.5	0	0	92	92	1	5111.96	4.25	0	85.17	0	1.67	2.3	0.26	8.75	0	0	0	0	0	0	-5.92	-5.92
Inverter	MV3-22	368656	4907142	2	0	0	89.1	89.1	1	4820.28	3.25	0	84.66	0	1.6	0	0	12.22	0	0	0	0	0	0	-9.42	-9.42
Westbrook Inverter Enclosur	W_INV2	369374	4906388	2	0	0	89.1	89.1	1	4945.93	3.25	0	84.88	0	1.63	0	0	12.39	0	0	0	0	0	0	-9.84	-9.84
Westbrook Inverter Enclosur	W_INV3	369508	4906164	2	0	0	89.1	89.1	1	4953.98	3.25	0	84.9	0	1.63	0	0	12.4	0	0	0	0	0	0	-9.87	-9.87
Westbrook Inverter Enclosur	W_INV4	369673	4906164	2	0	0	89.1	89.1	1	5100.77	3.25	0	85.15	0	1.66	0	0	12.6	0	0	0	0	0	0	-10.36	-10.36
Inverter	MV3-1	368156	4907976	2	0	0	89.1	89.1	1	5109.2	3.25	0	85.17	0	1.67	0	0	12.61	0	0	0	0	0	0	-10.39	-10.39
Inverter	MV3-5	368340	4907843	2	0	0	89.1	89.1	1	5116.7	3.25	0	85.18	0	1.67	0	0	12.62	0	0	0	0	0	0	-10.41	-10.41
Inverter	MV3-4	368502	4907925	2	0	0	89.1	89.1	1	5282.93	3.25	0	85.46	0	1.71	0	0	12.84	0	0	0	0	0	0	-10.95	-10.95
Westbrook Inverter Enclosur	W_INV7	369780	4906417	2	0	0	89.1	89.1	1	5313.17	3.25	0	85.51	0	1.72	0	0	12.88	0	0	0	0	0	0	-11.04	-11.04
Westbrook Inverter Enclosur	W_INV5	369719	4906574	2	0	0	89.1	89.1	1	5337.58	3.25	0	85.55	0	1.72	0	0	12.91	0	0	0	0	0	0	-11.12	-11.12
Inverter	MV3-2	368671	4907928	2	0	0	89.1	89.1	1	5395	3.25	0	85.64	0	1.74	0	0	12.99	0	0	0	0	0	0	-11.3	-11.3
Westbrook Inverter Enclosur	W_INV6	369875	4906578	2	0	0	89.1	89.1	1	5474.6	3.25	0	85.77	0	1.76	0	0	13.09	0	0	0	0	0	0	-11.56	-11.56
Fixed Reactor Bank 1	FRB1	369378	4908755	6	0	0	89.8	89.8	1	6482.95	5.25	0	87.24	0	-0.35	0	0	10.24	0	0	0	0	0	0	-7.35	-7.35
Fixed Reactor Bank 2	FRB2	369464	4908755	6	0	0	89.8	89.8	1	6539.78	5.25	0	87.31	0	-0.34	0	0	10.3	0	0	0	0	0	0	-7.49	-7.49
Inverter	MV4-15	369176	4908481	2	0	0	89.1	89.1	1	6143.74	3.25	0	86.77	0	1.92	0	0	13.94	0	0	0	0	0	0	-13.57	-13.57
Inverter	MV4-13	369051	4908605	2	0	0	89.1	89.1	1	6156.79	3.25	0	86.79	0	1.92	0	0	13.96	0	0	0	0	0	0	-13.61	-13.61
Inverter	MV4-14	369176	4908507	2	0	0	89.1	89.1	1	6163.28	3.25	0	86.8	0	1.93	0	0	13.97	0	0	0	0	0	0	-13.63	-13.63
Inverter	MV4-12	369043	4908803	2	0	0	89.1	89.1	1	6305.42	3.25	0	86.99	0	1.96	0	0	14.14	0	0	0	0	0	0	-14.04	-14.04
Inverter	MV5-6	369982	4908507	2	0	0	89.1	89.1	1	6721.37	3.25	0	87.55	0	2.06	0	0	14.65	0	0	0	0	0	0	-15.2	-15.2
Westbrook Inverter Enclosur	W_INV1	369409	4906578	2	0	0	86.1	86.1	1	5074.95	3.25	0	85.11	0	1.66	0	0	12.56	0	0	0	0	0	0	-13.27	-13.27
Inverter	MV6-4	370250	4906966	2	0	0	86.1	86.1	1	5994.41	3.25	0	86.55	0	1.88	0	0	13.76	0	0	0	0	0	0	-16.14	-16.14
Inverter Transformer	MV1-14 T	365157	4905049	2	0	0	69.4	69.4	1	1181.64	3.25	0	72.45	0	1.81	0	0	4.05	0	0	0	0	0	0	-8.96	-8.96
Inverter Transformer	MV1-13 T	364725	4905241	2	0	0	69.4	69.4	1	1428.2	3.25	0	74.1	0	1.94	0	0	4.35	0	0	0	0	0	0	-11.04	-11.04
Inverter Transformer	MV1-10 T	365010	4905564	2	0	0	69.4	69.4	1	1699.45	3.25	0	75.61	0	2.06	0	0	4.65	0	0	0	0	0	0	-12.97	-12.97
Westbrook Inverter Transfor	W_INVTR1	369403	4906578	2	0	0	78.2	78.2	1	5069.87	3.25	0	85.1	0	-3.19	0	0	2.44	0	0	0	0	0	0	-6.1	-6.1
Inverter Transformer	MV1-7 T	364919	4905782	2	0	0	69.4	69.4	1	1924.34	3.25	0	76.69	0	2.14	0	0	4.89	0	0	0	0	0	0	-14.37	-14.37
Westbrook Inverter Transfor	W_INVTR2	369368	4906388	2	0	0	77.3	77.3	1	4940.77	3.25	0	84.88	0	-3.17	0	0	2.39	0	0	0	0	0	0	-6.76	-6.76
Westbrook Inverter Transfor	W_INVTR3	369514	4906164	2	0	0	77.3	77.3	1	4959.3	3.25	0	84.91	0	-3.17	0	0	2.4	0	0	0	0	0	0	-6.8	-6.8
Westbrook Inverter Transfor	W_INVTR4	369679	4906164	2	0	0	77.3	77.3	1	5106.13	3.25	0	85.16	0	-3.2	0	0	2.45	0	0	0	0	0	0	-7.07	-7.07
Westbrook Inverter Transfor	W_INVTR7	369786	4906417	2	0	0	77.3	77.3	1	5318.44	3.25	0	85.52	0	-3.24	0	0	2.52	0	0	0	0	0	0	-7.45	-7.45
Westbrook Inverter Transfor	W_INVTR5	369725	4906574	2	0	0	77.3	77.3	1	5342.76	3.25	0	85.56	0	-3.24	0	0	2.53	0	0	0	0	0	0	-7.5	-7.5
Westbrook Inverter Transfor	W_INVTR6	369881	4906578	2	0	0	77.3	77.3	1	5479.81	3.25	0	85.78	0	-3.27	0	0	2.57	0	0	0	0	0	0	-7.74	-7.74
Inverter Transformer	MV2-1 T	365836	4906816	2	0	0	69.4	69.4	1	3034.13	3.25	0	80.64	0	2.52	0	0	5.91	0	0	0	0	0	0	-19.72	-19.72
Inverter Transformer	MV1-15 T	365309	4904994	2	0	0	56.1	56.1	1	1142.05	3.25	0	72.15	0	0.06	0	0	5.22	0	0	0	0	0	0	-21.38	-21.38
Inverter Transformer	MV6-4 T	370244	4906966	2	0	0	69.4	69.4	1	5989.28	3.25	0	86.55	0	3.19	0	0	8.01	0	0	0	0	0	0	-28.4	-28.4
Inverter Transformer	MV6-1 T	370230	4907364	2	0	0	69.4	69.4	1	6192.94	3.25	0	86.84	0	3.22	0	0	8.13	0	0	0	0	0	0	-28.84	-28.84
Inverter Transformer	MV1-12 T	365044	4905386	2	0	0	56.1	56.1	1	1519.81	3.25	0	74.64	0	0.21	0	0	6.06	0	0	0	0	0	0	-24.84	-24.84
Inverter Transformer	MV1-11 T	364649	4905414	2	0	0	56.1	56.1	1	1615.63	3.25	0	75.17	0	0.25	0	0	6.26	0	0	0	0	0	0	-25.62	-25.62
Inverter Transformer	MV1-8 T	364782	4905647	2	0	0	56.1	56.1	1	1810.49	3.25	0	76.16	0	0.32	0	0	6.67	0	0	0	0	0	0	-27.09	-27.09
Inverter Transformer	MV1-9 T	364555	4905646	2	0	0	56.1	56.1	1	1865.07	3.25	0	76.41	0	0.35	0	0	6.78	0	0	0	0	0	0	-27.48	-27.48
Inverter Transformer	MV1-6 T	364482	4905835	2	0	0	56.1	56.1	1	2067.33	3.25	0	77.31	0	0.43	0	0	7.18	0	0	0	0	0	0	-28.86	-28.86
Inverter Transformer	MV1-4 T	364821	4905918	2	0	0	56.1	56.1	1	2071.43	3.25	0	77.33	0	0.43	0	0	7.18	0	0	0	0	0	0	-28.88	-28.88
Inverter Transformer	MV1-5 T	364676	4905892	2	0	0	56.1	56.1	1	2071.74	3.25	0	77.33	0	0.43	0	0	7.18	0	0	0	0	0	0	-28.89	-28.89
Inverter Transformer	MV1-2 T	364759	4906063	2	0	0	56.1	56.1	1	2224.2	3.25	0	77.94	0	0.5	0	0	7.48	0	0	0	0	0	0	-29.86	-29.86
Inverter Transformer	MV1-3 T	364435	4906039	2	0	0	56.1	56.1	1	2275.96	3.25	0	78.14	0	0.52	0	0	7.57	0	0	0	0	0	0	-30.18	-30.18
Inverter Transformer	MV1-1 T	364721	4906166	2	0	0	56.1	56.1	1	2332.08	3.25	0	78.35	0	0.54	0	0	7.68	0	0	0	0	0	0	-30.52	-30.52
Inverter Transformer	MV2-4 T	365590	4906628	2	0	0	56.1	56.1	1	2800.04	3.25	0	79.94	0	0.74	0	0	8.52	0	0	0	0	0	0	-33.15	-33.15
Inverter Transformer	MV2-3 T	365814	4906641	2	0	0	56.1	56.1	1	2858.96	3.25	0	80.12	0	0.77	0	0	8.63	0	0	0	0	0	0	-33.46	-33.46
Inverter Transformer	MV2-2 T	365982	4906654	2	0	0	56.1	56.1	1	2916.84	3.25	0	80.3	0	0.79	0	0	8.73	0	0	0	0	0	0	-33.76	-33.76
Inverter Transformer	MV3-18 T	367757	4907412	2	0	0	56.1	56.1	1	4418.51	3.25	0	83.91	0	1.41	0	0	11.06	0	0	0	0	0	0	-40.32	-40.32
Inverter Transformer	MV3-12 T	367674	4907594	2	0	0	56.1	56.1	1	4518.32	3.25	0	84.1	0	1.45	0	0	11.2	0	0	0	0	0	0	-40.69	-40.69
Inverter Transformer	MV3-13 T	367958	4907577	2	0	0	56.1	56.1	1	4671.31	3.25	0	84.39	0	1.5	0	0	11.41	0	0	0	0	0	0	-41.25	-41.25
Inverter Transformer	MV3-17 T	368183	4907472	2	0	0	56.1	56.1	1	4730.94	3.25	0	84.5	0	1.53	0	0	11.49	0	0	0	0	0	0	-41.46	-41.46
Inverter Transformer	MV3-21 T	368484	4907206	2	0	0	56.1	56.1	1	4740.34	3.25	0	84.52	0	1.53	0	0	11.51	0	0	0	0	0	0	-41.49	-41.49
Inverter Transformer	MV3-19 T	368352	4907347	2	0	0	56.1	56.1	1	4749.83	3.25	0	84.53	0	1.53	0	0	11.52	0	0	0	0	0	0	-41.53	-41.53
Inverter Transformer	MV3-7 T	367951	4907754	2	0	0	56.1	56.1	1	4808.92	3.25	0	84.64	0	1.56	0	0	11.6	0	0	0	0	0	0	-41.74	-41.74
Inverter Transformer	MV3-22 T	368661	4907142	2	0	0	56.1	56.1	1	4823.95	3.25	0	84.67	0	1.56	0	0	11.62	0	0	0	0	0	0	-41.79	-41.79
Inverter Transformer	MV3-15 T	368351	4907477	2	0	0	56.1	56.1	1	4845.19	3.25	0	84.71	0	1.57	0	0	11.65	0	0	0	0	0	0	-41.86	-41.86
Inverter Transformer	MV3-10 T	368162	4907669	2	0	0	56.1	56.1	1	4869.53	3.25	0	84.75	0	1.58	0	0	11.68	0	0	0	0	0	0	-41.95	-41.95
Inverter Transformer	MV3-3 T	367944	4907927	2	0	0	56.1	56.1	1	4945.77	3.25	0	84.88	0	1.61	0	0	11.78	0	0	0	0	0	0	-42.21	-42.21
Inverter Transformer	MV3-16 T	368509	4907475	2	0	0	56.1	56.1	1	4950.55	3.25	0	84.89	0	1.61	0	0	11.79	0	0	0	0	0	0	-42.23	-42.23
Inverter Transformer	MV3-20 T	368683	4907317	2	0	0	56.1	56.1	1	4960.18	3.25	0	84.91	0	1.61	0	0	11.8	0	0	0	0	0	0	-42.26	-42.26
Inverter Transformer	MV3-11 T	368340	4907662	2	0	0	56.1	56.1	1	4977.39	3.25	0	84.94	0	1.62	0	0	11.82	0	0	0	0	0	0	-42.32	-42.32
Inverter Transformer	MV3-6 T	368156	4907834	2	0	0	56.1	56.1	1	4995.74	3.25	0	84.97	0	1.62	0	0	11.85	0	0	0	0	0	0	-42.39	-42.39
Inverter Transformer	MV3-14 T	368678	4907498	2	0	0	56.1	56.1	1	5084.2	3.25	0	85.12	0	1.66	0	0	11.96	0	0	0	0	0	0	-42.69	-42.69
Inverter Transformer	MV3-1 T	368150	4907976	2	0	0	56.1	56.1	1	5105.63	3.25	0	85.16	0	1.66	0	0	11.99	0	0	0	0	0	0	-42.76	-42.76
Inverter Transformer	MV3-5 T	368335	4907843	2	0	0	56.1	56.1	1	5113.55	3.25	0	85.17	0	1.67	0	0	12	0	0	0	0	0	0	-42.79	-42.79
Inverter Transformer	MV3-9 T	368517	4907703	2	0	0	56.1	56.1	1	5124.36	3.25	0	85.19	0	1.67	0	0	12.02	0	0	0	0	0	0	-42.82	-42.82
Inverter Transformer	MV3-8 T	368685	4907712	2	0	0	56.1	56.1	1	5243.89	3.25	0	85.39	0	1.71	0	0	12.17	0	0	0	0	0	0	-43.22	-43.22

	Inverter Transformer	MV3-4 T	368507	4907925	2	0	0	56.1	56.1	1	5286.13	3.25	0	85.46	0	1.73	0	0	12.23	0	0	0	0	0	0	-43.36	-43.36
	Inverter Transformer	MV3-2 T	368677	4907928	2	0	0	56.1	56.1	1	5398.95	3.25	0	85.65	0	1.77	0	0	12.37	0	0	0	0	0	0	-43.72	-43.72
	Inverter Transformer	MV6-3 T	370202	4907140	2	0	0	56.1	56.1	1	6045.74	3.25	0	86.63	0	1.98	0	0	13.16	0	0	0	0	0	0	-45.71	-45.71
	Inverter Transformer	MV6-2 T	370091	4907339	2	0	0	56.1	56.1	1	6064.37	3.25	0	86.66	0	1.99	0	0	13.18	0	0	0	0	0	0	-45.76	-45.76
	Inverter Transformer	MV4-15 T	369170	4908481	2	0	0	56.1	56.1	1	6139.78	3.25	0	86.76	0	2.01	0	0	13.27	0	0	0	0	0	0	-45.98	-45.98
	Inverter Transformer	MV4-13 T	369057	4908605	2	0	0	56.1	56.1	1	6160.63	3.25	0	86.79	0	2.02	0	0	13.29	0	0	0	0	0	0	-46.04	-46.04
	Inverter Transformer	MV4-14 T	369182	4908507	2	0	0	56.1	56.1	1	6167.24	3.25	0	86.8	0	2.02	0	0	13.3	0	0	0	0	0	0	-46.06	-46.06
	Inverter Transformer	MV4-12 T	369049	4908803	2	0	0	56.1	56.1	1	6309.15	3.25	0	87	0	2.06	0	0	13.46	0	0	0	0	0	0	-46.46	-46.46
	Inverter Transformer	MV4-7 T	369040	4909001	2	0	0	56.1	56.1	1	6459.74	3.25	0	87.2	0	2.11	0	0	13.63	0	0	0	0	0	0	-46.89	-46.89
	Inverter Transformer	MV4-11 T	369269	4908855	2	0	0	56.1	56.1	1	6488.4	3.25	0	87.24	0	2.11	0	0	13.67	0	0	0	0	0	0	-46.97	-46.97
	Inverter Transformer	MV4-10 T	369307	4908858	2	0	0	56.1	56.1	1	6515.07	3.25	0	87.28	0	2.12	0	0	13.7	0	0	0	0	0	0	-47.04	-47.04
	Inverter Transformer	MV4-8 T	369262	4909001	2	0	0	56.1	56.1	1	6596.88	3.25	0	87.39	0	2.15	0	0	13.79	0	0	0	0	0	0	-47.26	-47.26
	Inverter Transformer	MV4-9 T	369284	4909001	2	0	0	56.1	56.1	1	6610.72	3.25	0	87.4	0	2.15	0	0	13.8	0	0	0	0	0	0	-47.3	-47.3
	Inverter Transformer	MV4-4 T	369033	4909199	2	0	0	56.1	56.1	1	6614.02	3.25	0	87.41	0	2.15	0	0	13.81	0	0	0	0	0	0	-47.31	-47.31
	Inverter Transformer	MV5-6 T	369987	4908507	2	0	0	56.1	56.1	1	6724.99	3.25	0	87.55	0	2.18	0	0	13.93	0	0	0	0	0	0	-47.61	-47.61
	Inverter Transformer	MV4-6 T	369249	4909192	2	0	0	56.1	56.1	1	6738.58	3.25	0	87.57	0	2.19	0	0	13.95	0	0	0	0	0	0	-47.65	-47.65
	Inverter Transformer	MV4-5 T	369283	4909199	2	0	0	56.1	56.1	1	6764.99	3.25	0	87.61	0	2.19	0	0	13.97	0	0	0	0	0	0	-47.72	-47.72
	Inverter Transformer	MV4-1 T	369017	4909397	2	0	0	56.1	56.1	1	6765.39	3.25	0	87.61	0	2.19	0	0	13.97	0	0	0	0	0	0	-47.72	-47.72
	Inverter Transformer	MV5-5 T	370021	4908690	2	0	0	56.1	56.1	1	6876.71	3.25	0	87.75	0	2.23	0	0	14.1	0	0	0	0	0	0	-48.01	-48.01
	Inverter Transformer	MV4-3 T	369234	4909397	2	0	0	56.1	56.1	1	6892.72	3.25	0	87.77	0	2.23	0	0	14.11	0	0	0	0	0	0	-48.05	-48.05
	Inverter Transformer	MV4-2 T	369267	4909397	2	0	0	56.1	56.1	1	6912.48	3.25	0	87.79	0	2.24	0	0	14.14	0	0	0	0	0	0	-48.11	-48.11
	Inverter Transformer	MV5-2 T	370011	4908853	2	0	0	56.1	56.1	1	6984.96	3.25	0	87.88	0	2.26	0	0	14.21	0	0	0	0	0	0	-48.29	-48.29
	Inverter Transformer	MV5-4 T	370330	4908707	2	0	0	56.1	56.1	1	7111.88	3.25	0	88.04	0	2.29	0	0	14.35	0	0	0	0	0	0	-48.62	-48.62
	Inverter Transformer	MV5-3 T	370237	4908851	2	0	0	56.1	56.1	1	7143.7	3.25	0	88.08	0	2.3	0	0	14.38	0	0	0	0	0	0	-48.7	-48.7
	Inverter Transformer	MV5-1 T	370015	4909142	2	0	0	56.1	56.1	1	7196.79	3.25	0	88.14	0	2.31	0	0	14.44	0	0	0	0	0	0	-48.84	-48.84
	Line Reactor	NGR	369421	4908787.5	5	0	0	45.4	45.4	1	6535.71	5.25	0	87.31	0	3.23	1.37	0.09	2.67	0	0	0	0	0	0	-49.22	-49.22
Limit. Valu	0	0																								
Level D/N:	24.588	24.588																								

Receiver: Existing Noise Receptor
ID: G-107
X: 368397.2
Y: 4902267.1
Z: 4.5
Ground: 0

ISO	Description	ID	X	Y	Z	Ground	ReflOrd	LxT	LxN	L/A	Dist.	hm	Freq	Adiv	K0b	Agr	Abar	z	Aatm	Afol	Ahous	Cmet	CmetN	Dc	RL	LtotT	LtotN
	Sol_Luce Substation	S_Substation	369426	4908792	3.5	0	0	112.1	112.1	1	6605.51	5.25	0	87.4	0	1.3	2.52	0.35	10.36	0	0	0	0	0	0	10.5	10.5
	Inverter	MV1-15	365315	4904994	2	0	0	100.3	100.3	1	4115.33	3.25	0	83.29	0	0.54	0	0	17.23	0	0	0	0	0	0	-0.75	-0.75
	Inverter	MV1-12	365038	4905386	2	0	0	100.3	100.3	1	4583.86	3.25	0	84.22	0	0.6	0	0	17.96	0	0	0	0	0	0	-2.47	-2.47
	Inverter	MV1-11	364655	4905414	2	0	0	100.3	100.3	1	4889.48	3.25	0	84.79	0	0.63	0	0	18.42	0	0	0	0	0	0	-3.52	-3.52
	Inverter	MV3-21	368478	4907206	2	0	0	100.3	100.3	1	4939.56	3.25	0	84.87	0	0.64	0	0	18.49	0	0	0	0	0	0	-3.69	-3.69
	Inverter	MV1-8	364788	4905647	2	0	0	100.3	100.3	1	4944.7	3.25	0	84.88	0	0.64	0	0	18.5	0	0	0	0	0	0	-3.71	-3.71
	Inverter	MV3-20	368689	4907317	2	0	0	100.3	100.3	1	5058.32	3.25	0	85.08	0	0.65	0	0	18.67	0	0	0	0	0	0	-4.08	-4.08
	Inverter	MV2-3	365820	4906641	2	0	0	100.3	100.3	1	5076.71	3.25	0	85.11	0	0.65	0	0	18.69	0	0	0	0	0	0	-4.14	-4.14
	Inverter	MV3-19	368357	4907347	2	0	0	100.3	100.3	1	5080.06	3.25	0	85.12	0	0.65	0	0	18.7	0	0	0	0	0	0	-4.15	-4.15
	Inverter	MV1-9	364561	4905646	2	0	0	100.3	100.3	1	5112.08	3.25	0	85.17	0	0.65	0	0	18.74	0	0	0	0	0	0	-4.26	-4.26
	Inverter	MV1-4	364815	4905918	2	0	0	100.3	100.3	1	5114.81	3.25	0	85.18	0	0.65	0	0	18.75	0	0	0	0	0	0	-4.26	-4.26
	Inverter	MV2-4	365586	4906624	2	0	0	100.3	100.3	1	5185.12	3.25	0	85.3	0	0.66	0	0	18.85	0	0	0	0	0	0	-4.49	-4.49
	Inverter	MV3-18	367752	4907412	2	0	0	100.3	100.3	1	5185.2	3.25	0	85.3	0	0.66	0	0	18.85	0	0	0	0	0	0	-4.49	-4.49
	Inverter	MV6-3	370207	4907140	2	0	0	100.3	100.3	1	5198.13	3.25	0	85.32	0	0.66	0	0	18.87	0	0	0	0	0	0	-4.53	-4.53
	Inverter	MV1-5	364671	4905892	2	0	0	100.3	100.3	1	5198.51	3.25	0	85.32	0	0.66	0	0	18.87	0	0	0	0	0	0	-4.53	-4.53
	Inverter	MV3-16	368514	4907475	2	0	0	100.3	100.3	1	5209.21	3.25	0	85.34	0	0.66	0	0	18.89	0	0	0	0	0	0	-4.57	-4.57
	Inverter	MV3-17	368178	4907472	2	0	0	100.3	100.3	1	5209.51	3.25	0	85.34	0	0.66	0	0	18.89	0	0	0	0	0	0	-4.57	-4.57
	Inverter	MV3-15	368357	4907477	2	0	0	100.3	100.3	1	5210.06	3.25	0	85.34	0	0.66	0	0	18.89	0	0	0	0	0	0	-4.57	-4.57
	Inverter	MV3-14	368684	4907498	2	0	0	100.3	100.3	1	5238.76	3.25	0	85.38	0	0.66	0	0	18.93	0	0	0	0	0	0	-4.66	-4.66
	Inverter	MV1-2	364753	4906063	2	0	0	100.3	100.3	1	5262.04	3.25	0	85.42	0	0.66	0	0	18.96	0	0	0	0	0	0	-4.74	-4.74
	Inverter	MV1-6	364477	4905835	2	0	0	100.3	100.3	1	5300.74	3.25	0	85.49	0	0.67	0	0	19.02	0	0	0	0	0	0	-4.86	-4.86
	Inverter	MV3-13	367963	4907577	2	0	0	100.3	100.3	1	5327.62	3.25	0	85.53	0	0.67	0	0	19.06	0	0	0	0	0	0	-4.94	-4.94
	Inverter	MV6-2	370085	4907339	2	0	0	100.3	100.3	1	5345.36	3.25	0	85.56	0	0.67	0	0	19.08	0	0	0	0	0	0	-5	-5
	Inverter	MV1-1	364715	4906166	2	0	0	100.3	100.3	1	5362.84	3.25	0	85.59	0	0.67	0	0	19.11	0	0	0	0	0	0	-5.05	-5.05
	Inverter	MV3-12	367668	4907594	2	0	0	100.3	100.3	1	5376.58	3.25	0	85.61	0	0.67	0	0	19.13	0	0	0	0	0	0	-5.1	-5.1
	Inverter	MV3-11	368346	4907662	2	0	0	100.3	100.3	1	5395.14	3.25	0	85.64	0	0.67	0	0	19.15	0	0	0	0	0	0	-5.15	-5.15
	Inverter	MV3-10	368167	4907669	2	0	0	100.3	100.3	1	5406.8	3.25	0	85.66	0	0.67	0	0	19.17	0	0	0	0	0	0	-5.19	-5.19
	Inverter	MV3-9	368512	4907703	2	0	0	100.3	100.3	1	5437.11	3.25	0	85.71	0	0.68	0	0	19.21	0	0	0	0	0	0	-5.28	-5.28
	Inverter	MV3-8	368680	4907712	2	0	0	100.3	100.3	1	5452.24	3.25	0	85.73	0	0.68	0	0	19.23	0	0	0	0	0	0	-5.33	-5.33
	Inverter	MV3-7	367945	4907754	2	0	0	100.3	100.3	1	5505.5	3.25	0	85.82	0	0.68	0	0	19.31	0	0	0	0	0	0	-5.49	-5.49
	Inverter	MV3-6	368162	4907834	2	0	0	100.3	100.3	1	5571.87	3.25	0	85.92	0	0.68	0	0	19.4	0	0	0	0	0	0	-5.69	-5.69
	Inverter	MV3-3	367939	4907927	2	0	0	100.3	100.3	1	5678.42	3.25	0	86.08	0	0.69	0	0	19.55	0	0	0	0	0	0	-6.01	-6.01
	Inverter	MV1-14	365163	4905049	2	0	0	97.3	97.3	1	4266.03	3.25	0	83.6	0	0.56	0	0	17.47	0	0	0	0	0	0	-4.32	-4.32
	Gardiner Substation	G_Sub	366586.3	4903349.9	2.5	0	0	90.8	90.8	1	2109.93	3.5	0	77.49	0	-0.14	0	0	4.55	0	0	0	0	0	0	8.88	8.88
	Inverter	MV5-5	370015	4908690	2	0	0	100.3	100.3	1	6623.51	3.25	0	87.42	0	0.71	0	0	20.82	0	0	0	0	0	0	-8.64	-8.64
	Inverter	MV4-11	369264	4908855	2	0	0	100.3	100.3	1	6644.68	3.25	0	87.45	0	0.71	0	0	20.85	0	0	0	0	0	0	-8.7	-8.7
	Inverter	MV4-10	369312	4908858	2	0	0	100.3	100.3	1	6654.08	3.25	0	87.46	0	0.71	0	0	20.86	0	0	0	0	0	0	-8.72	-8.72

Inverter	MV1-13	364731	4905241	2	0	0	97.3	97.3	1	4720.71	3.25	0	84.48	0	0.62	0	0	18.17	0	0	0	0	0	0	-5.95	-5.95
Inverter	MV1-10	365004	4905564	2	0	0	97.3	97.3	1	4731.11	3.25	0	84.5	0	0.62	0	0	18.18	0	0	0	0	0	0	-5.98	-5.98
Inverters	G_Inv10	366900.7	4902704.8	2	0	0	87.7	87.7	1	1559.2	3.25	0	74.86	0	2.53	0	0	2.11	0	0	0	0	0	0	8.16	8.16
Inverter	MV5-4	370324	4908707	2	0	0	100.3	100.3	1	6721.97	3.25	0	87.55	0	0.71	0	0	20.95	0	0	0	0	0	0	-8.9	-8.9
Inverter	MV4-7	369035	4909001	2	0	0	100.3	100.3	1	6764.04	3.25	0	87.6	0	0.71	0	0	21	0	0	0	0	0	0	-9.01	-9.01
Inverter	MV5-2	370006	4908853	2	0	0	100.3	100.3	1	6779.55	3.25	0	87.62	0	0.71	0	0	21.02	0	0	0	0	0	0	-9.05	-9.05
Inverter	MV4-8	369256	4909001	2	0	0	100.3	100.3	1	6788.44	3.25	0	87.64	0	0.71	0	0	21.03	0	0	0	0	0	0	-9.07	-9.07
Inverter	MV4-9	369289	4909001	2	0	0	100.3	100.3	1	6792.7	3.25	0	87.64	0	0.71	0	0	21.04	0	0	0	0	0	0	-9.08	-9.08
Inverter	MV5-3	370231	4908851	2	0	0	100.3	100.3	1	6834.51	3.25	0	87.69	0	0.71	0	0	21.09	0	0	0	0	0	0	-9.19	-9.19
Inverter	MV4-4	369027	4909199	2	0	0	100.3	100.3	1	6960.45	3.25	0	87.85	0	0.71	0	0	21.25	0	0	0	0	0	0	-9.5	-9.5
Inverter	MV4-6	369243	4909192	2	0	0	100.3	100.3	1	6976.36	3.25	0	87.87	0	0.71	0	0	21.27	0	0	0	0	0	0	-9.54	-9.54
Inverter	MV1-7	364925	4905782	2	0	0	97.3	97.3	1	4940.72	3.25	0	84.88	0	0.64	0	0	18.49	0	0	0	0	0	0	-6.69	-6.69
Inverter	MV4-5	369289	4909199	2	0	0	100.3	100.3	1	6989.03	3.25	0	87.89	0	0.71	0	0	21.29	0	0	0	0	0	0	-9.57	-9.57
Inverter	MV5-1	370020	4909142	2	0	0	100.3	100.3	1	7063.83	3.25	0	87.98	0	0.71	0	0	21.38	0	0	0	0	0	0	-9.76	-9.76
Inverters	G_Inv8	366844.5	4902838.5	2	0	0	87.7	87.7	1	1654.5	3.25	0	75.37	0	2.54	0	0	2.23	0	0	0	0	0	0	7.52	7.52
Inverter	MV4-1	369011	4909397	2	0	0	100.3	100.3	1	7156.27	3.25	0	88.09	0	0.71	0	0	21.49	0	0	0	0	0	0	-9.98	-9.98
Inverter	MV4-3	369229	4909397	2	0	0	100.3	100.3	1	7178.26	3.25	0	88.12	0	0.7	0	0	21.52	0	0	0	0	0	0	-10.03	-10.03
Inverter	MV4-2	369272	4909397	2	0	0	100.3	100.3	1	7183.37	3.25	0	88.13	0	0.7	0	0	21.53	0	0	0	0	0	0	-10.05	-10.05
Inverters	G_Inv9	366750.9	4902691.8	2	0	0	87.7	87.7	1	1700.2	3.25	0	75.61	0	2.55	0	0	2.28	0	0	0	0	0	0	7.22	7.22
Inverter	MV2-1	365842	4906816	2	0	0	97.3	97.3	1	5217.43	3.25	0	85.35	0	0.66	0	0	18.9	0	0	0	0	0	0	-7.59	-7.59
Inverters	G_Inv6	366788.5	4902972	2	0	0	87.7	87.7	1	1756.36	3.25	0	75.89	0	2.55	0	0	2.35	0	0	0	0	0	0	6.87	6.87
Inverter	MV6-1	370235	4907364	2	0	0	97.3	97.3	1	5418.11	3.25	0	85.68	0	0.68	0	0	19.18	0	0	0	0	0	0	-8.22	-8.22
Inverters	G_Inv7	366694.6	4902824.7	2	0	0	87.7	87.7	1	1791.58	3.25	0	76.06	0	2.56	0	0	2.39	0	0	0	0	0	0	6.65	6.65
Inverters	G_Inv4	366732.8	4903105	2	0	0	87.7	87.7	1	1863.41	3.25	0	76.41	0	2.57	0	0	2.48	0	0	0	0	0	0	6.21	6.21
Inverters	G_Inv5	366638.5	4902958.1	2	0	0	87.7	87.7	1	1889.58	3.25	0	76.53	0	2.57	0	0	2.51	0	0	0	0	0	0	6.06	6.06
Inverters	G_Inv2	366676.9	4903239.1	2	0	0	87.7	87.7	1	1975.91	3.25	0	76.92	0	2.58	0	0	2.61	0	0	0	0	0	0	5.56	5.56
Inverters	G_Inv3	366583.7	4903091.4	2	0	0	87.7	87.7	1	1992.05	3.25	0	76.99	0	2.58	0	0	2.63	0	0	0	0	0	0	5.47	5.47
Inverters	G_Inv1	366526.4	4903225.8	2	0	0	87.7	87.7	1	2102.14	3.25	0	77.45	0	2.6	0	0	2.75	0	0	0	0	0	0	4.86	4.86
DSTATCOM - 10 MVAR #2	DSAT2	369403	4908757	2.5	0	0	96.6	96.6	1	6567.38	3.5	0	87.35	0	3.81	0	0	4.11	0	0	0	0	0	0	1.36	1.36
DSTATCOM - 10 MVAR #1	DSAT1	369437	4908757	2.5	0	0	96.6	96.6	1	6572.67	3.5	0	87.35	0	3.81	0	0	4.11	0	0	0	0	0	0	1.35	1.35
SubstationTransformer	W_ST	369711.17	4906112.3	2.5	0	0	92	92	1	4063.48	3.5	0	83.18	0	0.35	0	-0.13	7.45	0	0	0	0	0	0	1	1
Westbrook Inverter Enclosur	W_INV3	369508	4906164	2	0	0	89.1	89.1	1	4052.12	3.25	0	83.15	0	1.41	0	0	11.16	0	0	0	0	0	0	-6.66	-6.66
Westbrook Inverter Enclosur	W_INV4	369673	4906164	2	0	0	89.1	89.1	1	4100.43	3.25	0	83.26	0	1.42	0	0	11.23	0	0	0	0	0	0	-6.84	-6.84
Westbrook Inverter Enclosur	W_INV2	369374	4906388	2	0	0	89.1	89.1	1	4235.09	3.25	0	83.54	0	1.45	0	0	11.42	0	0	0	0	0	0	-7.35	-7.35
Westbrook Inverter Enclosur	W_INV7	369780	4906417	2	0	0	89.1	89.1	1	4374.22	3.25	0	83.82	0	1.48	0	0	11.61	0	0	0	0	0	0	-7.86	-7.86
Westbrook Inverter Enclosur	W_INV5	369719	4906574	2	0	0	89.1	89.1	1	4505.17	3.25	0	84.07	0	1.52	0	0	11.79	0	0	0	0	0	0	-8.33	-8.33
Westbrook Inverter Enclosur	W_INV6	369875	4906578	2	0	0	89.1	89.1	1	4557.17	4.11	0	84.17	0	2.32	2.34	0	11.86	0	0	0	0	0	0	-11.64	-11.64
Inverter	MV3-22	368656	4907142	2	0	0	89.1	89.1	1	4881.77	3.25	0	84.77	0	1.61	0	0	12.3	0	0	0	0	0	0	-9.63	-9.63
Inverter	MV2-2	365977	4906654	2	0	0	89.1	89.1	1	5010.22	3.25	0	85	0	1.64	0	0	12.48	0	0	0	0	0	0	-10.06	-10.06
Inverter	MV1-3	364440	4906039	2	0	0	89.1	89.1	1	5466.87	3.25	0	85.75	0	1.75	0	0	13.08	0	0	0	0	0	0	-11.53	-11.53
Inverter	MV3-5	368340	4907843	2	0	0	89.1	89.1	1	5576.19	3.25	0	85.93	0	1.78	0	0	13.22	0	0	0	0	0	0	-11.87	-11.87
Inverter	MV3-4	368502	4907925	2	0	0	89.1	89.1	1	5658.87	3.25	0	86.05	0	1.8	0	0	13.33	0	0	0	0	0	0	-12.13	-12.13
Inverter	MV3-2	368671	4907928	2	0	0	89.1	89.1	1	5667.52	3.25	0	86.07	0	1.8	0	0	13.34	0	0	0	0	0	0	-12.15	-12.15
Inverter	MV3-1	368156	4907976	2	0	0	89.1	89.1	1	5713.99	3.25	0	86.14	0	1.82	0	0	13.4	0	0	0	0	0	0	-12.3	-12.3
Fixed Reactor Bank 1	FRB1	369378	4908755	6	0	0	89.8	89.8	1	6561.62	5.25	0	87.34	0	-0.34	0	0	10.32	0	0	0	0	0	0	-7.54	-7.54
Fixed Reactor Bank 2	FRB2	369464	4908755	6	0	0	89.8	89.8	1	6575.02	5.25	0	87.36	0	-0.34	0	0	10.33	0	0	0	0	0	0	-7.58	-7.58
Westbrook Inverter Enclosur	W_INV1	369409	4906578	2	0	0	86.1	86.1	1	4428.05	3.25	0	83.92	0	1.5	0	0	11.69	0	0	0	0	0	0	-11.05	-11.05
Inverter	MV4-15	369176	4908481	2	0	0	89.1	89.1	1	6262.51	3.25	0	86.93	0	1.95	0	0	14.09	0	0	0	0	0	0	-13.92	-13.92
Inverter	MV4-14	369176	4908507	2	0	0	89.1	89.1	1	6288.31	3.25	0	86.97	0	1.96	0	0	14.12	0	0	0	0	0	0	-13.99	-13.99
Inverter	MV4-13	369051	4908605	2	0	0	89.1	89.1	1	6371.53	3.25	0	87.08	0	1.98	0	0	14.23	0	0	0	0	0	0	-14.23	-14.23
Inverter	MV5-6	369982	4908507	2	0	0	89.1	89.1	1	6438.01	3.25	0	87.18	0	1.99	0	0	14.31	0	0	0	0	0	0	-14.42	-14.42
Inverter	MV4-12	369043	4908803	2	0	0	89.1	89.1	1	6567.73	3.25	0	87.35	0	2.02	0	0	14.47	0	0	0	0	0	0	-14.78	-14.78
Inverter	MV6-4	370250	4906966	2	0	0	86.1	86.1	1	5050.99	3.25	0	85.07	0	1.65	0	0	12.53	0	0	0	0	0	0	-13.19	-13.19
Westbrook Inverter Transfor	W_INVTR1	369403	4906578	2	0	0	78.2	78.2	1	4426.68	3.25	0	83.92	0	-3.06	0	0	2.21	0	0	0	0	0	0	-4.83	-4.83
Westbrook Inverter Transfor	W_INVTR3	369514	4906164	2	0	0	77.3	77.3	1	4053.77	3.25	0	83.16	0	-2.98	0	0	2.07	0	0	0	0	0	0	-4.92	-4.92
Westbrook Inverter Transfor	W_INVTR4	369679	4906164	2	0	0	77.3	77.3	1	4102.3	3.25	0	83.26	0	-2.99	0	0	2.09	0	0	0	0	0	0	-5.03	-5.03
Westbrook Inverter Transfor	W_INVTR2	369368	4906388	2	0	0	77.3	77.3	1	4233.71	3.25	0	83.53	0	-3.02	0	0	2.14	0	0	0	0	0	0	-5.32	-5.32
Westbrook Inverter Transfor	W_INVTR7	369786	4906417	2	0	0	77.3	77.3	1	4376.12	3.25	0	83.82	0	-3.05	0	0	2.19	0	0	0	0	0	0	-5.63	-5.63
Westbrook Inverter Transfor	W_INVTR5	369725	4906574	2	0	0	77.3	77.3	1	4506.93	3.25	0	84.08	0	-3.08	0	0	2.24	0	0	0	0	0	0	-5.9	-5.9
Westbrook Inverter Transfor	W_INVTR6	369881	4906578	2	0	0	77.3	77.3	1	4559.11	3.25	0	84.18	0	-3.09	0	0	2.26	0	0	0	0	0	0	-6.01	-6.01
Inverter Transformer	MV1-14 T	365157	4905049	2	0	0	69.4	69.4	1	4270.58	3.25	0	83.61	0	2.85	0	0	6.88	0	0	0	0	0	0	-23.99	-23.99
Inverter Transformer	MV1-13 T	364725	4905241	2	0	0	69.4	69.4	1	4725.37	3.25	0	84.49	0	2.96	0	0	7.2	0	0	0	0	0	0	-25.29	-25.29
Inverter Transformer	MV1-10 T	365010	4905564	2	0	0	69.4	69.4	1	4726.8	3.25	0	84.49	0	2.96	0	0	7.2	0	0	0	0	0	0	-25.29	-25.29
Inverter Transformer	MV1-7 T	364919	4905782	2	0	0	69.4	69.4	1	4944.94	3.25	0	84.88	0	3	0	0	7.34	0	0	0	0	0	0	-25.88	-25.88
Inverter Transformer	MV6-4 T	370244	4906966	2	0	0	69.4	69.4	1	5048.8	3.25	0	85.06	0	3.02	0	0	7.41	0	0	0	0	0	0	-26.15	-26.15
Inverter Transformer	MV2-1 T	365836	4906816	2	0	0	69.4	69.4	1	5220.37	3.25	0	85.35	0	3.06	0	0	7.53	0	0	0	0	0	0	-26.59	-26.59
Inverter Transformer	MV6-1 T	370230	4907364	2	0	0	69.4	69.4	1	5416.42	3.25	0	85.67	0	3.09	0	0	7.65	0	0	0	0	0	0	-27.07	-27.07
Inverter Transformer	MV1-15 T	365309	4904994	2	0	0	56.1	56.1	1	4119.83	3.25	0	83.3	0	1.29	0	0	10.63	0	0	0	0	0	0	-39.16	-39.16
Inverter Transformer	MV1-12 T	365044	4905386	2	0	0	56.1	56.1	1	4579.46	3.25	0	84.22	0	1.47	0	0	11.29	0	0	0	0	0	0	-40.91	-40.91
Inverter Transformer	MV3-22 T	368661	4907142	2	0	0	56.1	56.1	1	4882.03	3.25	0	84.77	0	1.58	0	0	11.7	0	0	0	0	0	0	-41.99	-41.99
Inverter Transformer	MV1-11 T	364649	4905414	2	0	0	56.1	56.1	1	4894.08	3.25	0	84.79	0	1.59	0	0	11.71	0	0	0	0	0	0	-42.04	-42.04
Inverter Transformer	MV3-21 T	368484	4907206	2	0	0	56.1	56.1	1	4939.66	3.25	0	84.87	0	1.6	0	0	11.77	0	0	0	0	0	0	-42.19	-42.19
Inverter Transformer	MV1-8 T	364782	4905647	2	0	0	56.1	56.1	1	4949.08	3.25	0	84.89	0	1.61	0	0	11.79	0	0	0	0	0	0	-42.23	-42.23
Inverter Transformer	MV2-2 T	365982	4906654	2	0	0	56.1	56.1	1	5007.8	3.25	0	84.99	0	1.63	0	0	11.86	0	0	0	0	0	0	-42.43	-42.43

	Inverter Transformer	MV3-20 T	368683	4907317	2	0	0	56.1	56.1	1	5057.98	3.25	0	85.08	0	1.65	0	0	11.93	0	0	0	0	0	0	-42.6	-42.6
	Inverter Transformer	MV2-3 T	365814	4906641	2	0	0	56.1	56.1	1	5079.76	3.25	0	85.12	0	1.65	0	0	11.96	0	0	0	0	0	0	-42.67	-42.67
	Inverter Transformer	MV3-19 T	368352	4907347	2	0	0	56.1	56.1	1	5080.1	3.25	0	85.12	0	1.65	0	0	11.96	0	0	0	0	0	0	-42.67	-42.67
	Inverter Transformer	MV1-4 T	364821	4905918	2	0	0	56.1	56.1	1	5110.61	3.25	0	85.17	0	1.67	0	0	12	0	0	0	0	0	0	-42.78	-42.78
	Inverter Transformer	MV1-9 T	364555	4905646	2	0	0	56.1	56.1	1	5116.59	3.25	0	85.18	0	1.67	0	0	12.01	0	0	0	0	0	0	-42.8	-42.8
	Inverter Transformer	MV3-18 T	367757	4907412	2	0	0	56.1	56.1	1	5184.58	3.25	0	85.29	0	1.69	0	0	12.09	0	0	0	0	0	0	-43.02	-43.02
	Inverter Transformer	MV2-4 T	365590	4906628	2	0	0	56.1	56.1	1	5186.31	3.25	0	85.3	0	1.69	0	0	12.1	0	0	0	0	0	0	-43.03	-43.03
	Inverter Transformer	MV1-5 T	364676	4905892	2	0	0	56.1	56.1	1	5194.92	3.25	0	85.31	0	1.7	0	0	12.11	0	0	0	0	0	0	-43.06	-43.06
	Inverter Transformer	MV6-3 T	370202	4907140	2	0	0	56.1	56.1	1	5196.39	3.25	0	85.31	0	1.7	0	0	12.11	0	0	0	0	0	0	-43.06	-43.06
	Inverter Transformer	MV3-16 T	368509	4907475	2	0	0	56.1	56.1	1	5209.1	3.25	0	85.34	0	1.7	0	0	12.13	0	0	0	0	0	0	-43.1	-43.1
	Inverter Transformer	MV3-17 T	368183	4907472	2	0	0	56.1	56.1	1	5209.31	3.25	0	85.34	0	1.7	0	0	12.13	0	0	0	0	0	0	-43.1	-43.1
	Inverter Transformer	MV3-15 T	368351	4907477	2	0	0	56.1	56.1	1	5210.11	3.25	0	85.34	0	1.7	0	0	12.13	0	0	0	0	0	0	-43.11	-43.11
	Inverter Transformer	MV3-14 T	368678	4907498	2	0	0	56.1	56.1	1	5238.43	3.25	0	85.38	0	1.71	0	0	12.16	0	0	0	0	0	0	-43.2	-43.2
	Inverter Transformer	MV1-2 T	364759	4906063	2	0	0	56.1	56.1	1	5257.89	3.25	0	85.42	0	1.72	0	0	12.19	0	0	0	0	0	0	-43.26	-43.26
	Inverter Transformer	MV1-6 T	364482	4905835	2	0	0	56.1	56.1	1	5297.05	3.25	0	85.48	0	1.73	0	0	12.24	0	0	0	0	0	0	-43.39	-43.39
	Inverter Transformer	MV3-13 T	367958	4907577	2	0	0	56.1	56.1	1	5328.03	3.25	0	85.53	0	1.74	0	0	12.28	0	0	0	0	0	0	-43.49	-43.49
	Inverter Transformer	MV6-2 T	370091	4907339	2	0	0	56.1	56.1	1	5347.25	3.25	0	85.56	0	1.75	0	0	12.3	0	0	0	0	0	0	-43.56	-43.56
	Inverter Transformer	MV1-1 T	364721	4906166	2	0	0	56.1	56.1	1	5358.72	3.25	0	85.58	0	1.75	0	0	12.32	0	0	0	0	0	0	-43.59	-43.59
	Inverter Transformer	MV3-12 T	367674	4907594	2	0	0	56.1	56.1	1	5375.77	3.25	0	85.61	0	1.76	0	0	12.34	0	0	0	0	0	0	-43.65	-43.65
	Inverter Transformer	MV3-11 T	368340	4907662	2	0	0	56.1	56.1	1	5395.2	3.25	0	85.64	0	1.76	0	0	12.36	0	0	0	0	0	0	-43.71	-43.71
	Inverter Transformer	MV3-10 T	368162	4907669	2	0	0	56.1	56.1	1	5407.02	3.25	0	85.66	0	1.77	0	0	12.38	0	0	0	0	0	0	-43.75	-43.75
	Inverter Transformer	MV3-9 T	368517	4907703	2	0	0	56.1	56.1	1	5437.22	3.25	0	85.71	0	1.78	0	0	12.42	0	0	0	0	0	0	-43.85	-43.85
	Inverter Transformer	MV3-8 T	368685	4907712	2	0	0	56.1	56.1	1	5452.5	3.25	0	85.73	0	1.78	0	0	12.44	0	0	0	0	0	0	-43.89	-43.89
	Inverter Transformer	MV1-3 T	364435	4906039	2	0	0	56.1	56.1	1	5470.49	3.25	0	85.76	0	1.79	0	0	12.46	0	0	0	0	0	0	-43.95	-43.95
	Inverter Transformer	MV3-7 T	367951	4907754	2	0	0	56.1	56.1	1	5505.01	3.25	0	85.82	0	1.8	0	0	12.5	0	0	0	0	0	0	-44.06	-44.06
	Inverter Transformer	MV3-6 T	368156	4907834	2	0	0	56.1	56.1	1	5572.12	3.25	0	85.92	0	1.82	0	0	12.58	0	0	0	0	0	0	-44.27	-44.27
	Inverter Transformer	MV3-5 T	368335	4907843	2	0	0	56.1	56.1	1	5576.25	3.25	0	85.93	0	1.83	0	0	12.59	0	0	0	0	0	0	-44.28	-44.28
	Inverter Transformer	MV3-4 T	368507	4907925	2	0	0	56.1	56.1	1	5658.97	3.25	0	86.05	0	1.85	0	0	12.69	0	0	0	0	0	0	-44.54	-44.54
	Inverter Transformer	MV3-2 T	368677	4907928	2	0	0	56.1	56.1	1	5667.81	3.25	0	86.07	0	1.86	0	0	12.7	0	0	0	0	0	0	-44.57	-44.57
	Inverter Transformer	MV3-3 T	367944	4907927	2	0	0	56.1	56.1	1	5678.02	3.25	0	86.08	0	1.86	0	0	12.72	0	0	0	0	0	0	-44.6	-44.6
	Inverter Transformer	MV3-1 T	368150	4907976	2	0	0	56.1	56.1	1	5714.25	3.25	0	86.14	0	1.87	0	0	12.76	0	0	0	0	0	0	-44.71	-44.71
	Inverter Transformer	MV4-15 T	369170	4908481	2	0	0	56.1	56.1	1	6261.77	3.25	0	86.93	0	2.05	0	0	13.41	0	0	0	0	0	0	-46.33	-46.33
	Inverter Transformer	MV4-14 T	369182	4908507	2	0	0	56.1	56.1	1	6289.06	3.25	0	86.97	0	2.05	0	0	13.44	0	0	0	0	0	0	-46.41	-46.41
	Inverter Transformer	MV4-13 T	369057	4908605	2	0	0	56.1	56.1	1	6372.15	3.25	0	87.09	0	2.08	0	0	13.54	0	0	0	0	0	0	-46.64	-46.64
	Inverter Transformer	MV5-6 T	369987	4908507	2	0	0	56.1	56.1	1	6439.24	3.25	0	87.18	0	2.1	0	0	13.61	0	0	0	0	0	0	-46.83	-46.83
	Inverter Transformer	MV4-12 T	369049	4908803	2	0	0	56.1	56.1	1	6568.32	3.25	0	87.35	0	2.14	0	0	13.76	0	0	0	0	0	0	-47.19	-47.19
	Inverter Transformer	MV5-5 T	370021	4908690	2	0	0	56.1	56.1	1	6624.98	3.25	0	87.42	0	2.15	0	0	13.82	0	0	0	0	0	0	-47.34	-47.34
	Inverter Transformer	MV4-11 T	369269	4908855	2	0	0	56.1	56.1	1	6645.33	3.25	0	87.45	0	2.16	0	0	13.84	0	0	0	0	0	0	-47.39	-47.39
	Inverter Transformer	MV4-10 T	369307	4908858	2	0	0	56.1	56.1	1	6653.4	3.25	0	87.46	0	2.16	0	0	13.85	0	0	0	0	0	0	-47.42	-47.42
	Inverter Transformer	MV5-4 T	370330	4908707	2	0	0	56.1	56.1	1	6723.69	3.25	0	87.55	0	2.18	0	0	13.93	0	0	0	0	0	0	-47.61	-47.61
	Inverter Transformer	MV4-7 T	369040	4909001	2	0	0	56.1	56.1	1	6764.51	3.25	0	87.6	0	2.19	0	0	13.97	0	0	0	0	0	0	-47.71	-47.71
	Inverter Transformer	MV5-2 T	370011	4908853	2	0	0	56.1	56.1	1	6780.74	3.25	0	87.63	0	2.2	0	0	13.99	0	0	0	0	0	0	-47.76	-47.76
	Inverter Transformer	MV4-8 T	369262	4909001	2	0	0	56.1	56.1	1	6789.2	3.25	0	87.64	0	2.2	0	0	14	0	0	0	0	0	0	-47.78	-47.78
	Inverter Transformer	MV4-9 T	369284	4909001	2	0	0	56.1	56.1	1	6792.04	3.25	0	87.64	0	2.2	0	0	14	0	0	0	0	0	0	-47.79	-47.79
	Inverter Transformer	MV5-3 T	370237	4908851	2	0	0	56.1	56.1	1	6836.13	3.25	0	87.7	0	2.21	0	0	14.05	0	0	0	0	0	0	-47.9	-47.9
	Inverter Transformer	MV4-4 T	369033	4909199	2	0	0	56.1	56.1	1	6961	3.25	0	87.85	0	2.25	0	0	14.19	0	0	0	0	0	0	-48.23	-48.23
	Inverter Transformer	MV4-6 T	369249	4909192	2	0	0	56.1	56.1	1	6977.09	3.25	0	87.87	0	2.25	0	0	14.21	0	0	0	0	0	0	-48.27	-48.27
	Inverter Transformer	MV4-5 T	369283	4909199	2	0	0	56.1	56.1	1	6988.27	3.25	0	87.89	0	2.26	0	0	14.22	0	0	0	0	0	0	-48.3	-48.3
	Inverter Transformer	MV5-1 T	370015	4909142	2	0	0	56.1	56.1	1	7062.69	3.25	0	87.98	0	2.28	0	0	14.3	0	0	0	0	0	0	-48.49	-48.49
	Inverter Transformer	MV4-1 T	369017	4909397	2	0	0	56.1	56.1	1	7156.79	3.25	0	88.09	0	2.3	0	0	14.4	0	0	0	0	0	0	-48.73	-48.73
	Inverter Transformer	MV4-3 T	369234	4909397	2	0	0	56.1	56.1	1	7178.84	3.25	0	88.12	0	2.31	0	0	14.42	0	0	0	0	0	0	-48.79	-48.79
	Inverter Transformer	MV4-2 T	369267	4909397	2	0	0	56.1	56.1	1	7182.76	3.25	0	88.13	0	2.31	0	0	14.42	0	0	0	0	0	0	-48.8	-48.8
	Line Reactor	NGR	369421	4908787.5	5	0	0	45.4	45.4	1	6600.29	5.25	0	87.39	0	3.23	1.37	0.12	2.7	0	0	0	0	0	0	-49.33	-49.33
Limit. Valu	0	0																								
Level D/N:	19.4026	19.4026																								

Receiver: Existing Noise Receptor
ID: G-108
X: 365041.2
Y: 4903916
Z: 4.5
Ground: 0

ISO	Description	ID	X	Y	Z	Ground	ReflOrd	LxT	LxN	L/A	Dist.	hm	Freq	Adiv	K0b	Agr	Abar	z	Aatm	Afol	Ahous	Cmet	CmetN	Dc	RL	LtotT	LtotN
	Inverter	MV1-15	365315	4904994	2	0	0	100.3	100.3	1	1112.23	3.25	0	71.92	0	-0.19	0	0	11.27	0	0	0	0	0	0	17.32	17.32
	Inverter	MV1-12	365038	4905386	2	0	0	100.3	100.3	1	1470.01	3.25	0	74.35	0	-0.04	0	0	12.25	0	0	0	0	0	0	13.76	13.76
	Inverter	MV1-11	364655	4905414	2	0	0	100.3	100.3	1	1546.98	3.25	0	74.79	0	-0.02	0	0	12.44	0	0	0	0	0	0	13.1	13.1
	Inverter	MV1-14	365163	4905049	2	0	0	97.3	97.3	1	1139.53	3.25	0	72.13	0	-0.18	0	0	11.35	0	0	0	0	0	0	14.01	14.01
	Sol_Luce Substation	S_Substation	369426	4908792	3.5	0	0	112.1	112.1	1	6557.58	5.25	0	87.33	0	1.29	2.53	0.26	10.32	0	0	0	0	0	0	10.61	10.61
	Inverter	MV1-8	364788	4905647	2	0	0	100.3	100.3	1	1749.42	3.25	0	75.86	0	0.05	0	0	12.92	0	0	0	0	0	0	11.49	11.49
	Inverter	MV1-9	364561	4905646	2	0	0	100.3	100.3	1	1795.41	3.25	0	76.08	0	0.07	0	0	13.02	0	0	0	0	0	0	11.14	11.14
	Inverter	MV1-13	364731	4905241	2	0	0	97.3	97.3	1	1360.83	3.25	0	73.68	0	-0.09	0	0	11.97	0	0	0	0	0	0	11.75	11.75
	Inverter	MV1-6	364477	4905835	2	0	0	100.3	100.3	1	2000.22	3.25	0	77.02	0	0.13	0	0	13.46	0	0	0	0	0	0	9.7	9.7
	Inverter	MV1-5	364671	4905892	2	0	0	100.3	100.3	1	2010.38	3.25	0	77.07	0	0.13	0	0	13.48	0	0	0	0	0	0	9.63	9.63

Inverter	MV1-4	364815	4905918	2	0	0	100.3	100.3	1	2014.74	3.25	0	77.08	0	0.13	0	0	13.49	0	0	0	0	0	0	9.6	9.6
Inverter	MV1-2	364753	4906063	2	0	0	100.3	100.3	1	2166.26	3.25	0	77.71	0	0.17	0	0	13.8	0	0	0	0	0	0	8.62	8.62
Inverter	MV1-1	364715	4906166	2	0	0	100.3	100.3	1	2273.52	3.25	0	78.13	0	0.2	0	0	14.02	0	0	0	0	0	0	7.96	7.96
Inverter	MV1-10	365004	4905564	2	0	0	97.3	97.3	1	1648.42	3.25	0	75.34	0	0.02	0	0	12.68	0	0	0	0	0	0	9.27	9.27
Inverter	MV1-7	364925	4905782	2	0	0	97.3	97.3	1	1869.62	3.25	0	76.44	0	0.09	0	0	13.18	0	0	0	0	0	0	7.6	7.6
Inverter	MV2-4	365586	4906624	2	0	0	100.3	100.3	1	2762.26	3.25	0	79.83	0	0.31	0	0	14.95	0	0	0	0	0	0	5.23	5.23
Inverter	MV2-3	365820	4906641	2	0	0	100.3	100.3	1	2834.11	3.25	0	80.05	0	0.33	0	0	15.08	0	0	0	0	0	0	4.86	4.86
Inverter	MV2-1	365842	4906816	2	0	0	97.3	97.3	1	3008.54	3.25	0	80.57	0	0.36	0	0	15.39	0	0	0	0	0	0	0.99	0.99
Inverter	MV3-18	367752	4907412	2	0	0	100.3	100.3	1	4423.85	3.25	0	83.92	0	0.58	0	0	17.71	0	0	0	0	0	0	-1.9	-1.9
Inverter	MV3-12	367668	4907594	2	0	0	100.3	100.3	1	4519.71	3.25	0	84.1	0	0.59	0	0	17.86	0	0	0	0	0	0	-2.24	-2.24
Inverter	MV3-13	367963	4907577	2	0	0	100.3	100.3	1	4684	3.25	0	84.41	0	0.61	0	0	18.11	0	0	0	0	0	0	-2.82	-2.82
Inverter	MV3-17	368178	4907472	2	0	0	100.3	100.3	1	4741.8	3.25	0	84.52	0	0.62	0	0	18.2	0	0	0	0	0	0	-3.02	-3.02
Inverter	MV3-21	368478	4907206	2	0	0	100.3	100.3	1	4757.7	3.25	0	84.55	0	0.62	0	0	18.22	0	0	0	0	0	0	-3.08	-3.08
Inverter	MV3-19	368357	4907347	2	0	0	100.3	100.3	1	4771.4	3.25	0	84.57	0	0.62	0	0	18.24	0	0	0	0	0	0	-3.12	-3.12
Inverter	MV3-7	367945	4907754	2	0	0	100.3	100.3	1	4812.72	3.25	0	84.65	0	0.62	0	0	18.3	0	0	0	0	0	0	-3.26	-3.26
Inverter	MV3-15	368357	4907477	2	0	0	100.3	100.3	1	4865.72	3.25	0	84.74	0	0.63	0	0	18.38	0	0	0	0	0	0	-3.44	-3.44
Inverter	MV3-10	368167	4907669	2	0	0	100.3	100.3	1	4884.22	3.25	0	84.78	0	0.63	0	0	18.41	0	0	0	0	0	0	-3.5	-3.5
Gardiner Substation	G_Sub	366586.3	4903349.9	2.5	0	0	90.8	90.8	1	1645.54	4.25	0	75.33	0	0.84	4.29	0.31	3.75	0	0	0	0	0	0	6.57	6.57
Inverter	MV3-3	367939	4907927	2	0	0	100.3	100.3	1	4948.27	3.25	0	84.89	0	0.64	0	0	18.5	0	0	0	0	0	0	-3.72	-3.72
Inverter	MV3-16	368514	4907475	2	0	0	100.3	100.3	1	4972.61	3.25	0	84.93	0	0.64	0	0	18.54	0	0	0	0	0	0	-3.8	-3.8
Inverter	MV3-20	368689	4907317	2	0	0	100.3	100.3	1	4987.31	3.25	0	84.96	0	0.64	0	0	18.56	0	0	0	0	0	0	-3.85	-3.85
Inverter	MV3-11	368346	4907662	2	0	0	100.3	100.3	1	4995.42	3.25	0	84.97	0	0.64	0	0	18.57	0	0	0	0	0	0	-3.87	-3.87
Inverter	MV3-6	368162	4907834	2	0	0	100.3	100.3	1	5009	3.25	0	85	0	0.64	0	0	18.59	0	0	0	0	0	0	-3.92	-3.92
Inverter	MV3-14	368684	4907498	2	0	0	100.3	100.3	1	5108.89	3.25	0	85.17	0	0.65	0	0	18.74	0	0	0	0	0	0	-4.25	-4.25
Inverter	MV3-9	368512	4907703	2	0	0	100.3	100.3	1	5136.91	3.25	0	85.21	0	0.65	0	0	18.78	0	0	0	0	0	0	-4.34	-4.34
Inverter	MV3-8	368680	4907712	2	0	0	100.3	100.3	1	5258.37	3.25	0	85.42	0	0.66	0	0	18.96	0	0	0	0	0	0	-4.72	-4.72
Inverter	MV6-3	370207	4907140	2	0	0	100.3	100.3	1	6089.31	3.25	0	86.69	0	0.71	0	0	20.11	0	0	0	0	0	0	-7.2	-7.2
Inverter	MV6-2	370085	4907339	2	0	0	100.3	100.3	1	6095.64	3.25	0	86.7	0	0.71	0	0	20.12	0	0	0	0	0	0	-7.22	-7.22
Inverter	MV4-7	369035	4909001	2	0	0	100.3	100.3	1	6465.89	3.25	0	87.21	0	0.71	0	0	20.61	0	0	0	0	0	0	-8.23	-8.23
Inverter	MV4-11	369264	4908855	2	0	0	100.3	100.3	1	6498.14	3.25	0	87.26	0	0.71	0	0	20.66	0	0	0	0	0	0	-8.32	-8.32
Inverter	MV4-10	369312	4908858	2	0	0	100.3	100.3	1	6531.7	3.25	0	87.3	0	0.71	0	0	20.7	0	0	0	0	0	0	-8.4	-8.4
Inverter	MV4-8	369256	4909001	2	0	0	100.3	100.3	1	6604.68	3.25	0	87.4	0	0.72	0	0	20.8	0	0	0	0	0	0	-8.6	-8.6
Inverter	MV4-4	369027	4909199	2	0	0	100.3	100.3	1	6617.91	3.25	0	87.41	0	0.71	0	0	20.81	0	0	0	0	0	0	-8.63	-8.63
Inverter	MV4-9	369289	4909001	2	0	0	100.3	100.3	1	6625.79	3.25	0	87.42	0	0.71	0	0	20.82	0	0	0	0	0	0	-8.65	-8.65
Inverter	MV4-6	369243	4909192	2	0	0	100.3	100.3	1	6744.72	3.25	0	87.58	0	0.71	0	0	20.98	0	0	0	0	0	0	-8.96	-8.96
Inverter	MV4-1	369011	4909397	2	0	0	100.3	100.3	1	6767.62	3.25	0	87.61	0	0.71	0	0	21	0	0	0	0	0	0	-9.02	-9.02
Inverter	MV4-5	369289	4909199	2	0	0	100.3	100.3	1	6778.93	3.25	0	87.62	0	0.71	0	0	21.02	0	0	0	0	0	0	-9.04	-9.04
Inverter	MV5-5	370015	4908690	2	0	0	100.3	100.3	1	6894.18	3.25	0	87.77	0	0.71	0	0	21.17	0	0	0	0	0	0	-9.34	-9.34
Inverter	MV4-3	369229	4909397	2	0	0	100.3	100.3	1	6897.76	3.25	0	87.77	0	0.71	0	0	21.17	0	0	0	0	0	0	-9.34	-9.34
Inverter	MV4-2	369272	4909397	2	0	0	100.3	100.3	1	6923.95	3.25	0	87.81	0	0.71	0	0	21.2	0	0	0	0	0	0	-9.41	-9.41
Inverter	MV5-2	370006	4908853	2	0	0	100.3	100.3	1	7001.66	3.25	0	87.9	0	0.71	0	0	21.3	0	0	0	0	0	0	-9.6	-9.6
Inverters	G_Inv1	366526.4	4903225.8	2	0	0	87.7	87.7	1	1637.74	3.25	0	75.28	0	2.54	0	0	2.21	0	0	0	0	0	0	7.63	7.63
Inverter	MV5-4	370324	4908707	2	0	0	100.3	100.3	1	7131.74	3.25	0	88.06	0	0.71	0	0	21.46	0	0	0	0	0	0	-9.92	-9.92
Inverter	MV5-3	370231	4908851	2	0	0	100.3	100.3	1	7161.58	3.25	0	88.1	0	0.7	0	0	21.5	0	0	0	0	0	0	-9.99	-9.99
Inverter	MV5-1	370020	4909142	2	0	0	100.3	100.3	1	7218	3.25	0	88.17	0	0.7	0	0	21.57	0	0	0	0	0	0	-10.13	-10.13
Inverters	G_Inv3	366583.7	4903091.4	2	0	0	87.7	87.7	1	1749.08	3.25	0	75.86	0	2.55	0	0	2.34	0	0	0	0	0	0	6.91	6.91
Inverters	G_Inv2	366676.9	4903239.1	2	0	0	87.7	87.7	1	1770.23	3.25	0	75.96	0	2.55	0	0	2.37	0	0	0	0	0	0	6.78	6.78
Inverters	G_Inv5	366638.5	4902958.1	2	0	0	87.7	87.7	1	1862.51	3.25	0	76.4	0	2.57	0	0	2.47	0	0	0	0	0	0	6.22	6.22
Inverters	G_Inv4	366732.8	4903105	2	0	0	87.7	87.7	1	1875.96	3.25	0	76.46	0	2.57	0	0	2.49	0	0	0	0	0	0	6.14	6.14
Inverter	MV1-3	364440	4906039	2	0	0	89.1	89.1	1	2206.49	3.25	0	77.87	0	0.96	0	0	8.38	0	0	0	0	0	0	1.85	1.85
Inverters	G_Inv7	366694.6	4902824.7	2	0	0	87.7	87.7	1	1981.08	3.25	0	76.94	0	2.58	0	0	2.61	0	0	0	0	0	0	5.53	5.53
Inverters	G_Inv6	366788.5	4902972	2	0	0	87.7	87.7	1	1986	3.25	0	76.96	0	2.58	0	0	2.62	0	0	0	0	0	0	5.5	5.5
Inverter	MV6-1	370235	4907364	2	0	0	97.3	97.3	1	6234.12	3.25	0	86.9	0	0.71	0	0	20.31	0	0	0	0	0	0	-10.6	-10.6
Inverters	G_Inv8	366844.5	4902838.5	2	0	0	87.7	87.7	1	2100.69	3.25	0	77.45	0	2.6	0	0	2.75	0	0	0	0	0	0	4.86	4.86
Inverters	G_Inv9	366750.9	4902691.8	2	0	0	87.7	87.7	1	2102.79	3.25	0	77.46	0	2.6	0	0	2.75	0	0	0	0	0	0	4.85	4.85
Inverters	G_Inv10	366900.7	4902704.8	2	0	0	87.7	87.7	1	2219.18	3.25	0	77.92	0	2.61	0	0	2.89	0	0	0	0	0	0	4.24	4.24
DSTATCOM - 10 MVAR #2	DSAT2	369403	4908757	2.5	0	0	96.6	96.6	1	6516.18	3.5	0	87.28	0	3.81	0	0	4.08	0	0	0	0	0	0	1.46	1.46
DSTATCOM - 10 MVAR #1	DSAT1	369437	4908757	2.5	0	0	96.6	96.6	1	6538.99	3.5	0	87.31	0	3.81	0	0	4.1	0	0	0	0	0	0	1.41	1.41
Inverter	MV2-2	365977	4906654	2	0	0	89.1	89.1	1	2893.51	3.25	0	80.23	0	1.12	0	0	9.46	0	0	0	0	0	0	-1.75	-1.75
SubstationTransformer	W_ST	369711.17	4906112.3	2.5	0	0	92	92	1	5160.64	4.25	0	85.25	0	1.68	2.29	0.26	8.81	0	0	0	0	0	0	-6.06	-6.06
Inverter	MV3-22	368656	4907142	2	0	0	89.1	89.1	1	4844.98	3.25	0	84.71	0	1.6	0	0	12.26	0	0	0	0	0	0	-9.5	-9.5
Westbrook Inverter Enclosur	W_INV2	369374	4906388	2	0	0	89.1	89.1	1	4988.38	3.25	0	84.96	0	1.64	0	0	12.45	0	0	0	0	0	0	-9.99	-9.99
Westbrook Inverter Enclosur	W_INV3	369508	4906164	2	0	0	89.1	89.1	1	5000.58	3.25	0	84.98	0	1.64	0	0	12.46	0	0	0	0	0	0	-10.03	-10.03
Inverter	MV3-1	368156	4907976	2	0	0	89.1	89.1	1	5117.19	3.25	0	85.18	0	1.67	0	0	12.62	0	0	0	0	0	0	-10.41	-10.41
Inverter	MV3-5	368340	4907843	2	0	0	89.1	89.1	1	5128.69	3.25	0	85.2	0	1.67	0	0	12.64	0	0	0	0	0	0	-10.45	-10.45
Westbrook Inverter Enclosur	W_INV4	369673	4906164	2	0	0	89.1	89.1	1	5148.5	3.25	0	85.23	0	1.68	0	0	12.66	0	0	0	0	0	0	-10.51	-10.51
Inverter	MV3-4	368502	4907925	2	0	0	89.1	89.1	1	5296.15	3.25	0	85.48	0	1.71	0	0	12.86	0	0	0	0	0	0	-10.99	-10.99
Westbrook Inverter Enclosur	W_INV7	369780	4906417	2	0	0	89.1	89.1	1	5358.29	3.25	0	85.58	0	1.73	0	0	12.94	0	0	0	0	0	0	-11.19	-11.19
Westbrook Inverter Enclosur	W_INV5	369719	4906574	2	0	0	89.1	89.1	1	5380.22	3.25	0	85.62	0	1.73	0	0	12.97	0	0	0	0	0	0	-11.26	-11.26
Inverter	MV3-2	368671	4907928	2	0	0	89.1	89.1	1	5410.32	3.25	0	85.66	0	1.74	0	0	13.01	0	0	0	0	0	0	-11.35	-11.35
Westbrook Inverter Enclosur	W_INV6	369875	4906578	2	0	0	89.1	89.1	1	5518.32	3.25	0	85.84	0	1.77	0	0	13.15	0	0	0	0	0	0	-11.69	-11.69
Fixed Reactor Bank 1	FRB1	369378	4908755	6	0	0	89.8	89.8	1	6497.98	5.25	0	87.26	0	-0.35	0	0	10.26	0	0	0	0	0	0	-7.39	-7.39
Fixed Reactor Bank 2	FRB2	369464	4908755	6	0	0	89.8	89.8	1	6555.69	5.25	0	87.33	0	-0.34	0	0	10.31	0	0	0	0	0	0	-7.53	-7.53
Inverter	MV4-15	369176	4908481	2	0	0	89.1	89.1	1	6159.2	3.25	0	86.79	0	1.92	0	0	13.96	0	0	0	0	0	0	-13.62	-13.62

Inverter	MV4-13	369051	4908605	2	0	0	89.1	89.1	1	6169.7	3.25	0	86.81	0	1.93	0	0	13.98	0	0	0	0	0	0	-13.65	-13.65
Inverter	MV4-14	369176	4908507	2	0	0	89.1	89.1	1	6178.5	3.25	0	86.82	0	1.93	0	0	13.99	0	0	0	0	0	0	-13.68	-13.68
Inverter	MV4-12	369043	4908803	2	0	0	89.1	89.1	1	6316.42	3.25	0	87.01	0	1.96	0	0	14.16	0	0	0	0	0	0	-14.07	-14.07
Inverter	MV5-6	369982	4908507	2	0	0	89.1	89.1	1	6744.54	3.25	0	87.58	0	2.07	0	0	14.68	0	0	0	0	0	0	-15.27	-15.27
Westbrook Inverter Enclosur	W_INV1	369409	4906578	2	0	0	86.1	86.1	1	5115.07	3.25	0	85.18	0	1.67	0	0	12.62	0	0	0	0	0	0	-13.4	-13.4
Inverter	MV6-4	370250	4906966	2	0	0	86.1	86.1	1	6036.07	3.25	0	86.62	0	1.89	0	0	13.81	0	0	0	0	0	0	-16.26	-16.26
Inverter Transformer	MV1-14 T	365157	4905049	2	0	0	69.4	69.4	1	1138.91	3.25	0	72.13	0	1.78	0	0	4	0	0	0	0	0	0	-8.56	-8.56
Inverter Transformer	MV1-13 T	364725	4905241	2	0	0	69.4	69.4	1	1362.21	3.25	0	73.68	0	1.91	0	0	4.27	0	0	0	0	0	0	-10.52	-10.52
Inverter Transformer	MV1-10 T	365010	4905564	2	0	0	69.4	69.4	1	1648.3	3.25	0	75.34	0	2.04	0	0	4.6	0	0	0	0	0	0	-12.63	-12.63
Westbrook Inverter Transfor	W_INVTR1	369403	4906578	2	0	0	78.2	78.2	1	5109.95	3.25	0	85.17	0	-3.2	0	0	2.45	0	0	0	0	0	0	-6.18	-6.18
Inverter Transformer	MV1-7 T	364919	4905782	2	0	0	69.4	69.4	1	1870	3.25	0	76.44	0	2.12	0	0	4.83	0	0	0	0	0	0	-14.04	-14.04
Westbrook Inverter Transfor	W_INVTR2	369368	4906388	2	0	0	77.3	77.3	1	4983.17	3.25	0	84.95	0	-3.17	0	0	2.41	0	0	0	0	0	0	-6.84	-6.84
Westbrook Inverter Transfor	W_INVTR3	369514	4906164	2	0	0	77.3	77.3	1	5005.94	3.25	0	84.99	0	-3.18	0	0	2.42	0	0	0	0	0	0	-6.88	-6.88
Westbrook Inverter Transfor	W_INVTR4	369679	4906164	2	0	0	77.3	77.3	1	5153.9	3.25	0	85.24	0	-3.21	0	0	2.47	0	0	0	0	0	0	-7.16	-7.16
Westbrook Inverter Transfor	W_INVTR7	369786	4906417	2	0	0	77.3	77.3	1	5363.59	3.25	0	85.59	0	-3.25	0	0	2.54	0	0	0	0	0	0	-7.53	-7.53
Westbrook Inverter Transfor	W_INVTR5	369725	4906574	2	0	0	77.3	77.3	1	5385.44	3.25	0	85.62	0	-3.25	0	0	2.54	0	0	0	0	0	0	-7.57	-7.57
Westbrook Inverter Transfor	W_INVTR6	369881	4906578	2	0	0	77.3	77.3	1	5523.58	3.25	0	85.84	0	-3.28	0	0	2.59	0	0	0	0	0	0	-7.81	-7.81
Inverter Transformer	MV2-1 T	365836	4906816	2	0	0	69.4	69.4	1	3006.94	3.25	0	80.56	0	2.51	0	0	5.89	0	0	0	0	0	0	-19.61	-19.61
Inverter Transformer	MV1-15 T	365309	4904994	2	0	0	56.1	56.1	1	1110.77	3.25	0	71.91	0	0.05	0	0	5.15	0	0	0	0	0	0	-21.06	-21.06
Inverter Transformer	MV6-4 T	370244	4906966	2	0	0	69.4	69.4	1	6030.89	3.25	0	86.61	0	3.19	0	0	8.04	0	0	0	0	0	0	-28.49	-28.49
Inverter Transformer	MV6-1 T	370230	4907364	2	0	0	69.4	69.4	1	6229.96	3.25	0	86.89	0	3.22	0	0	8.16	0	0	0	0	0	0	-28.92	-28.92
Inverter Transformer	MV1-12 T	365044	4905386	2	0	0	56.1	56.1	1	1470	3.25	0	74.35	0	0.19	0	0	5.95	0	0	0	0	0	0	-24.43	-24.43
Inverter Transformer	MV1-11 T	364649	4905414	2	0	0	56.1	56.1	1	1548.49	3.25	0	74.8	0	0.22	0	0	6.12	0	0	0	0	0	0	-25.08	-25.08
Inverter Transformer	MV1-8 T	364782	4905647	2	0	0	56.1	56.1	1	1750.3	3.25	0	75.86	0	0.3	0	0	6.54	0	0	0	0	0	0	-26.65	-26.65
Inverter Transformer	MV1-9 T	364555	4905646	2	0	0	56.1	56.1	1	1797.02	3.25	0	76.09	0	0.32	0	0	6.64	0	0	0	0	0	0	-26.99	-26.99
Inverter Transformer	MV1-6 T	364482	4905835	2	0	0	56.1	56.1	1	1998.82	3.25	0	77.02	0	0.4	0	0	7.04	0	0	0	0	0	0	-28.4	-28.4
Inverter Transformer	MV1-5 T	364676	4905892	2	0	0	56.1	56.1	1	2009.47	3.25	0	77.06	0	0.41	0	0	7.06	0	0	0	0	0	0	-28.47	-28.47
Inverter Transformer	MV1-4 T	364821	4905918	2	0	0	56.1	56.1	1	2014.08	3.25	0	77.08	0	0.41	0	0	7.07	0	0	0	0	0	0	-28.5	-28.5
Inverter Transformer	MV1-2 T	364759	4906063	2	0	0	56.1	56.1	1	2165.47	3.25	0	77.71	0	0.47	0	0	7.36	0	0	0	0	0	0	-29.49	-29.49
Inverter Transformer	MV1-3 T	364435	4906039	2	0	0	56.1	56.1	1	2207.85	3.25	0	77.88	0	0.49	0	0	7.45	0	0	0	0	0	0	-29.76	-29.76
Inverter Transformer	MV1-1 T	364721	4906166	2	0	0	56.1	56.1	1	2272.67	3.25	0	78.13	0	0.52	0	0	7.57	0	0	0	0	0	0	-30.16	-30.16
Inverter Transformer	MV2-4 T	365590	4906628	2	0	0	56.1	56.1	1	2766.97	3.25	0	79.84	0	0.73	0	0	8.47	0	0	0	0	0	0	-32.98	-32.98
Inverter Transformer	MV2-3 T	365814	4906641	2	0	0	56.1	56.1	1	2832.46	3.25	0	80.04	0	0.76	0	0	8.58	0	0	0	0	0	0	-33.32	-33.32
Inverter Transformer	MV2-2 T	365982	4906654	2	0	0	56.1	56.1	1	2895.13	3.25	0	80.23	0	0.79	0	0	8.69	0	0	0	0	0	0	-33.65	-33.65
Inverter Transformer	MV3-18 T	367757	4907412	2	0	0	56.1	56.1	1	4426.92	3.25	0	83.92	0	1.41	0	0	11.07	0	0	0	0	0	0	-40.35	-40.35
Inverter Transformer	MV3-12 T	367674	4907594	2	0	0	56.1	56.1	1	4523.2	3.25	0	84.11	0	1.45	0	0	11.21	0	0	0	0	0	0	-40.71	-40.71
Inverter Transformer	MV3-13 T	367958	4907577	2	0	0	56.1	56.1	1	4680.88	3.25	0	84.41	0	1.51	0	0	11.43	0	0	0	0	0	0	-41.28	-41.28
Inverter Transformer	MV3-17 T	368183	4907472	2	0	0	56.1	56.1	1	4745.11	3.25	0	84.52	0	1.53	0	0	11.51	0	0	0	0	0	0	-41.51	-41.51
Inverter Transformer	MV3-21 T	368484	4907206	2	0	0	56.1	56.1	1	4762.04	3.25	0	84.56	0	1.54	0	0	11.54	0	0	0	0	0	0	-41.57	-41.57
Inverter Transformer	MV3-19 T	368352	4907347	2	0	0	56.1	56.1	1	4767.93	3.25	0	84.57	0	1.54	0	0	11.54	0	0	0	0	0	0	-41.59	-41.59
Inverter Transformer	MV3-7 T	367951	4907754	2	0	0	56.1	56.1	1	4816.35	3.25	0	84.65	0	1.56	0	0	11.61	0	0	0	0	0	0	-41.76	-41.76
Inverter Transformer	MV3-22 T	368661	4907142	2	0	0	56.1	56.1	1	4848.71	3.25	0	84.71	0	1.57	0	0	11.65	0	0	0	0	0	0	-41.88	-41.88
Inverter Transformer	MV3-15 T	368351	4907477	2	0	0	56.1	56.1	1	4861.64	3.25	0	84.74	0	1.58	0	0	11.67	0	0	0	0	0	0	-41.92	-41.92
Inverter Transformer	MV3-10 T	368162	4907669	2	0	0	56.1	56.1	1	4881.03	3.25	0	84.77	0	1.58	0	0	11.7	0	0	0	0	0	0	-41.99	-41.99
Inverter Transformer	MV3-3 T	367944	4907927	2	0	0	56.1	56.1	1	4951.2	3.25	0	84.89	0	1.61	0	0	11.79	0	0	0	0	0	0	-42.23	-42.23
Inverter Transformer	MV3-16 T	368509	4907475	2	0	0	56.1	56.1	1	4969.12	3.25	0	84.93	0	1.61	0	0	11.81	0	0	0	0	0	0	-42.29	-42.29
Inverter Transformer	MV3-20 T	368683	4907317	2	0	0	56.1	56.1	1	4982.92	3.25	0	84.95	0	1.62	0	0	11.83	0	0	0	0	0	0	-42.34	-42.34
Inverter Transformer	MV3-11 T	368340	4907662	2	0	0	56.1	56.1	1	4991.45	3.25	0	84.96	0	1.62	0	0	11.84	0	0	0	0	0	0	-42.37	-42.37
Inverter Transformer	MV3-6 T	368156	4907834	2	0	0	56.1	56.1	1	5005.27	3.25	0	84.99	0	1.63	0	0	11.86	0	0	0	0	0	0	-42.42	-42.42
Inverter Transformer	MV3-14 T	368678	4907498	2	0	0	56.1	56.1	1	5104.61	3.25	0	85.16	0	1.66	0	0	11.99	0	0	0	0	0	0	-42.76	-42.76
Inverter Transformer	MV3-1 T	368150	4907976	2	0	0	56.1	56.1	1	5113.54	3.25	0	85.17	0	1.67	0	0	12	0	0	0	0	0	0	-42.79	-42.79
Inverter Transformer	MV3-5 T	368335	4907843	2	0	0	56.1	56.1	1	5125.47	3.25	0	85.19	0	1.67	0	0	12.02	0	0	0	0	0	0	-42.83	-42.83
Inverter Transformer	MV3-9 T	368517	4907703	2	0	0	56.1	56.1	1	5140.29	3.25	0	85.22	0	1.68	0	0	12.04	0	0	0	0	0	0	-42.87	-42.87
Inverter Transformer	MV3-8 T	368685	4907712	2	0	0	56.1	56.1	1	5261.83	3.25	0	85.42	0	1.72	0	0	12.19	0	0	0	0	0	0	-43.28	-43.28
Inverter Transformer	MV3-4 T	368507	4907925	2	0	0	56.1	56.1	1	5299.42	3.25	0	85.48	0	1.73	0	0	12.24	0	0	0	0	0	0	-43.4	-43.4
Inverter Transformer	MV3-2 T	368677	4907928	2	0	0	56.1	56.1	1	5414.35	3.25	0	85.67	0	1.77	0	0	12.39	0	0	0	0	0	0	-43.77	-43.77
Inverter Transformer	MV6-3 T	370202	4907140	2	0	0	56.1	56.1	1	6085.07	3.25	0	86.69	0	1.99	0	0	13.2	0	0	0	0	0	0	-45.82	-45.82
Inverter Transformer	MV6-2 T	370091	4907339	2	0	0	56.1	56.1	1	6100.61	3.25	0	86.71	0	2	0	0	13.22	0	0	0	0	0	0	-45.87	-45.87
Inverter Transformer	MV4-15 T	369170	4908481	2	0	0	56.1	56.1	1	6155.18	3.25	0	86.78	0	2.01	0	0	13.29	0	0	0	0	0	0	-46.02	-46.02
Inverter Transformer	MV4-13 T	369057	4908605	2	0	0	56.1	56.1	1	6173.6	3.25	0	86.81	0	2.02	0	0	13.31	0	0	0	0	0	0	-46.08	-46.08
Inverter Transformer	MV4-14 T	369182	4908507	2	0	0	56.1	56.1	1	6182.52	3.25	0	86.82	0	2.02	0	0	13.32	0	0	0	0	0	0	-46.1	-46.1
Inverter Transformer	MV4-12 T	369049	4908803	2	0	0	56.1	56.1	1	6320.22	3.25	0	87.01	0	2.06	0	0	13.48	0	0	0	0	0	0	-46.5	-46.5
Inverter Transformer	MV4-7 T	369040	4909001	2	0	0	56.1	56.1	1	6468.97	3.25	0	87.22	0	2.11	0	0	13.64	0	0	0	0	0	0	-46.91	-46.91
Inverter Transformer	MV4-11 T	369269	4908855	2	0	0	56.1	56.1	1	6501.39	3.25	0	87.26	0	2.12	0	0	13.68	0	0	0	0	0	0	-47	-47
Inverter Transformer	MV4-10 T	369307	4908858	2	0	0	56.1	56.1	1	6528.43	3.25	0	87.3	0	2.13	0	0	13.71	0	0	0	0	0	0	-47.08	-47.08
Inverter Transformer	MV4-8 T	369262	4909001	2	0	0	56.1	56.1	1	6608.51	3.25	0	87.4	0	2.15	0	0	13.8	0	0	0	0	0	0	-47.29	-47.29
Inverter Transformer	MV4-4 T	369033	4909199	2	0	0	56.1	56.1	1	6621.52	3.25	0	87.42	0	2.15	0	0	13.82	0	0	0	0	0	0	-47.33	-47.33
Inverter Transformer	MV4-9 T	369284	4909001	2	0	0	56.1	56.1	1	6622.58	3.25	0	87.42	0	2.15	0	0	13.82	0	0	0	0	0	0	-47.33	-47.33
Inverter Transformer	MV5-6 T	369987	4908507	2	0	0	56.1	56.1	1	6748.2	3.25	0	87.58	0	2.19	0	0	13.96	0	0	0	0	0	0	-47.67	-47.67
Inverter Transformer	MV4-6 T	369249	4909192	2	0	0	56.1	56.1	1	6748.46	3.25	0	87.58	0	2.19	0	0	13.96	0	0	0	0	0	0	-47.67	-47.67
Inverter Transformer	MV4-1 T	369017	4909397	2	0	0	56.1	56.1	1	6771.14	3.25	0	87.61	0	2.2	0	0	13.98	0	0	0	0	0	0	-47.73	-47.73
Inverter Transformer	MV4-5 T	369283	4909199	2	0	0	56.1	56.1	1	6775.17	3.25	0	87.62	0	2.2	0	0	13.99	0	0	0	0	0	0	-47.74	-47.74
Inverter Transformer	MV5-5 T	370021	4908690	2	0	0	56.1	56.1	1	6898.51	3.25	0	87.78	0	2.23	0	0	14.12	0	0	0	0	0	0	-48.07	-48.07
Inverter Transformer	MV4-3 T	369234	4909397	2	0	0	56.1	56.1	1	6900.79	3.25	0	87.78	0	2.23	0	0	14.12	0	0	0	0	0	0	-48.07	-48.07

	Inverter Transformer	MV4-2 T	369267	4909397	2	0	0	56.1	56.1	1	6920.89	3.25	0	87.8	0	2.24	0	0	14.14	0	0	0	0	0	0	-48.13	-48.13
	Inverter Transformer	MV5-2 T	370011	4908853	2	0	0	56.1	56.1	1	7005.2	3.25	0	87.91	0	2.26	0	0	14.24	0	0	0	0	0	0	-48.35	-48.35
	Inverter Transformer	MV5-4 T	370330	4908707	2	0	0	56.1	56.1	1	7136.18	3.25	0	88.07	0	2.3	0	0	14.37	0	0	0	0	0	0	-48.68	-48.68
	Inverter Transformer	MV5-3 T	370237	4908851	2	0	0	56.1	56.1	1	7165.93	3.25	0	88.11	0	2.3	0	0	14.41	0	0	0	0	0	0	-48.76	-48.76
	Inverter Transformer	MV5-1 T	370015	4909142	2	0	0	56.1	56.1	1	7214.55	3.25	0	88.16	0	2.32	0	0	14.46	0	0	0	0	0	0	-48.88	-48.88
	Line Reactor	NGR	369421	4908787.5	5	0	0	45.4	45.4	1	6550.89	5.25	0	87.33	0	3.23	1.37	0.09	2.68	0	0	0	0	0	0	-49.24	-49.24
Limit. Valu	0	0																								
Level D/N:	24.8113	24.8113																								

Receiver: Existing Noise Receptor
ID: G-109
X: 365011.2
Y: 4903913
Z: 4.5
Ground: 0

ISO	Description	ID	X	Y	Z	Ground	ReflOrd	LxT	LxN	L/A	Dist.	hm	Freq	Adiv	K0b	Agr	Abar	z	Aatm	Afol	Ahous	Cmet	CmetN	Dc	RL	LtotT	LtotN
	Inverter	MV1-15	365315	4904994	2	0	0	100.3	100.3	1	1122.88	3.25	0	72.01	0	-0.19	0	0	11.3	0	0	0	0	0	0	17.2	17.2
	Inverter	MV1-12	365038	4905386	2	0	0	100.3	100.3	1	1473.25	3.25	0	74.37	0	-0.04	0	0	12.26	0	0	0	0	0	0	13.73	13.73
	Inverter	MV1-11	364655	4905414	2	0	0	100.3	100.3	1	1542.69	3.25	0	74.77	0	-0.02	0	0	12.43	0	0	0	0	0	0	13.13	13.13
	Inverter	MV1-14	365163	4905049	2	0	0	97.3	97.3	1	1146.1	3.25	0	72.18	0	-0.18	0	0	11.37	0	0	0	0	0	0	13.94	13.94
	Sol_Luce Substation	S_Substation	369426	4908792	3.5	0	0	112.1	112.1	1	6579.9	5.25	0	87.36	0	1.29	2.52	0.26	10.34	0	0	0	0	0	0	10.56	10.56
	Inverter	MV1-8	364788	4905647	2	0	0	100.3	100.3	1	1748.31	3.25	0	75.85	0	0.05	0	0	12.91	0	0	0	0	0	0	11.49	11.49
	Inverter	MV1-9	364561	4905646	2	0	0	100.3	100.3	1	1790.52	3.25	0	76.06	0	0.07	0	0	13.01	0	0	0	0	0	0	11.18	11.18
	Inverter	MV1-13	364731	4905241	2	0	0	97.3	97.3	1	1357.24	3.25	0	73.65	0	-0.09	0	0	11.96	0	0	0	0	0	0	11.79	11.79
	Inverter	MV1-6	364477	4905835	2	0	0	100.3	100.3	1	1994.86	3.25	0	77	0	0.13	0	0	13.45	0	0	0	0	0	0	9.73	9.73
	Inverter	MV1-5	364671	4905892	2	0	0	100.3	100.3	1	2008.03	3.25	0	77.06	0	0.13	0	0	13.48	0	0	0	0	0	0	9.65	9.65
	Inverter	MV1-4	364815	4905918	2	0	0	100.3	100.3	1	2014.58	3.25	0	77.08	0	0.13	0	0	13.49	0	0	0	0	0	0	9.6	9.6
	Inverter	MV1-2	364753	4906063	2	0	0	100.3	100.3	1	2165.45	3.25	0	77.71	0	0.17	0	0	13.8	0	0	0	0	0	0	8.62	8.62
	Inverter	MV1-1	364715	4906166	2	0	0	100.3	100.3	1	2272.39	3.25	0	78.13	0	0.2	0	0	14.02	0	0	0	0	0	0	7.96	7.96
	Inverter	MV1-10	365004	4905564	2	0	0	97.3	97.3	1	1651.02	3.25	0	75.36	0	0.02	0	0	12.69	0	0	0	0	0	0	9.25	9.25
	Inverter	MV1-7	364925	4905782	2	0	0	97.3	97.3	1	1870.99	3.25	0	76.44	0	0.09	0	0	13.19	0	0	0	0	0	0	7.59	7.59
	Inverter	MV2-4	365586	4906624	2	0	0	100.3	100.3	1	2771.27	3.25	0	79.85	0	0.32	0	0	14.96	0	0	0	0	0	0	5.18	5.18
	Inverter	MV2-3	365820	4906641	2	0	0	100.3	100.3	1	2845.37	3.25	0	80.08	0	0.33	0	0	15.1	0	0	0	0	0	0	4.8	4.8
	Inverter	MV2-1	365842	4906816	2	0	0	97.3	97.3	1	3019.54	3.25	0	80.6	0	0.37	0	0	15.41	0	0	0	0	0	0	0.94	0.94
	Inverter	MV3-18	367752	4907412	2	0	0	100.3	100.3	1	4444.66	3.25	0	83.96	0	0.58	0	0	17.75	0	0	0	0	0	0	-1.97	-1.97
	Inverter	MV3-12	367668	4907594	2	0	0	100.3	100.3	1	4539.64	3.25	0	84.14	0	0.6	0	0	17.89	0	0	0	0	0	0	-2.31	-2.31
	Inverter	MV3-13	367963	4907577	2	0	0	100.3	100.3	1	4705.11	3.25	0	84.45	0	0.61	0	0	18.14	0	0	0	0	0	0	-2.89	-2.89
	Inverter	MV3-17	368178	4907472	2	0	0	100.3	100.3	1	4763.94	3.25	0	84.56	0	0.62	0	0	18.23	0	0	0	0	0	0	-3.1	-3.1
	Inverter	MV3-21	368478	4907206	2	0	0	100.3	100.3	1	4781.48	3.25	0	84.59	0	0.62	0	0	18.26	0	0	0	0	0	0	-3.16	-3.16
	Inverter	MV3-19	368357	4907347	2	0	0	100.3	100.3	1	4794.45	3.25	0	84.61	0	0.62	0	0	18.28	0	0	0	0	0	0	-3.2	-3.2
	Inverter	MV3-7	367945	4907754	2	0	0	100.3	100.3	1	4833.27	3.25	0	84.68	0	0.63	0	0	18.33	0	0	0	0	0	0	-3.33	-3.33
	Inverter	MV3-15	368357	4907477	2	0	0	100.3	100.3	1	4888.4	3.25	0	84.78	0	0.63	0	0	18.42	0	0	0	0	0	0	-3.52	-3.52
	Inverter	MV3-10	368167	4907669	2	0	0	100.3	100.3	1	4905.77	3.25	0	84.81	0	0.63	0	0	18.44	0	0	0	0	0	0	-3.58	-3.58
	Inverter	MV3-3	367939	4907927	2	0	0	100.3	100.3	1	4968.32	3.25	0	84.92	0	0.64	0	0	18.53	0	0	0	0	0	0	-3.78	-3.78
	Inverter	MV3-16	368514	4907475	2	0	0	100.3	100.3	1	4995.74	3.25	0	84.97	0	0.64	0	0	18.57	0	0	0	0	0	0	-3.88	-3.88
	Inverter	MV3-20	368689	4907317	2	0	0	100.3	100.3	1	5011.33	3.25	0	85	0	0.64	0	0	18.6	0	0	0	0	0	0	-3.93	-3.93
	Gardiner Substation	G_Sub	366586.3	4903349.9	2.5	0	0	90.8	90.8	1	1672.73	4.25	0	75.47	0	0.84	4.26	0.31	3.8	0	0	0	0	0	0	6.41	6.41
	Inverter	MV3-11	368346	4907662	2	0	0	100.3	100.3	1	5017.56	3.25	0	85.01	0	0.64	0	0	18.61	0	0	0	0	0	0	-3.95	-3.95
	Inverter	MV3-6	368162	4907834	2	0	0	100.3	100.3	1	5030.09	3.25	0	85.03	0	0.64	0	0	18.62	0	0	0	0	0	0	-3.99	-3.99
	Inverter	MV3-14	368684	4907498	2	0	0	100.3	100.3	1	5132.42	3.25	0	85.21	0	0.65	0	0	18.77	0	0	0	0	0	0	-4.32	-4.32
	Inverter	MV3-9	368512	4907703	2	0	0	100.3	100.3	1	5159.43	3.25	0	85.25	0	0.66	0	0	18.81	0	0	0	0	0	0	-4.41	-4.41
	Inverter	MV3-8	368680	4907712	2	0	0	100.3	100.3	1	5281.34	3.25	0	85.45	0	0.67	0	0	18.99	0	0	0	0	0	0	-4.8	-4.8
	Inverter	MV6-3	370207	4907140	2	0	0	100.3	100.3	1	6116.36	3.25	0	86.73	0	0.71	0	0	20.15	0	0	0	0	0	0	-7.28	-7.28
	Inverter	MV6-2	370085	4907339	2	0	0	100.3	100.3	1	6122.17	3.25	0	86.74	0	0.71	0	0	20.16	0	0	0	0	0	0	-7.29	-7.29
	Inverter	MV4-7	369035	4909001	2	0	0	100.3	100.3	1	6486.81	3.25	0	87.24	0	0.71	0	0	20.64	0	0	0	0	0	0	-8.29	-8.29
	Inverter	MV4-11	369264	4908855	2	0	0	100.3	100.3	1	6519.94	3.25	0	87.28	0	0.71	0	0	20.69	0	0	0	0	0	0	-8.37	-8.37
	Inverter	MV4-10	369312	4908858	2	0	0	100.3	100.3	1	6553.62	3.25	0	87.33	0	0.71	0	0	20.73	0	0	0	0	0	0	-8.46	-8.46
	Inverter	MV4-8	369256	4909001	2	0	0	100.3	100.3	1	6626.17	3.25	0	87.43	0	0.71	0	0	20.82	0	0	0	0	0	0	-8.65	-8.65
	Inverter	MV4-4	369027	4909199	2	0	0	100.3	100.3	1	6638.41	3.25	0	87.44	0	0.71	0	0	20.84	0	0	0	0	0	0	-8.68	-8.68
	Inverter	MV4-9	369289	4909001	2	0	0	100.3	100.3	1	6647.35	3.25	0	87.45	0	0.71	0	0	20.85	0	0	0	0	0	0	-8.71	-8.71
	Inverter	MV4-6	369243	4909192	2	0	0	100.3	100.3	1	6765.79	3.25	0	87.61	0	0.71	0	0	21	0	0	0	0	0	0	-9.01	-9.01
	Inverter	MV4-1	369011	4909397	2	0	0	100.3	100.3	1	6787.68	3.25	0	87.63	0	0.71	0	0	21.03	0	0	0	0	0	0	-9.07	-9.07
	Inverter	MV4-5	369289	4909199	2	0	0	100.3	100.3	1	6800.1	3.25	0	87.65	0	0.71	0	0	21.05	0	0	0	0	0	0	-9.1	-9.1
	Inverter	MV5-5	370015	4908690	2	0	0	100.3	100.3	1	6917.93	3.25	0	87.8	0	0.71	0	0	21.2	0	0	0	0	0	0	-9.39	-9.39
	Inverter	MV4-3	369229	4909397	2	0	0	100.3	100.3	1	6918.39	3.25	0	87.8	0	0.71	0	0	21.2	0	0	0	0	0	0	-9.4	-9.4
	Inverter	MV4-2	369272	4909397	2	0	0	100.3	100.3	1	6944.69	3.25	0	87.83	0	0.71	0	0	21.23	0	0	0	0	0	0	-9.46	-9.46
	Inverter	MV5-2	370006	4908853	2	0	0	100.3	100.3	1	7025.07	3.25	0	87.93	0	0.71	0	0	21.33	0	0	0	0	0	0	-9.66	-9.66
	Inverters	G_Inv1	366526.4	4903225.8	2	0	0	87.7	87.7	1	1663.76	3.25	0	75.42	0	2.54	0	0	2.24	0	0	0	0	0	0	7.46	7.46
	Inverter	MV5-4	370324	4908707	2	0	0	100.3	100.3	1	7156	3.25	0	88.09	0	0.71	0	0	21.49	0	0	0	0	0	0	-9.98	-9.98
	Inverter	MV5-3	370231	4908851	2	0	0	100.3	100.3	1	7185.41	3.25	0	88.13	0	0.7	0	0	21.53	0	0	0	0	0	0	-10.05	-10.05
	Inverter	MV5-1	370020	4909142	2	0	0	100.3	100.3	1	7240.89	3.25	0	88.2	0	0.7	0	0	21.6	0	0	0	0	0	0	-10.18	-10.18
	Inverters	G_Inv3	366583.7	4903091.4	2	0	0	87.7	87.7	1	1774.2	3.25	0	75.98	0	2.55	0	0	2.37	0	0	0	0	0	0	6.75	6.75
	Inverters	G_Inv2	366676.9	4903239.1	2	0	0	87.7	87.7	1	1796.86	3.25	0	76.09	0	2.56	0	0	2.4	0	0	0	0	0	0	6.61	6.61

Inverter	MV1-3	364440	4906039	2	0	0	89.1	89.1	1	2201.4	3.25	0	77.85	0	0.95	0	0	8.37	0	0	0	0	0	0	1.88	1.88
Inverters	G_Inv5	366638.5	4902958.1	2	0	0	87.7	87.7	1	1886.78	3.25	0	76.51	0	2.57	0	0	2.5	0	0	0	0	0	0	6.07	6.07
Inverters	G_Inv4	366732.8	4903105	2	0	0	87.7	87.7	1	1901.78	3.25	0	76.58	0	2.57	0	0	2.52	0	0	0	0	0	0	5.99	5.99
Inverters	G_Inv7	366694.6	4902824.7	2	0	0	87.7	87.7	1	2004.55	3.25	0	77.04	0	2.58	0	0	2.64	0	0	0	0	0	0	5.4	5.4
Inverters	G_Inv6	366788.5	4902972	2	0	0	87.7	87.7	1	2011.04	3.25	0	77.07	0	2.58	0	0	2.65	0	0	0	0	0	0	5.36	5.36
Inverter	MV6-1	370235	4907364	2	0	0	97.3	97.3	1	6260.79	3.25	0	86.93	0	0.71	0	0	20.34	0	0	0	0	0	0	-10.68	-10.68
Inverters	G_Inv8	366844.5	4902838.5	2	0	0	87.7	87.7	1	2124.98	3.25	0	77.55	0	2.6	0	0	2.78	0	0	0	0	0	0	4.73	4.73
Inverters	G_Inv9	366750.9	4902691.8	2	0	0	87.7	87.7	1	2125.53	3.25	0	77.55	0	2.6	0	0	2.78	0	0	0	0	0	0	4.73	4.73
Inverters	G_Inv10	366900.7	4902704.8	2	0	0	87.7	87.7	1	2242.76	3.25	0	78.02	0	2.61	0	0	2.92	0	0	0	0	0	0	4.11	4.11
DSTATCOM - 10 MVAR #2	DSAT2	369403	4908757	2.5	0	0	96.6	96.6	1	6538.52	3.5	0	87.31	0	3.81	0	0	4.1	0	0	0	0	0	0	1.42	1.42
DSTATCOM - 10 MVAR #1	DSAT1	369437	4908757	2.5	0	0	96.6	96.6	1	6561.41	3.5	0	87.34	0	3.81	0	0	4.11	0	0	0	0	0	0	1.37	1.37
Inverter	MV2-2	365977	4906654	2	0	0	89.1	89.1	1	2906.18	3.25	0	80.27	0	1.12	0	0	9.47	0	0	0	0	0	0	-1.81	-1.81
SubstationTransformer	W_ST	369711.17	4906112.3	2.5	0	0	92	92	1	5189.08	4.25	0	85.3	0	1.69	2.28	0.26	8.84	0	0	0	0	0	0	-6.14	-6.14
Inverter	MV3-22	368656	4907142	2	0	0	89.1	89.1	1	4869.4	3.25	0	84.75	0	1.61	0	0	12.29	0	0	0	0	0	0	-9.59	-9.59
Westbrook Inverter Enclosur	W_INV2	369374	4906388	2	0	0	89.1	89.1	1	5015.94	3.25	0	85.01	0	1.64	0	0	12.48	0	0	0	0	0	0	-10.08	-10.08
Westbrook Inverter Enclosur	W_INV3	369508	4906164	2	0	0	89.1	89.1	1	5028.74	3.25	0	85.03	0	1.65	0	0	12.5	0	0	0	0	0	0	-10.12	-10.12
Inverter	MV3-1	368156	4907976	2	0	0	89.1	89.1	1	5137.87	3.25	0	85.22	0	1.67	0	0	12.65	0	0	0	0	0	0	-10.48	-10.48
Inverter	MV3-5	368340	4907843	2	0	0	89.1	89.1	1	5150.32	3.25	0	85.24	0	1.68	0	0	12.66	0	0	0	0	0	0	-10.52	-10.52
Westbrook Inverter Enclosur	W_INV4	369673	4906164	2	0	0	89.1	89.1	1	5176.81	3.25	0	85.28	0	1.68	0	0	12.7	0	0	0	0	0	0	-10.61	-10.61
Inverter	MV3-4	368502	4907925	2	0	0	89.1	89.1	1	5318.07	3.25	0	85.52	0	1.72	0	0	12.89	0	0	0	0	0	0	-11.06	-11.06
Westbrook Inverter Enclosur	W_INV7	369780	4906417	2	0	0	89.1	89.1	1	5386.23	3.25	0	85.63	0	1.74	0	0	12.97	0	0	0	0	0	0	-11.28	-11.28
Westbrook Inverter Enclosur	W_INV5	369719	4906574	2	0	0	89.1	89.1	1	5407.8	3.25	0	85.66	0	1.74	0	0	13	0	0	0	0	0	0	-11.35	-11.35
Inverter	MV3-2	368671	4907928	2	0	0	89.1	89.1	1	5432.71	3.25	0	85.7	0	1.75	0	0	13.04	0	0	0	0	0	0	-11.42	-11.42
Westbrook Inverter Enclosur	W_INV6	369875	4906578	2	0	0	89.1	89.1	1	5546.06	3.25	0	85.88	0	1.77	0	0	13.18	0	0	0	0	0	0	-11.78	-11.78
Fixed Reactor Bank 1	FRB1	369378	4908755	6	0	0	89.8	89.8	1	6520.27	5.25	0	87.29	0	-0.35	0	0	10.28	0	0	0	0	0	0	-7.44	-7.44
Fixed Reactor Bank 2	FRB2	369464	4908755	6	0	0	89.8	89.8	1	6578.18	5.25	0	87.36	0	-0.34	0	0	10.34	0	0	0	0	0	0	-7.58	-7.58
Inverter	MV4-15	369176	4908481	2	0	0	89.1	89.1	1	6181.6	3.25	0	86.82	0	1.93	0	0	13.99	0	0	0	0	0	0	-13.68	-13.68
Inverter	MV4-13	369051	4908605	2	0	0	89.1	89.1	1	6191.51	3.25	0	86.84	0	1.93	0	0	14	0	0	0	0	0	0	-13.71	-13.71
Inverter	MV4-14	369176	4908507	2	0	0	89.1	89.1	1	6200.84	3.25	0	86.85	0	1.93	0	0	14.01	0	0	0	0	0	0	-13.74	-13.74
Inverter	MV4-12	369043	4908803	2	0	0	89.1	89.1	1	6337.78	3.25	0	87.04	0	1.97	0	0	14.18	0	0	0	0	0	0	-14.13	-14.13
Inverter	MV5-6	369982	4908507	2	0	0	89.1	89.1	1	6768.58	3.25	0	87.61	0	2.07	0	0	14.71	0	0	0	0	0	0	-15.33	-15.33
Westbrook Inverter Enclosur	W_INV1	369409	4906578	2	0	0	86.1	86.1	1	5142.26	3.25	0	85.22	0	1.67	0	0	12.65	0	0	0	0	0	0	-13.49	-13.49
Inverter	MV6-4	370250	4906966	2	0	0	86.1	86.1	1	6063.48	3.25	0	86.65	0	1.9	0	0	13.84	0	0	0	0	0	0	-16.34	-16.34
Inverter Transformer	MV1-14 T	365157	4905049	2	0	0	69.4	69.4	1	1145.32	3.25	0	72.18	0	1.79	0	0	4.01	0	0	0	0	0	0	-8.62	-8.62
Inverter Transformer	MV1-13 T	364725	4905241	2	0	0	69.4	69.4	1	1358.49	3.25	0	73.66	0	1.91	0	0	4.27	0	0	0	0	0	0	-10.49	-10.49
Inverter Transformer	MV1-10 T	365010	4905564	2	0	0	69.4	69.4	1	1651	3.25	0	75.35	0	2.04	0	0	4.6	0	0	0	0	0	0	-12.64	-12.64
Westbrook Inverter Transfor	W_INVTR1	369403	4906578	2	0	0	78.2	78.2	1	5137.13	3.25	0	85.21	0	-3.2	0	0	2.46	0	0	0	0	0	0	-6.23	-6.23
Inverter Transformer	MV1-7 T	364919	4905782	2	0	0	69.4	69.4	1	1871.27	3.25	0	76.44	0	2.12	0	0	4.83	0	0	0	0	0	0	-14.05	-14.05
Westbrook Inverter Transfor	W_INVTR2	369368	4906388	2	0	0	77.3	77.3	1	5010.72	3.25	0	85	0	-3.18	0	0	2.42	0	0	0	0	0	0	-6.89	-6.89
Westbrook Inverter Transfor	W_INVTR3	369514	4906164	2	0	0	77.3	77.3	1	5034.11	3.25	0	85.04	0	-3.18	0	0	2.42	0	0	0	0	0	0	-6.94	-6.94
Westbrook Inverter Transfor	W_INVTR4	369679	4906164	2	0	0	77.3	77.3	1	5182.22	3.25	0	85.29	0	-3.21	0	0	2.47	0	0	0	0	0	0	-7.21	-7.21
Westbrook Inverter Transfor	W_INVTR7	369786	4906417	2	0	0	77.3	77.3	1	5391.54	3.25	0	85.63	0	-3.25	0	0	2.54	0	0	0	0	0	0	-7.58	-7.58
Westbrook Inverter Transfor	W_INVTR5	369725	4906574	2	0	0	77.3	77.3	1	5413.02	3.25	0	85.67	0	-3.26	0	0	2.55	0	0	0	0	0	0	-7.62	-7.62
Westbrook Inverter Transfor	W_INVTR6	369881	4906578	2	0	0	77.3	77.3	1	5551.32	3.25	0	85.89	0	-3.28	0	0	2.6	0	0	0	0	0	0	-7.86	-7.86
Inverter Transformer	MV2-1 T	365836	4906816	2	0	0	69.4	69.4	1	3017.9	3.25	0	80.59	0	2.51	0	0	5.9	0	0	0	0	0	0	-19.65	-19.65
Inverter Transformer	MV1-15 T	365309	4904994	2	0	0	56.1	56.1	1	1121.27	3.25	0	71.99	0	0.05	0	0	5.17	0	0	0	0	0	0	-21.17	-21.17
Inverter Transformer	MV6-4 T	370244	4906966	2	0	0	69.4	69.4	1	6058.3	3.25	0	86.65	0	3.2	0	0	8.05	0	0	0	0	0	0	-28.55	-28.55
Inverter Transformer	MV6-1 T	370230	4907364	2	0	0	69.4	69.4	1	6256.62	3.25	0	86.93	0	3.23	0	0	8.17	0	0	0	0	0	0	-28.97	-28.97
Inverter Transformer	MV1-12 T	365044	4905386	2	0	0	56.1	56.1	1	1473.37	3.25	0	74.37	0	0.19	0	0	5.96	0	0	0	0	0	0	-24.46	-24.46
Inverter Transformer	MV1-11 T	364649	4905414	2	0	0	56.1	56.1	1	1544.08	3.25	0	74.77	0	0.22	0	0	6.11	0	0	0	0	0	0	-25.04	-25.04
Inverter Transformer	MV1-8 T	364782	4905647	2	0	0	56.1	56.1	1	1749.08	3.25	0	75.86	0	0.3	0	0	6.54	0	0	0	0	0	0	-26.64	-26.64
Inverter Transformer	MV1-9 T	364555	4905646	2	0	0	56.1	56.1	1	1792.04	3.25	0	76.07	0	0.32	0	0	6.63	0	0	0	0	0	0	-26.95	-26.95
Inverter Transformer	MV1-6 T	364482	4905835	2	0	0	56.1	56.1	1	1993.53	3.25	0	76.99	0	0.4	0	0	7.03	0	0	0	0	0	0	-28.37	-28.37
Inverter Transformer	MV1-5 T	364676	4905892	2	0	0	56.1	56.1	1	2007.19	3.25	0	77.05	0	0.41	0	0	7.06	0	0	0	0	0	0	-28.46	-28.46
Inverter Transformer	MV1-4 T	364821	4905918	2	0	0	56.1	56.1	1	2014	3.25	0	77.08	0	0.41	0	0	7.07	0	0	0	0	0	0	-28.5	-28.5
Inverter Transformer	MV1-2 T	364759	4906063	2	0	0	56.1	56.1	1	2164.74	3.25	0	77.71	0	0.47	0	0	7.36	0	0	0	0	0	0	-29.49	-29.49
Inverter Transformer	MV1-3 T	364435	4906039	2	0	0	56.1	56.1	1	2202.7	3.25	0	77.86	0	0.49	0	0	7.44	0	0	0	0	0	0	-29.73	-29.73
Inverter Transformer	MV1-1 T	364721	4906166	2	0	0	56.1	56.1	1	2271.61	3.25	0	78.13	0	0.52	0	0	7.57	0	0	0	0	0	0	-30.15	-30.15
Inverter Transformer	MV2-4 T	365590	4906628	2	0	0	56.1	56.1	1	2776.01	3.25	0	79.87	0	0.73	0	0	8.48	0	0	0	0	0	0	-33.03	-33.03
Inverter Transformer	MV2-3 T	365814	4906641	2	0	0	56.1	56.1	1	2843.67	3.25	0	80.08	0	0.76	0	0	8.6	0	0	0	0	0	0	-33.38	-33.38
Inverter Transformer	MV2-2 T	365982	4906654	2	0	0	56.1	56.1	1	2907.84	3.25	0	80.27	0	0.79	0	0	8.71	0	0	0	0	0	0	-33.71	-33.71
Inverter Transformer	MV3-18 T	367757	4907412	2	0	0	56.1	56.1	1	4447.74	3.25	0	83.96	0	1.42	0	0	11.1	0	0	0	0	0	0	-40.43	-40.43
Inverter Transformer	MV3-12 T	367674	4907594	2	0	0	56.1	56.1	1	4543.16	3.25	0	84.15	0	1.46	0	0	11.24	0	0	0	0	0	0	-40.78	-40.78
Inverter Transformer	MV3-13 T	367958	4907577	2	0	0	56.1	56.1	1	4701.97	3.25	0	84.45	0	1.52	0	0	11.45	0	0	0	0	0	0	-41.36	-41.36
Inverter Transformer	MV3-17 T	368183	4907472	2	0	0	56.1	56.1	1	4767.26	3.25	0	84.57	0	1.54	0	0	11.54	0	0	0	0	0	0	-41.59	-41.59
Inverter Transformer	MV3-21 T	368484	4907206	2	0	0	56.1	56.1	1	4785.83	3.25	0	84.6	0	1.55	0	0	11.57	0	0	0	0	0	0	-41.66	-41.66
Inverter Transformer	MV3-19 T	368352	4907347	2	0	0	56.1	56.1	1	4790.96	3.25	0	84.61	0	1.55	0	0	11.58	0	0	0	0	0	0	-41.67	-41.67
Inverter Transformer	MV3-7 T	367951	4907754	2	0	0	56.1	56.1	1	4836.91	3.25	0	84.69	0	1.57	0	0	11.64	0	0	0	0	0	0	-41.84	-41.84
Inverter Transformer	MV3-22 T	368661	4907142	2	0	0	56.1	56.1	1	4873.14	3.25	0	84.76	0	1.58	0	0	11.69	0	0	0	0	0	0	-41.96	-41.96
Inverter Transformer	MV3-15 T	368351	4907477	2	0	0	56.1	56.1	1	4884.3	3.25	0	84.78	0	1.58	0	0	11.7	0	0	0	0	0	0	-42	-42
Inverter Transformer	MV3-10 T	368162	4907669	2	0	0	56.1	56.1	1	4902.56	3.25	0	84.81	0	1.59	0	0	11.72	0	0	0	0	0	0	-42.06	-42.06
Inverter Transformer	MV3-3 T	367944	4907927	2	0	0	56.1	56.1	1	4971.27	3.25	0	84.93	0	1.61	0	0	11.82	0	0	0	0	0	0	-42.3	-42.3
Inverter Transformer	MV3-16 T	368509	4907475	2	0	0	56.1	56.1	1	4992.24	3.25	0	84.97	0	1.62	0	0	11.84	0	0	0	0	0	0	-42.37	-42.37
Inverter Transformer	MV3-20 T	368683	4907317	2	0	0	56.1	56.1	1	5006.93	3.25	0	84.99	0	1.63	0	0	11.86	0	0	0	0	0	0	-42.42	-42.42

	Inverter Transformer	MV3-11 T	368340	4907662	2	0	0	56.1	56.1	1	5013.57	3.25	0	85	0	1.63	0	0	11.87	0	0	0	0	0	0	-42.45	-42.45
	Inverter Transformer	MV3-6 T	368156	4907834	2	0	0	56.1	56.1	1	5026.33	3.25	0	85.03	0	1.63	0	0	11.89	0	0	0	0	0	0	-42.49	-42.49
	Inverter Transformer	MV3-14 T	368678	4907498	2	0	0	56.1	56.1	1	5128.12	3.25	0	85.2	0	1.67	0	0	12.02	0	0	0	0	0	0	-42.83	-42.83
	Inverter Transformer	MV3-1 T	368150	4907976	2	0	0	56.1	56.1	1	5134.2	3.25	0	85.21	0	1.67	0	0	12.03	0	0	0	0	0	0	-42.85	-42.85
	Inverter Transformer	MV3-5 T	368335	4907843	2	0	0	56.1	56.1	1	5147.09	3.25	0	85.23	0	1.68	0	0	12.05	0	0	0	0	0	0	-42.9	-42.9
	Inverter Transformer	MV3-9 T	368517	4907703	2	0	0	56.1	56.1	1	5162.82	3.25	0	85.26	0	1.68	0	0	12.07	0	0	0	0	0	0	-42.95	-42.95
	Inverter Transformer	MV3-8 T	368685	4907712	2	0	0	56.1	56.1	1	5284.81	3.25	0	85.46	0	1.73	0	0	12.22	0	0	0	0	0	0	-43.35	-43.35
	Inverter Transformer	MV3-4 T	368507	4907925	2	0	0	56.1	56.1	1	5321.35	3.25	0	85.52	0	1.74	0	0	12.27	0	0	0	0	0	0	-43.47	-43.47
	Inverter Transformer	MV3-2 T	368677	4907928	2	0	0	56.1	56.1	1	5436.76	3.25	0	85.71	0	1.78	0	0	12.42	0	0	0	0	0	0	-43.84	-43.84
	Inverter Transformer	MV6-3 T	370202	4907140	2	0	0	56.1	56.1	1	6112.11	3.25	0	86.72	0	2	0	0	13.23	0	0	0	0	0	0	-45.9	-45.9
	Inverter Transformer	MV6-2 T	370091	4907339	2	0	0	56.1	56.1	1	6127.14	3.25	0	86.75	0	2	0	0	13.25	0	0	0	0	0	0	-45.94	-45.94
	Inverter Transformer	MV4-15 T	369170	4908481	2	0	0	56.1	56.1	1	6177.56	3.25	0	86.82	0	2.02	0	0	13.31	0	0	0	0	0	0	-46.09	-46.09
	Inverter Transformer	MV4-13 T	369057	4908605	2	0	0	56.1	56.1	1	6195.43	3.25	0	86.84	0	2.03	0	0	13.33	0	0	0	0	0	0	-46.14	-46.14
	Inverter Transformer	MV4-14 T	369182	4908507	2	0	0	56.1	56.1	1	6204.87	3.25	0	86.85	0	2.03	0	0	13.34	0	0	0	0	0	0	-46.17	-46.17
	Inverter Transformer	MV4-12 T	369049	4908803	2	0	0	56.1	56.1	1	6341.6	3.25	0	87.04	0	2.07	0	0	13.5	0	0	0	0	0	0	-46.56	-46.56
	Inverter Transformer	MV4-7 T	369040	4909001	2	0	0	56.1	56.1	1	6489.91	3.25	0	87.24	0	2.11	0	0	13.67	0	0	0	0	0	0	-46.97	-46.97
	Inverter Transformer	MV4-11 T	369269	4908855	2	0	0	56.1	56.1	1	6523.21	3.25	0	87.29	0	2.12	0	0	13.71	0	0	0	0	0	0	-47.06	-47.06
	Inverter Transformer	MV4-10 T	369307	4908858	2	0	0	56.1	56.1	1	6550.34	3.25	0	87.33	0	2.13	0	0	13.74	0	0	0	0	0	0	-47.14	-47.14
	Inverter Transformer	MV4-8 T	369262	4909001	2	0	0	56.1	56.1	1	6630.01	3.25	0	87.43	0	2.16	0	0	13.83	0	0	0	0	0	0	-47.35	-47.35
	Inverter Transformer	MV4-4 T	369033	4909199	2	0	0	56.1	56.1	1	6642.04	3.25	0	87.45	0	2.16	0	0	13.84	0	0	0	0	0	0	-47.39	-47.39
	Inverter Transformer	MV4-9 T	369284	4909001	2	0	0	56.1	56.1	1	6644.14	3.25	0	87.45	0	2.16	0	0	13.84	0	0	0	0	0	0	-47.39	-47.39
	Inverter Transformer	MV4-6 T	369249	4909192	2	0	0	56.1	56.1	1	6769.55	3.25	0	87.61	0	2.2	0	0	13.98	0	0	0	0	0	0	-47.73	-47.73
	Inverter Transformer	MV5-6 T	369987	4908507	2	0	0	56.1	56.1	1	6772.25	3.25	0	87.61	0	2.2	0	0	13.98	0	0	0	0	0	0	-47.74	-47.74
	Inverter Transformer	MV4-1 T	369017	4909397	2	0	0	56.1	56.1	1	6791.22	3.25	0	87.64	0	2.2	0	0	14	0	0	0	0	0	0	-47.79	-47.79
	Inverter Transformer	MV4-5 T	369283	4909199	2	0	0	56.1	56.1	1	6796.33	3.25	0	87.65	0	2.2	0	0	14.01	0	0	0	0	0	0	-47.8	-47.8
	Inverter Transformer	MV4-3 T	369234	4909397	2	0	0	56.1	56.1	1	6921.44	3.25	0	87.8	0	2.24	0	0	14.15	0	0	0	0	0	0	-48.13	-48.13
	Inverter Transformer	MV5-5 T	370021	4908690	2	0	0	56.1	56.1	1	6922.27	3.25	0	87.8	0	2.24	0	0	14.15	0	0	0	0	0	0	-48.13	-48.13
	Inverter Transformer	MV4-2 T	369267	4909397	2	0	0	56.1	56.1	1	6941.62	3.25	0	87.83	0	2.24	0	0	14.17	0	0	0	0	0	0	-48.18	-48.18
	Inverter Transformer	MV5-2 T	370011	4908853	2	0	0	56.1	56.1	1	7028.63	3.25	0	87.94	0	2.27	0	0	14.26	0	0	0	0	0	0	-48.41	-48.41
	Inverter Transformer	MV5-4 T	370330	4908707	2	0	0	56.1	56.1	1	7160.45	3.25	0	88.1	0	2.3	0	0	14.4	0	0	0	0	0	0	-48.74	-48.74
	Inverter Transformer	MV5-3 T	370237	4908851	2	0	0	56.1	56.1	1	7189.77	3.25	0	88.13	0	2.31	0	0	14.43	0	0	0	0	0	0	-48.82	-48.82
	Inverter Transformer	MV5-1 T	370015	4909142	2	0	0	56.1	56.1	1	7237.43	3.25	0	88.19	0	2.32	0	0	14.48	0	0	0	0	0	0	-48.94	-48.94
	Line Reactor	NGR	369421	4908787.5	5	0	0	45.4	45.4	1	6573.21	5.25	0	87.36	0	3.23	1.37	0.09	2.69	0	0	0	0	0	0	-49.28	-49.28
Limit. Valu	0	0																								
Level D/N:	24.761	24.761																								

Receiver: Existing Noise Receptor
ID: G-110
X: 364922.2
Y: 4903826
Z: 4.5
Ground: 0

ISO	Description	ID	X	Y	Z	Ground	ReflOrd	LxT	LxN	L/A	Dist.	hm	Freq	Adiv	K0b	Agr	Abar	z	Aatm	Afol	Ahous	Cmet	CmetN	Dc	RL	LtotT	LtotN
	Inverter	MV1-15	365315	4904994	2	0	0	100.3	100.3	1	1232.28	3.25	0	72.81	0	-0.14	0	0	11.62	0	0	0	0	0	0	16.02	16.02
	Inverter	MV1-12	365038	4905386	2	0	0	100.3	100.3	1	1564.29	3.25	0	74.89	0	-0.01	0	0	12.48	0	0	0	0	0	0	12.95	12.95
	Inverter	MV1-11	364655	4905414	2	0	0	100.3	100.3	1	1610.32	3.25	0	75.14	0	0.01	0	0	12.59	0	0	0	0	0	0	12.57	12.57
	Sol_Luce Substation	S_Substation	369426	4908792	3.5	0	0	112.1	112.1	1	6704.13	5.25	0	87.53	0	1.32	2.5	0.26	10.46	0	0	0	0	0	0	10.27	10.27
	Inverter	MV1-14	365163	4905049	2	0	0	97.3	97.3	1	1246.48	3.25	0	72.91	0	-0.13	0	0	11.66	0	0	0	0	0	0	12.87	12.87
	Inverter	MV1-8	364788	4905647	2	0	0	100.3	100.3	1	1825.94	3.25	0	76.23	0	0.08	0	0	13.09	0	0	0	0	0	0	10.92	10.92
	Inverter	MV1-9	364561	4905646	2	0	0	100.3	100.3	1	1855.5	3.25	0	76.37	0	0.09	0	0	13.15	0	0	0	0	0	0	10.7	10.7
	Inverter	MV1-13	364731	4905241	2	0	0	97.3	97.3	1	1427.86	3.25	0	74.09	0	-0.06	0	0	12.14	0	0	0	0	0	0	11.14	11.14
	Inverter	MV1-6	364477	4905835	2	0	0	100.3	100.3	1	2057.74	3.25	0	77.27	0	0.15	0	0	13.58	0	0	0	0	0	0	9.32	9.32
	Inverter	MV1-5	364671	4905892	2	0	0	100.3	100.3	1	2081.22	3.25	0	77.37	0	0.15	0	0	13.63	0	0	0	0	0	0	9.16	9.16
	Inverter	MV1-4	364815	4905918	2	0	0	100.3	100.3	1	2094.75	3.25	0	77.42	0	0.16	0	0	13.66	0	0	0	0	0	0	9.07	9.07
	Inverter	MV1-2	364753	4906063	2	0	0	100.3	100.3	1	2243.39	3.25	0	78.02	0	0.2	0	0	13.96	0	0	0	0	0	0	8.14	8.14
	Inverter	MV1-1	364715	4906166	2	0	0	100.3	100.3	1	2349.16	3.25	0	78.42	0	0.22	0	0	14.17	0	0	0	0	0	0	7.5	7.5
	Inverter	MV1-10	365004	4905564	2	0	0	97.3	97.3	1	1739.93	3.25	0	75.81	0	0.05	0	0	12.89	0	0	0	0	0	0	8.56	8.56
	Inverter	MV1-7	364925	4905782	2	0	0	97.3	97.3	1	1956	3.25	0	76.83	0	0.12	0	0	13.37	0	0	0	0	0	0	7	7
	Inverter	MV2-4	365586	4906624	2	0	0	100.3	100.3	1	2875.66	3.25	0	80.17	0	0.34	0	0	15.15	0	0	0	0	0	0	4.65	4.65
	Inverter	MV2-3	365820	4906641	2	0	0	100.3	100.3	1	2954.7	3.25	0	80.41	0	0.35	0	0	15.29	0	0	0	0	0	0	4.26	4.26
	Inverter	MV2-1	365842	4906816	2	0	0	97.3	97.3	1	3128.28	3.25	0	80.91	0	0.39	0	0	15.6	0	0	0	0	0	0	0.42	0.42
	Inverter	MV3-18	367752	4907412	2	0	0	100.3	100.3	1	4568.06	3.25	0	84.19	0	0.6	0	0	17.93	0	0	0	0	0	0	-2.42	-2.42
	Inverter	MV3-12	367668	4907594	2	0	0	100.3	100.3	1	4662.32	3.25	0	84.37	0	0.61	0	0	18.08	0	0	0	0	0	0	-2.75	-2.75
	Inverter	MV3-13	367963	4907577	2	0	0	100.3	100.3	1	4828.71	3.25	0	84.68	0	0.63	0	0	18.33	0	0	0	0	0	0	-3.32	-3.32
	Inverter	MV3-17	368178	4907472	2	0	0	100.3	100.3	1	4888.1	3.25	0	84.78	0	0.63	0	0	18.41	0	0	0	0	0	0	-3.52	-3.52
	Inverter	MV3-21	368478	4907206	2	0	0	100.3	100.3	1	4905.93	3.25	0	84.81	0	0.63	0	0	18.44	0	0	0	0	0	0	-3.58	-3.58
	Inverter	MV3-19	368357	4907347	2	0	0	100.3	100.3	1	4918.87	3.25	0	84.84	0	0.63	0	0	18.46	0	0	0	0	0	0	-3.62	-3.62
	Inverter	MV3-7	367945	4907754	2	0	0	100.3	100.3	1	4956.46	3.25	0	84.9	0	0.64	0	0	18.52	0	0	0	0	0	0	-3.75	-3.75
	Inverter	MV3-15	368357	4907477	2	0	0	100.3	100.3	1	5012.75	3.25	0	85	0	0.64	0	0	18.6	0	0	0	0	0	0	-3.93	-3.93
	Inverter	MV3-10	368167	4907669	2	0	0	100.3	100.3	1	5029.65	3.25	0	85.03	0	0.64	0	0	18.62	0	0	0	0	0	0	-3.99	-3.99
	Inverter	MV3-3	367939	4907927	2	0	0	100.3	100.3	1	5091.1	3.25	0	85.14	0	0.65	0	0	18.71	0	0	0	0	0	0	-4.19	-4.19
	Inverter	MV3-16	368514	4907475	2	0	0	100.3	100.3	1	5120.18	3.25	0	85.19	0	0.65	0	0	18.76	0	0	0	0	0	0	-4.28	-4.28
	Inverter	MV3-20	368689	4907317	2	0	0	100.3	100.3	1	5135.74	3.25	0	85.21	0	0.65	0	0	18.78	0	0	0	0	0	0	-4.33	-4.33

Inverter	MV3-11	368346	4907662	2	0	0	100.3	100.3	1	5141.72	3.25	0	85.22	0	0.65	0	0	18.79	0	0	0	0	0	0	-4.35	-4.35
Inverter	MV3-6	368162	4907834	2	0	0	100.3	100.3	1	5153.68	3.25	0	85.24	0	0.66	0	0	18.8	0	0	0	0	0	0	-4.39	-4.39
Gardiner Substation	G_Sub	366586.3	4903349.9	2.5	0	0	90.8	90.8	1	1730.87	4.25	0	75.77	0	0.85	4.18	0.31	3.9	0	0	0	0	0	0	6.09	6.09
Inverter	MV3-14	368684	4907498	2	0	0	100.3	100.3	1	5256.87	3.25	0	85.41	0	0.66	0	0	18.95	0	0	0	0	0	0	-4.72	-4.72
Inverter	MV3-9	368512	4907703	2	0	0	100.3	100.3	1	5283.73	3.25	0	85.46	0	0.67	0	0	18.99	0	0	0	0	0	0	-4.8	-4.8
Inverter	MV3-8	368680	4907712	2	0	0	100.3	100.3	1	5405.74	3.25	0	85.66	0	0.67	0	0	19.17	0	0	0	0	0	0	-5.19	-5.19
Inverter	MV6-3	370207	4907140	2	0	0	100.3	100.3	1	6237.93	3.25	0	86.9	0	0.71	0	0	20.31	0	0	0	0	0	0	-7.61	-7.61
Inverter	MV6-2	370085	4907339	2	0	0	100.3	100.3	1	6244.65	3.25	0	86.91	0	0.71	0	0	20.32	0	0	0	0	0	0	-7.63	-7.63
Inverter	MV4-7	369035	4909001	2	0	0	100.3	100.3	1	6610.28	3.25	0	87.4	0	0.72	0	0	20.8	0	0	0	0	0	0	-8.61	-8.61
Inverter	MV4-11	369264	4908855	2	0	0	100.3	100.3	1	6643.95	3.25	0	87.45	0	0.71	0	0	20.85	0	0	0	0	0	0	-8.7	-8.7
Inverter	MV4-10	369312	4908858	2	0	0	100.3	100.3	1	6677.68	3.25	0	87.49	0	0.71	0	0	20.89	0	0	0	0	0	0	-8.78	-8.78
Inverter	MV4-8	369256	4909001	2	0	0	100.3	100.3	1	6750	3.25	0	87.59	0	0.71	0	0	20.98	0	0	0	0	0	0	-8.97	-8.97
Inverter	MV4-4	369027	4909199	2	0	0	100.3	100.3	1	6761.55	3.25	0	87.6	0	0.71	0	0	21	0	0	0	0	0	0	-9	-9
Inverter	MV4-9	369289	4909001	2	0	0	100.3	100.3	1	6771.23	3.25	0	87.61	0	0.71	0	0	21.01	0	0	0	0	0	0	-9.02	-9.02
Inverter	MV4-6	369243	4909192	2	0	0	100.3	100.3	1	6889.36	3.25	0	87.76	0	0.71	0	0	21.16	0	0	0	0	0	0	-9.32	-9.32
Inverter	MV4-1	369011	4909397	2	0	0	100.3	100.3	1	6910.45	3.25	0	87.79	0	0.71	0	0	21.19	0	0	0	0	0	0	-9.38	-9.38
Inverter	MV4-5	369289	4909199	2	0	0	100.3	100.3	1	6923.73	3.25	0	87.81	0	0.71	0	0	21.2	0	0	0	0	0	0	-9.41	-9.41
Inverter	MV4-3	369229	4909397	2	0	0	100.3	100.3	1	7041.63	3.25	0	87.95	0	0.71	0	0	21.35	0	0	0	0	0	0	-9.7	-9.7
Inverter	MV5-5	370015	4908690	2	0	0	100.3	100.3	1	7042.38	3.25	0	87.95	0	0.71	0	0	21.35	0	0	0	0	0	0	-9.7	-9.7
Inverter	MV4-2	369272	4909397	2	0	0	100.3	100.3	1	7068.01	3.25	0	87.99	0	0.71	0	0	21.38	0	0	0	0	0	0	-9.77	-9.77
Inverter	MV5-2	370006	4908853	2	0	0	100.3	100.3	1	7149.53	3.25	0	88.09	0	0.71	0	0	21.49	0	0	0	0	0	0	-9.96	-9.96
Inverter	MV5-4	370324	4908707	2	0	0	100.3	100.3	1	7280.36	3.25	0	88.24	0	0.7	0	0	21.65	0	0	0	0	0	0	-10.28	-10.28
Inverter	MV5-3	370231	4908851	2	0	0	100.3	100.3	1	7309.86	3.25	0	88.28	0	0.7	0	0	21.68	0	0	0	0	0	0	-10.35	-10.35
Inverters	G_Inv1	366526.4	4903225.8	2	0	0	87.7	87.7	1	1712.81	3.25	0	75.67	0	2.55	0	0	2.3	0	0	0	0	0	0	7.14	7.14
Inverter	MV5-1	370020	4909142	2	0	0	100.3	100.3	1	7365.29	3.25	0	88.34	0	0.7	0	0	21.75	0	0	0	0	0	0	-10.48	-10.48
Inverters	G_Inv3	366583.7	4903091.4	2	0	0	87.7	87.7	1	1816.65	3.25	0	76.19	0	2.56	0	0	2.42	0	0	0	0	0	0	6.49	6.49
Inverters	G_Inv2	366676.9	4903239.1	2	0	0	87.7	87.7	1	1850.25	3.25	0	76.34	0	2.56	0	0	2.46	0	0	0	0	0	0	6.29	6.29
Inverters	G_Inv5	366638.5	4902958.1	2	0	0	87.7	87.7	1	1923.26	3.25	0	76.68	0	2.57	0	0	2.55	0	0	0	0	0	0	5.86	5.86
Inverter	MV1-3	364440	4906039	2	0	0	89.1	89.1	1	2264.93	3.25	0	78.1	0	0.97	0	0	8.47	0	0	0	0	0	0	1.51	1.51
Inverters	G_Inv4	366732.8	4903105	2	0	0	87.7	87.7	1	1948.88	3.25	0	76.8	0	2.58	0	0	2.58	0	0	0	0	0	0	5.71	5.71
Inverters	G_Inv7	366694.6	4902824.7	2	0	0	87.7	87.7	1	2035.68	3.25	0	77.17	0	2.59	0	0	2.68	0	0	0	0	0	0	5.22	5.22
Inverters	G_Inv6	366788.5	4902972	2	0	0	87.7	87.7	1	2052.41	3.25	0	77.25	0	2.59	0	0	2.7	0	0	0	0	0	0	5.13	5.13
Inverter	MV6-1	370235	4907364	2	0	0	97.3	97.3	1	6383.05	3.25	0	87.1	0	0.71	0	0	20.51	0	0	0	0	0	0	-11.01	-11.01
Inverters	G_Inv9	366750.9	4902691.8	2	0	0	87.7	87.7	1	2151.87	3.25	0	77.66	0	2.6	0	0	2.81	0	0	0	0	0	0	4.59	4.59
Inverters	G_Inv8	366844.5	4902838.5	2	0	0	87.7	87.7	1	2161.11	3.25	0	77.69	0	2.6	0	0	2.82	0	0	0	0	0	0	4.54	4.54
Inverters	G_Inv10	366900.7	4902704.8	2	0	0	87.7	87.7	1	2274.11	3.25	0	78.14	0	2.62	0	0	2.95	0	0	0	0	0	0	3.95	3.95
DSTATCOM - 10 MVAR #2	DSAT2	369403	4908757	2.5	0	0	96.6	96.6	1	6662.76	3.5	0	87.47	0	3.82	0	0	4.15	0	0	0	0	0	0	1.19	1.19
DSTATCOM - 10 MVAR #1	DSAT1	369437	4908757	2.5	0	0	96.6	96.6	1	6685.67	3.5	0	87.5	0	3.82	0	0	4.16	0	0	0	0	0	0	1.14	1.14
Inverter	MV2-2	365977	4906654	2	0	0	89.1	89.1	1	3018.31	3.25	0	80.6	0	1.15	0	0	9.64	0	0	0	0	0	0	-2.33	-2.33
SubstationTransformer	W_ST	369711.17	4906112.3	2.5	0	0	92	92	1	5306.72	4.25	0	85.5	0	1.71	2.26	0.26	8.98	0	0	0	0	0	0	-6.47	-6.47
Inverter	MV3-22	368656	4907142	2	0	0	89.1	89.1	1	4993.71	3.25	0	84.97	0	1.64	0	0	12.46	0	0	0	0	0	0	-10	-10
Westbrook Inverter Enclosur	W_INV2	369374	4906388	2	0	0	89.1	89.1	1	5136.38	3.25	0	85.21	0	1.67	0	0	12.65	0	0	0	0	0	0	-10.47	-10.47
Westbrook Inverter Enclosur	W_INV3	369508	4906164	2	0	0	89.1	89.1	1	5147.41	3.25	0	85.23	0	1.68	0	0	12.66	0	0	0	0	0	0	-10.51	-10.51
Inverter	MV3-1	368156	4907976	2	0	0	89.1	89.1	1	5261.18	3.25	0	85.42	0	1.7	0	0	12.81	0	0	0	0	0	0	-10.88	-10.88
Inverter	MV3-5	368340	4907843	2	0	0	89.1	89.1	1	5274.24	3.25	0	85.44	0	1.71	0	0	12.83	0	0	0	0	0	0	-10.92	-10.92
Westbrook Inverter Enclosur	W_INV4	369673	4906164	2	0	0	89.1	89.1	1	5294.94	3.25	0	85.48	0	1.71	0	0	12.85	0	0	0	0	0	0	-10.99	-10.99
Inverter	MV3-4	368502	4907925	2	0	0	89.1	89.1	1	5442.13	3.25	0	85.72	0	1.75	0	0	13.05	0	0	0	0	0	0	-11.45	-11.45
Westbrook Inverter Enclosur	W_INV7	369780	4906417	2	0	0	89.1	89.1	1	5505.59	3.25	0	85.82	0	1.76	0	0	13.13	0	0	0	0	0	0	-11.65	-11.65
Westbrook Inverter Enclosur	W_INV5	369719	4906574	2	0	0	89.1	89.1	1	5528.18	3.25	0	85.85	0	1.77	0	0	13.16	0	0	0	0	0	0	-11.72	-11.72
Inverter	MV3-2	368671	4907928	2	0	0	89.1	89.1	1	5556.97	3.25	0	85.9	0	1.78	0	0	13.2	0	0	0	0	0	0	-11.81	-11.81
Westbrook Inverter Enclosur	W_INV6	369875	4906578	2	0	0	89.1	89.1	1	5666.02	3.25	0	86.07	0	1.8	0	0	13.34	0	0	0	0	0	0	-12.15	-12.15
Fixed Reactor Bank 1	FRB1	369378	4908755	6	0	0	89.8	89.8	1	6644.49	5.25	0	87.45	0	-0.33	0	0	10.4	0	0	0	0	0	0	-7.75	-7.75
Fixed Reactor Bank 2	FRB2	369464	4908755	6	0	0	89.8	89.8	1	6702.46	5.25	0	87.52	0	-0.32	0	0	10.46	0	0	0	0	0	0	-7.89	-7.89
Inverter	MV4-15	369176	4908481	2	0	0	89.1	89.1	1	6305.86	3.25	0	86.99	0	1.96	0	0	14.14	0	0	0	0	0	0	-14.04	-14.04
Inverter	MV4-13	369051	4908605	2	0	0	89.1	89.1	1	6315.52	3.25	0	87.01	0	1.96	0	0	14.16	0	0	0	0	0	0	-14.07	-14.07
Inverter	MV4-14	369176	4908507	2	0	0	89.1	89.1	1	6325.08	3.25	0	87.02	0	1.97	0	0	14.17	0	0	0	0	0	0	-14.1	-14.1
Inverter	MV4-12	369043	4908803	2	0	0	89.1	89.1	1	6461.54	3.25	0	87.21	0	2	0	0	14.34	0	0	0	0	0	0	-14.48	-14.48
Inverter	MV5-6	369982	4908507	2	0	0	89.1	89.1	1	6892.99	3.25	0	87.77	0	2.1	0	0	14.86	0	0	0	0	0	0	-15.67	-15.67
Westbrook Inverter Enclosur	W_INV1	369409	4906578	2	0	0	86.1	86.1	1	5263.54	3.25	0	85.43	0	1.7	0	0	12.81	0	0	0	0	0	0	-13.89	-13.89
Inverter	MV6-4	370250	4906966	2	0	0	86.1	86.1	1	6184.26	3.25	0	86.83	0	1.93	0	0	13.99	0	0	0	0	0	0	-16.69	-16.69
Inverter Transformer	MV1-14 T	365157	4905049	2	0	0	69.4	69.4	1	1245.34	3.25	0	72.91	0	1.85	0	0	4.13	0	0	0	0	0	0	-9.54	-9.54
Inverter Transformer	MV1-13 T	364725	4905241	2	0	0	69.4	69.4	1	1428.68	3.25	0	74.1	0	1.94	0	0	4.35	0	0	0	0	0	0	-11.04	-11.04
Inverter Transformer	MV1-10 T	365010	4905564	2	0	0	69.4	69.4	1	1740.22	3.25	0	75.81	0	2.07	0	0	4.7	0	0	0	0	0	0	-13.23	-13.23
Westbrook Inverter Transfor	W_INVTR1	369403	4906578	2	0	0	78.2	78.2	1	5258.43	3.25	0	85.42	0	-3.23	0	0	2.5	0	0	0	0	0	0	-6.45	-6.45
Inverter Transformer	MV1-7 T	364919	4905782	2	0	0	69.4	69.4	1	1956	3.25	0	76.83	0	2.16	0	0	4.92	0	0	0	0	0	0	-14.56	-14.56
Westbrook Inverter Transfor	W_INVTR2	369368	4906388	2	0	0	77.3	77.3	1	5131.18	3.25	0	85.2	0	-3.2	0	0	2.46	0	0	0	0	0	0	-7.12	-7.12
Westbrook Inverter Transfor	W_INVTR3	369514	4906164	2	0	0	77.3	77.3	1	5152.75	3.25	0	85.24	0	-3.21	0	0	2.46	0	0	0	0	0	0	-7.16	-7.16
Westbrook Inverter Transfor	W_INVTR4	369679	4906164	2	0	0	77.3	77.3	1	5300.32	3.25	0	85.49	0	-3.24	0	0	2.51	0	0	0	0	0	0	-7.42	-7.42
Westbrook Inverter Transfor	W_INVTR7	369786	4906417	2	0	0	77.3	77.3	1	5510.88	3.25	0	85.82	0	-3.28	0	0	2.58	0	0	0	0	0	0	-7.79	-7.79
Westbrook Inverter Transfor	W_INVTR5	369725	4906574	2	0	0	77.3	77.3	1	5533.39	3.25	0	85.86	0	-3.28	0	0	2.59	0	0	0	0	0	0	-7.83	-7.83
Westbrook Inverter Transfor	W_INVTR6	369881	4906578	2	0	0	77.3	77.3	1	5671.26	3.25	0	86.07	0	-3.31	0	0	2.64	0	0	0	0	0	0	-8.06	-8.06
Inverter Transformer	MV2-1 T	365836	4906816	2	0	0	69.4	69.4	1	3126.52	3.25	0	80.9	0	2.55	0	0	5.99	0	0	0	0	0	0	-20.09	-20.09
Inverter Transformer	MV1-15 T	365309	4904994	2	0	0	56.1	56.1	1	1230.38	3.25	0	72.8	0	0.09	0	0	5.42	0	0	0	0	0	0	-22.26	-22.26
Inverter Transformer	MV6-4 T	370244	4906966	2	0	0	69.4	69.4	1	6179.09	3.25	0	86.82	0	3.21	0	0	8.13	0	0	0	0	0	0	-28.81	-28.81

	Inverter Transformer	MV6-1 T	370230	4907364	2	0	0	69.4	69.4	1	6378.89	3.25	0	87.09	0	3.24	0	0	8.24	0	0	0	0	0	0	-29.23	-29.23
	Inverter Transformer	MV1-12 T	365044	4905386	2	0	0	56.1	56.1	1	1564.75	3.25	0	74.89	0	0.22	0	0	6.16	0	0	0	0	0	0	-25.21	-25.21
	Inverter Transformer	MV1-11 T	364649	4905414	2	0	0	56.1	56.1	1	1611.33	3.25	0	75.14	0	0.24	0	0	6.25	0	0	0	0	0	0	-25.58	-25.58
	Inverter Transformer	MV1-8 T	364782	4905647	2	0	0	56.1	56.1	1	1826.39	3.25	0	76.23	0	0.33	0	0	6.7	0	0	0	0	0	0	-27.2	-27.2
	Inverter Transformer	MV1-9 T	364555	4905646	2	0	0	56.1	56.1	1	1856.68	3.25	0	76.37	0	0.34	0	0	6.76	0	0	0	0	0	0	-27.42	-27.42
	Inverter Transformer	MV1-6 T	364482	4905835	2	0	0	56.1	56.1	1	2056.66	3.25	0	77.26	0	0.43	0	0	7.15	0	0	0	0	0	0	-28.79	-28.79
	Inverter Transformer	MV1-5 T	364676	4905892	2	0	0	56.1	56.1	1	2080.62	3.25	0	77.36	0	0.44	0	0	7.2	0	0	0	0	0	0	-28.94	-28.94
	Inverter Transformer	MV1-4 T	364821	4905918	2	0	0	56.1	56.1	1	2094.45	3.25	0	77.42	0	0.44	0	0	7.23	0	0	0	0	0	0	-29.03	-29.03
	Inverter Transformer	MV1-2 T	364759	4906063	2	0	0	56.1	56.1	1	2242.95	3.25	0	78.02	0	0.51	0	0	7.51	0	0	0	0	0	0	-29.98	-29.98
	Inverter Transformer	MV1-3 T	364435	4906039	2	0	0	56.1	56.1	1	2266	3.25	0	78.11	0	0.52	0	0	7.56	0	0	0	0	0	0	-30.12	-30.12
	Inverter Transformer	MV1-1 T	364721	4906166	2	0	0	56.1	56.1	1	2348.64	3.25	0	78.42	0	0.55	0	0	7.71	0	0	0	0	0	0	-30.62	-30.62
	Inverter Transformer	MV2-4 T	365590	4906628	2	0	0	56.1	56.1	1	2880.48	3.25	0	80.19	0	0.78	0	0	8.66	0	0	0	0	0	0	-33.57	-33.57
	Inverter Transformer	MV2-3 T	365814	4906641	2	0	0	56.1	56.1	1	2952.89	3.25	0	80.4	0	0.81	0	0	8.79	0	0	0	0	0	0	-33.94	-33.94
	Inverter Transformer	MV2-2 T	365982	4906654	2	0	0	56.1	56.1	1	3020.06	3.25	0	80.6	0	0.84	0	0	8.9	0	0	0	0	0	0	-34.28	-34.28
	Inverter Transformer	MV3-18 T	367757	4907412	2	0	0	56.1	56.1	1	4571.16	3.25	0	84.2	0	1.47	0	0	11.27	0	0	0	0	0	0	-40.88	-40.88
	Inverter Transformer	MV3-12 T	367674	4907594	2	0	0	56.1	56.1	1	4665.86	3.25	0	84.38	0	1.5	0	0	11.41	0	0	0	0	0	0	-41.23	-41.23
	Inverter Transformer	MV3-13 T	367958	4907577	2	0	0	56.1	56.1	1	4825.57	3.25	0	84.67	0	1.56	0	0	11.62	0	0	0	0	0	0	-41.8	-41.8
	Inverter Transformer	MV3-17 T	368183	4907472	2	0	0	56.1	56.1	1	4891.44	3.25	0	84.79	0	1.59	0	0	11.71	0	0	0	0	0	0	-42.03	-42.03
	Inverter Transformer	MV3-21 T	368484	4907206	2	0	0	56.1	56.1	1	4910.28	3.25	0	84.82	0	1.59	0	0	11.74	0	0	0	0	0	0	-42.09	-42.09
	Inverter Transformer	MV3-19 T	368352	4907347	2	0	0	56.1	56.1	1	4915.38	3.25	0	84.83	0	1.59	0	0	11.74	0	0	0	0	0	0	-42.11	-42.11
	Inverter Transformer	MV3-7 T	367951	4907754	2	0	0	56.1	56.1	1	4960.12	3.25	0	84.91	0	1.61	0	0	11.8	0	0	0	0	0	0	-42.26	-42.26
	Inverter Transformer	MV3-22 T	368661	4907142	2	0	0	56.1	56.1	1	4997.45	3.25	0	84.97	0	1.62	0	0	11.85	0	0	0	0	0	0	-42.39	-42.39
	Inverter Transformer	MV3-15 T	368351	4907477	2	0	0	56.1	56.1	1	5008.64	3.25	0	84.99	0	1.63	0	0	11.87	0	0	0	0	0	0	-42.43	-42.43
	Inverter Transformer	MV3-10 T	368162	4907669	2	0	0	56.1	56.1	1	5026.43	3.25	0	85.03	0	1.63	0	0	11.89	0	0	0	0	0	0	-42.49	-42.49
	Inverter Transformer	MV3-3 T	367944	4907927	2	0	0	56.1	56.1	1	5094.06	3.25	0	85.14	0	1.66	0	0	11.98	0	0	0	0	0	0	-42.72	-42.72
	Inverter Transformer	MV3-16 T	368509	4907475	2	0	0	56.1	56.1	1	5116.67	3.25	0	85.18	0	1.67	0	0	12.01	0	0	0	0	0	0	-42.8	-42.8
	Inverter Transformer	MV3-20 T	368683	4907317	2	0	0	56.1	56.1	1	5131.35	3.25	0	85.2	0	1.67	0	0	12.03	0	0	0	0	0	0	-42.84	-42.84
	Inverter Transformer	MV3-11 T	368340	4907662	2	0	0	56.1	56.1	1	5137.73	3.25	0	85.22	0	1.67	0	0	12.03	0	0	0	0	0	0	-42.87	-42.87
	Inverter Transformer	MV3-6 T	368156	4907834	2	0	0	56.1	56.1	1	5149.91	3.25	0	85.24	0	1.68	0	0	12.05	0	0	0	0	0	0	-42.91	-42.91
	Inverter Transformer	MV3-14 T	368678	4907498	2	0	0	56.1	56.1	1	5252.58	3.25	0	85.41	0	1.72	0	0	12.18	0	0	0	0	0	0	-43.25	-43.25
	Inverter Transformer	MV3-1 T	368150	4907976	2	0	0	56.1	56.1	1	5257.49	3.25	0	85.42	0	1.72	0	0	12.19	0	0	0	0	0	0	-43.26	-43.26
	Inverter Transformer	MV3-5 T	368335	4907843	2	0	0	56.1	56.1	1	5271.01	3.25	0	85.44	0	1.72	0	0	12.21	0	0	0	0	0	0	-43.31	-43.31
	Inverter Transformer	MV3-9 T	368517	4907703	2	0	0	56.1	56.1	1	5287.13	3.25	0	85.46	0	1.73	0	0	12.23	0	0	0	0	0	0	-43.36	-43.36
	Inverter Transformer	MV3-8 T	368685	4907712	2	0	0	56.1	56.1	1	5409.22	3.25	0	85.66	0	1.77	0	0	12.38	0	0	0	0	0	0	-43.76	-43.76
	Inverter Transformer	MV3-4 T	368507	4907925	2	0	0	56.1	56.1	1	5445.42	3.25	0	85.72	0	1.78	0	0	12.43	0	0	0	0	0	0	-43.87	-43.87
	Inverter Transformer	MV3-2 T	368677	4907928	2	0	0	56.1	56.1	1	5561.02	3.25	0	85.9	0	1.82	0	0	12.57	0	0	0	0	0	0	-44.24	-44.24
	Inverter Transformer	MV6-3 T	370202	4907140	2	0	0	56.1	56.1	1	6233.69	3.25	0	86.89	0	2.04	0	0	13.38	0	0	0	0	0	0	-46.25	-46.25
	Inverter Transformer	MV6-2 T	370091	4907339	2	0	0	56.1	56.1	1	6249.61	3.25	0	86.92	0	2.04	0	0	13.39	0	0	0	0	0	0	-46.3	-46.3
	Inverter Transformer	MV4-15 T	369170	4908481	2	0	0	56.1	56.1	1	6301.81	3.25	0	86.99	0	2.06	0	0	13.45	0	0	0	0	0	0	-46.44	-46.44
	Inverter Transformer	MV4-13 T	369057	4908605	2	0	0	56.1	56.1	1	6319.45	3.25	0	87.01	0	2.06	0	0	13.47	0	0	0	0	0	0	-46.49	-46.49
	Inverter Transformer	MV4-14 T	369182	4908507	2	0	0	56.1	56.1	1	6329.11	3.25	0	87.03	0	2.07	0	0	13.49	0	0	0	0	0	0	-46.52	-46.52
	Inverter Transformer	MV4-12 T	369049	4908803	2	0	0	56.1	56.1	1	6465.37	3.25	0	87.21	0	2.11	0	0	13.64	0	0	0	0	0	0	-46.9	-46.9
	Inverter Transformer	MV4-7 T	369040	4909001	2	0	0	56.1	56.1	1	6613.39	3.25	0	87.41	0	2.15	0	0	13.81	0	0	0	0	0	0	-47.31	-47.31
	Inverter Transformer	MV4-11 T	369269	4908855	2	0	0	56.1	56.1	1	6647.22	3.25	0	87.45	0	2.16	0	0	13.84	0	0	0	0	0	0	-47.4	-47.4
	Inverter Transformer	MV4-10 T	369307	4908858	2	0	0	56.1	56.1	1	6674.39	3.25	0	87.49	0	2.17	0	0	13.87	0	0	0	0	0	0	-47.47	-47.47
	Inverter Transformer	MV4-8 T	369262	4909001	2	0	0	56.1	56.1	1	6753.85	3.25	0	87.59	0	2.19	0	0	13.96	0	0	0	0	0	0	-47.69	-47.69
	Inverter Transformer	MV4-4 T	369033	4909199	2	0	0	56.1	56.1	1	6765.19	3.25	0	87.61	0	2.19	0	0	13.97	0	0	0	0	0	0	-47.72	-47.72
	Inverter Transformer	MV4-9 T	369284	4909001	2	0	0	56.1	56.1	1	6768.01	3.25	0	87.61	0	2.2	0	0	13.98	0	0	0	0	0	0	-47.72	-47.72
	Inverter Transformer	MV4-6 T	369249	4909192	2	0	0	56.1	56.1	1	6893.12	3.25	0	87.77	0	2.23	0	0	14.11	0	0	0	0	0	0	-48.05	-48.05
	Inverter Transformer	MV5-6 T	369987	4908507	2	0	0	56.1	56.1	1	6896.66	3.25	0	87.77	0	2.23	0	0	14.12	0	0	0	0	0	0	-48.06	-48.06
	Inverter Transformer	MV4-1 T	369017	4909397	2	0	0	56.1	56.1	1	6914	3.25	0	87.79	0	2.24	0	0	14.14	0	0	0	0	0	0	-48.11	-48.11
	Inverter Transformer	MV4-5 T	369283	4909199	2	0	0	56.1	56.1	1	6919.95	3.25	0	87.8	0	2.24	0	0	14.14	0	0	0	0	0	0	-48.12	-48.12
	Inverter Transformer	MV4-3 T	369234	4909397	2	0	0	56.1	56.1	1	7044.69	3.25	0	87.96	0	2.27	0	0	14.28	0	0	0	0	0	0	-48.45	-48.45
	Inverter Transformer	MV5-5 T	370021	4908690	2	0	0	56.1	56.1	1	7046.72	3.25	0	87.96	0	2.27	0	0	14.28	0	0	0	0	0	0	-48.45	-48.45
	Inverter Transformer	MV4-2 T	369267	4909397	2	0	0	56.1	56.1	1	7064.94	3.25	0	87.98	0	2.28	0	0	14.3	0	0	0	0	0	0	-48.5	-48.5
	Inverter Transformer	MV5-2 T	370011	4908853	2	0	0	56.1	56.1	1	7153.08	3.25	0	88.09	0	2.3	0	0	14.39	0	0	0	0	0	0	-48.72	-48.72
	Inverter Transformer	MV5-4 T	370330	4908707	2	0	0	56.1	56.1	1	7284.81	3.25	0	88.25	0	2.34	0	0	14.53	0	0	0	0	0	0	-49.06	-49.06
	Inverter Transformer	MV5-3 T	370237	4908851	2	0	0	56.1	56.1	1	7314.21	3.25	0	88.28	0	2.34	0	0	14.56	0	0	0	0	0	0	-49.13	-49.13
	Inverter Transformer	MV5-1 T	370015	4909142	2	0	0	56.1	56.1	1	7361.83	3.25	0	88.34	0	2.36	0	0	14.61	0	0	0	0	0	0	-49.25	-49.25
	Line Reactor	NGR	369421	4908787.5	5	0	0	45.4	45.4	1	6697.44	5.25	0	87.52	0	3.22	1.37	0.09	2.74	0	0	0	0	0	0	-49.49	-49.49
Limit. Valu	0	0																								
Level D/N:	24.12	24.12																								

Receiver: Existing Noise Receptor
ID: G-111
X: 364942.2
Y: 4903879
Z: 4.5
Ground: 0

ISO	Description	ID	X	Y	Z	Ground	ReflOrd	LxT	LxN	L/A	Dist.	hm	Freq	Adiv	K0b	Agr	Abar	z	Aatm	Afol	Ahous	Cmet	CmetN	Dc	RL	LtotT	LtotN
	Inverter	MV1-15	365315	4904994	2	0	0	100.3	100.3	1	1175.67	3.25	0	72.41	0	-0.16	0	0	11.46	0	0	0	0	0	0	16.62	16.62
	Inverter	MV1-12	365038	4905386	2	0	0	100.3	100.3	1	1510.04	3.25	0	74.58	0	-0.03	0	0	12.35	0	0	0	0	0	0	13.41	13.41
	Inverter	MV1-11	364655	4905414	2	0	0	100.3	100.3	1	1561.64	3.25	0	74.87	0	-0.01	0	0	12.48	0	0	0	0	0	0	12.98	12.98

Inverter	MV1-14	365163	4905049	2	0	0	97.3	97.3	1	1190.65	3.25	0	72.52	0	-0.16	0	0	11.5	0	0	0	0	0	0	13.46	13.46
Sol_Luce Substation	S_Substation	369426	4908792	3.5	0	0	112.1	112.1	1	6651.47	5.25	0	87.46	0	1.31	2.51	0.26	10.41	0	0	0	0	0	0	10.39	10.39
Inverter	MV1-8	364788	4905647	2	0	0	100.3	100.3	1	1774.71	3.25	0	75.98	0	0.06	0	0	12.97	0	0	0	0	0	0	11.3	11.3
Inverter	MV1-9	364561	4905646	2	0	0	100.3	100.3	1	1807.65	3.25	0	76.14	0	0.07	0	0	13.05	0	0	0	0	0	0	11.05	11.05
Inverter	MV1-13	364731	4905241	2	0	0	97.3	97.3	1	1378.28	3.25	0	73.79	0	-0.08	0	0	12.01	0	0	0	0	0	0	11.59	11.59
Inverter	MV1-6	364477	4905835	2	0	0	100.3	100.3	1	2010.56	3.25	0	77.07	0	0.13	0	0	13.48	0	0	0	0	0	0	9.63	9.63
Inverter	MV1-5	364671	4905892	2	0	0	100.3	100.3	1	2031.19	3.25	0	77.16	0	0.14	0	0	13.53	0	0	0	0	0	0	9.49	9.49
Inverter	MV1-4	364815	4905918	2	0	0	100.3	100.3	1	2042.97	3.25	0	77.21	0	0.14	0	0	13.55	0	0	0	0	0	0	9.41	9.41
Inverter	MV1-2	364753	4906063	2	0	0	100.3	100.3	1	2192.18	3.25	0	77.82	0	0.18	0	0	13.86	0	0	0	0	0	0	8.46	8.46
Inverter	MV1-1	364715	4906166	2	0	0	100.3	100.3	1	2298.26	3.25	0	78.23	0	0.21	0	0	14.07	0	0	0	0	0	0	7.81	7.81
Inverter	MV1-10	365004	4905564	2	0	0	97.3	97.3	1	1686.13	3.25	0	75.54	0	0.03	0	0	12.77	0	0	0	0	0	0	8.97	8.97
Inverter	MV1-7	364925	4905782	2	0	0	97.3	97.3	1	1903.08	3.25	0	76.59	0	0.1	0	0	13.26	0	0	0	0	0	0	7.37	7.37
Inverter	MV2-4	365586	4906624	2	0	0	100.3	100.3	1	2819.49	3.25	0	80	0	0.33	0	0	15.05	0	0	0	0	0	0	4.93	4.93
Inverter	MV2-3	365820	4906641	2	0	0	100.3	100.3	1	2898.13	3.25	0	80.24	0	0.34	0	0	15.19	0	0	0	0	0	0	4.54	4.54
Inverter	MV2-1	365842	4906816	2	0	0	97.3	97.3	1	3071.74	3.25	0	80.75	0	0.38	0	0	15.5	0	0	0	0	0	0	0.69	0.69
Inverter	MV3-18	367752	4907412	2	0	0	100.3	100.3	1	4514.1	3.25	0	84.09	0	0.59	0	0	17.85	0	0	0	0	0	0	-2.22	-2.22
Inverter	MV3-12	367668	4907594	2	0	0	100.3	100.3	1	4607.73	3.25	0	84.27	0	0.6	0	0	17.99	0	0	0	0	0	0	-2.56	-2.56
Inverter	MV3-13	367963	4907577	2	0	0	100.3	100.3	1	4774.98	3.25	0	84.58	0	0.62	0	0	18.25	0	0	0	0	0	0	-3.13	-3.13
Inverter	MV3-17	368178	4907472	2	0	0	100.3	100.3	1	4835.29	3.25	0	84.69	0	0.63	0	0	18.34	0	0	0	0	0	0	-3.34	-3.34
Inverter	MV3-21	368478	4907206	2	0	0	100.3	100.3	1	4854.98	3.25	0	84.72	0	0.63	0	0	18.37	0	0	0	0	0	0	-3.41	-3.41
Inverter	MV3-19	368357	4907347	2	0	0	100.3	100.3	1	4867.02	3.25	0	84.75	0	0.63	0	0	18.38	0	0	0	0	0	0	-3.45	-3.45
Inverter	MV3-7	367945	4907754	2	0	0	100.3	100.3	1	4902.29	3.25	0	84.81	0	0.63	0	0	18.44	0	0	0	0	0	0	-3.57	-3.57
Inverter	MV3-15	368357	4907477	2	0	0	100.3	100.3	1	4960.49	3.25	0	84.91	0	0.64	0	0	18.52	0	0	0	0	0	0	-3.76	-3.76
Inverter	MV3-10	368167	4907669	2	0	0	100.3	100.3	1	4976.29	3.25	0	84.94	0	0.64	0	0	18.55	0	0	0	0	0	0	-3.81	-3.81
Inverter	MV3-3	367939	4907927	2	0	0	100.3	100.3	1	5036.58	3.25	0	85.04	0	0.65	0	0	18.63	0	0	0	0	0	0	-4.01	-4.01
Inverter	MV3-16	368514	4907475	2	0	0	100.3	100.3	1	5068.43	3.25	0	85.1	0	0.65	0	0	18.68	0	0	0	0	0	0	-4.11	-4.11
Inverter	MV3-20	368689	4907317	2	0	0	100.3	100.3	1	5085.11	3.25	0	85.13	0	0.65	0	0	18.7	0	0	0	0	0	0	-4.17	-4.17
Inverter	MV3-11	368346	4907662	2	0	0	100.3	100.3	1	5088.9	3.25	0	85.13	0	0.65	0	0	18.71	0	0	0	0	0	0	-4.18	-4.18
Inverter	MV3-6	368162	4907834	2	0	0	100.3	100.3	1	5099.92	3.25	0	85.15	0	0.65	0	0	18.73	0	0	0	0	0	0	-4.22	-4.22
Gardiner Substation	G_Sub	366586.3	4903349.9	2.5	0	0	90.8	90.8	1	1727.14	4.25	0	75.75	0	0.85	4.18	0.31	3.89	0	0	0	0	0	0	6.11	6.11
Inverter	MV3-14	368684	4907498	2	0	0	100.3	100.3	1	5205.6	3.25	0	85.33	0	0.66	0	0	18.88	0	0	0	0	0	0	-4.56	-4.56
Inverter	MV3-9	368512	4907703	2	0	0	100.3	100.3	1	5231.3	3.25	0	85.37	0	0.66	0	0	18.92	0	0	0	0	0	0	-4.64	-4.64
Inverter	MV3-8	368680	4907712	2	0	0	100.3	100.3	1	5353.79	3.25	0	85.57	0	0.67	0	0	19.09	0	0	0	0	0	0	-5.02	-5.02
Inverter	MV6-3	370207	4907140	2	0	0	100.3	100.3	1	6192.92	3.25	0	86.84	0	0.71	0	0	20.25	0	0	0	0	0	0	-7.49	-7.49
Inverter	MV6-2	370085	4907339	2	0	0	100.3	100.3	1	6198.39	3.25	0	86.85	0	0.71	0	0	20.26	0	0	0	0	0	0	-7.5	-7.5
Inverter	MV4-7	369035	4909001	2	0	0	100.3	100.3	1	6556.36	3.25	0	87.33	0	0.71	0	0	20.73	0	0	0	0	0	0	-8.47	-8.47
Inverter	MV4-11	369264	4908855	2	0	0	100.3	100.3	1	6590.79	3.25	0	87.38	0	0.72	0	0	20.78	0	0	0	0	0	0	-8.56	-8.56
Inverter	MV4-10	369312	4908858	2	0	0	100.3	100.3	1	6624.62	3.25	0	87.42	0	0.71	0	0	20.82	0	0	0	0	0	0	-8.65	-8.65
Inverter	MV4-8	369256	4909001	2	0	0	100.3	100.3	1	6696.55	3.25	0	87.52	0	0.71	0	0	20.91	0	0	0	0	0	0	-8.83	-8.83
Inverter	MV4-4	369027	4909199	2	0	0	100.3	100.3	1	6707.31	3.25	0	87.53	0	0.71	0	0	20.93	0	0	0	0	0	0	-8.86	-8.86
Inverter	MV4-9	369289	4909001	2	0	0	100.3	100.3	1	6717.85	3.25	0	87.54	0	0.71	0	0	20.94	0	0	0	0	0	0	-8.89	-8.89
Inverter	MV4-6	369243	4909192	2	0	0	100.3	100.3	1	6835.56	3.25	0	87.7	0	0.71	0	0	21.09	0	0	0	0	0	0	-9.19	-9.19
Inverter	MV4-1	369011	4909397	2	0	0	100.3	100.3	1	6855.91	3.25	0	87.72	0	0.71	0	0	21.12	0	0	0	0	0	0	-9.24	-9.24
Inverter	MV4-5	369289	4909199	2	0	0	100.3	100.3	1	6870.01	3.25	0	87.74	0	0.71	0	0	21.14	0	0	0	0	0	0	-9.27	-9.27
Inverter	MV4-3	369229	4909397	2	0	0	100.3	100.3	1	6987.49	3.25	0	87.89	0	0.71	0	0	21.28	0	0	0	0	0	0	-9.57	-9.57
Inverter	MV5-5	370015	4908690	2	0	0	100.3	100.3	1	6991.35	3.25	0	87.89	0	0.71	0	0	21.29	0	0	0	0	0	0	-9.58	-9.58
Inverter	MV4-2	369272	4909397	2	0	0	100.3	100.3	1	7013.95	3.25	0	87.92	0	0.71	0	0	21.32	0	0	0	0	0	0	-9.63	-9.63
Inverter	MV5-2	370006	4908853	2	0	0	100.3	100.3	1	7098.08	3.25	0	88.02	0	0.71	0	0	21.42	0	0	0	0	0	0	-9.84	-9.84
Inverter	MV5-4	370324	4908707	2	0	0	100.3	100.3	1	7230.03	3.25	0	88.18	0	0.7	0	0	21.59	0	0	0	0	0	0	-10.16	-10.16
Inverter	MV5-3	370231	4908851	2	0	0	100.3	100.3	1	7258.94	3.25	0	88.22	0	0.7	0	0	21.62	0	0	0	0	0	0	-10.23	-10.23
Inverter	MV5-1	370020	4909142	2	0	0	100.3	100.3	1	7313.22	3.25	0	88.28	0	0.7	0	0	21.69	0	0	0	0	0	0	-10.36	-10.36
Inverters	G_Inv1	366526.4	4903225.8	2	0	0	87.7	87.7	1	1713.58	3.25	0	75.68	0	2.55	0	0	2.3	0	0	0	0	0	0	7.14	7.14
Inverters	G_Inv3	366583.7	4903091.4	2	0	0	87.7	87.7	1	1820.67	3.25	0	76.2	0	2.56	0	0	2.43	0	0	0	0	0	0	6.47	6.47
Inverters	G_Inv2	366676.9	4903239.1	2	0	0	87.7	87.7	1	1848.96	3.25	0	76.34	0	2.56	0	0	2.46	0	0	0	0	0	0	6.3	6.3
Inverter	MV1-3	364440	4906039	2	0	0	89.1	89.1	1	2217.61	3.25	0	77.92	0	0.96	0	0	8.4	0	0	0	0	0	0	1.78	1.78
Inverters	G_Inv5	366638.5	4902958.1	2	0	0	87.7	87.7	1	1930.15	3.25	0	76.71	0	2.57	0	0	2.55	0	0	0	0	0	0	5.82	5.82
Inverters	G_Inv4	366732.8	4903105	2	0	0	87.7	87.7	1	1950.73	3.25	0	76.8	0	2.58	0	0	2.58	0	0	0	0	0	0	5.7	5.7
Inverters	G_Inv7	366694.6	4902824.7	2	0	0	87.7	87.7	1	2045.11	3.25	0	77.21	0	2.59	0	0	2.69	0	0	0	0	0	0	5.17	5.17
Inverters	G_Inv6	366788.5	4902972	2	0	0	87.7	87.7	1	2057.06	3.25	0	77.26	0	2.59	0	0	2.7	0	0	0	0	0	0	5.1	5.1
Inverter	MV6-1	370235	4907364	2	0	0	97.3	97.3	1	6337.11	3.25	0	87.04	0	0.71	0	0	20.44	0	0	0	0	0	0	-10.88	-10.88
Inverters	G_Inv9	366750.9	4902691.8	2	0	0	87.7	87.7	1	2163.53	3.25	0	77.7	0	2.6	0	0	2.83	0	0	0	0	0	0	4.53	4.53
Inverters	G_Inv8	366844.5	4902838.5	2	0	0	87.7	87.7	1	2168.27	3.25	0	77.72	0	2.6	0	0	2.83	0	0	0	0	0	0	4.5	4.5
Inverters	G_Inv10	366900.7	4902704.8	2	0	0	87.7	87.7	1	2283.52	3.25	0	78.17	0	2.62	0	0	2.96	0	0	0	0	0	0	3.91	3.91
DSTATCOM - 10 MVAR #2	DSAT2	369403	4908757	2.5	0	0	96.6	96.6	1	6610.12	3.5	0	87.4	0	3.81	0	0	4.13	0	0	0	0	0	0	1.28	1.28
DSTATCOM - 10 MVAR #1	DSAT1	369437	4908757	2.5	0	0	96.6	96.6	1	6633.11	3.5	0	87.43	0	3.82	0	0	4.14	0	0	0	0	0	0	1.24	1.24
Inverter	MV2-2	365977	4906654	2	0	0	89.1	89.1	1	2961.66	3.25	0	80.43	0	1.14	0	0	9.56	0	0	0	0	0	0	-2.07	-2.07
SubstationTransformer	W_ST	369711.17	4906112.3	2.5	0	0	92	92	1	5265.98	4.25	0	85.43	0	1.7	2.27	0.26	8.93	0	0	0	0	0	0	-6.35	-6.35
Inverter	MV3-22	368656	4907142	2	0	0	89.1	89.1	1	4943.63	3.25	0	84.88	0	1.63	0	0	12.39	0	0	0	0	0	0	-9.84	-9.84
Westbrook Inverter Enclosur	W_INV2	369374	4906388	2	0	0	89.1	89.1	1	5092.73	3.25	0	85.14	0	1.66	0	0	12.59	0	0	0	0	0	0	-10.33	-10.33
Westbrook Inverter Enclosur	W_INV3	369508	4906164	2	0	0	89.1	89.1	1	5105.66	3.25	0	85.16	0	1.67	0	0	12.6	0	0	0	0	0	0	-10.37	-10.37
Inverter	MV3-1	368156	4907976	2	0	0	89.1	89.1	1	5207.1	3.25	0	85.33	0	1.69	0	0	12.74	0	0	0	0	0	0	-10.7	-10.7
Inverter	MV3-5	368340	4907843	2	0	0	89.1	89.1	1	5220.95	3.25	0	85.35	0	1.69	0	0	12.76	0	0	0	0	0	0	-10.75	-10.75
Westbrook Inverter Enclosur	W_INV4	369673	4906164	2	0	0	89.1	89.1	1	5253.73	3.25	0	85.41	0	1.7	0	0	12.8	0	0	0	0	0	0	-10.85	-10.85
Inverter	MV3-4	368502	4907925	2	0	0	89.1	89.1	1	5389.09	3.25	0	85.63	0	1.74	0	0	12.98	0	0	0	0	0	0	-11.29	-11.29

Westbrook Inverter Enclosur	W_INV7	369780	4906417	2	0	0	89.1	89.1	1	5463.13	3.25	0	85.75	0	1.75	0	0	13.07	0	0	0	0	0	0	-11.52	-11.52
Westbrook Inverter Enclosur	W_INV5	369719	4906574	2	0	0	89.1	89.1	1	5484.6	3.25	0	85.78	0	1.76	0	0	13.1	0	0	0	0	0	0	-11.59	-11.59
Inverter	MV3-2	368671	4907928	2	0	0	89.1	89.1	1	5504.39	3.25	0	85.81	0	1.76	0	0	13.13	0	0	0	0	0	0	-11.65	-11.65
Westbrook Inverter Enclosur	W_INV6	369875	4906578	2	0	0	89.1	89.1	1	5622.91	3.25	0	86	0	1.79	0	0	13.28	0	0	0	0	0	0	-12.02	-12.02
Fixed Reactor Bank 1	FRB1	369378	4908755	6	0	0	89.8	89.8	1	6591.79	5.25	0	87.38	0	-0.34	0	0	10.35	0	0	0	0	0	0	-7.62	-7.62
Fixed Reactor Bank 2	FRB2	369464	4908755	6	0	0	89.8	89.8	1	6649.97	5.25	0	87.46	0	-0.33	0	0	10.41	0	0	0	0	0	0	-7.76	-7.76
Inverter	MV4-15	369176	4908481	2	0	0	89.1	89.1	1	6253.28	3.25	0	86.92	0	1.95	0	0	14.08	0	0	0	0	0	0	-13.89	-13.89
Inverter	MV4-13	369051	4908605	2	0	0	89.1	89.1	1	6262.37	3.25	0	86.93	0	1.95	0	0	14.09	0	0	0	0	0	0	-13.92	-13.92
Inverter	MV4-14	369176	4908507	2	0	0	89.1	89.1	1	6272.44	3.25	0	86.95	0	1.95	0	0	14.1	0	0	0	0	0	0	-13.95	-13.95
Inverter	MV4-12	369043	4908803	2	0	0	89.1	89.1	1	6407.99	3.25	0	87.13	0	1.99	0	0	14.27	0	0	0	0	0	0	-14.33	-14.33
Inverter	MV5-6	369982	4908507	2	0	0	89.1	89.1	1	6842.37	3.25	0	87.7	0	2.09	0	0	14.8	0	0	0	0	0	0	-15.53	-15.53
Westbrook Inverter Enclosur	W_INV1	369409	4906578	2	0	0	86.1	86.1	1	5218.9	3.25	0	85.35	0	1.69	0	0	12.75	0	0	0	0	0	0	-13.74	-13.74
Inverter	MV6-4	370250	4906966	2	0	0	86.1	86.1	1	6140.22	3.25	0	86.76	0	1.92	0	0	13.94	0	0	0	0	0	0	-16.56	-16.56
Inverter Transformer	MV1-14 T	365157	4905049	2	0	0	69.4	69.4	1	1189.56	3.25	0	72.51	0	1.82	0	0	4.06	0	0	0	0	0	0	-9.04	-9.04
Inverter Transformer	MV1-13 T	364725	4905241	2	0	0	69.4	69.4	1	1379.21	3.25	0	73.79	0	1.92	0	0	4.29	0	0	0	0	0	0	-10.65	-10.65
Inverter Transformer	MV1-10 T	365010	4905564	2	0	0	69.4	69.4	1	1686.37	3.25	0	75.54	0	2.05	0	0	4.64	0	0	0	0	0	0	-12.88	-12.88
Westbrook Inverter Transfor	W_INVTR1	369403	4906578	2	0	0	78.2	78.2	1	5213.76	3.25	0	85.34	0	-3.22	0	0	2.49	0	0	0	0	0	0	-6.37	-6.37
Inverter Transformer	MV1-7 T	364919	4905782	2	0	0	69.4	69.4	1	1903.14	3.25	0	76.59	0	2.14	0	0	4.87	0	0	0	0	0	0	-14.24	-14.24
Westbrook Inverter Transfor	W_INVTR2	369368	4906388	2	0	0	77.3	77.3	1	5087.51	3.25	0	85.13	0	-3.19	0	0	2.44	0	0	0	0	0	0	-7.04	-7.04
Westbrook Inverter Transfor	W_INVTR3	369514	4906164	2	0	0	77.3	77.3	1	5111.03	3.25	0	85.17	0	-3.2	0	0	2.45	0	0	0	0	0	0	-7.08	-7.08
Westbrook Inverter Transfor	W_INVTR4	369679	4906164	2	0	0	77.3	77.3	1	5259.14	3.25	0	85.42	0	-3.23	0	0	2.5	0	0	0	0	0	0	-7.35	-7.35
Westbrook Inverter Transfor	W_INVTR7	369786	4906417	2	0	0	77.3	77.3	1	5468.44	3.25	0	85.76	0	-3.27	0	0	2.57	0	0	0	0	0	0	-7.72	-7.72
Westbrook Inverter Transfor	W_INVTR5	369725	4906574	2	0	0	77.3	77.3	1	5489.83	3.25	0	85.79	0	-3.27	0	0	2.58	0	0	0	0	0	0	-7.75	-7.75
Westbrook Inverter Transfor	W_INVTR6	369881	4906578	2	0	0	77.3	77.3	1	5628.17	3.25	0	86.01	0	-3.3	0	0	2.62	0	0	0	0	0	0	-7.99	-7.99
Inverter Transformer	MV2-1 T	365836	4906816	2	0	0	69.4	69.4	1	3069.99	3.25	0	80.74	0	2.53	0	0	5.94	0	0	0	0	0	0	-19.86	-19.86
Inverter Transformer	MV1-15 T	365309	4904994	2	0	0	56.1	56.1	1	1173.79	3.25	0	72.39	0	0.07	0	0	5.3	0	0	0	0	0	0	-21.7	-21.7
Inverter Transformer	MV6-4 T	370244	4906966	2	0	0	69.4	69.4	1	6135.04	3.25	0	86.76	0	3.21	0	0	8.1	0	0	0	0	0	0	-28.71	-28.71
Inverter Transformer	MV6-1 T	370230	4907364	2	0	0	69.4	69.4	1	6332.93	3.25	0	87.03	0	3.24	0	0	8.22	0	0	0	0	0	0	-29.14	-29.14
Inverter Transformer	MV1-12 T	365044	4905386	2	0	0	56.1	56.1	1	1510.44	3.25	0	74.58	0	0.2	0	0	6.04	0	0	0	0	0	0	-24.77	-24.77
Inverter Transformer	MV1-11 T	364649	4905414	2	0	0	56.1	56.1	1	1562.75	3.25	0	74.88	0	0.22	0	0	6.15	0	0	0	0	0	0	-25.19	-25.19
Inverter Transformer	MV1-8 T	364782	4905647	2	0	0	56.1	56.1	1	1775.24	3.25	0	75.99	0	0.31	0	0	6.59	0	0	0	0	0	0	-26.83	-26.83
Inverter Transformer	MV1-9 T	364555	4905646	2	0	0	56.1	56.1	1	1808.93	3.25	0	76.15	0	0.32	0	0	6.66	0	0	0	0	0	0	-27.08	-27.08
Inverter Transformer	MV1-6 T	364482	4905835	2	0	0	56.1	56.1	1	2009.41	3.25	0	77.06	0	0.41	0	0	7.06	0	0	0	0	0	0	-28.47	-28.47
Inverter Transformer	MV1-5 T	364676	4905892	2	0	0	56.1	56.1	1	2030.53	3.25	0	77.15	0	0.42	0	0	7.1	0	0	0	0	0	0	-28.61	-28.61
Inverter Transformer	MV1-4 T	364821	4905918	2	0	0	56.1	56.1	1	2042.6	3.25	0	77.2	0	0.42	0	0	7.13	0	0	0	0	0	0	-28.69	-28.69
Inverter Transformer	MV1-2 T	364759	4906063	2	0	0	56.1	56.1	1	2191.67	3.25	0	77.82	0	0.48	0	0	7.41	0	0	0	0	0	0	-29.66	-29.66
Inverter Transformer	MV1-3 T	364435	4906039	2	0	0	56.1	56.1	1	2218.75	3.25	0	77.92	0	0.5	0	0	7.47	0	0	0	0	0	0	-29.83	-29.83
Inverter Transformer	MV1-1 T	364721	4906166	2	0	0	56.1	56.1	1	2297.67	3.25	0	78.23	0	0.53	0	0	7.62	0	0	0	0	0	0	-30.31	-30.31
Inverter Transformer	MV2-4 T	365590	4906628	2	0	0	56.1	56.1	1	2824.3	3.25	0	80.02	0	0.76	0	0	8.57	0	0	0	0	0	0	-33.28	-33.28
Inverter Transformer	MV2-3 T	365814	4906641	2	0	0	56.1	56.1	1	2896.32	3.25	0	80.24	0	0.79	0	0	8.69	0	0	0	0	0	0	-33.66	-33.66
Inverter Transformer	MV2-2 T	365982	4906654	2	0	0	56.1	56.1	1	2963.41	3.25	0	80.44	0	0.81	0	0	8.81	0	0	0	0	0	0	-34	-34
Inverter Transformer	MV3-18 T	367757	4907412	2	0	0	56.1	56.1	1	4517.21	3.25	0	84.1	0	1.45	0	0	11.2	0	0	0	0	0	0	-40.68	-40.68
Inverter Transformer	MV3-12 T	367674	4907594	2	0	0	56.1	56.1	1	4611.29	3.25	0	84.28	0	1.48	0	0	11.33	0	0	0	0	0	0	-41.03	-41.03
Inverter Transformer	MV3-13 T	367958	4907577	2	0	0	56.1	56.1	1	4771.82	3.25	0	84.57	0	1.54	0	0	11.55	0	0	0	0	0	0	-41.61	-41.61
Inverter Transformer	MV3-17 T	368183	4907472	2	0	0	56.1	56.1	1	4838.64	3.25	0	84.69	0	1.57	0	0	11.64	0	0	0	0	0	0	-41.84	-41.84
Inverter Transformer	MV3-21 T	368484	4907206	2	0	0	56.1	56.1	1	4859.35	3.25	0	84.73	0	1.57	0	0	11.67	0	0	0	0	0	0	-41.91	-41.91
Inverter Transformer	MV3-19 T	368352	4907347	2	0	0	56.1	56.1	1	4863.51	3.25	0	84.74	0	1.58	0	0	11.67	0	0	0	0	0	0	-41.93	-41.93
Inverter Transformer	MV3-7 T	367951	4907754	2	0	0	56.1	56.1	1	4905.97	3.25	0	84.81	0	1.59	0	0	11.73	0	0	0	0	0	0	-42.08	-42.08
Inverter Transformer	MV3-22 T	368661	4907142	2	0	0	56.1	56.1	1	4947.39	3.25	0	84.89	0	1.61	0	0	11.78	0	0	0	0	0	0	-42.22	-42.22
Inverter Transformer	MV3-15 T	368351	4907477	2	0	0	56.1	56.1	1	4956.36	3.25	0	84.9	0	1.61	0	0	11.8	0	0	0	0	0	0	-42.25	-42.25
Inverter Transformer	MV3-10 T	368162	4907669	2	0	0	56.1	56.1	1	4973.05	3.25	0	84.93	0	1.62	0	0	11.82	0	0	0	0	0	0	-42.31	-42.31
Inverter Transformer	MV3-3 T	367944	4907927	2	0	0	56.1	56.1	1	5039.55	3.25	0	85.05	0	1.64	0	0	11.91	0	0	0	0	0	0	-42.54	-42.54
Inverter Transformer	MV3-16 T	368509	4907475	2	0	0	56.1	56.1	1	5064.91	3.25	0	85.09	0	1.65	0	0	11.94	0	0	0	0	0	0	-42.62	-42.62
Inverter Transformer	MV3-20 T	368683	4907317	2	0	0	56.1	56.1	1	5080.69	3.25	0	85.12	0	1.65	0	0	11.96	0	0	0	0	0	0	-42.67	-42.67
Inverter Transformer	MV3-11 T	368340	4907662	2	0	0	56.1	56.1	1	5084.89	3.25	0	85.13	0	1.66	0	0	11.97	0	0	0	0	0	0	-42.69	-42.69
Inverter Transformer	MV3-6 T	368156	4907834	2	0	0	56.1	56.1	1	5096.13	3.25	0	85.14	0	1.66	0	0	11.98	0	0	0	0	0	0	-42.73	-42.73
Inverter Transformer	MV3-14 T	368678	4907498	2	0	0	56.1	56.1	1	5201.29	3.25	0	85.32	0	1.7	0	0	12.12	0	0	0	0	0	0	-43.08	-43.08
Inverter Transformer	MV3-1 T	368150	4907976	2	0	0	56.1	56.1	1	5203.4	3.25	0	85.33	0	1.7	0	0	12.12	0	0	0	0	0	0	-43.08	-43.08
Inverter Transformer	MV3-5 T	368335	4907843	2	0	0	56.1	56.1	1	5217.7	3.25	0	85.35	0	1.7	0	0	12.14	0	0	0	0	0	0	-43.13	-43.13
Inverter Transformer	MV3-9 T	368517	4907703	2	0	0	56.1	56.1	1	5234.71	3.25	0	85.38	0	1.71	0	0	12.16	0	0	0	0	0	0	-43.19	-43.19
Inverter Transformer	MV3-8 T	368685	4907712	2	0	0	56.1	56.1	1	5357.28	3.25	0	85.58	0	1.75	0	0	12.32	0	0	0	0	0	0	-43.59	-43.59
Inverter Transformer	MV3-4 T	368507	4907925	2	0	0	56.1	56.1	1	5392.39	3.25	0	85.64	0	1.76	0	0	12.36	0	0	0	0	0	0	-43.7	-43.7
Inverter Transformer	MV3-2 T	368677	4907928	2	0	0	56.1	56.1	1	5508.46	3.25	0	85.82	0	1.8	0	0	12.51	0	0	0	0	0	0	-44.07	-44.07
Inverter Transformer	MV6-3 T	370202	4907140	2	0	0	56.1	56.1	1	6188.67	3.25	0	86.83	0	2.02	0	0	13.32	0	0	0	0	0	0	-46.12	-46.12
Inverter Transformer	MV6-2 T	370091	4907339	2	0	0	56.1	56.1	1	6203.37	3.25	0	86.85	0	2.03	0	0	13.34	0	0	0	0	0	0	-46.16	-46.16
Inverter Transformer	MV4-15 T	369170	4908481	2	0	0	56.1	56.1	1	6249.22	3.25	0	86.92	0	2.04	0	0	13.39	0	0	0	0	0	0	-46.29	-46.29
Inverter Transformer	MV4-13 T	369057	4908605	2	0	0	56.1	56.1	1	6266.31	3.25	0	86.94	0	2.05	0	0	13.41	0	0	0	0	0	0	-46.34	-46.34
Inverter Transformer	MV4-14 T	369182	4908507	2	0	0	56.1	56.1	1	6276.49	3.25	0	86.95	0	2.05	0	0	13.43	0	0	0	0	0	0	-46.37	-46.37
Inverter Transformer	MV4-12 T	369049	4908803	2	0	0	56.1	56.1	1	6411.83	3.25	0	87.14	0	2.09	0	0	13.58	0	0	0	0	0	0	-46.75	-46.75
Inverter Transformer	MV4-7 T	369040	4909001	2	0	0	56.1	56.1	1	6559.49	3.25	0	87.34	0	2.14	0	0	13.75	0	0	0	0	0	0	-47.16	-47.16
Inverter Transformer	MV4-11 T	369269	4908855	2	0	0	56.1	56.1	1	6594.07	3.25	0	87.38	0	2.15	0	0	13.79	0	0	0	0	0	0	-47.26	-47.26
Inverter Transformer	MV4-10 T	369307	4908858	2	0	0	56.1	56.1	1	6621.32	3.25	0	87.42	0	2.15	0	0	13.82	0	0	0	0	0	0	-47.33	-47.33
Inverter Transformer	MV4-8 T	369262	4909001	2	0	0	56.1	56.1	1	6700.42	3.25	0	87.52	0	2.18	0	0	13.9	0	0	0	0	0	0	-47.54	-47.54
Inverter Transformer	MV4-4 T	369033	4909199	2	0	0	56.1	56.1	1	6710.96	3.25	0	87.54	0	2.18	0	0	13.92	0	0	0	0	0	0	-47.57	-47.57

	Inverter Transformer	MV4-9 T	369284	4909001	2	0	0	56.1	56.1	1	6714.62	3.25	0	87.54	0	2.18	0	0	13.92	0	0	0	0	0	0	-47.58	-47.58
	Inverter Transformer	MV4-6 T	369249	4909192	2	0	0	56.1	56.1	1	6839.33	3.25	0	87.7	0	2.22	0	0	14.06	0	0	0	0	0	0	-47.91	-47.91
	Inverter Transformer	MV5-6 T	369987	4908507	2	0	0	56.1	56.1	1	6846.05	3.25	0	87.71	0	2.22	0	0	14.06	0	0	0	0	0	0	-47.93	-47.93
	Inverter Transformer	MV4-1 T	369017	4909397	2	0	0	56.1	56.1	1	6859.47	3.25	0	87.73	0	2.22	0	0	14.08	0	0	0	0	0	0	-47.97	-47.97
	Inverter Transformer	MV4-5 T	369283	4909199	2	0	0	56.1	56.1	1	6866.22	3.25	0	87.73	0	2.22	0	0	14.09	0	0	0	0	0	0	-47.98	-47.98
	Inverter Transformer	MV4-3 T	369234	4909397	2	0	0	56.1	56.1	1	6990.56	3.25	0	87.89	0	2.26	0	0	14.22	0	0	0	0	0	0	-48.31	-48.31
	Inverter Transformer	MV5-5 T	370021	4908690	2	0	0	56.1	56.1	1	6995.71	3.25	0	87.9	0	2.26	0	0	14.23	0	0	0	0	0	0	-48.32	-48.32
	Inverter Transformer	MV4-2 T	369267	4909397	2	0	0	56.1	56.1	1	7010.86	3.25	0	87.92	0	2.26	0	0	14.24	0	0	0	0	0	0	-48.36	-48.36
	Inverter Transformer	MV5-2 T	370011	4908853	2	0	0	56.1	56.1	1	7101.65	3.25	0	88.03	0	2.29	0	0	14.34	0	0	0	0	0	0	-48.59	-48.59
	Inverter Transformer	MV5-4 T	370330	4908707	2	0	0	56.1	56.1	1	7234.5	3.25	0	88.19	0	2.32	0	0	14.48	0	0	0	0	0	0	-48.93	-48.93
	Inverter Transformer	MV5-3 T	370237	4908851	2	0	0	56.1	56.1	1	7263.31	3.25	0	88.22	0	2.33	0	0	14.51	0	0	0	0	0	0	-49	-49
	Inverter Transformer	MV5-1 T	370015	4909142	2	0	0	56.1	56.1	1	7309.75	3.25	0	88.28	0	2.34	0	0	14.56	0	0	0	0	0	0	-49.12	-49.12
	Line Reactor	NGR	369421	4908787.5	5	0	0	45.4	45.4	1	6644.77	5.25	0	87.45	0	3.23	1.37	0.09	2.72	0	0	0	0	0	0	-49.4	-49.4
Limit. Valu	0	0																								
Level D/N:	24.4648	24.4648																								

Receiver: Existing Noise Receptor
ID: G-112
X: 364883.2
Y: 4903837
Z: 4.5
Ground: 0

ISO	Description	ID	X	Y	Z	Ground	ReflOrd	LxT	LxN	L/A	Dist.	hm	Freq	Adiv	K0b	Agr	Abar	z	Aatm	Afol	Ahous	Cmet	CmetN	Dc	RL	LtotT	LtotN
	Inverter	MV1-15	365315	4904994	2	0	0	100.3	100.3	1	1234.95	3.25	0	72.83	0	-0.14	0	0	11.63	0	0	0	0	0	0	15.99	15.99
	Inverter	MV1-12	365038	4905386	2	0	0	100.3	100.3	1	1556.72	3.25	0	74.84	0	-0.01	0	0	12.46	0	0	0	0	0	0	13.02	13.02
	Inverter	MV1-11	364655	4905414	2	0	0	100.3	100.3	1	1593.43	3.25	0	75.05	0	0	0	0	12.55	0	0	0	0	0	0	12.71	12.71
	Sol_Luce Substation	S_Substation	369426	4908792	3.5	0	0	112.1	112.1	1	6722.28	5.25	0	87.55	0	1.32	2.5	0.26	10.48	0	0	0	0	0	0	10.23	10.23
	Inverter	MV1-14	365163	4905049	2	0	0	97.3	97.3	1	1243.88	3.25	0	72.9	0	-0.14	0	0	11.65	0	0	0	0	0	0	12.9	12.9
	Inverter	MV1-8	364788	4905647	2	0	0	100.3	100.3	1	1812.5	3.25	0	76.17	0	0.07	0	0	13.06	0	0	0	0	0	0	11.02	11.02
	Inverter	MV1-9	364561	4905646	2	0	0	100.3	100.3	1	1837.47	3.25	0	76.28	0	0.08	0	0	13.11	0	0	0	0	0	0	10.83	10.83
	Inverter	MV1-13	364731	4905241	2	0	0	97.3	97.3	1	1412.23	3.25	0	74	0	-0.07	0	0	12.1	0	0	0	0	0	0	11.28	11.28
	Inverter	MV1-6	364477	4905835	2	0	0	100.3	100.3	1	2038.87	3.25	0	77.19	0	0.14	0	0	13.54	0	0	0	0	0	0	9.44	9.44
	Inverter	MV1-5	364671	4905892	2	0	0	100.3	100.3	1	2065.93	3.25	0	77.3	0	0.15	0	0	13.6	0	0	0	0	0	0	9.26	9.26
	Inverter	MV1-4	364815	4905918	2	0	0	100.3	100.3	1	2082.12	3.25	0	77.37	0	0.15	0	0	13.63	0	0	0	0	0	0	9.16	9.16
	Inverter	MV1-2	364753	4906063	2	0	0	100.3	100.3	1	2229.81	3.25	0	77.97	0	0.19	0	0	13.93	0	0	0	0	0	0	8.22	8.22
	Inverter	MV1-1	364715	4906166	2	0	0	100.3	100.3	1	2335.07	3.25	0	78.37	0	0.22	0	0	14.14	0	0	0	0	0	0	7.59	7.59
	Inverter	MV1-10	365004	4905564	2	0	0	97.3	97.3	1	1731.22	3.25	0	75.77	0	0.05	0	0	12.87	0	0	0	0	0	0	8.62	8.62
	Inverter	MV1-7	364925	4905782	2	0	0	97.3	97.3	1	1945.45	3.25	0	76.78	0	0.11	0	0	13.35	0	0	0	0	0	0	7.07	7.07
	Inverter	MV2-4	365586	4906624	2	0	0	100.3	100.3	1	2874.25	3.25	0	80.17	0	0.34	0	0	15.15	0	0	0	0	0	0	4.66	4.66
	Inverter	MV2-3	365820	4906641	2	0	0	100.3	100.3	1	2956.35	3.25	0	80.42	0	0.35	0	0	15.29	0	0	0	0	0	0	4.25	4.25
	Inverter	MV2-1	365842	4906816	2	0	0	97.3	97.3	1	3129.5	3.25	0	80.91	0	0.39	0	0	15.6	0	0	0	0	0	0	0.42	0.42
	Inverter	MV3-18	367752	4907412	2	0	0	100.3	100.3	1	4583.74	3.25	0	84.22	0	0.6	0	0	17.96	0	0	0	0	0	0	-2.47	-2.47
	Inverter	MV3-12	367668	4907594	2	0	0	100.3	100.3	1	4676.55	3.25	0	84.4	0	0.61	0	0	18.1	0	0	0	0	0	0	-2.8	-2.8
	Inverter	MV3-13	367963	4907577	2	0	0	100.3	100.3	1	4844.87	3.25	0	84.71	0	0.63	0	0	18.35	0	0	0	0	0	0	-3.37	-3.37
	Inverter	MV3-17	368178	4907472	2	0	0	100.3	100.3	1	4906.01	3.25	0	84.81	0	0.63	0	0	18.44	0	0	0	0	0	0	-3.58	-3.58
	Inverter	MV3-21	368478	4907206	2	0	0	100.3	100.3	1	4926.74	3.25	0	84.85	0	0.64	0	0	18.47	0	0	0	0	0	0	-3.65	-3.65
	Inverter	MV3-19	368357	4907347	2	0	0	100.3	100.3	1	4938.36	3.25	0	84.87	0	0.64	0	0	18.49	0	0	0	0	0	0	-3.69	-3.69
	Inverter	MV3-7	367945	4907754	2	0	0	100.3	100.3	1	4971.67	3.25	0	84.93	0	0.64	0	0	18.54	0	0	0	0	0	0	-3.8	-3.8
	Inverter	MV3-15	368357	4907477	2	0	0	100.3	100.3	1	5031.59	3.25	0	85.03	0	0.64	0	0	18.63	0	0	0	0	0	0	-3.99	-3.99
	Inverter	MV3-10	368167	4907669	2	0	0	100.3	100.3	1	5046.54	3.25	0	85.06	0	0.65	0	0	18.65	0	0	0	0	0	0	-4.04	-4.04
	Inverter	MV3-3	367939	4907927	2	0	0	100.3	100.3	1	5105.49	3.25	0	85.16	0	0.65	0	0	18.73	0	0	0	0	0	0	-4.23	-4.23
	Inverter	MV3-16	368514	4907475	2	0	0	100.3	100.3	1	5139.82	3.25	0	85.22	0	0.65	0	0	18.78	0	0	0	0	0	0	-4.35	-4.35
	Inverter	MV3-20	368689	4907317	2	0	0	100.3	100.3	1	5156.99	3.25	0	85.25	0	0.66	0	0	18.81	0	0	0	0	0	0	-4.4	-4.4
	Inverter	MV3-11	368346	4907662	2	0	0	100.3	100.3	1	5159.61	3.25	0	85.25	0	0.66	0	0	18.81	0	0	0	0	0	0	-4.41	-4.41
	Inverter	MV3-6	368162	4907834	2	0	0	100.3	100.3	1	5169.77	3.25	0	85.27	0	0.66	0	0	18.83	0	0	0	0	0	0	-4.44	-4.44
	Inverter	MV3-14	368684	4907498	2	0	0	100.3	100.3	1	5277.22	3.25	0	85.45	0	0.66	0	0	18.98	0	0	0	0	0	0	-4.78	-4.78
	Inverter	MV3-9	368512	4907703	2	0	0	100.3	100.3	1	5302.28	3.25	0	85.49	0	0.67	0	0	19.02	0	0	0	0	0	0	-4.86	-4.86
	Gardiner Substation	G_Sub	366586.3	4903349.9	2.5	0	0	90.8	90.8	1	1771.39	4.25	0	75.97	0	0.85	4.12	0.31	3.97	0	0	0	0	0	0	5.87	5.87
	Inverter	MV3-8	368680	4907712	2	0	0	100.3	100.3	1	5425.06	3.25	0	85.69	0	0.68	0	0	19.19	0	0	0	0	0	0	-5.25	-5.25
	Inverter	MV6-3	370207	4907140	2	0	0	100.3	100.3	1	6265.19	3.25	0	86.94	0	0.71	0	0	20.35	0	0	0	0	0	0	-7.69	-7.69
	Inverter	MV6-2	370085	4907339	2	0	0	100.3	100.3	1	6270.78	3.25	0	86.95	0	0.71	0	0	20.36	0	0	0	0	0	0	-7.7	-7.7
	Inverter	MV4-7	369035	4909001	2	0	0	100.3	100.3	1	6626.04	3.25	0	87.43	0	0.71	0	0	20.82	0	0	0	0	0	0	-8.65	-8.65
	Inverter	MV4-11	369264	4908855	2	0	0	100.3	100.3	1	6661.21	3.25	0	87.47	0	0.71	0	0	20.87	0	0	0	0	0	0	-8.74	-8.74
	Inverter	MV4-10	369312	4908858	2	0	0	100.3	100.3	1	6695.13	3.25	0	87.52	0	0.71	0	0	20.91	0	0	0	0	0	0	-8.83	-8.83
	Inverter	MV4-8	369256	4909001	2	0	0	100.3	100.3	1	6766.7	3.25	0	87.61	0	0.71	0	0	21	0	0	0	0	0	0	-9.01	-9.01
	Inverter	MV4-4	369027	4909199	2	0	0	100.3	100.3	1	6776.59	3.25	0	87.62	0	0.71	0	0	21.02	0	0	0	0	0	0	-9.04	-9.04
	Inverter	MV4-9	369289	4909001	2	0	0	100.3	100.3	1	6788.08	3.25	0	87.63	0	0.71	0	0	21.03	0	0	0	0	0	0	-9.07	-9.07
	Inverter	MV4-6	369243	4909192	2	0	0	100.3	100.3	1	6905.35	3.25	0	87.78	0	0.71	0	0	21.18	0	0	0	0	0	0	-9.36	-9.36
	Inverter	MV4-1	369011	4909397	2	0	0	100.3	100.3	1	6924.76	3.25	0	87.81	0	0.71	0	0	21.2	0	0	0	0	0	0	-9.41	-9.41
	Inverter	MV4-5	369289	4909199	2	0	0	100.3	100.3	1	6939.89	3.25	0	87.83	0	0.71	0	0	21.22	0	0	0	0	0	0	-9.45	-9.45
	Inverter	MV4-3	369229	4909397	2	0	0	100.3	100.3	1	7056.88	3.25	0	87.97	0	0.71	0	0	21.37	0	0	0	0	0	0	-9.74	-9.74
	Inverter	MV5-5	370015	4908690	2	0	0	100.3	100.3	1	7063.07	3.25	0	87.98	0	0.71	0	0	21.38	0	0	0	0	0	0	-9.75	-9.75
	Inverter	MV4-2	369272	4909397	2	0	0	100.3	100.3	1	7083.44	3.25	0	88	0	0.71	0	0	21.4	0	0	0	0	0	0	-9.8	-9.8

Inverter	MV5-2	370006	4908853	2	0	0	100.3	100.3	1	7169.61	3.25	0	88.11	0	0.7	0	0	21.51	0	0	0	0	0	0	-10.01	-10.01
Inverter	MV5-4	370324	4908707	2	0	0	100.3	100.3	1	7302	3.25	0	88.27	0	0.7	0	0	21.67	0	0	0	0	0	0	-10.33	-10.33
Inverter	MV5-3	370231	4908851	2	0	0	100.3	100.3	1	7330.7	3.25	0	88.3	0	0.7	0	0	21.71	0	0	0	0	0	0	-10.4	-10.4
Inverter	MV5-1	370020	4909142	2	0	0	100.3	100.3	1	7384.43	3.25	0	88.37	0	0.7	0	0	21.77	0	0	0	0	0	0	-10.52	-10.52
Inverters	G_Inv1	366526.4	4903225.8	2	0	0	87.7	87.7	1	1753.19	3.25	0	75.88	0	2.55	0	0	2.35	0	0	0	0	0	0	6.89	6.89
Inverters	G_Inv3	366583.7	4903091.4	2	0	0	87.7	87.7	1	1856.78	3.25	0	76.38	0	2.57	0	0	2.47	0	0	0	0	0	0	6.25	6.25
Inverters	G_Inv2	366676.9	4903239.1	2	0	0	87.7	87.7	1	1890.73	3.25	0	76.53	0	2.57	0	0	2.51	0	0	0	0	0	0	6.05	6.05
Inverter	MV1-3	364440	4906039	2	0	0	89.1	89.1	1	2246.16	3.25	0	78.03	0	0.97	0	0	8.44	0	0	0	0	0	0	1.62	1.62
Inverters	G_Inv5	366638.5	4902958.1	2	0	0	87.7	87.7	1	1963.05	3.25	0	76.86	0	2.58	0	0	2.59	0	0	0	0	0	0	5.63	5.63
Inverters	G_Inv4	366732.8	4903105	2	0	0	87.7	87.7	1	1989.18	3.25	0	76.97	0	2.58	0	0	2.62	0	0	0	0	0	0	5.48	5.48
Inverters	G_Inv7	366694.6	4902824.7	2	0	0	87.7	87.7	1	2075.07	3.25	0	77.34	0	2.59	0	0	2.72	0	0	0	0	0	0	5	5
Inverters	G_Inv6	366788.5	4902972	2	0	0	87.7	87.7	1	2092.46	3.25	0	77.41	0	2.59	0	0	2.74	0	0	0	0	0	0	4.91	4.91
Inverter	MV6-1	370235	4907364	2	0	0	97.3	97.3	1	6409.49	3.25	0	87.14	0	0.71	0	0	20.54	0	0	0	0	0	0	-11.08	-11.08
Inverters	G_Inv9	366750.9	4902691.8	2	0	0	87.7	87.7	1	2190.84	3.25	0	77.81	0	2.61	0	0	2.86	0	0	0	0	0	0	4.38	4.38
Inverters	G_Inv8	366844.5	4902838.5	2	0	0	87.7	87.7	1	2200.84	3.25	0	77.85	0	2.61	0	0	2.87	0	0	0	0	0	0	4.33	4.33
Inverters	G_Inv10	366900.7	4902704.8	2	0	0	87.7	87.7	1	2313.48	3.25	0	78.29	0	2.62	0	0	3	0	0	0	0	0	0	3.76	3.76
DSTATCOM - 10 MVAR #2	DSAT2	369403	4908757	2.5	0	0	96.6	96.6	1	6680.94	3.5	0	87.5	0	3.82	0	0	4.16	0	0	0	0	0	0	1.15	1.15
DSTATCOM - 10 MVAR #1	DSAT1	369437	4908757	2.5	0	0	96.6	96.6	1	6703.99	3.5	0	87.53	0	3.82	0	0	4.17	0	0	0	0	0	0	1.11	1.11
Inverter	MV2-2	365977	4906654	2	0	0	89.1	89.1	1	3021.9	3.25	0	80.61	0	1.15	0	0	9.65	0	0	0	0	0	0	-2.35	-2.35
SubstationTransformer	W_ST	369711.17	4906112.3	2.5	0	0	92	92	1	5337.24	4.25	0	85.55	0	1.72	2.25	0.26	9.01	0	0	0	0	0	0	-6.55	-6.55
Inverter	MV3-22	368656	4907142	2	0	0	89.1	89.1	1	5015.68	3.25	0	85.01	0	1.64	0	0	12.48	0	0	0	0	0	0	-10.08	-10.08
Westbrook Inverter Enclosur	W_INV2	369374	4906388	2	0	0	89.1	89.1	1	5164.77	3.25	0	85.26	0	1.68	0	0	12.68	0	0	0	0	0	0	-10.57	-10.57
Westbrook Inverter Enclosur	W_INV3	369508	4906164	2	0	0	89.1	89.1	1	5177.23	3.25	0	85.28	0	1.68	0	0	12.7	0	0	0	0	0	0	-10.61	-10.61
Inverter	MV3-1	368156	4907976	2	0	0	89.1	89.1	1	5276.6	3.25	0	85.45	0	1.71	0	0	12.83	0	0	0	0	0	0	-10.93	-10.93
Inverter	MV3-5	368340	4907843	2	0	0	89.1	89.1	1	5291.27	3.25	0	85.47	0	1.71	0	0	12.85	0	0	0	0	0	0	-10.97	-10.97
Westbrook Inverter Enclosur	W_INV4	369673	4906164	2	0	0	89.1	89.1	1	5325.14	3.25	0	85.53	0	1.72	0	0	12.89	0	0	0	0	0	0	-11.08	-11.08
Inverter	MV3-4	368502	4907925	2	0	0	89.1	89.1	1	5459.62	3.25	0	85.74	0	1.75	0	0	13.07	0	0	0	0	0	0	-11.51	-11.51
Westbrook Inverter Enclosur	W_INV7	369780	4906417	2	0	0	89.1	89.1	1	5534.89	3.25	0	85.86	0	1.77	0	0	13.17	0	0	0	0	0	0	-11.74	-11.74
Westbrook Inverter Enclosur	W_INV5	369719	4906574	2	0	0	89.1	89.1	1	5556.63	3.25	0	85.9	0	1.78	0	0	13.2	0	0	0	0	0	0	-11.81	-11.81
Inverter	MV3-2	368671	4907928	2	0	0	89.1	89.1	1	5575.28	3.25	0	85.93	0	1.78	0	0	13.22	0	0	0	0	0	0	-11.87	-11.87
Westbrook Inverter Enclosur	W_INV6	369875	4906578	2	0	0	89.1	89.1	1	5694.84	3.25	0	86.11	0	1.81	0	0	13.37	0	0	0	0	0	0	-12.24	-12.24
Fixed Reactor Bank 1	FRB1	369378	4908755	6	0	0	89.8	89.8	1	6662.58	5.25	0	87.47	0	-0.33	0	0	10.42	0	0	0	0	0	0	-7.79	-7.79
Fixed Reactor Bank 2	FRB2	369464	4908755	6	0	0	89.8	89.8	1	6720.9	5.25	0	87.55	0	-0.32	0	0	10.48	0	0	0	0	0	0	-7.93	-7.93
Inverter	MV4-15	369176	4908481	2	0	0	89.1	89.1	1	6324.15	3.25	0	87.02	0	1.96	0	0	14.17	0	0	0	0	0	0	-14.09	-14.09
Inverter	MV4-13	369051	4908605	2	0	0	89.1	89.1	1	6332.8	3.25	0	87.03	0	1.97	0	0	14.18	0	0	0	0	0	0	-14.12	-14.12
Inverter	MV4-14	369176	4908507	2	0	0	89.1	89.1	1	6343.27	3.25	0	87.05	0	1.97	0	0	14.19	0	0	0	0	0	0	-14.15	-14.15
Inverter	MV4-12	369043	4908803	2	0	0	89.1	89.1	1	6478.05	3.25	0	87.23	0	2	0	0	14.36	0	0	0	0	0	0	-14.53	-14.53
Inverter	MV5-6	369982	4908507	2	0	0	89.1	89.1	1	6914.24	3.25	0	87.79	0	2.11	0	0	14.88	0	0	0	0	0	0	-15.73	-15.73
Westbrook Inverter Enclosur	W_INV1	369409	4906578	2	0	0	86.1	86.1	1	5291.12	3.25	0	85.47	0	1.71	0	0	12.85	0	0	0	0	0	0	-13.97	-13.97
Inverter	MV6-4	370250	4906966	2	0	0	86.1	86.1	1	6212.34	3.25	0	86.87	0	1.94	0	0	14.03	0	0	0	0	0	0	-16.77	-16.77
Inverter Transformer	MV1-14 T	365157	4905049	2	0	0	69.4	69.4	1	1242.54	3.25	0	72.89	0	1.85	0	0	4.13	0	0	0	0	0	0	-9.51	-9.51
Inverter Transformer	MV1-13 T	364725	4905241	2	0	0	69.4	69.4	1	1412.89	3.25	0	74	0	1.93	0	0	4.33	0	0	0	0	0	0	-10.92	-10.92
Inverter Transformer	MV1-10 T	365010	4905564	2	0	0	69.4	69.4	1	1731.65	3.25	0	75.77	0	2.07	0	0	4.69	0	0	0	0	0	0	-13.18	-13.18
Westbrook Inverter Transfor	W_INVTR1	369403	4906578	2	0	0	78.2	78.2	1	5285.99	3.25	0	85.46	0	-3.23	0	0	2.51	0	0	0	0	0	0	-6.5	-6.5
Inverter Transformer	MV1-7 T	364919	4905782	2	0	0	69.4	69.4	1	1945.33	3.25	0	76.78	0	2.15	0	0	4.91	0	0	0	0	0	0	-14.49	-14.49
Westbrook Inverter Transfor	W_INVTR2	369368	4906388	2	0	0	77.3	77.3	1	5159.56	3.25	0	85.25	0	-3.21	0	0	2.47	0	0	0	0	0	0	-7.17	-7.17
Westbrook Inverter Transfor	W_INVTR3	369514	4906164	2	0	0	77.3	77.3	1	5182.59	3.25	0	85.29	0	-3.21	0	0	2.47	0	0	0	0	0	0	-7.21	-7.21
Westbrook Inverter Transfor	W_INVTR4	369679	4906164	2	0	0	77.3	77.3	1	5330.54	3.25	0	85.54	0	-3.24	0	0	2.52	0	0	0	0	0	0	-7.48	-7.48
Westbrook Inverter Transfor	W_INVTR7	369786	4906417	2	0	0	77.3	77.3	1	5540.2	3.25	0	85.87	0	-3.28	0	0	2.59	0	0	0	0	0	0	-7.84	-7.84
Westbrook Inverter Transfor	W_INVTR5	369725	4906574	2	0	0	77.3	77.3	1	5561.85	3.25	0	85.9	0	-3.29	0	0	2.6	0	0	0	0	0	0	-7.88	-7.88
Westbrook Inverter Transfor	W_INVTR6	369881	4906578	2	0	0	77.3	77.3	1	5700.1	3.25	0	86.12	0	-3.31	0	0	2.65	0	0	0	0	0	0	-8.11	-8.11
Inverter Transformer	MV2-1 T	365836	4906816	2	0	0	69.4	69.4	1	3127.66	3.25	0	80.9	0	2.55	0	0	5.99	0	0	0	0	0	0	-20.09	-20.09
Inverter Transformer	MV1-15 T	365309	4904994	2	0	0	56.1	56.1	1	1232.87	3.25	0	72.82	0	0.1	0	0	5.43	0	0	0	0	0	0	-22.29	-22.29
Inverter Transformer	MV6-4 T	370244	4906966	2	0	0	69.4	69.4	1	6207.16	3.25	0	86.86	0	3.22	0	0	8.14	0	0	0	0	0	0	-28.87	-28.87
Inverter Transformer	MV6-1 T	370230	4907364	2	0	0	69.4	69.4	1	6405.31	3.25	0	87.13	0	3.25	0	0	8.26	0	0	0	0	0	0	-29.29	-29.29
Inverter Transformer	MV1-12 T	365044	4905386	2	0	0	56.1	56.1	1	1557.33	3.25	0	74.85	0	0.22	0	0	6.14	0	0	0	0	0	0	-25.15	-25.15
Inverter Transformer	MV1-11 T	364649	4905414	2	0	0	56.1	56.1	1	1594.3	3.25	0	75.05	0	0.24	0	0	6.22	0	0	0	0	0	0	-25.45	-25.45
Inverter Transformer	MV1-8 T	364782	4905647	2	0	0	56.1	56.1	1	1812.83	3.25	0	76.17	0	0.33	0	0	6.67	0	0	0	0	0	0	-27.1	-27.1
Inverter Transformer	MV1-9 T	364555	4905646	2	0	0	56.1	56.1	1	1838.53	3.25	0	76.29	0	0.34	0	0	6.72	0	0	0	0	0	0	-27.29	-27.29
Inverter Transformer	MV1-6 T	364482	4905835	2	0	0	56.1	56.1	1	2037.88	3.25	0	77.18	0	0.42	0	0	7.12	0	0	0	0	0	0	-28.66	-28.66
Inverter Transformer	MV1-5 T	364676	4905892	2	0	0	56.1	56.1	1	2065.42	3.25	0	77.3	0	0.43	0	0	7.17	0	0	0	0	0	0	-28.84	-28.84
Inverter Transformer	MV1-4 T	364821	4905918	2	0	0	56.1	56.1	1	2081.93	3.25	0	77.37	0	0.44	0	0	7.2	0	0	0	0	0	0	-28.95	-28.95
Inverter Transformer	MV1-2 T	364759	4906063	2	0	0	56.1	56.1	1	2229.46	3.25	0	77.96	0	0.5	0	0	7.49	0	0	0	0	0	0	-29.89	-29.89
Inverter Transformer	MV1-3 T	364435	4906039	2	0	0	56.1	56.1	1	2247.15	3.25	0	78.03	0	0.51	0	0	7.52	0	0	0	0	0	0	-30	-30
Inverter Transformer	MV1-1 T	364721	4906166	2	0	0	56.1	56.1	1	2334.64	3.25	0	78.36	0	0.55	0	0	7.68	0	0	0	0	0	0	-30.54	-30.54
Inverter Transformer	MV2-4 T	365590	4906628	2	0	0	56.1	56.1	1	2879.11	3.25	0	80.19	0	0.78	0	0	8.66	0	0	0	0	0	0	-33.57	-33.57
Inverter Transformer	MV2-3 T	365814	4906641	2	0	0	56.1	56.1	1	2954.46	3.25	0	80.41	0	0.81	0	0	8.79	0	0	0	0	0	0	-33.95	-33.95
Inverter Transformer	MV2-2 T	365982	4906654	2	0	0	56.1	56.1	1	3023.72	3.25	0	80.61	0	0.84	0	0	8.91	0	0	0	0	0	0	-34.3	-34.3
Inverter Transformer	MV3-18 T	367757	4907412	2	0	0	56.1	56.1	1	4586.87	3.25	0	84.23	0	1.47	0	0	11.3	0	0	0	0	0	0	-40.94	-40.94
Inverter Transformer	MV3-12 T	367674	4907594	2	0	0	56.1	56.1	1	4680.13	3.25	0	84.41	0	1.51	0	0	11.42	0	0	0	0	0	0	-41.28	-41.28
Inverter Transformer	MV3-13 T	367958	4907577	2	0	0	56.1	56.1	1	4841.69	3.25	0	84.7	0	1.57	0	0	11.64	0	0	0	0	0	0	-41.85	-41.85
Inverter Transformer	MV3-17 T	368183	4907472	2	0	0	56.1	56.1	1	4909.37	3.25	0	84.82	0	1.59	0	0	11.73	0	0	0	0	0	0	-42.09	-42.09
Inverter Transformer	MV3-21 T	368484	4907206	2	0	0	56.1	56.1	1	4931.12	3.25	0	84.86	0	1.6	0	0	11.76	0	0	0	0	0	0	-42.16	-42.16
Inverter Transformer	MV3-19 T	368352	4907347	2	0	0	56.1	56.1	1	4934.84	3.25	0	84.87	0	1.6	0	0	11.77	0	0	0	0	0	0	-42.18	-42.18

	Inverter Transformer	MV3-7 T	367951	4907754	2	0	0	56.1	56.1	1	4975.37	3.25	0	84.94	0	1.62	0	0	11.82	0	0	0	0	0	0	-42.32	-42.32
	Inverter Transformer	MV3-22 T	368661	4907142	2	0	0	56.1	56.1	1	5019.44	3.25	0	85.01	0	1.63	0	0	11.88	0	0	0	0	0	0	-42.47	-42.47
	Inverter Transformer	MV3-15 T	368351	4907477	2	0	0	56.1	56.1	1	5027.45	3.25	0	85.03	0	1.64	0	0	11.89	0	0	0	0	0	0	-42.49	-42.49
	Inverter Transformer	MV3-10 T	368162	4907669	2	0	0	56.1	56.1	1	5043.29	3.25	0	85.05	0	1.64	0	0	11.91	0	0	0	0	0	0	-42.55	-42.55
	Inverter Transformer	MV3-3 T	367944	4907927	2	0	0	56.1	56.1	1	5108.48	3.25	0	85.17	0	1.66	0	0	12	0	0	0	0	0	0	-42.77	-42.77
	Inverter Transformer	MV3-16 T	368509	4907475	2	0	0	56.1	56.1	1	5136.29	3.25	0	85.21	0	1.67	0	0	12.03	0	0	0	0	0	0	-42.86	-42.86
	Inverter Transformer	MV3-20 T	368683	4907317	2	0	0	56.1	56.1	1	5152.56	3.25	0	85.24	0	1.68	0	0	12.05	0	0	0	0	0	0	-42.92	-42.92
	Inverter Transformer	MV3-11 T	368340	4907662	2	0	0	56.1	56.1	1	5155.59	3.25	0	85.25	0	1.68	0	0	12.06	0	0	0	0	0	0	-42.93	-42.93
	Inverter Transformer	MV3-6 T	368156	4907834	2	0	0	56.1	56.1	1	5165.97	3.25	0	85.26	0	1.68	0	0	12.07	0	0	0	0	0	0	-42.96	-42.96
	Inverter Transformer	MV3-1 T	368150	4907976	2	0	0	56.1	56.1	1	5272.88	3.25	0	85.44	0	1.72	0	0	12.21	0	0	0	0	0	0	-43.31	-43.31
	Inverter Transformer	MV3-14 T	368678	4907498	2	0	0	56.1	56.1	1	5272.9	3.25	0	85.44	0	1.72	0	0	12.21	0	0	0	0	0	0	-43.31	-43.31
	Inverter Transformer	MV3-5 T	368335	4907843	2	0	0	56.1	56.1	1	5288	3.25	0	85.47	0	1.73	0	0	12.23	0	0	0	0	0	0	-43.36	-43.36
	Inverter Transformer	MV3-9 T	368517	4907703	2	0	0	56.1	56.1	1	5305.7	3.25	0	85.49	0	1.73	0	0	12.25	0	0	0	0	0	0	-43.42	-43.42
	Inverter Transformer	MV3-8 T	368685	4907712	2	0	0	56.1	56.1	1	5428.56	3.25	0	85.69	0	1.78	0	0	12.41	0	0	0	0	0	0	-43.82	-43.82
	Inverter Transformer	MV3-4 T	368507	4907925	2	0	0	56.1	56.1	1	5462.94	3.25	0	85.75	0	1.79	0	0	12.45	0	0	0	0	0	0	-43.93	-43.93
	Inverter Transformer	MV3-2 T	368677	4907928	2	0	0	56.1	56.1	1	5579.36	3.25	0	85.93	0	1.83	0	0	12.59	0	0	0	0	0	0	-44.29	-44.29
	Inverter Transformer	MV6-3 T	370202	4907140	2	0	0	56.1	56.1	1	6260.95	3.25	0	86.93	0	2.05	0	0	13.41	0	0	0	0	0	0	-46.33	-46.33
	Inverter Transformer	MV6-2 T	370091	4907339	2	0	0	56.1	56.1	1	6275.76	3.25	0	86.95	0	2.05	0	0	13.42	0	0	0	0	0	0	-46.37	-46.37
	Inverter Transformer	MV4-15 T	369170	4908481	2	0	0	56.1	56.1	1	6320.08	3.25	0	87.01	0	2.06	0	0	13.48	0	0	0	0	0	0	-46.5	-46.5
	Inverter Transformer	MV4-13 T	369057	4908605	2	0	0	56.1	56.1	1	6336.75	3.25	0	87.04	0	2.07	0	0	13.49	0	0	0	0	0	0	-46.54	-46.54
	Inverter Transformer	MV4-14 T	369182	4908507	2	0	0	56.1	56.1	1	6347.33	3.25	0	87.05	0	2.07	0	0	13.51	0	0	0	0	0	0	-46.57	-46.57
	Inverter Transformer	MV4-12 T	369049	4908803	2	0	0	56.1	56.1	1	6481.9	3.25	0	87.23	0	2.11	0	0	13.66	0	0	0	0	0	0	-46.95	-46.95
	Inverter Transformer	MV4-7 T	369040	4909001	2	0	0	56.1	56.1	1	6629.17	3.25	0	87.43	0	2.16	0	0	13.82	0	0	0	0	0	0	-47.35	-47.35
	Inverter Transformer	MV4-11 T	369269	4908855	2	0	0	56.1	56.1	1	6664.5	3.25	0	87.48	0	2.17	0	0	13.86	0	0	0	0	0	0	-47.45	-47.45
	Inverter Transformer	MV4-10 T	369307	4908858	2	0	0	56.1	56.1	1	6691.82	3.25	0	87.51	0	2.17	0	0	13.89	0	0	0	0	0	0	-47.52	-47.52
	Inverter Transformer	MV4-8 T	369262	4909001	2	0	0	56.1	56.1	1	6770.58	3.25	0	87.61	0	2.2	0	0	13.98	0	0	0	0	0	0	-47.73	-47.73
	Inverter Transformer	MV4-4 T	369033	4909199	2	0	0	56.1	56.1	1	6780.26	3.25	0	87.62	0	2.2	0	0	13.99	0	0	0	0	0	0	-47.76	-47.76
	Inverter Transformer	MV4-9 T	369284	4909001	2	0	0	56.1	56.1	1	6784.83	3.25	0	87.63	0	2.2	0	0	14	0	0	0	0	0	0	-47.77	-47.77
	Inverter Transformer	MV4-6 T	369249	4909192	2	0	0	56.1	56.1	1	6909.14	3.25	0	87.79	0	2.23	0	0	14.13	0	0	0	0	0	0	-48.1	-48.1
	Inverter Transformer	MV5-6 T	369987	4908507	2	0	0	56.1	56.1	1	6917.92	3.25	0	87.8	0	2.24	0	0	14.14	0	0	0	0	0	0	-48.12	-48.12
	Inverter Transformer	MV4-1 T	369017	4909397	2	0	0	56.1	56.1	1	6928.34	3.25	0	87.81	0	2.24	0	0	14.15	0	0	0	0	0	0	-48.15	-48.15
	Inverter Transformer	MV4-5 T	369283	4909199	2	0	0	56.1	56.1	1	6936.09	3.25	0	87.82	0	2.24	0	0	14.16	0	0	0	0	0	0	-48.17	-48.17
	Inverter Transformer	MV4-3 T	369234	4909397	2	0	0	56.1	56.1	1	7059.96	3.25	0	87.98	0	2.28	0	0	14.29	0	0	0	0	0	0	-48.49	-48.49
	Inverter Transformer	MV5-5 T	370021	4908690	2	0	0	56.1	56.1	1	7067.43	3.25	0	87.99	0	2.28	0	0	14.3	0	0	0	0	0	0	-48.51	-48.51
	Inverter Transformer	MV4-2 T	369267	4909397	2	0	0	56.1	56.1	1	7080.35	3.25	0	88	0	2.28	0	0	14.32	0	0	0	0	0	0	-48.54	-48.54
	Inverter Transformer	MV5-2 T	370011	4908853	2	0	0	56.1	56.1	1	7173.19	3.25	0	88.11	0	2.31	0	0	14.41	0	0	0	0	0	0	-48.78	-48.78
	Inverter Transformer	MV5-4 T	370330	4908707	2	0	0	56.1	56.1	1	7306.47	3.25	0	88.27	0	2.34	0	0	14.55	0	0	0	0	0	0	-49.11	-49.11
	Inverter Transformer	MV5-3 T	370237	4908851	2	0	0	56.1	56.1	1	7335.08	3.25	0	88.31	0	2.35	0	0	14.58	0	0	0	0	0	0	-49.18	-49.18
	Inverter Transformer	MV5-1 T	370015	4909142	2	0	0	56.1	56.1	1	7380.95	3.25	0	88.36	0	2.36	0	0	14.63	0	0	0	0	0	0	-49.3	-49.3
	Line Reactor	NGR	369421	4908787.5	5	0	0	45.4	45.4	1	6715.58	5.25	0	87.54	0	3.22	1.37	0.09	2.74	0	0	0	0	0	0	-49.52	-49.52
Limit. Valu	0	0																								
Level D/N:	24.1289	24.1289																								

Receiver: Existing Noise Receptor
ID: G-113
X: 364872.2
Y: 4903824
Z: 4.5
Ground: 0

ISO	Description	ID	X	Y	Z	Ground	ReflOrd	LxT	LxN	L/A	Dist.	hm	Freq	Adiv	K0b	Agr	Abar	z	Aatm	Afol	Ahous	Cmet	CmetN	Dc	RL	LtotT	LtotN
	Inverter	MV1-15	365315	4904994	2	0	0	100.3	100.3	1	1250.99	3.25	0	72.95	0	-0.13	0	0	11.67	0	0	0	0	0	0	15.83	15.83
	Inverter	MV1-12	365038	4905386	2	0	0	100.3	100.3	1	1570.78	3.25	0	74.92	0	-0.01	0	0	12.5	0	0	0	0	0	0	12.9	12.9
	Inverter	MV1-11	364655	4905414	2	0	0	100.3	100.3	1	1604.77	3.25	0	75.11	0	0	0	0	12.58	0	0	0	0	0	0	12.62	12.62
	Sol_Luce Substation	S_Substation	369426	4908792	3.5	0	0	112.1	112.1	1	6739.3	5.25	0	87.57	0	1.33	2.49	0.26	10.5	0	0	0	0	0	0	10.19	10.19
	Inverter	MV1-14	365163	4905049	2	0	0	97.3	97.3	1	1259.05	3.25	0	73	0	-0.13	0	0	11.69	0	0	0	0	0	0	12.75	12.75
	Inverter	MV1-8	364788	4905647	2	0	0	100.3	100.3	1	1824.95	3.25	0	76.22	0	0.08	0	0	13.08	0	0	0	0	0	0	10.93	10.93
	Inverter	MV1-9	364561	4905646	2	0	0	100.3	100.3	1	1848.39	3.25	0	76.34	0	0.08	0	0	13.14	0	0	0	0	0	0	10.76	10.76
	Inverter	MV1-13	364731	4905241	2	0	0	97.3	97.3	1	1424.02	3.25	0	74.07	0	-0.06	0	0	12.13	0	0	0	0	0	0	11.17	11.17
	Inverter	MV1-6	364477	4905835	2	0	0	100.3	100.3	1	2049.47	3.25	0	77.23	0	0.14	0	0	13.57	0	0	0	0	0	0	9.37	9.37
	Inverter	MV1-5	364671	4905892	2	0	0	100.3	100.3	1	2077.77	3.25	0	77.35	0	0.15	0	0	13.62	0	0	0	0	0	0	9.18	9.18
	Inverter	MV1-4	364815	4905918	2	0	0	100.3	100.3	1	2094.78	3.25	0	77.42	0	0.16	0	0	13.66	0	0	0	0	0	0	9.07	9.07
	Inverter	MV1-2	364753	4906063	2	0	0	100.3	100.3	1	2242.17	3.25	0	78.01	0	0.19	0	0	13.96	0	0	0	0	0	0	8.15	8.15
	Inverter	MV1-1	364715	4906166	2	0	0	100.3	100.3	1	2347.27	3.25	0	78.41	0	0.22	0	0	14.16	0	0	0	0	0	0	7.52	7.52
	Inverter	MV1-10	365004	4905564	2	0	0	97.3	97.3	1	1744.99	3.25	0	75.84	0	0.05	0	0	12.91	0	0	0	0	0	0	8.52	8.52
	Inverter	MV1-7	364925	4905782	2	0	0	97.3	97.3	1	1958.71	3.25	0	76.84	0	0.12	0	0	13.37	0	0	0	0	0	0	6.98	6.98
	Inverter	MV2-4	365586	4906624	2	0	0	100.3	100.3	1	2889.55	3.25	0	80.22	0	0.34	0	0	15.18	0	0	0	0	0	0	4.58	4.58
	Inverter	MV2-3	365820	4906641	2	0	0	100.3	100.3	1	2972.17	3.25	0	80.46	0	0.36	0	0	15.32	0	0	0	0	0	0	4.17	4.17
	Inverter	MV2-1	365842	4906816	2	0	0	97.3	97.3	1	3145.25	3.25	0	80.95	0	0.39	0	0	15.63	0	0	0	0	0	0	0.34	0.34
	Inverter	MV3-18	367752	4907412	2	0	0	100.3	100.3	1	4600.76	3.25	0	84.26	0	0.6	0	0	17.98	0	0	0	0	0	0	-2.53	-2.53
	Inverter	MV3-12	367668	4907594	2	0	0	100.3	100.3	1	4693.55	3.25	0	84.43	0	0.61	0	0	18.12	0	0	0	0	0	0	-2.85	-2.85
	Inverter	MV3-13	367963	4907577	2	0	0	100.3	100.3	1	4861.9	3.25	0	84.74	0	0.63	0	0	18.38	0	0	0	0	0	0	-3.43	-3.43
	Inverter	MV3-17	368178	4907472	2	0	0	100.3	100.3	1	4923.03	3.25	0	84.84	0	0.64	0	0	18.47	0	0	0	0	0	0	-3.63	-3.63
	Inverter	MV3-21	368478	4907206	2	0	0	100.3	100.3	1	4943.65	3.25	0	84.88	0	0.64	0	0	18.5	0	0	0	0	0	0	-3.7	-3.7

Inverter	MV3-19	368357	4907347	2	0	0	100.3	100.3	1	4955.34	3.25	0	84.9	0	0.64	0	0	18.51	0	0	0	0	0	0	-3.74	-3.74
Inverter	MV3-7	367945	4907754	2	0	0	100.3	100.3	1	4988.69	3.25	0	84.96	0	0.64	0	0	18.56	0	0	0	0	0	0	-3.85	-3.85
Inverter	MV3-15	368357	4907477	2	0	0	100.3	100.3	1	5048.59	3.25	0	85.06	0	0.65	0	0	18.65	0	0	0	0	0	0	-4.05	-4.05
Inverter	MV3-10	368167	4907669	2	0	0	100.3	100.3	1	5063.57	3.25	0	85.09	0	0.65	0	0	18.67	0	0	0	0	0	0	-4.1	-4.1
Inverter	MV3-3	367939	4907927	2	0	0	100.3	100.3	1	5122.49	3.25	0	85.19	0	0.65	0	0	18.76	0	0	0	0	0	0	-4.29	-4.29
Inverter	MV3-16	368514	4907475	2	0	0	100.3	100.3	1	5156.79	3.25	0	85.25	0	0.66	0	0	18.81	0	0	0	0	0	0	-4.4	-4.4
Inverter	MV3-20	368689	4907317	2	0	0	100.3	100.3	1	5173.88	3.25	0	85.28	0	0.66	0	0	18.83	0	0	0	0	0	0	-4.46	-4.46
Inverter	MV3-11	368346	4907662	2	0	0	100.3	100.3	1	5176.63	3.25	0	85.28	0	0.66	0	0	18.84	0	0	0	0	0	0	-4.46	-4.46
Inverter	MV3-6	368162	4907834	2	0	0	100.3	100.3	1	5186.8	3.25	0	85.3	0	0.66	0	0	18.85	0	0	0	0	0	0	-4.5	-4.5
Inverter	MV3-14	368684	4907498	2	0	0	100.3	100.3	1	5294.16	3.25	0	85.48	0	0.67	0	0	19.01	0	0	0	0	0	0	-4.84	-4.84
Inverter	MV3-9	368512	4907703	2	0	0	100.3	100.3	1	5319.28	3.25	0	85.52	0	0.67	0	0	19.04	0	0	0	0	0	0	-4.92	-4.92
Gardiner Substation	G_Sub	366586.3	4903349.9	2.5	0	0	90.8	90.8	1	1778.46	4.25	0	76	0	0.85	4.11	0.31	3.98	0	0	0	0	0	0	5.83	5.83
Inverter	MV3-8	368680	4907712	2	0	0	100.3	100.3	1	5442.05	3.25	0	85.72	0	0.68	0	0	19.22	0	0	0	0	0	0	-5.3	-5.3
Inverter	MV6-3	370207	4907140	2	0	0	100.3	100.3	1	6281.4	3.25	0	86.96	0	0.71	0	0	20.37	0	0	0	0	0	0	-7.73	-7.73
Inverter	MV6-2	370085	4907339	2	0	0	100.3	100.3	1	6287.17	3.25	0	86.97	0	0.71	0	0	20.38	0	0	0	0	0	0	-7.75	-7.75
Inverter	MV4-7	369035	4909001	2	0	0	100.3	100.3	1	6643.06	3.25	0	87.45	0	0.71	0	0	20.84	0	0	0	0	0	0	-8.69	-8.69
Inverter	MV4-11	369264	4908855	2	0	0	100.3	100.3	1	6678.24	3.25	0	87.49	0	0.71	0	0	20.89	0	0	0	0	0	0	-8.79	-8.79
Inverter	MV4-10	369312	4908858	2	0	0	100.3	100.3	1	6712.15	3.25	0	87.54	0	0.71	0	0	20.93	0	0	0	0	0	0	-8.87	-8.87
Inverter	MV4-8	369256	4909001	2	0	0	100.3	100.3	1	6783.73	3.25	0	87.63	0	0.71	0	0	21.03	0	0	0	0	0	0	-9.06	-9.06
Inverter	MV4-4	369027	4909199	2	0	0	100.3	100.3	1	6793.6	3.25	0	87.64	0	0.71	0	0	21.04	0	0	0	0	0	0	-9.08	-9.08
Inverter	MV4-9	369289	4909001	2	0	0	100.3	100.3	1	6805.11	3.25	0	87.66	0	0.71	0	0	21.05	0	0	0	0	0	0	-9.11	-9.11
Inverter	MV4-6	369243	4909192	2	0	0	100.3	100.3	1	6922.38	3.25	0	87.81	0	0.71	0	0	21.2	0	0	0	0	0	0	-9.41	-9.41
Inverter	MV4-1	369011	4909397	2	0	0	100.3	100.3	1	6941.76	3.25	0	87.83	0	0.71	0	0	21.23	0	0	0	0	0	0	-9.45	-9.45
Inverter	MV4-5	369289	4909199	2	0	0	100.3	100.3	1	6956.92	3.25	0	87.85	0	0.71	0	0	21.24	0	0	0	0	0	0	-9.49	-9.49
Inverter	MV4-3	369229	4909397	2	0	0	100.3	100.3	1	7073.9	3.25	0	87.99	0	0.71	0	0	21.39	0	0	0	0	0	0	-9.78	-9.78
Inverter	MV5-5	370015	4908690	2	0	0	100.3	100.3	1	7080	3.25	0	88	0	0.71	0	0	21.4	0	0	0	0	0	0	-9.8	-9.8
Inverter	MV4-2	369272	4909397	2	0	0	100.3	100.3	1	7100.46	3.25	0	88.03	0	0.71	0	0	21.42	0	0	0	0	0	0	-9.85	-9.85
Inverter	MV5-2	370006	4908853	2	0	0	100.3	100.3	1	7186.57	3.25	0	88.13	0	0.7	0	0	21.53	0	0	0	0	0	0	-10.05	-10.05
Inverter	MV5-4	370324	4908707	2	0	0	100.3	100.3	1	7318.87	3.25	0	88.29	0	0.7	0	0	21.69	0	0	0	0	0	0	-10.37	-10.37
Inverter	MV5-3	370231	4908851	2	0	0	100.3	100.3	1	7347.62	3.25	0	88.32	0	0.7	0	0	21.73	0	0	0	0	0	0	-10.44	-10.44
Inverter	MV5-1	370020	4909142	2	0	0	100.3	100.3	1	7401.42	3.25	0	88.39	0	0.69	0	0	21.8	0	0	0	0	0	0	-10.56	-10.56
Inverters	G_Inv1	366526.4	4903225.8	2	0	0	87.7	87.7	1	1759.04	3.25	0	75.91	0	2.55	0	0	2.35	0	0	0	0	0	0	6.85	6.85
Inverters	G_Inv3	366583.7	4903091.4	2	0	0	87.7	87.7	1	1861.7	3.25	0	76.4	0	2.57	0	0	2.47	0	0	0	0	0	0	6.22	6.22
Inverters	G_Inv2	366676.9	4903239.1	2	0	0	87.7	87.7	1	1897.12	3.25	0	76.56	0	2.57	0	0	2.52	0	0	0	0	0	0	6.01	6.01
Inverter	MV1-3	364440	4906039	2	0	0	89.1	89.1	1	2256.77	3.25	0	78.07	0	0.97	0	0	8.46	0	0	0	0	0	0	1.56	1.56
Inverters	G_Inv5	366638.5	4902958.1	2	0	0	87.7	87.7	1	1967.13	3.25	0	76.88	0	2.58	0	0	2.6	0	0	0	0	0	0	5.61	5.61
Inverters	G_Inv4	366732.8	4903105	2	0	0	87.7	87.7	1	1994.69	3.25	0	77	0	2.58	0	0	2.63	0	0	0	0	0	0	5.45	5.45
Inverters	G_Inv7	366694.6	4902824.7	2	0	0	87.7	87.7	1	2078.4	3.25	0	77.35	0	2.59	0	0	2.73	0	0	0	0	0	0	4.99	4.99
Inverters	G_Inv6	366788.5	4902972	2	0	0	87.7	87.7	1	2097.17	3.25	0	77.43	0	2.6	0	0	2.75	0	0	0	0	0	0	4.88	4.88
Inverter	MV6-1	370235	4907364	2	0	0	97.3	97.3	1	6425.83	3.25	0	87.16	0	0.71	0	0	20.56	0	0	0	0	0	0	-11.12	-11.12
Inverters	G_Inv9	366750.9	4902691.8	2	0	0	87.7	87.7	1	2193.49	3.25	0	77.82	0	2.61	0	0	2.86	0	0	0	0	0	0	4.37	4.37
Inverters	G_Inv8	366844.5	4902838.5	2	0	0	87.7	87.7	1	2204.81	3.25	0	77.87	0	2.61	0	0	2.87	0	0	0	0	0	0	4.31	4.31
Inverters	G_Inv10	366900.7	4902704.8	2	0	0	87.7	87.7	1	2316.77	3.25	0	78.3	0	2.62	0	0	3	0	0	0	0	0	0	3.74	3.74
DSTATCOM - 10 MVAR #2	DSAT2	369403	4908757	2.5	0	0	96.6	96.6	1	6697.96	3.5	0	87.52	0	3.82	0	0	4.17	0	0	0	0	0	0	1.12	1.12
DSTATCOM - 10 MVAR #1	DSAT1	369437	4908757	2.5	0	0	96.6	96.6	1	6721	3.5	0	87.55	0	3.82	0	0	4.18	0	0	0	0	0	0	1.08	1.08
Inverter	MV2-2	365977	4906654	2	0	0	89.1	89.1	1	3038.01	3.25	0	80.65	0	1.16	0	0	9.67	0	0	0	0	0	0	-2.42	-2.42
SubstationTransformer	W_ST	369711.17	4906112.3	2.5	0	0	92	92	1	5352.74	4.25	0	85.57	0	1.73	2.25	0.26	9.03	0	0	0	0	0	0	-6.6	-6.6
Inverter	MV3-22	368656	4907142	2	0	0	89.1	89.1	1	5032.52	3.25	0	85.04	0	1.65	0	0	12.51	0	0	0	0	0	0	-10.13	-10.13
Westbrook Inverter Enclosur	W_INV2	369374	4906388	2	0	0	89.1	89.1	1	5180.76	3.25	0	85.29	0	1.68	0	0	12.7	0	0	0	0	0	0	-10.62	-10.62
Westbrook Inverter Enclosur	W_INV3	369508	4906164	2	0	0	89.1	89.1	1	5192.9	3.25	0	85.31	0	1.69	0	0	12.72	0	0	0	0	0	0	-10.66	-10.66
Inverter	MV3-1	368156	4907976	2	0	0	89.1	89.1	1	5293.62	3.25	0	85.48	0	1.71	0	0	12.85	0	0	0	0	0	0	-10.98	-10.98
Inverter	MV3-5	368340	4907843	2	0	0	89.1	89.1	1	5308.3	3.25	0	85.5	0	1.72	0	0	12.87	0	0	0	0	0	0	-11.03	-11.03
Westbrook Inverter Enclosur	W_INV4	369673	4906164	2	0	0	89.1	89.1	1	5340.72	3.25	0	85.55	0	1.72	0	0	12.91	0	0	0	0	0	0	-11.13	-11.13
Inverter	MV3-4	368502	4907925	2	0	0	89.1	89.1	1	5476.65	3.25	0	85.77	0	1.76	0	0	13.09	0	0	0	0	0	0	-11.56	-11.56
Westbrook Inverter Enclosur	W_INV7	369780	4906417	2	0	0	89.1	89.1	1	5550.69	3.25	0	85.89	0	1.78	0	0	13.19	0	0	0	0	0	0	-11.79	-11.79
Westbrook Inverter Enclosur	W_INV5	369719	4906574	2	0	0	89.1	89.1	1	5572.61	3.25	0	85.92	0	1.78	0	0	13.22	0	0	0	0	0	0	-11.86	-11.86
Inverter	MV3-2	368671	4907928	2	0	0	89.1	89.1	1	5592.29	3.25	0	85.95	0	1.79	0	0	13.24	0	0	0	0	0	0	-11.92	-11.92
Westbrook Inverter Enclosur	W_INV6	369875	4906578	2	0	0	89.1	89.1	1	5710.74	3.25	0	86.13	0	1.82	0	0	13.39	0	0	0	0	0	0	-12.29	-12.29
Fixed Reactor Bank 1	FRB1	369378	4908755	6	0	0	89.8	89.8	1	6679.6	5.25	0	87.5	0	-0.32	0	0	10.44	0	0	0	0	0	0	-7.83	-7.83
Fixed Reactor Bank 2	FRB2	369464	4908755	6	0	0	89.8	89.8	1	6737.91	5.25	0	87.57	0	-0.32	0	0	10.5	0	0	0	0	0	0	-7.97	-7.97
Inverter	MV4-15	369176	4908481	2	0	0	89.1	89.1	1	6341.16	3.25	0	87.04	0	1.97	0	0	14.19	0	0	0	0	0	0	-14.14	-14.14
Inverter	MV4-13	369051	4908605	2	0	0	89.1	89.1	1	6349.83	3.25	0	87.06	0	1.97	0	0	14.2	0	0	0	0	0	0	-14.17	-14.17
Inverter	MV4-14	369176	4908507	2	0	0	89.1	89.1	1	6360.28	3.25	0	87.07	0	1.97	0	0	14.21	0	0	0	0	0	0	-14.2	-14.2
Inverter	MV4-12	369043	4908803	2	0	0	89.1	89.1	1	6495.08	3.25	0	87.25	0	2.01	0	0	14.38	0	0	0	0	0	0	-14.58	-14.58
Inverter	MV5-6	369982	4908507	2	0	0	89.1	89.1	1	6931.13	3.25	0	87.82	0	2.11	0	0	14.9	0	0	0	0	0	0	-15.77	-15.77
Westbrook Inverter Enclosur	W_INV1	369409	4906578	2	0	0	86.1	86.1	1	5307.27	3.25	0	85.5	0	1.72	0	0	12.87	0	0	0	0	0	0	-14.03	-14.03
Inverter	MV6-4	370250	4906966	2	0	0	86.1	86.1	1	6228.39	3.25	0	86.89	0	1.94	0	0	14.05	0	0	0	0	0	0	-16.82	-16.82
Inverter Transformer	MV1-14 T	365157	4905049	2	0	0	69.4	69.4	1	1257.67	3.25	0	72.99	0	1.85	0	0	4.15	0	0	0	0	0	0	-9.64	-9.64
Inverter Transformer	MV1-13 T	364725	4905241	2	0	0	69.4	69.4	1	1424.63	3.25	0	74.07	0	1.94	0	0	4.35	0	0	0	0	0	0	-11.01	-11.01
Inverter Transformer	MV1-10 T	365010	4905564	2	0	0	69.4	69.4	1	1745.45	3.25	0	75.84	0	2.08	0	0	4.7	0	0	0	0	0	0	-13.27	-13.27
Westbrook Inverter Transfor	W_INVTR1	369403	4906578	2	0	0	78.2	78.2	1	5302.14	3.25	0	85.49	0	-3.24	0	0	2.51	0	0	0	0	0	0	-6.53	-6.53
Inverter Transformer	MV1-7 T	364919	4905782	2	0	0	69.4	69.4	1	1958.56	3.25	0	76.84	0	2.16	0	0	4.92	0	0	0	0	0	0	-14.57	-14.57
Westbrook Inverter Transfor	W_INVTR2	369368	4906388	2	0	0	77.3	77.3	1	5175.55	3.25	0	85.28	0	-3.21	0	0	2.47	0	0	0	0	0	0	-7.2	-7.2
Westbrook Inverter Transfor	W_INVTR3	369514	4906164	2	0	0	77.3	77.3	1	5198.26	3.25	0	85.32	0	-3.22	0	0	2.48	0	0	0	0	0	0	-7.24	-7.24

Westbrook Inverter Transfor	W_INVTR4	369679	4906164	2	0	0	77.3	77.3	1	5346.11	3.25	0	85.56	0	-3.25	0	0	2.53	0	0	0	0	0	0	-7.5	-7.5
Westbrook Inverter Transfor	W_INVTR7	369786	4906417	2	0	0	77.3	77.3	1	5556	3.25	0	85.9	0	-3.29	0	0	2.6	0	0	0	0	0	0	-7.87	-7.87
Westbrook Inverter Transfor	W_INVTR5	369725	4906574	2	0	0	77.3	77.3	1	5577.83	3.25	0	85.93	0	-3.29	0	0	2.61	0	0	0	0	0	0	-7.9	-7.9
Westbrook Inverter Transfor	W_INVTR6	369881	4906578	2	0	0	77.3	77.3	1	5716	3.25	0	86.14	0	-3.32	0	0	2.65	0	0	0	0	0	0	-8.14	-8.14
Inverter Transformer	MV2-1 T	365836	4906816	2	0	0	69.4	69.4	1	3143.4	3.25	0	80.95	0	2.55	0	0	6	0	0	0	0	0	0	-20.15	-20.15
Inverter Transformer	MV1-15 T	365309	4904994	2	0	0	56.1	56.1	1	1248.88	3.25	0	72.93	0	0.1	0	0	5.47	0	0	0	0	0	0	-22.44	-22.44
Inverter Transformer	MV6-4 T	370244	4906966	2	0	0	69.4	69.4	1	6223.22	3.25	0	86.88	0	3.22	0	0	8.15	0	0	0	0	0	0	-28.9	-28.9
Inverter Transformer	MV6-1 T	370230	4907364	2	0	0	69.4	69.4	1	6421.65	3.25	0	87.15	0	3.25	0	0	8.27	0	0	0	0	0	0	-29.32	-29.32
Inverter Transformer	MV1-12 T	365044	4905386	2	0	0	56.1	56.1	1	1571.42	3.25	0	74.93	0	0.23	0	0	6.17	0	0	0	0	0	0	-25.26	-25.26
Inverter Transformer	MV1-11 T	364649	4905414	2	0	0	56.1	56.1	1	1605.59	3.25	0	75.11	0	0.24	0	0	6.24	0	0	0	0	0	0	-25.54	-25.54
Inverter Transformer	MV1-8 T	364782	4905647	2	0	0	56.1	56.1	1	1825.23	3.25	0	76.23	0	0.33	0	0	6.69	0	0	0	0	0	0	-27.19	-27.19
Inverter Transformer	MV1-9 T	364555	4905646	2	0	0	56.1	56.1	1	1849.41	3.25	0	76.34	0	0.34	0	0	6.74	0	0	0	0	0	0	-27.37	-27.37
Inverter Transformer	MV1-6 T	364482	4905835	2	0	0	56.1	56.1	1	2048.51	3.25	0	77.23	0	0.42	0	0	7.14	0	0	0	0	0	0	-28.73	-28.73
Inverter Transformer	MV1-5 T	364676	4905892	2	0	0	56.1	56.1	1	2077.29	3.25	0	77.35	0	0.44	0	0	7.19	0	0	0	0	0	0	-28.92	-28.92
Inverter Transformer	MV1-4 T	364821	4905918	2	0	0	56.1	56.1	1	2094.63	3.25	0	77.42	0	0.44	0	0	7.23	0	0	0	0	0	0	-29.04	-29.04
Inverter Transformer	MV1-2 T	364759	4906063	2	0	0	56.1	56.1	1	2241.86	3.25	0	78.01	0	0.51	0	0	7.51	0	0	0	0	0	0	-29.97	-29.97
Inverter Transformer	MV1-3 T	364435	4906039	2	0	0	56.1	56.1	1	2257.74	3.25	0	78.07	0	0.51	0	0	7.54	0	0	0	0	0	0	-30.07	-30.07
Inverter Transformer	MV1-1 T	364721	4906166	2	0	0	56.1	56.1	1	2346.88	3.25	0	78.41	0	0.55	0	0	7.71	0	0	0	0	0	0	-30.61	-30.61
Inverter Transformer	MV2-4 T	365590	4906628	2	0	0	56.1	56.1	1	2894.42	3.25	0	80.23	0	0.78	0	0	8.69	0	0	0	0	0	0	-33.65	-33.65
Inverter Transformer	MV2-3 T	365814	4906641	2	0	0	56.1	56.1	1	2970.27	3.25	0	80.46	0	0.82	0	0	8.82	0	0	0	0	0	0	-34.03	-34.03
Inverter Transformer	MV2-2 T	365982	4906654	2	0	0	56.1	56.1	1	3039.83	3.25	0	80.66	0	0.85	0	0	8.94	0	0	0	0	0	0	-34.38	-34.38
Inverter Transformer	MV3-18 T	367757	4907412	2	0	0	56.1	56.1	1	4603.89	3.25	0	84.26	0	1.48	0	0	11.32	0	0	0	0	0	0	-41	-41
Inverter Transformer	MV3-12 T	367674	4907594	2	0	0	56.1	56.1	1	4697.13	3.25	0	84.44	0	1.51	0	0	11.45	0	0	0	0	0	0	-41.34	-41.34
Inverter Transformer	MV3-13 T	367958	4907577	2	0	0	56.1	56.1	1	4858.72	3.25	0	84.73	0	1.57	0	0	11.67	0	0	0	0	0	0	-41.91	-41.91
Inverter Transformer	MV3-17 T	368183	4907472	2	0	0	56.1	56.1	1	4926.39	3.25	0	84.85	0	1.6	0	0	11.76	0	0	0	0	0	0	-42.15	-42.15
Inverter Transformer	MV3-21 T	368484	4907206	2	0	0	56.1	56.1	1	4948.03	3.25	0	84.89	0	1.61	0	0	11.79	0	0	0	0	0	0	-42.22	-42.22
Inverter Transformer	MV3-19 T	368352	4907347	2	0	0	56.1	56.1	1	4951.82	3.25	0	84.9	0	1.61	0	0	11.79	0	0	0	0	0	0	-42.24	-42.24
Inverter Transformer	MV3-7 T	367951	4907754	2	0	0	56.1	56.1	1	4992.39	3.25	0	84.97	0	1.62	0	0	11.84	0	0	0	0	0	0	-42.37	-42.37
Inverter Transformer	MV3-22 T	368661	4907142	2	0	0	56.1	56.1	1	5036.28	3.25	0	85.04	0	1.64	0	0	11.9	0	0	0	0	0	0	-42.52	-42.52
Inverter Transformer	MV3-15 T	368351	4907477	2	0	0	56.1	56.1	1	5044.45	3.25	0	85.06	0	1.64	0	0	11.91	0	0	0	0	0	0	-42.55	-42.55
Inverter Transformer	MV3-10 T	368162	4907669	2	0	0	56.1	56.1	1	5060.32	3.25	0	85.08	0	1.65	0	0	11.93	0	0	0	0	0	0	-42.61	-42.61
Inverter Transformer	MV3-3 T	367944	4907927	2	0	0	56.1	56.1	1	5125.48	3.25	0	85.19	0	1.67	0	0	12.02	0	0	0	0	0	0	-42.83	-42.83
Inverter Transformer	MV3-16 T	368509	4907475	2	0	0	56.1	56.1	1	5153.26	3.25	0	85.24	0	1.68	0	0	12.05	0	0	0	0	0	0	-42.92	-42.92
Inverter Transformer	MV3-20 T	368683	4907317	2	0	0	56.1	56.1	1	5169.45	3.25	0	85.27	0	1.69	0	0	12.08	0	0	0	0	0	0	-42.97	-42.97
Inverter Transformer	MV3-11 T	368340	4907662	2	0	0	56.1	56.1	1	5172.61	3.25	0	85.27	0	1.69	0	0	12.08	0	0	0	0	0	0	-42.98	-42.98
Inverter Transformer	MV3-6 T	368156	4907834	2	0	0	56.1	56.1	1	5183	3.25	0	85.29	0	1.69	0	0	12.09	0	0	0	0	0	0	-43.02	-43.02
Inverter Transformer	MV3-14 T	368678	4907498	2	0	0	56.1	56.1	1	5289.84	3.25	0	85.47	0	1.73	0	0	12.23	0	0	0	0	0	0	-43.37	-43.37
Inverter Transformer	MV3-1 T	368150	4907976	2	0	0	56.1	56.1	1	5289.9	3.25	0	85.47	0	1.73	0	0	12.23	0	0	0	0	0	0	-43.37	-43.37
Inverter Transformer	MV3-5 T	368335	4907843	2	0	0	56.1	56.1	1	5305.03	3.25	0	85.49	0	1.73	0	0	12.25	0	0	0	0	0	0	-43.42	-43.42
Inverter Transformer	MV3-9 T	368517	4907703	2	0	0	56.1	56.1	1	5322.71	3.25	0	85.52	0	1.74	0	0	12.27	0	0	0	0	0	0	-43.48	-43.48
Inverter Transformer	MV3-8 T	368685	4907712	2	0	0	56.1	56.1	1	5445.55	3.25	0	85.72	0	1.78	0	0	12.43	0	0	0	0	0	0	-43.87	-43.87
Inverter Transformer	MV3-4 T	368507	4907925	2	0	0	56.1	56.1	1	5479.96	3.25	0	85.78	0	1.79	0	0	12.47	0	0	0	0	0	0	-43.98	-43.98
Inverter Transformer	MV3-2 T	368677	4907928	2	0	0	56.1	56.1	1	5596.37	3.25	0	85.96	0	1.83	0	0	12.61	0	0	0	0	0	0	-44.35	-44.35
Inverter Transformer	MV6-3 T	370202	4907140	2	0	0	56.1	56.1	1	6277.15	3.25	0	86.96	0	2.05	0	0	13.43	0	0	0	0	0	0	-46.37	-46.37
Inverter Transformer	MV6-2 T	370091	4907339	2	0	0	56.1	56.1	1	6292.15	3.25	0	86.98	0	2.06	0	0	13.44	0	0	0	0	0	0	-46.42	-46.42
Inverter Transformer	MV4-15 T	369170	4908481	2	0	0	56.1	56.1	1	6337.09	3.25	0	87.04	0	2.07	0	0	13.5	0	0	0	0	0	0	-46.54	-46.54
Inverter Transformer	MV4-13 T	369057	4908605	2	0	0	56.1	56.1	1	6353.78	3.25	0	87.06	0	2.07	0	0	13.51	0	0	0	0	0	0	-46.59	-46.59
Inverter Transformer	MV4-14 T	369182	4908507	2	0	0	56.1	56.1	1	6364.34	3.25	0	87.08	0	2.08	0	0	13.53	0	0	0	0	0	0	-46.62	-46.62
Inverter Transformer	MV4-12 T	369049	4908803	2	0	0	56.1	56.1	1	6498.93	3.25	0	87.26	0	2.12	0	0	13.68	0	0	0	0	0	0	-46.99	-46.99
Inverter Transformer	MV4-7 T	369040	4909001	2	0	0	56.1	56.1	1	6646.19	3.25	0	87.45	0	2.16	0	0	13.84	0	0	0	0	0	0	-47.4	-47.4
Inverter Transformer	MV4-11 T	369269	4908855	2	0	0	56.1	56.1	1	6681.53	3.25	0	87.5	0	2.17	0	0	13.88	0	0	0	0	0	0	-47.49	-47.49
Inverter Transformer	MV4-10 T	369307	4908858	2	0	0	56.1	56.1	1	6708.85	3.25	0	87.53	0	2.18	0	0	13.91	0	0	0	0	0	0	-47.57	-47.57
Inverter Transformer	MV4-8 T	369262	4909001	2	0	0	56.1	56.1	1	6787.61	3.25	0	87.63	0	2.2	0	0	14	0	0	0	0	0	0	-47.78	-47.78
Inverter Transformer	MV4-4 T	369033	4909199	2	0	0	56.1	56.1	1	6797.27	3.25	0	87.65	0	2.2	0	0	14.01	0	0	0	0	0	0	-47.8	-47.8
Inverter Transformer	MV4-9 T	369284	4909001	2	0	0	56.1	56.1	1	6801.86	3.25	0	87.65	0	2.2	0	0	14.01	0	0	0	0	0	0	-47.81	-47.81
Inverter Transformer	MV4-6 T	369249	4909192	2	0	0	56.1	56.1	1	6926.17	3.25	0	87.81	0	2.24	0	0	14.15	0	0	0	0	0	0	-48.14	-48.14
Inverter Transformer	MV5-6 T	369987	4908507	2	0	0	56.1	56.1	1	6934.82	3.25	0	87.82	0	2.24	0	0	14.16	0	0	0	0	0	0	-48.16	-48.16
Inverter Transformer	MV4-1 T	369017	4909397	2	0	0	56.1	56.1	1	6945.34	3.25	0	87.83	0	2.24	0	0	14.17	0	0	0	0	0	0	-48.19	-48.19
Inverter Transformer	MV4-5 T	369283	4909199	2	0	0	56.1	56.1	1	6953.11	3.25	0	87.84	0	2.25	0	0	14.18	0	0	0	0	0	0	-48.21	-48.21
Inverter Transformer	MV4-3 T	369234	4909397	2	0	0	56.1	56.1	1	7076.98	3.25	0	88	0	2.28	0	0	14.31	0	0	0	0	0	0	-48.53	-48.53
Inverter Transformer	MV5-5 T	370021	4908690	2	0	0	56.1	56.1	1	7084.36	3.25	0	88.01	0	2.28	0	0	14.32	0	0	0	0	0	0	-48.55	-48.55
Inverter Transformer	MV4-2 T	369267	4909397	2	0	0	56.1	56.1	1	7097.37	3.25	0	88.02	0	2.29	0	0	14.33	0	0	0	0	0	0	-48.58	-48.58
Inverter Transformer	MV5-2 T	370011	4908853	2	0	0	56.1	56.1	1	7190.14	3.25	0	88.13	0	2.31	0	0	14.43	0	0	0	0	0	0	-48.82	-48.82
Inverter Transformer	MV5-4 T	370330	4908707	2	0	0	56.1	56.1	1	7323.34	3.25	0	88.29	0	2.35	0	0	14.57	0	0	0	0	0	0	-49.15	-49.15
Inverter Transformer	MV5-3 T	370237	4908851	2	0	0	56.1	56.1	1	7351.99	3.25	0	88.33	0	2.35	0	0	14.6	0	0	0	0	0	0	-49.22	-49.22
Inverter Transformer	MV5-1 T	370015	4909142	2	0	0	56.1	56.1	1	7397.94	3.25	0	88.38	0	2.36	0	0	14.65	0	0	0	0	0	0	-49.34	-49.34
Line Reactor	NGR	369421	4908787.5	5	0	0	45.4	45.4	1	6732.6	5.25	0	87.56	0	3.22	1.37	0.09	2.75	0	0	0	0	0	0	-49.55	-49.55

Limit. Valu 0 0

Level D/N: 24.0362 24.0362

Receiver: Existing Noise Receptor
ID: G-114
X: 364823.2
Y: 4903911

Z: 4.5
Ground: 0

ISO	Description	ID	X	Y	Z	Ground	ReflOrd	LxT	LxN	L/A	Dist.	hm	Freq	Adiv	K0b	Agr	Abar	z	Aatm	Afol	Ahous	Cmet	CmetN	Dc	RL	LtotT	LtotN
	Inverter	MV1-15	365315	4904994	2	0	0	100.3	100.3	1	1189.44	3.25	0	72.51	0	-0.16	0	0	11.5	0	0	0	0	0	0	16.47	16.47
	Inverter	MV1-12	365038	4905386	2	0	0	100.3	100.3	1	1490.56	3.25	0	74.47	0	-0.04	0	0	12.3	0	0	0	0	0	0	13.58	13.58
	Inverter	MV1-11	364655	4905414	2	0	0	100.3	100.3	1	1512.38	3.25	0	74.59	0	-0.03	0	0	12.36	0	0	0	0	0	0	13.39	13.39
	Inverter	MV1-14	365163	4905049	2	0	0	97.3	97.3	1	1187.65	3.25	0	72.49	0	-0.16	0	0	11.49	0	0	0	0	0	0	13.49	13.49
	Sol_Luce Substation	S_Substation	369426	4908792	3.5	0	0	112.1	112.1	1	6708.94	5.25	0	87.53	0	1.32	2.5	0.26	10.47	0	0	0	0	0	0	10.26	10.26
	Inverter	MV1-8	364788	4905647	2	0	0	100.3	100.3	1	1736.36	3.25	0	75.79	0	0.05	0	0	12.89	0	0	0	0	0	0	11.58	11.58
	Inverter	MV1-9	364561	4905646	2	0	0	100.3	100.3	1	1754.7	3.25	0	75.88	0	0.05	0	0	12.93	0	0	0	0	0	0	11.45	11.45
	Inverter	MV1-13	364731	4905241	2	0	0	97.3	97.3	1	1333.19	3.25	0	73.5	0	-0.1	0	0	11.89	0	0	0	0	0	0	12.02	12.02
	Inverter	MV1-6	364477	4905835	2	0	0	100.3	100.3	1	1954.9	3.25	0	76.82	0	0.12	0	0	13.37	0	0	0	0	0	0	10.01	10.01
	Inverter	MV1-5	364671	4905892	2	0	0	100.3	100.3	1	1986.84	3.25	0	76.96	0	0.13	0	0	13.43	0	0	0	0	0	0	9.79	9.79
	Inverter	MV1-4	364815	4905918	2	0	0	100.3	100.3	1	2007.02	3.25	0	77.05	0	0.13	0	0	13.48	0	0	0	0	0	0	9.65	9.65
	Inverter	MV1-2	364753	4906063	2	0	0	100.3	100.3	1	2153.15	3.25	0	77.66	0	0.17	0	0	13.78	0	0	0	0	0	0	8.7	8.7
	Inverter	MV1-1	364715	4906166	2	0	0	100.3	100.3	1	2257.6	3.25	0	78.07	0	0.2	0	0	13.99	0	0	0	0	0	0	8.05	8.05
	Inverter	MV1-10	365004	4905564	2	0	0	97.3	97.3	1	1662.86	3.25	0	75.42	0	0.02	0	0	12.72	0	0	0	0	0	0	9.15	9.15
	Inverter	MV1-7	364925	4905782	2	0	0	97.3	97.3	1	1873.77	3.25	0	76.45	0	0.09	0	0	13.19	0	0	0	0	0	0	7.57	7.57
	Inverter	MV2-4	365586	4906624	2	0	0	100.3	100.3	1	2818.2	3.25	0	80	0	0.33	0	0	15.05	0	0	0	0	0	0	4.94	4.94
	Inverter	MV2-3	365820	4906641	2	0	0	100.3	100.3	1	2906.29	3.25	0	80.27	0	0.34	0	0	15.21	0	0	0	0	0	0	4.5	4.5
	Inverter	MV2-1	365842	4906816	2	0	0	97.3	97.3	1	3078.47	3.25	0	80.77	0	0.38	0	0	15.51	0	0	0	0	0	0	0.66	0.66
	Inverter	MV3-18	367752	4907412	2	0	0	100.3	100.3	1	4564.52	3.25	0	84.19	0	0.6	0	0	17.93	0	0	0	0	0	0	-2.4	-2.4
	Inverter	MV3-12	367668	4907594	2	0	0	100.3	100.3	1	4653.75	3.25	0	84.36	0	0.61	0	0	18.06	0	0	0	0	0	0	-2.72	-2.72
	Inverter	MV3-13	367963	4907577	2	0	0	100.3	100.3	1	4826.79	3.25	0	84.67	0	0.63	0	0	18.32	0	0	0	0	0	0	-3.31	-3.31
	Inverter	MV3-17	368178	4907472	2	0	0	100.3	100.3	1	4892.38	3.25	0	84.79	0	0.63	0	0	18.42	0	0	0	0	0	0	-3.53	-3.53
	Inverter	MV3-21	368478	4907206	2	0	0	100.3	100.3	1	4920.83	3.25	0	84.84	0	0.63	0	0	18.46	0	0	0	0	0	0	-3.63	-3.63
	Inverter	MV3-19	368357	4907347	2	0	0	100.3	100.3	1	4928.88	3.25	0	84.85	0	0.64	0	0	18.48	0	0	0	0	0	0	-3.65	-3.65
	Inverter	MV3-7	367945	4907754	2	0	0	100.3	100.3	1	4951.19	3.25	0	84.89	0	0.64	0	0	18.51	0	0	0	0	0	0	-3.73	-3.73
	Inverter	MV3-15	368357	4907477	2	0	0	100.3	100.3	1	5020.37	3.25	0	85.01	0	0.64	0	0	18.61	0	0	0	0	0	0	-3.96	-3.96
	Inverter	MV3-10	368167	4907669	2	0	0	100.3	100.3	1	5030.27	3.25	0	85.03	0	0.64	0	0	18.62	0	0	0	0	0	0	-3.99	-3.99
	Inverter	MV3-3	367939	4907927	2	0	0	100.3	100.3	1	5082.96	3.25	0	85.12	0	0.65	0	0	18.7	0	0	0	0	0	0	-4.16	-4.16
	Inverter	MV3-16	368514	4907475	2	0	0	100.3	100.3	1	5130.7	3.25	0	85.2	0	0.65	0	0	18.77	0	0	0	0	0	0	-4.32	-4.32
	Inverter	MV3-11	368346	4907662	2	0	0	100.3	100.3	1	5145.88	3.25	0	85.23	0	0.65	0	0	18.79	0	0	0	0	0	0	-4.37	-4.37
	Inverter	MV3-6	368162	4907834	2	0	0	100.3	100.3	1	5151.46	3.25	0	85.24	0	0.66	0	0	18.8	0	0	0	0	0	0	-4.38	-4.38
	Inverter	MV3-20	368689	4907317	2	0	0	100.3	100.3	1	5152.21	3.25	0	85.24	0	0.66	0	0	18.8	0	0	0	0	0	0	-4.39	-4.39
	Inverter	MV3-14	368684	4907498	2	0	0	100.3	100.3	1	5269.95	3.25	0	85.44	0	0.66	0	0	18.97	0	0	0	0	0	0	-4.76	-4.76
	Inverter	MV3-9	368512	4907703	2	0	0	100.3	100.3	1	5290.23	3.25	0	85.47	0	0.67	0	0	19	0	0	0	0	0	0	-4.83	-4.83
	Inverter	MV3-8	368680	4907712	2	0	0	100.3	100.3	1	5415.03	3.25	0	85.67	0	0.67	0	0	19.18	0	0	0	0	0	0	-5.21	-5.21
	Gardiner Substation	G_Sub	366586.3	4903349.9	2.5	0	0	90.8	90.8	1	1850.23	4.25	0	76.34	0	0.86	4.02	0.31	4.11	0	0	0	0	0	0	5.45	5.45
	Inverter	MV6-3	370207	4907140	2	0	0	100.3	100.3	1	6277.88	3.25	0	86.96	0	0.71	0	0	20.37	0	0	0	0	0	0	-7.72	-7.72
	Inverter	MV6-2	370085	4907339	2	0	0	100.3	100.3	1	6279.95	3.25	0	86.96	0	0.71	0	0	20.37	0	0	0	0	0	0	-7.73	-7.73
	Inverter	MV4-7	369035	4909001	2	0	0	100.3	100.3	1	6606.62	3.25	0	87.4	0	0.72	0	0	20.8	0	0	0	0	0	0	-8.6	-8.6
	Inverter	MV4-11	369264	4908855	2	0	0	100.3	100.3	1	6645.59	3.25	0	87.45	0	0.71	0	0	20.85	0	0	0	0	0	0	-8.7	-8.7
	Inverter	MV4-10	369312	4908858	2	0	0	100.3	100.3	1	6679.98	3.25	0	87.5	0	0.71	0	0	20.89	0	0	0	0	0	0	-8.79	-8.79
	Inverter	MV4-8	369256	4909001	2	0	0	100.3	100.3	1	6749.65	3.25	0	87.59	0	0.71	0	0	20.98	0	0	0	0	0	0	-8.97	-8.97
	Inverter	MV4-4	369027	4909199	2	0	0	100.3	100.3	1	6755.36	3.25	0	87.59	0	0.71	0	0	20.99	0	0	0	0	0	0	-8.98	-8.98
	Inverter	MV4-9	369289	4909001	2	0	0	100.3	100.3	1	6771.37	3.25	0	87.61	0	0.71	0	0	21.01	0	0	0	0	0	0	-9.03	-9.03
	Inverter	MV4-6	369243	4909192	2	0	0	100.3	100.3	1	6886.48	3.25	0	87.76	0	0.71	0	0	21.16	0	0	0	0	0	0	-9.32	-9.32
	Inverter	MV4-1	369011	4909397	2	0	0	100.3	100.3	1	6901.73	3.25	0	87.78	0	0.71	0	0	21.18	0	0	0	0	0	0	-9.35	-9.35
	Inverter	MV4-5	369289	4909199	2	0	0	100.3	100.3	1	6921.44	3.25	0	87.8	0	0.71	0	0	21.2	0	0	0	0	0	0	-9.4	-9.4
	Inverter	MV4-3	369229	4909397	2	0	0	100.3	100.3	1	7036.14	3.25	0	87.95	0	0.71	0	0	21.34	0	0	0	0	0	0	-9.69	-9.69
	Inverter	MV5-5	370015	4908690	2	0	0	100.3	100.3	1	7056.46	3.25	0	87.97	0	0.71	0	0	21.37	0	0	0	0	0	0	-9.74	-9.74
	Inverter	MV4-2	369272	4909397	2	0	0	100.3	100.3	1	7063.15	3.25	0	87.98	0	0.71	0	0	21.38	0	0	0	0	0	0	-9.75	-9.75
	Inverter	MV5-2	370006	4908853	2	0	0	100.3	100.3	1	7161.34	3.25	0	88.1	0	0.7	0	0	21.5	0	0	0	0	0	0	-9.99	-9.99
	Inverter	MV5-4	370324	4908707	2	0	0	100.3	100.3	1	7297.97	3.25	0	88.26	0	0.7	0	0	21.67	0	0	0	0	0	0	-10.32	-10.32
	Inverter	MV5-3	370231	4908851	2	0	0	100.3	100.3	1	7324.47	3.25	0	88.3	0	0.7	0	0	21.7	0	0	0	0	0	0	-10.38	-10.38
	Inverter	MV5-1	370020	4909142	2	0	0	100.3	100.3	1	7373.61	3.25	0	88.35	0	0.7	0	0	21.76	0	0	0	0	0	0	-10.5	-10.5
	Inverters	G_Inv1	366526.4	4903225.8	2	0	0	87.7	87.7	1	1835.86	3.25	0	76.28	0	2.56	0	0	2.44	0	0	0	0	0	0	6.38	6.38
	Inverter	MV1-3	364440	4906039	2	0	0	89.1	89.1	1	2162.23	3.25	0	77.7	0	0.95	0	0	8.31	0	0	0	0	0	0	2.11	2.11
	Inverters	G_Inv3	366583.7	4903091.4	2	0	0	87.7	87.7	1	1941.93	3.25	0	76.76	0	2.58	0	0	2.57	0	0	0	0	0	0	5.75	5.75
	Inverters	G_Inv2	366676.9	4903239.1	2	0	0	87.7	87.7	1	1971.71	3.25	0	76.9	0	2.58	0	0	2.6	0	0	0	0	0	0	5.58	5.58
	Inverters	G_Inv5	366638.5	4902958.1	2	0	0	87.7	87.7	1	2050.2	3.25	0	77.24	0	2.59	0	0	2.69	0	0	0	0	0	0	5.14	5.14
	Inverters	G_Inv4	366732.8	4903105	2	0	0	87.7	87.7	1	2072.73	3.25	0	77.33	0	2.59	0	0	2.72	0	0	0	0	0	0	5.02	5.02
	Inverter	MV6-1	370235	4907364	2	0	0	97.3	97.3	1	6419.56	3.25	0	87.15	0	0.71	0	0	20.55	0	0	0	0	0	0	-11.11	-11.11
	Inverters	G_Inv7	366694.6	4902824.7	2	0	0	87.7	87.7	1	2163.84	3.25	0	77.7	0	2.6	0	0	2.83	0	0	0	0	0	0	4.53	4.53
	Inverters	G_Inv6	366788.5	4902972	2	0	0	87.7	87.7	1	2178.1	3.25	0	77.76	0	2.61	0	0	2.84	0	0	0	0	0	0	4.45	4.45
	Inverters	G_Inv9	366750.9	4902691.8	2	0	0	87.7	87.7	1	2280.9	3.25	0	78.16	0	2.62	0	0	2.96	0	0	0	0	0	0	3.92	3.92
	Inverters	G_Inv8	366844.5	4902838.5	2	0	0	87.7	87.7	1	2288.21	3.25	0	78.19	0	2.62	0	0	2.97	0	0	0	0	0	0	3.88	3.88
	DSTATCOM - 10 MVAR #2	DSAT2	369403	4908757	2.5	0	0	96.6	96.6	1	6667.7	3.5	0	87.48	0	3.82	0	0	4.16	0	0	0	0	0	0	1.18	1.18
	DSTATCOM - 10 MVAR #1	DSAT1	369437	4908757	2.5	0	0	96.6	96.6	1	6691.1	3.5	0	87.51	0	3.82	0	0	4.17	0	0	0	0	0	0	1.13	1.13
	Inverters	G_Inv10	366900.7	4902704.8	2	0	0	87.7	87.7	1	2402.28	3.25	0	78.61	0	2.63	0	0	3.1	0	0	0	0	0	0	3.32	3.32
	Inverter	MV2-2	365977	4906654	2	0	0	89.1	89.1	1	2975.79	3.25	0	80.47	0	1.14	0	0	9.58	0	0	0	0	0	0	-2.14	-2.14
	SubstationTransformer	W_ST	369711.17	4906112.3	2.5	0	0	92	92	1	5360.77	4.25	0	85.58	0	1.73	2.24	0.26	9.04	0	0	0	0	0	0	-6.62	-6.62

Inverter	MV3-22	368656	4907142	2	0	0	89.1	89.1	1	5012.96	3.25	0	85	0	1.64	0	0	12.48	0	0	0	0	0	0	-10.07	-10.07
Westbrook Inverter Enclosur	W_INV2	369374	4906388	2	0	0	89.1	89.1	1	5181.25	3.25	0	85.29	0	1.68	0	0	12.7	0	0	0	0	0	0	-10.62	-10.62
Westbrook Inverter Enclosur	W_INV3	369508	4906164	2	0	0	89.1	89.1	1	5198.4	3.25	0	85.32	0	1.69	0	0	12.73	0	0	0	0	0	0	-10.68	-10.68
Inverter	MV3-1	368156	4907976	2	0	0	89.1	89.1	1	5256.59	3.25	0	85.41	0	1.7	0	0	12.8	0	0	0	0	0	0	-10.86	-10.86
Inverter	MV3-5	368340	4907843	2	0	0	89.1	89.1	1	5275.27	3.25	0	85.44	0	1.71	0	0	12.83	0	0	0	0	0	0	-10.92	-10.92
Westbrook Inverter Enclosur	W_INV4	369673	4906164	2	0	0	89.1	89.1	1	5347.58	3.25	0	85.56	0	1.73	0	0	12.92	0	0	0	0	0	0	-11.15	-11.15
Inverter	MV3-4	368502	4907925	2	0	0	89.1	89.1	1	5444.79	3.25	0	85.72	0	1.75	0	0	13.05	0	0	0	0	0	0	-11.46	-11.46
Westbrook Inverter Enclosur	W_INV7	369780	4906417	2	0	0	89.1	89.1	1	5554.27	3.25	0	85.89	0	1.78	0	0	13.19	0	0	0	0	0	0	-11.8	-11.8
Inverter	MV3-2	368671	4907928	2	0	0	89.1	89.1	1	5562.54	3.25	0	85.91	0	1.78	0	0	13.2	0	0	0	0	0	0	-11.83	-11.83
Westbrook Inverter Enclosur	W_INV5	369719	4906574	2	0	0	89.1	89.1	1	5573.19	3.25	0	85.92	0	1.78	0	0	13.22	0	0	0	0	0	0	-11.86	-11.86
Westbrook Inverter Enclosur	W_INV6	369875	4906578	2	0	0	89.1	89.1	1	5712.58	3.25	0	86.14	0	1.82	0	0	13.4	0	0	0	0	0	0	-12.29	-12.29
Fixed Reactor Bank 1	FRB1	369378	4908755	6	0	0	89.8	89.8	1	6649.1	5.25	0	87.46	0	-0.33	0	0	10.41	0	0	0	0	0	0	-7.76	-7.76
Fixed Reactor Bank 2	FRB2	369464	4908755	6	0	0	89.8	89.8	1	6708.31	5.25	0	87.53	0	-0.32	0	0	10.47	0	0	0	0	0	0	-7.9	-7.9
Inverter	MV4-15	369176	4908481	2	0	0	89.1	89.1	1	6311.24	3.25	0	87	0	1.96	0	0	14.15	0	0	0	0	0	0	-14.06	-14.06
Inverter	MV4-13	369051	4908605	2	0	0	89.1	89.1	1	6317.27	3.25	0	87.01	0	1.96	0	0	14.16	0	0	0	0	0	0	-14.07	-14.07
Inverter	MV4-14	369176	4908507	2	0	0	89.1	89.1	1	6330.09	3.25	0	87.03	0	1.97	0	0	14.17	0	0	0	0	0	0	-14.11	-14.11
Inverter	MV4-12	369043	4908803	2	0	0	89.1	89.1	1	6460.52	3.25	0	87.21	0	2	0	0	14.33	0	0	0	0	0	0	-14.48	-14.48
Inverter	MV5-6	369982	4908507	2	0	0	89.1	89.1	1	6909.16	3.25	0	87.79	0	2.11	0	0	14.88	0	0	0	0	0	0	-15.71	-15.71
Westbrook Inverter Enclosur	W_INV1	369409	4906578	2	0	0	86.1	86.1	1	5304.95	3.25	0	85.49	0	1.72	0	0	12.87	0	0	0	0	0	0	-14.02	-14.02
Inverter	MV6-4	370250	4906966	2	0	0	86.1	86.1	1	6227.62	3.25	0	86.89	0	1.94	0	0	14.05	0	0	0	0	0	0	-16.82	-16.82
Inverter Transformer	MV1-14 T	365157	4905049	2	0	0	69.4	69.4	1	1185.95	3.25	0	72.48	0	1.81	0	0	4.06	0	0	0	0	0	0	-9	-9
Inverter Transformer	MV1-13 T	364725	4905241	2	0	0	69.4	69.4	1	1333.62	3.25	0	73.5	0	1.89	0	0	4.24	0	0	0	0	0	0	-10.28	-10.28
Inverter Transformer	MV1-10 T	365010	4905564	2	0	0	69.4	69.4	1	1663.52	3.25	0	75.42	0	2.04	0	0	4.62	0	0	0	0	0	0	-12.73	-12.73
Inverter Transformer	MV1-7 T	364919	4905782	2	0	0	69.4	69.4	1	1873.45	3.25	0	76.45	0	2.13	0	0	4.84	0	0	0	0	0	0	-14.07	-14.07
Westbrook Inverter Transfor	W_INVTR1	369403	4906578	2	0	0	78.2	78.2	1	5299.76	3.25	0	85.49	0	-3.24	0	0	2.51	0	0	0	0	0	0	-6.52	-6.52
Westbrook Inverter Transfor	W_INVTR2	369368	4906388	2	0	0	77.3	77.3	1	5175.98	3.25	0	85.28	0	-3.21	0	0	2.47	0	0	0	0	0	0	-7.2	-7.2
Westbrook Inverter Transfor	W_INVTR3	369514	4906164	2	0	0	77.3	77.3	1	5203.81	3.25	0	85.33	0	-3.22	0	0	2.48	0	0	0	0	0	0	-7.25	-7.25
Westbrook Inverter Transfor	W_INVTR4	369679	4906164	2	0	0	77.3	77.3	1	5353.02	3.25	0	85.57	0	-3.25	0	0	2.53	0	0	0	0	0	0	-7.52	-7.52
Westbrook Inverter Transfor	W_INVTR7	369786	4906417	2	0	0	77.3	77.3	1	5559.62	3.25	0	85.9	0	-3.29	0	0	2.6	0	0	0	0	0	0	-7.87	-7.87
Westbrook Inverter Transfor	W_INVTR5	369725	4906574	2	0	0	77.3	77.3	1	5578.46	3.25	0	85.93	0	-3.29	0	0	2.61	0	0	0	0	0	0	-7.9	-7.9
Westbrook Inverter Transfor	W_INVTR6	369881	4906578	2	0	0	77.3	77.3	1	5717.89	3.25	0	86.14	0	-3.32	0	0	2.65	0	0	0	0	0	0	-8.14	-8.14
Inverter Transformer	MV2-1 T	365836	4906816	2	0	0	69.4	69.4	1	3076.49	3.25	0	80.76	0	2.53	0	0	5.95	0	0	0	0	0	0	-19.89	-19.89
Inverter Transformer	MV1-15 T	365309	4904994	2	0	0	56.1	56.1	1	1186.97	3.25	0	72.49	0	0.08	0	0	5.33	0	0	0	0	0	0	-21.83	-21.83
Inverter Transformer	MV6-4 T	370244	4906966	2	0	0	69.4	69.4	1	6222.39	3.25	0	86.88	0	3.22	0	0	8.15	0	0	0	0	0	0	-28.9	-28.9
Inverter Transformer	MV6-1 T	370230	4907364	2	0	0	69.4	69.4	1	6415.35	3.25	0	87.14	0	3.25	0	0	8.27	0	0	0	0	0	0	-29.31	-29.31
Inverter Transformer	MV1-12 T	365044	4905386	2	0	0	56.1	56.1	1	1491.44	3.25	0	74.47	0	0.2	0	0	6	0	0	0	0	0	0	-24.61	-24.61
Inverter Transformer	MV1-11 T	364649	4905414	2	0	0	56.1	56.1	1	1513.06	3.25	0	74.6	0	0.2	0	0	6.05	0	0	0	0	0	0	-24.79	-24.79
Inverter Transformer	MV1-8 T	364782	4905647	2	0	0	56.1	56.1	1	1736.49	3.25	0	75.79	0	0.29	0	0	6.51	0	0	0	0	0	0	-26.54	-26.54
Inverter Transformer	MV1-9 T	364555	4905646	2	0	0	56.1	56.1	1	1755.61	3.25	0	75.89	0	0.3	0	0	6.55	0	0	0	0	0	0	-26.69	-26.69
Inverter Transformer	MV1-6 T	364482	4905835	2	0	0	56.1	56.1	1	1954.02	3.25	0	76.82	0	0.38	0	0	6.95	0	0	0	0	0	0	-28.1	-28.1
Inverter Transformer	MV1-5 T	364676	4905892	2	0	0	56.1	56.1	1	1986.46	3.25	0	76.96	0	0.4	0	0	7.02	0	0	0	0	0	0	-28.32	-28.32
Inverter Transformer	MV1-4 T	364821	4905918	2	0	0	56.1	56.1	1	2007	3.25	0	77.05	0	0.41	0	0	7.06	0	0	0	0	0	0	-28.46	-28.46
Inverter Transformer	MV1-2 T	364759	4906063	2	0	0	56.1	56.1	1	2152.96	3.25	0	77.66	0	0.47	0	0	7.34	0	0	0	0	0	0	-29.41	-29.41
Inverter Transformer	MV1-3 T	364435	4906039	2	0	0	56.1	56.1	1	2163.12	3.25	0	77.7	0	0.47	0	0	7.36	0	0	0	0	0	0	-29.48	-29.48
Inverter Transformer	MV1-1 T	364721	4906166	2	0	0	56.1	56.1	1	2257.32	3.25	0	78.07	0	0.51	0	0	7.54	0	0	0	0	0	0	-30.07	-30.07
Inverter Transformer	MV2-4 T	365590	4906628	2	0	0	56.1	56.1	1	2823.13	3.25	0	80.01	0	0.75	0	0	8.56	0	0	0	0	0	0	-33.28	-33.28
Inverter Transformer	MV2-3 T	365814	4906641	2	0	0	56.1	56.1	1	2904.24	3.25	0	80.26	0	0.79	0	0	8.7	0	0	0	0	0	0	-33.7	-33.7
Inverter Transformer	MV2-2 T	365982	4906654	2	0	0	56.1	56.1	1	2977.73	3.25	0	80.48	0	0.82	0	0	8.83	0	0	0	0	0	0	-34.07	-34.07
Inverter Transformer	MV3-18 T	367757	4907412	2	0	0	56.1	56.1	1	4567.73	3.25	0	84.19	0	1.47	0	0	11.27	0	0	0	0	0	0	-40.87	-40.87
Inverter Transformer	MV3-12 T	367674	4907594	2	0	0	56.1	56.1	1	4657.42	3.25	0	84.36	0	1.5	0	0	11.39	0	0	0	0	0	0	-41.2	-41.2
Inverter Transformer	MV3-13 T	367958	4907577	2	0	0	56.1	56.1	1	4823.54	3.25	0	84.67	0	1.56	0	0	11.62	0	0	0	0	0	0	-41.79	-41.79
Inverter Transformer	MV3-17 T	368183	4907472	2	0	0	56.1	56.1	1	4895.81	3.25	0	84.8	0	1.59	0	0	11.72	0	0	0	0	0	0	-42.04	-42.04
Inverter Transformer	MV3-21 T	368484	4907206	2	0	0	56.1	56.1	1	4925.29	3.25	0	84.85	0	1.6	0	0	11.76	0	0	0	0	0	0	-42.14	-42.14
Inverter Transformer	MV3-19 T	368352	4907347	2	0	0	56.1	56.1	1	4925.3	3.25	0	84.85	0	1.6	0	0	11.76	0	0	0	0	0	0	-42.14	-42.14
Inverter Transformer	MV3-7 T	367951	4907754	2	0	0	56.1	56.1	1	4954.98	3.25	0	84.9	0	1.61	0	0	11.79	0	0	0	0	0	0	-42.25	-42.25
Inverter Transformer	MV3-15 T	368351	4907477	2	0	0	56.1	56.1	1	5016.15	3.25	0	85.01	0	1.63	0	0	11.88	0	0	0	0	0	0	-42.46	-42.46
Inverter Transformer	MV3-22 T	368661	4907142	2	0	0	56.1	56.1	1	5016.78	3.25	0	85.01	0	1.63	0	0	11.88	0	0	0	0	0	0	-42.46	-42.46
Inverter Transformer	MV3-10 T	368162	4907669	2	0	0	56.1	56.1	1	5026.94	3.25	0	85.03	0	1.64	0	0	11.89	0	0	0	0	0	0	-42.49	-42.49
Inverter Transformer	MV3-3 T	367944	4907927	2	0	0	56.1	56.1	1	5086.03	3.25	0	85.13	0	1.66	0	0	11.97	0	0	0	0	0	0	-42.69	-42.69
Inverter Transformer	MV3-16 T	368509	4907475	2	0	0	56.1	56.1	1	5127.11	3.25	0	85.2	0	1.67	0	0	12.02	0	0	0	0	0	0	-42.83	-42.83
Inverter Transformer	MV3-11 T	368340	4907662	2	0	0	56.1	56.1	1	5141.78	3.25	0	85.22	0	1.68	0	0	12.04	0	0	0	0	0	0	-42.88	-42.88
Inverter Transformer	MV3-6 T	368156	4907834	2	0	0	56.1	56.1	1	5147.57	3.25	0	85.23	0	1.68	0	0	12.05	0	0	0	0	0	0	-42.9	-42.9
Inverter Transformer	MV3-20 T	368683	4907317	2	0	0	56.1	56.1	1	5147.71	3.25	0	85.23	0	1.68	0	0	12.05	0	0	0	0	0	0	-42.9	-42.9
Inverter Transformer	MV3-1 T	368150	4907976	2	0	0	56.1	56.1	1	5252.79	3.25	0	85.41	0	1.72	0	0	12.18	0	0	0	0	0	0	-43.25	-43.25
Inverter Transformer	MV3-14 T	368678	4907498	2	0	0	56.1	56.1	1	5265.55	3.25	0	85.43	0	1.72	0	0	12.2	0	0	0	0	0	0	-43.29	-43.29
Inverter Transformer	MV3-5 T	368335	4907843	2	0	0	56.1	56.1	1	5271.94	3.25	0	85.44	0	1.72	0	0	12.21	0	0	0	0	0	0	-43.31	-43.31
Inverter Transformer	MV3-9 T	368517	4907703	2	0	0	56.1	56.1	1	5293.72	3.25	0	85.48	0	1.73	0	0	12.24	0	0	0	0	0	0	-43.38	-43.38
Inverter Transformer	MV3-8 T	368685	4907712	2	0	0	56.1	56.1	1	5418.59	3.25	0	85.68	0	1.77	0	0	12.39	0	0	0	0	0	0	-43.79	-43.79
Inverter Transformer	MV3-4 T	368507	4907925	2	0	0	56.1	56.1	1	5448.17	3.25	0	85.73	0	1.78	0	0	12.43	0	0	0	0	0	0	-43.88	-43.88
Inverter Transformer	MV3-2 T	368677	4907928	2	0	0	56.1	56.1	1	5566.69	3.25	0	85.91	0	1.82	0	0	12.58	0	0	0	0	0	0	-44.25	-44.25
Inverter Transformer	MV6-3 T	370202	4907140	2	0	0	56.1	56.1	1	6273.59	3.25	0	86.95	0	2.05	0	0	13.42	0	0	0	0	0	0	-46.36	-46.36
Inverter Transformer	MV6-2 T	370091	4907339	2	0	0	56.1	56.1	1	6284.97	3.25	0	86.97	0	2.05	0	0	13.44	0	0	0	0	0	0	-46.4	-46.4
Inverter Transformer	MV4-15 T	369170	4908481	2	0	0	56.1	56.1	1	6307.11	3.25	0	87	0	2.06	0	0	13.46	0	0	0	0	0	0	-46.46	-46.46
Inverter Transformer	MV4-13 T	369057	4908605	2	0	0	56.1	56.1	1	6321.29	3.25	0	87.02	0	2.06	0	0	13.48	0	0	0	0	0	0	-46.5	-46.5

	Inverter Transformer	MV4-14 T	369182	4908507	2	0	0	56.1	56.1	1	6334.22	3.25	0	87.03	0	2.07	0	0	13.49	0	0	0	0	0	0	-46.54	-46.54
	Inverter Transformer	MV4-12 T	369049	4908803	2	0	0	56.1	56.1	1	6464.45	3.25	0	87.21	0	2.11	0	0	13.64	0	0	0	0	0	0	-46.9	-46.9
	Inverter Transformer	MV4-7 T	369040	4909001	2	0	0	56.1	56.1	1	6609.8	3.25	0	87.4	0	2.15	0	0	13.8	0	0	0	0	0	0	-47.3	-47.3
	Inverter Transformer	MV4-11 T	369269	4908855	2	0	0	56.1	56.1	1	6648.93	3.25	0	87.46	0	2.16	0	0	13.85	0	0	0	0	0	0	-47.4	-47.4
	Inverter Transformer	MV4-10 T	369307	4908858	2	0	0	56.1	56.1	1	6676.62	3.25	0	87.49	0	2.17	0	0	13.88	0	0	0	0	0	0	-47.48	-47.48
	Inverter Transformer	MV4-8 T	369262	4909001	2	0	0	56.1	56.1	1	6753.6	3.25	0	87.59	0	2.19	0	0	13.96	0	0	0	0	0	0	-47.69	-47.69
	Inverter Transformer	MV4-4 T	369033	4909199	2	0	0	56.1	56.1	1	6759.1	3.25	0	87.6	0	2.19	0	0	13.97	0	0	0	0	0	0	-47.7	-47.7
	Inverter Transformer	MV4-9 T	369284	4909001	2	0	0	56.1	56.1	1	6768.08	3.25	0	87.61	0	2.2	0	0	13.98	0	0	0	0	0	0	-47.72	-47.72
	Inverter Transformer	MV4-6 T	369249	4909192	2	0	0	56.1	56.1	1	6890.33	3.25	0	87.76	0	2.23	0	0	14.11	0	0	0	0	0	0	-48.05	-48.05
	Inverter Transformer	MV4-1 T	369017	4909397	2	0	0	56.1	56.1	1	6905.37	3.25	0	87.78	0	2.23	0	0	14.13	0	0	0	0	0	0	-48.09	-48.09
	Inverter Transformer	MV5-6 T	369987	4908507	2	0	0	56.1	56.1	1	6912.89	3.25	0	87.79	0	2.24	0	0	14.14	0	0	0	0	0	0	-48.11	-48.11
	Inverter Transformer	MV4-5 T	369283	4909199	2	0	0	56.1	56.1	1	6917.57	3.25	0	87.8	0	2.24	0	0	14.14	0	0	0	0	0	0	-48.12	-48.12
	Inverter Transformer	MV4-3 T	369234	4909397	2	0	0	56.1	56.1	1	7039.27	3.25	0	87.95	0	2.27	0	0	14.27	0	0	0	0	0	0	-48.43	-48.43
	Inverter Transformer	MV4-2 T	369267	4909397	2	0	0	56.1	56.1	1	7060	3.25	0	87.98	0	2.28	0	0	14.29	0	0	0	0	0	0	-48.49	-48.49
	Inverter Transformer	MV5-5 T	370021	4908690	2	0	0	56.1	56.1	1	7060.88	3.25	0	87.98	0	2.28	0	0	14.29	0	0	0	0	0	0	-48.49	-48.49
	Inverter Transformer	MV5-2 T	370011	4908853	2	0	0	56.1	56.1	1	7164.96	3.25	0	88.1	0	2.3	0	0	14.41	0	0	0	0	0	0	-48.76	-48.76
	Inverter Transformer	MV5-4 T	370330	4908707	2	0	0	56.1	56.1	1	7302.5	3.25	0	88.27	0	2.34	0	0	14.55	0	0	0	0	0	0	-49.1	-49.1
	Inverter Transformer	MV5-3 T	370237	4908851	2	0	0	56.1	56.1	1	7328.9	3.25	0	88.3	0	2.35	0	0	14.58	0	0	0	0	0	0	-49.17	-49.17
	Inverter Transformer	MV5-1 T	370015	4909142	2	0	0	56.1	56.1	1	7370.09	3.25	0	88.35	0	2.36	0	0	14.62	0	0	0	0	0	0	-49.27	-49.27
	Line Reactor	NGR	369421	4908787.5	5	0	0	45.4	45.4	1	6702.24	5.25	0	87.52	0	3.22	1.37	0.09	2.74	0	0	0	0	0	0	-49.5	-49.5
Limit. Valu	0	0																								
Level D/N:	24.4933	24.4933																								

Receiver: Existing Noise Receptor
ID: G-115
X: 365499.2
Y: 4904756.1
Z: 4.5
Ground: 0

ISO	Description	ID	X	Y	Z	Ground	ReflOrd	LxT	LxN	L/A	Dist.	hm	Freq	Adiv	K0b	Agr	Abar	z	Aatm	Afol	Ahous	Cmet	CmetN	Dc	RL	LtotT	LtotN
	Inverter	MV1-15	365315	4904994	2	0	0	100.3	100.3	1	300.89	3.25	0	60.57	0	-0.65	0	0	6.41	0	0	0	0	0	0	33.99	33.99
	Inverter	MV1-14	365163	4905049	2	0	0	97.3	97.3	1	445.9	3.25	0	63.98	0	-0.59	0	0	8.07	0	0	0	0	0	0	25.85	25.85
	Inverter	MV1-12	365038	4905386	2	0	0	100.3	100.3	1	780.7	3.25	0	68.85	0	-0.36	0	0	10.1	0	0	0	0	0	0	21.72	21.72
	Inverter	MV1-11	364655	4905414	2	0	0	100.3	100.3	1	1070.29	3.25	0	71.59	0	-0.21	0	0	11.14	0	0	0	0	0	0	17.8	17.8
	Inverter	MV1-8	364788	4905647	2	0	0	100.3	100.3	1	1139.96	3.25	0	72.14	0	-0.18	0	0	11.35	0	0	0	0	0	0	17.01	17.01
	Inverter	MV1-13	364731	4905241	2	0	0	97.3	97.3	1	908.44	3.25	0	70.17	0	-0.29	0	0	10.6	0	0	0	0	0	0	16.84	16.84
	Inverter	MV1-9	364561	4905646	2	0	0	100.3	100.3	1	1293.12	3.25	0	73.23	0	-0.11	0	0	11.79	0	0	0	0	0	0	15.41	15.41
	Inverter	MV1-10	365004	4905564	2	0	0	97.3	97.3	1	947.59	3.25	0	70.53	0	-0.27	0	0	10.73	0	0	0	0	0	0	16.32	16.32
	Inverter	MV1-4	364815	4905918	2	0	0	100.3	100.3	1	1348.39	3.25	0	73.6	0	-0.09	0	0	11.94	0	0	0	0	0	0	14.87	14.87
	Inverter	MV1-5	364671	4905892	2	0	0	100.3	100.3	1	1405.77	3.25	0	73.96	0	-0.07	0	0	12.09	0	0	0	0	0	0	14.34	14.34
	Sol_Luce Substation	S_Substation	369426	4908792	3.5	0	0	112.1	112.1	1	5631.01	5.25	0	86.01	0	1.07	2.72	0.25	9.34	0	0	0	0	0	0	12.93	12.93
	Inverter	MV1-6	364477	4905835	2	0	0	100.3	100.3	1	1486.25	3.25	0	74.44	0	-0.04	0	0	12.29	0	0	0	0	0	0	13.62	13.62
	Inverter	MV1-2	364753	4906063	2	0	0	100.3	100.3	1	1504.93	3.25	0	74.55	0	-0.03	0	0	12.34	0	0	0	0	0	0	13.46	13.46
	Inverter	MV1-1	364715	4906166	2	0	0	100.3	100.3	1	1613.32	3.25	0	75.15	0	0.01	0	0	12.6	0	0	0	0	0	0	12.55	12.55
	Inverter	MV1-7	364925	4905782	2	0	0	97.3	97.3	1	1175.66	3.25	0	72.41	0	-0.16	0	0	11.46	0	0	0	0	0	0	13.62	13.62
	Inverter	MV2-4	365586	4906624	2	0	0	100.3	100.3	1	1869.92	3.25	0	76.44	0	0.09	0	0	13.18	0	0	0	0	0	0	10.6	10.6
	Inverter	MV2-3	365820	4906641	2	0	0	100.3	100.3	1	1912.01	3.25	0	76.63	0	0.1	0	0	13.27	0	0	0	0	0	0	10.3	10.3
	Inverter	MV2-1	365842	4906816	2	0	0	97.3	97.3	1	2088.23	3.25	0	77.4	0	0.15	0	0	13.65	0	0	0	0	0	0	6.12	6.12
	Inverter	MV3-18	367752	4907412	2	0	0	100.3	100.3	1	3482.66	3.25	0	81.84	0	0.45	0	0	16.2	0	0	0	0	0	0	1.82	1.82
	Inverter	MV3-12	367668	4907594	2	0	0	100.3	100.3	1	3571.75	3.25	0	82.06	0	0.46	0	0	16.35	0	0	0	0	0	0	1.44	1.44
	Inverter	MV3-13	367963	4907577	2	0	0	100.3	100.3	1	3745.37	3.25	0	82.47	0	0.49	0	0	16.64	0	0	0	0	0	0	0.72	0.72
	Inverter	MV3-17	368178	4907472	2	0	0	100.3	100.3	1	3814.72	3.25	0	82.63	0	0.5	0	0	16.75	0	0	0	0	0	0	0.43	0.43
	Inverter	MV3-21	368478	4907206	2	0	0	100.3	100.3	1	3856.85	3.25	0	82.72	0	0.51	0	0	16.82	0	0	0	0	0	0	0.26	0.26
	Inverter	MV3-19	368357	4907347	2	0	0	100.3	100.3	1	3857.43	3.25	0	82.73	0	0.51	0	0	16.82	0	0	0	0	0	0	0.26	0.26
	Inverter	MV3-7	367945	4907754	2	0	0	100.3	100.3	1	3869.02	3.25	0	82.75	0	0.51	0	0	16.84	0	0	0	0	0	0	0.21	0.21
	Inverter	MV3-15	368357	4907477	2	0	0	100.3	100.3	1	3945.92	3.25	0	82.92	0	0.52	0	0	16.96	0	0	0	0	0	0	-0.09	-0.09
	Inverter	MV3-10	368167	4907669	2	0	0	100.3	100.3	1	3949.96	3.25	0	82.93	0	0.52	0	0	16.97	0	0	0	0	0	0	-0.11	-0.11
	Inverter	MV3-3	367939	4907927	2	0	0	100.3	100.3	1	4000.9	3.25	0	83.04	0	0.53	0	0	17.05	0	0	0	0	0	0	-0.31	-0.31
	Inverter	MV3-16	368514	4907475	2	0	0	100.3	100.3	1	4059.73	3.25	0	83.17	0	0.54	0	0	17.14	0	0	0	0	0	0	-0.54	-0.54
	Inverter	MV3-11	368346	4907662	2	0	0	100.3	100.3	1	4067.99	3.25	0	83.19	0	0.54	0	0	17.16	0	0	0	0	0	0	-0.57	-0.57
	Inverter	MV3-6	368162	4907834	2	0	0	100.3	100.3	1	4069.89	3.25	0	83.19	0	0.54	0	0	17.16	0	0	0	0	0	0	-0.58	-0.58
	Inverter	MV3-20	368689	4907317	2	0	0	100.3	100.3	1	4090.6	3.25	0	83.24	0	0.54	0	0	17.19	0	0	0	0	0	0	-0.66	-0.66
	Inverter	MV3-14	368684	4907498	2	0	0	100.3	100.3	1	4202.5	3.25	0	83.47	0	0.55	0	0	17.37	0	0	0	0	0	0	-1.08	-1.08
	Inverter	MV3-9	368512	4907703	2	0	0	100.3	100.3	1	4214.4	3.25	0	83.49	0	0.56	0	0	17.39	0	0	0	0	0	0	-1.13	-1.13
	Inverter	MV3-8	368680	4907712	2	0	0	100.3	100.3	1	4342.22	3.25	0	83.75	0	0.57	0	0	17.59	0	0	0	0	0	0	-1.6	-1.6
	Inverter	MV6-2	370085	4907339	2	0	0	100.3	100.3	1	5263.17	3.25	0	85.42	0	0.66	0	0	18.96	0	0	0	0	0	0	-4.74	-4.74
	Inverter	MV6-3	370207	4907140	2	0	0	100.3	100.3	1	5276.97	3.25	0	85.45	0	0.66	0	0	18.98	0	0	0	0	0	0	-4.78	-4.78
	Gardiner Substation	G_Sub	366586.3	4903349.9	2.5	0	0	90.8	90.8	1	1777.41	4.25	0	76	0	0.75	3.72	0.25	3.98	0	0	0	0	0	0	6.33	6.33
	Inverter	MV4-7	369035	4909001	2	0	0	100.3	100.3	1	5524.59	3.25	0	85.85	0	0.68	0	0	19.34	0	0	0	0	0	0	-5.55	-5.55
	Inverter	MV4-11	369264	4908855	2	0	0	100.3	100.3	1	5565.49	3.25	0	85.91	0	0.68	0	0	19.39	0	0	0	0	0	0	-5.68	-5.68
	Inverter	MV4-10	369312	4908858	2	0	0	100.3	100.3	1	5600.27	3.25	0	85.96	0	0.69	0	0	19.44	0	0	0	0	0	0	-5.78	-5.78
	Inverter	MV4-8	369256	4909001	2	0	0	100.3	100.3	1	5668.57	3.25	0	86.07	0	0.69	0	0	19.54	0	0	0	0	0	0	-5.98	-5.98
	Inverter	MV4-4	369027	4909199	2	0	0	100.3	100.3	1	5673.16	3.25	0	86.08	0	0.69	0	0	19.54	0	0	0	0	0	0	-6	-6

Inverter	MV4-9	369289	4909001	2	0	0	100.3	100.3	1	5690.5	3.25	0	86.1	0	0.69	0	0	19.57	0	0	0	0	0	0	-6.05	-6.05
Inverter	MV4-6	369243	4909192	2	0	0	100.3	100.3	1	5804.59	3.25	0	86.28	0	0.7	0	0	19.73	0	0	0	0	0	0	-6.39	-6.39
Inverter	MV4-1	369011	4909397	2	0	0	100.3	100.3	1	5819.85	3.25	0	86.3	0	0.7	0	0	19.75	0	0	0	0	0	0	-6.43	-6.43
Inverter	MV4-5	369289	4909199	2	0	0	100.3	100.3	1	5839.69	3.25	0	86.33	0	0.7	0	0	19.77	0	0	0	0	0	0	-6.49	-6.49
Inverter	MV4-3	369229	4909397	2	0	0	100.3	100.3	1	5953.94	3.25	0	86.5	0	0.7	0	0	19.93	0	0	0	0	0	0	-6.82	-6.82
Inverter	MV4-2	369272	4909397	2	0	0	100.3	100.3	1	5980.97	3.25	0	86.54	0	0.7	0	0	19.97	0	0	0	0	0	0	-6.89	-6.89
Inverter	MV5-5	370015	4908690	2	0	0	100.3	100.3	1	5988.99	3.25	0	86.55	0	0.7	0	0	19.98	0	0	0	0	0	0	-6.92	-6.92
Inverter	MV1-3	364440	4906039	2	0	0	89.1	89.1	1	1663.65	3.25	0	75.42	0	0.83	0	0	7.49	0	0	0	0	0	0	5.32	5.32
Inverter	MV5-2	370006	4908853	2	0	0	100.3	100.3	1	6090.64	3.25	0	86.69	0	0.71	0	0	20.12	0	0	0	0	0	0	-7.2	-7.2
Inverter	MV5-4	370324	4908707	2	0	0	100.3	100.3	1	6236.05	3.25	0	86.9	0	0.71	0	0	20.31	0	0	0	0	0	0	-7.61	-7.61
Inverter	MV5-3	370231	4908851	2	0	0	100.3	100.3	1	6257.65	3.25	0	86.93	0	0.71	0	0	20.34	0	0	0	0	0	0	-7.67	-7.67
Inverter	MV5-1	370020	4909142	2	0	0	100.3	100.3	1	6298.71	3.25	0	86.99	0	0.71	0	0	20.39	0	0	0	0	0	0	-7.78	-7.78
Inverter	MV2-2	365977	4906654	2	0	0	89.1	89.1	1	1957.12	3.25	0	76.83	0	0.9	0	0	7.98	0	0	0	0	0	0	3.35	3.35
Inverter	MV6-1	370235	4907364	2	0	0	97.3	97.3	1	5406.38	3.25	0	85.66	0	0.67	0	0	19.17	0	0	0	0	0	0	-8.19	-8.19
Inverters	G_Inv1	366526.4	4903225.8	2	0	0	87.7	87.7	1	1843.09	3.25	0	76.31	0	2.56	0	0	2.45	0	0	0	0	0	0	6.33	6.33
Inverters	G_Inv2	366676.9	4903239.1	2	0	0	87.7	87.7	1	1920.49	4.16	0	76.67	0	3.05	1.64	0.01	2.54	0	0	0	0	0	0	3.76	3.76
Inverters	G_Inv3	366583.7	4903091.4	2	0	0	87.7	87.7	1	1986.8	3.25	0	76.96	0	2.58	0	0	2.62	0	0	0	0	0	0	5.5	5.5
DSTATCOM - 10 MVAR #2	DSAT2	369403	4908757	2.5	0	0	96.6	96.6	1	5589.89	3.5	0	85.95	0	3.74	0	0	3.64	0	0	0	0	0	0	3.3	3.3
DSTATCOM - 10 MVAR #1	DSAT1	369437	4908757	2.5	0	0	96.6	96.6	1	5613.69	3.5	0	85.98	0	3.74	0	0	3.65	0	0	0	0	0	0	3.25	3.25
Inverters	G_Inv4	366732.8	4903105	2	0	0	87.7	87.7	1	2061.04	3.25	0	77.28	0	2.59	0	0	2.71	0	0	0	0	0	0	5.08	5.08
Inverters	G_Inv5	366638.5	4902958.1	2	0	0	87.7	87.7	1	2128.57	3.25	0	77.56	0	2.6	0	0	2.78	0	0	0	0	0	0	4.71	4.71
Inverters	G_Inv6	366788.5	4902972	2	0	0	87.7	87.7	1	2201.21	3.25	0	77.85	0	2.61	0	0	2.87	0	0	0	0	0	0	4.33	4.33
Inverters	G_Inv7	366694.6	4902824.7	2	0	0	87.7	87.7	1	2271.41	3.25	0	78.13	0	2.62	0	0	2.95	0	0	0	0	0	0	3.97	3.97
Inverters	G_Inv8	366844.5	4902838.5	2	0	0	87.7	87.7	1	2342.44	3.25	0	78.39	0	2.63	0	0	3.03	0	0	0	0	0	0	3.61	3.61
Inverters	G_Inv9	366750.9	4902691.8	2	0	0	87.7	87.7	1	2414.14	3.25	0	78.66	0	2.63	0	0	3.11	0	0	0	0	0	0	3.26	3.26
Inverters	G_Inv10	366900.7	4902704.8	2	0	0	87.7	87.7	1	2484.36	3.25	0	78.9	0	2.64	0	0	3.19	0	0	0	0	0	0	2.92	2.92
SubstationTransformer	W_ST	369711.17	4906112.3	2.5	0	0	92	92	1	4424.92	4.25	0	83.92	0	1.48	2.49	0.28	7.92	0	0	0	0	0	0	-3.83	-3.83
Inverter	MV3-22	368656	4907142	2	0	0	89.1	89.1	1	3957.01	3.25	0	82.95	0	1.38	0	0	11.02	0	0	0	0	0	0	-6.29	-6.29
Inverter	MV3-1	368156	4907976	2	0	0	89.1	89.1	1	4174.49	3.25	0	83.41	0	1.44	0	0	11.33	0	0	0	0	0	0	-7.12	-7.12
Inverter	MV3-5	368340	4907843	2	0	0	89.1	89.1	1	4195.13	3.25	0	83.45	0	1.44	0	0	11.36	0	0	0	0	0	0	-7.2	-7.2
Westbrook Inverter Enclosur	W_INV2	369374	4906388	2	0	0	89.1	89.1	1	4204.42	3.25	0	83.47	0	1.44	0	0	11.37	0	0	0	0	0	0	-7.23	-7.23
Westbrook Inverter Enclosur	W_INV3	369508	4906164	2	0	0	89.1	89.1	1	4248.84	3.25	0	83.57	0	1.45	0	0	11.44	0	0	0	0	0	0	-7.4	-7.4
Inverter Transformer	MV1-14 T	365157	4905049	2	0	0	69.4	69.4	1	450.44	3.25	0	64.07	0	0.97	0	0	2.84	0	0	0	0	0	0	1.47	1.47
Inverter	MV3-4	368502	4907925	2	0	0	89.1	89.1	1	4365.63	3.25	0	83.8	0	1.48	0	0	11.6	0	0	0	0	0	0	-7.82	-7.82
Westbrook Inverter Enclosur	W_INV4	369673	4906164	2	0	0	89.1	89.1	1	4404.86	3.25	0	83.88	0	1.49	0	0	11.65	0	0	0	0	0	0	-7.97	-7.97
Inverter	MV3-2	368671	4907928	2	0	0	89.1	89.1	1	4485.67	3.25	0	84.04	0	1.51	0	0	11.76	0	0	0	0	0	0	-8.26	-8.26
Westbrook Inverter Enclosur	W_INV7	369780	4906417	2	0	0	89.1	89.1	1	4591.71	3.25	0	84.24	0	1.54	0	0	11.91	0	0	0	0	0	0	-8.63	-8.63
Westbrook Inverter Enclosur	W_INV5	369719	4906574	2	0	0	89.1	89.1	1	4594.72	3.25	0	84.25	0	1.54	0	0	11.91	0	0	0	0	0	0	-8.64	-8.64
Westbrook Inverter Enclosur	W_INV6	369875	4906578	2	0	0	89.1	89.1	1	4739.93	3.25	0	84.52	0	1.58	0	0	12.11	0	0	0	0	0	0	-9.15	-9.15
Fixed Reactor Bank 1	FRB1	369378	4908755	6	0	0	89.8	89.8	1	5571.02	5.25	0	85.92	0	-0.48	0	0	9.28	0	0	0	0	0	0	-4.94	-4.94
Fixed Reactor Bank 2	FRB2	369464	4908755	6	0	0	89.8	89.8	1	5631.24	5.25	0	86.01	0	-0.47	0	0	9.34	0	0	0	0	0	0	-5.11	-5.11
Inverter	MV4-15	369176	4908481	2	0	0	89.1	89.1	1	5233.9	3.25	0	85.38	0	1.7	0	0	12.77	0	0	0	0	0	0	-10.79	-10.79
Inverter	MV4-13	369051	4908605	2	0	0	89.1	89.1	1	5237.3	3.25	0	85.38	0	1.7	0	0	12.78	0	0	0	0	0	0	-10.8	-10.8
Inverter	MV4-14	369176	4908507	2	0	0	89.1	89.1	1	5252.44	3.25	0	85.41	0	1.7	0	0	12.8	0	0	0	0	0	0	-10.85	-10.85
Inverter	MV4-12	369043	4908803	2	0	0	89.1	89.1	1	5379.21	3.25	0	85.61	0	1.73	0	0	12.97	0	0	0	0	0	0	-11.26	-11.26
Inverter	MV5-6	369982	4908507	2	0	0	89.1	89.1	1	5845.06	3.25	0	86.34	0	1.85	0	0	13.57	0	0	0	0	0	0	-12.69	-12.69
Westbrook Inverter Enclosur	W_INV1	369409	4906578	2	0	0	86.1	86.1	1	4313.45	3.25	0	83.7	0	1.47	0	0	11.53	0	0	0	0	0	0	-10.63	-10.63
Inverter	MV6-4	370250	4906966	2	0	0	86.1	86.1	1	5239.63	3.25	0	85.39	0	1.7	0	0	12.78	0	0	0	0	0	0	-13.81	-13.81
Inverter Transformer	MV1-13 T	364725	4905241	2	0	0	69.4	69.4	1	913.52	3.25	0	70.21	0	1.61	0	0	3.69	0	0	0	0	0	0	-6.16	-6.16
Inverter Transformer	MV1-10 T	365010	4905564	2	0	0	69.4	69.4	1	944.47	3.25	0	70.5	0	1.64	0	0	3.73	0	0	0	0	0	0	-6.52	-6.52
Inverter Transformer	MV1-7 T	364919	4905782	2	0	0	69.4	69.4	1	1178.6	3.25	0	72.43	0	1.81	0	0	4.05	0	0	0	0	0	0	-8.93	-8.93
Inverter Transformer	MV1-15 T	365309	4904994	2	0	0	56.1	56.1	1	304.6	3.25	0	60.67	0	-0.07	0	0	2.81	0	0	0	0	0	0	-7.35	-7.35
Westbrook Inverter Transfor	W_INVTR1	369403	4906578	2	0	0	78.2	78.2	1	4308.01	3.25	0	83.69	0	-3.03	0	0	2.17	0	0	0	0	0	0	-4.58	-4.58
Westbrook Inverter Transfor	W_INVTR2	369368	4906388	2	0	0	77.3	77.3	1	4198.89	3.25	0	83.46	0	-3.01	0	0	2.13	0	0	0	0	0	0	-5.24	-5.24
Westbrook Inverter Transfor	W_INVTR3	369514	4906164	2	0	0	77.3	77.3	1	4254.5	3.25	0	83.58	0	-3.02	0	0	2.15	0	0	0	0	0	0	-5.36	-5.36
Westbrook Inverter Transfor	W_INVTR4	369679	4906164	2	0	0	77.3	77.3	1	4410.55	3.25	0	83.89	0	-3.05	0	0	2.21	0	0	0	0	0	0	-5.7	-5.7
Westbrook Inverter Transfor	W_INVTR7	369786	4906417	2	0	0	77.3	77.3	1	4597.31	3.25	0	84.25	0	-3.09	0	0	2.27	0	0	0	0	0	0	-6.09	-6.09
Westbrook Inverter Transfor	W_INVTR5	369725	4906574	2	0	0	77.3	77.3	1	4600.23	3.25	0	84.26	0	-3.09	0	0	2.27	0	0	0	0	0	0	-6.09	-6.09
Westbrook Inverter Transfor	W_INVTR6	369881	4906578	2	0	0	77.3	77.3	1	4745.47	3.25	0	84.53	0	-3.13	0	0	2.32	0	0	0	0	0	0	-6.38	-6.38
Inverter Transformer	MV2-1 T	365836	4906816	2	0	0	69.4	69.4	1	2087.25	3.25	0	77.39	0	2.21	0	0	5.05	0	0	0	0	0	0	-15.3	-15.3
Inverter Transformer	MV1-12 T	365044	4905386	2	0	0	56.1	56.1	1	777.17	3.25	0	68.81	0	-0.06	0	0	4.34	0	0	0	0	0	0	-17.03	-17.03
Inverter Transformer	MV1-11 T	364649	4905414	2	0	0	56.1	56.1	1	1075.02	3.25	0	71.63	0	0.04	0	0	5.07	0	0	0	0	0	0	-20.67	-20.67
Inverter Transformer	MV6-4 T	370244	4906966	2	0	0	69.4	69.4	1	5234.19	3.25	0	85.38	0	3.06	0	0	7.54	0	0	0	0	0	0	-26.62	-26.62
Inverter Transformer	MV1-8 T	364782	4905647	2	0	0	56.1	56.1	1	1143.72	3.25	0	72.17	0	0.06	0	0	5.23	0	0	0	0	0	0	-21.4	-21.4
Inverter Transformer	MV6-1 T	370230	4907364	2	0	0	69.4	69.4	1	5402	3.25	0	85.65	0	3.09	0	0	7.64	0	0	0	0	0	0	-27.03	-27.03
Inverter Transformer	MV1-9 T	364555	4905646	2	0	0	56.1	56.1	1	1297.48	3.25	0	73.26	0	0.12	0	0	5.58	0	0	0	0	0	0	-22.9	-22.9
Inverter Transformer	MV1-4 T	364821	4905918	2	0	0	56.1	56.1	1	1345.35	3.25	0	73.58	0	0.14	0	0	5.68	0	0	0	0	0	0	-23.34	-23.34
Inverter Transformer	MV1-5 T	364676	4905892	2	0	0	56.1	56.1	1	1402.83	3.25	0	73.94	0	0.16	0	0	5.81	0	0	0	0	0	0	-23.85	-23.85
Inverter Transformer	MV1-6 T	364482	4905835	2	0	0	56.1	56.1	1	1482.81	3.25	0	74.42	0	0.19	0	0	5.98	0	0	0	0	0	0	-24.54	-24.54
Inverter Transformer	MV1-2 T	364759	4906063	2	0	0	56.1	56.1	1	1501.96	3.25	0	74.53	0	0.2	0	0	6.02	0	0	0	0	0	0	-24.7	-24.7
Inverter Transformer	MV1-1 T	364721	4906166	2	0	0	56.1	56.1	1	1610.41	3.25	0	75.14	0	0.24	0	0	6.25	0	0	0	0	0	0	-25.58	-25.58
Inverter Transformer	MV1-3 T	364435	4906039	2	0	0	56.1	56.1	1	1666.84	3.25	0	75.44	0	0.27	0	0	6.37	0	0	0	0	0	0	-26.02	-26.02
Inverter Transformer	MV2-4 T	365590	4906628	2	0	0	56.1	56.1	1	1874.1	3.25	0	76.46	0	0.35	0	0	6.79	0	0	0	0	0	0	-27.54	-27.54
Inverter Transformer	MV2-3 T	365814	4906641	2	0	0	56.1	56.1	1	1911.01	3.25	0	76.63	0	0.37	0	0	6.87	0	0	0	0	0	0	-27.8	-27.8

	Inverter Transformer	MV2-2 T	365982	4906654	2	0	0	56.1	56.1	1	1958.35	3.25	0	76.84	0	0.39	0	0	6.96	0	0	0	0	0	0	-28.13	-28.13
	Inverter Transformer	MV3-18 T	367757	4907412	2	0	0	56.1	56.1	1	3485.9	3.25	0	81.85	0	1.03	0	0	9.67	0	0	0	0	0	0	-36.49	-36.49
	Inverter Transformer	MV3-12 T	367674	4907594	2	0	0	56.1	56.1	1	3575.39	3.25	0	82.07	0	1.07	0	0	9.81	0	0	0	0	0	0	-36.89	-36.89
	Inverter Transformer	MV3-13 T	367958	4907577	2	0	0	56.1	56.1	1	3742.08	3.25	0	82.46	0	1.14	0	0	10.07	0	0	0	0	0	0	-37.61	-37.61
	Inverter Transformer	MV3-17 T	368183	4907472	2	0	0	56.1	56.1	1	3818.23	3.25	0	82.64	0	1.17	0	0	10.18	0	0	0	0	0	0	-37.93	-37.93
	Inverter Transformer	MV3-19 T	368352	4907347	2	0	0	56.1	56.1	1	3853.73	3.25	0	82.72	0	1.19	0	0	10.24	0	0	0	0	0	0	-38.08	-38.08
	Inverter Transformer	MV3-21 T	368484	4907206	2	0	0	56.1	56.1	1	3861.48	3.25	0	82.74	0	1.19	0	0	10.25	0	0	0	0	0	0	-38.11	-38.11
	Inverter Transformer	MV3-7 T	367951	4907754	2	0	0	56.1	56.1	1	3872.82	3.25	0	82.76	0	1.19	0	0	10.26	0	0	0	0	0	0	-38.16	-38.16
	Inverter Transformer	MV3-15 T	368351	4907477	2	0	0	56.1	56.1	1	3941.58	3.25	0	82.91	0	1.22	0	0	10.37	0	0	0	0	0	0	-38.44	-38.44
	Inverter Transformer	MV3-10 T	368162	4907669	2	0	0	56.1	56.1	1	3946.58	3.25	0	82.92	0	1.22	0	0	10.38	0	0	0	0	0	0	-38.46	-38.46
	Inverter Transformer	MV3-22 T	368661	4907142	2	0	0	56.1	56.1	1	3961	3.25	0	82.96	0	1.23	0	0	10.4	0	0	0	0	0	0	-38.52	-38.52
	Inverter Transformer	MV3-3 T	367944	4907927	2	0	0	56.1	56.1	1	4003.96	3.25	0	83.05	0	1.25	0	0	10.46	0	0	0	0	0	0	-38.7	-38.7
	Inverter Transformer	MV3-16 T	368509	4907475	2	0	0	56.1	56.1	1	4056.02	3.25	0	83.16	0	1.27	0	0	10.54	0	0	0	0	0	0	-38.91	-38.91
	Inverter Transformer	MV3-11 T	368340	4907662	2	0	0	56.1	56.1	1	4063.79	3.25	0	83.18	0	1.27	0	0	10.55	0	0	0	0	0	0	-38.94	-38.94
	Inverter Transformer	MV3-6 T	368156	4907834	2	0	0	56.1	56.1	1	4065.96	3.25	0	83.18	0	1.27	0	0	10.55	0	0	0	0	0	0	-38.95	-38.95
	Inverter Transformer	MV3-20 T	368683	4907317	2	0	0	56.1	56.1	1	4085.93	3.25	0	83.23	0	1.28	0	0	10.58	0	0	0	0	0	0	-39.03	-39.03
	Inverter Transformer	MV3-1 T	368150	4907976	2	0	0	56.1	56.1	1	4170.67	3.25	0	83.4	0	1.31	0	0	10.71	0	0	0	0	0	0	-39.36	-39.36
	Inverter Transformer	MV3-5 T	368335	4907843	2	0	0	56.1	56.1	1	4191.74	3.25	0	83.45	0	1.32	0	0	10.74	0	0	0	0	0	0	-39.45	-39.45
	Inverter Transformer	MV3-14 T	368678	4907498	2	0	0	56.1	56.1	1	4197.95	3.25	0	83.46	0	1.32	0	0	10.75	0	0	0	0	0	0	-39.47	-39.47
	Inverter Transformer	MV3-9 T	368517	4907703	2	0	0	56.1	56.1	1	4217.98	3.25	0	83.5	0	1.33	0	0	10.77	0	0	0	0	0	0	-39.55	-39.55
	Inverter Transformer	MV3-8 T	368685	4907712	2	0	0	56.1	56.1	1	4345.88	3.25	0	83.76	0	1.38	0	0	10.96	0	0	0	0	0	0	-40.04	-40.04
	Inverter Transformer	MV3-4 T	368507	4907925	2	0	0	56.1	56.1	1	4369.07	3.25	0	83.81	0	1.39	0	0	10.99	0	0	0	0	0	0	-40.13	-40.13
	Inverter Transformer	MV3-2 T	368677	4907928	2	0	0	56.1	56.1	1	4489.92	3.25	0	84.04	0	1.44	0	0	11.16	0	0	0	0	0	0	-40.58	-40.58
	Inverter Transformer	MV4-15 T	369170	4908481	2	0	0	56.1	56.1	1	5229.69	3.25	0	85.37	0	1.71	0	0	12.15	0	0	0	0	0	0	-43.17	-43.17
	Inverter Transformer	MV4-13 T	369057	4908605	2	0	0	56.1	56.1	1	5241.37	3.25	0	85.39	0	1.71	0	0	12.17	0	0	0	0	0	0	-43.21	-43.21
	Inverter Transformer	MV4-14 T	369182	4908507	2	0	0	56.1	56.1	1	5256.64	3.25	0	85.41	0	1.72	0	0	12.19	0	0	0	0	0	0	-43.26	-43.26
	Inverter Transformer	MV6-2 T	370091	4907339	2	0	0	56.1	56.1	1	5268.4	3.25	0	85.43	0	1.72	0	0	12.2	0	0	0	0	0	0	-43.3	-43.3
	Inverter Transformer	MV6-3 T	370202	4907140	2	0	0	56.1	56.1	1	5272.51	3.25	0	85.44	0	1.72	0	0	12.21	0	0	0	0	0	0	-43.31	-43.31
	Inverter Transformer	MV4-12 T	369049	4908803	2	0	0	56.1	56.1	1	5383.17	3.25	0	85.62	0	1.76	0	0	12.35	0	0	0	0	0	0	-43.67	-43.67
	Inverter Transformer	MV4-7 T	369040	4909001	2	0	0	56.1	56.1	1	5527.79	3.25	0	85.85	0	1.81	0	0	12.53	0	0	0	0	0	0	-44.13	-44.13
	Inverter Transformer	MV4-11 T	369269	4908855	2	0	0	56.1	56.1	1	5568.88	3.25	0	85.92	0	1.82	0	0	12.58	0	0	0	0	0	0	-44.26	-44.26
	Inverter Transformer	MV4-10 T	369307	4908858	2	0	0	56.1	56.1	1	5596.87	3.25	0	85.96	0	1.83	0	0	12.62	0	0	0	0	0	0	-44.35	-44.35
	Inverter Transformer	MV4-8 T	369262	4909001	2	0	0	56.1	56.1	1	5672.55	3.25	0	86.08	0	1.86	0	0	12.71	0	0	0	0	0	0	-44.58	-44.58
	Inverter Transformer	MV4-4 T	369033	4909199	2	0	0	56.1	56.1	1	5676.89	3.25	0	86.08	0	1.86	0	0	12.71	0	0	0	0	0	0	-44.6	-44.6
	Inverter Transformer	MV4-9 T	369284	4909001	2	0	0	56.1	56.1	1	5687.17	3.25	0	86.1	0	1.86	0	0	12.73	0	0	0	0	0	0	-44.63	-44.63
	Inverter Transformer	MV4-6 T	369249	4909192	2	0	0	56.1	56.1	1	5808.46	3.25	0	86.28	0	1.9	0	0	12.87	0	0	0	0	0	0	-45	-45
	Inverter Transformer	MV4-1 T	369017	4909397	2	0	0	56.1	56.1	1	5823.48	3.25	0	86.3	0	1.91	0	0	12.89	0	0	0	0	0	0	-45.05	-45.05
	Inverter Transformer	MV4-5 T	369283	4909199	2	0	0	56.1	56.1	1	5835.8	3.25	0	86.32	0	1.91	0	0	12.91	0	0	0	0	0	0	-45.08	-45.08
	Inverter Transformer	MV5-6 T	369987	4908507	2	0	0	56.1	56.1	1	5848.9	3.25	0	86.34	0	1.92	0	0	12.92	0	0	0	0	0	0	-45.12	-45.12
	Inverter Transformer	MV4-3 T	369234	4909397	2	0	0	56.1	56.1	1	5957.07	3.25	0	86.5	0	1.95	0	0	13.05	0	0	0	0	0	0	-45.45	-45.45
	Inverter Transformer	MV4-2 T	369267	4909397	2	0	0	56.1	56.1	1	5977.82	3.25	0	86.53	0	1.96	0	0	13.08	0	0	0	0	0	0	-45.51	-45.51
	Inverter Transformer	MV5-5 T	370021	4908690	2	0	0	56.1	56.1	1	5993.52	3.25	0	86.55	0	1.96	0	0	13.1	0	0	0	0	0	0	-45.55	-45.55
	Inverter Transformer	MV5-2 T	370011	4908853	2	0	0	56.1	56.1	1	6094.34	3.25	0	86.7	0	1.99	0	0	13.21	0	0	0	0	0	0	-45.85	-45.85
	Inverter Transformer	MV5-4 T	370330	4908707	2	0	0	56.1	56.1	1	6240.69	3.25	0	86.9	0	2.04	0	0	13.38	0	0	0	0	0	0	-46.27	-46.27
	Inverter Transformer	MV5-3 T	370237	4908851	2	0	0	56.1	56.1	1	6262.19	3.25	0	86.93	0	2.05	0	0	13.41	0	0	0	0	0	0	-46.33	-46.33
	Inverter Transformer	MV5-1 T	370015	4909142	2	0	0	56.1	56.1	1	6295.12	3.25	0	86.98	0	2.06	0	0	13.45	0	0	0	0	0	0	-46.43	-46.43
	Line Reactor	NGR	369421	4908787.5	5	0	0	45.4	45.4	1	5624.3	5.25	0	86	0	3.25	1.36	0.08	2.3	0	0	0	0	0	0	-47.55	-47.55
Limit. Valu	0	0																								
Level D/N:	35.4825	35.4825																								

Receiver: Existing Noise Receptor
ID: G-116
X: 364792.2
Y: 4903920
Z: 4.5
Ground: 0

ISO	Description	ID	X	Y	Z	Ground	ReflOrd	LxT	LxN	L/A	Dist.	hm	Freq	Adiv	K0b	Agr	Abar	z	Aatm	Afol	Ahous	Cmet	CmetN	Dc	RL	LtotT	LtotN
	Inverter	MV1-15	365315	4904994	2	0	0	100.3	100.3	1	1194.49	3.25	0	72.54	0	-0.16	0	0	11.51	0	0	0	0	0	0	16.42	16.42
	Inverter	MV1-12	365038	4905386	2	0	0	100.3	100.3	1	1486.47	3.25	0	74.44	0	-0.04	0	0	12.29	0	0	0	0	0	0	13.62	13.62
	Inverter	MV1-11	364655	4905414	2	0	0	100.3	100.3	1	1500.29	3.25	0	74.52	0	-0.03	0	0	12.33	0	0	0	0	0	0	13.5	13.5
	Inverter	MV1-14	365163	4905049	2	0	0	97.3	97.3	1	1188.33	3.25	0	72.5	0	-0.16	0	0	11.49	0	0	0	0	0	0	13.48	13.48
	Inverter	MV1-8	364788	4905647	2	0	0	100.3	100.3	1	1727.01	3.25	0	75.75	0	0.05	0	0	12.86	0	0	0	0	0	0	11.66	11.66
	Sol_Luce Substation	S_Substation	369426	4908792	3.5	0	0	112.1	112.1	1	6723.73	5.25	0	87.55	0	1.32	2.5	0.26	10.48	0	0	0	0	0	0	10.22	10.22
	Inverter	MV1-9	364561	4905646	2	0	0	100.3	100.3	1	1741.42	3.25	0	75.82	0	0.05	0	0	12.9	0	0	0	0	0	0	11.55	11.55
	Inverter	MV1-13	364731	4905241	2	0	0	97.3	97.3	1	1322.42	3.25	0	73.43	0	-0.1	0	0	11.87	0	0	0	0	0	0	12.12	12.12
	Inverter	MV1-6	364477	4905835	2	0	0	100.3	100.3	1	1940.77	3.25	0	76.76	0	0.11	0	0	13.34	0	0	0	0	0	0	10.1	10.1
	Inverter	MV1-5	364671	4905892	2	0	0	100.3	100.3	1	1975.72	3.25	0	76.91	0	0.12	0	0	13.41	0	0	0	0	0	0	9.86	9.86
	Inverter	MV1-4	364815	4905918	2	0	0	100.3	100.3	1	1998.13	3.25	0	77.01	0	0.13	0	0	13.46	0	0	0	0	0	0	9.71	9.71
	Inverter	MV1-2	364753	4906063	2	0	0	100.3	100.3	1	2143.36	3.25	0	77.62	0	0.17	0	0	13.76	0	0	0	0	0	0	8.76	8.76
	Inverter	MV1-1	364715	4906166	2	0	0	100.3	100.3	1	2247.33	3.25	0	78.03	0	0.2	0	0	13.97	0	0	0	0	0	0	8.12	8.12
	Inverter	MV1-10	365004	4905564	2	0	0	97.3	97.3	1	1657.59	3.25	0	75.39	0	0.02	0	0	12.7	0	0	0	0	0	0	9.2	9.2
	Inverter	MV1-7	364925	4905782	2	0	0	97.3	97.3	1	1866.73	3.25	0	76.42	0	0.09	0	0	13.18	0	0	0	0	0	0	7.62	7.62
	Inverter	MV2-4	365586	4906624	2	0	0	100.3	100.3	1	2818.11	3.25	0	80	0	0.33	0	0	15.05	0	0	0	0	0	0	4.94	4.94

Inverter	MV2-3	365820	4906641	2	0	0	100.3	100.3	1	2908.65	3.25	0	80.27	0	0.34	0	0	15.21	0	0	0	0	0	0	4.48	4.48
Inverter	MV2-1	365842	4906816	2	0	0	97.3	97.3	1	3080.41	3.25	0	80.77	0	0.38	0	0	15.51	0	0	0	0	0	0	0.65	0.65
Inverter	MV3-18	367752	4907412	2	0	0	100.3	100.3	1	4577.61	3.25	0	84.21	0	0.6	0	0	17.95	0	0	0	0	0	0	-2.45	-2.45
Inverter	MV3-12	367668	4907594	2	0	0	100.3	100.3	1	4665.67	3.25	0	84.38	0	0.61	0	0	18.08	0	0	0	0	0	0	-2.76	-2.76
Inverter	MV3-13	367963	4907577	2	0	0	100.3	100.3	1	4840.21	3.25	0	84.7	0	0.63	0	0	18.34	0	0	0	0	0	0	-3.36	-3.36
Inverter	MV3-17	368178	4907472	2	0	0	100.3	100.3	1	4907.17	3.25	0	84.82	0	0.63	0	0	18.44	0	0	0	0	0	0	-3.58	-3.58
Inverter	MV3-21	368478	4907206	2	0	0	100.3	100.3	1	4937.91	3.25	0	84.87	0	0.64	0	0	18.49	0	0	0	0	0	0	-3.68	-3.68
Inverter	MV3-19	368357	4907347	2	0	0	100.3	100.3	1	4944.91	3.25	0	84.88	0	0.64	0	0	18.5	0	0	0	0	0	0	-3.71	-3.71
Inverter	MV3-7	367945	4907754	2	0	0	100.3	100.3	1	4963.84	3.25	0	84.92	0	0.64	0	0	18.53	0	0	0	0	0	0	-3.77	-3.77
Inverter	MV3-15	368357	4907477	2	0	0	100.3	100.3	1	5035.88	3.25	0	85.04	0	0.65	0	0	18.63	0	0	0	0	0	0	-4.01	-4.01
Inverter	MV3-10	368167	4907669	2	0	0	100.3	100.3	1	5044.23	3.25	0	85.06	0	0.65	0	0	18.65	0	0	0	0	0	0	-4.03	-4.03
Inverter	MV3-3	367939	4907927	2	0	0	100.3	100.3	1	5094.94	3.25	0	85.14	0	0.65	0	0	18.72	0	0	0	0	0	0	-4.2	-4.2
Inverter	MV3-16	368514	4907475	2	0	0	100.3	100.3	1	5146.83	3.25	0	85.23	0	0.65	0	0	18.79	0	0	0	0	0	0	-4.37	-4.37
Inverter	MV3-11	368346	4907662	2	0	0	100.3	100.3	1	5160.63	3.25	0	85.25	0	0.66	0	0	18.81	0	0	0	0	0	0	-4.41	-4.41
Inverter	MV3-6	368162	4907834	2	0	0	100.3	100.3	1	5164.78	3.25	0	85.26	0	0.66	0	0	18.82	0	0	0	0	0	0	-4.43	-4.43
Inverter	MV3-20	368689	4907317	2	0	0	100.3	100.3	1	5169.59	3.25	0	85.27	0	0.66	0	0	18.83	0	0	0	0	0	0	-4.44	-4.44
Inverter	MV3-14	368684	4907498	2	0	0	100.3	100.3	1	5286.61	3.25	0	85.46	0	0.67	0	0	19	0	0	0	0	0	0	-4.81	-4.81
Inverter	MV3-9	368512	4907703	2	0	0	100.3	100.3	1	5305.47	3.25	0	85.49	0	0.67	0	0	19.02	0	0	0	0	0	0	-4.87	-4.87
Inverter	MV3-8	368680	4907712	2	0	0	100.3	100.3	1	5430.86	3.25	0	85.7	0	0.68	0	0	19.2	0	0	0	0	0	0	-5.26	-5.26
Gardiner Substation	G_Sub	366586.3	4903349.9	2.5	0	0	90.8	90.8	1	1882.5	4.25	0	76.49	0	0.86	3.98	0.31	4.17	0	0	0	0	0	0	5.28	5.28
Inverter	MV6-3	370207	4907140	2	0	0	100.3	100.3	1	6299.88	3.25	0	86.99	0	0.71	0	0	20.4	0	0	0	0	0	0	-7.78	-7.78
Inverter	MV6-2	370085	4907339	2	0	0	100.3	100.3	1	6301.06	3.25	0	86.99	0	0.71	0	0	20.4	0	0	0	0	0	0	-7.79	-7.79
Inverter	MV4-7	369035	4909001	2	0	0	100.3	100.3	1	6619.51	3.25	0	87.42	0	0.71	0	0	20.81	0	0	0	0	0	0	-8.63	-8.63
Inverter	MV4-11	369264	4908855	2	0	0	100.3	100.3	1	6659.67	3.25	0	87.47	0	0.71	0	0	20.87	0	0	0	0	0	0	-8.74	-8.74
Inverter	MV4-10	369312	4908858	2	0	0	100.3	100.3	1	6694.21	3.25	0	87.51	0	0.71	0	0	20.91	0	0	0	0	0	0	-8.83	-8.83
Inverter	MV4-8	369256	4909001	2	0	0	100.3	100.3	1	6763.29	3.25	0	87.6	0	0.71	0	0	21	0	0	0	0	0	0	-9	-9
Inverter	MV4-4	369027	4909199	2	0	0	100.3	100.3	1	6767.67	3.25	0	87.61	0	0.71	0	0	21	0	0	0	0	0	0	-9.02	-9.02
Inverter	MV4-9	369289	4909001	2	0	0	100.3	100.3	1	6785.11	3.25	0	87.63	0	0.71	0	0	21.03	0	0	0	0	0	0	-9.06	-9.06
Inverter	MV4-6	369243	4909192	2	0	0	100.3	100.3	1	6899.54	3.25	0	87.78	0	0.71	0	0	21.17	0	0	0	0	0	0	-9.35	-9.35
Inverter	MV4-1	369011	4909397	2	0	0	100.3	100.3	1	6913.45	3.25	0	87.79	0	0.71	0	0	21.19	0	0	0	0	0	0	-9.38	-9.38
Inverter	MV4-5	369289	4909199	2	0	0	100.3	100.3	1	6934.63	3.25	0	87.82	0	0.71	0	0	21.22	0	0	0	0	0	0	-9.44	-9.44
Inverter	MV4-3	369229	4909397	2	0	0	100.3	100.3	1	7048.6	3.25	0	87.96	0	0.71	0	0	21.36	0	0	0	0	0	0	-9.72	-9.72
Inverter	MV5-5	370015	4908690	2	0	0	100.3	100.3	1	7073.23	3.25	0	87.99	0	0.71	0	0	21.39	0	0	0	0	0	0	-9.78	-9.78
Inverter	MV4-2	369272	4909397	2	0	0	100.3	100.3	1	7075.74	3.25	0	88	0	0.71	0	0	21.39	0	0	0	0	0	0	-9.78	-9.78
Inverter	MV5-2	370006	4908853	2	0	0	100.3	100.3	1	7177.62	3.25	0	88.12	0	0.7	0	0	21.52	0	0	0	0	0	0	-10.03	-10.03
Inverter	MV5-4	370324	4908707	2	0	0	100.3	100.3	1	7315.48	3.25	0	88.28	0	0.7	0	0	21.69	0	0	0	0	0	0	-10.36	-10.36
Inverter	MV5-3	370231	4908851	2	0	0	100.3	100.3	1	7341.34	3.25	0	88.32	0	0.7	0	0	21.72	0	0	0	0	0	0	-10.42	-10.42
Inverter	MV5-1	370020	4909142	2	0	0	100.3	100.3	1	7389.13	3.25	0	88.37	0	0.7	0	0	21.78	0	0	0	0	0	0	-10.54	-10.54
Inverter	MV1-3	364440	4906039	2	0	0	89.1	89.1	1	2148.07	3.25	0	77.64	0	0.94	0	0	8.29	0	0	0	0	0	0	2.19	2.19
Inverters	G_Inv1	366526.4	4903225.8	2	0	0	87.7	87.7	1	1867.99	3.25	0	76.43	0	2.57	0	0	2.48	0	0	0	0	0	0	6.18	6.18
Inverters	G_Inv3	366583.7	4903091.4	2	0	0	87.7	87.7	1	1973.84	3.25	0	76.91	0	2.58	0	0	2.6	0	0	0	0	0	0	5.57	5.57
Inverters	G_Inv2	366676.9	4903239.1	2	0	0	87.7	87.7	1	2003.93	3.25	0	77.04	0	2.58	0	0	2.64	0	0	0	0	0	0	5.4	5.4
Inverters	G_Inv5	366638.5	4902958.1	2	0	0	87.7	87.7	1	2081.85	3.25	0	77.37	0	2.59	0	0	2.73	0	0	0	0	0	0	4.97	4.97
Inverters	G_Inv4	366732.8	4903105	2	0	0	87.7	87.7	1	2104.79	3.25	0	77.46	0	2.6	0	0	2.76	0	0	0	0	0	0	4.84	4.84
Inverter	MV6-1	370235	4907364	2	0	0	97.3	97.3	1	6440.9	3.25	0	87.18	0	0.71	0	0	20.58	0	0	0	0	0	0	-11.16	-11.16
Inverters	G_Inv7	366694.6	4902824.7	2	0	0	87.7	87.7	1	2195.18	3.25	0	77.83	0	2.61	0	0	2.86	0	0	0	0	0	0	4.36	4.36
Inverters	G_Inv6	366788.5	4902972	2	0	0	87.7	87.7	1	2209.96	3.25	0	77.89	0	2.61	0	0	2.88	0	0	0	0	0	0	4.28	4.28
Inverters	G_Inv9	366750.9	4902691.8	2	0	0	87.7	87.7	1	2311.92	3.25	0	78.28	0	2.62	0	0	3	0	0	0	0	0	0	3.76	3.76
Inverters	G_Inv8	366844.5	4902838.5	2	0	0	87.7	87.7	1	2319.82	3.25	0	78.31	0	2.62	0	0	3.01	0	0	0	0	0	0	3.72	3.72
DSTATCOM - 10 MVAR #2	DSAT2	369403	4908757	2.5	0	0	96.6	96.6	1	6682.52	3.5	0	87.5	0	3.82	0	0	4.16	0	0	0	0	0	0	1.15	1.15
DSTATCOM - 10 MVAR #1	DSAT1	369437	4908757	2.5	0	0	96.6	96.6	1	6706.02	3.5	0	87.53	0	3.82	0	0	4.17	0	0	0	0	0	0	1.11	1.11
Inverters	G_Inv10	366900.7	4902704.8	2	0	0	87.7	87.7	1	2433.62	3.25	0	78.73	0	2.64	0	0	3.14	0	0	0	0	0	0	3.16	3.16
Inverter	MV2-2	365977	4906654	2	0	0	89.1	89.1	1	2979.68	3.25	0	80.48	0	1.14	0	0	9.59	0	0	0	0	0	0	-2.15	-2.15
SubstationTransformer	W_ST	369711.17	4906112.3	2.5	0	0	92	92	1	5385.38	4.25	0	85.62	0	1.73	2.24	0.27	9.07	0	0	0	0	0	0	-6.69	-6.69
Inverter	MV3-22	368656	4907142	2	0	0	89.1	89.1	1	5030.93	3.25	0	85.03	0	1.65	0	0	12.5	0	0	0	0	0	0	-10.13	-10.13
Westbrook Inverter Enclosur	W_INV2	369374	4906388	2	0	0	89.1	89.1	1	5204.22	3.25	0	85.33	0	1.69	0	0	12.74	0	0	0	0	0	0	-10.69	-10.69
Westbrook Inverter Enclosur	W_INV3	369508	4906164	2	0	0	89.1	89.1	1	5222.48	3.25	0	85.36	0	1.69	0	0	12.76	0	0	0	0	0	0	-10.75	-10.75
Inverter	MV3-1	368156	4907976	2	0	0	89.1	89.1	1	5269.37	3.25	0	85.44	0	1.71	0	0	12.82	0	0	0	0	0	0	-10.9	-10.9
Inverter	MV3-5	368340	4907843	2	0	0	89.1	89.1	1	5289.31	3.25	0	85.47	0	1.71	0	0	12.85	0	0	0	0	0	0	-10.97	-10.97
Westbrook Inverter Enclosur	W_INV4	369673	4906164	2	0	0	89.1	89.1	1	5371.94	3.25	0	85.6	0	1.73	0	0	12.96	0	0	0	0	0	0	-11.23	-11.23
Inverter	MV3-4	368502	4907925	2	0	0	89.1	89.1	1	5459.18	3.25	0	85.74	0	1.75	0	0	13.07	0	0	0	0	0	0	-11.51	-11.51
Inverter	MV3-2	368671	4907928	2	0	0	89.1	89.1	1	5577.56	3.25	0	85.93	0	1.78	0	0	13.22	0	0	0	0	0	0	-11.88	-11.88
Westbrook Inverter Enclosur	W_INV7	369780	4906417	2	0	0	89.1	89.1	1	5577.92	3.25	0	85.93	0	1.78	0	0	13.22	0	0	0	0	0	0	-11.88	-11.88
Westbrook Inverter Enclosur	W_INV5	369719	4906574	2	0	0	89.1	89.1	1	5596.17	3.25	0	85.96	0	1.79	0	0	13.25	0	0	0	0	0	0	-11.93	-11.93
Westbrook Inverter Enclosur	W_INV6	369875	4906578	2	0	0	89.1	89.1	1	5735.84	3.25	0	86.17	0	1.82	0	0	13.43	0	0	0	0	0	0	-12.36	-12.36
Fixed Reactor Bank 1	FRB1	369378	4908755	6	0	0	89.8	89.8	1	6663.84	5.25	0	87.47	0	-0.33	0	0	10.42	0	0	0	0	0	0	-7.79	-7.79
Fixed Reactor Bank 2	FRB2	369464	4908755	6	0	0	89.8	89.8	1	6723.31	5.25	0	87.55	0	-0.32	0	0	10.48	0	0	0	0	0	0	-7.94	-7.94
Inverter	MV4-15	369176	4908481	2	0	0	89.1	89.1	1	6326.17	3.25	0	87.02	0	1.97	0	0	14.17	0	0	0	0	0	0	-14.1	-14.1
Inverter	MV4-13	369051	4908605	2	0	0	89.1	89.1	1	6331.4	3.25	0	87.03	0	1.97	0	0	14.18	0	0	0	0	0	0	-14.11	-14.11
Inverter	MV4-14	369176	4908507	2	0	0	89.1	89.1	1	6344.94	3.25	0	87.05	0	1.97	0	0	14.19	0	0	0	0	0	0	-14.15	-14.15
Inverter	MV4-12	369043	4908803	2	0	0	89.1	89.1	1	6474.02	3.25	0	87.22	0	2	0	0	14.35	0	0	0	0	0	0	-14.52	-14.52
Inverter	MV5-6	369982	4908507	2	0	0	89.1	89.1	1	6926.37	3.25	0	87.81	0	2.11	0	0	14.9	0	0	0	0	0	0	-15.76	-15.76
Westbrook Inverter Enclosur	W_INV1	369409	4906578	2	0	0	86.1	86.1	1	5327.27	3.25	0	85.53	0	1.72	0	0	12.9	0	0	0	0	0	0	-14.09	-14.09
Inverter	MV6-4	370250	4906966	2	0	0	86.1	86.1	1	6250.26	3.25	0	86.92	0	1.95	0	0	14.08	0	0	0	0	0	0	-16.88	-16.88

Inverter Transformer	MV1-14 T	365157	4905049	2	0	0	69.4	69.4	1	1186.48	3.25	0	72.49	0	1.81	0	0	4.06	0	0	0	0	0	0	-9.01	-9.01
Inverter Transformer	MV1-13 T	364725	4905241	2	0	0	69.4	69.4	1	1322.71	3.25	0	73.43	0	1.89	0	0	4.23	0	0	0	0	0	0	-10.19	-10.19
Inverter Transformer	MV1-10 T	365010	4905564	2	0	0	69.4	69.4	1	1658.37	3.25	0	75.39	0	2.04	0	0	4.61	0	0	0	0	0	0	-12.69	-12.69
Inverter Transformer	MV1-7 T	364919	4905782	2	0	0	69.4	69.4	1	1866.31	3.25	0	76.42	0	2.12	0	0	4.83	0	0	0	0	0	0	-14.02	-14.02
Westbrook Inverter Transfor	W_INVTR1	369403	4906578	2	0	0	78.2	78.2	1	5322.07	3.25	0	85.52	0	-3.24	0	0	2.52	0	0	0	0	0	0	-6.56	-6.56
Westbrook Inverter Transfor	W_INVTR2	369368	4906388	2	0	0	77.3	77.3	1	5198.94	3.25	0	85.32	0	-3.22	0	0	2.48	0	0	0	0	0	0	-7.24	-7.24
Westbrook Inverter Transfor	W_INVTR3	369514	4906164	2	0	0	77.3	77.3	1	5227.9	3.25	0	85.37	0	-3.22	0	0	2.49	0	0	0	0	0	0	-7.29	-7.29
Westbrook Inverter Transfor	W_INVTR4	369679	4906164	2	0	0	77.3	77.3	1	5377.39	3.25	0	85.61	0	-3.25	0	0	2.54	0	0	0	0	0	0	-7.56	-7.56
Westbrook Inverter Transfor	W_INVTR7	369786	4906417	2	0	0	77.3	77.3	1	5583.28	3.25	0	85.94	0	-3.29	0	0	2.61	0	0	0	0	0	0	-7.91	-7.91
Westbrook Inverter Transfor	W_INVTR5	369725	4906574	2	0	0	77.3	77.3	1	5601.45	3.25	0	85.97	0	-3.29	0	0	2.61	0	0	0	0	0	0	-7.94	-7.94
Westbrook Inverter Transfor	W_INVTR6	369881	4906578	2	0	0	77.3	77.3	1	5741.15	3.25	0	86.18	0	-3.32	0	0	2.66	0	0	0	0	0	0	-8.18	-8.18
Inverter Transformer	MV2-1 T	365836	4906816	2	0	0	69.4	69.4	1	3078.37	3.25	0	80.77	0	2.53	0	0	5.95	0	0	0	0	0	0	-19.9	-19.9
Inverter Transformer	MV1-15 T	365309	4904994	2	0	0	56.1	56.1	1	1191.87	3.25	0	72.52	0	0.08	0	0	5.34	0	0	0	0	0	0	-21.88	-21.88
Inverter Transformer	MV6-4 T	370244	4906966	2	0	0	69.4	69.4	1	6245.02	3.25	0	86.91	0	3.22	0	0	8.17	0	0	0	0	0	0	-28.95	-28.95
Inverter Transformer	MV6-1 T	370230	4907364	2	0	0	69.4	69.4	1	6436.68	3.25	0	87.17	0	3.25	0	0	8.28	0	0	0	0	0	0	-29.35	-29.35
Inverter Transformer	MV1-12 T	365044	4905386	2	0	0	56.1	56.1	1	1487.47	3.25	0	74.45	0	0.19	0	0	5.99	0	0	0	0	0	0	-24.58	-24.58
Inverter Transformer	MV1-11 T	364649	4905414	2	0	0	56.1	56.1	1	1500.85	3.25	0	74.53	0	0.2	0	0	6.02	0	0	0	0	0	0	-24.69	-24.69
Inverter Transformer	MV1-8 T	364782	4905647	2	0	0	56.1	56.1	1	1727.03	3.25	0	75.75	0	0.29	0	0	6.49	0	0	0	0	0	0	-26.47	-26.47
Inverter Transformer	MV1-9 T	364555	4905646	2	0	0	56.1	56.1	1	1742.22	3.25	0	75.82	0	0.3	0	0	6.53	0	0	0	0	0	0	-26.59	-26.59
Inverter Transformer	MV1-6 T	364482	4905835	2	0	0	56.1	56.1	1	1939.96	3.25	0	76.76	0	0.38	0	0	6.92	0	0	0	0	0	0	-28	-28
Inverter Transformer	MV1-5 T	364676	4905892	2	0	0	56.1	56.1	1	1975.42	3.25	0	76.91	0	0.39	0	0	7	0	0	0	0	0	0	-28.24	-28.24
Inverter Transformer	MV1-4 T	364821	4905918	2	0	0	56.1	56.1	1	1998.21	3.25	0	77.01	0	0.4	0	0	7.04	0	0	0	0	0	0	-28.4	-28.4
Inverter Transformer	MV1-2 T	364759	4906063	2	0	0	56.1	56.1	1	2143.26	3.25	0	77.62	0	0.46	0	0	7.32	0	0	0	0	0	0	-29.35	-29.35
Inverter Transformer	MV1-3 T	364435	4906039	2	0	0	56.1	56.1	1	2148.9	3.25	0	77.64	0	0.47	0	0	7.33	0	0	0	0	0	0	-29.39	-29.39
Inverter Transformer	MV1-1 T	364721	4906166	2	0	0	56.1	56.1	1	2247.13	3.25	0	78.03	0	0.51	0	0	7.52	0	0	0	0	0	0	-30	-30
Inverter Transformer	MV2-4 T	365590	4906628	2	0	0	56.1	56.1	1	2823.08	3.25	0	80.01	0	0.75	0	0	8.56	0	0	0	0	0	0	-33.27	-33.27
Inverter Transformer	MV2-3 T	365814	4906641	2	0	0	56.1	56.1	1	2906.53	3.25	0	80.27	0	0.79	0	0	8.71	0	0	0	0	0	0	-33.71	-33.71
Inverter Transformer	MV2-2 T	365982	4906654	2	0	0	56.1	56.1	1	2981.68	3.25	0	80.49	0	0.82	0	0	8.84	0	0	0	0	0	0	-34.09	-34.09
Inverter Transformer	MV3-18 T	367757	4907412	2	0	0	56.1	56.1	1	4580.84	3.25	0	84.22	0	1.47	0	0	11.29	0	0	0	0	0	0	-40.92	-40.92
Inverter Transformer	MV3-12 T	367674	4907594	2	0	0	56.1	56.1	1	4669.37	3.25	0	84.39	0	1.5	0	0	11.41	0	0	0	0	0	0	-41.24	-41.24
Inverter Transformer	MV3-13 T	367958	4907577	2	0	0	56.1	56.1	1	4836.94	3.25	0	84.69	0	1.57	0	0	11.64	0	0	0	0	0	0	-41.84	-41.84
Inverter Transformer	MV3-17 T	368183	4907472	2	0	0	56.1	56.1	1	4910.62	3.25	0	84.82	0	1.59	0	0	11.74	0	0	0	0	0	0	-42.09	-42.09
Inverter Transformer	MV3-19 T	368352	4907347	2	0	0	56.1	56.1	1	4941.31	3.25	0	84.88	0	1.6	0	0	11.78	0	0	0	0	0	0	-42.2	-42.2
Inverter Transformer	MV3-21 T	368484	4907206	2	0	0	56.1	56.1	1	4942.39	3.25	0	84.88	0	1.6	0	0	11.78	0	0	0	0	0	0	-42.2	-42.2
Inverter Transformer	MV3-7 T	367951	4907754	2	0	0	56.1	56.1	1	4967.65	3.25	0	84.92	0	1.61	0	0	11.81	0	0	0	0	0	0	-42.29	-42.29
Inverter Transformer	MV3-15 T	368351	4907477	2	0	0	56.1	56.1	1	5031.63	3.25	0	85.03	0	1.64	0	0	11.9	0	0	0	0	0	0	-42.51	-42.51
Inverter Transformer	MV3-22 T	368661	4907142	2	0	0	56.1	56.1	1	5034.77	3.25	0	85.04	0	1.64	0	0	11.9	0	0	0	0	0	0	-42.52	-42.52
Inverter Transformer	MV3-10 T	368162	4907669	2	0	0	56.1	56.1	1	5040.89	3.25	0	85.05	0	1.64	0	0	11.91	0	0	0	0	0	0	-42.54	-42.54
Inverter Transformer	MV3-3 T	367944	4907927	2	0	0	56.1	56.1	1	5098.03	3.25	0	85.15	0	1.66	0	0	11.98	0	0	0	0	0	0	-42.73	-42.73
Inverter Transformer	MV3-16 T	368509	4907475	2	0	0	56.1	56.1	1	5143.21	3.25	0	85.22	0	1.68	0	0	12.04	0	0	0	0	0	0	-42.88	-42.88
Inverter Transformer	MV3-11 T	368340	4907662	2	0	0	56.1	56.1	1	5156.5	3.25	0	85.25	0	1.68	0	0	12.06	0	0	0	0	0	0	-42.93	-42.93
Inverter Transformer	MV3-6 T	368156	4907834	2	0	0	56.1	56.1	1	5160.87	3.25	0	85.25	0	1.68	0	0	12.06	0	0	0	0	0	0	-42.94	-42.94
Inverter Transformer	MV3-20 T	368683	4907317	2	0	0	56.1	56.1	1	5165.07	3.25	0	85.26	0	1.68	0	0	12.07	0	0	0	0	0	0	-42.96	-42.96
Inverter Transformer	MV3-1 T	368150	4907976	2	0	0	56.1	56.1	1	5265.54	3.25	0	85.43	0	1.72	0	0	12.2	0	0	0	0	0	0	-43.29	-43.29
Inverter Transformer	MV3-14 T	368678	4907498	2	0	0	56.1	56.1	1	5282.19	3.25	0	85.46	0	1.73	0	0	12.22	0	0	0	0	0	0	-43.34	-43.34
Inverter Transformer	MV3-5 T	368335	4907843	2	0	0	56.1	56.1	1	5285.96	3.25	0	85.46	0	1.73	0	0	12.23	0	0	0	0	0	0	-43.36	-43.36
Inverter Transformer	MV3-9 T	368517	4907703	2	0	0	56.1	56.1	1	5308.98	3.25	0	85.5	0	1.73	0	0	12.25	0	0	0	0	0	0	-43.43	-43.43
Inverter Transformer	MV3-8 T	368685	4907712	2	0	0	56.1	56.1	1	5434.44	3.25	0	85.7	0	1.78	0	0	12.41	0	0	0	0	0	0	-43.84	-43.84
Inverter Transformer	MV3-4 T	368507	4907925	2	0	0	56.1	56.1	1	5462.58	3.25	0	85.75	0	1.79	0	0	12.45	0	0	0	0	0	0	-43.93	-43.93
Inverter Transformer	MV3-2 T	368677	4907928	2	0	0	56.1	56.1	1	5581.73	3.25	0	85.94	0	1.83	0	0	12.6	0	0	0	0	0	0	-44.3	-44.3
Inverter Transformer	MV6-3 T	370202	4907140	2	0	0	56.1	56.1	1	6295.58	3.25	0	86.98	0	2.06	0	0	13.45	0	0	0	0	0	0	-46.43	-46.43
Inverter Transformer	MV6-2 T	370091	4907339	2	0	0	56.1	56.1	1	6306.1	3.25	0	87	0	2.06	0	0	13.46	0	0	0	0	0	0	-46.46	-46.46
Inverter Transformer	MV4-15 T	369170	4908481	2	0	0	56.1	56.1	1	6322.01	3.25	0	87.02	0	2.06	0	0	13.48	0	0	0	0	0	0	-46.5	-46.5
Inverter Transformer	MV4-13 T	369057	4908605	2	0	0	56.1	56.1	1	6335.44	3.25	0	87.04	0	2.07	0	0	13.49	0	0	0	0	0	0	-46.54	-46.54
Inverter Transformer	MV4-14 T	369182	4908507	2	0	0	56.1	56.1	1	6349.09	3.25	0	87.05	0	2.07	0	0	13.51	0	0	0	0	0	0	-46.58	-46.58
Inverter Transformer	MV4-12 T	369049	4908803	2	0	0	56.1	56.1	1	6477.97	3.25	0	87.23	0	2.11	0	0	13.66	0	0	0	0	0	0	-46.94	-46.94
Inverter Transformer	MV4-7 T	369040	4909001	2	0	0	56.1	56.1	1	6622.72	3.25	0	87.42	0	2.15	0	0	13.82	0	0	0	0	0	0	-47.33	-47.33
Inverter Transformer	MV4-11 T	369269	4908855	2	0	0	56.1	56.1	1	6663.03	3.25	0	87.47	0	2.17	0	0	13.86	0	0	0	0	0	0	-47.44	-47.44
Inverter Transformer	MV4-10 T	369307	4908858	2	0	0	56.1	56.1	1	6690.83	3.25	0	87.51	0	2.17	0	0	13.89	0	0	0	0	0	0	-47.52	-47.52
Inverter Transformer	MV4-8 T	369262	4909001	2	0	0	56.1	56.1	1	6767.25	3.25	0	87.61	0	2.19	0	0	13.98	0	0	0	0	0	0	-47.72	-47.72
Inverter Transformer	MV4-4 T	369033	4909199	2	0	0	56.1	56.1	1	6771.43	3.25	0	87.61	0	2.2	0	0	13.98	0	0	0	0	0	0	-47.73	-47.73
Inverter Transformer	MV4-9 T	369284	4909001	2	0	0	56.1	56.1	1	6781.8	3.25	0	87.63	0	2.2	0	0	13.99	0	0	0	0	0	0	-47.76	-47.76
Inverter Transformer	MV4-6 T	369249	4909192	2	0	0	56.1	56.1	1	6903.41	3.25	0	87.78	0	2.23	0	0	14.13	0	0	0	0	0	0	-48.08	-48.08
Inverter Transformer	MV4-1 T	369017	4909397	2	0	0	56.1	56.1	1	6917.11	3.25	0	87.8	0	2.24	0	0	14.14	0	0	0	0	0	0	-48.12	-48.12
Inverter Transformer	MV5-6 T	369987	4908507	2	0	0	56.1	56.1	1	6930.12	3.25	0	87.81	0	2.24	0	0	14.15	0	0	0	0	0	0	-48.15	-48.15
Inverter Transformer	MV4-5 T	369283	4909199	2	0	0	56.1	56.1	1	6930.74	3.25	0	87.82	0	2.24	0	0	14.16	0	0	0	0	0	0	-48.15	-48.15
Inverter Transformer	MV4-3 T	369234	4909397	2	0	0	56.1	56.1	1	7051.75	3.25	0	87.97	0	2.27	0	0	14.29	0	0	0	0	0	0	-48.47	-48.47
Inverter Transformer	MV4-2 T	369267	4909397	2	0	0	56.1	56.1	1	7072.58	3.25	0	87.99	0	2.28	0	0	14.31	0	0	0	0	0	0	-48.52	-48.52
Inverter Transformer	MV5-5 T	370021	4908690	2	0	0	56.1	56.1	1	7077.66	3.25	0	88	0	2.28	0	0	14.31	0	0	0	0	0	0	-48.53	-48.53
Inverter Transformer	MV5-2 T	370011	4908853	2	0	0	56.1	56.1	1	7181.25	3.25	0	88.12	0	2.31	0	0	14.42	0	0	0	0	0	0	-48.8	-48.8
Inverter Transformer	MV5-4 T	370330	4908707	2	0	0	56.1	56.1	1	7320.01	3.25	0	88.29	0	2.34	0	0	14.57	0	0	0	0	0	0	-49.14	-49.14
Inverter Transformer	MV5-3 T	370237	4908851	2	0	0	56.1	56.1	1	7345.79	3.25	0	88.32	0	2.35	0	0	14.6	0	0	0	0	0	0	-49.21	-49.21
Inverter Transformer	MV5-1 T	370015	4909142	2	0	0	56.1	56.1	1	7385.59	3.25	0	88.37	0	2.36	0	0	14.64	0	0	0	0	0	0	-49.31	-49.31
Line Reactor	NGR	369421	4908787.5	5	0	0	45.4	45.4	1	6717.02	5.25	0	87.54	0	3.22	1.37	0.09	2.75	0	0	0	0	0	0	-49.53	-49.53

Limit. Valu 0 0
Level D/N: 24.4997 24.4997

Receiver: Existing Noise Receptor
ID: G-117
X: 365182.2
Y: 4904745
Z: 4.5
Ground: 0

ISO	Description	ID	X	Y	Z	Ground	ReflOrd	LxT	LxN	L/A	Dist.	hm	Freq	Adiv	K0b	Agr	Abar	z	Aatm	Afol	Ahous	Cmet	CmetN	Dc	RL	LtotT	LtotN
	Inverter	MV1-15	365315	4904994	2	0	0	100.3	100.3	1	282.21	3.25	0	60.01	0	-0.64	0	0	6.13	0	0	0	0	0	0	34.81	34.81
	Inverter	MV1-14	365163	4905049	2	0	0	97.3	97.3	1	304.62	3.25	0	60.68	0	-0.65	0	0	6.46	0	0	0	0	0	0	30.83	30.83
	Inverter	MV1-12	365038	4905386	2	0	0	100.3	100.3	1	657.02	3.25	0	67.35	0	-0.44	0	0	9.52	0	0	0	0	0	0	23.88	23.88
	Inverter	MV1-11	364655	4905414	2	0	0	100.3	100.3	1	851.77	3.25	0	69.61	0	-0.32	0	0	10.39	0	0	0	0	0	0	20.64	20.64
	Inverter	MV1-13	364731	4905241	2	0	0	97.3	97.3	1	670.52	3.25	0	67.53	0	-0.43	0	0	9.59	0	0	0	0	0	0	20.62	20.62
	Inverter	MV1-8	364788	4905647	2	0	0	100.3	100.3	1	984.38	3.25	0	70.86	0	-0.25	0	0	10.86	0	0	0	0	0	0	18.84	18.84
	Inverter	MV1-9	364561	4905646	2	0	0	100.3	100.3	1	1094.39	3.25	0	71.78	0	-0.2	0	0	11.21	0	0	0	0	0	0	17.52	17.52
	Inverter	MV1-10	365004	4905564	2	0	0	97.3	97.3	1	838.17	3.25	0	69.47	0	-0.33	0	0	10.33	0	0	0	0	0	0	17.84	17.84
	Inverter	MV1-4	364815	4905918	2	0	0	100.3	100.3	1	1229.13	3.25	0	72.79	0	-0.14	0	0	11.61	0	0	0	0	0	0	16.05	16.05
	Inverter	MV1-5	364671	4905892	2	0	0	100.3	100.3	1	1255.76	3.25	0	72.98	0	-0.13	0	0	11.68	0	0	0	0	0	0	15.78	15.78
	Inverter	MV1-6	364477	4905835	2	0	0	100.3	100.3	1	1298.23	3.25	0	73.27	0	-0.11	0	0	11.8	0	0	0	0	0	0	15.36	15.36
	Inverter	MV1-2	364753	4906063	2	0	0	100.3	100.3	1	1386.13	3.25	0	73.84	0	-0.08	0	0	12.03	0	0	0	0	0	0	14.52	14.52
	Inverter	MV1-1	364715	4906166	2	0	0	100.3	100.3	1	1495.84	3.25	0	74.5	0	-0.04	0	0	12.31	0	0	0	0	0	0	13.54	13.54
	Inverter	MV1-7	364925	4905782	2	0	0	97.3	97.3	1	1068.42	3.25	0	71.57	0	-0.21	0	0	11.13	0	0	0	0	0	0	14.82	14.82
	Sol_Luce Substation	S_Substation	369426	4908792	3.5	0	0	112.1	112.1	1	5864.13	5.25	0	86.36	0	1.13	2.67	0.25	9.6	0	0	0	0	0	0	12.32	12.32
	Inverter	MV2-4	365586	4906624	2	0	0	100.3	100.3	1	1921.9	3.25	0	76.67	0	0.11	0	0	13.3	0	0	0	0	0	0	10.24	10.24
	Inverter	MV2-3	365820	4906641	2	0	0	100.3	100.3	1	2000.4	3.25	0	77.02	0	0.13	0	0	13.46	0	0	0	0	0	0	9.7	9.7
	Inverter	MV2-1	365842	4906816	2	0	0	97.3	97.3	1	2173.56	3.25	0	77.74	0	0.18	0	0	13.82	0	0	0	0	0	0	5.57	5.57
	Inverter	MV3-18	367752	4907412	2	0	0	100.3	100.3	1	3703.62	3.25	0	82.37	0	0.48	0	0	16.57	0	0	0	0	0	0	0.89	0.89
	Inverter	MV3-12	367668	4907594	2	0	0	100.3	100.3	1	3781.01	3.25	0	82.55	0	0.5	0	0	16.7	0	0	0	0	0	0	0.57	0.57
	Inverter	MV3-13	367963	4907577	2	0	0	100.3	100.3	1	3969.01	3.25	0	82.97	0	0.52	0	0	17	0	0	0	0	0	0	-0.18	-0.18
	Inverter	MV3-17	368178	4907472	2	0	0	100.3	100.3	1	4051.09	3.25	0	83.15	0	0.53	0	0	17.13	0	0	0	0	0	0	-0.5	-0.5
	Inverter	MV3-7	367945	4907754	2	0	0	100.3	100.3	1	4084.99	3.25	0	83.22	0	0.54	0	0	17.18	0	0	0	0	0	0	-0.63	-0.63
	Inverter	MV3-19	368357	4907347	2	0	0	100.3	100.3	1	4104.85	3.25	0	83.27	0	0.54	0	0	17.22	0	0	0	0	0	0	-0.71	-0.71
	Inverter	MV3-21	368478	4907206	2	0	0	100.3	100.3	1	4113.25	3.25	0	83.28	0	0.54	0	0	17.23	0	0	0	0	0	0	-0.74	-0.74
	Inverter	MV3-10	368167	4907669	2	0	0	100.3	100.3	1	4178.37	3.25	0	83.42	0	0.55	0	0	17.33	0	0	0	0	0	0	-0.99	-0.99
	Inverter	MV3-15	368357	4907477	2	0	0	100.3	100.3	1	4188.46	3.25	0	83.44	0	0.55	0	0	17.35	0	0	0	0	0	0	-1.03	-1.03
	Inverter	MV3-3	367939	4907927	2	0	0	100.3	100.3	1	4210.12	3.25	0	83.49	0	0.56	0	0	17.38	0	0	0	0	0	0	-1.11	-1.11
	Inverter	MV3-6	368162	4907834	2	0	0	100.3	100.3	1	4291.99	3.25	0	83.65	0	0.57	0	0	17.51	0	0	0	0	0	0	-1.42	-1.42
	Inverter	MV3-11	368346	4907662	2	0	0	100.3	100.3	1	4303.32	3.25	0	83.68	0	0.57	0	0	17.53	0	0	0	0	0	0	-1.46	-1.46
	Inverter	MV3-16	368514	4907475	2	0	0	100.3	100.3	1	4307.41	3.25	0	83.68	0	0.57	0	0	17.53	0	0	0	0	0	0	-1.47	-1.47
	Inverter	MV3-20	368689	4907317	2	0	0	100.3	100.3	1	4348.89	3.25	0	83.77	0	0.57	0	0	17.6	0	0	0	0	0	0	-1.63	-1.63
	Inverter	MV3-9	368512	4907703	2	0	0	100.3	100.3	1	4453.91	3.25	0	83.97	0	0.59	0	0	17.76	0	0	0	0	0	0	-2.01	-2.01
	Inverter	MV3-14	368684	4907498	2	0	0	100.3	100.3	1	4454.39	3.25	0	83.98	0	0.59	0	0	17.76	0	0	0	0	0	0	-2.01	-2.01
	Inverter	MV3-8	368680	4907712	2	0	0	100.3	100.3	1	4586.69	3.25	0	84.23	0	0.6	0	0	17.96	0	0	0	0	0	0	-2.48	-2.48
	Inverter	MV1-3	364440	4906039	2	0	0	89.1	89.1	1	1491.74	3.25	0	74.47	0	0.79	0	0	7.19	0	0	0	0	0	0	6.6	6.6
	Inverter	MV6-2	370085	4907339	2	0	0	100.3	100.3	1	5546.74	3.25	0	85.88	0	0.68	0	0	19.37	0	0	0	0	0	0	-5.62	-5.62
	Inverter	MV6-3	370207	4907140	2	0	0	100.3	100.3	1	5566.39	3.25	0	85.91	0	0.68	0	0	19.39	0	0	0	0	0	0	-5.68	-5.68
	Inverter	MV4-7	369035	4909001	2	0	0	100.3	100.3	1	5740.87	3.25	0	86.18	0	0.69	0	0	19.64	0	0	0	0	0	0	-6.2	-6.2
	Inverter	MV4-11	369264	4908855	2	0	0	100.3	100.3	1	5792.51	3.25	0	86.26	0	0.7	0	0	19.71	0	0	0	0	0	0	-6.35	-6.35
	Inverter	MV4-10	369312	4908858	2	0	0	100.3	100.3	1	5828.55	3.25	0	86.31	0	0.7	0	0	19.76	0	0	0	0	0	0	-6.46	-6.46
	Inverter	MV4-4	369027	4909199	2	0	0	100.3	100.3	1	5883.93	3.25	0	86.39	0	0.7	0	0	19.83	0	0	0	0	0	0	-6.62	-6.62
	Inverter	MV4-8	369256	4909001	2	0	0	100.3	100.3	1	5891.47	3.25	0	86.4	0	0.7	0	0	19.85	0	0	0	0	0	0	-6.64	-6.64
	Inverter	MV4-9	369289	4909001	2	0	0	100.3	100.3	1	5914.33	3.25	0	86.44	0	0.7	0	0	19.88	0	0	0	0	0	0	-6.7	-6.7
	Gardiner Substation	G_Sub	366586.3	4903349.9	2.5	0	0	90.8	90.8	1	1979.34	4.25	0	76.93	0	0.82	3.64	0.27	4.33	0	0	0	0	0	0	5.05	5.05
	Inverter	MV4-6	369243	4909192	2	0	0	100.3	100.3	1	6022.12	3.25	0	86.59	0	0.71	0	0	20.02	0	0	0	0	0	0	-7.01	-7.01
	Inverter	MV4-1	369011	4909397	2	0	0	100.3	100.3	1	6025.02	3.25	0	86.6	0	0.71	0	0	20.03	0	0	0	0	0	0	-7.02	-7.02
	Inverter	MV4-5	369289	4909199	2	0	0	100.3	100.3	1	6058.38	3.25	0	86.65	0	0.71	0	0	20.07	0	0	0	0	0	0	-7.11	-7.11
	Inverter	MV4-3	369229	4909397	2	0	0	100.3	100.3	1	6165.85	3.25	0	86.8	0	0.71	0	0	20.22	0	0	0	0	0	0	-7.41	-7.41
	Inverter	MV4-2	369272	4909397	2	0	0	100.3	100.3	1	6194.16	3.25	0	86.84	0	0.71	0	0	20.25	0	0	0	0	0	0	-7.49	-7.49
	Inverter	MV5-5	370015	4908690	2	0	0	100.3	100.3	1	6238.51	3.25	0	86.9	0	0.71	0	0	20.31	0	0	0	0	0	0	-7.62	-7.62
	Inverter	MV5-2	370006	4908853	2	0	0	100.3	100.3	1	6335.99	3.25	0	87.04	0	0.71	0	0	20.44	0	0	0	0	0	0	-7.88	-7.88
	Inverter	MV5-4	370324	4908707	2	0	0	100.3	100.3	1	6491.19	3.25	0	87.25	0	0.71	0	0	20.65	0	0	0	0	0	0	-8.3	-8.3
	Inverter	MV5-3	370231	4908851	2	0	0	100.3	100.3	1	6507.66	3.25	0	87.27	0	0.71	0	0	20.67	0	0	0	0	0	0	-8.34	-8.34
	Inverter	MV5-1	370020	4909142	2	0	0	100.3	100.3	1	6537.42	3.25	0	87.31	0	0.71	0	0	20.71	0	0	0	0	0	0	-8.42	-8.42
	Inverter	MV2-2	365977	4906654	2	0	0	89.1	89.1	1	2067.85	3.25	0	77.31	0	0.92	0	0	8.16	0	0	0	0	0	0	2.67	2.67
	Inverter	MV6-1	370235	4907364	2	0	0	97.3	97.3	1	5691.22	3.25	0	86.1	0	0.69	0	0	19.57	0	0	0	0	0	0	-9.05	-9.05
	Inverters	G_Inv1	366526.4	4903225.8	2	0	0	87.7	87.7	1	2028.51	3.25	0	77.14	0	2.59	0	0	2.67	0	0	0	0	0	0	5.26	5.26
	DSTATCOM - 10 MVAR #2	DSAT2	369403	4908757	2.5	0	0	96.6	96.6	1	5823.34	3.5	0	86.3	0	3.76	0	0	3.75	0	0	0	0	0	0	2.81	2.81
	DSTATCOM - 10 MVAR #1	DSAT1	369437	4908757	2.5	0	0	96.6	96.6	1	5848.03	3.5	0	86.34	0	3.76	0	0	3.77	0	0	0	0	0	0	2.76	2.76
	Inverters	G_Inv2	366676.9	4903239.1	2	0	0	87.7	87.7	1	2121.76	3.25	0	77.53	0	2.6	0	0	2.78	0	0	0	0	0	0	4.75	4.75
	Inverters	G_Inv3	366583.7	4903091.4	2	0	0	87.7	87.7	1	2167.63	3.25	0	77.72	0	2.6	0	0	2.83	0	0	0	0	0	0	4.51	4.51
	Inverters	G_Inv4	366732.8	4903105	2	0	0	87.7	87.7	1	2256.98	3.25	0	78.07	0	2.61	0	0	2.93	0	0	0	0	0	0	4.04	4.04

Inverters	G_Inv5	366638.5	4902958.1	2	0	0	87.7	87.7	1	2305.17	3.25	0	78.25	0	2.62	0	0	2.99	0	0	0	0	0	0	3.8	3.8
Inverters	G_Inv6	366788.5	4902972	2	0	0	87.7	87.7	1	2392.43	3.25	0	78.58	0	2.63	0	0	3.09	0	0	0	0	0	0	3.36	3.36
Inverters	G_Inv7	366694.6	4902824.7	2	0	0	87.7	87.7	1	2444.36	3.25	0	78.76	0	2.64	0	0	3.15	0	0	0	0	0	0	3.11	3.11
Inverter Transformer	MV1-14 T	365157	4905049	2	0	0	69.4	69.4	1	305.05	3.25	0	60.69	0	0.77	0	0	2.4	0	0	0	0	0	0	5.5	5.5
Inverters	G_Inv8	366844.5	4902838.5	2	0	0	87.7	87.7	1	2529.42	3.25	0	79.06	0	2.65	0	0	3.24	0	0	0	0	0	0	2.71	2.71
Inverters	G_Inv9	366750.9	4902691.8	2	0	0	87.7	87.7	1	2583.88	3.25	0	79.25	0	2.65	0	0	3.31	0	0	0	0	0	0	2.46	2.46
Inverters	G_Inv10	366900.7	4902704.8	2	0	0	87.7	87.7	1	2667.52	3.25	0	79.52	0	2.66	0	0	3.4	0	0	0	0	0	0	2.07	2.07
SubstationTransformer	W_ST	369711.17	4906112.3	2.5	0	0	92	92	1	4730.86	4.25	0	84.5	0	1.57	2.4	0.28	8.3	0	0	0	0	0	0	-4.79	-4.79
Inverter	MV3-22	368656	4907142	2	0	0	89.1	89.1	1	4220.53	3.25	0	83.51	0	1.45	0	0	11.4	0	0	0	0	0	0	-7.29	-7.29
Inverter	MV3-1	368156	4907976	2	0	0	89.1	89.1	1	4391.22	3.25	0	83.85	0	1.49	0	0	11.63	0	0	0	0	0	0	-7.92	-7.92
Inverter	MV3-5	368340	4907843	2	0	0	89.1	89.1	1	4423.72	3.25	0	83.92	0	1.5	0	0	11.68	0	0	0	0	0	0	-8.03	-8.03
Westbrook Inverter Enclosur	W_INV2	369374	4906388	2	0	0	89.1	89.1	1	4502.29	3.25	0	84.07	0	1.52	0	0	11.79	0	0	0	0	0	0	-8.32	-8.32
Westbrook Inverter Enclosur	W_INV3	369508	4906164	2	0	0	89.1	89.1	1	4552.59	3.25	0	84.17	0	1.53	0	0	11.86	0	0	0	0	0	0	-8.49	-8.49
Inverter	MV3-4	368502	4907925	2	0	0	89.1	89.1	1	4597.12	3.25	0	84.25	0	1.54	0	0	11.92	0	0	0	0	0	0	-8.65	-8.65
Westbrook Inverter Enclosur	W_INV4	369673	4906164	2	0	0	89.1	89.1	1	4709.66	3.25	0	84.46	0	1.57	0	0	12.07	0	0	0	0	0	0	-9.04	-9.04
Inverter	MV3-2	368671	4907928	2	0	0	89.1	89.1	1	4722.63	3.25	0	84.48	0	1.57	0	0	12.09	0	0	0	0	0	0	-9.09	-9.09
Westbrook Inverter Enclosur	W_INV5	369719	4906574	2	0	0	89.1	89.1	1	4891.61	3.25	0	84.79	0	1.61	0	0	12.32	0	0	0	0	0	0	-9.66	-9.66
Westbrook Inverter Enclosur	W_INV7	369780	4906417	2	0	0	89.1	89.1	1	4892.38	3.25	0	84.79	0	1.61	0	0	12.32	0	0	0	0	0	0	-9.66	-9.66
Westbrook Inverter Enclosur	W_INV6	369875	4906578	2	0	0	89.1	89.1	1	5038.08	3.25	0	85.05	0	1.65	0	0	12.51	0	0	0	0	0	0	-10.15	-10.15
Fixed Reactor Bank 1	FRB1	369378	4908755	6	0	0	89.8	89.8	1	5803.86	5.25	0	86.27	0	-0.45	0	0	9.53	0	0	0	0	0	0	-5.58	-5.58
Fixed Reactor Bank 2	FRB2	369464	4908755	6	0	0	89.8	89.8	1	5866.34	5.25	0	86.37	0	-0.44	0	0	9.6	0	0	0	0	0	0	-5.75	-5.75
Inverter	MV4-13	369051	4908605	2	0	0	89.1	89.1	1	5465.09	3.25	0	85.75	0	1.75	0	0	13.08	0	0	0	0	0	0	-11.53	-11.53
Inverter	MV4-15	369176	4908481	2	0	0	89.1	89.1	1	5468.83	3.25	0	85.76	0	1.76	0	0	13.08	0	0	0	0	0	0	-11.54	-11.54
Inverter	MV4-14	369176	4908507	2	0	0	89.1	89.1	1	5486.63	3.25	0	85.79	0	1.76	0	0	13.11	0	0	0	0	0	0	-11.59	-11.59
Inverter	MV4-12	369043	4908803	2	0	0	89.1	89.1	1	5601.17	3.25	0	85.97	0	1.79	0	0	13.25	0	0	0	0	0	0	-11.95	-11.95
Inverter	MV5-6	369982	4908507	2	0	0	89.1	89.1	1	6098.42	3.25	0	86.7	0	1.91	0	0	13.89	0	0	0	0	0	0	-13.44	-13.44
Westbrook Inverter Enclosur	W_INV1	369409	4906578	2	0	0	86.1	86.1	1	4607.14	3.25	0	84.27	0	1.54	0	0	11.93	0	0	0	0	0	0	-11.69	-11.69
Inverter Transformer	MV1-13 T	364725	4905241	2	0	0	69.4	69.4	1	674.58	3.25	0	67.58	0	1.32	0	0	3.31	0	0	0	0	0	0	-2.86	-2.86
Inverter	MV6-4	370250	4906966	2	0	0	86.1	86.1	1	5533.12	3.25	0	85.86	0	1.77	0	0	13.17	0	0	0	0	0	0	-14.74	-14.74
Inverter Transformer	MV1-10 T	365010	4905564	2	0	0	69.4	69.4	1	836.91	3.25	0	69.45	0	1.53	0	0	3.57	0	0	0	0	0	0	-5.21	-5.21
Inverter Transformer	MV1-7 T	364919	4905782	2	0	0	69.4	69.4	1	1069.88	3.25	0	71.59	0	1.74	0	0	3.91	0	0	0	0	0	0	-7.88	-7.88
Inverter Transformer	MV1-15 T	365309	4904994	2	0	0	56.1	56.1	1	279.44	3.25	0	59.93	0	-0.05	0	0	2.68	0	0	0	0	0	0	-6.5	-6.5
Westbrook Inverter Transfor	W_INVTR1	369403	4906578	2	0	0	78.2	78.2	1	4601.64	3.25	0	84.26	0	-3.1	0	0	2.27	0	0	0	0	0	0	-5.2	-5.2
Westbrook Inverter Transfor	W_INVTR2	369368	4906388	2	0	0	77.3	77.3	1	4496.71	3.25	0	84.06	0	-3.07	0	0	2.24	0	0	0	0	0	0	-5.88	-5.88
Westbrook Inverter Transfor	W_INVTR3	369514	4906164	2	0	0	77.3	77.3	1	4558.3	3.25	0	84.18	0	-3.09	0	0	2.26	0	0	0	0	0	0	-6.01	-6.01
Westbrook Inverter Transfor	W_INVTR4	369679	4906164	2	0	0	77.3	77.3	1	4715.38	3.25	0	84.47	0	-3.12	0	0	2.31	0	0	0	0	0	0	-6.32	-6.32
Westbrook Inverter Transfor	W_INVTR5	369725	4906574	2	0	0	77.3	77.3	1	4897.17	3.25	0	84.8	0	-3.16	0	0	2.38	0	0	0	0	0	0	-6.68	-6.68
Westbrook Inverter Transfor	W_INVTR7	369786	4906417	2	0	0	77.3	77.3	1	4898.02	3.25	0	84.8	0	-3.16	0	0	2.38	0	0	0	0	0	0	-6.68	-6.68
Westbrook Inverter Transfor	W_INVTR6	369881	4906578	2	0	0	77.3	77.3	1	5043.67	3.25	0	85.05	0	-3.19	0	0	2.43	0	0	0	0	0	0	-6.96	-6.96
Inverter Transformer	MV2-1 T	365836	4906816	2	0	0	69.4	69.4	1	2171.75	3.25	0	77.74	0	2.24	0	0	5.13	0	0	0	0	0	0	-15.76	-15.76
Inverter Transformer	MV1-12 T	365044	4905386	2	0	0	56.1	56.1	1	655.73	3.25	0	67.33	0	-0.09	0	0	4.01	0	0	0	0	0	0	-15.2	-15.2
Inverter Transformer	MV1-11 T	364649	4905414	2	0	0	56.1	56.1	1	855.49	3.25	0	69.64	0	-0.04	0	0	4.54	0	0	0	0	0	0	-18.09	-18.09
Inverter Transformer	MV1-8 T	364782	4905647	2	0	0	56.1	56.1	1	986.8	3.25	0	70.88	0	0.01	0	0	4.86	0	0	0	0	0	0	-19.69	-19.69
Inverter Transformer	MV1-9 T	364555	4905646	2	0	0	56.1	56.1	1	1097.81	3.25	0	71.81	0	0.05	0	0	5.12	0	0	0	0	0	0	-20.92	-20.92
Inverter Transformer	MV6-4 T	370244	4906966	2	0	0	69.4	69.4	1	5527.63	3.25	0	85.85	0	3.11	0	0	7.73	0	0	0	0	0	0	-27.34	-27.34
Inverter Transformer	MV1-4 T	364821	4905918	2	0	0	56.1	56.1	1	1227.36	3.25	0	72.78	0	0.09	0	0	5.42	0	0	0	0	0	0	-22.23	-22.23
Inverter Transformer	MV6-1 T	370230	4907364	2	0	0	69.4	69.4	1	5686.78	3.25	0	86.1	0	3.14	0	0	7.83	0	0	0	0	0	0	-27.71	-27.71
Inverter Transformer	MV1-5 T	364676	4905892	2	0	0	56.1	56.1	1	1253.74	3.25	0	72.96	0	0.1	0	0	5.48	0	0	0	0	0	0	-22.49	-22.49
Inverter Transformer	MV1-6 T	364482	4905835	2	0	0	56.1	56.1	1	1295.53	3.25	0	73.25	0	0.12	0	0	5.57	0	0	0	0	0	0	-22.88	-22.88
Inverter Transformer	MV1-2 T	364759	4906063	2	0	0	56.1	56.1	1	1384.28	3.25	0	73.82	0	0.15	0	0	5.77	0	0	0	0	0	0	-23.69	-23.69
Inverter Transformer	MV1-1 T	364721	4906166	2	0	0	56.1	56.1	1	1493.97	3.25	0	74.49	0	0.2	0	0	6	0	0	0	0	0	0	-24.63	-24.63
Inverter Transformer	MV1-3 T	364435	4906039	2	0	0	56.1	56.1	1	1494.24	3.25	0	74.49	0	0.2	0	0	6.01	0	0	0	0	0	0	-24.63	-24.63
Inverter Transformer	MV2-4 T	365590	4906628	2	0	0	56.1	56.1	1	1926.65	3.25	0	76.7	0	0.37	0	0	6.9	0	0	0	0	0	0	-27.91	-27.91
Inverter Transformer	MV2-3 T	365814	4906641	2	0	0	56.1	56.1	1	1998.5	3.25	0	77.01	0	0.4	0	0	7.04	0	0	0	0	0	0	-28.4	-28.4
Inverter Transformer	MV2-2 T	365982	4906654	2	0	0	56.1	56.1	1	2069.77	3.25	0	77.32	0	0.43	0	0	7.18	0	0	0	0	0	0	-28.87	-28.87
Inverter Transformer	MV3-18 T	367757	4907412	2	0	0	56.1	56.1	1	3707.09	3.25	0	82.38	0	1.13	0	0	10.01	0	0	0	0	0	0	-37.46	-37.46
Inverter Transformer	MV3-12 T	367674	4907594	2	0	0	56.1	56.1	1	3784.95	3.25	0	82.56	0	1.16	0	0	10.13	0	0	0	0	0	0	-37.79	-37.79
Inverter Transformer	MV3-13 T	367958	4907577	2	0	0	56.1	56.1	1	3965.51	3.25	0	82.97	0	1.23	0	0	10.4	0	0	0	0	0	0	-38.54	-38.54
Inverter Transformer	MV3-17 T	368183	4907472	2	0	0	56.1	56.1	1	4054.79	3.25	0	83.16	0	1.27	0	0	10.54	0	0	0	0	0	0	-38.9	-38.9
Inverter Transformer	MV3-7 T	367951	4907754	2	0	0	56.1	56.1	1	4089.05	3.25	0	83.23	0	1.28	0	0	10.59	0	0	0	0	0	0	-39.04	-39.04
Inverter Transformer	MV3-19 T	368352	4907347	2	0	0	56.1	56.1	1	4100.98	3.25	0	83.26	0	1.28	0	0	10.6	0	0	0	0	0	0	-39.09	-39.09
Inverter Transformer	MV3-21 T	368484	4907206	2	0	0	56.1	56.1	1	4118.06	3.25	0	83.29	0	1.29	0	0	10.63	0	0	0	0	0	0	-39.16	-39.16
Inverter Transformer	MV3-10 T	368162	4907669	2	0	0	56.1	56.1	1	4174.8	3.25	0	83.41	0	1.31	0	0	10.71	0	0	0	0	0	0	-39.38	-39.38
Inverter Transformer	MV3-15 T	368351	4907477	2	0	0	56.1	56.1	1	4183.91	3.25	0	83.43	0	1.32	0	0	10.73	0	0	0	0	0	0	-39.42	-39.42
Inverter Transformer	MV3-3 T	367944	4907927	2	0	0	56.1	56.1	1	4213.39	3.25	0	83.49	0	1.33	0	0	10.77	0	0	0	0	0	0	-39.53	-39.53
Inverter Transformer	MV3-22 T	368661	4907142	2	0	0	56.1	56.1	1	4224.65	3.25	0	83.52	0	1.33	0	0	10.78	0	0	0	0	0	0	-39.57	-39.57
Inverter Transformer	MV3-6 T	368156	4907834	2	0	0	56.1	56.1	1	4287.82	3.25	0	83.64	0	1.36	0	0	10.88	0	0	0	0	0	0	-39.82	-39.82
Inverter Transformer	MV3-11 T	368340	4907662	2	0	0	56.1	56.1	1	4298.91	3.25	0	83.67	0	1.36	0	0	10.89	0	0	0	0	0	0	-39.86	-39.86
Inverter Transformer	MV3-16 T	368509	4907475	2	0	0	56.1	56.1	1	4303.55	3.25	0	83.68	0	1.36	0	0	10.9	0	0	0	0	0	0	-39.88	-39.88
Inverter Transformer	MV3-20 T	368683	4907317	2	0	0	56.1	56.1	1	4344.05	3.25	0	83.76	0	1.38	0	0	10.96	0	0	0	0	0	0	-40.03	-40.03
Inverter Transformer	MV3-1 T	368150	4907976	2	0	0	56.1	56.1	1	4387.16	3.25	0	83.84	0	1.4	0	0	11.02	0	0	0	0	0	0	-40.2	-40.2
Inverter Transformer	MV3-5 T	368335	4907843	2	0	0	56.1	56.1	1	4420.15	3.25	0	83.91	0	1.41	0	0	11.06	0	0	0	0	0	0	-40.32	-40.32
Inverter Transformer	MV3-14 T	368678	4907498	2	0	0	56.1	56.1	1	4449.68	3.25	0	83.97	0	1.42	0	0	11.1	0	0	0	0	0	0	-40.43	-40.43
Inverter Transformer	MV3-9 T	368517	4907703	2	0	0	56.1	56.1	1	4457.65	3.25	0	83.98	0	1.42	0	0	11.12	0	0	0	0	0	0	-40.46	-40.46

	Inverter Transformer	MV3-8 T	368685	4907712	2	0	0	56.1	56.1	1	4590.5	3.25	0	84.24	0	1.47	0	0	11.3	0	0	0	0	0	0	-40.95	-40.95
	Inverter Transformer	MV3-4 T	368507	4907925	2	0	0	56.1	56.1	1	4600.73	3.25	0	84.26	0	1.48	0	0	11.32	0	0	0	0	0	0	-40.99	-40.99
	Inverter Transformer	MV3-2 T	368677	4907928	2	0	0	56.1	56.1	1	4727.06	3.25	0	84.49	0	1.53	0	0	11.49	0	0	0	0	0	0	-41.45	-41.45
	Inverter Transformer	MV4-15 T	369170	4908481	2	0	0	56.1	56.1	1	5464.45	3.25	0	85.75	0	1.79	0	0	12.45	0	0	0	0	0	0	-43.93	-43.93
	Inverter Transformer	MV4-13 T	369057	4908605	2	0	0	56.1	56.1	1	5469.34	3.25	0	85.76	0	1.79	0	0	12.46	0	0	0	0	0	0	-43.95	-43.95
	Inverter Transformer	MV4-14 T	369182	4908507	2	0	0	56.1	56.1	1	5491	3.25	0	85.79	0	1.8	0	0	12.48	0	0	0	0	0	0	-44.02	-44.02
	Inverter Transformer	MV6-2 T	370091	4907339	2	0	0	56.1	56.1	1	5552.04	3.25	0	85.89	0	1.82	0	0	12.56	0	0	0	0	0	0	-44.21	-44.21
	Inverter Transformer	MV6-3 T	370202	4907140	2	0	0	56.1	56.1	1	5561.87	3.25	0	85.9	0	1.82	0	0	12.57	0	0	0	0	0	0	-44.24	-44.24
	Inverter Transformer	MV4-12 T	369049	4908803	2	0	0	56.1	56.1	1	5605.31	3.25	0	85.97	0	1.84	0	0	12.63	0	0	0	0	0	0	-44.38	-44.38
	Inverter Transformer	MV4-7 T	369040	4909001	2	0	0	56.1	56.1	1	5744.23	3.25	0	86.18	0	1.88	0	0	12.8	0	0	0	0	0	0	-44.8	-44.8
	Inverter Transformer	MV4-11 T	369269	4908855	2	0	0	56.1	56.1	1	5796.04	3.25	0	86.26	0	1.9	0	0	12.86	0	0	0	0	0	0	-44.96	-44.96
	Inverter Transformer	MV4-10 T	369307	4908858	2	0	0	56.1	56.1	1	5825.01	3.25	0	86.31	0	1.91	0	0	12.89	0	0	0	0	0	0	-45.05	-45.05
	Inverter Transformer	MV4-4 T	369033	4909199	2	0	0	56.1	56.1	1	5887.85	3.25	0	86.4	0	1.93	0	0	12.97	0	0	0	0	0	0	-45.24	-45.24
	Inverter Transformer	MV4-8 T	369262	4909001	2	0	0	56.1	56.1	1	5895.62	3.25	0	86.41	0	1.93	0	0	12.98	0	0	0	0	0	0	-45.26	-45.26
	Inverter Transformer	MV4-9 T	369284	4909001	2	0	0	56.1	56.1	1	5910.86	3.25	0	86.43	0	1.94	0	0	13	0	0	0	0	0	0	-45.31	-45.31
	Inverter Transformer	MV4-6 T	369249	4909192	2	0	0	56.1	56.1	1	6026.17	3.25	0	86.6	0	1.97	0	0	13.13	0	0	0	0	0	0	-45.65	-45.65
	Inverter Transformer	MV4-1 T	369017	4909397	2	0	0	56.1	56.1	1	6028.83	3.25	0	86.6	0	1.97	0	0	13.14	0	0	0	0	0	0	-45.66	-45.66
	Inverter Transformer	MV4-5 T	369283	4909199	2	0	0	56.1	56.1	1	6054.31	3.25	0	86.64	0	1.98	0	0	13.17	0	0	0	0	0	0	-45.73	-45.73
	Inverter Transformer	MV5-6 T	369987	4908507	2	0	0	56.1	56.1	1	6102.36	3.25	0	86.71	0	2	0	0	13.22	0	0	0	0	0	0	-45.87	-45.87
	Inverter Transformer	MV4-3 T	369234	4909397	2	0	0	56.1	56.1	1	6169.13	3.25	0	86.8	0	2.02	0	0	13.3	0	0	0	0	0	0	-46.07	-46.07
	Inverter Transformer	MV4-2 T	369267	4909397	2	0	0	56.1	56.1	1	6190.86	3.25	0	86.84	0	2.02	0	0	13.33	0	0	0	0	0	0	-46.13	-46.13
	Inverter Transformer	MV5-5 T	370021	4908690	2	0	0	56.1	56.1	1	6243.16	3.25	0	86.91	0	2.04	0	0	13.39	0	0	0	0	0	0	-46.28	-46.28
	Inverter Transformer	MV5-2 T	370011	4908853	2	0	0	56.1	56.1	1	6339.79	3.25	0	87.04	0	2.07	0	0	13.5	0	0	0	0	0	0	-46.55	-46.55
	Inverter Transformer	MV5-4 T	370330	4908707	2	0	0	56.1	56.1	1	6495.94	3.25	0	87.25	0	2.12	0	0	13.68	0	0	0	0	0	0	-46.99	-46.99
	Inverter Transformer	MV5-3 T	370237	4908851	2	0	0	56.1	56.1	1	6512.31	3.25	0	87.27	0	2.12	0	0	13.69	0	0	0	0	0	0	-47.03	-47.03
	Inverter Transformer	MV5-1 T	370015	4909142	2	0	0	56.1	56.1	1	6533.73	3.25	0	87.3	0	2.13	0	0	13.72	0	0	0	0	0	0	-47.09	-47.09
	Line Reactor	NGR	369421	4908787.5	5	0	0	45.4	45.4	1	5857.41	5.25	0	86.35	0	3.24	1.36	0.08	2.39	0	0	0	0	0	0	-48	-48
Limit. Valu	0	0																								
Level D/N:	37.1632	37.1632																								

Receiver: Existing Noise Receptor
ID: G-118
X: 365211.2
Y: 4904781.1
Z: 4.5
Ground: 0

ISO	Description	ID	X	Y	Z	Ground	ReflOrd	LxT	LxN	L/A	Dist.	hm	Freq	Adiv	K0b	Agr	Abar	z	Aatm	Afol	Ahous	Cmet	CmetN	Dc	RL	LtotT	LtotN
	Inverter	MV1-15	365315	4904994	2	0	0	100.3	100.3	1	236.87	3.25	0	58.49	0	-0.6	0	0	5.41	0	0	0	0	0	0	37.02	37.02
	Inverter	MV1-14	365163	4905049	2	0	0	97.3	97.3	1	272.21	3.25	0	59.7	0	-0.64	0	0	5.98	0	0	0	0	0	0	32.27	32.27
	Inverter	MV1-12	365038	4905386	2	0	0	100.3	100.3	1	629.21	3.25	0	66.98	0	-0.46	0	0	9.37	0	0	0	0	0	0	24.42	24.42
	Inverter	MV1-11	364655	4905414	2	0	0	100.3	100.3	1	842.57	3.25	0	69.51	0	-0.33	0	0	10.35	0	0	0	0	0	0	20.78	20.78
	Inverter	MV1-13	364731	4905241	2	0	0	97.3	97.3	1	664.91	3.25	0	67.46	0	-0.43	0	0	9.56	0	0	0	0	0	0	20.73	20.73
	Inverter	MV1-8	364788	4905647	2	0	0	100.3	100.3	1	963.79	3.25	0	70.68	0	-0.26	0	0	10.79	0	0	0	0	0	0	19.11	19.11
	Inverter	MV1-9	364561	4905646	2	0	0	100.3	100.3	1	1082.04	3.25	0	71.68	0	-0.21	0	0	11.17	0	0	0	0	0	0	17.66	17.66
	Inverter	MV1-10	365004	4905564	2	0	0	97.3	97.3	1	809.86	3.25	0	69.17	0	-0.35	0	0	10.22	0	0	0	0	0	0	18.27	18.27
	Inverter	MV1-4	364815	4905918	2	0	0	100.3	100.3	1	1203.96	3.25	0	72.61	0	-0.15	0	0	11.54	0	0	0	0	0	0	16.32	16.32
	Inverter	MV1-5	364671	4905892	2	0	0	100.3	100.3	1	1235.28	3.25	0	72.84	0	-0.14	0	0	11.63	0	0	0	0	0	0	15.99	15.99
	Inverter	MV1-6	364477	4905835	2	0	0	100.3	100.3	1	1284.43	3.25	0	73.17	0	-0.12	0	0	11.76	0	0	0	0	0	0	15.49	15.49
	Inverter	MV1-2	364753	4906063	2	0	0	100.3	100.3	1	1361.33	3.25	0	73.68	0	-0.09	0	0	11.97	0	0	0	0	0	0	14.75	14.75
	Inverter	MV1-7	364925	4905782	2	0	0	97.3	97.3	1	1041.02	3.25	0	71.35	0	-0.23	0	0	11.04	0	0	0	0	0	0	15.15	15.15
	Inverter	MV1-1	364715	4906166	2	0	0	100.3	100.3	1	1471.11	3.25	0	74.35	0	-0.04	0	0	12.25	0	0	0	0	0	0	13.75	13.75
	Sol_Luce Substation	S_Substation	369426	4908792	3.5	0	0	112.1	112.1	1	5818.24	5.25	0	86.3	0	1.11	2.68	0.25	9.55	0	0	0	0	0	0	12.44	12.44
	Inverter	MV2-4	365586	4906624	2	0	0	100.3	100.3	1	1880.63	3.25	0	76.49	0	0.09	0	0	13.21	0	0	0	0	0	0	10.53	10.53
	Inverter	MV2-3	365820	4906641	2	0	0	100.3	100.3	1	1957.01	3.25	0	76.83	0	0.12	0	0	13.37	0	0	0	0	0	0	9.99	9.99
	Inverter	MV2-1	365842	4906816	2	0	0	97.3	97.3	1	2130.43	3.25	0	77.57	0	0.17	0	0	13.73	0	0	0	0	0	0	5.85	5.85
	Inverter	MV3-18	367752	4907412	2	0	0	100.3	100.3	1	3657.5	3.25	0	82.26	0	0.48	0	0	16.49	0	0	0	0	0	0	1.08	1.08
	Inverter	MV3-12	367668	4907594	2	0	0	100.3	100.3	1	3734.74	3.25	0	82.45	0	0.49	0	0	16.62	0	0	0	0	0	0	0.76	0.76
	Inverter	MV3-13	367963	4907577	2	0	0	100.3	100.3	1	3922.94	3.25	0	82.87	0	0.52	0	0	16.92	0	0	0	0	0	0	0	0
	Inverter	MV3-17	368178	4907472	2	0	0	100.3	100.3	1	4005.35	3.25	0	83.05	0	0.53	0	0	17.06	0	0	0	0	0	0	-0.33	-0.33
	Inverter	MV3-7	367945	4907754	2	0	0	100.3	100.3	1	4038.79	3.25	0	83.13	0	0.53	0	0	17.11	0	0	0	0	0	0	-0.46	-0.46
	Inverter	MV3-19	368357	4907347	2	0	0	100.3	100.3	1	4059.55	3.25	0	83.17	0	0.54	0	0	17.14	0	0	0	0	0	0	-0.54	-0.54
	Inverter	MV3-21	368478	4907206	2	0	0	100.3	100.3	1	4068.43	3.25	0	83.19	0	0.54	0	0	17.16	0	0	0	0	0	0	-0.57	-0.57
	Inverter	MV3-10	368167	4907669	2	0	0	100.3	100.3	1	4132.4	3.25	0	83.32	0	0.55	0	0	17.26	0	0	0	0	0	0	-0.82	-0.82
	Inverter	MV3-15	368357	4907477	2	0	0	100.3	100.3	1	4142.94	3.25	0	83.35	0	0.55	0	0	17.28	0	0	0	0	0	0	-0.86	-0.86
	Inverter	MV3-3	367939	4907927	2	0	0	100.3	100.3	1	4163.84	3.25	0	83.39	0	0.55	0	0	17.31	0	0	0	0	0	0	-0.94	-0.94
	Inverter	MV3-6	368162	4907834	2	0	0	100.3	100.3	1	4245.87	3.25	0	83.56	0	0.56	0	0	17.44	0	0	0	0	0	0	-1.24	-1.24
	Inverter	MV3-11	368346	4907662	2	0	0	100.3	100.3	1	4257.53	3.25	0	83.58	0	0.56	0	0	17.46	0	0	0	0	0	0	-1.29	-1.29
	Inverter	MV3-16	368514	4907475	2	0	0	100.3	100.3	1	4262.11	3.25	0	83.59	0	0.56	0	0	17.46	0	0	0	0	0	0	-1.3	-1.3
	Inverter	MV3-20	368689	4907317	2	0	0	100.3	100.3	1	4304.17	3.25	0	83.68	0	0.57	0	0	17.53	0	0	0	0	0	0	-1.46	-1.46
	Inverter	MV3-9	368512	4907703	2	0	0	100.3	100.3	1	4408.26	3.25	0	83.89	0	0.58	0	0	17.69	0	0	0	0	0	0	-1.84	-1.84
	Inverter	MV3-14	368684	4907498	2	0	0	100.3	100.3	1	4409.3	3.25	0	83.89	0	0.58	0	0	17.69	0	0	0	0	0	0	-1.85	-1.85
	Inverter	MV3-8	368680	4907712	2	0	0	100.3	100.3	1	4541.23	3.25	0	84.14	0	0.6	0	0	17.89	0	0	0	0	0	0	-2.32	-2.32
	Inverter	MV1-3	364440	4906039	2	0	0	89.1	89.1	1	1475.49	3.25	0	74.38	0	0.79	0	0	7.17	0	0	0	0	0	0	6.73	6.73

Inverter	MV6-2	370085	4907339	2	0	0	100.3	100.3	1	5504.25	3.25	0	85.81	0	0.68	0	0	19.31	0	0	0	0	0	0	-5.49	-5.49
Inverter	MV6-3	370207	4907140	2	0	0	100.3	100.3	1	5524.71	3.25	0	85.85	0	0.68	0	0	19.34	0	0	0	0	0	0	-5.55	-5.55
Inverter	MV4-7	369035	4909001	2	0	0	100.3	100.3	1	5694.65	3.25	0	86.11	0	0.69	0	0	19.57	0	0	0	0	0	0	-6.06	-6.06
Inverter	MV4-11	369264	4908855	2	0	0	100.3	100.3	1	5746.46	3.25	0	86.19	0	0.69	0	0	19.65	0	0	0	0	0	0	-6.22	-6.22
Inverter	MV4-10	369312	4908858	2	0	0	100.3	100.3	1	5782.53	3.25	0	86.24	0	0.7	0	0	19.7	0	0	0	0	0	0	-6.32	-6.32
Inverter	MV4-4	369027	4909199	2	0	0	100.3	100.3	1	5837.65	3.25	0	86.32	0	0.7	0	0	19.77	0	0	0	0	0	0	-6.48	-6.48
Inverter	MV4-8	369256	4909001	2	0	0	100.3	100.3	1	5845.34	3.25	0	86.34	0	0.7	0	0	19.78	0	0	0	0	0	0	-6.5	-6.5
Inverter	MV4-9	369289	4909001	2	0	0	100.3	100.3	1	5868.22	3.25	0	86.37	0	0.7	0	0	19.81	0	0	0	0	0	0	-6.57	-6.57
Gardiner Substation	G_Sub	366586.3	4903349.9	2.5	0	0	90.8	90.8	1	1984.75	4.25	0	76.95	0	0.81	3.62	0.27	4.34	0	0	0	0	0	0	5.05	5.05
Inverter	MV4-6	369243	4909192	2	0	0	100.3	100.3	1	5975.91	3.25	0	86.53	0	0.7	0	0	19.96	0	0	0	0	0	0	-6.88	-6.88
Inverter	MV4-1	369011	4909397	2	0	0	100.3	100.3	1	5978.71	3.25	0	86.53	0	0.7	0	0	19.96	0	0	0	0	0	0	-6.89	-6.89
Inverter	MV4-5	369289	4909199	2	0	0	100.3	100.3	1	6012.18	3.25	0	86.58	0	0.71	0	0	20.01	0	0	0	0	0	0	-6.98	-6.98
Inverter	MV4-3	369229	4909397	2	0	0	100.3	100.3	1	6119.58	3.25	0	86.73	0	0.71	0	0	20.15	0	0	0	0	0	0	-7.29	-7.29
Inverter	MV4-2	369272	4909397	2	0	0	100.3	100.3	1	6147.9	3.25	0	86.77	0	0.71	0	0	20.19	0	0	0	0	0	0	-7.36	-7.36
Inverter	MV5-5	370015	4908690	2	0	0	100.3	100.3	1	6193.22	3.25	0	86.84	0	0.71	0	0	20.25	0	0	0	0	0	0	-7.49	-7.49
Inverter	MV5-2	370006	4908853	2	0	0	100.3	100.3	1	6290.51	3.25	0	86.97	0	0.71	0	0	20.38	0	0	0	0	0	0	-7.76	-7.76
Inverter	MV5-4	370324	4908707	2	0	0	100.3	100.3	1	6446.19	3.25	0	87.19	0	0.71	0	0	20.59	0	0	0	0	0	0	-8.18	-8.18
Inverter	MV5-3	370231	4908851	2	0	0	100.3	100.3	1	6462.39	3.25	0	87.21	0	0.71	0	0	20.61	0	0	0	0	0	0	-8.22	-8.22
Inverter	MV5-1	370020	4909142	2	0	0	100.3	100.3	1	6491.69	3.25	0	87.25	0	0.71	0	0	20.65	0	0	0	0	0	0	-8.3	-8.3
Inverter	MV2-2	365977	4906654	2	0	0	89.1	89.1	1	2023.42	3.25	0	77.12	0	0.91	0	0	8.08	0	0	0	0	0	0	2.94	2.94
Inverter	MV6-1	370235	4907364	2	0	0	97.3	97.3	1	5648.89	3.25	0	86.04	0	0.69	0	0	19.51	0	0	0	0	0	0	-8.93	-8.93
Inverters	G_Inv1	366526.4	4903225.8	2	0	0	87.7	87.7	1	2036.84	3.25	0	77.18	0	2.59	0	0	2.68	0	0	0	0	0	0	5.21	5.21
DSTATCOM - 10 MVAR #2	DSAT2	369403	4908757	2.5	0	0	96.6	96.6	1	5777.45	3.5	0	86.23	0	3.76	0	0	3.73	0	0	0	0	0	0	2.91	2.91
DSTATCOM - 10 MVAR #1	DSAT1	369437	4908757	2.5	0	0	96.6	96.6	1	5802.17	3.5	0	86.27	0	3.76	0	0	3.74	0	0	0	0	0	0	2.86	2.86
Inverters	G_Inv2	366676.9	4903239.1	2	0	0	87.7	87.7	1	2127.45	3.25	0	77.56	0	2.6	0	0	2.78	0	0	0	0	0	0	4.72	4.72
Inverters	G_Inv3	366583.7	4903091.4	2	0	0	87.7	87.7	1	2176.89	3.25	0	77.76	0	2.61	0	0	2.84	0	0	0	0	0	0	4.46	4.46
Inverter Transformer	MV1-14 T	365157	4905049	2	0	0	69.4	69.4	1	273.34	3.25	0	59.73	0	0.74	0	0	2.27	0	0	0	0	0	0	6.61	6.61
Inverters	G_Inv4	366732.8	4903105	2	0	0	87.7	87.7	1	2263.75	3.25	0	78.1	0	2.62	0	0	2.94	0	0	0	0	0	0	4.01	4.01
Inverters	G_Inv5	366638.5	4902958.1	2	0	0	87.7	87.7	1	2315.28	3.25	0	78.29	0	2.62	0	0	3	0	0	0	0	0	0	3.75	3.75
Inverters	G_Inv6	366788.5	4902972	2	0	0	87.7	87.7	1	2400.15	3.25	0	78.6	0	2.63	0	0	3.1	0	0	0	0	0	0	3.33	3.33
Inverters	G_Inv7	366694.6	4902824.7	2	0	0	87.7	87.7	1	2455.2	3.25	0	78.8	0	2.64	0	0	3.16	0	0	0	0	0	0	3.06	3.06
Inverters	G_Inv8	366844.5	4902838.5	2	0	0	87.7	87.7	1	2537.99	3.25	0	79.09	0	2.65	0	0	3.25	0	0	0	0	0	0	2.67	2.67
Inverters	G_Inv9	366750.9	4902691.8	2	0	0	87.7	87.7	1	2595.35	3.25	0	79.28	0	2.65	0	0	3.32	0	0	0	0	0	0	2.4	2.4
Inverters	G_Inv10	366900.7	4902704.8	2	0	0	87.7	87.7	1	2676.83	3.25	0	79.55	0	2.66	0	0	3.41	0	0	0	0	0	0	2.03	2.03
SubstationTransformer	W_ST	369711.17	4906112.3	2.5	0	0	92	92	1	4692.73	4.25	0	84.43	0	1.56	2.41	0.28	8.25	0	0	0	0	0	0	-4.67	-4.67
Inverter	MV3-22	368656	4907142	2	0	0	89.1	89.1	1	4176.18	3.25	0	83.42	0	1.44	0	0	11.33	0	0	0	0	0	0	-7.13	-7.13
Inverter	MV3-1	368156	4907976	2	0	0	89.1	89.1	1	4345.02	3.25	0	83.76	0	1.48	0	0	11.57	0	0	0	0	0	0	-7.75	-7.75
Inverter	MV3-5	368340	4907843	2	0	0	89.1	89.1	1	4377.74	3.25	0	83.83	0	1.49	0	0	11.62	0	0	0	0	0	0	-7.87	-7.87
Westbrook Inverter Enclosur	W_INV2	369374	4906388	2	0	0	89.1	89.1	1	4462.18	3.25	0	83.99	0	1.51	0	0	11.73	0	0	0	0	0	0	-8.17	-8.17
Westbrook Inverter Enclosur	W_INV3	369508	4906164	2	0	0	89.1	89.1	1	4513.86	3.25	0	84.09	0	1.52	0	0	11.8	0	0	0	0	0	0	-8.36	-8.36
Inverter	MV3-4	368502	4907925	2	0	0	89.1	89.1	1	4551.21	3.25	0	84.16	0	1.53	0	0	11.86	0	0	0	0	0	0	-8.49	-8.49
Westbrook Inverter Enclosur	W_INV4	369673	4906164	2	0	0	89.1	89.1	1	4671.2	3.25	0	84.39	0	1.56	0	0	12.02	0	0	0	0	0	0	-8.91	-8.91
Inverter	MV3-2	368671	4907928	2	0	0	89.1	89.1	1	4676.88	3.25	0	84.4	0	1.56	0	0	12.03	0	0	0	0	0	0	-8.93	-8.93
Westbrook Inverter Enclosur	W_INV5	369719	4906574	2	0	0	89.1	89.1	1	4851.26	3.25	0	84.72	0	1.6	0	0	12.26	0	0	0	0	0	0	-9.53	-9.53
Westbrook Inverter Enclosur	W_INV7	369780	4906417	2	0	0	89.1	89.1	1	4852.85	3.25	0	84.72	0	1.6	0	0	12.27	0	0	0	0	0	0	-9.53	-9.53
Westbrook Inverter Enclosur	W_INV6	369875	4906578	2	0	0	89.1	89.1	1	4997.99	3.25	0	84.98	0	1.64	0	0	12.46	0	0	0	0	0	0	-10.02	-10.02
Fixed Reactor Bank 1	FRB1	369378	4908755	6	0	0	89.8	89.8	1	5757.96	5.25	0	86.21	0	-0.45	0	0	9.48	0	0	0	0	0	0	-5.46	-5.46
Fixed Reactor Bank 2	FRB2	369464	4908755	6	0	0	89.8	89.8	1	5820.5	5.25	0	86.3	0	-0.44	0	0	9.55	0	0	0	0	0	0	-5.63	-5.63
Inverter	MV4-13	369051	4908605	2	0	0	89.1	89.1	1	5419.07	3.25	0	85.68	0	1.74	0	0	13.02	0	0	0	0	0	0	-11.38	-11.38
Inverter	MV4-15	369176	4908481	2	0	0	89.1	89.1	1	5423	3.25	0	85.68	0	1.74	0	0	13.02	0	0	0	0	0	0	-11.39	-11.39
Inverter	MV4-14	369176	4908507	2	0	0	89.1	89.1	1	5440.77	3.25	0	85.71	0	1.75	0	0	13.05	0	0	0	0	0	0	-11.45	-11.45
Inverter	MV4-12	369043	4908803	2	0	0	89.1	89.1	1	5555.03	3.25	0	85.89	0	1.78	0	0	13.19	0	0	0	0	0	0	-11.81	-11.81
Inverter	MV5-6	369982	4908507	2	0	0	89.1	89.1	1	6053.34	3.25	0	86.64	0	1.9	0	0	13.83	0	0	0	0	0	0	-13.31	-13.31
Westbrook Inverter Enclosur	W_INV1	369409	4906578	2	0	0	86.1	86.1	1	4566.22	3.25	0	84.19	0	1.53	0	0	11.88	0	0	0	0	0	0	-11.54	-11.54
Inverter Transformer	MV1-13 T	364725	4905241	2	0	0	69.4	69.4	1	669.26	3.25	0	67.51	0	1.32	0	0	3.3	0	0	0	0	0	0	-2.77	-2.77
Inverter	MV6-4	370250	4906966	2	0	0	86.1	86.1	1	5492.11	3.25	0	85.79	0	1.76	0	0	13.11	0	0	0	0	0	0	-14.61	-14.61
Inverter Transformer	MV1-10 T	365010	4905564	2	0	0	69.4	69.4	1	808.34	3.25	0	69.15	0	1.5	0	0	3.53	0	0	0	0	0	0	-4.83	-4.83
Inverter Transformer	MV1-7 T	364919	4905782	2	0	0	69.4	69.4	1	1042.68	3.25	0	71.36	0	1.72	0	0	3.87	0	0	0	0	0	0	-7.6	-7.6
Inverter Transformer	MV1-15 T	365309	4904994	2	0	0	56.1	56.1	1	234.3	3.25	0	58.4	0	0.01	0	0	2.44	0	0	0	0	0	0	-4.79	-4.79
Westbrook Inverter Transfor	W_INVTR1	369403	4906578	2	0	0	78.2	78.2	1	4560.71	3.25	0	84.18	0	-3.09	0	0	2.26	0	0	0	0	0	0	-5.11	-5.11
Westbrook Inverter Transfor	W_INVTR2	369368	4906388	2	0	0	77.3	77.3	1	4456.58	3.25	0	83.98	0	-3.06	0	0	2.22	0	0	0	0	0	0	-5.8	-5.8
Westbrook Inverter Transfor	W_INVTR3	369514	4906164	2	0	0	77.3	77.3	1	4519.57	3.25	0	84.1	0	-3.08	0	0	2.25	0	0	0	0	0	0	-5.93	-5.93
Westbrook Inverter Transfor	W_INVTR4	369679	4906164	2	0	0	77.3	77.3	1	4676.93	3.25	0	84.4	0	-3.11	0	0	2.3	0	0	0	0	0	0	-6.25	-6.25
Westbrook Inverter Transfor	W_INVTR5	369725	4906574	2	0	0	77.3	77.3	1	4856.84	3.25	0	84.73	0	-3.15	0	0	2.36	0	0	0	0	0	0	-6.6	-6.6
Westbrook Inverter Transfor	W_INVTR7	369786	4906417	2	0	0	77.3	77.3	1	4858.49	3.25	0	84.73	0	-3.15	0	0	2.36	0	0	0	0	0	0	-6.6	-6.6
Westbrook Inverter Transfor	W_INVTR6	369881	4906578	2	0	0	77.3	77.3	1	5003.59	3.25	0	84.99	0	-3.18	0	0	2.41	0	0	0	0	0	0	-6.88	-6.88
Inverter Transformer	MV2-1 T	365836	4906816	2	0	0	69.4	69.4	1	2128.66	3.25	0	77.56	0	2.22	0	0	5.09	0	0	0	0	0	0	-15.52	-15.52
Inverter Transformer	MV1-12 T	365044	4905386	2	0	0	56.1	56.1	1	627.59	3.25	0	66.95	0	-0.1	0	0	3.93	0	0	0	0	0	0	-14.73	-14.73
Inverter Transformer	MV1-11 T	364649	4905414	2	0	0	56.1	56.1	1	846.54	3.25	0	69.55	0	-0.04	0	0	4.51	0	0	0	0	0	0	-17.97	-17.97
Inverter Transformer	MV1-8 T	364782	4905647	2	0	0	56.1	56.1	1	966.44	3.25	0	70.7	0	0	0	0	4.81	0	0	0	0	0	0	-19.45	-19.45
Inverter Transformer	MV1-9 T	364555	4905646	2	0	0	56.1	56.1	1	1085.66	3.25	0	71.71	0	0.04	0	0	5.09	0	0	0	0	0	0	-20.79	-20.79
Inverter Transformer	MV6-4 T	370244	4906966	2	0	0	69.4	69.4	1	5486.61	3.25	0	85.79	0	3.1	0	0	7.7	0	0	0	0	0	0	-27.24	-27.24
Inverter Transformer	MV1-4 T	364821	4905918	2	0	0	56.1	56.1	1	1202	3.25	0	72.6	0	0.08	0	0	5.36	0	0	0	0	0	0	-21.98	-21.98
Inverter Transformer	MV6-1 T	370230	4907364	2	0	0	69.4	69.4	1	5644.44	3.25	0	86.03	0	3.13	0	0	7.8	0	0	0	0	0	0	-27.61	-27.61

	Inverter Transformer	MV1-5 T	364676	4905892	2	0	0	56.1	56.1	1	1233.1	3.25	0	72.82	0	0.1	0	0	5.43	0	0	0	0	0	0	-22.29	-22.29
	Inverter Transformer	MV1-6 T	364482	4905835	2	0	0	56.1	56.1	1	1281.58	3.25	0	73.15	0	0.11	0	0	5.54	0	0	0	0	0	0	-22.75	-22.75
	Inverter Transformer	MV1-2 T	364759	4906063	2	0	0	56.1	56.1	1	1359.32	3.25	0	73.67	0	0.14	0	0	5.71	0	0	0	0	0	0	-23.46	-23.46
	Inverter Transformer	MV1-1 T	364721	4906166	2	0	0	56.1	56.1	1	1469.1	3.25	0	74.34	0	0.19	0	0	5.95	0	0	0	0	0	0	-24.42	-24.42
	Inverter Transformer	MV1-3 T	364435	4906039	2	0	0	56.1	56.1	1	1478.11	3.25	0	74.39	0	0.19	0	0	5.97	0	0	0	0	0	0	-24.5	-24.5
	Inverter Transformer	MV2-4 T	365590	4906628	2	0	0	56.1	56.1	1	1885.35	3.25	0	76.51	0	0.36	0	0	6.82	0	0	0	0	0	0	-27.62	-27.62
	Inverter Transformer	MV2-3 T	365814	4906641	2	0	0	56.1	56.1	1	1955.15	3.25	0	76.82	0	0.39	0	0	6.96	0	0	0	0	0	0	-28.11	-28.11
	Inverter Transformer	MV2-2 T	365982	4906654	2	0	0	56.1	56.1	1	2025.31	3.25	0	77.13	0	0.41	0	0	7.09	0	0	0	0	0	0	-28.58	-28.58
	Inverter Transformer	MV3-18 T	367757	4907412	2	0	0	56.1	56.1	1	3660.98	3.25	0	82.27	0	1.11	0	0	9.94	0	0	0	0	0	0	-37.26	-37.26
	Inverter Transformer	MV3-12 T	367674	4907594	2	0	0	56.1	56.1	1	3738.69	3.25	0	82.45	0	1.14	0	0	10.06	0	0	0	0	0	0	-37.59	-37.59
	Inverter Transformer	MV3-13 T	367958	4907577	2	0	0	56.1	56.1	1	3919.44	3.25	0	82.86	0	1.21	0	0	10.33	0	0	0	0	0	0	-38.35	-38.35
	Inverter Transformer	MV3-17 T	368183	4907472	2	0	0	56.1	56.1	1	4009.06	3.25	0	83.06	0	1.25	0	0	10.47	0	0	0	0	0	0	-38.72	-38.72
	Inverter Transformer	MV3-7 T	367951	4907754	2	0	0	56.1	56.1	1	4042.85	3.25	0	83.13	0	1.26	0	0	10.52	0	0	0	0	0	0	-38.85	-38.85
	Inverter Transformer	MV3-19 T	368352	4907347	2	0	0	56.1	56.1	1	4055.67	3.25	0	83.16	0	1.27	0	0	10.54	0	0	0	0	0	0	-38.91	-38.91
	Inverter Transformer	MV3-21 T	368484	4907206	2	0	0	56.1	56.1	1	4073.25	3.25	0	83.2	0	1.27	0	0	10.56	0	0	0	0	0	0	-38.98	-38.98
	Inverter Transformer	MV3-10 T	368162	4907669	2	0	0	56.1	56.1	1	4128.82	3.25	0	83.32	0	1.3	0	0	10.64	0	0	0	0	0	0	-39.2	-39.2
	Inverter Transformer	MV3-15 T	368351	4907477	2	0	0	56.1	56.1	1	4138.38	3.25	0	83.34	0	1.3	0	0	10.66	0	0	0	0	0	0	-39.24	-39.24
	Inverter Transformer	MV3-3 T	367944	4907927	2	0	0	56.1	56.1	1	4167.12	3.25	0	83.4	0	1.31	0	0	10.7	0	0	0	0	0	0	-39.35	-39.35
	Inverter Transformer	MV3-22 T	368661	4907142	2	0	0	56.1	56.1	1	4180.31	3.25	0	83.42	0	1.32	0	0	10.72	0	0	0	0	0	0	-39.4	-39.4
	Inverter Transformer	MV3-6 T	368156	4907834	2	0	0	56.1	56.1	1	4241.7	3.25	0	83.55	0	1.34	0	0	10.81	0	0	0	0	0	0	-39.64	-39.64
	Inverter Transformer	MV3-11 T	368340	4907662	2	0	0	56.1	56.1	1	4253.11	3.25	0	83.57	0	1.34	0	0	10.83	0	0	0	0	0	0	-39.69	-39.69
	Inverter Transformer	MV3-16 T	368509	4907475	2	0	0	56.1	56.1	1	4258.24	3.25	0	83.58	0	1.35	0	0	10.83	0	0	0	0	0	0	-39.7	-39.7
	Inverter Transformer	MV3-20 T	368683	4907317	2	0	0	56.1	56.1	1	4299.32	3.25	0	83.67	0	1.36	0	0	10.89	0	0	0	0	0	0	-39.86	-39.86
	Inverter Transformer	MV3-1 T	368150	4907976	2	0	0	56.1	56.1	1	4340.96	3.25	0	83.75	0	1.38	0	0	10.95	0	0	0	0	0	0	-40.02	-40.02
	Inverter Transformer	MV3-5 T	368335	4907843	2	0	0	56.1	56.1	1	4374.17	3.25	0	83.82	0	1.39	0	0	11	0	0	0	0	0	0	-40.15	-40.15
	Inverter Transformer	MV3-14 T	368678	4907498	2	0	0	56.1	56.1	1	4404.57	3.25	0	83.88	0	1.4	0	0	11.04	0	0	0	0	0	0	-40.26	-40.26
	Inverter Transformer	MV3-9 T	368517	4907703	2	0	0	56.1	56.1	1	4412.01	3.25	0	83.89	0	1.41	0	0	11.05	0	0	0	0	0	0	-40.29	-40.29
	Inverter Transformer	MV3-8 T	368685	4907712	2	0	0	56.1	56.1	1	4545.05	3.25	0	84.15	0	1.46	0	0	11.24	0	0	0	0	0	0	-40.79	-40.79
	Inverter Transformer	MV3-4 T	368507	4907925	2	0	0	56.1	56.1	1	4554.82	3.25	0	84.17	0	1.46	0	0	11.25	0	0	0	0	0	0	-40.82	-40.82
	Inverter Transformer	MV3-2 T	368677	4907928	2	0	0	56.1	56.1	1	4681.32	3.25	0	84.41	0	1.51	0	0	11.43	0	0	0	0	0	0	-41.28	-41.28
	Inverter Transformer	MV4-15 T	369170	4908481	2	0	0	56.1	56.1	1	5418.61	3.25	0	85.68	0	1.77	0	0	12.39	0	0	0	0	0	0	-43.79	-43.79
	Inverter Transformer	MV4-13 T	369057	4908605	2	0	0	56.1	56.1	1	5423.32	3.25	0	85.69	0	1.77	0	0	12.4	0	0	0	0	0	0	-43.8	-43.8
	Inverter Transformer	MV4-14 T	369182	4908507	2	0	0	56.1	56.1	1	5445.14	3.25	0	85.72	0	1.78	0	0	12.43	0	0	0	0	0	0	-43.87	-43.87
	Inverter Transformer	MV6-2 T	370091	4907339	2	0	0	56.1	56.1	1	5509.57	3.25	0	85.82	0	1.8	0	0	12.51	0	0	0	0	0	0	-44.08	-44.08
	Inverter Transformer	MV6-3 T	370202	4907140	2	0	0	56.1	56.1	1	5520.19	3.25	0	85.84	0	1.81	0	0	12.52	0	0	0	0	0	0	-44.11	-44.11
	Inverter Transformer	MV4-12 T	369049	4908803	2	0	0	56.1	56.1	1	5559.17	3.25	0	85.9	0	1.82	0	0	12.57	0	0	0	0	0	0	-44.23	-44.23
	Inverter Transformer	MV4-7 T	369040	4909001	2	0	0	56.1	56.1	1	5698.01	3.25	0	86.11	0	1.87	0	0	12.74	0	0	0	0	0	0	-44.66	-44.66
	Inverter Transformer	MV4-11 T	369269	4908855	2	0	0	56.1	56.1	1	5749.99	3.25	0	86.19	0	1.88	0	0	12.8	0	0	0	0	0	0	-44.82	-44.82
	Inverter Transformer	MV4-10 T	369307	4908858	2	0	0	56.1	56.1	1	5778.99	3.25	0	86.24	0	1.89	0	0	12.84	0	0	0	0	0	0	-44.91	-44.91
	Inverter Transformer	MV4-4 T	369033	4909199	2	0	0	56.1	56.1	1	5841.58	3.25	0	86.33	0	1.91	0	0	12.91	0	0	0	0	0	0	-45.1	-45.1
	Inverter Transformer	MV4-8 T	369262	4909001	2	0	0	56.1	56.1	1	5849.49	3.25	0	86.34	0	1.92	0	0	12.92	0	0	0	0	0	0	-45.12	-45.12
	Inverter Transformer	MV4-9 T	369284	4909001	2	0	0	56.1	56.1	1	5864.75	3.25	0	86.36	0	1.92	0	0	12.94	0	0	0	0	0	0	-45.17	-45.17
	Inverter Transformer	MV4-6 T	369249	4909192	2	0	0	56.1	56.1	1	5979.96	3.25	0	86.53	0	1.96	0	0	13.08	0	0	0	0	0	0	-45.51	-45.51
	Inverter Transformer	MV4-1 T	369017	4909397	2	0	0	56.1	56.1	1	5982.53	3.25	0	86.54	0	1.96	0	0	13.08	0	0	0	0	0	0	-45.52	-45.52
	Inverter Transformer	MV4-5 T	369283	4909199	2	0	0	56.1	56.1	1	6008.11	3.25	0	86.57	0	1.97	0	0	13.11	0	0	0	0	0	0	-45.6	-45.6
	Inverter Transformer	MV5-6 T	369987	4908507	2	0	0	56.1	56.1	1	6057.28	3.25	0	86.65	0	1.98	0	0	13.17	0	0	0	0	0	0	-45.74	-45.74
	Inverter Transformer	MV4-3 T	369234	4909397	2	0	0	56.1	56.1	1	6122.86	3.25	0	86.74	0	2	0	0	13.25	0	0	0	0	0	0	-45.93	-45.93
	Inverter Transformer	MV4-2 T	369267	4909397	2	0	0	56.1	56.1	1	6144.6	3.25	0	86.77	0	2.01	0	0	13.27	0	0	0	0	0	0	-45.99	-45.99
	Inverter Transformer	MV5-5 T	370021	4908690	2	0	0	56.1	56.1	1	6197.88	3.25	0	86.84	0	2.03	0	0	13.33	0	0	0	0	0	0	-46.15	-46.15
	Inverter Transformer	MV5-2 T	370011	4908853	2	0	0	56.1	56.1	1	6294.32	3.25	0	86.98	0	2.06	0	0	13.45	0	0	0	0	0	0	-46.42	-46.42
	Inverter Transformer	MV5-4 T	370330	4908707	2	0	0	56.1	56.1	1	6450.95	3.25	0	87.19	0	2.1	0	0	13.62	0	0	0	0	0	0	-46.86	-46.86
	Inverter Transformer	MV5-3 T	370237	4908851	2	0	0	56.1	56.1	1	6467.05	3.25	0	87.21	0	2.11	0	0	13.64	0	0	0	0	0	0	-46.91	-46.91
	Inverter Transformer	MV5-1 T	370015	4909142	2	0	0	56.1	56.1	1	6487.99	3.25	0	87.24	0	2.11	0	0	13.67	0	0	0	0	0	0	-46.96	-46.96
	Line Reactor	NGR	369421	4908787.5	5	0	0	45.4	45.4	1	5811.51	5.25	0	86.29	0	3.24	1.36	0.08	2.38	0	0	0	0	0	0	-47.91	-47.91
Limit. Valu	0	0																								
Level D/N:	38.8948	38.8948																								

Receiver: Existing Noise Receptor
ID: G-119
X: 364893.2
Y: 4904450
Z: 4.5
Ground: 0

ISO	Description	ID	X	Y	Z	Ground	ReflOrd	LxT	LxN	L/A	Dist.	hm	Freq	Adiv	K0b	Agr	Abar	z	Aatm	Afol	Ahous	Cmet	CmetN	Dc	RL	LtotT	LtotN
	Inverter	MV1-15	365315	4904994	2	0	0	100.3	100.3	1	688.37	3.25	0	67.76	0	-0.42	0	0	9.68	0	0	0	0	0	0	23.29	23.29
	Inverter	MV1-14	365163	4905049	2	0	0	97.3	97.3	1	656.96	3.25	0	67.35	0	-0.44	0	0	9.52	0	0	0	0	0	0	20.88	20.88
	Inverter	MV1-12	365038	4905386	2	0	0	100.3	100.3	1	947.14	3.25	0	70.53	0	-0.27	0	0	10.73	0	0	0	0	0	0	19.32	19.32
	Inverter	MV1-11	364655	4905414	2	0	0	100.3	100.3	1	993	3.25	0	70.94	0	-0.25	0	0	10.89	0	0	0	0	0	0	18.73	18.73
	Inverter	MV1-13	364731	4905241	2	0	0	97.3	97.3	1	807.46	3.25	0	69.14	0	-0.35	0	0	10.21	0	0	0	0	0	0	18.31	18.31
	Inverter	MV1-8	364788	4905647	2	0	0	100.3	100.3	1	1201.62	3.25	0	72.6	0	-0.15	0	0	11.53	0	0	0	0	0	0	16.34	16.34
	Inverter	MV1-9	364561	4905646	2	0	0	100.3	100.3	1	1241.28	3.25	0	72.88	0	-0.14	0	0	11.64	0	0	0	0	0	0	15.93	15.93
	Inverter	MV1-6	364477	4905835	2	0	0	100.3	100.3	1	1446.19	3.25	0	74.2	0	-0.05	0	0	12.19	0	0	0	0	0	0	13.97	13.97
	Inverter	MV1-5	364671	4905892	2	0	0	100.3	100.3	1	1459.02	3.25	0	74.28	0	-0.05	0	0	12.22	0	0	0	0	0	0	13.86	13.86

Inverter	MV1-4	364815	4905918	2	0	0	100.3	100.3	1	1470.08	3.25	0	74.35	0	-0.04	0	0	12.25	0	0	0	0	0	0	13.76	13.76
Inverter	MV1-10	365004	4905564	2	0	0	97.3	97.3	1	1119.5	3.25	0	71.98	0	-0.19	0	0	11.29	0	0	0	0	0	0	14.23	14.23
Inverter	MV1-2	364753	4906063	2	0	0	100.3	100.3	1	1619.08	3.25	0	75.19	0	0.01	0	0	12.61	0	0	0	0	0	0	12.5	12.5
Sol_Luce Substation	S_Substation	369426	4908792	3.5	0	0	112.1	112.1	1	6276.88	5.25	0	86.95	0	1.23	2.59	0.25	10.03	0	0	0	0	0	0	11.28	11.28
Inverter	MV1-1	364715	4906166	2	0	0	100.3	100.3	1	1725.23	3.25	0	75.74	0	0.05	0	0	12.86	0	0	0	0	0	0	11.67	11.67
Inverter	MV1-7	364925	4905782	2	0	0	97.3	97.3	1	1332.38	3.25	0	73.49	0	-0.1	0	0	11.89	0	0	0	0	0	0	12.03	12.03
Inverter	MV2-4	365586	4906624	2	0	0	100.3	100.3	1	2281.72	3.25	0	78.17	0	0.2	0	0	14.04	0	0	0	0	0	0	7.91	7.91
Inverter	MV2-3	365820	4906641	2	0	0	100.3	100.3	1	2378.96	3.25	0	78.53	0	0.23	0	0	14.23	0	0	0	0	0	0	7.33	7.33
Inverter	MV2-1	365842	4906816	2	0	0	97.3	97.3	1	2549.15	3.25	0	79.13	0	0.27	0	0	14.55	0	0	0	0	0	0	3.36	3.36
Inverter	MV3-18	367752	4907412	2	0	0	100.3	100.3	1	4116.57	3.25	0	83.29	0	0.54	0	0	17.23	0	0	0	0	0	0	-0.76	-0.76
Inverter	MV3-12	367668	4907594	2	0	0	100.3	100.3	1	4193.36	3.25	0	83.45	0	0.55	0	0	17.35	0	0	0	0	0	0	-1.05	-1.05
Inverter	MV3-13	367963	4907577	2	0	0	100.3	100.3	1	4381.99	3.25	0	83.83	0	0.58	0	0	17.65	0	0	0	0	0	0	-1.75	-1.75
Inverter	MV3-17	368178	4907472	2	0	0	100.3	100.3	1	4463.45	3.25	0	83.99	0	0.59	0	0	17.77	0	0	0	0	0	0	-2.04	-2.04
Inverter	MV3-7	367945	4907754	2	0	0	100.3	100.3	1	4497.77	3.25	0	84.06	0	0.59	0	0	17.83	0	0	0	0	0	0	-2.17	-2.17
Inverter	MV3-19	368357	4907347	2	0	0	100.3	100.3	1	4515.59	3.25	0	84.09	0	0.59	0	0	17.85	0	0	0	0	0	0	-2.23	-2.23
Inverter	MV3-21	368478	4907206	2	0	0	100.3	100.3	1	4521.76	3.25	0	84.11	0	0.59	0	0	17.86	0	0	0	0	0	0	-2.25	-2.25
Inverter	MV3-10	368167	4907669	2	0	0	100.3	100.3	1	4591.27	3.25	0	84.24	0	0.6	0	0	17.97	0	0	0	0	0	0	-2.5	-2.5
Inverter	MV3-15	368357	4907477	2	0	0	100.3	100.3	1	4600.07	3.25	0	84.26	0	0.6	0	0	17.98	0	0	0	0	0	0	-2.53	-2.53
Inverter	MV3-3	367939	4907927	2	0	0	100.3	100.3	1	4622.38	3.25	0	84.3	0	0.6	0	0	18.02	0	0	0	0	0	0	-2.61	-2.61
Inverter	MV3-6	368162	4907834	2	0	0	100.3	100.3	1	4704.95	3.25	0	84.45	0	0.61	0	0	18.14	0	0	0	0	0	0	-2.89	-2.89
Inverter	MV3-11	368346	4907662	2	0	0	100.3	100.3	1	4715.8	3.25	0	84.47	0	0.61	0	0	18.16	0	0	0	0	0	0	-2.93	-2.93
Inverter	MV3-16	368514	4907475	2	0	0	100.3	100.3	1	4718.14	3.25	0	84.48	0	0.61	0	0	18.16	0	0	0	0	0	0	-2.94	-2.94
Inverter	MV3-20	368689	4907317	2	0	0	100.3	100.3	1	4756.87	3.25	0	84.55	0	0.62	0	0	18.22	0	0	0	0	0	0	-3.07	-3.07
Inverter	MV3-14	368684	4907498	2	0	0	100.3	100.3	1	4864.2	3.25	0	84.74	0	0.63	0	0	18.38	0	0	0	0	0	0	-3.44	-3.44
Inverter	MV3-9	368512	4907703	2	0	0	100.3	100.3	1	4865.98	3.25	0	84.74	0	0.63	0	0	18.38	0	0	0	0	0	0	-3.44	-3.44
Inverter	MV3-8	368680	4907712	2	0	0	100.3	100.3	1	4998.05	3.25	0	84.98	0	0.64	0	0	18.58	0	0	0	0	0	0	-3.88	-3.88
Inverter	MV6-2	370085	4907339	2	0	0	100.3	100.3	1	5941.47	3.25	0	86.48	0	0.7	0	0	19.91	0	0	0	0	0	0	-6.78	-6.78
Inverter	MV6-3	370207	4907140	2	0	0	100.3	100.3	1	5955.89	3.25	0	86.5	0	0.7	0	0	19.93	0	0	0	0	0	0	-6.82	-6.82
Inverter	MV1-3	364440	4906039	2	0	0	89.1	89.1	1	1652.37	3.25	0	75.36	0	0.83	0	0	7.47	0	0	0	0	0	0	5.4	5.4
Gardiner Substation	G_Sub	366586.3	4903349.9	2.5	0	0	90.8	90.8	1	2019.11	4.25	0	77.1	0	0.86	3.74	0.3	4.4	0	0	0	0	0	0	4.67	4.67
Inverter	MV4-7	369035	4909001	2	0	0	100.3	100.3	1	6153.54	3.25	0	86.78	0	0.71	0	0	20.2	0	0	0	0	0	0	-7.38	-7.38
Inverter	MV4-11	369264	4908855	2	0	0	100.3	100.3	1	6205.48	3.25	0	86.86	0	0.71	0	0	20.27	0	0	0	0	0	0	-7.52	-7.52
Inverter	MV4-10	369312	4908858	2	0	0	100.3	100.3	1	6241.5	3.25	0	86.91	0	0.71	0	0	20.32	0	0	0	0	0	0	-7.62	-7.62
Inverter	MV4-4	369027	4909199	2	0	0	100.3	100.3	1	6296.13	3.25	0	86.98	0	0.71	0	0	20.39	0	0	0	0	0	0	-7.77	-7.77
Inverter	MV4-8	369256	4909001	2	0	0	100.3	100.3	1	6304.41	3.25	0	86.99	0	0.71	0	0	20.4	0	0	0	0	0	0	-7.8	-7.8
Inverter	MV4-9	369289	4909001	2	0	0	100.3	100.3	1	6327.3	3.25	0	87.02	0	0.71	0	0	20.43	0	0	0	0	0	0	-7.86	-7.86
Inverter	MV4-6	369243	4909192	2	0	0	100.3	100.3	1	6434.85	3.25	0	87.17	0	0.71	0	0	20.57	0	0	0	0	0	0	-8.15	-8.15
Inverter	MV4-1	369011	4909397	2	0	0	100.3	100.3	1	6436.54	3.25	0	87.17	0	0.71	0	0	20.58	0	0	0	0	0	0	-8.15	-8.15
Inverter	MV4-5	369289	4909199	2	0	0	100.3	100.3	1	6471.17	3.25	0	87.22	0	0.71	0	0	20.62	0	0	0	0	0	0	-8.24	-8.24
Inverter	MV4-3	369229	4909397	2	0	0	100.3	100.3	1	6578.14	3.25	0	87.36	0	0.72	0	0	20.76	0	0	0	0	0	0	-8.53	-8.53
Inverter	MV4-2	369272	4909397	2	0	0	100.3	100.3	1	6606.57	3.25	0	87.4	0	0.72	0	0	20.8	0	0	0	0	0	0	-8.6	-8.6
Inverter	MV5-5	370015	4908690	2	0	0	100.3	100.3	1	6649.09	3.25	0	87.46	0	0.71	0	0	20.85	0	0	0	0	0	0	-8.71	-8.71
Inverter	MV5-2	370006	4908853	2	0	0	100.3	100.3	1	6747.38	3.25	0	87.58	0	0.71	0	0	20.98	0	0	0	0	0	0	-8.96	-8.96
Inverter	MV5-4	370324	4908707	2	0	0	100.3	100.3	1	6900.41	3.25	0	87.78	0	0.71	0	0	21.17	0	0	0	0	0	0	-9.35	-9.35
Inverter	MV5-3	370231	4908851	2	0	0	100.3	100.3	1	6918.16	3.25	0	87.8	0	0.71	0	0	21.2	0	0	0	0	0	0	-9.4	-9.4
Inverter	MV5-1	370020	4909142	2	0	0	100.3	100.3	1	6949.74	3.25	0	87.84	0	0.71	0	0	21.24	0	0	0	0	0	0	-9.47	-9.47
Inverter	MV6-1	370235	4907364	2	0	0	97.3	97.3	1	6084.92	3.25	0	86.69	0	0.71	0	0	20.11	0	0	0	0	0	0	-10.19	-10.19
Inverters	G_Inv1	366526.4	4903225.8	2	0	0	87.7	87.7	1	2041.08	3.25	0	77.2	0	2.59	0	0	2.68	0	0	0	0	0	0	5.19	5.19
Inverter	MV2-2	365977	4906654	2	0	0	89.1	89.1	1	2456.06	3.25	0	78.8	0	1.02	0	0	8.78	0	0	0	0	0	0	0.46	0.46
Inverters	G_Inv2	366676.9	4903239.1	2	0	0	87.7	87.7	1	2155.89	3.25	0	77.67	0	2.6	0	0	2.82	0	0	0	0	0	0	4.57	4.57
Inverters	G_Inv3	366583.7	4903091.4	2	0	0	87.7	87.7	1	2168.78	3.25	0	77.72	0	2.6	0	0	2.83	0	0	0	0	0	0	4.5	4.5
DSTATCOM - 10 MVAR #2	DSAT2	369403	4908757	2.5	0	0	96.6	96.6	1	6236.07	3.5	0	86.9	0	3.79	0	0	3.95	0	0	0	0	0	0	1.99	1.99
DSTATCOM - 10 MVAR #1	DSAT1	369437	4908757	2.5	0	0	96.6	96.6	1	6260.7	3.5	0	86.93	0	3.79	0	0	3.96	0	0	0	0	0	0	1.94	1.94
Inverters	G_Inv4	366732.8	4903105	2	0	0	87.7	87.7	1	2278.85	3.25	0	78.15	0	2.62	0	0	2.96	0	0	0	0	0	0	3.93	3.93
Inverters	G_Inv5	366638.5	4902958.1	2	0	0	87.7	87.7	1	2296.05	3.25	0	78.22	0	2.62	0	0	2.98	0	0	0	0	0	0	3.84	3.84
Inverters	G_Inv6	366788.5	4902972	2	0	0	87.7	87.7	1	2403.47	3.25	0	78.62	0	2.63	0	0	3.1	0	0	0	0	0	0	3.31	3.31
Inverters	G_Inv7	366694.6	4902824.7	2	0	0	87.7	87.7	1	2426.24	3.25	0	78.7	0	2.63	0	0	3.13	0	0	0	0	0	0	3.2	3.2
Inverters	G_Inv8	366844.5	4902838.5	2	0	0	87.7	87.7	1	2530.71	3.25	0	79.06	0	2.65	0	0	3.25	0	0	0	0	0	0	2.7	2.7
Inverters	G_Inv9	366750.9	4902691.8	2	0	0	87.7	87.7	1	2557.8	3.25	0	79.16	0	2.65	0	0	3.28	0	0	0	0	0	0	2.58	2.58
Inverters	G_Inv10	366900.7	4902704.8	2	0	0	87.7	87.7	1	2660.03	3.25	0	79.5	0	2.66	0	0	3.39	0	0	0	0	0	0	2.11	2.11
SubstationTransformer	W_ST	369711.17	4906112.3	2.5	0	0	92	92	1	5096.66	4.25	0	85.15	0	1.66	2.31	0.27	8.73	0	0	0	0	0	0	-5.87	-5.87
Inverter	MV3-22	368656	4907142	2	0	0	89.1	89.1	1	4626.61	3.25	0	84.31	0	1.55	0	0	11.96	0	0	0	0	0	0	-8.75	-8.75
Inverter	MV3-1	368156	4907976	2	0	0	89.1	89.1	1	4804.01	3.25	0	84.63	0	1.59	0	0	12.2	0	0	0	0	0	0	-9.37	-9.37
Inverter	MV3-5	368340	4907843	2	0	0	89.1	89.1	1	4836.62	3.25	0	84.69	0	1.6	0	0	12.24	0	0	0	0	0	0	-9.48	-9.48
Westbrook Inverter Enclosur	W_INV2	369374	4906388	2	0	0	89.1	89.1	1	4881.95	3.25	0	84.77	0	1.61	0	0	12.31	0	0	0	0	0	0	-9.63	-9.63
Westbrook Inverter Enclosur	W_INV3	369508	4906164	2	0	0	89.1	89.1	1	4922.82	3.25	0	84.84	0	1.62	0	0	12.36	0	0	0	0	0	0	-9.77	-9.77
Inverter	MV3-4	368502	4907925	2	0	0	89.1	89.1	1	5009.9	3.25	0	85	0	1.64	0	0	12.48	0	0	0	0	0	0	-10.06	-10.06
Westbrook Inverter Enclosur	W_INV4	369673	4906164	2	0	0	89.1	89.1	1	5077.82	3.25	0	85.11	0	1.66	0	0	12.57	0	0	0	0	0	0	-10.28	-10.28
Inverter	MV3-2	368671	4907928	2	0	0	89.1	89.1	1	5135	3.25	0	85.21	0	1.67	0	0	12.64	0	0	0	0	0	0	-10.47	-10.47
Westbrook Inverter Enclosur	W_INV7	369780	4906417	2	0	0	89.1	89.1	1	5267.82	3.25	0	85.43	0	1.71	0	0	12.82	0	0	0	0	0	0	-10.9	-10.9
Westbrook Inverter Enclosur	W_INV5	369719	4906574	2	0	0	89.1	89.1	1	5272.54	3.25	0	85.44	0	1.71	0	0	12.83	0	0	0	0	0	0	-10.91	-10.91
Westbrook Inverter Enclosur	W_INV6	369875	4906578	2	0	0	89.1	89.1	1	5417.26	3.25	0	85.68	0	1.74	0	0	13.01	0	0	0	0	0	0	-11.38	-11.38
Fixed Reactor Bank 1	FRB1	369378	4908755	6	0	0	89.8	89.8	1	6216.63	5.25	0	86.87	0	-0.39	0	0	9.97	0	0	0	0	0	0	-6.68	-6.68
Fixed Reactor Bank 2	FRB2	369464	4908755	6	0	0	89.8	89.8	1	6278.95	5.25	0	86.96	0	-0.38	0	0	10.03	0	0	0	0	0	0	-6.84	-6.84

Inverter	MV4-13	369051	4908605	2	0	0	89.1	89.1	1	5878.04	3.25	0	86.38	0	1.86	0	0	13.61	0	0	0	0	0	0	-12.79	-12.79
Inverter	MV4-15	369176	4908481	2	0	0	89.1	89.1	1	5881.44	3.25	0	86.39	0	1.86	0	0	13.61	0	0	0	0	0	0	-12.8	-12.8
Inverter	MV4-14	369176	4908507	2	0	0	89.1	89.1	1	5899.29	3.25	0	86.42	0	1.86	0	0	13.63	0	0	0	0	0	0	-12.85	-12.85
Inverter	MV4-12	369043	4908803	2	0	0	89.1	89.1	1	6014.1	3.25	0	86.58	0	1.89	0	0	13.78	0	0	0	0	0	0	-13.19	-13.19
Inverter Transformer	MV1-14 T	365157	4905049	2	0	0	69.4	69.4	1	654.52	3.25	0	67.32	0	1.3	0	0	3.27	0	0	0	0	0	0	-2.53	-2.53
Inverter	MV5-6	369982	4908507	2	0	0	89.1	89.1	1	6508.08	3.25	0	87.27	0	2.01	0	0	14.39	0	0	0	0	0	0	-14.61	-14.61
Westbrook Inverter Enclosur	W_INV1	369409	4906578	2	0	0	86.1	86.1	1	4992.08	3.25	0	84.97	0	1.64	0	0	12.45	0	0	0	0	0	0	-13	-13
Inverter Transformer	MV1-13 T	364725	4905241	2	0	0	69.4	69.4	1	808.69	3.25	0	69.16	0	1.5	0	0	3.53	0	0	0	0	0	0	-4.83	-4.83
Inverter	MV6-4	370250	4906966	2	0	0	86.1	86.1	1	5918.24	3.25	0	86.44	0	1.87	0	0	13.66	0	0	0	0	0	0	-15.91	-15.91
Inverter Transformer	MV1-10 T	365010	4905564	2	0	0	69.4	69.4	1	1120.11	3.25	0	71.99	0	1.77	0	0	3.97	0	0	0	0	0	0	-8.38	-8.38
Inverter Transformer	MV1-7 T	364919	4905782	2	0	0	69.4	69.4	1	1332.25	3.25	0	73.49	0	1.89	0	0	4.24	0	0	0	0	0	0	-10.27	-10.27
Westbrook Inverter Transfor	W_INVTR1	369403	4906578	2	0	0	78.2	78.2	1	4986.65	3.25	0	84.96	0	-3.17	0	0	2.41	0	0	0	0	0	0	-5.95	-5.95
Westbrook Inverter Transfor	W_INVTR2	369368	4906388	2	0	0	77.3	77.3	1	4876.44	3.25	0	84.76	0	-3.15	0	0	2.37	0	0	0	0	0	0	-6.64	-6.64
Westbrook Inverter Transfor	W_INVTR3	369514	4906164	2	0	0	77.3	77.3	1	4928.45	3.25	0	84.85	0	-3.16	0	0	2.39	0	0	0	0	0	0	-6.74	-6.74
Westbrook Inverter Transfor	W_INVTR4	369679	4906164	2	0	0	77.3	77.3	1	5083.47	3.25	0	85.12	0	-3.19	0	0	2.44	0	0	0	0	0	0	-7.03	-7.03
Westbrook Inverter Transfor	W_INVTR7	369786	4906417	2	0	0	77.3	77.3	1	5273.38	3.25	0	85.44	0	-3.23	0	0	2.51	0	0	0	0	0	0	-7.37	-7.37
Westbrook Inverter Transfor	W_INVTR5	369725	4906574	2	0	0	77.3	77.3	1	5278.04	3.25	0	85.45	0	-3.23	0	0	2.51	0	0	0	0	0	0	-7.38	-7.38
Westbrook Inverter Transfor	W_INVTR6	369881	4906578	2	0	0	77.3	77.3	1	5422.78	3.25	0	85.68	0	-3.26	0	0	2.55	0	0	0	0	0	0	-7.64	-7.64
Inverter Transformer	MV2-1 T	365836	4906816	2	0	0	69.4	69.4	1	2546.93	3.25	0	79.12	0	2.36	0	0	5.49	0	0	0	0	0	0	-17.62	-17.62
Inverter Transformer	MV1-15 T	365309	4904994	2	0	0	56.1	56.1	1	684.71	3.25	0	67.71	0	-0.08	0	0	4.09	0	0	0	0	0	0	-15.66	-15.66
Inverter Transformer	MV1-12 T	365044	4905386	2	0	0	56.1	56.1	1	948.07	3.25	0	70.54	0	-0.01	0	0	4.76	0	0	0	0	0	0	-19.24	-19.24
Inverter Transformer	MV1-11 T	364649	4905414	2	0	0	56.1	56.1	1	994.45	3.25	0	70.95	0	0.01	0	0	4.88	0	0	0	0	0	0	-19.78	-19.78
Inverter Transformer	MV1-8 T	364782	4905647	2	0	0	56.1	56.1	1	1202.16	3.25	0	72.6	0	0.08	0	0	5.36	0	0	0	0	0	0	-21.99	-21.99
Inverter Transformer	MV1-9 T	364555	4905646	2	0	0	56.1	56.1	1	1242.9	3.25	0	72.89	0	0.1	0	0	5.45	0	0	0	0	0	0	-22.38	-22.38
Inverter Transformer	MV6-4 T	370244	4906966	2	0	0	69.4	69.4	1	5912.81	3.25	0	86.44	0	3.18	0	0	7.97	0	0	0	0	0	0	-28.23	-28.23
Inverter Transformer	MV6-1 T	370230	4907364	2	0	0	69.4	69.4	1	6080.53	3.25	0	86.68	0	3.2	0	0	8.07	0	0	0	0	0	0	-28.6	-28.6
Inverter Transformer	MV1-6 T	364482	4905835	2	0	0	56.1	56.1	1	1444.75	3.25	0	74.2	0	0.18	0	0	5.9	0	0	0	0	0	0	-24.21	-24.21
Inverter Transformer	MV1-5 T	364676	4905892	2	0	0	56.1	56.1	1	1458.27	3.25	0	74.28	0	0.18	0	0	5.93	0	0	0	0	0	0	-24.33	-24.33
Inverter Transformer	MV1-4 T	364821	4905918	2	0	0	56.1	56.1	1	1469.78	3.25	0	74.35	0	0.19	0	0	5.95	0	0	0	0	0	0	-24.43	-24.43
Inverter Transformer	MV1-2 T	364759	4906063	2	0	0	56.1	56.1	1	1618.57	3.25	0	75.18	0	0.25	0	0	6.27	0	0	0	0	0	0	-25.64	-25.64
Inverter Transformer	MV1-3 T	364435	4906039	2	0	0	56.1	56.1	1	1653.75	3.25	0	75.37	0	0.26	0	0	6.34	0	0	0	0	0	0	-25.91	-25.91
Inverter Transformer	MV1-1 T	364721	4906166	2	0	0	56.1	56.1	1	1724.62	3.25	0	75.73	0	0.29	0	0	6.49	0	0	0	0	0	0	-26.45	-26.45
Inverter Transformer	MV2-4 T	365590	4906628	2	0	0	56.1	56.1	1	2286.75	3.25	0	78.18	0	0.53	0	0	7.59	0	0	0	0	0	0	-30.25	-30.25
Inverter Transformer	MV2-3 T	365814	4906641	2	0	0	56.1	56.1	1	2376.63	3.25	0	78.52	0	0.56	0	0	7.76	0	0	0	0	0	0	-30.79	-30.79
Inverter Transformer	MV2-2 T	365982	4906654	2	0	0	56.1	56.1	1	2458.27	3.25	0	78.81	0	0.6	0	0	7.91	0	0	0	0	0	0	-31.27	-31.27
Inverter Transformer	MV3-18 T	367757	4907412	2	0	0	56.1	56.1	1	4120.05	3.25	0	83.3	0	1.29	0	0	10.63	0	0	0	0	0	0	-39.16	-39.16
Inverter Transformer	MV3-12 T	367674	4907594	2	0	0	56.1	56.1	1	4197.33	3.25	0	83.46	0	1.32	0	0	10.74	0	0	0	0	0	0	-39.47	-39.47
Inverter Transformer	MV3-13 T	367958	4907577	2	0	0	56.1	56.1	1	4378.49	3.25	0	83.83	0	1.39	0	0	11	0	0	0	0	0	0	-40.17	-40.17
Inverter Transformer	MV3-17 T	368183	4907472	2	0	0	56.1	56.1	1	4467.13	3.25	0	84	0	1.43	0	0	11.13	0	0	0	0	0	0	-40.5	-40.5
Inverter Transformer	MV3-7 T	367951	4907754	2	0	0	56.1	56.1	1	4501.84	3.25	0	84.07	0	1.44	0	0	11.18	0	0	0	0	0	0	-40.63	-40.63
Inverter Transformer	MV3-19 T	368352	4907347	2	0	0	56.1	56.1	1	4511.75	3.25	0	84.09	0	1.44	0	0	11.19	0	0	0	0	0	0	-40.66	-40.66
Inverter Transformer	MV3-21 T	368484	4907206	2	0	0	56.1	56.1	1	4526.52	3.25	0	84.12	0	1.45	0	0	11.21	0	0	0	0	0	0	-40.72	-40.72
Inverter Transformer	MV3-10 T	368162	4907669	2	0	0	56.1	56.1	1	4587.7	3.25	0	84.23	0	1.47	0	0	11.3	0	0	0	0	0	0	-40.94	-40.94
Inverter Transformer	MV3-15 T	368351	4907477	2	0	0	56.1	56.1	1	4595.55	3.25	0	84.25	0	1.48	0	0	11.31	0	0	0	0	0	0	-40.97	-40.97
Inverter Transformer	MV3-3 T	367944	4907927	2	0	0	56.1	56.1	1	4625.68	3.25	0	84.3	0	1.49	0	0	11.35	0	0	0	0	0	0	-41.08	-41.08
Inverter Transformer	MV3-22 T	368661	4907142	2	0	0	56.1	56.1	1	4630.68	3.25	0	84.31	0	1.49	0	0	11.36	0	0	0	0	0	0	-41.1	-41.1
Inverter Transformer	MV3-6 T	368156	4907834	2	0	0	56.1	56.1	1	4700.78	3.25	0	84.44	0	1.52	0	0	11.45	0	0	0	0	0	0	-41.35	-41.35
Inverter Transformer	MV3-11 T	368340	4907662	2	0	0	56.1	56.1	1	4711.41	3.25	0	84.46	0	1.52	0	0	11.47	0	0	0	0	0	0	-41.39	-41.39
Inverter Transformer	MV3-16 T	368509	4907475	2	0	0	56.1	56.1	1	4714.3	3.25	0	84.47	0	1.52	0	0	11.47	0	0	0	0	0	0	-41.4	-41.4
Inverter Transformer	MV3-20 T	368683	4907317	2	0	0	56.1	56.1	1	4752.08	3.25	0	84.54	0	1.53	0	0	11.52	0	0	0	0	0	0	-41.54	-41.54
Inverter Transformer	MV3-1 T	368150	4907976	2	0	0	56.1	56.1	1	4799.94	3.25	0	84.62	0	1.55	0	0	11.59	0	0	0	0	0	0	-41.71	-41.71
Inverter Transformer	MV3-5 T	368335	4907843	2	0	0	56.1	56.1	1	4833.06	3.25	0	84.68	0	1.56	0	0	11.63	0	0	0	0	0	0	-41.82	-41.82
Inverter Transformer	MV3-14 T	368678	4907498	2	0	0	56.1	56.1	1	4859.53	3.25	0	84.73	0	1.57	0	0	11.67	0	0	0	0	0	0	-41.92	-41.92
Inverter Transformer	MV3-9 T	368517	4907703	2	0	0	56.1	56.1	1	4869.7	3.25	0	84.75	0	1.58	0	0	11.68	0	0	0	0	0	0	-41.95	-41.95
Inverter Transformer	MV3-8 T	368685	4907712	2	0	0	56.1	56.1	1	5001.84	3.25	0	84.98	0	1.63	0	0	11.86	0	0	0	0	0	0	-42.41	-42.41
Inverter Transformer	MV3-4 T	368507	4907925	2	0	0	56.1	56.1	1	5013.5	3.25	0	85	0	1.63	0	0	11.87	0	0	0	0	0	0	-42.45	-42.45
Inverter Transformer	MV3-2 T	368677	4907928	2	0	0	56.1	56.1	1	5139.42	3.25	0	85.22	0	1.68	0	0	12.04	0	0	0	0	0	0	-42.87	-42.87
Inverter Transformer	MV4-15 T	369170	4908481	2	0	0	56.1	56.1	1	5877.07	3.25	0	86.38	0	1.93	0	0	12.96	0	0	0	0	0	0	-45.21	-45.21
Inverter Transformer	MV4-13 T	369057	4908605	2	0	0	56.1	56.1	1	5882.28	3.25	0	86.39	0	1.93	0	0	12.96	0	0	0	0	0	0	-45.22	-45.22
Inverter Transformer	MV4-14 T	369182	4908507	2	0	0	56.1	56.1	1	5903.65	3.25	0	86.42	0	1.93	0	0	12.99	0	0	0	0	0	0	-45.29	-45.29
Inverter Transformer	MV6-2 T	370091	4907339	2	0	0	56.1	56.1	1	5946.72	3.25	0	86.49	0	1.95	0	0	13.04	0	0	0	0	0	0	-45.41	-45.41
Inverter Transformer	MV6-3 T	370202	4907140	2	0	0	56.1	56.1	1	5951.43	3.25	0	86.49	0	1.95	0	0	13.05	0	0	0	0	0	0	-45.43	-45.43
Inverter Transformer	MV4-12 T	369049	4908803	2	0	0	56.1	56.1	1	6018.25	3.25	0	86.59	0	1.97	0	0	13.12	0	0	0	0	0	0	-45.63	-45.63
Inverter Transformer	MV4-7 T	369040	4909001	2	0	0	56.1	56.1	1	6156.91	3.25	0	86.79	0	2.01	0	0	13.29	0	0	0	0	0	0	-46.03	-46.03
Inverter Transformer	MV4-11 T	369269	4908855	2	0	0	56.1	56.1	1	6209	3.25	0	86.86	0	2.03	0	0	13.35	0	0	0	0	0	0	-46.18	-46.18
Inverter Transformer	MV4-10 T	369307	4908858	2	0	0	56.1	56.1	1	6237.96	3.25	0	86.9	0	2.04	0	0	13.38	0	0	0	0	0	0	-46.26	-46.26
Inverter Transformer	MV4-4 T	369033	4909199	2	0	0	56.1	56.1	1	6300.08	3.25	0	86.99	0	2.06	0	0	13.45	0	0	0	0	0	0	-46.44	-46.44
Inverter Transformer	MV4-8 T	369262	4909001	2	0	0	56.1	56.1	1	6308.57	3.25	0	87	0	2.06	0	0	13.46	0	0	0	0	0	0	-46.46	-46.46
Inverter Transformer	MV4-9 T	369284	4909001	2	0	0	56.1	56.1	1	6323.82	3.25	0	87.02	0	2.07	0	0	13.48	0	0	0	0	0	0	-46.51	-46.51
Inverter Transformer	MV4-6 T	369249	4909192	2	0	0	56.1	56.1	1	6438.91	3.25	0	87.18	0	2.1	0	0	13.61	0	0	0	0	0	0	-46.83	-46.83
Inverter Transformer	MV4-1 T	369017	4909397	2	0	0	56.1	56.1	1	6440.38	3.25	0	87.18	0	2.1	0	0	13.61	0	0	0	0	0	0	-46.83	-46.83
Inverter Transformer	MV4-5 T	369283	4909199	2	0	0	56.1	56.1	1	6467.1	3.25	0	87.21	0	2.11	0	0	13.64	0	0	0	0	0	0	-46.91	-46.91
Inverter Transformer	MV5-6 T	369987	4908507	2	0	0	56.1	56.1	1	6511.99	3.25	0	87.27	0	2.12	0	0	13.69	0	0	0	0	0	0	-47.03	-47.03
Inverter Transformer	MV4-3 T	369234	4909397	2	0	0	56.1	56.1	1	6581.44	3.25	0	87.37	0	2.14	0	0	13.77	0	0	0	0	0	0	-47.22	-47.22

	Inverter Transformer	MV4-2 T	369267	4909397	2	0	0	56.1	56.1	1	6603.25	3.25	0	87.4	0	2.15	0	0	13.8	0	0	0	0	0	0	-47.28	-47.28
	Inverter Transformer	MV5-5 T	370021	4908690	2	0	0	56.1	56.1	1	6653.72	3.25	0	87.46	0	2.16	0	0	13.85	0	0	0	0	0	0	-47.42	-47.42
	Inverter Transformer	MV5-2 T	370011	4908853	2	0	0	56.1	56.1	1	6751.17	3.25	0	87.59	0	2.19	0	0	13.96	0	0	0	0	0	0	-47.68	-47.68
	Inverter Transformer	MV5-4 T	370330	4908707	2	0	0	56.1	56.1	1	6905.13	3.25	0	87.78	0	2.23	0	0	14.13	0	0	0	0	0	0	-48.09	-48.09
	Inverter Transformer	MV5-3 T	370237	4908851	2	0	0	56.1	56.1	1	6922.79	3.25	0	87.81	0	2.24	0	0	14.15	0	0	0	0	0	0	-48.13	-48.13
	Inverter Transformer	MV5-1 T	370015	4909142	2	0	0	56.1	56.1	1	6946.06	3.25	0	87.83	0	2.24	0	0	14.17	0	0	0	0	0	0	-48.19	-48.19
	Line Reactor	NGR	369421	4908787.5	5	0	0	45.4	45.4	1	6270.16	5.25	0	86.95	0	3.23	1.36	0.08	2.56	0	0	0	0	0	0	-48.75	-48.75
Limit. Valu	0	0																								
Level D/N:	29.4087	29.4087																								

Receiver: Existing Noise Receptor
ID: G-120
X: 365148.2
Y: 4904745
Z: 4.5
Ground: 0

ISO	Description	ID	X	Y	Z	Ground	ReflOrd	LxT	LxN	L/A	Dist.	hm	Freq	Adiv	K0b	Agr	Abar	z	Aatm	Afol	Ahous	Cmet	CmetN	Dc	RL	LtotT	LtotN
	Inverter	MV1-15	365315	4904994	2	0	0	100.3	100.3	1	299.72	3.25	0	60.53	0	-0.65	0	0	6.39	0	0	0	0	0	0	34.04	34.04
	Inverter	MV1-14	365163	4905049	2	0	0	97.3	97.3	1	304.37	3.25	0	60.67	0	-0.65	0	0	6.46	0	0	0	0	0	0	30.84	30.84
	Inverter	MV1-12	365038	4905386	2	0	0	100.3	100.3	1	650.41	3.25	0	67.26	0	-0.44	0	0	9.49	0	0	0	0	0	0	24.01	24.01
	Inverter	MV1-11	364655	4905414	2	0	0	100.3	100.3	1	831.15	3.25	0	69.39	0	-0.33	0	0	10.31	0	0	0	0	0	0	20.95	20.95
	Inverter	MV1-13	364731	4905241	2	0	0	97.3	97.3	1	648.13	3.25	0	67.23	0	-0.45	0	0	9.47	0	0	0	0	0	0	21.05	21.05
	Inverter	MV1-8	364788	4905647	2	0	0	100.3	100.3	1	971.26	3.25	0	70.75	0	-0.26	0	0	10.81	0	0	0	0	0	0	19.01	19.01
	Inverter	MV1-9	364561	4905646	2	0	0	100.3	100.3	1	1075.46	3.25	0	71.63	0	-0.21	0	0	11.15	0	0	0	0	0	0	17.74	17.74
	Inverter	MV1-10	365004	4905564	2	0	0	97.3	97.3	1	831.6	3.25	0	69.4	0	-0.33	0	0	10.31	0	0	0	0	0	0	17.94	17.94
	Inverter	MV1-4	364815	4905918	2	0	0	100.3	100.3	1	1219.41	3.25	0	72.72	0	-0.15	0	0	11.58	0	0	0	0	0	0	16.15	16.15
	Inverter	MV1-5	364671	4905892	2	0	0	100.3	100.3	1	1242.31	3.25	0	72.88	0	-0.14	0	0	11.65	0	0	0	0	0	0	15.92	15.92
	Inverter	MV1-6	364477	4905835	2	0	0	100.3	100.3	1	1280.08	3.25	0	73.14	0	-0.12	0	0	11.75	0	0	0	0	0	0	15.54	15.54
	Inverter	MV1-2	364753	4906063	2	0	0	100.3	100.3	1	1375.98	3.25	0	73.77	0	-0.08	0	0	12.01	0	0	0	0	0	0	14.61	14.61
	Inverter	MV1-1	364715	4906166	2	0	0	100.3	100.3	1	1485.57	3.25	0	74.44	0	-0.04	0	0	12.29	0	0	0	0	0	0	13.62	13.62
	Inverter	MV1-7	364925	4905782	2	0	0	97.3	97.3	1	1060.75	3.25	0	71.51	0	-0.22	0	0	11.11	0	0	0	0	0	0	14.91	14.91
	Sol_Luce Substation	S_Substation	369426	4908792	3.5	0	0	112.1	112.1	1	5888.78	5.25	0	86.4	0	1.13	2.67	0.24	9.62	0	0	0	0	0	0	12.25	12.25
	Inverter	MV2-4	365586	4906624	2	0	0	100.3	100.3	1	1929.33	3.25	0	76.71	0	0.11	0	0	13.31	0	0	0	0	0	0	10.18	10.18
	Inverter	MV2-3	365820	4906641	2	0	0	100.3	100.3	1	2011.5	3.25	0	77.07	0	0.13	0	0	13.49	0	0	0	0	0	0	9.62	9.62
	Inverter	MV2-1	365842	4906816	2	0	0	97.3	97.3	1	2184.13	3.25	0	77.79	0	0.18	0	0	13.84	0	0	0	0	0	0	5.51	5.51
	Inverter	MV3-18	367752	4907412	2	0	0	100.3	100.3	1	3727.29	3.25	0	82.43	0	0.49	0	0	16.61	0	0	0	0	0	0	0.79	0.79
	Inverter	MV3-12	367668	4907594	2	0	0	100.3	100.3	1	3803.45	3.25	0	82.6	0	0.5	0	0	16.73	0	0	0	0	0	0	0.48	0.48
	Inverter	MV3-13	367963	4907577	2	0	0	100.3	100.3	1	3992.91	3.25	0	83.03	0	0.53	0	0	17.04	0	0	0	0	0	0	-0.28	-0.28
	Inverter	MV3-17	368178	4907472	2	0	0	100.3	100.3	1	4076.3	3.25	0	83.21	0	0.54	0	0	17.17	0	0	0	0	0	0	-0.6	-0.6
	Inverter	MV3-7	367945	4907754	2	0	0	100.3	100.3	1	4108.06	3.25	0	83.27	0	0.54	0	0	17.22	0	0	0	0	0	0	-0.72	-0.72
	Inverter	MV3-19	368357	4907347	2	0	0	100.3	100.3	1	4131.2	3.25	0	83.32	0	0.54	0	0	17.26	0	0	0	0	0	0	-0.81	-0.81
	Inverter	MV3-21	368478	4907206	2	0	0	100.3	100.3	1	4140.54	3.25	0	83.34	0	0.55	0	0	17.27	0	0	0	0	0	0	-0.85	-0.85
	Inverter	MV3-10	368167	4907669	2	0	0	100.3	100.3	1	4202.73	3.25	0	83.47	0	0.55	0	0	17.37	0	0	0	0	0	0	-1.08	-1.08
	Inverter	MV3-15	368357	4907477	2	0	0	100.3	100.3	1	4214.29	3.25	0	83.49	0	0.56	0	0	17.39	0	0	0	0	0	0	-1.13	-1.13
	Inverter	MV3-3	367939	4907927	2	0	0	100.3	100.3	1	4232.46	3.25	0	83.53	0	0.56	0	0	17.42	0	0	0	0	0	0	-1.19	-1.19
	Inverter	MV3-6	368162	4907834	2	0	0	100.3	100.3	1	4315.66	3.25	0	83.7	0	0.57	0	0	17.55	0	0	0	0	0	0	-1.5	-1.5
	Inverter	MV3-11	368346	4907662	2	0	0	100.3	100.3	1	4328.37	3.25	0	83.73	0	0.57	0	0	17.57	0	0	0	0	0	0	-1.55	-1.55
	Inverter	MV3-16	368514	4907475	2	0	0	100.3	100.3	1	4333.76	3.25	0	83.74	0	0.57	0	0	17.57	0	0	0	0	0	0	-1.57	-1.57
	Inverter	MV3-20	368689	4907317	2	0	0	100.3	100.3	1	4376.35	3.25	0	83.82	0	0.58	0	0	17.64	0	0	0	0	0	0	-1.73	-1.73
	Inverter	MV3-9	368512	4907703	2	0	0	100.3	100.3	1	4479.39	3.25	0	84.02	0	0.59	0	0	17.8	0	0	0	0	0	0	-2.1	-2.1
	Inverter	MV3-14	368684	4907498	2	0	0	100.3	100.3	1	4481.17	3.25	0	84.03	0	0.59	0	0	17.8	0	0	0	0	0	0	-2.11	-2.11
	Inverter	MV3-8	368680	4907712	2	0	0	100.3	100.3	1	4612.67	3.25	0	84.28	0	0.6	0	0	18	0	0	0	0	0	0	-2.57	-2.57
	Inverter	MV1-3	364440	4906039	2	0	0	89.1	89.1	1	1475.12	3.25	0	74.38	0	0.79	0	0	7.17	0	0	0	0	0	0	6.73	6.73
	Inverter	MV6-2	370085	4907339	2	0	0	100.3	100.3	1	5576.81	3.25	0	85.93	0	0.69	0	0	19.41	0	0	0	0	0	0	-5.71	-5.71
	Inverter	MV6-3	370207	4907140	2	0	0	100.3	100.3	1	5597.1	3.25	0	85.96	0	0.69	0	0	19.44	0	0	0	0	0	0	-5.77	-5.77
	Inverter	MV4-7	369035	4909001	2	0	0	100.3	100.3	1	5763.75	3.25	0	86.21	0	0.7	0	0	19.67	0	0	0	0	0	0	-6.27	-6.27
	Inverter	MV4-11	369264	4908855	2	0	0	100.3	100.3	1	5816.52	3.25	0	86.29	0	0.7	0	0	19.74	0	0	0	0	0	0	-6.42	-6.42
	Inverter	MV4-10	369312	4908858	2	0	0	100.3	100.3	1	5852.69	3.25	0	86.35	0	0.7	0	0	19.79	0	0	0	0	0	0	-6.53	-6.53
	Inverter	MV4-4	369027	4909199	2	0	0	100.3	100.3	1	5906.2	3.25	0	86.43	0	0.7	0	0	19.87	0	0	0	0	0	0	-6.68	-6.68
	Inverter	MV4-8	369256	4909001	2	0	0	100.3	100.3	1	5915.03	3.25	0	86.44	0	0.7	0	0	19.88	0	0	0	0	0	0	-6.71	-6.71
	Inverter	MV4-9	369289	4909001	2	0	0	100.3	100.3	1	5937.99	3.25	0	86.47	0	0.7	0	0	19.91	0	0	0	0	0	0	-6.77	-6.77
	Gardiner Substation	G_Sub	366586.3	4903349.9	2.5	0	0	90.8	90.8	1	2003.61	4.25	0	77.04	0	0.82	3.63	0.27	4.37	0	0	0	0	0	0	4.91	4.91
	Inverter	MV4-6	369243	4909192	2	0	0	100.3	100.3	1	6045.1	3.25	0	86.63	0	0.71	0	0	20.05	0	0	0	0	0	0	-7.08	-7.08
	Inverter	MV4-1	369011	4909397	2	0	0	100.3	100.3	1	6046.68	3.25	0	86.63	0	0.71	0	0	20.06	0	0	0	0	0	0	-7.08	-7.08
	Inverter	MV4-5	369289	4909199	2	0	0	100.3	100.3	1	6081.48	3.25	0	86.68	0	0.71	0	0	20.1	0	0	0	0	0	0	-7.18	-7.18
	Inverter	MV4-3	369229	4909397	2	0	0	100.3	100.3	1	6188.22	3.25	0	86.83	0	0.71	0	0	20.25	0	0	0	0	0	0	-7.48	-7.48
	Inverter	MV4-2	369272	4909397	2	0	0	100.3	100.3	1	6216.66	3.25	0	86.87	0	0.71	0	0	20.28	0	0	0	0	0	0	-7.55	-7.55
	Inverter	MV5-5	370015	4908690	2	0	0	100.3	100.3	1	6264.88	3.25	0	86.94	0	0.71	0	0	20.35	0	0	0	0	0	0	-7.69	-7.69
	Inverter	MV5-2	370006	4908853	2	0	0	100.3	100.3	1	6361.91	3.25	0	87.07	0	0.71	0	0	20.48	0	0	0	0	0	0	-7.95	-7.95
	Inverter	MV5-4	370324	4908707	2	0	0	100.3	100.3	1	6518.16	3.25	0	87.28	0	0.71	0	0	20.68	0	0	0	0	0	0	-8.37	-8.37
	Inverter	MV5-3	370231	4908851	2	0	0	100.3	100.3	1	6534.07	3.25	0	87.3	0	0.71	0	0	20.7	0	0	0	0	0	0	-8.41	-8.41
	Inverter	MV5-1	370020	4909142	2	0	0	100.3	100.3	1	6562.63	3.25	0	87.34	0	0.72	0	0	20.74	0	0	0	0	0	0	-8.49	-8.49
	Inverter	MV2-2	365977	4906654	2	0	0	89.1	89.1	1	2081.15	3.25	0	77.37	0	0.93	0	0	8.18	0	0	0	0	0	0	2.59	2.59

Inverter	MV6-1	370235	4907364	2	0	0	97.3	97.3	1	5721.42	3.25	0	86.15	0	0.69	0	0	19.61	0	0	0	0	0	0	-9.14	-9.14
Inverters	G_Inv1	366526.4	4903225.8	2	0	0	87.7	87.7	1	2051.2	3.25	0	77.24	0	2.59	0	0	2.7	0	0	0	0	0	0	5.14	5.14
DSTATCOM - 10 MVAR #2	DSAT2	369403	4908757	2.5	0	0	96.6	96.6	1	5848.03	3.5	0	86.34	0	3.76	0	0	3.77	0	0	0	0	0	0	2.76	2.76
DSTATCOM - 10 MVAR #1	DSAT1	369437	4908757	2.5	0	0	96.6	96.6	1	5872.81	3.5	0	86.38	0	3.76	0	0	3.78	0	0	0	0	0	0	2.71	2.71
Inverters	G_Inv2	366676.9	4903239.1	2	0	0	87.7	87.7	1	2145.85	3.25	0	77.63	0	2.6	0	0	2.8	0	0	0	0	0	0	4.62	4.62
Inverters	G_Inv3	366583.7	4903091.4	2	0	0	87.7	87.7	1	2189.76	3.25	0	77.81	0	2.61	0	0	2.86	0	0	0	0	0	0	4.39	4.39
Inverters	G_Inv4	366732.8	4903105	2	0	0	87.7	87.7	1	2280.47	3.25	0	78.16	0	2.62	0	0	2.96	0	0	0	0	0	0	3.92	3.92
Inverters	G_Inv5	366638.5	4902958.1	2	0	0	87.7	87.7	1	2326.8	3.25	0	78.34	0	2.62	0	0	3.01	0	0	0	0	0	0	3.69	3.69
Inverters	G_Inv6	366788.5	4902972	2	0	0	87.7	87.7	1	2415.39	3.25	0	78.66	0	2.63	0	0	3.11	0	0	0	0	0	0	3.25	3.25
Inverters	G_Inv7	366694.6	4902824.7	2	0	0	87.7	87.7	1	2465.54	3.25	0	78.84	0	2.64	0	0	3.17	0	0	0	0	0	0	3.01	3.01
Inverter Transformer	MV1-14 T	365157	4905049	2	0	0	69.4	69.4	1	304.14	3.25	0	60.66	0	0.76	0	0	2.39	0	0	0	0	0	0	5.53	5.53
Inverters	G_Inv8	366844.5	4902838.5	2	0	0	87.7	87.7	1	2551.9	3.25	0	79.14	0	2.65	0	0	3.27	0	0	0	0	0	0	2.6	2.6
Inverters	G_Inv9	366750.9	4902691.8	2	0	0	87.7	87.7	1	2604.67	3.25	0	79.32	0	2.66	0	0	3.33	0	0	0	0	0	0	2.36	2.36
Inverters	G_Inv10	366900.7	4902704.8	2	0	0	87.7	87.7	1	2689.55	3.25	0	79.59	0	2.66	0	0	3.43	0	0	0	0	0	0	1.98	1.98
SubstationTransformer	W_ST	369711.17	4906112.3	2.5	0	0	92	92	1	4763.42	4.25	0	84.56	0	1.58	2.39	0.28	8.34	0	0	0	0	0	0	-4.89	-4.89
Inverter	MV3-22	368656	4907142	2	0	0	89.1	89.1	1	4248.56	3.25	0	83.56	0	1.45	0	0	11.44	0	0	0	0	0	0	-7.4	-7.4
Inverter	MV3-1	368156	4907976	2	0	0	89.1	89.1	1	4414.32	3.25	0	83.9	0	1.49	0	0	11.67	0	0	0	0	0	0	-8	-8
Inverter	MV3-5	368340	4907843	2	0	0	89.1	89.1	1	4448.06	3.25	0	83.96	0	1.5	0	0	11.71	0	0	0	0	0	0	-8.12	-8.12
Westbrook Inverter Enclosur	W_INV2	369374	4906388	2	0	0	89.1	89.1	1	4533.97	3.25	0	84.13	0	1.52	0	0	11.83	0	0	0	0	0	0	-8.43	-8.43
Westbrook Inverter Enclosur	W_INV3	369508	4906164	2	0	0	89.1	89.1	1	4584.91	3.25	0	84.23	0	1.54	0	0	11.9	0	0	0	0	0	0	-8.61	-8.61
Inverter	MV3-4	368502	4907925	2	0	0	89.1	89.1	1	4621.73	3.25	0	84.3	0	1.55	0	0	11.95	0	0	0	0	0	0	-8.74	-8.74
Westbrook Inverter Enclosur	W_INV4	369673	4906164	2	0	0	89.1	89.1	1	4742.09	3.25	0	84.52	0	1.58	0	0	12.12	0	0	0	0	0	0	-9.15	-9.15
Inverter	MV3-2	368671	4907928	2	0	0	89.1	89.1	1	4747.8	3.25	0	84.53	0	1.58	0	0	12.12	0	0	0	0	0	0	-9.17	-9.17
Westbrook Inverter Enclosur	W_INV5	369719	4906574	2	0	0	89.1	89.1	1	4923.16	3.25	0	84.84	0	1.62	0	0	12.36	0	0	0	0	0	0	-9.77	-9.77
Westbrook Inverter Enclosur	W_INV7	369780	4906417	2	0	0	89.1	89.1	1	4924.34	3.25	0	84.85	0	1.62	0	0	12.36	0	0	0	0	0	0	-9.77	-9.77
Westbrook Inverter Enclosur	W_INV6	369875	4906578	2	0	0	89.1	89.1	1	5069.77	3.25	0	85.1	0	1.66	0	0	12.56	0	0	0	0	0	0	-10.26	-10.26
Fixed Reactor Bank 1	FRB1	369378	4908755	6	0	0	89.8	89.8	1	5828.49	5.25	0	86.31	0	-0.44	0	0	9.56	0	0	0	0	0	0	-5.65	-5.65
Fixed Reactor Bank 2	FRB2	369464	4908755	6	0	0	89.8	89.8	1	5891.2	5.25	0	86.4	0	-0.43	0	0	9.63	0	0	0	0	0	0	-5.82	-5.82
Inverter	MV4-13	369051	4908605	2	0	0	89.1	89.1	1	5489.21	3.25	0	85.79	0	1.76	0	0	13.11	0	0	0	0	0	0	-11.6	-11.6
Inverter	MV4-15	369176	4908481	2	0	0	89.1	89.1	1	5493.71	3.25	0	85.8	0	1.76	0	0	13.11	0	0	0	0	0	0	-11.62	-11.62
Inverter	MV4-14	369176	4908507	2	0	0	89.1	89.1	1	5511.43	3.25	0	85.83	0	1.77	0	0	13.14	0	0	0	0	0	0	-11.67	-11.67
Inverter	MV4-12	369043	4908803	2	0	0	89.1	89.1	1	5624.66	3.25	0	86	0	1.79	0	0	13.28	0	0	0	0	0	0	-12.02	-12.02
Inverter	MV5-6	369982	4908507	2	0	0	89.1	89.1	1	6125.22	3.25	0	86.74	0	1.92	0	0	13.92	0	0	0	0	0	0	-13.52	-13.52
Inverter Transformer	MV1-13 T	364725	4905241	2	0	0	69.4	69.4	1	652.01	3.25	0	67.29	0	1.29	0	0	3.26	0	0	0	0	0	0	-2.49	-2.49
Westbrook Inverter Enclosur	W_INV1	369409	4906578	2	0	0	86.1	86.1	1	4638.35	3.25	0	84.33	0	1.55	0	0	11.97	0	0	0	0	0	0	-11.79	-11.79
Inverter	MV6-4	370250	4906966	2	0	0	86.1	86.1	1	5564.28	3.25	0	85.91	0	1.78	0	0	13.21	0	0	0	0	0	0	-14.84	-14.84
Inverter Transformer	MV1-10 T	365010	4905564	2	0	0	69.4	69.4	1	830.58	3.25	0	69.39	0	1.52	0	0	3.56	0	0	0	0	0	0	-5.12	-5.12
Inverter Transformer	MV1-7 T	364919	4905782	2	0	0	69.4	69.4	1	1062.03	3.25	0	71.52	0	1.73	0	0	3.9	0	0	0	0	0	0	-7.8	-7.8
Inverter Transformer	MV1-15 T	365309	4904994	2	0	0	56.1	56.1	1	296.42	3.25	0	60.44	0	-0.07	0	0	2.77	0	0	0	0	0	0	-7.08	-7.08
Westbrook Inverter Transfor	W_INVTR1	369403	4906578	2	0	0	78.2	78.2	1	4632.84	3.25	0	84.32	0	-3.1	0	0	2.29	0	0	0	0	0	0	-5.26	-5.26
Westbrook Inverter Transfor	W_INVTR2	369368	4906388	2	0	0	77.3	77.3	1	4528.37	3.25	0	84.12	0	-3.08	0	0	2.25	0	0	0	0	0	0	-5.95	-5.95
Westbrook Inverter Transfor	W_INVTR3	369514	4906164	2	0	0	77.3	77.3	1	4590.62	3.25	0	84.24	0	-3.09	0	0	2.27	0	0	0	0	0	0	-6.07	-6.07
Westbrook Inverter Transfor	W_INVTR4	369679	4906164	2	0	0	77.3	77.3	1	4747.81	3.25	0	84.53	0	-3.13	0	0	2.33	0	0	0	0	0	0	-6.39	-6.39
Westbrook Inverter Transfor	W_INVTR5	369725	4906574	2	0	0	77.3	77.3	1	4928.73	3.25	0	84.85	0	-3.16	0	0	2.39	0	0	0	0	0	0	-6.74	-6.74
Westbrook Inverter Transfor	W_INVTR7	369786	4906417	2	0	0	77.3	77.3	1	4929.99	3.25	0	84.86	0	-3.16	0	0	2.39	0	0	0	0	0	0	-6.74	-6.74
Westbrook Inverter Transfor	W_INVTR6	369881	4906578	2	0	0	77.3	77.3	1	5075.36	3.25	0	85.11	0	-3.19	0	0	2.44	0	0	0	0	0	0	-7.01	-7.01
Inverter Transformer	MV2-1 T	365836	4906816	2	0	0	69.4	69.4	1	2182.23	3.25	0	77.78	0	2.24	0	0	5.14	0	0	0	0	0	0	-15.81	-15.81
Inverter Transformer	MV1-12 T	365044	4905386	2	0	0	56.1	56.1	1	649.42	3.25	0	67.25	0	-0.09	0	0	4	0	0	0	0	0	0	-15.09	-15.09
Inverter Transformer	MV1-11 T	364649	4905414	2	0	0	56.1	56.1	1	834.73	3.25	0	69.43	0	-0.04	0	0	4.48	0	0	0	0	0	0	-17.81	-17.81
Inverter Transformer	MV1-8 T	364782	4905647	2	0	0	56.1	56.1	1	973.51	3.25	0	70.77	0	0	0	0	4.83	0	0	0	0	0	0	-19.54	-19.54
Inverter Transformer	MV1-9 T	364555	4905646	2	0	0	56.1	56.1	1	1078.75	3.25	0	71.66	0	0.04	0	0	5.08	0	0	0	0	0	0	-20.71	-20.71
Inverter Transformer	MV6-4 T	370244	4906966	2	0	0	69.4	69.4	1	5558.78	3.25	0	85.9	0	3.12	0	0	7.74	0	0	0	0	0	0	-27.41	-27.41
Inverter Transformer	MV1-4 T	364821	4905918	2	0	0	56.1	56.1	1	1217.78	3.25	0	72.71	0	0.09	0	0	5.4	0	0	0	0	0	0	-22.14	-22.14
Inverter Transformer	MV6-1 T	370230	4907364	2	0	0	69.4	69.4	1	5716.98	3.25	0	86.14	0	3.14	0	0	7.84	0	0	0	0	0	0	-27.78	-27.78
Inverter Transformer	MV1-5 T	364676	4905892	2	0	0	56.1	56.1	1	1240.4	3.25	0	72.87	0	0.1	0	0	5.45	0	0	0	0	0	0	-22.36	-22.36
Inverter Transformer	MV1-6 T	364482	4905835	2	0	0	56.1	56.1	1	1277.47	3.25	0	73.13	0	0.11	0	0	5.53	0	0	0	0	0	0	-22.71	-22.71
Inverter Transformer	MV1-2 T	364759	4906063	2	0	0	56.1	56.1	1	1374.27	3.25	0	73.76	0	0.15	0	0	5.75	0	0	0	0	0	0	-23.6	-23.6
Inverter Transformer	MV1-3 T	364435	4906039	2	0	0	56.1	56.1	1	1477.53	3.25	0	74.39	0	0.19	0	0	5.97	0	0	0	0	0	0	-24.49	-24.49
Inverter Transformer	MV1-1 T	364721	4906166	2	0	0	56.1	56.1	1	1483.83	3.25	0	74.43	0	0.19	0	0	5.98	0	0	0	0	0	0	-24.54	-24.54
Inverter Transformer	MV2-4 T	365590	4906628	2	0	0	56.1	56.1	1	1934.14	3.25	0	76.73	0	0.38	0	0	6.91	0	0	0	0	0	0	-27.96	-27.96
Inverter Transformer	MV2-3 T	365814	4906641	2	0	0	56.1	56.1	1	2009.51	3.25	0	77.06	0	0.41	0	0	7.06	0	0	0	0	0	0	-28.47	-28.47
Inverter Transformer	MV2-2 T	365982	4906654	2	0	0	56.1	56.1	1	2083.15	3.25	0	77.37	0	0.44	0	0	7.21	0	0	0	0	0	0	-28.96	-28.96
Inverter Transformer	MV3-18 T	367757	4907412	2	0	0	56.1	56.1	1	3730.78	3.25	0	82.44	0	1.14	0	0	10.05	0	0	0	0	0	0	-37.56	-37.56
Inverter Transformer	MV3-12 T	367674	4907594	2	0	0	56.1	56.1	1	3807.42	3.25	0	82.61	0	1.17	0	0	10.17	0	0	0	0	0	0	-37.89	-37.89
Inverter Transformer	MV3-13 T	367958	4907577	2	0	0	56.1	56.1	1	3989.39	3.25	0	83.02	0	1.24	0	0	10.44	0	0	0	0	0	0	-38.64	-38.64
Inverter Transformer	MV3-17 T	368183	4907472	2	0	0	56.1	56.1	1	4080.02	3.25	0	83.21	0	1.28	0	0	10.57	0	0	0	0	0	0	-39	-39
Inverter Transformer	MV3-7 T	367951	4907754	2	0	0	56.1	56.1	1	4112.15	3.25	0	83.28	0	1.29	0	0	10.62	0	0	0	0	0	0	-39.13	-39.13
Inverter Transformer	MV3-19 T	368352	4907347	2	0	0	56.1	56.1	1	4127.32	3.25	0	83.31	0	1.29	0	0	10.64	0	0	0	0	0	0	-39.19	-39.19
Inverter Transformer	MV3-21 T	368484	4907206	2	0	0	56.1	56.1	1	4145.37	3.25	0	83.35	0	1.3	0	0	10.67	0	0	0	0	0	0	-39.26	-39.26
Inverter Transformer	MV3-10 T	368162	4907669	2	0	0	56.1	56.1	1	4199.14	3.25	0	83.46	0	1.32	0	0	10.75	0	0	0	0	0	0	-39.47	-39.47
Inverter Transformer	MV3-15 T	368351	4907477	2	0	0	56.1	56.1	1	4209.72	3.25	0	83.49	0	1.33	0	0	10.76	0	0	0	0	0	0	-39.52	-39.52
Inverter Transformer	MV3-3 T	367944	4907927	2	0	0	56.1	56.1	1	4235.76	3.25	0	83.54	0	1.34	0	0	10.8	0	0	0	0	0	0	-39.62	-39.62
Inverter Transformer	MV3-22 T	368661	4907142	2	0	0	56.1	56.1	1	4252.69	3.25	0	83.57	0	1.34	0	0	10.82	0	0	0	0	0	0	-39.68	-39.68
Inverter Transformer	MV3-6 T	368156	4907834	2	0	0	56.1	56.1	1	4311.47	3.25	0	83.69	0	1.37	0	0	10.91	0	0	0	0	0	0	-39.91	-39.91

	Inverter Transformer	MV3-11 T	368340	4907662	2	0	0	56.1	56.1	1	4323.94	3.25	0	83.72	0	1.37	0	0	10.93	0	0	0	0	0	0	-39.96	-39.96
	Inverter Transformer	MV3-16 T	368509	4907475	2	0	0	56.1	56.1	1	4329.88	3.25	0	83.73	0	1.37	0	0	10.94	0	0	0	0	0	0	-39.98	-39.98
	Inverter Transformer	MV3-20 T	368683	4907317	2	0	0	56.1	56.1	1	4371.5	3.25	0	83.81	0	1.39	0	0	10.99	0	0	0	0	0	0	-40.14	-40.14
	Inverter Transformer	MV3-1 T	368150	4907976	2	0	0	56.1	56.1	1	4410.23	3.25	0	83.89	0	1.41	0	0	11.05	0	0	0	0	0	0	-40.29	-40.29
	Inverter Transformer	MV3-5 T	368335	4907843	2	0	0	56.1	56.1	1	4444.47	3.25	0	83.96	0	1.42	0	0	11.1	0	0	0	0	0	0	-40.41	-40.41
	Inverter Transformer	MV3-14 T	368678	4907498	2	0	0	56.1	56.1	1	4476.44	3.25	0	84.02	0	1.43	0	0	11.14	0	0	0	0	0	0	-40.53	-40.53
	Inverter Transformer	MV3-9 T	368517	4907703	2	0	0	56.1	56.1	1	4483.14	3.25	0	84.03	0	1.43	0	0	11.15	0	0	0	0	0	0	-40.56	-40.56
	Inverter Transformer	MV3-8 T	368685	4907712	2	0	0	56.1	56.1	1	4616.5	3.25	0	84.29	0	1.48	0	0	11.34	0	0	0	0	0	0	-41.05	-41.05
	Inverter Transformer	MV3-4 T	368507	4907925	2	0	0	56.1	56.1	1	4625.36	3.25	0	84.3	0	1.49	0	0	11.35	0	0	0	0	0	0	-41.08	-41.08
	Inverter Transformer	MV3-2 T	368677	4907928	2	0	0	56.1	56.1	1	4752.25	3.25	0	84.54	0	1.53	0	0	11.52	0	0	0	0	0	0	-41.54	-41.54
	Inverter Transformer	MV4-15 T	369170	4908481	2	0	0	56.1	56.1	1	5489.31	3.25	0	85.79	0	1.8	0	0	12.48	0	0	0	0	0	0	-44.01	-44.01
	Inverter Transformer	MV4-13 T	369057	4908605	2	0	0	56.1	56.1	1	5493.48	3.25	0	85.8	0	1.8	0	0	12.49	0	0	0	0	0	0	-44.02	-44.02
	Inverter Transformer	MV4-14 T	369182	4908507	2	0	0	56.1	56.1	1	5515.81	3.25	0	85.83	0	1.81	0	0	12.52	0	0	0	0	0	0	-44.09	-44.09
	Inverter Transformer	MV6-2 T	370091	4907339	2	0	0	56.1	56.1	1	5582.12	3.25	0	85.94	0	1.83	0	0	12.6	0	0	0	0	0	0	-44.3	-44.3
	Inverter Transformer	MV6-3 T	370202	4907140	2	0	0	56.1	56.1	1	5592.58	3.25	0	85.95	0	1.83	0	0	12.61	0	0	0	0	0	0	-44.34	-44.34
	Inverter Transformer	MV4-12 T	369049	4908803	2	0	0	56.1	56.1	1	5628.82	3.25	0	86.01	0	1.84	0	0	12.65	0	0	0	0	0	0	-44.45	-44.45
	Inverter Transformer	MV4-7 T	369040	4909001	2	0	0	56.1	56.1	1	5767.12	3.25	0	86.22	0	1.89	0	0	12.82	0	0	0	0	0	0	-44.87	-44.87
	Inverter Transformer	MV4-11 T	369269	4908855	2	0	0	56.1	56.1	1	5820.06	3.25	0	86.3	0	1.91	0	0	12.89	0	0	0	0	0	0	-45.03	-45.03
	Inverter Transformer	MV4-10 T	369307	4908858	2	0	0	56.1	56.1	1	5849.14	3.25	0	86.34	0	1.92	0	0	12.92	0	0	0	0	0	0	-45.12	-45.12
	Inverter Transformer	MV4-4 T	369033	4909199	2	0	0	56.1	56.1	1	5910.14	3.25	0	86.43	0	1.94	0	0	13	0	0	0	0	0	0	-45.31	-45.31
	Inverter Transformer	MV4-8 T	369262	4909001	2	0	0	56.1	56.1	1	5919.2	3.25	0	86.45	0	1.94	0	0	13.01	0	0	0	0	0	0	-45.33	-45.33
	Inverter Transformer	MV4-9 T	369284	4909001	2	0	0	56.1	56.1	1	5934.51	3.25	0	86.47	0	1.94	0	0	13.03	0	0	0	0	0	0	-45.38	-45.38
	Inverter Transformer	MV4-6 T	369249	4909192	2	0	0	56.1	56.1	1	6049.16	3.25	0	86.63	0	1.98	0	0	13.16	0	0	0	0	0	0	-45.72	-45.72
	Inverter Transformer	MV4-1 T	369017	4909397	2	0	0	56.1	56.1	1	6050.51	3.25	0	86.64	0	1.98	0	0	13.16	0	0	0	0	0	0	-45.72	-45.72
	Inverter Transformer	MV4-5 T	369283	4909199	2	0	0	56.1	56.1	1	6077.39	3.25	0	86.67	0	1.99	0	0	13.19	0	0	0	0	0	0	-45.8	-45.8
	Inverter Transformer	MV5-6 T	369987	4908507	2	0	0	56.1	56.1	1	6129.16	3.25	0	86.75	0	2.01	0	0	13.25	0	0	0	0	0	0	-45.95	-45.95
	Inverter Transformer	MV4-3 T	369234	4909397	2	0	0	56.1	56.1	1	6191.52	3.25	0	86.84	0	2.02	0	0	13.33	0	0	0	0	0	0	-46.13	-46.13
	Inverter Transformer	MV4-2 T	369267	4909397	2	0	0	56.1	56.1	1	6213.34	3.25	0	86.87	0	2.03	0	0	13.35	0	0	0	0	0	0	-46.19	-46.19
	Inverter Transformer	MV5-5 T	370021	4908690	2	0	0	56.1	56.1	1	6269.55	3.25	0	86.94	0	2.05	0	0	13.42	0	0	0	0	0	0	-46.35	-46.35
	Inverter Transformer	MV5-2 T	370011	4908853	2	0	0	56.1	56.1	1	6365.73	3.25	0	87.08	0	2.08	0	0	13.53	0	0	0	0	0	0	-46.62	-46.62
	Inverter Transformer	MV5-4 T	370330	4908707	2	0	0	56.1	56.1	1	6522.92	3.25	0	87.29	0	2.12	0	0	13.71	0	0	0	0	0	0	-47.06	-47.06
	Inverter Transformer	MV5-3 T	370237	4908851	2	0	0	56.1	56.1	1	6538.74	3.25	0	87.31	0	2.13	0	0	13.72	0	0	0	0	0	0	-47.1	-47.1
	Inverter Transformer	MV5-1 T	370015	4909142	2	0	0	56.1	56.1	1	6558.91	3.25	0	87.34	0	2.13	0	0	13.75	0	0	0	0	0	0	-47.16	-47.16
	Line Reactor	NGR	369421	4908787.5	5	0	0	45.4	45.4	1	5882.06	5.25	0	86.39	0	3.24	1.36	0.08	2.4	0	0	0	0	0	0	-48.04	-48.04
Limit. Valu	0	0																								
Level D/N:	36.7682	36.7682																								

Receiver: Existing Noise Receptor
ID: G-121
X: 364855.2
Y: 4904442
Z: 4.5
Ground: 0

ISO	Description	ID	X	Y	Z	Ground	ReflOrd	LxT	LxN	L/A	Dist.	hm	Freq	Adiv	K0b	Agr	Abar	z	Aatm	Afol	Ahous	Cmet	CmetN	Dc	RL	LtotT	LtotN
	Inverter	MV1-15	365315	4904994	2	0	0	100.3	100.3	1	718.42	3.25	0	68.13	0	-0.4	0	0	9.82	0	0	0	0	0	0	22.76	22.76
	Inverter	MV1-14	365163	4905049	2	0	0	97.3	97.3	1	680.59	3.25	0	67.66	0	-0.42	0	0	9.64	0	0	0	0	0	0	20.44	20.44
	Inverter	MV1-12	365038	4905386	2	0	0	100.3	100.3	1	961.54	3.25	0	70.66	0	-0.27	0	0	10.78	0	0	0	0	0	0	19.14	19.14
	Inverter	MV1-11	364655	4905414	2	0	0	100.3	100.3	1	992.41	3.25	0	70.93	0	-0.25	0	0	10.89	0	0	0	0	0	0	18.74	18.74
	Inverter	MV1-13	364731	4905241	2	0	0	97.3	97.3	1	808.6	3.25	0	69.15	0	-0.35	0	0	10.22	0	0	0	0	0	0	18.29	18.29
	Inverter	MV1-8	364788	4905647	2	0	0	100.3	100.3	1	1206.87	3.25	0	72.63	0	-0.15	0	0	11.55	0	0	0	0	0	0	16.28	16.28
	Inverter	MV1-9	364561	4905646	2	0	0	100.3	100.3	1	1239.43	3.25	0	72.86	0	-0.14	0	0	11.64	0	0	0	0	0	0	15.95	15.95
	Inverter	MV1-6	364477	4905835	2	0	0	100.3	100.3	1	1443.43	3.25	0	74.19	0	-0.05	0	0	12.18	0	0	0	0	0	0	14	14
	Inverter	MV1-5	364671	4905892	2	0	0	100.3	100.3	1	1461.66	3.25	0	74.3	0	-0.05	0	0	12.23	0	0	0	0	0	0	13.83	13.83
	Inverter	MV1-4	364815	4905918	2	0	0	100.3	100.3	1	1476.55	3.25	0	74.38	0	-0.04	0	0	12.27	0	0	0	0	0	0	13.7	13.7
	Inverter	MV1-10	365004	4905564	2	0	0	97.3	97.3	1	1131.83	3.25	0	72.08	0	-0.18	0	0	11.33	0	0	0	0	0	0	14.1	14.1
	Inverter	MV1-2	364753	4906063	2	0	0	100.3	100.3	1	1624.22	3.25	0	75.21	0	0.01	0	0	12.63	0	0	0	0	0	0	12.46	12.46
	Sol_Luce Substation	S_Substation	369426	4908792	3.5	0	0	112.1	112.1	1	6309.89	5.25	0	87	0	1.23	2.58	0.25	10.07	0	0	0	0	0	0	11.2	11.2
	Inverter	MV1-1	364715	4906166	2	0	0	100.3	100.3	1	1729.69	3.25	0	75.76	0	0.05	0	0	12.87	0	0	0	0	0	0	11.64	11.64
	Inverter	MV1-7	364925	4905782	2	0	0	97.3	97.3	1	1341.82	3.25	0	73.55	0	-0.09	0	0	11.92	0	0	0	0	0	0	11.93	11.93
	Inverter	MV2-4	365586	4906624	2	0	0	100.3	100.3	1	2301.13	3.25	0	78.24	0	0.21	0	0	14.07	0	0	0	0	0	0	7.79	7.79
	Inverter	MV2-3	365820	4906641	2	0	0	100.3	100.3	1	2401.34	3.25	0	78.61	0	0.23	0	0	14.27	0	0	0	0	0	0	7.2	7.2
	Inverter	MV2-1	365842	4906816	2	0	0	97.3	97.3	1	2570.93	3.25	0	79.2	0	0.27	0	0	14.59	0	0	0	0	0	0	3.25	3.25
	Inverter	MV3-18	367752	4907412	2	0	0	100.3	100.3	1	4148.78	3.25	0	83.36	0	0.55	0	0	17.28	0	0	0	0	0	0	-0.88	-0.88
	Inverter	MV3-12	367668	4907594	2	0	0	100.3	100.3	1	4224.57	3.25	0	83.52	0	0.56	0	0	17.4	0	0	0	0	0	0	-1.16	-1.16
	Inverter	MV3-13	367963	4907577	2	0	0	100.3	100.3	1	4414.37	3.25	0	83.9	0	0.58	0	0	17.7	0	0	0	0	0	0	-1.86	-1.86
	Inverter	MV3-17	368178	4907472	2	0	0	100.3	100.3	1	4496.88	3.25	0	84.06	0	0.59	0	0	17.83	0	0	0	0	0	0	-2.16	-2.16
	Inverter	MV3-7	367945	4907754	2	0	0	100.3	100.3	1	4529.48	3.25	0	84.12	0	0.59	0	0	17.88	0	0	0	0	0	0	-2.28	-2.28
	Inverter	MV3-19	368357	4907347	2	0	0	100.3	100.3	1	4549.9	3.25	0	84.16	0	0.6	0	0	17.91	0	0	0	0	0	0	-2.35	-2.35
	Inverter	MV3-21	368478	4907206	2	0	0	100.3	100.3	1	4556.8	3.25	0	84.17	0	0.6	0	0	17.92	0	0	0	0	0	0	-2.38	-2.38
	Inverter	MV3-10	368167	4907669	2	0	0	100.3	100.3	1	4624.02	3.25	0	84.3	0	0.6	0	0	18.02	0	0	0	0	0	0	-2.61	-2.61
	Inverter	MV3-15	368357	4907477	2	0	0	100.3	100.3	1	4633.99	3.25	0	84.32	0	0.61	0	0	18.03	0	0	0	0	0	0	-2.65	-2.65
	Inverter	MV3-3	367939	4907927	2	0	0	100.3	100.3	1	4653.5	3.25	0	84.36	0	0.61	0	0	18.06	0	0	0	0	0	0	-2.72	-2.72
	Inverter	MV3-6	368162	4907834	2	0	0	100.3	100.3	1	4737.15	3.25	0	84.51	0	0.62	0	0	18.19	0	0	0	0	0	0	-3	-3

Inverter	MV3-11	368346	4907662	2	0	0	100.3	100.3	1	4749.11	3.25	0	84.53	0	0.62	0	0	18.21	0	0	0	0	0	0	-3.05	-3.05
Inverter	MV3-16	368514	4907475	2	0	0	100.3	100.3	1	4752.46	3.25	0	84.54	0	0.62	0	0	18.21	0	0	0	0	0	0	-3.06	-3.06
Inverter	MV3-20	368689	4907317	2	0	0	100.3	100.3	1	4792.04	3.25	0	84.61	0	0.62	0	0	18.27	0	0	0	0	0	0	-3.19	-3.19
Inverter	MV3-14	368684	4907498	2	0	0	100.3	100.3	1	4898.86	3.25	0	84.8	0	0.63	0	0	18.43	0	0	0	0	0	0	-3.55	-3.55
Inverter	MV3-9	368512	4907703	2	0	0	100.3	100.3	1	4899.62	3.25	0	84.8	0	0.63	0	0	18.43	0	0	0	0	0	0	-3.56	-3.56
Inverter	MV3-8	368680	4907712	2	0	0	100.3	100.3	1	5032.1	3.25	0	85.03	0	0.64	0	0	18.63	0	0	0	0	0	0	-4	-4
Inverter	MV6-2	370085	4907339	2	0	0	100.3	100.3	1	5978.58	3.25	0	86.53	0	0.7	0	0	19.96	0	0	0	0	0	0	-6.89	-6.89
Inverter	MV6-3	370207	4907140	2	0	0	100.3	100.3	1	5993.41	3.25	0	86.55	0	0.7	0	0	19.98	0	0	0	0	0	0	-6.93	-6.93
Inverter	MV1-3	364440	4906039	2	0	0	89.1	89.1	1	1650.09	3.25	0	75.35	0	0.83	0	0	7.46	0	0	0	0	0	0	5.42	5.42
Gardiner Substation	G_Sub	366586.3	4903349.9	2.5	0	0	90.8	90.8	1	2046.8	4.25	0	77.22	0	0.87	3.72	0.3	4.45	0	0	0	0	0	0	4.52	4.52
Inverter	MV4-7	369035	4909001	2	0	0	100.3	100.3	1	6185.08	3.25	0	86.83	0	0.71	0	0	20.24	0	0	0	0	0	0	-7.47	-7.47
Inverter	MV4-11	369264	4908855	2	0	0	100.3	100.3	1	6237.96	3.25	0	86.9	0	0.71	0	0	20.31	0	0	0	0	0	0	-7.61	-7.61
Inverter	MV4-10	369312	4908858	2	0	0	100.3	100.3	1	6274.08	3.25	0	86.95	0	0.71	0	0	20.36	0	0	0	0	0	0	-7.71	-7.71
Inverter	MV4-4	369027	4909199	2	0	0	100.3	100.3	1	6327.16	3.25	0	87.02	0	0.71	0	0	20.43	0	0	0	0	0	0	-7.86	-7.86
Inverter	MV4-8	369256	4909001	2	0	0	100.3	100.3	1	6336.52	3.25	0	87.04	0	0.71	0	0	20.44	0	0	0	0	0	0	-7.88	-7.88
Inverter	MV4-9	369289	4909001	2	0	0	100.3	100.3	1	6359.49	3.25	0	87.07	0	0.71	0	0	20.47	0	0	0	0	0	0	-7.94	-7.94
Inverter	MV4-6	369243	4909192	2	0	0	100.3	100.3	1	6466.47	3.25	0	87.21	0	0.71	0	0	20.62	0	0	0	0	0	0	-8.23	-8.23
Inverter	MV4-1	369011	4909397	2	0	0	100.3	100.3	1	6467.05	3.25	0	87.21	0	0.71	0	0	20.62	0	0	0	0	0	0	-8.23	-8.23
Inverter	MV4-5	369289	4909199	2	0	0	100.3	100.3	1	6502.89	3.25	0	87.26	0	0.71	0	0	20.66	0	0	0	0	0	0	-8.33	-8.33
Inverter	MV4-3	369229	4909397	2	0	0	100.3	100.3	1	6609.25	3.25	0	87.4	0	0.72	0	0	20.8	0	0	0	0	0	0	-8.61	-8.61
Inverter	MV4-2	369272	4909397	2	0	0	100.3	100.3	1	6637.78	3.25	0	87.44	0	0.71	0	0	20.84	0	0	0	0	0	0	-8.68	-8.68
Inverter	MV5-5	370015	4908690	2	0	0	100.3	100.3	1	6683.49	3.25	0	87.5	0	0.71	0	0	20.9	0	0	0	0	0	0	-8.8	-8.8
Inverter	MV5-2	370006	4908853	2	0	0	100.3	100.3	1	6781.42	3.25	0	87.63	0	0.71	0	0	21.02	0	0	0	0	0	0	-9.05	-9.05
Inverter	MV5-4	370324	4908707	2	0	0	100.3	100.3	1	6935.27	3.25	0	87.82	0	0.71	0	0	21.22	0	0	0	0	0	0	-9.44	-9.44
Inverter	MV5-3	370231	4908851	2	0	0	100.3	100.3	1	6952.59	3.25	0	87.84	0	0.71	0	0	21.24	0	0	0	0	0	0	-9.48	-9.48
Inverter	MV5-1	370020	4909142	2	0	0	100.3	100.3	1	6983.21	3.25	0	87.88	0	0.71	0	0	21.28	0	0	0	0	0	0	-9.56	-9.56
Inverter	MV6-1	370235	4907364	2	0	0	97.3	97.3	1	6122.12	3.25	0	86.74	0	0.71	0	0	20.16	0	0	0	0	0	0	-10.29	-10.29
Inverters	G_Inv1	366526.4	4903225.8	2	0	0	87.7	87.7	1	2066.9	3.25	0	77.31	0	2.59	0	0	2.71	0	0	0	0	0	0	5.05	5.05
Inverter	MV2-2	365977	4906654	2	0	0	89.1	89.1	1	2480.2	3.25	0	78.89	0	1.02	0	0	8.81	0	0	0	0	0	0	0.33	0.33
Inverters	G_Inv2	366676.9	4903239.1	2	0	0	87.7	87.7	1	2183.02	3.25	0	77.78	0	2.61	0	0	2.85	0	0	0	0	0	0	4.43	4.43
Inverters	G_Inv3	366583.7	4903091.4	2	0	0	87.7	87.7	1	2193.59	3.25	0	77.82	0	2.61	0	0	2.86	0	0	0	0	0	0	4.37	4.37
DSTATCOM - 10 MVAR #2	DSAT2	369403	4908757	2.5	0	0	96.6	96.6	1	6269.11	3.5	0	86.94	0	3.79	0	0	3.97	0	0	0	0	0	0	1.93	1.93
DSTATCOM - 10 MVAR #1	DSAT1	369437	4908757	2.5	0	0	96.6	96.6	1	6293.82	3.5	0	86.98	0	3.79	0	0	3.98	0	0	0	0	0	0	1.88	1.88
Inverters	G_Inv4	366732.8	4903105	2	0	0	87.7	87.7	1	2304.99	3.25	0	78.25	0	2.62	0	0	2.99	0	0	0	0	0	0	3.8	3.8
Inverters	G_Inv5	366638.5	4902958.1	2	0	0	87.7	87.7	1	2319.94	3.25	0	78.31	0	2.62	0	0	3.01	0	0	0	0	0	0	3.72	3.72
Inverters	G_Inv6	366788.5	4902972	2	0	0	87.7	87.7	1	2428.69	3.25	0	78.71	0	2.64	0	0	3.13	0	0	0	0	0	0	3.19	3.19
Inverters	G_Inv7	366694.6	4902824.7	2	0	0	87.7	87.7	1	2449.3	3.25	0	78.78	0	2.64	0	0	3.15	0	0	0	0	0	0	3.09	3.09
Inverters	G_Inv8	366844.5	4902838.5	2	0	0	87.7	87.7	1	2555.1	3.25	0	79.15	0	2.65	0	0	3.27	0	0	0	0	0	0	2.59	2.59
Inverters	G_Inv9	366750.9	4902691.8	2	0	0	87.7	87.7	1	2580.09	3.25	0	79.23	0	2.65	0	0	3.3	0	0	0	0	0	0	2.47	2.47
Inverters	G_Inv10	366900.7	4902704.8	2	0	0	87.7	87.7	1	2683.64	3.25	0	79.57	0	2.66	0	0	3.42	0	0	0	0	0	0	2	2
SubstationTransformer	W_ST	369711.17	4906112.3	2.5	0	0	92	92	1	5135.2	4.25	0	85.21	0	1.67	2.3	0.27	8.78	0	0	0	0	0	0	-5.99	-5.99
Inverter	MV3-22	368656	4907142	2	0	0	89.1	89.1	1	4662.2	3.25	0	84.37	0	1.56	0	0	12.01	0	0	0	0	0	0	-8.88	-8.88
Inverter	MV3-1	368156	4907976	2	0	0	89.1	89.1	1	4835.75	3.25	0	84.69	0	1.6	0	0	12.24	0	0	0	0	0	0	-9.47	-9.47
Inverter	MV3-5	368340	4907843	2	0	0	89.1	89.1	1	4869.36	3.25	0	84.75	0	1.61	0	0	12.29	0	0	0	0	0	0	-9.59	-9.59
Westbrook Inverter Enclosur	W_INV2	369374	4906388	2	0	0	89.1	89.1	1	4920.01	3.25	0	84.84	0	1.62	0	0	12.36	0	0	0	0	0	0	-9.76	-9.76
Westbrook Inverter Enclosur	W_INV3	369508	4906164	2	0	0	89.1	89.1	1	4961.23	3.25	0	84.91	0	1.63	0	0	12.41	0	0	0	0	0	0	-9.9	-9.9
Inverter	MV3-4	368502	4907925	2	0	0	89.1	89.1	1	5042.86	3.25	0	85.05	0	1.65	0	0	12.52	0	0	0	0	0	0	-10.17	-10.17
Westbrook Inverter Enclosur	W_INV4	369673	4906164	2	0	0	89.1	89.1	1	5116.3	3.25	0	85.18	0	1.67	0	0	12.62	0	0	0	0	0	0	-10.41	-10.41
Inverter	MV3-2	368671	4907928	2	0	0	89.1	89.1	1	5168.42	3.25	0	85.27	0	1.68	0	0	12.69	0	0	0	0	0	0	-10.58	-10.58
Westbrook Inverter Enclosur	W_INV7	369780	4906417	2	0	0	89.1	89.1	1	5306.06	3.25	0	85.5	0	1.72	0	0	12.87	0	0	0	0	0	0	-11.02	-11.02
Westbrook Inverter Enclosur	W_INV5	369719	4906574	2	0	0	89.1	89.1	1	5310.55	3.25	0	85.5	0	1.72	0	0	12.88	0	0	0	0	0	0	-11.04	-11.04
Westbrook Inverter Enclosur	W_INV6	369875	4906578	2	0	0	89.1	89.1	1	5455.35	3.25	0	85.74	0	1.75	0	0	13.06	0	0	0	0	0	0	-11.5	-11.5
Fixed Reactor Bank 1	FRB1	369378	4908755	6	0	0	89.8	89.8	1	6249.62	5.25	0	86.92	0	-0.38	0	0	10	0	0	0	0	0	0	-6.76	-6.76
Fixed Reactor Bank 2	FRB2	369464	4908755	6	0	0	89.8	89.8	1	6312.13	5.25	0	87	0	-0.37	0	0	10.07	0	0	0	0	0	0	-6.92	-6.92
Inverter	MV4-13	369051	4908605	2	0	0	89.1	89.1	1	5910.61	3.25	0	86.43	0	1.86	0	0	13.65	0	0	0	0	0	0	-12.89	-12.89
Inverter	MV4-15	369176	4908481	2	0	0	89.1	89.1	1	5914.63	3.25	0	86.44	0	1.87	0	0	13.65	0	0	0	0	0	0	-12.9	-12.9
Inverter	MV4-14	369176	4908507	2	0	0	89.1	89.1	1	5932.41	3.25	0	86.46	0	1.87	0	0	13.68	0	0	0	0	0	0	-12.95	-12.95
Inverter	MV4-12	369043	4908803	2	0	0	89.1	89.1	1	6046.16	3.25	0	86.63	0	1.9	0	0	13.82	0	0	0	0	0	0	-13.29	-13.29
Inverter	MV5-6	369982	4908507	2	0	0	89.1	89.1	1	6542.81	3.25	0	87.32	0	2.02	0	0	14.44	0	0	0	0	0	0	-14.71	-14.71
Inverter Transformer	MV1-14 T	365157	4905049	2	0	0	69.4	69.4	1	677.89	3.25	0	67.62	0	1.33	0	0	3.31	0	0	0	0	0	0	-2.91	-2.91
Westbrook Inverter Enclosur	W_INV1	369409	4906578	2	0	0	86.1	86.1	1	5029.87	3.25	0	85.03	0	1.65	0	0	12.5	0	0	0	0	0	0	-13.12	-13.12
Inverter Transformer	MV1-13 T	364725	4905241	2	0	0	69.4	69.4	1	809.54	3.25	0	69.16	0	1.5	0	0	3.53	0	0	0	0	0	0	-4.84	-4.84
Inverter	MV6-4	370250	4906966	2	0	0	86.1	86.1	1	5956.04	3.25	0	86.5	0	1.88	0	0	13.71	0	0	0	0	0	0	-16.02	-16.02
Inverter Transformer	MV1-10 T	365010	4905564	2	0	0	69.4	69.4	1	1132.63	3.25	0	72.08	0	1.78	0	0	3.99	0	0	0	0	0	0	-8.5	-8.5
Inverter Transformer	MV1-7 T	364919	4905782	2	0	0	69.4	69.4	1	1341.52	3.25	0	73.55	0	1.9	0	0	4.25	0	0	0	0	0	0	-10.35	-10.35
Westbrook Inverter Transfor	W_INVTR1	369403	4906578	2	0	0	78.2	78.2	1	5024.44	3.25	0	85.02	0	-3.18	0	0	2.42	0	0	0	0	0	0	-6.02	-6.02
Westbrook Inverter Transfor	W_INVTR2	369368	4906388	2	0	0	77.3	77.3	1	4914.5	3.25	0	84.83	0	-3.16	0	0	2.38	0	0	0	0	0	0	-6.71	-6.71
Westbrook Inverter Transfor	W_INVTR3	369514	4906164	2	0	0	77.3	77.3	1	4966.86	3.25	0	84.92	0	-3.17	0	0	2.4	0	0	0	0	0	0	-6.81	-6.81
Westbrook Inverter Transfor	W_INVTR4	369679	4906164	2	0	0	77.3	77.3	1	5121.95	3.25	0	85.19	0	-3.2	0	0	2.45	0	0	0	0	0	0	-7.1	-7.1
Westbrook Inverter Transfor	W_INVTR7	369786	4906417	2	0	0	77.3	77.3	1	5311.63	3.25	0	85.5	0	-3.24	0	0	2.52	0	0	0	0	0	0	-7.44	-7.44
Westbrook Inverter Transfor	W_INVTR5	369725	4906574	2	0	0	77.3	77.3	1	5316.05	3.25	0	85.51	0	-3.24	0	0	2.52	0	0	0	0	0	0	-7.45	-7.45
Westbrook Inverter Transfor	W_INVTR6	369881	4906578	2	0	0	77.3	77.3	1	5460.88	3.25	0	85.75	0	-3.27	0	0	2.57	0	0	0	0	0	0	-7.7	-7.7
Inverter Transformer	MV2-1 T	365836	4906816	2	0	0	69.4	69.4	1	2568.63	3.25	0	79.19	0	2.37	0	0	5.51	0	0	0	0	0	0	-17.72	-17.72
Inverter Transformer	MV1-15 T	365309	4904994	2	0	0	56.1	56.1	1	714.59	3.25	0	68.08	0	-0.08	0	0	4.17	0	0	0	0	0	0	-16.12	-16.12

	Inverter Transformer	MV1-12 T	365044	4905386	2	0	0	56.1	56.1	1	962.7	3.25	0	70.67	0	0	0	0	4.8	0	0	0	0	0	0	-19.41	-19.41
	Inverter Transformer	MV1-11 T	364649	4905414	2	0	0	56.1	56.1	1	993.63	3.25	0	70.94	0	0.01	0	0	4.87	0	0	0	0	0	0	-19.77	-19.77
	Inverter Transformer	MV1-8 T	364782	4905647	2	0	0	56.1	56.1	1	1207.22	3.25	0	72.64	0	0.09	0	0	5.37	0	0	0	0	0	0	-22.04	-22.04
	Inverter Transformer	MV1-9 T	364555	4905646	2	0	0	56.1	56.1	1	1240.86	3.25	0	72.87	0	0.1	0	0	5.45	0	0	0	0	0	0	-22.36	-22.36
	Inverter Transformer	MV6-4 T	370244	4906966	2	0	0	69.4	69.4	1	5950.61	3.25	0	86.49	0	3.18	0	0	7.99	0	0	0	0	0	0	-28.31	-28.31
	Inverter Transformer	MV6-1 T	370230	4907364	2	0	0	69.4	69.4	1	6117.73	3.25	0	86.73	0	3.21	0	0	8.09	0	0	0	0	0	0	-28.68	-28.68
	Inverter Transformer	MV1-6 T	364482	4905835	2	0	0	56.1	56.1	1	1442.13	3.25	0	74.18	0	0.18	0	0	5.89	0	0	0	0	0	0	-24.19	-24.19
	Inverter Transformer	MV1-5 T	364676	4905892	2	0	0	56.1	56.1	1	1461.03	3.25	0	74.29	0	0.18	0	0	5.93	0	0	0	0	0	0	-24.35	-24.35
	Inverter Transformer	MV1-4 T	364821	4905918	2	0	0	56.1	56.1	1	1476.4	3.25	0	74.38	0	0.19	0	0	5.97	0	0	0	0	0	0	-24.48	-24.48
	Inverter Transformer	MV1-2 T	364759	4906063	2	0	0	56.1	56.1	1	1623.85	3.25	0	75.21	0	0.25	0	0	6.28	0	0	0	0	0	0	-25.68	-25.68
	Inverter Transformer	MV1-3 T	364435	4906039	2	0	0	56.1	56.1	1	1651.36	3.25	0	75.36	0	0.26	0	0	6.34	0	0	0	0	0	0	-25.9	-25.9
	Inverter Transformer	MV1-1 T	364721	4906166	2	0	0	56.1	56.1	1	1729.22	3.25	0	75.76	0	0.29	0	0	6.5	0	0	0	0	0	0	-26.49	-26.49
	Inverter Transformer	MV2-4 T	365590	4906628	2	0	0	56.1	56.1	1	2306.19	3.25	0	78.26	0	0.53	0	0	7.63	0	0	0	0	0	0	-30.36	-30.36
	Inverter Transformer	MV2-3 T	365814	4906641	2	0	0	56.1	56.1	1	2398.94	3.25	0	78.6	0	0.57	0	0	7.8	0	0	0	0	0	0	-30.92	-30.92
	Inverter Transformer	MV2-2 T	365982	4906654	2	0	0	56.1	56.1	1	2482.46	3.25	0	78.9	0	0.61	0	0	7.96	0	0	0	0	0	0	-31.41	-31.41
	Inverter Transformer	MV3-18 T	367757	4907412	2	0	0	56.1	56.1	1	4152.27	3.25	0	83.37	0	1.3	0	0	10.68	0	0	0	0	0	0	-39.29	-39.29
	Inverter Transformer	MV3-12 T	367674	4907594	2	0	0	56.1	56.1	1	4228.56	3.25	0	83.52	0	1.33	0	0	10.79	0	0	0	0	0	0	-39.59	-39.59
	Inverter Transformer	MV3-13 T	367958	4907577	2	0	0	56.1	56.1	1	4410.85	3.25	0	83.89	0	1.41	0	0	11.05	0	0	0	0	0	0	-40.29	-40.29
	Inverter Transformer	MV3-17 T	368183	4907472	2	0	0	56.1	56.1	1	4500.57	3.25	0	84.07	0	1.44	0	0	11.18	0	0	0	0	0	0	-40.62	-40.62
	Inverter Transformer	MV3-7 T	367951	4907754	2	0	0	56.1	56.1	1	4533.58	3.25	0	84.13	0	1.45	0	0	11.22	0	0	0	0	0	0	-40.75	-40.75
	Inverter Transformer	MV3-19 T	368352	4907347	2	0	0	56.1	56.1	1	4546.06	3.25	0	84.15	0	1.46	0	0	11.24	0	0	0	0	0	0	-40.79	-40.79
	Inverter Transformer	MV3-21 T	368484	4907206	2	0	0	56.1	56.1	1	4561.57	3.25	0	84.18	0	1.46	0	0	11.26	0	0	0	0	0	0	-40.85	-40.85
	Inverter Transformer	MV3-10 T	368162	4907669	2	0	0	56.1	56.1	1	4620.44	3.25	0	84.29	0	1.49	0	0	11.34	0	0	0	0	0	0	-41.06	-41.06
	Inverter Transformer	MV3-15 T	368351	4907477	2	0	0	56.1	56.1	1	4629.45	3.25	0	84.31	0	1.49	0	0	11.36	0	0	0	0	0	0	-41.1	-41.1
	Inverter Transformer	MV3-3 T	367944	4907927	2	0	0	56.1	56.1	1	4656.81	3.25	0	84.36	0	1.5	0	0	11.39	0	0	0	0	0	0	-41.19	-41.19
	Inverter Transformer	MV3-22 T	368661	4907142	2	0	0	56.1	56.1	1	4666.27	3.25	0	84.38	0	1.5	0	0	11.41	0	0	0	0	0	0	-41.23	-41.23
	Inverter Transformer	MV3-6 T	368156	4907834	2	0	0	56.1	56.1	1	4732.96	3.25	0	84.5	0	1.53	0	0	11.5	0	0	0	0	0	0	-41.47	-41.47
	Inverter Transformer	MV3-11 T	368340	4907662	2	0	0	56.1	56.1	1	4744.71	3.25	0	84.52	0	1.53	0	0	11.51	0	0	0	0	0	0	-41.51	-41.51
	Inverter Transformer	MV3-16 T	368509	4907475	2	0	0	56.1	56.1	1	4748.62	3.25	0	84.53	0	1.53	0	0	11.52	0	0	0	0	0	0	-41.52	-41.52
	Inverter Transformer	MV3-20 T	368683	4907317	2	0	0	56.1	56.1	1	4787.24	3.25	0	84.6	0	1.55	0	0	11.57	0	0	0	0	0	0	-41.66	-41.66
	Inverter Transformer	MV3-1 T	368150	4907976	2	0	0	56.1	56.1	1	4831.65	3.25	0	84.68	0	1.56	0	0	11.63	0	0	0	0	0	0	-41.82	-41.82
	Inverter Transformer	MV3-5 T	368335	4907843	2	0	0	56.1	56.1	1	4865.78	3.25	0	84.74	0	1.58	0	0	11.68	0	0	0	0	0	0	-41.94	-41.94
	Inverter Transformer	MV3-14 T	368678	4907498	2	0	0	56.1	56.1	1	4894.17	3.25	0	84.79	0	1.59	0	0	11.71	0	0	0	0	0	0	-42.04	-42.04
	Inverter Transformer	MV3-9 T	368517	4907703	2	0	0	56.1	56.1	1	4903.36	3.25	0	84.81	0	1.59	0	0	11.73	0	0	0	0	0	0	-42.07	-42.07
	Inverter Transformer	MV3-8 T	368685	4907712	2	0	0	56.1	56.1	1	5035.9	3.25	0	85.04	0	1.64	0	0	11.9	0	0	0	0	0	0	-42.52	-42.52
	Inverter Transformer	MV3-4 T	368507	4907925	2	0	0	56.1	56.1	1	5046.48	3.25	0	85.06	0	1.64	0	0	11.92	0	0	0	0	0	0	-42.56	-42.56
	Inverter Transformer	MV3-2 T	368677	4907928	2	0	0	56.1	56.1	1	5172.85	3.25	0	85.27	0	1.69	0	0	12.08	0	0	0	0	0	0	-42.98	-42.98
	Inverter Transformer	MV4-15 T	369170	4908481	2	0	0	56.1	56.1	1	5910.25	3.25	0	86.43	0	1.94	0	0	13	0	0	0	0	0	0	-45.31	-45.31
	Inverter Transformer	MV4-13 T	369057	4908605	2	0	0	56.1	56.1	1	5914.87	3.25	0	86.44	0	1.94	0	0	13	0	0	0	0	0	0	-45.32	-45.32
	Inverter Transformer	MV4-14 T	369182	4908507	2	0	0	56.1	56.1	1	5936.79	3.25	0	86.47	0	1.94	0	0	13.03	0	0	0	0	0	0	-45.39	-45.39
	Inverter Transformer	MV6-2 T	370091	4907339	2	0	0	56.1	56.1	1	5983.83	3.25	0	86.54	0	1.96	0	0	13.08	0	0	0	0	0	0	-45.52	-45.52
	Inverter Transformer	MV6-3 T	370202	4907140	2	0	0	56.1	56.1	1	5988.95	3.25	0	86.55	0	1.96	0	0	13.09	0	0	0	0	0	0	-45.54	-45.54
	Inverter Transformer	MV4-12 T	369049	4908803	2	0	0	56.1	56.1	1	6050.31	3.25	0	86.64	0	1.98	0	0	13.16	0	0	0	0	0	0	-45.72	-45.72
	Inverter Transformer	MV4-7 T	369040	4909001	2	0	0	56.1	56.1	1	6188.46	3.25	0	86.83	0	2.02	0	0	13.32	0	0	0	0	0	0	-46.12	-46.12
	Inverter Transformer	MV4-11 T	369269	4908855	2	0	0	56.1	56.1	1	6241.49	3.25	0	86.91	0	2.04	0	0	13.39	0	0	0	0	0	0	-46.27	-46.27
	Inverter Transformer	MV4-10 T	369307	4908858	2	0	0	56.1	56.1	1	6270.53	3.25	0	86.95	0	2.05	0	0	13.42	0	0	0	0	0	0	-46.36	-46.36
	Inverter Transformer	MV4-4 T	369033	4909199	2	0	0	56.1	56.1	1	6331.12	3.25	0	87.03	0	2.07	0	0	13.49	0	0	0	0	0	0	-46.53	-46.53
	Inverter Transformer	MV4-8 T	369262	4909001	2	0	0	56.1	56.1	1	6340.69	3.25	0	87.04	0	2.07	0	0	13.5	0	0	0	0	0	0	-46.55	-46.55
	Inverter Transformer	MV4-9 T	369284	4909001	2	0	0	56.1	56.1	1	6356	3.25	0	87.06	0	2.07	0	0	13.52	0	0	0	0	0	0	-46.6	-46.6
	Inverter Transformer	MV4-6 T	369249	4909192	2	0	0	56.1	56.1	1	6470.55	3.25	0	87.22	0	2.11	0	0	13.65	0	0	0	0	0	0	-46.92	-46.92
	Inverter Transformer	MV4-1 T	369017	4909397	2	0	0	56.1	56.1	1	6470.9	3.25	0	87.22	0	2.11	0	0	13.65	0	0	0	0	0	0	-46.92	-46.92
	Inverter Transformer	MV4-5 T	369283	4909199	2	0	0	56.1	56.1	1	6498.81	3.25	0	87.26	0	2.12	0	0	13.68	0	0	0	0	0	0	-46.99	-46.99
	Inverter Transformer	MV5-6 T	369987	4908507	2	0	0	56.1	56.1	1	6546.72	3.25	0	87.32	0	2.13	0	0	13.73	0	0	0	0	0	0	-47.13	-47.13
	Inverter Transformer	MV4-3 T	369234	4909397	2	0	0	56.1	56.1	1	6612.56	3.25	0	87.41	0	2.15	0	0	13.81	0	0	0	0	0	0	-47.31	-47.31
	Inverter Transformer	MV4-2 T	369267	4909397	2	0	0	56.1	56.1	1	6634.46	3.25	0	87.44	0	2.16	0	0	13.83	0	0	0	0	0	0	-47.37	-47.37
	Inverter Transformer	MV5-5 T	370021	4908690	2	0	0	56.1	56.1	1	6688.12	3.25	0	87.51	0	2.17	0	0	13.89	0	0	0	0	0	0	-47.51	-47.51
	Inverter Transformer	MV5-2 T	370011	4908853	2	0	0	56.1	56.1	1	6785.22	3.25	0	87.63	0	2.2	0	0	14	0	0	0	0	0	0	-47.77	-47.77
	Inverter Transformer	MV5-4 T	370330	4908707	2	0	0	56.1	56.1	1	6940	3.25	0	87.83	0	2.24	0	0	14.17	0	0	0	0	0	0	-48.18	-48.18
	Inverter Transformer	MV5-3 T	370237	4908851	2	0	0	56.1	56.1	1	6957.23	3.25	0	87.85	0	2.25	0	0	14.18	0	0	0	0	0	0	-48.22	-48.22
	Inverter Transformer	MV5-1 T	370015	4909142	2	0	0	56.1	56.1	1	6979.51	3.25	0	87.88	0	2.25	0	0	14.21	0	0	0	0	0	0	-48.28	-48.28
	Line Reactor	NGR	369421	4908787.5	5	0	0	45.4	45.4	1	6303.17	5.25	0	86.99	0	3.23	1.36	0.08	2.58	0	0	0	0	0	0	-48.81	-48.81
Limit. Valu	0	0																								
Level D/N:	29.1822	29.1822																								

Receiver: Existing Noise Receptor
ID: G-122
X: 364836.2
Y: 4904433
Z: 4.5
Ground: 0

ISO	Description	ID	X	Y	Z	Ground	ReflOrd	LxT	LxN	L/A	Dist.	hm	Freq	Adiv	K0b	Agr	Abar	z	Aatm	Afol	Ahous	Cmet	CmetN	Dc	RL	LtotT	LtotN
	Inverter	MV1-15	365315	4904994	2	0	0	100.3	100.3	1	737.55	3.25	0	68.36	0	-0.39	0	0	9.91	0	0	0	0	0	0	22.43	22.43
	Inverter	MV1-12	365038	4905386	2	0	0	100.3	100.3	1	974.13	3.25	0	70.77	0	-0.26	0	0	10.82	0	0	0	0	0	0	18.97	18.97

Inverter	MV1-14	365163	4905049	2	0	0	97.3	97.3	1	697.32	3.25	0	67.87	0	-0.41	0	0	9.72	0	0	0	0	0	0	20.13	20.13
Inverter	MV1-11	364655	4905414	2	0	0	100.3	100.3	1	997.6	3.25	0	70.98	0	-0.25	0	0	10.9	0	0	0	0	0	0	18.68	18.68
Inverter	MV1-13	364731	4905241	2	0	0	97.3	97.3	1	814.82	3.25	0	69.22	0	-0.34	0	0	10.24	0	0	0	0	0	0	18.19	18.19
Inverter	MV1-8	364788	4905647	2	0	0	100.3	100.3	1	1214.96	3.25	0	72.69	0	-0.15	0	0	11.57	0	0	0	0	0	0	16.2	16.2
Inverter	MV1-9	364561	4905646	2	0	0	100.3	100.3	1	1243.83	3.25	0	72.9	0	-0.14	0	0	11.65	0	0	0	0	0	0	15.9	15.9
Inverter	MV1-6	364477	4905835	2	0	0	100.3	100.3	1	1447.29	3.25	0	74.21	0	-0.05	0	0	12.19	0	0	0	0	0	0	13.96	13.96
Inverter	MV1-5	364671	4905892	2	0	0	100.3	100.3	1	1468.32	3.25	0	74.34	0	-0.05	0	0	12.25	0	0	0	0	0	0	13.78	13.78
Inverter	MV1-4	364815	4905918	2	0	0	100.3	100.3	1	1485.15	3.25	0	74.44	0	-0.04	0	0	12.29	0	0	0	0	0	0	13.63	13.63
Inverter	MV1-10	365004	4905564	2	0	0	97.3	97.3	1	1143.38	3.25	0	72.16	0	-0.18	0	0	11.36	0	0	0	0	0	0	13.97	13.97
Inverter	MV1-2	364753	4906063	2	0	0	100.3	100.3	1	1632.12	3.25	0	75.26	0	0.01	0	0	12.64	0	0	0	0	0	0	12.4	12.4
Sol_Luce Substation	S_Substation	369426	4908792	3.5	0	0	112.1	112.1	1	6329.86	5.25	0	87.03	0	1.24	2.57	0.25	10.09	0	0	0	0	0	0	11.15	11.15
Inverter	MV1-1	364715	4906166	2	0	0	100.3	100.3	1	1737.23	3.25	0	75.8	0	0.05	0	0	12.89	0	0	0	0	0	0	11.58	11.58
Inverter	MV1-7	364925	4905782	2	0	0	97.3	97.3	1	1351.92	3.25	0	73.62	0	-0.09	0	0	11.94	0	0	0	0	0	0	11.84	11.84
Inverter	MV2-4	365586	4906624	2	0	0	100.3	100.3	1	2315.75	3.25	0	78.29	0	0.21	0	0	14.1	0	0	0	0	0	0	7.7	7.7
Inverter	MV2-3	365820	4906641	2	0	0	100.3	100.3	1	2417.26	3.25	0	78.67	0	0.24	0	0	14.3	0	0	0	0	0	0	7.11	7.11
Inverter	MV2-1	365842	4906816	2	0	0	97.3	97.3	1	2586.57	3.25	0	79.25	0	0.28	0	0	14.62	0	0	0	0	0	0	3.16	3.16
Inverter	MV3-18	367752	4907412	2	0	0	100.3	100.3	1	4168.49	3.25	0	83.4	0	0.55	0	0	17.32	0	0	0	0	0	0	-0.95	-0.95
Inverter	MV3-12	367668	4907594	2	0	0	100.3	100.3	1	4243.94	3.25	0	83.56	0	0.56	0	0	17.43	0	0	0	0	0	0	-1.24	-1.24
Inverter	MV3-13	367963	4907577	2	0	0	100.3	100.3	1	4434.14	3.25	0	83.94	0	0.58	0	0	17.73	0	0	0	0	0	0	-1.94	-1.94
Inverter	MV3-17	368178	4907472	2	0	0	100.3	100.3	1	4516.99	3.25	0	84.1	0	0.59	0	0	17.86	0	0	0	0	0	0	-2.23	-2.23
Inverter	MV3-7	367945	4907754	2	0	0	100.3	100.3	1	4549.03	3.25	0	84.16	0	0.6	0	0	17.91	0	0	0	0	0	0	-2.35	-2.35
Inverter	MV3-19	368357	4907347	2	0	0	100.3	100.3	1	4570.28	3.25	0	84.2	0	0.6	0	0	17.94	0	0	0	0	0	0	-2.42	-2.42
Inverter	MV3-21	368478	4907206	2	0	0	100.3	100.3	1	4577.36	3.25	0	84.21	0	0.6	0	0	17.95	0	0	0	0	0	0	-2.45	-2.45
Inverter	MV3-10	368167	4907669	2	0	0	100.3	100.3	1	4643.91	3.25	0	84.34	0	0.61	0	0	18.05	0	0	0	0	0	0	-2.68	-2.68
Inverter	MV3-15	368357	4907477	2	0	0	100.3	100.3	1	4654.24	3.25	0	84.36	0	0.61	0	0	18.06	0	0	0	0	0	0	-2.72	-2.72
Inverter	MV3-3	367939	4907927	2	0	0	100.3	100.3	1	4672.84	3.25	0	84.39	0	0.61	0	0	18.09	0	0	0	0	0	0	-2.78	-2.78
Inverter	MV3-6	368162	4907834	2	0	0	100.3	100.3	1	4756.86	3.25	0	84.55	0	0.62	0	0	18.22	0	0	0	0	0	0	-3.07	-3.07
Inverter	MV3-11	368346	4907662	2	0	0	100.3	100.3	1	4769.19	3.25	0	84.57	0	0.62	0	0	18.24	0	0	0	0	0	0	-3.11	-3.11
Inverter	MV3-16	368514	4907475	2	0	0	100.3	100.3	1	4772.84	3.25	0	84.58	0	0.62	0	0	18.24	0	0	0	0	0	0	-3.13	-3.13
Inverter	MV3-20	368689	4907317	2	0	0	100.3	100.3	1	4812.64	3.25	0	84.65	0	0.62	0	0	18.3	0	0	0	0	0	0	-3.26	-3.26
Inverter	MV3-14	368684	4907498	2	0	0	100.3	100.3	1	4919.33	3.25	0	84.84	0	0.63	0	0	18.46	0	0	0	0	0	0	-3.62	-3.62
Inverter	MV3-9	368512	4907703	2	0	0	100.3	100.3	1	4919.8	3.25	0	84.84	0	0.63	0	0	18.46	0	0	0	0	0	0	-3.62	-3.62
Inverter	MV3-8	368680	4907712	2	0	0	100.3	100.3	1	5052.39	3.25	0	85.07	0	0.65	0	0	18.66	0	0	0	0	0	0	-4.06	-4.06
Inverter	MV6-2	370085	4907339	2	0	0	100.3	100.3	1	5999.56	3.25	0	86.56	0	0.7	0	0	19.99	0	0	0	0	0	0	-6.95	-6.95
Inverter	MV6-3	370207	4907140	2	0	0	100.3	100.3	1	6014.43	3.25	0	86.58	0	0.71	0	0	20.01	0	0	0	0	0	0	-6.99	-6.99
Inverter	MV1-3	364440	4906039	2	0	0	89.1	89.1	1	1654.15	3.25	0	75.37	0	0.83	0	0	7.47	0	0	0	0	0	0	5.39	5.39
Gardiner Substation	G_Sub	366586.3	4903349.9	2.5	0	0	90.8	90.8	1	2058.14	4.25	0	77.27	0	0.87	3.71	0.3	4.47	0	0	0	0	0	0	4.46	4.46
Inverter	MV4-7	369035	4909001	2	0	0	100.3	100.3	1	6204.56	3.25	0	86.85	0	0.71	0	0	20.27	0	0	0	0	0	0	-7.52	-7.52
Inverter	MV4-11	369264	4908855	2	0	0	100.3	100.3	1	6257.76	3.25	0	86.93	0	0.71	0	0	20.34	0	0	0	0	0	0	-7.67	-7.67
Inverter	MV4-10	369312	4908858	2	0	0	100.3	100.3	1	6293.92	3.25	0	86.98	0	0.71	0	0	20.39	0	0	0	0	0	0	-7.77	-7.77
Inverter	MV4-4	369027	4909199	2	0	0	100.3	100.3	1	6346.46	3.25	0	87.05	0	0.71	0	0	20.46	0	0	0	0	0	0	-7.91	-7.91
Inverter	MV4-8	369256	4909001	2	0	0	100.3	100.3	1	6356.2	3.25	0	87.06	0	0.71	0	0	20.47	0	0	0	0	0	0	-7.94	-7.94
Inverter	MV4-9	369289	4909001	2	0	0	100.3	100.3	1	6379.19	3.25	0	87.1	0	0.71	0	0	20.5	0	0	0	0	0	0	-8	-8
Inverter	MV4-6	369243	4909192	2	0	0	100.3	100.3	1	6485.98	3.25	0	87.24	0	0.71	0	0	20.64	0	0	0	0	0	0	-8.28	-8.28
Inverter	MV4-1	369011	4909397	2	0	0	100.3	100.3	1	6486.16	3.25	0	87.24	0	0.71	0	0	20.64	0	0	0	0	0	0	-8.28	-8.28
Inverter	MV4-5	369289	4909199	2	0	0	100.3	100.3	1	6522.44	3.25	0	87.29	0	0.71	0	0	20.69	0	0	0	0	0	0	-8.38	-8.38
Inverter	MV4-3	369229	4909397	2	0	0	100.3	100.3	1	6628.57	3.25	0	87.43	0	0.71	0	0	20.83	0	0	0	0	0	0	-8.66	-8.66
Inverter	MV4-2	369272	4909397	2	0	0	100.3	100.3	1	6657.15	3.25	0	87.47	0	0.71	0	0	20.86	0	0	0	0	0	0	-8.73	-8.73
Inverter	MV5-5	370015	4908690	2	0	0	100.3	100.3	1	6703.88	3.25	0	87.53	0	0.71	0	0	20.92	0	0	0	0	0	0	-8.85	-8.85
Inverter	MV5-2	370006	4908853	2	0	0	100.3	100.3	1	6801.71	3.25	0	87.65	0	0.71	0	0	21.05	0	0	0	0	0	0	-9.1	-9.1
Inverter	MV5-4	370324	4908707	2	0	0	100.3	100.3	1	6955.79	3.25	0	87.85	0	0.71	0	0	21.24	0	0	0	0	0	0	-9.49	-9.49
Inverter	MV5-3	370231	4908851	2	0	0	100.3	100.3	1	6972.99	3.25	0	87.87	0	0.71	0	0	21.27	0	0	0	0	0	0	-9.53	-9.53
Inverter	MV5-1	370020	4909142	2	0	0	100.3	100.3	1	7003.32	3.25	0	87.91	0	0.71	0	0	21.3	0	0	0	0	0	0	-9.61	-9.61
Inverter	MV6-1	370235	4907364	2	0	0	97.3	97.3	1	6143.11	3.25	0	86.77	0	0.71	0	0	20.19	0	0	0	0	0	0	-10.35	-10.35
Inverters	G_Inv1	366526.4	4903225.8	2	0	0	87.7	87.7	1	2077.04	3.25	0	77.35	0	2.59	0	0	2.73	0	0	0	0	0	0	4.99	4.99
Inverter	MV2-2	365977	4906654	2	0	0	89.1	89.1	1	2496.85	3.25	0	78.95	0	1.03	0	0	8.84	0	0	0	0	0	0	0.24	0.24
Inverters	G_Inv2	366676.9	4903239.1	2	0	0	87.7	87.7	1	2193.99	3.25	0	77.82	0	2.61	0	0	2.86	0	0	0	0	0	0	4.37	4.37
Inverters	G_Inv3	366583.7	4903091.4	2	0	0	87.7	87.7	1	2203.1	3.25	0	77.86	0	2.61	0	0	2.87	0	0	0	0	0	0	4.32	4.32
DSTATCOM - 10 MVAR #2	DSAT2	369403	4908757	2.5	0	0	96.6	96.6	1	6289.09	3.5	0	86.97	0	3.79	0	0	3.98	0	0	0	0	0	0	1.89	1.89
DSTATCOM - 10 MVAR #1	DSAT1	369437	4908757	2.5	0	0	96.6	96.6	1	6313.82	3.5	0	87.01	0	3.8	0	0	3.99	0	0	0	0	0	0	1.84	1.84
Inverters	G_Inv4	366732.8	4903105	2	0	0	87.7	87.7	1	2315.31	3.25	0	78.29	0	2.62	0	0	3	0	0	0	0	0	0	3.75	3.75
Inverters	G_Inv5	366638.5	4902958.1	2	0	0	87.7	87.7	1	2328.87	3.25	0	78.34	0	2.62	0	0	3.02	0	0	0	0	0	0	3.68	3.68
Inverters	G_Inv6	366788.5	4902972	2	0	0	87.7	87.7	1	2438.44	3.25	0	78.74	0	2.64	0	0	3.14	0	0	0	0	0	0	3.14	3.14
Inverters	G_Inv7	366694.6	4902824.7	2	0	0	87.7	87.7	1	2457.7	3.25	0	78.81	0	2.64	0	0	3.16	0	0	0	0	0	0	3.05	3.05
Inverters	G_Inv8	366844.5	4902838.5	2	0	0	87.7	87.7	1	2564.31	3.25	0	79.18	0	2.65	0	0	3.28	0	0	0	0	0	0	2.55	2.55
Inverters	G_Inv9	366750.9	4902691.8	2	0	0	87.7	87.7	1	2588.02	3.25	0	79.26	0	2.65	0	0	3.31	0	0	0	0	0	0	2.44	2.44
Inverters	G_Inv10	366900.7	4902704.8	2	0	0	87.7	87.7	1	2692.37	3.25	0	79.6	0	2.67	0	0	3.43	0	0	0	0	0	0	1.96	1.96
SubstationTransformer	W_ST	369711.17	4906112.3	2.5	0	0	92	92	1	5156.09	4.25	0	85.25	0	1.68	2.29	0.27	8.8	0	0	0	0	0	0	-6.05	-6.05
Inverter	MV3-22	368656	4907142	2	0	0	89.1	89.1	1	4682.9	3.25	0	84.41	0	1.56	0	0	12.04	0	0	0	0	0	0	-8.95	-8.95
Inverter	MV3-1	368156	4907976	2	0	0	89.1	89.1	1	4855.3	3.25	0	84.72	0	1.6	0	0	12.27	0	0	0	0	0	0	-9.54	-9.54
Inverter	MV3-5	368340	4907843	2	0	0	89.1	89.1	1	4889.25	3.25	0	84.78	0	1.61	0	0	12.31	0	0	0	0	0	0	-9.65	-9.65
Westbrook Inverter Enclosur	W_INV2	369374	4906388	2	0	0	89.1	89.1	1	4941.02	3.25	0	84.88	0	1.63	0	0	12.38	0	0	0	0	0	0	-9.83	-9.83
Westbrook Inverter Enclosur	W_INV3	369508	4906164	2	0	0	89.1	89.1	1	4982.18	3.25	0	84.95	0	1.64	0	0	12.44	0	0	0	0	0	0	-9.97	-9.97
Inverter	MV3-4	368502	4907925	2	0	0	89.1	89.1	1	5062.82	3.25	0	85.09	0	1.66	0	0	12.55	0	0	0	0	0	0	-10.23	-10.23

Westbrook Inverter Enclosur	W_INV4	369673	4906164	2	0	0	89.1	89.1	1	5137.22	3.25	0	85.21	0	1.67	0	0	12.65	0	0	0	0	0	0	-10.48	-10.48
Inverter	MV3-2	368671	4907928	2	0	0	89.1	89.1	1	5188.52	3.25	0	85.3	0	1.69	0	0	12.71	0	0	0	0	0	0	-10.64	-10.64
Westbrook Inverter Enclosur	W_INV7	369780	4906417	2	0	0	89.1	89.1	1	5327.05	3.25	0	85.53	0	1.72	0	0	12.9	0	0	0	0	0	0	-11.09	-11.09
Westbrook Inverter Enclosur	W_INV5	369719	4906574	2	0	0	89.1	89.1	1	5331.57	3.25	0	85.54	0	1.72	0	0	12.9	0	0	0	0	0	0	-11.1	-11.1
Westbrook Inverter Enclosur	W_INV6	369875	4906578	2	0	0	89.1	89.1	1	5476.36	3.25	0	85.77	0	1.76	0	0	13.09	0	0	0	0	0	0	-11.56	-11.56
Fixed Reactor Bank 1	FRB1	369378	4908755	6	0	0	89.8	89.8	1	6269.58	5.25	0	86.94	0	-0.38	0	0	10.02	0	0	0	0	0	0	-6.81	-6.81
Fixed Reactor Bank 2	FRB2	369464	4908755	6	0	0	89.8	89.8	1	6332.16	5.25	0	87.03	0	-0.37	0	0	10.09	0	0	0	0	0	0	-6.97	-6.97
Inverter	MV4-13	369051	4908605	2	0	0	89.1	89.1	1	5930.44	3.25	0	86.46	0	1.87	0	0	13.67	0	0	0	0	0	0	-12.95	-12.95
Inverter	MV4-15	369176	4908481	2	0	0	89.1	89.1	1	5934.66	3.25	0	86.47	0	1.87	0	0	13.68	0	0	0	0	0	0	-12.96	-12.96
Inverter	MV4-14	369176	4908507	2	0	0	89.1	89.1	1	5952.42	3.25	0	86.49	0	1.87	0	0	13.7	0	0	0	0	0	0	-13.01	-13.01
Inverter	MV4-12	369043	4908803	2	0	0	89.1	89.1	1	6065.81	3.25	0	86.66	0	1.9	0	0	13.85	0	0	0	0	0	0	-13.35	-13.35
Inverter	MV5-6	369982	4908507	2	0	0	89.1	89.1	1	6563.29	3.25	0	87.34	0	2.02	0	0	14.46	0	0	0	0	0	0	-14.77	-14.77
Inverter Transformer	MV1-14 T	365157	4905049	2	0	0	69.4	69.4	1	694.53	3.25	0	67.83	0	1.35	0	0	3.34	0	0	0	0	0	0	-3.18	-3.18
Westbrook Inverter Enclosur	W_INV1	369409	4906578	2	0	0	86.1	86.1	1	5050.89	3.25	0	85.07	0	1.65	0	0	12.53	0	0	0	0	0	0	-13.19	-13.19
Inverter Transformer	MV1-13 T	364725	4905241	2	0	0	69.4	69.4	1	815.62	3.25	0	69.23	0	1.51	0	0	3.54	0	0	0	0	0	0	-4.92	-4.92
Inverter	MV6-4	370250	4906966	2	0	0	86.1	86.1	1	5977.07	3.25	0	86.53	0	1.88	0	0	13.73	0	0	0	0	0	0	-16.09	-16.09
Inverter Transformer	MV1-10 T	365010	4905564	2	0	0	69.4	69.4	1	1144.28	3.25	0	72.17	0	1.79	0	0	4	0	0	0	0	0	0	-8.61	-8.61
Inverter Transformer	MV1-7 T	364919	4905782	2	0	0	69.4	69.4	1	1351.54	3.25	0	73.62	0	1.9	0	0	4.26	0	0	0	0	0	0	-10.43	-10.43
Westbrook Inverter Transfor	W_INVTR1	369403	4906578	2	0	0	78.2	78.2	1	5045.46	3.25	0	85.06	0	-3.19	0	0	2.43	0	0	0	0	0	0	-6.06	-6.06
Westbrook Inverter Transfor	W_INVTR2	369368	4906388	2	0	0	77.3	77.3	1	4935.51	3.25	0	84.87	0	-3.16	0	0	2.39	0	0	0	0	0	0	-6.75	-6.75
Westbrook Inverter Transfor	W_INVTR3	369514	4906164	2	0	0	77.3	77.3	1	4987.8	3.25	0	84.96	0	-3.17	0	0	2.41	0	0	0	0	0	0	-6.85	-6.85
Westbrook Inverter Transfor	W_INVTR4	369679	4906164	2	0	0	77.3	77.3	1	5142.87	3.25	0	85.22	0	-3.21	0	0	2.46	0	0	0	0	0	0	-7.14	-7.14
Westbrook Inverter Transfor	W_INVTR7	369786	4906417	2	0	0	77.3	77.3	1	5332.61	3.25	0	85.54	0	-3.24	0	0	2.53	0	0	0	0	0	0	-7.48	-7.48
Westbrook Inverter Transfor	W_INVTR5	369725	4906574	2	0	0	77.3	77.3	1	5337.06	3.25	0	85.55	0	-3.24	0	0	2.53	0	0	0	0	0	0	-7.49	-7.49
Westbrook Inverter Transfor	W_INVTR6	369881	4906578	2	0	0	77.3	77.3	1	5481.88	3.25	0	85.78	0	-3.27	0	0	2.57	0	0	0	0	0	0	-7.74	-7.74
Inverter Transformer	MV2-1 T	365836	4906816	2	0	0	69.4	69.4	1	2584.24	3.25	0	79.25	0	2.38	0	0	5.52	0	0	0	0	0	0	-17.79	-17.79
Inverter Transformer	MV1-15 T	365309	4904994	2	0	0	56.1	56.1	1	733.67	3.25	0	68.31	0	-0.07	0	0	4.22	0	0	0	0	0	0	-16.4	-16.4
Inverter Transformer	MV1-12 T	365044	4905386	2	0	0	56.1	56.1	1	975.4	3.25	0	70.78	0	0	0	0	4.83	0	0	0	0	0	0	-19.56	-19.56
Inverter Transformer	MV1-11 T	364649	4905414	2	0	0	56.1	56.1	1	998.7	3.25	0	70.99	0	0.01	0	0	4.89	0	0	0	0	0	0	-19.83	-19.83
Inverter Transformer	MV1-8 T	364782	4905647	2	0	0	56.1	56.1	1	1215.21	3.25	0	72.69	0	0.09	0	0	5.39	0	0	0	0	0	0	-22.11	-22.11
Inverter Transformer	MV1-9 T	364555	4905646	2	0	0	56.1	56.1	1	1245.17	3.25	0	72.9	0	0.1	0	0	5.46	0	0	0	0	0	0	-22.4	-22.4
Inverter Transformer	MV6-4 T	370244	4906966	2	0	0	69.4	69.4	1	5971.63	3.25	0	86.52	0	3.18	0	0	8	0	0	0	0	0	0	-28.36	-28.36
Inverter Transformer	MV6-1 T	370230	4907364	2	0	0	69.4	69.4	1	6138.72	3.25	0	86.76	0	3.21	0	0	8.1	0	0	0	0	0	0	-28.72	-28.72
Inverter Transformer	MV1-6 T	364482	4905835	2	0	0	56.1	56.1	1	1446.05	3.25	0	74.2	0	0.18	0	0	5.9	0	0	0	0	0	0	-24.22	-24.22
Inverter Transformer	MV1-5 T	364676	4905892	2	0	0	56.1	56.1	1	1467.77	3.25	0	74.33	0	0.19	0	0	5.95	0	0	0	0	0	0	-24.41	-24.41
Inverter Transformer	MV1-4 T	364821	4905918	2	0	0	56.1	56.1	1	1485.08	3.25	0	74.43	0	0.19	0	0	5.99	0	0	0	0	0	0	-24.56	-24.56
Inverter Transformer	MV1-2 T	364759	4906063	2	0	0	56.1	56.1	1	1631.83	3.25	0	75.25	0	0.25	0	0	6.3	0	0	0	0	0	0	-25.74	-25.74
Inverter Transformer	MV1-3 T	364435	4906039	2	0	0	56.1	56.1	1	1655.36	3.25	0	75.38	0	0.26	0	0	6.35	0	0	0	0	0	0	-25.93	-25.93
Inverter Transformer	MV1-1 T	364721	4906166	2	0	0	56.1	56.1	1	1736.83	3.25	0	75.8	0	0.29	0	0	6.51	0	0	0	0	0	0	-26.55	-26.55
Inverter Transformer	MV2-4 T	365590	4906628	2	0	0	56.1	56.1	1	2320.83	3.25	0	78.31	0	0.54	0	0	7.66	0	0	0	0	0	0	-30.45	-30.45
Inverter Transformer	MV2-3 T	365814	4906641	2	0	0	56.1	56.1	1	2414.82	3.25	0	78.66	0	0.58	0	0	7.83	0	0	0	0	0	0	-31.01	-31.01
Inverter Transformer	MV2-2 T	365982	4906654	2	0	0	56.1	56.1	1	2499.14	3.25	0	78.96	0	0.62	0	0	7.99	0	0	0	0	0	0	-31.5	-31.5
Inverter Transformer	MV3-18 T	367757	4907412	2	0	0	56.1	56.1	1	4171.99	3.25	0	83.41	0	1.31	0	0	10.71	0	0	0	0	0	0	-39.37	-39.37
Inverter Transformer	MV3-12 T	367674	4907594	2	0	0	56.1	56.1	1	4247.94	3.25	0	83.56	0	1.34	0	0	10.82	0	0	0	0	0	0	-39.67	-39.67
Inverter Transformer	MV3-13 T	367958	4907577	2	0	0	56.1	56.1	1	4430.62	3.25	0	83.93	0	1.41	0	0	11.08	0	0	0	0	0	0	-40.36	-40.36
Inverter Transformer	MV3-17 T	368183	4907472	2	0	0	56.1	56.1	1	4520.69	3.25	0	84.1	0	1.45	0	0	11.2	0	0	0	0	0	0	-40.7	-40.7
Inverter Transformer	MV3-7 T	367951	4907754	2	0	0	56.1	56.1	1	4553.13	3.25	0	84.17	0	1.46	0	0	11.25	0	0	0	0	0	0	-40.82	-40.82
Inverter Transformer	MV3-19 T	368352	4907347	2	0	0	56.1	56.1	1	4566.43	3.25	0	84.19	0	1.46	0	0	11.27	0	0	0	0	0	0	-40.87	-40.87
Inverter Transformer	MV3-21 T	368484	4907206	2	0	0	56.1	56.1	1	4582.14	3.25	0	84.22	0	1.47	0	0	11.29	0	0	0	0	0	0	-40.92	-40.92
Inverter Transformer	MV3-10 T	368162	4907669	2	0	0	56.1	56.1	1	4640.33	3.25	0	84.33	0	1.49	0	0	11.37	0	0	0	0	0	0	-41.14	-41.14
Inverter Transformer	MV3-15 T	368351	4907477	2	0	0	56.1	56.1	1	4649.71	3.25	0	84.35	0	1.5	0	0	11.38	0	0	0	0	0	0	-41.17	-41.17
Inverter Transformer	MV3-3 T	367944	4907927	2	0	0	56.1	56.1	1	4676.16	3.25	0	84.4	0	1.51	0	0	11.42	0	0	0	0	0	0	-41.26	-41.26
Inverter Transformer	MV3-22 T	368661	4907142	2	0	0	56.1	56.1	1	4686.98	3.25	0	84.42	0	1.51	0	0	11.43	0	0	0	0	0	0	-41.3	-41.3
Inverter Transformer	MV3-6 T	368156	4907834	2	0	0	56.1	56.1	1	4752.67	3.25	0	84.54	0	1.53	0	0	11.52	0	0	0	0	0	0	-41.54	-41.54
Inverter Transformer	MV3-11 T	368340	4907662	2	0	0	56.1	56.1	1	4764.77	3.25	0	84.56	0	1.54	0	0	11.54	0	0	0	0	0	0	-41.58	-41.58
Inverter Transformer	MV3-16 T	368509	4907475	2	0	0	56.1	56.1	1	4768.99	3.25	0	84.57	0	1.54	0	0	11.55	0	0	0	0	0	0	-41.6	-41.6
Inverter Transformer	MV3-20 T	368683	4907317	2	0	0	56.1	56.1	1	4807.84	3.25	0	84.64	0	1.56	0	0	11.6	0	0	0	0	0	0	-41.73	-41.73
Inverter Transformer	MV3-1 T	368150	4907976	2	0	0	56.1	56.1	1	4851.2	3.25	0	84.72	0	1.57	0	0	11.66	0	0	0	0	0	0	-41.89	-41.89
Inverter Transformer	MV3-5 T	368335	4907843	2	0	0	56.1	56.1	1	4885.66	3.25	0	84.78	0	1.58	0	0	11.7	0	0	0	0	0	0	-42.01	-42.01
Inverter Transformer	MV3-14 T	368678	4907498	2	0	0	56.1	56.1	1	4914.64	3.25	0	84.83	0	1.59	0	0	11.74	0	0	0	0	0	0	-42.11	-42.11
Inverter Transformer	MV3-9 T	368517	4907703	2	0	0	56.1	56.1	1	4923.53	3.25	0	84.85	0	1.6	0	0	11.75	0	0	0	0	0	0	-42.14	-42.14
Inverter Transformer	MV3-8 T	368685	4907712	2	0	0	56.1	56.1	1	5056.2	3.25	0	85.08	0	1.65	0	0	11.93	0	0	0	0	0	0	-42.59	-42.59
Inverter Transformer	MV3-4 T	368507	4907925	2	0	0	56.1	56.1	1	5066.44	3.25	0	85.09	0	1.65	0	0	11.94	0	0	0	0	0	0	-42.63	-42.63
Inverter Transformer	MV3-2 T	368677	4907928	2	0	0	56.1	56.1	1	5192.95	3.25	0	85.31	0	1.69	0	0	12.11	0	0	0	0	0	0	-43.05	-43.05
Inverter Transformer	MV4-15 T	369170	4908481	2	0	0	56.1	56.1	1	5930.27	3.25	0	86.46	0	1.94	0	0	13.02	0	0	0	0	0	0	-45.37	-45.37
Inverter Transformer	MV4-13 T	369057	4908605	2	0	0	56.1	56.1	1	5934.71	3.25	0	86.47	0	1.94	0	0	13.03	0	0	0	0	0	0	-45.38	-45.38
Inverter Transformer	MV4-14 T	369182	4908507	2	0	0	56.1	56.1	1	5956.8	3.25	0	86.5	0	1.95	0	0	13.05	0	0	0	0	0	0	-45.44	-45.44
Inverter Transformer	MV6-2 T	370091	4907339	2	0	0	56.1	56.1	1	6004.81	3.25	0	86.57	0	1.97	0	0	13.11	0	0	0	0	0	0	-45.59	-45.59
Inverter Transformer	MV6-3 T	370202	4907140	2	0	0	56.1	56.1	1	6009.96	3.25	0	86.58	0	1.97	0	0	13.11	0	0	0	0	0	0	-45.6	-45.6
Inverter Transformer	MV4-12 T	369049	4908803	2	0	0	56.1	56.1	1	6069.97	3.25	0	86.66	0	1.99	0	0	13.19	0	0	0	0	0	0	-45.78	-45.78
Inverter Transformer	MV4-7 T	369040	4909001	2	0	0	56.1	56.1	1	6207.94	3.25	0	86.86	0	2.03	0	0	13.35	0	0	0	0	0	0	-46.18	-46.18
Inverter Transformer	MV4-11 T	369269	4908855	2	0	0	56.1	56.1	1	6261.29	3.25	0	86.93	0	2.05	0	0	13.41	0	0	0	0	0	0	-46.33	-46.33
Inverter Transformer	MV4-10 T	369307	4908858	2	0	0	56.1	56.1	1	6290.36	3.25	0	86.97	0	2.05	0	0	13.44	0	0	0	0	0	0	-46.41	-46.41
Inverter Transformer	MV4-4 T	369033	4909199	2	0	0	56.1	56.1	1	6350.42	3.25	0	87.06	0	2.07	0	0	13.51	0	0	0	0	0	0	-46.58	-46.58

	Inverter Transformer	MV4-8 T	369262	4909001	2	0	0	56.1	56.1	1	6360.37	3.25	0	87.07	0	2.08	0	0	13.52	0	0	0	0	0	0	-46.61	-46.61
	Inverter Transformer	MV4-9 T	369284	4909001	2	0	0	56.1	56.1	1	6375.7	3.25	0	87.09	0	2.08	0	0	13.54	0	0	0	0	0	0	-46.65	-46.65
	Inverter Transformer	MV4-1 T	369017	4909397	2	0	0	56.1	56.1	1	6490.02	3.25	0	87.24	0	2.11	0	0	13.67	0	0	0	0	0	0	-46.97	-46.97
	Inverter Transformer	MV4-6 T	369249	4909192	2	0	0	56.1	56.1	1	6490.06	3.25	0	87.24	0	2.11	0	0	13.67	0	0	0	0	0	0	-46.97	-46.97
	Inverter Transformer	MV4-5 T	369283	4909199	2	0	0	56.1	56.1	1	6518.34	3.25	0	87.28	0	2.12	0	0	13.7	0	0	0	0	0	0	-47.05	-47.05
	Inverter Transformer	MV5-6 T	369987	4908507	2	0	0	56.1	56.1	1	6567.21	3.25	0	87.35	0	2.14	0	0	13.76	0	0	0	0	0	0	-47.18	-47.18
	Inverter Transformer	MV4-3 T	369234	4909397	2	0	0	56.1	56.1	1	6631.89	3.25	0	87.43	0	2.16	0	0	13.83	0	0	0	0	0	0	-47.36	-47.36
	Inverter Transformer	MV4-2 T	369267	4909397	2	0	0	56.1	56.1	1	6653.82	3.25	0	87.46	0	2.16	0	0	13.85	0	0	0	0	0	0	-47.42	-47.42
	Inverter Transformer	MV5-5 T	370021	4908690	2	0	0	56.1	56.1	1	6708.52	3.25	0	87.53	0	2.18	0	0	13.91	0	0	0	0	0	0	-47.56	-47.56
	Inverter Transformer	MV5-2 T	370011	4908853	2	0	0	56.1	56.1	1	6805.51	3.25	0	87.66	0	2.21	0	0	14.02	0	0	0	0	0	0	-47.82	-47.82
	Inverter Transformer	MV5-4 T	370330	4908707	2	0	0	56.1	56.1	1	6960.53	3.25	0	87.85	0	2.25	0	0	14.19	0	0	0	0	0	0	-48.23	-48.23
	Inverter Transformer	MV5-3 T	370237	4908851	2	0	0	56.1	56.1	1	6977.63	3.25	0	87.87	0	2.25	0	0	14.21	0	0	0	0	0	0	-48.27	-48.27
	Inverter Transformer	MV5-1 T	370015	4909142	2	0	0	56.1	56.1	1	6999.62	3.25	0	87.9	0	2.26	0	0	14.23	0	0	0	0	0	0	-48.33	-48.33
	Line Reactor	NGR	369421	4908787.5	5	0	0	45.4	45.4	1	6323.14	5.25	0	87.02	0	3.23	1.36	0.08	2.58	0	0	0	0	0	0	-48.85	-48.85
Limit. Valu	0	0																								
Level D/N:	29.0138	29.0138																								

Receiver: Existing Noise Receptor
ID: G-123
X: 364677.2
Y: 4904232
Z: 4.5
Ground: 0

ISO	Description	ID	X	Y	Z	Ground	ReflOrd	LxT	LxN	L/A	Dist.	hm	Freq	Adiv	K0b	Agr	Abar	z	Aatm	Afol	Ahous	Cmet	CmetN	Dc	RL	LtotT	LtotN
	Inverter	MV1-15	365315	4904994	2	0	0	100.3	100.3	1	993.7	3.25	0	70.95	0	-0.25	0	0	10.89	0	0	0	0	0	0	18.73	18.73
	Inverter	MV1-11	364655	4905414	2	0	0	100.3	100.3	1	1182.21	3.25	0	72.45	0	-0.16	0	0	11.47	0	0	0	0	0	0	16.55	16.55
	Inverter	MV1-12	365038	4905386	2	0	0	100.3	100.3	1	1209.09	3.25	0	72.65	0	-0.15	0	0	11.55	0	0	0	0	0	0	16.26	16.26
	Inverter	MV1-14	365163	4905049	2	0	0	97.3	97.3	1	950.52	3.25	0	70.56	0	-0.27	0	0	10.74	0	0	0	0	0	0	16.28	16.28
	Inverter	MV1-9	364561	4905646	2	0	0	100.3	100.3	1	1418.77	3.25	0	74.04	0	-0.06	0	0	12.12	0	0	0	0	0	0	14.22	14.22
	Inverter	MV1-8	364788	4905647	2	0	0	100.3	100.3	1	1419.33	3.25	0	74.04	0	-0.06	0	0	12.12	0	0	0	0	0	0	14.21	14.21
	Inverter	MV1-13	364731	4905241	2	0	0	97.3	97.3	1	1010.44	3.25	0	71.09	0	-0.24	0	0	10.95	0	0	0	0	0	0	15.52	15.52
	Inverter	MV1-6	364477	4905835	2	0	0	100.3	100.3	1	1615.46	3.25	0	75.17	0	0.01	0	0	12.6	0	0	0	0	0	0	12.53	12.53
	Inverter	MV1-5	364671	4905892	2	0	0	100.3	100.3	1	1660.01	3.25	0	75.4	0	0.02	0	0	12.71	0	0	0	0	0	0	12.18	12.18
	Inverter	MV1-4	364815	4905918	2	0	0	100.3	100.3	1	1691.62	3.25	0	75.57	0	0.03	0	0	12.78	0	0	0	0	0	0	11.93	11.93
	Sol_Luce Substation	S_Substation	369426	4908792	3.5	0	0	112.1	112.1	1	6583.67	5.25	0	87.37	0	1.29	2.52	0.25	10.34	0	0	0	0	0	0	10.55	10.55
	Inverter	MV1-2	364753	4906063	2	0	0	100.3	100.3	1	1832.57	3.25	0	76.26	0	0.08	0	0	13.1	0	0	0	0	0	0	10.87	10.87
	Inverter	MV1-1	364715	4906166	2	0	0	100.3	100.3	1	1934.37	3.25	0	76.73	0	0.11	0	0	13.32	0	0	0	0	0	0	10.15	10.15
	Inverter	MV1-10	365004	4905564	2	0	0	97.3	97.3	1	1371.51	3.25	0	73.74	0	-0.08	0	0	12	0	0	0	0	0	0	11.65	11.65
	Inverter	MV1-7	364925	4905782	2	0	0	97.3	97.3	1	1569.69	3.25	0	74.92	0	-0.01	0	0	12.5	0	0	0	0	0	0	9.91	9.91
	Inverter	MV2-4	365586	4906624	2	0	0	100.3	100.3	1	2558.83	3.25	0	79.16	0	0.27	0	0	14.57	0	0	0	0	0	0	6.31	6.31
	Inverter	MV2-3	365820	4906641	2	0	0	100.3	100.3	1	2666.32	3.25	0	79.52	0	0.29	0	0	14.77	0	0	0	0	0	0	5.73	5.73
	Inverter	MV2-1	365842	4906816	2	0	0	97.3	97.3	1	2834.4	3.25	0	80.05	0	0.33	0	0	15.08	0	0	0	0	0	0	1.86	1.86
	Inverter	MV3-18	367752	4907412	2	0	0	100.3	100.3	1	4423.44	3.25	0	83.92	0	0.58	0	0	17.71	0	0	0	0	0	0	-1.9	-1.9
	Inverter	MV3-12	367668	4907594	2	0	0	100.3	100.3	1	4499.77	3.25	0	84.06	0	0.59	0	0	17.83	0	0	0	0	0	0	-2.17	-2.17
	Inverter	MV3-13	367963	4907577	2	0	0	100.3	100.3	1	4688.87	3.25	0	84.42	0	0.61	0	0	18.12	0	0	0	0	0	0	-2.84	-2.84
	Inverter	MV3-17	368178	4907472	2	0	0	100.3	100.3	1	4770.03	3.25	0	84.57	0	0.62	0	0	18.24	0	0	0	0	0	0	-3.12	-3.12
	Inverter	MV3-7	367945	4907754	2	0	0	100.3	100.3	1	4804.48	3.25	0	84.63	0	0.62	0	0	18.29	0	0	0	0	0	0	-3.23	-3.23
	Inverter	MV3-19	368357	4907347	2	0	0	100.3	100.3	1	4821.22	3.25	0	84.66	0	0.63	0	0	18.32	0	0	0	0	0	0	-3.29	-3.29
	Inverter	MV3-21	368478	4907206	2	0	0	100.3	100.3	1	4826.05	3.25	0	84.67	0	0.63	0	0	18.32	0	0	0	0	0	0	-3.31	-3.31
	Inverter	MV3-10	368167	4907669	2	0	0	100.3	100.3	1	4898.13	3.25	0	84.8	0	0.63	0	0	18.43	0	0	0	0	0	0	-3.55	-3.55
	Inverter	MV3-15	368357	4907477	2	0	0	100.3	100.3	1	4906.22	3.25	0	84.81	0	0.63	0	0	18.44	0	0	0	0	0	0	-3.58	-3.58
	Inverter	MV3-3	367939	4907927	2	0	0	100.3	100.3	1	4928.73	3.25	0	84.85	0	0.64	0	0	18.48	0	0	0	0	0	0	-3.65	-3.65
	Inverter	MV3-6	368162	4907834	2	0	0	100.3	100.3	1	5011.81	3.25	0	85	0	0.64	0	0	18.6	0	0	0	0	0	0	-3.93	-3.93
	Inverter	MV3-11	368346	4907662	2	0	0	100.3	100.3	1	5022.45	3.25	0	85.02	0	0.64	0	0	18.61	0	0	0	0	0	0	-3.96	-3.96
	Inverter	MV3-16	368514	4907475	2	0	0	100.3	100.3	1	5023.75	3.25	0	85.02	0	0.64	0	0	18.62	0	0	0	0	0	0	-3.97	-3.97
	Inverter	MV3-20	368689	4907317	2	0	0	100.3	100.3	1	5060.81	3.25	0	85.08	0	0.65	0	0	18.67	0	0	0	0	0	0	-4.09	-4.09
	Inverter	MV3-14	368684	4907498	2	0	0	100.3	100.3	1	5169.26	3.25	0	85.27	0	0.66	0	0	18.83	0	0	0	0	0	0	-4.44	-4.44
	Inverter	MV3-9	368512	4907703	2	0	0	100.3	100.3	1	5172.38	3.25	0	85.27	0	0.66	0	0	18.83	0	0	0	0	0	0	-4.45	-4.45
	Inverter	MV3-8	368680	4907712	2	0	0	100.3	100.3	1	5304.04	3.25	0	85.49	0	0.67	0	0	19.02	0	0	0	0	0	0	-4.87	-4.87
	Inverter	MV6-2	370085	4907339	2	0	0	100.3	100.3	1	6236.81	3.25	0	86.9	0	0.71	0	0	20.31	0	0	0	0	0	0	-7.61	-7.61
	Inverter	MV6-3	370207	4907140	2	0	0	100.3	100.3	1	6247.81	3.25	0	86.91	0	0.71	0	0	20.33	0	0	0	0	0	0	-7.64	-7.64
	Gardiner Substation	G_Sub	366586.3	4903349.9	2.5	0	0	90.8	90.8	1	2103.04	4.25	0	77.46	0	0.89	3.71	0.31	4.54	0	0	0	0	0	0	4.18	4.18
	Inverter	MV4-7	369035	4909001	2	0	0	100.3	100.3	1	6460.17	3.25	0	87.2	0	0.71	0	0	20.61	0	0	0	0	0	0	-8.21	-8.21
	Inverter	MV4-11	369264	4908855	2	0	0	100.3	100.3	1	6512.36	3.25	0	87.27	0	0.71	0	0	20.68	0	0	0	0	0	0	-8.35	-8.35
	Inverter	MV4-10	369312	4908858	2	0	0	100.3	100.3	1	6548.38	3.25	0	87.32	0	0.71	0	0	20.72	0	0	0	0	0	0	-8.45	-8.45
	Inverter	MV4-4	369027	4909199	2	0	0	100.3	100.3	1	6602.41	3.25	0	87.39	0	0.72	0	0	20.79	0	0	0	0	0	0	-8.59	-8.59
	Inverter	MV4-8	369256	4909001	2	0	0	100.3	100.3	1	6611.26	3.25	0	87.41	0	0.72	0	0	20.8	0	0	0	0	0	0	-8.61	-8.61
	Inverter	MV4-9	369289	4909001	2	0	0	100.3	100.3	1	6634.16	3.25	0	87.44	0	0.71	0	0	20.83	0	0	0	0	0	0	-8.67	-8.67
	Inverter	MV1-3	364440	4906039	2	0	0	89.1	89.1	1	1822.5	3.25	0	76.21	0	0.87	0	0	7.75	0	0	0	0	0	0	4.23	4.23
	Inverter	MV4-6	369243	4909192	2	0	0	100.3	100.3	1	6741.52	3.25	0	87.58	0	0.71	0	0	20.97	0	0	0	0	0	0	-8.95	-8.95
	Inverter	MV4-1	369011	4909397	2	0	0	100.3	100.3	1	6742.33	3.25	0	87.58	0	0.71	0	0	20.97	0	0	0	0	0	0	-8.95	-8.95
	Inverter	MV4-5	369289	4909199	2	0	0	100.3	100.3	1	6777.89	3.25	0	87.62	0	0.71	0	0	21.02	0	0	0	0	0	0	-9.04	-9.04
	Inverter	MV4-3	369229	4909397	2	0	0	100.3	100.3	1	6884.48	3.25	0	87.76	0	0.71	0	0	21.15	0	0	0	0	0	0	-9.31	-9.31

Inverter	MV4-2	369272	4909397	2	0	0	100.3	100.3	1	6912.99	3.25	0	87.79	0	0.71	0	0	21.19	0	0	0	0	0	0	-9.38	-9.38
Inverter	MV5-5	370015	4908690	2	0	0	100.3	100.3	1	6954.56	3.25	0	87.85	0	0.71	0	0	21.24	0	0	0	0	0	0	-9.49	-9.49
Inverter	MV5-2	370006	4908853	2	0	0	100.3	100.3	1	7053.35	3.25	0	87.97	0	0.71	0	0	21.37	0	0	0	0	0	0	-9.73	-9.73
Inverter	MV5-4	370324	4908707	2	0	0	100.3	100.3	1	7205	3.25	0	88.15	0	0.7	0	0	21.55	0	0	0	0	0	0	-10.1	-10.1
Inverter	MV5-3	370231	4908851	2	0	0	100.3	100.3	1	7223.56	3.25	0	88.18	0	0.7	0	0	21.58	0	0	0	0	0	0	-10.14	-10.14
Inverter	MV5-1	370020	4909142	2	0	0	100.3	100.3	1	7256.28	3.25	0	88.21	0	0.7	0	0	21.62	0	0	0	0	0	0	-10.22	-10.22
Inverter	MV6-1	370235	4907364	2	0	0	97.3	97.3	1	6379.54	3.25	0	87.1	0	0.71	0	0	20.5	0	0	0	0	0	0	-11	-11
Inverters	G_Inv1	366526.4	4903225.8	2	0	0	87.7	87.7	1	2105.23	3.25	0	77.47	0	2.6	0	0	2.76	0	0	0	0	0	0	4.84	4.84
Inverters	G_Inv3	366583.7	4903091.4	2	0	0	87.7	87.7	1	2221.65	3.25	0	77.93	0	2.61	0	0	2.89	0	0	0	0	0	0	4.22	4.22
Inverters	G_Inv2	366676.9	4903239.1	2	0	0	87.7	87.7	1	2232.63	3.25	0	77.98	0	2.61	0	0	2.91	0	0	0	0	0	0	4.17	4.17
DSTATCOM - 10 MVAR #2	DSAT2	369403	4908757	2.5	0	0	96.6	96.6	1	6542.84	3.5	0	87.32	0	3.81	0	0	4.1	0	0	0	0	0	0	1.41	1.41
DSTATCOM - 10 MVAR #1	DSAT1	369437	4908757	2.5	0	0	96.6	96.6	1	6567.44	3.5	0	87.35	0	3.81	0	0	4.11	0	0	0	0	0	0	1.36	1.36
Inverters	G_Inv5	366638.5	4902958.1	2	0	0	87.7	87.7	1	2338.7	3.25	0	78.38	0	2.62	0	0	3.03	0	0	0	0	0	0	3.63	3.63
Inverter	MV2-2	365977	4906654	2	0	0	89.1	89.1	1	2748.74	3.25	0	79.78	0	1.09	0	0	9.23	0	0	0	0	0	0	-1.04	-1.04
Inverters	G_Inv4	366732.8	4903105	2	0	0	87.7	87.7	1	2344.28	3.25	0	78.4	0	2.63	0	0	3.03	0	0	0	0	0	0	3.6	3.6
Inverters	G_Inv6	366788.5	4902972	2	0	0	87.7	87.7	1	2458.7	3.25	0	78.81	0	2.64	0	0	3.16	0	0	0	0	0	0	3.04	3.04
Inverters	G_Inv7	366694.6	4902824.7	2	0	0	87.7	87.7	1	2459.76	3.25	0	78.82	0	2.64	0	0	3.17	0	0	0	0	0	0	3.04	3.04
Inverters	G_Inv8	366844.5	4902838.5	2	0	0	87.7	87.7	1	2576.63	3.25	0	79.22	0	2.65	0	0	3.3	0	0	0	0	0	0	2.49	2.49
Inverters	G_Inv9	366750.9	4902691.8	2	0	0	87.7	87.7	1	2583.11	3.25	0	79.24	0	2.65	0	0	3.31	0	0	0	0	0	0	2.46	2.46
Inverters	G_Inv10	366900.7	4902704.8	2	0	0	87.7	87.7	1	2697.46	3.25	0	79.62	0	2.67	0	0	3.44	0	0	0	0	0	0	1.94	1.94
SubstationTransformer	W_ST	369711.17	4906112.3	2.5	0	0	92	92	1	5373.66	4.25	0	85.61	0	1.73	2.24	0.27	9.05	0	0	0	0	0	0	-6.66	-6.66
Inverter	MV3-22	368656	4907142	2	0	0	89.1	89.1	1	4929.4	3.25	0	84.86	0	1.62	0	0	12.37	0	0	0	0	0	0	-9.79	-9.79
Inverter	MV3-1	368156	4907976	2	0	0	89.1	89.1	1	5110.73	3.25	0	85.17	0	1.67	0	0	12.61	0	0	0	0	0	0	-10.39	-10.39
Inverter	MV3-5	368340	4907843	2	0	0	89.1	89.1	1	5143.48	3.25	0	85.23	0	1.68	0	0	12.65	0	0	0	0	0	0	-10.5	-10.5
Westbrook Inverter Enclosur	W_INV2	369374	4906388	2	0	0	89.1	89.1	1	5168	3.25	0	85.27	0	1.68	0	0	12.69	0	0	0	0	0	0	-10.58	-10.58
Westbrook Inverter Enclosur	W_INV3	369508	4906164	2	0	0	89.1	89.1	1	5202.81	3.25	0	85.32	0	1.69	0	0	12.73	0	0	0	0	0	0	-10.69	-10.69
Inverter	MV3-4	368502	4907925	2	0	0	89.1	89.1	1	5316.7	3.25	0	85.51	0	1.72	0	0	12.88	0	0	0	0	0	0	-11.06	-11.06
Westbrook Inverter Enclosur	W_INV4	369673	4906164	2	0	0	89.1	89.1	1	5356.37	3.25	0	85.58	0	1.73	0	0	12.94	0	0	0	0	0	0	-11.18	-11.18
Inverter	MV3-2	368671	4907928	2	0	0	89.1	89.1	1	5441.59	3.25	0	85.71	0	1.75	0	0	13.05	0	0	0	0	0	0	-11.45	-11.45
Westbrook Inverter Enclosur	W_INV7	369780	4906417	2	0	0	89.1	89.1	1	5550.93	3.25	0	85.89	0	1.78	0	0	13.19	0	0	0	0	0	0	-11.79	-11.79
Westbrook Inverter Enclosur	W_INV5	369719	4906574	2	0	0	89.1	89.1	1	5559.2	3.25	0	85.9	0	1.78	0	0	13.2	0	0	0	0	0	0	-11.82	-11.82
Westbrook Inverter Enclosur	W_INV6	369875	4906578	2	0	0	89.1	89.1	1	5702.71	3.25	0	86.12	0	1.81	0	0	13.38	0	0	0	0	0	0	-12.26	-12.26
Fixed Reactor Bank 1	FRB1	369378	4908755	6	0	0	89.8	89.8	1	6523.42	5.25	0	87.29	0	-0.35	0	0	10.28	0	0	0	0	0	0	-7.45	-7.45
Fixed Reactor Bank 2	FRB2	369464	4908755	6	0	0	89.8	89.8	1	6585.67	5.25	0	87.37	0	-0.34	0	0	10.34	0	0	0	0	0	0	-7.6	-7.6
Inverter	MV4-13	369051	4908605	2	0	0	89.1	89.1	1	6184.92	3.25	0	86.83	0	1.93	0	0	13.99	0	0	0	0	0	0	-13.69	-13.69
Inverter	MV4-15	369176	4908481	2	0	0	89.1	89.1	1	6188.15	3.25	0	86.83	0	1.93	0	0	14	0	0	0	0	0	0	-13.7	-13.7
Inverter	MV4-14	369176	4908507	2	0	0	89.1	89.1	1	6206.03	3.25	0	86.86	0	1.94	0	0	14.02	0	0	0	0	0	0	-13.75	-13.75
Inverter	MV4-12	369043	4908803	2	0	0	89.1	89.1	1	6320.94	3.25	0	87.02	0	1.96	0	0	14.16	0	0	0	0	0	0	-14.08	-14.08
Inverter	MV5-6	369982	4908507	2	0	0	89.1	89.1	1	6812.97	3.25	0	87.67	0	2.08	0	0	14.76	0	0	0	0	0	0	-15.45	-15.45
Westbrook Inverter Enclosur	W_INV1	369409	4906578	2	0	0	86.1	86.1	1	5281.44	3.25	0	85.46	0	1.71	0	0	12.84	0	0	0	0	0	0	-13.94	-13.94
Inverter	MV6-4	370250	4906966	2	0	0	86.1	86.1	1	6207.32	3.25	0	86.86	0	1.94	0	0	14.02	0	0	0	0	0	0	-16.76	-16.76
Inverter Transformer	MV1-14 T	365157	4905049	2	0	0	69.4	69.4	1	947.47	3.25	0	70.53	0	1.64	0	0	3.74	0	0	0	0	0	0	-6.56	-6.56
Inverter Transformer	MV1-13 T	364725	4905241	2	0	0	69.4	69.4	1	1010.13	3.25	0	71.09	0	1.69	0	0	3.82	0	0	0	0	0	0	-7.25	-7.25
Inverter Transformer	MV1-10 T	365010	4905564	2	0	0	69.4	69.4	1	1372.95	3.25	0	73.75	0	1.91	0	0	4.29	0	0	0	0	0	0	-10.6	-10.6
Inverter Transformer	MV1-7 T	364919	4905782	2	0	0	69.4	69.4	1	1568.75	3.25	0	74.91	0	2	0	0	4.51	0	0	0	0	0	0	-12.07	-12.07
Westbrook Inverter Transfor	W_INVTR1	369403	4906578	2	0	0	78.2	78.2	1	5276.07	3.25	0	85.45	0	-3.23	0	0	2.51	0	0	0	0	0	0	-6.48	-6.48
Westbrook Inverter Transfor	W_INVTR2	369368	4906388	2	0	0	77.3	77.3	1	5162.55	3.25	0	85.26	0	-3.21	0	0	2.47	0	0	0	0	0	0	-7.17	-7.17
Westbrook Inverter Transfor	W_INVTR3	369514	4906164	2	0	0	77.3	77.3	1	5208.38	3.25	0	85.33	0	-3.22	0	0	2.48	0	0	0	0	0	0	-7.26	-7.26
Westbrook Inverter Transfor	W_INVTR4	369679	4906164	2	0	0	77.3	77.3	1	5361.96	3.25	0	85.59	0	-3.25	0	0	2.53	0	0	0	0	0	0	-7.53	-7.53
Westbrook Inverter Transfor	W_INVTR7	369786	4906417	2	0	0	77.3	77.3	1	5556.44	3.25	0	85.9	0	-3.29	0	0	2.6	0	0	0	0	0	0	-7.87	-7.87
Westbrook Inverter Transfor	W_INVTR5	369725	4906574	2	0	0	77.3	77.3	1	5564.64	3.25	0	85.91	0	-3.29	0	0	2.6	0	0	0	0	0	0	-7.88	-7.88
Westbrook Inverter Transfor	W_INVTR6	369881	4906578	2	0	0	77.3	77.3	1	5708.17	3.25	0	86.13	0	-3.31	0	0	2.65	0	0	0	0	0	0	-8.12	-8.12
Inverter Transformer	MV2-1 T	365836	4906816	2	0	0	69.4	69.4	1	2831.94	3.25	0	80.04	0	2.46	0	0	5.74	0	0	0	0	0	0	-18.89	-18.89
Inverter Transformer	MV1-15 T	365309	4904994	2	0	0	56.1	56.1	1	989.86	3.25	0	70.91	0	0.01	0	0	4.86	0	0	0	0	0	0	-19.73	-19.73
Inverter Transformer	MV1-11 T	364649	4905414	2	0	0	56.1	56.1	1	1182.34	3.25	0	72.45	0	0.08	0	0	5.32	0	0	0	0	0	0	-21.79	-21.79
Inverter Transformer	MV1-12 T	365044	4905386	2	0	0	56.1	56.1	1	1210.89	3.25	0	72.66	0	0.09	0	0	5.38	0	0	0	0	0	0	-22.07	-22.07
Inverter Transformer	MV6-4 T	370244	4906966	2	0	0	69.4	69.4	1	6201.94	3.25	0	86.85	0	3.22	0	0	8.14	0	0	0	0	0	0	-28.86	-28.86
Inverter Transformer	MV6-1 T	370230	4907364	2	0	0	69.4	69.4	1	6375.19	3.25	0	87.09	0	3.24	0	0	8.24	0	0	0	0	0	0	-29.22	-29.22
Inverter Transformer	MV1-8 T	364782	4905647	2	0	0	56.1	56.1	1	1418.88	3.25	0	74.04	0	0.17	0	0	5.84	0	0	0	0	0	0	-23.99	-23.99
Inverter Transformer	MV1-9 T	364555	4905646	2	0	0	56.1	56.1	1	1419.27	3.25	0	74.04	0	0.17	0	0	5.84	0	0	0	0	0	0	-23.99	-23.99
Inverter Transformer	MV1-6 T	364482	4905835	2	0	0	56.1	56.1	1	1614.84	3.25	0	75.16	0	0.24	0	0	6.26	0	0	0	0	0	0	-25.61	-25.61
Inverter Transformer	MV1-5 T	364676	4905892	2	0	0	56.1	56.1	1	1660	3.25	0	75.4	0	0.26	0	0	6.36	0	0	0	0	0	0	-25.96	-25.96
Inverter Transformer	MV1-4 T	364821	4905918	2	0	0	56.1	56.1	1	1692.12	3.25	0	75.57	0	0.28	0	0	6.42	0	0	0	0	0	0	-26.21	-26.21
Inverter Transformer	MV1-3 T	364435	4906039	2	0	0	56.1	56.1	1	1823.16	3.25	0	76.22	0	0.33	0	0	6.69	0	0	0	0	0	0	-27.18	-27.18
Inverter Transformer	MV1-2 T	364759	4906063	2	0	0	56.1	56.1	1	1832.83	3.25	0	76.26	0	0.33	0	0	6.71	0	0	0	0	0	0	-27.25	-27.25
Inverter Transformer	MV1-1 T	364721	4906166	2	0	0	56.1	56.1	1	1934.5	3.25	0	76.73	0	0.38	0	0	6.91	0	0	0	0	0	0	-27.96	-27.96
Inverter Transformer	MV2-4 T	365590	4906628	2	0	0	56.1	56.1	1	2563.99	3.25	0	79.18	0	0.64	0	0	8.11	0	0	0	0	0	0	-31.87	-31.87
Inverter Transformer	MV2-3 T	365814	4906641	2	0	0	56.1	56.1	1	2663.76	3.25	0	79.51	0	0.69	0	0	8.28	0	0	0	0	0	0	-32.42	-32.42
Inverter Transformer	MV2-2 T	365982	4906654	2	0	0	56.1	56.1	1	2751.11	3.25	0	79.79	0	0.72	0	0	8.44	0	0	0	0	0	0	-32.89	-32.89
Inverter Transformer	MV3-18 T	367757	4907412	2	0	0	56.1	56.1	1	4426.91	3.25	0	83.92	0	1.41	0	0	11.07	0	0	0	0	0	0	-40.35	-40.35
Inverter Transformer	MV3-12 T	367674	4907594	2	0	0	56.1	56.1	1	4503.76	3.25	0	84.07	0	1.44	0	0	11.18	0	0	0	0	0	0	-40.63	-40.63
Inverter Transformer	MV3-13 T	367958	4907577	2	0	0	56.1	56.1	1	4685.37	3.25	0	84.41	0	1.51	0	0	11.43	0	0	0	0	0	0	-41.3	-41.3
Inverter Transformer	MV3-17 T	368183	4907472	2	0	0	56.1	56.1	1	4773.7	3.25	0	84.58	0	1.54	0	0	11.55	0	0	0	0	0	0	-41.61	-41.61
Inverter Transformer	MV3-7 T	367951	4907754	2	0	0	56.1	56.1	1	4808.56	3.25	0	84.64	0	1.56	0	0	11.6	0	0	0	0	0	0	-41.74	-41.74

	Inverter Transformer	MV3-19 T	368352	4907347	2	0	0	56.1	56.1	1	4817.4	3.25	0	84.66	0	1.56	0	0	11.61	0	0	0	0	0	0	-41.77	-41.77
	Inverter Transformer	MV3-21 T	368484	4907206	2	0	0	56.1	56.1	1	4830.78	3.25	0	84.68	0	1.56	0	0	11.63	0	0	0	0	0	0	-41.81	-41.81
	Inverter Transformer	MV3-10 T	368162	4907669	2	0	0	56.1	56.1	1	4894.57	3.25	0	84.79	0	1.59	0	0	11.71	0	0	0	0	0	0	-42.04	-42.04
	Inverter Transformer	MV3-15 T	368351	4907477	2	0	0	56.1	56.1	1	4901.72	3.25	0	84.81	0	1.59	0	0	11.72	0	0	0	0	0	0	-42.06	-42.06
	Inverter Transformer	MV3-3 T	367944	4907927	2	0	0	56.1	56.1	1	4932.04	3.25	0	84.86	0	1.6	0	0	11.76	0	0	0	0	0	0	-42.17	-42.17
	Inverter Transformer	MV3-22 T	368661	4907142	2	0	0	56.1	56.1	1	4933.43	3.25	0	84.86	0	1.6	0	0	11.77	0	0	0	0	0	0	-42.17	-42.17
	Inverter Transformer	MV3-6 T	368156	4907834	2	0	0	56.1	56.1	1	5007.64	3.25	0	84.99	0	1.63	0	0	11.86	0	0	0	0	0	0	-42.43	-42.43
	Inverter Transformer	MV3-11 T	368340	4907662	2	0	0	56.1	56.1	1	5018.07	3.25	0	85.01	0	1.63	0	0	11.88	0	0	0	0	0	0	-42.46	-42.46
	Inverter Transformer	MV3-16 T	368509	4907475	2	0	0	56.1	56.1	1	5019.93	3.25	0	85.01	0	1.63	0	0	11.88	0	0	0	0	0	0	-42.47	-42.47
	Inverter Transformer	MV3-20 T	368683	4907317	2	0	0	56.1	56.1	1	5056.05	3.25	0	85.08	0	1.65	0	0	11.93	0	0	0	0	0	0	-42.59	-42.59
	Inverter Transformer	MV3-1 T	368150	4907976	2	0	0	56.1	56.1	1	5106.65	3.25	0	85.16	0	1.66	0	0	11.99	0	0	0	0	0	0	-42.76	-42.76
	Inverter Transformer	MV3-5 T	368335	4907843	2	0	0	56.1	56.1	1	5139.92	3.25	0	85.22	0	1.68	0	0	12.04	0	0	0	0	0	0	-42.87	-42.87
	Inverter Transformer	MV3-14 T	368678	4907498	2	0	0	56.1	56.1	1	5164.61	3.25	0	85.26	0	1.68	0	0	12.07	0	0	0	0	0	0	-42.96	-42.96
	Inverter Transformer	MV3-9 T	368517	4907703	2	0	0	56.1	56.1	1	5176.09	3.25	0	85.28	0	1.69	0	0	12.08	0	0	0	0	0	0	-42.99	-42.99
	Inverter Transformer	MV3-8 T	368685	4907712	2	0	0	56.1	56.1	1	5307.81	3.25	0	85.5	0	1.73	0	0	12.25	0	0	0	0	0	0	-43.43	-43.43
	Inverter Transformer	MV3-4 T	368507	4907925	2	0	0	56.1	56.1	1	5320.3	3.25	0	85.52	0	1.74	0	0	12.27	0	0	0	0	0	0	-43.47	-43.47
	Inverter Transformer	MV3-2 T	368677	4907928	2	0	0	56.1	56.1	1	5445.99	3.25	0	85.72	0	1.78	0	0	12.43	0	0	0	0	0	0	-43.87	-43.87
	Inverter Transformer	MV4-15 T	369170	4908481	2	0	0	56.1	56.1	1	6183.79	3.25	0	86.83	0	2.02	0	0	13.32	0	0	0	0	0	0	-46.11	-46.11
	Inverter Transformer	MV4-13 T	369057	4908605	2	0	0	56.1	56.1	1	6189.17	3.25	0	86.83	0	2.02	0	0	13.32	0	0	0	0	0	0	-46.12	-46.12
	Inverter Transformer	MV4-14 T	369182	4908507	2	0	0	56.1	56.1	1	6210.38	3.25	0	86.86	0	2.03	0	0	13.35	0	0	0	0	0	0	-46.18	-46.18
	Inverter Transformer	MV6-2 T	370091	4907339	2	0	0	56.1	56.1	1	6242.01	3.25	0	86.91	0	2.04	0	0	13.39	0	0	0	0	0	0	-46.27	-46.27
	Inverter Transformer	MV6-3 T	370202	4907140	2	0	0	56.1	56.1	1	6243.39	3.25	0	86.91	0	2.04	0	0	13.39	0	0	0	0	0	0	-46.28	-46.28
	Inverter Transformer	MV4-12 T	369049	4908803	2	0	0	56.1	56.1	1	6325.08	3.25	0	87.02	0	2.07	0	0	13.48	0	0	0	0	0	0	-46.51	-46.51
	Inverter Transformer	MV4-7 T	369040	4909001	2	0	0	56.1	56.1	1	6463.54	3.25	0	87.21	0	2.11	0	0	13.64	0	0	0	0	0	0	-46.9	-46.9
	Inverter Transformer	MV4-11 T	369269	4908855	2	0	0	56.1	56.1	1	6515.89	3.25	0	87.28	0	2.12	0	0	13.7	0	0	0	0	0	0	-47.04	-47.04
	Inverter Transformer	MV4-10 T	369307	4908858	2	0	0	56.1	56.1	1	6544.84	3.25	0	87.32	0	2.13	0	0	13.73	0	0	0	0	0	0	-47.12	-47.12
	Inverter Transformer	MV4-4 T	369033	4909199	2	0	0	56.1	56.1	1	6606.37	3.25	0	87.4	0	2.15	0	0	13.8	0	0	0	0	0	0	-47.29	-47.29
	Inverter Transformer	MV4-8 T	369262	4909001	2	0	0	56.1	56.1	1	6615.42	3.25	0	87.41	0	2.15	0	0	13.81	0	0	0	0	0	0	-47.31	-47.31
	Inverter Transformer	MV4-9 T	369284	4909001	2	0	0	56.1	56.1	1	6630.68	3.25	0	87.43	0	2.16	0	0	13.83	0	0	0	0	0	0	-47.35	-47.35
	Inverter Transformer	MV4-6 T	369249	4909192	2	0	0	56.1	56.1	1	6745.59	3.25	0	87.58	0	2.19	0	0	13.95	0	0	0	0	0	0	-47.66	-47.66
	Inverter Transformer	MV4-1 T	369017	4909397	2	0	0	56.1	56.1	1	6746.19	3.25	0	87.58	0	2.19	0	0	13.95	0	0	0	0	0	0	-47.67	-47.67
	Inverter Transformer	MV4-5 T	369283	4909199	2	0	0	56.1	56.1	1	6773.81	3.25	0	87.62	0	2.2	0	0	13.98	0	0	0	0	0	0	-47.74	-47.74
	Inverter Transformer	MV5-6 T	369987	4908507	2	0	0	56.1	56.1	1	6816.86	3.25	0	87.67	0	2.21	0	0	14.03	0	0	0	0	0	0	-47.85	-47.85
	Inverter Transformer	MV4-3 T	369234	4909397	2	0	0	56.1	56.1	1	6887.79	3.25	0	87.76	0	2.23	0	0	14.11	0	0	0	0	0	0	-48.04	-48.04
	Inverter Transformer	MV4-2 T	369267	4909397	2	0	0	56.1	56.1	1	6909.67	3.25	0	87.79	0	2.23	0	0	14.13	0	0	0	0	0	0	-48.1	-48.1
	Inverter Transformer	MV5-5 T	370021	4908690	2	0	0	56.1	56.1	1	6959.16	3.25	0	87.85	0	2.25	0	0	14.19	0	0	0	0	0	0	-48.23	-48.23
	Inverter Transformer	MV5-2 T	370011	4908853	2	0	0	56.1	56.1	1	7057.13	3.25	0	87.97	0	2.27	0	0	14.29	0	0	0	0	0	0	-48.48	-48.48
	Inverter Transformer	MV5-4 T	370330	4908707	2	0	0	56.1	56.1	1	7209.7	3.25	0	88.16	0	2.32	0	0	14.45	0	0	0	0	0	0	-48.87	-48.87
	Inverter Transformer	MV5-3 T	370237	4908851	2	0	0	56.1	56.1	1	7228.18	3.25	0	88.18	0	2.32	0	0	14.47	0	0	0	0	0	0	-48.91	-48.91
	Inverter Transformer	MV5-1 T	370015	4909142	2	0	0	56.1	56.1	1	7252.6	3.25	0	88.21	0	2.33	0	0	14.5	0	0	0	0	0	0	-48.98	-48.98
	Line Reactor	NGR	369421	4908787.5	5	0	0	45.4	45.4	1	6576.95	5.25	0	87.36	0	3.23	1.37	0.08	2.69	0	0	0	0	0	0	-49.29	-49.29
Limit. Valu	0	0																								
Level D/N:	26.5823	26.5823																								

Receiver: Existing Noise Receptor
ID: G-124
X: 364705.2
Y: 4904280
Z: 4.5
Ground: 0

ISO	Description	ID	X	Y	Z	Ground	ReflOrd	LxT	LxN	L/A	Dist.	hm	Freq	Adiv	K0b	Agr	Abar	z	Aatm	Afol	Ahous	Cmet	CmetN	Dc	RL	LtotT	LtotN
	Inverter	MV1-15	365315	4904994	2	0	0	100.3	100.3	1	938.97	3.25	0	70.45	0	-0.28	0	0	10.7	0	0	0	0	0	0	19.43	19.43
	Inverter	MV1-11	364655	4905414	2	0	0	100.3	100.3	1	1135.11	3.25	0	72.1	0	-0.18	0	0	11.34	0	0	0	0	0	0	17.06	17.06
	Inverter	MV1-12	365038	4905386	2	0	0	100.3	100.3	1	1154.99	3.25	0	72.25	0	-0.17	0	0	11.39	0	0	0	0	0	0	16.84	16.84
	Inverter	MV1-14	365163	4905049	2	0	0	97.3	97.3	1	894.96	3.25	0	70.04	0	-0.3	0	0	10.55	0	0	0	0	0	0	17.03	17.03
	Inverter	MV1-13	364731	4905241	2	0	0	97.3	97.3	1	961.35	3.25	0	70.66	0	-0.27	0	0	10.78	0	0	0	0	0	0	16.14	16.14
	Inverter	MV1-8	364788	4905647	2	0	0	100.3	100.3	1	1369.51	3.25	0	73.73	0	-0.08	0	0	11.99	0	0	0	0	0	0	14.67	14.67
	Inverter	MV1-9	364561	4905646	2	0	0	100.3	100.3	1	1373.59	3.25	0	73.76	0	-0.08	0	0	12	0	0	0	0	0	0	14.63	14.63
	Inverter	MV1-6	364477	4905835	2	0	0	100.3	100.3	1	1571.66	3.25	0	74.93	0	-0.01	0	0	12.5	0	0	0	0	0	0	12.89	12.89
	Inverter	MV1-5	364671	4905892	2	0	0	100.3	100.3	1	1612.36	3.25	0	75.15	0	0.01	0	0	12.6	0	0	0	0	0	0	12.56	12.56
	Inverter	MV1-4	364815	4905918	2	0	0	100.3	100.3	1	1641.68	3.25	0	75.31	0	0.02	0	0	12.67	0	0	0	0	0	0	12.32	12.32
	Sol_Luce Substation	S_Substation	369426	4908792	3.5	0	0	112.1	112.1	1	6530.24	5.25	0	87.3	0	1.28	2.53	0.25	10.29	0	0	0	0	0	0	10.67	10.67
	Inverter	MV1-2	364753	4906063	2	0	0	100.3	100.3	1	1783.64	3.25	0	76.03	0	0.06	0	0	12.99	0	0	0	0	0	0	11.23	11.23
	Inverter	MV1-10	365004	4905564	2	0	0	97.3	97.3	1	1318.31	3.25	0	73.4	0	-0.1	0	0	11.85	0	0	0	0	0	0	12.16	12.16
	Inverter	MV1-1	364715	4906166	2	0	0	100.3	100.3	1	1886.03	3.25	0	76.51	0	0.1	0	0	13.22	0	0	0	0	0	0	10.49	10.49
	Inverter	MV1-7	364925	4905782	2	0	0	97.3	97.3	1	1518	3.25	0	74.63	0	-0.03	0	0	12.37	0	0	0	0	0	0	10.34	10.34
	Inverter	MV2-4	365586	4906624	2	0	0	100.3	100.3	1	2504.03	3.25	0	78.97	0	0.26	0	0	14.47	0	0	0	0	0	0	6.62	6.62
	Inverter	MV2-3	365820	4906641	2	0	0	100.3	100.3	1	2610.96	3.25	0	79.34	0	0.28	0	0	14.67	0	0	0	0	0	0	6.03	6.03
	Inverter	MV2-1	365842	4906816	2	0	0	97.3	97.3	1	2779.14	3.25	0	79.88	0	0.32	0	0	14.98	0	0	0	0	0	0	2.14	2.14
	Inverter	MV3-18	367752	4907412	2	0	0	100.3	100.3	1	4369.49	3.25	0	83.81	0	0.58	0	0	17.63	0	0	0	0	0	0	-1.7	-1.7
	Inverter	MV3-12	367668	4907594	2	0	0	100.3	100.3	1	4445.31	3.25	0	83.96	0	0.58	0	0	17.75	0	0	0	0	0	0	-1.98	-1.98
	Inverter	MV3-13	367963	4907577	2	0	0	100.3	100.3	1	4635.03	3.25	0	84.32	0	0.61	0	0	18.04	0	0	0	0	0	0	-2.65	-2.65
	Inverter	MV3-17	368178	4907472	2	0	0	100.3	100.3	1	4716.91	3.25	0	84.47	0	0.61	0	0	18.16	0	0	0	0	0	0	-2.94	-2.94

Inverter	MV3-7	367945	4907754	2	0	0	100.3	100.3	1	4750.26	3.25	0	84.53	0	0.62	0	0	18.21	0	0	0	0	0	0	-3.05	-3.05
Inverter	MV3-19	368357	4907347	2	0	0	100.3	100.3	1	4768.87	3.25	0	84.57	0	0.62	0	0	18.24	0	0	0	0	0	0	-3.11	-3.11
Inverter	MV3-21	368478	4907206	2	0	0	100.3	100.3	1	4774.46	3.25	0	84.58	0	0.62	0	0	18.25	0	0	0	0	0	0	-3.13	-3.13
Inverter	MV3-10	368167	4907669	2	0	0	100.3	100.3	1	4844.52	3.25	0	84.71	0	0.63	0	0	18.35	0	0	0	0	0	0	-3.37	-3.37
Inverter	MV3-15	368357	4907477	2	0	0	100.3	100.3	1	4853.5	3.25	0	84.72	0	0.63	0	0	18.36	0	0	0	0	0	0	-3.4	-3.4
Inverter	MV3-3	367939	4907927	2	0	0	100.3	100.3	1	4874.23	3.25	0	84.76	0	0.63	0	0	18.39	0	0	0	0	0	0	-3.47	-3.47
Inverter	MV3-6	368162	4907834	2	0	0	100.3	100.3	1	4957.86	3.25	0	84.91	0	0.64	0	0	18.52	0	0	0	0	0	0	-3.75	-3.75
Inverter	MV3-11	368346	4907662	2	0	0	100.3	100.3	1	4969.24	3.25	0	84.93	0	0.64	0	0	18.53	0	0	0	0	0	0	-3.79	-3.79
Inverter	MV3-16	368514	4907475	2	0	0	100.3	100.3	1	4971.42	3.25	0	84.93	0	0.64	0	0	18.54	0	0	0	0	0	0	-3.8	-3.8
Inverter	MV3-20	368689	4907317	2	0	0	100.3	100.3	1	5009.39	3.25	0	85	0	0.64	0	0	18.59	0	0	0	0	0	0	-3.92	-3.92
Inverter	MV3-14	368684	4907498	2	0	0	100.3	100.3	1	5117.26	3.25	0	85.18	0	0.65	0	0	18.75	0	0	0	0	0	0	-4.27	-4.27
Inverter	MV3-9	368512	4907703	2	0	0	100.3	100.3	1	5119.44	3.25	0	85.18	0	0.65	0	0	18.75	0	0	0	0	0	0	-4.28	-4.28
Inverter	MV3-8	368680	4907712	2	0	0	100.3	100.3	1	5251.44	3.25	0	85.41	0	0.66	0	0	18.95	0	0	0	0	0	0	-4.7	-4.7
Inverter	MV6-2	370085	4907339	2	0	0	100.3	100.3	1	6188.68	3.25	0	86.83	0	0.71	0	0	20.25	0	0	0	0	0	0	-7.48	-7.48
Inverter	MV6-3	370207	4907140	2	0	0	100.3	100.3	1	6200.76	3.25	0	86.85	0	0.71	0	0	20.26	0	0	0	0	0	0	-7.51	-7.51
Gardiner Substation	G_Sub	366586.3	4903349.9	2.5	0	0	90.8	90.8	1	2098.48	4.25	0	77.44	0	0.89	3.71	0.3	4.53	0	0	0	0	0	0	4.21	4.21
Inverter	MV4-7	369035	4909001	2	0	0	100.3	100.3	1	6405.86	3.25	0	87.13	0	0.71	0	0	20.54	0	0	0	0	0	0	-8.07	-8.07
Inverter	MV4-11	369264	4908855	2	0	0	100.3	100.3	1	6458.58	3.25	0	87.2	0	0.71	0	0	20.6	0	0	0	0	0	0	-8.21	-8.21
Inverter	MV4-10	369312	4908858	2	0	0	100.3	100.3	1	6494.67	3.25	0	87.25	0	0.71	0	0	20.65	0	0	0	0	0	0	-8.31	-8.31
Inverter	MV1-3	364440	4906039	2	0	0	89.1	89.1	1	1778.88	3.25	0	76	0	0.86	0	0	7.68	0	0	0	0	0	0	4.52	4.52
Inverter	MV4-4	369027	4909199	2	0	0	100.3	100.3	1	6547.86	3.25	0	87.32	0	0.71	0	0	20.72	0	0	0	0	0	0	-8.45	-8.45
Inverter	MV4-8	369256	4909001	2	0	0	100.3	100.3	1	6557.26	3.25	0	87.33	0	0.72	0	0	20.73	0	0	0	0	0	0	-8.47	-8.47
Inverter	MV4-9	369289	4909001	2	0	0	100.3	100.3	1	6580.2	3.25	0	87.36	0	0.72	0	0	20.76	0	0	0	0	0	0	-8.53	-8.53
Inverter	MV4-6	369243	4909192	2	0	0	100.3	100.3	1	6687.25	3.25	0	87.5	0	0.71	0	0	20.9	0	0	0	0	0	0	-8.81	-8.81
Inverter	MV4-1	369011	4909397	2	0	0	100.3	100.3	1	6687.57	3.25	0	87.51	0	0.71	0	0	20.9	0	0	0	0	0	0	-8.81	-8.81
Inverter	MV4-5	369289	4909199	2	0	0	100.3	100.3	1	6723.67	3.25	0	87.55	0	0.71	0	0	20.95	0	0	0	0	0	0	-8.9	-8.9
Inverter	MV4-3	369229	4909397	2	0	0	100.3	100.3	1	6829.97	3.25	0	87.69	0	0.71	0	0	21.08	0	0	0	0	0	0	-9.17	-9.17
Inverter	MV4-2	369272	4909397	2	0	0	100.3	100.3	1	6858.52	3.25	0	87.72	0	0.71	0	0	21.12	0	0	0	0	0	0	-9.25	-9.25
Inverter	MV5-5	370015	4908690	2	0	0	100.3	100.3	1	6902.32	3.25	0	87.78	0	0.71	0	0	21.18	0	0	0	0	0	0	-9.36	-9.36
Inverter	MV5-2	370006	4908853	2	0	0	100.3	100.3	1	7000.77	3.25	0	87.9	0	0.71	0	0	21.3	0	0	0	0	0	0	-9.6	-9.6
Inverter	MV5-4	370324	4908707	2	0	0	100.3	100.3	1	7153.27	3.25	0	88.09	0	0.71	0	0	21.49	0	0	0	0	0	0	-9.97	-9.97
Inverter	MV5-3	370231	4908851	2	0	0	100.3	100.3	1	7171.37	3.25	0	88.11	0	0.7	0	0	21.51	0	0	0	0	0	0	-10.02	-10.02
Inverter	MV5-1	370020	4909142	2	0	0	100.3	100.3	1	7203.2	3.25	0	88.15	0	0.7	0	0	21.55	0	0	0	0	0	0	-10.09	-10.09
Inverter	MV6-1	370235	4907364	2	0	0	97.3	97.3	1	6331.65	3.25	0	87.03	0	0.71	0	0	20.44	0	0	0	0	0	0	-10.87	-10.87
Inverters	G_Inv1	366526.4	4903225.8	2	0	0	87.7	87.7	1	2104.31	3.25	0	77.46	0	2.6	0	0	2.76	0	0	0	0	0	0	4.84	4.84
Inverters	G_Inv3	366583.7	4903091.4	2	0	0	87.7	87.7	1	2222.96	3.25	0	77.94	0	2.61	0	0	2.89	0	0	0	0	0	0	4.22	4.22
Inverters	G_Inv2	366676.9	4903239.1	2	0	0	87.7	87.7	1	2229.59	3.25	0	77.96	0	2.61	0	0	2.9	0	0	0	0	0	0	4.18	4.18
Inverter	MV2-2	365977	4906654	2	0	0	89.1	89.1	1	2693.21	3.25	0	79.61	0	1.07	0	0	9.15	0	0	0	0	0	0	-0.77	-0.77
DSTATCOM - 10 MVAR #2	DSAT2	369403	4908757	2.5	0	0	96.6	96.6	1	6489.44	3.5	0	87.24	0	3.81	0	0	4.07	0	0	0	0	0	0	1.51	1.51
DSTATCOM - 10 MVAR #1	DSAT1	369437	4908757	2.5	0	0	96.6	96.6	1	6514.1	3.5	0	87.28	0	3.81	0	0	4.08	0	0	0	0	0	0	1.46	1.46
Inverters	G_Inv5	366638.5	4902958.1	2	0	0	87.7	87.7	1	2342.02	3.25	0	78.39	0	2.62	0	0	3.03	0	0	0	0	0	0	3.61	3.61
Inverters	G_Inv4	366732.8	4903105	2	0	0	87.7	87.7	1	2343.46	3.25	0	78.4	0	2.63	0	0	3.03	0	0	0	0	0	0	3.61	3.61
Inverters	G_Inv6	366788.5	4902972	2	0	0	87.7	87.7	1	2459.88	3.25	0	78.82	0	2.64	0	0	3.17	0	0	0	0	0	0	3.04	3.04
Inverters	G_Inv7	366694.6	4902824.7	2	0	0	87.7	87.7	1	2464.88	3.25	0	78.84	0	2.64	0	0	3.17	0	0	0	0	0	0	3.01	3.01
Inverters	G_Inv8	366844.5	4902838.5	2	0	0	87.7	87.7	1	2579.64	3.25	0	79.23	0	2.65	0	0	3.3	0	0	0	0	0	0	2.47	2.47
Inverters	G_Inv9	366750.9	4902691.8	2	0	0	87.7	87.7	1	2589.84	3.25	0	79.27	0	2.65	0	0	3.31	0	0	0	0	0	0	2.43	2.43
Inverters	G_Inv10	366900.7	4902704.8	2	0	0	87.7	87.7	1	2702.13	3.25	0	79.63	0	2.67	0	0	3.44	0	0	0	0	0	0	1.92	1.92
SubstationTransformer	W_ST	369711.17	4906112.3	2.5	0	0	92	92	1	5330.76	4.25	0	85.54	0	1.72	2.25	0.27	9.01	0	0	0	0	0	0	-6.54	-6.54
Inverter	MV3-22	368656	4907142	2	0	0	89.1	89.1	1	4878.51	3.25	0	84.77	0	1.61	0	0	12.3	0	0	0	0	0	0	-9.62	-9.62
Inverter	MV3-1	368156	4907976	2	0	0	89.1	89.1	1	5056.52	3.25	0	85.08	0	1.65	0	0	12.54	0	0	0	0	0	0	-10.21	-10.21
Inverter	MV3-5	368340	4907843	2	0	0	89.1	89.1	1	5089.87	3.25	0	85.13	0	1.66	0	0	12.58	0	0	0	0	0	0	-10.32	-10.32
Westbrook Inverter Enclosur	W_INV2	369374	4906388	2	0	0	89.1	89.1	1	5122.63	3.25	0	85.19	0	1.67	0	0	12.63	0	0	0	0	0	0	-10.43	-10.43
Westbrook Inverter Enclosur	W_INV3	369508	4906164	2	0	0	89.1	89.1	1	5159.1	3.25	0	85.25	0	1.68	0	0	12.68	0	0	0	0	0	0	-10.55	-10.55
Inverter	MV3-4	368502	4907925	2	0	0	89.1	89.1	1	5263.24	3.25	0	85.43	0	1.7	0	0	12.81	0	0	0	0	0	0	-10.88	-10.88
Westbrook Inverter Enclosur	W_INV4	369673	4906164	2	0	0	89.1	89.1	1	5313.05	3.25	0	85.51	0	1.72	0	0	12.88	0	0	0	0	0	0	-11.04	-11.04
Inverter	MV3-2	368671	4907928	2	0	0	89.1	89.1	1	5388.46	3.25	0	85.63	0	1.74	0	0	12.98	0	0	0	0	0	0	-11.28	-11.28
Westbrook Inverter Enclosur	W_INV7	369780	4906417	2	0	0	89.1	89.1	1	5506.39	3.25	0	85.82	0	1.76	0	0	13.13	0	0	0	0	0	0	-11.66	-11.66
Westbrook Inverter Enclosur	W_INV5	369719	4906574	2	0	0	89.1	89.1	1	5513.68	3.25	0	85.83	0	1.77	0	0	13.14	0	0	0	0	0	0	-11.68	-11.68
Westbrook Inverter Enclosur	W_INV6	369875	4906578	2	0	0	89.1	89.1	1	5657.53	3.25	0	86.05	0	1.8	0	0	13.33	0	0	0	0	0	0	-12.12	-12.12
Fixed Reactor Bank 1	FRB1	369378	4908755	6	0	0	89.8	89.8	1	6469.98	5.25	0	87.22	0	-0.35	0	0	10.23	0	0	0	0	0	0	-7.32	-7.32
Fixed Reactor Bank 2	FRB2	369464	4908755	6	0	0	89.8	89.8	1	6532.37	5.25	0	87.3	0	-0.34	0	0	10.29	0	0	0	0	0	0	-7.47	-7.47
Inverter	MV4-13	369051	4908605	2	0	0	89.1	89.1	1	6131.2	3.25	0	86.75	0	1.92	0	0	13.93	0	0	0	0	0	0	-13.54	-13.54
Inverter	MV4-15	369176	4908481	2	0	0	89.1	89.1	1	6134.86	3.25	0	86.76	0	1.92	0	0	13.93	0	0	0	0	0	0	-13.55	-13.55
Inverter	MV4-14	369176	4908507	2	0	0	89.1	89.1	1	6152.69	3.25	0	86.78	0	1.92	0	0	13.95	0	0	0	0	0	0	-13.6	-13.6
Inverter	MV4-12	369043	4908803	2	0	0	89.1	89.1	1	6266.9	3.25	0	86.94	0	1.95	0	0	14.1	0	0	0	0	0	0	-13.93	-13.93
Inverter	MV5-6	369982	4908507	2	0	0	89.1	89.1	1	6761.08	3.25	0	87.6	0	2.07	0	0	14.7	0	0	0	0	0	0	-15.31	-15.31
Westbrook Inverter Enclosur	W_INV1	369409	4906578	2	0	0	86.1	86.1	1	5235.13	3.25	0	85.38	0	1.7	0	0	12.78	0	0	0	0	0	0	-13.79	-13.79
Inverter Transformer	MV1-14 T	365157	4905049	2	0	0	69.4	69.4	1	891.9	3.25	0	70.01	0	1.59	0	0	3.66	0	0	0	0	0	0	-5.9	-5.9
Inverter	MV6-4	370250	4906966	2	0	0	86.1	86.1	1	6161.12	3.25	0	86.79	0	1.93	0	0	13.96	0	0	0	0	0	0	-16.62	-16.62
Inverter Transformer	MV1-13 T	364725	4905241	2	0	0	69.4	69.4	1	961.21	3.25	0	70.66	0	1.65	0	0	3.76	0	0	0	0	0	0	-6.71	-6.71
Inverter Transformer	MV1-10 T	365010	4905564	2	0	0	69.4	69.4	1	1319.68	3.25	0	73.41	0	1.89	0	0	4.22	0	0	0	0	0	0	-10.17	-10.17
Inverter Transformer	MV1-7 T	364919	4905782	2	0	0	69.4	69.4	1	1517.14	3.25	0	74.62	0	1.98	0	0	4.45	0	0	0	0	0	0	-11.7	-11.7
Westbrook Inverter Transfor	W_INVTR1	369403	4906578	2	0	0	78.2	78.2	1	5229.74	3.25	0	85.37	0	-3.22	0	0	2.49	0	0	0	0	0	0	-6.4	-6.4
Westbrook Inverter Transfor	W_INVTR2	369368	4906388	2	0	0	77.3	77.3	1	5117.16	3.25	0	85.18	0	-3.2	0	0	2.45	0	0	0	0	0	0	-7.09	-7.09

Westbrook Inverter Transfor	W_INVTR3	369514	4906164	2	0	0	77.3	77.3	1	5164.69	3.25	0	85.26	0	-3.21	0	0	2.47	0	0	0	0	0	0	-7.18	-7.18
Westbrook Inverter Transfor	W_INVTR4	369679	4906164	2	0	0	77.3	77.3	1	5318.66	3.25	0	85.52	0	-3.24	0	0	2.52	0	0	0	0	0	0	-7.45	-7.45
Westbrook Inverter Transfor	W_INVTR7	369786	4906417	2	0	0	77.3	77.3	1	5511.92	3.25	0	85.83	0	-3.28	0	0	2.58	0	0	0	0	0	0	-7.79	-7.79
Westbrook Inverter Transfor	W_INVTR5	369725	4906574	2	0	0	77.3	77.3	1	5519.13	3.25	0	85.84	0	-3.28	0	0	2.59	0	0	0	0	0	0	-7.8	-7.8
Westbrook Inverter Transfor	W_INVTR6	369881	4906578	2	0	0	77.3	77.3	1	5663.01	3.25	0	86.06	0	-3.31	0	0	2.63	0	0	0	0	0	0	-8.05	-8.05
Inverter Transformer	MV2-1 T	365836	4906816	2	0	0	69.4	69.4	1	2776.69	3.25	0	79.87	0	2.44	0	0	5.69	0	0	0	0	0	0	-18.65	-18.65
Inverter Transformer	MV1-15 T	365309	4904994	2	0	0	56.1	56.1	1	935.08	3.25	0	70.42	0	-0.01	0	0	4.73	0	0	0	0	0	0	-19.08	-19.08
Inverter Transformer	MV1-11 T	364649	4905414	2	0	0	56.1	56.1	1	1135.39	3.25	0	72.1	0	0.06	0	0	5.21	0	0	0	0	0	0	-21.31	-21.31
Inverter Transformer	MV1-12 T	365044	4905386	2	0	0	56.1	56.1	1	1156.73	3.25	0	72.26	0	0.07	0	0	5.26	0	0	0	0	0	0	-21.53	-21.53
Inverter Transformer	MV6-4 T	370244	4906966	2	0	0	69.4	69.4	1	6155.72	3.25	0	86.79	0	3.21	0	0	8.11	0	0	0	0	0	0	-28.76	-28.76
Inverter Transformer	MV1-8 T	364782	4905647	2	0	0	56.1	56.1	1	1369.16	3.25	0	73.73	0	0.15	0	0	5.73	0	0	0	0	0	0	-23.55	-23.55
Inverter Transformer	MV6-1 T	370230	4907364	2	0	0	69.4	69.4	1	6327.28	3.25	0	87.02	0	3.24	0	0	8.21	0	0	0	0	0	0	-29.12	-29.12
Inverter Transformer	MV1-9 T	364555	4905646	2	0	0	56.1	56.1	1	1374.24	3.25	0	73.76	0	0.15	0	0	5.75	0	0	0	0	0	0	-23.6	-23.6
Inverter Transformer	MV1-6 T	364482	4905835	2	0	0	56.1	56.1	1	1570.94	3.25	0	74.92	0	0.23	0	0	6.17	0	0	0	0	0	0	-25.26	-25.26
Inverter Transformer	MV1-5 T	364676	4905892	2	0	0	56.1	56.1	1	1612.27	3.25	0	75.15	0	0.24	0	0	6.26	0	0	0	0	0	0	-25.59	-25.59
Inverter Transformer	MV1-4 T	364821	4905918	2	0	0	56.1	56.1	1	1642.09	3.25	0	75.31	0	0.26	0	0	6.32	0	0	0	0	0	0	-25.82	-25.82
Inverter Transformer	MV1-3 T	364435	4906039	2	0	0	56.1	56.1	1	1779.63	3.25	0	76.01	0	0.31	0	0	6.6	0	0	0	0	0	0	-26.86	-26.86
Inverter Transformer	MV1-2 T	364759	4906063	2	0	0	56.1	56.1	1	1783.81	3.25	0	76.03	0	0.31	0	0	6.61	0	0	0	0	0	0	-26.89	-26.89
Inverter Transformer	MV1-1 T	364721	4906166	2	0	0	56.1	56.1	1	1886.07	3.25	0	76.51	0	0.36	0	0	6.82	0	0	0	0	0	0	-27.63	-27.63
Inverter Transformer	MV2-4 T	365590	4906628	2	0	0	56.1	56.1	1	2509.18	3.25	0	78.99	0	0.62	0	0	8.01	0	0	0	0	0	0	-31.56	-31.56
Inverter Transformer	MV2-3 T	365814	4906641	2	0	0	56.1	56.1	1	2608.4	3.25	0	79.33	0	0.66	0	0	8.19	0	0	0	0	0	0	-32.12	-32.12
Inverter Transformer	MV2-2 T	365982	4906654	2	0	0	56.1	56.1	1	2695.57	3.25	0	79.61	0	0.7	0	0	8.34	0	0	0	0	0	0	-32.6	-32.6
Inverter Transformer	MV3-18 T	367757	4907412	2	0	0	56.1	56.1	1	4372.98	3.25	0	83.82	0	1.39	0	0	11	0	0	0	0	0	0	-40.14	-40.14
Inverter Transformer	MV3-12 T	367674	4907594	2	0	0	56.1	56.1	1	4449.31	3.25	0	83.97	0	1.42	0	0	11.1	0	0	0	0	0	0	-40.43	-40.43
Inverter Transformer	MV3-13 T	367958	4907577	2	0	0	56.1	56.1	1	4631.51	3.25	0	84.31	0	1.49	0	0	11.36	0	0	0	0	0	0	-41.1	-41.1
Inverter Transformer	MV3-17 T	368183	4907472	2	0	0	56.1	56.1	1	4720.59	3.25	0	84.48	0	1.52	0	0	11.48	0	0	0	0	0	0	-41.42	-41.42
Inverter Transformer	MV3-7 T	367951	4907754	2	0	0	56.1	56.1	1	4754.36	3.25	0	84.54	0	1.54	0	0	11.53	0	0	0	0	0	0	-41.54	-41.54
Inverter Transformer	MV3-19 T	368352	4907347	2	0	0	56.1	56.1	1	4765.04	3.25	0	84.56	0	1.54	0	0	11.54	0	0	0	0	0	0	-41.58	-41.58
Inverter Transformer	MV3-21 T	368484	4907206	2	0	0	56.1	56.1	1	4779.21	3.25	0	84.59	0	1.54	0	0	11.56	0	0	0	0	0	0	-41.63	-41.63
Inverter Transformer	MV3-10 T	368162	4907669	2	0	0	56.1	56.1	1	4840.95	3.25	0	84.7	0	1.57	0	0	11.64	0	0	0	0	0	0	-41.85	-41.85
Inverter Transformer	MV3-15 T	368351	4907477	2	0	0	56.1	56.1	1	4848.99	3.25	0	84.71	0	1.57	0	0	11.65	0	0	0	0	0	0	-41.88	-41.88
Inverter Transformer	MV3-3 T	367944	4907927	2	0	0	56.1	56.1	1	4877.54	3.25	0	84.76	0	1.58	0	0	11.69	0	0	0	0	0	0	-41.98	-41.98
Inverter Transformer	MV3-22 T	368661	4907142	2	0	0	56.1	56.1	1	4882.56	3.25	0	84.77	0	1.58	0	0	11.7	0	0	0	0	0	0	-42	-42
Inverter Transformer	MV3-6 T	368156	4907834	2	0	0	56.1	56.1	1	4953.68	3.25	0	84.9	0	1.61	0	0	11.79	0	0	0	0	0	0	-42.24	-42.24
Inverter Transformer	MV3-11 T	368340	4907662	2	0	0	56.1	56.1	1	4964.85	3.25	0	84.92	0	1.61	0	0	11.81	0	0	0	0	0	0	-42.28	-42.28
Inverter Transformer	MV3-16 T	368509	4907475	2	0	0	56.1	56.1	1	4967.59	3.25	0	84.92	0	1.61	0	0	11.81	0	0	0	0	0	0	-42.29	-42.29
Inverter Transformer	MV3-20 T	368683	4907317	2	0	0	56.1	56.1	1	5004.62	3.25	0	84.99	0	1.63	0	0	11.86	0	0	0	0	0	0	-42.42	-42.42
Inverter Transformer	MV3-1 T	368150	4907976	2	0	0	56.1	56.1	1	5052.43	3.25	0	85.07	0	1.64	0	0	11.92	0	0	0	0	0	0	-42.58	-42.58
Inverter Transformer	MV3-5 T	368335	4907843	2	0	0	56.1	56.1	1	5086.3	3.25	0	85.13	0	1.66	0	0	11.97	0	0	0	0	0	0	-42.69	-42.69
Inverter Transformer	MV3-14 T	368678	4907498	2	0	0	56.1	56.1	1	5112.6	3.25	0	85.17	0	1.67	0	0	12	0	0	0	0	0	0	-42.78	-42.78
Inverter Transformer	MV3-9 T	368517	4907703	2	0	0	56.1	56.1	1	5123.16	3.25	0	85.19	0	1.67	0	0	12.02	0	0	0	0	0	0	-42.82	-42.82
Inverter Transformer	MV3-8 T	368685	4907712	2	0	0	56.1	56.1	1	5255.23	3.25	0	85.41	0	1.72	0	0	12.19	0	0	0	0	0	0	-43.26	-43.26
Inverter Transformer	MV3-4 T	368507	4907925	2	0	0	56.1	56.1	1	5266.85	3.25	0	85.43	0	1.72	0	0	12.2	0	0	0	0	0	0	-43.29	-43.29
Inverter Transformer	MV3-2 T	368677	4907928	2	0	0	56.1	56.1	1	5392.88	3.25	0	85.64	0	1.76	0	0	12.36	0	0	0	0	0	0	-43.7	-43.7
Inverter Transformer	MV4-15 T	369170	4908481	2	0	0	56.1	56.1	1	6130.48	3.25	0	86.75	0	2.01	0	0	13.26	0	0	0	0	0	0	-45.95	-45.95
Inverter Transformer	MV4-13 T	369057	4908605	2	0	0	56.1	56.1	1	6135.45	3.25	0	86.76	0	2.01	0	0	13.26	0	0	0	0	0	0	-45.97	-45.97
Inverter Transformer	MV4-14 T	369182	4908507	2	0	0	56.1	56.1	1	6157.05	3.25	0	86.79	0	2.01	0	0	13.29	0	0	0	0	0	0	-46.03	-46.03
Inverter Transformer	MV6-2 T	370091	4907339	2	0	0	56.1	56.1	1	6193.89	3.25	0	86.84	0	2.03	0	0	13.33	0	0	0	0	0	0	-46.14	-46.14
Inverter Transformer	MV6-3 T	370202	4907140	2	0	0	56.1	56.1	1	6196.32	3.25	0	86.84	0	2.03	0	0	13.33	0	0	0	0	0	0	-46.14	-46.14
Inverter Transformer	MV4-12 T	369049	4908803	2	0	0	56.1	56.1	1	6271.06	3.25	0	86.95	0	2.05	0	0	13.42	0	0	0	0	0	0	-46.36	-46.36
Inverter Transformer	MV4-7 T	369040	4909001	2	0	0	56.1	56.1	1	6409.24	3.25	0	87.14	0	2.09	0	0	13.58	0	0	0	0	0	0	-46.75	-46.75
Inverter Transformer	MV4-11 T	369269	4908855	2	0	0	56.1	56.1	1	6462.11	3.25	0	87.21	0	2.11	0	0	13.64	0	0	0	0	0	0	-46.89	-46.89
Inverter Transformer	MV4-10 T	369307	4908858	2	0	0	56.1	56.1	1	6491.12	3.25	0	87.25	0	2.12	0	0	13.67	0	0	0	0	0	0	-46.97	-46.97
Inverter Transformer	MV4-4 T	369033	4909199	2	0	0	56.1	56.1	1	6551.83	3.25	0	87.33	0	2.13	0	0	13.74	0	0	0	0	0	0	-47.14	-47.14
Inverter Transformer	MV4-8 T	369262	4909001	2	0	0	56.1	56.1	1	6561.42	3.25	0	87.34	0	2.14	0	0	13.75	0	0	0	0	0	0	-47.17	-47.17
Inverter Transformer	MV4-9 T	369284	4909001	2	0	0	56.1	56.1	1	6576.72	3.25	0	87.36	0	2.14	0	0	13.77	0	0	0	0	0	0	-47.21	-47.21
Inverter Transformer	MV4-6 T	369249	4909192	2	0	0	56.1	56.1	1	6691.33	3.25	0	87.51	0	2.17	0	0	13.89	0	0	0	0	0	0	-47.52	-47.52
Inverter Transformer	MV4-1 T	369017	4909397	2	0	0	56.1	56.1	1	6691.44	3.25	0	87.51	0	2.17	0	0	13.89	0	0	0	0	0	0	-47.52	-47.52
Inverter Transformer	MV4-5 T	369283	4909199	2	0	0	56.1	56.1	1	6719.58	3.25	0	87.55	0	2.18	0	0	13.92	0	0	0	0	0	0	-47.59	-47.59
Inverter Transformer	MV5-6 T	369987	4908507	2	0	0	56.1	56.1	1	6764.98	3.25	0	87.61	0	2.19	0	0	13.97	0	0	0	0	0	0	-47.72	-47.72
Inverter Transformer	MV4-3 T	369234	4909397	2	0	0	56.1	56.1	1	6833.28	3.25	0	87.69	0	2.21	0	0	14.05	0	0	0	0	0	0	-47.9	-47.9
Inverter Transformer	MV4-2 T	369267	4909397	2	0	0	56.1	56.1	1	6855.2	3.25	0	87.72	0	2.22	0	0	14.07	0	0	0	0	0	0	-47.95	-47.95
Inverter Transformer	MV5-5 T	370021	4908690	2	0	0	56.1	56.1	1	6906.94	3.25	0	87.79	0	2.23	0	0	14.13	0	0	0	0	0	0	-48.09	-48.09
Inverter Transformer	MV5-2 T	370011	4908853	2	0	0	56.1	56.1	1	7004.56	3.25	0	87.91	0	2.26	0	0	14.23	0	0	0	0	0	0	-48.34	-48.34
Inverter Transformer	MV5-4 T	370330	4908707	2	0	0	56.1	56.1	1	7157.98	3.25	0	88.1	0	2.3	0	0	14.4	0	0	0	0	0	0	-48.74	-48.74
Inverter Transformer	MV5-3 T	370237	4908851	2	0	0	56.1	56.1	1	7175.99	3.25	0	88.12	0	2.31	0	0	14.42	0	0	0	0	0	0	-48.78	-48.78
Inverter Transformer	MV5-1 T	370015	4909142	2	0	0	56.1	56.1	1	7199.52	3.25	0	88.15	0	2.31	0	0	14.44	0	0	0	0	0	0	-48.84	-48.84
Line Reactor	NGR	369421	4908787.5	5	0	0	45.4	45.4	1	6523.52	5.25	0	87.29	0	3.23	1.37	0.08	2.67	0	0	0	0	0	0	-49.2	-49.2
Limit. Valu 0	0																								
Level D/N: 27.0781	27.0781																								

Receiver: Vacant Lot Receptor
ID: G-V1
X: 365715.9

Y: 4902081.3
Z: 4.5
Ground: 0

ISO	Description	ID	X	Y	Z	Ground	ReflOrd	LxT	LxN	L/A	Dist.	hm	Freq	Adiv	K0b	Agr	Abar	z	Aatm	Afol	Ahous	Cmet	CmetN	Dc	RL	LtotT	LtotN
	Sol_Luce Substation	S_Substation	369426	4908792	3.5	0	0	112.1	112.1	1	7668.01	5.25	0	88.69	0	1.5	2.32	0.31	11.36	0	0	0	0	0	0	8.19	8.19
	Inverter	MV1-15	365315	4904994	2	0	0	100.3	100.3	1	2940.16	3.25	0	80.37	0	0.35	0	0	15.27	0	0	0	0	0	0	4.33	4.33
	Inverter	MV1-12	365038	4905386	2	0	0	100.3	100.3	1	3373.51	3.25	0	81.56	0	0.43	0	0	16.02	0	0	0	0	0	0	2.3	2.3
	Inverter	MV1-11	364655	4905414	2	0	0	100.3	100.3	1	3497.49	3.25	0	81.88	0	0.45	0	0	16.23	0	0	0	0	0	0	1.76	1.76
	Inverter	MV1-8	364788	4905647	2	0	0	100.3	100.3	1	3684.46	3.25	0	82.33	0	0.48	0	0	16.54	0	0	0	0	0	0	0.97	0.97
	Inverter	MV1-9	364561	4905646	2	0	0	100.3	100.3	1	3747.12	3.25	0	82.47	0	0.49	0	0	16.64	0	0	0	0	0	0	0.71	0.71
	Inverter	MV1-4	364815	4905918	2	0	0	100.3	100.3	1	3941.05	3.25	0	82.91	0	0.52	0	0	16.95	0	0	0	0	0	0	-0.07	-0.07
	Inverter	MV1-5	364671	4905892	2	0	0	100.3	100.3	1	3951.36	3.25	0	82.93	0	0.52	0	0	16.97	0	0	0	0	0	0	-0.11	-0.11
	Inverter	MV1-6	364477	4905835	2	0	0	100.3	100.3	1	3952.87	3.25	0	82.94	0	0.52	0	0	16.97	0	0	0	0	0	0	-0.12	-0.12
	Inverter	MV1-2	364753	4906063	2	0	0	100.3	100.3	1	4096.48	3.25	0	83.25	0	0.54	0	0	17.2	0	0	0	0	0	0	-0.68	-0.68
	Inverter	MV1-1	364715	4906166	2	0	0	100.3	100.3	1	4205.54	3.25	0	83.48	0	0.55	0	0	17.37	0	0	0	0	0	0	-1.09	-1.09
	Inverter	MV1-14	365163	4905049	2	0	0	97.3	97.3	1	3018.77	3.25	0	80.6	0	0.37	0	0	15.41	0	0	0	0	0	0	0.94	0.94
	Inverter	MV2-4	365586	4906624	2	0	0	100.3	100.3	1	4544.56	3.25	0	84.15	0	0.6	0	0	17.9	0	0	0	0	0	0	-2.33	-2.33
	Inverter	MV2-3	365820	4906641	2	0	0	100.3	100.3	1	4560.89	3.25	0	84.18	0	0.6	0	0	17.92	0	0	0	0	0	0	-2.39	-2.39
	Gardiner Substation	G_Sub	366586.3	4903349.9	2.5	0	0	90.8	90.8	1	1538.49	3.5	0	74.74	0	-0.27	0	0	3.55	0	0	0	0	0	0	12.75	12.75
	Inverter	MV1-13	364731	4905241	2	0	0	97.3	97.3	1	3309.64	3.25	0	81.4	0	0.42	0	0	15.91	0	0	0	0	0	0	-0.41	-0.41
	Inverter	MV1-10	365004	4905564	2	0	0	97.3	97.3	1	3554.72	3.25	0	82.02	0	0.46	0	0	16.32	0	0	0	0	0	0	-1.49	-1.49
	Inverters	G_Inv9	366750.9	4902691.8	2	0	0	87.7	87.7	1	1201.64	3.25	0	72.6	0	2.48	0	0	1.68	0	0	0	0	0	0	10.91	10.91
	Inverters	G_Inv7	366694.6	4902824.7	2	0	0	87.7	87.7	1	1229.03	3.25	0	72.79	0	2.48	0	0	1.71	0	0	0	0	0	0	10.67	10.67
	Inverter	MV1-7	364925	4905782	2	0	0	97.3	97.3	1	3784.27	3.25	0	82.56	0	0.5	0	0	16.7	0	0	0	0	0	0	-2.44	-2.44
	Inverters	G_Inv5	366638.5	4902958.1	2	0	0	87.7	87.7	1	1272.78	3.25	0	73.1	0	2.49	0	0	1.77	0	0	0	0	0	0	10.31	10.31
	Inverter	MV3-18	367752	4907412	2	0	0	100.3	100.3	1	5706.32	3.25	0	86.13	0	0.69	0	0	19.59	0	0	0	0	0	0	-6.1	-6.1
	Inverters	G_Inv3	366583.7	4903091.4	2	0	0	87.7	87.7	1	1331.69	3.25	0	73.49	0	2.5	0	0	1.84	0	0	0	0	0	0	9.84	9.84
	Inverters	G_Inv10	366900.7	4902704.8	2	0	0	87.7	87.7	1	1338.85	3.25	0	73.53	0	2.5	0	0	1.85	0	0	0	0	0	0	9.78	9.78
	Inverter	MV3-21	368478	4907206	2	0	0	100.3	100.3	1	5821.66	3.25	0	86.3	0	0.7	0	0	19.75	0	0	0	0	0	0	-6.44	-6.44
	Inverters	G_Inv8	366844.5	4902838.5	2	0	0	87.7	87.7	1	1359.08	3.25	0	73.66	0	2.5	0	0	1.87	0	0	0	0	0	0	9.62	9.62
	Inverter	MV3-12	367668	4907594	2	0	0	100.3	100.3	1	5848.12	3.25	0	86.34	0	0.7	0	0	19.79	0	0	0	0	0	0	-6.51	-6.51
	Inverter	MV3-19	368357	4907347	2	0	0	100.3	100.3	1	5890.93	3.25	0	86.4	0	0.7	0	0	19.84	0	0	0	0	0	0	-6.64	-6.64
	Inverter	MV3-17	368178	4907472	2	0	0	100.3	100.3	1	5926.35	3.25	0	86.46	0	0.7	0	0	19.89	0	0	0	0	0	0	-6.74	-6.74
	Inverter	MV3-13	367963	4907577	2	0	0	100.3	100.3	1	5937.35	3.25	0	86.47	0	0.7	0	0	19.91	0	0	0	0	0	0	-6.77	-6.77
	Inverters	G_Inv6	366788.5	4902972	2	0	0	87.7	87.7	1	1394.21	3.25	0	73.89	0	2.5	0	0	1.92	0	0	0	0	0	0	9.35	9.35
	Inverter	MV3-15	368357	4907477	2	0	0	100.3	100.3	1	6007.41	3.25	0	86.57	0	0.71	0	0	20	0	0	0	0	0	0	-6.97	-6.97
	Inverters	G_Inv1	366526.4	4903225.8	2	0	0	87.7	87.7	1	1402.43	3.25	0	73.94	0	2.51	0	0	1.93	0	0	0	0	0	0	9.29	9.29
	Inverter	MV3-20	368689	4907317	2	0	0	100.3	100.3	1	6020.95	3.25	0	86.59	0	0.71	0	0	20.02	0	0	0	0	0	0	-7.01	-7.01
	Inverter	MV3-16	368514	4907475	2	0	0	100.3	100.3	1	6076.3	3.25	0	86.67	0	0.71	0	0	20.1	0	0	0	0	0	0	-7.16	-7.16
	Inverter	MV3-7	367945	4907754	2	0	0	100.3	100.3	1	6094.95	3.25	0	86.7	0	0.71	0	0	20.12	0	0	0	0	0	0	-7.22	-7.22
	Inverter	MV3-10	368167	4907669	2	0	0	100.3	100.3	1	6101.66	3.25	0	86.71	0	0.71	0	0	20.13	0	0	0	0	0	0	-7.24	-7.24
	Inverter	MV3-11	368346	4907662	2	0	0	100.3	100.3	1	6169.41	3.25	0	86.8	0	0.71	0	0	20.22	0	0	0	0	0	0	-7.42	-7.42
	Inverter	MV3-14	368684	4907498	2	0	0	100.3	100.3	1	6176.59	3.25	0	86.81	0	0.71	0	0	20.23	0	0	0	0	0	0	-7.44	-7.44
	Inverters	G_Inv4	366732.8	4903105	2	0	0	87.7	87.7	1	1442.93	3.25	0	74.18	0	2.51	0	0	1.97	0	0	0	0	0	0	8.99	8.99
	Inverter	MV3-6	368162	4907834	2	0	0	100.3	100.3	1	6251.16	3.25	0	86.92	0	0.71	0	0	20.33	0	0	0	0	0	0	-7.65	-7.65
	Inverter	MV3-3	367939	4907927	2	0	0	100.3	100.3	1	6254.15	3.25	0	86.92	0	0.71	0	0	20.33	0	0	0	0	0	0	-7.66	-7.66
	Inverter	MV3-9	368512	4907703	2	0	0	100.3	100.3	1	6278.67	3.25	0	86.96	0	0.71	0	0	20.37	0	0	0	0	0	0	-7.72	-7.72
	Inverter	MV3-8	368680	4907712	2	0	0	100.3	100.3	1	6363.23	3.25	0	87.07	0	0.71	0	0	20.48	0	0	0	0	0	0	-7.95	-7.95
	Inverters	G_Inv2	366676.9	4903239.1	2	0	0	87.7	87.7	1	1504.67	3.25	0	74.55	0	2.52	0	0	2.05	0	0	0	0	0	0	8.54	8.54
	Inverter	MV2-1	365842	4906816	2	0	0	97.3	97.3	1	4736.38	3.25	0	84.51	0	0.62	0	0	18.19	0	0	0	0	0	0	-6	-6
	Inverter	MV6-3	370207	4907140	2	0	0	100.3	100.3	1	6764.65	3.25	0	87.6	0	0.71	0	0	21	0	0	0	0	0	0	-9.01	-9.01
	Inverter	MV6-2	370085	4907339	2	0	0	100.3	100.3	1	6836.11	3.25	0	87.7	0	0.71	0	0	21.09	0	0	0	0	0	0	-9.19	-9.19
	Inverter	MV4-11	369264	4908855	2	0	0	100.3	100.3	1	7646.7	3.25	0	88.67	0	0.68	0	0	22.09	0	0	0	0	0	0	-11.13	-11.13
	Inverter	MV4-10	369312	4908858	2	0	0	100.3	100.3	1	7671.74	3.25	0	88.7	0	0.68	0	0	22.12	0	0	0	0	0	0	-11.18	-11.18
	Inverter	MV4-7	369035	4909001	2	0	0	100.3	100.3	1	7674.55	3.25	0	88.7	0	0.68	0	0	22.12	0	0	0	0	0	0	-11.19	-11.19
	Inverter	MV4-8	369256	4909001	2	0	0	100.3	100.3	1	7772.68	3.25	0	88.81	0	0.67	0	0	22.24	0	0	0	0	0	0	-11.41	-11.41
	Inverter	MV4-9	369289	4909001	2	0	0	100.3	100.3	1	7787.77	3.25	0	88.83	0	0.67	0	0	22.26	0	0	0	0	0	0	-11.44	-11.44
	Inverter	MV4-4	369027	4909199	2	0	0	100.3	100.3	1	7850.16	3.25	0	88.9	0	0.67	0	0	22.33	0	0	0	0	0	0	-11.58	-11.58
	Inverter	MV5-5	370015	4908690	2	0	0	100.3	100.3	1	7883.98	3.25	0	88.93	0	0.66	0	0	22.37	0	0	0	0	0	0	-11.66	-11.66
	Inverter	MV4-6	369243	4909192	2	0	0	100.3	100.3	1	7937.41	3.25	0	88.99	0	0.66	0	0	22.43	0	0	0	0	0	0	-11.77	-11.77
	Inverter	MV4-5	369289	4909199	2	0	0	100.3	100.3	1	7964.21	3.25	0	89.02	0	0.66	0	0	22.46	0	0	0	0	0	0	-11.83	-11.83
	Inverter	MV5-2	370006	4908853	2	0	0	100.3	100.3	1	8016.29	3.25	0	89.08	0	0.65	0	0	22.52	0	0	0	0	0	0	-11.94	-11.94
	Inverter	MV4-1	369011	4909397	2	0	0	100.3	100.3	1	8023.54	3.25	0	89.09	0	0.65	0	0	22.53	0	0	0	0	0	0	-11.96	-11.96
	Inverter	MV5-4	370324	4908707	2	0	0	100.3	100.3	1	8070.59	3.25	0	89.14	0	0.65	0	0	22.59	0	0	0	0	0	0	-12.06	-12.06
	Inverter	MV4-3	369229	4909397	2	0	0	100.3	100.3	1	8115.5	3.25	0	89.19	0	0.64	0	0	22.64	0	0	0	0	0	0	-12.16	-12.16
	Inverter	MV4-2	369272	4909397	2	0	0	100.3	100.3	1	8134.21	3.25	0	89.21	0	0.64	0	0	22.66	0	0	0	0	0	0	-12.2	-12.2
	Inverter	MV5-3	370231	4908851	2	0	0	100.3	100.3	1	8137.26	3.25	0	89.21	0	0.64	0	0	22.66	0	0	0	0	0	0	-12.2	-12.2
	Inverter	MV5-1	370020	4909142	2	0	0	100.3	100.3	1	8269.15	3.25	0	89.35	0	0.63	0	0	22.81	0	0	0	0	0	0	-12.48	-12.48
	Inverter	MV6-1	370235	4907364	2	0	0	97.3	97.3	1	6951.92	3.25	0	87.84	0	0.71	0	0	21.24	0	0	0	0	0	0	-12.48	-12.48
	DSTATCOM - 10 MVAR #2	DSAT2	369403	4908757	2.5	0	0	96.6	96.6	1	7626.25	3.5	0	88.65	0	3.87	0	0	4.6	0	0	0	0	0	0	-0.48	-0.48
	DSTATCOM - 10 MVAR #1	DSAT1	369437	4908757	2.5	0	0	96.6	96.6	1	7642.75	3.5	0	88.66	0	3.87	0	0	4.61	0	0	0	0	0	0	-0.51	-0.51
	SubstationTransformer	W_ST	369711.17	4906112.3	2.5	0	0	92	92	1	5675.47	3.5	0	86.08	0	0.7	0	-0.1	9.39	0	0	0	0	0	0	-4.2	-4.2
	Inverter	MV1-3	364440	4906039	2	0	0	89.1	89.1	1	4158.28	3.25	0	83.38	0	1.43	0	0	11.31	0	0	0	0	0	0	-7.06	-7.06

Inverter	MV2-2	365977	4906654	2	0	0	89.1	89.1	1	4580.15	3.25	0	84.22	0	1.54	0	0	11.89	0	0	0	0	0	0	-8.59	-8.59
Westbrook Inverter Enclosur	W_INV3	369508	4906164	2	0	0	89.1	89.1	1	5572.12	3.25	0	85.92	0	1.78	0	0	13.22	0	0	0	0	0	0	-11.86	-11.86
Westbrook Inverter Enclosur	W_INV2	369374	4906388	2	0	0	89.1	89.1	1	5650.61	3.25	0	86.04	0	1.8	0	0	13.32	0	0	0	0	0	0	-12.1	-12.1
Westbrook Inverter Enclosur	W_INV4	369673	4906164	2	0	0	89.1	89.1	1	5685.69	3.25	0	86.1	0	1.81	0	0	13.36	0	0	0	0	0	0	-12.21	-12.21
Inverter	MV3-22	368656	4907142	2	0	0	89.1	89.1	1	5852.77	3.25	0	86.35	0	1.85	0	0	13.58	0	0	0	0	0	0	-12.72	-12.72
Westbrook Inverter Enclosur	W_INV7	369780	4906417	2	0	0	89.1	89.1	1	5942.66	3.25	0	86.48	0	1.87	0	0	13.69	0	0	0	0	0	0	-12.98	-12.98
Westbrook Inverter Enclosur	W_INV5	369719	4906574	2	0	0	89.1	89.1	1	6017.41	3.25	0	86.59	0	1.89	0	0	13.78	0	0	0	0	0	0	-13.2	-13.2
Westbrook Inverter Enclosur	W_INV6	369875	4906578	2	0	0	89.1	89.1	1	6125.23	3.25	0	86.74	0	1.92	0	0	13.92	0	0	0	0	0	0	-13.52	-13.52
Inverter	MV3-5	368340	4907843	2	0	0	89.1	89.1	1	6331.12	3.25	0	87.03	0	1.97	0	0	14.18	0	0	0	0	0	0	-14.11	-14.11
Inverter	MV3-1	368156	4907976	2	0	0	89.1	89.1	1	6379.78	3.25	0	87.1	0	1.98	0	0	14.24	0	0	0	0	0	0	-14.25	-14.25
Inverter	MV3-4	368502	4907925	2	0	0	89.1	89.1	1	6473.89	3.25	0	87.22	0	2	0	0	14.35	0	0	0	0	0	0	-14.52	-14.52
Inverter	MV3-2	368671	4907928	2	0	0	89.1	89.1	1	6551.07	3.25	0	87.33	0	2.02	0	0	14.45	0	0	0	0	0	0	-14.73	-14.73
Fixed Reactor Bank 1	FRB1	369378	4908755	6	0	0	89.8	89.8	1	7612.44	5.25	0	88.63	0	-0.21	0	0	11.31	0	0	0	0	0	0	-9.95	-9.95
Fixed Reactor Bank 2	FRB2	369464	4908755	6	0	0	89.8	89.8	1	7654.18	5.25	0	88.68	0	-0.21	0	0	11.35	0	0	0	0	0	0	-10.04	-10.04
Inverter	MV4-15	369176	4908481	2	0	0	89.1	89.1	1	7275.19	3.25	0	88.24	0	2.19	0	0	15.31	0	0	0	0	0	0	-16.68	-16.68
Inverter	MV4-14	369176	4908507	2	0	0	89.1	89.1	1	7298.08	3.25	0	88.26	0	2.2	0	0	15.34	0	0	0	0	0	0	-16.74	-16.74
Inverter	MV4-13	369051	4908605	2	0	0	89.1	89.1	1	7326.77	3.25	0	88.3	0	2.21	0	0	15.37	0	0	0	0	0	0	-16.82	-16.82
Inverter	MV4-12	369043	4908803	2	0	0	89.1	89.1	1	7500.06	3.25	0	88.5	0	2.25	0	0	15.57	0	0	0	0	0	0	-17.26	-17.26
Inverter	MV5-6	369982	4908507	2	0	0	89.1	89.1	1	7712.93	3.25	0	88.74	0	2.3	0	0	15.82	0	0	0	0	0	0	-17.8	-17.8
Westbrook Inverter Enclosur	W_INV1	369409	4906578	2	0	0	86.1	86.1	1	5818.87	3.25	0	86.3	0	1.84	0	0	13.53	0	0	0	0	0	0	-15.61	-15.61
Inverter	MV6-4	370250	4906966	2	0	0	86.1	86.1	1	6664.71	3.25	0	87.48	0	2.05	0	0	14.58	0	0	0	0	0	0	-18.05	-18.05
Westbrook Inverter Transfor	W_INVTR1	369403	4906578	2	0	0	78.2	78.2	1	5815.07	3.25	0	86.29	0	-3.33	0	0	2.68	0	0	0	0	0	0	-7.4	-7.4
Westbrook Inverter Transfor	W_INVTR3	369514	4906164	2	0	0	77.3	77.3	1	5576.2	3.25	0	85.93	0	-3.29	0	0	2.61	0	0	0	0	0	0	-7.9	-7.9
Westbrook Inverter Transfor	W_INVTR2	369368	4906388	2	0	0	77.3	77.3	1	5646.73	3.25	0	86.04	0	-3.3	0	0	2.63	0	0	0	0	0	0	-8.02	-8.02
Westbrook Inverter Transfor	W_INVTR4	369679	4906164	2	0	0	77.3	77.3	1	5689.87	3.25	0	86.1	0	-3.31	0	0	2.64	0	0	0	0	0	0	-8.09	-8.09
Westbrook Inverter Transfor	W_INVTR7	369786	4906417	2	0	0	77.3	77.3	1	5946.77	3.25	0	86.49	0	-3.36	0	0	2.72	0	0	0	0	0	0	-8.51	-8.51
Westbrook Inverter Transfor	W_INVTR5	369725	4906574	2	0	0	77.3	77.3	1	6021.4	3.25	0	86.59	0	-3.37	0	0	2.75	0	0	0	0	0	0	-8.63	-8.63
Westbrook Inverter Transfor	W_INVTR6	369881	4906578	2	0	0	77.3	77.3	1	6129.3	3.25	0	86.75	0	-3.39	0	0	2.78	0	0	0	0	0	0	-8.8	-8.8
Inverter Transformer	MV1-14 T	365157	4905049	2	0	0	69.4	69.4	1	3019.87	3.25	0	80.6	0	2.51	0	0	5.9	0	0	0	0	0	0	-19.66	-19.66
Inverter Transformer	MV1-13 T	364725	4905241	2	0	0	69.4	69.4	1	3311.43	3.25	0	81.4	0	2.6	0	0	6.14	0	0	0	0	0	0	-20.79	-20.79
Inverter Transformer	MV1-10 T	365010	4905564	2	0	0	69.4	69.4	1	3553.52	3.25	0	82.01	0	2.67	0	0	6.33	0	0	0	0	0	0	-21.67	-21.67
Inverter Transformer	MV1-7 T	364919	4905782	2	0	0	69.4	69.4	1	3785.53	3.25	0	82.56	0	2.73	0	0	6.51	0	0	0	0	0	0	-22.46	-22.46
Inverter Transformer	MV2-1 T	365836	4906816	2	0	0	69.4	69.4	1	4736.22	3.25	0	84.51	0	2.96	0	0	7.2	0	0	0	0	0	0	-25.32	-25.32
Inverter Transformer	MV6-4 T	370244	4906966	2	0	0	69.4	69.4	1	6660.63	3.25	0	87.47	0	3.28	0	0	8.41	0	0	0	0	0	0	-29.81	-29.81
Inverter Transformer	MV6-1 T	370230	4907364	2	0	0	69.4	69.4	1	6948.67	3.25	0	87.84	0	3.31	0	0	8.57	0	0	0	0	0	0	-30.37	-30.37
Inverter Transformer	MV1-15 T	365309	4904994	2	0	0	56.1	56.1	1	2940.99	3.25	0	80.37	0	0.8	0	0	8.77	0	0	0	0	0	0	-33.88	-33.88
Inverter Transformer	MV1-12 T	365044	4905386	2	0	0	56.1	56.1	1	3372.31	3.25	0	81.56	0	0.99	0	0	9.48	0	0	0	0	0	0	-35.97	-35.97
Inverter Transformer	MV1-11 T	364649	4905414	2	0	0	56.1	56.1	1	3499.31	3.25	0	81.88	0	1.04	0	0	9.69	0	0	0	0	0	0	-36.55	-36.55
Inverter Transformer	MV1-8 T	364782	4905647	2	0	0	56.1	56.1	1	3685.97	3.25	0	82.33	0	1.12	0	0	9.98	0	0	0	0	0	0	-37.37	-37.37
Inverter Transformer	MV1-9 T	364555	4905646	2	0	0	56.1	56.1	1	3748.97	3.25	0	82.48	0	1.14	0	0	10.08	0	0	0	0	0	0	-37.64	-37.64
Inverter Transformer	MV1-4 T	364821	4905918	2	0	0	56.1	56.1	1	3939.69	3.25	0	82.91	0	1.22	0	0	10.36	0	0	0	0	0	0	-38.44	-38.44
Inverter Transformer	MV1-5 T	364676	4905892	2	0	0	56.1	56.1	1	3950.04	3.25	0	82.93	0	1.22	0	0	10.38	0	0	0	0	0	0	-38.48	-38.48
Inverter Transformer	MV1-6 T	364482	4905835	2	0	0	56.1	56.1	1	3951.3	3.25	0	82.93	0	1.22	0	0	10.38	0	0	0	0	0	0	-38.48	-38.48
Inverter Transformer	MV1-2 T	364759	4906063	2	0	0	56.1	56.1	1	4095.07	3.25	0	83.25	0	1.28	0	0	10.6	0	0	0	0	0	0	-39.06	-39.06
Inverter Transformer	MV1-3 T	364435	4906039	2	0	0	56.1	56.1	1	4159.82	3.25	0	83.38	0	1.31	0	0	10.69	0	0	0	0	0	0	-39.32	-39.32
Inverter Transformer	MV1-1 T	364721	4906166	2	0	0	56.1	56.1	1	4204.12	3.25	0	83.47	0	1.32	0	0	10.75	0	0	0	0	0	0	-39.49	-39.49
Inverter Transformer	MV2-4 T	365590	4906628	2	0	0	56.1	56.1	1	4548.44	3.25	0	84.16	0	1.46	0	0	11.24	0	0	0	0	0	0	-40.8	-40.8
Inverter Transformer	MV2-3 T	365814	4906641	2	0	0	56.1	56.1	1	4560.76	3.25	0	84.18	0	1.46	0	0	11.26	0	0	0	0	0	0	-40.85	-40.85
Inverter Transformer	MV2-2 T	365982	4906654	2	0	0	56.1	56.1	1	4580.44	3.25	0	84.22	0	1.47	0	0	11.29	0	0	0	0	0	0	-40.92	-40.92
Inverter Transformer	MV3-18 T	367757	4907412	2	0	0	56.1	56.1	1	5708.1	3.25	0	86.13	0	1.87	0	0	12.75	0	0	0	0	0	0	-44.69	-44.69
Inverter Transformer	MV3-21 T	368484	4907206	2	0	0	56.1	56.1	1	5824.51	3.25	0	86.31	0	1.91	0	0	12.89	0	0	0	0	0	0	-45.05	-45.05
Inverter Transformer	MV3-12 T	367674	4907594	2	0	0	56.1	56.1	1	5850.13	3.25	0	86.34	0	1.92	0	0	12.92	0	0	0	0	0	0	-45.13	-45.13
Inverter Transformer	MV3-22 T	368661	4907142	2	0	0	56.1	56.1	1	5855.28	3.25	0	86.35	0	1.92	0	0	12.93	0	0	0	0	0	0	-45.14	-45.14
Inverter Transformer	MV3-19 T	368352	4907347	2	0	0	56.1	56.1	1	5888.69	3.25	0	86.4	0	1.93	0	0	12.97	0	0	0	0	0	0	-45.24	-45.24
Inverter Transformer	MV3-17 T	368183	4907472	2	0	0	56.1	56.1	1	5928.43	3.25	0	86.46	0	1.94	0	0	13.02	0	0	0	0	0	0	-45.36	-45.36
Inverter Transformer	MV3-13 T	367958	4907577	2	0	0	56.1	56.1	1	5935.46	3.25	0	86.47	0	1.94	0	0	13.03	0	0	0	0	0	0	-45.38	-45.38
Inverter Transformer	MV3-15 T	368351	4907477	2	0	0	56.1	56.1	1	6004.78	3.25	0	86.57	0	1.97	0	0	13.11	0	0	0	0	0	0	-45.59	-45.59
Inverter Transformer	MV3-20 T	368683	4907317	2	0	0	56.1	56.1	1	6017.99	3.25	0	86.59	0	1.97	0	0	13.12	0	0	0	0	0	0	-45.63	-45.63
Inverter Transformer	MV3-16 T	368509	4907475	2	0	0	56.1	56.1	1	6073.99	3.25	0	86.67	0	1.99	0	0	13.19	0	0	0	0	0	0	-45.79	-45.79
Inverter Transformer	MV3-7 T	367951	4907754	2	0	0	56.1	56.1	1	6097.15	3.25	0	86.7	0	2	0	0	13.22	0	0	0	0	0	0	-45.86	-45.86
Inverter Transformer	MV3-10 T	368162	4907669	2	0	0	56.1	56.1	1	6099.66	3.25	0	86.71	0	2	0	0	13.22	0	0	0	0	0	0	-45.86	-45.86
Inverter Transformer	MV3-11 T	368340	4907662	2	0	0	56.1	56.1	1	6166.86	3.25	0	86.8	0	2.02	0	0	13.3	0	0	0	0	0	0	-46.06	-46.06
Inverter Transformer	MV3-14 T	368678	4907498	2	0	0	56.1	56.1	1	6173.71	3.25	0	86.81	0	2.02	0	0	13.31	0	0	0	0	0	0	-46.08	-46.08
Inverter Transformer	MV3-6 T	368156	4907834	2	0	0	56.1	56.1	1	6248.81	3.25	0	86.92	0	2.04	0	0	13.39	0	0	0	0	0	0	-46.29	-46.29
Inverter Transformer	MV3-3 T	367944	4907927	2	0	0	56.1	56.1	1	6255.93	3.25	0	86.93	0	2.04	0	0	13.4	0	0	0	0	0	0	-46.31	-46.31
Inverter Transformer	MV3-9 T	368517	4907703	2	0	0	56.1	56.1	1	6280.9	3.25	0	86.96	0	2.05	0	0	13.43	0	0	0	0	0	0	-46.38	-46.38
Inverter Transformer	MV3-5 T	368335	4907843	2	0	0	56.1	56.1	1	6329.05	3.25	0	87.03	0	2.07	0	0	13.49	0	0	0	0	0	0	-46.52	-46.52
Inverter Transformer	MV3-8 T	368685	4907712	2	0	0	56.1	56.1	1	6365.56	3.25	0	87.08	0	2.08	0	0	13.53	0	0	0	0	0	0	-46.62	-46.62
Inverter Transformer	MV3-1 T	368150	4907976	2	0	0	56.1	56.1	1	6377.49	3.25	0	87.09	0	2.08	0	0	13.54	0	0	0	0	0	0	-46.66	-46.66
Inverter Transformer	MV3-4 T	368507	4907925	2	0	0	56.1	56.1	1	6476.04	3.25	0	87.23	0	2.11	0	0	13.65	0	0	0	0	0	0	-46.93	-46.93
Inverter Transformer	MV3-2 T	368677	4907928	2	0	0	56.1	56.1	1	6553.78	3.25	0	87.33	0	2.13	0	0	13.74	0	0	0	0	0	0	-47.15	-47.15
Inverter Transformer	MV6-3 T	370202	4907140	2	0	0	56.1	56.1	1	6761.33	3.25	0	87.6	0	2.19	0	0	13.97	0	0	0	0	0	0	-47.71	-47.71
Inverter Transformer	MV6-2 T	370091	4907339	2	0	0	56.1	56.1	1	6839.95	3.25	0	87.7	0	2.22	0	0	14.06	0	0	0	0	0	0	-47.91	-47.91
Inverter Transformer	MV4-15 T	369170	4908481	2	0	0	56.1	56.1	1	7272.34	3.25	0	88.23	0	2.33	0	0	14.52	0	0	0	0	0	0	-49.03	-49.03

	Inverter Transformer	MV4-14 T	369182	4908507	2	0	0	56.1	56.1	1	7300.92	3.25	0	88.27	0	2.34	0	0	14.55	0	0	0	0	0	0	-49.1	-49.1
	Inverter Transformer	MV4-13 T	369057	4908605	2	0	0	56.1	56.1	1	7329.5	3.25	0	88.3	0	2.35	0	0	14.58	0	0	0	0	0	0	-49.17	-49.17
	Inverter Transformer	MV4-12 T	369049	4908803	2	0	0	56.1	56.1	1	7502.72	3.25	0	88.5	0	2.39	0	0	14.76	0	0	0	0	0	0	-49.59	-49.59
	Inverter Transformer	MV4-11 T	369269	4908855	2	0	0	56.1	56.1	1	7649.02	3.25	0	88.67	0	2.43	0	0	14.91	0	0	0	0	0	0	-49.95	-49.95
	Inverter Transformer	MV4-10 T	369307	4908858	2	0	0	56.1	56.1	1	7669.4	3.25	0	88.7	0	2.43	0	0	14.93	0	0	0	0	0	0	-50	-50
	Inverter Transformer	MV4-7 T	369040	4909001	2	0	0	56.1	56.1	1	7676.71	3.25	0	88.7	0	2.43	0	0	14.93	0	0	0	0	0	0	-50.01	-50.01
	Inverter Transformer	MV5-6 T	369987	4908507	2	0	0	56.1	56.1	1	7715.69	3.25	0	88.75	0	2.44	0	0	14.97	0	0	0	0	0	0	-50.11	-50.11
	Inverter Transformer	MV4-8 T	369262	4909001	2	0	0	56.1	56.1	1	7775.42	3.25	0	88.81	0	2.46	0	0	15.03	0	0	0	0	0	0	-50.25	-50.25
	Inverter Transformer	MV4-9 T	369284	4909001	2	0	0	56.1	56.1	1	7785.47	3.25	0	88.83	0	2.46	0	0	15.04	0	0	0	0	0	0	-50.27	-50.27
	Inverter Transformer	MV4-4 T	369033	4909199	2	0	0	56.1	56.1	1	7852.69	3.25	0	88.9	0	2.48	0	0	15.11	0	0	0	0	0	0	-50.43	-50.43
	Inverter Transformer	MV5-5 T	370021	4908690	2	0	0	56.1	56.1	1	7887.26	3.25	0	88.94	0	2.48	0	0	15.14	0	0	0	0	0	0	-50.51	-50.51
	Inverter Transformer	MV4-6 T	369249	4909192	2	0	0	56.1	56.1	1	7940.08	3.25	0	89	0	2.5	0	0	15.2	0	0	0	0	0	0	-50.63	-50.63
	Inverter Transformer	MV4-5 T	369283	4909199	2	0	0	56.1	56.1	1	7961.52	3.25	0	89.02	0	2.5	0	0	15.22	0	0	0	0	0	0	-50.68	-50.68
	Inverter Transformer	MV5-2 T	370011	4908853	2	0	0	56.1	56.1	1	8018.97	3.25	0	89.08	0	2.51	0	0	15.27	0	0	0	0	0	0	-50.81	-50.81
	Inverter Transformer	MV4-1 T	369017	4909397	2	0	0	56.1	56.1	1	8026	3.25	0	89.09	0	2.52	0	0	15.28	0	0	0	0	0	0	-50.83	-50.83
	Inverter Transformer	MV5-4 T	370330	4908707	2	0	0	56.1	56.1	1	8074.02	3.25	0	89.14	0	2.53	0	0	15.33	0	0	0	0	0	0	-50.94	-50.94
	Inverter Transformer	MV4-3 T	369234	4909397	2	0	0	56.1	56.1	1	8117.67	3.25	0	89.19	0	2.54	0	0	15.37	0	0	0	0	0	0	-51.04	-51.04
	Inverter Transformer	MV4-2 T	369267	4909397	2	0	0	56.1	56.1	1	8132.02	3.25	0	89.2	0	2.54	0	0	15.39	0	0	0	0	0	0	-51.07	-51.07
	Inverter Transformer	MV5-3 T	370237	4908851	2	0	0	56.1	56.1	1	8140.59	3.25	0	89.21	0	2.54	0	0	15.39	0	0	0	0	0	0	-51.09	-51.09
	Inverter Transformer	MV5-1 T	370015	4909142	2	0	0	56.1	56.1	1	8266.54	3.25	0	89.35	0	2.57	0	0	15.52	0	0	0	0	0	0	-51.37	-51.37
	Line Reactor	NGR	369421	4908787.5	5	0	0	45.4	45.4	1	7661.65	5.25	0	88.69	0	3.21	1.37	0.1	3.13	0	0	0	0	0	0	-51.04	-51.04
Limit. Valu	0	0																								
Level D/N:	21.6905	21.6905																								

Receiver: Vacant Lot Receptor
ID: G-V2
X: 365814.9
Y: 4903678.9
Z: 4.5
Ground: 0

ISO	Description	ID	X	Y	Z	Ground	ReflOrd	LxT	LxN	L/A	Dist.	hm	Freq	Adiv	K0b	Agr	Abar	z	Aatm	Afol	Ahous	Cmet	CmetN	Dc	RL	LtotT	LtotN
	Inverter	MV1-15	365315	4904994	2	0	0	100.3	100.3	1	1406.91	3.25	0	73.97	0	-0.07	0	0	12.09	0	0	0	0	0	0	14.33	14.33
	Sol_Luce Substation	S_Substation	369426	4908792	3.5	0	0	112.1	112.1	1	6259.7	5.25	0	86.93	0	1.22	2.59	0.29	10.01	0	0	0	0	0	0	11.32	11.32
	Inverter	MV1-12	365038	4905386	2	0	0	100.3	100.3	1	1875.57	3.25	0	76.46	0	0.09	0	0	13.2	0	0	0	0	0	0	10.56	10.56
	Inverter	MV1-11	364655	4905414	2	0	0	100.3	100.3	1	2087.09	3.25	0	77.39	0	0.15	0	0	13.64	0	0	0	0	0	0	9.12	9.12
	Inverter	MV1-14	365163	4905049	2	0	0	97.3	97.3	1	1517.29	3.25	0	74.62	0	-0.03	0	0	12.37	0	0	0	0	0	0	10.35	10.35
	Inverter	MV1-8	364788	4905647	2	0	0	100.3	100.3	1	2219.9	3.25	0	77.93	0	0.19	0	0	13.91	0	0	0	0	0	0	8.28	8.28
	Inverter	MV1-9	364561	4905646	2	0	0	100.3	100.3	1	2332.76	3.25	0	78.36	0	0.22	0	0	14.14	0	0	0	0	0	0	7.6	7.6
	Inverter	MV1-4	364815	4905918	2	0	0	100.3	100.3	1	2452.22	3.25	0	78.79	0	0.25	0	0	14.37	0	0	0	0	0	0	6.91	6.91
	Inverter	MV1-5	364671	4905892	2	0	0	100.3	100.3	1	2491.25	3.25	0	78.93	0	0.26	0	0	14.44	0	0	0	0	0	0	6.69	6.69
	Gardiner Substation	G_Sub	366586.3	4903349.9	2.5	0	0	90.8	90.8	1	838.63	4.25	0	69.47	0	0.47	3.84	0.3	2.19	0	0	0	0	0	0	14.82	14.82
	Inverter	MV1-6	364477	4905835	2	0	0	100.3	100.3	1	2537.47	3.25	0	79.09	0	0.27	0	0	14.53	0	0	0	0	0	0	6.43	6.43
	Inverter	MV1-2	364753	4906063	2	0	0	100.3	100.3	1	2609.9	3.25	0	79.33	0	0.28	0	0	14.66	0	0	0	0	0	0	6.03	6.03
	Inverter	MV1-13	364731	4905241	2	0	0	97.3	97.3	1	1901.32	3.25	0	76.58	0	0.1	0	0	13.25	0	0	0	0	0	0	7.38	7.38
	Inverter	MV1-1	364715	4906166	2	0	0	100.3	100.3	1	2719.46	3.25	0	79.69	0	0.31	0	0	14.87	0	0	0	0	0	0	5.45	5.45
	Inverter	MV1-10	365004	4905564	2	0	0	97.3	97.3	1	2052.11	3.25	0	77.24	0	0.14	0	0	13.57	0	0	0	0	0	0	6.35	6.35
	Inverter	MV2-4	365586	4906624	2	0	0	100.3	100.3	1	2953.98	3.25	0	80.41	0	0.35	0	0	15.29	0	0	0	0	0	0	4.26	4.26
	Inverter	MV2-3	365820	4906641	2	0	0	100.3	100.3	1	2962.11	3.25	0	80.43	0	0.35	0	0	15.31	0	0	0	0	0	0	4.22	4.22
	Inverter	MV1-7	364925	4905782	2	0	0	97.3	97.3	1	2283.63	3.25	0	78.17	0	0.21	0	0	14.04	0	0	0	0	0	0	4.89	4.89
	Inverters	G_Inv1	366526.4	4903225.8	2	0	0	87.7	87.7	1	843.53	3.25	0	69.52	0	2.43	0	0	1.23	0	0	0	0	0	0	14.49	14.49
	Inverters	G_Inv3	366583.7	4903091.4	2	0	0	87.7	87.7	1	967.58	3.25	0	70.71	0	2.44	0	0	1.39	0	0	0	0	0	0	13.12	13.12
	Inverters	G_Inv2	366676.9	4903239.1	2	0	0	87.7	87.7	1	967.72	3.25	0	70.71	0	2.44	0	0	1.39	0	0	0	0	0	0	13.11	13.11
	Inverter	MV3-18	367752	4907412	2	0	0	100.3	100.3	1	4205.76	3.25	0	83.48	0	0.55	0	0	17.37	0	0	0	0	0	0	-1.09	-1.09
	Inverter	MV3-12	367668	4907594	2	0	0	100.3	100.3	1	4331.51	3.25	0	83.73	0	0.57	0	0	17.57	0	0	0	0	0	0	-1.56	-1.56
	Inverter	MV3-21	368478	4907206	2	0	0	100.3	100.3	1	4419.56	3.25	0	83.91	0	0.58	0	0	17.71	0	0	0	0	0	0	-1.88	-1.88
	Inverter	MV2-1	365842	4906816	2	0	0	97.3	97.3	1	3137.22	3.25	0	80.93	0	0.39	0	0	15.61	0	0	0	0	0	0	0.38	0.38
	Inverter	MV3-13	367963	4907577	2	0	0	100.3	100.3	1	4450.79	3.25	0	83.97	0	0.59	0	0	17.75	0	0	0	0	0	0	-2	-2
	Inverter	MV3-19	368357	4907347	2	0	0	100.3	100.3	1	4462.87	3.25	0	83.99	0	0.59	0	0	17.77	0	0	0	0	0	0	-2.04	-2.04
	Inverter	MV3-17	368178	4907472	2	0	0	100.3	100.3	1	4468.99	3.25	0	84	0	0.59	0	0	17.78	0	0	0	0	0	0	-2.06	-2.06
	Inverter	MV3-15	368357	4907477	2	0	0	100.3	100.3	1	4570.32	3.25	0	84.2	0	0.6	0	0	17.94	0	0	0	0	0	0	-2.42	-2.42
	Inverter	MV3-7	367945	4907754	2	0	0	100.3	100.3	1	4598.24	3.25	0	84.25	0	0.6	0	0	17.98	0	0	0	0	0	0	-2.52	-2.52
	Inverter	MV3-10	368167	4907669	2	0	0	100.3	100.3	1	4631.77	3.25	0	84.31	0	0.61	0	0	18.03	0	0	0	0	0	0	-2.64	-2.64
	Inverter	MV3-20	368689	4907317	2	0	0	100.3	100.3	1	4636.4	3.25	0	84.32	0	0.61	0	0	18.04	0	0	0	0	0	0	-2.66	-2.66
	Inverters	G_Inv4	366732.8	4903105	2	0	0	87.7	87.7	1	1082.55	3.25	0	71.69	0	2.46	0	0	1.53	0	0	0	0	0	0	11.98	11.98
	Inverter	MV3-16	368514	4907475	2	0	0	100.3	100.3	1	4657.85	3.25	0	84.36	0	0.61	0	0	18.07	0	0	0	0	0	0	-2.73	-2.73
	Inverters	G_Inv5	366638.5	4902958.1	2	0	0	87.7	87.7	1	1094.48	3.25	0	71.78	0	2.46	0	0	1.55	0	0	0	0	0	0	11.87	11.87
	Inverter	MV3-11	368346	4907662	2	0	0	100.3	100.3	1	4719.28	3.25	0	84.48	0	0.61	0	0	18.16	0	0	0	0	0	0	-2.94	-2.94
	Inverter	MV3-3	367939	4907927	2	0	0	100.3	100.3	1	4749.54	3.25	0	84.53	0	0.62	0	0	18.21	0	0	0	0	0	0	-3.05	-3.05
	Inverter	MV3-6	368162	4907834	2	0	0	100.3	100.3	1	4772.18	3.25	0	84.57	0	0.62	0	0	18.24	0	0	0	0	0	0	-3.12	-3.12
	Inverter	MV3-14	368684	4907498	2	0	0	100.3	100.3	1	4776.74	3.25	0	84.58	0	0.62	0	0	18.25	0	0	0	0	0	0	-3.14	-3.14
	Inverter	MV3-9	368512	4907703	2	0	0	100.3	100.3	1	4844.35	3.25	0	84.7	0	0.63	0	0	18.35	0	0	0	0	0	0	-3.37	-3.37
	Inverter	MV3-8	368680	4907712	2	0	0	100.3	100.3	1	4947.19	3.25	0	84.89	0	0.64	0	0	18.5	0	0	0	0	0	0	-3.71	-3.71
	Inverters	G_Inv6	366788.5	4902972	2	0	0	87.7	87.7	1	1203.17	3.25	0	72.61	0	2.48	0	0	1.68	0	0	0	0	0	0	10.89	10.89

Inverters	G_Inv7	366694.6	4902824.7	2	0	0	87.7	87.7	1	1226.19	3.25	0	72.77	0	2.48	0	0	1.71	0	0	0	0	0	0	10.7	10.7
Inverter	MV6-3	370207	4907140	2	0	0	100.3	100.3	1	5591.94	3.25	0	85.95	0	0.69	0	0	19.43	0	0	0	0	0	0	-5.76	-5.76
Inverter	MV6-2	370085	4907339	2	0	0	100.3	100.3	1	5624.06	3.25	0	86	0	0.69	0	0	19.47	0	0	0	0	0	0	-5.85	-5.85
Inverters	G_Inv8	366844.5	4902838.5	2	0	0	87.7	87.7	1	1329.04	3.25	0	73.47	0	2.5	0	0	1.84	0	0	0	0	0	0	9.86	9.86
Inverters	G_Inv9	366750.9	4902691.8	2	0	0	87.7	87.7	1	1360.32	3.25	0	73.67	0	2.5	0	0	1.87	0	0	0	0	0	0	9.61	9.61
Inverter	MV4-11	369264	4908855	2	0	0	100.3	100.3	1	6219.99	3.25	0	86.88	0	0.71	0	0	20.29	0	0	0	0	0	0	-7.56	-7.56
Inverter	MV4-7	369035	4909001	2	0	0	100.3	100.3	1	6220.43	3.25	0	86.88	0	0.71	0	0	20.29	0	0	0	0	0	0	-7.57	-7.57
Inverter	MV4-10	369312	4908858	2	0	0	100.3	100.3	1	6249.22	3.25	0	86.92	0	0.71	0	0	20.33	0	0	0	0	0	0	-7.64	-7.64
Inverters	G_Inv10	366900.7	4902704.8	2	0	0	87.7	87.7	1	1458.71	3.25	0	74.28	0	2.51	0	0	1.99	0	0	0	0	0	0	8.87	8.87
Inverter	MV4-8	369256	4909001	2	0	0	100.3	100.3	1	6337.66	3.25	0	87.04	0	0.71	0	0	20.45	0	0	0	0	0	0	-7.89	-7.89
Inverter	MV4-9	369289	4909001	2	0	0	100.3	100.3	1	6355.64	3.25	0	87.06	0	0.71	0	0	20.47	0	0	0	0	0	0	-7.93	-7.93
Inverter	MV4-4	369027	4909199	2	0	0	100.3	100.3	1	6386.63	3.25	0	87.11	0	0.71	0	0	20.51	0	0	0	0	0	0	-8.02	-8.02
Inverter	MV4-6	369243	4909192	2	0	0	100.3	100.3	1	6492.01	3.25	0	87.25	0	0.71	0	0	20.65	0	0	0	0	0	0	-8.3	-8.3
Inverter	MV4-5	369289	4909199	2	0	0	100.3	100.3	1	6522.34	3.25	0	87.29	0	0.71	0	0	20.69	0	0	0	0	0	0	-8.38	-8.38
Inverter	MV5-5	370015	4908690	2	0	0	100.3	100.3	1	6538.5	3.25	0	87.31	0	0.71	0	0	20.71	0	0	0	0	0	0	-8.42	-8.42
Inverter	MV4-1	369011	4909397	2	0	0	100.3	100.3	1	6550.7	3.25	0	87.33	0	0.71	0	0	20.73	0	0	0	0	0	0	-8.45	-8.45
Inverter	MV5-2	370006	4908853	2	0	0	100.3	100.3	1	6658.58	3.25	0	87.47	0	0.71	0	0	20.86	0	0	0	0	0	0	-8.74	-8.74
Inverter	MV4-3	369229	4909397	2	0	0	100.3	100.3	1	6659.79	3.25	0	87.47	0	0.71	0	0	20.87	0	0	0	0	0	0	-8.74	-8.74
Inverter	MV4-2	369272	4909397	2	0	0	100.3	100.3	1	6681.93	3.25	0	87.5	0	0.71	0	0	20.89	0	0	0	0	0	0	-8.8	-8.8
Inverter	MV5-4	370324	4908707	2	0	0	100.3	100.3	1	6753.8	3.25	0	87.59	0	0.71	0	0	20.99	0	0	0	0	0	0	-8.98	-8.98
Inverter	MV5-3	370231	4908851	2	0	0	100.3	100.3	1	6800.92	3.25	0	87.65	0	0.71	0	0	21.05	0	0	0	0	0	0	-9.1	-9.1
Inverter	MV5-1	370020	4909142	2	0	0	100.3	100.3	1	6894.08	3.25	0	87.77	0	0.71	0	0	21.17	0	0	0	0	0	0	-9.34	-9.34
Inverter	MV6-1	370235	4907364	2	0	0	97.3	97.3	1	5754.76	3.25	0	86.2	0	0.69	0	0	19.66	0	0	0	0	0	0	-9.24	-9.24
DSTATCOM - 10 MVAR #2	DSAT2	369403	4908757	2.5	0	0	96.6	96.6	1	6217.84	3.5	0	86.87	0	3.79	0	0	3.94	0	0	0	0	0	0	2.03	2.03
DSTATCOM - 10 MVAR #1	DSAT1	369437	4908757	2.5	0	0	96.6	96.6	1	6237.52	3.5	0	86.9	0	3.79	0	0	3.95	0	0	0	0	0	0	1.99	1.99
Inverter	MV1-3	364440	4906039	2	0	0	89.1	89.1	1	2731.38	3.25	0	79.73	0	1.08	0	0	9.21	0	0	0	0	0	0	-0.96	-0.96
Inverter	MV2-2	365977	4906654	2	0	0	89.1	89.1	1	2979.51	3.25	0	80.48	0	1.14	0	0	9.59	0	0	0	0	0	0	-2.15	-2.15
SubstationTransformer	W_ST	369711.17	4906112.3	2.5	0	0	92	92	1	4593.71	4.25	0	84.24	0	1.53	2.43	0.25	8.13	0	0	0	0	0	0	-4.36	-4.36
Westbrook Inverter Enclosur	W_INV3	369508	4906164	2	0	0	89.1	89.1	1	4451.37	3.25	0	83.97	0	1.5	0	0	11.72	0	0	0	0	0	0	-8.13	-8.13
Westbrook Inverter Enclosur	W_INV2	369374	4906388	2	0	0	89.1	89.1	1	4472.85	3.25	0	84.01	0	1.51	0	0	11.75	0	0	0	0	0	0	-8.21	-8.21
Inverter	MV3-22	368656	4907142	2	0	0	89.1	89.1	1	4479.39	3.25	0	84.02	0	1.51	0	0	11.76	0	0	0	0	0	0	-8.23	-8.23
Westbrook Inverter Enclosur	W_INV4	369673	4906164	2	0	0	89.1	89.1	1	4589.19	3.25	0	84.23	0	1.54	0	0	11.91	0	0	0	0	0	0	-8.62	-8.62
Westbrook Inverter Enclosur	W_INV7	369780	4906417	2	0	0	89.1	89.1	1	4818.63	3.25	0	84.66	0	1.59	0	0	12.22	0	0	0	0	0	0	-9.42	-9.42
Westbrook Inverter Enclosur	W_INV5	369719	4906574	2	0	0	89.1	89.1	1	4860.41	3.25	0	84.73	0	1.61	0	0	12.28	0	0	0	0	0	0	-9.56	-9.56
Inverter	MV3-5	368340	4907843	2	0	0	89.1	89.1	1	4869.89	3.25	0	84.75	0	1.61	0	0	12.29	0	0	0	0	0	0	-9.59	-9.59
Inverter	MV3-1	368156	4907976	2	0	0	89.1	89.1	1	4893.45	3.25	0	84.79	0	1.61	0	0	12.32	0	0	0	0	0	0	-9.67	-9.67
Westbrook Inverter Enclosur	W_INV6	369875	4906578	2	0	0	89.1	89.1	1	4988.91	3.25	0	84.96	0	1.64	0	0	12.45	0	0	0	0	0	0	-9.99	-9.99
Inverter	MV3-4	368502	4907925	2	0	0	89.1	89.1	1	5024.93	3.25	0	85.02	0	1.65	0	0	12.5	0	0	0	0	0	0	-10.11	-10.11
Inverter	MV3-2	368671	4907928	2	0	0	89.1	89.1	1	5119.78	3.25	0	85.19	0	1.67	0	0	12.62	0	0	0	0	0	0	-10.42	-10.42
Fixed Reactor Bank 1	FRB1	369378	4908755	6	0	0	89.8	89.8	1	6201.81	5.25	0	86.85	0	-0.39	0	0	9.95	0	0	0	0	0	0	-6.64	-6.64
Fixed Reactor Bank 2	FRB2	369464	4908755	6	0	0	89.8	89.8	1	6251.62	5.25	0	86.92	0	-0.38	0	0	10.01	0	0	0	0	0	0	-6.77	-6.77
Inverter	MV4-15	369176	4908481	2	0	0	89.1	89.1	1	5861.5	3.25	0	86.36	0	1.85	0	0	13.59	0	0	0	0	0	0	-12.74	-12.74
Inverter	MV4-14	369176	4908507	2	0	0	89.1	89.1	1	5882.82	3.25	0	86.39	0	1.86	0	0	13.61	0	0	0	0	0	0	-12.81	-12.81
Inverter	MV4-13	369051	4908605	2	0	0	89.1	89.1	1	5893.96	3.25	0	86.41	0	1.86	0	0	13.63	0	0	0	0	0	0	-12.84	-12.84
Inverter	MV4-12	369043	4908803	2	0	0	89.1	89.1	1	6056.16	3.25	0	86.64	0	1.9	0	0	13.83	0	0	0	0	0	0	-13.32	-13.32
Inverter	MV5-6	369982	4908507	2	0	0	89.1	89.1	1	6377.72	3.25	0	87.09	0	1.98	0	0	14.23	0	0	0	0	0	0	-14.25	-14.25
Westbrook Inverter Enclosur	W_INV1	369409	4906578	2	0	0	86.1	86.1	1	4617.61	3.25	0	84.29	0	1.55	0	0	11.95	0	0	0	0	0	0	-11.72	-11.72
Inverter	MV6-4	370250	4906966	2	0	0	86.1	86.1	1	5520.43	3.25	0	85.84	0	1.77	0	0	13.15	0	0	0	0	0	0	-14.7	-14.7
Inverter Transformer	MV1-14 T	365157	4905049	2	0	0	69.4	69.4	1	1519.87	3.25	0	74.64	0	1.98	0	0	4.46	0	0	0	0	0	0	-11.72	-11.72
Westbrook Inverter Transfor	W_INVTR1	369403	4906578	2	0	0	78.2	78.2	1	4612.94	3.25	0	84.28	0	-3.1	0	0	2.28	0	0	0	0	0	0	-5.22	-5.22
Westbrook Inverter Transfor	W_INVTR3	369514	4906164	2	0	0	77.3	77.3	1	4456.35	3.25	0	83.98	0	-3.06	0	0	2.22	0	0	0	0	0	0	-5.8	-5.8
Westbrook Inverter Transfor	W_INVTR2	369368	4906388	2	0	0	77.3	77.3	1	4468.08	3.25	0	84	0	-3.07	0	0	2.23	0	0	0	0	0	0	-5.82	-5.82
Westbrook Inverter Transfor	W_INVTR4	369679	4906164	2	0	0	77.3	77.3	1	4594.24	3.25	0	84.24	0	-3.09	0	0	2.27	0	0	0	0	0	0	-6.08	-6.08
Inverter Transformer	MV1-13 T	364725	4905241	2	0	0	69.4	69.4	1	1904.74	3.25	0	76.6	0	2.14	0	0	4.87	0	0	0	0	0	0	-14.25	-14.25
Westbrook Inverter Transfor	W_INVTR7	369786	4906417	2	0	0	77.3	77.3	1	4823.57	3.25	0	84.67	0	-3.14	0	0	2.35	0	0	0	0	0	0	-6.54	-6.54
Westbrook Inverter Transfor	W_INVTR5	369725	4906574	2	0	0	77.3	77.3	1	4865.23	3.25	0	84.74	0	-3.15	0	0	2.37	0	0	0	0	0	0	-6.62	-6.62
Westbrook Inverter Transfor	W_INVTR6	369881	4906578	2	0	0	77.3	77.3	1	4993.79	3.25	0	84.97	0	-3.18	0	0	2.41	0	0	0	0	0	0	-6.86	-6.86
Inverter Transformer	MV1-10 T	365010	4905564	2	0	0	69.4	69.4	1	2049.75	3.25	0	77.23	0	2.19	0	0	5.02	0	0	0	0	0	0	-15.09	-15.09
Inverter Transformer	MV1-7 T	364919	4905782	2	0	0	69.4	69.4	1	2285.97	3.25	0	78.18	0	2.28	0	0	5.24	0	0	0	0	0	0	-16.35	-16.35
Inverter Transformer	MV2-1 T	365836	4906816	2	0	0	69.4	69.4	1	3137.17	3.25	0	80.93	0	2.55	0	0	6	0	0	0	0	0	0	-20.13	-20.13
Inverter Transformer	MV6-4 T	370244	4906966	2	0	0	69.4	69.4	1	5515.61	3.25	0	85.83	0	3.11	0	0	7.72	0	0	0	0	0	0	-27.31	-27.31
Inverter Transformer	MV6-1 T	370230	4907364	2	0	0	69.4	69.4	1	5750.92	3.25	0	86.19	0	3.15	0	0	7.87	0	0	0	0	0	0	-27.86	-27.86
Inverter Transformer	MV1-15 T	365309	4904994	2	0	0	56.1	56.1	1	1409.05	3.25	0	73.98	0	0.16	0	0	5.82	0	0	0	0	0	0	-23.9	-23.9
Inverter Transformer	MV1-12 T	365044	4905386	2	0	0	56.1	56.1	1	1873.09	3.25	0	76.45	0	0.35	0	0	6.79	0	0	0	0	0	0	-27.54	-27.54
Inverter Transformer	MV1-11 T	364649	4905414	2	0	0	56.1	56.1	1	2090.43	3.25	0	77.4	0	0.44	0	0	7.22	0	0	0	0	0	0	-29.01	-29.01
Inverter Transformer	MV1-8 T	364782	4905647	2	0	0	56.1	56.1	1	2222.68	3.25	0	77.94	0	0.5	0	0	7.47	0	0	0	0	0	0	-29.85	-29.85
Inverter Transformer	MV1-9 T	364555	4905646	2	0	0	56.1	56.1	1	2335.99	3.25	0	78.37	0	0.55	0	0	7.69	0	0	0	0	0	0	-30.54	-30.54
Inverter Transformer	MV1-4 T	364821	4905918	2	0	0	56.1	56.1	1	2449.78	3.25	0	78.78	0	0.59	0	0	7.9	0	0	0	0	0	0	-31.22	-31.22
Inverter Transformer	MV1-5 T	364676	4905892	2	0	0	56.1	56.1	1	2488.96	3.25	0	78.92	0	0.61	0	0	7.97	0	0	0	0	0	0	-31.44	-31.44
Inverter Transformer	MV1-6 T	364482	4905835	2	0	0	56.1	56.1	1	2534.84	3.25	0	79.08	0	0.63	0	0	8.05	0	0	0	0	0	0	-31.7	-31.7
Inverter Transformer	MV1-2 T	364759	4906063	2	0	0	56.1	56.1	1	2607.46	3.25	0	79.32	0	0.66	0	0	8.18	0	0	0	0	0	0	-32.11	-32.11
Inverter Transformer	MV1-1 T	364721	4906166	2	0	0	56.1	56.1	1	2717.04	3.25	0	79.68	0	0.71	0	0	8.38	0	0	0	0	0	0	-32.71	-32.71
Inverter Transformer	MV1-3 T	364435	4906039	2	0	0	56.1	56.1	1	2733.9	3.25	0	79.74	0	0.72	0	0	8.41	0	0	0	0	0	0	-32.8	-32.8
Inverter Transformer	MV2-4 T	365590	4906628	2	0	0	56.1	56.1	1	2957.66	3.25	0	80.42	0	0.81	0	0	8.8	0	0	0	0	0	0	-33.97	-33.97

Inverter Transformer	MV2-3 T	365814	4906641	2	0	0	56.1	56.1	1	2962.1	3.25	0	80.43	0	0.81	0	0	8.8	0	0	0	0	0	0	-33.99	-33.99
Inverter Transformer	MV2-2 T	365982	4906654	2	0	0	56.1	56.1	1	2979.79	3.25	0	80.48	0	0.82	0	0	8.83	0	0	0	0	0	0	-34.08	-34.08
Inverter Transformer	MV3-18 T	367757	4907412	2	0	0	56.1	56.1	1	4208.06	3.25	0	83.48	0	1.33	0	0	10.76	0	0	0	0	0	0	-39.51	-39.51
Inverter Transformer	MV3-12 T	367674	4907594	2	0	0	56.1	56.1	1	4334.08	3.25	0	83.74	0	1.38	0	0	10.94	0	0	0	0	0	0	-40	-40
Inverter Transformer	MV3-21 T	368484	4907206	2	0	0	56.1	56.1	1	4423.18	3.25	0	83.91	0	1.41	0	0	11.07	0	0	0	0	0	0	-40.33	-40.33
Inverter Transformer	MV3-13 T	367958	4907577	2	0	0	56.1	56.1	1	4448.38	3.25	0	83.96	0	1.42	0	0	11.1	0	0	0	0	0	0	-40.43	-40.43
Inverter Transformer	MV3-19 T	368352	4907347	2	0	0	56.1	56.1	1	4460.03	3.25	0	83.99	0	1.42	0	0	11.12	0	0	0	0	0	0	-40.47	-40.47
Inverter Transformer	MV3-17 T	368183	4907472	2	0	0	56.1	56.1	1	4471.63	3.25	0	84.01	0	1.43	0	0	11.14	0	0	0	0	0	0	-40.52	-40.52
Inverter Transformer	MV3-22 T	368661	4907142	2	0	0	56.1	56.1	1	4482.56	3.25	0	84.03	0	1.43	0	0	11.15	0	0	0	0	0	0	-40.56	-40.56
Inverter Transformer	MV3-15 T	368351	4907477	2	0	0	56.1	56.1	1	4566.99	3.25	0	84.19	0	1.47	0	0	11.27	0	0	0	0	0	0	-40.87	-40.87
Inverter Transformer	MV3-7 T	367951	4907754	2	0	0	56.1	56.1	1	4601.02	3.25	0	84.26	0	1.48	0	0	11.32	0	0	0	0	0	0	-40.99	-40.99
Inverter Transformer	MV3-10 T	368162	4907669	2	0	0	56.1	56.1	1	4629.23	3.25	0	84.31	0	1.49	0	0	11.35	0	0	0	0	0	0	-41.1	-41.1
Inverter Transformer	MV3-20 T	368683	4907317	2	0	0	56.1	56.1	1	4632.69	3.25	0	84.32	0	1.49	0	0	11.36	0	0	0	0	0	0	-41.11	-41.11
Inverter Transformer	MV3-16 T	368509	4907475	2	0	0	56.1	56.1	1	4654.95	3.25	0	84.36	0	1.5	0	0	11.39	0	0	0	0	0	0	-41.19	-41.19
Inverter Transformer	MV3-11 T	368340	4907662	2	0	0	56.1	56.1	1	4716.06	3.25	0	84.47	0	1.52	0	0	11.47	0	0	0	0	0	0	-41.41	-41.41
Inverter Transformer	MV3-3 T	367944	4907927	2	0	0	56.1	56.1	1	4751.78	3.25	0	84.54	0	1.53	0	0	11.52	0	0	0	0	0	0	-41.54	-41.54
Inverter Transformer	MV3-6 T	368156	4907834	2	0	0	56.1	56.1	1	4769.24	3.25	0	84.57	0	1.54	0	0	11.55	0	0	0	0	0	0	-41.6	-41.6
Inverter Transformer	MV3-14 T	368678	4907498	2	0	0	56.1	56.1	1	4773.14	3.25	0	84.58	0	1.54	0	0	11.55	0	0	0	0	0	0	-41.61	-41.61
Inverter Transformer	MV3-9 T	368517	4907703	2	0	0	56.1	56.1	1	4847.14	3.25	0	84.71	0	1.57	0	0	11.65	0	0	0	0	0	0	-41.87	-41.87
Inverter Transformer	MV3-5 T	368335	4907843	2	0	0	56.1	56.1	1	4867.3	3.25	0	84.75	0	1.58	0	0	11.68	0	0	0	0	0	0	-41.94	-41.94
Inverter Transformer	MV3-1 T	368150	4907976	2	0	0	56.1	56.1	1	4890.58	3.25	0	84.79	0	1.59	0	0	11.71	0	0	0	0	0	0	-42.02	-42.02
Inverter Transformer	MV3-8 T	368685	4907712	2	0	0	56.1	56.1	1	4950.09	3.25	0	84.89	0	1.61	0	0	11.79	0	0	0	0	0	0	-42.23	-42.23
Inverter Transformer	MV3-4 T	368507	4907925	2	0	0	56.1	56.1	1	5027.6	3.25	0	85.03	0	1.64	0	0	11.89	0	0	0	0	0	0	-42.49	-42.49
Inverter Transformer	MV3-2 T	368677	4907928	2	0	0	56.1	56.1	1	5123.13	3.25	0	85.19	0	1.67	0	0	12.02	0	0	0	0	0	0	-42.82	-42.82
Inverter Transformer	MV6-3 T	370202	4907140	2	0	0	56.1	56.1	1	5588.01	3.25	0	85.95	0	1.83	0	0	12.6	0	0	0	0	0	0	-44.32	-44.32
Inverter Transformer	MV6-2 T	370091	4907339	2	0	0	56.1	56.1	1	5628.62	3.25	0	86.01	0	1.84	0	0	12.65	0	0	0	0	0	0	-44.45	-44.45
Inverter Transformer	MV4-15 T	369170	4908481	2	0	0	56.1	56.1	1	5858.06	3.25	0	86.36	0	1.92	0	0	12.93	0	0	0	0	0	0	-45.15	-45.15
Inverter Transformer	MV4-14 T	369182	4908507	2	0	0	56.1	56.1	1	5886.25	3.25	0	86.4	0	1.93	0	0	12.97	0	0	0	0	0	0	-45.23	-45.23
Inverter Transformer	MV4-13 T	369057	4908605	2	0	0	56.1	56.1	1	5897.26	3.25	0	86.41	0	1.93	0	0	12.98	0	0	0	0	0	0	-45.27	-45.27
Inverter Transformer	MV4-12 T	369049	4908803	2	0	0	56.1	56.1	1	6059.36	3.25	0	86.65	0	1.98	0	0	13.17	0	0	0	0	0	0	-45.75	-45.75
Inverter Transformer	MV4-11 T	369269	4908855	2	0	0	56.1	56.1	1	6222.77	3.25	0	86.88	0	2.03	0	0	13.36	0	0	0	0	0	0	-46.22	-46.22
Inverter Transformer	MV4-7 T	369040	4909001	2	0	0	56.1	56.1	1	6223.02	3.25	0	86.88	0	2.03	0	0	13.36	0	0	0	0	0	0	-46.22	-46.22
Inverter Transformer	MV4-10 T	369307	4908858	2	0	0	56.1	56.1	1	6246.43	3.25	0	86.91	0	2.04	0	0	13.39	0	0	0	0	0	0	-46.29	-46.29
Inverter Transformer	MV4-8 T	369262	4909001	2	0	0	56.1	56.1	1	6340.92	3.25	0	87.04	0	2.07	0	0	13.5	0	0	0	0	0	0	-46.55	-46.55
Inverter Transformer	MV4-9 T	369284	4909001	2	0	0	56.1	56.1	1	6352.91	3.25	0	87.06	0	2.07	0	0	13.51	0	0	0	0	0	0	-46.59	-46.59
Inverter Transformer	MV5-6 T	369987	4908507	2	0	0	56.1	56.1	1	6380.99	3.25	0	87.1	0	2.08	0	0	13.55	0	0	0	0	0	0	-46.67	-46.67
Inverter Transformer	MV4-4 T	369033	4909199	2	0	0	56.1	56.1	1	6389.65	3.25	0	87.11	0	2.08	0	0	13.56	0	0	0	0	0	0	-46.69	-46.69
Inverter Transformer	MV4-6 T	369249	4909192	2	0	0	56.1	56.1	1	6495.18	3.25	0	87.25	0	2.12	0	0	13.67	0	0	0	0	0	0	-46.98	-46.98
Inverter Transformer	MV4-5 T	369283	4909199	2	0	0	56.1	56.1	1	6519.14	3.25	0	87.28	0	2.12	0	0	13.7	0	0	0	0	0	0	-47.05	-47.05
Inverter Transformer	MV5-5 T	370021	4908690	2	0	0	56.1	56.1	1	6542.35	3.25	0	87.31	0	2.13	0	0	13.73	0	0	0	0	0	0	-47.11	-47.11
Inverter Transformer	MV4-1 T	369017	4909397	2	0	0	56.1	56.1	1	6553.63	3.25	0	87.33	0	2.13	0	0	13.74	0	0	0	0	0	0	-47.14	-47.14
Inverter Transformer	MV5-2 T	370011	4908853	2	0	0	56.1	56.1	1	6661.72	3.25	0	87.47	0	2.16	0	0	13.86	0	0	0	0	0	0	-47.44	-47.44
Inverter Transformer	MV4-3 T	369234	4909397	2	0	0	56.1	56.1	1	6662.35	3.25	0	87.47	0	2.16	0	0	13.86	0	0	0	0	0	0	-47.44	-47.44
Inverter Transformer	MV4-2 T	369267	4909397	2	0	0	56.1	56.1	1	6679.35	3.25	0	87.49	0	2.17	0	0	13.88	0	0	0	0	0	0	-47.49	-47.49
Inverter Transformer	MV5-4 T	370330	4908707	2	0	0	56.1	56.1	1	6757.8	3.25	0	87.6	0	2.19	0	0	13.97	0	0	0	0	0	0	-47.7	-47.7
Inverter Transformer	MV5-3 T	370237	4908851	2	0	0	56.1	56.1	1	6804.82	3.25	0	87.66	0	2.21	0	0	14.02	0	0	0	0	0	0	-47.82	-47.82
Inverter Transformer	MV5-1 T	370015	4909142	2	0	0	56.1	56.1	1	6891.03	3.25	0	87.77	0	2.23	0	0	14.11	0	0	0	0	0	0	-48.05	-48.05
Line Reactor	NGR	369421	4908787.5	5	0	0	45.4	45.4	1	6253.14	5.25	0	86.92	0	3.23	1.36	0.1	2.56	0	0	0	0	0	0	-48.72	-48.72
Limit. Valu 0	0																								
Level D/N: 25.1447	25.1447																								

Receiver: Vacant Lot Receptor
ID: G-V3
X: 365868.9
Y: 4903674.3
Z: 4.5
Ground: 0

ISO	Description	ID	X	Y	Z	Ground	ReflOrd	LxT	LxN	L/A	Dist.	hm	Freq	Adiv	K0b	Agr	Abar	z	Aatm	Afol	Ahous	Cmet	CmetN	Dc	RL	LtotT	LtotN
	Inverter	MV1-15	365315	4904994	2	0	0	100.3	100.3	1	1431.23	3.25	0	74.11	0	-0.06	0	0	12.15	0	0	0	0	0	0	14.11	14.11
	Sol_Luce Substation	S_Substation	369426	4908792	3.5	0	0	112.1	112.1	1	6232.48	5.25	0	86.89	0	1.22	2.59	0.29	9.99	0	0	0	0	0	0	11.39	11.39
	Inverter	MV1-12	365038	4905386	2	0	0	100.3	100.3	1	1902.71	3.25	0	76.59	0	0.1	0	0	13.25	0	0	0	0	0	0	10.37	10.37
	Inverter	MV1-11	364655	4905414	2	0	0	100.3	100.3	1	2121.35	3.25	0	77.53	0	0.16	0	0	13.71	0	0	0	0	0	0	8.9	8.9
	Inverter	MV1-14	365163	4905049	2	0	0	97.3	97.3	1	1545.35	3.25	0	74.78	0	-0.02	0	0	12.44	0	0	0	0	0	0	10.11	10.11
	Inverter	MV1-8	364788	4905647	2	0	0	100.3	100.3	1	2249.42	3.25	0	78.04	0	0.2	0	0	13.97	0	0	0	0	0	0	8.1	8.1
	Gardiner Substation	G_Sub	366586.3	4903349.9	2.5	0	0	90.8	90.8	1	787.34	4.25	0	68.92	0	0.47	4.07	0.3	2.08	0	0	0	0	0	0	15.23	15.23
	Inverter	MV1-9	364561	4905646	2	0	0	100.3	100.3	1	2366.05	3.25	0	78.48	0	0.23	0	0	14.2	0	0	0	0	0	0	7.41	7.41
	Inverter	MV1-4	364815	4905918	2	0	0	100.3	100.3	1	2478.89	3.25	0	78.89	0	0.25	0	0	14.42	0	0	0	0	0	0	6.76	6.76
	Inverter	MV1-5	364671	4905892	2	0	0	100.3	100.3	1	2520.55	3.25	0	79.03	0	0.26	0	0	14.5	0	0	0	0	0	0	6.52	6.52
	Inverter	MV1-6	364477	4905835	2	0	0	100.3	100.3	1	2570.22	3.25	0	79.2	0	0.27	0	0	14.59	0	0	0	0	0	0	6.25	6.25
	Inverter	MV1-2	364753	4906063	2	0	0	100.3	100.3	1	2636.5	3.25	0	79.42	0	0.29	0	0	14.71	0	0	0	0	0	0	5.89	5.89
	Inverter	MV1-13	364731	4905241	2	0	0	97.3	97.3	1	1936.33	3.25	0	76.74	0	0.11	0	0	13.33	0	0	0	0	0	0	7.13	7.13
	Inverter	MV1-1	364715	4906166	2	0	0	100.3	100.3	1	2745.92	3.25	0	79.77	0	0.31	0	0	14.92	0	0	0	0	0	0	5.31	5.31
	Inverter	MV1-10	365004	4905564	2	0	0	97.3	97.3	1	2078.23	3.25	0	77.35	0	0.15	0	0	13.63	0	0	0	0	0	0	6.18	6.18

Inverter	MV2-4	365586	4906624	2	0	0	100.3	100.3	1	2963.24	3.25	0	80.44	0	0.35	0	0	15.31	0	0	0	0	0	0	4.21	4.21
Inverter	MV2-3	365820	4906641	2	0	0	100.3	100.3	1	2967.1	3.25	0	80.45	0	0.36	0	0	15.31	0	0	0	0	0	0	4.2	4.2
Inverter	MV1-7	364925	4905782	2	0	0	97.3	97.3	1	2309.41	3.25	0	78.27	0	0.21	0	0	14.09	0	0	0	0	0	0	4.74	4.74
Inverters	G_Inv1	366526.4	4903225.8	2	0	0	87.7	87.7	1	795.9	3.25	0	69.02	0	2.42	0	0	1.16	0	0	0	0	0	0	15.06	15.06
Inverters	G_Inv2	366676.9	4903239.1	2	0	0	87.7	87.7	1	917.75	3.25	0	70.25	0	2.44	0	0	1.32	0	0	0	0	0	0	13.65	13.65
Inverters	G_Inv3	366583.7	4903091.4	2	0	0	87.7	87.7	1	922.34	3.25	0	70.3	0	2.44	0	0	1.33	0	0	0	0	0	0	13.6	13.6
Inverter	MV3-18	367752	4907412	2	0	0	100.3	100.3	1	4185.27	3.25	0	83.43	0	0.55	0	0	17.34	0	0	0	0	0	0	-1.02	-1.02
Inverter	MV3-12	367668	4907594	2	0	0	100.3	100.3	1	4312.87	3.25	0	83.7	0	0.57	0	0	17.54	0	0	0	0	0	0	-1.49	-1.49
Inverter	MV3-21	368478	4907206	2	0	0	100.3	100.3	1	4390.94	3.25	0	83.85	0	0.58	0	0	17.66	0	0	0	0	0	0	-1.78	-1.78
Inverter	MV3-13	367963	4907577	2	0	0	100.3	100.3	1	4429.03	3.25	0	83.93	0	0.58	0	0	17.72	0	0	0	0	0	0	-1.92	-1.92
Inverter	MV3-19	368357	4907347	2	0	0	100.3	100.3	1	4436.14	3.25	0	83.94	0	0.58	0	0	17.73	0	0	0	0	0	0	-1.94	-1.94
Inverter	MV2-1	365842	4906816	2	0	0	97.3	97.3	1	3141.82	3.25	0	80.94	0	0.39	0	0	15.62	0	0	0	0	0	0	0.36	0.36
Inverters	G_Inv4	366732.8	4903105	2	0	0	87.7	87.7	1	1034.62	3.25	0	71.3	0	2.45	0	0	1.47	0	0	0	0	0	0	12.44	12.44
Inverter	MV3-17	368178	4907472	2	0	0	100.3	100.3	1	4444.6	3.25	0	83.96	0	0.58	0	0	17.75	0	0	0	0	0	0	-1.97	-1.97
Inverters	G_Inv5	366638.5	4902958.1	2	0	0	87.7	87.7	1	1051.3	3.25	0	71.43	0	2.46	0	0	1.49	0	0	0	0	0	0	12.28	12.28
Inverter	MV3-15	368357	4907477	2	0	0	100.3	100.3	1	4544.36	3.25	0	84.15	0	0.6	0	0	17.9	0	0	0	0	0	0	-2.33	-2.33
Inverter	MV3-7	367945	4907754	2	0	0	100.3	100.3	1	4577.57	3.25	0	84.21	0	0.6	0	0	17.95	0	0	0	0	0	0	-2.45	-2.45
Inverter	MV3-20	368689	4907317	2	0	0	100.3	100.3	1	4606.76	3.25	0	84.27	0	0.6	0	0	17.99	0	0	0	0	0	0	-2.55	-2.55
Inverter	MV3-10	368167	4907669	2	0	0	100.3	100.3	1	4608.57	3.25	0	84.27	0	0.6	0	0	18	0	0	0	0	0	0	-2.56	-2.56
Inverter	MV3-16	368514	4907475	2	0	0	100.3	100.3	1	4630.54	3.25	0	84.31	0	0.61	0	0	18.03	0	0	0	0	0	0	-2.64	-2.64
Inverter	MV3-11	368346	4907662	2	0	0	100.3	100.3	1	4694.44	3.25	0	84.43	0	0.61	0	0	18.13	0	0	0	0	0	0	-2.86	-2.86
Inverter	MV3-3	367939	4907927	2	0	0	100.3	100.3	1	4729.78	3.25	0	84.5	0	0.62	0	0	18.18	0	0	0	0	0	0	-2.98	-2.98
Inverter	MV3-14	368684	4907498	2	0	0	100.3	100.3	1	4748.21	3.25	0	84.53	0	0.62	0	0	18.21	0	0	0	0	0	0	-3.04	-3.04
Inverter	MV3-6	368162	4907834	2	0	0	100.3	100.3	1	4749.89	3.25	0	84.53	0	0.62	0	0	18.21	0	0	0	0	0	0	-3.05	-3.05
Inverter	MV3-9	368512	4907703	2	0	0	100.3	100.3	1	4818.34	3.25	0	84.66	0	0.62	0	0	18.31	0	0	0	0	0	0	-3.28	-3.28
Inverter	MV3-8	368680	4907712	2	0	0	100.3	100.3	1	4919.89	3.25	0	84.84	0	0.63	0	0	18.46	0	0	0	0	0	0	-3.62	-3.62
Inverters	G_Inv6	366788.5	4902972	2	0	0	87.7	87.7	1	1157.11	3.25	0	72.27	0	2.47	0	0	1.62	0	0	0	0	0	0	11.3	11.3
Inverters	G_Inv7	366694.6	4902824.7	2	0	0	87.7	87.7	1	1184.74	3.25	0	72.47	0	2.48	0	0	1.66	0	0	0	0	0	0	11.05	11.05
Inverters	G_Inv8	366844.5	4902838.5	2	0	0	87.7	87.7	1	1284.66	3.25	0	73.18	0	2.49	0	0	1.78	0	0	0	0	0	0	10.21	10.21
Inverter	MV6-3	370207	4907140	2	0	0	100.3	100.3	1	5552.49	3.25	0	85.89	0	0.68	0	0	19.37	0	0	0	0	0	0	-5.64	-5.64
Inverter	MV6-2	370085	4907339	2	0	0	100.3	100.3	1	5586.19	3.25	0	85.94	0	0.69	0	0	19.42	0	0	0	0	0	0	-5.74	-5.74
Inverters	G_Inv9	366750.9	4902691.8	2	0	0	87.7	87.7	1	1320.32	3.25	0	73.41	0	2.49	0	0	1.83	0	0	0	0	0	0	9.93	9.93
Inverters	G_Inv10	366900.7	4902704.8	2	0	0	87.7	87.7	1	1415.82	3.25	0	74.02	0	2.51	0	0	1.94	0	0	0	0	0	0	9.19	9.19
Inverter	MV4-11	369264	4908855	2	0	0	100.3	100.3	1	6194.06	3.25	0	86.84	0	0.71	0	0	20.25	0	0	0	0	0	0	-7.49	-7.49
Inverter	MV4-7	369035	4909001	2	0	0	100.3	100.3	1	6196.61	3.25	0	86.84	0	0.71	0	0	20.26	0	0	0	0	0	0	-7.5	-7.5
Inverter	MV4-10	369312	4908858	2	0	0	100.3	100.3	1	6223	3.25	0	86.88	0	0.71	0	0	20.29	0	0	0	0	0	0	-7.57	-7.57
Inverter	MV4-8	369256	4909001	2	0	0	100.3	100.3	1	6312.38	3.25	0	87	0	0.71	0	0	20.41	0	0	0	0	0	0	-7.82	-7.82
Inverter	MV4-9	369289	4909001	2	0	0	100.3	100.3	1	6330.15	3.25	0	87.03	0	0.71	0	0	20.44	0	0	0	0	0	0	-7.87	-7.87
Inverter	MV4-4	369027	4909199	2	0	0	100.3	100.3	1	6363.64	3.25	0	87.07	0	0.71	0	0	20.48	0	0	0	0	0	0	-7.96	-7.96
Inverter	MV4-6	369243	4909192	2	0	0	100.3	100.3	1	6467.58	3.25	0	87.21	0	0.71	0	0	20.62	0	0	0	0	0	0	-8.23	-8.23
Inverter	MV4-5	369289	4909199	2	0	0	100.3	100.3	1	6497.65	3.25	0	87.26	0	0.71	0	0	20.66	0	0	0	0	0	0	-8.31	-8.31
Inverter	MV5-5	370015	4908690	2	0	0	100.3	100.3	1	6507.49	3.25	0	87.27	0	0.71	0	0	20.67	0	0	0	0	0	0	-8.34	-8.34
Inverter	MV4-1	369011	4909397	2	0	0	100.3	100.3	1	6528.56	3.25	0	87.3	0	0.71	0	0	20.7	0	0	0	0	0	0	-8.4	-8.4
Inverter	MV5-2	370006	4908853	2	0	0	100.3	100.3	1	6628.31	3.25	0	87.43	0	0.71	0	0	20.83	0	0	0	0	0	0	-8.66	-8.66
Inverter	MV4-3	369229	4909397	2	0	0	100.3	100.3	1	6636.23	3.25	0	87.44	0	0.71	0	0	20.84	0	0	0	0	0	0	-8.68	-8.68
Inverter	MV4-2	369272	4909397	2	0	0	100.3	100.3	1	6658.11	3.25	0	87.47	0	0.71	0	0	20.86	0	0	0	0	0	0	-8.73	-8.73
Inverter	MV5-4	370324	4908707	2	0	0	100.3	100.3	1	6721.31	3.25	0	87.55	0	0.71	0	0	20.95	0	0	0	0	0	0	-8.9	-8.9
Inverter	MV5-3	370231	4908851	2	0	0	100.3	100.3	1	6769.5	3.25	0	87.61	0	0.71	0	0	21.01	0	0	0	0	0	0	-9.02	-9.02
Inverter	MV5-1	370020	4909142	2	0	0	100.3	100.3	1	6864.94	3.25	0	87.73	0	0.71	0	0	21.13	0	0	0	0	0	0	-9.26	-9.26
Inverter	MV6-1	370235	4907364	2	0	0	97.3	97.3	1	5716.36	3.25	0	86.14	0	0.69	0	0	19.6	0	0	0	0	0	0	-9.13	-9.13
DSTATCOM - 10 MVAR #2	DSAT2	369403	4908757	2.5	0	0	96.6	96.6	1	6190.61	3.5	0	86.83	0	3.79	0	0	3.93	0	0	0	0	0	0	2.08	2.08
DSTATCOM - 10 MVAR #1	DSAT1	369437	4908757	2.5	0	0	96.6	96.6	1	6210.09	3.5	0	86.86	0	3.79	0	0	3.94	0	0	0	0	0	0	2.04	2.04
Inverter	MV1-3	364440	4906039	2	0	0	89.1	89.1	1	2762.89	3.25	0	79.83	0	1.09	0	0	9.25	0	0	0	0	0	0	-1.11	-1.11
Inverter	MV2-2	365977	4906654	2	0	0	89.1	89.1	1	2981.66	3.25	0	80.49	0	1.14	0	0	9.59	0	0	0	0	0	0	-2.16	-2.16
SubstationTransformer	W_ST	369711.17	4906112.3	2.5	0	0	92	92	1	4550.47	4.25	0	84.16	0	1.52	2.44	0.25	8.07	0	0	0	0	0	0	-4.22	-4.22
Westbrook Inverter Enclosur	W_INV3	369508	4906164	2	0	0	89.1	89.1	1	4409.27	3.25	0	83.89	0	1.49	0	0	11.66	0	0	0	0	0	0	-7.98	-7.98
Westbrook Inverter Enclosur	W_INV2	369374	4906388	2	0	0	89.1	89.1	1	4432.82	3.25	0	83.93	0	1.5	0	0	11.69	0	0	0	0	0	0	-8.07	-8.07
Inverter	MV3-22	368656	4907142	2	0	0	89.1	89.1	1	4448.92	3.25	0	83.97	0	1.5	0	0	11.71	0	0	0	0	0	0	-8.12	-8.12
Westbrook Inverter Enclosur	W_INV4	369673	4906164	2	0	0	89.1	89.1	1	4546.4	3.25	0	84.15	0	1.53	0	0	11.85	0	0	0	0	0	0	-8.47	-8.47
Westbrook Inverter Enclosur	W_INV7	369780	4906417	2	0	0	89.1	89.1	1	4776.94	3.25	0	84.58	0	1.58	0	0	12.16	0	0	0	0	0	0	-9.27	-9.27
Westbrook Inverter Enclosur	W_INV5	369719	4906574	2	0	0	89.1	89.1	1	4819.91	3.25	0	84.66	0	1.6	0	0	12.22	0	0	0	0	0	0	-9.42	-9.42
Inverter	MV3-5	368340	4907843	2	0	0	89.1	89.1	1	4846.07	3.25	0	84.71	0	1.6	0	0	12.26	0	0	0	0	0	0	-9.51	-9.51
Inverter	MV3-1	368156	4907976	2	0	0	89.1	89.1	1	4871.9	3.25	0	84.75	0	1.61	0	0	12.29	0	0	0	0	0	0	-9.6	-9.6
Westbrook Inverter Enclosur	W_INV6	369875	4906578	2	0	0	89.1	89.1	1	4947.76	3.25	0	84.89	0	1.63	0	0	12.39	0	0	0	0	0	0	-9.85	-9.85
Inverter	MV3-4	368502	4907925	2	0	0	89.1	89.1	1	5000.17	3.25	0	84.98	0	1.64	0	0	12.46	0	0	0	0	0	0	-10.03	-10.03
Inverter	MV3-2	368671	4907928	2	0	0	89.1	89.1	1	5093.7	3.25	0	85.14	0	1.66	0	0	12.59	0	0	0	0	0	0	-10.33	-10.33
Fixed Reactor Bank 1	FRB1	369378	4908755	6	0	0	89.8	89.8	1	6174.73	5.25	0	86.81	0	-0.39	0	0	9.93	0	0	0	0	0	0	-6.57	-6.57
Fixed Reactor Bank 2	FRB2	369464	4908755	6	0	0	89.8	89.8	1	6224.01	5.25	0	86.88	0	-0.39	0	0	9.98	0	0	0	0	0	0	-6.7	-6.7
Inverter	MV4-15	369176	4908481	2	0	0	89.1	89.1	1	5834.49	3.25	0	86.32	0	1.85	0	0	13.55	0	0	0	0	0	0	-12.66	-12.66
Inverter	MV4-14	369176	4908507	2	0	0	89.1	89.1	1	5855.93	3.25	0	86.35	0	1.85	0	0	13.58	0	0	0	0	0	0	-12.72	-12.72
Inverter	MV4-13	369051	4908605	2	0	0	89.1	89.1	1	5868.35	3.25	0	86.37	0	1.85	0	0	13.6	0	0	0	0	0	0	-12.76	-12.76
Inverter	MV4-12	369043	4908803	2	0	0	89.1	89.1	1	6031.46	3.25	0	86.61	0	1.89	0	0	13.8	0	0	0	0	0	0	-13.25	-13.25
Inverter	MV5-6	369982	4908507	2	0	0	89.1	89.1	1	6346.07	3.25	0	87.05	0	1.97	0	0	14.19	0	0	0	0	0	0	-14.16	-14.16
Westbrook Inverter Enclosur	W_INV1	369409	4906578	2	0	0	86.1	86.1	1	4578.62	3.25	0	84.21	0	1.54	0	0	11.89	0	0	0	0	0	0	-11.58	-11.58

Inverter	MV6-4	370250	4906966	2	0	0	86.1	86.1	1	5479.9	3.25	0	85.78	0	1.76	0	0	13.1	0	0	0	0	0	0	-14.57	-14.57
Inverter Transformer	MV1-14 T	365157	4905049	2	0	0	69.4	69.4	1	1548.1	3.25	0	74.8	0	1.99	0	0	4.49	0	0	0	0	0	0	-11.93	-11.93
Westbrook Inverter Transfor	W_INVTR1	369403	4906578	2	0	0	78.2	78.2	1	4573.99	3.25	0	84.21	0	-3.09	0	0	2.26	0	0	0	0	0	0	-5.14	-5.14
Westbrook Inverter Transfor	W_INVTR3	369514	4906164	2	0	0	77.3	77.3	1	4414.22	3.25	0	83.9	0	-3.06	0	0	2.21	0	0	0	0	0	0	-5.71	-5.71
Westbrook Inverter Transfor	W_INVTR2	369368	4906388	2	0	0	77.3	77.3	1	4428.08	3.25	0	83.92	0	-3.06	0	0	2.21	0	0	0	0	0	0	-5.74	-5.74
Westbrook Inverter Transfor	W_INVTR4	369679	4906164	2	0	0	77.3	77.3	1	4551.43	3.25	0	84.16	0	-3.08	0	0	2.26	0	0	0	0	0	0	-5.99	-5.99
Westbrook Inverter Transfor	W_INVTR7	369786	4906417	2	0	0	77.3	77.3	1	4781.85	3.25	0	84.59	0	-3.13	0	0	2.34	0	0	0	0	0	0	-6.46	-6.46
Westbrook Inverter Transfor	W_INVTR5	369725	4906574	2	0	0	77.3	77.3	1	4824.7	3.25	0	84.67	0	-3.14	0	0	2.35	0	0	0	0	0	0	-6.54	-6.54
Inverter Transformer	MV1-13 T	364725	4905241	2	0	0	69.4	69.4	1	1939.86	3.25	0	76.76	0	2.15	0	0	4.9	0	0	0	0	0	0	-14.46	-14.46
Westbrook Inverter Transfor	W_INVTR6	369881	4906578	2	0	0	77.3	77.3	1	4952.62	3.25	0	84.9	0	-3.17	0	0	2.4	0	0	0	0	0	0	-6.78	-6.78
Inverter Transformer	MV1-10 T	365010	4905564	2	0	0	69.4	69.4	1	2075.74	3.25	0	77.34	0	2.2	0	0	5.04	0	0	0	0	0	0	-15.23	-15.23
Inverter Transformer	MV1-7 T	364919	4905782	2	0	0	69.4	69.4	1	2311.86	3.25	0	78.28	0	2.28	0	0	5.27	0	0	0	0	0	0	-16.48	-16.48
Inverter Transformer	MV2-1 T	365836	4906816	2	0	0	69.4	69.4	1	3141.87	3.25	0	80.94	0	2.55	0	0	6	0	0	0	0	0	0	-20.14	-20.14
Inverter Transformer	MV6-4 T	370244	4906966	2	0	0	69.4	69.4	1	5475.11	3.25	0	85.77	0	3.1	0	0	7.69	0	0	0	0	0	0	-27.21	-27.21
Inverter Transformer	MV6-1 T	370230	4907364	2	0	0	69.4	69.4	1	5712.54	3.25	0	86.14	0	3.14	0	0	7.84	0	0	0	0	0	0	-27.77	-27.77
Inverter Transformer	MV1-15 T	365309	4904994	2	0	0	56.1	56.1	1	1433.56	3.25	0	74.13	0	0.17	0	0	5.87	0	0	0	0	0	0	-24.12	-24.12
Inverter Transformer	MV1-12 T	365044	4905386	2	0	0	56.1	56.1	1	1900.1	3.25	0	76.58	0	0.36	0	0	6.85	0	0	0	0	0	0	-27.72	-27.72
Inverter Transformer	MV1-11 T	364649	4905414	2	0	0	56.1	56.1	1	2124.79	3.25	0	77.55	0	0.46	0	0	7.29	0	0	0	0	0	0	-29.23	-29.23
Inverter Transformer	MV1-8 T	364782	4905647	2	0	0	56.1	56.1	1	2252.31	3.25	0	78.05	0	0.51	0	0	7.53	0	0	0	0	0	0	-30.03	-30.03
Inverter Transformer	MV1-9 T	364555	4905646	2	0	0	56.1	56.1	1	2369.38	3.25	0	78.49	0	0.56	0	0	7.75	0	0	0	0	0	0	-30.74	-30.74
Inverter Transformer	MV1-4 T	364821	4905918	2	0	0	56.1	56.1	1	2476.35	3.25	0	78.88	0	0.61	0	0	7.95	0	0	0	0	0	0	-31.37	-31.37
Inverter Transformer	MV1-5 T	364676	4905892	2	0	0	56.1	56.1	1	2518.18	3.25	0	79.02	0	0.62	0	0	8.02	0	0	0	0	0	0	-31.61	-31.61
Inverter Transformer	MV1-6 T	364482	4905835	2	0	0	56.1	56.1	1	2567.51	3.25	0	79.19	0	0.65	0	0	8.11	0	0	0	0	0	0	-31.89	-31.89
Inverter Transformer	MV1-2 T	364759	4906063	2	0	0	56.1	56.1	1	2633.97	3.25	0	79.41	0	0.67	0	0	8.23	0	0	0	0	0	0	-32.26	-32.26
Inverter Transformer	MV1-1 T	364721	4906166	2	0	0	56.1	56.1	1	2743.4	3.25	0	79.77	0	0.72	0	0	8.43	0	0	0	0	0	0	-32.85	-32.85
Inverter Transformer	MV1-3 T	364435	4906039	2	0	0	56.1	56.1	1	2765.48	3.25	0	79.84	0	0.73	0	0	8.46	0	0	0	0	0	0	-32.97	-32.97
Inverter Transformer	MV2-4 T	365590	4906628	2	0	0	56.1	56.1	1	2966.84	3.25	0	80.45	0	0.82	0	0	8.81	0	0	0	0	0	0	-34.01	-34.01
Inverter Transformer	MV2-3 T	365814	4906641	2	0	0	56.1	56.1	1	2967.21	3.25	0	80.45	0	0.82	0	0	8.81	0	0	0	0	0	0	-34.02	-34.02
Inverter Transformer	MV2-2 T	365982	4906654	2	0	0	56.1	56.1	1	2981.85	3.25	0	80.49	0	0.82	0	0	8.84	0	0	0	0	0	0	-34.09	-34.09
Inverter Transformer	MV3-18 T	367757	4907412	2	0	0	56.1	56.1	1	4187.52	3.25	0	83.44	0	1.32	0	0	10.73	0	0	0	0	0	0	-39.43	-39.43
Inverter Transformer	MV3-12 T	367674	4907594	2	0	0	56.1	56.1	1	4315.37	3.25	0	83.7	0	1.37	0	0	10.91	0	0	0	0	0	0	-39.92	-39.92
Inverter Transformer	MV3-21 T	368484	4907206	2	0	0	56.1	56.1	1	4394.5	3.25	0	83.86	0	1.4	0	0	11.03	0	0	0	0	0	0	-40.23	-40.23
Inverter Transformer	MV3-13 T	367958	4907577	2	0	0	56.1	56.1	1	4426.67	3.25	0	83.92	0	1.41	0	0	11.07	0	0	0	0	0	0	-40.35	-40.35
Inverter Transformer	MV3-19 T	368352	4907347	2	0	0	56.1	56.1	1	4433.34	3.25	0	83.93	0	1.41	0	0	11.08	0	0	0	0	0	0	-40.37	-40.37
Inverter Transformer	MV3-17 T	368183	4907472	2	0	0	56.1	56.1	1	4447.2	3.25	0	83.96	0	1.42	0	0	11.1	0	0	0	0	0	0	-40.42	-40.42
Inverter Transformer	MV3-22 T	368661	4907142	2	0	0	56.1	56.1	1	4452.05	3.25	0	83.97	0	1.42	0	0	11.11	0	0	0	0	0	0	-40.44	-40.44
Inverter Transformer	MV3-15 T	368351	4907477	2	0	0	56.1	56.1	1	4541.07	3.25	0	84.14	0	1.46	0	0	11.23	0	0	0	0	0	0	-40.77	-40.77
Inverter Transformer	MV3-7 T	367951	4907754	2	0	0	56.1	56.1	1	4580.29	3.25	0	84.22	0	1.47	0	0	11.29	0	0	0	0	0	0	-40.92	-40.92
Inverter Transformer	MV3-20 T	368683	4907317	2	0	0	56.1	56.1	1	4603.09	3.25	0	84.26	0	1.48	0	0	11.32	0	0	0	0	0	0	-41	-41
Inverter Transformer	MV3-10 T	368162	4907669	2	0	0	56.1	56.1	1	4606.08	3.25	0	84.27	0	1.48	0	0	11.32	0	0	0	0	0	0	-41.01	-41.01
Inverter Transformer	MV3-16 T	368509	4907475	2	0	0	56.1	56.1	1	4627.68	3.25	0	84.31	0	1.49	0	0	11.35	0	0	0	0	0	0	-41.09	-41.09
Inverter Transformer	MV3-11 T	368340	4907662	2	0	0	56.1	56.1	1	4691.28	3.25	0	84.43	0	1.51	0	0	11.44	0	0	0	0	0	0	-41.32	-41.32
Inverter Transformer	MV3-3 T	367944	4907927	2	0	0	56.1	56.1	1	4731.97	3.25	0	84.5	0	1.53	0	0	11.5	0	0	0	0	0	0	-41.46	-41.46
Inverter Transformer	MV3-14 T	368678	4907498	2	0	0	56.1	56.1	1	4744.65	3.25	0	84.52	0	1.53	0	0	11.51	0	0	0	0	0	0	-41.51	-41.51
Inverter Transformer	MV3-6 T	368156	4907834	2	0	0	56.1	56.1	1	4746.99	3.25	0	84.53	0	1.53	0	0	11.52	0	0	0	0	0	0	-41.52	-41.52
Inverter Transformer	MV3-9 T	368517	4907703	2	0	0	56.1	56.1	1	4821.09	3.25	0	84.66	0	1.56	0	0	11.62	0	0	0	0	0	0	-41.78	-41.78
Inverter Transformer	MV3-5 T	368335	4907843	2	0	0	56.1	56.1	1	4843.52	3.25	0	84.7	0	1.57	0	0	11.65	0	0	0	0	0	0	-41.86	-41.86
Inverter Transformer	MV3-1 T	368150	4907976	2	0	0	56.1	56.1	1	4869.09	3.25	0	84.75	0	1.58	0	0	11.68	0	0	0	0	0	0	-41.95	-41.95
Inverter Transformer	MV3-8 T	368685	4907712	2	0	0	56.1	56.1	1	4922.75	3.25	0	84.84	0	1.6	0	0	11.75	0	0	0	0	0	0	-42.13	-42.13
Inverter Transformer	MV3-4 T	368507	4907925	2	0	0	56.1	56.1	1	5002.8	3.25	0	84.98	0	1.63	0	0	11.86	0	0	0	0	0	0	-42.41	-42.41
Inverter Transformer	MV3-2 T	368677	4907928	2	0	0	56.1	56.1	1	5097	3.25	0	85.15	0	1.66	0	0	11.98	0	0	0	0	0	0	-42.73	-42.73
Inverter Transformer	MV6-3 T	370202	4907140	2	0	0	56.1	56.1	1	5548.59	3.25	0	85.88	0	1.82	0	0	12.56	0	0	0	0	0	0	-44.2	-44.2
Inverter Transformer	MV6-2 T	370091	4907339	2	0	0	56.1	56.1	1	5590.72	3.25	0	85.95	0	1.83	0	0	12.61	0	0	0	0	0	0	-44.33	-44.33
Inverter Transformer	MV4-15 T	369170	4908481	2	0	0	56.1	56.1	1	5831.09	3.25	0	86.31	0	1.91	0	0	12.9	0	0	0	0	0	0	-45.07	-45.07
Inverter Transformer	MV4-14 T	369182	4908507	2	0	0	56.1	56.1	1	5859.32	3.25	0	86.36	0	1.92	0	0	12.94	0	0	0	0	0	0	-45.15	-45.15
Inverter Transformer	MV4-13 T	369057	4908605	2	0	0	56.1	56.1	1	5871.61	3.25	0	86.38	0	1.92	0	0	12.95	0	0	0	0	0	0	-45.19	-45.19
Inverter Transformer	MV4-12 T	369049	4908803	2	0	0	56.1	56.1	1	6034.62	3.25	0	86.61	0	1.98	0	0	13.14	0	0	0	0	0	0	-45.67	-45.67
Inverter Transformer	MV4-11 T	369269	4908855	2	0	0	56.1	56.1	1	6196.8	3.25	0	86.84	0	2.03	0	0	13.33	0	0	0	0	0	0	-46.14	-46.14
Inverter Transformer	MV4-7 T	369040	4909001	2	0	0	56.1	56.1	1	6199.16	3.25	0	86.85	0	2.03	0	0	13.34	0	0	0	0	0	0	-46.15	-46.15
Inverter Transformer	MV4-10 T	369307	4908858	2	0	0	56.1	56.1	1	6220.23	3.25	0	86.88	0	2.03	0	0	13.36	0	0	0	0	0	0	-46.21	-46.21
Inverter Transformer	MV4-8 T	369262	4909001	2	0	0	56.1	56.1	1	6315.61	3.25	0	87.01	0	2.06	0	0	13.47	0	0	0	0	0	0	-46.48	-46.48
Inverter Transformer	MV4-9 T	369284	4909001	2	0	0	56.1	56.1	1	6327.45	3.25	0	87.02	0	2.07	0	0	13.48	0	0	0	0	0	0	-46.52	-46.52
Inverter Transformer	MV5-6 T	369987	4908507	2	0	0	56.1	56.1	1	6349.31	3.25	0	87.05	0	2.07	0	0	13.51	0	0	0	0	0	0	-46.58	-46.58
Inverter Transformer	MV4-4 T	369033	4909199	2	0	0	56.1	56.1	1	6366.62	3.25	0	87.08	0	2.08	0	0	13.53	0	0	0	0	0	0	-46.63	-46.63
Inverter Transformer	MV4-6 T	369249	4909192	2	0	0	56.1	56.1	1	6470.71	3.25	0	87.22	0	2.11	0	0	13.65	0	0	0	0	0	0	-46.92	-46.92
Inverter Transformer	MV4-5 T	369283	4909199	2	0	0	56.1	56.1	1	6494.49	3.25	0	87.25	0	2.12	0	0	13.67	0	0	0	0	0	0	-46.98	-46.98
Inverter Transformer	MV5-5 T	370021	4908690	2	0	0	56.1	56.1	1	6511.31	3.25	0	87.27	0	2.12	0	0	13.69	0	0	0	0	0	0	-47.03	-47.03
Inverter Transformer	MV4-1 T	369017	4909397	2	0	0	56.1	56.1	1	6531.45	3.25	0	87.3	0	2.13	0	0	13.72	0	0	0	0	0	0	-47.08	-47.08
Inverter Transformer	MV5-2 T	370011	4908853	2	0	0	56.1	56.1	1	6631.44	3.25	0	87.43	0	2.16	0	0	13.83	0	0	0	0	0	0	-47.36	-47.36
Inverter Transformer	MV4-3 T	369234	4909397	2	0	0	56.1	56.1	1	6638.76	3.25	0	87.44	0	2.16	0	0	13.84	0	0	0	0	0	0	-47.38	-47.38
Inverter Transformer	MV4-2 T	369267	4909397	2	0	0	56.1	56.1	1	6655.55	3.25	0	87.46	0	2.16	0	0	13.85	0	0	0	0	0	0	-47.42	-47.42
Inverter Transformer	MV5-4 T	370330	4908707	2	0	0	56.1	56.1	1	6725.29	3.25	0	87.55	0	2.18	0	0	13.93	0	0	0	0	0	0	-47.61	-47.61
Inverter Transformer	MV5-3 T	370237	4908851	2	0	0	56.1	56.1	1	6773.37	3.25	0	87.62	0	2.2	0	0	13.98	0	0	0	0	0	0	-47.74	-47.74
Inverter Transformer	MV5-1 T	370015	4909142	2	0	0	56.1	56.1	1	6861.92	3.25	0	87.73	0	2.22	0	0	14.08	0	0	0	0	0	0	-47.97	-47.97

	Line Reactor	NGR	369421	4908787.5	5	0	0	45.4	45.4	1	6225.93	5.25	0	86.88	0	3.23	1.36	0.1	2.54	0	0	0	0	0	0	-48.67	-48.67
Limit. Valu	0	0																								
Level D/N:	25.3459	25.3459																								

Receiver: Vacant Lot Receptor
ID: G-V4
X: 365914.1
Y: 4901591.3
Z: 4.5
Ground: 0

ISO	Description	ID	X	Y	Z	Ground	ReflOrd	LxT	LxN	L/A	Dist.	hm	Freq	Adiv	K0b	Agr	Abar	z	Aatm	Afol	Ahous	Cmet	CmetN	Dc	RL	LtotT	LtotN
	Sol_Luce Substation	S_Substation	369426	4908792	3.5	0	0	112.1	112.1	1	8011.46	5.25	0	89.07	0	1.56	2.27	0.32	11.66	0	0	0	0	0	0	7.51	7.51
	Inverter	MV1-15	365315	4904994	2	0	0	100.3	100.3	1	3455.04	3.25	0	81.77	0	0.44	0	0	16.16	0	0	0	0	0	0	1.94	1.94
	Inverter	MV1-12	365038	4905386	2	0	0	100.3	100.3	1	3894.52	3.25	0	82.81	0	0.51	0	0	16.88	0	0	0	0	0	0	0.11	0.11
	Inverter	MV1-11	364655	4905414	2	0	0	100.3	100.3	1	4024.72	3.25	0	83.09	0	0.53	0	0	17.09	0	0	0	0	0	0	-0.4	-0.4
	Inverter	MV1-8	364788	4905647	2	0	0	100.3	100.3	1	4209.13	3.25	0	83.48	0	0.56	0	0	17.38	0	0	0	0	0	0	-1.11	-1.11
	Inverter	MV1-9	364561	4905646	2	0	0	100.3	100.3	1	4274.51	3.25	0	83.62	0	0.56	0	0	17.48	0	0	0	0	0	0	-1.35	-1.35
	Inverter	MV1-4	364815	4905918	2	0	0	100.3	100.3	1	4464.12	3.25	0	83.99	0	0.59	0	0	17.78	0	0	0	0	0	0	-2.04	-2.04
	Inverter	MV1-5	364671	4905892	2	0	0	100.3	100.3	1	4476.75	3.25	0	84.02	0	0.59	0	0	17.79	0	0	0	0	0	0	-2.09	-2.09
	Inverter	MV1-6	364477	4905835	2	0	0	100.3	100.3	1	4480.43	3.25	0	84.03	0	0.59	0	0	17.8	0	0	0	0	0	0	-2.1	-2.1
	Inverter	MV1-2	364753	4906063	2	0	0	100.3	100.3	1	4619.98	3.25	0	84.29	0	0.6	0	0	18.01	0	0	0	0	0	0	-2.6	-2.6
	Inverter	MV1-1	364715	4906166	2	0	0	100.3	100.3	1	4729.24	3.25	0	84.5	0	0.62	0	0	18.18	0	0	0	0	0	0	-2.98	-2.98
	Inverter	MV1-14	365163	4905049	2	0	0	97.3	97.3	1	3538.34	3.25	0	81.98	0	0.46	0	0	16.3	0	0	0	0	0	0	-1.42	-1.42
	Inverter	MV2-4	365586	4906624	2	0	0	100.3	100.3	1	5043.38	3.25	0	85.05	0	0.65	0	0	18.64	0	0	0	0	0	0	-4.03	-4.03
	Inverter	MV2-3	365820	4906641	2	0	0	100.3	100.3	1	5050.58	3.25	0	85.07	0	0.65	0	0	18.65	0	0	0	0	0	0	-4.06	-4.06
	Inverter	MV1-13	364731	4905241	2	0	0	97.3	97.3	1	3836.67	3.25	0	82.68	0	0.5	0	0	16.79	0	0	0	0	0	0	-2.66	-2.66
	Gardiner Substation	G_Sub	366586.3	4903349.9	2.5	0	0	90.8	90.8	1	1882.69	3.5	0	76.5	0	-0.19	0	0	4.17	0	0	0	0	0	0	10.31	10.31
	Inverter	MV1-10	365004	4905564	2	0	0	97.3	97.3	1	4075.61	3.25	0	83.2	0	0.54	0	0	17.17	0	0	0	0	0	0	-3.6	-3.6
	Inverters	G_Inv9	366750.9	4902691.8	2	0	0	87.7	87.7	1	1382.51	3.25	0	73.81	0	2.5	0	0	1.9	0	0	0	0	0	0	9.44	9.44
	Inverter	MV1-7	364925	4905782	2	0	0	97.3	97.3	1	4305.84	3.25	0	83.68	0	0.57	0	0	17.53	0	0	0	0	0	0	-4.47	-4.47
	Inverter	MV3-18	367752	4907412	2	0	0	100.3	100.3	1	6103.97	3.25	0	86.71	0	0.71	0	0	20.13	0	0	0	0	0	0	-7.24	-7.24
	Inverter	MV3-21	368478	4907206	2	0	0	100.3	100.3	1	6172.39	3.25	0	86.81	0	0.71	0	0	20.23	0	0	0	0	0	0	-7.43	-7.43
	Inverter	MV3-19	368357	4907347	2	0	0	100.3	100.3	1	6252.67	3.25	0	86.92	0	0.71	0	0	20.33	0	0	0	0	0	0	-7.65	-7.65
	Inverter	MV3-12	367668	4907594	2	0	0	100.3	100.3	1	6253.69	3.25	0	86.92	0	0.71	0	0	20.33	0	0	0	0	0	0	-7.66	-7.66
	Inverters	G_Inv7	366694.6	4902824.7	2	0	0	87.7	87.7	1	1459.61	3.25	0	74.28	0	2.51	0	0	1.99	0	0	0	0	0	0	8.87	8.87
	Inverter	MV3-17	368178	4907472	2	0	0	100.3	100.3	1	6301.42	3.25	0	86.99	0	0.71	0	0	20.4	0	0	0	0	0	0	-7.79	-7.79
	Inverter	MV3-13	367963	4907577	2	0	0	100.3	100.3	1	6326.66	3.25	0	87.02	0	0.71	0	0	20.43	0	0	0	0	0	0	-7.86	-7.86
	Inverter	MV3-20	368689	4907317	2	0	0	100.3	100.3	1	6362.68	3.25	0	87.07	0	0.71	0	0	20.48	0	0	0	0	0	0	-7.95	-7.95
	Inverter	MV3-15	368357	4907477	2	0	0	100.3	100.3	1	6372.54	3.25	0	87.09	0	0.71	0	0	20.49	0	0	0	0	0	0	-7.98	-7.98
	Inverters	G_Inv10	366900.7	4902704.8	2	0	0	87.7	87.7	1	1487.71	3.25	0	74.45	0	2.52	0	0	2.03	0	0	0	0	0	0	8.66	8.66
	Inverter	MV3-16	368514	4907475	2	0	0	100.3	100.3	1	6432.53	3.25	0	87.17	0	0.71	0	0	20.57	0	0	0	0	0	0	-8.14	-8.14
	Inverter	MV3-10	368167	4907669	2	0	0	100.3	100.3	1	6481.82	3.25	0	87.23	0	0.71	0	0	20.64	0	0	0	0	0	0	-8.27	-8.27
	Inverter	MV3-7	367945	4907754	2	0	0	100.3	100.3	1	6488.72	3.25	0	87.24	0	0.71	0	0	20.64	0	0	0	0	0	0	-8.29	-8.29
	Inverter	MV3-14	368684	4907498	2	0	0	100.3	100.3	1	6523.91	3.25	0	87.29	0	0.71	0	0	20.69	0	0	0	0	0	0	-8.38	-8.38
	Inverter	MV3-11	368346	4907662	2	0	0	100.3	100.3	1	6539.69	3.25	0	87.31	0	0.71	0	0	20.71	0	0	0	0	0	0	-8.42	-8.42
	Inverter	MV3-6	368162	4907834	2	0	0	100.3	100.3	1	6635.09	3.25	0	87.44	0	0.71	0	0	20.83	0	0	0	0	0	0	-8.67	-8.67
	Inverters	G_Inv5	366638.5	4902958.1	2	0	0	87.7	87.7	1	1546.9	3.25	0	74.79	0	2.53	0	0	2.1	0	0	0	0	0	0	8.25	8.25
	Inverter	MV3-9	368512	4907703	2	0	0	100.3	100.3	1	6640.93	3.25	0	87.44	0	0.71	0	0	20.84	0	0	0	0	0	0	-8.69	-8.69
	Inverter	MV3-3	367939	4907927	2	0	0	100.3	100.3	1	6651.41	3.25	0	87.46	0	0.71	0	0	20.86	0	0	0	0	0	0	-8.72	-8.72
	Inverters	G_Inv8	366844.5	4902838.5	2	0	0	87.7	87.7	1	1556.01	3.25	0	74.84	0	2.53	0	0	2.11	0	0	0	0	0	0	8.18	8.18
	Inverter	MV3-8	368680	4907712	2	0	0	100.3	100.3	1	6716.63	3.25	0	87.54	0	0.71	0	0	20.94	0	0	0	0	0	0	-8.88	-8.88
	Inverters	G_Inv6	366788.5	4902972	2	0	0	87.7	87.7	1	1634.29	3.25	0	75.27	0	2.54	0	0	2.2	0	0	0	0	0	0	7.65	7.65
	Inverter	MV6-3	370207	4907140	2	0	0	100.3	100.3	1	7015.49	3.25	0	87.92	0	0.71	0	0	21.32	0	0	0	0	0	0	-9.64	-9.64
	Inverters	G_Inv3	366583.7	4903091.4	2	0	0	87.7	87.7	1	1642.76	3.25	0	75.31	0	2.54	0	0	2.21	0	0	0	0	0	0	7.6	7.6
	Inverter	MV6-2	370085	4907339	2	0	0	100.3	100.3	1	7101.58	3.25	0	88.03	0	0.71	0	0	21.43	0	0	0	0	0	0	-9.85	-9.85
	Inverter	MV2-1	365842	4906816	2	0	0	97.3	97.3	1	5225.2	3.25	0	85.36	0	0.66	0	0	18.91	0	0	0	0	0	0	-7.62	-7.62
	Inverters	G_Inv4	366732.8	4903105	2	0	0	87.7	87.7	1	1720.92	3.25	0	75.72	0	2.55	0	0	2.31	0	0	0	0	0	0	7.09	7.09
	Inverters	G_Inv1	366526.4	4903225.8	2	0	0	87.7	87.7	1	1745.42	3.25	0	75.84	0	2.55	0	0	2.34	0	0	0	0	0	0	6.93	6.93
	Inverters	G_Inv2	366676.9	4903239.1	2	0	0	87.7	87.7	1	1815.8	3.25	0	76.18	0	2.56	0	0	2.42	0	0	0	0	0	0	6.5	6.5
	Inverter	MV4-11	369264	4908855	2	0	0	100.3	100.3	1	7998.95	3.25	0	89.06	0	0.65	0	0	22.5	0	0	0	0	0	0	-11.91	-11.91
	Inverter	MV4-10	369312	4908858	2	0	0	100.3	100.3	1	8021.89	3.25	0	89.09	0	0.65	0	0	22.53	0	0	0	0	0	0	-11.96	-11.96
	Inverter	MV4-7	369035	4909001	2	0	0	100.3	100.3	1	8040.13	3.25	0	89.11	0	0.65	0	0	22.55	0	0	0	0	0	0	-11.99	-11.99
	Inverter	MV4-8	369256	4909001	2	0	0	100.3	100.3	1	8128.47	3.25	0	89.2	0	0.64	0	0	22.65	0	0	0	0	0	0	-12.18	-12.18
	Inverter	MV4-9	369289	4909001	2	0	0	100.3	100.3	1	8142.09	3.25	0	89.21	0	0.64	0	0	22.67	0	0	0	0	0	0	-12.21	-12.21
	Inverter	MV5-5	370015	4908690	2	0	0	100.3	100.3	1	8198.11	3.25	0	89.27	0	0.63	0	0	22.73	0	0	0	0	0	0	-12.33	-12.33
	Inverter	MV4-4	369027	4909199	2	0	0	100.3	100.3	1	8219.93	3.25	0	89.3	0	0.63	0	0	22.76	0	0	0	0	0	0	-12.38	-12.38
	Inverter	MV4-6	369243	4909192	2	0	0	100.3	100.3	1	8297.72	3.25	0	89.38	0	0.62	0	0	22.85	0	0	0	0	0	0	-12.54	-12.54
	Inverter	MV4-5	369289	4909199	2	0	0	100.3	100.3	1	8322.68	3.25	0	89.41	0	0.62	0	0	22.87	0	0	0	0	0	0	-12.59	-12.59
	Inverter	MV5-2	370006	4908853	2	0	0	100.3	100.3	1	8335.22	3.25	0	89.42	0	0.62	0	0	22.89	0	0	0	0	0	0	-12.62	-12.62
	Inverter	MV5-4	370324	4908707	2	0	0	100.3	100.3	1	8371.4	3.25	0	89.46	0	0.62	0	0	22.93	0	0	0	0	0	0	-12.69	-12.69
	Inverter	MV4-1	369011	4909397	2	0	0	100.3	100.3	1	8397.6	3.25	0	89.48	0	0.61	0	0	22.96	0	0	0	0	0	0	-12.74	-12.74
	Inverter	MV5-3	370231	4908851	2	0	0	100.3	100.3	1	8446.23	3.25	0	89.53	0	0.61	0	0	23.01	0	0	0	0	0	0	-12.84	-12.84
	Inverter	MV4-3	369229	4909397	2	0	0	100.3	100.3	1	8480.42	3.25	0	89.57	0	0.6	0	0	23.05	0	0	0	0	0	0	-12.91	-12.91

Inverter	MV4-2	369272	4909397	2	0	0	100.3	100.3	1	8497.32	3.25	0	89.59	0	0.6	0	0	23.07	0	0	0	0	0	0	-12.95	-12.95
Inverter	MV5-1	370020	4909142	2	0	0	100.3	100.3	1	8594.85	3.25	0	89.68	0	0.59	0	0	23.18	0	0	0	0	0	0	-13.14	-13.14
Inverter	MV6-1	370235	4907364	2	0	0	97.3	97.3	1	7210.7	3.25	0	88.16	0	0.7	0	0	21.56	0	0	0	0	0	0	-13.11	-13.11
DSTATCOM - 10 MVAR #2	DSAT2	369403	4908757	2.5	0	0	96.6	96.6	1	7969.92	3.5	0	89.03	0	3.88	0	0	4.76	0	0	0	0	0	0	-1.04	-1.04
DSTATCOM - 10 MVAR #1	DSAT1	369437	4908757	2.5	0	0	96.6	96.6	1	7984.87	3.5	0	89.05	0	3.88	0	0	4.76	0	0	0	0	0	0	-1.06	-1.06
SubstationTransformer	W_ST	369711.17	4906112.3	2.5	0	0	92	92	1	5903.97	3.5	0	86.42	0	0.75	0	-0.11	9.64	0	0	0	0	0	0	-4.83	-4.83
Inverter	MV1-3	364440	4906039	2	0	0	89.1	89.1	1	4685.62	3.25	0	84.42	0	1.56	0	0	12.04	0	0	0	0	0	0	-8.96	-8.96
Inverter	MV2-2	365977	4906654	2	0	0	89.1	89.1	1	5063.09	3.25	0	85.09	0	1.66	0	0	12.55	0	0	0	0	0	0	-10.23	-10.23
Westbrook Inverter Enclosur	W_INV3	369508	4906164	2	0	0	89.1	89.1	1	5815.99	3.25	0	86.29	0	1.84	0	0	13.53	0	0	0	0	0	0	-12.6	-12.6
Westbrook Inverter Enclosur	W_INV2	369374	4906388	2	0	0	89.1	89.1	1	5914.33	3.25	0	86.44	0	1.86	0	0	13.65	0	0	0	0	0	0	-12.9	-12.9
Westbrook Inverter Enclosur	W_INV4	369673	4906164	2	0	0	89.1	89.1	1	5919.37	3.25	0	86.45	0	1.87	0	0	13.66	0	0	0	0	0	0	-12.91	-12.91
Westbrook Inverter Enclosur	W_INV7	369780	4906417	2	0	0	89.1	89.1	1	6183.25	3.25	0	86.82	0	1.93	0	0	13.99	0	0	0	0	0	0	-13.69	-13.69
Inverter	MV3-22	368656	4907142	2	0	0	89.1	89.1	1	6190.98	3.25	0	86.84	0	1.93	0	0	14	0	0	0	0	0	0	-13.71	-13.71
Westbrook Inverter Enclosur	W_INV5	369719	4906574	2	0	0	89.1	89.1	1	6269.34	3.25	0	86.94	0	1.95	0	0	14.1	0	0	0	0	0	0	-13.94	-13.94
Westbrook Inverter Enclosur	W_INV6	369875	4906578	2	0	0	89.1	89.1	1	6368.35	3.25	0	87.08	0	1.98	0	0	14.22	0	0	0	0	0	0	-14.22	-14.22
Inverter	MV3-5	368340	4907843	2	0	0	89.1	89.1	1	6705.87	3.25	0	87.53	0	2.06	0	0	14.63	0	0	0	0	0	0	-15.16	-15.16
Inverter	MV3-1	368156	4907976	2	0	0	89.1	89.1	1	6766.87	3.25	0	87.61	0	2.07	0	0	14.71	0	0	0	0	0	0	-15.33	-15.33
Inverter	MV3-4	368502	4907925	2	0	0	89.1	89.1	1	6842	3.25	0	87.7	0	2.09	0	0	14.8	0	0	0	0	0	0	-15.53	-15.53
Inverter	MV3-2	368671	4907928	2	0	0	89.1	89.1	1	6910.45	3.25	0	87.79	0	2.11	0	0	14.88	0	0	0	0	0	0	-15.72	-15.72
Fixed Reactor Bank 1	FRB1	369378	4908755	6	0	0	89.8	89.8	1	7957.21	5.25	0	89.02	0	-0.18	0	0	11.62	0	0	0	0	0	0	-10.68	-10.68
Fixed Reactor Bank 2	FRB2	369464	4908755	6	0	0	89.8	89.8	1	7995.02	5.25	0	89.06	0	-0.17	0	0	11.65	0	0	0	0	0	0	-10.76	-10.76
Inverter	MV4-15	369176	4908481	2	0	0	89.1	89.1	1	7622.86	3.25	0	88.64	0	2.27	0	0	15.71	0	0	0	0	0	0	-17.57	-17.57
Inverter	MV4-14	369176	4908507	2	0	0	89.1	89.1	1	7646.37	3.25	0	88.67	0	2.28	0	0	15.74	0	0	0	0	0	0	-17.63	-17.63
Inverter	MV4-13	369051	4908605	2	0	0	89.1	89.1	1	7683.24	3.25	0	88.71	0	2.29	0	0	15.78	0	0	0	0	0	0	-17.72	-17.72
Inverter	MV4-12	369043	4908803	2	0	0	89.1	89.1	1	7861.21	3.25	0	88.91	0	2.33	0	0	15.98	0	0	0	0	0	0	-18.17	-18.17
Inverter	MV5-6	369982	4908507	2	0	0	89.1	89.1	1	8023.39	3.25	0	89.09	0	2.37	0	0	16.17	0	0	0	0	0	0	-18.56	-18.56
Westbrook Inverter Enclosur	W_INV1	369409	4906578	2	0	0	86.1	86.1	1	6089.46	3.25	0	86.69	0	1.91	0	0	13.87	0	0	0	0	0	0	-16.42	-16.42
Inverter	MV6-4	370250	4906966	2	0	0	86.1	86.1	1	6905.61	3.25	0	87.78	0	2.11	0	0	14.87	0	0	0	0	0	0	-18.71	-18.71
Westbrook Inverter Transfor	W_INVTR1	369403	4906578	2	0	0	78.2	78.2	1	6086.02	3.25	0	86.69	0	-3.38	0	0	2.77	0	0	0	0	0	0	-7.83	-7.83
Westbrook Inverter Transfor	W_INVTR3	369514	4906164	2	0	0	77.3	77.3	1	5819.7	3.25	0	86.3	0	-3.33	0	0	2.68	0	0	0	0	0	0	-8.31	-8.31
Westbrook Inverter Transfor	W_INVTR2	369368	4906388	2	0	0	77.3	77.3	1	5910.82	3.25	0	86.43	0	-3.35	0	0	2.71	0	0	0	0	0	0	-8.45	-8.45
Westbrook Inverter Transfor	W_INVTR4	369679	4906164	2	0	0	77.3	77.3	1	5923.18	3.25	0	86.45	0	-3.35	0	0	2.72	0	0	0	0	0	0	-8.47	-8.47
Westbrook Inverter Transfor	W_INVTR7	369786	4906417	2	0	0	77.3	77.3	1	6187	3.25	0	86.83	0	-3.4	0	0	2.8	0	0	0	0	0	0	-8.89	-8.89
Westbrook Inverter Transfor	W_INVTR5	369725	4906574	2	0	0	77.3	77.3	1	6272.98	3.25	0	86.95	0	-3.42	0	0	2.83	0	0	0	0	0	0	-9.02	-9.02
Westbrook Inverter Transfor	W_INVTR6	369881	4906578	2	0	0	77.3	77.3	1	6372.09	3.25	0	87.09	0	-3.43	0	0	2.86	0	0	0	0	0	0	-9.17	-9.17
Inverter Transformer	MV1-14 T	365157	4905049	2	0	0	69.4	69.4	1	3539.62	3.25	0	81.98	0	2.66	0	0	6.32	0	0	0	0	0	0	-21.62	-21.62
Inverter Transformer	MV1-13 T	364725	4905241	2	0	0	69.4	69.4	1	3838.53	3.25	0	82.68	0	2.74	0	0	6.55	0	0	0	0	0	0	-22.63	-22.63
Inverter Transformer	MV1-10 T	365010	4905564	2	0	0	69.4	69.4	1	4074.28	3.25	0	83.2	0	2.8	0	0	6.73	0	0	0	0	0	0	-23.39	-23.39
Inverter Transformer	MV1-7 T	364919	4905782	2	0	0	69.4	69.4	1	4307.23	3.25	0	83.68	0	2.86	0	0	6.9	0	0	0	0	0	0	-24.1	-24.1
Inverter Transformer	MV2-1 T	365836	4906816	2	0	0	69.4	69.4	1	5225.28	3.25	0	85.36	0	3.06	0	0	7.53	0	0	0	0	0	0	-26.6	-26.6
Inverter Transformer	MV6-4 T	370244	4906966	2	0	0	69.4	69.4	1	6901.84	3.25	0	87.78	0	3.31	0	0	8.55	0	0	0	0	0	0	-30.28	-30.28
Inverter Transformer	MV6-1 T	370230	4907364	2	0	0	69.4	69.4	1	7207.71	3.25	0	88.16	0	3.34	0	0	8.72	0	0	0	0	0	0	-30.86	-30.86
Inverter Transformer	MV1-15 T	365309	4904994	2	0	0	56.1	56.1	1	3456.08	3.25	0	81.77	0	1.02	0	0	9.62	0	0	0	0	0	0	-36.35	-36.35
Inverter Transformer	MV1-12 T	365044	4905386	2	0	0	56.1	56.1	1	3893.18	3.25	0	82.81	0	1.2	0	0	10.3	0	0	0	0	0	0	-38.24	-38.24
Inverter Transformer	MV1-11 T	364649	4905414	2	0	0	56.1	56.1	1	4026.6	3.25	0	83.1	0	1.25	0	0	10.49	0	0	0	0	0	0	-38.79	-38.79
Inverter Transformer	MV1-8 T	364782	4905647	2	0	0	56.1	56.1	1	4210.74	3.25	0	83.49	0	1.33	0	0	10.76	0	0	0	0	0	0	-39.52	-39.52
Inverter Transformer	MV1-9 T	364555	4905646	2	0	0	56.1	56.1	1	4276.42	3.25	0	83.62	0	1.35	0	0	10.86	0	0	0	0	0	0	-39.78	-39.78
Inverter Transformer	MV1-4 T	364821	4905918	2	0	0	56.1	56.1	1	4462.65	3.25	0	83.99	0	1.43	0	0	11.12	0	0	0	0	0	0	-40.48	-40.48
Inverter Transformer	MV1-5 T	364676	4905892	2	0	0	56.1	56.1	1	4475.37	3.25	0	84.02	0	1.43	0	0	11.14	0	0	0	0	0	0	-40.53	-40.53
Inverter Transformer	MV1-6 T	364482	4905835	2	0	0	56.1	56.1	1	4478.83	3.25	0	84.02	0	1.43	0	0	11.15	0	0	0	0	0	0	-40.54	-40.54
Inverter Transformer	MV1-2 T	364759	4906063	2	0	0	56.1	56.1	1	4618.48	3.25	0	84.29	0	1.48	0	0	11.34	0	0	0	0	0	0	-41.06	-41.06
Inverter Transformer	MV1-3 T	364435	4906039	2	0	0	56.1	56.1	1	4687.19	3.25	0	84.42	0	1.51	0	0	11.43	0	0	0	0	0	0	-41.3	-41.3
Inverter Transformer	MV1-1 T	364721	4906166	2	0	0	56.1	56.1	1	4727.72	3.25	0	84.49	0	1.53	0	0	11.49	0	0	0	0	0	0	-41.45	-41.45
Inverter Transformer	MV2-4 T	365590	4906628	2	0	0	56.1	56.1	1	5047.12	3.25	0	85.06	0	1.64	0	0	11.92	0	0	0	0	0	0	-42.56	-42.56
Inverter Transformer	MV2-3 T	365814	4906641	2	0	0	56.1	56.1	1	5050.69	3.25	0	85.07	0	1.64	0	0	11.92	0	0	0	0	0	0	-42.57	-42.57
Inverter Transformer	MV2-2 T	365982	4906654	2	0	0	56.1	56.1	1	5063.16	3.25	0	85.09	0	1.65	0	0	11.94	0	0	0	0	0	0	-42.62	-42.62
Inverter Transformer	MV3-18 T	367757	4907412	2	0	0	56.1	56.1	1	6105.48	3.25	0	86.71	0	2	0	0	13.23	0	0	0	0	0	0	-45.88	-45.88
Inverter Transformer	MV3-21 T	368484	4907206	2	0	0	56.1	56.1	1	6174.89	3.25	0	86.81	0	2.02	0	0	13.31	0	0	0	0	0	0	-46.08	-46.08
Inverter Transformer	MV3-22 T	368661	4907142	2	0	0	56.1	56.1	1	6193.2	3.25	0	86.84	0	2.03	0	0	13.33	0	0	0	0	0	0	-46.13	-46.13
Inverter Transformer	MV3-19 T	368352	4907347	2	0	0	56.1	56.1	1	6250.72	3.25	0	86.92	0	2.04	0	0	13.4	0	0	0	0	0	0	-46.3	-46.3
Inverter Transformer	MV3-12 T	367674	4907594	2	0	0	56.1	56.1	1	6255.37	3.25	0	86.93	0	2.04	0	0	13.4	0	0	0	0	0	0	-46.31	-46.31
Inverter Transformer	MV3-17 T	368183	4907472	2	0	0	56.1	56.1	1	6303.22	3.25	0	86.99	0	2.06	0	0	13.46	0	0	0	0	0	0	-46.45	-46.45
Inverter Transformer	MV3-13 T	367958	4907577	2	0	0	56.1	56.1	1	6325.04	3.25	0	87.02	0	2.07	0	0	13.48	0	0	0	0	0	0	-46.51	-46.51
Inverter Transformer	MV3-20 T	368683	4907317	2	0	0	56.1	56.1	1	6360.07	3.25	0	87.07	0	2.08	0	0	13.52	0	0	0	0	0	0	-46.61	-46.61
Inverter Transformer	MV3-15 T	368351	4907477	2	0	0	56.1	56.1	1	6370.24	3.25	0	87.08	0	2.08	0	0	13.53	0	0	0	0	0	0	-46.64	-46.64
Inverter Transformer	MV3-16 T	368509	4907475	2	0	0	56.1	56.1	1	6430.51	3.25	0	87.16	0	2.1	0	0	13.6	0	0	0	0	0	0	-46.81	-46.81
Inverter Transformer	MV3-10 T	368162	4907669	2	0	0	56.1	56.1	1	6480.08	3.25	0	87.23	0	2.11	0	0	13.66	0	0	0	0	0	0	-46.94	-46.94
Inverter Transformer	MV3-7 T	367951	4907754	2	0	0	56.1	56.1	1	6490.6	3.25	0	87.25	0	2.11	0	0	13.67	0	0	0	0	0	0	-46.97	-46.97
Inverter Transformer	MV3-14 T	368678	4907498	2	0	0	56.1	56.1	1	6521.37	3.25	0	87.29	0	2.12	0	0	13.7	0	0	0	0	0	0	-47.06	-47.06
Inverter Transformer	MV3-11 T	368340	4907662	2	0	0	56.1	56.1	1	6537.46	3.25	0	87.31	0	2.13	0	0	13.72	0	0	0	0	0	0	-47.1	-47.1
Inverter Transformer	MV3-6 T	368156	4907834	2	0	0	56.1	56.1	1	6633.06	3.25	0	87.43	0	2.16	0	0	13.83	0	0	0	0	0	0	-47.36	-47.36
Inverter Transformer	MV3-9 T	368517	4907703	2	0	0	56.1	56.1	1	6642.89	3.25	0	87.45	0	2.16	0	0	13.84	0	0	0	0	0	0	-47.39	-47.39
Inverter Transformer	MV3-3 T	367944	4907927	2	0	0	56.1	56.1	1	6652.94	3.25	0	87.46	0	2.16	0	0	13.85	0	0	0	0	0	0	-47.42	-47.42
Inverter Transformer	MV3-5 T	368335	4907843	2	0	0	56.1	56.1	1	6704.07	3.25	0	87.53	0	2.18	0	0	13.91	0	0	0	0	0	0	-47.55	-47.55

	Inverter Transformer	MV3-8 T	368685	4907712	2	0	0	56.1	56.1	1	6718.69	3.25	0	87.55	0	2.18	0	0	13.92	0	0	0	0	0	0	-47.59	-47.59
	Inverter Transformer	MV3-1 T	368150	4907976	2	0	0	56.1	56.1	1	6764.88	3.25	0	87.61	0	2.19	0	0	13.97	0	0	0	0	0	0	-47.72	-47.72
	Inverter Transformer	MV3-4 T	368507	4907925	2	0	0	56.1	56.1	1	6843.89	3.25	0	87.71	0	2.22	0	0	14.06	0	0	0	0	0	0	-47.92	-47.92
	Inverter Transformer	MV3-2 T	368677	4907928	2	0	0	56.1	56.1	1	6912.84	3.25	0	87.79	0	2.24	0	0	14.14	0	0	0	0	0	0	-48.11	-48.11
	Inverter Transformer	MV6-3 T	370202	4907140	2	0	0	56.1	56.1	1	7012.43	3.25	0	87.92	0	2.26	0	0	14.24	0	0	0	0	0	0	-48.36	-48.36
	Inverter Transformer	MV6-2 T	370091	4907339	2	0	0	56.1	56.1	1	7105.11	3.25	0	88.03	0	2.29	0	0	14.34	0	0	0	0	0	0	-48.6	-48.6
	Inverter Transformer	MV4-15 T	369170	4908481	2	0	0	56.1	56.1	1	7620.29	3.25	0	88.64	0	2.42	0	0	14.88	0	0	0	0	0	0	-49.88	-49.88
	Inverter Transformer	MV4-14 T	369182	4908507	2	0	0	56.1	56.1	1	7648.93	3.25	0	88.67	0	2.43	0	0	14.91	0	0	0	0	0	0	-49.95	-49.95
	Inverter Transformer	MV4-13 T	369057	4908605	2	0	0	56.1	56.1	1	7685.69	3.25	0	88.71	0	2.44	0	0	14.94	0	0	0	0	0	0	-50.03	-50.03
	Inverter Transformer	MV4-12 T	369049	4908803	2	0	0	56.1	56.1	1	7863.6	3.25	0	88.91	0	2.48	0	0	15.12	0	0	0	0	0	0	-50.45	-50.45
	Inverter Transformer	MV4-11 T	369269	4908855	2	0	0	56.1	56.1	1	8001.04	3.25	0	89.06	0	2.51	0	0	15.26	0	0	0	0	0	0	-50.77	-50.77
	Inverter Transformer	MV4-10 T	369307	4908858	2	0	0	56.1	56.1	1	8019.77	3.25	0	89.08	0	2.51	0	0	15.28	0	0	0	0	0	0	-50.82	-50.82
	Inverter Transformer	MV5-6 T	369987	4908507	2	0	0	56.1	56.1	1	8025.92	3.25	0	89.09	0	2.52	0	0	15.28	0	0	0	0	0	0	-50.83	-50.83
	Inverter Transformer	MV4-7 T	369040	4909001	2	0	0	56.1	56.1	1	8042.07	3.25	0	89.11	0	2.52	0	0	15.3	0	0	0	0	0	0	-50.87	-50.87
	Inverter Transformer	MV4-8 T	369262	4909001	2	0	0	56.1	56.1	1	8130.93	3.25	0	89.2	0	2.54	0	0	15.38	0	0	0	0	0	0	-51.07	-51.07
	Inverter Transformer	MV4-9 T	369284	4909001	2	0	0	56.1	56.1	1	8140.02	3.25	0	89.21	0	2.54	0	0	15.39	0	0	0	0	0	0	-51.09	-51.09
	Inverter Transformer	MV5-5 T	370021	4908690	2	0	0	56.1	56.1	1	8201.11	3.25	0	89.28	0	2.56	0	0	15.45	0	0	0	0	0	0	-51.23	-51.23
	Inverter Transformer	MV4-4 T	369033	4909199	2	0	0	56.1	56.1	1	8222.2	3.25	0	89.3	0	2.56	0	0	15.47	0	0	0	0	0	0	-51.27	-51.27
	Inverter Transformer	MV4-6 T	369249	4909192	2	0	0	56.1	56.1	1	8300.13	3.25	0	89.38	0	2.58	0	0	15.55	0	0	0	0	0	0	-51.45	-51.45
	Inverter Transformer	MV4-5 T	369283	4909199	2	0	0	56.1	56.1	1	8320.25	3.25	0	89.4	0	2.58	0	0	15.57	0	0	0	0	0	0	-51.49	-51.49
	Inverter Transformer	MV5-2 T	370011	4908853	2	0	0	56.1	56.1	1	8337.68	3.25	0	89.42	0	2.58	0	0	15.58	0	0	0	0	0	0	-51.53	-51.53
	Inverter Transformer	MV5-4 T	370330	4908707	2	0	0	56.1	56.1	1	8374.57	3.25	0	89.46	0	2.59	0	0	15.62	0	0	0	0	0	0	-51.61	-51.61
	Inverter Transformer	MV4-1 T	369017	4909397	2	0	0	56.1	56.1	1	8399.82	3.25	0	89.49	0	2.6	0	0	15.64	0	0	0	0	0	0	-51.67	-51.67
	Inverter Transformer	MV5-3 T	370237	4908851	2	0	0	56.1	56.1	1	8449.3	3.25	0	89.54	0	2.61	0	0	15.69	0	0	0	0	0	0	-51.78	-51.78
	Inverter Transformer	MV4-3 T	369234	4909397	2	0	0	56.1	56.1	1	8482.38	3.25	0	89.57	0	2.62	0	0	15.72	0	0	0	0	0	0	-51.85	-51.85
	Inverter Transformer	MV4-2 T	369267	4909397	2	0	0	56.1	56.1	1	8495.35	3.25	0	89.58	0	2.62	0	0	15.73	0	0	0	0	0	0	-51.88	-51.88
	Inverter Transformer	MV5-1 T	370015	4909142	2	0	0	56.1	56.1	1	8592.47	3.25	0	89.68	0	2.64	0	0	15.82	0	0	0	0	0	0	-52.09	-52.09
	Line Reactor	NGR	369421	4908787.5	5	0	0	45.4	45.4	1	8005.23	5.25	0	89.07	0	3.2	1.38	0.11	3.27	0	0	0	0	0	0	-51.56	-51.56
Limit. Valu	0	0																								
Level D/N:	19.9194	19.9194																								

Receiver: Vacant Lot Receptor
ID: G-V5
X: 365940.5
Y: 4902083.4
Z: 4.5
Ground: 0

ISO	Description	ID	X	Y	Z	Ground	ReflOrd	LxT	LxN	L/A	Dist.	hm	Freq	Adiv	K0b	Agr	Abar	z	Aatm	Afol	Ahous	Cmet	CmetN	Dc	RL	LtotT	LtotN
	Sol_Luce Substation	S_Substation	369426	4908792	3.5	0	0	112.1	112.1	1	7560.03	5.25	0	88.57	0	1.49	2.34	0.31	11.27	0	0	0	0	0	0	8.41	8.41
	Inverter	MV1-15	365315	4904994	2	0	0	100.3	100.3	1	2977.05	3.25	0	80.48	0	0.36	0	0	15.33	0	0	0	0	0	0	4.15	4.15
	Inverter	MV1-12	365038	4905386	2	0	0	100.3	100.3	1	3423.69	3.25	0	81.69	0	0.44	0	0	16.1	0	0	0	0	0	0	2.08	2.08
	Inverter	MV1-11	364655	4905414	2	0	0	100.3	100.3	1	3570.07	3.25	0	82.05	0	0.46	0	0	16.35	0	0	0	0	0	0	1.45	1.45
	Inverter	MV1-8	364788	4905647	2	0	0	100.3	100.3	1	3745.33	3.25	0	82.47	0	0.49	0	0	16.64	0	0	0	0	0	0	0.72	0.72
	Inverter	MV1-9	364561	4905646	2	0	0	100.3	100.3	1	3820.36	3.25	0	82.64	0	0.5	0	0	16.76	0	0	0	0	0	0	0.41	0.41
	Inverter	MV1-4	364815	4905918	2	0	0	100.3	100.3	1	3996.36	3.25	0	83.03	0	0.53	0	0	17.04	0	0	0	0	0	0	-0.29	-0.29
	Inverter	MV1-5	364671	4905892	2	0	0	100.3	100.3	1	4014.61	3.25	0	83.07	0	0.53	0	0	17.07	0	0	0	0	0	0	-0.36	-0.36
	Inverter	MV1-6	364477	4905835	2	0	0	100.3	100.3	1	4026.95	3.25	0	83.1	0	0.53	0	0	17.09	0	0	0	0	0	0	-0.41	-0.41
	Inverter	MV1-2	364753	4906063	2	0	0	100.3	100.3	1	4153	3.25	0	83.37	0	0.55	0	0	17.29	0	0	0	0	0	0	-0.89	-0.89
	Gardiner Substation	G_Sub	366586.3	4903349.9	2.5	0	0	90.8	90.8	1	1421.65	3.5	0	74.06	0	-0.29	0	0	3.34	0	0	0	0	0	0	13.68	13.68
	Inverter	MV1-1	364715	4906166	2	0	0	100.3	100.3	1	4262.57	3.25	0	83.59	0	0.56	0	0	17.46	0	0	0	0	0	0	-1.31	-1.31
	Inverter	MV1-14	365163	4905049	2	0	0	97.3	97.3	1	3065.83	3.25	0	80.73	0	0.37	0	0	15.49	0	0	0	0	0	0	0.72	0.72
	Inverters	G_Inv9	366750.9	4902691.8	2	0	0	87.7	87.7	1	1013.36	3.25	0	71.12	0	2.45	0	0	1.44	0	0	0	0	0	0	12.65	12.65
	Inverters	G_Inv7	366694.6	4902824.7	2	0	0	87.7	87.7	1	1057.45	3.25	0	71.49	0	2.46	0	0	1.5	0	0	0	0	0	0	12.22	12.22
	Inverter	MV2-4	365586	4906624	2	0	0	100.3	100.3	1	4554.42	3.25	0	84.17	0	0.6	0	0	17.91	0	0	0	0	0	0	-2.37	-2.37
	Inverter	MV2-3	365820	4906641	2	0	0	100.3	100.3	1	4559.19	3.25	0	84.18	0	0.6	0	0	17.92	0	0	0	0	0	0	-2.38	-2.38
	Inverter	MV1-13	364731	4905241	2	0	0	97.3	97.3	1	3381.32	3.25	0	81.58	0	0.43	0	0	16.03	0	0	0	0	0	0	-0.73	-0.73
	Inverters	G_Inv5	366638.5	4902958.1	2	0	0	87.7	87.7	1	1119.07	3.25	0	71.98	0	2.47	0	0	1.58	0	0	0	0	0	0	11.64	11.64
	Inverters	G_Inv10	366900.7	4902704.8	2	0	0	87.7	87.7	1	1143.73	3.25	0	72.17	0	2.47	0	0	1.61	0	0	0	0	0	0	11.42	11.42
	Inverters	G_Inv8	366844.5	4902838.5	2	0	0	87.7	87.7	1	1177.88	3.25	0	72.42	0	2.48	0	0	1.65	0	0	0	0	0	0	11.11	11.11
	Inverter	MV1-10	365004	4905564	2	0	0	97.3	97.3	1	3604.39	3.25	0	82.14	0	0.47	0	0	16.41	0	0	0	0	0	0	-1.7	-1.7
	Inverters	G_Inv3	366583.7	4903091.4	2	0	0	87.7	87.7	1	1195.73	3.25	0	72.55	0	2.48	0	0	1.67	0	0	0	0	0	0	10.96	10.96
	Inverters	G_Inv6	366788.5	4902972	2	0	0	87.7	87.7	1	1228.3	3.25	0	72.79	0	2.48	0	0	1.71	0	0	0	0	0	0	10.68	10.68
	Inverter	MV1-7	364925	4905782	2	0	0	97.3	97.3	1	3835.48	3.25	0	82.68	0	0.5	0	0	16.78	0	0	0	0	0	0	-2.65	-2.65
	Inverters	G_Inv1	366526.4	4903225.8	2	0	0	87.7	87.7	1	1283.89	3.25	0	73.17	0	2.49	0	0	1.78	0	0	0	0	0	0	10.22	10.22
	Inverters	G_Inv4	366732.8	4903105	2	0	0	87.7	87.7	1	1292.83	3.25	0	73.23	0	2.49	0	0	1.79	0	0	0	0	0	0	10.15	10.15
	Inverter	MV3-18	367752	4907412	2	0	0	100.3	100.3	1	5628.1	3.25	0	86.01	0	0.69	0	0	19.48	0	0	0	0	0	0	-5.86	-5.86
	Inverter	MV3-21	368478	4907206	2	0	0	100.3	100.3	1	5716.64	3.25	0	86.14	0	0.69	0	0	19.6	0	0	0	0	0	0	-6.13	-6.13
	Inverter	MV3-12	367668	4907594	2	0	0	100.3	100.3	1	5775.03	3.25	0	86.23	0	0.7	0	0	19.68	0	0	0	0	0	0	-6.3	-6.3
	Inverter	MV3-19	368357	4907347	2	0	0	100.3	100.3	1	5791.8	3.25	0	86.26	0	0.7	0	0	19.71	0	0	0	0	0	0	-6.35	-6.35
	Inverter	MV3-17	368178	4907472	2	0	0	100.3	100.3	1	5834.67	3.25	0	86.32	0	0.7	0	0	19.77	0	0	0	0	0	0	-6.47	-6.47
	Inverter	MV3-13	367963	4907577	2	0	0	100.3	100.3	1	5854.07	3.25	0	86.35	0	0.7	0	0	19.79	0	0	0	0	0	0	-6.53	-6.53
	Inverters	G_Inv2	366676.9	4903239.1	2	0	0	87.7	87.7	1	1370.38	3.25	0	73.74	0	2.5	0	0	1.89	0	0	0	0	0	0	9.54	9.54
	Inverter	MV3-15	368357	4907477	2	0	0	100.3	100.3	1	5910.19	3.25	0	86.43	0	0.7	0	0	19.87	0	0	0	0	0	0	-6.69	-6.69

Inverter	MV3-20	368689	4907317	2	0	0	100.3	100.3	1	5911.42	3.25	0	86.43	0	0.7	0	0	19.87	0	0	0	0	0	0	-6.7	-6.7
Inverter	MV3-16	368514	4907475	2	0	0	100.3	100.3	1	5974.3	3.25	0	86.53	0	0.7	0	0	19.96	0	0	0	0	0	0	-6.88	-6.88
Inverter	MV3-10	368167	4907669	2	0	0	100.3	100.3	1	6013.01	3.25	0	86.58	0	0.71	0	0	20.01	0	0	0	0	0	0	-6.99	-6.99
Inverter	MV3-7	367945	4907754	2	0	0	100.3	100.3	1	6014.46	3.25	0	86.58	0	0.71	0	0	20.01	0	0	0	0	0	0	-6.99	-6.99
Inverter	MV3-14	368684	4907498	2	0	0	100.3	100.3	1	6069.98	3.29	0	86.66	0	1.7	2.48	0	20.09	0	0	0	0	0	0	-10.62	-10.62
Inverter	MV3-11	368346	4907662	2	0	0	100.3	100.3	1	6075.13	3.25	0	86.67	0	0.71	0	0	20.09	0	0	0	0	0	0	-7.16	-7.16
Inverter	MV3-6	368162	4907834	2	0	0	100.3	100.3	1	6164.78	3.25	0	86.8	0	0.71	0	0	20.22	0	0	0	0	0	0	-7.41	-7.41
Inverter	MV3-3	367939	4907927	2	0	0	100.3	100.3	1	6175.89	3.25	0	86.81	0	0.71	0	0	20.23	0	0	0	0	0	0	-7.44	-7.44
Inverter	MV3-9	368512	4907703	2	0	0	100.3	100.3	1	6180.01	3.25	0	86.82	0	0.71	0	0	20.24	0	0	0	0	0	0	-7.45	-7.45
Inverter	MV3-8	368680	4907712	2	0	0	100.3	100.3	1	6259.87	3.25	0	86.93	0	0.71	0	0	20.34	0	0	0	0	0	0	-7.67	-7.67
Inverter	MV6-3	370207	4907140	2	0	0	100.3	100.3	1	6616.06	3.25	0	87.41	0	0.71	0	0	20.81	0	0	0	0	0	0	-8.62	-8.62
Inverter	MV2-1	365842	4906816	2	0	0	97.3	97.3	1	4733.63	3.25	0	84.5	0	0.62	0	0	18.18	0	0	0	0	0	0	-5.99	-5.99
Inverter	MV6-2	370085	4907339	2	0	0	100.3	100.3	1	6693.15	3.25	0	87.51	0	0.71	0	0	20.91	0	0	0	0	0	0	-8.82	-8.82
Inverter	MV4-11	369264	4908855	2	0	0	100.3	100.3	1	7543.22	3.25	0	88.55	0	0.69	0	0	21.97	0	0	0	0	0	0	-10.89	-10.89
Inverter	MV4-10	369312	4908858	2	0	0	100.3	100.3	1	7567.18	3.25	0	88.58	0	0.69	0	0	22	0	0	0	0	0	0	-10.95	-10.95
Inverter	MV4-7	369035	4909001	2	0	0	100.3	100.3	1	7578.2	3.25	0	88.59	0	0.68	0	0	22.01	0	0	0	0	0	0	-10.97	-10.97
Inverter	MV4-8	369256	4909001	2	0	0	100.3	100.3	1	7671.1	3.25	0	88.7	0	0.68	0	0	22.12	0	0	0	0	0	0	-11.18	-11.18
Inverter	MV4-9	369289	4909001	2	0	0	100.3	100.3	1	7685.42	3.25	0	88.71	0	0.68	0	0	22.14	0	0	0	0	0	0	-11.22	-11.22
Inverter	MV4-4	369027	4909199	2	0	0	100.3	100.3	1	7756.18	3.25	0	88.79	0	0.67	0	0	22.22	0	0	0	0	0	0	-11.37	-11.37
Inverter	MV5-5	370015	4908690	2	0	0	100.3	100.3	1	7762	3.25	0	88.8	0	0.67	0	0	22.23	0	0	0	0	0	0	-11.39	-11.39
Inverter	MV4-6	369243	4909192	2	0	0	100.3	100.3	1	7838.28	3.25	0	88.88	0	0.67	0	0	22.32	0	0	0	0	0	0	-11.56	-11.56
Inverter	MV4-5	369289	4909199	2	0	0	100.3	100.3	1	7864.11	3.25	0	88.91	0	0.66	0	0	22.35	0	0	0	0	0	0	-11.61	-11.61
Inverter	MV5-2	370006	4908853	2	0	0	100.3	100.3	1	7896.57	3.25	0	88.95	0	0.66	0	0	22.39	0	0	0	0	0	0	-11.68	-11.68
Inverter	MV4-1	369011	4909397	2	0	0	100.3	100.3	1	7932.01	3.25	0	88.99	0	0.66	0	0	22.43	0	0	0	0	0	0	-11.76	-11.76
Inverter	MV5-4	370324	4908707	2	0	0	100.3	100.3	1	7942.74	3.25	0	89	0	0.66	0	0	22.44	0	0	0	0	0	0	-11.78	-11.78
Inverter	MV5-3	370231	4908851	2	0	0	100.3	100.3	1	8013.04	3.25	0	89.08	0	0.65	0	0	22.52	0	0	0	0	0	0	-11.94	-11.94
Inverter	MV4-3	369229	4909397	2	0	0	100.3	100.3	1	8018.91	3.25	0	89.08	0	0.65	0	0	22.53	0	0	0	0	0	0	-11.95	-11.95
Inverter	MV4-2	369272	4909397	2	0	0	100.3	100.3	1	8036.64	3.25	0	89.1	0	0.65	0	0	22.55	0	0	0	0	0	0	-11.99	-11.99
Inverter	MV5-1	370020	4909142	2	0	0	100.3	100.3	1	8152.68	3.25	0	89.23	0	0.64	0	0	22.68	0	0	0	0	0	0	-12.23	-12.23
Inverter	MV6-1	370235	4907364	2	0	0	97.3	97.3	1	6806.43	3.25	0	87.66	0	0.71	0	0	21.05	0	0	0	0	0	0	-12.11	-12.11
DSTATCOM - 10 MVAR #2	DSAT2	369403	4908757	2.5	0	0	96.6	96.6	1	7518.37	3.5	0	88.52	0	3.86	0	0	4.55	0	0	0	0	0	0	-0.31	-0.31
DSTATCOM - 10 MVAR #1	DSAT1	369437	4908757	2.5	0	0	96.6	96.6	1	7534.09	3.5	0	88.54	0	3.86	0	0	4.56	0	0	0	0	0	0	-0.33	-0.33
SubstationTransformer	W_ST	369711.17	4906112.3	2.5	0	0	92	92	1	5518.13	3.5	0	85.84	0	0.67	0	-0.1	9.22	0	0	0	0	0	0	-3.75	-3.75
Inverter	MV1-3	364440	4906039	2	0	0	89.1	89.1	1	4230.64	3.25	0	83.53	0	1.45	0	0	11.41	0	0	0	0	0	0	-7.33	-7.33
Inverter	MV2-2	365977	4906654	2	0	0	89.1	89.1	1	4570.75	3.25	0	84.2	0	1.53	0	0	11.88	0	0	0	0	0	0	-8.56	-8.56
Westbrook Inverter Enclosur	W_INV3	369508	4906164	2	0	0	89.1	89.1	1	5420.18	3.25	0	85.68	0	1.74	0	0	13.02	0	0	0	0	0	0	-11.38	-11.38
Westbrook Inverter Enclosur	W_INV2	369374	4906388	2	0	0	89.1	89.1	1	5506.22	3.25	0	85.82	0	1.76	0	0	13.13	0	0	0	0	0	0	-11.65	-11.65
Westbrook Inverter Enclosur	W_INV4	369673	4906164	2	0	0	89.1	89.1	1	5530.18	3.25	0	85.85	0	1.77	0	0	13.16	0	0	0	0	0	0	-11.73	-11.73
Inverter	MV3-22	368656	4907142	2	0	0	89.1	89.1	1	5741.37	3.25	0	86.18	0	1.82	0	0	13.43	0	0	0	0	0	0	-12.38	-12.38
Westbrook Inverter Enclosur	W_INV7	369780	4906417	2	0	0	89.1	89.1	1	5789.81	3.25	0	86.25	0	1.83	0	0	13.5	0	0	0	0	0	0	-12.53	-12.53
Westbrook Inverter Enclosur	W_INV5	369719	4906574	2	0	0	89.1	89.1	1	5868.78	3.25	0	86.37	0	1.85	0	0	13.6	0	0	0	0	0	0	-12.76	-12.76
Westbrook Inverter Enclosur	W_INV6	369875	4906578	2	0	0	89.1	89.1	1	5973.42	3.25	0	86.52	0	1.88	0	0	13.73	0	0	0	0	0	0	-13.07	-13.07
Inverter	MV3-5	368340	4907843	2	0	0	89.1	89.1	1	6239.44	3.25	0	86.9	0	1.94	0	0	14.06	0	0	0	0	0	0	-13.85	-13.85
Inverter	MV3-1	368156	4907976	2	0	0	89.1	89.1	1	6295.33	3.25	0	86.98	0	1.96	0	0	14.13	0	0	0	0	0	0	-14.01	-14.01
Inverter	MV3-4	368502	4907925	2	0	0	89.1	89.1	1	6378.52	3.25	0	87.09	0	1.98	0	0	14.23	0	0	0	0	0	0	-14.25	-14.25
Inverter	MV3-2	368671	4907928	2	0	0	89.1	89.1	1	6450.97	3.25	0	87.19	0	2	0	0	14.32	0	0	0	0	0	0	-14.45	-14.45
Fixed Reactor Bank 1	FRB1	369378	4908755	6	0	0	89.8	89.8	1	7505.11	5.25	0	88.51	0	-0.23	0	0	11.22	0	0	0	0	0	0	-9.72	-9.72
Fixed Reactor Bank 2	FRB2	369464	4908755	6	0	0	89.8	89.8	1	7544.89	5.25	0	88.55	0	-0.22	0	0	11.25	0	0	0	0	0	0	-9.81	-9.81
Inverter	MV4-15	369176	4908481	2	0	0	89.1	89.1	1	7169.22	3.25	0	88.11	0	2.17	0	0	15.19	0	0	0	0	0	0	-16.41	-16.41
Inverter	MV4-14	369176	4908507	2	0	0	89.1	89.1	1	7192.43	3.25	0	88.14	0	2.17	0	0	15.21	0	0	0	0	0	0	-16.47	-16.47
Inverter	MV4-13	369051	4908605	2	0	0	89.1	89.1	1	7225.41	3.25	0	88.18	0	2.18	0	0	15.25	0	0	0	0	0	0	-16.55	-16.55
Inverter	MV4-12	369043	4908803	2	0	0	89.1	89.1	1	7401.25	3.25	0	88.39	0	2.22	0	0	15.46	0	0	0	0	0	0	-17.01	-17.01
Inverter	MV5-6	369982	4908507	2	0	0	89.1	89.1	1	7589.23	3.25	0	88.6	0	2.27	0	0	15.67	0	0	0	0	0	0	-17.49	-17.49
Westbrook Inverter Enclosur	W_INV1	369409	4906578	2	0	0	86.1	86.1	1	5677.32	3.25	0	86.08	0	1.81	0	0	13.35	0	0	0	0	0	0	-15.18	-15.18
Inverter	MV6-4	370250	4906966	2	0	0	86.1	86.1	1	6512.42	3.25	0	87.27	0	2.01	0	0	14.4	0	0	0	0	0	0	-17.63	-17.63
Westbrook Inverter Transfor	W_INVTR1	369403	4906578	2	0	0	78.2	78.2	1	5673.65	3.25	0	86.08	0	-3.31	0	0	2.64	0	0	0	0	0	0	-7.16	-7.16
Westbrook Inverter Transfor	W_INVTR3	369514	4906164	2	0	0	77.3	77.3	1	5424.13	3.25	0	85.69	0	-3.26	0	0	2.56	0	0	0	0	0	0	-7.64	-7.64
Westbrook Inverter Transfor	W_INVTR2	369368	4906388	2	0	0	77.3	77.3	1	5502.49	3.25	0	85.81	0	-3.28	0	0	2.58	0	0	0	0	0	0	-7.78	-7.78
Westbrook Inverter Transfor	W_INVTR4	369679	4906164	2	0	0	77.3	77.3	1	5534.23	3.25	0	85.86	0	-3.28	0	0	2.59	0	0	0	0	0	0	-7.83	-7.83
Westbrook Inverter Transfor	W_INVTR7	369786	4906417	2	0	0	77.3	77.3	1	5793.79	3.25	0	86.26	0	-3.33	0	0	2.68	0	0	0	0	0	0	-8.26	-8.26
Westbrook Inverter Transfor	W_INVTR5	369725	4906574	2	0	0	77.3	77.3	1	5872.64	3.25	0	86.38	0	-3.34	0	0	2.7	0	0	0	0	0	0	-8.39	-8.39
Westbrook Inverter Transfor	W_INVTR6	369881	4906578	2	0	0	77.3	77.3	1	5977.37	3.25	0	86.53	0	-3.36	0	0	2.73	0	0	0	0	0	0	-8.56	-8.56
Inverter Transformer	MV1-14 T	365157	4905049	2	0	0	69.4	69.4	1	3067.35	3.25	0	80.74	0	2.53	0	0	5.94	0	0	0	0	0	0	-19.85	-19.85
Inverter Transformer	MV1-13 T	364725	4905241	2	0	0	69.4	69.4	1	3383.47	3.25	0	81.59	0	2.62	0	0	6.2	0	0	0	0	0	0	-21.06	-21.06
Inverter Transformer	MV1-10 T	365010	4905564	2	0	0	69.4	69.4	1	3602.83	3.25	0	82.13	0	2.68	0	0	6.37	0	0	0	0	0	0	-21.84	-21.84
Inverter Transformer	MV1-7 T	364919	4905782	2	0	0	69.4	69.4	1	3837.07	3.25	0	82.68	0	2.74	0	0	6.55	0	0	0	0	0	0	-22.63	-22.63
Inverter Transformer	MV2-1 T	365836	4906816	2	0	0	69.4	69.4	1	4733.75	3.25	0	84.5	0	2.96	0	0	7.2	0	0	0	0	0	0	-25.31	-25.31
Inverter Transformer	MV6-4 T	370244	4906966	2	0	0	69.4	69.4	1	6508.45	3.25	0	87.27	0	3.26	0	0	8.32	0	0	0	0	0	0	-29.5	-29.5
Inverter Transformer	MV6-1 T	370230	4907364	2	0	0	69.4	69.4	1	6803.28	3.25	0	87.65	0	3.3	0	0	8.49	0	0	0	0	0	0	-30.09	-30.09
Inverter Transformer	MV1-15 T	365309	4904994	2	0	0	56.1	56.1	1	2978.32	3.25	0	80.48	0	0.82	0	0	8.83	0	0	0	0	0	0	-34.07	-34.07
Inverter Transformer	MV1-12 T	365044	4905386	2	0	0	56.1	56.1	1	3422.12	3.25	0	81.69	0	1.01	0	0	9.56	0	0	0	0	0	0	-36.2	-36.2
Inverter Transformer	MV1-11 T	364649	4905414	2	0	0	56.1	56.1	1	3572.24	3.25	0	82.06	0	1.07	0	0	9.8	0	0	0	0	0	0	-36.87	-36.87
Inverter Transformer	MV1-8 T	364782	4905647	2	0	0	56.1	56.1	1	3747.18	3.25	0	82.47	0	1.14	0	0	10.07	0	0	0	0	0	0	-37.63	-37.63
Inverter Transformer	MV1-9 T	364555	4905646	2	0	0	56.1	56.1	1	3822.53	3.25	0	82.65	0	1.17	0	0	10.19	0	0	0	0	0	0	-37.95	-37.95

	Inverter Transformer	MV1-4 T	364821	4905918	2	0	0	56.1	56.1	1	3994.68	3.25	0	83.03	0	1.24	0	0	10.45	0	0	0	0	0	0	-38.66	-38.66
	Inverter Transformer	MV1-5 T	364676	4905892	2	0	0	56.1	56.1	1	4013.03	3.25	0	83.07	0	1.25	0	0	10.47	0	0	0	0	0	0	-38.73	-38.73
	Inverter Transformer	MV1-6 T	364482	4905835	2	0	0	56.1	56.1	1	4025.14	3.25	0	83.1	0	1.25	0	0	10.49	0	0	0	0	0	0	-38.78	-38.78
	Inverter Transformer	MV1-2 T	364759	4906063	2	0	0	56.1	56.1	1	4151.28	3.25	0	83.36	0	1.3	0	0	10.68	0	0	0	0	0	0	-39.29	-39.29
	Inverter Transformer	MV1-3 T	364435	4906039	2	0	0	56.1	56.1	1	4232.41	3.25	0	83.53	0	1.34	0	0	10.8	0	0	0	0	0	0	-39.6	-39.6
	Inverter Transformer	MV1-1 T	364721	4906166	2	0	0	56.1	56.1	1	4260.85	3.25	0	83.59	0	1.35	0	0	10.84	0	0	0	0	0	0	-39.71	-39.71
	Inverter Transformer	MV2-4 T	365590	4906628	2	0	0	56.1	56.1	1	4558.1	3.25	0	84.18	0	1.46	0	0	11.26	0	0	0	0	0	0	-40.84	-40.84
	Inverter Transformer	MV2-3 T	365814	4906641	2	0	0	56.1	56.1	1	4559.36	3.25	0	84.18	0	1.46	0	0	11.26	0	0	0	0	0	0	-40.84	-40.84
	Inverter Transformer	MV2-2 T	365982	4906654	2	0	0	56.1	56.1	1	4570.79	3.25	0	84.2	0	1.47	0	0	11.27	0	0	0	0	0	0	-40.88	-40.88
	Inverter Transformer	MV3-18 T	367757	4907412	2	0	0	56.1	56.1	1	5629.71	3.25	0	86.01	0	1.84	0	0	12.66	0	0	0	0	0	0	-44.45	-44.45
	Inverter Transformer	MV3-21 T	368484	4907206	2	0	0	56.1	56.1	1	5719.3	3.25	0	86.15	0	1.87	0	0	12.77	0	0	0	0	0	0	-44.73	-44.73
	Inverter Transformer	MV3-22 T	368661	4907142	2	0	0	56.1	56.1	1	5743.74	3.25	0	86.18	0	1.88	0	0	12.8	0	0	0	0	0	0	-44.8	-44.8
	Inverter Transformer	MV3-12 T	367674	4907594	2	0	0	56.1	56.1	1	5776.83	3.25	0	86.23	0	1.89	0	0	12.84	0	0	0	0	0	0	-44.9	-44.9
	Inverter Transformer	MV3-19 T	368352	4907347	2	0	0	56.1	56.1	1	5789.72	3.25	0	86.25	0	1.9	0	0	12.85	0	0	0	0	0	0	-44.94	-44.94
	Inverter Transformer	MV3-17 T	368183	4907472	2	0	0	56.1	56.1	1	5836.59	3.25	0	86.32	0	1.91	0	0	12.91	0	0	0	0	0	0	-45.08	-45.08
	Inverter Transformer	MV3-13 T	367958	4907577	2	0	0	56.1	56.1	1	5852.35	3.25	0	86.35	0	1.92	0	0	12.93	0	0	0	0	0	0	-45.13	-45.13
	Inverter Transformer	MV3-15 T	368351	4907477	2	0	0	56.1	56.1	1	5907.74	3.25	0	86.43	0	1.94	0	0	12.99	0	0	0	0	0	0	-45.3	-45.3
	Inverter Transformer	MV3-20 T	368683	4907317	2	0	0	56.1	56.1	1	5908.63	3.25	0	86.43	0	1.94	0	0	12.99	0	0	0	0	0	0	-45.3	-45.3
	Inverter Transformer	MV3-16 T	368509	4907475	2	0	0	56.1	56.1	1	5972.15	3.25	0	86.52	0	1.96	0	0	13.07	0	0	0	0	0	0	-45.49	-45.49
	Inverter Transformer	MV3-10 T	368162	4907669	2	0	0	56.1	56.1	1	6011.16	3.25	0	86.58	0	1.97	0	0	13.12	0	0	0	0	0	0	-45.61	-45.61
	Inverter Transformer	MV3-7 T	367951	4907754	2	0	0	56.1	56.1	1	6016.46	3.25	0	86.59	0	1.97	0	0	13.12	0	0	0	0	0	0	-45.62	-45.62
	Inverter Transformer	MV3-14 T	368678	4907498	2	0	0	56.1	56.1	1	6067.27	3.25	0	86.66	0	1.99	0	0	13.18	0	0	0	0	0	0	-45.77	-45.77
	Inverter Transformer	MV3-11 T	368340	4907662	2	0	0	56.1	56.1	1	6072.76	3.25	0	86.67	0	1.99	0	0	13.19	0	0	0	0	0	0	-45.79	-45.79
	Inverter Transformer	MV3-6 T	368156	4907834	2	0	0	56.1	56.1	1	6162.62	3.25	0	86.8	0	2.02	0	0	13.29	0	0	0	0	0	0	-46.05	-46.05
	Inverter Transformer	MV3-3 T	367944	4907927	2	0	0	56.1	56.1	1	6177.51	3.25	0	86.82	0	2.02	0	0	13.31	0	0	0	0	0	0	-46.09	-46.09
	Inverter Transformer	MV3-9 T	368517	4907703	2	0	0	56.1	56.1	1	6182.09	3.25	0	86.82	0	2.02	0	0	13.32	0	0	0	0	0	0	-46.1	-46.1
	Inverter Transformer	MV3-5 T	368335	4907843	2	0	0	56.1	56.1	1	6237.52	3.25	0	86.9	0	2.04	0	0	13.38	0	0	0	0	0	0	-46.26	-46.26
	Inverter Transformer	MV3-8 T	368685	4907712	2	0	0	56.1	56.1	1	6262.06	3.25	0	86.93	0	2.05	0	0	13.41	0	0	0	0	0	0	-46.33	-46.33
	Inverter Transformer	MV3-1 T	368150	4907976	2	0	0	56.1	56.1	1	6293.22	3.25	0	86.98	0	2.06	0	0	13.44	0	0	0	0	0	0	-46.42	-46.42
	Inverter Transformer	MV3-4 T	368507	4907925	2	0	0	56.1	56.1	1	6380.53	3.25	0	87.1	0	2.08	0	0	13.54	0	0	0	0	0	0	-46.67	-46.67
	Inverter Transformer	MV3-2 T	368677	4907928	2	0	0	56.1	56.1	1	6453.51	3.25	0	87.2	0	2.1	0	0	13.63	0	0	0	0	0	0	-46.87	-46.87
	Inverter Transformer	MV6-3 T	370202	4907140	2	0	0	56.1	56.1	1	6612.84	3.25	0	87.41	0	2.15	0	0	13.81	0	0	0	0	0	0	-47.31	-47.31
	Inverter Transformer	MV6-2 T	370091	4907339	2	0	0	56.1	56.1	1	6696.86	3.25	0	87.52	0	2.17	0	0	13.9	0	0	0	0	0	0	-47.53	-47.53
	Inverter Transformer	MV4-15 T	369170	4908481	2	0	0	56.1	56.1	1	7166.52	3.25	0	88.11	0	2.3	0	0	14.41	0	0	0	0	0	0	-48.76	-48.76
	Inverter Transformer	MV4-14 T	369182	4908507	2	0	0	56.1	56.1	1	7195.13	3.25	0	88.14	0	2.31	0	0	14.44	0	0	0	0	0	0	-48.83	-48.83
	Inverter Transformer	MV4-13 T	369057	4908605	2	0	0	56.1	56.1	1	7227.99	3.25	0	88.18	0	2.32	0	0	14.47	0	0	0	0	0	0	-48.91	-48.91
	Inverter Transformer	MV4-12 T	369049	4908803	2	0	0	56.1	56.1	1	7403.77	3.25	0	88.39	0	2.37	0	0	14.66	0	0	0	0	0	0	-49.35	-49.35
	Inverter Transformer	MV4-11 T	369269	4908855	2	0	0	56.1	56.1	1	7545.43	3.25	0	88.55	0	2.4	0	0	14.8	0	0	0	0	0	0	-49.7	-49.7
	Inverter Transformer	MV4-10 T	369307	4908858	2	0	0	56.1	56.1	1	7564.95	3.25	0	88.58	0	2.41	0	0	14.82	0	0	0	0	0	0	-49.74	-49.74
	Inverter Transformer	MV4-7 T	369040	4909001	2	0	0	56.1	56.1	1	7580.24	3.25	0	88.59	0	2.41	0	0	14.84	0	0	0	0	0	0	-49.78	-49.78
	Inverter Transformer	MV5-6 T	369987	4908507	2	0	0	56.1	56.1	1	7591.89	3.25	0	88.61	0	2.41	0	0	14.85	0	0	0	0	0	0	-49.81	-49.81
	Inverter Transformer	MV4-8 T	369262	4909001	2	0	0	56.1	56.1	1	7673.69	3.25	0	88.7	0	2.43	0	0	14.93	0	0	0	0	0	0	-50.01	-50.01
	Inverter Transformer	MV4-9 T	369284	4909001	2	0	0	56.1	56.1	1	7683.24	3.25	0	88.71	0	2.44	0	0	14.94	0	0	0	0	0	0	-50.03	-50.03
	Inverter Transformer	MV4-4 T	369033	4909199	2	0	0	56.1	56.1	1	7758.56	3.25	0	88.8	0	2.45	0	0	15.02	0	0	0	0	0	0	-50.21	-50.21
	Inverter Transformer	MV5-5 T	370021	4908690	2	0	0	56.1	56.1	1	7765.16	3.25	0	88.8	0	2.46	0	0	15.02	0	0	0	0	0	0	-50.22	-50.22
	Inverter Transformer	MV4-6 T	369249	4909192	2	0	0	56.1	56.1	1	7840.81	3.25	0	88.89	0	2.47	0	0	15.1	0	0	0	0	0	0	-50.4	-50.4
	Inverter Transformer	MV4-5 T	369283	4909199	2	0	0	56.1	56.1	1	7861.56	3.25	0	88.91	0	2.48	0	0	15.12	0	0	0	0	0	0	-50.45	-50.45
	Inverter Transformer	MV5-2 T	370011	4908853	2	0	0	56.1	56.1	1	7899.14	3.25	0	88.95	0	2.49	0	0	15.16	0	0	0	0	0	0	-50.54	-50.54
	Inverter Transformer	MV4-1 T	369017	4909397	2	0	0	56.1	56.1	1	7934.33	3.25	0	88.99	0	2.49	0	0	15.19	0	0	0	0	0	0	-50.62	-50.62
	Inverter Transformer	MV5-4 T	370330	4908707	2	0	0	56.1	56.1	1	7946.06	3.25	0	89	0	2.5	0	0	15.2	0	0	0	0	0	0	-50.65	-50.65
	Inverter Transformer	MV5-3 T	370237	4908851	2	0	0	56.1	56.1	1	8016.25	3.25	0	89.08	0	2.51	0	0	15.27	0	0	0	0	0	0	-50.81	-50.81
	Inverter Transformer	MV4-3 T	369234	4909397	2	0	0	56.1	56.1	1	8020.97	3.25	0	89.08	0	2.51	0	0	15.28	0	0	0	0	0	0	-50.82	-50.82
	Inverter Transformer	MV4-2 T	369267	4909397	2	0	0	56.1	56.1	1	8034.57	3.25	0	89.1	0	2.52	0	0	15.29	0	0	0	0	0	0	-50.85	-50.85
	Inverter Transformer	MV5-1 T	370015	4909142	2	0	0	56.1	56.1	1	8150.18	3.25	0	89.22	0	2.54	0	0	15.4	0	0	0	0	0	0	-51.11	-51.11
	Line Reactor	NGR	369421	4908787.5	5	0	0	45.4	45.4	1	7553.73	5.25	0	88.56	0	3.21	1.37	0.1	3.09	0	0	0	0	0	0	-50.88	-50.88
Limit. Valu	0	0																								
Level D/N:	22.7223	22.7223																								

Receiver: Vacant Lot Receptor
ID: G-V6
X: 366141.8
Y: 4902440.5
Z: 4.5
Ground: 0

ISO	Description	ID	X	Y	Z	Ground	ReflOrd	LxT	LxN	L/A	Dist.	hm	Freq	Adiv	K0b	Agr	Abar	z	Aatm	Afol	Ahous	Cmet	CmetN	Dc	RL	LtotT	LtotN
	Sol_Luce Substation	S_Substation	369426	4908792	3.5	0	0	112.1	112.1	1	7150.35	5.25	0	88.09	0	1.41	2.41	0.31	10.89	0	0	0	0	0	0	9.27	9.27
	Inverter	MV1-15	365315	4904994	2	0	0	100.3	100.3	1	2684.02	3.25	0	79.58	0	0.3	0	0	14.8	0	0	0	0	0	0	5.64	5.64
	Inverters	G_Inv9	366750.9	4902691.8	2	0	0	87.7	87.7	1	658.91	3.25	0	67.38	0	2.4	0	0	0.98	0	0	0	0	0	0	16.9	16.9
	Inverters	G_Inv7	366694.6	4902824.7	2	0	0	87.7	87.7	1	673.2	3.25	0	67.56	0	2.4	0	0	1	0	0	0	0	0	0	16.69	16.69
	Gardiner Substation	G_Sub	366586.3	4903349.9	2.5	0	0	90.8	90.8	1	1012.22	3.5	0	71.11	0	-0.37	0	0	2.54	0	0	0	0	0	0	17.49	17.49
	Inverters	G_Inv5	366638.5	4902958.1	2	0	0	87.7	87.7	1	717.38	3.25	0	68.11	0	2.41	0	0	1.06	0	0	0	0	0	0	16.08	16.08
	Inverter	MV1-12	365038	4905386	2	0	0	100.3	100.3	1	3145.53	3.25	0	80.95	0	0.39	0	0	15.63	0	0	0	0	0	0	3.34	3.34
	Inverter	MV1-11	364655	4905414	2	0	0	100.3	100.3	1	3324.5	3.25	0	81.43	0	0.42	0	0	15.94	0	0	0	0	0	0	2.52	2.52

Inverters	G_Inv3	366583.7	4903091.4	2	0	0	87.7	87.7	1	786.74	3.25	0	68.92	0	2.42	0	0	1.15	0	0	0	0	0	0	15.17	15.17
Inverters	G_Inv10	366900.7	4902704.8	2	0	0	87.7	87.7	1	803.61	3.25	0	69.1	0	2.42	0	0	1.17	0	0	0	0	0	0	14.97	14.97
Inverters	G_Inv8	366844.5	4902838.5	2	0	0	87.7	87.7	1	807.59	3.25	0	69.14	0	2.42	0	0	1.18	0	0	0	0	0	0	14.92	14.92
Inverter	MV1-8	364788	4905647	2	0	0	100.3	100.3	1	3480.58	3.25	0	81.83	0	0.45	0	0	16.2	0	0	0	0	0	0	1.83	1.83
Inverter	MV1-9	364561	4905646	2	0	0	100.3	100.3	1	3574.1	3.25	0	82.06	0	0.46	0	0	16.35	0	0	0	0	0	0	1.43	1.43
Inverters	G_Inv6	366788.5	4902972	2	0	0	87.7	87.7	1	837.09	3.25	0	69.46	0	2.43	0	0	1.22	0	0	0	0	0	0	14.56	14.56
Inverter	MV1-4	364815	4905918	2	0	0	100.3	100.3	1	3722.02	3.25	0	82.42	0	0.49	0	0	16.6	0	0	0	0	0	0	0.81	0.81
Inverter	MV1-5	364671	4905892	2	0	0	100.3	100.3	1	3751.81	3.25	0	82.48	0	0.49	0	0	16.65	0	0	0	0	0	0	0.69	0.69
Inverters	G_Inv1	366526.4	4903225.8	2	0	0	87.7	87.7	1	874.43	3.25	0	69.83	0	2.43	0	0	1.27	0	0	0	0	0	0	14.13	14.13
Inverter	MV1-6	364477	4905835	2	0	0	100.3	100.3	1	3780.77	3.25	0	82.55	0	0.5	0	0	16.69	0	0	0	0	0	0	0.57	0.57
Inverters	G_Inv4	366732.8	4903105	2	0	0	87.7	87.7	1	889.3	3.25	0	69.98	0	2.43	0	0	1.28	0	0	0	0	0	0	13.96	13.96
Inverter	MV1-2	364753	4906063	2	0	0	100.3	100.3	1	3879.6	3.25	0	82.78	0	0.51	0	0	16.86	0	0	0	0	0	0	0.17	0.17
Inverter	MV1-14	365163	4905049	2	0	0	97.3	97.3	1	2786.1	3.25	0	79.9	0	0.32	0	0	14.99	0	0	0	0	0	0	2.1	2.1
Inverter	MV1-1	364715	4906166	2	0	0	100.3	100.3	1	3989.38	3.25	0	83.02	0	0.53	0	0	17.03	0	0	0	0	0	0	-0.26	-0.26
Inverters	G_Inv2	366676.9	4903239.1	2	0	0	87.7	87.7	1	961.3	3.25	0	70.66	0	2.44	0	0	1.38	0	0	0	0	0	0	13.18	13.18
Inverter	MV2-3	365820	4906641	2	0	0	100.3	100.3	1	4212.81	3.25	0	83.49	0	0.56	0	0	17.39	0	0	0	0	0	0	-1.12	-1.12
Inverter	MV2-4	365586	4906624	2	0	0	100.3	100.3	1	4220.26	3.25	0	83.51	0	0.56	0	0	17.4	0	0	0	0	0	0	-1.15	-1.15
Inverter	MV1-13	364731	4905241	2	0	0	97.3	97.3	1	3135.79	3.25	0	80.93	0	0.39	0	0	15.61	0	0	0	0	0	0	0.39	0.39
Inverter	MV1-10	365004	4905564	2	0	0	97.3	97.3	1	3324.28	3.25	0	81.43	0	0.42	0	0	15.93	0	0	0	0	0	0	-0.48	-0.48
Inverter	MV1-7	364925	4905782	2	0	0	97.3	97.3	1	3556.15	3.25	0	82.02	0	0.46	0	0	16.33	0	0	0	0	0	0	-1.49	-1.49
Inverter	MV3-18	367752	4907412	2	0	0	100.3	100.3	1	5225.76	3.25	0	85.36	0	0.66	0	0	18.91	0	0	0	0	0	0	-4.62	-4.62
Inverter	MV3-21	368478	4907206	2	0	0	100.3	100.3	1	5307.34	3.25	0	85.5	0	0.67	0	0	19.03	0	0	0	0	0	0	-4.88	-4.88
Inverter	MV3-12	367668	4907594	2	0	0	100.3	100.3	1	5374.74	3.25	0	85.61	0	0.67	0	0	19.12	0	0	0	0	0	0	-5.09	-5.09
Inverter	MV3-19	368357	4907347	2	0	0	100.3	100.3	1	5383.39	3.25	0	85.62	0	0.67	0	0	19.14	0	0	0	0	0	0	-5.12	-5.12
Inverter	MV3-17	368178	4907472	2	0	0	100.3	100.3	1	5427.9	3.25	0	85.69	0	0.68	0	0	19.2	0	0	0	0	0	0	-5.25	-5.25
Inverter	MV3-13	367963	4907577	2	0	0	100.3	100.3	1	5449.81	3.25	0	85.73	0	0.68	0	0	19.23	0	0	0	0	0	0	-5.32	-5.32
Inverter	MV3-20	368689	4907317	2	0	0	100.3	100.3	1	5501.68	3.25	0	85.81	0	0.68	0	0	19.3	0	0	0	0	0	0	-5.48	-5.48
Inverter	MV3-15	368357	4907477	2	0	0	100.3	100.3	1	5502.13	3.25	0	85.81	0	0.68	0	0	19.3	0	0	0	0	0	0	-5.48	-5.48
Inverter	MV3-16	368514	4907475	2	0	0	100.3	100.3	1	5565.39	3.25	0	85.91	0	0.68	0	0	19.39	0	0	0	0	0	0	-5.67	-5.67
Inverter	MV3-10	368167	4907669	2	0	0	100.3	100.3	1	5607.02	3.25	0	85.97	0	0.69	0	0	19.45	0	0	0	0	0	0	-5.8	-5.8
Inverter	MV3-7	367945	4907754	2	0	0	100.3	100.3	1	5611.13	3.25	0	85.98	0	0.69	0	0	19.46	0	0	0	0	0	0	-5.81	-5.81
Inverter	MV3-14	368684	4907498	2	0	0	100.3	100.3	1	5660.49	3.25	0	86.06	0	0.69	0	0	19.53	0	0	0	0	0	0	-5.96	-5.96
Inverter	MV3-11	368346	4907662	2	0	0	100.3	100.3	1	5667.68	3.25	0	86.07	0	0.69	0	0	19.54	0	0	0	0	0	0	-5.98	-5.98
Inverter	MV3-6	368162	4907834	2	0	0	100.3	100.3	1	5759.43	3.25	0	86.21	0	0.69	0	0	19.66	0	0	0	0	0	0	-6.25	-6.25
Inverter	MV3-9	368512	4907703	2	0	0	100.3	100.3	1	5771.63	3.25	0	86.23	0	0.7	0	0	19.68	0	0	0	0	0	0	-6.29	-6.29
Inverter	MV3-3	367939	4907927	2	0	0	100.3	100.3	1	5773.35	3.25	0	86.23	0	0.7	0	0	19.68	0	0	0	0	0	0	-6.29	-6.29
Inverter	MV3-8	368680	4907712	2	0	0	100.3	100.3	1	5850.74	3.25	0	86.34	0	0.7	0	0	19.79	0	0	0	0	0	0	-6.52	-6.52
Inverter	MV2-1	365842	4906816	2	0	0	97.3	97.3	1	4385.76	3.25	0	83.84	0	0.58	0	0	17.65	0	0	0	0	0	0	-4.76	-4.76
Inverter	MV6-3	370207	4907140	2	0	0	100.3	100.3	1	6213.79	3.25	0	86.87	0	0.71	0	0	20.28	0	0	0	0	0	0	-7.55	-7.55
Inverter	MV6-2	370085	4907339	2	0	0	100.3	100.3	1	6288.41	3.25	0	86.97	0	0.71	0	0	20.38	0	0	0	0	0	0	-7.75	-7.75
Inverter	MV4-11	369264	4908855	2	0	0	100.3	100.3	1	7134	3.25	0	88.07	0	0.71	0	0	21.47	0	0	0	0	0	0	-9.93	-9.93
Inverter	MV4-10	369312	4908858	2	0	0	100.3	100.3	1	7157.83	3.25	0	88.1	0	0.7	0	0	21.5	0	0	0	0	0	0	-9.98	-9.98
Inverter	MV4-7	369035	4909001	2	0	0	100.3	100.3	1	7170.13	3.25	0	88.11	0	0.7	0	0	21.51	0	0	0	0	0	0	-10.01	-10.01
Inverter	MV4-8	369256	4909001	2	0	0	100.3	100.3	1	7262.12	3.25	0	88.22	0	0.7	0	0	21.62	0	0	0	0	0	0	-10.23	-10.23
Inverter	MV4-9	369289	4909001	2	0	0	100.3	100.3	1	7276.33	3.25	0	88.24	0	0.7	0	0	21.64	0	0	0	0	0	0	-10.27	-10.27
Inverter	MV4-4	369027	4909199	2	0	0	100.3	100.3	1	7348.59	3.25	0	88.32	0	0.7	0	0	21.73	0	0	0	0	0	0	-10.44	-10.44
Inverter	MV5-5	370015	4908690	2	0	0	100.3	100.3	1	7352.41	3.25	0	88.33	0	0.7	0	0	21.74	0	0	0	0	0	0	-10.45	-10.45
Inverter	MV4-6	369243	4909192	2	0	0	100.3	100.3	1	7429.68	3.25	0	88.42	0	0.69	0	0	21.83	0	0	0	0	0	0	-10.63	-10.63
Inverter	MV4-5	369289	4909199	2	0	0	100.3	100.3	1	7455.35	3.25	0	88.45	0	0.69	0	0	21.86	0	0	0	0	0	0	-10.69	-10.69
Inverter	MV5-2	370006	4908853	2	0	0	100.3	100.3	1	7486.8	3.25	0	88.49	0	0.69	0	0	21.9	0	0	0	0	0	0	-10.76	-10.76
Inverter	MV4-1	369011	4909397	2	0	0	100.3	100.3	1	7524.97	3.25	0	88.53	0	0.69	0	0	21.94	0	0	0	0	0	0	-10.85	-10.85
Inverter	MV5-4	370324	4908707	2	0	0	100.3	100.3	1	7533.91	3.25	0	88.54	0	0.69	0	0	21.96	0	0	0	0	0	0	-10.87	-10.87
Inverter	MV5-3	370231	4908851	2	0	0	100.3	100.3	1	7603.69	3.25	0	88.62	0	0.68	0	0	22.04	0	0	0	0	0	0	-11.03	-11.03
Inverter	MV4-3	369229	4909397	2	0	0	100.3	100.3	1	7610.76	3.25	0	88.63	0	0.68	0	0	22.05	0	0	0	0	0	0	-11.05	-11.05
Inverter	MV4-2	369272	4909397	2	0	0	100.3	100.3	1	7628.31	3.25	0	88.65	0	0.68	0	0	22.07	0	0	0	0	0	0	-11.09	-11.09
Inverter	MV5-1	370020	4909142	2	0	0	100.3	100.3	1	7742.77	3.25	0	88.78	0	0.67	0	0	22.2	0	0	0	0	0	0	-11.34	-11.34
Inverter	MV6-1	370235	4907364	2	0	0	97.3	97.3	1	6402.75	3.25	0	87.13	0	0.71	0	0	20.53	0	0	0	0	0	0	-11.06	-11.06
DSTATCOM - 10 MVAR #2	DSAT2	369403	4908757	2.5	0	0	96.6	96.6	1	7108.7	3.5	0	88.04	0	3.84	0	0	4.36	0	0	0	0	0	0	0.39	0.39
DSTATCOM - 10 MVAR #1	DSAT1	369437	4908757	2.5	0	0	96.6	96.6	1	7124.36	3.5	0	88.05	0	3.84	0	0	4.37	0	0	0	0	0	0	0.36	0.36
SubstationTransformer	W_ST	369711.17	4906112.3	2.5	0	0	92	92	1	5120.77	3.5	0	85.19	0	0.59	0	-0.1	8.76	0	0	0	0	0	0	-2.56	-2.56
Inverter	MV1-3	364440	4906039	2	0	0	89.1	89.1	1	3980.62	3.25	0	83	0	1.39	0	0	11.06	0	0	0	0	0	0	-6.39	-6.39
Inverter	MV2-2	365977	4906654	2	0	0	89.1	89.1	1	4216.72	3.25	0	83.5	0	1.45	0	0	11.39	0	0	0	0	0	0	-7.28	-7.28
Westbrook Inverter Enclosur	W_INV3	369508	4906164	2	0	0	89.1	89.1	1	5019.54	3.25	0	85.01	0	1.64	0	0	12.49	0	0	0	0	0	0	-10.09	-10.09
Westbrook Inverter Enclosur	W_INV2	369374	4906388	2	0	0	89.1	89.1	1	5101.95	3.25	0	85.15	0	1.66	0	0	12.6	0	0	0	0	0	0	-10.36	-10.36
Westbrook Inverter Enclosur	W_INV4	369673	4906164	2	0	0	89.1	89.1	1	5131.65	3.25	0	85.21	0	1.67	0	0	12.64	0	0	0	0	0	0	-10.46	-10.46
Inverter	MV3-22	368656	4907142	2	0	0	89.1	89.1	1	5331.54	3.25	0	85.54	0	1.72	0	0	12.9	0	0	0	0	0	0	-11.1	-11.1
Westbrook Inverter Enclosur	W_INV7	369780	4906417	2	0	0	89.1	89.1	1	5389.72	3.25	0	85.63	0	1.74	0	0	12.98	0	0	0	0	0	0	-11.29	-11.29
Westbrook Inverter Enclosur	W_INV5	369719	4906574	2	0	0	89.1	89.1	1	5466.46	3.25	0	85.75	0	1.75	0	0	13.08	0	0	0	0	0	0	-11.53	-11.53
Westbrook Inverter Enclosur	W_INV6	369875	4906578	2	0	0	89.1	89.1	1	5572.76	3.25	0	85.92	0	1.78	0	0	13.22	0	0	0	0	0	0	-11.86	-11.86
Inverter	MV3-5	368340	4907843	2	0	0	89.1	89.1	1	5832.59	3.25	0	86.32	0	1.84	0	0	13.55	0	0	0	0	0	0	-12.65	-12.65
Inverter	MV3-1	368156	4907976	2	0	0	89.1	89.1	1	5890.57	3.25	0	86.4	0	1.86	0	0	13.62	0	0	0	0	0	0	-12.83	-12.83
Inverter	MV3-4	368502	4907925	2	0	0	89.1	89.1	1	5970.79	3.25	0	86.52	0	1.88	0	0	13.73	0	0	0	0	0	0	-13.07	-13.07
Inverter	MV3-2	368671	4907928	2	0	0	89.1	89.1	1	6042.31	3.25	0	86.62	0	1.9	0	0	13.82	0	0	0	0	0	0	-13.28	-13.28
Fixed Reactor Bank 1	FRB1	369378	4908755	6	0	0	89.8	89.8	1	7095.48	5.25	0	88.02	0	-0.27	0	0	10.84	0	0	0	0	0	0	-8.81	-8.81

Fixed Reactor Bank 2	FRB2	369464	4908755	6	0	0	89.8	89.8	1	7135.12	5.25	0	88.07	0	-0.27	0	0	10.88	0	0	0	0	0	0	-8.9	-8.9
Inverter	MV4-15	369176	4908481	2	0	0	89.1	89.1	1	6759.73	3.25	0	87.6	0	2.07	0	0	14.7	0	0	0	0	0	0	-15.31	-15.31
Inverter	MV4-14	369176	4908507	2	0	0	89.1	89.1	1	6782.98	3.25	0	87.63	0	2.08	0	0	14.73	0	0	0	0	0	0	-15.37	-15.37
Inverter	MV4-13	369051	4908605	2	0	0	89.1	89.1	1	6816.49	3.25	0	87.67	0	2.08	0	0	14.77	0	0	0	0	0	0	-15.46	-15.46
Inverter	MV4-12	369043	4908803	2	0	0	89.1	89.1	1	6992.74	3.25	0	87.89	0	2.13	0	0	14.98	0	0	0	0	0	0	-15.94	-15.94
Inverter	MV5-6	369982	4908507	2	0	0	89.1	89.1	1	7179.8	3.25	0	88.12	0	2.17	0	0	15.2	0	0	0	0	0	0	-16.43	-16.43
Westbrook Inverter Enclosur	W_INV1	369409	4906578	2	0	0	86.1	86.1	1	5271.95	3.25	0	85.44	0	1.71	0	0	12.82	0	0	0	0	0	0	-13.91	-13.91
Inverter	MV6-4	370250	4906966	2	0	0	86.1	86.1	1	6112.08	3.25	0	86.72	0	1.91	0	0	13.9	0	0	0	0	0	0	-16.48	-16.48
Westbrook Inverter Transfor	W_INVTR1	369403	4906578	2	0	0	78.2	78.2	1	5268.24	3.25	0	85.43	0	-3.23	0	0	2.5	0	0	0	0	0	0	-6.46	-6.46
Westbrook Inverter Transfor	W_INVTR3	369514	4906164	2	0	0	77.3	77.3	1	5023.56	3.25	0	85.02	0	-3.18	0	0	2.42	0	0	0	0	0	0	-6.92	-6.92
Westbrook Inverter Transfor	W_INVTR2	369368	4906388	2	0	0	77.3	77.3	1	5098.15	3.25	0	85.15	0	-3.2	0	0	2.45	0	0	0	0	0	0	-7.06	-7.06
Westbrook Inverter Transfor	W_INVTR4	369679	4906164	2	0	0	77.3	77.3	1	5135.78	3.25	0	85.21	0	-3.2	0	0	2.46	0	0	0	0	0	0	-7.13	-7.13
Westbrook Inverter Transfor	W_INVTR7	369786	4906417	2	0	0	77.3	77.3	1	5393.77	3.25	0	85.64	0	-3.25	0	0	2.55	0	0	0	0	0	0	-7.59	-7.59
Westbrook Inverter Transfor	W_INVTR5	369725	4906574	2	0	0	77.3	77.3	1	5470.39	3.25	0	85.76	0	-3.27	0	0	2.57	0	0	0	0	0	0	-7.72	-7.72
Westbrook Inverter Transfor	W_INVTR6	369881	4906578	2	0	0	77.3	77.3	1	5576.78	3.25	0	85.93	0	-3.29	0	0	2.61	0	0	0	0	0	0	-7.9	-7.9
Inverter Transformer	MV1-14 T	365157	4905049	2	0	0	69.4	69.4	1	2788.21	3.25	0	79.91	0	2.44	0	0	5.7	0	0	0	0	0	0	-18.7	-18.7
Inverter Transformer	MV1-13 T	364725	4905241	2	0	0	69.4	69.4	1	3138.49	3.25	0	80.93	0	2.55	0	0	6	0	0	0	0	0	0	-20.13	-20.13
Inverter Transformer	MV1-10 T	365010	4905564	2	0	0	69.4	69.4	1	3322.23	3.25	0	81.43	0	2.6	0	0	6.15	0	0	0	0	0	0	-20.83	-20.83
Inverter Transformer	MV1-7 T	364919	4905782	2	0	0	69.4	69.4	1	3558.21	3.25	0	82.02	0	2.67	0	0	6.34	0	0	0	0	0	0	-21.68	-21.68
Inverter Transformer	MV2-1 T	365836	4906816	2	0	0	69.4	69.4	1	4386.17	3.25	0	83.84	0	2.88	0	0	6.96	0	0	0	0	0	0	-24.33	-24.33
Inverter Transformer	MV6-4 T	370244	4906966	2	0	0	69.4	69.4	1	6108.04	3.25	0	86.72	0	3.2	0	0	8.08	0	0	0	0	0	0	-28.66	-28.66
Inverter Transformer	MV6-1 T	370230	4907364	2	0	0	69.4	69.4	1	6399.55	3.25	0	87.12	0	3.25	0	0	8.26	0	0	0	0	0	0	-29.27	-29.27
Inverter Transformer	MV1-15 T	365309	4904994	2	0	0	56.1	56.1	1	2685.87	3.25	0	79.58	0	0.7	0	0	8.32	0	0	0	0	0	0	-32.54	-32.54
Inverter Transformer	MV1-12 T	365044	4905386	2	0	0	56.1	56.1	1	3143.43	3.25	0	80.95	0	0.89	0	0	9.11	0	0	0	0	0	0	-34.89	-34.89
Inverter Transformer	MV1-11 T	364649	4905414	2	0	0	56.1	56.1	1	3327.19	3.25	0	81.44	0	0.97	0	0	9.41	0	0	0	0	0	0	-35.76	-35.76
Inverter Transformer	MV1-8 T	364782	4905647	2	0	0	56.1	56.1	1	3482.92	3.25	0	81.84	0	1.03	0	0	9.66	0	0	0	0	0	0	-36.47	-36.47
Inverter Transformer	MV1-9 T	364555	4905646	2	0	0	56.1	56.1	1	3576.75	3.25	0	82.07	0	1.07	0	0	9.81	0	0	0	0	0	0	-36.89	-36.89
Inverter Transformer	MV1-4 T	364821	4905918	2	0	0	56.1	56.1	1	3719.88	3.25	0	82.41	0	1.13	0	0	10.03	0	0	0	0	0	0	-37.51	-37.51
Inverter Transformer	MV1-5 T	364676	4905892	2	0	0	56.1	56.1	1	3749.86	3.25	0	82.48	0	1.14	0	0	10.08	0	0	0	0	0	0	-37.64	-37.64
Inverter Transformer	MV1-6 T	364482	4905835	2	0	0	56.1	56.1	1	3778.57	3.25	0	82.55	0	1.15	0	0	10.12	0	0	0	0	0	0	-37.76	-37.76
Inverter Transformer	MV1-2 T	364759	4906063	2	0	0	56.1	56.1	1	3877.45	3.25	0	82.77	0	1.19	0	0	10.27	0	0	0	0	0	0	-38.18	-38.18
Inverter Transformer	MV1-3 T	364435	4906039	2	0	0	56.1	56.1	1	3982.76	3.25	0	83	0	1.24	0	0	10.43	0	0	0	0	0	0	-38.61	-38.61
Inverter Transformer	MV1-1 T	364721	4906166	2	0	0	56.1	56.1	1	3987.23	3.25	0	83.01	0	1.24	0	0	10.44	0	0	0	0	0	0	-38.63	-38.63
Inverter Transformer	MV2-3 T	365814	4906641	2	0	0	56.1	56.1	1	4213.27	3.25	0	83.49	0	1.33	0	0	10.77	0	0	0	0	0	0	-39.53	-39.53
Inverter Transformer	MV2-2 T	365982	4906654	2	0	0	56.1	56.1	1	4216.53	3.25	0	83.5	0	1.33	0	0	10.77	0	0	0	0	0	0	-39.54	-39.54
Inverter Transformer	MV2-4 T	365590	4906628	2	0	0	56.1	56.1	1	4223.7	3.25	0	83.51	0	1.33	0	0	10.78	0	0	0	0	0	0	-39.57	-39.57
Inverter Transformer	MV3-18 T	367757	4907412	2	0	0	56.1	56.1	1	5227.3	3.25	0	85.37	0	1.71	0	0	12.15	0	0	0	0	0	0	-43.16	-43.16
Inverter Transformer	MV3-21 T	368484	4907206	2	0	0	56.1	56.1	1	5309.98	3.25	0	85.5	0	1.74	0	0	12.26	0	0	0	0	0	0	-43.43	-43.43
Inverter Transformer	MV3-22 T	368661	4907142	2	0	0	56.1	56.1	1	5333.9	3.25	0	85.54	0	1.74	0	0	12.29	0	0	0	0	0	0	-43.51	-43.51
Inverter Transformer	MV3-12 T	367674	4907594	2	0	0	56.1	56.1	1	5376.45	3.25	0	85.61	0	1.76	0	0	12.34	0	0	0	0	0	0	-43.65	-43.65
Inverter Transformer	MV3-19 T	368352	4907347	2	0	0	56.1	56.1	1	5381.33	3.25	0	85.62	0	1.76	0	0	12.35	0	0	0	0	0	0	-43.67	-43.67
Inverter Transformer	MV3-17 T	368183	4907472	2	0	0	56.1	56.1	1	5429.78	3.25	0	85.7	0	1.78	0	0	12.41	0	0	0	0	0	0	-43.82	-43.82
Inverter Transformer	MV3-13 T	367958	4907577	2	0	0	56.1	56.1	1	5448.14	3.25	0	85.72	0	1.78	0	0	12.43	0	0	0	0	0	0	-43.88	-43.88
Inverter Transformer	MV3-20 T	368683	4907317	2	0	0	56.1	56.1	1	5498.9	3.25	0	85.81	0	1.8	0	0	12.49	0	0	0	0	0	0	-44.04	-44.04
Inverter Transformer	MV3-15 T	368351	4907477	2	0	0	56.1	56.1	1	5499.72	3.25	0	85.81	0	1.8	0	0	12.49	0	0	0	0	0	0	-44.04	-44.04
Inverter Transformer	MV3-16 T	368509	4907475	2	0	0	56.1	56.1	1	5563.26	3.25	0	85.91	0	1.82	0	0	12.57	0	0	0	0	0	0	-44.24	-44.24
Inverter Transformer	MV3-10 T	368162	4907669	2	0	0	56.1	56.1	1	5605.21	3.25	0	85.97	0	1.84	0	0	12.63	0	0	0	0	0	0	-44.38	-44.38
Inverter Transformer	MV3-7 T	367951	4907754	2	0	0	56.1	56.1	1	5613.06	3.25	0	85.98	0	1.84	0	0	12.64	0	0	0	0	0	0	-44.4	-44.4
Inverter Transformer	MV3-14 T	368678	4907498	2	0	0	56.1	56.1	1	5657.79	3.25	0	86.05	0	1.85	0	0	12.69	0	0	0	0	0	0	-44.54	-44.54
Inverter Transformer	MV3-11 T	368340	4907662	2	0	0	56.1	56.1	1	5665.35	3.25	0	86.06	0	1.86	0	0	12.7	0	0	0	0	0	0	-44.56	-44.56
Inverter Transformer	MV3-6 T	368156	4907834	2	0	0	56.1	56.1	1	5757.33	3.25	0	86.2	0	1.89	0	0	12.81	0	0	0	0	0	0	-44.84	-44.84
Inverter Transformer	MV3-9 T	368517	4907703	2	0	0	56.1	56.1	1	5773.69	3.25	0	86.23	0	1.89	0	0	12.83	0	0	0	0	0	0	-44.89	-44.89
Inverter Transformer	MV3-3 T	367944	4907927	2	0	0	56.1	56.1	1	5774.91	3.25	0	86.23	0	1.89	0	0	12.83	0	0	0	0	0	0	-44.9	-44.9
Inverter Transformer	MV3-5 T	368335	4907843	2	0	0	56.1	56.1	1	5830.71	3.25	0	86.31	0	1.91	0	0	12.9	0	0	0	0	0	0	-45.07	-45.07
Inverter Transformer	MV3-8 T	368685	4907712	2	0	0	56.1	56.1	1	5852.91	3.25	0	86.35	0	1.92	0	0	12.93	0	0	0	0	0	0	-45.13	-45.13
Inverter Transformer	MV3-1 T	368150	4907976	2	0	0	56.1	56.1	1	5888.52	3.25	0	86.4	0	1.93	0	0	12.97	0	0	0	0	0	0	-45.24	-45.24
Inverter Transformer	MV3-4 T	368507	4907925	2	0	0	56.1	56.1	1	5972.76	3.25	0	86.52	0	1.96	0	0	13.07	0	0	0	0	0	0	-45.49	-45.49
Inverter Transformer	MV3-2 T	368677	4907928	2	0	0	56.1	56.1	1	6044.82	3.25	0	86.63	0	1.98	0	0	13.16	0	0	0	0	0	0	-45.7	-45.7
Inverter Transformer	MV6-3 T	370202	4907140	2	0	0	56.1	56.1	1	6210.52	3.25	0	86.86	0	2.03	0	0	13.35	0	0	0	0	0	0	-46.18	-46.18
Inverter Transformer	MV6-2 T	370091	4907339	2	0	0	56.1	56.1	1	6292.18	3.25	0	86.98	0	2.06	0	0	13.44	0	0	0	0	0	0	-46.42	-46.42
Inverter Transformer	MV4-15 T	369170	4908481	2	0	0	56.1	56.1	1	6757.04	3.25	0	87.6	0	2.19	0	0	13.97	0	0	0	0	0	0	-47.69	-47.69
Inverter Transformer	MV4-14 T	369182	4908507	2	0	0	56.1	56.1	1	6785.66	3.25	0	87.63	0	2.2	0	0	14	0	0	0	0	0	0	-47.77	-47.77
Inverter Transformer	MV4-13 T	369057	4908605	2	0	0	56.1	56.1	1	6819.05	3.25	0	87.67	0	2.21	0	0	14.03	0	0	0	0	0	0	-47.86	-47.86
Inverter Transformer	MV4-12 T	369049	4908803	2	0	0	56.1	56.1	1	6995.23	3.25	0	87.9	0	2.26	0	0	14.22	0	0	0	0	0	0	-48.32	-48.32
Inverter Transformer	MV4-11 T	369269	4908855	2	0	0	56.1	56.1	1	7136.19	3.25	0	88.07	0	2.3	0	0	14.37	0	0	0	0	0	0	-48.68	-48.68
Inverter Transformer	MV4-10 T	369307	4908858	2	0	0	56.1	56.1	1	7155.61	3.25	0	88.09	0	2.3	0	0	14.4	0	0	0	0	0	0	-48.73	-48.73
Inverter Transformer	MV4-7 T	369040	4909001	2	0	0	56.1	56.1	1	7172.15	3.25	0	88.11	0	2.31	0	0	14.41	0	0	0	0	0	0	-48.77	-48.77
Inverter Transformer	MV5-6 T	369987	4908507	2	0	0	56.1	56.1	1	7182.48	3.25	0	88.13	0	2.31	0	0	14.42	0	0	0	0	0	0	-48.8	-48.8
Inverter Transformer	MV4-8 T	369262	4909001	2	0	0	56.1	56.1	1	7264.7	3.25	0	88.22	0	2.33	0	0	14.51	0	0	0	0	0	0	-49.01	-49.01
Inverter Transformer	MV4-9 T	369284	4909001	2	0	0	56.1	56.1	1	7274.17	3.25	0	88.24	0	2.33	0	0	14.52	0	0	0	0	0	0	-49.03	-49.03
Inverter Transformer	MV4-4 T	369033	4909199	2	0	0	56.1	56.1	1	7350.94	3.25	0	88.33	0	2.35	0	0	14.6	0	0	0	0	0	0	-49.22	-49.22
Inverter Transformer	MV5-5 T	370021	4908690	2	0	0	56.1	56.1	1	7355.57	3.25	0	88.33	0	2.35	0	0	14.61	0	0	0	0	0	0	-49.23	-49.23
Inverter Transformer	MV4-6 T	369249	4909192	2	0	0	56.1	56.1	1	7432.19	3.25	0	88.42	0	2.37	0	0	14.68	0	0	0	0	0	0	-49.42	-49.42
Inverter Transformer	MV4-5 T	369283	4909199	2	0	0	56.1	56.1	1	7452.82	3.25	0	88.45	0	2.38	0	0	14.71	0	0	0	0	0	0	-49.47	-49.47

	Inverter Transformer	MV5-2 T	370011	4908853	2	0	0	56.1	56.1	1	7489.38	3.25	0	88.49	0	2.39	0	0	14.74	0	0	0	0	0	0	-49.56	-49.56
	Inverter Transformer	MV4-1 T	369017	4909397	2	0	0	56.1	56.1	1	7527.26	3.25	0	88.53	0	2.4	0	0	14.78	0	0	0	0	0	0	-49.65	-49.65
	Inverter Transformer	MV5-4 T	370330	4908707	2	0	0	56.1	56.1	1	7537.24	3.25	0	88.54	0	2.4	0	0	14.79	0	0	0	0	0	0	-49.68	-49.68
	Inverter Transformer	MV5-3 T	370237	4908851	2	0	0	56.1	56.1	1	7606.92	3.25	0	88.62	0	2.42	0	0	14.86	0	0	0	0	0	0	-49.85	-49.85
	Inverter Transformer	MV4-3 T	369234	4909397	2	0	0	56.1	56.1	1	7612.79	3.25	0	88.63	0	2.42	0	0	14.87	0	0	0	0	0	0	-49.86	-49.86
	Inverter Transformer	MV4-2 T	369267	4909397	2	0	0	56.1	56.1	1	7626.26	3.25	0	88.65	0	2.42	0	0	14.88	0	0	0	0	0	0	-49.89	-49.89
	Inverter Transformer	MV5-1 T	370015	4909142	2	0	0	56.1	56.1	1	7740.27	3.25	0	88.78	0	2.45	0	0	15	0	0	0	0	0	0	-50.16	-50.16
	Line Reactor	NGR	369421	4908787.5	5	0	0	45.4	45.4	1	7144.06	5.25	0	88.08	0	3.22	1.37	0.1	2.92	0	0	0	0	0	0	-50.23	-50.23
Limit. Valu	0	0																								
Level D/N:	26.3425	26.3425																								

Receiver: Vacant Lot Receptor
ID: G-V7
X: 366166.4
Y: 4903596.6
Z: 4.5
Ground: 0

ISO	Description	ID	X	Y	Z	Ground	ReflOrd	LxT	LxN	L/A	Dist.	hm	Freq	Adiv	K0b	Agr	Abar	z	Aatm	Afol	Ahous	Cmet	CmetN	Dc	RL	LtotT	LtotN
	Gardiner Substation	G_Sub	366586.3	4903349.9	2.5	0	0	90.8	90.8	1	487.01	4.24	0	64.75	0	0.48	5.36	0.3	1.4	0	0	0	0	0	0	18.79	18.79
	Sol_Luce Substation	S_Substation	369426	4908792	3.5	0	0	112.1	112.1	1	6133.28	5.25	0	86.75	0	1.19	2.62	0.3	9.88	0	0	0	0	0	0	11.63	11.63
	Inverter	MV1-15	365315	4904994	2	0	0	100.3	100.3	1	1636.34	3.25	0	75.28	0	0.02	0	0	12.65	0	0	0	0	0	0	12.37	12.37
	Inverter	MV1-12	365038	4905386	2	0	0	100.3	100.3	1	2115.48	3.25	0	77.51	0	0.16	0	0	13.7	0	0	0	0	0	0	8.94	8.94
	Inverters	G_Inv1	366526.4	4903225.8	2	0	0	87.7	87.7	1	516.82	3.25	0	65.27	0	2.4	0	0	0.79	0	0	0	0	0	0	19.21	19.21
	Inverter	MV1-11	364655	4905414	2	0	0	100.3	100.3	1	2363.74	3.25	0	78.47	0	0.22	0	0	14.2	0	0	0	0	0	0	7.42	7.42
	Inverter	MV1-8	364788	4905647	2	0	0	100.3	100.3	1	2470.65	3.25	0	78.86	0	0.25	0	0	14.4	0	0	0	0	0	0	6.8	6.8
	Inverter	MV1-14	365163	4905049	2	0	0	97.3	97.3	1	1765.3	3.25	0	75.94	0	0.06	0	0	12.95	0	0	0	0	0	0	8.37	8.37
	Inverter	MV1-9	364561	4905646	2	0	0	100.3	100.3	1	2603.34	3.25	0	79.31	0	0.28	0	0	14.65	0	0	0	0	0	0	6.07	6.07
	Inverters	G_Inv2	366676.9	4903239.1	2	0	0	87.7	87.7	1	623.24	3.25	0	66.89	0	2.4	0	0	0.93	0	0	0	0	0	0	17.44	17.44
	Inverter	MV1-4	364815	4905918	2	0	0	100.3	100.3	1	2686.11	3.25	0	79.58	0	0.3	0	0	14.81	0	0	0	0	0	0	5.63	5.63
	Inverter	MV1-5	364671	4905892	2	0	0	100.3	100.3	1	2739.54	3.25	0	79.75	0	0.31	0	0	14.9	0	0	0	0	0	0	5.34	5.34
	Inverter	MV1-6	364477	4905835	2	0	0	100.3	100.3	1	2804.37	3.25	0	79.96	0	0.32	0	0	15.02	0	0	0	0	0	0	5.01	5.01
	Inverters	G_Inv3	366583.7	4903091.4	2	0	0	87.7	87.7	1	655.27	3.25	0	67.33	0	2.4	0	0	0.98	0	0	0	0	0	0	16.95	16.95
	Inverter	MV1-2	364753	4906063	2	0	0	100.3	100.3	1	2842.68	3.25	0	80.07	0	0.33	0	0	15.09	0	0	0	0	0	0	4.82	4.82
	Inverter	MV1-1	364715	4906166	2	0	0	100.3	100.3	1	2951	3.25	0	80.4	0	0.35	0	0	15.29	0	0	0	0	0	0	4.27	4.27
	Inverter	MV2-3	365820	4906641	2	0	0	100.3	100.3	1	3064.04	3.25	0	80.73	0	0.37	0	0	15.48	0	0	0	0	0	0	3.73	3.73
	Inverter	MV2-4	365586	4906624	2	0	0	100.3	100.3	1	3082.53	3.25	0	80.78	0	0.38	0	0	15.52	0	0	0	0	0	0	3.64	3.64
	Inverter	MV1-13	364731	4905241	2	0	0	97.3	97.3	1	2182.76	3.25	0	77.78	0	0.18	0	0	13.84	0	0	0	0	0	0	5.51	5.51
	Inverters	G_Inv4	366732.8	4903105	2	0	0	87.7	87.7	1	749.99	3.25	0	68.5	0	2.41	0	0	1.1	0	0	0	0	0	0	15.64	15.64
	Inverter	MV1-10	365004	4905564	2	0	0	97.3	97.3	1	2285.14	3.25	0	78.18	0	0.21	0	0	14.04	0	0	0	0	0	0	4.89	4.89
	Inverters	G_Inv5	366638.5	4902958.1	2	0	0	87.7	87.7	1	794.08	3.25	0	69	0	2.42	0	0	1.16	0	0	0	0	0	0	15.08	15.08
	Inverter	MV1-7	364925	4905782	2	0	0	97.3	97.3	1	2513.37	3.25	0	79.01	0	0.26	0	0	14.48	0	0	0	0	0	0	3.56	3.56
	Inverters	G_Inv6	366788.5	4902972	2	0	0	87.7	87.7	1	881.56	3.25	0	69.9	0	2.43	0	0	1.27	0	0	0	0	0	0	14.05	14.05
	Inverters	G_Inv7	366694.6	4902824.7	2	0	0	87.7	87.7	1	935.32	3.25	0	70.42	0	2.44	0	0	1.34	0	0	0	0	0	0	13.46	13.46
	Inverter	MV3-18	367752	4907412	2	0	0	100.3	100.3	1	4131.76	3.25	0	83.32	0	0.55	0	0	17.26	0	0	0	0	0	0	-0.81	-0.81
	Inverter	MV3-12	367668	4907594	2	0	0	100.3	100.3	1	4270.13	3.25	0	83.61	0	0.56	0	0	17.47	0	0	0	0	0	0	-1.33	-1.33
	Inverter	MV3-21	368478	4907206	2	0	0	100.3	100.3	1	4286.17	3.25	0	83.64	0	0.57	0	0	17.5	0	0	0	0	0	0	-1.39	-1.39
	Inverter	MV3-19	368357	4907347	2	0	0	100.3	100.3	1	4343.3	3.25	0	83.76	0	0.57	0	0	17.59	0	0	0	0	0	0	-1.61	-1.61
	Inverters	G_Inv8	366844.5	4902838.5	2	0	0	87.7	87.7	1	1017.12	3.25	0	71.15	0	2.45	0	0	1.45	0	0	0	0	0	0	12.61	12.61
	Inverter	MV3-17	368178	4907472	2	0	0	100.3	100.3	1	4366.38	3.25	0	83.8	0	0.57	0	0	17.62	0	0	0	0	0	0	-1.69	-1.69
	Inverter	MV3-13	367963	4907577	2	0	0	100.3	100.3	1	4367.08	3.25	0	83.8	0	0.58	0	0	17.63	0	0	0	0	0	0	-1.69	-1.69
	Inverter	MV3-15	368357	4907477	2	0	0	100.3	100.3	1	4456.03	3.25	0	83.98	0	0.59	0	0	17.76	0	0	0	0	0	0	-2.02	-2.02
	Inverter	MV3-20	368689	4907317	2	0	0	100.3	100.3	1	4494.99	3.25	0	84.05	0	0.59	0	0	17.82	0	0	0	0	0	0	-2.16	-2.16
	Inverter	MV3-7	367945	4907754	2	0	0	100.3	100.3	1	4521.88	3.25	0	84.11	0	0.59	0	0	17.86	0	0	0	0	0	0	-2.25	-2.25
	Inverter	MV3-16	368514	4907475	2	0	0	100.3	100.3	1	4533.57	3.25	0	84.13	0	0.59	0	0	17.88	0	0	0	0	0	0	-2.29	-2.29
	Inverter	MV3-10	368167	4907669	2	0	0	100.3	100.3	1	4537.27	3.25	0	84.14	0	0.6	0	0	17.89	0	0	0	0	0	0	-2.31	-2.31
	Inverter	MV2-1	365842	4906816	2	0	0	97.3	97.3	1	3235.7	3.25	0	81.2	0	0.41	0	0	15.78	0	0	0	0	0	0	-0.08	-0.08
	Inverter	MV3-11	368346	4907662	2	0	0	100.3	100.3	1	4612.82	3.25	0	84.28	0	0.6	0	0	18	0	0	0	0	0	0	-2.57	-2.57
	Inverters	G_Inv9	366750.9	4902691.8	2	0	0	87.7	87.7	1	1077.18	3.25	0	71.65	0	2.46	0	0	1.52	0	0	0	0	0	0	12.03	12.03
	Inverter	MV3-14	368684	4907498	2	0	0	100.3	100.3	1	4643.19	3.25	0	84.34	0	0.61	0	0	18.05	0	0	0	0	0	0	-2.68	-2.68
	Inverter	MV3-3	367939	4907927	2	0	0	100.3	100.3	1	4679.15	3.25	0	84.4	0	0.61	0	0	18.1	0	0	0	0	0	0	-2.8	-2.8
	Inverter	MV3-6	368162	4907834	2	0	0	100.3	100.3	1	4683.8	3.25	0	84.41	0	0.61	0	0	18.11	0	0	0	0	0	0	-2.82	-2.82
	Inverter	MV3-9	368512	4907703	2	0	0	100.3	100.3	1	4729.1	3.25	0	84.5	0	0.62	0	0	18.18	0	0	0	0	0	0	-2.98	-2.98
	Inverter	MV3-8	368680	4907712	2	0	0	100.3	100.3	1	4822.31	3.25	0	84.67	0	0.63	0	0	18.32	0	0	0	0	0	0	-3.3	-3.3
	Inverters	G_Inv10	366900.7	4902704.8	2	0	0	87.7	87.7	1	1155.21	3.25	0	72.25	0	2.47	0	0	1.62	0	0	0	0	0	0	11.31	11.31
	Inverter	MV6-3	370207	4907140	2	0	0	100.3	100.3	1	5374.21	3.25	0	85.61	0	0.67	0	0	19.12	0	0	0	0	0	0	-5.09	-5.09
	Inverter	MV6-2	370085	4907339	2	0	0	100.3	100.3	1	5418.58	3.25	0	85.68	0	0.68	0	0	19.19	0	0	0	0	0	0	-5.23	-5.23
	Inverter	MV4-11	369264	4908855	2	0	0	100.3	100.3	1	6102.94	3.25	0	86.71	0	0.71	0	0	20.13	0	0	0	0	0	0	-7.24	-7.24
	Inverter	MV4-7	369035	4909001	2	0	0	100.3	100.3	1	6118.53	3.25	0	86.73	0	0.71	0	0	20.15	0	0	0	0	0	0	-7.28	-7.28
	Inverter	MV4-10	369312	4908858	2	0	0	100.3	100.3	1	6130.02	3.25	0	86.75	0	0.71	0	0	20.17	0	0	0	0	0	0	-7.31	-7.31
	Inverter	MV4-8	369256	4909001	2	0	0	100.3	100.3	1	6225.2	3.25	0	86.88	0	0.71	0	0	20.3	0	0	0	0	0	0	-7.58	-7.58
	Inverter	MV4-9	369289	4909001	2	0	0	100.3	100.3	1	6241.65	3.25	0	86.91	0	0.71	0	0	20.32	0	0	0	0	0	0	-7.62	-7.62
	Inverter	MV4-4	369027	4909199	2	0	0	100.3	100.3	1	6290.46	3.25	0	86.97	0	0.71	0	0	20.38	0	0	0	0	0	0	-7.76	-7.76
	Inverter	MV5-5	370015	4908690	2	0	0	100.3	100.3	1	6383.92	3.25	0	87.1	0	0.71	0	0	20.51	0	0	0	0	0	0	-8.01	-8.01

Inverter	MV4-6	369243	4909192	2	0	0	100.3	100.3	1	6385.45	3.25	0	87.1	0	0.71	0	0	20.51	0	0	0	0	0	0	-8.01	-8.01
Inverter	MV4-5	369289	4909199	2	0	0	100.3	100.3	1	6413.85	3.25	0	87.14	0	0.71	0	0	20.55	0	0	0	0	0	0	-8.09	-8.09
Inverter	MV4-1	369011	4909397	2	0	0	100.3	100.3	1	6460.37	3.25	0	87.21	0	0.71	0	0	20.61	0	0	0	0	0	0	-8.21	-8.21
Inverter	MV5-2	370006	4908853	2	0	0	100.3	100.3	1	6509.4	3.25	0	87.27	0	0.71	0	0	20.67	0	0	0	0	0	0	-8.34	-8.34
Inverter	MV4-3	369229	4909397	2	0	0	100.3	100.3	1	6559.28	3.25	0	87.34	0	0.72	0	0	20.74	0	0	0	0	0	0	-8.48	-8.48
Inverter	MV4-2	369272	4909397	2	0	0	100.3	100.3	1	6579.47	3.25	0	87.36	0	0.72	0	0	20.76	0	0	0	0	0	0	-8.53	-8.53
Inverter	MV5-4	370324	4908707	2	0	0	100.3	100.3	1	6588.01	3.25	0	87.38	0	0.72	0	0	20.77	0	0	0	0	0	0	-8.55	-8.55
Inverter	MV5-3	370231	4908851	2	0	0	100.3	100.3	1	6643.02	3.25	0	87.45	0	0.71	0	0	20.84	0	0	0	0	0	0	-8.69	-8.69
Inverter	MV5-1	370020	4909142	2	0	0	100.3	100.3	1	6752.9	3.25	0	87.59	0	0.71	0	0	20.99	0	0	0	0	0	0	-8.98	-8.98
Inverter	MV6-1	370235	4907364	2	0	0	97.3	97.3	1	5544.98	3.25	0	85.88	0	0.68	0	0	19.36	0	0	0	0	0	0	-8.61	-8.61
DSTATCOM - 10 MVAR #2	DSAT2	369403	4908757	2.5	0	0	96.6	96.6	1	6091.41	3.5	0	86.69	0	3.78	0	0	3.88	0	0	0	0	0	0	2.27	2.27
DSTATCOM - 10 MVAR #1	DSAT1	369437	4908757	2.5	0	0	96.6	96.6	1	6109.55	3.5	0	86.72	0	3.78	0	0	3.89	0	0	0	0	0	0	2.24	2.24
Inverter	MV1-3	364440	4906039	2	0	0	89.1	89.1	1	2990.95	3.25	0	80.52	0	1.14	0	0	9.6	0	0	0	0	0	0	-2.21	-2.21
Inverter	MV2-2	365977	4906654	2	0	0	89.1	89.1	1	3063.26	3.25	0	80.72	0	1.16	0	0	9.71	0	0	0	0	0	0	-2.54	-2.54
SubstationTransformer	W_ST	369711.17	4906112.3	2.5	0	0	92	92	1	4346.72	4.25	0	83.76	0	1.46	2.5	0.24	7.82	0	0	0	0	0	0	-3.56	-3.56
Westbrook Inverter Enclosur	W_INV3	369508	4906164	2	0	0	89.1	89.1	1	4214.01	3.25	0	83.49	0	1.45	0	0	11.39	0	0	0	0	0	0	-7.27	-7.27
Westbrook Inverter Enclosur	W_INV2	369374	4906388	2	0	0	89.1	89.1	1	4252.13	3.25	0	83.57	0	1.45	0	0	11.44	0	0	0	0	0	0	-7.41	-7.41
Inverter	MV3-22	368656	4907142	2	0	0	89.1	89.1	1	4332.2	3.25	0	83.73	0	1.47	0	0	11.55	0	0	0	0	0	0	-7.7	-7.7
Westbrook Inverter Enclosur	W_INV4	369673	4906164	2	0	0	89.1	89.1	1	4346.01	3.25	0	83.76	0	1.48	0	0	11.57	0	0	0	0	0	0	-7.75	-7.75
Westbrook Inverter Enclosur	W_INV7	369780	4906417	2	0	0	89.1	89.1	1	4583.97	3.25	0	84.22	0	1.54	0	0	11.9	0	0	0	0	0	0	-8.6	-8.6
Westbrook Inverter Enclosur	W_INV5	369719	4906574	2	0	0	89.1	89.1	1	4635.29	3.25	0	84.32	0	1.55	0	0	11.97	0	0	0	0	0	0	-8.78	-8.78
Westbrook Inverter Enclosur	W_INV6	369875	4906578	2	0	0	89.1	89.1	1	4758.41	3.25	0	84.55	0	1.58	0	0	12.14	0	0	0	0	0	0	-9.21	-9.21
Inverter	MV3-5	368340	4907843	2	0	0	89.1	89.1	1	4770.37	3.25	0	84.57	0	1.58	0	0	12.15	0	0	0	0	0	0	-9.25	-9.25
Inverter	MV3-1	368156	4907976	2	0	0	89.1	89.1	1	4810.16	3.25	0	84.64	0	1.59	0	0	12.21	0	0	0	0	0	0	-9.39	-9.39
Inverter	MV3-4	368502	4907925	2	0	0	89.1	89.1	1	4918.34	3.25	0	84.84	0	1.62	0	0	12.35	0	0	0	0	0	0	-9.75	-9.75
Inverter	MV3-2	368671	4907928	2	0	0	89.1	89.1	1	5003.4	3.25	0	84.99	0	1.64	0	0	12.47	0	0	0	0	0	0	-10.04	-10.04
Fixed Reactor Bank 1	FRB1	369378	4908755	6	0	0	89.8	89.8	1	6076.47	5.25	0	86.67	0	-0.41	0	0	9.82	0	0	0	0	0	0	-6.31	-6.31
Fixed Reactor Bank 2	FRB2	369464	4908755	6	0	0	89.8	89.8	1	6122.36	5.25	0	86.74	0	-0.4	0	0	9.87	0	0	0	0	0	0	-6.43	-6.43
Inverter	MV4-15	369176	4908481	2	0	0	89.1	89.1	1	5737.16	3.25	0	86.17	0	1.82	0	0	13.43	0	0	0	0	0	0	-12.37	-12.37
Inverter	MV4-14	369176	4908507	2	0	0	89.1	89.1	1	5759.32	3.25	0	86.21	0	1.83	0	0	13.46	0	0	0	0	0	0	-12.43	-12.43
Inverter	MV4-13	369051	4908605	2	0	0	89.1	89.1	1	5779.71	3.25	0	86.24	0	1.83	0	0	13.48	0	0	0	0	0	0	-12.49	-12.49
Inverter	MV4-12	369043	4908803	2	0	0	89.1	89.1	1	5948.23	3.25	0	86.49	0	1.87	0	0	13.7	0	0	0	0	0	0	-13	-13
Inverter	MV5-6	369982	4908507	2	0	0	89.1	89.1	1	6218.59	3.25	0	86.87	0	1.94	0	0	14.04	0	0	0	0	0	0	-13.79	-13.79
Westbrook Inverter Enclosur	W_INV1	369409	4906578	2	0	0	86.1	86.1	1	4404.91	3.25	0	83.88	0	1.49	0	0	11.65	0	0	0	0	0	0	-10.97	-10.97
Inverter	MV6-4	370250	4906966	2	0	0	86.1	86.1	1	5294.21	3.25	0	85.48	0	1.71	0	0	12.85	0	0	0	0	0	0	-13.98	-13.98
Westbrook Inverter Transfor	W_INVTR1	369403	4906578	2	0	0	78.2	78.2	1	4400.49	3.25	0	83.87	0	-3.05	0	0	2.2	0	0	0	0	0	0	-4.78	-4.78
Westbrook Inverter Transfor	W_INVTR3	369514	4906164	2	0	0	77.3	77.3	1	4218.76	3.25	0	83.5	0	-3.01	0	0	2.14	0	0	0	0	0	0	-5.29	-5.29
Westbrook Inverter Transfor	W_INVTR2	369368	4906388	2	0	0	77.3	77.3	1	4247.61	3.25	0	83.56	0	-3.02	0	0	2.15	0	0	0	0	0	0	-5.35	-5.35
Westbrook Inverter Transfor	W_INVTR4	369679	4906164	2	0	0	77.3	77.3	1	4350.85	3.25	0	83.77	0	-3.04	0	0	2.18	0	0	0	0	0	0	-5.57	-5.57
Inverter Transformer	MV1-14 T	365157	4905049	2	0	0	69.4	69.4	1	1768.72	3.25	0	75.95	0	2.08	0	0	4.73	0	0	0	0	0	0	-13.42	-13.42
Westbrook Inverter Transfor	W_INVTR7	369786	4906417	2	0	0	77.3	77.3	1	4588.7	3.25	0	84.23	0	-3.09	0	0	2.27	0	0	0	0	0	0	-6.07	-6.07
Westbrook Inverter Transfor	W_INVTR5	369725	4906574	2	0	0	77.3	77.3	1	4639.89	3.25	0	84.33	0	-3.1	0	0	2.29	0	0	0	0	0	0	-6.17	-6.17
Westbrook Inverter Transfor	W_INVTR6	369881	4906578	2	0	0	77.3	77.3	1	4763.09	3.25	0	84.56	0	-3.13	0	0	2.33	0	0	0	0	0	0	-6.42	-6.42
Inverter Transformer	MV1-13 T	364725	4905241	2	0	0	69.4	69.4	1	2186.71	3.25	0	77.8	0	2.24	0	0	5.15	0	0	0	0	0	0	-15.84	-15.84
Inverter Transformer	MV1-10 T	365010	4905564	2	0	0	69.4	69.4	1	2282.09	3.25	0	78.17	0	2.27	0	0	5.24	0	0	0	0	0	0	-16.33	-16.33
Inverter Transformer	MV1-7 T	364919	4905782	2	0	0	69.4	69.4	1	2516.34	3.25	0	79.02	0	2.35	0	0	5.46	0	0	0	0	0	0	-17.48	-17.48
Inverter Transformer	MV2-1 T	365836	4906816	2	0	0	69.4	69.4	1	3236.31	3.25	0	81.2	0	2.58	0	0	6.08	0	0	0	0	0	0	-20.51	-20.51
Inverter Transformer	MV6-4 T	370244	4906966	2	0	0	69.4	69.4	1	5289.58	3.25	0	85.47	0	3.07	0	0	7.57	0	0	0	0	0	0	-26.76	-26.76
Inverter Transformer	MV6-1 T	370230	4907364	2	0	0	69.4	69.4	1	5541.31	3.25	0	85.87	0	3.11	0	0	7.73	0	0	0	0	0	0	-27.37	-27.37
Inverter Transformer	MV1-15 T	365309	4904994	2	0	0	56.1	56.1	1	1639.47	3.25	0	75.29	0	0.25	0	0	6.31	0	0	0	0	0	0	-25.8	-25.8
Inverter Transformer	MV1-12 T	365044	4905386	2	0	0	56.1	56.1	1	2112.28	3.25	0	77.5	0	0.45	0	0	7.26	0	0	0	0	0	0	-29.15	-29.15
Inverter Transformer	MV1-11 T	364649	4905414	2	0	0	56.1	56.1	1	2367.58	3.25	0	78.49	0	0.56	0	0	7.75	0	0	0	0	0	0	-30.73	-30.73
Inverter Transformer	MV1-8 T	364782	4905647	2	0	0	56.1	56.1	1	2474.01	3.25	0	78.87	0	0.61	0	0	7.94	0	0	0	0	0	0	-31.36	-31.36
Inverter Transformer	MV1-9 T	364555	4905646	2	0	0	56.1	56.1	1	2607.04	3.25	0	79.32	0	0.66	0	0	8.18	0	0	0	0	0	0	-32.11	-32.11
Inverter Transformer	MV1-4 T	364821	4905918	2	0	0	56.1	56.1	1	2683.1	3.25	0	79.57	0	0.69	0	0	8.32	0	0	0	0	0	0	-32.53	-32.53
Inverter Transformer	MV1-5 T	364676	4905892	2	0	0	56.1	56.1	1	2736.82	3.25	0	79.74	0	0.72	0	0	8.41	0	0	0	0	0	0	-32.82	-32.82
Inverter Transformer	MV1-6 T	364482	4905835	2	0	0	56.1	56.1	1	2801.36	3.25	0	79.95	0	0.75	0	0	8.53	0	0	0	0	0	0	-33.16	-33.16
Inverter Transformer	MV1-2 T	364759	4906063	2	0	0	56.1	56.1	1	2839.7	3.25	0	80.07	0	0.76	0	0	8.59	0	0	0	0	0	0	-33.36	-33.36
Inverter Transformer	MV1-1 T	364721	4906166	2	0	0	56.1	56.1	1	2948.05	3.25	0	80.39	0	0.81	0	0	8.78	0	0	0	0	0	0	-33.92	-33.92
Inverter Transformer	MV1-3 T	364435	4906039	2	0	0	56.1	56.1	1	2993.84	3.25	0	80.52	0	0.83	0	0	8.86	0	0	0	0	0	0	-34.15	-34.15
Inverter Transformer	MV2-2 T	365982	4906654	2	0	0	56.1	56.1	1	3062.96	3.25	0	80.72	0	0.86	0	0	8.97	0	0	0	0	0	0	-34.5	-34.5
Inverter Transformer	MV2-3 T	365814	4906641	2	0	0	56.1	56.1	1	3064.73	3.25	0	80.73	0	0.86	0	0	8.98	0	0	0	0	0	0	-34.5	-34.5
Inverter Transformer	MV2-4 T	365590	4906628	2	0	0	56.1	56.1	1	3085.71	3.25	0	80.79	0	0.87	0	0	9.01	0	0	0	0	0	0	-34.61	-34.61
Inverter Transformer	MV3-18 T	367757	4907412	2	0	0	56.1	56.1	1	4133.68	3.25	0	83.33	0	1.3	0	0	10.65	0	0	0	0	0	0	-39.22	-39.22
Inverter Transformer	MV3-12 T	367674	4907594	2	0	0	56.1	56.1	1	4272.24	3.25	0	83.61	0	1.35	0	0	10.85	0	0	0	0	0	0	-39.76	-39.76
Inverter Transformer	MV3-21 T	368484	4907206	2	0	0	56.1	56.1	1	4289.41	3.25	0	83.65	0	1.36	0	0	10.88	0	0	0	0	0	0	-39.83	-39.83
Inverter Transformer	MV3-22 T	368661	4907142	2	0	0	56.1	56.1	1	4335.08	3.25	0	83.74	0	1.38	0	0	10.94	0	0	0	0	0	0	-40	-40
Inverter Transformer	MV3-19 T	368352	4907347	2	0	0	56.1	56.1	1	4340.78	3.25	0	83.75	0	1.38	0	0	10.95	0	0	0	0	0	0	-40.02	-40.02
Inverter Transformer	MV3-13 T	367958	4907577	2	0	0	56.1	56.1	1	4365.02	3.25	0	83.8	0	1.39	0	0	10.99	0	0	0	0	0	0	-40.11	-40.11
Inverter Transformer	MV3-17 T	368183	4907472	2	0	0	56.1	56.1	1	4368.68	3.25	0	83.81	0	1.39	0	0	10.99	0	0	0	0	0	0	-40.13	-40.13
Inverter Transformer	MV3-15 T	368351	4907477	2	0	0	56.1	56.1	1	4453.09	3.25	0	83.97	0	1.42	0	0	11.11	0	0	0	0	0	0	-40.45	-40.45
Inverter Transformer	MV3-20 T	368683	4907317	2	0	0	56.1	56.1	1	4491.62	3.25	0	84.05	0	1.44	0	0	11.16	0	0	0	0	0	0	-40.59	-40.59
Inverter Transformer	MV3-7 T	367951	4907754	2	0	0	56.1	56.1	1	4524.24	3.25	0	84.11	0	1.45	0	0	11.21	0	0	0	0	0	0	-40.71	-40.71
Inverter Transformer	MV3-16 T	368509	4907475	2	0	0	56.1	56.1	1	4530.98	3.25	0	84.12	0	1.45	0	0	11.22	0	0	0	0	0	0	-40.74	-40.74

	Inverter Transformer	MV3-10 T	368162	4907669	2	0	0	56.1	56.1	1	4535.07	3.25	0	84.13	0	1.45	0	0	11.22	0	0	0	0	0	0	-40.75	-40.75
	Inverter Transformer	MV3-11 T	368340	4907662	2	0	0	56.1	56.1	1	4609.99	3.25	0	84.27	0	1.48	0	0	11.33	0	0	0	0	0	0	-41.03	-41.03
	Inverter Transformer	MV3-14 T	368678	4907498	2	0	0	56.1	56.1	1	4639.94	3.25	0	84.33	0	1.49	0	0	11.37	0	0	0	0	0	0	-41.13	-41.13
	Inverter Transformer	MV3-3 T	367944	4907927	2	0	0	56.1	56.1	1	4681.05	3.25	0	84.41	0	1.51	0	0	11.43	0	0	0	0	0	0	-41.28	-41.28
	Inverter Transformer	MV3-6 T	368156	4907834	2	0	0	56.1	56.1	1	4681.25	3.25	0	84.41	0	1.51	0	0	11.43	0	0	0	0	0	0	-41.28	-41.28
	Inverter Transformer	MV3-9 T	368517	4907703	2	0	0	56.1	56.1	1	4731.58	3.25	0	84.5	0	1.53	0	0	11.49	0	0	0	0	0	0	-41.46	-41.46
	Inverter Transformer	MV3-5 T	368335	4907843	2	0	0	56.1	56.1	1	4768.1	3.25	0	84.57	0	1.54	0	0	11.54	0	0	0	0	0	0	-41.59	-41.59
	Inverter Transformer	MV3-1 T	368150	4907976	2	0	0	56.1	56.1	1	4807.68	3.25	0	84.64	0	1.56	0	0	11.6	0	0	0	0	0	0	-41.73	-41.73
	Inverter Transformer	MV3-8 T	368685	4907712	2	0	0	56.1	56.1	1	4824.92	3.25	0	84.67	0	1.56	0	0	11.62	0	0	0	0	0	0	-41.79	-41.79
	Inverter Transformer	MV3-4 T	368507	4907925	2	0	0	56.1	56.1	1	4920.72	3.25	0	84.84	0	1.6	0	0	11.75	0	0	0	0	0	0	-42.13	-42.13
	Inverter Transformer	MV3-2 T	368677	4907928	2	0	0	56.1	56.1	1	5006.41	3.25	0	84.99	0	1.63	0	0	11.86	0	0	0	0	0	0	-42.42	-42.42
	Inverter Transformer	MV6-3 T	370202	4907140	2	0	0	56.1	56.1	1	5370.45	3.25	0	85.6	0	1.76	0	0	12.33	0	0	0	0	0	0	-43.63	-43.63
	Inverter Transformer	MV6-2 T	370091	4907339	2	0	0	56.1	56.1	1	5422.92	3.25	0	85.68	0	1.77	0	0	12.4	0	0	0	0	0	0	-43.8	-43.8
	Inverter Transformer	MV4-15 T	369170	4908481	2	0	0	56.1	56.1	1	5734.02	3.25	0	86.17	0	1.88	0	0	12.78	0	0	0	0	0	0	-44.77	-44.77
	Inverter Transformer	MV4-14 T	369182	4908507	2	0	0	56.1	56.1	1	5762.45	3.25	0	86.21	0	1.89	0	0	12.82	0	0	0	0	0	0	-44.86	-44.86
	Inverter Transformer	MV4-13 T	369057	4908605	2	0	0	56.1	56.1	1	5782.7	3.25	0	86.24	0	1.89	0	0	12.84	0	0	0	0	0	0	-44.92	-44.92
	Inverter Transformer	MV4-12 T	369049	4908803	2	0	0	56.1	56.1	1	5951.13	3.25	0	86.49	0	1.95	0	0	13.04	0	0	0	0	0	0	-45.43	-45.43
	Inverter Transformer	MV4-11 T	369269	4908855	2	0	0	56.1	56.1	1	6105.48	3.25	0	86.71	0	2	0	0	13.23	0	0	0	0	0	0	-45.88	-45.88
	Inverter Transformer	MV4-7 T	369040	4909001	2	0	0	56.1	56.1	1	6120.88	3.25	0	86.74	0	2	0	0	13.25	0	0	0	0	0	0	-45.93	-45.93
	Inverter Transformer	MV4-10 T	369307	4908858	2	0	0	56.1	56.1	1	6127.45	3.25	0	86.75	0	2	0	0	13.25	0	0	0	0	0	0	-45.94	-45.94
	Inverter Transformer	MV5-6 T	369987	4908507	2	0	0	56.1	56.1	1	6221.66	3.25	0	86.88	0	2.03	0	0	13.36	0	0	0	0	0	0	-46.22	-46.22
	Inverter Transformer	MV4-8 T	369262	4909001	2	0	0	56.1	56.1	1	6228.18	3.25	0	86.89	0	2.04	0	0	13.37	0	0	0	0	0	0	-46.23	-46.23
	Inverter Transformer	MV4-9 T	369284	4909001	2	0	0	56.1	56.1	1	6239.15	3.25	0	86.9	0	2.04	0	0	13.38	0	0	0	0	0	0	-46.27	-46.27
	Inverter Transformer	MV4-4 T	369033	4909199	2	0	0	56.1	56.1	1	6293.19	3.25	0	86.98	0	2.06	0	0	13.44	0	0	0	0	0	0	-46.42	-46.42
	Inverter Transformer	MV5-5 T	370021	4908690	2	0	0	56.1	56.1	1	6387.54	3.25	0	87.11	0	2.08	0	0	13.55	0	0	0	0	0	0	-46.69	-46.69
	Inverter Transformer	MV4-6 T	369249	4909192	2	0	0	56.1	56.1	1	6388.34	3.25	0	87.11	0	2.08	0	0	13.55	0	0	0	0	0	0	-46.69	-46.69
	Inverter Transformer	MV4-5 T	369283	4909199	2	0	0	56.1	56.1	1	6410.93	3.25	0	87.14	0	2.09	0	0	13.58	0	0	0	0	0	0	-46.75	-46.75
	Inverter Transformer	MV4-1 T	369017	4909397	2	0	0	56.1	56.1	1	6463.02	3.25	0	87.21	0	2.11	0	0	13.64	0	0	0	0	0	0	-46.9	-46.9
	Inverter Transformer	MV5-2 T	370011	4908853	2	0	0	56.1	56.1	1	6512.35	3.25	0	87.27	0	2.12	0	0	13.69	0	0	0	0	0	0	-47.03	-47.03
	Inverter Transformer	MV4-3 T	369234	4909397	2	0	0	56.1	56.1	1	6561.62	3.25	0	87.34	0	2.14	0	0	13.75	0	0	0	0	0	0	-47.17	-47.17
	Inverter Transformer	MV4-2 T	369267	4909397	2	0	0	56.1	56.1	1	6577.11	3.25	0	87.36	0	2.14	0	0	13.77	0	0	0	0	0	0	-47.21	-47.21
	Inverter Transformer	MV5-4 T	370330	4908707	2	0	0	56.1	56.1	1	6591.79	3.25	0	87.38	0	2.14	0	0	13.78	0	0	0	0	0	0	-47.25	-47.25
	Inverter Transformer	MV5-3 T	370237	4908851	2	0	0	56.1	56.1	1	6646.69	3.25	0	87.45	0	2.16	0	0	13.84	0	0	0	0	0	0	-47.4	-47.4
	Inverter Transformer	MV5-1 T	370015	4909142	2	0	0	56.1	56.1	1	6750.05	3.25	0	87.59	0	2.19	0	0	13.96	0	0	0	0	0	0	-47.68	-47.68
	Line Reactor	NGR	369421	4908787.5	5	0	0	45.4	45.4	1	6126.82	5.25	0	86.74	0	3.24	1.36	0.1	2.5	0	0	0	0	0	0	-48.49	-48.49
Limit. Valu	0	0																								
Level D/N:	27.3455	27.3455																								

Receiver: Vacant Lot Receptor
ID: G-V8
X: 366321.5
Y: 4901596.4
Z: 4.5
Ground: 0

ISO	Description	ID	X	Y	Z	Ground	ReflOrd	LxT	LxN	L/A	Dist.	hm	Freq	Adiv	K0b	Agr	Abar	z	Aatm	Afol	Ahous	Cmet	CmetN	Dc	RL	LtotT	LtotN
	Sol_Luce Substation	S_Substation	369426	4908792	3.5	0	0	112.1	112.1	1	7836.75	5.25	0	88.88	0	1.53	2.29	0.32	11.51	0	0	0	0	0	0	7.86	7.86
	Inverter	MV1-15	365315	4904994	2	0	0	100.3	100.3	1	3543.55	3.25	0	81.99	0	0.46	0	0	16.3	0	0	0	0	0	0	1.56	1.56
	Inverter	MV1-12	365038	4905386	2	0	0	100.3	100.3	1	4001.06	3.25	0	83.04	0	0.53	0	0	17.05	0	0	0	0	0	0	-0.31	-0.31
	Inverter	MV1-11	364655	4905414	2	0	0	100.3	100.3	1	4165.49	3.25	0	83.39	0	0.55	0	0	17.31	0	0	0	0	0	0	-0.94	-0.94
	Inverter	MV1-8	364788	4905647	2	0	0	100.3	100.3	1	4331.16	3.25	0	83.73	0	0.57	0	0	17.57	0	0	0	0	0	0	-1.56	-1.56
	Inverter	MV1-9	364561	4905646	2	0	0	100.3	100.3	1	4415.72	3.25	0	83.9	0	0.58	0	0	17.7	0	0	0	0	0	0	-1.87	-1.87
	Inverter	MV1-4	364815	4905918	2	0	0	100.3	100.3	1	4576.66	3.25	0	84.21	0	0.6	0	0	17.95	0	0	0	0	0	0	-2.45	-2.45
	Inverter	MV1-5	364671	4905892	2	0	0	100.3	100.3	1	4601.78	3.25	0	84.26	0	0.6	0	0	17.99	0	0	0	0	0	0	-2.53	-2.53
	Inverter	MV1-6	364477	4905835	2	0	0	100.3	100.3	1	4622.54	3.25	0	84.3	0	0.6	0	0	18.02	0	0	0	0	0	0	-2.61	-2.61
	Inverter	MV1-2	364753	4906063	2	0	0	100.3	100.3	1	4734	3.25	0	84.5	0	0.62	0	0	18.19	0	0	0	0	0	0	-2.99	-2.99
	Inverter	MV1-1	364715	4906166	2	0	0	100.3	100.3	1	4843.77	3.25	0	84.7	0	0.63	0	0	18.35	0	0	0	0	0	0	-3.37	-3.37
	Inverters	G_Inv9	366750.9	4902691.8	2	0	0	87.7	87.7	1	1176.56	3.25	0	72.41	0	2.47	0	0	1.65	0	0	0	0	0	0	11.12	11.12
	Inverter	MV2-3	365820	4906641	2	0	0	100.3	100.3	1	5069.47	3.25	0	85.1	0	0.65	0	0	18.68	0	0	0	0	0	0	-4.12	-4.12
	Inverter	MV2-4	365586	4906624	2	0	0	100.3	100.3	1	5081.11	3.25	0	85.12	0	0.65	0	0	18.7	0	0	0	0	0	0	-4.16	-4.16
	Inverter	MV1-14	365163	4905049	2	0	0	97.3	97.3	1	3641.78	3.25	0	82.23	0	0.47	0	0	16.47	0	0	0	0	0	0	-1.86	-1.86
	Gardiner Substation	G_Sub	366586.3	4903349.9	2.5	0	0	90.8	90.8	1	1773.38	3.5	0	75.98	0	-0.22	0	0	3.98	0	0	0	0	0	0	11.04	11.04
	Inverters	G_Inv10	366900.7	4902704.8	2	0	0	87.7	87.7	1	1250.61	3.25	0	72.94	0	2.49	0	0	1.74	0	0	0	0	0	0	10.49	10.49
	Inverters	G_Inv7	366694.6	4902824.7	2	0	0	87.7	87.7	1	1283.72	3.25	0	73.17	0	2.49	0	0	1.78	0	0	0	0	0	0	10.22	10.22
	Inverter	MV1-13	364731	4905241	2	0	0	97.3	97.3	1	3976.53	3.25	0	82.99	0	0.52	0	0	17.01	0	0	0	0	0	0	-3.21	-3.21
	Inverters	G_Inv8	366844.5	4902838.5	2	0	0	87.7	87.7	1	1347.72	3.25	0	73.59	0	2.5	0	0	1.86	0	0	0	0	0	0	9.71	9.71
	Inverter	MV1-10	365004	4905564	2	0	0	97.3	97.3	1	4180.63	3.25	0	83.42	0	0.55	0	0	17.33	0	0	0	0	0	0	-4	-4
	Inverter	MV3-18	367752	4907412	2	0	0	100.3	100.3	1	5988.95	3.25	0	86.55	0	0.7	0	0	19.98	0	0	0	0	0	0	-6.92	-6.92
	Inverters	G_Inv5	366638.5	4902958.1	2	0	0	87.7	87.7	1	1398.11	3.25	0	73.91	0	2.51	0	0	1.92	0	0	0	0	0	0	9.32	9.32
	Inverter	MV3-21	368478	4907206	2	0	0	100.3	100.3	1	6009.83	3.25	0	86.58	0	0.71	0	0	20.01	0	0	0	0	0	0	-6.98	-6.98
	Inverter	MV3-19	368357	4907347	2	0	0	100.3	100.3	1	6100.22	3.25	0	86.71	0	0.71	0	0	20.13	0	0	0	0	0	0	-7.23	-7.23
	Inverter	MV3-12	367668	4907594	2	0	0	100.3	100.3	1	6146.89	3.25	0	86.77	0	0.71	0	0	20.19	0	0	0	0	0	0	-7.36	-7.36
	Inverter	MV3-17	368178	4907472	2	0	0	100.3	100.3	1	6161.92	3.25	0	86.79	0	0.71	0	0	20.21	0	0	0	0	0	0	-7.4	-7.4
	Inverter	MV3-20	368689	4907317	2	0	0	100.3	100.3	1	6191.15	3.25	0	86.84	0	0.71	0	0	20.25	0	0	0	0	0	0	-7.48	-7.48

Inverter	MV3-13	367963	4907577	2	0	0	100.3	100.3	1	6201.78	3.25	0	86.85	0	0.71	0	0	20.27	0	0	0	0	0	0	-7.51	-7.51
Inverter	MV3-15	368357	4907477	2	0	0	100.3	100.3	1	6222.92	3.25	0	86.88	0	0.71	0	0	20.29	0	0	0	0	0	0	-7.57	-7.57
Inverter	MV1-7	364925	4905782	2	0	0	97.3	97.3	1	4412.42	3.25	0	83.89	0	0.58	0	0	17.7	0	0	0	0	0	0	-4.86	-4.86
Inverters	G_Inv6	366788.5	4902972	2	0	0	87.7	87.7	1	1452.71	3.25	0	74.24	0	2.51	0	0	1.99	0	0	0	0	0	0	8.92	8.92
Inverter	MV3-16	368514	4907475	2	0	0	100.3	100.3	1	6274.15	3.25	0	86.95	0	0.71	0	0	20.36	0	0	0	0	0	0	-7.71	-7.71
Inverter	MV3-10	368167	4907669	2	0	0	100.3	100.3	1	6346.84	3.25	0	87.05	0	0.71	0	0	20.46	0	0	0	0	0	0	-7.91	-7.91
Inverter	MV3-14	368684	4907498	2	0	0	100.3	100.3	1	6356.91	3.25	0	87.06	0	0.71	0	0	20.47	0	0	0	0	0	0	-7.94	-7.94
Inverter	MV3-7	367945	4907754	2	0	0	100.3	100.3	1	6368.03	3.25	0	87.08	0	0.71	0	0	20.49	0	0	0	0	0	0	-7.97	-7.97
Inverter	MV3-11	368346	4907662	2	0	0	100.3	100.3	1	6394.54	3.25	0	87.12	0	0.71	0	0	20.52	0	0	0	0	0	0	-8.04	-8.04
Inverter	MV3-9	368512	4907703	2	0	0	100.3	100.3	1	6487.59	3.25	0	87.24	0	0.71	0	0	20.64	0	0	0	0	0	0	-8.29	-8.29
Inverter	MV3-6	368162	4907834	2	0	0	100.3	100.3	1	6503.47	3.25	0	87.26	0	0.71	0	0	20.66	0	0	0	0	0	0	-8.33	-8.33
Inverters	G_Inv3	366583.7	4903091.4	2	0	0	87.7	87.7	1	1517.82	3.25	0	74.62	0	2.52	0	0	2.07	0	0	0	0	0	0	8.45	8.45
Inverter	MV3-3	367939	4907927	2	0	0	100.3	100.3	1	6533.97	3.25	0	87.3	0	0.71	0	0	20.7	0	0	0	0	0	0	-8.41	-8.41
Inverter	MV3-8	368680	4907712	2	0	0	100.3	100.3	1	6554.62	3.25	0	87.33	0	0.71	0	0	20.73	0	0	0	0	0	0	-8.46	-8.46
Inverters	G_Inv4	366732.8	4903105	2	0	0	87.7	87.7	1	1563.66	3.25	0	74.88	0	2.53	0	0	2.12	0	0	0	0	0	0	8.13	8.13
Inverter	MV6-3	370207	4907140	2	0	0	100.3	100.3	1	6769.68	3.25	0	87.61	0	0.71	0	0	21.01	0	0	0	0	0	0	-9.02	-9.02
Inverter	MV6-2	370085	4907339	2	0	0	100.3	100.3	1	6865.96	3.25	0	87.73	0	0.71	0	0	21.13	0	0	0	0	0	0	-9.26	-9.26
Inverters	G_Inv1	366526.4	4903225.8	2	0	0	87.7	87.7	1	1642.23	3.25	0	75.31	0	2.54	0	0	2.21	0	0	0	0	0	0	7.6	7.6
Inverters	G_Inv2	366676.9	4903239.1	2	0	0	87.7	87.7	1	1680.71	3.25	0	75.51	0	2.54	0	0	2.26	0	0	0	0	0	0	7.35	7.35
Inverter	MV2-1	365842	4906816	2	0	0	97.3	97.3	1	5241.58	3.25	0	85.39	0	0.66	0	0	18.93	0	0	0	0	0	0	-7.67	-7.67
Inverter	MV4-11	369264	4908855	2	0	0	100.3	100.3	1	7832.34	3.25	0	88.88	0	0.67	0	0	22.31	0	0	0	0	0	0	-11.54	-11.54
Inverter	MV4-10	369312	4908858	2	0	0	100.3	100.3	1	7853.28	3.25	0	88.9	0	0.67	0	0	22.33	0	0	0	0	0	0	-11.59	-11.59
Inverter	MV4-7	369035	4909001	2	0	0	100.3	100.3	1	7886.14	3.25	0	88.94	0	0.66	0	0	22.37	0	0	0	0	0	0	-11.66	-11.66
Inverter	MV4-8	369256	4909001	2	0	0	100.3	100.3	1	7964.89	3.25	0	89.02	0	0.66	0	0	22.46	0	0	0	0	0	0	-11.83	-11.83
Inverter	MV4-9	369289	4909001	2	0	0	100.3	100.3	1	7977.1	3.25	0	89.04	0	0.66	0	0	22.48	0	0	0	0	0	0	-11.86	-11.86
Inverter	MV5-5	370015	4908690	2	0	0	100.3	100.3	1	7997.57	3.25	0	89.06	0	0.65	0	0	22.5	0	0	0	0	0	0	-11.9	-11.9
Inverter	MV4-4	369027	4909199	2	0	0	100.3	100.3	1	8069.65	3.25	0	89.14	0	0.65	0	0	22.59	0	0	0	0	0	0	-12.06	-12.06
Inverter	MV4-6	369243	4909192	2	0	0	100.3	100.3	1	8138.08	3.25	0	89.21	0	0.64	0	0	22.66	0	0	0	0	0	0	-12.2	-12.2
Inverter	MV5-2	370006	4908853	2	0	0	100.3	100.3	1	8138.41	3.25	0	89.21	0	0.64	0	0	22.67	0	0	0	0	0	0	-12.2	-12.2
Inverter	MV5-4	370324	4908707	2	0	0	100.3	100.3	1	8159.7	3.25	0	89.23	0	0.64	0	0	22.69	0	0	0	0	0	0	-12.25	-12.25
Inverter	MV4-5	369289	4909199	2	0	0	100.3	100.3	1	8161.22	3.25	0	89.24	0	0.64	0	0	22.69	0	0	0	0	0	0	-12.25	-12.25
Inverter	MV5-3	370231	4908851	2	0	0	100.3	100.3	1	8240.96	3.25	0	89.32	0	0.63	0	0	22.78	0	0	0	0	0	0	-12.42	-12.42
Inverter	MV4-1	369011	4909397	2	0	0	100.3	100.3	1	8251.23	3.25	0	89.33	0	0.63	0	0	22.79	0	0	0	0	0	0	-12.44	-12.44
Inverter	MV4-3	369229	4909397	2	0	0	100.3	100.3	1	8324.84	3.25	0	89.41	0	0.62	0	0	22.88	0	0	0	0	0	0	-12.59	-12.59
Inverter	MV4-2	369272	4909397	2	0	0	100.3	100.3	1	8339.95	3.25	0	89.42	0	0.62	0	0	22.89	0	0	0	0	0	0	-12.63	-12.63
Inverter	MV5-1	370020	4909142	2	0	0	100.3	100.3	1	8403.27	3.25	0	89.49	0	0.61	0	0	22.97	0	0	0	0	0	0	-12.76	-12.76
Inverter	MV6-1	370235	4907364	2	0	0	97.3	97.3	1	6969.99	3.25	0	87.86	0	0.71	0	0	21.26	0	0	0	0	0	0	-12.52	-12.52
DSTATCOM - 10 MVAR #2	DSAT2	369403	4908757	2.5	0	0	96.6	96.6	1	7795.5	3.5	0	88.84	0	3.88	0	0	4.68	0	0	0	0	0	0	-0.76	-0.76
DSTATCOM - 10 MVAR #1	DSAT1	369437	4908757	2.5	0	0	96.6	96.6	1	7809	3.5	0	88.85	0	3.88	0	0	4.68	0	0	0	0	0	0	-0.78	-0.78
SubstationTransformer	W_ST	369711.17	4906112.3	2.5	0	0	92	92	1	5646.5	3.5	0	86.04	0	0.7	0	-0.11	9.36	0	0	0	0	0	0	-4.12	-4.12
Inverter	MV1-3	364440	4906039	2	0	0	89.1	89.1	1	4824.6	3.25	0	84.67	0	1.6	0	0	12.23	0	0	0	0	0	0	-9.44	-9.44
Inverter	MV2-2	365977	4906654	2	0	0	89.1	89.1	1	5069.32	3.25	0	85.1	0	1.66	0	0	12.56	0	0	0	0	0	0	-10.25	-10.25
Westbrook Inverter Enclosur	W_INV3	369508	4906164	2	0	0	89.1	89.1	1	5569.27	3.25	0	85.92	0	1.78	0	0	13.21	0	0	0	0	0	0	-11.85	-11.85
Westbrook Inverter Enclosur	W_INV4	369673	4906164	2	0	0	89.1	89.1	1	5665.29	3.25	0	86.06	0	1.8	0	0	13.34	0	0	0	0	0	0	-12.15	-12.15
Westbrook Inverter Enclosur	W_INV2	369374	4906388	2	0	0	89.1	89.1	1	5681.3	3.25	0	86.09	0	1.81	0	0	13.36	0	0	0	0	0	0	-12.2	-12.2
Westbrook Inverter Enclosur	W_INV7	369780	4906417	2	0	0	89.1	89.1	1	5932.91	3.25	0	86.47	0	1.87	0	0	13.68	0	0	0	0	0	0	-12.95	-12.95
Inverter	MV3-22	368656	4907142	2	0	0	89.1	89.1	1	6016.94	3.25	0	86.59	0	1.89	0	0	13.78	0	0	0	0	0	0	-13.2	-13.2
Westbrook Inverter Enclosur	W_INV5	369719	4906574	2	0	0	89.1	89.1	1	6026.57	3.25	0	86.6	0	1.89	0	0	13.8	0	0	0	0	0	0	-13.23	-13.23
Westbrook Inverter Enclosur	W_INV6	369875	4906578	2	0	0	89.1	89.1	1	6119.13	3.25	0	86.73	0	1.92	0	0	13.91	0	0	0	0	0	0	-13.5	-13.5
Inverter	MV3-5	368340	4907843	2	0	0	89.1	89.1	1	6564.63	3.25	0	87.34	0	2.02	0	0	14.46	0	0	0	0	0	0	-14.77	-14.77
Inverter	MV3-1	368156	4907976	2	0	0	89.1	89.1	1	6638.12	3.25	0	87.44	0	2.04	0	0	14.55	0	0	0	0	0	0	-14.98	-14.98
Inverter	MV3-4	368502	4907925	2	0	0	89.1	89.1	1	6693.71	3.25	0	87.51	0	2.05	0	0	14.62	0	0	0	0	0	0	-15.13	-15.13
Inverter	MV3-2	368671	4907928	2	0	0	89.1	89.1	1	6753.47	3.25	0	87.59	0	2.07	0	0	14.69	0	0	0	0	0	0	-15.29	-15.29
Fixed Reactor Bank 1	FRB1	369378	4908755	6	0	0	89.8	89.8	1	7783.81	5.25	0	88.82	0	-0.2	0	0	11.47	0	0	0	0	0	0	-10.32	-10.32
Fixed Reactor Bank 2	FRB2	369464	4908755	6	0	0	89.8	89.8	1	7817.98	5.25	0	88.86	0	-0.19	0	0	11.5	0	0	0	0	0	0	-10.39	-10.39
Inverter	MV4-15	369176	4908481	2	0	0	89.1	89.1	1	7452.91	3.25	0	88.45	0	2.23	0	0	15.52	0	0	0	0	0	0	-17.14	-17.14
Inverter	MV4-14	369176	4908507	2	0	0	89.1	89.1	1	7476.94	3.25	0	88.47	0	2.24	0	0	15.55	0	0	0	0	0	0	-17.2	-17.2
Inverter	MV4-13	369051	4908605	2	0	0	89.1	89.1	1	7521.35	3.25	0	88.53	0	2.25	0	0	15.6	0	0	0	0	0	0	-17.32	-17.32
Inverter	MV4-12	369043	4908803	2	0	0	89.1	89.1	1	7703.35	3.25	0	88.73	0	2.29	0	0	15.81	0	0	0	0	0	0	-17.77	-17.77
Inverter	MV5-6	369982	4908507	2	0	0	89.1	89.1	1	7820.21	3.25	0	88.86	0	2.32	0	0	15.94	0	0	0	0	0	0	-18.07	-18.07
Westbrook Inverter Enclosur	W_INV1	369409	4906578	2	0	0	86.1	86.1	1	5860.8	3.25	0	86.36	0	1.85	0	0	13.59	0	0	0	0	0	0	-15.74	-15.74
Inverter	MV6-4	370250	4906966	2	0	0	86.1	86.1	1	6653.25	3.25	0	87.46	0	2.04	0	0	14.57	0	0	0	0	0	0	-18.02	-18.02
Westbrook Inverter Transfor	W_INVTR1	369403	4906578	2	0	0	78.2	78.2	1	5857.64	3.25	0	86.35	0	-3.34	0	0	2.7	0	0	0	0	0	0	-7.47	-7.47
Westbrook Inverter Transfor	W_INVTR3	369514	4906164	2	0	0	77.3	77.3	1	5572.7	3.25	0	85.92	0	-3.29	0	0	2.6	0	0	0	0	0	0	-7.9	-7.9
Westbrook Inverter Transfor	W_INVTR4	369679	4906164	2	0	0	77.3	77.3	1	5668.84	3.25	0	86.07	0	-3.31	0	0	2.64	0	0	0	0	0	0	-8.06	-8.06
Westbrook Inverter Transfor	W_INVTR2	369368	4906388	2	0	0	77.3	77.3	1	5678.08	3.25	0	86.08	0	-3.31	0	0	2.64	0	0	0	0	0	0	-8.07	-8.07
Westbrook Inverter Transfor	W_INVTR7	369786	4906417	2	0	0	77.3	77.3	1	5936.41	3.25	0	86.47	0	-3.36	0	0	2.72	0	0	0	0	0	0	-8.49	-8.49
Westbrook Inverter Transfor	W_INVTR5	369725	4906574	2	0	0	77.3	77.3	1	6029.95	3.25	0	86.61	0	-3.37	0	0	2.75	0	0	0	0	0	0	-8.64	-8.64
Westbrook Inverter Transfor	W_INVTR6	369881	4906578	2	0	0	77.3	77.3	1	6122.61	3.25	0	86.74	0	-3.39	0	0	2.78	0	0	0	0	0	0	-8.79	-8.79
Inverter Transformer	MV1-14 T	365157	4905049	2	0	0	69.4	69.4	1	3643.7	3.25	0	82.23	0	2.69	0	0	6.4	0	0	0	0	0	0	-21.98	-21.98
Inverter Transformer	MV1-13 T	364725	4905241	2	0	0	69.4	69.4	1	3978.94	3.25	0	83	0	2.78	0	0	6.66	0	0	0	0	0	0	-23.09	-23.09
Inverter Transformer	MV1-10 T	365010	4905564	2	0	0	69.4	69.4	1	4178.74	3.25	0	83.42	0	2.83	0	0	6.81	0	0	0	0	0	0	-23.71	-23.71
Inverter Transformer	MV1-7 T	364919	4905782	2	0	0	69.4	69.4	1	4414.32	3.25	0	83.9	0	2.89	0	0	6.98	0	0	0	0	0	0	-24.41	-24.41
Inverter Transformer	MV2-1 T	365836	4906816	2	0	0	69.4	69.4	1	5242.13	3.25	0	85.39	0	3.06	0	0	7.54	0	0	0	0	0	0	-26.64	-26.64

	Inverter Transformer	MV6-4 T	370244	4906966	2	0	0	69.4	69.4	1	6649.71	3.25	0	87.46	0	3.28	0	0	8.4	0	0	0	0	0	0	-29.79	-29.79
	Inverter Transformer	MV6-1 T	370230	4907364	2	0	0	69.4	69.4	1	6967.18	3.25	0	87.86	0	3.31	0	0	8.58	0	0	0	0	0	0	-30.41	-30.41
	Inverter Transformer	MV1-15 T	365309	4904994	2	0	0	56.1	56.1	1	3545.26	3.25	0	81.99	0	1.06	0	0	9.76	0	0	0	0	0	0	-36.75	-36.75
	Inverter Transformer	MV1-12 T	365044	4905386	2	0	0	56.1	56.1	1	3999.13	3.25	0	83.04	0	1.24	0	0	10.45	0	0	0	0	0	0	-38.68	-38.68
	Inverter Transformer	MV1-11 T	364649	4905414	2	0	0	56.1	56.1	1	4167.89	3.25	0	83.4	0	1.31	0	0	10.7	0	0	0	0	0	0	-39.35	-39.35
	Inverter Transformer	MV1-8 T	364782	4905647	2	0	0	56.1	56.1	1	4333.29	3.25	0	83.74	0	1.38	0	0	10.94	0	0	0	0	0	0	-39.99	-39.99
	Inverter Transformer	MV1-9 T	364555	4905646	2	0	0	56.1	56.1	1	4418.12	3.25	0	83.9	0	1.41	0	0	11.06	0	0	0	0	0	0	-40.31	-40.31
	Inverter Transformer	MV1-4 T	364821	4905918	2	0	0	56.1	56.1	1	4574.68	3.25	0	84.21	0	1.47	0	0	11.28	0	0	0	0	0	0	-40.9	-40.9
	Inverter Transformer	MV1-5 T	364676	4905892	2	0	0	56.1	56.1	1	4599.98	3.25	0	84.26	0	1.48	0	0	11.31	0	0	0	0	0	0	-40.99	-40.99
	Inverter Transformer	MV1-6 T	364482	4905835	2	0	0	56.1	56.1	1	4620.55	3.25	0	84.29	0	1.49	0	0	11.34	0	0	0	0	0	0	-41.06	-41.06
	Inverter Transformer	MV1-2 T	364759	4906063	2	0	0	56.1	56.1	1	4732.01	3.25	0	84.5	0	1.53	0	0	11.5	0	0	0	0	0	0	-41.46	-41.46
	Inverter Transformer	MV1-3 T	364435	4906039	2	0	0	56.1	56.1	1	4826.55	3.25	0	84.67	0	1.56	0	0	11.62	0	0	0	0	0	0	-41.8	-41.8
	Inverter Transformer	MV1-1 T	364721	4906166	2	0	0	56.1	56.1	1	4841.78	3.25	0	84.7	0	1.57	0	0	11.64	0	0	0	0	0	0	-41.85	-41.85
	Inverter Transformer	MV2-2 T	365982	4906654	2	0	0	56.1	56.1	1	5068.98	3.25	0	85.1	0	1.65	0	0	11.94	0	0	0	0	0	0	-42.63	-42.63
	Inverter Transformer	MV2-3 T	365814	4906641	2	0	0	56.1	56.1	1	5070.06	3.25	0	85.1	0	1.65	0	0	11.95	0	0	0	0	0	0	-42.64	-42.64
	Inverter Transformer	MV2-4 T	365590	4906628	2	0	0	56.1	56.1	1	5084.5	3.25	0	85.12	0	1.66	0	0	11.97	0	0	0	0	0	0	-42.69	-42.69
	Inverter Transformer	MV3-18 T	367757	4907412	2	0	0	56.1	56.1	1	5990.15	3.25	0	86.55	0	1.96	0	0	13.09	0	0	0	0	0	0	-45.54	-45.54
	Inverter Transformer	MV3-21 T	368484	4907206	2	0	0	56.1	56.1	1	6011.99	3.25	0	86.58	0	1.97	0	0	13.12	0	0	0	0	0	0	-45.61	-45.61
	Inverter Transformer	MV3-22 T	368661	4907142	2	0	0	56.1	56.1	1	6018.88	3.25	0	86.59	0	1.97	0	0	13.13	0	0	0	0	0	0	-45.63	-45.63
	Inverter Transformer	MV3-19 T	368352	4907347	2	0	0	56.1	56.1	1	6098.55	3.25	0	86.7	0	2	0	0	13.22	0	0	0	0	0	0	-45.86	-45.86
	Inverter Transformer	MV3-12 T	367674	4907594	2	0	0	56.1	56.1	1	6148.21	3.25	0	86.77	0	2.01	0	0	13.28	0	0	0	0	0	0	-46	-46
	Inverter Transformer	MV3-17 T	368183	4907472	2	0	0	56.1	56.1	1	6163.43	3.25	0	86.8	0	2.02	0	0	13.29	0	0	0	0	0	0	-46.05	-46.05
	Inverter Transformer	MV3-20 T	368683	4907317	2	0	0	56.1	56.1	1	6188.86	3.25	0	86.83	0	2.02	0	0	13.32	0	0	0	0	0	0	-46.12	-46.12
	Inverter Transformer	MV3-13 T	367958	4907577	2	0	0	56.1	56.1	1	6200.46	3.25	0	86.85	0	2.03	0	0	13.34	0	0	0	0	0	0	-46.16	-46.16
	Inverter Transformer	MV3-15 T	368351	4907477	2	0	0	56.1	56.1	1	6220.96	3.25	0	86.88	0	2.03	0	0	13.36	0	0	0	0	0	0	-46.21	-46.21
	Inverter Transformer	MV3-16 T	368509	4907475	2	0	0	56.1	56.1	1	6272.41	3.25	0	86.95	0	2.05	0	0	13.42	0	0	0	0	0	0	-46.36	-46.36
	Inverter Transformer	MV3-10 T	368162	4907669	2	0	0	56.1	56.1	1	6345.39	3.25	0	87.05	0	2.07	0	0	13.5	0	0	0	0	0	0	-46.57	-46.57
	Inverter Transformer	MV3-14 T	368678	4907498	2	0	0	56.1	56.1	1	6354.68	3.25	0	87.06	0	2.07	0	0	13.52	0	0	0	0	0	0	-46.59	-46.59
	Inverter Transformer	MV3-7 T	367951	4907754	2	0	0	56.1	56.1	1	6369.56	3.25	0	87.08	0	2.08	0	0	13.53	0	0	0	0	0	0	-46.63	-46.63
	Inverter Transformer	MV3-11 T	368340	4907662	2	0	0	56.1	56.1	1	6392.64	3.25	0	87.11	0	2.09	0	0	13.56	0	0	0	0	0	0	-46.7	-46.7
	Inverter Transformer	MV3-9 T	368517	4907703	2	0	0	56.1	56.1	1	6489.28	3.25	0	87.24	0	2.11	0	0	13.67	0	0	0	0	0	0	-46.97	-46.97
	Inverter Transformer	MV3-6 T	368156	4907834	2	0	0	56.1	56.1	1	6501.77	3.25	0	87.26	0	2.12	0	0	13.68	0	0	0	0	0	0	-47	-47
	Inverter Transformer	MV3-3 T	367944	4907927	2	0	0	56.1	56.1	1	6535.21	3.25	0	87.31	0	2.13	0	0	13.72	0	0	0	0	0	0	-47.09	-47.09
	Inverter Transformer	MV3-8 T	368685	4907712	2	0	0	56.1	56.1	1	6556.42	3.25	0	87.33	0	2.13	0	0	13.74	0	0	0	0	0	0	-47.15	-47.15
	Inverter Transformer	MV3-5 T	368335	4907843	2	0	0	56.1	56.1	1	6563.09	3.25	0	87.34	0	2.14	0	0	13.75	0	0	0	0	0	0	-47.17	-47.17
	Inverter Transformer	MV3-1 T	368150	4907976	2	0	0	56.1	56.1	1	6636.47	3.25	0	87.44	0	2.16	0	0	13.83	0	0	0	0	0	0	-47.37	-47.37
	Inverter Transformer	MV3-4 T	368507	4907925	2	0	0	56.1	56.1	1	6695.34	3.25	0	87.52	0	2.17	0	0	13.9	0	0	0	0	0	0	-47.53	-47.53
	Inverter Transformer	MV3-2 T	368677	4907928	2	0	0	56.1	56.1	1	6755.56	3.25	0	87.59	0	2.19	0	0	13.96	0	0	0	0	0	0	-47.69	-47.69
	Inverter Transformer	MV6-3 T	370202	4907140	2	0	0	56.1	56.1	1	6766.82	3.25	0	87.61	0	2.19	0	0	13.98	0	0	0	0	0	0	-47.72	-47.72
	Inverter Transformer	MV6-2 T	370091	4907339	2	0	0	56.1	56.1	1	6869.25	3.25	0	87.74	0	2.22	0	0	14.09	0	0	0	0	0	0	-47.99	-47.99
	Inverter Transformer	MV4-15 T	369170	4908481	2	0	0	56.1	56.1	1	7450.62	3.25	0	88.44	0	2.38	0	0	14.7	0	0	0	0	0	0	-49.47	-49.47
	Inverter Transformer	MV4-14 T	369182	4908507	2	0	0	56.1	56.1	1	7479.23	3.25	0	88.48	0	2.38	0	0	14.73	0	0	0	0	0	0	-49.54	-49.54
	Inverter Transformer	MV4-13 T	369057	4908605	2	0	0	56.1	56.1	1	7523.53	3.25	0	88.53	0	2.4	0	0	14.78	0	0	0	0	0	0	-49.64	-49.64
	Inverter Transformer	MV4-12 T	369049	4908803	2	0	0	56.1	56.1	1	7705.48	3.25	0	88.74	0	2.44	0	0	14.96	0	0	0	0	0	0	-50.08	-50.08
	Inverter Transformer	MV5-6 T	369987	4908507	2	0	0	56.1	56.1	1	7822.55	3.25	0	88.87	0	2.47	0	0	15.08	0	0	0	0	0	0	-50.36	-50.36
	Inverter Transformer	MV4-11 T	369269	4908855	2	0	0	56.1	56.1	1	7834.22	3.25	0	88.88	0	2.47	0	0	15.09	0	0	0	0	0	0	-50.39	-50.39
	Inverter Transformer	MV4-10 T	369307	4908858	2	0	0	56.1	56.1	1	7851.37	3.25	0	88.9	0	2.48	0	0	15.11	0	0	0	0	0	0	-50.43	-50.43
	Inverter Transformer	MV4-7 T	369040	4909001	2	0	0	56.1	56.1	1	7887.86	3.25	0	88.94	0	2.48	0	0	15.15	0	0	0	0	0	0	-50.51	-50.51
	Inverter Transformer	MV4-8 T	369262	4909001	2	0	0	56.1	56.1	1	7967.1	3.25	0	89.03	0	2.5	0	0	15.22	0	0	0	0	0	0	-50.69	-50.69
	Inverter Transformer	MV4-9 T	369284	4909001	2	0	0	56.1	56.1	1	7975.24	3.25	0	89.03	0	2.5	0	0	15.23	0	0	0	0	0	0	-50.71	-50.71
	Inverter Transformer	MV5-5 T	370021	4908690	2	0	0	56.1	56.1	1	8000.34	3.25	0	89.06	0	2.51	0	0	15.26	0	0	0	0	0	0	-50.77	-50.77
	Inverter Transformer	MV4-4 T	369033	4909199	2	0	0	56.1	56.1	1	8071.66	3.25	0	89.14	0	2.53	0	0	15.33	0	0	0	0	0	0	-50.93	-50.93
	Inverter Transformer	MV4-6 T	369249	4909192	2	0	0	56.1	56.1	1	8140.23	3.25	0	89.21	0	2.54	0	0	15.39	0	0	0	0	0	0	-51.09	-51.09
	Inverter Transformer	MV5-2 T	370011	4908853	2	0	0	56.1	56.1	1	8140.68	3.25	0	89.21	0	2.54	0	0	15.39	0	0	0	0	0	0	-51.09	-51.09
	Inverter Transformer	MV4-5 T	369283	4909199	2	0	0	56.1	56.1	1	8159.04	3.25	0	89.23	0	2.55	0	0	15.41	0	0	0	0	0	0	-51.13	-51.13
	Inverter Transformer	MV5-4 T	370330	4908707	2	0	0	56.1	56.1	1	8162.64	3.25	0	89.24	0	2.55	0	0	15.41	0	0	0	0	0	0	-51.14	-51.14
	Inverter Transformer	MV5-3 T	370237	4908851	2	0	0	56.1	56.1	1	8243.81	3.25	0	89.32	0	2.56	0	0	15.49	0	0	0	0	0	0	-51.32	-51.32
	Inverter Transformer	MV4-1 T	369017	4909397	2	0	0	56.1	56.1	1	8253.19	3.25	0	89.33	0	2.57	0	0	15.5	0	0	0	0	0	0	-51.34	-51.34
	Inverter Transformer	MV4-3 T	369234	4909397	2	0	0	56.1	56.1	1	8326.59	3.25	0	89.41	0	2.58	0	0	15.57	0	0	0	0	0	0	-51.51	-51.51
	Inverter Transformer	MV4-2 T	369267	4909397	2	0	0	56.1	56.1	1	8338.19	3.25	0	89.42	0	2.59	0	0	15.58	0	0	0	0	0	0	-51.53	-51.53
	Inverter Transformer	MV5-1 T	370015	4909142	2	0	0	56.1	56.1	1	8401.07	3.25	0	89.49	0	2.6	0	0	15.64	0	0	0	0	0	0	-51.67	-51.67
	Line Reactor	NGR	369421	4908787.5	5	0	0	45.4	45.4	1	7830.63	5.25	0	88.88	0	3.2	1.38	0.11	3.2	0	0	0	0	0	0	-51.3	-51.3
Limit. Valu	0	0																								
Level D/N:	20.8699	20.8699																								

Receiver: Vacant Lot Receptor
ID: G-V9
X: 366607.5
Y: 4903462.5
Z: 4.5
Ground: 0

ISO	Description	ID	X	Y	Z	Ground	ReflOrd	LxT	LxN	L/A	Dist.	hm	Freq	Adiv	K0b	Agr	Abar	z	Aatm	Afol	Ahous	Cmet	CmetN	Dc	RL	LtotT	LtotN
	Gardiner Substation	G_Sub	366586.3	4903349.9	2.5	0	0	90.8	90.8	1	114.6	4.23	0	52.18	0	0.76	9.02	0.37	0.4	0	0	0	0	0	0	28.41	28.41

Inverters	G_Inv2	366676.9	4903239.1	2	0	0	87.7	87.7	1	233.94	3.25	0	58.38	0	2.59	0	0	0.37	0	0	0	0	0	0	26.31	26.31
Inverters	G_Inv1	366526.4	4903225.8	2	0	0	87.7	87.7	1	250.22	3.25	0	58.97	0	2.56	0	0	0.4	0	0	0	0	0	0	25.73	25.73
Sol_Luce Substation	S_Substation	369426	4908792	3.5	0	0	112.1	112.1	1	6028.89	5.25	0	86.6	0	1.17	2.64	0.31	9.77	0	0	0	0	0	0	11.89	11.89
Inverters	G_Inv3	366583.7	4903091.4	2	0	0	87.7	87.7	1	371.87	3.25	0	62.41	0	2.44	0	0	0.58	0	0	0	0	0	0	22.24	22.24
Inverters	G_Inv4	366732.8	4903105	2	0	0	87.7	87.7	1	378.83	3.25	0	62.57	0	2.43	0	0	0.59	0	0	0	0	0	0	22.07	22.07
Inverter	MV1-15	365315	4904994	2	0	0	100.3	100.3	1	2004.01	3.25	0	77.04	0	0.13	0	0	13.47	0	0	0	0	0	0	9.67	9.67
Inverters	G_Inv5	366638.5	4902958.1	2	0	0	87.7	87.7	1	505.36	3.25	0	65.07	0	2.4	0	0	0.77	0	0	0	0	0	0	19.42	19.42
Inverters	G_Inv6	366788.5	4902972	2	0	0	87.7	87.7	1	522.84	3.25	0	65.37	0	2.4	0	0	0.79	0	0	0	0	0	0	19.1	19.1
Inverter	MV1-12	365038	4905386	2	0	0	100.3	100.3	1	2482.58	3.25	0	78.9	0	0.25	0	0	14.43	0	0	0	0	0	0	6.74	6.74
Inverter	MV1-11	364655	4905414	2	0	0	100.3	100.3	1	2760.55	3.25	0	79.82	0	0.31	0	0	14.94	0	0	0	0	0	0	5.24	5.24
Inverters	G_Inv7	366694.6	4902824.7	2	0	0	87.7	87.7	1	643.72	3.25	0	67.17	0	2.4	0	0	0.96	0	0	0	0	0	0	17.12	17.12
Inverter	MV1-8	364788	4905647	2	0	0	100.3	100.3	1	2843	3.25	0	80.08	0	0.33	0	0	15.09	0	0	0	0	0	0	4.81	4.81
Inverters	G_Inv8	366844.5	4902838.5	2	0	0	87.7	87.7	1	667.5	3.25	0	67.49	0	2.4	0	0	0.99	0	0	0	0	0	0	16.78	16.78
Inverter	MV1-9	364561	4905646	2	0	0	100.3	100.3	1	2992.63	3.25	0	80.52	0	0.36	0	0	15.36	0	0	0	0	0	0	4.07	4.07
Inverter	MV1-14	365163	4905049	2	0	0	97.3	97.3	1	2145.59	3.25	0	77.63	0	0.17	0	0	13.76	0	0	0	0	0	0	5.75	5.75
Inverter	MV1-4	364815	4905918	2	0	0	100.3	100.3	1	3040.16	3.25	0	80.66	0	0.37	0	0	15.44	0	0	0	0	0	0	3.84	3.84
Inverter	MV1-5	364671	4905892	2	0	0	100.3	100.3	1	3106.85	3.25	0	80.85	0	0.38	0	0	15.56	0	0	0	0	0	0	3.52	3.52
Inverter	MV1-6	364477	4905835	2	0	0	100.3	100.3	1	3188.7	3.25	0	81.07	0	0.4	0	0	15.7	0	0	0	0	0	0	3.14	3.14
Inverter	MV1-2	364753	4906063	2	0	0	100.3	100.3	1	3194.02	3.25	0	81.09	0	0.4	0	0	15.71	0	0	0	0	0	0	3.12	3.12
Inverter	MV2-3	365820	4906641	2	0	0	100.3	100.3	1	3274.6	3.25	0	81.3	0	0.41	0	0	15.85	0	0	0	0	0	0	2.75	2.75
Inverter	MV1-1	364715	4906166	2	0	0	100.3	100.3	1	3300.07	3.25	0	81.37	0	0.42	0	0	15.89	0	0	0	0	0	0	2.63	2.63
Inverter	MV2-4	365586	4906624	2	0	0	100.3	100.3	1	3322.43	3.25	0	81.43	0	0.42	0	0	15.93	0	0	0	0	0	0	2.53	2.53
Inverters	G_Inv9	366750.9	4902691.8	2	0	0	87.7	87.7	1	783.93	3.25	0	68.89	0	2.42	0	0	1.15	0	0	0	0	0	0	15.21	15.21
Inverters	G_Inv10	366900.7	4902704.8	2	0	0	87.7	87.7	1	812.45	3.25	0	69.2	0	2.42	0	0	1.19	0	0	0	0	0	0	14.86	14.86
Inverter	MV1-13	364731	4905241	2	0	0	97.3	97.3	1	2585.41	3.25	0	79.25	0	0.28	0	0	14.62	0	0	0	0	0	0	3.17	3.17
Inverter	MV1-10	365004	4905564	2	0	0	97.3	97.3	1	2643.39	3.25	0	79.44	0	0.29	0	0	14.73	0	0	0	0	0	0	2.85	2.85
Inverter	MV1-7	364925	4905782	2	0	0	97.3	97.3	1	2865.47	3.25	0	80.14	0	0.34	0	0	15.13	0	0	0	0	0	0	1.7	1.7
Inverter	MV3-18	367752	4907412	2	0	0	100.3	100.3	1	4111.99	3.25	0	83.28	0	0.54	0	0	17.23	0	0	0	0	0	0	-0.74	-0.74
Inverter	MV3-21	368478	4907206	2	0	0	100.3	100.3	1	4184.8	3.25	0	83.43	0	0.55	0	0	17.34	0	0	0	0	0	0	-1.01	-1.01
Inverter	MV3-19	368357	4907347	2	0	0	100.3	100.3	1	4260.29	3.25	0	83.59	0	0.56	0	0	17.46	0	0	0	0	0	0	-1.3	-1.3
Inverter	MV3-12	367668	4907594	2	0	0	100.3	100.3	1	4265.44	3.25	0	83.6	0	0.56	0	0	17.47	0	0	0	0	0	0	-1.32	-1.32
Inverter	MV3-17	368178	4907472	2	0	0	100.3	100.3	1	4306.11	3.25	0	83.68	0	0.57	0	0	17.53	0	0	0	0	0	0	-1.47	-1.47
Inverter	MV3-13	367963	4907577	2	0	0	100.3	100.3	1	4332.03	3.25	0	83.73	0	0.57	0	0	17.57	0	0	0	0	0	0	-1.56	-1.56
Inverter	MV3-15	368357	4907477	2	0	0	100.3	100.3	1	4379.15	3.25	0	83.83	0	0.58	0	0	17.64	0	0	0	0	0	0	-1.74	-1.74
Inverter	MV3-20	368689	4907317	2	0	0	100.3	100.3	1	4380.62	3.25	0	83.83	0	0.58	0	0	17.65	0	0	0	0	0	0	-1.74	-1.74
Inverter	MV3-16	368514	4907475	2	0	0	100.3	100.3	1	4442.4	3.25	0	83.95	0	0.58	0	0	17.74	0	0	0	0	0	0	-1.97	-1.97
Inverter	MV3-10	368167	4907669	2	0	0	100.3	100.3	1	4486.28	3.25	0	84.04	0	0.59	0	0	17.81	0	0	0	0	0	0	-2.12	-2.12
Inverter	MV3-7	367945	4907754	2	0	0	100.3	100.3	1	4495.1	3.25	0	84.05	0	0.59	0	0	17.82	0	0	0	0	0	0	-2.16	-2.16
Inverter	MV3-14	368684	4907498	2	0	0	100.3	100.3	1	4538.4	3.25	0	84.14	0	0.6	0	0	17.89	0	0	0	0	0	0	-2.31	-2.31
Inverter	MV3-11	368346	4907662	2	0	0	100.3	100.3	1	4545.13	3.25	0	84.15	0	0.6	0	0	17.9	0	0	0	0	0	0	-2.33	-2.33
Inverter	MV3-6	368162	4907834	2	0	0	100.3	100.3	1	4639.66	3.25	0	84.33	0	0.61	0	0	18.04	0	0	0	0	0	0	-2.67	-2.67
Inverter	MV3-9	368512	4907703	2	0	0	100.3	100.3	1	4648.54	3.25	0	84.35	0	0.61	0	0	18.06	0	0	0	0	0	0	-2.7	-2.7
Inverter	MV3-3	367939	4907927	2	0	0	100.3	100.3	1	4658.83	3.25	0	84.37	0	0.61	0	0	18.07	0	0	0	0	0	0	-2.73	-2.73
Inverter	MV3-8	368680	4907712	2	0	0	100.3	100.3	1	4727.95	3.25	0	84.49	0	0.62	0	0	18.18	0	0	0	0	0	0	-2.97	-2.97
Inverter	MV2-1	365842	4906816	2	0	0	97.3	97.3	1	3439.76	3.25	0	81.73	0	0.44	0	0	16.13	0	0	0	0	0	0	-0.99	-0.99
Inverter	MV6-3	370207	4907140	2	0	0	100.3	100.3	1	5145.91	3.25	0	85.23	0	0.65	0	0	18.79	0	0	0	0	0	0	-4.37	-4.37
Inverter	MV6-2	370085	4907339	2	0	0	100.3	100.3	1	5207.71	3.25	0	85.33	0	0.66	0	0	18.88	0	0	0	0	0	0	-4.56	-4.56
Inverter	MV4-11	369264	4908855	2	0	0	100.3	100.3	1	6011.33	3.25	0	86.58	0	0.71	0	0	20.01	0	0	0	0	0	0	-6.98	-6.98
Inverter	MV4-10	369312	4908858	2	0	0	100.3	100.3	1	6035.37	3.25	0	86.61	0	0.71	0	0	20.04	0	0	0	0	0	0	-7.05	-7.05
Inverter	MV4-7	369035	4909001	2	0	0	100.3	100.3	1	6047.13	3.25	0	86.63	0	0.71	0	0	20.06	0	0	0	0	0	0	-7.08	-7.08
Inverter	MV4-8	369256	4909001	2	0	0	100.3	100.3	1	6139.18	3.25	0	86.76	0	0.71	0	0	20.18	0	0	0	0	0	0	-7.34	-7.34
Inverter	MV4-9	369289	4909001	2	0	0	100.3	100.3	1	6153.49	3.25	0	86.78	0	0.71	0	0	20.2	0	0	0	0	0	0	-7.38	-7.38
Inverter	MV4-4	369027	4909199	2	0	0	100.3	100.3	1	6225.87	3.25	0	86.88	0	0.71	0	0	20.3	0	0	0	0	0	0	-7.58	-7.58
Inverter	MV5-5	370015	4908690	2	0	0	100.3	100.3	1	6240.02	3.25	0	86.9	0	0.71	0	0	20.32	0	0	0	0	0	0	-7.62	-7.62
Inverter	MV4-6	369243	4909192	2	0	0	100.3	100.3	1	6306.59	3.25	0	87	0	0.71	0	0	20.4	0	0	0	0	0	0	-7.8	-7.8
Inverter	MV4-5	369289	4909199	2	0	0	100.3	100.3	1	6332.29	3.25	0	87.03	0	0.71	0	0	20.44	0	0	0	0	0	0	-7.87	-7.87
Inverter	MV5-2	370006	4908853	2	0	0	100.3	100.3	1	6372.39	3.25	0	87.09	0	0.71	0	0	20.49	0	0	0	0	0	0	-7.98	-7.98
Inverter	MV4-1	369011	4909397	2	0	0	100.3	100.3	1	6402.74	3.25	0	87.13	0	0.71	0	0	20.53	0	0	0	0	0	0	-8.06	-8.06
Inverter	MV5-4	370324	4908707	2	0	0	100.3	100.3	1	6427.84	3.25	0	87.16	0	0.71	0	0	20.56	0	0	0	0	0	0	-8.13	-8.13
Inverter	MV4-3	369229	4909397	2	0	0	100.3	100.3	1	6487.72	3.25	0	87.24	0	0.71	0	0	20.64	0	0	0	0	0	0	-8.29	-8.29
Inverter	MV5-3	370231	4908851	2	0	0	100.3	100.3	1	6493.51	3.25	0	87.25	0	0.71	0	0	20.65	0	0	0	0	0	0	-8.3	-8.3
Inverter	MV4-2	369272	4909397	2	0	0	100.3	100.3	1	6505.22	3.25	0	87.27	0	0.71	0	0	20.67	0	0	0	0	0	0	-8.33	-8.33
Inverter	MV5-1	370020	4909142	2	0	0	100.3	100.3	1	6625.85	3.25	0	87.42	0	0.71	0	0	20.82	0	0	0	0	0	0	-8.65	-8.65
Inverter	MV6-1	370235	4907364	2	0	0	97.3	97.3	1	5327.33	3.25	0	85.53	0	0.67	0	0	19.06	0	0	0	0	0	0	-7.94	-7.94
DSTATCOM - 10 MVAR #2	DSAT2	369403	4908757	2.5	0	0	96.6	96.6	1	5987.2	3.5	0	86.54	0	3.77	0	0	3.83	0	0	0	0	0	0	2.48	2.48
DSTATCOM - 10 MVAR #1	DSAT1	369437	4908757	2.5	0	0	96.6	96.6	1	6003.15	3.5	0	86.57	0	3.77	0	0	3.84	0	0	0	0	0	0	2.45	2.45
SubstationTransformer	W_ST	369711.17	4906112.3	2.5	0	0	92	92	1	4080.94	4.25	0	83.22	0	1.38	2.57	0.22	7.47	0	0	0	0	0	0	-2.66	-2.66
Inverter	MV2-2	365977	4906654	2	0	0	89.1	89.1	1	3253.18	3.25	0	81.25	0	1.21	0	0	10	0	0	0	0	0	0	-3.39	-3.39
Inverter	MV1-3	364440	4906039	2	0	0	89.1	89.1	1	3366.96	3.25	0	81.54	0	1.24	0	0	10.17	0	0	0	0	0	0	-3.89	-3.89
Westbrook Inverter Enclosur	W_INV3	369508	4906164	2	0	0	89.1	89.1	1	3963.71	3.25	0	82.96	0	1.38	0	0	11.03	0	0	0	0	0	0	-6.32	-6.32
Westbrook Inverter Enclosur	W_INV2	369374	4906388	2	0	0	89.1	89.1	1	4026.42	3.25	0	83.1	0	1.4	0	0	11.12	0	0	0	0	0	0	-6.56	-6.56
Westbrook Inverter Enclosur	W_INV4	369673	4906164	2	0	0	89.1	89.1	1	4086	3.25	0	83.23	0	1.41	0	0	11.21	0	0	0	0	0	0	-6.79	-6.79
Inverter	MV3-22	368656	4907142	2	0	0	89.1	89.1	1	4211.3	3.25	0	83.49	0	1.44	0	0	11.38	0	0	0	0	0	0	-7.26	-7.26
Westbrook Inverter Enclosur	W_INV7	369780	4906417	2	0	0	89.1	89.1	1	4335.19	3.25	0	83.74	0	1.48	0	0	11.56	0	0	0	0	0	0	-7.71	-7.71

Westbrook Inverter Enclosur	W_INV5	369719	4906574	2	0	0	89.1	89.1	1	4400.33	3.25	0	83.87	0	1.49	0	0	11.65	0	0	0	0	0	0	-7.95	-7.95
Westbrook Inverter Enclosur	W_INV6	369875	4906578	2	0	0	89.1	89.1	1	4514.74	3.25	0	84.09	0	1.52	0	0	11.8	0	0	0	0	0	0	-8.36	-8.36
Inverter	MV3-5	368340	4907843	2	0	0	89.1	89.1	1	4710.66	3.25	0	84.46	0	1.57	0	0	12.07	0	0	0	0	0	0	-9.05	-9.05
Inverter	MV3-1	368156	4907976	2	0	0	89.1	89.1	1	4771.74	3.25	0	84.57	0	1.58	0	0	12.16	0	0	0	0	0	0	-9.26	-9.26
Inverter	MV3-4	368502	4907925	2	0	0	89.1	89.1	1	4847.99	3.25	0	84.71	0	1.6	0	0	12.26	0	0	0	0	0	0	-9.51	-9.51
Inverter	MV3-2	368671	4907928	2	0	0	89.1	89.1	1	4919.22	3.25	0	84.84	0	1.62	0	0	12.36	0	0	0	0	0	0	-9.76	-9.76
Fixed Reactor Bank 1	FRB1	369378	4908755	6	0	0	89.8	89.8	1	5973.8	5.25	0	86.53	0	-0.42	0	0	9.71	0	0	0	0	0	0	-6.04	-6.04
Fixed Reactor Bank 2	FRB2	369464	4908755	6	0	0	89.8	89.8	1	6014.16	5.25	0	86.58	0	-0.42	0	0	9.76	0	0	0	0	0	0	-6.15	-6.15
Inverter	MV4-15	369176	4908481	2	0	0	89.1	89.1	1	5637.6	3.25	0	86.02	0	1.8	0	0	13.3	0	0	0	0	0	0	-12.06	-12.06
Inverter	MV4-14	369176	4908507	2	0	0	89.1	89.1	1	5660.76	3.25	0	86.06	0	1.8	0	0	13.33	0	0	0	0	0	0	-12.13	-12.13
Inverter	MV4-13	369051	4908605	2	0	0	89.1	89.1	1	5693.51	3.25	0	86.11	0	1.81	0	0	13.37	0	0	0	0	0	0	-12.23	-12.23
Inverter	MV4-12	369043	4908803	2	0	0	89.1	89.1	1	5869.63	3.25	0	86.37	0	1.85	0	0	13.6	0	0	0	0	0	0	-12.77	-12.77
Westbrook Inverter Enclosur	W_INV1	369409	4906578	2	0	0	86.1	86.1	1	4189.84	3.25	0	83.44	0	1.44	0	0	11.35	0	0	0	0	0	0	-10.18	-10.18
Inverter	MV5-6	369982	4908507	2	0	0	89.1	89.1	1	6069.12	3.25	0	86.66	0	1.9	0	0	13.85	0	0	0	0	0	0	-13.36	-13.36
Inverter	MV6-4	370250	4906966	2	0	0	86.1	86.1	1	5053.94	3.25	0	85.07	0	1.65	0	0	12.54	0	0	0	0	0	0	-13.2	-13.2
Westbrook Inverter Transfor	W_INVTR1	369403	4906578	2	0	0	78.2	78.2	1	4185.83	3.25	0	83.44	0	-3.01	0	0	2.12	0	0	0	0	0	0	-4.31	-4.31
Westbrook Inverter Transfor	W_INVTR3	369514	4906164	2	0	0	77.3	77.3	1	3968.1	3.25	0	82.97	0	-2.96	0	0	2.04	0	0	0	0	0	0	-4.72	-4.72
Westbrook Inverter Transfor	W_INVTR2	369368	4906388	2	0	0	77.3	77.3	1	4022.3	3.25	0	83.09	0	-2.97	0	0	2.06	0	0	0	0	0	0	-4.84	-4.84
Westbrook Inverter Transfor	W_INVTR4	369679	4906164	2	0	0	77.3	77.3	1	4090.5	3.25	0	83.24	0	-2.98	0	0	2.09	0	0	0	0	0	0	-5	-5
Westbrook Inverter Transfor	W_INVTR7	369786	4906417	2	0	0	77.3	77.3	1	4339.58	3.25	0	83.75	0	-3.04	0	0	2.18	0	0	0	0	0	0	-5.55	-5.55
Westbrook Inverter Transfor	W_INVTR5	369725	4906574	2	0	0	77.3	77.3	1	4404.57	3.25	0	83.88	0	-3.05	0	0	2.2	0	0	0	0	0	0	-5.69	-5.69
Westbrook Inverter Transfor	W_INVTR6	369881	4906578	2	0	0	77.3	77.3	1	4519.09	3.25	0	84.1	0	-3.08	0	0	2.24	0	0	0	0	0	0	-5.93	-5.93
Inverter Transformer	MV1-14 T	365157	4905049	2	0	0	69.4	69.4	1	2149.64	3.25	0	77.65	0	2.23	0	0	5.11	0	0	0	0	0	0	-15.64	-15.64
Inverter Transformer	MV1-13 T	364725	4905241	2	0	0	69.4	69.4	1	2589.76	3.25	0	79.27	0	2.38	0	0	5.52	0	0	0	0	0	0	-17.82	-17.82
Inverter Transformer	MV1-10 T	365010	4905564	2	0	0	69.4	69.4	1	2639.76	3.25	0	79.43	0	2.39	0	0	5.57	0	0	0	0	0	0	-18.04	-18.04
Inverter Transformer	MV1-7 T	364919	4905782	2	0	0	69.4	69.4	1	2868.99	3.25	0	80.15	0	2.47	0	0	5.77	0	0	0	0	0	0	-19.04	-19.04
Inverter Transformer	MV2-1 T	365836	4906816	2	0	0	69.4	69.4	1	3441.1	3.25	0	81.73	0	2.64	0	0	6.25	0	0	0	0	0	0	-21.27	-21.27
Inverter Transformer	MV6-4 T	370244	4906966	2	0	0	69.4	69.4	1	5049.62	3.25	0	85.07	0	3.02	0	0	7.41	0	0	0	0	0	0	-26.15	-26.15
Inverter Transformer	MV6-1 T	370230	4907364	2	0	0	69.4	69.4	1	5323.93	3.25	0	85.52	0	3.07	0	0	7.59	0	0	0	0	0	0	-26.84	-26.84
Inverter Transformer	MV1-15 T	365309	4904994	2	0	0	56.1	56.1	1	2007.88	3.25	0	77.05	0	0.41	0	0	7.06	0	0	0	0	0	0	-28.46	-28.46
Inverter Transformer	MV1-12 T	365044	4905386	2	0	0	56.1	56.1	1	2478.79	3.25	0	78.88	0	0.61	0	0	7.95	0	0	0	0	0	0	-31.38	-31.38
Inverter Transformer	MV1-11 T	364649	4905414	2	0	0	56.1	56.1	1	2764.79	3.25	0	79.83	0	0.73	0	0	8.46	0	0	0	0	0	0	-32.97	-32.97
Inverter Transformer	MV1-8 T	364782	4905647	2	0	0	56.1	56.1	1	2846.84	3.25	0	80.09	0	0.76	0	0	8.61	0	0	0	0	0	0	-33.4	-33.4
Inverter Transformer	MV1-9 T	364555	4905646	2	0	0	56.1	56.1	1	2996.74	3.25	0	80.53	0	0.83	0	0	8.86	0	0	0	0	0	0	-34.17	-34.17
Inverter Transformer	MV1-4 T	364821	4905918	2	0	0	56.1	56.1	1	3036.62	3.25	0	80.65	0	0.85	0	0	8.93	0	0	0	0	0	0	-34.36	-34.36
Inverter Transformer	MV1-5 T	364676	4905892	2	0	0	56.1	56.1	1	3103.73	3.25	0	80.84	0	0.87	0	0	9.04	0	0	0	0	0	0	-34.7	-34.7
Inverter Transformer	MV1-6 T	364482	4905835	2	0	0	56.1	56.1	1	3185.36	3.25	0	81.06	0	0.91	0	0	9.18	0	0	0	0	0	0	-35.09	-35.09
Inverter Transformer	MV1-2 T	364759	4906063	2	0	0	56.1	56.1	1	3190.54	3.25	0	81.08	0	0.91	0	0	9.19	0	0	0	0	0	0	-35.12	-35.12
Inverter Transformer	MV2-2 T	365982	4906654	2	0	0	56.1	56.1	1	3252.22	3.25	0	81.24	0	0.94	0	0	9.29	0	0	0	0	0	0	-35.41	-35.41
Inverter Transformer	MV2-3 T	365814	4906641	2	0	0	56.1	56.1	1	3276.05	3.25	0	81.31	0	0.95	0	0	9.33	0	0	0	0	0	0	-35.52	-35.52
Inverter Transformer	MV1-1 T	364721	4906166	2	0	0	56.1	56.1	1	3296.63	3.25	0	81.36	0	0.96	0	0	9.36	0	0	0	0	0	0	-35.62	-35.62
Inverter Transformer	MV2-4 T	365590	4906628	2	0	0	56.1	56.1	1	3325.01	3.25	0	81.44	0	0.97	0	0	9.41	0	0	0	0	0	0	-35.75	-35.75
Inverter Transformer	MV1-3 T	364435	4906039	2	0	0	56.1	56.1	1	3370.18	3.25	0	81.55	0	0.99	0	0	9.48	0	0	0	0	0	0	-35.96	-35.96
Inverter Transformer	MV3-18 T	367757	4907412	2	0	0	56.1	56.1	1	4113.38	3.25	0	83.28	0	1.29	0	0	10.62	0	0	0	0	0	0	-39.14	-39.14
Inverter Transformer	MV3-21 T	368484	4907206	2	0	0	56.1	56.1	1	4187.49	3.25	0	83.44	0	1.32	0	0	10.73	0	0	0	0	0	0	-39.43	-39.43
Inverter Transformer	MV3-22 T	368661	4907142	2	0	0	56.1	56.1	1	4213.74	3.25	0	83.49	0	1.33	0	0	10.77	0	0	0	0	0	0	-39.53	-39.53
Inverter Transformer	MV3-19 T	368352	4907347	2	0	0	56.1	56.1	1	4258.24	3.25	0	83.58	0	1.35	0	0	10.83	0	0	0	0	0	0	-39.7	-39.7
Inverter Transformer	MV3-12 T	367674	4907594	2	0	0	56.1	56.1	1	4266.93	3.25	0	83.6	0	1.35	0	0	10.85	0	0	0	0	0	0	-39.74	-39.74
Inverter Transformer	MV3-17 T	368183	4907472	2	0	0	56.1	56.1	1	4307.93	3.25	0	83.69	0	1.37	0	0	10.9	0	0	0	0	0	0	-39.9	-39.9
Inverter Transformer	MV3-13 T	367958	4907577	2	0	0	56.1	56.1	1	4330.47	3.25	0	83.73	0	1.37	0	0	10.94	0	0	0	0	0	0	-39.98	-39.98
Inverter Transformer	MV3-15 T	368351	4907477	2	0	0	56.1	56.1	1	4376.76	3.25	0	83.82	0	1.39	0	0	11	0	0	0	0	0	0	-40.16	-40.16
Inverter Transformer	MV3-20 T	368683	4907317	2	0	0	56.1	56.1	1	4377.77	3.25	0	83.83	0	1.39	0	0	11	0	0	0	0	0	0	-40.16	-40.16
Inverter Transformer	MV3-16 T	368509	4907475	2	0	0	56.1	56.1	1	4440.26	3.25	0	83.95	0	1.42	0	0	11.09	0	0	0	0	0	0	-40.4	-40.4
Inverter Transformer	MV3-10 T	368162	4907669	2	0	0	56.1	56.1	1	4484.54	3.25	0	84.03	0	1.43	0	0	11.15	0	0	0	0	0	0	-40.56	-40.56
Inverter Transformer	MV3-7 T	367951	4907754	2	0	0	56.1	56.1	1	4496.88	3.25	0	84.06	0	1.44	0	0	11.17	0	0	0	0	0	0	-40.61	-40.61
Inverter Transformer	MV3-14 T	368678	4907498	2	0	0	56.1	56.1	1	4535.66	3.25	0	84.13	0	1.45	0	0	11.23	0	0	0	0	0	0	-40.75	-40.75
Inverter Transformer	MV3-11 T	368340	4907662	2	0	0	56.1	56.1	1	4542.84	3.25	0	84.15	0	1.46	0	0	11.24	0	0	0	0	0	0	-40.78	-40.78
Inverter Transformer	MV3-6 T	368156	4907834	2	0	0	56.1	56.1	1	4637.66	3.25	0	84.33	0	1.49	0	0	11.37	0	0	0	0	0	0	-41.13	-41.13
Inverter Transformer	MV3-9 T	368517	4907703	2	0	0	56.1	56.1	1	4650.6	3.25	0	84.35	0	1.5	0	0	11.38	0	0	0	0	0	0	-41.17	-41.17
Inverter Transformer	MV3-3 T	367944	4907927	2	0	0	56.1	56.1	1	4660.26	3.25	0	84.37	0	1.5	0	0	11.4	0	0	0	0	0	0	-41.21	-41.21
Inverter Transformer	MV3-5 T	368335	4907843	2	0	0	56.1	56.1	1	4708.83	3.25	0	84.46	0	1.52	0	0	11.46	0	0	0	0	0	0	-41.38	-41.38
Inverter Transformer	MV3-8 T	368685	4907712	2	0	0	56.1	56.1	1	4730.14	3.25	0	84.5	0	1.53	0	0	11.49	0	0	0	0	0	0	-41.46	-41.46
Inverter Transformer	MV3-1 T	368150	4907976	2	0	0	56.1	56.1	1	4769.8	3.25	0	84.57	0	1.54	0	0	11.55	0	0	0	0	0	0	-41.6	-41.6
Inverter Transformer	MV3-4 T	368507	4907925	2	0	0	56.1	56.1	1	4849.95	3.25	0	84.71	0	1.57	0	0	11.65	0	0	0	0	0	0	-41.88	-41.88
Inverter Transformer	MV3-2 T	368677	4907928	2	0	0	56.1	56.1	1	4921.74	3.25	0	84.84	0	1.6	0	0	11.75	0	0	0	0	0	0	-42.13	-42.13
Inverter Transformer	MV6-3 T	370202	4907140	2	0	0	56.1	56.1	1	5142.42	3.25	0	85.22	0	1.68	0	0	12.04	0	0	0	0	0	0	-42.88	-42.88
Inverter Transformer	MV6-2 T	370091	4907339	2	0	0	56.1	56.1	1	5211.72	3.25	0	85.34	0	1.7	0	0	12.13	0	0	0	0	0	0	-43.11	-43.11
Inverter Transformer	MV4-15 T	369170	4908481	2	0	0	56.1	56.1	1	5634.87	3.25	0	86.02	0	1.85	0	0	12.66	0	0	0	0	0	0	-44.47	-44.47
Inverter Transformer	MV4-14 T	369182	4908507	2	0	0	56.1	56.1	1	5663.48	3.25	0	86.06	0	1.86	0	0	12.7	0	0	0	0	0	0	-44.56	-44.56
Inverter Transformer	MV4-13 T	369057	4908605	2	0	0	56.1	56.1	1	5696.08	3.25	0	86.11	0	1.87	0	0	12.74	0	0	0	0	0	0	-44.66	-44.66
Inverter Transformer	MV4-12 T	369049	4908803	2	0	0	56.1	56.1	1	5872.13	3.25	0	86.38	0	1.92	0	0	12.95	0	0	0	0	0	0	-45.19	-45.19
Inverter Transformer	MV4-11 T	369269	4908855	2	0	0	56.1	56.1	1	6013.54	3.25	0	86.58	0	1.97	0	0	13.12	0	0	0	0	0	0	-45.61	-45.61
Inverter Transformer	MV4-10 T	369307	4908858	2	0	0	56.1	56.1	1	6033.14	3.25	0	86.61	0	1.98	0	0	13.14	0	0	0	0	0	0	-45.67	-45.67
Inverter Transformer	MV4-7 T	369040	4909001	2	0	0	56.1	56.1	1	6049.14	3.25	0	86.63	0	1.98	0	0	13.16	0	0	0	0	0	0	-45.72	-45.72

	Inverter Transformer	MV5-6 T	369987	4908507	2	0	0	56.1	56.1	1	6071.9	3.25	0	86.67	0	1.99	0	0	13.19	0	0	0	0	0	0	-45.78	-45.78
	Inverter Transformer	MV4-8 T	369262	4909001	2	0	0	56.1	56.1	1	6141.77	3.25	0	86.77	0	2.01	0	0	13.27	0	0	0	0	0	0	-45.99	-45.99
	Inverter Transformer	MV4-9 T	369284	4909001	2	0	0	56.1	56.1	1	6151.31	3.25	0	86.78	0	2.01	0	0	13.28	0	0	0	0	0	0	-46.01	-46.01
	Inverter Transformer	MV4-4 T	369033	4909199	2	0	0	56.1	56.1	1	6228.2	3.25	0	86.89	0	2.04	0	0	13.37	0	0	0	0	0	0	-46.23	-46.23
	Inverter Transformer	MV5-5 T	370021	4908690	2	0	0	56.1	56.1	1	6243.3	3.25	0	86.91	0	2.04	0	0	13.39	0	0	0	0	0	0	-46.28	-46.28
	Inverter Transformer	MV4-6 T	369249	4909192	2	0	0	56.1	56.1	1	6309.1	3.25	0	87	0	2.06	0	0	13.46	0	0	0	0	0	0	-46.46	-46.46
	Inverter Transformer	MV4-5 T	369283	4909199	2	0	0	56.1	56.1	1	6329.75	3.25	0	87.03	0	2.07	0	0	13.49	0	0	0	0	0	0	-46.52	-46.52
	Inverter Transformer	MV5-2 T	370011	4908853	2	0	0	56.1	56.1	1	6375.05	3.25	0	87.09	0	2.08	0	0	13.54	0	0	0	0	0	0	-46.65	-46.65
	Inverter Transformer	MV4-1 T	369017	4909397	2	0	0	56.1	56.1	1	6405	3.25	0	87.13	0	2.09	0	0	13.57	0	0	0	0	0	0	-46.73	-46.73
	Inverter Transformer	MV5-4 T	370330	4908707	2	0	0	56.1	56.1	1	6431.31	3.25	0	87.17	0	2.1	0	0	13.6	0	0	0	0	0	0	-46.81	-46.81
	Inverter Transformer	MV4-3 T	369234	4909397	2	0	0	56.1	56.1	1	6489.75	3.25	0	87.24	0	2.11	0	0	13.67	0	0	0	0	0	0	-46.97	-46.97
	Inverter Transformer	MV5-3 T	370237	4908851	2	0	0	56.1	56.1	1	6496.86	3.25	0	87.25	0	2.12	0	0	13.68	0	0	0	0	0	0	-46.99	-46.99
	Inverter Transformer	MV4-2 T	369267	4909397	2	0	0	56.1	56.1	1	6503.17	3.25	0	87.26	0	2.12	0	0	13.68	0	0	0	0	0	0	-47.01	-47.01
	Inverter Transformer	MV5-1 T	370015	4909142	2	0	0	56.1	56.1	1	6623.28	3.25	0	87.42	0	2.15	0	0	13.82	0	0	0	0	0	0	-47.33	-47.33
	Line Reactor	NGR	369421	4908787.5	5	0	0	45.4	45.4	1	6022.57	5.25	0	86.6	0	3.24	1.36	0.1	2.46	0	0	0	0	0	0	-48.3	-48.3
Limit. Valu	0	0																								
Level D/N:	33.5086	33.5086																								

Receiver: Vacant Lot Receptor
ID: G-V10
X: 366830.7
Y: 4902539.6
Z: 4.5
Ground: 0

ISO	Description	ID	X	Y	Z	Ground	ReflOrd	LxT	LxN	L/A	Dist.	hm	Freq	Adiv	K0b	Agr	Abar	z	Aatm	Afol	Ahous	Cmet	CmetN	Dc	RL	LtotT	LtotN
	Inverters	G_Inv9	366750.9	4902691.8	2	0	0	87.7	87.7	1	171.87	3.25	0	55.7	0	2.62	0	0	0.28	0	0	0	0	0	0	29.05	29.05
	Inverters	G_Inv10	366900.7	4902704.8	2	0	0	87.7	87.7	1	179.44	3.25	0	56.08	0	2.64	0	0	0.29	0	0	0	0	0	0	28.65	28.65
	Inverters	G_Inv8	366844.5	4902838.5	2	0	0	87.7	87.7	1	299.23	3.25	0	60.52	0	2.49	0	0	0.47	0	0	0	0	0	0	24.17	24.17
	Inverters	G_Inv7	366694.6	4902824.7	2	0	0	87.7	87.7	1	315.93	3.25	0	60.99	0	2.48	0	0	0.5	0	0	0	0	0	0	23.69	23.69
	Sol_Luce Substation	S_Substation	369426	4908792	3.5	0	0	112.1	112.1	1	6769.64	5.25	0	87.61	0	1.33	2.49	0.33	10.53	0	0	0	0	0	0	10.12	10.12
	Inverters	G_Inv6	366788.5	4902972	2	0	0	87.7	87.7	1	434.46	3.25	0	63.76	0	2.41	0	0	0.67	0	0	0	0	0	0	20.82	20.82
	Inverters	G_Inv5	366638.5	4902958.1	2	0	0	87.7	87.7	1	460.53	3.25	0	64.27	0	2.4	0	0	0.71	0	0	0	0	0	0	20.28	20.28
	Inverters	G_Inv4	366732.8	4903105	2	0	0	87.7	87.7	1	573.82	3.25	0	66.18	0	2.4	0	0	0.87	0	0	0	0	0	0	18.22	18.22
	Gardiner Substation	G_Sub	366586.3	4903349.9	2.5	0	0	90.8	90.8	1	846.36	3.5	0	69.55	0	-0.39	0	0	2.2	0	0	0	0	0	0	19.42	19.42
	Inverters	G_Inv3	366583.7	4903091.4	2	0	0	87.7	87.7	1	604.56	3.25	0	66.63	0	2.4	0	0	0.91	0	0	0	0	0	0	17.73	17.73
	Inverter	MV1-15	365315	4904994	2	0	0	100.3	100.3	1	2884.69	3.25	0	80.2	0	0.34	0	0	15.17	0	0	0	0	0	0	4.6	4.6
	Inverters	G_Inv2	366676.9	4903239.1	2	0	0	87.7	87.7	1	716.21	3.25	0	68.1	0	2.41	0	0	1.06	0	0	0	0	0	0	16.09	16.09
	Inverters	G_Inv1	366526.4	4903225.8	2	0	0	87.7	87.7	1	750.65	3.25	0	68.51	0	2.41	0	0	1.1	0	0	0	0	0	0	15.63	15.63
	Inverter	MV1-12	365038	4905386	2	0	0	100.3	100.3	1	3363.89	3.25	0	81.54	0	0.43	0	0	16	0	0	0	0	0	0	2.35	2.35
	Inverter	MV1-11	364655	4905414	2	0	0	100.3	100.3	1	3604.98	3.25	0	82.14	0	0.47	0	0	16.41	0	0	0	0	0	0	1.3	1.3
	Inverter	MV1-8	364788	4905647	2	0	0	100.3	100.3	1	3718.68	3.25	0	82.41	0	0.49	0	0	16.59	0	0	0	0	0	0	0.83	0.83
	Inverter	MV1-9	364561	4905646	2	0	0	100.3	100.3	1	3847.24	3.25	0	82.7	0	0.51	0	0	16.8	0	0	0	0	0	0	0.3	0.3
	Inverter	MV1-4	364815	4905918	2	0	0	100.3	100.3	1	3934.04	3.25	0	82.9	0	0.52	0	0	16.94	0	0	0	0	0	0	-0.05	-0.05
	Inverter	MV1-5	364671	4905892	2	0	0	100.3	100.3	1	3987.84	3.25	0	83.01	0	0.53	0	0	17.03	0	0	0	0	0	0	-0.26	-0.26
	Inverter	MV1-6	364477	4905835	2	0	0	100.3	100.3	1	4049.64	3.25	0	83.15	0	0.53	0	0	17.13	0	0	0	0	0	0	-0.5	-0.5
	Inverter	MV1-2	364753	4906063	2	0	0	100.3	100.3	1	4090.38	3.25	0	83.24	0	0.54	0	0	17.19	0	0	0	0	0	0	-0.65	-0.65
	Inverter	MV1-1	364715	4906166	2	0	0	100.3	100.3	1	4198.45	3.25	0	83.46	0	0.55	0	0	17.36	0	0	0	0	0	0	-1.07	-1.07
	Inverter	MV2-3	365820	4906641	2	0	0	100.3	100.3	1	4224.1	3.25	0	83.51	0	0.56	0	0	17.4	0	0	0	0	0	0	-1.16	-1.16
	Inverter	MV1-14	365163	4905049	2	0	0	97.3	97.3	1	3013.02	3.25	0	80.58	0	0.36	0	0	15.4	0	0	0	0	0	0	0.97	0.97
	Inverter	MV2-4	365586	4906624	2	0	0	100.3	100.3	1	4269.85	3.25	0	83.61	0	0.56	0	0	17.47	0	0	0	0	0	0	-1.33	-1.33
	Inverter	MV1-13	364731	4905241	2	0	0	97.3	97.3	1	3421.45	3.25	0	81.68	0	0.44	0	0	16.1	0	0	0	0	0	0	-0.91	-0.91
	Inverter	MV3-21	368478	4907206	2	0	0	100.3	100.3	1	4948.63	3.25	0	84.89	0	0.64	0	0	18.5	0	0	0	0	0	0	-3.72	-3.72
	Inverter	MV3-18	367752	4907412	2	0	0	100.3	100.3	1	4958.74	3.25	0	84.91	0	0.64	0	0	18.52	0	0	0	0	0	0	-3.75	-3.75
	Inverter	MV1-10	365004	4905564	2	0	0	97.3	97.3	1	3533.25	3.25	0	81.96	0	0.46	0	0	16.29	0	0	0	0	0	0	-1.39	-1.39
	Inverter	MV3-19	368357	4907347	2	0	0	100.3	100.3	1	5043.88	3.25	0	85.06	0	0.65	0	0	18.64	0	0	0	0	0	0	-4.03	-4.03
	Inverter	MV3-17	368178	4907472	2	0	0	100.3	100.3	1	5113.1	3.25	0	85.17	0	0.65	0	0	18.75	0	0	0	0	0	0	-4.26	-4.26
	Inverter	MV3-12	367668	4907594	2	0	0	100.3	100.3	1	5123.28	3.25	0	85.19	0	0.65	0	0	18.76	0	0	0	0	0	0	-4.29	-4.29
	Inverter	MV3-20	368689	4907317	2	0	0	100.3	100.3	1	5126.09	3.25	0	85.2	0	0.65	0	0	18.76	0	0	0	0	0	0	-4.3	-4.3
	Inverter	MV3-13	367963	4907577	2	0	0	100.3	100.3	1	5163.09	3.25	0	85.26	0	0.66	0	0	18.82	0	0	0	0	0	0	-4.42	-4.42
	Inverter	MV3-15	368357	4907477	2	0	0	100.3	100.3	1	5167.93	3.25	0	85.27	0	0.66	0	0	18.83	0	0	0	0	0	0	-4.44	-4.44
	Inverter	MV3-16	368514	4907475	2	0	0	100.3	100.3	1	5214.56	3.25	0	85.34	0	0.66	0	0	18.89	0	0	0	0	0	0	-4.59	-4.59
	Inverter	MV3-14	368684	4907498	2	0	0	100.3	100.3	1	5293.44	3.25	0	85.47	0	0.67	0	0	19.01	0	0	0	0	0	0	-4.84	-4.84
	Inverter	MV3-10	368167	4907669	2	0	0	100.3	100.3	1	5300.61	3.25	0	85.49	0	0.67	0	0	19.02	0	0	0	0	0	0	-4.86	-4.86
	Inverter	MV1-7	364925	4905782	2	0	0	97.3	97.3	1	3760.96	3.25	0	82.51	0	0.49	0	0	16.66	0	0	0	0	0	0	-2.35	-2.35
	Inverter	MV3-7	367945	4907754	2	0	0	100.3	100.3	1	5332.13	3.25	0	85.54	0	0.67	0	0	19.06	0	0	0	0	0	0	-4.96	-4.96
	Inverter	MV3-11	368346	4907662	2	0	0	100.3	100.3	1	5341.83	3.25	0	85.55	0	0.67	0	0	19.08	0	0	0	0	0	0	-4.99	-4.99
	Inverter	MV3-9	368512	4907703	2	0	0	100.3	100.3	1	5430.24	3.25	0	85.7	0	0.68	0	0	19.2	0	0	0	0	0	0	-5.26	-5.26
	Inverter	MV3-6	368162	4907834	2	0	0	100.3	100.3	1	5459.22	3.25	0	85.74	0	0.68	0	0	19.24	0	0	0	0	0	0	-5.35	-5.35
	Inverter	MV3-8	368680	4907712	2	0	0	100.3	100.3	1	5493.05	3.25	0	85.8	0	0.68	0	0	19.29	0	0	0	0	0	0	-5.45	-5.45
	Inverter	MV3-3	367939	4907927	2	0	0	100.3	100.3	1	5500.22	3.25	0	85.81	0	0.68	0	0	19.3	0	0	0	0	0	0	-5.48	-5.48
	Inverter	MV6-3	370207	4907140	2	0	0	100.3	100.3	1	5706.41	3.25	0	86.13	0	0.69	0	0	19.59	0	0	0	0	0	0	-6.1	-6.1
	Inverter	MV6-2	370085	4907339	2	0	0	100.3	100.3	1	5798.68	3.25	0	86.27	0	0.7	0	0	19.72	0	0	0	0	0	0	-6.37	-6.37
	Inverter	MV2-1	365842	4906816	2	0	0	97.3	97.3	1	4389.21	3.25	0	83.85	0	0.58	0	0	17.66	0	0	0	0	0	0	-4.77	-4.77

Inverter	MV4-11	369264	4908855	2	0	0	100.3	100.3	1	6767.96	3.25	0	87.61	0	0.71	0	0	21.01	0	0	0	0	0	0	-9.02	-9.02
Inverter	MV4-10	369312	4908858	2	0	0	100.3	100.3	1	6788.15	3.25	0	87.64	0	0.71	0	0	21.03	0	0	0	0	0	0	-9.07	-9.07
Inverter	MV4-7	369035	4909001	2	0	0	100.3	100.3	1	6827.05	3.25	0	87.68	0	0.71	0	0	21.08	0	0	0	0	0	0	-9.17	-9.17
Inverter	MV4-8	369256	4909001	2	0	0	100.3	100.3	1	6901.58	3.25	0	87.78	0	0.71	0	0	21.18	0	0	0	0	0	0	-9.35	-9.35
Inverter	MV4-9	369289	4909001	2	0	0	100.3	100.3	1	6913.24	3.25	0	87.79	0	0.71	0	0	21.19	0	0	0	0	0	0	-9.38	-9.38
Inverter	MV5-5	370015	4908690	2	0	0	100.3	100.3	1	6925.84	3.25	0	87.81	0	0.71	0	0	21.21	0	0	0	0	0	0	-9.41	-9.41
Inverter	MV4-4	369027	4909199	2	0	0	100.3	100.3	1	7012.23	3.25	0	87.92	0	0.71	0	0	21.31	0	0	0	0	0	0	-9.63	-9.63
Inverter	MV5-2	370006	4908853	2	0	0	100.3	100.3	1	7066.93	3.25	0	87.98	0	0.71	0	0	21.38	0	0	0	0	0	0	-9.76	-9.76
Inverter	MV4-6	369243	4909192	2	0	0	100.3	100.3	1	7076.27	3.25	0	88	0	0.71	0	0	21.39	0	0	0	0	0	0	-9.79	-9.79
Inverter	MV5-4	370324	4908707	2	0	0	100.3	100.3	1	7088.02	3.25	0	88.01	0	0.71	0	0	21.41	0	0	0	0	0	0	-9.81	-9.81
Inverter	MV4-5	369289	4909199	2	0	0	100.3	100.3	1	7098.65	3.25	0	88.02	0	0.71	0	0	21.42	0	0	0	0	0	0	-9.84	-9.84
Inverter	MV5-3	370231	4908851	2	0	0	100.3	100.3	1	7169.09	3.25	0	88.11	0	0.7	0	0	21.51	0	0	0	0	0	0	-10.01	-10.01
Inverter	MV4-1	369011	4909397	2	0	0	100.3	100.3	1	7195.67	3.25	0	88.14	0	0.7	0	0	21.54	0	0	0	0	0	0	-10.08	-10.08
Inverter	MV4-3	369229	4909397	2	0	0	100.3	100.3	1	7264.69	3.25	0	88.22	0	0.7	0	0	21.63	0	0	0	0	0	0	-10.24	-10.24
Inverter	MV4-2	369272	4909397	2	0	0	100.3	100.3	1	7279	3.25	0	88.24	0	0.7	0	0	21.65	0	0	0	0	0	0	-10.28	-10.28
Inverter	MV5-1	370020	4909142	2	0	0	100.3	100.3	1	7332.35	3.25	0	88.3	0	0.7	0	0	21.71	0	0	0	0	0	0	-10.4	-10.4
Inverter	MV6-1	370235	4907364	2	0	0	97.3	97.3	1	5904.58	3.25	0	86.42	0	0.7	0	0	19.86	0	0	0	0	0	0	-9.68	-9.68
DSTATCOM - 10 MVAR #2	DSAT2	369403	4908757	2.5	0	0	96.6	96.6	1	6728.51	3.5	0	87.56	0	3.82	0	0	4.18	0	0	0	0	0	0	1.07	1.07
DSTATCOM - 10 MVAR #1	DSAT1	369437	4908757	2.5	0	0	96.6	96.6	1	6741.58	3.5	0	87.58	0	3.82	0	0	4.19	0	0	0	0	0	0	1.04	1.04
SubstationTransformer	W_ST	369711.17	4906112.3	2.5	0	0	92	92	1	4589.24	3.5	0	84.23	0	0.47	0	-0.11	8.12	0	0	0	0	0	0	-0.85	-0.85
Inverter	MV2-2	365977	4906654	2	0	0	89.1	89.1	1	4202.03	3.25	0	83.47	0	1.44	0	0	11.37	0	0	0	0	0	0	-7.22	-7.22
Inverter	MV1-3	364440	4906039	2	0	0	89.1	89.1	1	4238.07	3.25	0	83.54	0	1.45	0	0	11.42	0	0	0	0	0	0	-7.36	-7.36
Westbrook Inverter Enclosur	W_INV3	369508	4906164	2	0	0	89.1	89.1	1	4506.02	3.25	0	84.08	0	1.52	0	0	11.79	0	0	0	0	0	0	-8.33	-8.33
Westbrook Inverter Enclosur	W_INV4	369673	4906164	2	0	0	89.1	89.1	1	4605.97	3.25	0	84.27	0	1.54	0	0	11.93	0	0	0	0	0	0	-8.68	-8.68
Westbrook Inverter Enclosur	W_INV2	369374	4906388	2	0	0	89.1	89.1	1	4612.87	3.25	0	84.28	0	1.54	0	0	11.94	0	0	0	0	0	0	-8.71	-8.71
Westbrook Inverter Enclosur	W_INV7	369780	4906417	2	0	0	89.1	89.1	1	4871.61	3.25	0	84.75	0	1.61	0	0	12.29	0	0	0	0	0	0	-9.59	-9.59
Inverter	MV3-22	368656	4907142	2	0	0	89.1	89.1	1	4951.14	3.25	0	84.89	0	1.63	0	0	12.4	0	0	0	0	0	0	-9.86	-9.86
Westbrook Inverter Enclosur	W_INV5	369719	4906574	2	0	0	89.1	89.1	1	4961.72	3.25	0	84.91	0	1.63	0	0	12.41	0	0	0	0	0	0	-9.9	-9.9
Westbrook Inverter Enclosur	W_INV6	369875	4906578	2	0	0	89.1	89.1	1	5057.32	3.25	0	85.08	0	1.65	0	0	12.54	0	0	0	0	0	0	-10.21	-10.21
Inverter	MV3-5	368340	4907843	2	0	0	89.1	89.1	1	5513.99	3.25	0	85.83	0	1.77	0	0	13.14	0	0	0	0	0	0	-11.68	-11.68
Inverter	MV3-1	368156	4907976	2	0	0	89.1	89.1	1	5595.61	3.25	0	85.96	0	1.79	0	0	13.25	0	0	0	0	0	0	-11.93	-11.93
Inverter	MV3-4	368502	4907925	2	0	0	89.1	89.1	1	5638.77	3.25	0	86.02	0	1.8	0	0	13.3	0	0	0	0	0	0	-12.07	-12.07
Inverter	MV3-2	368671	4907928	2	0	0	89.1	89.1	1	5693.99	3.25	0	86.11	0	1.81	0	0	13.37	0	0	0	0	0	0	-12.23	-12.23
Fixed Reactor Bank 1	FRB1	369378	4908755	6	0	0	89.8	89.8	1	6717.14	5.25	0	87.54	0	-0.32	0	0	10.47	0	0	0	0	0	0	-7.92	-7.92
Fixed Reactor Bank 2	FRB2	369464	4908755	6	0	0	89.8	89.8	1	6750.22	5.25	0	87.59	0	-0.32	0	0	10.51	0	0	0	0	0	0	-8	-8
Inverter	MV4-15	369176	4908481	2	0	0	89.1	89.1	1	6387.54	3.25	0	87.11	0	1.98	0	0	14.25	0	0	0	0	0	0	-14.27	-14.27
Inverter	MV4-14	369176	4908507	2	0	0	89.1	89.1	1	6411.73	3.25	0	87.14	0	1.99	0	0	14.28	0	0	0	0	0	0	-14.34	-14.34
Inverter	MV4-13	369051	4908605	2	0	0	89.1	89.1	1	6459.01	3.25	0	87.2	0	2	0	0	14.33	0	0	0	0	0	0	-14.48	-14.48
Inverter	MV4-12	369043	4908803	2	0	0	89.1	89.1	1	6642.62	3.25	0	87.45	0	2.04	0	0	14.56	0	0	0	0	0	0	-14.99	-14.99
Inverter	MV5-6	369982	4908507	2	0	0	89.1	89.1	1	6748.37	3.25	0	87.58	0	2.07	0	0	14.69	0	0	0	0	0	0	-15.28	-15.28
Westbrook Inverter Enclosur	W_INV1	369409	4906578	2	0	0	86.1	86.1	1	4791.27	3.25	0	84.61	0	1.59	0	0	12.18	0	0	0	0	0	0	-12.32	-12.32
Inverter	MV6-4	370250	4906966	2	0	0	86.1	86.1	1	5593.27	3.25	0	85.95	0	1.79	0	0	13.24	0	0	0	0	0	0	-14.92	-14.92
Westbrook Inverter Transfor	W_INVTR1	369403	4906578	2	0	0	78.2	78.2	1	4788.05	3.25	0	84.6	0	-3.13	0	0	2.34	0	0	0	0	0	0	-5.57	-5.57
Westbrook Inverter Transfor	W_INVTR3	369514	4906164	2	0	0	77.3	77.3	1	4509.59	3.25	0	84.08	0	-3.08	0	0	2.24	0	0	0	0	0	0	-5.91	-5.91
Westbrook Inverter Transfor	W_INVTR2	369368	4906388	2	0	0	77.3	77.3	1	4609.56	3.25	0	84.27	0	-3.1	0	0	2.28	0	0	0	0	0	0	-6.11	-6.11
Westbrook Inverter Transfor	W_INVTR4	369679	4906164	2	0	0	77.3	77.3	1	4609.67	3.25	0	84.27	0	-3.1	0	0	2.28	0	0	0	0	0	0	-6.11	-6.11
Westbrook Inverter Transfor	W_INVTR7	369786	4906417	2	0	0	77.3	77.3	1	4875.25	3.25	0	84.76	0	-3.15	0	0	2.37	0	0	0	0	0	0	-6.64	-6.64
Westbrook Inverter Transfor	W_INVTR5	369725	4906574	2	0	0	77.3	77.3	1	4965.22	3.25	0	84.92	0	-3.17	0	0	2.4	0	0	0	0	0	0	-6.81	-6.81
Westbrook Inverter Transfor	W_INVTR6	369881	4906578	2	0	0	77.3	77.3	1	5060.93	3.25	0	85.08	0	-3.19	0	0	2.43	0	0	0	0	0	0	-6.99	-6.99
Inverter Transformer	MV1-14 T	365157	4905049	2	0	0	69.4	69.4	1	3016.35	3.25	0	80.59	0	2.51	0	0	5.9	0	0	0	0	0	0	-19.65	-19.65
Inverter Transformer	MV1-13 T	364725	4905241	2	0	0	69.4	69.4	1	3425.13	3.25	0	81.69	0	2.63	0	0	6.23	0	0	0	0	0	0	-21.21	-21.21
Inverter Transformer	MV1-10 T	365010	4905564	2	0	0	69.4	69.4	1	3530.15	3.25	0	81.96	0	2.66	0	0	6.32	0	0	0	0	0	0	-21.58	-21.58
Inverter Transformer	MV1-7 T	364919	4905782	2	0	0	69.4	69.4	1	3764.01	3.25	0	82.51	0	2.72	0	0	6.5	0	0	0	0	0	0	-22.39	-22.39
Inverter Transformer	MV2-1 T	365836	4906816	2	0	0	69.4	69.4	1	4390.56	3.25	0	83.85	0	2.88	0	0	6.96	0	0	0	0	0	0	-24.34	-24.34
Inverter Transformer	MV6-4 T	370244	4906966	2	0	0	69.4	69.4	1	5589.6	3.25	0	85.95	0	3.12	0	0	7.76	0	0	0	0	0	0	-27.48	-27.48
Inverter Transformer	MV6-1 T	370230	4907364	2	0	0	69.4	69.4	1	5901.7	3.25	0	86.42	0	3.17	0	0	7.96	0	0	0	0	0	0	-28.2	-28.2
Inverter Transformer	MV1-15 T	365309	4904994	2	0	0	56.1	56.1	1	2887.85	3.25	0	80.21	0	0.78	0	0	8.68	0	0	0	0	0	0	-33.61	-33.61
Inverter Transformer	MV1-12 T	365044	4905386	2	0	0	56.1	56.1	1	3360.7	3.25	0	81.53	0	0.98	0	0	9.46	0	0	0	0	0	0	-35.92	-35.92
Inverter Transformer	MV1-11 T	364649	4905414	2	0	0	56.1	56.1	1	3608.6	3.25	0	82.15	0	1.08	0	0	9.86	0	0	0	0	0	0	-37.03	-37.03
Inverter Transformer	MV1-8 T	364782	4905647	2	0	0	56.1	56.1	1	3721.98	3.25	0	82.42	0	1.13	0	0	10.03	0	0	0	0	0	0	-37.52	-37.52
Inverter Transformer	MV1-9 T	364555	4905646	2	0	0	56.1	56.1	1	3850.78	3.25	0	82.71	0	1.18	0	0	10.23	0	0	0	0	0	0	-38.07	-38.07
Inverter Transformer	MV1-4 T	364821	4905918	2	0	0	56.1	56.1	1	3930.97	3.25	0	82.89	0	1.22	0	0	10.35	0	0	0	0	0	0	-38.4	-38.4
Inverter Transformer	MV1-5 T	364676	4905892	2	0	0	56.1	56.1	1	3985.14	3.25	0	83.01	0	1.24	0	0	10.43	0	0	0	0	0	0	-38.62	-38.62
Inverter Transformer	MV1-6 T	364482	4905835	2	0	0	56.1	56.1	1	4046.73	3.25	0	83.14	0	1.26	0	0	10.52	0	0	0	0	0	0	-38.87	-38.87
Inverter Transformer	MV1-2 T	364759	4906063	2	0	0	56.1	56.1	1	4087.33	3.25	0	83.23	0	1.28	0	0	10.58	0	0	0	0	0	0	-39.03	-39.03
Inverter Transformer	MV1-1 T	364721	4906166	2	0	0	56.1	56.1	1	4195.43	3.25	0	83.46	0	1.32	0	0	10.74	0	0	0	0	0	0	-39.46	-39.46
Inverter Transformer	MV2-2 T	365982	4906654	2	0	0	56.1	56.1	1	4201.02	3.25	0	83.47	0	1.32	0	0	10.75	0	0	0	0	0	0	-39.48	-39.48
Inverter Transformer	MV2-3 T	365814	4906641	2	0	0	56.1	56.1	1	4225.54	3.25	0	83.52	0	1.33	0	0	10.79	0	0	0	0	0	0	-39.58	-39.58
Inverter Transformer	MV1-3 T	364435	4906039	2	0	0	56.1	56.1	1	4240.89	3.25	0	83.55	0	1.34	0	0	10.81	0	0	0	0	0	0	-39.64	-39.64
Inverter Transformer	MV2-4 T	365590	4906628	2	0	0	56.1	56.1	1	4272.51	3.25	0	83.61	0	1.35	0	0	10.85	0	0	0	0	0	0	-39.76	-39.76
Inverter Transformer	MV3-21 T	368484	4907206	2	0	0	56.1	56.1	1	4950.63	3.25	0	84.89	0	1.61	0	0	11.79	0	0	0	0	0	0	-42.23	-42.23
Inverter Transformer	MV3-22 T	368661	4907142	2	0	0	56.1	56.1	1	4952.99	3.25	0	84.9	0	1.61	0	0	11.79	0	0	0	0	0	0	-42.24	-42.24
Inverter Transformer	MV3-18 T	367757	4907412	2	0	0	56.1	56.1	1	4959.67	3.25	0	84.91	0	1.61	0	0	11.8	0	0	0	0	0	0	-42.26	-42.26
Inverter Transformer	MV3-19 T	368352	4907347	2	0	0	56.1	56.1	1	5042.37	3.25	0	85.05	0	1.64	0	0	11.91	0	0	0	0	0	0	-42.54	-42.54

	Inverter Transformer	MV3-17 T	368183	4907472	2	0	0	56.1	56.1	1	5114.42	3.25	0	85.18	0	1.67	0	0	12	0	0	0	0	0	0	-42.79	-42.79
	Inverter Transformer	MV3-20 T	368683	4907317	2	0	0	56.1	56.1	1	5123.92	3.25	0	85.19	0	1.67	0	0	12.02	0	0	0	0	0	0	-42.82	-42.82
	Inverter Transformer	MV3-12 T	367674	4907594	2	0	0	56.1	56.1	1	5124.27	3.25	0	85.19	0	1.67	0	0	12.02	0	0	0	0	0	0	-42.82	-42.82
	Inverter Transformer	MV3-13 T	367958	4907577	2	0	0	56.1	56.1	1	5162	3.25	0	85.26	0	1.68	0	0	12.07	0	0	0	0	0	0	-42.95	-42.95
	Inverter Transformer	MV3-15 T	368351	4907477	2	0	0	56.1	56.1	1	5166.16	3.25	0	85.26	0	1.68	0	0	12.07	0	0	0	0	0	0	-42.96	-42.96
	Inverter Transformer	MV3-16 T	368509	4907475	2	0	0	56.1	56.1	1	5212.95	3.25	0	85.34	0	1.7	0	0	12.13	0	0	0	0	0	0	-43.12	-43.12
	Inverter Transformer	MV3-14 T	368678	4907498	2	0	0	56.1	56.1	1	5291.34	3.25	0	85.47	0	1.73	0	0	12.23	0	0	0	0	0	0	-43.37	-43.37
	Inverter Transformer	MV3-10 T	368162	4907669	2	0	0	56.1	56.1	1	5299.35	3.25	0	85.48	0	1.73	0	0	12.24	0	0	0	0	0	0	-43.4	-43.4
	Inverter Transformer	MV3-7 T	367951	4907754	2	0	0	56.1	56.1	1	5333.39	3.25	0	85.54	0	1.74	0	0	12.29	0	0	0	0	0	0	-43.51	-43.51
	Inverter Transformer	MV3-11 T	368340	4907662	2	0	0	56.1	56.1	1	5340.13	3.25	0	85.55	0	1.75	0	0	12.29	0	0	0	0	0	0	-43.53	-43.53
	Inverter Transformer	MV3-9 T	368517	4907703	2	0	0	56.1	56.1	1	5431.79	3.25	0	85.7	0	1.78	0	0	12.41	0	0	0	0	0	0	-43.83	-43.83
	Inverter Transformer	MV3-6 T	368156	4907834	2	0	0	56.1	56.1	1	5457.76	3.25	0	85.74	0	1.79	0	0	12.44	0	0	0	0	0	0	-43.91	-43.91
	Inverter Transformer	MV3-8 T	368685	4907712	2	0	0	56.1	56.1	1	5494.74	3.25	0	85.8	0	1.8	0	0	12.49	0	0	0	0	0	0	-44.03	-44.03
	Inverter Transformer	MV3-3 T	367944	4907927	2	0	0	56.1	56.1	1	5501.23	3.25	0	85.81	0	1.8	0	0	12.5	0	0	0	0	0	0	-44.05	-44.05
	Inverter Transformer	MV3-5 T	368335	4907843	2	0	0	56.1	56.1	1	5512.62	3.25	0	85.83	0	1.8	0	0	12.51	0	0	0	0	0	0	-44.08	-44.08
	Inverter Transformer	MV3-1 T	368150	4907976	2	0	0	56.1	56.1	1	5594.19	3.25	0	85.95	0	1.83	0	0	12.61	0	0	0	0	0	0	-44.34	-44.34
	Inverter Transformer	MV3-4 T	368507	4907925	2	0	0	56.1	56.1	1	5640.26	3.25	0	86.03	0	1.85	0	0	12.67	0	0	0	0	0	0	-44.48	-44.48
	Inverter Transformer	MV3-2 T	368677	4907928	2	0	0	56.1	56.1	1	5695.94	3.25	0	86.11	0	1.87	0	0	12.74	0	0	0	0	0	0	-44.66	-44.66
	Inverter Transformer	MV6-3 T	370202	4907140	2	0	0	56.1	56.1	1	5703.45	3.25	0	86.12	0	1.87	0	0	12.75	0	0	0	0	0	0	-44.68	-44.68
	Inverter Transformer	MV6-2 T	370091	4907339	2	0	0	56.1	56.1	1	5802.05	3.25	0	86.27	0	1.9	0	0	12.87	0	0	0	0	0	0	-44.98	-44.98
	Inverter Transformer	MV4-15 T	369170	4908481	2	0	0	56.1	56.1	1	6385.34	3.25	0	87.1	0	2.08	0	0	13.55	0	0	0	0	0	0	-46.68	-46.68
	Inverter Transformer	MV4-14 T	369182	4908507	2	0	0	56.1	56.1	1	6413.93	3.25	0	87.14	0	2.09	0	0	13.58	0	0	0	0	0	0	-46.76	-46.76
	Inverter Transformer	MV4-13 T	369057	4908605	2	0	0	56.1	56.1	1	6461.08	3.25	0	87.21	0	2.11	0	0	13.64	0	0	0	0	0	0	-46.89	-46.89
	Inverter Transformer	MV4-12 T	369049	4908803	2	0	0	56.1	56.1	1	6644.62	3.25	0	87.45	0	2.16	0	0	13.84	0	0	0	0	0	0	-47.39	-47.39
	Inverter Transformer	MV5-6 T	369987	4908507	2	0	0	56.1	56.1	1	6750.71	3.25	0	87.59	0	2.19	0	0	13.96	0	0	0	0	0	0	-47.68	-47.68
	Inverter Transformer	MV4-11 T	369269	4908855	2	0	0	56.1	56.1	1	6769.76	3.25	0	87.61	0	2.2	0	0	13.98	0	0	0	0	0	0	-47.73	-47.73
	Inverter Transformer	MV4-10 T	369307	4908858	2	0	0	56.1	56.1	1	6786.33	3.25	0	87.63	0	2.2	0	0	14	0	0	0	0	0	0	-47.77	-47.77
	Inverter Transformer	MV4-7 T	369040	4909001	2	0	0	56.1	56.1	1	6828.67	3.25	0	87.69	0	2.21	0	0	14.04	0	0	0	0	0	0	-47.88	-47.88
	Inverter Transformer	MV4-8 T	369262	4909001	2	0	0	56.1	56.1	1	6903.69	3.25	0	87.78	0	2.23	0	0	14.13	0	0	0	0	0	0	-48.08	-48.08
	Inverter Transformer	MV4-9 T	369284	4909001	2	0	0	56.1	56.1	1	6911.47	3.25	0	87.79	0	2.24	0	0	14.13	0	0	0	0	0	0	-48.1	-48.1
	Inverter Transformer	MV5-5 T	370021	4908690	2	0	0	56.1	56.1	1	6928.6	3.25	0	87.81	0	2.24	0	0	14.15	0	0	0	0	0	0	-48.15	-48.15
	Inverter Transformer	MV4-4 T	369033	4909199	2	0	0	56.1	56.1	1	7014.11	3.25	0	87.92	0	2.26	0	0	14.24	0	0	0	0	0	0	-48.37	-48.37
	Inverter Transformer	MV5-2 T	370011	4908853	2	0	0	56.1	56.1	1	7069.18	3.25	0	87.99	0	2.28	0	0	14.3	0	0	0	0	0	0	-48.51	-48.51
	Inverter Transformer	MV4-6 T	369249	4909192	2	0	0	56.1	56.1	1	7078.32	3.25	0	88	0	2.28	0	0	14.31	0	0	0	0	0	0	-48.53	-48.53
	Inverter Transformer	MV5-4 T	370330	4908707	2	0	0	56.1	56.1	1	7090.98	3.25	0	88.01	0	2.28	0	0	14.33	0	0	0	0	0	0	-48.57	-48.57
	Inverter Transformer	MV4-5 T	369283	4909199	2	0	0	56.1	56.1	1	7096.58	3.25	0	88.02	0	2.29	0	0	14.33	0	0	0	0	0	0	-48.58	-48.58
	Inverter Transformer	MV5-3 T	370237	4908851	2	0	0	56.1	56.1	1	7171.94	3.25	0	88.11	0	2.31	0	0	14.41	0	0	0	0	0	0	-48.77	-48.77
	Inverter Transformer	MV4-1 T	369017	4909397	2	0	0	56.1	56.1	1	7197.49	3.25	0	88.14	0	2.31	0	0	14.44	0	0	0	0	0	0	-48.84	-48.84
	Inverter Transformer	MV4-3 T	369234	4909397	2	0	0	56.1	56.1	1	7266.35	3.25	0	88.23	0	2.33	0	0	14.51	0	0	0	0	0	0	-49.01	-49.01
	Inverter Transformer	MV4-2 T	369267	4909397	2	0	0	56.1	56.1	1	7277.33	3.25	0	88.24	0	2.33	0	0	14.52	0	0	0	0	0	0	-49.04	-49.04
	Inverter Transformer	MV5-1 T	370015	4909142	2	0	0	56.1	56.1	1	7330.17	3.25	0	88.3	0	2.35	0	0	14.58	0	0	0	0	0	0	-49.17	-49.17
	Line Reactor	NGR	369421	4908787.5	5	0	0	45.4	45.4	1	6763.57	5.25	0	87.6	0	3.22	1.37	0.11	2.76	0	0	0	0	0	0	-49.6	-49.6
Limit. Valu	0	0																								
Level D/N:	34.1385	34.1385																								

Receiver: Vacant Lot Receptor
ID: G-V11
X: 366934.7
Y: 4903303
Z: 4.5
Ground: 0

ISO	Description	ID	X	Y	Z	Ground	ReflOrd	LxT	LxN	L/A	Dist.	hm	Freq	Adiv	K0b	Agr	Abar	z	Aatm	Afol	Ahous	Cmet	CmetN	Dc	RL	LtotT	LtotN
	Gardiner Substation	G_Sub	366586.3	4903349.9	2.5	0	0	90.8	90.8	1	351.55	4.24	0	61.92	0	0.44	5.18	0.3	1.07	0	0	0	0	0	0	22.17	22.17
	Inverters	G_Inv2	366676.9	4903239.1	2	0	0	87.7	87.7	1	265.61	3.25	0	59.48	0	2.54	0	0	0.42	0	0	0	0	0	0	25.22	25.22
	Inverters	G_Inv4	366732.8	4903105	2	0	0	87.7	87.7	1	282.8	3.25	0	60.03	0	2.51	0	0	0.45	0	0	0	0	0	0	24.67	24.67
	Inverters	G_Inv6	366788.5	4902972	2	0	0	87.7	87.7	1	361.86	3.25	0	62.17	0	2.44	0	0	0.57	0	0	0	0	0	0	22.48	22.48
	Sol_Luce Substation	S_Substation	369426	4908792	3.5	0	0	112.1	112.1	1	6027.91	5.25	0	86.6	0	1.17	2.64	0.32	9.77	0	0	0	0	0	0	11.9	11.9
	Inverters	G_Inv3	366583.7	4903091.4	2	0	0	87.7	87.7	1	409.86	3.25	0	63.25	0	2.42	0	0	0.63	0	0	0	0	0	0	21.36	21.36
	Inverters	G_Inv1	366526.4	4903225.8	2	0	0	87.7	87.7	1	415.54	3.25	0	63.37	0	2.42	0	0	0.64	0	0	0	0	0	0	21.23	21.23
	Inverters	G_Inv5	366638.5	4902958.1	2	0	0	87.7	87.7	1	454.64	3.25	0	64.15	0	2.4	0	0	0.7	0	0	0	0	0	0	20.4	20.4
	Inverters	G_Inv8	366844.5	4902838.5	2	0	0	87.7	87.7	1	473.18	3.25	0	64.5	0	2.4	0	0	0.73	0	0	0	0	0	0	20.03	20.03
	Inverters	G_Inv7	366694.6	4902824.7	2	0	0	87.7	87.7	1	535.19	3.25	0	65.57	0	2.4	0	0	0.81	0	0	0	0	0	0	18.88	18.88
	Inverter	MV1-15	365315	4904994	2	0	0	100.3	100.3	1	2341.56	3.25	0	78.39	0	0.22	0	0	14.15	0	0	0	0	0	0	7.55	7.55
	Inverters	G_Inv10	366900.7	4902704.8	2	0	0	87.7	87.7	1	599.17	3.25	0	66.55	0	2.4	0	0	0.9	0	0	0	0	0	0	17.81	17.81
	Inverters	G_Inv9	366750.9	4902691.8	2	0	0	87.7	87.7	1	638.24	3.25	0	67.1	0	2.4	0	0	0.95	0	0	0	0	0	0	17.21	17.21
	Inverter	MV1-12	365038	4905386	2	0	0	100.3	100.3	1	2817.16	3.25	0	80	0	0.33	0	0	15.05	0	0	0	0	0	0	4.94	4.94
	Inverter	MV1-11	364655	4905414	2	0	0	100.3	100.3	1	3106.99	3.25	0	80.85	0	0.38	0	0	15.56	0	0	0	0	0	0	3.52	3.52
	Inverter	MV1-8	364788	4905647	2	0	0	100.3	100.3	1	3178.47	3.25	0	81.04	0	0.4	0	0	15.68	0	0	0	0	0	0	3.19	3.19
	Inverter	MV1-9	364561	4905646	2	0	0	100.3	100.3	1	3335.28	3.25	0	81.46	0	0.42	0	0	15.95	0	0	0	0	0	0	2.47	2.47
	Inverter	MV1-4	364815	4905918	2	0	0	100.3	100.3	1	3366.21	3.25	0	81.54	0	0.43	0	0	16.01	0	0	0	0	0	0	2.33	2.33
	Inverter	MV1-5	364671	4905892	2	0	0	100.3	100.3	1	3439.08	3.25	0	81.73	0	0.44	0	0	16.13	0	0	0	0	0	0	2.01	2.01
	Inverter	MV1-14	365163	4905049	2	0	0	97.3	97.3	1	2487.46	3.25	0	78.92	0	0.25	0	0	14.43	0	0	0	0	0	0	3.71	3.71
	Inverter	MV1-2	364753	4906063	2	0	0	100.3	100.3	1	3518.16	3.25	0	81.93	0	0.45	0	0	16.26	0	0	0	0	0	0	1.67	1.67

Inverter	MV2-3	365820	4906641	2	0	0	100.3	100.3	1	3519.21	3.25	0	81.93	0	0.45	0	0	16.26	0	0	0	0	0	0	1.67	1.67
Inverter	MV1-6	364477	4905835	2	0	0	100.3	100.3	1	3528.64	3.25	0	81.95	0	0.46	0	0	16.28	0	0	0	0	0	0	1.62	1.62
Inverter	MV2-4	365586	4906624	2	0	0	100.3	100.3	1	3584.42	3.25	0	82.09	0	0.46	0	0	16.37	0	0	0	0	0	0	1.39	1.39
Inverter	MV1-1	364715	4906166	2	0	0	100.3	100.3	1	3622.68	3.25	0	82.18	0	0.47	0	0	16.44	0	0	0	0	0	0	1.23	1.23
Inverter	MV1-13	364731	4905241	2	0	0	97.3	97.3	1	2934.65	3.25	0	80.35	0	0.35	0	0	15.26	0	0	0	0	0	0	1.36	1.36
Inverter	MV3-18	367752	4907412	2	0	0	100.3	100.3	1	4189.49	3.25	0	83.44	0	0.55	0	0	17.35	0	0	0	0	0	0	-1.03	-1.03
Inverter	MV3-21	368478	4907206	2	0	0	100.3	100.3	1	4197.05	3.25	0	83.46	0	0.55	0	0	17.36	0	0	0	0	0	0	-1.06	-1.06
Inverter	MV1-10	365004	4905564	2	0	0	97.3	97.3	1	2973.17	3.25	0	80.46	0	0.36	0	0	15.32	0	0	0	0	0	0	1.17	1.17
Inverter	MV3-19	368357	4907347	2	0	0	100.3	100.3	1	4286.83	3.25	0	83.64	0	0.57	0	0	17.5	0	0	0	0	0	0	-1.4	-1.4
Inverter	MV3-17	368178	4907472	2	0	0	100.3	100.3	1	4350.44	3.25	0	83.77	0	0.57	0	0	17.6	0	0	0	0	0	0	-1.63	-1.63
Inverter	MV3-12	367668	4907594	2	0	0	100.3	100.3	1	4353.21	3.25	0	83.78	0	0.57	0	0	17.6	0	0	0	0	0	0	-1.64	-1.64
Inverter	MV3-20	368689	4907317	2	0	0	100.3	100.3	1	4380.61	3.25	0	83.83	0	0.58	0	0	17.65	0	0	0	0	0	0	-1.74	-1.74
Inverter	MV3-13	367963	4907577	2	0	0	100.3	100.3	1	4395.96	3.25	0	83.86	0	0.58	0	0	17.67	0	0	0	0	0	0	-1.8	-1.8
Inverter	MV3-15	368357	4907477	2	0	0	100.3	100.3	1	4409.67	3.25	0	83.89	0	0.58	0	0	17.69	0	0	0	0	0	0	-1.85	-1.85
Inverter	MV3-16	368514	4907475	2	0	0	100.3	100.3	1	4460.92	3.25	0	83.99	0	0.59	0	0	17.77	0	0	0	0	0	0	-2.03	-2.03
Inverter	MV1-7	364925	4905782	2	0	0	97.3	97.3	1	3191.29	3.25	0	81.08	0	0.4	0	0	15.71	0	0	0	0	0	0	0.13	0.13
Inverter	MV3-10	368167	4907669	2	0	0	100.3	100.3	1	4536.58	3.25	0	84.13	0	0.59	0	0	17.89	0	0	0	0	0	0	-2.3	-2.3
Inverter	MV3-14	368684	4907498	2	0	0	100.3	100.3	1	4545.12	3.25	0	84.15	0	0.6	0	0	17.9	0	0	0	0	0	0	-2.33	-2.33
Inverter	MV3-7	367945	4907754	2	0	0	100.3	100.3	1	4564.22	3.25	0	84.19	0	0.6	0	0	17.93	0	0	0	0	0	0	-2.4	-2.4
Inverter	MV3-11	368346	4907662	2	0	0	100.3	100.3	1	4581.77	3.25	0	84.22	0	0.6	0	0	17.95	0	0	0	0	0	0	-2.46	-2.46
Inverter	MV3-9	368512	4907703	2	0	0	100.3	100.3	1	4674.17	3.25	0	84.39	0	0.61	0	0	18.09	0	0	0	0	0	0	-2.79	-2.79
Inverter	MV3-6	368162	4907834	2	0	0	100.3	100.3	1	4694.28	3.25	0	84.43	0	0.61	0	0	18.13	0	0	0	0	0	0	-2.86	-2.86
Inverter	MV3-3	367939	4907927	2	0	0	100.3	100.3	1	4731.81	3.25	0	84.5	0	0.62	0	0	18.18	0	0	0	0	0	0	-2.99	-2.99
Inverter	MV3-8	368680	4907712	2	0	0	100.3	100.3	1	4741.87	3.25	0	84.52	0	0.62	0	0	18.2	0	0	0	0	0	0	-3.02	-3.02
Inverter	MV6-3	370207	4907140	2	0	0	100.3	100.3	1	5042.87	3.25	0	85.05	0	0.65	0	0	18.64	0	0	0	0	0	0	-4.03	-4.03
Inverter	MV6-2	370085	4907339	2	0	0	100.3	100.3	1	5119.93	3.25	0	85.19	0	0.65	0	0	18.76	0	0	0	0	0	0	-4.28	-4.28
Inverter	MV2-1	365842	4906816	2	0	0	97.3	97.3	1	3679.02	3.25	0	82.31	0	0.48	0	0	16.53	0	0	0	0	0	0	-2.01	-2.01
Inverter	MV4-11	369264	4908855	2	0	0	100.3	100.3	1	6020.83	3.25	0	86.59	0	0.71	0	0	20.02	0	0	0	0	0	0	-7.01	-7.01
Inverter	MV4-10	369312	4908858	2	0	0	100.3	100.3	1	6042.32	3.25	0	86.62	0	0.71	0	0	20.05	0	0	0	0	0	0	-7.07	-7.07
Inverter	MV4-7	369035	4909001	2	0	0	100.3	100.3	1	6072.76	3.25	0	86.67	0	0.71	0	0	20.09	0	0	0	0	0	0	-7.15	-7.15
Inverter	MV4-8	369256	4909001	2	0	0	100.3	100.3	1	6152.69	3.25	0	86.78	0	0.71	0	0	20.2	0	0	0	0	0	0	-7.38	-7.38
Inverter	MV4-9	369289	4909001	2	0	0	100.3	100.3	1	6165.22	3.25	0	86.8	0	0.71	0	0	20.22	0	0	0	0	0	0	-7.41	-7.41
Inverter	MV5-5	370015	4908690	2	0	0	100.3	100.3	1	6205.48	3.25	0	86.86	0	0.71	0	0	20.27	0	0	0	0	0	0	-7.52	-7.52
Inverter	MV4-4	369027	4909199	2	0	0	100.3	100.3	1	6256.24	3.25	0	86.93	0	0.71	0	0	20.34	0	0	0	0	0	0	-7.66	-7.66
Inverter	MV4-6	369243	4909192	2	0	0	100.3	100.3	1	6325.23	3.25	0	87.02	0	0.71	0	0	20.43	0	0	0	0	0	0	-7.85	-7.85
Inverter	MV5-2	370006	4908853	2	0	0	100.3	100.3	1	6343.14	3.25	0	87.05	0	0.71	0	0	20.45	0	0	0	0	0	0	-7.9	-7.9
Inverter	MV4-5	369289	4909199	2	0	0	100.3	100.3	1	6348.67	3.25	0	87.05	0	0.71	0	0	20.46	0	0	0	0	0	0	-7.92	-7.92
Inverter	MV5-4	370324	4908707	2	0	0	100.3	100.3	1	6378.92	3.25	0	87.09	0	0.71	0	0	20.5	0	0	0	0	0	0	-8	-8
Inverter	MV4-1	369011	4909397	2	0	0	100.3	100.3	1	6438	3.25	0	87.18	0	0.71	0	0	20.58	0	0	0	0	0	0	-8.16	-8.16
Inverter	MV5-3	370231	4908851	2	0	0	100.3	100.3	1	6453.36	3.25	0	87.2	0	0.71	0	0	20.6	0	0	0	0	0	0	-8.2	-8.2
Inverter	MV4-3	369229	4909397	2	0	0	100.3	100.3	1	6511.58	3.25	0	87.27	0	0.71	0	0	20.67	0	0	0	0	0	0	-8.35	-8.35
Inverter	MV4-2	369272	4909397	2	0	0	100.3	100.3	1	6526.85	3.25	0	87.29	0	0.71	0	0	20.69	0	0	0	0	0	0	-8.39	-8.39
Inverter	MV5-1	370020	4909142	2	0	0	100.3	100.3	1	6604.01	3.25	0	87.4	0	0.72	0	0	20.79	0	0	0	0	0	0	-8.59	-8.59
Inverter	MV6-1	370235	4907364	2	0	0	97.3	97.3	1	5232.94	3.25	0	85.37	0	0.66	0	0	18.92	0	0	0	0	0	0	-7.64	-7.64
DSTATCOM - 10 MVAR #2	DSAT2	369403	4908757	2.5	0	0	96.6	96.6	1	5986.54	3.5	0	86.54	0	3.77	0	0	3.83	0	0	0	0	0	0	2.48	2.48
DSTATCOM - 10 MVAR #1	DSAT1	369437	4908757	2.5	0	0	96.6	96.6	1	6000.64	3.5	0	86.56	0	3.77	0	0	3.84	0	0	0	0	0	0	2.45	2.45
SubstationTransformer	W_ST	369711.17	4906112.3	2.5	0	0	92	92	1	3949.78	3.5	0	82.93	0	0.32	0	-0.1	7.3	0	0	0	0	0	0	1.43	1.43
Inverter	MV2-2	365977	4906654	2	0	0	89.1	89.1	1	3485.17	3.25	0	81.84	0	1.27	0	0	10.34	0	0	0	0	0	0	-4.39	-4.39
Inverter	MV1-3	364440	4906039	2	0	0	89.1	89.1	1	3702.6	3.25	0	82.37	0	1.32	0	0	10.66	0	0	0	0	0	0	-5.29	-5.29
Westbrook Inverter Enclosur	W_INV3	369508	4906164	2	0	0	89.1	89.1	1	3848.01	3.25	0	82.7	0	1.35	0	0	10.87	0	0	0	0	0	0	-5.87	-5.87
Westbrook Inverter Enclosur	W_INV2	369374	4906388	2	0	0	89.1	89.1	1	3932.86	3.25	0	82.89	0	1.38	0	0	10.99	0	0	0	0	0	0	-6.2	-6.2
Westbrook Inverter Enclosur	W_INV4	369673	4906164	2	0	0	89.1	89.1	1	3960.25	3.25	0	82.95	0	1.38	0	0	11.03	0	0	0	0	0	0	-6.31	-6.31
Inverter	MV3-22	368656	4907142	2	0	0	89.1	89.1	1	4207.23	3.25	0	83.48	0	1.44	0	0	11.38	0	0	0	0	0	0	-7.24	-7.24
Westbrook Inverter Enclosur	W_INV7	369780	4906417	2	0	0	89.1	89.1	1	4218.14	3.25	0	83.5	0	1.45	0	0	11.39	0	0	0	0	0	0	-7.28	-7.28
Westbrook Inverter Enclosur	W_INV5	369719	4906574	2	0	0	89.1	89.1	1	4295.55	3.25	0	83.66	0	1.47	0	0	11.5	0	0	0	0	0	0	-7.57	-7.57
Westbrook Inverter Enclosur	W_INV6	369875	4906578	2	0	0	89.1	89.1	1	4401.25	3.25	0	83.87	0	1.49	0	0	11.65	0	0	0	0	0	0	-7.95	-7.95
Inverter	MV3-5	368340	4907843	2	0	0	89.1	89.1	1	4752.52	3.25	0	84.54	0	1.58	0	0	12.13	0	0	0	0	0	0	-9.19	-9.19
Inverter	MV3-1	368156	4907976	2	0	0	89.1	89.1	1	4829.96	3.25	0	84.68	0	1.6	0	0	12.23	0	0	0	0	0	0	-9.45	-9.45
Inverter	MV3-4	368502	4907925	2	0	0	89.1	89.1	1	4880.5	3.25	0	84.77	0	1.61	0	0	12.3	0	0	0	0	0	0	-9.62	-9.62
Inverter	MV3-2	368671	4907928	2	0	0	89.1	89.1	1	4940.18	3.25	0	84.87	0	1.62	0	0	12.38	0	0	0	0	0	0	-9.83	-9.83
Fixed Reactor Bank 1	FRB1	369378	4908755	6	0	0	89.8	89.8	1	5974.45	5.25	0	86.53	0	-0.42	0	0	9.72	0	0	0	0	0	0	-6.04	-6.04
Fixed Reactor Bank 2	FRB2	369464	4908755	6	0	0	89.8	89.8	1	6010.13	5.25	0	86.58	0	-0.42	0	0	9.75	0	0	0	0	0	0	-6.14	-6.14
Inverter	MV4-15	369176	4908481	2	0	0	89.1	89.1	1	5642.26	3.25	0	86.03	0	1.8	0	0	13.31	0	0	0	0	0	0	-12.08	-12.08
Inverter	MV4-14	369176	4908507	2	0	0	89.1	89.1	1	5666.13	3.25	0	86.07	0	1.8	0	0	13.34	0	0	0	0	0	0	-12.15	-12.15
Inverter	MV4-13	369051	4908605	2	0	0	89.1	89.1	1	5708.76	3.25	0	86.13	0	1.81	0	0	13.39	0	0	0	0	0	0	-12.28	-12.28
Westbrook Inverter Enclosur	W_INV1	369409	4906578	2	0	0	86.1	86.1	1	4104.61	3.25	0	83.27	0	1.42	0	0	11.23	0	0	0	0	0	0	-9.86	-9.86
Inverter	MV4-12	369043	4908803	2	0	0	89.1	89.1	1	5890.24	3.25	0	86.4	0	1.86	0	0	13.62	0	0	0	0	0	0	-12.83	-12.83
Inverter	MV5-6	369982	4908507	2	0	0	89.1	89.1	1	6030.56	3.25	0	86.61	0	1.89	0	0	13.8	0	0	0	0	0	0	-13.24	-13.24
Inverter	MV6-4	370250	4906966	2	0	0	86.1	86.1	1	4940.53	3.25	0	84.88	0	1.63	0	0	12.38	0	0	0	0	0	0	-12.83	-12.83
Westbrook Inverter Transfor	W_INVTR1	369403	4906578	2	0	0	78.2	78.2	1	4100.99	3.25	0	83.26	0	-2.99	0	0	2.09	0	0	0	0	0	0	-4.12	-4.12
Westbrook Inverter Transfor	W_INVTR3	369514	4906164	2	0	0	77.3	77.3	1	3852.03	3.25	0	82.71	0	-2.93	0	0	2	0	0	0	0	0	0	-4.44	-4.44
Westbrook Inverter Transfor	W_INVTR2	369368	4906388	2	0	0	77.3	77.3	1	3929.14	3.25	0	82.89	0	-2.95	0	0	2.03	0	0	0	0	0	0	-4.63	-4.63
Westbrook Inverter Transfor	W_INVTR4	369679	4906164	2	0	0	77.3	77.3	1	3964.41	3.25	0	82.96	0	-2.95	0	0	2.04	0	0	0	0	0	0	-4.71	-4.71
Westbrook Inverter Transfor	W_INVTR7	369786	4906417	2	0	0	77.3	77.3	1	4222.19	3.25	0	83.51	0	-3.01	0	0	2.14	0	0	0	0	0	0	-5.29	-5.29

Westbrook Inverter Transfor	W_INVTR5	369725	4906574	2	0	0	77.3	77.3	1	4299.44	3.25	0	83.67	0	-3.03	0	0	2.17	0	0	0	0	0	0	-5.46	-5.46
Westbrook Inverter Transfor	W_INVTR6	369881	4906578	2	0	0	77.3	77.3	1	4405.26	3.25	0	83.88	0	-3.05	0	0	2.2	0	0	0	0	0	0	-5.69	-5.69
Inverter Transformer	MV1-14 T	365157	4905049	2	0	0	69.4	69.4	1	2491.73	3.25	0	78.93	0	2.35	0	0	5.44	0	0	0	0	0	0	-17.36	-17.36
Inverter Transformer	MV1-13 T	364725	4905241	2	0	0	69.4	69.4	1	2939.15	3.25	0	80.36	0	2.49	0	0	5.83	0	0	0	0	0	0	-19.33	-19.33
Inverter Transformer	MV1-10 T	365010	4905564	2	0	0	69.4	69.4	1	2969.28	3.25	0	80.45	0	2.5	0	0	5.86	0	0	0	0	0	0	-19.46	-19.46
Inverter Transformer	MV1-7 T	364919	4905782	2	0	0	69.4	69.4	1	3195.07	3.25	0	81.09	0	2.57	0	0	6.05	0	0	0	0	0	0	-20.35	-20.35
Inverter Transformer	MV2-1 T	365836	4906816	2	0	0	69.4	69.4	1	3680.8	3.25	0	82.32	0	2.7	0	0	6.43	0	0	0	0	0	0	-22.1	-22.1
Inverter Transformer	MV6-4 T	370244	4906966	2	0	0	69.4	69.4	1	4936.5	3.25	0	84.87	0	3	0	0	7.34	0	0	0	0	0	0	-25.86	-25.86
Inverter Transformer	MV6-1 T	370230	4907364	2	0	0	69.4	69.4	1	5229.79	3.25	0	85.37	0	3.06	0	0	7.53	0	0	0	0	0	0	-26.61	-26.61
Inverter Transformer	MV1-15 T	365309	4904994	2	0	0	56.1	56.1	1	2345.72	3.25	0	78.41	0	0.55	0	0	7.71	0	0	0	0	0	0	-30.6	-30.6
Inverter Transformer	MV1-12 T	365044	4905386	2	0	0	56.1	56.1	1	2813.12	3.25	0	79.98	0	0.75	0	0	8.55	0	0	0	0	0	0	-33.22	-33.22
Inverter Transformer	MV1-11 T	364649	4905414	2	0	0	56.1	56.1	1	3111.39	3.25	0	80.86	0	0.88	0	0	9.06	0	0	0	0	0	0	-34.73	-34.73
Inverter Transformer	MV1-8 T	364782	4905647	2	0	0	56.1	56.1	1	3182.52	3.25	0	81.06	0	0.91	0	0	9.17	0	0	0	0	0	0	-35.08	-35.08
Inverter Transformer	MV1-9 T	364555	4905646	2	0	0	56.1	56.1	1	3339.55	3.25	0	81.47	0	0.97	0	0	9.43	0	0	0	0	0	0	-35.82	-35.82
Inverter Transformer	MV1-4 T	364821	4905918	2	0	0	56.1	56.1	1	3362.43	3.25	0	81.53	0	0.98	0	0	9.47	0	0	0	0	0	0	-35.93	-35.93
Inverter Transformer	MV1-5 T	364676	4905892	2	0	0	56.1	56.1	1	3435.79	3.25	0	81.72	0	1.01	0	0	9.59	0	0	0	0	0	0	-36.26	-36.26
Inverter Transformer	MV2-2 T	365982	4906654	2	0	0	56.1	56.1	1	3483.8	3.25	0	81.84	0	1.03	0	0	9.66	0	0	0	0	0	0	-36.48	-36.48
Inverter Transformer	MV1-2 T	364759	4906063	2	0	0	56.1	56.1	1	3514.44	3.25	0	81.92	0	1.05	0	0	9.71	0	0	0	0	0	0	-36.62	-36.62
Inverter Transformer	MV2-3 T	365814	4906641	2	0	0	56.1	56.1	1	3521.11	3.25	0	81.93	0	1.05	0	0	9.72	0	0	0	0	0	0	-36.65	-36.65
Inverter Transformer	MV1-6 T	364482	4905835	2	0	0	56.1	56.1	1	3525.16	3.25	0	81.94	0	1.05	0	0	9.73	0	0	0	0	0	0	-36.66	-36.66
Inverter Transformer	MV2-4 T	365590	4906628	2	0	0	56.1	56.1	1	3586.62	3.25	0	82.09	0	1.08	0	0	9.82	0	0	0	0	0	0	-36.94	-36.94
Inverter Transformer	MV1-1 T	364721	4906166	2	0	0	56.1	56.1	1	3619.01	3.25	0	82.17	0	1.09	0	0	9.87	0	0	0	0	0	0	-37.08	-37.08
Inverter Transformer	MV1-3 T	364435	4906039	2	0	0	56.1	56.1	1	3705.97	3.25	0	82.38	0	1.12	0	0	10.01	0	0	0	0	0	0	-37.45	-37.45
Inverter Transformer	MV3-18 T	367757	4907412	2	0	0	56.1	56.1	1	4190.47	3.25	0	83.45	0	1.32	0	0	10.73	0	0	0	0	0	0	-39.44	-39.44
Inverter Transformer	MV3-21 T	368484	4907206	2	0	0	56.1	56.1	1	4199.26	3.25	0	83.46	0	1.32	0	0	10.75	0	0	0	0	0	0	-39.48	-39.48
Inverter Transformer	MV3-22 T	368661	4907142	2	0	0	56.1	56.1	1	4209.28	3.25	0	83.48	0	1.33	0	0	10.76	0	0	0	0	0	0	-39.51	-39.51
Inverter Transformer	MV3-19 T	368352	4907347	2	0	0	56.1	56.1	1	4285.17	3.25	0	83.64	0	1.36	0	0	10.87	0	0	0	0	0	0	-39.81	-39.81
Inverter Transformer	MV3-17 T	368183	4907472	2	0	0	56.1	56.1	1	4351.88	3.25	0	83.77	0	1.38	0	0	10.97	0	0	0	0	0	0	-40.06	-40.06
Inverter Transformer	MV3-12 T	367674	4907594	2	0	0	56.1	56.1	1	4354.22	3.25	0	83.78	0	1.38	0	0	10.97	0	0	0	0	0	0	-40.07	-40.07
Inverter Transformer	MV3-20 T	368683	4907317	2	0	0	56.1	56.1	1	4378.21	3.25	0	83.83	0	1.39	0	0	11	0	0	0	0	0	0	-40.16	-40.16
Inverter Transformer	MV3-13 T	367958	4907577	2	0	0	56.1	56.1	1	4394.8	3.25	0	83.86	0	1.4	0	0	11.03	0	0	0	0	0	0	-40.23	-40.23
Inverter Transformer	MV3-15 T	368351	4907477	2	0	0	56.1	56.1	1	4407.74	3.25	0	83.88	0	1.4	0	0	11.05	0	0	0	0	0	0	-40.28	-40.28
Inverter Transformer	MV3-16 T	368509	4907475	2	0	0	56.1	56.1	1	4459.15	3.25	0	83.99	0	1.42	0	0	11.12	0	0	0	0	0	0	-40.47	-40.47
Inverter Transformer	MV3-10 T	368162	4907669	2	0	0	56.1	56.1	1	4535.22	3.25	0	84.13	0	1.45	0	0	11.22	0	0	0	0	0	0	-40.75	-40.75
Inverter Transformer	MV3-14 T	368678	4907498	2	0	0	56.1	56.1	1	4542.81	3.25	0	84.15	0	1.46	0	0	11.24	0	0	0	0	0	0	-40.78	-40.78
Inverter Transformer	MV3-7 T	367951	4907754	2	0	0	56.1	56.1	1	4565.55	3.25	0	84.19	0	1.46	0	0	11.27	0	0	0	0	0	0	-40.86	-40.86
Inverter Transformer	MV3-11 T	368340	4907662	2	0	0	56.1	56.1	1	4579.93	3.25	0	84.22	0	1.47	0	0	11.29	0	0	0	0	0	0	-40.92	-40.92
Inverter Transformer	MV3-9 T	368517	4907703	2	0	0	56.1	56.1	1	4675.86	3.25	0	84.4	0	1.51	0	0	11.42	0	0	0	0	0	0	-41.26	-41.26
Inverter Transformer	MV3-6 T	368156	4907834	2	0	0	56.1	56.1	1	4692.71	3.25	0	84.43	0	1.51	0	0	11.44	0	0	0	0	0	0	-41.32	-41.32
Inverter Transformer	MV3-3 T	367944	4907927	2	0	0	56.1	56.1	1	4732.87	3.25	0	84.5	0	1.53	0	0	11.5	0	0	0	0	0	0	-41.47	-41.47
Inverter Transformer	MV3-8 T	368685	4907712	2	0	0	56.1	56.1	1	4743.72	3.25	0	84.52	0	1.53	0	0	11.51	0	0	0	0	0	0	-41.51	-41.51
Inverter Transformer	MV3-5 T	368335	4907843	2	0	0	56.1	56.1	1	4751.05	3.25	0	84.54	0	1.53	0	0	11.52	0	0	0	0	0	0	-41.53	-41.53
Inverter Transformer	MV3-1 T	368150	4907976	2	0	0	56.1	56.1	1	4828.45	3.25	0	84.68	0	1.56	0	0	11.63	0	0	0	0	0	0	-41.81	-41.81
Inverter Transformer	MV3-4 T	368507	4907925	2	0	0	56.1	56.1	1	4882.11	3.25	0	84.77	0	1.58	0	0	11.7	0	0	0	0	0	0	-41.99	-41.99
Inverter Transformer	MV3-2 T	368677	4907928	2	0	0	56.1	56.1	1	4942.29	3.25	0	84.88	0	1.6	0	0	11.78	0	0	0	0	0	0	-42.2	-42.2
Inverter Transformer	MV6-3 T	370202	4907140	2	0	0	56.1	56.1	1	5039.63	3.25	0	85.05	0	1.64	0	0	11.91	0	0	0	0	0	0	-42.54	-42.54
Inverter Transformer	MV6-2 T	370091	4907339	2	0	0	56.1	56.1	1	5123.62	3.25	0	85.19	0	1.67	0	0	12.02	0	0	0	0	0	0	-42.82	-42.82
Inverter Transformer	MV4-15 T	369170	4908481	2	0	0	56.1	56.1	1	5639.88	3.25	0	86.03	0	1.85	0	0	12.67	0	0	0	0	0	0	-44.48	-44.48
Inverter Transformer	MV4-14 T	369182	4908507	2	0	0	56.1	56.1	1	5668.51	3.25	0	86.07	0	1.86	0	0	12.7	0	0	0	0	0	0	-44.57	-44.57
Inverter Transformer	MV4-13 T	369057	4908605	2	0	0	56.1	56.1	1	5710.99	3.25	0	86.13	0	1.87	0	0	12.76	0	0	0	0	0	0	-44.7	-44.7
Inverter Transformer	MV4-12 T	369049	4908803	2	0	0	56.1	56.1	1	5892.39	3.25	0	86.41	0	1.93	0	0	12.97	0	0	0	0	0	0	-45.25	-45.25
Inverter Transformer	MV4-11 T	369269	4908855	2	0	0	56.1	56.1	1	6022.76	3.25	0	86.6	0	1.97	0	0	13.13	0	0	0	0	0	0	-45.64	-45.64
Inverter Transformer	MV5-6 T	369987	4908507	2	0	0	56.1	56.1	1	6033.09	3.25	0	86.61	0	1.98	0	0	13.14	0	0	0	0	0	0	-45.67	-45.67
Inverter Transformer	MV4-10 T	369307	4908858	2	0	0	56.1	56.1	1	6040.35	3.25	0	86.62	0	1.98	0	0	13.15	0	0	0	0	0	0	-45.69	-45.69
Inverter Transformer	MV4-7 T	369040	4909001	2	0	0	56.1	56.1	1	6074.5	3.25	0	86.67	0	1.99	0	0	13.19	0	0	0	0	0	0	-45.79	-45.79
Inverter Transformer	MV4-8 T	369262	4909001	2	0	0	56.1	56.1	1	6154.96	3.25	0	86.78	0	2.01	0	0	13.28	0	0	0	0	0	0	-46.02	-46.02
Inverter Transformer	MV4-9 T	369284	4909001	2	0	0	56.1	56.1	1	6163.31	3.25	0	86.8	0	2.02	0	0	13.29	0	0	0	0	0	0	-46.05	-46.05
Inverter Transformer	MV5-5 T	370021	4908690	2	0	0	56.1	56.1	1	6208.46	3.25	0	86.86	0	2.03	0	0	13.35	0	0	0	0	0	0	-46.18	-46.18
Inverter Transformer	MV4-4 T	369033	4909199	2	0	0	56.1	56.1	1	6258.25	3.25	0	86.93	0	2.05	0	0	13.4	0	0	0	0	0	0	-46.32	-46.32
Inverter Transformer	MV4-6 T	369249	4909192	2	0	0	56.1	56.1	1	6327.43	3.25	0	87.02	0	2.07	0	0	13.48	0	0	0	0	0	0	-46.52	-46.52
Inverter Transformer	MV5-2 T	370011	4908853	2	0	0	56.1	56.1	1	6345.56	3.25	0	87.05	0	2.07	0	0	13.5	0	0	0	0	0	0	-46.57	-46.57
Inverter Transformer	MV4-5 T	369283	4909199	2	0	0	56.1	56.1	1	6346.44	3.25	0	87.05	0	2.07	0	0	13.51	0	0	0	0	0	0	-46.57	-46.57
Inverter Transformer	MV5-4 T	370330	4908707	2	0	0	56.1	56.1	1	6382.11	3.25	0	87.1	0	2.08	0	0	13.55	0	0	0	0	0	0	-46.67	-46.67
Inverter Transformer	MV4-1 T	369017	4909397	2	0	0	56.1	56.1	1	6439.94	3.25	0	87.18	0	2.1	0	0	13.61	0	0	0	0	0	0	-46.83	-46.83
Inverter Transformer	MV5-3 T	370237	4908851	2	0	0	56.1	56.1	1	6456.43	3.25	0	87.2	0	2.1	0	0	13.63	0	0	0	0	0	0	-46.88	-46.88
Inverter Transformer	MV4-3 T	369234	4909397	2	0	0	56.1	56.1	1	6513.34	3.25	0	87.28	0	2.12	0	0	13.69	0	0	0	0	0	0	-47.03	-47.03
Inverter Transformer	MV4-2 T	369267	4909397	2	0	0	56.1	56.1	1	6525.06	3.25	0	87.29	0	2.13	0	0	13.71	0	0	0	0	0	0	-47.07	-47.07
Inverter Transformer	MV5-1 T	370015	4909142	2	0	0	56.1	56.1	1	6601.68	3.25	0	87.39	0	2.15	0	0	13.79	0	0	0	0	0	0	-47.28	-47.28
Line Reactor	NGR	369421	4908787.5	5	0	0	45.4	45.4	1	6021.75	5.25	0	86.59	0	3.24	1.36	0.11	2.46	0	0	0	0	0	0	-48.3	-48.3
Limit. Valu 0	0																								
Level D/N: 32.3298	32.3298																								

Receiver: Vacant Lot Receptor
ID: G-V12

X: 366949
Y: 4902598
Z: 4.5
Ground: 0

ISO	Description	ID	X	Y	Z	Ground	ReflOrd	LxT	LxN	L/A	Dist.	hm	Freq	Adiv	K0b	Agr	Abar	z	Aatm	Afol	Ahous	Cmet	CmetN	Dc	RL	LtotT	LtotN
	Inverters	G_Inv10	366900.7	4902704.8	2	0	0	87.7	87.7	1	117.24	3.25	0	52.38	0	2.38	0	0	0.19	0	0	0	0	0	0	32.7	32.7
	Inverters	G_Inv9	366750.9	4902691.8	2	0	0	87.7	87.7	1	219.2	3.25	0	57.82	0	2.62	0	0	0.35	0	0	0	0	0	0	26.87	26.87
	Inverters	G_Inv8	366844.5	4902838.5	2	0	0	87.7	87.7	1	262.23	3.25	0	59.37	0	2.54	0	0	0.42	0	0	0	0	0	0	25.33	25.33
	Inverters	G_Inv7	366694.6	4902824.7	2	0	0	87.7	87.7	1	340.76	3.25	0	61.65	0	2.46	0	0	0.53	0	0	0	0	0	0	23.02	23.02
	Sol_Luce Substation	S_Substation	369426	4908792	3.5	0	0	112.1	112.1	1	6670.92	5.25	0	87.48	0	1.31	2.51	0.33	10.43	0	0	0	0	0	0	10.34	10.34
	Inverters	G_Inv6	366788.5	4902972	2	0	0	87.7	87.7	1	406.99	3.25	0	63.19	0	2.42	0	0	0.63	0	0	0	0	0	0	21.42	21.42
	Inverters	G_Inv5	366638.5	4902958.1	2	0	0	87.7	87.7	1	475.49	3.25	0	64.54	0	2.4	0	0	0.73	0	0	0	0	0	0	19.99	19.99
	Inverters	G_Inv4	366732.8	4903105	2	0	0	87.7	87.7	1	551.18	3.25	0	65.83	0	2.4	0	0	0.83	0	0	0	0	0	0	18.6	18.6
	Gardiner Substation	G_Sub	366586.3	4903349.9	2.5	0	0	90.8	90.8	1	834.81	3.5	0	69.43	0	-0.39	0	0	2.18	0	0	0	0	0	0	19.56	19.56
	Inverters	G_Inv3	366583.7	4903091.4	2	0	0	87.7	87.7	1	613.92	3.25	0	66.76	0	2.4	0	0	0.92	0	0	0	0	0	0	17.58	17.58
	Inverter	MV1-15	365315	4904994	2	0	0	100.3	100.3	1	2900.13	3.25	0	80.25	0	0.34	0	0	15.19	0	0	0	0	0	0	4.53	4.53
	Inverters	G_Inv2	366676.9	4903239.1	2	0	0	87.7	87.7	1	696.46	3.25	0	67.86	0	2.41	0	0	1.03	0	0	0	0	0	0	16.36	16.36
	Inverters	G_Inv1	366526.4	4903225.8	2	0	0	87.7	87.7	1	756.79	3.25	0	68.58	0	2.41	0	0	1.11	0	0	0	0	0	0	15.55	15.55
	Inverter	MV1-12	365038	4905386	2	0	0	100.3	100.3	1	3380.07	3.25	0	81.58	0	0.43	0	0	16.03	0	0	0	0	0	0	2.27	2.27
	Inverter	MV1-11	364655	4905414	2	0	0	100.3	100.3	1	3632.12	3.25	0	82.2	0	0.47	0	0	16.45	0	0	0	0	0	0	1.19	1.19
	Inverter	MV1-8	364788	4905647	2	0	0	100.3	100.3	1	3737.16	3.25	0	82.45	0	0.49	0	0	16.62	0	0	0	0	0	0	0.75	0.75
	Inverter	MV1-9	364561	4905646	2	0	0	100.3	100.3	1	3872.06	3.25	0	82.76	0	0.51	0	0	16.84	0	0	0	0	0	0	0.2	0.2
	Inverter	MV1-4	364815	4905918	2	0	0	100.3	100.3	1	3946.69	3.25	0	82.92	0	0.52	0	0	16.96	0	0	0	0	0	0	-0.1	-0.1
	Inverter	MV1-5	364671	4905892	2	0	0	100.3	100.3	1	4004.96	3.25	0	83.05	0	0.53	0	0	17.06	0	0	0	0	0	0	-0.32	-0.32
	Inverter	MV1-6	364477	4905835	2	0	0	100.3	100.3	1	4072.95	3.25	0	83.2	0	0.54	0	0	17.16	0	0	0	0	0	0	-0.59	-0.59
	Inverter	MV1-2	364753	4906063	2	0	0	100.3	100.3	1	4102.27	3.25	0	83.26	0	0.54	0	0	17.21	0	0	0	0	0	0	-0.7	-0.7
	Inverter	MV2-3	365820	4906641	2	0	0	100.3	100.3	1	4197.68	3.25	0	83.46	0	0.55	0	0	17.36	0	0	0	0	0	0	-1.06	-1.06
	Inverter	MV1-1	364715	4906166	2	0	0	100.3	100.3	1	4209.68	3.25	0	83.48	0	0.56	0	0	17.38	0	0	0	0	0	0	-1.11	-1.11
	Inverter	MV2-4	365586	4906624	2	0	0	100.3	100.3	1	4250.46	3.25	0	83.57	0	0.56	0	0	17.44	0	0	0	0	0	0	-1.26	-1.26
	Inverter	MV1-14	365163	4905049	2	0	0	97.3	97.3	1	3032.69	3.25	0	80.64	0	0.37	0	0	15.43	0	0	0	0	0	0	0.88	0.88
	Inverter	MV3-21	368478	4907206	2	0	0	100.3	100.3	1	4855.05	3.25	0	84.72	0	0.63	0	0	18.37	0	0	0	0	0	0	-3.41	-3.41
	Inverter	MV1-13	364731	4905241	2	0	0	97.3	97.3	1	3450.36	3.25	0	81.76	0	0.44	0	0	16.15	0	0	0	0	0	0	-1.04	-1.04
	Inverter	MV3-18	367752	4907412	2	0	0	100.3	100.3	1	4880.51	3.25	0	84.77	0	0.63	0	0	18.4	0	0	0	0	0	0	-3.49	-3.49
	Inverter	MV3-19	368357	4907347	2	0	0	100.3	100.3	1	4953.33	3.25	0	84.9	0	0.64	0	0	18.51	0	0	0	0	0	0	-3.74	-3.74
	Inverter	MV1-10	365004	4905564	2	0	0	97.3	97.3	1	3546.86	3.25	0	82	0	0.46	0	0	16.31	0	0	0	0	0	0	-1.45	-1.45
	Inverter	MV3-17	368178	4907472	2	0	0	100.3	100.3	1	5026.56	3.25	0	85.03	0	0.64	0	0	18.62	0	0	0	0	0	0	-3.98	-3.98
	Inverter	MV3-20	368689	4907317	2	0	0	100.3	100.3	1	5029.57	3.25	0	85.03	0	0.64	0	0	18.62	0	0	0	0	0	0	-3.99	-3.99
	Inverter	MV3-12	367668	4907594	2	0	0	100.3	100.3	1	5047.47	3.25	0	85.06	0	0.65	0	0	18.65	0	0	0	0	0	0	-4.05	-4.05
	Inverter	MV3-15	368357	4907477	2	0	0	100.3	100.3	1	5078.1	3.25	0	85.11	0	0.65	0	0	18.69	0	0	0	0	0	0	-4.15	-4.15
	Inverter	MV3-13	367963	4907577	2	0	0	100.3	100.3	1	5081.2	3.25	0	85.12	0	0.65	0	0	18.7	0	0	0	0	0	0	-4.16	-4.16
	Inverter	MV3-16	368514	4907475	2	0	0	100.3	100.3	1	5121.95	3.25	0	85.19	0	0.65	0	0	18.76	0	0	0	0	0	0	-4.29	-4.29
	Inverter	MV3-14	368684	4907498	2	0	0	100.3	100.3	1	5198.1	3.25	0	85.32	0	0.66	0	0	18.87	0	0	0	0	0	0	-4.53	-4.53
	Inverter	MV3-10	368167	4907669	2	0	0	100.3	100.3	1	5215.22	3.25	0	85.35	0	0.66	0	0	18.89	0	0	0	0	0	0	-4.59	-4.59
	Inverter	MV3-7	367945	4907754	2	0	0	100.3	100.3	1	5251.32	3.25	0	85.41	0	0.66	0	0	18.95	0	0	0	0	0	0	-4.7	-4.7
	Inverter	MV3-11	368346	4907662	2	0	0	100.3	100.3	1	5253.16	3.25	0	85.41	0	0.66	0	0	18.95	0	0	0	0	0	0	-4.71	-4.71
	Inverter	MV1-7	364925	4905782	2	0	0	97.3	97.3	1	3772.86	3.25	0	82.53	0	0.49	0	0	16.68	0	0	0	0	0	0	-2.4	-2.4
	Inverter	MV3-9	368512	4907703	2	0	0	100.3	100.3	1	5338.91	3.25	0	85.55	0	0.67	0	0	19.07	0	0	0	0	0	0	-4.98	-4.98
	Inverter	MV3-6	368162	4907834	2	0	0	100.3	100.3	1	5374.67	3.25	0	85.61	0	0.67	0	0	19.12	0	0	0	0	0	0	-5.09	-5.09
	Inverter	MV3-8	368680	4907712	2	0	0	100.3	100.3	1	5399.02	3.25	0	85.65	0	0.67	0	0	19.16	0	0	0	0	0	0	-5.17	-5.17
	Inverter	MV3-3	367939	4907927	2	0	0	100.3	100.3	1	5420.18	3.25	0	85.68	0	0.68	0	0	19.19	0	0	0	0	0	0	-5.23	-5.23
	Inverter	MV6-3	370207	4907140	2	0	0	100.3	100.3	1	5589.66	3.25	0	85.95	0	0.69	0	0	19.43	0	0	0	0	0	0	-5.75	-5.75
	Inverter	MV6-2	370085	4907339	2	0	0	100.3	100.3	1	5684.33	3.25	0	86.09	0	0.69	0	0	19.56	0	0	0	0	0	0	-6.03	-6.03
	Inverter	MV2-1	365842	4906816	2	0	0	97.3	97.3	1	4360.85	3.25	0	83.79	0	0.57	0	0	17.62	0	0	0	0	0	0	-4.67	-4.67
	Inverter	MV4-11	369264	4908855	2	0	0	100.3	100.3	1	6671.53	3.25	0	87.48	0	0.71	0	0	20.88	0	0	0	0	0	0	-8.77	-8.77
	Inverter	MV4-10	369312	4908858	2	0	0	100.3	100.3	1	6691.14	3.25	0	87.51	0	0.71	0	0	20.91	0	0	0	0	0	0	-8.82	-8.82
	Inverter	MV4-7	369035	4909001	2	0	0	100.3	100.3	1	6734.23	3.25	0	87.57	0	0.71	0	0	20.96	0	0	0	0	0	0	-8.93	-8.93
	Inverter	MV4-8	369256	4909001	2	0	0	100.3	100.3	1	6805.93	3.25	0	87.66	0	0.71	0	0	21.05	0	0	0	0	0	0	-9.11	-9.11
	Inverter	MV4-9	369289	4909001	2	0	0	100.3	100.3	1	6817.19	3.25	0	87.67	0	0.71	0	0	21.07	0	0	0	0	0	0	-9.14	-9.14
	Inverter	MV5-5	370015	4908690	2	0	0	100.3	100.3	1	6820.03	3.25	0	87.68	0	0.71	0	0	21.07	0	0	0	0	0	0	-9.15	-9.15
	Inverter	MV4-4	369027	4909199	2	0	0	100.3	100.3	1	6920.35	3.25	0	87.8	0	0.71	0	0	21.2	0	0	0	0	0	0	-9.4	-9.4
	Inverter	MV5-2	370006	4908853	2	0	0	100.3	100.3	1	6962.06	3.25	0	87.85	0	0.71	0	0	21.25	0	0	0	0	0	0	-9.5	-9.5
	Inverter	MV5-4	370324	4908707	2	0	0	100.3	100.3	1	6979.29	3.25	0	87.88	0	0.71	0	0	21.27	0	0	0	0	0	0	-9.55	-9.55
	Inverter	MV4-6	369243	4909192	2	0	0	100.3	100.3	1	6981.64	3.25	0	87.88	0	0.71	0	0	21.28	0	0	0	0	0	0	-9.55	-9.55
	Inverter	MV4-5	369289	4909199	2	0	0	100.3	100.3	1	7003.49	3.25	0	87.91	0	0.71	0	0	21.3	0	0	0	0	0	0	-9.61	-9.61
	Inverter	MV5-3	370231	4908851	2	0	0	100.3	100.3	1	7061.98	3.25	0	87.98	0	0.71	0	0	21.38	0	0	0	0	0	0	-9.75	-9.75
	Inverter	MV4-1	369011	4909397	2	0	0	100.3	100.3	1	7104.8	3.25	0	88.03	0	0.71	0	0	21.43	0	0	0	0	0	0	-9.86	-9.86
	Inverter	MV4-3	369229	4909397	2	0	0	100.3	100.3	1	7171.11	3.25	0	88.11	0	0.7	0	0	21.51	0	0	0	0	0	0	-10.02	-10.02
	Inverter	MV4-2	369272	4909397	2	0	0	100.3	100.3	1	7184.9	3.25	0	88.13	0	0.7	0	0	21.53	0	0	0	0	0	0	-10.05	-10.05
	Inverter	MV5-1	370020	4909142	2	0	0	100.3	100.3	1	7228.76	3.25	0	88.18	0	0.7	0	0	21.58	0	0	0	0	0	0	-10.16	-10.16
	Inverter	MV6-1	370235	4907364	2	0	0	97.3	97.3	1	5789	3.25	0	86.25	0	0.7	0	0	19.7	0	0	0	0	0	0	-9.34	-9.34
	DSTATCOM - 10 MVAR #2	DSAT2	369403	4908757	2.5	0	0	96.6	96.6	1	6629.89	3.5	0	87.43	0	3.82	0	0	4.14	0	0	0	0	0	0	1.25	1.25
	DSTATCOM - 10 MVAR #1	DSAT1	369437	4908757	2.5	0	0	96.6	96.6	1	6642.55	3.5	0	87.45	0	3.82	0	0	4.14	0	0	0	0	0	0	1.22	1.22
	SubstationTransformer	W_ST	369711.17	4906112.3	2.5	0	0	92	92	1	4469.86	3.5	0	84.01	0	0.44	0	-0.11	7.97	0	0	0	0	0	0	-0.45	-0.45

Inverter	MV2-2	365977	4906654	2	0	0	89.1	89.1	1	4170.84	3.25	0	83.4	0	1.43	0	0	11.33	0	0	0	0	0	0	-7.11	-7.11
Inverter	MV1-3	364440	4906039	2	0	0	89.1	89.1	1	4258.59	3.25	0	83.59	0	1.46	0	0	11.45	0	0	0	0	0	0	-7.43	-7.43
Westbrook Inverter Enclosur	W_INV3	369508	4906164	2	0	0	89.1	89.1	1	4389.17	3.25	0	83.85	0	1.49	0	0	11.63	0	0	0	0	0	0	-7.91	-7.91
Westbrook Inverter Enclosur	W_INV4	369673	4906164	2	0	0	89.1	89.1	1	4487.38	3.25	0	84.04	0	1.51	0	0	11.77	0	0	0	0	0	0	-8.26	-8.26
Westbrook Inverter Enclosur	W_INV2	369374	4906388	2	0	0	89.1	89.1	1	4499.41	3.25	0	84.06	0	1.52	0	0	11.78	0	0	0	0	0	0	-8.3	-8.3
Westbrook Inverter Enclosur	W_INV7	369780	4906417	2	0	0	89.1	89.1	1	4753.88	3.25	0	84.54	0	1.58	0	0	12.13	0	0	0	0	0	0	-9.19	-9.19
Westbrook Inverter Enclosur	W_INV5	369719	4906574	2	0	0	89.1	89.1	1	4845.77	3.25	0	84.71	0	1.6	0	0	12.26	0	0	0	0	0	0	-9.51	-9.51
Inverter	MV3-22	368656	4907142	2	0	0	89.1	89.1	1	4854.05	3.25	0	84.72	0	1.6	0	0	12.27	0	0	0	0	0	0	-9.54	-9.54
Westbrook Inverter Enclosur	W_INV6	369875	4906578	2	0	0	89.1	89.1	1	4939.83	3.25	0	84.87	0	1.62	0	0	12.38	0	0	0	0	0	0	-9.82	-9.82
Inverter	MV3-5	368340	4907843	2	0	0	89.1	89.1	1	5426.32	3.25	0	85.69	0	1.74	0	0	13.03	0	0	0	0	0	0	-11.4	-11.4
Inverter	MV3-1	368156	4907976	2	0	0	89.1	89.1	1	5511.78	3.25	0	85.83	0	1.77	0	0	13.14	0	0	0	0	0	0	-11.67	-11.67
Inverter	MV3-4	368502	4907925	2	0	0	89.1	89.1	1	5548.76	3.25	0	85.88	0	1.78	0	0	13.19	0	0	0	0	0	0	-11.79	-11.79
Inverter	MV3-2	368671	4907928	2	0	0	89.1	89.1	1	5601.27	3.25	0	85.97	0	1.79	0	0	13.25	0	0	0	0	0	0	-11.95	-11.95
Fixed Reactor Bank 1	FRB1	369378	4908755	6	0	0	89.8	89.8	1	6618.81	5.25	0	87.42	0	-0.33	0	0	10.38	0	0	0	0	0	0	-7.68	-7.68
Fixed Reactor Bank 2	FRB2	369464	4908755	6	0	0	89.8	89.8	1	6650.86	5.25	0	87.46	0	-0.33	0	0	10.41	0	0	0	0	0	0	-7.76	-7.76
Inverter	MV4-15	369176	4908481	2	0	0	89.1	89.1	1	6290.41	3.25	0	86.97	0	1.96	0	0	14.13	0	0	0	0	0	0	-14	-14
Inverter	MV4-14	369176	4908507	2	0	0	89.1	89.1	1	6314.73	3.25	0	87.01	0	1.96	0	0	14.16	0	0	0	0	0	0	-14.07	-14.07
Inverter	MV4-13	369051	4908605	2	0	0	89.1	89.1	1	6364.15	3.25	0	87.07	0	1.97	0	0	14.22	0	0	0	0	0	0	-14.21	-14.21
Inverter	MV4-12	369043	4908803	2	0	0	89.1	89.1	1	6548.81	3.25	0	87.32	0	2.02	0	0	14.44	0	0	0	0	0	0	-14.73	-14.73
Westbrook Inverter Enclosur	W_INV1	369409	4906578	2	0	0	86.1	86.1	1	4678.89	3.25	0	84.4	0	1.56	0	0	12.03	0	0	0	0	0	0	-11.94	-11.94
Inverter	MV5-6	369982	4908507	2	0	0	89.1	89.1	1	6641.94	3.25	0	87.45	0	2.04	0	0	14.56	0	0	0	0	0	0	-14.99	-14.99
Inverter	MV6-4	370250	4906966	2	0	0	86.1	86.1	1	5475.04	3.25	0	85.77	0	1.76	0	0	13.09	0	0	0	0	0	0	-14.56	-14.56
Westbrook Inverter Transfor	W_INVTR1	369403	4906578	2	0	0	78.2	78.2	1	4675.74	3.25	0	84.4	0	-3.11	0	0	2.3	0	0	0	0	0	0	-5.35	-5.35
Westbrook Inverter Transfor	W_INVTR3	369514	4906164	2	0	0	77.3	77.3	1	4392.67	3.25	0	83.85	0	-3.05	0	0	2.2	0	0	0	0	0	0	-5.66	-5.66
Westbrook Inverter Transfor	W_INVTR4	369679	4906164	2	0	0	77.3	77.3	1	4491.02	3.25	0	84.05	0	-3.07	0	0	2.23	0	0	0	0	0	0	-5.87	-5.87
Westbrook Inverter Transfor	W_INVTR2	369368	4906388	2	0	0	77.3	77.3	1	4496.18	3.25	0	84.06	0	-3.07	0	0	2.24	0	0	0	0	0	0	-5.88	-5.88
Westbrook Inverter Transfor	W_INVTR7	369786	4906417	2	0	0	77.3	77.3	1	4757.45	3.25	0	84.55	0	-3.13	0	0	2.33	0	0	0	0	0	0	-6.41	-6.41
Westbrook Inverter Transfor	W_INVTR5	369725	4906574	2	0	0	77.3	77.3	1	4849.2	3.25	0	84.71	0	-3.15	0	0	2.36	0	0	0	0	0	0	-6.59	-6.59
Westbrook Inverter Transfor	W_INVTR6	369881	4906578	2	0	0	77.3	77.3	1	4943.38	3.25	0	84.88	0	-3.17	0	0	2.39	0	0	0	0	0	0	-6.77	-6.77
Inverter Transformer	MV1-14 T	365157	4905049	2	0	0	69.4	69.4	1	3036.23	3.25	0	80.65	0	2.52	0	0	5.91	0	0	0	0	0	0	-19.73	-19.73
Inverter Transformer	MV1-13 T	364725	4905241	2	0	0	69.4	69.4	1	3454.22	3.25	0	81.77	0	2.64	0	0	6.26	0	0	0	0	0	0	-21.31	-21.31
Inverter Transformer	MV1-10 T	365010	4905564	2	0	0	69.4	69.4	1	3543.57	3.25	0	81.99	0	2.67	0	0	6.33	0	0	0	0	0	0	-21.63	-21.63
Inverter Transformer	MV1-7 T	364919	4905782	2	0	0	69.4	69.4	1	3776.08	3.25	0	82.54	0	2.73	0	0	6.51	0	0	0	0	0	0	-22.43	-22.43
Inverter Transformer	MV2-1 T	365836	4906816	2	0	0	69.4	69.4	1	4362.37	3.25	0	83.79	0	2.87	0	0	6.94	0	0	0	0	0	0	-24.26	-24.26
Inverter Transformer	MV6-4 T	370244	4906966	2	0	0	69.4	69.4	1	5471.42	3.25	0	85.76	0	3.1	0	0	7.69	0	0	0	0	0	0	-27.2	-27.2
Inverter Transformer	MV6-1 T	370230	4907364	2	0	0	69.4	69.4	1	5786.17	3.25	0	86.25	0	3.15	0	0	7.89	0	0	0	0	0	0	-27.94	-27.94
Inverter Transformer	MV1-15 T	365309	4904994	2	0	0	56.1	56.1	1	2903.52	3.25	0	80.26	0	0.79	0	0	8.7	0	0	0	0	0	0	-33.69	-33.69
Inverter Transformer	MV1-12 T	365044	4905386	2	0	0	56.1	56.1	1	3376.68	3.25	0	81.57	0	0.99	0	0	9.49	0	0	0	0	0	0	-35.99	-35.99
Inverter Transformer	MV1-11 T	364649	4905414	2	0	0	56.1	56.1	1	3635.91	3.25	0	82.21	0	1.1	0	0	9.9	0	0	0	0	0	0	-37.15	-37.15
Inverter Transformer	MV1-8 T	364782	4905647	2	0	0	56.1	56.1	1	3740.63	3.25	0	82.46	0	1.14	0	0	10.06	0	0	0	0	0	0	-37.6	-37.6
Inverter Transformer	MV1-9 T	364555	4905646	2	0	0	56.1	56.1	1	3875.76	3.25	0	82.77	0	1.19	0	0	10.27	0	0	0	0	0	0	-38.17	-38.17
Inverter Transformer	MV1-4 T	364821	4905918	2	0	0	56.1	56.1	1	3943.45	3.25	0	82.92	0	1.22	0	0	10.37	0	0	0	0	0	0	-38.45	-38.45
Inverter Transformer	MV1-5 T	364676	4905892	2	0	0	56.1	56.1	1	4002.12	3.25	0	83.05	0	1.24	0	0	10.46	0	0	0	0	0	0	-38.69	-38.69
Inverter Transformer	MV1-6 T	364482	4905835	2	0	0	56.1	56.1	1	4069.92	3.25	0	83.19	0	1.27	0	0	10.56	0	0	0	0	0	0	-38.96	-38.96
Inverter Transformer	MV1-2 T	364759	4906063	2	0	0	56.1	56.1	1	4099.06	3.25	0	83.25	0	1.28	0	0	10.6	0	0	0	0	0	0	-39.08	-39.08
Inverter Transformer	MV2-2 T	365982	4906654	2	0	0	56.1	56.1	1	4169.68	3.25	0	83.4	0	1.31	0	0	10.7	0	0	0	0	0	0	-39.36	-39.36
Inverter Transformer	MV2-3 T	365814	4906641	2	0	0	56.1	56.1	1	4199.3	3.25	0	83.46	0	1.32	0	0	10.75	0	0	0	0	0	0	-39.48	-39.48
Inverter Transformer	MV1-1 T	364721	4906166	2	0	0	56.1	56.1	1	4206.5	3.25	0	83.48	0	1.33	0	0	10.76	0	0	0	0	0	0	-39.5	-39.5
Inverter Transformer	MV2-4 T	365590	4906628	2	0	0	56.1	56.1	1	4252.97	3.25	0	83.57	0	1.34	0	0	10.83	0	0	0	0	0	0	-39.68	-39.68
Inverter Transformer	MV1-3 T	364435	4906039	2	0	0	56.1	56.1	1	4261.54	3.25	0	83.59	0	1.35	0	0	10.84	0	0	0	0	0	0	-39.72	-39.72
Inverter Transformer	MV3-22 T	368661	4907142	2	0	0	56.1	56.1	1	4855.81	3.25	0	84.73	0	1.57	0	0	11.66	0	0	0	0	0	0	-41.9	-41.9
Inverter Transformer	MV3-21 T	368484	4907206	2	0	0	56.1	56.1	1	4856.94	3.25	0	84.73	0	1.57	0	0	11.66	0	0	0	0	0	0	-41.91	-41.91
Inverter Transformer	MV3-18 T	367757	4907412	2	0	0	56.1	56.1	1	4881.34	3.25	0	84.77	0	1.58	0	0	11.7	0	0	0	0	0	0	-41.99	-41.99
Inverter Transformer	MV3-19 T	368352	4907347	2	0	0	56.1	56.1	1	4951.91	3.25	0	84.9	0	1.61	0	0	11.79	0	0	0	0	0	0	-42.24	-42.24
Inverter Transformer	MV3-20 T	368683	4907317	2	0	0	56.1	56.1	1	5027.5	3.25	0	85.03	0	1.64	0	0	11.89	0	0	0	0	0	0	-42.49	-42.49
Inverter Transformer	MV3-17 T	368183	4907472	2	0	0	56.1	56.1	1	5027.79	3.25	0	85.03	0	1.64	0	0	11.89	0	0	0	0	0	0	-42.5	-42.5
Inverter Transformer	MV3-12 T	367674	4907594	2	0	0	56.1	56.1	1	5048.33	3.25	0	85.06	0	1.64	0	0	11.92	0	0	0	0	0	0	-42.57	-42.57
Inverter Transformer	MV3-15 T	368351	4907477	2	0	0	56.1	56.1	1	5076.44	3.25	0	85.11	0	1.65	0	0	11.95	0	0	0	0	0	0	-42.66	-42.66
Inverter Transformer	MV3-13 T	367958	4907577	2	0	0	56.1	56.1	1	5080.21	3.25	0	85.12	0	1.65	0	0	11.96	0	0	0	0	0	0	-42.67	-42.67
Inverter Transformer	MV3-16 T	368509	4907475	2	0	0	56.1	56.1	1	5120.42	3.25	0	85.19	0	1.67	0	0	12.01	0	0	0	0	0	0	-42.81	-42.81
Inverter Transformer	MV3-14 T	368678	4907498	2	0	0	56.1	56.1	1	5196.1	3.25	0	85.31	0	1.7	0	0	12.11	0	0	0	0	0	0	-43.06	-43.06
Inverter Transformer	MV3-10 T	368162	4907669	2	0	0	56.1	56.1	1	5214.06	3.25	0	85.34	0	1.7	0	0	12.13	0	0	0	0	0	0	-43.12	-43.12
Inverter Transformer	MV3-11 T	368340	4907662	2	0	0	56.1	56.1	1	5251.57	3.25	0	85.41	0	1.71	0	0	12.18	0	0	0	0	0	0	-43.24	-43.24
Inverter Transformer	MV3-7 T	367951	4907754	2	0	0	56.1	56.1	1	5252.46	3.25	0	85.41	0	1.72	0	0	12.18	0	0	0	0	0	0	-43.25	-43.25
Inverter Transformer	MV3-9 T	368517	4907703	2	0	0	56.1	56.1	1	5340.38	3.25	0	85.55	0	1.75	0	0	12.29	0	0	0	0	0	0	-43.53	-43.53
Inverter Transformer	MV3-6 T	368156	4907834	2	0	0	56.1	56.1	1	5373.32	3.25	0	85.6	0	1.76	0	0	12.34	0	0	0	0	0	0	-43.64	-43.64
Inverter Transformer	MV3-8 T	368685	4907712	2	0	0	56.1	56.1	1	5400.62	3.25	0	85.65	0	1.77	0	0	12.37	0	0	0	0	0	0	-43.73	-43.73
Inverter Transformer	MV3-3 T	367944	4907927	2	0	0	56.1	56.1	1	5421.1	3.25	0	85.68	0	1.77	0	0	12.4	0	0	0	0	0	0	-43.79	-43.79
Inverter Transformer	MV3-5 T	368335	4907843	2	0	0	56.1	56.1	1	5425.04	3.25	0	85.69	0	1.78	0	0	12.4	0	0	0	0	0	0	-43.81	-43.81
Inverter Transformer	MV3-1 T	368150	4907976	2	0	0	56.1	56.1	1	5510.47	3.25	0	85.82	0	1.8	0	0	12.51	0	0	0	0	0	0	-44.08	-44.08
Inverter Transformer	MV3-4 T	368507	4907925	2	0	0	56.1	56.1	1	5550.16	3.25	0	85.89	0	1.82	0	0	12.56	0	0	0	0	0	0	-44.2	-44.2
Inverter Transformer	MV6-3 T	370202	4907140	2	0	0	56.1	56.1	1	5586.75	3.25	0	85.94	0	1.83	0	0	12.6	0	0	0	0	0	0	-44.32	-44.32
Inverter Transformer	MV3-2 T	368677	4907928	2	0	0	56.1	56.1	1	5603.11	3.25	0	85.97	0	1.84	0	0	12.62	0	0	0	0	0	0	-44.37	-44.37
Inverter Transformer	MV6-2 T	370091	4907339	2	0	0	56.1	56.1	1	5687.64	3.25	0	86.1	0	1.86	0	0	12.73	0	0	0	0	0	0	-44.63	-44.63

	Inverter Transformer	MV4-15 T	369170	4908481	2	0	0	56.1	56.1	1	6288.29	3.25	0	86.97	0	2.05	0	0	13.44	0	0	0	0	0	0	-46.41	-46.41
	Inverter Transformer	MV4-14 T	369182	4908507	2	0	0	56.1	56.1	1	6316.85	3.25	0	87.01	0	2.06	0	0	13.47	0	0	0	0	0	0	-46.49	-46.49
	Inverter Transformer	MV4-13 T	369057	4908605	2	0	0	56.1	56.1	1	6366.14	3.25	0	87.08	0	2.08	0	0	13.53	0	0	0	0	0	0	-46.63	-46.63
	Inverter Transformer	MV4-12 T	369049	4908803	2	0	0	56.1	56.1	1	6550.73	3.25	0	87.33	0	2.13	0	0	13.74	0	0	0	0	0	0	-47.14	-47.14
	Inverter Transformer	MV5-6 T	369987	4908507	2	0	0	56.1	56.1	1	6644.23	3.25	0	87.45	0	2.16	0	0	13.84	0	0	0	0	0	0	-47.39	-47.39
	Inverter Transformer	MV4-11 T	369269	4908855	2	0	0	56.1	56.1	1	6673.26	3.25	0	87.49	0	2.17	0	0	13.87	0	0	0	0	0	0	-47.47	-47.47
	Inverter Transformer	MV4-10 T	369307	4908858	2	0	0	56.1	56.1	1	6689.38	3.25	0	87.51	0	2.17	0	0	13.89	0	0	0	0	0	0	-47.51	-47.51
	Inverter Transformer	MV4-7 T	369040	4909001	2	0	0	56.1	56.1	1	6735.78	3.25	0	87.57	0	2.19	0	0	13.94	0	0	0	0	0	0	-47.64	-47.64
	Inverter Transformer	MV4-8 T	369262	4909001	2	0	0	56.1	56.1	1	6807.96	3.25	0	87.66	0	2.21	0	0	14.02	0	0	0	0	0	0	-47.83	-47.83
	Inverter Transformer	MV4-9 T	369284	4909001	2	0	0	56.1	56.1	1	6815.47	3.25	0	87.67	0	2.21	0	0	14.03	0	0	0	0	0	0	-47.85	-47.85
	Inverter Transformer	MV5-5 T	370021	4908690	2	0	0	56.1	56.1	1	6822.73	3.25	0	87.68	0	2.21	0	0	14.04	0	0	0	0	0	0	-47.87	-47.87
	Inverter Transformer	MV4-4 T	369033	4909199	2	0	0	56.1	56.1	1	6922.16	3.25	0	87.8	0	2.24	0	0	14.15	0	0	0	0	0	0	-48.13	-48.13
	Inverter Transformer	MV5-2 T	370011	4908853	2	0	0	56.1	56.1	1	6964.26	3.25	0	87.86	0	2.25	0	0	14.19	0	0	0	0	0	0	-48.24	-48.24
	Inverter Transformer	MV5-4 T	370330	4908707	2	0	0	56.1	56.1	1	6982.2	3.25	0	87.88	0	2.25	0	0	14.21	0	0	0	0	0	0	-48.29	-48.29
	Inverter Transformer	MV4-6 T	369249	4909192	2	0	0	56.1	56.1	1	6983.61	3.25	0	87.88	0	2.25	0	0	14.21	0	0	0	0	0	0	-48.29	-48.29
	Inverter Transformer	MV4-5 T	369283	4909199	2	0	0	56.1	56.1	1	7001.48	3.25	0	87.9	0	2.26	0	0	14.23	0	0	0	0	0	0	-48.34	-48.34
	Inverter Transformer	MV5-3 T	370237	4908851	2	0	0	56.1	56.1	1	7064.77	3.25	0	87.98	0	2.28	0	0	14.3	0	0	0	0	0	0	-48.5	-48.5
	Inverter Transformer	MV4-1 T	369017	4909397	2	0	0	56.1	56.1	1	7106.55	3.25	0	88.03	0	2.29	0	0	14.34	0	0	0	0	0	0	-48.61	-48.61
	Inverter Transformer	MV4-3 T	369234	4909397	2	0	0	56.1	56.1	1	7172.7	3.25	0	88.11	0	2.31	0	0	14.41	0	0	0	0	0	0	-48.77	-48.77
	Inverter Transformer	MV4-2 T	369267	4909397	2	0	0	56.1	56.1	1	7183.28	3.25	0	88.13	0	2.31	0	0	14.42	0	0	0	0	0	0	-48.8	-48.8
	Inverter Transformer	MV5-1 T	370015	4909142	2	0	0	56.1	56.1	1	7226.64	3.25	0	88.18	0	2.32	0	0	14.47	0	0	0	0	0	0	-48.91	-48.91
	Line Reactor	NGR	369421	4908787.5	5	0	0	45.4	45.4	1	6664.89	5.25	0	87.48	0	3.23	1.37	0.11	2.72	0	0	0	0	0	0	-49.44	-49.44
Limit. Valu	0	0																								
Level D/N:	35.4082	35.4082																								

Receiver: Vacant Lot Receptor
ID: G-V13
X: 367100.1
Y: 4903206.6
Z: 4.5
Ground: 0

ISO	Description	ID	X	Y	Z	Ground	ReflOrd	LxT	LxN	L/A	Dist.	hm	Freq	Adiv	K0b	Agr	Abar	z	Aatm	Afol	Ahous	Cmet	CmetN	Dc	RL	LtotT	LtotN
	Sol_Luce Substation	S_Substation	369426	4908792	3.5	0	0	112.1	112.1	1	6050.33	5.25	0	86.64	0	1.17	2.63	0.33	9.8	0	0	0	0	0	0	11.84	11.84
	Gardiner Substation	G_Sub	366586.3	4903349.9	2.5	0	0	90.8	90.8	1	533.41	4.24	0	65.54	0	0.19	3.7	0.3	1.51	0	0	0	0	0	0	19.84	19.84
	Inverters	G_Inv4	366732.8	4903105	2	0	0	87.7	87.7	1	381.1	3.25	0	62.62	0	2.43	0	0	0.59	0	0	0	0	0	0	22.02	22.02
	Inverters	G_Inv6	366788.5	4902972	2	0	0	87.7	87.7	1	390.05	3.25	0	62.82	0	2.43	0	0	0.61	0	0	0	0	0	0	21.81	21.81
	Inverters	G_Inv2	366676.9	4903239.1	2	0	0	87.7	87.7	1	424.45	3.25	0	63.56	0	2.41	0	0	0.66	0	0	0	0	0	0	21.04	21.04
	Inverters	G_Inv8	366844.5	4902838.5	2	0	0	87.7	87.7	1	448.15	3.25	0	64.03	0	2.41	0	0	0.69	0	0	0	0	0	0	20.54	20.54
	Inverters	G_Inv5	366638.5	4902958.1	2	0	0	87.7	87.7	1	524.25	3.25	0	65.39	0	2.4	0	0	0.8	0	0	0	0	0	0	19.08	19.08
	Inverters	G_Inv3	366583.7	4903091.4	2	0	0	87.7	87.7	1	529.1	3.25	0	65.47	0	2.4	0	0	0.8	0	0	0	0	0	0	18.99	18.99
	Inverters	G_Inv10	366900.7	4902704.8	2	0	0	87.7	87.7	1	539.97	3.25	0	65.65	0	2.4	0	0	0.82	0	0	0	0	0	0	18.8	18.8
	Inverters	G_Inv7	366694.6	4902824.7	2	0	0	87.7	87.7	1	557.03	3.25	0	65.92	0	2.4	0	0	0.84	0	0	0	0	0	0	18.5	18.5
	Inverters	G_Inv1	366526.4	4903225.8	2	0	0	87.7	87.7	1	574.03	3.25	0	66.18	0	2.4	0	0	0.87	0	0	0	0	0	0	18.22	18.22
	Inverter	MV1-15	365315	4904994	2	0	0	100.3	100.3	1	2526.14	3.25	0	79.05	0	0.26	0	0	14.51	0	0	0	0	0	0	6.49	6.49
	Inverters	G_Inv9	366750.9	4902691.8	2	0	0	87.7	87.7	1	622.07	3.25	0	66.88	0	2.4	0	0	0.93	0	0	0	0	0	0	17.45	17.45
	Inverter	MV1-12	365038	4905386	2	0	0	100.3	100.3	1	3000.34	3.25	0	80.54	0	0.36	0	0	15.37	0	0	0	0	0	0	4.03	4.03
	Inverter	MV1-11	364655	4905414	2	0	0	100.3	100.3	1	3294.11	3.25	0	81.35	0	0.42	0	0	15.88	0	0	0	0	0	0	2.66	2.66
	Inverter	MV1-8	364788	4905647	2	0	0	100.3	100.3	1	3361.75	3.25	0	81.53	0	0.43	0	0	16	0	0	0	0	0	0	2.35	2.35
	Inverter	MV1-9	364561	4905646	2	0	0	100.3	100.3	1	3521.04	3.25	0	81.93	0	0.45	0	0	16.27	0	0	0	0	0	0	1.66	1.66
	Inverter	MV1-4	364815	4905918	2	0	0	100.3	100.3	1	3545.9	3.25	0	81.99	0	0.46	0	0	16.31	0	0	0	0	0	0	1.55	1.55
	Inverter	MV1-5	364671	4905892	2	0	0	100.3	100.3	1	3621.04	3.25	0	82.18	0	0.47	0	0	16.43	0	0	0	0	0	0	1.23	1.23
	Inverter	MV2-3	365820	4906641	2	0	0	100.3	100.3	1	3665.21	3.25	0	82.28	0	0.48	0	0	16.51	0	0	0	0	0	0	1.05	1.05
	Inverter	MV1-2	364753	4906063	2	0	0	100.3	100.3	1	3697.01	3.25	0	82.36	0	0.48	0	0	16.56	0	0	0	0	0	0	0.91	0.91
	Inverter	MV1-6	364477	4905835	2	0	0	100.3	100.3	1	3713.37	3.25	0	82.4	0	0.48	0	0	16.58	0	0	0	0	0	0	0.85	0.85
	Inverter	MV2-4	365586	4906624	2	0	0	100.3	100.3	1	3737.8	3.25	0	82.45	0	0.49	0	0	16.62	0	0	0	0	0	0	0.75	0.75
	Inverter	MV1-14	365163	4905049	2	0	0	97.3	97.3	1	2673.35	3.25	0	79.54	0	0.3	0	0	14.78	0	0	0	0	0	0	2.69	2.69
	Inverter	MV1-1	364715	4906166	2	0	0	100.3	100.3	1	3800.89	3.25	0	82.6	0	0.5	0	0	16.73	0	0	0	0	0	0	0.49	0.49
	Inverter	MV3-21	368478	4907206	2	0	0	100.3	100.3	1	4230.11	3.25	0	83.53	0	0.56	0	0	17.41	0	0	0	0	0	0	-1.19	-1.19
	Inverter	MV3-18	367752	4907412	2	0	0	100.3	100.3	1	4255.63	3.25	0	83.58	0	0.56	0	0	17.45	0	0	0	0	0	0	-1.28	-1.28
	Inverter	MV3-19	368357	4907347	2	0	0	100.3	100.3	1	4326.98	3.25	0	83.72	0	0.57	0	0	17.56	0	0	0	0	0	0	-1.55	-1.55
	Inverter	MV3-17	368178	4907472	2	0	0	100.3	100.3	1	4399.49	3.25	0	83.87	0	0.58	0	0	17.68	0	0	0	0	0	0	-1.81	-1.81
	Inverter	MV3-20	368689	4907317	2	0	0	100.3	100.3	1	4406.81	3.25	0	83.88	0	0.58	0	0	17.69	0	0	0	0	0	0	-1.84	-1.84
	Inverter	MV1-13	364731	4905241	2	0	0	97.3	97.3	1	3122.73	3.25	0	80.89	0	0.39	0	0	15.59	0	0	0	0	0	0	0.45	0.45
	Inverter	MV3-12	367668	4907594	2	0	0	100.3	100.3	1	4424	3.25	0	83.92	0	0.58	0	0	17.71	0	0	0	0	0	0	-1.9	-1.9
	Inverter	MV3-15	368357	4907477	2	0	0	100.3	100.3	1	4451.53	3.25	0	83.97	0	0.59	0	0	17.76	0	0	0	0	0	0	-2	-2
	Inverter	MV3-13	367963	4907577	2	0	0	100.3	100.3	1	4454.77	3.25	0	83.98	0	0.59	0	0	17.76	0	0	0	0	0	0	-2.01	-2.01
	Inverter	MV1-10	365004	4905564	2	0	0	97.3	97.3	1	3154.52	3.25	0	80.98	0	0.39	0	0	15.64	0	0	0	0	0	0	0.3	0.3
	Inverter	MV3-16	368514	4907475	2	0	0	100.3	100.3	1	4496.48	3.25	0	84.06	0	0.59	0	0	17.82	0	0	0	0	0	0	-2.16	-2.16
	Inverter	MV3-14	368684	4907498	2	0	0	100.3	100.3	1	4574.37	3.25	0	84.21	0	0.6	0	0	17.94	0	0	0	0	0	0	-2.44	-2.44
	Inverter	MV3-10	368167	4907669	2	0	0	100.3	100.3	1	4588.17	3.25	0	84.23	0	0.6	0	0	17.96	0	0	0	0	0	0	-2.49	-2.49
	Inverter	MV3-7	367945	4907754	2	0	0	100.3	100.3	1	4625.23	3.25	0	84.3	0	0.6	0	0	18.02	0	0	0	0	0	0	-2.62	-2.62
	Inverter	MV3-11	368346	4907662	2	0	0	100.3	100.3	1	4626.32	3.25	0	84.3	0	0.6	0	0	18.02	0	0	0	0	0	0	-2.62	-2.62
	Inverter	MV3-9	368512	4907703	2	0	0	100.3	100.3	1	4712.86	3.25	0	84.47	0	0.61	0	0	18.15	0	0	0	0	0	0	-2.92	-2.92

Inverter	MV3-6	368162	4907834	2	0	0	100.3	100.3	1	4747.68	3.25	0	84.53	0	0.62	0	0	18.21	0	0	0	0	0	0	-3.04	-3.04
Inverter	MV1-7	364925	4905782	2	0	0	97.3	97.3	1	3371.02	3.25	0	81.56	0	0.43	0	0	16.01	0	0	0	0	0	0	-0.69	-0.69
Inverter	MV3-8	368680	4907712	2	0	0	100.3	100.3	1	4774.38	3.25	0	84.58	0	0.62	0	0	18.25	0	0	0	0	0	0	-3.13	-3.13
Inverter	MV3-3	367939	4907927	2	0	0	100.3	100.3	1	4794.36	3.25	0	84.61	0	0.62	0	0	18.28	0	0	0	0	0	0	-3.2	-3.2
Inverter	MV6-3	370207	4907140	2	0	0	100.3	100.3	1	5012.43	3.25	0	85	0	0.64	0	0	18.6	0	0	0	0	0	0	-3.93	-3.93
Inverter	MV6-2	370085	4907339	2	0	0	100.3	100.3	1	5097.68	3.25	0	85.15	0	0.65	0	0	18.72	0	0	0	0	0	0	-4.21	-4.21
Inverter	MV2-1	365842	4906816	2	0	0	97.3	97.3	1	3822.38	3.25	0	82.65	0	0.5	0	0	16.76	0	0	0	0	0	0	-2.6	-2.6
Inverter	MV4-11	369264	4908855	2	0	0	100.3	100.3	1	6048.71	3.25	0	86.63	0	0.71	0	0	20.06	0	0	0	0	0	0	-7.09	-7.09
Inverter	MV4-10	369312	4908858	2	0	0	100.3	100.3	1	6068.84	3.25	0	86.66	0	0.71	0	0	20.09	0	0	0	0	0	0	-7.14	-7.14
Inverter	MV4-7	369035	4909001	2	0	0	100.3	100.3	1	6108.92	3.25	0	86.72	0	0.71	0	0	20.14	0	0	0	0	0	0	-7.26	-7.26
Inverter	MV4-8	369256	4909001	2	0	0	100.3	100.3	1	6182.47	3.25	0	86.82	0	0.71	0	0	20.24	0	0	0	0	0	0	-7.46	-7.46
Inverter	MV4-9	369289	4909001	2	0	0	100.3	100.3	1	6194.06	3.25	0	86.84	0	0.71	0	0	20.25	0	0	0	0	0	0	-7.49	-7.49
Inverter	MV5-5	370015	4908690	2	0	0	100.3	100.3	1	6210.02	3.25	0	86.86	0	0.71	0	0	20.28	0	0	0	0	0	0	-7.54	-7.54
Inverter	MV4-4	369027	4909199	2	0	0	100.3	100.3	1	6294.59	3.25	0	86.98	0	0.71	0	0	20.39	0	0	0	0	0	0	-7.77	-7.77
Inverter	MV5-2	370006	4908853	2	0	0	100.3	100.3	1	6350.28	3.25	0	87.06	0	0.71	0	0	20.46	0	0	0	0	0	0	-7.92	-7.92
Inverter	MV4-6	369243	4909192	2	0	0	100.3	100.3	1	6357.44	3.25	0	87.07	0	0.71	0	0	20.47	0	0	0	0	0	0	-7.94	-7.94
Inverter	MV5-4	370324	4908707	2	0	0	100.3	100.3	1	6375.57	3.25	0	87.09	0	0.71	0	0	20.5	0	0	0	0	0	0	-7.99	-7.99
Inverter	MV4-5	369289	4909199	2	0	0	100.3	100.3	1	6379.67	3.25	0	87.1	0	0.71	0	0	20.5	0	0	0	0	0	0	-8	-8
Inverter	MV5-3	370231	4908851	2	0	0	100.3	100.3	1	6454.59	3.25	0	87.2	0	0.71	0	0	20.6	0	0	0	0	0	0	-8.2	-8.2
Inverter	MV4-1	369011	4909397	2	0	0	100.3	100.3	1	6478.63	3.25	0	87.23	0	0.71	0	0	20.63	0	0	0	0	0	0	-8.26	-8.26
Inverter	MV4-3	369229	4909397	2	0	0	100.3	100.3	1	6546.24	3.25	0	87.32	0	0.71	0	0	20.72	0	0	0	0	0	0	-8.44	-8.44
Inverter	MV4-2	369272	4909397	2	0	0	100.3	100.3	1	6560.35	3.25	0	87.34	0	0.72	0	0	20.74	0	0	0	0	0	0	-8.48	-8.48
Inverter	MV5-1	370020	4909142	2	0	0	100.3	100.3	1	6614.74	3.25	0	87.41	0	0.71	0	0	20.81	0	0	0	0	0	0	-8.62	-8.62
Inverter	MV6-1	370235	4907364	2	0	0	97.3	97.3	1	5206.88	3.25	0	85.33	0	0.66	0	0	18.88	0	0	0	0	0	0	-7.56	-7.56
DSTATCOM - 10 MVAR #2	DSAT2	369403	4908757	2.5	0	0	96.6	96.6	1	6009.18	3.5	0	86.58	0	3.77	0	0	3.84	0	0	0	0	0	0	2.44	2.44
DSTATCOM - 10 MVAR #1	DSAT1	369437	4908757	2.5	0	0	96.6	96.6	1	6022.3	3.5	0	86.6	0	3.77	0	0	3.85	0	0	0	0	0	0	2.41	2.41
SubstationTransformer	W_ST	369711.17	4906112.3	2.5	0	0	92	92	1	3906.48	3.5	0	82.84	0	0.31	0	-0.11	7.24	0	0	0	0	0	0	1.59	1.59
Inverter	MV2-2	365977	4906654	2	0	0	89.1	89.1	1	3625.73	3.25	0	82.19	0	1.3	0	0	10.55	0	0	0	0	0	0	-4.98	-4.98
Westbrook Inverter Enclosur	W_INV3	369508	4906164	2	0	0	89.1	89.1	1	3813.69	3.25	0	82.63	0	1.35	0	0	10.82	0	0	0	0	0	0	-5.73	-5.73
Inverter	MV1-3	364440	4906039	2	0	0	89.1	89.1	1	3885.7	3.25	0	82.79	0	1.36	0	0	10.92	0	0	0	0	0	0	-6.02	-6.02
Westbrook Inverter Enclosur	W_INV2	369374	4906388	2	0	0	89.1	89.1	1	3910.49	3.25	0	82.84	0	1.37	0	0	10.96	0	0	0	0	0	0	-6.11	-6.11
Westbrook Inverter Enclosur	W_INV4	369673	4906164	2	0	0	89.1	89.1	1	3919.95	3.25	0	82.87	0	1.37	0	0	10.97	0	0	0	0	0	0	-6.15	-6.15
Westbrook Inverter Enclosur	W_INV7	369780	4906417	2	0	0	89.1	89.1	1	4181.93	3.25	0	83.43	0	1.44	0	0	11.34	0	0	0	0	0	0	-7.15	-7.15
Inverter	MV3-22	368656	4907142	2	0	0	89.1	89.1	1	4231.81	3.25	0	83.53	0	1.45	0	0	11.41	0	0	0	0	0	0	-7.33	-7.33
Westbrook Inverter Enclosur	W_INV5	369719	4906574	2	0	0	89.1	89.1	1	4265.91	3.25	0	83.6	0	1.46	0	0	11.46	0	0	0	0	0	0	-7.46	-7.46
Westbrook Inverter Enclosur	W_INV6	369875	4906578	2	0	0	89.1	89.1	1	4366.51	3.25	0	83.8	0	1.48	0	0	11.6	0	0	0	0	0	0	-7.83	-7.83
Inverter	MV3-5	368340	4907843	2	0	0	89.1	89.1	1	4799.33	3.25	0	84.62	0	1.59	0	0	12.19	0	0	0	0	0	0	-9.35	-9.35
Inverter	MV3-1	368156	4907976	2	0	0	89.1	89.1	1	4884.89	3.25	0	84.78	0	1.61	0	0	12.31	0	0	0	0	0	0	-9.64	-9.64
Inverter	MV3-4	368502	4907925	2	0	0	89.1	89.1	1	4922.26	3.25	0	84.84	0	1.62	0	0	12.36	0	0	0	0	0	0	-9.77	-9.77
Inverter	MV3-2	368671	4907928	2	0	0	89.1	89.1	1	4975.88	3.25	0	84.94	0	1.63	0	0	12.43	0	0	0	0	0	0	-9.94	-9.94
Fixed Reactor Bank 1	FRB1	369378	4908755	6	0	0	89.8	89.8	1	5997.8	5.25	0	86.56	0	-0.42	0	0	9.74	0	0	0	0	0	0	-6.1	-6.1
Fixed Reactor Bank 2	FRB2	369464	4908755	6	0	0	89.8	89.8	1	6030.98	5.25	0	86.61	0	-0.41	0	0	9.78	0	0	0	0	0	0	-6.19	-6.19
Inverter	MV4-15	369176	4908481	2	0	0	89.1	89.1	1	5668.22	3.25	0	86.07	0	1.8	0	0	13.34	0	0	0	0	0	0	-12.16	-12.16
Inverter	MV4-14	369176	4908507	2	0	0	89.1	89.1	1	5692.42	3.25	0	86.11	0	1.81	0	0	13.37	0	0	0	0	0	0	-12.23	-12.23
Inverter	MV4-13	369051	4908605	2	0	0	89.1	89.1	1	5740.1	3.25	0	86.18	0	1.82	0	0	13.43	0	0	0	0	0	0	-12.37	-12.37
Westbrook Inverter Enclosur	W_INV1	369409	4906578	2	0	0	86.1	86.1	1	4086.24	3.25	0	83.23	0	1.41	0	0	11.21	0	0	0	0	0	0	-9.79	-9.79
Inverter	MV4-12	369043	4908803	2	0	0	89.1	89.1	1	5924.07	3.25	0	86.45	0	1.87	0	0	13.67	0	0	0	0	0	0	-12.93	-12.93
Inverter	MV5-6	369982	4908507	2	0	0	89.1	89.1	1	6033.21	3.25	0	86.61	0	1.89	0	0	13.8	0	0	0	0	0	0	-13.25	-13.25
Inverter	MV6-4	370250	4906966	2	0	0	86.1	86.1	1	4904.59	3.25	0	84.81	0	1.62	0	0	12.34	0	0	0	0	0	0	-12.71	-12.71
Westbrook Inverter Transfor	W_INVTR1	369403	4906578	2	0	0	78.2	78.2	1	4082.85	3.25	0	83.22	0	-2.98	0	0	2.09	0	0	0	0	0	0	-4.08	-4.08
Westbrook Inverter Transfor	W_INVTR3	369514	4906164	2	0	0	77.3	77.3	1	3817.48	3.25	0	82.64	0	-2.92	0	0	1.99	0	0	0	0	0	0	-4.36	-4.36
Westbrook Inverter Transfor	W_INVTR2	369368	4906388	2	0	0	77.3	77.3	1	3907	3.25	0	82.84	0	-2.94	0	0	2.02	0	0	0	0	0	0	-4.57	-4.57
Westbrook Inverter Transfor	W_INVTR4	369679	4906164	2	0	0	77.3	77.3	1	3923.89	3.25	0	82.87	0	-2.95	0	0	2.03	0	0	0	0	0	0	-4.61	-4.61
Westbrook Inverter Transfor	W_INVTR7	369786	4906417	2	0	0	77.3	77.3	1	4185.78	3.25	0	83.44	0	-3.01	0	0	2.12	0	0	0	0	0	0	-5.21	-5.21
Westbrook Inverter Transfor	W_INVTR5	369725	4906574	2	0	0	77.3	77.3	1	4269.6	3.25	0	83.61	0	-3.02	0	0	2.15	0	0	0	0	0	0	-5.4	-5.4
Westbrook Inverter Transfor	W_INVTR6	369881	4906578	2	0	0	77.3	77.3	1	4370.33	3.25	0	83.81	0	-3.05	0	0	2.19	0	0	0	0	0	0	-5.61	-5.61
Inverter Transformer	MV1-14 T	365157	4905049	2	0	0	69.4	69.4	1	2677.7	3.25	0	79.56	0	2.41	0	0	5.6	0	0	0	0	0	0	-18.21	-18.21
Inverter Transformer	MV1-13 T	364725	4905241	2	0	0	69.4	69.4	1	3127.28	3.25	0	80.9	0	2.55	0	0	5.99	0	0	0	0	0	0	-20.09	-20.09
Inverter Transformer	MV1-10 T	365010	4905564	2	0	0	69.4	69.4	1	3150.53	3.25	0	80.97	0	2.55	0	0	6.01	0	0	0	0	0	0	-20.18	-20.18
Inverter Transformer	MV1-7 T	364919	4905782	2	0	0	69.4	69.4	1	3374.89	3.25	0	81.57	0	2.62	0	0	6.19	0	0	0	0	0	0	-21.02	-21.02
Inverter Transformer	MV2-1 T	365836	4906816	2	0	0	69.4	69.4	1	3824.36	3.25	0	82.65	0	2.74	0	0	6.54	0	0	0	0	0	0	-22.59	-22.59
Inverter Transformer	MV6-4 T	370244	4906966	2	0	0	69.4	69.4	1	4900.73	3.25	0	84.81	0	2.99	0	0	7.32	0	0	0	0	0	0	-25.76	-25.76
Inverter Transformer	MV6-1 T	370230	4907364	2	0	0	69.4	69.4	1	5203.87	3.25	0	85.33	0	3.05	0	0	7.52	0	0	0	0	0	0	-26.54	-26.54
Inverter Transformer	MV1-15 T	365309	4904994	2	0	0	56.1	56.1	1	2530.38	3.25	0	79.06	0	0.63	0	0	8.04	0	0	0	0	0	0	-31.68	-31.68
Inverter Transformer	MV1-12 T	365044	4905386	2	0	0	56.1	56.1	1	2996.22	3.25	0	80.53	0	0.83	0	0	8.86	0	0	0	0	0	0	-34.16	-34.16
Inverter Transformer	MV1-11 T	364649	4905414	2	0	0	56.1	56.1	1	3298.56	3.25	0	81.37	0	0.96	0	0	9.36	0	0	0	0	0	0	-35.63	-35.63
Inverter Transformer	MV1-8 T	364782	4905647	2	0	0	56.1	56.1	1	3365.88	3.25	0	81.54	0	0.98	0	0	9.47	0	0	0	0	0	0	-35.94	-35.94
Inverter Transformer	MV1-9 T	364555	4905646	2	0	0	56.1	56.1	1	3525.37	3.25	0	81.94	0	1.05	0	0	9.73	0	0	0	0	0	0	-36.66	-36.66
Inverter Transformer	MV1-4 T	364821	4905918	2	0	0	56.1	56.1	1	3542.03	3.25	0	81.99	0	1.06	0	0	9.75	0	0	0	0	0	0	-36.74	-36.74
Inverter Transformer	MV1-5 T	364676	4905892	2	0	0	56.1	56.1	1	3617.68	3.25	0	82.17	0	1.09	0	0	9.87	0	0	0	0	0	0	-37.07	-37.07
Inverter Transformer	MV2-2 T	365982	4906654	2	0	0	56.1	56.1	1	3624.19	3.25	0	82.18	0	1.09	0	0	9.88	0	0	0	0	0	0	-37.1	-37.1
Inverter Transformer	MV2-3 T	365814	4906641	2	0	0	56.1	56.1	1	3667.31	3.25	0	82.29	0	1.11	0	0	9.95	0	0	0	0	0	0	-37.29	-37.29
Inverter Transformer	MV1-2 T	364759	4906063	2	0	0	56.1	56.1	1	3693.21	3.25	0	82.35	0	1.12	0	0	9.99	0	0	0	0	0	0	-37.4	-37.4
Inverter Transformer	MV1-6 T	364482	4905835	2	0	0	56.1	56.1	1	3709.84	3.25	0	82.39	0	1.13	0	0	10.02	0	0	0	0	0	0	-37.47	-37.47

	Inverter Transformer	MV2-4 T	365590	4906628	2	0	0	56.1	56.1	1	3739.84	3.25	0	82.46	0	1.14	0	0	10.06	0	0	0	0	0	0	-37.6	-37.6
	Inverter Transformer	MV1-1 T	364721	4906166	2	0	0	56.1	56.1	1	3797.13	3.25	0	82.59	0	1.16	0	0	10.15	0	0	0	0	0	0	-37.84	-37.84
	Inverter Transformer	MV1-3 T	364435	4906039	2	0	0	56.1	56.1	1	3889.12	3.25	0	82.8	0	1.2	0	0	10.29	0	0	0	0	0	0	-38.23	-38.23
	Inverter Transformer	MV3-21 T	368484	4907206	2	0	0	56.1	56.1	1	4232.07	3.25	0	83.53	0	1.34	0	0	10.79	0	0	0	0	0	0	-39.6	-39.6
	Inverter Transformer	MV3-22 T	368661	4907142	2	0	0	56.1	56.1	1	4233.65	3.25	0	83.53	0	1.34	0	0	10.8	0	0	0	0	0	0	-39.61	-39.61
	Inverter Transformer	MV3-18 T	367757	4907412	2	0	0	56.1	56.1	1	4256.4	3.25	0	83.58	0	1.35	0	0	10.83	0	0	0	0	0	0	-39.7	-39.7
	Inverter Transformer	MV3-19 T	368352	4907347	2	0	0	56.1	56.1	1	4325.53	3.25	0	83.72	0	1.37	0	0	10.93	0	0	0	0	0	0	-39.96	-39.96
	Inverter Transformer	MV3-17 T	368183	4907472	2	0	0	56.1	56.1	1	4400.72	3.25	0	83.87	0	1.4	0	0	11.04	0	0	0	0	0	0	-40.25	-40.25
	Inverter Transformer	MV3-20 T	368683	4907317	2	0	0	56.1	56.1	1	4404.65	3.25	0	83.88	0	1.4	0	0	11.04	0	0	0	0	0	0	-40.26	-40.26
	Inverter Transformer	MV3-12 T	367674	4907594	2	0	0	56.1	56.1	1	4424.78	3.25	0	83.92	0	1.41	0	0	11.07	0	0	0	0	0	0	-40.34	-40.34
	Inverter Transformer	MV3-15 T	368351	4907477	2	0	0	56.1	56.1	1	4449.84	3.25	0	83.97	0	1.42	0	0	11.11	0	0	0	0	0	0	-40.43	-40.43
	Inverter Transformer	MV3-13 T	367958	4907577	2	0	0	56.1	56.1	1	4453.81	3.25	0	83.97	0	1.42	0	0	11.11	0	0	0	0	0	0	-40.45	-40.45
	Inverter Transformer	MV3-16 T	368509	4907475	2	0	0	56.1	56.1	1	4494.91	3.25	0	84.05	0	1.44	0	0	11.17	0	0	0	0	0	0	-40.6	-40.6
	Inverter Transformer	MV3-14 T	368678	4907498	2	0	0	56.1	56.1	1	4572.3	3.25	0	84.2	0	1.47	0	0	11.28	0	0	0	0	0	0	-40.89	-40.89
	Inverter Transformer	MV3-10 T	368162	4907669	2	0	0	56.1	56.1	1	4587.01	3.25	0	84.23	0	1.47	0	0	11.3	0	0	0	0	0	0	-40.94	-40.94
	Inverter Transformer	MV3-11 T	368340	4907662	2	0	0	56.1	56.1	1	4624.71	3.25	0	84.3	0	1.49	0	0	11.35	0	0	0	0	0	0	-41.08	-41.08
	Inverter Transformer	MV3-7 T	367951	4907754	2	0	0	56.1	56.1	1	4626.33	3.25	0	84.3	0	1.49	0	0	11.35	0	0	0	0	0	0	-41.08	-41.08
	Inverter Transformer	MV3-9 T	368517	4907703	2	0	0	56.1	56.1	1	4714.36	3.25	0	84.47	0	1.52	0	0	11.47	0	0	0	0	0	0	-41.4	-41.4
	Inverter Transformer	MV3-6 T	368156	4907834	2	0	0	56.1	56.1	1	4746.34	3.25	0	84.53	0	1.53	0	0	11.51	0	0	0	0	0	0	-41.52	-41.52
	Inverter Transformer	MV3-8 T	368685	4907712	2	0	0	56.1	56.1	1	4776.04	3.25	0	84.58	0	1.54	0	0	11.56	0	0	0	0	0	0	-41.62	-41.62
	Inverter Transformer	MV3-3 T	367944	4907927	2	0	0	56.1	56.1	1	4795.24	3.25	0	84.62	0	1.55	0	0	11.58	0	0	0	0	0	0	-41.69	-41.69
	Inverter Transformer	MV3-5 T	368335	4907843	2	0	0	56.1	56.1	1	4798.04	3.25	0	84.62	0	1.55	0	0	11.58	0	0	0	0	0	0	-41.7	-41.7
	Inverter Transformer	MV3-1 T	368150	4907976	2	0	0	56.1	56.1	1	4883.59	3.25	0	84.77	0	1.58	0	0	11.7	0	0	0	0	0	0	-42	-42
	Inverter Transformer	MV3-4 T	368507	4907925	2	0	0	56.1	56.1	1	4923.68	3.25	0	84.85	0	1.6	0	0	11.75	0	0	0	0	0	0	-42.14	-42.14
	Inverter Transformer	MV3-2 T	368677	4907928	2	0	0	56.1	56.1	1	4977.77	3.25	0	84.94	0	1.62	0	0	11.82	0	0	0	0	0	0	-42.32	-42.32
	Inverter Transformer	MV6-3 T	370202	4907140	2	0	0	56.1	56.1	1	5009.33	3.25	0	85	0	1.63	0	0	11.87	0	0	0	0	0	0	-42.43	-42.43
	Inverter Transformer	MV6-2 T	370091	4907339	2	0	0	56.1	56.1	1	5101.2	3.25	0	85.15	0	1.66	0	0	11.99	0	0	0	0	0	0	-42.74	-42.74
	Inverter Transformer	MV4-15 T	369170	4908481	2	0	0	56.1	56.1	1	5666.02	3.25	0	86.07	0	1.86	0	0	12.7	0	0	0	0	0	0	-44.56	-44.56
	Inverter Transformer	MV4-14 T	369182	4908507	2	0	0	56.1	56.1	1	5694.61	3.25	0	86.11	0	1.87	0	0	12.74	0	0	0	0	0	0	-44.65	-44.65
	Inverter Transformer	MV4-13 T	369057	4908605	2	0	0	56.1	56.1	1	5742.14	3.25	0	86.18	0	1.88	0	0	12.79	0	0	0	0	0	0	-44.8	-44.8
	Inverter Transformer	MV4-12 T	369049	4908803	2	0	0	56.1	56.1	1	5926.04	3.25	0	86.46	0	1.94	0	0	13.01	0	0	0	0	0	0	-45.35	-45.35
	Inverter Transformer	MV5-6 T	369987	4908507	2	0	0	56.1	56.1	1	6035.6	3.25	0	86.61	0	1.98	0	0	13.14	0	0	0	0	0	0	-45.68	-45.68
	Inverter Transformer	MV4-11 T	369269	4908855	2	0	0	56.1	56.1	1	6050.5	3.25	0	86.64	0	1.98	0	0	13.16	0	0	0	0	0	0	-45.72	-45.72
	Inverter Transformer	MV4-10 T	369307	4908858	2	0	0	56.1	56.1	1	6067.02	3.25	0	86.66	0	1.99	0	0	13.18	0	0	0	0	0	0	-45.77	-45.77
	Inverter Transformer	MV4-7 T	369040	4909001	2	0	0	56.1	56.1	1	6110.51	3.25	0	86.72	0	2	0	0	13.23	0	0	0	0	0	0	-45.9	-45.9
	Inverter Transformer	MV4-8 T	369262	4909001	2	0	0	56.1	56.1	1	6184.57	3.25	0	86.83	0	2.02	0	0	13.32	0	0	0	0	0	0	-46.11	-46.11
	Inverter Transformer	MV4-9 T	369284	4909001	2	0	0	56.1	56.1	1	6192.29	3.25	0	86.84	0	2.02	0	0	13.33	0	0	0	0	0	0	-46.13	-46.13
	Inverter Transformer	MV5-5 T	370021	4908690	2	0	0	56.1	56.1	1	6212.84	3.25	0	86.87	0	2.03	0	0	13.35	0	0	0	0	0	0	-46.19	-46.19
	Inverter Transformer	MV4-4 T	369033	4909199	2	0	0	56.1	56.1	1	6296.42	3.25	0	86.98	0	2.06	0	0	13.45	0	0	0	0	0	0	-46.43	-46.43
	Inverter Transformer	MV5-2 T	370011	4908853	2	0	0	56.1	56.1	1	6352.57	3.25	0	87.06	0	2.07	0	0	13.51	0	0	0	0	0	0	-46.59	-46.59
	Inverter Transformer	MV4-6 T	369249	4909192	2	0	0	56.1	56.1	1	6359.46	3.25	0	87.07	0	2.08	0	0	13.52	0	0	0	0	0	0	-46.61	-46.61
	Inverter Transformer	MV4-5 T	369283	4909199	2	0	0	56.1	56.1	1	6377.61	3.25	0	87.09	0	2.08	0	0	13.54	0	0	0	0	0	0	-46.66	-46.66
	Inverter Transformer	MV5-4 T	370330	4908707	2	0	0	56.1	56.1	1	6378.61	3.25	0	87.09	0	2.08	0	0	13.54	0	0	0	0	0	0	-46.66	-46.66
	Inverter Transformer	MV5-3 T	370237	4908851	2	0	0	56.1	56.1	1	6457.51	3.25	0	87.2	0	2.11	0	0	13.63	0	0	0	0	0	0	-46.88	-46.88
	Inverter Transformer	MV4-1 T	369017	4909397	2	0	0	56.1	56.1	1	6480.4	3.25	0	87.23	0	2.11	0	0	13.66	0	0	0	0	0	0	-46.94	-46.94
	Inverter Transformer	MV4-3 T	369234	4909397	2	0	0	56.1	56.1	1	6547.87	3.25	0	87.32	0	2.13	0	0	13.73	0	0	0	0	0	0	-47.13	-47.13
	Inverter Transformer	MV4-2 T	369267	4909397	2	0	0	56.1	56.1	1	6558.7	3.25	0	87.34	0	2.13	0	0	13.75	0	0	0	0	0	0	-47.16	-47.16
	Inverter Transformer	MV5-1 T	370015	4909142	2	0	0	56.1	56.1	1	6612.54	3.25	0	87.41	0	2.15	0	0	13.81	0	0	0	0	0	0	-47.31	-47.31
	Line Reactor	NGR	369421	4908787.5	5	0	0	45.4	45.4	1	6044.26	5.25	0	86.63	0	3.24	1.36	0.11	2.47	0	0	0	0	0	0	-48.34	-48.34
Limit. Valu	0	0																								
Level D/N:	30.5761	30.5761																								

Receiver: Vacant Lot Receptor
ID: G-V14
X: 367178.3
Y: 4902711.2
Z: 4.5
Ground: 0

ISO	Description	ID	X	Y	Z	Ground	ReflOrd	LxT	LxN	L/A	Dist.	hm	Freq	Adiv	K0b	Agr	Abar	z	Aatm	Afol	Ahous	Cmet	CmetN	Dc	RL	LtotT	LtotN
	Inverters	G_Inv10	366900.7	4902704.8	2	0	0	87.7	87.7	1	277.69	3.25	0	59.87	0	2.52	0	0	0.44	0	0	0	0	0	0	24.83	24.83
	Inverters	G_Inv8	366844.5	4902838.5	2	0	0	87.7	87.7	1	357.26	3.25	0	62.06	0	2.44	0	0	0.56	0	0	0	0	0	0	22.6	22.6
	Sol_Luce Substation	S_Substation	369426	4908792	3.5	0	0	112.1	112.1	1	6482.92	5.25	0	87.24	0	1.27	2.54	0.33	10.24	0	0	0	0	0	0	10.78	10.78
	Inverters	G_Inv9	366750.9	4902691.8	2	0	0	87.7	87.7	1	427.85	3.25	0	63.63	0	2.41	0	0	0.66	0	0	0	0	0	0	20.96	20.96
	Inverters	G_Inv6	366788.5	4902972	2	0	0	87.7	87.7	1	469.01	3.25	0	64.42	0	2.4	0	0	0.72	0	0	0	0	0	0	20.12	20.12
	Inverters	G_Inv7	366694.6	4902824.7	2	0	0	87.7	87.7	1	496.84	3.25	0	64.92	0	2.4	0	0	0.76	0	0	0	0	0	0	19.58	19.58
	Inverters	G_Inv5	366638.5	4902958.1	2	0	0	87.7	87.7	1	593.59	3.25	0	66.47	0	2.4	0	0	0.89	0	0	0	0	0	0	17.9	17.9
	Inverters	G_Inv4	366732.8	4903105	2	0	0	87.7	87.7	1	594.6	3.25	0	66.48	0	2.4	0	0	0.89	0	0	0	0	0	0	17.88	17.88
	Gardiner Substation	G_Sub	366586.3	4903349.9	2.5	0	0	90.8	90.8	1	870.86	3.5	0	69.8	0	-0.39	0	0	2.25	0	0	0	0	0	0	19.11	19.11
	Inverter	MV1-15	365315	4904994	2	0	0	100.3	100.3	1	2946.7	3.25	0	80.39	0	0.35	0	0	15.28	0	0	0	0	0	0	4.3	4.3
	Inverters	G_Inv3	366583.7	4903091.4	2	0	0	87.7	87.7	1	705.77	3.25	0	67.97	0	2.41	0	0	1.04	0	0	0	0	0	0	16.24	16.24
	Inverters	G_Inv2	366676.9	4903239.1	2	0	0	87.7	87.7	1	728.07	3.25	0	68.24	0	2.41	0	0	1.07	0	0	0	0	0	0	15.93	15.93
	Inverter	MV1-12	365038	4905386	2	0	0	100.3	100.3	1	3425.7	3.25	0	81.69	0	0.44	0	0	16.11	0	0	0	0	0	0	2.07	2.07
	Inverters	G_Inv1	366526.4	4903225.8	2	0	0	87.7	87.7	1	830.54	3.25	0	69.39	0	2.42	0	0	1.21	0	0	0	0	0	0	14.64	14.64

Inverter	MV1-11	364655	4905414	2	0	0	100.3	100.3	1	3697.59	3.25	0	82.36	0	0.48	0	0	16.56	0	0	0	0	0	0	0.91	0.91
Inverter	MV1-8	364788	4905647	2	0	0	100.3	100.3	1	3785.82	3.25	0	82.56	0	0.5	0	0	16.7	0	0	0	0	0	0	0.55	0.55
Inverter	MV1-9	364561	4905646	2	0	0	100.3	100.3	1	3932.34	3.25	0	82.89	0	0.52	0	0	16.94	0	0	0	0	0	0	-0.04	-0.04
Inverter	MV1-4	364815	4905918	2	0	0	100.3	100.3	1	3983.56	3.25	0	83.01	0	0.52	0	0	17.02	0	0	0	0	0	0	-0.24	-0.24
Inverter	MV1-5	364671	4905892	2	0	0	100.3	100.3	1	4050.19	3.25	0	83.15	0	0.53	0	0	17.13	0	0	0	0	0	0	-0.5	-0.5
Inverter	MV1-6	364477	4905835	2	0	0	100.3	100.3	1	4129.79	3.25	0	83.32	0	0.54	0	0	17.25	0	0	0	0	0	0	-0.81	-0.81
Inverter	MV1-2	364753	4906063	2	0	0	100.3	100.3	1	4137.23	3.25	0	83.33	0	0.55	0	0	17.27	0	0	0	0	0	0	-0.83	-0.83
Inverter	MV2-3	365820	4906641	2	0	0	100.3	100.3	1	4157.92	3.25	0	83.38	0	0.55	0	0	17.3	0	0	0	0	0	0	-0.91	-0.91
Inverter	MV2-4	365586	4906624	2	0	0	100.3	100.3	1	4224.39	3.25	0	83.52	0	0.56	0	0	17.4	0	0	0	0	0	0	-1.16	-1.16
Inverter	MV1-1	364715	4906166	2	0	0	100.3	100.3	1	4243.05	3.25	0	83.55	0	0.56	0	0	17.43	0	0	0	0	0	0	-1.23	-1.23
Inverter	MV1-14	365163	4905049	2	0	0	97.3	97.3	1	3086.54	3.25	0	80.79	0	0.38	0	0	15.52	0	0	0	0	0	0	0.62	0.62
Inverter	MV3-21	368478	4907206	2	0	0	100.3	100.3	1	4678.94	3.25	0	84.4	0	0.61	0	0	18.1	0	0	0	0	0	0	-2.8	-2.8
Inverter	MV3-18	367752	4907412	2	0	0	100.3	100.3	1	4735.68	3.25	0	84.51	0	0.62	0	0	18.19	0	0	0	0	0	0	-3	-3
Inverter	MV3-19	368357	4907347	2	0	0	100.3	100.3	1	4783.3	3.25	0	84.59	0	0.62	0	0	18.26	0	0	0	0	0	0	-3.16	-3.16
Inverter	MV3-20	368689	4907317	2	0	0	100.3	100.3	1	4847.23	3.25	0	84.71	0	0.63	0	0	18.35	0	0	0	0	0	0	-3.38	-3.38
Inverter	MV3-17	368178	4907472	2	0	0	100.3	100.3	1	4864.63	3.25	0	84.74	0	0.63	0	0	18.38	0	0	0	0	0	0	-3.44	-3.44
Inverter	MV3-12	367668	4907594	2	0	0	100.3	100.3	1	4907.3	3.25	0	84.82	0	0.63	0	0	18.44	0	0	0	0	0	0	-3.58	-3.58
Inverter	MV3-15	368357	4907477	2	0	0	100.3	100.3	1	4909.4	3.25	0	84.82	0	0.63	0	0	18.45	0	0	0	0	0	0	-3.59	-3.59
Inverter	MV3-13	367963	4907577	2	0	0	100.3	100.3	1	4928.67	3.25	0	84.85	0	0.64	0	0	18.48	0	0	0	0	0	0	-3.65	-3.65
Inverter	MV3-16	368514	4907475	2	0	0	100.3	100.3	1	4947.51	3.25	0	84.89	0	0.64	0	0	18.5	0	0	0	0	0	0	-3.72	-3.72
Inverter	MV1-13	364731	4905241	2	0	0	97.3	97.3	1	3519.83	3.25	0	81.93	0	0.45	0	0	16.26	0	0	0	0	0	0	-1.34	-1.34
Inverter	MV3-14	368684	4907498	2	0	0	100.3	100.3	1	5018.03	3.25	0	85.01	0	0.64	0	0	18.61	0	0	0	0	0	0	-3.95	-3.95
Inverter	MV3-10	368167	4907669	2	0	0	100.3	100.3	1	5055.42	3.25	0	85.08	0	0.65	0	0	18.66	0	0	0	0	0	0	-4.07	-4.07
Inverter	MV1-10	365004	4905564	2	0	0	97.3	97.3	1	3586.93	3.25	0	82.09	0	0.47	0	0	16.38	0	0	0	0	0	0	-1.62	-1.62
Inverter	MV3-11	368346	4907662	2	0	0	100.3	100.3	1	5086.64	3.25	0	85.13	0	0.65	0	0	18.71	0	0	0	0	0	0	-4.17	-4.17
Inverter	MV3-7	367945	4907754	2	0	0	100.3	100.3	1	5100.75	3.25	0	85.15	0	0.65	0	0	18.73	0	0	0	0	0	0	-4.22	-4.22
Inverter	MV3-9	368512	4907703	2	0	0	100.3	100.3	1	5166.9	3.25	0	85.26	0	0.66	0	0	18.82	0	0	0	0	0	0	-4.43	-4.43
Inverter	MV3-6	368162	4907834	2	0	0	100.3	100.3	1	5216.39	3.25	0	85.35	0	0.66	0	0	18.9	0	0	0	0	0	0	-4.59	-4.59
Inverter	MV3-8	368680	4907712	2	0	0	100.3	100.3	1	5221.41	3.25	0	85.36	0	0.66	0	0	18.9	0	0	0	0	0	0	-4.61	-4.61
Inverter	MV3-3	367939	4907927	2	0	0	100.3	100.3	1	5270.98	3.25	0	85.44	0	0.66	0	0	18.97	0	0	0	0	0	0	-4.76	-4.76
Inverter	MV6-3	370207	4907140	2	0	0	100.3	100.3	1	5365.38	3.25	0	85.59	0	0.67	0	0	19.11	0	0	0	0	0	0	-5.06	-5.06
Inverter	MV1-7	364925	4905782	2	0	0	97.3	97.3	1	3808.83	3.25	0	82.62	0	0.5	0	0	16.74	0	0	0	0	0	0	-2.54	-2.54
Inverter	MV6-2	370085	4907339	2	0	0	100.3	100.3	1	5464.93	3.25	0	85.75	0	0.68	0	0	19.25	0	0	0	0	0	0	-5.37	-5.37
Inverter	MV2-1	365842	4906816	2	0	0	97.3	97.3	1	4316.84	3.25	0	83.7	0	0.57	0	0	17.55	0	0	0	0	0	0	-4.51	-4.51
Inverter	MV4-11	369264	4908855	2	0	0	100.3	100.3	1	6488.18	3.25	0	87.24	0	0.71	0	0	20.64	0	0	0	0	0	0	-8.29	-8.29
Inverter	MV4-10	369312	4908858	2	0	0	100.3	100.3	1	6506.6	3.25	0	87.27	0	0.71	0	0	20.67	0	0	0	0	0	0	-8.34	-8.34
Inverter	MV4-7	369035	4909001	2	0	0	100.3	100.3	1	6558.12	3.25	0	87.34	0	0.72	0	0	20.73	0	0	0	0	0	0	-8.47	-8.47
Inverter	MV5-5	370015	4908690	2	0	0	100.3	100.3	1	6617.62	3.25	0	87.41	0	0.71	0	0	20.81	0	0	0	0	0	0	-8.63	-8.63
Inverter	MV4-8	369256	4909001	2	0	0	100.3	100.3	1	6624.08	3.25	0	87.42	0	0.71	0	0	20.82	0	0	0	0	0	0	-8.65	-8.65
Inverter	MV4-9	369289	4909001	2	0	0	100.3	100.3	1	6634.5	3.25	0	87.44	0	0.71	0	0	20.83	0	0	0	0	0	0	-8.67	-8.67
Inverter	MV4-4	369027	4909199	2	0	0	100.3	100.3	1	6746.05	3.25	0	87.58	0	0.71	0	0	20.98	0	0	0	0	0	0	-8.96	-8.96
Inverter	MV5-2	370006	4908853	2	0	0	100.3	100.3	1	6761.48	3.25	0	87.6	0	0.71	0	0	21	0	0	0	0	0	0	-9	-9
Inverter	MV5-4	370324	4908707	2	0	0	100.3	100.3	1	6770.9	3.25	0	87.61	0	0.71	0	0	21.01	0	0	0	0	0	0	-9.02	-9.02
Inverter	MV4-6	369243	4909192	2	0	0	100.3	100.3	1	6801.75	3.25	0	87.65	0	0.71	0	0	21.05	0	0	0	0	0	0	-9.1	-9.1
Inverter	MV4-5	369289	4909199	2	0	0	100.3	100.3	1	6822.51	3.25	0	87.68	0	0.71	0	0	21.07	0	0	0	0	0	0	-9.15	-9.15
Inverter	MV5-3	370231	4908851	2	0	0	100.3	100.3	1	6856.83	3.25	0	87.72	0	0.71	0	0	21.12	0	0	0	0	0	0	-9.24	-9.24
Inverter	MV4-1	369011	4909397	2	0	0	100.3	100.3	1	6932.44	3.25	0	87.82	0	0.71	0	0	21.21	0	0	0	0	0	0	-9.43	-9.43
Inverter	MV4-3	369229	4909397	2	0	0	100.3	100.3	1	6993.23	3.25	0	87.89	0	0.71	0	0	21.29	0	0	0	0	0	0	-9.58	-9.58
Inverter	MV4-2	369272	4909397	2	0	0	100.3	100.3	1	7005.96	3.25	0	87.91	0	0.71	0	0	21.31	0	0	0	0	0	0	-9.61	-9.61
Inverter	MV5-1	370020	4909142	2	0	0	100.3	100.3	1	7030.68	3.25	0	87.94	0	0.71	0	0	21.34	0	0	0	0	0	0	-9.67	-9.67
Inverter	MV6-1	370235	4907364	2	0	0	97.3	97.3	1	5567.04	3.25	0	85.91	0	0.68	0	0	19.4	0	0	0	0	0	0	-8.68	-8.68
DSTATCOM - 10 MVAR #2	DSAT2	369403	4908757	2.5	0	0	96.6	96.6	1	6442.13	3.5	0	87.18	0	3.8	0	0	4.05	0	0	0	0	0	0	1.6	1.6
DSTATCOM - 10 MVAR #1	DSAT1	369437	4908757	2.5	0	0	96.6	96.6	1	6453.95	3.5	0	87.2	0	3.8	0	0	4.06	0	0	0	0	0	0	1.57	1.57
SubstationTransformer	W_ST	369711.17	4906112.3	2.5	0	0	92	92	1	4240.6	3.5	0	83.55	0	0.39	0	-0.11	7.68	0	0	0	0	0	0	0.36	0.36
Inverter	MV2-2	365977	4906654	2	0	0	89.1	89.1	1	4121.75	3.25	0	83.3	0	1.42	0	0	11.26	0	0	0	0	0	0	-6.92	-6.92
Westbrook Inverter Enclosur	W_INV3	369508	4906164	2	0	0	89.1	89.1	1	4165.25	3.25	0	83.39	0	1.43	0	0	11.32	0	0	0	0	0	0	-7.09	-7.09
Westbrook Inverter Enclosur	W_INV4	369673	4906164	2	0	0	89.1	89.1	1	4259.74	3.25	0	83.59	0	1.46	0	0	11.45	0	0	0	0	0	0	-7.44	-7.44
Westbrook Inverter Enclosur	W_INV2	369374	4906388	2	0	0	89.1	89.1	1	4282.52	3.25	0	83.63	0	1.46	0	0	11.48	0	0	0	0	0	0	-7.52	-7.52
Inverter	MV1-3	364440	4906039	2	0	0	89.1	89.1	1	4309.59	3.25	0	83.69	0	1.47	0	0	11.52	0	0	0	0	0	0	-7.62	-7.62
Westbrook Inverter Enclosur	W_INV7	369780	4906417	2	0	0	89.1	89.1	1	4527.89	3.25	0	84.12	0	1.52	0	0	11.82	0	0	0	0	0	0	-8.41	-8.41
Westbrook Inverter Enclosur	W_INV5	369719	4906574	2	0	0	89.1	89.1	1	4623.46	3.25	0	84.3	0	1.55	0	0	11.95	0	0	0	0	0	0	-8.74	-8.74
Inverter	MV3-22	368656	4907142	2	0	0	89.1	89.1	1	4670.72	3.25	0	84.39	0	1.56	0	0	12.02	0	0	0	0	0	0	-8.91	-8.91
Westbrook Inverter Enclosur	W_INV6	369875	4906578	2	0	0	89.1	89.1	1	4714.27	3.25	0	84.47	0	1.57	0	0	12.08	0	0	0	0	0	0	-9.06	-9.06
Inverter	MV3-5	368340	4907843	2	0	0	89.1	89.1	1	5261.65	3.25	0	85.42	0	1.7	0	0	12.81	0	0	0	0	0	0	-10.88	-10.88
Inverter	MV3-1	368156	4907976	2	0	0	89.1	89.1	1	5354.81	3.25	0	85.57	0	1.73	0	0	12.93	0	0	0	0	0	0	-11.18	-11.18
Inverter	MV3-4	368502	4907925	2	0	0	89.1	89.1	1	5379.21	3.25	0	85.61	0	1.73	0	0	12.97	0	0	0	0	0	0	-11.26	-11.26
Inverter	MV3-2	368671	4907928	2	0	0	89.1	89.1	1	5426.16	3.25	0	85.69	0	1.74	0	0	13.03	0	0	0	0	0	0	-11.4	-11.4
Fixed Reactor Bank 1	FRB1	369378	4908755	6	0	0	89.8	89.8	1	6431.66	5.25	0	87.17	0	-0.36	0	0	10.19	0	0	0	0	0	0	-7.22	-7.22
Fixed Reactor Bank 2	FRB2	369464	4908755	6	0	0	89.8	89.8	1	6461.57	5.25	0	87.21	0	-0.35	0	0	10.22	0	0	0	0	0	0	-7.3	-7.3
Inverter	MV4-15	369176	4908481	2	0	0	89.1	89.1	1	6105.85	3.25	0	86.71	0	1.91	0	0	13.9	0	0	0	0	0	0	-13.46	-13.46
Inverter	MV4-14	369176	4908507	2	0	0	89.1	89.1	1	6130.42	3.25	0	86.75	0	1.92	0	0	13.93	0	0	0	0	0	0	-13.54	-13.54
Inverter	MV4-13	369051	4908605	2	0	0	89.1	89.1	1	6184.16	3.25	0	86.83	0	1.93	0	0	13.99	0	0	0	0	0	0	-13.69	-13.69
Westbrook Inverter Enclosur	W_INV1	369409	4906578	2	0	0	86.1	86.1	1	4464.1	3.25	0	83.99	0	1.51	0	0	11.74	0	0	0	0	0	0	-11.18	-11.18
Inverter	MV4-12	369043	4908803	2	0	0	89.1	89.1	1	6370.8	3.25	0	87.08	0	1.98	0	0	14.22	0	0	0	0	0	0	-14.23	-14.23

Inverter	MV5-6	369982	4908507	2	0	0	89.1	89.1	1	6438.33	3.25	0	87.18	0	1.99	0	0	14.31	0	0	0	0	0	0	-14.42	-14.42
Inverter	MV6-4	370250	4906966	2	0	0	86.1	86.1	1	5247.73	3.25	0	85.4	0	1.7	0	0	12.79	0	0	0	0	0	0	-13.84	-13.84
Westbrook Inverter Transfor	W_INVTR1	369403	4906578	2	0	0	78.2	78.2	1	4461.1	3.25	0	83.99	0	-3.07	0	0	2.22	0	0	0	0	0	0	-4.91	-4.91
Westbrook Inverter Transfor	W_INVTR3	369514	4906164	2	0	0	77.3	77.3	1	4168.61	3.25	0	83.4	0	-3	0	0	2.12	0	0	0	0	0	0	-5.17	-5.17
Westbrook Inverter Transfor	W_INVTR4	369679	4906164	2	0	0	77.3	77.3	1	4263.25	3.25	0	83.59	0	-3.02	0	0	2.15	0	0	0	0	0	0	-5.38	-5.38
Westbrook Inverter Transfor	W_INVTR2	369368	4906388	2	0	0	77.3	77.3	1	4279.45	3.25	0	83.63	0	-3.03	0	0	2.16	0	0	0	0	0	0	-5.42	-5.42
Westbrook Inverter Transfor	W_INVTR7	369786	4906417	2	0	0	77.3	77.3	1	4531.34	3.25	0	84.12	0	-3.08	0	0	2.25	0	0	0	0	0	0	-5.95	-5.95
Westbrook Inverter Transfor	W_INVTR5	369725	4906574	2	0	0	77.3	77.3	1	4626.76	3.25	0	84.31	0	-3.1	0	0	2.28	0	0	0	0	0	0	-6.15	-6.15
Westbrook Inverter Transfor	W_INVTR6	369881	4906578	2	0	0	77.3	77.3	1	4717.7	3.25	0	84.47	0	-3.12	0	0	2.32	0	0	0	0	0	0	-6.33	-6.33
Inverter Transformer	MV1-14 T	365157	4905049	2	0	0	69.4	69.4	1	3090.46	3.25	0	80.8	0	2.53	0	0	5.96	0	0	0	0	0	0	-19.94	-19.94
Inverter Transformer	MV1-13 T	364725	4905241	2	0	0	69.4	69.4	1	3524	3.25	0	81.94	0	2.66	0	0	6.31	0	0	0	0	0	0	-21.56	-21.56
Inverter Transformer	MV1-10 T	365010	4905564	2	0	0	69.4	69.4	1	3583.29	3.25	0	82.09	0	2.68	0	0	6.36	0	0	0	0	0	0	-21.77	-21.77
Inverter Transformer	MV1-7 T	364919	4905782	2	0	0	69.4	69.4	1	3812.38	3.25	0	82.62	0	2.74	0	0	6.53	0	0	0	0	0	0	-22.55	-22.55
Inverter Transformer	MV2-1 T	365836	4906816	2	0	0	69.4	69.4	1	4318.7	3.25	0	83.71	0	2.86	0	0	6.91	0	0	0	0	0	0	-24.13	-24.13
Inverter Transformer	MV6-4 T	370244	4906966	2	0	0	69.4	69.4	1	5244.22	3.25	0	85.39	0	3.06	0	0	7.54	0	0	0	0	0	0	-26.65	-26.65
Inverter Transformer	MV6-1 T	370230	4907364	2	0	0	69.4	69.4	1	5564.3	3.25	0	85.91	0	3.12	0	0	7.75	0	0	0	0	0	0	-27.42	-27.42
Inverter Transformer	MV1-15 T	365309	4904994	2	0	0	56.1	56.1	1	2950.5	3.25	0	80.4	0	0.81	0	0	8.78	0	0	0	0	0	0	-33.93	-33.93
Inverter Transformer	MV1-12 T	365044	4905386	2	0	0	56.1	56.1	1	3421.96	3.25	0	81.69	0	1.01	0	0	9.56	0	0	0	0	0	0	-36.2	-36.2
Inverter Transformer	MV1-11 T	364649	4905414	2	0	0	56.1	56.1	1	3701.69	3.25	0	82.37	0	1.12	0	0	10	0	0	0	0	0	0	-37.44	-37.44
Inverter Transformer	MV1-8 T	364782	4905647	2	0	0	56.1	56.1	1	3789.61	3.25	0	82.57	0	1.16	0	0	10.14	0	0	0	0	0	0	-37.81	-37.81
Inverter Transformer	MV1-9 T	364555	4905646	2	0	0	56.1	56.1	1	3936.34	3.25	0	82.9	0	1.22	0	0	10.36	0	0	0	0	0	0	-38.42	-38.42
Inverter Transformer	MV1-4 T	364821	4905918	2	0	0	56.1	56.1	1	3980	3.25	0	83	0	1.24	0	0	10.43	0	0	0	0	0	0	-38.6	-38.6
Inverter Transformer	MV1-5 T	364676	4905892	2	0	0	56.1	56.1	1	4047.1	3.25	0	83.14	0	1.26	0	0	10.52	0	0	0	0	0	0	-38.87	-38.87
Inverter Transformer	MV2-2 T	365982	4906654	2	0	0	56.1	56.1	1	4120.29	3.25	0	83.3	0	1.29	0	0	10.63	0	0	0	0	0	0	-39.16	-39.16
Inverter Transformer	MV1-6 T	364482	4905835	2	0	0	56.1	56.1	1	4126.52	3.25	0	83.31	0	1.29	0	0	10.64	0	0	0	0	0	0	-39.19	-39.19
Inverter Transformer	MV1-2 T	364759	4906063	2	0	0	56.1	56.1	1	4133.71	3.25	0	83.33	0	1.3	0	0	10.65	0	0	0	0	0	0	-39.22	-39.22
Inverter Transformer	MV2-3 T	365814	4906641	2	0	0	56.1	56.1	1	4159.89	3.25	0	83.38	0	1.31	0	0	10.69	0	0	0	0	0	0	-39.32	-39.32
Inverter Transformer	MV2-4 T	365590	4906628	2	0	0	56.1	56.1	1	4226.59	3.25	0	83.52	0	1.33	0	0	10.79	0	0	0	0	0	0	-39.58	-39.58
Inverter Transformer	MV1-1 T	364721	4906166	2	0	0	56.1	56.1	1	4239.57	3.25	0	83.55	0	1.34	0	0	10.81	0	0	0	0	0	0	-39.63	-39.63
Inverter Transformer	MV1-3 T	364435	4906039	2	0	0	56.1	56.1	1	4312.77	3.25	0	83.7	0	1.37	0	0	10.91	0	0	0	0	0	0	-39.91	-39.91
Inverter Transformer	MV3-22 T	368661	4907142	2	0	0	56.1	56.1	1	4672.3	3.25	0	84.39	0	1.5	0	0	11.41	0	0	0	0	0	0	-41.25	-41.25
Inverter Transformer	MV3-21 T	368484	4907206	2	0	0	56.1	56.1	1	4680.61	3.25	0	84.41	0	1.51	0	0	11.43	0	0	0	0	0	0	-41.28	-41.28
Inverter Transformer	MV3-18 T	367757	4907412	2	0	0	56.1	56.1	1	4736.29	3.25	0	84.51	0	1.53	0	0	11.5	0	0	0	0	0	0	-41.48	-41.48
Inverter Transformer	MV3-19 T	368352	4907347	2	0	0	56.1	56.1	1	4782.07	3.25	0	84.59	0	1.55	0	0	11.56	0	0	0	0	0	0	-41.64	-41.64
Inverter Transformer	MV3-20 T	368683	4907317	2	0	0	56.1	56.1	1	4845.36	3.25	0	84.71	0	1.57	0	0	11.65	0	0	0	0	0	0	-41.87	-41.87
Inverter Transformer	MV3-17 T	368183	4907472	2	0	0	56.1	56.1	1	4865.66	3.25	0	84.74	0	1.58	0	0	11.68	0	0	0	0	0	0	-41.94	-41.94
Inverter Transformer	MV3-12 T	367674	4907594	2	0	0	56.1	56.1	1	4907.9	3.25	0	84.82	0	1.59	0	0	11.73	0	0	0	0	0	0	-42.08	-42.08
Inverter Transformer	MV3-15 T	368351	4907477	2	0	0	56.1	56.1	1	4907.96	3.25	0	84.82	0	1.59	0	0	11.73	0	0	0	0	0	0	-42.08	-42.08
Inverter Transformer	MV3-13 T	367958	4907577	2	0	0	56.1	56.1	1	4927.87	3.25	0	84.85	0	1.6	0	0	11.76	0	0	0	0	0	0	-42.15	-42.15
Inverter Transformer	MV3-16 T	368509	4907475	2	0	0	56.1	56.1	1	4946.17	3.25	0	84.89	0	1.61	0	0	11.78	0	0	0	0	0	0	-42.22	-42.22
Inverter Transformer	MV3-14 T	368678	4907498	2	0	0	56.1	56.1	1	5016.23	3.25	0	85.01	0	1.63	0	0	11.88	0	0	0	0	0	0	-42.46	-42.46
Inverter Transformer	MV3-10 T	368162	4907669	2	0	0	56.1	56.1	1	5054.45	3.25	0	85.07	0	1.65	0	0	11.93	0	0	0	0	0	0	-42.59	-42.59
Inverter Transformer	MV3-11 T	368340	4907662	2	0	0	56.1	56.1	1	5085.27	3.25	0	85.13	0	1.66	0	0	11.97	0	0	0	0	0	0	-42.69	-42.69
Inverter Transformer	MV3-7 T	367951	4907754	2	0	0	56.1	56.1	1	5101.66	3.25	0	85.15	0	1.66	0	0	11.99	0	0	0	0	0	0	-42.75	-42.75
Inverter Transformer	MV3-9 T	368517	4907703	2	0	0	56.1	56.1	1	5168.19	3.25	0	85.27	0	1.69	0	0	12.07	0	0	0	0	0	0	-42.97	-42.97
Inverter Transformer	MV3-6 T	368156	4907834	2	0	0	56.1	56.1	1	5215.26	3.25	0	85.35	0	1.7	0	0	12.13	0	0	0	0	0	0	-43.12	-43.12
Inverter Transformer	MV3-8 T	368685	4907712	2	0	0	56.1	56.1	1	5222.85	3.25	0	85.36	0	1.7	0	0	12.14	0	0	0	0	0	0	-43.15	-43.15
Inverter Transformer	MV3-5 T	368335	4907843	2	0	0	56.1	56.1	1	5260.54	3.25	0	85.42	0	1.72	0	0	12.19	0	0	0	0	0	0	-43.27	-43.27
Inverter Transformer	MV3-3 T	367944	4907927	2	0	0	56.1	56.1	1	5271.7	3.25	0	85.44	0	1.72	0	0	12.21	0	0	0	0	0	0	-43.31	-43.31
Inverter Transformer	MV3-1 T	368150	4907976	2	0	0	56.1	56.1	1	5353.72	3.25	0	85.57	0	1.75	0	0	12.31	0	0	0	0	0	0	-43.58	-43.58
Inverter Transformer	MV6-3 T	370202	4907140	2	0	0	56.1	56.1	1	5362.56	3.25	0	85.59	0	1.75	0	0	12.32	0	0	0	0	0	0	-43.61	-43.61
Inverter Transformer	MV3-4 T	368507	4907925	2	0	0	56.1	56.1	1	5380.44	3.25	0	85.62	0	1.76	0	0	12.35	0	0	0	0	0	0	-43.66	-43.66
Inverter Transformer	MV3-2 T	368677	4907928	2	0	0	56.1	56.1	1	5427.81	3.25	0	85.69	0	1.78	0	0	12.4	0	0	0	0	0	0	-43.81	-43.81
Inverter Transformer	MV6-2 T	370091	4907339	2	0	0	56.1	56.1	1	5468.12	3.25	0	85.76	0	1.79	0	0	12.46	0	0	0	0	0	0	-43.94	-43.94
Inverter Transformer	MV4-15 T	369170	4908481	2	0	0	56.1	56.1	1	6103.89	3.25	0	86.71	0	2	0	0	13.23	0	0	0	0	0	0	-45.88	-45.88
Inverter Transformer	MV4-14 T	369182	4908507	2	0	0	56.1	56.1	1	6132.38	3.25	0	86.75	0	2.01	0	0	13.26	0	0	0	0	0	0	-45.96	-45.96
Inverter Transformer	MV4-13 T	369057	4908605	2	0	0	56.1	56.1	1	6185.98	3.25	0	86.83	0	2.02	0	0	13.32	0	0	0	0	0	0	-46.11	-46.11
Inverter Transformer	MV4-12 T	369049	4908803	2	0	0	56.1	56.1	1	6372.56	3.25	0	87.09	0	2.08	0	0	13.54	0	0	0	0	0	0	-46.64	-46.64
Inverter Transformer	MV5-6 T	369987	4908507	2	0	0	56.1	56.1	1	6440.5	3.25	0	87.18	0	2.1	0	0	13.61	0	0	0	0	0	0	-46.83	-46.83
Inverter Transformer	MV4-11 T	369269	4908855	2	0	0	56.1	56.1	1	6489.79	3.25	0	87.24	0	2.11	0	0	13.67	0	0	0	0	0	0	-46.97	-46.97
Inverter Transformer	MV4-10 T	369307	4908858	2	0	0	56.1	56.1	1	6504.96	3.25	0	87.26	0	2.12	0	0	13.69	0	0	0	0	0	0	-47.01	-47.01
Inverter Transformer	MV4-7 T	369040	4909001	2	0	0	56.1	56.1	1	6559.54	3.25	0	87.34	0	2.14	0	0	13.75	0	0	0	0	0	0	-47.16	-47.16
Inverter Transformer	MV5-5 T	370021	4908690	2	0	0	56.1	56.1	1	6620.2	3.25	0	87.42	0	2.15	0	0	13.81	0	0	0	0	0	0	-47.33	-47.33
Inverter Transformer	MV4-8 T	369262	4909001	2	0	0	56.1	56.1	1	6625.96	3.25	0	87.42	0	2.15	0	0	13.82	0	0	0	0	0	0	-47.34	-47.34
Inverter Transformer	MV4-9 T	369284	4909001	2	0	0	56.1	56.1	1	6632.92	3.25	0	87.43	0	2.16	0	0	13.83	0	0	0	0	0	0	-47.36	-47.36
Inverter Transformer	MV4-4 T	369033	4909199	2	0	0	56.1	56.1	1	6747.7	3.25	0	87.58	0	2.19	0	0	13.96	0	0	0	0	0	0	-47.67	-47.67
Inverter Transformer	MV5-2 T	370011	4908853	2	0	0	56.1	56.1	1	6763.57	3.25	0	87.6	0	2.19	0	0	13.97	0	0	0	0	0	0	-47.71	-47.71
Inverter Transformer	MV5-4 T	370330	4908707	2	0	0	56.1	56.1	1	6773.69	3.25	0	87.62	0	2.2	0	0	13.98	0	0	0	0	0	0	-47.74	-47.74
Inverter Transformer	MV4-6 T	369249	4909192	2	0	0	56.1	56.1	1	6803.57	3.25	0	87.65	0	2.21	0	0	14.02	0	0	0	0	0	0	-47.82	-47.82
Inverter Transformer	MV4-5 T	369283	4909199	2	0	0	56.1	56.1	1	6820.65	3.25	0	87.68	0	2.21	0	0	14.04	0	0	0	0	0	0	-47.86	-47.86
Inverter Transformer	MV5-3 T	370237	4908851	2	0	0	56.1	56.1	1	6859.5	3.25	0	87.73	0	2.22	0	0	14.08	0	0	0	0	0	0	-47.97	-47.97
Inverter Transformer	MV4-1 T	369017	4909397	2	0	0	56.1	56.1	1	6934.03	3.25	0	87.82	0	2.24	0	0	14.16	0	0	0	0	0	0	-48.16	-48.16
Inverter Transformer	MV4-3 T	369234	4909397	2	0	0	56.1	56.1	1	6994.7	3.25	0	87.9	0	2.26	0	0	14.22	0	0	0	0	0	0	-48.32	-48.32
Inverter Transformer	MV4-2 T	369267	4909397	2	0	0	56.1	56.1	1	7004.47	3.25	0	87.91	0	2.26	0	0	14.23	0	0	0	0	0	0	-48.34	-48.34

	Inverter Transformer	MV5-1 T	370015	4909142	2	0	0	56.1	56.1	1	7028.66	3.25	0	87.94	0	2.27	0	0	14.26	0	0	0	0	0	0	-48.41	-48.41
	Line Reactor	NGR	369421	4908787.5	5	0	0	45.4	45.4	1	6476.97	5.25	0	87.23	0	3.23	1.37	0.11	2.65	0	0	0	0	0	0	-49.12	-49.12
Limit. Valu	0		0																							
Level D/N:	30.668		30.668																							

Receiver: Vacant Lot Receptor
ID: G-V15
X: 367268.9
Y: 4904079.9
Z: 4.5
Ground: 0

ISO	Description	ID	X	Y	Z	Ground	ReflOrd	LxT	LxN	L/A	Dist.	hm	Freq	Adiv	K0b	Agr	Abar	z	Aatm	Afol	Ahous	Cmet	CmetN	Dc	RL	LtotT	LtotN
	Sol_Luce Substation	S_Substation	369426	4908792	3.5	0	0	112.1	112.1	1	5182.37	5.25	0	85.29	0	0.95	2.82	0.32	8.83	0	0	0	0	0	0	14.18	14.18
	Inverter	MV1-15	365315	4904994	2	0	0	100.3	100.3	1	2157.15	3.25	0	77.68	0	0.17	0	0	13.79	0	0	0	0	0	0	8.68	8.68
	Inverter	MV1-12	365038	4905386	2	0	0	100.3	100.3	1	2585.11	3.25	0	79.25	0	0.28	0	0	14.62	0	0	0	0	0	0	6.17	6.17
	Inverter	MV1-8	364788	4905647	2	0	0	100.3	100.3	1	2934.39	3.25	0	80.35	0	0.35	0	0	15.26	0	0	0	0	0	0	4.36	4.36
	Inverter	MV1-11	364655	4905414	2	0	0	100.3	100.3	1	2934.67	3.25	0	80.35	0	0.35	0	0	15.26	0	0	0	0	0	0	4.36	4.36
	Inverter	MV2-3	365820	4906641	2	0	0	100.3	100.3	1	2942.54	3.25	0	80.37	0	0.35	0	0	15.27	0	0	0	0	0	0	4.32	4.32
	Gardiner Substation	G_Sub	366586.3	4903349.9	2.5	0	0	90.8	90.8	1	999.42	4.25	0	70.99	0	0.85	5.6	0.35	2.52	0	0	0	0	0	0	10.81	10.81
	Inverter	MV2-4	365586	4906624	2	0	0	100.3	100.3	1	3050.34	3.25	0	80.69	0	0.37	0	0	15.46	0	0	0	0	0	0	3.79	3.79
	Inverter	MV1-4	364815	4905918	2	0	0	100.3	100.3	1	3065.98	3.25	0	80.73	0	0.37	0	0	15.49	0	0	0	0	0	0	3.72	3.72
	Inverter	MV1-9	364561	4905646	2	0	0	100.3	100.3	1	3128.16	3.25	0	80.91	0	0.39	0	0	15.6	0	0	0	0	0	0	3.42	3.42
	Inverter	MV1-5	364671	4905892	2	0	0	100.3	100.3	1	3167.46	3.25	0	81.01	0	0.39	0	0	15.67	0	0	0	0	0	0	3.24	3.24
	Inverter	MV1-2	364753	4906063	2	0	0	100.3	100.3	1	3203.51	3.25	0	81.11	0	0.4	0	0	15.73	0	0	0	0	0	0	3.07	3.07
	Inverter	MV1-14	365163	4905049	2	0	0	97.3	97.3	1	2318.18	3.25	0	78.3	0	0.21	0	0	14.11	0	0	0	0	0	0	4.69	4.69
	Inverter	MV1-1	364715	4906166	2	0	0	100.3	100.3	1	3297.61	3.25	0	81.36	0	0.42	0	0	15.89	0	0	0	0	0	0	2.64	2.64
	Inverter	MV1-6	364477	4905835	2	0	0	100.3	100.3	1	3297.74	3.25	0	81.36	0	0.42	0	0	15.89	0	0	0	0	0	0	2.64	2.64
	Inverter	MV3-21	368478	4907206	2	0	0	100.3	100.3	1	3351.78	3.25	0	81.51	0	0.43	0	0	15.98	0	0	0	0	0	0	2.4	2.4
	Inverter	MV3-18	367752	4907412	2	0	0	100.3	100.3	1	3366.94	3.25	0	81.54	0	0.43	0	0	16.01	0	0	0	0	0	0	2.33	2.33
	Inverter	MV3-19	368357	4907347	2	0	0	100.3	100.3	1	3443.53	3.25	0	81.74	0	0.44	0	0	16.14	0	0	0	0	0	0	1.99	1.99
	Inverter	MV3-17	368178	4907472	2	0	0	100.3	100.3	1	3511.81	3.25	0	81.91	0	0.45	0	0	16.25	0	0	0	0	0	0	1.7	1.7
	Inverter	MV3-20	368689	4907317	2	0	0	100.3	100.3	1	3534.9	3.25	0	81.97	0	0.46	0	0	16.29	0	0	0	0	0	0	1.6	1.6
	Inverter	MV3-12	367668	4907594	2	0	0	100.3	100.3	1	3536.69	3.25	0	81.97	0	0.46	0	0	16.29	0	0	0	0	0	0	1.59	1.59
	Inverter	MV3-13	367963	4907577	2	0	0	100.3	100.3	1	3565.32	3.25	0	82.04	0	0.46	0	0	16.34	0	0	0	0	0	0	1.47	1.47
	Inverter	MV3-15	368357	4907477	2	0	0	100.3	100.3	1	3567.11	3.25	0	82.05	0	0.46	0	0	16.34	0	0	0	0	0	0	1.46	1.46
	Inverter	MV3-16	368514	4907475	2	0	0	100.3	100.3	1	3616.21	3.25	0	82.17	0	0.47	0	0	16.42	0	0	0	0	0	0	1.25	1.25
	Inverter	MV3-14	368684	4907498	2	0	0	100.3	100.3	1	3699.45	3.25	0	82.36	0	0.48	0	0	16.56	0	0	0	0	0	0	0.9	0.9
	Inverter	MV3-10	368167	4907669	2	0	0	100.3	100.3	1	3699.76	3.25	0	82.36	0	0.48	0	0	16.56	0	0	0	0	0	0	0.9	0.9
	Inverter	MV3-7	367945	4907754	2	0	0	100.3	100.3	1	3735.79	3.25	0	82.45	0	0.49	0	0	16.62	0	0	0	0	0	0	0.75	0.75
	Inverter	MV3-11	368346	4907662	2	0	0	100.3	100.3	1	3740.53	3.25	0	82.46	0	0.49	0	0	16.63	0	0	0	0	0	0	0.74	0.74
	Inverter	MV1-10	365004	4905564	2	0	0	97.3	97.3	1	2707.83	3.25	0	79.65	0	0.3	0	0	14.85	0	0	0	0	0	0	2.51	2.51
	Inverter	MV3-9	368512	4907703	2	0	0	100.3	100.3	1	3830.43	3.25	0	82.66	0	0.5	0	0	16.78	0	0	0	0	0	0	0.37	0.37
	Inverter	MV3-6	368162	4907834	2	0	0	100.3	100.3	1	3858.87	3.25	0	82.73	0	0.51	0	0	16.82	0	0	0	0	0	0	0.25	0.25
	Inverter	MV3-8	368680	4907712	2	0	0	100.3	100.3	1	3896.58	3.25	0	82.81	0	0.51	0	0	16.88	0	0	0	0	0	0	0.1	0.1
	Inverter	MV3-3	367939	4907927	2	0	0	100.3	100.3	1	3905.02	3.25	0	82.83	0	0.51	0	0	16.9	0	0	0	0	0	0	0.07	0.07
	Inverter	MV1-13	364731	4905241	2	0	0	97.3	97.3	1	2790.9	3.25	0	79.91	0	0.32	0	0	15	0	0	0	0	0	0	2.08	2.08
	Inverter	MV1-7	364925	4905782	2	0	0	97.3	97.3	1	2896.73	3.25	0	80.24	0	0.34	0	0	15.19	0	0	0	0	0	0	1.54	1.54
	Inverter	MV6-3	370207	4907140	2	0	0	100.3	100.3	1	4242.25	3.25	0	83.55	0	0.56	0	0	17.43	0	0	0	0	0	0	-1.23	-1.23
	Inverter	MV6-2	370085	4907339	2	0	0	100.3	100.3	1	4307.22	3.25	0	83.68	0	0.57	0	0	17.53	0	0	0	0	0	0	-1.47	-1.47
	Inverter	MV2-1	365842	4906816	2	0	0	97.3	97.3	1	3085.82	3.25	0	80.79	0	0.38	0	0	15.52	0	0	0	0	0	0	0.62	0.62
	Inverters	G_Inv2	366676.9	4903239.1	2	0	0	87.7	87.7	1	1028.31	3.25	0	71.24	0	2.45	0	0	1.46	0	0	0	0	0	0	12.5	12.5
	Inverters	G_Inv4	366732.8	4903105	2	0	0	87.7	87.7	1	1112.58	3.25	0	71.93	0	2.47	0	0	1.57	0	0	0	0	0	0	11.7	11.7
	Inverters	G_Inv1	366526.4	4903225.8	2	0	0	87.7	87.7	1	1131.72	3.25	0	72.07	0	2.47	0	0	1.59	0	0	0	0	0	0	11.52	11.52
	Inverters	G_Inv3	366583.7	4903091.4	2	0	0	87.7	87.7	1	1202.76	3.25	0	72.6	0	2.48	0	0	1.68	0	0	0	0	0	0	10.9	10.9
	Inverter	MV4-11	369264	4908855	2	0	0	100.3	100.3	1	5175.13	3.25	0	85.28	0	0.66	0	0	18.84	0	0	0	0	0	0	-4.46	-4.46
	Inverters	G_Inv6	366788.5	4902972	2	0	0	87.7	87.7	1	1207.57	3.25	0	72.64	0	2.48	0	0	1.69	0	0	0	0	0	0	10.86	10.86
	Inverter	MV4-10	369312	4908858	2	0	0	100.3	100.3	1	5196.59	3.25	0	85.31	0	0.66	0	0	18.87	0	0	0	0	0	0	-4.53	-4.53
	Inverter	MV4-7	369035	4909001	2	0	0	100.3	100.3	1	5228.42	3.25	0	85.37	0	0.66	0	0	18.91	0	0	0	0	0	0	-4.63	-4.63
	Inverter	MV4-8	369256	4909001	2	0	0	100.3	100.3	1	5307.15	3.25	0	85.5	0	0.67	0	0	19.03	0	0	0	0	0	0	-4.88	-4.88
	Inverter	MV4-9	369289	4909001	2	0	0	100.3	100.3	1	5319.59	3.25	0	85.52	0	0.67	0	0	19.04	0	0	0	0	0	0	-4.92	-4.92
	Inverter	MV5-5	370015	4908690	2	0	0	100.3	100.3	1	5366.01	3.25	0	85.59	0	0.67	0	0	19.11	0	0	0	0	0	0	-5.06	-5.06
	Inverter	MV4-4	369027	4909199	2	0	0	100.3	100.3	1	5412.59	3.25	0	85.67	0	0.67	0	0	19.18	0	0	0	0	0	0	-5.21	-5.21
	Inverter	MV4-6	369243	4909192	2	0	0	100.3	100.3	1	5480.02	3.25	0	85.78	0	0.68	0	0	19.27	0	0	0	0	0	0	-5.42	-5.42
	Inverter	MV5-2	370006	4908853	2	0	0	100.3	100.3	1	5502.2	3.25	0	85.81	0	0.68	0	0	19.3	0	0	0	0	0	0	-5.48	-5.48
	Inverter	MV4-5	369289	4909199	2	0	0	100.3	100.3	1	5503.27	3.25	0	85.81	0	0.68	0	0	19.31	0	0	0	0	0	0	-5.49	-5.49
	Inverters	G_Inv5	366638.5	4902958.1	2	0	0	87.7	87.7	1	1286.8	3.25	0	73.19	0	2.49	0	0	1.78	0	0	0	0	0	0	10.2	10.2
	Inverter	MV5-4	370324	4908707	2	0	0	100.3	100.3	1	5544.7	3.25	0	85.88	0	0.68	0	0	19.36	0	0	0	0	0	0	-5.61	-5.61
	Inverter	MV4-1	369011	4909397	2	0	0	100.3	100.3	1	5595.22	3.25	0	85.96	0	0.69	0	0	19.43	0	0	0	0	0	0	-5.77	-5.77
	Inverter	MV5-3	370231	4908851	2	0	0	100.3	100.3	1	5615.82	3.25	0	85.99	0	0.69	0	0	19.46	0	0	0	0	0	0	-5.83	-5.83
	Inverters	G_Inv8	366844.5	4902838.5	2	0	0	87.7	87.7	1	1311.94	3.25	0	73.36	0	2.49	0	0	1.82	0	0	0	0	0	0	9.99	9.99
	Inverter	MV4-3	369229	4909397	2	0	0	100.3	100.3	1	5666.88	3.25	0	86.07	0	0.69	0	0	19.53	0	0	0	0	0	0	-5.98	-5.98
	Inverter	MV4-2	369272	4909397	2	0	0	100.3	100.3	1	5681.9	3.25	0	86.09	0	0.69	0	0	19.56	0	0	0	0	0	0	-6.02	-6.02
	Inverter	MV5-1	370020	4909142	2	0	0	100.3	100.3	1	5761.37	3.25	0	86.21	0	0.69	0	0	19.67	0	0	0	0	0	0	-6.26	-6.26

Inverters	G_Inv7	366694.6	4902824.7	2	0	0	87.7	87.7	1	1380.35	3.25	0	73.8	0	2.5	0	0	1.9	0	0	0	0	0	0	9.46	9.46
Inverters	G_Inv10	366900.7	4902704.8	2	0	0	87.7	87.7	1	1423.54	3.25	0	74.07	0	2.51	0	0	1.95	0	0	0	0	0	0	9.13	9.13
Inverter	MV6-1	370235	4907364	2	0	0	97.3	97.3	1	4425.28	3.25	0	83.92	0	0.58	0	0	17.72	0	0	0	0	0	0	-4.9	-4.9
Inverters	G_Inv9	366750.9	4902691.8	2	0	0	87.7	87.7	1	1481.6	3.25	0	74.41	0	2.52	0	0	2.02	0	0	0	0	0	0	8.71	8.71
DSTATCOM - 10 MVAR #2	DSAT2	369403	4908757	2.5	0	0	96.6	96.6	1	5140.98	3.5	0	85.22	0	3.7	0	0	3.42	0	0	0	0	0	0	4.29	4.29
DSTATCOM - 10 MVAR #1	DSAT1	369437	4908757	2.5	0	0	96.6	96.6	1	5155.18	3.5	0	85.24	0	3.7	0	0	3.43	0	0	0	0	0	0	4.26	4.26
SubstationTransformer	W_ST	369711.17	4906112.3	2.5	0	0	92	92	1	3177.3	4.25	0	81.04	0	1.1	2.84	0.23	6.22	0	0	0	0	0	0	0.78	0.78
Inverter	MV2-2	365977	4906654	2	0	0	89.1	89.1	1	2880.1	3.25	0	80.19	0	1.12	0	0	9.43	0	0	0	0	0	0	-1.68	-1.68
Westbrook Inverter Enclosur	W_INV3	369508	4906164	2	0	0	89.1	89.1	1	3058.93	3.25	0	80.71	0	1.16	0	0	9.71	0	0	0	0	0	0	-2.52	-2.52
Westbrook Inverter Enclosur	W_INV2	369374	4906388	2	0	0	89.1	89.1	1	3123.9	3.25	0	80.89	0	1.18	0	0	9.8	0	0	0	0	0	0	-2.82	-2.82
Westbrook Inverter Enclosur	W_INV4	369673	4906164	2	0	0	89.1	89.1	1	3181.69	3.25	0	81.05	0	1.19	0	0	9.89	0	0	0	0	0	0	-3.08	-3.08
Inverter	MV3-22	368656	4907142	2	0	0	89.1	89.1	1	3361.62	3.25	0	81.53	0	1.24	0	0	10.16	0	0	0	0	0	0	-3.87	-3.87
Westbrook Inverter Enclosur	W_INV7	369780	4906417	2	0	0	89.1	89.1	1	3430.4	3.25	0	81.71	0	1.25	0	0	10.26	0	0	0	0	0	0	-4.16	-4.16
Inverter	MV1-3	364440	4906039	2	0	0	89.1	89.1	1	3441.04	3.25	0	81.73	0	1.25	0	0	10.28	0	0	0	0	0	0	-4.21	-4.21
Westbrook Inverter Enclosur	W_INV5	369719	4906574	2	0	0	89.1	89.1	1	3496.22	3.25	0	81.87	0	1.27	0	0	10.36	0	0	0	0	0	0	-4.44	-4.44
Westbrook Inverter Enclosur	W_INV6	369875	4906578	2	0	0	89.1	89.1	1	3610.02	3.25	0	82.15	0	1.3	0	0	10.52	0	0	0	0	0	0	-4.91	-4.91
Inverter	MV3-5	368340	4907843	2	0	0	89.1	89.1	1	3912.57	3.25	0	82.85	0	1.37	0	0	10.96	0	0	0	0	0	0	-6.12	-6.12
Inverter	MV3-1	368156	4907976	2	0	0	89.1	89.1	1	3995.82	3.25	0	83.03	0	1.39	0	0	11.08	0	0	0	0	0	0	-6.44	-6.44
Inverter	MV3-4	368502	4907925	2	0	0	89.1	89.1	1	4037.99	3.25	0	83.12	0	1.4	0	0	11.14	0	0	0	0	0	0	-6.61	-6.61
Inverter	MV3-2	368671	4907928	2	0	0	89.1	89.1	1	4095.58	3.25	0	83.25	0	1.42	0	0	11.22	0	0	0	0	0	0	-6.82	-6.82
Westbrook Inverter Enclosur	W_INV1	369409	4906578	2	0	0	86.1	86.1	1	3289.46	3.25	0	81.34	0	1.22	0	0	10.05	0	0	0	0	0	0	-6.55	-6.55
Fixed Reactor Bank 1	FRB1	369378	4908755	6	0	0	89.8	89.8	1	5128.83	5.25	0	85.2	0	-0.55	0	0	8.77	0	0	0	0	0	0	-3.65	-3.65
Fixed Reactor Bank 2	FRB2	369464	4908755	6	0	0	89.8	89.8	1	5164.79	5.25	0	85.26	0	-0.54	0	0	8.81	0	0	0	0	0	0	-3.76	-3.76
Inverter	MV4-15	369176	4908481	2	0	0	89.1	89.1	1	4796.53	3.25	0	84.62	0	1.59	0	0	12.19	0	0	0	0	0	0	-9.34	-9.34
Inverter	MV4-14	369176	4908507	2	0	0	89.1	89.1	1	4820.4	3.25	0	84.66	0	1.6	0	0	12.22	0	0	0	0	0	0	-9.42	-9.42
Inverter	MV4-13	369051	4908605	2	0	0	89.1	89.1	1	4863.38	3.25	0	84.74	0	1.61	0	0	12.28	0	0	0	0	0	0	-9.57	-9.57
Inverter	MV4-12	369043	4908803	2	0	0	89.1	89.1	1	5045.31	3.25	0	85.06	0	1.65	0	0	12.52	0	0	0	0	0	0	-10.17	-10.17
Inverter	MV5-6	369982	4908507	2	0	0	89.1	89.1	1	5192.31	3.25	0	85.31	0	1.69	0	0	12.72	0	0	0	0	0	0	-10.66	-10.66
Inverter	MV6-4	370250	4906966	2	0	0	86.1	86.1	1	4149.28	3.25	0	83.36	0	1.43	0	0	11.3	0	0	0	0	0	0	-10.03	-10.03
Westbrook Inverter Transfor	W_INVTR1	369403	4906578	2	0	0	78.2	78.2	1	3285.56	3.25	0	81.33	0	-2.79	0	0	1.78	0	0	0	0	0	0	-2.08	-2.08
Westbrook Inverter Transfor	W_INVTR3	369514	4906164	2	0	0	77.3	77.3	1	3063.32	3.25	0	80.72	0	-2.73	0	0	1.68	0	0	0	0	0	0	-2.33	-2.33
Westbrook Inverter Transfor	W_INVTR2	369368	4906388	2	0	0	77.3	77.3	1	3119.86	3.25	0	80.88	0	-2.75	0	0	1.71	0	0	0	0	0	0	-2.5	-2.5
Westbrook Inverter Transfor	W_INVTR4	369679	4906164	2	0	0	77.3	77.3	1	3186.23	3.25	0	81.07	0	-2.76	0	0	1.73	0	0	0	0	0	0	-2.69	-2.69
Westbrook Inverter Transfor	W_INVTR7	369786	4906417	2	0	0	77.3	77.3	1	3434.8	3.25	0	81.72	0	-2.83	0	0	1.84	0	0	0	0	0	0	-3.38	-3.38
Westbrook Inverter Transfor	W_INVTR5	369725	4906574	2	0	0	77.3	77.3	1	3500.42	3.25	0	81.88	0	-2.84	0	0	1.86	0	0	0	0	0	0	-3.56	-3.56
Westbrook Inverter Transfor	W_INVTR6	369881	4906578	2	0	0	77.3	77.3	1	3614.36	3.25	0	82.16	0	-2.87	0	0	1.91	0	0	0	0	0	0	-3.85	-3.85
Inverter Transformer	MV1-14 T	365157	4905049	2	0	0	69.4	69.4	1	2323.64	3.25	0	78.32	0	2.29	0	0	5.28	0	0	0	0	0	0	-16.54	-16.54
Inverter Transformer	MV1-10 T	365010	4905564	2	0	0	69.4	69.4	1	2702.81	3.25	0	79.64	0	2.41	0	0	5.63	0	0	0	0	0	0	-18.33	-18.33
Inverter Transformer	MV1-13 T	364725	4905241	2	0	0	69.4	69.4	1	2796.35	3.25	0	79.93	0	2.44	0	0	5.71	0	0	0	0	0	0	-18.73	-18.73
Inverter Transformer	MV1-7 T	364919	4905782	2	0	0	69.4	69.4	1	2901.58	3.25	0	80.25	0	2.48	0	0	5.8	0	0	0	0	0	0	-19.18	-19.18
Inverter Transformer	MV2-1 T	365836	4906816	2	0	0	69.4	69.4	1	3088.6	3.25	0	80.8	0	2.53	0	0	5.96	0	0	0	0	0	0	-19.94	-19.94
Inverter Transformer	MV6-4 T	370244	4906966	2	0	0	69.4	69.4	1	4144.97	3.25	0	83.35	0	2.82	0	0	6.78	0	0	0	0	0	0	-23.61	-23.61
Inverter Transformer	MV6-1 T	370230	4907364	2	0	0	69.4	69.4	1	4421.93	3.25	0	83.91	0	2.89	0	0	6.98	0	0	0	0	0	0	-24.43	-24.43
Inverter Transformer	MV1-15 T	365309	4904994	2	0	0	56.1	56.1	1	2162.59	3.25	0	77.7	0	0.47	0	0	7.36	0	0	0	0	0	0	-29.47	-29.47
Inverter Transformer	MV1-12 T	365044	4905386	2	0	0	56.1	56.1	1	2579.94	3.25	0	79.23	0	0.65	0	0	8.13	0	0	0	0	0	0	-31.96	-31.96
Inverter Transformer	MV2-2 T	365982	4906654	2	0	0	56.1	56.1	1	2877.87	3.25	0	80.18	0	0.78	0	0	8.66	0	0	0	0	0	0	-33.56	-33.56
Inverter Transformer	MV1-8 T	364782	4905647	2	0	0	56.1	56.1	1	2939.47	3.25	0	80.37	0	0.8	0	0	8.76	0	0	0	0	0	0	-33.88	-33.88
Inverter Transformer	MV1-11 T	364649	4905414	2	0	0	56.1	56.1	1	2940.02	3.25	0	80.37	0	0.8	0	0	8.77	0	0	0	0	0	0	-33.88	-33.88
Inverter Transformer	MV2-3 T	365814	4906641	2	0	0	56.1	56.1	1	2945.5	3.25	0	80.38	0	0.81	0	0	8.78	0	0	0	0	0	0	-33.91	-33.91
Inverter Transformer	MV2-4 T	365590	4906628	2	0	0	56.1	56.1	1	3051.48	3.25	0	80.69	0	0.85	0	0	8.96	0	0	0	0	0	0	-34.44	-34.44
Inverter Transformer	MV1-4 T	364821	4905918	2	0	0	56.1	56.1	1	3061.18	3.25	0	80.72	0	0.86	0	0	8.97	0	0	0	0	0	0	-34.49	-34.49
Inverter Transformer	MV1-9 T	364555	4905646	2	0	0	56.1	56.1	1	3133.36	3.25	0	80.92	0	0.89	0	0	9.09	0	0	0	0	0	0	-34.84	-34.84
Inverter Transformer	MV1-5 T	364676	4905892	2	0	0	56.1	56.1	1	3163.36	3.25	0	81	0	0.9	0	0	9.14	0	0	0	0	0	0	-34.99	-34.99
Inverter Transformer	MV1-2 T	364759	4906063	2	0	0	56.1	56.1	1	3198.8	3.25	0	81.1	0	0.91	0	0	9.2	0	0	0	0	0	0	-35.16	-35.16
Inverter Transformer	MV1-1 T	364721	4906166	2	0	0	56.1	56.1	1	3292.96	3.25	0	81.35	0	0.95	0	0	9.36	0	0	0	0	0	0	-35.6	-35.6
Inverter Transformer	MV1-6 T	364482	4905835	2	0	0	56.1	56.1	1	3293.51	3.25	0	81.35	0	0.95	0	0	9.36	0	0	0	0	0	0	-35.6	-35.6
Inverter Transformer	MV3-21 T	368484	4907206	2	0	0	56.1	56.1	1	3353.95	3.25	0	81.51	0	0.98	0	0	9.45	0	0	0	0	0	0	-35.89	-35.89
Inverter Transformer	MV3-22 T	368661	4907142	2	0	0	56.1	56.1	1	3363.69	3.25	0	81.54	0	0.98	0	0	9.47	0	0	0	0	0	0	-35.93	-35.93
Inverter Transformer	MV3-18 T	367757	4907412	2	0	0	56.1	56.1	1	3367.66	3.25	0	81.55	0	0.98	0	0	9.48	0	0	0	0	0	0	-35.95	-35.95
Inverter Transformer	MV3-19 T	368352	4907347	2	0	0	56.1	56.1	1	3441.96	3.25	0	81.74	0	1.02	0	0	9.6	0	0	0	0	0	0	-36.29	-36.29
Inverter Transformer	MV1-3 T	364435	4906039	2	0	0	56.1	56.1	1	3445.15	3.25	0	81.74	0	1.02	0	0	9.6	0	0	0	0	0	0	-36.3	-36.3
Inverter Transformer	MV3-17 T	368183	4907472	2	0	0	56.1	56.1	1	3513.11	3.25	0	81.91	0	1.05	0	0	9.71	0	0	0	0	0	0	-36.61	-36.61
Inverter Transformer	MV3-20 T	368683	4907317	2	0	0	56.1	56.1	1	3532.49	3.25	0	81.96	0	1.05	0	0	9.74	0	0	0	0	0	0	-36.7	-36.7
Inverter Transformer	MV3-12 T	367674	4907594	2	0	0	56.1	56.1	1	3537.37	3.25	0	81.97	0	1.06	0	0	9.75	0	0	0	0	0	0	-36.72	-36.72
Inverter Transformer	MV3-13 T	367958	4907577	2	0	0	56.1	56.1	1	3564.35	3.25	0	82.04	0	1.07	0	0	9.79	0	0	0	0	0	0	-36.84	-36.84
Inverter Transformer	MV3-15 T	368351	4907477	2	0	0	56.1	56.1	1	3565.28	3.25	0	82.04	0	1.07	0	0	9.79	0	0	0	0	0	0	-36.84	-36.84
Inverter Transformer	MV3-16 T	368509	4907475	2	0	0	56.1	56.1	1	3614.49	3.25	0	82.16	0	1.09	0	0	9.87	0	0	0	0	0	0	-37.06	-37.06
Inverter Transformer	MV3-14 T	368678	4907498	2	0	0	56.1	56.1	1	3697.16	3.25	0	82.36	0	1.12	0	0	10	0	0	0	0	0	0	-37.42	-37.42
Inverter Transformer	MV3-10 T	368162	4907669	2	0	0	56.1	56.1	1	3698.55	3.25	0	82.36	0	1.12	0	0	10	0	0	0	0	0	0	-37.42	-37.42
Inverter Transformer	MV3-7 T	367951	4907754	2	0	0	56.1	56.1	1	3736.88	3.25	0	82.45	0	1.14	0	0	10.06	0	0	0	0	0	0	-37.59	-37.59
Inverter Transformer	MV3-11 T	368340	4907662	2	0	0	56.1	56.1	1	3738.81	3.25	0	82.45	0	1.14	0	0	10.06	0	0	0	0	0	0	-37.59	-37.59
Inverter Transformer	MV3-9 T	368517	4907703	2	0	0	56.1	56.1	1	3832.05	3.25	0	82.67	0	1.18	0	0	10.2	0	0	0	0	0	0	-37.99	-37.99
Inverter Transformer	MV3-6 T	368156	4907834	2	0	0	56.1	56.1	1	3857.49	3.25	0	82.73	0	1.19	0	0	10.24	0	0	0	0	0	0	-38.1	-38.1
Inverter Transformer	MV3-8 T	368685	4907712	2	0	0	56.1	56.1	1	3898.4	3.25	0	82.82	0	1.2	0	0	10.3	0	0	0	0	0	0	-38.27	-38.27

	Inverter Transformer	MV3-3 T	367944	4907927	2	0	0	56.1	56.1	1	3905.89	3.25	0	82.83	0	1.21	0	0	10.31	0	0	0	0	0	0	-38.3	-38.3
	Inverter Transformer	MV3-5 T	368335	4907843	2	0	0	56.1	56.1	1	3911.2	3.25	0	82.85	0	1.21	0	0	10.32	0	0	0	0	0	0	-38.32	-38.32
	Inverter Transformer	MV3-1 T	368150	4907976	2	0	0	56.1	56.1	1	3994.49	3.25	0	83.03	0	1.24	0	0	10.45	0	0	0	0	0	0	-38.66	-38.66
	Inverter Transformer	MV3-4 T	368507	4907925	2	0	0	56.1	56.1	1	4039.52	3.25	0	83.13	0	1.26	0	0	10.51	0	0	0	0	0	0	-38.84	-38.84
	Inverter Transformer	MV3-2 T	368677	4907928	2	0	0	56.1	56.1	1	4097.64	3.25	0	83.25	0	1.28	0	0	10.6	0	0	0	0	0	0	-39.07	-39.07
	Inverter Transformer	MV6-3 T	370202	4907140	2	0	0	56.1	56.1	1	4238.78	3.25	0	83.54	0	1.34	0	0	10.8	0	0	0	0	0	0	-39.63	-39.63
	Inverter Transformer	MV6-2 T	370091	4907339	2	0	0	56.1	56.1	1	4311.15	3.25	0	83.69	0	1.37	0	0	10.91	0	0	0	0	0	0	-39.91	-39.91
	Inverter Transformer	MV4-15 T	369170	4908481	2	0	0	56.1	56.1	1	4794.15	3.25	0	84.61	0	1.55	0	0	11.58	0	0	0	0	0	0	-41.69	-41.69
	Inverter Transformer	MV4-14 T	369182	4908507	2	0	0	56.1	56.1	1	4822.78	3.25	0	84.67	0	1.56	0	0	11.62	0	0	0	0	0	0	-41.79	-41.79
	Inverter Transformer	MV4-13 T	369057	4908605	2	0	0	56.1	56.1	1	4865.58	3.25	0	84.74	0	1.58	0	0	11.68	0	0	0	0	0	0	-41.94	-41.94
	Inverter Transformer	MV4-12 T	369049	4908803	2	0	0	56.1	56.1	1	5047.42	3.25	0	85.06	0	1.64	0	0	11.92	0	0	0	0	0	0	-42.56	-42.56
	Inverter Transformer	MV4-11 T	369269	4908855	2	0	0	56.1	56.1	1	5177.06	3.25	0	85.28	0	1.69	0	0	12.09	0	0	0	0	0	0	-43	-43
	Inverter Transformer	MV4-10 T	369307	4908858	2	0	0	56.1	56.1	1	5194.62	3.25	0	85.31	0	1.69	0	0	12.11	0	0	0	0	0	0	-43.06	-43.06
	Inverter Transformer	MV5-6 T	369987	4908507	2	0	0	56.1	56.1	1	5194.93	3.25	0	85.31	0	1.7	0	0	12.11	0	0	0	0	0	0	-43.06	-43.06
	Inverter Transformer	MV4-7 T	369040	4909001	2	0	0	56.1	56.1	1	5230.11	3.25	0	85.37	0	1.71	0	0	12.15	0	0	0	0	0	0	-43.17	-43.17
	Inverter Transformer	MV4-8 T	369262	4909001	2	0	0	56.1	56.1	1	5309.4	3.25	0	85.5	0	1.74	0	0	12.26	0	0	0	0	0	0	-43.43	-43.43
	Inverter Transformer	MV4-9 T	369284	4909001	2	0	0	56.1	56.1	1	5317.69	3.25	0	85.51	0	1.74	0	0	12.27	0	0	0	0	0	0	-43.46	-43.46
	Inverter Transformer	MV5-5 T	370021	4908690	2	0	0	56.1	56.1	1	5369.09	3.25	0	85.6	0	1.76	0	0	12.33	0	0	0	0	0	0	-43.63	-43.63
	Inverter Transformer	MV4-4 T	369033	4909199	2	0	0	56.1	56.1	1	5414.54	3.25	0	85.67	0	1.77	0	0	12.39	0	0	0	0	0	0	-43.77	-43.77
	Inverter Transformer	MV4-6 T	369249	4909192	2	0	0	56.1	56.1	1	5482.19	3.25	0	85.78	0	1.79	0	0	12.47	0	0	0	0	0	0	-43.99	-43.99
	Inverter Transformer	MV4-5 T	369283	4909199	2	0	0	56.1	56.1	1	5501.07	3.25	0	85.81	0	1.8	0	0	12.5	0	0	0	0	0	0	-44.05	-44.05
	Inverter Transformer	MV5-2 T	370011	4908853	2	0	0	56.1	56.1	1	5504.69	3.25	0	85.81	0	1.8	0	0	12.5	0	0	0	0	0	0	-44.06	-44.06
	Inverter Transformer	MV5-4 T	370330	4908707	2	0	0	56.1	56.1	1	5548.01	3.25	0	85.88	0	1.82	0	0	12.56	0	0	0	0	0	0	-44.2	-44.2
	Inverter Transformer	MV4-1 T	369017	4909397	2	0	0	56.1	56.1	1	5597.09	3.25	0	85.96	0	1.83	0	0	12.62	0	0	0	0	0	0	-44.35	-44.35
	Inverter Transformer	MV5-3 T	370237	4908851	2	0	0	56.1	56.1	1	5618.99	3.25	0	85.99	0	1.84	0	0	12.64	0	0	0	0	0	0	-44.42	-44.42
	Inverter Transformer	MV4-3 T	369234	4909397	2	0	0	56.1	56.1	1	5668.61	3.25	0	86.07	0	1.86	0	0	12.7	0	0	0	0	0	0	-44.57	-44.57
	Inverter Transformer	MV4-2 T	369267	4909397	2	0	0	56.1	56.1	1	5680.14	3.25	0	86.09	0	1.86	0	0	12.72	0	0	0	0	0	0	-44.61	-44.61
	Inverter Transformer	MV5-1 T	370015	4909142	2	0	0	56.1	56.1	1	5758.99	3.25	0	86.21	0	1.89	0	0	12.81	0	0	0	0	0	0	-44.85	-44.85
	Line Reactor	NGR	369421	4908787.5	5	0	0	45.4	45.4	1	5176.2	5.25	0	85.28	0	3.26	1.35	0.11	2.12	0	0	0	0	0	0	-46.65	-46.65
Limit. Valu	0	0																								
Level D/N:	23.8692	23.8692																								

Receiver: Vacant Lot Receptor
ID: G-V16
X: 367452.8
Y: 4903195.1
Z: 4.5
Ground: 0

ISO	Description	ID	X	Y	Z	Ground	ReflOrd	LxT	LxN	L/A	Dist.	hm	Freq	Adiv	K0b	Agr	Abar	z	Aatm	Afol	Ahous	Cmet	CmetN	Dc	RL	LtotT	LtotN
	Sol_Luce Substation	S_Substation	369426	4908792	3.5	0	0	112.1	112.1	1	5934.54	5.25	0	86.47	0	1.14	2.66	0.33	9.67	0	0	0	0	0	0	12.13	12.13
	Gardiner Substation	G_Sub	366586.3	4903349.9	2.5	0	0	90.8	90.8	1	880.22	4.25	0	69.89	0	0.46	3.66	0.3	2.27	0	0	0	0	0	0	14.49	14.49
	Inverter	MV1-15	365315	4904994	2	0	0	100.3	100.3	1	2793.96	3.25	0	79.92	0	0.32	0	0	15	0	0	0	0	0	0	5.06	5.06
	Inverters	G_Inv6	366788.5	4902972	2	0	0	87.7	87.7	1	700.77	3.25	0	67.91	0	2.41	0	0	1.04	0	0	0	0	0	0	16.3	16.3
	Inverters	G_Inv8	366844.5	4902838.5	2	0	0	87.7	87.7	1	705.12	3.25	0	67.97	0	2.41	0	0	1.04	0	0	0	0	0	0	16.24	16.24
	Inverters	G_Inv4	366732.8	4903105	2	0	0	87.7	87.7	1	725.62	3.25	0	68.21	0	2.41	0	0	1.07	0	0	0	0	0	0	15.97	15.97
	Inverters	G_Inv10	366900.7	4902704.8	2	0	0	87.7	87.7	1	738.39	3.25	0	68.37	0	2.41	0	0	1.09	0	0	0	0	0	0	15.8	15.8
	Inverter	MV1-12	365038	4905386	2	0	0	100.3	100.3	1	3260.57	3.25	0	81.27	0	0.41	0	0	15.83	0	0	0	0	0	0	2.81	2.81
	Inverters	G_Inv2	366676.9	4903239.1	2	0	0	87.7	87.7	1	777.15	3.25	0	68.81	0	2.42	0	0	1.14	0	0	0	0	0	0	15.29	15.29
	Inverter	MV1-11	364655	4905414	2	0	0	100.3	100.3	1	3570.88	3.25	0	82.06	0	0.46	0	0	16.35	0	0	0	0	0	0	1.44	1.44
	Inverters	G_Inv7	366694.6	4902824.7	2	0	0	87.7	87.7	1	843.84	3.25	0	69.53	0	2.43	0	0	1.23	0	0	0	0	0	0	14.48	14.48
	Inverter	MV1-8	364788	4905647	2	0	0	100.3	100.3	1	3621.18	3.25	0	82.18	0	0.47	0	0	16.43	0	0	0	0	0	0	1.23	1.23
	Inverters	G_Inv5	366638.5	4902958.1	2	0	0	87.7	87.7	1	848.09	3.25	0	69.57	0	2.43	0	0	1.23	0	0	0	0	0	0	14.43	14.43
	Inverters	G_Inv9	366750.9	4902691.8	2	0	0	87.7	87.7	1	863.7	3.25	0	69.73	0	2.43	0	0	1.25	0	0	0	0	0	0	14.25	14.25
	Inverters	G_Inv3	366583.7	4903091.4	2	0	0	87.7	87.7	1	875.27	3.25	0	69.84	0	2.43	0	0	1.27	0	0	0	0	0	0	14.12	14.12
	Inverter	MV1-9	364561	4905646	2	0	0	100.3	100.3	1	3790.7	3.25	0	82.57	0	0.5	0	0	16.71	0	0	0	0	0	0	0.53	0.53
	Inverter	MV1-4	364815	4905918	2	0	0	100.3	100.3	1	3791.07	3.25	0	82.58	0	0.5	0	0	16.71	0	0	0	0	0	0	0.53	0.53
	Inverter	MV2-3	365820	4906641	2	0	0	100.3	100.3	1	3813.17	3.25	0	82.63	0	0.5	0	0	16.75	0	0	0	0	0	0	0.44	0.44
	Inverter	MV1-5	364671	4905892	2	0	0	100.3	100.3	1	3874.49	3.25	0	82.76	0	0.51	0	0	16.85	0	0	0	0	0	0	0.19	0.19
	Inverter	MV2-4	365586	4906624	2	0	0	100.3	100.3	1	3904.14	3.25	0	82.83	0	0.51	0	0	16.89	0	0	0	0	0	0	0.07	0.07
	Inverter	MV1-2	364753	4906063	2	0	0	100.3	100.3	1	3938.75	3.25	0	82.91	0	0.52	0	0	16.95	0	0	0	0	0	0	-0.06	-0.06
	Inverters	G_Inv1	366526.4	4903225.8	2	0	0	87.7	87.7	1	926.91	3.25	0	70.34	0	2.44	0	0	1.33	0	0	0	0	0	0	13.55	13.55
	Inverter	MV1-6	364477	4905835	2	0	0	100.3	100.3	1	3978	3.25	0	82.99	0	0.52	0	0	17.01	0	0	0	0	0	0	-0.22	-0.22
	Inverter	MV1-1	364715	4906166	2	0	0	100.3	100.3	1	4040.02	3.25	0	83.13	0	0.53	0	0	17.11	0	0	0	0	0	0	-0.46	-0.46
	Inverter	MV3-21	368478	4907206	2	0	0	100.3	100.3	1	4139.85	3.25	0	83.34	0	0.55	0	0	17.27	0	0	0	0	0	0	-0.84	-0.84
	Inverter	MV1-14	365163	4905049	2	0	0	97.3	97.3	1	2946.21	3.25	0	80.39	0	0.35	0	0	15.28	0	0	0	0	0	0	1.3	1.3
	Inverter	MV3-18	367752	4907412	2	0	0	100.3	100.3	1	4227.5	3.25	0	83.52	0	0.56	0	0	17.41	0	0	0	0	0	0	-1.18	-1.18
	Inverter	MV3-19	368357	4907347	2	0	0	100.3	100.3	1	4249.22	3.25	0	83.57	0	0.56	0	0	17.44	0	0	0	0	0	0	-1.26	-1.26
	Inverter	MV3-20	368689	4907317	2	0	0	100.3	100.3	1	4303.28	3.25	0	83.68	0	0.57	0	0	17.53	0	0	0	0	0	0	-1.46	-1.46
	Inverter	MV3-17	368178	4907472	2	0	0	100.3	100.3	1	4337.95	3.25	0	83.75	0	0.57	0	0	17.58	0	0	0	0	0	0	-1.59	-1.59
	Inverter	MV3-15	368357	4907477	2	0	0	100.3	100.3	1	4376.33	3.25	0	83.82	0	0.58	0	0	17.64	0	0	0	0	0	0	-1.73	-1.73
	Inverter	MV3-12	367668	4907594	2	0	0	100.3	100.3	1	4404.16	3.25	0	83.88	0	0.58	0	0	17.68	0	0	0	0	0	0	-1.83	-1.83
	Inverter	MV3-16	368514	4907475	2	0	0	100.3	100.3	1	4409.5	3.25	0	83.89	0	0.58	0	0	17.69	0	0	0	0	0	0	-1.85	-1.85
	Inverter	MV3-13	367963	4907577	2	0	0	100.3	100.3	1	4411.5	3.25	0	83.89	0	0.58	0	0	17.69	0	0	0	0	0	0	-1.85	-1.85

Inverter	MV3-14	368684	4907498	2	0	0	100.3	100.3	1	4475.58	3.25	0	84.02	0	0.59	0	0	17.79	0	0	0	0	0	0	-2.09	-2.09
Inverter	MV3-10	368167	4907669	2	0	0	100.3	100.3	1	4530.55	3.25	0	84.12	0	0.59	0	0	17.88	0	0	0	0	0	0	-2.28	-2.28
Inverter	MV3-11	368346	4907662	2	0	0	100.3	100.3	1	4555.33	3.25	0	84.17	0	0.6	0	0	17.91	0	0	0	0	0	0	-2.37	-2.37
Inverter	MV3-7	367945	4907754	2	0	0	100.3	100.3	1	4585.39	3.25	0	84.23	0	0.6	0	0	17.96	0	0	0	0	0	0	-2.48	-2.48
Inverter	MV3-9	368512	4907703	2	0	0	100.3	100.3	1	4630.67	3.25	0	84.31	0	0.61	0	0	18.03	0	0	0	0	0	0	-2.64	-2.64
Inverter	MV3-8	368680	4907712	2	0	0	100.3	100.3	1	4680.64	3.25	0	84.41	0	0.61	0	0	18.1	0	0	0	0	0	0	-2.81	-2.81
Inverter	MV3-6	368162	4907834	2	0	0	100.3	100.3	1	4692.8	3.25	0	84.43	0	0.61	0	0	18.12	0	0	0	0	0	0	-2.85	-2.85
Inverter	MV3-3	367939	4907927	2	0	0	100.3	100.3	1	4756.81	3.25	0	84.55	0	0.62	0	0	18.22	0	0	0	0	0	0	-3.07	-3.07
Inverter	MV1-13	364731	4905241	2	0	0	97.3	97.3	1	3404.98	3.25	0	81.64	0	0.44	0	0	16.07	0	0	0	0	0	0	-0.84	-0.84
Inverter	MV6-3	370207	4907140	2	0	0	100.3	100.3	1	4811.22	3.25	0	84.65	0	0.62	0	0	18.3	0	0	0	0	0	0	-3.26	-3.26
Inverter	MV1-10	365004	4905564	2	0	0	97.3	97.3	1	3407.1	3.25	0	81.65	0	0.44	0	0	16.08	0	0	0	0	0	0	-0.85	-0.85
Inverter	MV6-2	370085	4907339	2	0	0	100.3	100.3	1	4909.21	3.25	0	84.82	0	0.63	0	0	18.45	0	0	0	0	0	0	-3.59	-3.59
Inverter	MV1-7	364925	4905782	2	0	0	97.3	97.3	1	3616.88	3.25	0	82.17	0	0.47	0	0	16.43	0	0	0	0	0	0	-1.75	-1.75
Inverter	MV2-1	365842	4906816	2	0	0	97.3	97.3	1	3963.03	3.25	0	82.96	0	0.52	0	0	16.99	0	0	0	0	0	0	-3.16	-3.16
Inverter	MV4-11	369264	4908855	2	0	0	100.3	100.3	1	5942.64	3.25	0	86.48	0	0.7	0	0	19.92	0	0	0	0	0	0	-6.79	-6.79
Inverter	MV4-10	369312	4908858	2	0	0	100.3	100.3	1	5960.29	3.25	0	86.51	0	0.7	0	0	19.94	0	0	0	0	0	0	-6.84	-6.84
Inverter	MV4-7	369035	4909001	2	0	0	100.3	100.3	1	6017.63	3.25	0	86.59	0	0.71	0	0	20.02	0	0	0	0	0	0	-7	-7
Inverter	MV5-5	370015	4908690	2	0	0	100.3	100.3	1	6062.9	3.25	0	86.65	0	0.71	0	0	20.08	0	0	0	0	0	0	-7.13	-7.13
Inverter	MV4-8	369256	4909001	2	0	0	100.3	100.3	1	6079.47	3.25	0	86.68	0	0.71	0	0	20.1	0	0	0	0	0	0	-7.17	-7.17
Inverter	MV4-9	369289	4909001	2	0	0	100.3	100.3	1	6089.34	3.25	0	86.69	0	0.71	0	0	20.11	0	0	0	0	0	0	-7.2	-7.2
Inverter	MV4-4	369027	4909199	2	0	0	100.3	100.3	1	6206.85	3.25	0	86.86	0	0.71	0	0	20.27	0	0	0	0	0	0	-7.53	-7.53
Inverter	MV5-2	370006	4908853	2	0	0	100.3	100.3	1	6207.31	3.25	0	86.86	0	0.71	0	0	20.27	0	0	0	0	0	0	-7.53	-7.53
Inverter	MV5-4	370324	4908707	2	0	0	100.3	100.3	1	6214.89	3.25	0	86.87	0	0.71	0	0	20.28	0	0	0	0	0	0	-7.55	-7.55
Inverter	MV4-6	369243	4909192	2	0	0	100.3	100.3	1	6258.4	3.25	0	86.93	0	0.71	0	0	20.34	0	0	0	0	0	0	-7.67	-7.67
Inverter	MV4-5	369289	4909199	2	0	0	100.3	100.3	1	6278.41	3.25	0	86.96	0	0.71	0	0	20.37	0	0	0	0	0	0	-7.72	-7.72
Inverter	MV5-3	370231	4908851	2	0	0	100.3	100.3	1	6301.4	3.25	0	86.99	0	0.71	0	0	20.4	0	0	0	0	0	0	-7.79	-7.79
Inverter	MV4-1	369011	4909397	2	0	0	100.3	100.3	1	6394.65	3.25	0	87.12	0	0.71	0	0	20.52	0	0	0	0	0	0	-8.04	-8.04
Inverter	MV4-3	369229	4909397	2	0	0	100.3	100.3	1	6451.24	3.25	0	87.19	0	0.71	0	0	20.6	0	0	0	0	0	0	-8.19	-8.19
Inverter	MV4-2	369272	4909397	2	0	0	100.3	100.3	1	6463.21	3.25	0	87.21	0	0.71	0	0	20.61	0	0	0	0	0	0	-8.22	-8.22
Inverter	MV5-1	370020	4909142	2	0	0	100.3	100.3	1	6477.36	3.25	0	87.23	0	0.71	0	0	20.63	0	0	0	0	0	0	-8.26	-8.26
Inverter	MV6-1	370235	4907364	2	0	0	97.3	97.3	1	5012.02	3.25	0	85	0	0.64	0	0	18.6	0	0	0	0	0	0	-6.93	-6.93
DSTATCOM - 10 MVAR #2	DSAT2	369403	4908757	2.5	0	0	96.6	96.6	1	5893.9	3.5	0	86.41	0	3.77	0	0	3.79	0	0	0	0	0	0	2.67	2.67
DSTATCOM - 10 MVAR #1	DSAT1	369437	4908757	2.5	0	0	96.6	96.6	1	5905.23	3.5	0	86.42	0	3.77	0	0	3.79	0	0	0	0	0	0	2.65	2.65
SubstationTransformer	W_ST	369711.17	4906112.3	2.5	0	0	92	92	1	3689.19	3.5	0	82.34	0	0.26	0	-0.11	6.95	0	0	0	0	0	0	2.44	2.44
Westbrook Inverter Enclosur	W_INV3	369508	4906164	2	0	0	89.1	89.1	1	3610.85	3.25	0	82.15	0	1.3	0	0	10.52	0	0	0	0	0	0	-4.92	-4.92
Westbrook Inverter Enclosur	W_INV4	369673	4906164	2	0	0	89.1	89.1	1	3707.24	3.25	0	82.38	0	1.32	0	0	10.66	0	0	0	0	0	0	-5.31	-5.31
Westbrook Inverter Enclosur	W_INV2	369374	4906388	2	0	0	89.1	89.1	1	3726.34	3.25	0	82.43	0	1.32	0	0	10.69	0	0	0	0	0	0	-5.38	-5.38
Inverter	MV2-2	365977	4906654	2	0	0	89.1	89.1	1	3760.58	3.25	0	82.51	0	1.33	0	0	10.74	0	0	0	0	0	0	-5.52	-5.52
Westbrook Inverter Enclosur	W_INV7	369780	4906417	2	0	0	89.1	89.1	1	3974.48	3.25	0	82.99	0	1.39	0	0	11.05	0	0	0	0	0	0	-6.36	-6.36
Westbrook Inverter Enclosur	W_INV5	369719	4906574	2	0	0	89.1	89.1	1	4068.49	3.25	0	83.19	0	1.41	0	0	11.18	0	0	0	0	0	0	-6.72	-6.72
Inverter	MV3-22	368656	4907142	2	0	0	89.1	89.1	1	4126.22	3.25	0	83.31	0	1.42	0	0	11.26	0	0	0	0	0	0	-6.94	-6.94
Inverter	MV1-3	364440	4906039	2	0	0	89.1	89.1	1	4143.03	3.25	0	83.35	0	1.43	0	0	11.29	0	0	0	0	0	0	-7	-7
Westbrook Inverter Enclosur	W_INV6	369875	4906578	2	0	0	89.1	89.1	1	4160.66	3.25	0	83.38	0	1.43	0	0	11.31	0	0	0	0	0	0	-7.07	-7.07
Inverter	MV3-5	368340	4907843	2	0	0	89.1	89.1	1	4731.82	3.25	0	84.5	0	1.57	0	0	12.1	0	0	0	0	0	0	-9.12	-9.12
Inverter	MV3-1	368156	4907976	2	0	0	89.1	89.1	1	4832.34	3.25	0	84.68	0	1.6	0	0	12.24	0	0	0	0	0	0	-9.46	-9.46
Inverter	MV3-4	368502	4907925	2	0	0	89.1	89.1	1	4844.87	3.25	0	84.71	0	1.6	0	0	12.26	0	0	0	0	0	0	-9.5	-9.5
Inverter	MV3-2	368671	4907928	2	0	0	89.1	89.1	1	4887.16	3.25	0	84.78	0	1.61	0	0	12.31	0	0	0	0	0	0	-9.65	-9.65
Fixed Reactor Bank 1	FRB1	369378	4908755	6	0	0	89.8	89.8	1	5883.78	5.25	0	86.39	0	-0.43	0	0	9.62	0	0	0	0	0	0	-5.8	-5.8
Fixed Reactor Bank 2	FRB2	369464	4908755	6	0	0	89.8	89.8	1	5912.48	5.25	0	86.44	0	-0.43	0	0	9.65	0	0	0	0	0	0	-5.88	-5.88
Westbrook Inverter Enclosur	W_INV1	369409	4906578	2	0	0	86.1	86.1	1	3907.78	3.25	0	82.84	0	1.37	0	0	10.95	0	0	0	0	0	0	-9.1	-9.1
Inverter	MV4-15	369176	4908481	2	0	0	89.1	89.1	1	5559.69	3.25	0	85.9	0	1.78	0	0	13.2	0	0	0	0	0	0	-11.82	-11.82
Inverter	MV4-14	369176	4908507	2	0	0	89.1	89.1	1	5584.42	3.25	0	85.94	0	1.78	0	0	13.23	0	0	0	0	0	0	-11.9	-11.9
Inverter	MV4-13	369051	4908605	2	0	0	89.1	89.1	1	5641.03	3.25	0	86.03	0	1.8	0	0	13.3	0	0	0	0	0	0	-12.07	-12.07
Inverter	MV4-12	369043	4908803	2	0	0	89.1	89.1	1	5829	3.25	0	86.31	0	1.84	0	0	13.55	0	0	0	0	0	0	-12.64	-12.64
Inverter	MV5-6	369982	4908507	2	0	0	89.1	89.1	1	5883.29	3.25	0	86.39	0	1.86	0	0	13.61	0	0	0	0	0	0	-12.81	-12.81
Inverter	MV6-4	370250	4906966	2	0	0	86.1	86.1	1	4695.11	3.25	0	84.43	0	1.56	0	0	12.05	0	0	0	0	0	0	-11.99	-11.99
Westbrook Inverter Transfor	W_INVTR1	369403	4906578	2	0	0	78.2	78.2	1	3904.78	3.25	0	82.83	0	-2.94	0	0	2.02	0	0	0	0	0	0	-3.67	-3.67
Westbrook Inverter Transfor	W_INVTR3	369514	4906164	2	0	0	77.3	77.3	1	3614.27	3.25	0	82.16	0	-2.87	0	0	1.91	0	0	0	0	0	0	-3.85	-3.85
Westbrook Inverter Transfor	W_INVTR4	369679	4906164	2	0	0	77.3	77.3	1	3710.84	3.25	0	82.39	0	-2.9	0	0	1.94	0	0	0	0	0	0	-4.1	-4.1
Westbrook Inverter Transfor	W_INVTR2	369368	4906388	2	0	0	77.3	77.3	1	3723.25	3.25	0	82.42	0	-2.9	0	0	1.95	0	0	0	0	0	0	-4.13	-4.13
Westbrook Inverter Transfor	W_INVTR7	369786	4906417	2	0	0	77.3	77.3	1	3978	3.25	0	82.99	0	-2.96	0	0	2.05	0	0	0	0	0	0	-4.74	-4.74
Westbrook Inverter Transfor	W_INVTR5	369725	4906574	2	0	0	77.3	77.3	1	4071.84	3.25	0	83.2	0	-2.98	0	0	2.08	0	0	0	0	0	0	-4.96	-4.96
Westbrook Inverter Transfor	W_INVTR6	369881	4906578	2	0	0	77.3	77.3	1	4164.15	3.25	0	83.39	0	-3	0	0	2.12	0	0	0	0	0	0	-5.16	-5.16
Inverter Transformer	MV1-14 T	365157	4905049	2	0	0	69.4	69.4	1	2950.87	3.25	0	80.4	0	2.49	0	0	5.84	0	0	0	0	0	0	-19.38	-19.38
Inverter Transformer	MV1-10 T	365010	4905564	2	0	0	69.4	69.4	1	3402.79	3.25	0	81.64	0	2.63	0	0	6.21	0	0	0	0	0	0	-21.13	-21.13
Inverter Transformer	MV1-13 T	364725	4905241	2	0	0	69.4	69.4	1	3409.78	3.25	0	81.65	0	2.63	0	0	6.22	0	0	0	0	0	0	-21.15	-21.15
Inverter Transformer	MV1-7 T	364919	4905782	2	0	0	69.4	69.4	1	3621.08	3.25	0	82.18	0	2.69	0	0	6.39	0	0	0	0	0	0	-21.9	-21.9
Inverter Transformer	MV2-1 T	365836	4906816	2	0	0	69.4	69.4	1	3965.47	3.25	0	82.97	0	2.78	0	0	6.65	0	0	0	0	0	0	-23.04	-23.04
Inverter Transformer	MV6-4 T	370244	4906966	2	0	0	69.4	69.4	1	4691.53	3.25	0	84.43	0	2.95	0	0	7.17	0	0	0	0	0	0	-25.2	-25.2
Inverter Transformer	MV6-1 T	370230	4907364	2	0	0	69.4	69.4	1	5009.25	3.25	0	85	0	3.01	0	0	7.39	0	0	0	0	0	0	-26.05	-26.05
Inverter Transformer	MV1-15 T	365309	4904994	2	0	0	56.1	56.1	1	2798.56	3.25	0	79.94	0	0.74	0	0	8.52	0	0	0	0	0	0	-33.15	-33.15
Inverter Transformer	MV1-12 T	365044	4905386	2	0	0	56.1	56.1	1	3256.13	3.25	0	81.25	0	0.94	0	0	9.29	0	0	0	0	0	0	-35.43	-35.43
Inverter Transformer	MV1-11 T	364649	4905414	2	0	0	56.1	56.1	1	3575.59	3.25	0	82.07	0	1.07	0	0	9.81	0	0	0	0	0	0	-36.89	-36.89
Inverter Transformer	MV1-8 T	364782	4905647	2	0	0	56.1	56.1	1	3625.6	3.25	0	82.19	0	1.09	0	0	9.89	0	0	0	0	0	0	-37.11	-37.11

	Inverter Transformer	MV2-2 T	365982	4906654	2	0	0	56.1	56.1	1	3758.62	3.25	0	82.5	0	1.15	0	0	10.09	0	0	0	0	0	0	-37.68	-37.68
	Inverter Transformer	MV1-4 T	364821	4905918	2	0	0	56.1	56.1	1	3786.89	3.25	0	82.57	0	1.16	0	0	10.13	0	0	0	0	0	0	-37.8	-37.8
	Inverter Transformer	MV1-9 T	364555	4905646	2	0	0	56.1	56.1	1	3795.28	3.25	0	82.58	0	1.16	0	0	10.15	0	0	0	0	0	0	-37.83	-37.83
	Inverter Transformer	MV2-3 T	365814	4906641	2	0	0	56.1	56.1	1	3815.74	3.25	0	82.63	0	1.17	0	0	10.18	0	0	0	0	0	0	-37.92	-37.92
	Inverter Transformer	MV1-5 T	364676	4905892	2	0	0	56.1	56.1	1	3870.9	3.25	0	82.76	0	1.19	0	0	10.26	0	0	0	0	0	0	-38.15	-38.15
	Inverter Transformer	MV2-4 T	365590	4906628	2	0	0	56.1	56.1	1	3905.74	3.25	0	82.83	0	1.21	0	0	10.31	0	0	0	0	0	0	-38.3	-38.3
	Inverter Transformer	MV1-2 T	364759	4906063	2	0	0	56.1	56.1	1	3934.64	3.25	0	82.9	0	1.22	0	0	10.36	0	0	0	0	0	0	-38.41	-38.41
	Inverter Transformer	MV1-6 T	364482	4905835	2	0	0	56.1	56.1	1	3974.26	3.25	0	82.99	0	1.23	0	0	10.42	0	0	0	0	0	0	-38.58	-38.58
	Inverter Transformer	MV1-1 T	364721	4906166	2	0	0	56.1	56.1	1	4035.96	3.25	0	83.12	0	1.26	0	0	10.51	0	0	0	0	0	0	-38.83	-38.83
	Inverter Transformer	MV3-22 T	368661	4907142	2	0	0	56.1	56.1	1	4127.68	3.25	0	83.31	0	1.29	0	0	10.64	0	0	0	0	0	0	-39.19	-39.19
	Inverter Transformer	MV3-21 T	368484	4907206	2	0	0	56.1	56.1	1	4141.34	3.25	0	83.34	0	1.3	0	0	10.66	0	0	0	0	0	0	-39.25	-39.25
	Inverter Transformer	MV1-3 T	364435	4906039	2	0	0	56.1	56.1	1	4146.67	3.25	0	83.35	0	1.3	0	0	10.67	0	0	0	0	0	0	-39.27	-39.27
	Inverter Transformer	MV3-18 T	367757	4907412	2	0	0	56.1	56.1	1	4227.86	3.25	0	83.52	0	1.33	0	0	10.79	0	0	0	0	0	0	-39.59	-39.59
	Inverter Transformer	MV3-19 T	368352	4907347	2	0	0	56.1	56.1	1	4248.16	3.25	0	83.56	0	1.34	0	0	10.82	0	0	0	0	0	0	-39.67	-39.67
	Inverter Transformer	MV3-20 T	368683	4907317	2	0	0	56.1	56.1	1	4301.56	3.25	0	83.67	0	1.36	0	0	10.89	0	0	0	0	0	0	-39.87	-39.87
	Inverter Transformer	MV3-17 T	368183	4907472	2	0	0	56.1	56.1	1	4338.79	3.25	0	83.75	0	1.38	0	0	10.95	0	0	0	0	0	0	-40.01	-40.01
	Inverter Transformer	MV3-15 T	368351	4907477	2	0	0	56.1	56.1	1	4375.09	3.25	0	83.82	0	1.39	0	0	11	0	0	0	0	0	0	-40.15	-40.15
	Inverter Transformer	MV3-12 T	367674	4907594	2	0	0	56.1	56.1	1	4404.46	3.25	0	83.88	0	1.4	0	0	11.04	0	0	0	0	0	0	-40.26	-40.26
	Inverter Transformer	MV3-16 T	368509	4907475	2	0	0	56.1	56.1	1	4408.3	3.25	0	83.89	0	1.4	0	0	11.05	0	0	0	0	0	0	-40.28	-40.28
	Inverter Transformer	MV3-13 T	367958	4907577	2	0	0	56.1	56.1	1	4410.93	3.25	0	83.89	0	1.41	0	0	11.05	0	0	0	0	0	0	-40.29	-40.29
	Inverter Transformer	MV3-14 T	368678	4907498	2	0	0	56.1	56.1	1	4473.93	3.25	0	84.01	0	1.43	0	0	11.14	0	0	0	0	0	0	-40.52	-40.52
	Inverter Transformer	MV3-10 T	368162	4907669	2	0	0	56.1	56.1	1	4529.76	3.25	0	84.12	0	1.45	0	0	11.22	0	0	0	0	0	0	-40.73	-40.73
	Inverter Transformer	MV3-11 T	368340	4907662	2	0	0	56.1	56.1	1	4554.15	3.25	0	84.17	0	1.46	0	0	11.25	0	0	0	0	0	0	-40.82	-40.82
	Inverter Transformer	MV3-7 T	367951	4907754	2	0	0	56.1	56.1	1	4586.04	3.25	0	84.23	0	1.47	0	0	11.3	0	0	0	0	0	0	-40.94	-40.94
	Inverter Transformer	MV3-9 T	368517	4907703	2	0	0	56.1	56.1	1	4631.81	3.25	0	84.32	0	1.49	0	0	11.36	0	0	0	0	0	0	-41.1	-41.1
	Inverter Transformer	MV3-8 T	368685	4907712	2	0	0	56.1	56.1	1	4681.96	3.25	0	84.41	0	1.51	0	0	11.43	0	0	0	0	0	0	-41.29	-41.29
	Inverter Transformer	MV3-6 T	368156	4907834	2	0	0	56.1	56.1	1	4691.9	3.25	0	84.43	0	1.51	0	0	11.44	0	0	0	0	0	0	-41.32	-41.32
	Inverter Transformer	MV3-5 T	368335	4907843	2	0	0	56.1	56.1	1	4730.88	3.25	0	84.5	0	1.53	0	0	11.49	0	0	0	0	0	0	-41.46	-41.46
	Inverter Transformer	MV3-3 T	367944	4907927	2	0	0	56.1	56.1	1	4757.33	3.25	0	84.55	0	1.54	0	0	11.53	0	0	0	0	0	0	-41.56	-41.56
	Inverter Transformer	MV6-3 T	370202	4907140	2	0	0	56.1	56.1	1	4808.36	3.25	0	84.64	0	1.56	0	0	11.6	0	0	0	0	0	0	-41.74	-41.74
	Inverter Transformer	MV3-1 T	368150	4907976	2	0	0	56.1	56.1	1	4831.47	3.25	0	84.68	0	1.56	0	0	11.63	0	0	0	0	0	0	-41.82	-41.82
	Inverter Transformer	MV3-4 T	368507	4907925	2	0	0	56.1	56.1	1	4845.96	3.25	0	84.71	0	1.57	0	0	11.65	0	0	0	0	0	0	-41.87	-41.87
	Inverter Transformer	MV3-2 T	368677	4907928	2	0	0	56.1	56.1	1	4888.66	3.25	0	84.78	0	1.58	0	0	11.71	0	0	0	0	0	0	-42.02	-42.02
	Inverter Transformer	MV6-2 T	370091	4907339	2	0	0	56.1	56.1	1	4912.43	3.25	0	84.83	0	1.59	0	0	11.74	0	0	0	0	0	0	-42.1	-42.1
	Inverter Transformer	MV4-15 T	369170	4908481	2	0	0	56.1	56.1	1	5557.83	3.25	0	85.9	0	1.82	0	0	12.57	0	0	0	0	0	0	-44.23	-44.23
	Inverter Transformer	MV4-14 T	369182	4908507	2	0	0	56.1	56.1	1	5586.27	3.25	0	85.94	0	1.83	0	0	12.6	0	0	0	0	0	0	-44.32	-44.32
	Inverter Transformer	MV4-13 T	369057	4908605	2	0	0	56.1	56.1	1	5642.74	3.25	0	86.03	0	1.85	0	0	12.67	0	0	0	0	0	0	-44.49	-44.49
	Inverter Transformer	MV4-12 T	369049	4908803	2	0	0	56.1	56.1	1	5830.64	3.25	0	86.31	0	1.91	0	0	12.9	0	0	0	0	0	0	-45.07	-45.07
	Inverter Transformer	MV5-6 T	369987	4908507	2	0	0	56.1	56.1	1	5885.44	3.25	0	86.4	0	1.93	0	0	12.97	0	0	0	0	0	0	-45.23	-45.23
	Inverter Transformer	MV4-11 T	369269	4908855	2	0	0	56.1	56.1	1	5944.16	3.25	0	86.48	0	1.95	0	0	13.04	0	0	0	0	0	0	-45.41	-45.41
	Inverter Transformer	MV4-10 T	369307	4908858	2	0	0	56.1	56.1	1	5958.73	3.25	0	86.5	0	1.95	0	0	13.05	0	0	0	0	0	0	-45.45	-45.45
	Inverter Transformer	MV4-7 T	369040	4909001	2	0	0	56.1	56.1	1	6018.94	3.25	0	86.59	0	1.97	0	0	13.13	0	0	0	0	0	0	-45.63	-45.63
	Inverter Transformer	MV5-5 T	370021	4908690	2	0	0	56.1	56.1	1	6065.44	3.25	0	86.66	0	1.99	0	0	13.18	0	0	0	0	0	0	-45.76	-45.76
	Inverter Transformer	MV4-8 T	369262	4909001	2	0	0	56.1	56.1	1	6081.26	3.25	0	86.68	0	1.99	0	0	13.2	0	0	0	0	0	0	-45.81	-45.81
	Inverter Transformer	MV4-9 T	369284	4909001	2	0	0	56.1	56.1	1	6087.84	3.25	0	86.69	0	1.99	0	0	13.21	0	0	0	0	0	0	-45.83	-45.83
	Inverter Transformer	MV4-4 T	369033	4909199	2	0	0	56.1	56.1	1	6208.37	3.25	0	86.86	0	2.03	0	0	13.35	0	0	0	0	0	0	-46.18	-46.18
	Inverter Transformer	MV5-2 T	370011	4908853	2	0	0	56.1	56.1	1	6209.37	3.25	0	86.86	0	2.03	0	0	13.35	0	0	0	0	0	0	-46.18	-46.18
	Inverter Transformer	MV5-4 T	370330	4908707	2	0	0	56.1	56.1	1	6217.66	3.25	0	86.87	0	2.03	0	0	13.36	0	0	0	0	0	0	-46.2	-46.2
	Inverter Transformer	MV4-6 T	369249	4909192	2	0	0	56.1	56.1	1	6260.12	3.25	0	86.93	0	2.05	0	0	13.41	0	0	0	0	0	0	-46.33	-46.33
	Inverter Transformer	MV4-5 T	369283	4909199	2	0	0	56.1	56.1	1	6276.66	3.25	0	86.95	0	2.05	0	0	13.43	0	0	0	0	0	0	-46.37	-46.37
	Inverter Transformer	MV5-3 T	370237	4908851	2	0	0	56.1	56.1	1	6304.04	3.25	0	86.99	0	2.06	0	0	13.46	0	0	0	0	0	0	-46.45	-46.45
	Inverter Transformer	MV4-1 T	369017	4909397	2	0	0	56.1	56.1	1	6396.12	3.25	0	87.12	0	2.09	0	0	13.56	0	0	0	0	0	0	-46.71	-46.71
	Inverter Transformer	MV4-3 T	369234	4909397	2	0	0	56.1	56.1	1	6452.62	3.25	0	87.19	0	2.1	0	0	13.63	0	0	0	0	0	0	-46.87	-46.87
	Inverter Transformer	MV4-2 T	369267	4909397	2	0	0	56.1	56.1	1	6461.8	3.25	0	87.21	0	2.11	0	0	13.64	0	0	0	0	0	0	-46.89	-46.89
	Inverter Transformer	MV5-1 T	370015	4909142	2	0	0	56.1	56.1	1	6475.38	3.25	0	87.23	0	2.11	0	0	13.65	0	0	0	0	0	0	-46.93	-46.93
	Line Reactor	NGR	369421	4908787.5	5	0	0	45.4	45.4	1	5928.64	5.25	0	86.46	0	3.24	1.36	0.11	2.42	0	0	0	0	0	0	-48.13	-48.13
Limit. Valu	0	0																								
Level D/N:	26.2144	26.2144																								

Receiver: Vacant Lot Receptor
ID: G-V17
X: 367515.8
Y: 4903272.4
Z: 4.5
Ground: 0

ISO	Description	ID	X	Y	Z	Ground	ReflOrd	LxT	LxN	L/A	Dist.	hm	Freq	Adiv	K0b	Agr	Abar	z	Aatm	Afol	Ahous	Cmet	CmetN	Dc	RL	LtotT	LtotN
	Sol_Luce Substation	S_Substation	369426	4908792	3.5	0	0	112.1	112.1	1	5840.79	5.25	0	86.33	0	1.12	2.68	0.33	9.57	0	0	0	0	0	0	12.38	12.38
	Inverter	MV1-15	365315	4904994	2	0	0	100.3	100.3	1	2794.18	3.25	0	79.93	0	0.32	0	0	15	0	0	0	0	0	0	5.06	5.06
	Gardiner Substation	G_Sub	366586.3	4903349.9	2.5	0	0	90.8	90.8	1	932.73	4.25	0	70.4	0	0.58	4.01	0.3	2.38	0	0	0	0	0	0	13.41	13.41
	Inverter	MV1-12	365038	4905386	2	0	0	100.3	100.3	1	3256.81	3.25	0	81.26	0	0.41	0	0	15.82	0	0	0	0	0	0	2.83	2.83
	Inverters	G_Inv6	366788.5	4902972	2	0	0	87.7	87.7	1	786.9	3.25	0	68.92	0	2.42	0	0	1.15	0	0	0	0	0	0	15.17	15.17
	Inverters	G_Inv8	366844.5	4902838.5	2	0	0	87.7	87.7	1	799.32	3.25	0	69.05	0	2.42	0	0	1.17	0	0	0	0	0	0	15.02	15.02
	Inverters	G_Inv4	366732.8	4903105	2	0	0	87.7	87.7	1	800.7	3.25	0	69.07	0	2.42	0	0	1.17	0	0	0	0	0	0	15	15

Inverter	MV1-11	364655	4905414	2	0	0	100.3	100.3	1	3573.6	3.25	0	82.06	0	0.46	0	0	16.35	0	0	0	0	0	0	1.43	1.43
Inverters	G_Inv10	366900.7	4902704.8	2	0	0	87.7	87.7	1	836.97	3.25	0	69.45	0	2.43	0	0	1.22	0	0	0	0	0	0	14.56	14.56
Inverters	G_Inv2	366676.9	4903239.1	2	0	0	87.7	87.7	1	839.56	3.25	0	69.48	0	2.43	0	0	1.22	0	0	0	0	0	0	14.53	14.53
Inverter	MV1-8	364788	4905647	2	0	0	100.3	100.3	1	3616.58	3.25	0	82.17	0	0.47	0	0	16.43	0	0	0	0	0	0	1.25	1.25
Inverter	MV2-3	365820	4906641	2	0	0	100.3	100.3	1	3771.37	3.25	0	82.53	0	0.49	0	0	16.68	0	0	0	0	0	0	0.61	0.61
Inverter	MV1-4	364815	4905918	2	0	0	100.3	100.3	1	3780.68	3.25	0	82.55	0	0.5	0	0	16.69	0	0	0	0	0	0	0.57	0.57
Inverter	MV1-9	364561	4905646	2	0	0	100.3	100.3	1	3790.1	3.25	0	82.57	0	0.5	0	0	16.71	0	0	0	0	0	0	0.53	0.53
Inverter	MV1-5	364671	4905892	2	0	0	100.3	100.3	1	3867.2	3.25	0	82.75	0	0.51	0	0	16.84	0	0	0	0	0	0	0.22	0.22
Inverter	MV2-4	365586	4906624	2	0	0	100.3	100.3	1	3867.47	3.25	0	82.75	0	0.51	0	0	16.84	0	0	0	0	0	0	0.22	0.22
Inverter	MV1-2	364753	4906063	2	0	0	100.3	100.3	1	3926.9	3.25	0	82.88	0	0.52	0	0	16.93	0	0	0	0	0	0	-0.02	-0.02
Inverter	MV1-6	364477	4905835	2	0	0	100.3	100.3	1	3975.08	3.25	0	82.99	0	0.52	0	0	17.01	0	0	0	0	0	0	-0.21	-0.21
Inverters	G_Inv5	366638.5	4902958.1	2	0	0	87.7	87.7	1	931.9	3.25	0	70.39	0	2.44	0	0	1.34	0	0	0	0	0	0	13.49	13.49
Inverters	G_Inv7	366694.6	4902824.7	2	0	0	87.7	87.7	1	935.31	3.25	0	70.42	0	2.44	0	0	1.34	0	0	0	0	0	0	13.46	13.46
Inverter	MV1-1	364715	4906166	2	0	0	100.3	100.3	1	4027.08	3.25	0	83.1	0	0.53	0	0	17.09	0	0	0	0	0	0	-0.41	-0.41
Inverter	MV3-21	368478	4907206	2	0	0	100.3	100.3	1	4049.57	3.25	0	83.15	0	0.53	0	0	17.13	0	0	0	0	0	0	-0.5	-0.5
Inverters	G_Inv3	366583.7	4903091.4	2	0	0	87.7	87.7	1	949.51	3.25	0	70.55	0	2.44	0	0	1.36	0	0	0	0	0	0	13.31	13.31
Inverters	G_Inv9	366750.9	4902691.8	2	0	0	87.7	87.7	1	960.3	3.25	0	70.65	0	2.44	0	0	1.38	0	0	0	0	0	0	13.19	13.19
Inverter	MV3-18	367752	4907412	2	0	0	100.3	100.3	1	4146.33	3.25	0	83.35	0	0.55	0	0	17.28	0	0	0	0	0	0	-0.87	-0.87
Inverter	MV3-19	368357	4907347	2	0	0	100.3	100.3	1	4160.53	3.25	0	83.38	0	0.55	0	0	17.3	0	0	0	0	0	0	-0.92	-0.92
Inverter	MV1-14	365163	4905049	2	0	0	97.3	97.3	1	2948.22	3.25	0	80.39	0	0.35	0	0	15.28	0	0	0	0	0	0	1.29	1.29
Inverter	MV3-20	368689	4907317	2	0	0	100.3	100.3	1	4211.32	3.25	0	83.49	0	0.56	0	0	17.38	0	0	0	0	0	0	-1.11	-1.11
Inverters	G_Inv1	366526.4	4903225.8	2	0	0	87.7	87.7	1	990.5	3.25	0	70.92	0	2.45	0	0	1.41	0	0	0	0	0	0	12.88	12.88
Inverter	MV3-17	368178	4907472	2	0	0	100.3	100.3	1	4251.49	3.25	0	83.57	0	0.56	0	0	17.45	0	0	0	0	0	0	-1.27	-1.27
Inverter	MV3-15	368357	4907477	2	0	0	100.3	100.3	1	4287.92	3.25	0	83.64	0	0.57	0	0	17.5	0	0	0	0	0	0	-1.4	-1.4
Inverter	MV3-16	368514	4907475	2	0	0	100.3	100.3	1	4319.52	3.25	0	83.71	0	0.57	0	0	17.55	0	0	0	0	0	0	-1.52	-1.52
Inverter	MV3-12	367668	4907594	2	0	0	100.3	100.3	1	4324.28	3.25	0	83.72	0	0.57	0	0	17.56	0	0	0	0	0	0	-1.54	-1.54
Inverter	MV3-13	367963	4907577	2	0	0	100.3	100.3	1	4327.77	3.25	0	83.73	0	0.57	0	0	17.56	0	0	0	0	0	0	-1.55	-1.55
Inverter	MV3-14	368684	4907498	2	0	0	100.3	100.3	1	4384.11	3.25	0	83.84	0	0.58	0	0	17.65	0	0	0	0	0	0	-1.75	-1.75
Inverter	MV3-10	368167	4907669	2	0	0	100.3	100.3	1	4444.57	3.25	0	83.96	0	0.58	0	0	17.75	0	0	0	0	0	0	-1.97	-1.97
Inverter	MV3-11	368346	4907662	2	0	0	100.3	100.3	1	4467.42	3.25	0	84	0	0.59	0	0	17.78	0	0	0	0	0	0	-2.06	-2.06
Inverter	MV3-7	367945	4907754	2	0	0	100.3	100.3	1	4502.11	3.25	0	84.07	0	0.59	0	0	17.83	0	0	0	0	0	0	-2.18	-2.18
Inverter	MV3-9	368512	4907703	2	0	0	100.3	100.3	1	4541.22	3.25	0	84.14	0	0.6	0	0	17.89	0	0	0	0	0	0	-2.32	-2.32
Inverter	MV3-8	368680	4907712	2	0	0	100.3	100.3	1	4589.71	3.25	0	84.24	0	0.6	0	0	17.97	0	0	0	0	0	0	-2.49	-2.49
Inverter	MV3-6	368162	4907834	2	0	0	100.3	100.3	1	4607.14	3.25	0	84.27	0	0.6	0	0	17.99	0	0	0	0	0	0	-2.55	-2.55
Inverter	MV3-3	367939	4907927	2	0	0	100.3	100.3	1	4673.8	3.25	0	84.39	0	0.61	0	0	18.09	0	0	0	0	0	0	-2.79	-2.79
Inverter	MV6-3	370207	4907140	2	0	0	100.3	100.3	1	4711.78	3.25	0	84.46	0	0.61	0	0	18.15	0	0	0	0	0	0	-2.92	-2.92
Inverter	MV1-10	365004	4905564	2	0	0	97.3	97.3	1	3400.08	3.25	0	81.63	0	0.43	0	0	16.06	0	0	0	0	0	0	-0.82	-0.82
Inverter	MV6-2	370085	4907339	2	0	0	100.3	100.3	1	4810.2	3.25	0	84.64	0	0.62	0	0	18.3	0	0	0	0	0	0	-3.25	-3.25
Inverter	MV1-13	364731	4905241	2	0	0	97.3	97.3	1	3410.35	3.25	0	81.66	0	0.44	0	0	16.08	0	0	0	0	0	0	-0.86	-0.86
Inverter	MV1-7	364925	4905782	2	0	0	97.3	97.3	1	3606.99	3.25	0	82.14	0	0.47	0	0	16.41	0	0	0	0	0	0	-1.71	-1.71
Inverter	MV2-1	365842	4906816	2	0	0	97.3	97.3	1	3919.02	3.25	0	82.86	0	0.52	0	0	16.92	0	0	0	0	0	0	-2.99	-2.99
Inverter	MV4-11	369264	4908855	2	0	0	100.3	100.3	1	5849.93	3.25	0	86.34	0	0.7	0	0	19.79	0	0	0	0	0	0	-6.52	-6.52
Inverter	MV4-10	369312	4908858	2	0	0	100.3	100.3	1	5867.31	3.25	0	86.37	0	0.7	0	0	19.81	0	0	0	0	0	0	-6.57	-6.57
Inverter	MV4-7	369035	4909001	2	0	0	100.3	100.3	1	5926.62	3.25	0	86.46	0	0.7	0	0	19.89	0	0	0	0	0	0	-6.74	-6.74
Inverter	MV5-5	370015	4908690	2	0	0	100.3	100.3	1	5966.27	3.25	0	86.51	0	0.7	0	0	19.95	0	0	0	0	0	0	-6.85	-6.85
Inverter	MV4-8	369256	4909001	2	0	0	100.3	100.3	1	5987.08	3.25	0	86.54	0	0.7	0	0	19.98	0	0	0	0	0	0	-6.91	-6.91
Inverter	MV4-9	369289	4909001	2	0	0	100.3	100.3	1	5996.76	3.25	0	86.56	0	0.7	0	0	19.99	0	0	0	0	0	0	-6.94	-6.94
Inverter	MV5-2	370006	4908853	2	0	0	100.3	100.3	1	6110.99	3.25	0	86.72	0	0.71	0	0	20.14	0	0	0	0	0	0	-7.26	-7.26
Inverter	MV4-4	369027	4909199	2	0	0	100.3	100.3	1	6116.23	3.25	0	86.73	0	0.71	0	0	20.15	0	0	0	0	0	0	-7.28	-7.28
Inverter	MV5-4	370324	4908707	2	0	0	100.3	100.3	1	6117.26	3.25	0	86.73	0	0.71	0	0	20.15	0	0	0	0	0	0	-7.28	-7.28
Inverter	MV4-6	369243	4909192	2	0	0	100.3	100.3	1	6166.43	3.25	0	86.8	0	0.71	0	0	20.22	0	0	0	0	0	0	-7.42	-7.42
Inverter	MV4-5	369289	4909199	2	0	0	100.3	100.3	1	6186.18	3.25	0	86.83	0	0.71	0	0	20.24	0	0	0	0	0	0	-7.47	-7.47
Inverter	MV5-3	370231	4908851	2	0	0	100.3	100.3	1	6204.28	3.25	0	86.85	0	0.71	0	0	20.27	0	0	0	0	0	0	-7.52	-7.52
Inverter	MV4-1	369011	4909397	2	0	0	100.3	100.3	1	6304.47	3.25	0	86.99	0	0.71	0	0	20.4	0	0	0	0	0	0	-7.8	-7.8
Inverter	MV4-3	369229	4909397	2	0	0	100.3	100.3	1	6359.7	3.25	0	87.07	0	0.71	0	0	20.47	0	0	0	0	0	0	-7.94	-7.94
Inverter	MV4-2	369272	4909397	2	0	0	100.3	100.3	1	6371.42	3.25	0	87.08	0	0.71	0	0	20.49	0	0	0	0	0	0	-7.98	-7.98
Inverter	MV5-1	370020	4909142	2	0	0	100.3	100.3	1	6381.48	3.25	0	87.1	0	0.71	0	0	20.5	0	0	0	0	0	0	-8	-8
Inverter	MV6-1	370235	4907364	2	0	0	97.3	97.3	1	4912.76	3.25	0	84.83	0	0.63	0	0	18.45	0	0	0	0	0	0	-6.6	-6.6
DSTATCOM - 10 MVAR #2	DSAT2	369403	4908757	2.5	0	0	96.6	96.6	1	5800.2	3.5	0	86.27	0	3.76	0	0	3.74	0	0	0	0	0	0	2.86	2.86
DSTATCOM - 10 MVAR #1	DSAT1	369437	4908757	2.5	0	0	96.6	96.6	1	5811.36	3.5	0	86.29	0	3.76	0	0	3.75	0	0	0	0	0	0	2.84	2.84
SubstationTransformer	W_ST	369711.17	4906112.3	2.5	0	0	92	92	1	3589.5	3.5	0	82.1	0	0.23	0	-0.11	6.81	0	0	0	0	0	0	2.84	2.84
Westbrook Inverter Enclosur	W_INV3	369508	4906164	2	0	0	89.1	89.1	1	3511.44	3.25	0	81.91	0	1.27	0	0	10.38	0	0	0	0	0	0	-4.5	-4.5
Westbrook Inverter Enclosur	W_INV4	369673	4906164	2	0	0	89.1	89.1	1	3607.61	3.25	0	82.14	0	1.3	0	0	10.52	0	0	0	0	0	0	-4.9	-4.9
Westbrook Inverter Enclosur	W_INV2	369374	4906388	2	0	0	89.1	89.1	1	3627.65	3.25	0	82.19	0	1.3	0	0	10.55	0	0	0	0	0	0	-4.98	-4.98
Inverter	MV2-2	365977	4906654	2	0	0	89.1	89.1	1	3715.26	3.25	0	82.4	0	1.32	0	0	10.68	0	0	0	0	0	0	-5.34	-5.34
Westbrook Inverter Enclosur	W_INV7	369780	4906417	2	0	0	89.1	89.1	1	3874.93	3.25	0	82.77	0	1.36	0	0	10.91	0	0	0	0	0	0	-5.97	-5.97
Westbrook Inverter Enclosur	W_INV5	369719	4906574	2	0	0	89.1	89.1	1	3969.21	3.25	0	82.97	0	1.38	0	0	11.04	0	0	0	0	0	0	-6.34	-6.34
Inverter	MV3-22	368656	4907142	2	0	0	89.1	89.1	1	4034.09	3.25	0	83.11	0	1.4	0	0	11.13	0	0	0	0	0	0	-6.59	-6.59
Westbrook Inverter Enclosur	W_INV6	369875	4906578	2	0	0	89.1	89.1	1	4061.14	3.25	0	83.17	0	1.41	0	0	11.17	0	0	0	0	0	0	-6.69	-6.69
Inverter	MV1-3	364440	4906039	2	0	0	89.1	89.1	1	4136.98	3.25	0	83.33	0	1.43	0	0	11.28	0	0	0	0	0	0	-6.98	-6.98
Inverter	MV3-5	368340	4907843	2	0	0	89.1	89.1	1	4644.32	3.25	0	84.34	0	1.55	0	0	11.98	0	0	0	0	0	0	-8.81	-8.81
Inverter	MV3-1	368156	4907976	2	0	0	89.1	89.1	1	4746.97	3.25	0	84.53	0	1.58	0	0	12.12	0	0	0	0	0	0	-9.17	-9.17
Inverter	MV3-4	368502	4907925	2	0	0	89.1	89.1	1	4755.97	3.25	0	84.54	0	1.58	0	0	12.13	0	0	0	0	0	0	-9.2	-9.2
Inverter	MV3-2	368671	4907928	2	0	0	89.1	89.1	1	4796.78	3.25	0	84.62	0	1.59	0	0	12.19	0	0	0	0	0	0	-9.34	-9.34

Fixed Reactor Bank 1	FRB1	369378	4908755	6	0	0	89.8	89.8	1	5790.22	5.25	0	86.25	0	-0.45	0	0	9.52	0	0	0	0	0	0	-5.55	-5.55
Fixed Reactor Bank 2	FRB2	369464	4908755	6	0	0	89.8	89.8	1	5818.45	5.25	0	86.3	0	-0.44	0	0	9.55	0	0	0	0	0	0	-5.62	-5.62
Westbrook Inverter Enclosur	W_INV1	369409	4906578	2	0	0	86.1	86.1	1	3809.36	3.25	0	82.62	0	1.35	0	0	10.81	0	0	0	0	0	0	-8.72	-8.72
Inverter	MV4-15	369176	4908481	2	0	0	89.1	89.1	1	5466.79	3.25	0	85.75	0	1.75	0	0	13.08	0	0	0	0	0	0	-11.53	-11.53
Inverter	MV4-14	369176	4908507	2	0	0	89.1	89.1	1	5491.57	3.25	0	85.79	0	1.76	0	0	13.11	0	0	0	0	0	0	-11.61	-11.61
Inverter	MV4-13	369051	4908605	2	0	0	89.1	89.1	1	5549.19	3.25	0	85.88	0	1.78	0	0	13.19	0	0	0	0	0	0	-11.79	-11.79
Inverter	MV4-12	369043	4908803	2	0	0	89.1	89.1	1	5737.59	3.25	0	86.17	0	1.82	0	0	13.43	0	0	0	0	0	0	-12.37	-12.37
Inverter	MV5-6	369982	4908507	2	0	0	89.1	89.1	1	5786.47	3.25	0	86.25	0	1.83	0	0	13.49	0	0	0	0	0	0	-12.52	-12.52
Inverter	MV6-4	370250	4906966	2	0	0	86.1	86.1	1	4595.49	3.25	0	84.25	0	1.54	0	0	11.92	0	0	0	0	0	0	-11.64	-11.64
Westbrook Inverter Transfor	W_INVTR1	369403	4906578	2	0	0	78.2	78.2	1	3806.38	3.25	0	82.61	0	-2.92	0	0	1.98	0	0	0	0	0	0	-3.43	-3.43
Westbrook Inverter Transfor	W_INVTR3	369514	4906164	2	0	0	77.3	77.3	1	3514.85	3.25	0	81.92	0	-2.85	0	0	1.87	0	0	0	0	0	0	-3.6	-3.6
Westbrook Inverter Transfor	W_INVTR4	369679	4906164	2	0	0	77.3	77.3	1	3611.2	3.25	0	82.15	0	-2.87	0	0	1.91	0	0	0	0	0	0	-3.85	-3.85
Westbrook Inverter Transfor	W_INVTR2	369368	4906388	2	0	0	77.3	77.3	1	3624.58	3.25	0	82.19	0	-2.87	0	0	1.91	0	0	0	0	0	0	-3.88	-3.88
Westbrook Inverter Transfor	W_INVTR7	369786	4906417	2	0	0	77.3	77.3	1	3878.44	3.25	0	82.77	0	-2.93	0	0	2.01	0	0	0	0	0	0	-4.51	-4.51
Westbrook Inverter Transfor	W_INVTR5	369725	4906574	2	0	0	77.3	77.3	1	3972.55	3.25	0	82.98	0	-2.96	0	0	2.04	0	0	0	0	0	0	-4.73	-4.73
Westbrook Inverter Transfor	W_INVTR6	369881	4906578	2	0	0	77.3	77.3	1	4064.62	3.25	0	83.18	0	-2.98	0	0	2.08	0	0	0	0	0	0	-4.94	-4.94
Inverter Transformer	MV1-14 T	365157	4905049	2	0	0	69.4	69.4	1	2953.01	3.25	0	80.41	0	2.49	0	0	5.84	0	0	0	0	0	0	-19.39	-19.39
Inverter Transformer	MV1-10 T	365010	4905564	2	0	0	69.4	69.4	1	3395.65	3.25	0	81.62	0	2.62	0	0	6.21	0	0	0	0	0	0	-21.1	-21.1
Inverter Transformer	MV1-13 T	364725	4905241	2	0	0	69.4	69.4	1	3415.25	3.25	0	81.67	0	2.63	0	0	6.22	0	0	0	0	0	0	-21.17	-21.17
Inverter Transformer	MV1-7 T	364919	4905782	2	0	0	69.4	69.4	1	3611.3	3.25	0	82.15	0	2.68	0	0	6.38	0	0	0	0	0	0	-21.87	-21.87
Inverter Transformer	MV2-1 T	365836	4906816	2	0	0	69.4	69.4	1	3921.59	3.25	0	82.87	0	2.77	0	0	6.62	0	0	0	0	0	0	-22.9	-22.9
Inverter Transformer	MV6-4 T	370244	4906966	2	0	0	69.4	69.4	1	4591.92	3.25	0	84.24	0	2.93	0	0	7.1	0	0	0	0	0	0	-24.92	-24.92
Inverter Transformer	MV6-1 T	370230	4907364	2	0	0	69.4	69.4	1	4910	3.25	0	84.82	0	2.99	0	0	7.32	0	0	0	0	0	0	-25.79	-25.79
Inverter Transformer	MV1-15 T	365309	4904994	2	0	0	56.1	56.1	1	2798.91	3.25	0	79.94	0	0.74	0	0	8.52	0	0	0	0	0	0	-33.15	-33.15
Inverter Transformer	MV1-12 T	365044	4905386	2	0	0	56.1	56.1	1	3252.25	3.25	0	81.24	0	0.94	0	0	9.29	0	0	0	0	0	0	-35.41	-35.41
Inverter Transformer	MV1-11 T	364649	4905414	2	0	0	56.1	56.1	1	3578.41	3.25	0	82.07	0	1.07	0	0	9.81	0	0	0	0	0	0	-36.9	-36.9
Inverter Transformer	MV1-8 T	364782	4905647	2	0	0	56.1	56.1	1	3621.1	3.25	0	82.18	0	1.09	0	0	9.88	0	0	0	0	0	0	-37.09	-37.09
Inverter Transformer	MV2-2 T	365982	4906654	2	0	0	56.1	56.1	1	3713.19	3.25	0	82.39	0	1.13	0	0	10.02	0	0	0	0	0	0	-37.49	-37.49
Inverter Transformer	MV2-3 T	365814	4906641	2	0	0	56.1	56.1	1	3774.07	3.25	0	82.54	0	1.15	0	0	10.11	0	0	0	0	0	0	-37.74	-37.74
Inverter Transformer	MV1-4 T	364821	4905918	2	0	0	56.1	56.1	1	3776.39	3.25	0	82.54	0	1.15	0	0	10.12	0	0	0	0	0	0	-37.75	-37.75
Inverter Transformer	MV1-9 T	364555	4905646	2	0	0	56.1	56.1	1	3794.78	3.25	0	82.58	0	1.16	0	0	10.15	0	0	0	0	0	0	-37.83	-37.83
Inverter Transformer	MV1-5 T	364676	4905892	2	0	0	56.1	56.1	1	3863.52	3.25	0	82.74	0	1.19	0	0	10.25	0	0	0	0	0	0	-38.12	-38.12
Inverter Transformer	MV2-4 T	365590	4906628	2	0	0	56.1	56.1	1	3868.95	3.25	0	82.75	0	1.19	0	0	10.26	0	0	0	0	0	0	-38.14	-38.14
Inverter Transformer	MV1-2 T	364759	4906063	2	0	0	56.1	56.1	1	3922.68	3.25	0	82.87	0	1.21	0	0	10.34	0	0	0	0	0	0	-38.37	-38.37
Inverter Transformer	MV1-6 T	364482	4905835	2	0	0	56.1	56.1	1	3971.26	3.25	0	82.98	0	1.23	0	0	10.41	0	0	0	0	0	0	-38.56	-38.56
Inverter Transformer	MV1-1 T	364721	4906166	2	0	0	56.1	56.1	1	4022.91	3.25	0	83.09	0	1.25	0	0	10.49	0	0	0	0	0	0	-38.77	-38.77
Inverter Transformer	MV3-22 T	368661	4907142	2	0	0	56.1	56.1	1	4035.5	3.25	0	83.12	0	1.26	0	0	10.51	0	0	0	0	0	0	-38.83	-38.83
Inverter Transformer	MV3-21 T	368484	4907206	2	0	0	56.1	56.1	1	4051	3.25	0	83.15	0	1.26	0	0	10.53	0	0	0	0	0	0	-38.89	-38.89
Inverter Transformer	MV1-3 T	364435	4906039	2	0	0	56.1	56.1	1	4140.7	3.25	0	83.34	0	1.3	0	0	10.66	0	0	0	0	0	0	-39.25	-39.25
Inverter Transformer	MV3-18 T	367757	4907412	2	0	0	56.1	56.1	1	4146.62	3.25	0	83.35	0	1.3	0	0	10.67	0	0	0	0	0	0	-39.27	-39.27
Inverter Transformer	MV3-19 T	368352	4907347	2	0	0	56.1	56.1	1	4159.52	3.25	0	83.38	0	1.31	0	0	10.69	0	0	0	0	0	0	-39.32	-39.32
Inverter Transformer	MV3-20 T	368683	4907317	2	0	0	56.1	56.1	1	4209.65	3.25	0	83.48	0	1.33	0	0	10.76	0	0	0	0	0	0	-39.52	-39.52
Inverter Transformer	MV3-17 T	368183	4907472	2	0	0	56.1	56.1	1	4252.27	3.25	0	83.57	0	1.34	0	0	10.82	0	0	0	0	0	0	-39.68	-39.68
Inverter Transformer	MV3-15 T	368351	4907477	2	0	0	56.1	56.1	1	4286.75	3.25	0	83.64	0	1.36	0	0	10.87	0	0	0	0	0	0	-39.81	-39.81
Inverter Transformer	MV3-16 T	368509	4907475	2	0	0	56.1	56.1	1	4318.37	3.25	0	83.71	0	1.37	0	0	10.92	0	0	0	0	0	0	-39.94	-39.94
Inverter Transformer	MV3-12 T	367674	4907594	2	0	0	56.1	56.1	1	4324.5	3.25	0	83.72	0	1.37	0	0	10.93	0	0	0	0	0	0	-39.96	-39.96
Inverter Transformer	MV3-13 T	367958	4907577	2	0	0	56.1	56.1	1	4327.25	3.25	0	83.72	0	1.37	0	0	10.93	0	0	0	0	0	0	-39.97	-39.97
Inverter Transformer	MV3-14 T	368678	4907498	2	0	0	56.1	56.1	1	4382.51	3.25	0	83.83	0	1.39	0	0	11.01	0	0	0	0	0	0	-40.18	-40.18
Inverter Transformer	MV3-10 T	368162	4907669	2	0	0	56.1	56.1	1	4443.84	3.25	0	83.96	0	1.42	0	0	11.1	0	0	0	0	0	0	-40.41	-40.41
Inverter Transformer	MV3-11 T	368340	4907662	2	0	0	56.1	56.1	1	4466.31	3.25	0	84	0	1.43	0	0	11.13	0	0	0	0	0	0	-40.5	-40.5
Inverter Transformer	MV3-7 T	367951	4907754	2	0	0	56.1	56.1	1	4502.68	3.25	0	84.07	0	1.44	0	0	11.18	0	0	0	0	0	0	-40.63	-40.63
Inverter Transformer	MV3-9 T	368517	4907703	2	0	0	56.1	56.1	1	4542.31	3.25	0	84.15	0	1.46	0	0	11.23	0	0	0	0	0	0	-40.78	-40.78
Inverter Transformer	MV3-8 T	368685	4907712	2	0	0	56.1	56.1	1	4590.98	3.25	0	84.24	0	1.47	0	0	11.3	0	0	0	0	0	0	-40.96	-40.96
Inverter Transformer	MV3-6 T	368156	4907834	2	0	0	56.1	56.1	1	4606.31	3.25	0	84.27	0	1.48	0	0	11.32	0	0	0	0	0	0	-41.01	-41.01
Inverter Transformer	MV3-5 T	368335	4907843	2	0	0	56.1	56.1	1	4643.43	3.25	0	84.34	0	1.49	0	0	11.37	0	0	0	0	0	0	-41.15	-41.15
Inverter Transformer	MV3-3 T	367944	4907927	2	0	0	56.1	56.1	1	4674.26	3.25	0	84.39	0	1.51	0	0	11.42	0	0	0	0	0	0	-41.26	-41.26
Inverter Transformer	MV6-3 T	370202	4907140	2	0	0	56.1	56.1	1	4708.93	3.25	0	84.46	0	1.52	0	0	11.46	0	0	0	0	0	0	-41.38	-41.38
Inverter Transformer	MV3-1 T	368150	4907976	2	0	0	56.1	56.1	1	4746.16	3.25	0	84.53	0	1.53	0	0	11.51	0	0	0	0	0	0	-41.52	-41.52
Inverter Transformer	MV3-4 T	368507	4907925	2	0	0	56.1	56.1	1	4757.01	3.25	0	84.55	0	1.54	0	0	11.53	0	0	0	0	0	0	-41.55	-41.55
Inverter Transformer	MV3-2 T	368677	4907928	2	0	0	56.1	56.1	1	4798.23	3.25	0	84.62	0	1.55	0	0	11.59	0	0	0	0	0	0	-41.7	-41.7
Inverter Transformer	MV6-2 T	370091	4907339	2	0	0	56.1	56.1	1	4813.41	3.25	0	84.65	0	1.56	0	0	11.61	0	0	0	0	0	0	-41.75	-41.75
Inverter Transformer	MV4-15 T	369170	4908481	2	0	0	56.1	56.1	1	5464.97	3.25	0	85.75	0	1.79	0	0	12.45	0	0	0	0	0	0	-43.93	-43.93
Inverter Transformer	MV4-14 T	369182	4908507	2	0	0	56.1	56.1	1	5493.38	3.25	0	85.8	0	1.8	0	0	12.49	0	0	0	0	0	0	-44.02	-44.02
Inverter Transformer	MV4-13 T	369057	4908605	2	0	0	56.1	56.1	1	5550.85	3.25	0	85.89	0	1.82	0	0	12.56	0	0	0	0	0	0	-44.21	-44.21
Inverter Transformer	MV4-12 T	369049	4908803	2	0	0	56.1	56.1	1	5739.19	3.25	0	86.18	0	1.88	0	0	12.79	0	0	0	0	0	0	-44.79	-44.79
Inverter Transformer	MV5-6 T	369987	4908507	2	0	0	56.1	56.1	1	5788.6	3.25	0	86.25	0	1.9	0	0	12.85	0	0	0	0	0	0	-44.94	-44.94
Inverter Transformer	MV4-11 T	369269	4908855	2	0	0	56.1	56.1	1	5851.42	3.25	0	86.35	0	1.92	0	0	12.93	0	0	0	0	0	0	-45.13	-45.13
Inverter Transformer	MV4-10 T	369307	4908858	2	0	0	56.1	56.1	1	5865.78	3.25	0	86.37	0	1.92	0	0	12.94	0	0	0	0	0	0	-45.17	-45.17
Inverter Transformer	MV4-7 T	369040	4909001	2	0	0	56.1	56.1	1	5927.9	3.25	0	86.46	0	1.94	0	0	13.02	0	0	0	0	0	0	-45.36	-45.36
Inverter Transformer	MV5-5 T	370021	4908690	2	0	0	56.1	56.1	1	5968.79	3.25	0	86.52	0	1.95	0	0	13.07	0	0	0	0	0	0	-45.48	-45.48
Inverter Transformer	MV4-8 T	369262	4909001	2	0	0	56.1	56.1	1	5988.83	3.25	0	86.55	0	1.96	0	0	13.09	0	0	0	0	0	0	-45.54	-45.54
Inverter Transformer	MV4-9 T	369284	4909001	2	0	0	56.1	56.1	1	5995.28	3.25	0	86.56	0	1.96	0	0	13.1	0	0	0	0	0	0	-45.56	-45.56
Inverter Transformer	MV5-2 T	370011	4908853	2	0	0	56.1	56.1	1	6113.03	3.25	0	86.73	0	2	0	0	13.24	0	0	0	0	0	0	-45.9	-45.9
Inverter Transformer	MV4-4 T	369033	4909199	2	0	0	56.1	56.1	1	6117.72	3.25	0	86.73	0	2	0	0	13.24	0	0	0	0	0	0	-45.92	-45.92

	Inverter Transformer	MV5-4 T	370330	4908707	2	0	0	56.1	56.1	1	6120.02	3.25	0	86.74	0	2	0	0	13.24	0	0	0	0	0	0	-45.92	-45.92
	Inverter Transformer	MV4-6 T	369249	4909192	2	0	0	56.1	56.1	1	6168.12	3.25	0	86.8	0	2.02	0	0	13.3	0	0	0	0	0	0	-46.06	-46.06
	Inverter Transformer	MV4-5 T	369283	4909199	2	0	0	56.1	56.1	1	6184.46	3.25	0	86.83	0	2.02	0	0	13.32	0	0	0	0	0	0	-46.11	-46.11
	Inverter Transformer	MV5-3 T	370237	4908851	2	0	0	56.1	56.1	1	6206.91	3.25	0	86.86	0	2.03	0	0	13.35	0	0	0	0	0	0	-46.17	-46.17
	Inverter Transformer	MV4-1 T	369017	4909397	2	0	0	56.1	56.1	1	6305.9	3.25	0	86.99	0	2.06	0	0	13.46	0	0	0	0	0	0	-46.46	-46.46
	Inverter Transformer	MV4-3 T	369234	4909397	2	0	0	56.1	56.1	1	6361.05	3.25	0	87.07	0	2.08	0	0	13.52	0	0	0	0	0	0	-46.61	-46.61
	Inverter Transformer	MV4-2 T	369267	4909397	2	0	0	56.1	56.1	1	6370.04	3.25	0	87.08	0	2.08	0	0	13.53	0	0	0	0	0	0	-46.64	-46.64
	Inverter Transformer	MV5-1 T	370015	4909142	2	0	0	56.1	56.1	1	6379.51	3.25	0	87.1	0	2.08	0	0	13.54	0	0	0	0	0	0	-46.66	-46.66
	Line Reactor	NGR	369421	4908787.5	5	0	0	45.4	45.4	1	5834.9	5.25	0	86.32	0	3.24	1.36	0.11	2.39	0	0	0	0	0	0	-47.96	-47.96
Limit. Valu	0	0																								
Level D/N:	25.4093	25.4093																								

Receiver: Vacant Lot Receptor
ID: G-V18
X: 367732.7
Y: 4901891.8
Z: 4.5
Ground: 0

ISO	Description	ID	X	Y	Z	Ground	ReflOrd	LxT	LxN	L/A	Dist.	hm	Freq	Adiv	K0b	Agr	Abar	z	Aatm	Afol	Ahous	Cmet	CmetN	Dc	RL	LtotT	LtotN
	Sol_Luce Substation	S_Substation	369426	4908792	3.5	0	0	112.1	112.1	1	7104.93	5.25	0	88.03	0	1.4	2.42	0.34	10.85	0	0	0	0	0	0	9.37	9.37
	Inverter	MV1-15	365315	4904994	2	0	0	100.3	100.3	1	3933.06	3.25	0	82.89	0	0.52	0	0	16.94	0	0	0	0	0	0	-0.04	-0.04
	Inverter	MV1-12	365038	4905386	2	0	0	100.3	100.3	1	4412.58	3.25	0	83.89	0	0.58	0	0	17.7	0	0	0	0	0	0	-1.86	-1.86
	Inverter	MV1-11	364655	4905414	2	0	0	100.3	100.3	1	4677.41	3.25	0	84.4	0	0.61	0	0	18.1	0	0	0	0	0	0	-2.8	-2.8
	Inverter	MV1-8	364788	4905647	2	0	0	100.3	100.3	1	4772.08	3.49	0	84.57	0	1.52	2.76	0	18.24	0	0	0	0	0	0	-6.78	-6.78
	Inverter	MV1-9	364561	4905646	2	0	0	100.3	100.3	1	4914.64	3.25	0	84.83	0	0.63	0	0	18.45	0	0	0	0	0	0	-3.61	-3.61
	Inverter	MV1-4	364815	4905918	2	0	0	100.3	100.3	1	4972.25	3.25	0	84.93	0	0.64	0	0	18.54	0	0	0	0	0	0	-3.8	-3.8
	Inverters	G_Inv10	366900.7	4902704.8	2	0	0	87.7	87.7	1	1163.27	3.25	0	72.31	0	2.47	0	0	1.63	0	0	0	0	0	0	11.24	11.24
	Inverter	MV1-5	364671	4905892	2	0	0	100.3	100.3	1	5037.42	3.25	0	85.04	0	0.65	0	0	18.64	0	0	0	0	0	0	-4.01	-4.01
	Inverter	MV1-6	364477	4905835	2	0	0	100.3	100.3	1	5113.55	3.25	0	85.17	0	0.65	0	0	18.75	0	0	0	0	0	0	-4.26	-4.26
	Inverter	MV2-3	365820	4906641	2	0	0	100.3	100.3	1	5119.9	3.25	0	85.19	0	0.65	0	0	18.76	0	0	0	0	0	0	-4.28	-4.28
	Inverter	MV1-2	364753	4906063	2	0	0	100.3	100.3	1	5126.16	3.25	0	85.2	0	0.65	0	0	18.76	0	0	0	0	0	0	-4.3	-4.3
	Inverter	MV2-4	365586	4906624	2	0	0	100.3	100.3	1	5196.35	3.25	0	85.31	0	0.66	0	0	18.87	0	0	0	0	0	0	-4.53	-4.53
	Inverter	MV1-1	364715	4906166	2	0	0	100.3	100.3	1	5232.14	3.25	0	85.37	0	0.66	0	0	18.92	0	0	0	0	0	0	-4.64	-4.64
	Inverter	MV3-21	368478	4907206	2	0	0	100.3	100.3	1	5366.21	3.25	0	85.59	0	0.67	0	0	19.11	0	0	0	0	0	0	-5.06	-5.06
	Inverters	G_Inv9	366750.9	4902691.8	2	0	0	87.7	87.7	1	1266.47	3.25	0	73.05	0	2.49	0	0	1.76	0	0	0	0	0	0	10.36	10.36
	Inverter	MV3-19	368357	4907347	2	0	0	100.3	100.3	1	5490.81	3.25	0	85.79	0	0.68	0	0	19.29	0	0	0	0	0	0	-5.45	-5.45
	Inverter	MV3-20	368689	4907317	2	0	0	100.3	100.3	1	5508.84	3.25	0	85.82	0	0.68	0	0	19.31	0	0	0	0	0	0	-5.5	-5.5
	Inverter	MV3-18	367752	4907412	2	0	0	100.3	100.3	1	5520.23	3.25	0	85.84	0	0.68	0	0	19.33	0	0	0	0	0	0	-5.54	-5.54
	Gardiner Substation	G_Sub	366586.3	4903349.9	2.5	0	0	90.8	90.8	1	1854.8	3.5	0	76.37	0	-0.2	0	0	4.12	0	0	0	0	0	0	10.49	10.49
	Inverters	G_Inv8	366844.5	4902838.5	2	0	0	87.7	87.7	1	1298.13	3.25	0	73.27	0	2.49	0	0	1.8	0	0	0	0	0	0	10.1	10.1
	Inverter	MV3-17	368178	4907472	2	0	0	100.3	100.3	1	5597.94	3.25	0	85.96	0	0.69	0	0	19.44	0	0	0	0	0	0	-5.77	-5.77
	Inverter	MV3-15	368357	4907477	2	0	0	100.3	100.3	1	5619.98	3.25	0	85.99	0	0.69	0	0	19.47	0	0	0	0	0	0	-5.84	-5.84
	Inverter	MV3-16	368514	4907475	2	0	0	100.3	100.3	1	5637.6	3.25	0	86.02	0	0.69	0	0	19.49	0	0	0	0	0	0	-5.89	-5.89
	Inverter	MV3-14	368684	4907498	2	0	0	100.3	100.3	1	5686.34	3.25	0	86.1	0	0.69	0	0	19.56	0	0	0	0	0	0	-6.04	-6.04
	Inverter	MV3-13	367963	4907577	2	0	0	100.3	100.3	1	5689.86	3.25	0	86.1	0	0.69	0	0	19.57	0	0	0	0	0	0	-6.05	-6.05
	Inverter	MV3-12	367668	4907594	2	0	0	100.3	100.3	1	5702.57	3.25	0	86.12	0	0.69	0	0	19.58	0	0	0	0	0	0	-6.09	-6.09
	Inverter	MV1-14	365163	4905049	2	0	0	97.3	97.3	1	4070.78	3.25	0	83.19	0	0.54	0	0	17.16	0	0	0	0	0	0	-3.58	-3.58
	Inverter	MV3-10	368167	4907669	2	0	0	100.3	100.3	1	5793.5	3.25	0	86.26	0	0.7	0	0	19.71	0	0	0	0	0	0	-6.35	-6.35
	Inverter	MV6-3	370207	4907140	2	0	0	100.3	100.3	1	5802.22	3.25	0	86.27	0	0.7	0	0	19.72	0	0	0	0	0	0	-6.38	-6.38
	Inverter	MV3-11	368346	4907662	2	0	0	100.3	100.3	1	5802.7	3.25	0	86.27	0	0.7	0	0	19.72	0	0	0	0	0	0	-6.38	-6.38
	Inverter	MV3-9	368512	4907703	2	0	0	100.3	100.3	1	5863.22	3.25	0	86.36	0	0.7	0	0	19.81	0	0	0	0	0	0	-6.56	-6.56
	Inverter	MV3-7	367945	4907754	2	0	0	100.3	100.3	1	5866.04	3.25	0	86.37	0	0.7	0	0	19.81	0	0	0	0	0	0	-6.56	-6.56
	Inverter	MV3-8	368680	4907712	2	0	0	100.3	100.3	1	5896.79	3.25	0	86.41	0	0.7	0	0	19.85	0	0	0	0	0	0	-6.65	-6.65
	Inverter	MV6-2	370085	4907339	2	0	0	100.3	100.3	1	5933.41	3.25	0	86.47	0	0.7	0	0	19.9	0	0	0	0	0	0	-6.76	-6.76
	Inverter	MV3-6	368162	4907834	2	0	0	100.3	100.3	1	5957.69	3.25	0	86.5	0	0.7	0	0	19.94	0	0	0	0	0	0	-6.83	-6.83
	Inverters	G_Inv7	366694.6	4902824.7	2	0	0	87.7	87.7	1	1395.69	3.25	0	73.9	0	2.51	0	0	1.92	0	0	0	0	0	0	9.34	9.34
	Inverter	MV3-3	367939	4907927	2	0	0	100.3	100.3	1	6038.73	3.25	0	86.62	0	0.71	0	0	20.05	0	0	0	0	0	0	-7.06	-7.06
	Inverters	G_Inv6	366788.5	4902972	2	0	0	87.7	87.7	1	1434.7	3.25	0	74.14	0	2.51	0	0	1.96	0	0	0	0	0	0	9.05	9.05
	Inverter	MV1-13	364731	4905241	2	0	0	97.3	97.3	1	4497.48	3.25	0	84.06	0	0.59	0	0	17.83	0	0	0	0	0	0	-5.16	-5.16
	Inverter	MV1-10	365004	4905564	2	0	0	97.3	97.3	1	4575.03	3.25	0	84.21	0	0.6	0	0	17.94	0	0	0	0	0	0	-5.44	-5.44
	Inverters	G_Inv5	366638.5	4902958.1	2	0	0	87.7	87.7	1	1527.83	3.25	0	74.68	0	2.52	0	0	2.08	0	0	0	0	0	0	8.38	8.38
	Inverters	G_Inv4	366732.8	4903105	2	0	0	87.7	87.7	1	1572.15	3.25	0	74.93	0	2.53	0	0	2.13	0	0	0	0	0	0	8.07	8.07
	Inverter	MV1-7	364925	4905782	2	0	0	97.3	97.3	1	4797.59	3.25	0	84.62	0	0.62	0	0	18.28	0	0	0	0	0	0	-6.21	-6.21
	Inverters	G_Inv3	366583.7	4903091.4	2	0	0	87.7	87.7	1	1661.1	3.25	0	75.41	0	2.54	0	0	2.24	0	0	0	0	0	0	7.48	7.48
	Inverter	MV4-11	369264	4908855	2	0	0	100.3	100.3	1	7129.59	3.25	0	88.06	0	0.71	0	0	21.46	0	0	0	0	0	0	-9.92	-9.92
	Inverter	MV4-10	369312	4908858	2	0	0	100.3	100.3	1	7142.98	3.25	0	88.08	0	0.71	0	0	21.48	0	0	0	0	0	0	-9.95	-9.95
	Inverter	MV5-5	370015	4908690	2	0	0	100.3	100.3	1	7171.08	3.25	0	88.11	0	0.7	0	0	21.51	0	0	0	0	0	0	-10.02	-10.02
	Inverter	MV4-7	369035	4909001	2	0	0	100.3	100.3	1	7227.5	3.25	0	88.18	0	0.7	0	0	21.58	0	0	0	0	0	0	-10.15	-10.15
	Inverter	MV4-8	369256	4909001	2	0	0	100.3	100.3	1	7270.57	3.25	0	88.23	0	0.7	0	0	21.64	0	0	0	0	0	0	-10.26	-10.26
	Inverter	MV4-9	369289	4909001	2	0	0	100.3	100.3	1	7277.55	3.25	0	88.24	0	0.7	0	0	21.64	0	0	0	0	0	0	-10.27	-10.27
	Inverter	MV5-4	370324	4908707	2	0	0	100.3	100.3	1	7291.21	3.25	0	88.26	0	0.7	0	0	21.66	0	0	0	0	0	0	-10.3	-10.3
	Inverter	MV5-2	370006	4908853	2	0	0	100.3	100.3	1	7322.99	3.25	0	88.29	0	0.7	0	0	21.7	0	0	0	0	0	0	-10.38	-10.38
	Inverters	G_Inv2	366676.9	4903239.1	2	0	0	87.7	87.7	1	1711.71	3.25	0	75.67	0	2.55	0	0	2.3	0	0	0	0	0	0	7.15	7.15

Inverter	MV5-3	370231	4908851	2	0	0	100.3	100.3	1	7394.05	3.25	0	88.38	0	0.69	0	0	21.79	0	0	0	0	0	0	-10.55	-10.55
Inverter	MV4-4	369027	4909199	2	0	0	100.3	100.3	1	7420.94	3.25	0	88.41	0	0.69	0	0	21.82	0	0	0	0	0	0	-10.61	-10.61
Inverter	MV2-1	365842	4906816	2	0	0	97.3	97.3	1	5274.7	3.25	0	85.44	0	0.66	0	0	18.98	0	0	0	0	0	0	-7.78	-7.78
Inverter	MV4-6	369243	4909192	2	0	0	100.3	100.3	1	7454.79	3.25	0	88.45	0	0.69	0	0	21.86	0	0	0	0	0	0	-10.69	-10.69
Inverter	MV4-5	369289	4909199	2	0	0	100.3	100.3	1	7471.09	3.25	0	88.47	0	0.69	0	0	21.88	0	0	0	0	0	0	-10.73	-10.73
Inverter	MV5-1	370020	4909142	2	0	0	100.3	100.3	1	7602.44	3.25	0	88.62	0	0.68	0	0	22.04	0	0	0	0	0	0	-11.03	-11.03
Inverter	MV4-1	369011	4909397	2	0	0	100.3	100.3	1	7613.28	3.25	0	88.63	0	0.68	0	0	22.05	0	0	0	0	0	0	-11.05	-11.05
Inverter	MV4-3	369229	4909397	2	0	0	100.3	100.3	1	7652.9	3.25	0	88.68	0	0.68	0	0	22.1	0	0	0	0	0	0	-11.14	-11.14
Inverter	MV4-2	369272	4909397	2	0	0	100.3	100.3	1	7661.43	3.25	0	88.69	0	0.68	0	0	22.11	0	0	0	0	0	0	-11.16	-11.16
Inverters	G_Inv1	366526.4	4903225.8	2	0	0	87.7	87.7	1	1798.53	3.25	0	76.1	0	2.56	0	0	2.4	0	0	0	0	0	0	6.6	6.6
Inverter	MV6-1	370235	4907364	2	0	0	97.3	97.3	1	6017.18	3.25	0	86.59	0	0.71	0	0	20.02	0	0	0	0	0	0	-10	-10
DSTATCOM - 10 MVAR #2	DSAT2	369403	4908757	2.5	0	0	96.6	96.6	1	7065.47	3.5	0	87.98	0	3.84	0	0	4.34	0	0	0	0	0	0	0.47	0.47
DSTATCOM - 10 MVAR #1	DSAT1	369437	4908757	2.5	0	0	96.6	96.6	1	7073.59	3.5	0	87.99	0	3.84	0	0	4.35	0	0	0	0	0	0	0.45	0.45
SubstationTransformer	W_ST	369711.17	4906112.3	2.5	0	0	92	92	1	4661.19	3.5	0	84.37	0	0.49	0	-0.13	8.21	0	0	0	0	0	0	-1.09	-1.09
Westbrook Inverter Enclosur	W_INV3	369508	4906164	2	0	0	89.1	89.1	1	4626.38	3.25	0	84.3	0	1.55	0	0	11.96	0	0	0	0	0	0	-8.75	-8.75
Westbrook Inverter Enclosur	W_INV4	369673	4906164	2	0	0	89.1	89.1	1	4692.17	3.25	0	84.43	0	1.56	0	0	12.05	0	0	0	0	0	0	-8.98	-8.98
Westbrook Inverter Enclosur	W_INV2	369374	4906388	2	0	0	89.1	89.1	1	4786.41	3.25	0	84.6	0	1.59	0	0	12.18	0	0	0	0	0	0	-9.31	-9.31
Westbrook Inverter Enclosur	W_INV7	369780	4906417	2	0	0	89.1	89.1	1	4966.78	3.25	0	84.92	0	1.63	0	0	12.42	0	0	0	0	0	0	-9.91	-9.91
Inverter	MV2-2	365977	4906654	2	0	0	89.1	89.1	1	5075.53	3.25	0	85.11	0	1.66	0	0	12.56	0	0	0	0	0	0	-10.27	-10.27
Westbrook Inverter Enclosur	W_INV5	369719	4906574	2	0	0	89.1	89.1	1	5086.1	3.25	0	85.13	0	1.66	0	0	12.58	0	0	0	0	0	0	-10.31	-10.31
Westbrook Inverter Enclosur	W_INV6	369875	4906578	2	0	0	89.1	89.1	1	5152.66	3.25	0	85.24	0	1.68	0	0	12.67	0	0	0	0	0	0	-10.53	-10.53
Inverter	MV1-3	364440	4906039	2	0	0	89.1	89.1	1	5295.39	3.25	0	85.48	0	1.71	0	0	12.86	0	0	0	0	0	0	-10.99	-10.99
Inverter	MV3-22	368656	4907142	2	0	0	89.1	89.1	1	5330.77	3.25	0	85.54	0	1.72	0	0	12.9	0	0	0	0	0	0	-11.1	-11.1
Inverter	MV3-5	368340	4907843	2	0	0	89.1	89.1	1	5982.11	3.25	0	86.54	0	1.88	0	0	13.74	0	0	0	0	0	0	-13.1	-13.1
Inverter	MV3-4	368502	4907925	2	0	0	89.1	89.1	1	6082.05	3.25	0	86.68	0	1.91	0	0	13.87	0	0	0	0	0	0	-13.39	-13.39
Inverter	MV3-1	368156	4907976	2	0	0	89.1	89.1	1	6098.91	3.25	0	86.71	0	1.91	0	0	13.89	0	0	0	0	0	0	-13.44	-13.44
Inverter	MV3-2	368671	4907928	2	0	0	89.1	89.1	1	6108.69	3.25	0	86.72	0	1.91	0	0	13.9	0	0	0	0	0	0	-13.47	-13.47
Fixed Reactor Bank 1	FRB1	369378	4908755	6	0	0	89.8	89.8	1	7057.66	5.25	0	87.97	0	-0.28	0	0	10.8	0	0	0	0	0	0	-8.72	-8.72
Fixed Reactor Bank 2	FRB2	369464	4908755	6	0	0	89.8	89.8	1	7078.2	5.25	0	88	0	-0.27	0	0	10.82	0	0	0	0	0	0	-8.77	-8.77
Inverter	MV4-15	369176	4908481	2	0	0	89.1	89.1	1	6745.42	3.25	0	87.58	0	2.07	0	0	14.68	0	0	0	0	0	0	-15.27	-15.27
Inverter	MV4-14	369176	4908507	2	0	0	89.1	89.1	1	6770.82	3.25	0	87.61	0	2.07	0	0	14.71	0	0	0	0	0	0	-15.34	-15.34
Inverter	MV4-13	369051	4908605	2	0	0	89.1	89.1	1	6841.42	3.25	0	87.7	0	2.09	0	0	14.8	0	0	0	0	0	0	-15.53	-15.53
Inverter	MV5-6	369982	4908507	2	0	0	89.1	89.1	1	6987.15	3.25	0	87.89	0	2.12	0	0	14.97	0	0	0	0	0	0	-15.92	-15.92
Westbrook Inverter Enclosur	W_INV1	369409	4906578	2	0	0	86.1	86.1	1	4976.99	3.25	0	84.94	0	1.63	0	0	12.43	0	0	0	0	0	0	-12.95	-12.95
Inverter	MV4-12	369043	4908803	2	0	0	89.1	89.1	1	7034.31	3.25	0	87.94	0	2.14	0	0	15.03	0	0	0	0	0	0	-16.05	-16.05
Inverter	MV6-4	370250	4906966	2	0	0	86.1	86.1	1	5664.3	3.25	0	86.06	0	1.8	0	0	13.33	0	0	0	0	0	0	-15.14	-15.14
Westbrook Inverter Transfor	W_INVTR1	369403	4906578	2	0	0	78.2	78.2	1	4974.98	3.25	0	84.94	0	-3.17	0	0	2.4	0	0	0	0	0	0	-5.93	-5.93
Westbrook Inverter Transfor	W_INVTR3	369514	4906164	2	0	0	77.3	77.3	1	4628.69	3.25	0	84.31	0	-3.1	0	0	2.28	0	0	0	0	0	0	-6.15	-6.15
Westbrook Inverter Transfor	W_INVTR4	369679	4906164	2	0	0	77.3	77.3	1	4694.65	3.25	0	84.43	0	-3.11	0	0	2.31	0	0	0	0	0	0	-6.28	-6.28
Westbrook Inverter Transfor	W_INVTR2	369368	4906388	2	0	0	77.3	77.3	1	4784.35	3.25	0	84.6	0	-3.13	0	0	2.34	0	0	0	0	0	0	-6.46	-6.46
Westbrook Inverter Transfor	W_INVTR7	369786	4906417	2	0	0	77.3	77.3	1	4969.25	3.25	0	84.93	0	-3.17	0	0	2.4	0	0	0	0	0	0	-6.82	-6.82
Westbrook Inverter Transfor	W_INVTR5	369725	4906574	2	0	0	77.3	77.3	1	5088.44	3.25	0	85.13	0	-3.2	0	0	2.44	0	0	0	0	0	0	-7.04	-7.04
Westbrook Inverter Transfor	W_INVTR6	369881	4906578	2	0	0	77.3	77.3	1	5155.16	3.25	0	85.24	0	-3.21	0	0	2.47	0	0	0	0	0	0	-7.16	-7.16
Inverter Transformer	MV1-14 T	365157	4905049	2	0	0	69.4	69.4	1	4074.57	3.25	0	83.2	0	2.8	0	0	6.73	0	0	0	0	0	0	-23.39	-23.39
Inverter Transformer	MV1-13 T	364725	4905241	2	0	0	69.4	69.4	1	4501.49	3.25	0	84.07	0	2.91	0	0	7.04	0	0	0	0	0	0	-24.66	-24.66
Inverter Transformer	MV1-10 T	365010	4905564	2	0	0	69.4	69.4	1	4571.45	3.25	0	84.2	0	2.92	0	0	7.09	0	0	0	0	0	0	-24.86	-24.86
Inverter Transformer	MV1-7 T	364919	4905782	2	0	0	69.4	69.4	1	4801.1	3.25	0	84.63	0	2.97	0	0	7.25	0	0	0	0	0	0	-25.5	-25.5
Inverter Transformer	MV2-1 T	365836	4906816	2	0	0	69.4	69.4	1	5276.86	3.25	0	85.45	0	3.07	0	0	7.56	0	0	0	0	0	0	-26.73	-26.73
Inverter Transformer	MV6-4 T	370244	4906966	2	0	0	69.4	69.4	1	5661.64	3.25	0	86.06	0	3.13	0	0	7.81	0	0	0	0	0	0	-27.65	-27.65
Inverter Transformer	MV6-1 T	370230	4907364	2	0	0	69.4	69.4	1	6015.1	3.25	0	86.58	0	3.19	0	0	8.03	0	0	0	0	0	0	-28.45	-28.45
Inverter Transformer	MV1-15 T	365309	4904994	2	0	0	56.1	56.1	1	3936.75	3.25	0	82.9	0	1.22	0	0	10.36	0	0	0	0	0	0	-38.42	-38.42
Inverter Transformer	MV1-12 T	365044	4905386	2	0	0	56.1	56.1	1	4408.92	3.25	0	83.89	0	1.4	0	0	11.05	0	0	0	0	0	0	-40.28	-40.28
Inverter Transformer	MV1-11 T	364649	4905414	2	0	0	56.1	56.1	1	4681.36	3.25	0	84.41	0	1.51	0	0	11.43	0	0	0	0	0	0	-41.28	-41.28
Inverter Transformer	MV1-8 T	364782	4905647	2	0	0	56.1	56.1	1	4775.79	3.49	0	84.58	0	2.45	2.09	0	11.55	0	0	0	0	0	0	-44.62	-44.62
Inverter Transformer	MV1-9 T	364555	4905646	2	0	0	56.1	56.1	1	4918.52	3.25	0	84.84	0	1.6	0	0	11.75	0	0	0	0	0	0	-42.12	-42.12
Inverter Transformer	MV1-4 T	364821	4905918	2	0	0	56.1	56.1	1	4968.73	3.25	0	84.92	0	1.61	0	0	11.81	0	0	0	0	0	0	-42.29	-42.29
Inverter Transformer	MV1-5 T	364676	4905892	2	0	0	56.1	56.1	1	5034.38	3.25	0	85.04	0	1.64	0	0	11.9	0	0	0	0	0	0	-42.52	-42.52
Inverter Transformer	MV2-2 T	365982	4906654	2	0	0	56.1	56.1	1	5073.81	3.25	0	85.11	0	1.65	0	0	11.95	0	0	0	0	0	0	-42.65	-42.65
Inverter Transformer	MV1-6 T	364482	4905835	2	0	0	56.1	56.1	1	5110.37	3.25	0	85.17	0	1.67	0	0	12	0	0	0	0	0	0	-42.77	-42.77
Inverter Transformer	MV2-3 T	365814	4906641	2	0	0	56.1	56.1	1	5122.14	3.25	0	85.19	0	1.67	0	0	12.01	0	0	0	0	0	0	-42.81	-42.81
Inverter Transformer	MV1-2 T	364759	4906063	2	0	0	56.1	56.1	1	5122.68	3.25	0	85.19	0	1.67	0	0	12.01	0	0	0	0	0	0	-42.82	-42.82
Inverter Transformer	MV2-4 T	365590	4906628	2	0	0	56.1	56.1	1	5198.34	3.25	0	85.32	0	1.7	0	0	12.11	0	0	0	0	0	0	-43.07	-43.07
Inverter Transformer	MV1-1 T	364721	4906166	2	0	0	56.1	56.1	1	5228.68	3.25	0	85.37	0	1.71	0	0	12.15	0	0	0	0	0	0	-43.17	-43.17
Inverter Transformer	MV1-3 T	364435	4906039	2	0	0	56.1	56.1	1	5298.5	3.25	0	85.48	0	1.73	0	0	12.24	0	0	0	0	0	0	-43.4	-43.4
Inverter Transformer	MV3-22 T	368661	4907142	2	0	0	56.1	56.1	1	5331.64	3.25	0	85.54	0	1.74	0	0	12.28	0	0	0	0	0	0	-43.51	-43.51
Inverter Transformer	MV3-21 T	368484	4907206	2	0	0	56.1	56.1	1	5367.05	3.25	0	85.59	0	1.76	0	0	12.33	0	0	0	0	0	0	-43.62	-43.62
Inverter Transformer	MV3-19 T	368352	4907347	2	0	0	56.1	56.1	1	5490.24	3.25	0	85.79	0	1.8	0	0	12.48	0	0	0	0	0	0	-44.01	-44.01
Inverter Transformer	MV3-20 T	368683	4907317	2	0	0	56.1	56.1	1	5507.8	3.25	0	85.82	0	1.8	0	0	12.51	0	0	0	0	0	0	-44.07	-44.07
Inverter Transformer	MV3-18 T	367757	4907412	2	0	0	56.1	56.1	1	5520.25	3.25	0	85.84	0	1.81	0	0	12.52	0	0	0	0	0	0	-44.11	-44.11
Inverter Transformer	MV3-17 T	368183	4907472	2	0	0	56.1	56.1	1	5598.34	3.25	0	85.96	0	1.83	0	0	12.62	0	0	0	0	0	0	-44.35	-44.35
Inverter Transformer	MV3-15 T	368351	4907477	2	0	0	56.1	56.1	1	5619.32	3.25	0	85.99	0	1.84	0	0	12.64	0	0	0	0	0	0	-44.42	-44.42
Inverter Transformer	MV3-16 T	368509	4907475	2	0	0	56.1	56.1	1	5636.91	3.25	0	86.02	0	1.85	0	0	12.66	0	0	0	0	0	0	-44.47	-44.47
Inverter Transformer	MV3-14 T	368678	4907498	2	0	0	56.1	56.1	1	5685.34	3.25	0	86.1	0	1.86	0	0	12.72	0	0	0	0	0	0	-44.62	-44.62
Inverter Transformer	MV3-13 T	367958	4907577	2	0	0	56.1	56.1	1	5689.66	3.25	0	86.1	0	1.86	0	0	12.73	0	0	0	0	0	0	-44.64	-44.64

	Inverter Transformer	MV3-12 T	367674	4907594	2	0	0	56.1	56.1	1	5702.5	3.25	0	86.12	0	1.87	0	0	12.75	0	0	0	0	0	0	-44.68	-44.68
	Inverter Transformer	MV3-10 T	368162	4907669	2	0	0	56.1	56.1	1	5793.13	3.25	0	86.26	0	1.9	0	0	12.86	0	0	0	0	0	0	-44.95	-44.95
	Inverter Transformer	MV6-3 T	370202	4907140	2	0	0	56.1	56.1	1	5800.09	3.25	0	86.27	0	1.9	0	0	12.86	0	0	0	0	0	0	-44.97	-44.97
	Inverter Transformer	MV3-11 T	368340	4907662	2	0	0	56.1	56.1	1	5802.07	3.25	0	86.27	0	1.9	0	0	12.87	0	0	0	0	0	0	-44.98	-44.98
	Inverter Transformer	MV3-9 T	368517	4907703	2	0	0	56.1	56.1	1	5863.89	3.25	0	86.36	0	1.92	0	0	12.94	0	0	0	0	0	0	-45.17	-45.17
	Inverter Transformer	MV3-7 T	367951	4907754	2	0	0	56.1	56.1	1	5866.26	3.25	0	86.37	0	1.92	0	0	12.94	0	0	0	0	0	0	-45.17	-45.17
	Inverter Transformer	MV3-8 T	368685	4907712	2	0	0	56.1	56.1	1	5897.59	3.25	0	86.41	0	1.93	0	0	12.98	0	0	0	0	0	0	-45.27	-45.27
	Inverter Transformer	MV6-2 T	370091	4907339	2	0	0	56.1	56.1	1	5935.79	3.25	0	86.47	0	1.94	0	0	13.03	0	0	0	0	0	0	-45.38	-45.38
	Inverter Transformer	MV3-6 T	368156	4907834	2	0	0	56.1	56.1	1	5957.26	3.25	0	86.5	0	1.95	0	0	13.05	0	0	0	0	0	0	-45.45	-45.45
	Inverter Transformer	MV3-5 T	368335	4907843	2	0	0	56.1	56.1	1	5981.6	3.25	0	86.54	0	1.96	0	0	13.08	0	0	0	0	0	0	-45.52	-45.52
	Inverter Transformer	MV3-3 T	367944	4907927	2	0	0	56.1	56.1	1	6038.9	3.25	0	86.62	0	1.98	0	0	13.15	0	0	0	0	0	0	-45.69	-45.69
	Inverter Transformer	MV3-4 T	368507	4907925	2	0	0	56.1	56.1	1	6082.68	3.25	0	86.68	0	1.99	0	0	13.2	0	0	0	0	0	0	-45.81	-45.81
	Inverter Transformer	MV3-1 T	368150	4907976	2	0	0	56.1	56.1	1	6098.49	3.25	0	86.7	0	2	0	0	13.22	0	0	0	0	0	0	-45.86	-45.86
	Inverter Transformer	MV3-2 T	368677	4907928	2	0	0	56.1	56.1	1	6109.62	3.25	0	86.72	0	2	0	0	13.23	0	0	0	0	0	0	-45.89	-45.89
	Inverter Transformer	MV4-15 T	369170	4908481	2	0	0	56.1	56.1	1	6744.14	3.25	0	87.58	0	2.19	0	0	13.95	0	0	0	0	0	0	-47.66	-47.66
	Inverter Transformer	MV4-14 T	369182	4908507	2	0	0	56.1	56.1	1	6772.1	3.25	0	87.61	0	2.2	0	0	13.98	0	0	0	0	0	0	-47.73	-47.73
	Inverter Transformer	MV4-13 T	369057	4908605	2	0	0	56.1	56.1	1	6842.57	3.25	0	87.7	0	2.22	0	0	14.06	0	0	0	0	0	0	-47.92	-47.92
	Inverter Transformer	MV5-6 T	369987	4908507	2	0	0	56.1	56.1	1	6988.76	3.25	0	87.89	0	2.26	0	0	14.22	0	0	0	0	0	0	-48.3	-48.3
	Inverter Transformer	MV4-12 T	369049	4908803	2	0	0	56.1	56.1	1	7035.43	3.25	0	87.95	0	2.27	0	0	14.27	0	0	0	0	0	0	-48.42	-48.42
	Inverter Transformer	MV4-11 T	369269	4908855	2	0	0	56.1	56.1	1	7130.66	3.25	0	88.06	0	2.29	0	0	14.37	0	0	0	0	0	0	-48.67	-48.67
	Inverter Transformer	MV4-10 T	369307	4908858	2	0	0	56.1	56.1	1	7141.87	3.25	0	88.08	0	2.3	0	0	14.38	0	0	0	0	0	0	-48.7	-48.7
	Inverter Transformer	MV5-5 T	370021	4908690	2	0	0	56.1	56.1	1	7172.99	3.25	0	88.11	0	2.31	0	0	14.41	0	0	0	0	0	0	-48.78	-48.78
	Inverter Transformer	MV4-7 T	369040	4909001	2	0	0	56.1	56.1	1	7228.4	3.25	0	88.18	0	2.32	0	0	14.47	0	0	0	0	0	0	-48.92	-48.92
	Inverter Transformer	MV4-8 T	369262	4909001	2	0	0	56.1	56.1	1	7271.83	3.25	0	88.23	0	2.33	0	0	14.52	0	0	0	0	0	0	-49.02	-49.02
	Inverter Transformer	MV4-9 T	369284	4909001	2	0	0	56.1	56.1	1	7276.49	3.25	0	88.24	0	2.33	0	0	14.52	0	0	0	0	0	0	-49.04	-49.04
	Inverter Transformer	MV5-4 T	370330	4908707	2	0	0	56.1	56.1	1	7293.35	3.25	0	88.26	0	2.34	0	0	14.54	0	0	0	0	0	0	-49.08	-49.08
	Inverter Transformer	MV5-2 T	370011	4908853	2	0	0	56.1	56.1	1	7324.55	3.25	0	88.3	0	2.35	0	0	14.57	0	0	0	0	0	0	-49.16	-49.16
	Inverter Transformer	MV5-3 T	370237	4908851	2	0	0	56.1	56.1	1	7396.08	3.25	0	88.38	0	2.36	0	0	14.65	0	0	0	0	0	0	-49.33	-49.33
	Inverter Transformer	MV4-4 T	369033	4909199	2	0	0	56.1	56.1	1	7421.99	3.25	0	88.41	0	2.37	0	0	14.67	0	0	0	0	0	0	-49.4	-49.4
	Inverter Transformer	MV4-6 T	369249	4909192	2	0	0	56.1	56.1	1	7456.01	3.25	0	88.45	0	2.38	0	0	14.71	0	0	0	0	0	0	-49.48	-49.48
	Inverter Transformer	MV4-5 T	369283	4909199	2	0	0	56.1	56.1	1	7469.85	3.25	0	88.47	0	2.38	0	0	14.72	0	0	0	0	0	0	-49.51	-49.51
	Inverter Transformer	MV5-1 T	370015	4909142	2	0	0	56.1	56.1	1	7600.94	3.25	0	88.62	0	2.42	0	0	14.86	0	0	0	0	0	0	-49.83	-49.83
	Inverter Transformer	MV4-1 T	369017	4909397	2	0	0	56.1	56.1	1	7614.29	3.25	0	88.63	0	2.42	0	0	14.87	0	0	0	0	0	0	-49.86	-49.86
	Inverter Transformer	MV4-3 T	369234	4909397	2	0	0	56.1	56.1	1	7653.88	3.25	0	88.68	0	2.43	0	0	14.91	0	0	0	0	0	0	-49.96	-49.96
	Inverter Transformer	MV4-2 T	369267	4909397	2	0	0	56.1	56.1	1	7660.42	3.25	0	88.69	0	2.43	0	0	14.92	0	0	0	0	0	0	-49.97	-49.97
	Line Reactor	NGR	369421	4908787.5	5	0	0	45.4	45.4	1	7099.37	5.25	0	88.02	0	3.22	1.37	0.11	2.9	0	0	0	0	0	0	-50.16	-50.16
Limit. Valu	0	0																								
Level D/N:	20.7471	20.7471																								

Receiver: Vacant Lot Receptor
ID: G-V19
X: 367842.8
Y: 4901854
Z: 4.5
Ground: 0

ISO	Description	ID	X	Y	Z	Ground	ReflOrd	LxT	LxN	L/A	Dist.	hm	Freq	Adiv	K0b	Agr	Abar	z	Aatm	Afol	Ahous	Cmet	CmetN	Dc	RL	LtotT	LtotN
	Sol_Luce Substation	S_Substation	369426	4908792	3.5	0	0	112.1	112.1	1	7116.35	5.25	0	88.05	0	1.4	2.42	0.34	10.86	0	0	0	0	0	0	9.35	9.35
	Inverter	MV1-15	365315	4904994	2	0	0	100.3	100.3	1	4031.05	3.25	0	83.11	0	0.53	0	0	17.1	0	0	0	0	0	0	-0.43	-0.43
	Inverter	MV1-12	365038	4905386	2	0	0	100.3	100.3	1	4510.2	3.25	0	84.08	0	0.59	0	0	17.85	0	0	0	0	0	0	-2.21	-2.21
	Inverter	MV1-11	364655	4905414	2	0	0	100.3	100.3	1	4778.67	3.25	0	84.59	0	0.62	0	0	18.25	0	0	0	0	0	0	-3.15	-3.15
	Inverter	MV1-8	364788	4905647	2	0	0	100.3	100.3	1	4870.18	3.25	0	84.75	0	0.63	0	0	18.39	0	0	0	0	0	0	-3.46	-3.46
	Inverter	MV1-9	364561	4905646	2	0	0	100.3	100.3	1	5014.93	3.25	0	85.01	0	0.64	0	0	18.6	0	0	0	0	0	0	-3.94	-3.94
	Inverter	MV1-4	364815	4905918	2	0	0	100.3	100.3	1	5067.91	3.25	0	85.1	0	0.65	0	0	18.68	0	0	0	0	0	0	-4.11	-4.11
	Inverter	MV1-5	364671	4905892	2	0	0	100.3	100.3	1	5134.76	3.25	0	85.21	0	0.65	0	0	18.78	0	0	0	0	0	0	-4.33	-4.33
	Inverter	MV2-3	365820	4906641	2	0	0	100.3	100.3	1	5196.84	3.25	0	85.31	0	0.66	0	0	18.87	0	0	0	0	0	0	-4.53	-4.53
	Inverter	MV1-6	364477	4905835	2	0	0	100.3	100.3	1	5213.15	3.25	0	85.34	0	0.66	0	0	18.89	0	0	0	0	0	0	-4.58	-4.58
	Inverter	MV1-2	364753	4906063	2	0	0	100.3	100.3	1	5221.36	3.25	0	85.36	0	0.66	0	0	18.9	0	0	0	0	0	0	-4.61	-4.61
	Inverter	MV2-4	365586	4906624	2	0	0	100.3	100.3	1	5276.94	3.25	0	85.45	0	0.66	0	0	18.98	0	0	0	0	0	0	-4.78	-4.78
	Inverter	MV1-1	364715	4906166	2	0	0	100.3	100.3	1	5326.96	3.25	0	85.53	0	0.67	0	0	19.05	0	0	0	0	0	0	-4.94	-4.94
	Inverter	MV3-21	368478	4907206	2	0	0	100.3	100.3	1	5389.56	3.25	0	85.63	0	0.67	0	0	19.14	0	0	0	0	0	0	-5.14	-5.14
	Inverters	G_Inv10	366900.7	4902704.8	2	0	0	87.7	87.7	1	1269.42	3.25	0	73.07	0	2.49	0	0	1.76	0	0	0	0	0	0	10.34	10.34
	Inverter	MV3-19	368357	4907347	2	0	0	100.3	100.3	1	5517.02	3.25	0	85.83	0	0.68	0	0	19.32	0	0	0	0	0	0	-5.53	-5.53
	Inverter	MV3-20	368689	4907317	2	0	0	100.3	100.3	1	5528.15	3.25	0	85.85	0	0.68	0	0	19.34	0	0	0	0	0	0	-5.56	-5.56
	Inverter	MV3-18	367752	4907412	2	0	0	100.3	100.3	1	5558.74	3.25	0	85.9	0	0.68	0	0	19.38	0	0	0	0	0	0	-5.65	-5.65
	Inverter	MV3-17	368178	4907472	2	0	0	100.3	100.3	1	5627.99	3.25	0	86.01	0	0.69	0	0	19.48	0	0	0	0	0	0	-5.86	-5.86
	Inverter	MV3-15	368357	4907477	2	0	0	100.3	100.3	1	5646.46	3.25	0	86.04	0	0.69	0	0	19.51	0	0	0	0	0	0	-5.92	-5.92
	Inverter	MV3-16	368514	4907475	2	0	0	100.3	100.3	1	5660.93	3.25	0	86.06	0	0.69	0	0	19.53	0	0	0	0	0	0	-5.96	-5.96
	Inverter	MV3-14	368684	4907498	2	0	0	100.3	100.3	1	5706.34	3.25	0	86.13	0	0.69	0	0	19.59	0	0	0	0	0	0	-6.1	-6.1
	Inverter	MV3-13	367963	4907577	2	0	0	100.3	100.3	1	5724.26	3.25	0	86.15	0	0.69	0	0	19.61	0	0	0	0	0	0	-6.15	-6.15
	Inverter	MV3-12	367668	4907594	2	0	0	100.3	100.3	1	5742.66	3.25	0	86.18	0	0.69	0	0	19.64	0	0	0	0	0	0	-6.2	-6.2
	Inverter	MV6-3	370207	4907140	2	0	0	100.3	100.3	1	5790.62	3.25	0	86.25	0	0.7	0	0	19.71	0	0	0	0	0	0	-6.35	-6.35
	Inverter	MV3-10	368167	4907669	2	0	0	100.3	100.3	1	5824.03	3.25	0	86.3	0	0.7	0	0	19.75	0	0	0	0	0	0	-6.44	-6.44
	Inverter	MV3-11	368346	4907662	2	0	0	100.3	100.3	1	5829.76	3.25	0	86.31	0	0.7	0	0	19.76	0	0	0	0	0	0	-6.46	-6.46

Gardiner Substation	G_Sub	366586.3	4903349.9	2.5	0	0	90.8	90.8	1	1953.59	3.5	0	76.82	0	-0.18	0	0	4.29	0	0	0	0	0	0	9.85	9.85
Inverter	MV3-9	368512	4907703	2	0	0	100.3	100.3	1	5887.16	3.25	0	86.4	0	0.7	0	0	19.84	0	0	0	0	0	0	-6.63	-6.63
Inverter	MV1-14	365163	4905049	2	0	0	97.3	97.3	1	4170.06	3.59	0	83.4	0	1.4	2.9	0	17.32	0	0	0	0	0	0	-7.71	-7.71
Inverter	MV3-7	367945	4907754	2	0	0	100.3	100.3	1	5900.89	3.25	0	86.42	0	0.7	0	0	19.86	0	0	0	0	0	0	-6.67	-6.67
Inverters	G_Inv9	366750.9	4902691.8	2	0	0	87.7	87.7	1	1376.29	3.25	0	73.77	0	2.5	0	0	1.89	0	0	0	0	0	0	9.49	9.49
Inverter	MV3-8	368680	4907712	2	0	0	100.3	100.3	1	5917.52	3.25	0	86.44	0	0.7	0	0	19.88	0	0	0	0	0	0	-6.71	-6.71
Inverter	MV6-2	370085	4907339	2	0	0	100.3	100.3	1	5925.6	3.25	0	86.45	0	0.7	0	0	19.89	0	0	0	0	0	0	-6.74	-6.74
Inverter	MV3-6	368162	4907834	2	0	0	100.3	100.3	1	5988.51	3.25	0	86.55	0	0.7	0	0	19.98	0	0	0	0	0	0	-6.92	-6.92
Inverters	G_Inv8	366844.5	4902838.5	2	0	0	87.7	87.7	1	1402.09	3.25	0	73.94	0	2.51	0	0	1.93	0	0	0	0	0	0	9.29	9.29
Inverter	MV3-3	367939	4907927	2	0	0	100.3	100.3	1	6073.76	3.25	0	86.67	0	0.71	0	0	20.09	0	0	0	0	0	0	-7.16	-7.16
Inverters	G_Inv7	366694.6	4902824.7	2	0	0	87.7	87.7	1	1503.54	3.25	0	74.54	0	2.52	0	0	2.05	0	0	0	0	0	0	8.55	8.55
Inverter	MV1-13	364731	4905241	2	0	0	97.3	97.3	1	4599.46	3.25	0	84.25	0	0.6	0	0	17.98	0	0	0	0	0	0	-5.53	-5.53
Inverters	G_Inv6	366788.5	4902972	2	0	0	87.7	87.7	1	1536.71	3.25	0	74.73	0	2.52	0	0	2.09	0	0	0	0	0	0	8.32	8.32
Inverter	MV1-10	365004	4905564	2	0	0	97.3	97.3	1	4671.5	3.25	0	84.39	0	0.61	0	0	18.09	0	0	0	0	0	0	-5.78	-5.78
Inverter	MV1-7	364925	4905782	2	0	0	97.3	97.3	1	4893.13	3.25	0	84.79	0	0.63	0	0	18.42	0	0	0	0	0	0	-6.53	-6.53
Inverters	G_Inv5	366638.5	4902958.1	2	0	0	87.7	87.7	1	1633.82	3.25	0	75.26	0	2.54	0	0	2.2	0	0	0	0	0	0	7.66	7.66
Inverter	MV4-11	369264	4908855	2	0	0	100.3	100.3	1	7143.8	3.25	0	88.08	0	0.71	0	0	21.48	0	0	0	0	0	0	-9.95	-9.95
Inverter	MV4-10	369312	4908858	2	0	0	100.3	100.3	1	7156.44	3.25	0	88.09	0	0.71	0	0	21.49	0	0	0	0	0	0	-9.98	-9.98
Inverter	MV5-5	370015	4908690	2	0	0	100.3	100.3	1	7172.82	3.25	0	88.11	0	0.7	0	0	21.51	0	0	0	0	0	0	-10.02	-10.02
Inverters	G_Inv4	366732.8	4903105	2	0	0	87.7	87.7	1	1672.46	3.25	0	75.47	0	2.54	0	0	2.25	0	0	0	0	0	0	7.4	7.4
Inverter	MV4-7	369035	4909001	2	0	0	100.3	100.3	1	7245.75	3.25	0	88.2	0	0.7	0	0	21.6	0	0	0	0	0	0	-10.2	-10.2
Inverter	MV4-8	369256	4909001	2	0	0	100.3	100.3	1	7285.38	3.25	0	88.25	0	0.7	0	0	21.65	0	0	0	0	0	0	-10.29	-10.29
Inverter	MV5-4	370324	4908707	2	0	0	100.3	100.3	1	7288.34	3.25	0	88.25	0	0.7	0	0	21.66	0	0	0	0	0	0	-10.3	-10.3
Inverter	MV4-9	369289	4909001	2	0	0	100.3	100.3	1	7291.85	3.25	0	88.26	0	0.7	0	0	21.66	0	0	0	0	0	0	-10.31	-10.31
Inverter	MV5-2	370006	4908853	2	0	0	100.3	100.3	1	7325.67	3.25	0	88.3	0	0.7	0	0	21.7	0	0	0	0	0	0	-10.39	-10.39
Inverter	MV5-3	370231	4908851	2	0	0	100.3	100.3	1	7393.34	3.25	0	88.38	0	0.69	0	0	21.79	0	0	0	0	0	0	-10.54	-10.54
Inverter	MV4-4	369027	4909199	2	0	0	100.3	100.3	1	7439.85	3.25	0	88.43	0	0.69	0	0	21.84	0	0	0	0	0	0	-10.65	-10.65
Inverter	MV4-6	369243	4909192	2	0	0	100.3	100.3	1	7470.4	3.25	0	88.47	0	0.69	0	0	21.88	0	0	0	0	0	0	-10.72	-10.72
Inverter	MV4-5	369289	4909199	2	0	0	100.3	100.3	1	7486.02	3.25	0	88.49	0	0.69	0	0	21.9	0	0	0	0	0	0	-10.76	-10.76
Inverter	MV2-1	365842	4906816	2	0	0	97.3	97.3	1	5350.2	3.25	0	85.57	0	0.67	0	0	19.09	0	0	0	0	0	0	-8.01	-8.01
Inverters	G_Inv3	366583.7	4903091.4	2	0	0	87.7	87.7	1	1765.36	3.25	0	75.94	0	2.55	0	0	2.36	0	0	0	0	0	0	6.81	6.81
Inverter	MV5-1	370020	4909142	2	0	0	100.3	100.3	1	7606.26	3.25	0	88.62	0	0.68	0	0	22.04	0	0	0	0	0	0	-11.04	-11.04
Inverter	MV4-1	369011	4909397	2	0	0	100.3	100.3	1	7632.93	3.25	0	88.65	0	0.68	0	0	22.07	0	0	0	0	0	0	-11.1	-11.1
Inverter	MV4-3	369229	4909397	2	0	0	100.3	100.3	1	7669.32	3.25	0	88.7	0	0.68	0	0	22.12	0	0	0	0	0	0	-11.18	-11.18
Inverter	MV4-2	369272	4909397	2	0	0	100.3	100.3	1	7677.2	3.25	0	88.7	0	0.68	0	0	22.13	0	0	0	0	0	0	-11.2	-11.2
Inverters	G_Inv2	366676.9	4903239.1	2	0	0	87.7	87.7	1	1810.48	3.25	0	76.16	0	2.56	0	0	2.41	0	0	0	0	0	0	6.53	6.53
Inverters	G_Inv1	366526.4	4903225.8	2	0	0	87.7	87.7	1	1901.25	3.25	0	76.58	0	2.57	0	0	2.52	0	0	0	0	0	0	5.99	5.99
Inverter	MV6-1	370235	4907364	2	0	0	97.3	97.3	1	6006.89	3.25	0	86.57	0	0.71	0	0	20	0	0	0	0	0	0	-9.97	-9.97
DSTATCOM - 10 MVAR #2	DSAT2	369403	4908757	2.5	0	0	96.6	96.6	1	7077.12	3.5	0	88	0	3.84	0	0	4.35	0	0	0	0	0	0	0.45	0.45
DSTATCOM - 10 MVAR #1	DSAT1	369437	4908757	2.5	0	0	96.6	96.6	1	7084.69	3.5	0	88.01	0	3.84	0	0	4.35	0	0	0	0	0	0	0.43	0.43
SubstationTransformer	W_ST	369711.17	4906112.3	2.5	0	0	92	92	1	4650.13	3.5	0	84.35	0	0.48	0	-0.13	8.2	0	0	0	0	0	0	-1.05	-1.05
Westbrook Inverter Enclosur	W_INV3	369508	4906164	2	0	0	89.1	89.1	1	4620.5	3.25	0	84.29	0	1.55	0	0	11.95	0	0	0	0	0	0	-8.73	-8.73
Westbrook Inverter Enclosur	W_INV4	369673	4906164	2	0	0	89.1	89.1	1	4682.49	3.25	0	84.41	0	1.56	0	0	12.03	0	0	0	0	0	0	-8.95	-8.95
Westbrook Inverter Enclosur	W_INV2	369374	4906388	2	0	0	89.1	89.1	1	4785.58	3.25	0	84.6	0	1.59	0	0	12.17	0	0	0	0	0	0	-9.3	-9.3
Westbrook Inverter Enclosur	W_INV7	369780	4906417	2	0	0	89.1	89.1	1	4957.19	3.25	0	84.9	0	1.63	0	0	12.41	0	0	0	0	0	0	-9.88	-9.88
Westbrook Inverter Enclosur	W_INV5	369719	4906574	2	0	0	89.1	89.1	1	5079.23	3.25	0	85.12	0	1.66	0	0	12.57	0	0	0	0	0	0	-10.29	-10.29
Westbrook Inverter Enclosur	W_INV6	369875	4906578	2	0	0	89.1	89.1	1	5142.57	3.25	0	85.22	0	1.67	0	0	12.65	0	0	0	0	0	0	-10.49	-10.49
Inverter	MV2-2	365977	4906654	2	0	0	89.1	89.1	1	5149.88	3.25	0	85.24	0	1.68	0	0	12.66	0	0	0	0	0	0	-10.52	-10.52
Inverter	MV3-22	368656	4907142	2	0	0	89.1	89.1	1	5350.16	3.25	0	85.57	0	1.73	0	0	12.93	0	0	0	0	0	0	-11.16	-11.16
Inverter	MV1-3	364440	4906039	2	0	0	89.1	89.1	1	5393.82	3.25	0	85.64	0	1.74	0	0	12.98	0	0	0	0	0	0	-11.3	-11.3
Inverter	MV3-5	368340	4907843	2	0	0	89.1	89.1	1	6009.6	3.25	0	86.58	0	1.89	0	0	13.77	0	0	0	0	0	0	-13.18	-13.18
Inverter	MV3-4	368502	4907925	2	0	0	89.1	89.1	1	6106.68	3.25	0	86.72	0	1.91	0	0	13.9	0	0	0	0	0	0	-13.47	-13.47
Inverter	MV3-1	368156	4907976	2	0	0	89.1	89.1	1	6130.01	3.25	0	86.75	0	1.92	0	0	13.93	0	0	0	0	0	0	-13.53	-13.53
Inverter	MV3-2	368671	4907928	2	0	0	89.1	89.1	1	6130.2	3.25	0	86.75	0	1.92	0	0	13.93	0	0	0	0	0	0	-13.54	-13.54
Fixed Reactor Bank 1	FRB1	369378	4908755	6	0	0	89.8	89.8	1	7069.7	5.25	0	87.99	0	-0.28	0	0	10.81	0	0	0	0	0	0	-8.75	-8.75
Fixed Reactor Bank 2	FRB2	369464	4908755	6	0	0	89.8	89.8	1	7088.87	5.25	0	88.01	0	-0.27	0	0	10.83	0	0	0	0	0	0	-8.79	-8.79
Inverter	MV4-15	369176	4908481	2	0	0	89.1	89.1	1	6759.77	3.25	0	87.6	0	2.07	0	0	14.7	0	0	0	0	0	0	-15.31	-15.31
Inverter	MV4-14	369176	4908507	2	0	0	89.1	89.1	1	6785.27	3.25	0	87.63	0	2.08	0	0	14.73	0	0	0	0	0	0	-15.38	-15.38
Inverter	MV4-13	369051	4908605	2	0	0	89.1	89.1	1	6858.26	3.25	0	87.72	0	2.09	0	0	14.82	0	0	0	0	0	0	-15.58	-15.58
Inverter	MV5-6	369982	4908507	2	0	0	89.1	89.1	1	6988.46	3.25	0	87.89	0	2.13	0	0	14.97	0	0	0	0	0	0	-15.93	-15.93
Westbrook Inverter Enclosur	W_INV1	369409	4906578	2	0	0	86.1	86.1	1	4976.86	3.25	0	84.94	0	1.63	0	0	12.43	0	0	0	0	0	0	-12.95	-12.95
Inverter	MV4-12	369043	4908803	2	0	0	89.1	89.1	1	7051.89	3.25	0	87.97	0	2.14	0	0	15.05	0	0	0	0	0	0	-16.1	-16.1
Inverter	MV6-4	370250	4906966	2	0	0	86.1	86.1	1	5650.41	3.25	0	86.04	0	1.8	0	0	13.32	0	0	0	0	0	0	-15.1	-15.1
Westbrook Inverter Transfor	W_INVTR1	369403	4906578	2	0	0	78.2	78.2	1	4974.98	3.25	0	84.94	0	-3.17	0	0	2.4	0	0	0	0	0	0	-5.93	-5.93
Westbrook Inverter Transfor	W_INVTR3	369514	4906164	2	0	0	77.3	77.3	1	4622.66	3.25	0	84.3	0	-3.1	0	0	2.28	0	0	0	0	0	0	-6.14	-6.14
Westbrook Inverter Transfor	W_INVTR4	369679	4906164	2	0	0	77.3	77.3	1	4684.84	3.25	0	84.41	0	-3.11	0	0	2.3	0	0	0	0	0	0	-6.26	-6.26
Westbrook Inverter Transfor	W_INVTR2	369368	4906388	2	0	0	77.3	77.3	1	4783.66	3.25	0	84.6	0	-3.13	0	0	2.34	0	0	0	0	0	0	-6.46	-6.46
Westbrook Inverter Transfor	W_INVTR7	369786	4906417	2	0	0	77.3	77.3	1	4959.54	3.25	0	84.91	0	-3.17	0	0	2.4	0	0	0	0	0	0	-6.8	-6.8
Westbrook Inverter Transfor	W_INVTR5	369725	4906574	2	0	0	77.3	77.3	1	5081.44	3.25	0	85.12	0	-3.19	0	0	2.44	0	0	0	0	0	0	-7.03	-7.03
Westbrook Inverter Transfor	W_INVTR6	369881	4906578	2	0	0	77.3	77.3	1	5144.94	3.25	0	85.23	0	-3.21	0	0	2.46	0	0	0	0	0	0	-7.14	-7.14
Inverter Transformer	MV1-14 T	365157	4905049	2	0	0	69.4	69.4	1	4173.91	3.59	0	83.41	0	3.64	0.97	0	6.8	0	0	0	0	0	0	-25.48	-25.48
Inverter Transformer	MV1-13 T	364725	4905241	2	0	0	69.4	69.4	1	4603.53	3.25	0	84.26	0	2.93	0	0	7.11	0	0	0	0	0	0	-24.95	-24.95
Inverter Transformer	MV1-10 T	365010	4905564	2	0	0	69.4	69.4	1	4667.85	3.25	0	84.38	0	2.94	0	0	7.16	0	0	0	0	0	0	-25.13	-25.13
Inverter Transformer	MV1-7 T	364919	4905782	2	0	0	69.4	69.4	1	4896.71	3.25	0	84.8	0	2.99	0	0	7.31	0	0	0	0	0	0	-25.75	-25.75

	Inverter Transformer	MV2-1 T	365836	4906816	2	0	0	69.4	69.4	1	5352.45	3.25	0	85.57	0	3.08	0	0	7.61	0	0	0	0	0	0	-26.91	-26.91
	Inverter Transformer	MV6-4 T	370244	4906966	2	0	0	69.4	69.4	1	5647.86	3.25	0	86.04	0	3.13	0	0	7.8	0	0	0	0	0	0	-27.62	-27.62
	Inverter Transformer	MV6-1 T	370230	4907364	2	0	0	69.4	69.4	1	6004.9	3.25	0	86.57	0	3.19	0	0	8.02	0	0	0	0	0	0	-28.43	-28.43
	Inverter Transformer	MV1-15 T	365309	4904994	2	0	0	56.1	56.1	1	4034.82	3.25	0	83.12	0	1.26	0	0	10.51	0	0	0	0	0	0	-38.82	-38.82
	Inverter Transformer	MV1-12 T	365044	4905386	2	0	0	56.1	56.1	1	4506.47	3.25	0	84.08	0	1.44	0	0	11.18	0	0	0	0	0	0	-40.64	-40.64
	Inverter Transformer	MV1-11 T	364649	4905414	2	0	0	56.1	56.1	1	4782.67	3.25	0	84.59	0	1.55	0	0	11.56	0	0	0	0	0	0	-41.64	-41.64
	Inverter Transformer	MV1-8 T	364782	4905647	2	0	0	56.1	56.1	1	4873.95	3.25	0	84.76	0	1.58	0	0	11.69	0	0	0	0	0	0	-41.97	-41.97
	Inverter Transformer	MV1-9 T	364555	4905646	2	0	0	56.1	56.1	1	5018.85	3.25	0	85.01	0	1.63	0	0	11.88	0	0	0	0	0	0	-42.46	-42.46
	Inverter Transformer	MV1-4 T	364821	4905918	2	0	0	56.1	56.1	1	5064.32	3.25	0	85.09	0	1.65	0	0	11.94	0	0	0	0	0	0	-42.62	-42.62
	Inverter Transformer	MV1-5 T	364676	4905892	2	0	0	56.1	56.1	1	5131.67	3.25	0	85.21	0	1.67	0	0	12.03	0	0	0	0	0	0	-42.85	-42.85
	Inverter Transformer	MV2-2 T	365982	4906654	2	0	0	56.1	56.1	1	5148.07	3.25	0	85.23	0	1.68	0	0	12.05	0	0	0	0	0	0	-42.9	-42.9
	Inverter Transformer	MV2-3 T	365814	4906641	2	0	0	56.1	56.1	1	5199.17	3.25	0	85.32	0	1.7	0	0	12.11	0	0	0	0	0	0	-43.07	-43.07
	Inverter Transformer	MV1-6 T	364482	4905835	2	0	0	56.1	56.1	1	5209.93	3.25	0	85.34	0	1.7	0	0	12.13	0	0	0	0	0	0	-43.11	-43.11
	Inverter Transformer	MV1-2 T	364759	4906063	2	0	0	56.1	56.1	1	5217.81	3.25	0	85.35	0	1.7	0	0	12.14	0	0	0	0	0	0	-43.13	-43.13
	Inverter Transformer	MV2-4 T	365590	4906628	2	0	0	56.1	56.1	1	5278.84	3.25	0	85.45	0	1.72	0	0	12.22	0	0	0	0	0	0	-43.33	-43.33
	Inverter Transformer	MV1-1 T	364721	4906166	2	0	0	56.1	56.1	1	5323.44	3.25	0	85.52	0	1.74	0	0	12.27	0	0	0	0	0	0	-43.48	-43.48
	Inverter Transformer	MV3-22 T	368661	4907142	2	0	0	56.1	56.1	1	5350.93	3.25	0	85.57	0	1.75	0	0	12.31	0	0	0	0	0	0	-43.57	-43.57
	Inverter Transformer	MV3-21 T	368484	4907206	2	0	0	56.1	56.1	1	5390.27	3.25	0	85.63	0	1.76	0	0	12.36	0	0	0	0	0	0	-43.69	-43.69
	Inverter Transformer	MV1-3 T	364435	4906039	2	0	0	56.1	56.1	1	5396.97	3.25	0	85.64	0	1.77	0	0	12.37	0	0	0	0	0	0	-43.72	-43.72
	Inverter Transformer	MV3-19 T	368352	4907347	2	0	0	56.1	56.1	1	5516.55	3.25	0	85.83	0	1.81	0	0	12.52	0	0	0	0	0	0	-44.1	-44.1
	Inverter Transformer	MV3-20 T	368683	4907317	2	0	0	56.1	56.1	1	5527.23	3.25	0	85.85	0	1.81	0	0	12.53	0	0	0	0	0	0	-44.13	-44.13
	Inverter Transformer	MV3-18 T	367757	4907412	2	0	0	56.1	56.1	1	5558.66	3.25	0	85.9	0	1.82	0	0	12.57	0	0	0	0	0	0	-44.23	-44.23
	Inverter Transformer	MV3-17 T	368183	4907472	2	0	0	56.1	56.1	1	5628.29	3.25	0	86.01	0	1.84	0	0	12.65	0	0	0	0	0	0	-44.45	-44.45
	Inverter Transformer	MV3-15 T	368351	4907477	2	0	0	56.1	56.1	1	5645.92	3.25	0	86.03	0	1.85	0	0	12.68	0	0	0	0	0	0	-44.5	-44.5
	Inverter Transformer	MV3-16 T	368509	4907475	2	0	0	56.1	56.1	1	5660.34	3.25	0	86.06	0	1.85	0	0	12.69	0	0	0	0	0	0	-44.55	-44.55
	Inverter Transformer	MV3-14 T	368678	4907498	2	0	0	56.1	56.1	1	5705.46	3.25	0	86.13	0	1.87	0	0	12.75	0	0	0	0	0	0	-44.69	-44.69
	Inverter Transformer	MV3-13 T	367958	4907577	2	0	0	56.1	56.1	1	5724.16	3.25	0	86.15	0	1.88	0	0	12.77	0	0	0	0	0	0	-44.74	-44.74
	Inverter Transformer	MV3-12 T	367674	4907594	2	0	0	56.1	56.1	1	5742.48	3.25	0	86.18	0	1.88	0	0	12.79	0	0	0	0	0	0	-44.8	-44.8
	Inverter Transformer	MV6-3 T	370202	4907140	2	0	0	56.1	56.1	1	5788.58	3.25	0	86.25	0	1.9	0	0	12.85	0	0	0	0	0	0	-44.94	-44.94
	Inverter Transformer	MV3-10 T	368162	4907669	2	0	0	56.1	56.1	1	5823.75	3.25	0	86.3	0	1.91	0	0	12.89	0	0	0	0	0	0	-45.05	-45.05
	Inverter Transformer	MV3-11 T	368340	4907662	2	0	0	56.1	56.1	1	5829.24	3.25	0	86.31	0	1.91	0	0	12.9	0	0	0	0	0	0	-45.06	-45.06
	Inverter Transformer	MV3-9 T	368517	4907703	2	0	0	56.1	56.1	1	5887.73	3.25	0	86.4	0	1.93	0	0	12.97	0	0	0	0	0	0	-45.24	-45.24
	Inverter Transformer	MV3-7 T	367951	4907754	2	0	0	56.1	56.1	1	5900.99	3.25	0	86.42	0	1.93	0	0	12.99	0	0	0	0	0	0	-45.28	-45.28
	Inverter Transformer	MV3-8 T	368685	4907712	2	0	0	56.1	56.1	1	5918.23	3.25	0	86.44	0	1.94	0	0	13.01	0	0	0	0	0	0	-45.33	-45.33
	Inverter Transformer	MV6-2 T	370091	4907339	2	0	0	56.1	56.1	1	5927.87	3.25	0	86.46	0	1.94	0	0	13.02	0	0	0	0	0	0	-45.36	-45.36
	Inverter Transformer	MV3-6 T	368156	4907834	2	0	0	56.1	56.1	1	5988.2	3.25	0	86.55	0	1.96	0	0	13.09	0	0	0	0	0	0	-45.54	-45.54
	Inverter Transformer	MV3-5 T	368335	4907843	2	0	0	56.1	56.1	1	6009.19	3.25	0	86.58	0	1.97	0	0	13.11	0	0	0	0	0	0	-45.6	-45.6
	Inverter Transformer	MV3-3 T	367944	4907927	2	0	0	56.1	56.1	1	6073.84	3.25	0	86.67	0	1.99	0	0	13.19	0	0	0	0	0	0	-45.79	-45.79
	Inverter Transformer	MV3-4 T	368507	4907925	2	0	0	56.1	56.1	1	6107.23	3.25	0	86.72	0	2	0	0	13.23	0	0	0	0	0	0	-45.89	-45.89
	Inverter Transformer	MV3-1 T	368150	4907976	2	0	0	56.1	56.1	1	6129.7	3.25	0	86.75	0	2.01	0	0	13.26	0	0	0	0	0	0	-45.95	-45.95
	Inverter Transformer	MV3-2 T	368677	4907928	2	0	0	56.1	56.1	1	6131.02	3.25	0	86.75	0	2.01	0	0	13.26	0	0	0	0	0	0	-45.96	-45.96
	Inverter Transformer	MV4-15 T	369170	4908481	2	0	0	56.1	56.1	1	6758.59	3.25	0	87.6	0	2.19	0	0	13.97	0	0	0	0	0	0	-47.7	-47.7
	Inverter Transformer	MV4-14 T	369182	4908507	2	0	0	56.1	56.1	1	6786.45	3.25	0	87.63	0	2.2	0	0	14	0	0	0	0	0	0	-47.77	-47.77
	Inverter Transformer	MV4-13 T	369057	4908605	2	0	0	56.1	56.1	1	6859.32	3.25	0	87.73	0	2.22	0	0	14.08	0	0	0	0	0	0	-47.97	-47.97
	Inverter Transformer	MV5-6 T	369987	4908507	2	0	0	56.1	56.1	1	6989.99	3.25	0	87.89	0	2.26	0	0	14.22	0	0	0	0	0	0	-48.31	-48.31
	Inverter Transformer	MV4-12 T	369049	4908803	2	0	0	56.1	56.1	1	7052.91	3.25	0	87.97	0	2.27	0	0	14.29	0	0	0	0	0	0	-48.47	-48.47
	Inverter Transformer	MV4-11 T	369269	4908855	2	0	0	56.1	56.1	1	7144.79	3.25	0	88.08	0	2.3	0	0	14.38	0	0	0	0	0	0	-48.7	-48.7
	Inverter Transformer	MV4-10 T	369307	4908858	2	0	0	56.1	56.1	1	7155.41	3.25	0	88.09	0	2.3	0	0	14.4	0	0	0	0	0	0	-48.73	-48.73
	Inverter Transformer	MV5-5 T	370021	4908690	2	0	0	56.1	56.1	1	7174.64	3.25	0	88.12	0	2.31	0	0	14.42	0	0	0	0	0	0	-48.78	-48.78
	Inverter Transformer	MV4-7 T	369040	4909001	2	0	0	56.1	56.1	1	7246.58	3.25	0	88.2	0	2.33	0	0	14.49	0	0	0	0	0	0	-48.96	-48.96
	Inverter Transformer	MV4-8 T	369262	4909001	2	0	0	56.1	56.1	1	7286.55	3.25	0	88.25	0	2.34	0	0	14.53	0	0	0	0	0	0	-49.06	-49.06
	Inverter Transformer	MV5-4 T	370330	4908707	2	0	0	56.1	56.1	1	7290.39	3.25	0	88.26	0	2.34	0	0	14.54	0	0	0	0	0	0	-49.07	-49.07
	Inverter Transformer	MV4-9 T	369284	4909001	2	0	0	56.1	56.1	1	7290.86	3.25	0	88.26	0	2.34	0	0	14.54	0	0	0	0	0	0	-49.07	-49.07
	Inverter Transformer	MV5-2 T	370011	4908853	2	0	0	56.1	56.1	1	7327.15	3.25	0	88.3	0	2.35	0	0	14.58	0	0	0	0	0	0	-49.16	-49.16
	Inverter Transformer	MV5-3 T	370237	4908851	2	0	0	56.1	56.1	1	7395.28	3.25	0	88.38	0	2.36	0	0	14.65	0	0	0	0	0	0	-49.33	-49.33
	Inverter Transformer	MV4-4 T	369033	4909199	2	0	0	56.1	56.1	1	7440.81	3.25	0	88.43	0	2.38	0	0	14.69	0	0	0	0	0	0	-49.44	-49.44
	Inverter Transformer	MV4-6 T	369249	4909192	2	0	0	56.1	56.1	1	7471.52	3.25	0	88.47	0	2.38	0	0	14.73	0	0	0	0	0	0	-49.52	-49.52
	Inverter Transformer	MV4-5 T	369283	4909199	2	0	0	56.1	56.1	1	7484.87	3.25	0	88.48	0	2.39	0	0	14.74	0	0	0	0	0	0	-49.55	-49.55
	Inverter Transformer	MV5-1 T	370015	4909142	2	0	0	56.1	56.1	1	7604.83	3.25	0	88.62	0	2.42	0	0	14.86	0	0	0	0	0	0	-49.84	-49.84
	Inverter Transformer	MV4-1 T	369017	4909397	2	0	0	56.1	56.1	1	7633.85	3.25	0	88.65	0	2.42	0	0	14.89	0	0	0	0	0	0	-49.91	-49.91
	Inverter Transformer	MV4-3 T	369234	4909397	2	0	0	56.1	56.1	1	7670.22	3.25	0	88.7	0	2.43	0	0	14.93	0	0	0	0	0	0	-50	-50
	Inverter Transformer	MV4-2 T	369267	4909397	2	0	0	56.1	56.1	1	7676.28	3.25	0	88.7	0	2.43	0	0	14.93	0	0	0	0	0	0	-50.01	-50.01
	Line Reactor	NGR	369421	4908787.5	5	0	0	45.4	45.4	1	7110.85	5.25	0	88.04	0	3.22	1.37	0.11	2.91	0	0	0	0	0	0	-50.18	-50.18
Limit. Valu	0	0																								
Level D/N:	20.1551	20.1551																								

Receiver: Vacant Lot Receptor
ID: G-V20
X: 367894.2
Y: 4901896.8
Z: 4.5
Ground: 0

ISO	Description	ID	X	Y	Z	Ground	ReflOrd	LxT	LxN	L/A	Dist.	hm	Freq	Adiv	K0b	Agr	Abar	z	Aatm	Afol	Ahous	Cmet	CmetN	Dc	RL	LtotT	LtotN

Sol_Luce Substation	S_Substation	369426	4908792	3.5	0	0	112.1	112.1	1	7063.3	5.25	0	87.98	0	1.39	2.43	0.34	10.81	0	0	0	0	0	0	9.46	9.46
Inverter	MV1-15	365315	4904994	2	0	0	100.3	100.3	1	4030.5	3.25	0	83.11	0	0.53	0	0	17.1	0	0	0	0	0	0	-0.42	-0.42
Inverter	MV1-12	365038	4905386	2	0	0	100.3	100.3	1	4509.15	3.25	0	84.08	0	0.59	0	0	17.84	0	0	0	0	0	0	-2.21	-2.21
Inverter	MV1-11	364655	4905414	2	0	0	100.3	100.3	1	4781.54	3.25	0	84.59	0	0.62	0	0	18.26	0	0	0	0	0	0	-3.16	-3.16
Inverter	MV1-8	364788	4905647	2	0	0	100.3	100.3	1	4869.55	3.25	0	84.75	0	0.63	0	0	18.39	0	0	0	0	0	0	-3.46	-3.46
Inverter	MV1-9	364561	4905646	2	0	0	100.3	100.3	1	5016.65	3.25	0	85.01	0	0.64	0	0	18.6	0	0	0	0	0	0	-3.94	-3.94
Inverter	MV1-4	364815	4905918	2	0	0	100.3	100.3	1	5064.73	3.25	0	85.09	0	0.65	0	0	18.68	0	0	0	0	0	0	-4.1	-4.1
Inverter	MV1-5	364671	4905892	2	0	0	100.3	100.3	1	5133.29	3.25	0	85.21	0	0.65	0	0	18.78	0	0	0	0	0	0	-4.32	-4.32
Inverter	MV2-3	365820	4906641	2	0	0	100.3	100.3	1	5177.81	3.25	0	85.28	0	0.66	0	0	18.84	0	0	0	0	0	0	-4.47	-4.47
Inverter	MV1-6	364477	4905835	2	0	0	100.3	100.3	1	5214.08	3.25	0	85.34	0	0.66	0	0	18.89	0	0	0	0	0	0	-4.58	-4.58
Inverter	MV1-2	364753	4906063	2	0	0	100.3	100.3	1	5217.7	3.25	0	85.35	0	0.66	0	0	18.9	0	0	0	0	0	0	-4.6	-4.6
Inverter	MV2-4	365586	4906624	2	0	0	100.3	100.3	1	5260.63	3.25	0	85.42	0	0.66	0	0	18.96	0	0	0	0	0	0	-4.73	-4.73
Inverter	MV1-1	364715	4906166	2	0	0	100.3	100.3	1	5322.91	3.25	0	85.52	0	0.67	0	0	19.05	0	0	0	0	0	0	-4.93	-4.93
Inverter	MV3-21	368478	4907206	2	0	0	100.3	100.3	1	5341.2	3.25	0	85.55	0	0.67	0	0	19.07	0	0	0	0	0	0	-4.99	-4.99
Inverter	MV3-19	368357	4907347	2	0	0	100.3	100.3	1	5469.81	3.25	0	85.76	0	0.68	0	0	19.26	0	0	0	0	0	0	-5.38	-5.38
Inverter	MV3-20	368689	4907317	2	0	0	100.3	100.3	1	5478.16	3.25	0	85.77	0	0.68	0	0	19.27	0	0	0	0	0	0	-5.41	-5.41
Inverters	G_Inv10	366900.7	4902704.8	2	0	0	87.7	87.7	1	1280.59	3.25	0	73.15	0	2.49	0	0	1.78	0	0	0	0	0	0	10.25	10.25
Inverter	MV3-18	367752	4907412	2	0	0	100.3	100.3	1	5517.03	3.25	0	85.83	0	0.68	0	0	19.32	0	0	0	0	0	0	-5.53	-5.53
Inverter	MV3-17	368178	4907472	2	0	0	100.3	100.3	1	5582.42	3.25	0	85.94	0	0.69	0	0	19.42	0	0	0	0	0	0	-5.73	-5.73
Inverter	MV3-15	368357	4907477	2	0	0	100.3	100.3	1	5599.36	3.25	0	85.96	0	0.69	0	0	19.44	0	0	0	0	0	0	-5.78	-5.78
Inverter	MV3-16	368514	4907475	2	0	0	100.3	100.3	1	5612.53	3.25	0	85.98	0	0.69	0	0	19.46	0	0	0	0	0	0	-5.82	-5.82
Inverter	MV3-14	368684	4907498	2	0	0	100.3	100.3	1	5656.61	3.25	0	86.05	0	0.69	0	0	19.52	0	0	0	0	0	0	-5.95	-5.95
Inverter	MV3-13	367963	4907577	2	0	0	100.3	100.3	1	5680.62	3.25	0	86.09	0	0.69	0	0	19.55	0	0	0	0	0	0	-6.02	-6.02
Inverter	MV3-12	367668	4907594	2	0	0	100.3	100.3	1	5701.69	3.25	0	86.12	0	0.69	0	0	19.58	0	0	0	0	0	0	-6.08	-6.08
Inverter	MV6-3	370207	4907140	2	0	0	100.3	100.3	1	5730.64	3.25	0	86.16	0	0.69	0	0	19.62	0	0	0	0	0	0	-6.17	-6.17
Inverter	MV3-10	368167	4907669	2	0	0	100.3	100.3	1	5778.64	3.25	0	86.24	0	0.7	0	0	19.69	0	0	0	0	0	0	-6.31	-6.31
Inverter	MV3-11	368346	4907662	2	0	0	100.3	100.3	1	5782.88	3.25	0	86.24	0	0.7	0	0	19.7	0	0	0	0	0	0	-6.32	-6.32
Inverter	MV3-9	368512	4907703	2	0	0	100.3	100.3	1	5838.98	3.25	0	86.33	0	0.7	0	0	19.77	0	0	0	0	0	0	-6.49	-6.49
Inverter	MV3-7	367945	4907754	2	0	0	100.3	100.3	1	5857.42	3.25	0	86.35	0	0.7	0	0	19.8	0	0	0	0	0	0	-6.54	-6.54
Gardiner Substation	G_Sub	366586.3	4903349.9	2.5	0	0	90.8	90.8	1	1955.02	3.5	0	76.82	0	-0.18	0	0	4.29	0	0	0	0	0	0	9.84	9.84
Inverter	MV6-2	370085	4907339	2	0	0	100.3	100.3	1	5866.61	3.25	0	86.37	0	0.7	0	0	19.81	0	0	0	0	0	0	-6.57	-6.57
Inverter	MV3-8	368680	4907712	2	0	0	100.3	100.3	1	5868.05	3.25	0	86.37	0	0.7	0	0	19.81	0	0	0	0	0	0	-6.57	-6.57
Inverter	MV1-14	365163	4905049	2	0	0	97.3	97.3	1	4170.83	3.25	0	83.4	0	0.55	0	0	17.32	0	0	0	0	0	0	-3.96	-3.96
Inverter	MV3-6	368162	4907834	2	0	0	100.3	100.3	1	5943.24	3.25	0	86.48	0	0.7	0	0	19.92	0	0	0	0	0	0	-6.79	-6.79
Inverters	G_Inv9	366750.9	4902691.8	2	0	0	87.7	87.7	1	1392.54	3.25	0	73.88	0	2.5	0	0	1.91	0	0	0	0	0	0	9.37	9.37
Inverter	MV3-3	367939	4907927	2	0	0	100.3	100.3	1	6030.37	3.25	0	86.61	0	0.71	0	0	20.03	0	0	0	0	0	0	-7.04	-7.04
Inverters	G_Inv8	366844.5	4902838.5	2	0	0	87.7	87.7	1	1410.2	3.25	0	73.99	0	2.51	0	0	1.94	0	0	0	0	0	0	9.23	9.23
Inverter	MV1-13	364731	4905241	2	0	0	97.3	97.3	1	4603.21	3.25	0	84.26	0	0.6	0	0	17.99	0	0	0	0	0	0	-5.54	-5.54
Inverters	G_Inv7	366694.6	4902824.7	2	0	0	87.7	87.7	1	1516.59	3.25	0	74.62	0	2.52	0	0	2.06	0	0	0	0	0	0	8.46	8.46
Inverter	MV1-10	365004	4905564	2	0	0	97.3	97.3	1	4669.22	3.25	0	84.38	0	0.61	0	0	18.09	0	0	0	0	0	0	-5.77	-5.77
Inverters	G_Inv6	366788.5	4902972	2	0	0	87.7	87.7	1	1542.28	3.25	0	74.76	0	2.52	0	0	2.09	0	0	0	0	0	0	8.28	8.28
Inverter	MV1-7	364925	4905782	2	0	0	97.3	97.3	1	4889.88	3.25	0	84.79	0	0.63	0	0	18.42	0	0	0	0	0	0	-6.52	-6.52
Inverters	G_Inv5	366638.5	4902958.1	2	0	0	87.7	87.7	1	1644.12	3.25	0	75.32	0	2.54	0	0	2.22	0	0	0	0	0	0	7.59	7.59
Inverter	MV4-11	369264	4908855	2	0	0	100.3	100.3	1	7091.75	3.25	0	88.02	0	0.71	0	0	21.41	0	0	0	0	0	0	-9.82	-9.82
Inverter	MV4-10	369312	4908858	2	0	0	100.3	100.3	1	7104.12	3.25	0	88.03	0	0.71	0	0	21.43	0	0	0	0	0	0	-9.85	-9.85
Inverter	MV5-5	370015	4908690	2	0	0	100.3	100.3	1	7116.56	3.25	0	88.05	0	0.71	0	0	21.44	0	0	0	0	0	0	-9.88	-9.88
Inverters	G_Inv4	366732.8	4903105	2	0	0	87.7	87.7	1	1675.89	3.25	0	75.48	0	2.54	0	0	2.25	0	0	0	0	0	0	7.38	7.38
Inverter	MV4-7	369035	4909001	2	0	0	100.3	100.3	1	7195.21	3.25	0	88.14	0	0.7	0	0	21.54	0	0	0	0	0	0	-10.07	-10.07
Inverter	MV5-4	370324	4908707	2	0	0	100.3	100.3	1	7230.68	3.25	0	88.18	0	0.7	0	0	21.59	0	0	0	0	0	0	-10.16	-10.16
Inverter	MV4-8	369256	4909001	2	0	0	100.3	100.3	1	7233.54	3.25	0	88.19	0	0.7	0	0	21.59	0	0	0	0	0	0	-10.17	-10.17
Inverter	MV4-9	369289	4909001	2	0	0	100.3	100.3	1	7239.83	3.25	0	88.19	0	0.7	0	0	21.6	0	0	0	0	0	0	-10.18	-10.18
Inverter	MV5-2	370006	4908853	2	0	0	100.3	100.3	1	7269.69	3.25	0	88.23	0	0.7	0	0	21.63	0	0	0	0	0	0	-10.25	-10.25
Inverter	MV5-3	370231	4908851	2	0	0	100.3	100.3	1	7336.32	3.25	0	88.31	0	0.7	0	0	21.72	0	0	0	0	0	0	-10.41	-10.41
Inverter	MV4-4	369027	4909199	2	0	0	100.3	100.3	1	7389.54	3.25	0	88.37	0	0.7	0	0	21.78	0	0	0	0	0	0	-10.54	-10.54
Inverter	MV4-6	369243	4909192	2	0	0	100.3	100.3	1	7418.84	3.25	0	88.41	0	0.69	0	0	21.82	0	0	0	0	0	0	-10.6	-10.6
Inverter	MV4-5	369289	4909199	2	0	0	100.3	100.3	1	7434.22	3.25	0	88.42	0	0.69	0	0	21.83	0	0	0	0	0	0	-10.64	-10.64
Inverter	MV2-1	365842	4906816	2	0	0	97.3	97.3	1	5330.11	3.25	0	85.53	0	0.67	0	0	19.06	0	0	0	0	0	0	-7.95	-7.95
Inverter	MV5-1	370020	4909142	2	0	0	100.3	100.3	1	7550.63	3.25	0	88.56	0	0.69	0	0	21.98	0	0	0	0	0	0	-10.91	-10.91
Inverter	MV4-1	369011	4909397	2	0	0	100.3	100.3	1	7582.89	3.25	0	88.6	0	0.68	0	0	22.01	0	0	0	0	0	0	-10.98	-10.98
Inverters	G_Inv3	366583.7	4903091.4	2	0	0	87.7	87.7	1	1773.27	3.25	0	75.98	0	2.55	0	0	2.37	0	0	0	0	0	0	6.76	6.76
Inverter	MV4-3	369229	4909397	2	0	0	100.3	100.3	1	7618.05	3.25	0	88.64	0	0.68	0	0	22.06	0	0	0	0	0	0	-11.06	-11.06
Inverter	MV4-2	369272	4909397	2	0	0	100.3	100.3	1	7625.7	3.25	0	88.65	0	0.68	0	0	22.07	0	0	0	0	0	0	-11.08	-11.08
Inverters	G_Inv2	366676.9	4903239.1	2	0	0	87.7	87.7	1	1812.07	3.25	0	76.16	0	2.56	0	0	2.42	0	0	0	0	0	0	6.52	6.52
Inverters	G_Inv1	366526.4	4903225.8	2	0	0	87.7	87.7	1	1907.12	3.25	0	76.61	0	2.57	0	0	2.53	0	0	0	0	0	0	5.95	5.95
Inverter	MV6-1	370235	4907364	2	0	0	97.3	97.3	1	5947.24	3.25	0	86.49	0	0.7	0	0	19.92	0	0	0	0	0	0	-9.8	-9.8
DSTATCOM - 10 MVAR #2	DSAT2	369403	4908757	2.5	0	0	96.6	96.6	1	7024.16	3.5	0	87.93	0	3.84	0	0	4.32	0	0	0	0	0	0	0.54	0.54
DSTATCOM - 10 MVAR #1	DSAT1	369437	4908757	2.5	0	0	96.6	96.6	1	7031.54	3.5	0	87.94	0	3.84	0	0	4.33	0	0	0	0	0	0	0.52	0.52
SubstationTransformer	W_ST	369711.17	4906112.3	2.5	0	0	92	92	1	4590.38	3.5	0	84.24	0	0.47	0	-0.13	8.12	0	0	0	0	0	0	-0.85	-0.85
Westbrook Inverter Enclosur	W_INV3	369508	4906164	2	0	0	89.1	89.1	1	4562.17	3.25	0	84.18	0	1.53	0	0	11.87	0	0	0	0	0	0	-8.53	-8.53
Westbrook Inverter Enclosur	W_INV4	369673	4906164	2	0	0	89.1	89.1	1	4623.11	3.25	0	84.3	0	1.55	0	0	11.95	0	0	0	0	0	0	-8.74	-8.74
Westbrook Inverter Enclosur	W_INV2	369374	4906388	2	0	0	89.1	89.1	1	4728.71	3.25	0	84.49	0	1.57	0	0	12.1	0	0	0	0	0	0	-9.11	-9.11
Westbrook Inverter Enclosur	W_INV7	369780	4906417	2	0	0	89.1	89.1	1	4897.8	3.25	0	84.8	0	1.61	0	0	12.33	0	0	0	0	0	0	-9.68	-9.68
Westbrook Inverter Enclosur	W_INV5	369719	4906574	2	0	0	89.1	89.1	1	5020.57	3.25	0	85.02	0	1.64	0	0	12.49	0	0	0	0	0	0	-10.09	-10.09
Westbrook Inverter Enclosur	W_INV6	369875	4906578	2	0	0	89.1	89.1	1	5083.03	3.25	0	85.12	0	1.66	0	0	12.57	0	0	0	0	0	0	-10.3	-10.3

Inverter	MV2-2	365977	4906654	2	0	0	89.1	89.1	1	5129	3.25	0	85.2	0	1.67	0	0	12.64	0	0	0	0	0	0	-10.45	-10.45
Inverter	MV3-22	368656	4907142	2	0	0	89.1	89.1	1	5300.23	3.25	0	85.49	0	1.71	0	0	12.86	0	0	0	0	0	0	-11	-11
Inverter	MV1-3	364440	4906039	2	0	0	89.1	89.1	1	5393.45	3.25	0	85.64	0	1.74	0	0	12.98	0	0	0	0	0	0	-11.3	-11.3
Inverter	MV3-5	368340	4907843	2	0	0	89.1	89.1	1	5962.89	3.25	0	86.51	0	1.88	0	0	13.72	0	0	0	0	0	0	-13.04	-13.04
Inverter	MV3-4	368502	4907925	2	0	0	89.1	89.1	1	6058.76	3.25	0	86.65	0	1.9	0	0	13.84	0	0	0	0	0	0	-13.33	-13.33
Inverter	MV3-2	368671	4907928	2	0	0	89.1	89.1	1	6081.02	3.25	0	86.68	0	1.91	0	0	13.86	0	0	0	0	0	0	-13.39	-13.39
Inverter	MV3-1	368156	4907976	2	0	0	89.1	89.1	1	6084.84	3.25	0	86.68	0	1.91	0	0	13.87	0	0	0	0	0	0	-13.4	-13.4
Fixed Reactor Bank 1	FRB1	369378	4908755	6	0	0	89.8	89.8	1	7016.88	5.25	0	87.92	0	-0.28	0	0	10.76	0	0	0	0	0	0	-8.63	-8.63
Fixed Reactor Bank 2	FRB2	369464	4908755	6	0	0	89.8	89.8	1	7035.57	5.25	0	87.95	0	-0.28	0	0	10.78	0	0	0	0	0	0	-8.67	-8.67
Inverter	MV4-15	369176	4908481	2	0	0	89.1	89.1	1	6707.81	3.25	0	87.53	0	2.06	0	0	14.64	0	0	0	0	0	0	-15.17	-15.17
Inverter	MV4-14	369176	4908507	2	0	0	89.1	89.1	1	6733.33	3.25	0	87.56	0	2.06	0	0	14.67	0	0	0	0	0	0	-15.24	-15.24
Inverter	MV4-13	369051	4908605	2	0	0	89.1	89.1	1	6807.21	3.25	0	87.66	0	2.08	0	0	14.76	0	0	0	0	0	0	-15.44	-15.44
Inverter	MV5-6	369982	4908507	2	0	0	89.1	89.1	1	6932.07	3.25	0	87.82	0	2.11	0	0	14.91	0	0	0	0	0	0	-15.78	-15.78
Westbrook Inverter Enclosur	W_INV1	369409	4906578	2	0	0	86.1	86.1	1	4920.19	3.25	0	84.84	0	1.62	0	0	12.36	0	0	0	0	0	0	-12.76	-12.76
Inverter	MV4-12	369043	4908803	2	0	0	89.1	89.1	1	7001.1	3.25	0	87.9	0	2.13	0	0	14.99	0	0	0	0	0	0	-15.96	-15.96
Inverter	MV6-4	370250	4906966	2	0	0	86.1	86.1	1	5589.86	3.25	0	85.95	0	1.79	0	0	13.24	0	0	0	0	0	0	-14.91	-14.91
Westbrook Inverter Transfor	W_INVTR1	369403	4906578	2	0	0	78.2	78.2	1	4918.34	3.25	0	84.84	0	-3.16	0	0	2.38	0	0	0	0	0	0	-5.82	-5.82
Westbrook Inverter Transfor	W_INVTR3	369514	4906164	2	0	0	77.3	77.3	1	4564.29	3.25	0	84.19	0	-3.09	0	0	2.26	0	0	0	0	0	0	-6.02	-6.02
Westbrook Inverter Transfor	W_INVTR4	369679	4906164	2	0	0	77.3	77.3	1	4625.42	3.25	0	84.3	0	-3.1	0	0	2.28	0	0	0	0	0	0	-6.14	-6.14
Westbrook Inverter Transfor	W_INVTR2	369368	4906388	2	0	0	77.3	77.3	1	4726.84	3.25	0	84.49	0	-3.12	0	0	2.32	0	0	0	0	0	0	-6.35	-6.35
Westbrook Inverter Transfor	W_INVTR7	369786	4906417	2	0	0	77.3	77.3	1	4900.11	3.25	0	84.8	0	-3.16	0	0	2.38	0	0	0	0	0	0	-6.68	-6.68
Westbrook Inverter Transfor	W_INVTR5	369725	4906574	2	0	0	77.3	77.3	1	5022.75	3.25	0	85.02	0	-3.18	0	0	2.42	0	0	0	0	0	0	-6.92	-6.92
Westbrook Inverter Transfor	W_INVTR6	369881	4906578	2	0	0	77.3	77.3	1	5085.37	3.25	0	85.13	0	-3.19	0	0	2.44	0	0	0	0	0	0	-7.03	-7.03
Inverter Transformer	MV1-14 T	365157	4905049	2	0	0	69.4	69.4	1	4174.76	3.25	0	83.41	0	2.83	0	0	6.81	0	0	0	0	0	0	-23.7	-23.7
Inverter Transformer	MV1-13 T	364725	4905241	2	0	0	69.4	69.4	1	4607.33	3.25	0	84.27	0	2.93	0	0	7.11	0	0	0	0	0	0	-24.96	-24.96
Inverter Transformer	MV1-10 T	365010	4905564	2	0	0	69.4	69.4	1	4665.51	3.25	0	84.38	0	2.94	0	0	7.15	0	0	0	0	0	0	-25.12	-25.12
Inverter Transformer	MV1-7 T	364919	4905782	2	0	0	69.4	69.4	1	4893.53	3.25	0	84.79	0	2.99	0	0	7.31	0	0	0	0	0	0	-25.74	-25.74
Inverter Transformer	MV2-1 T	365836	4906816	2	0	0	69.4	69.4	1	5332.42	3.25	0	85.54	0	3.08	0	0	7.6	0	0	0	0	0	0	-26.86	-26.86
Inverter Transformer	MV6-4 T	370244	4906966	2	0	0	69.4	69.4	1	5587.34	3.25	0	85.94	0	3.12	0	0	7.76	0	0	0	0	0	0	-27.48	-27.48
Inverter Transformer	MV6-1 T	370230	4907364	2	0	0	69.4	69.4	1	5945.27	3.25	0	86.48	0	3.18	0	0	7.98	0	0	0	0	0	0	-28.3	-28.3
Inverter Transformer	MV1-15 T	365309	4904994	2	0	0	56.1	56.1	1	4034.34	3.25	0	83.12	0	1.26	0	0	10.51	0	0	0	0	0	0	-38.82	-38.82
Inverter Transformer	MV1-12 T	365044	4905386	2	0	0	56.1	56.1	1	4505.35	3.25	0	84.07	0	1.44	0	0	11.18	0	0	0	0	0	0	-40.64	-40.64
Inverter Transformer	MV1-11 T	364649	4905414	2	0	0	56.1	56.1	1	4785.61	3.25	0	84.6	0	1.55	0	0	11.57	0	0	0	0	0	0	-41.66	-41.66
Inverter Transformer	MV1-8 T	364782	4905647	2	0	0	56.1	56.1	1	4873.38	3.25	0	84.76	0	1.58	0	0	11.69	0	0	0	0	0	0	-41.96	-41.96
Inverter Transformer	MV1-9 T	364555	4905646	2	0	0	56.1	56.1	1	5020.63	3.25	0	85.02	0	1.63	0	0	11.88	0	0	0	0	0	0	-42.47	-42.47
Inverter Transformer	MV1-4 T	364821	4905918	2	0	0	56.1	56.1	1	5061.09	3.25	0	85.08	0	1.65	0	0	11.93	0	0	0	0	0	0	-42.61	-42.61
Inverter Transformer	MV2-2 T	365982	4906654	2	0	0	56.1	56.1	1	5127.13	3.25	0	85.2	0	1.67	0	0	12.02	0	0	0	0	0	0	-42.83	-42.83
Inverter Transformer	MV1-5 T	364676	4905892	2	0	0	56.1	56.1	1	5130.15	3.25	0	85.2	0	1.67	0	0	12.02	0	0	0	0	0	0	-42.84	-42.84
Inverter Transformer	MV2-3 T	365814	4906641	2	0	0	56.1	56.1	1	5180.22	3.25	0	85.29	0	1.69	0	0	12.09	0	0	0	0	0	0	-43.01	-43.01
Inverter Transformer	MV1-6 T	364482	4905835	2	0	0	56.1	56.1	1	5210.81	3.25	0	85.34	0	1.7	0	0	12.13	0	0	0	0	0	0	-43.11	-43.11
Inverter Transformer	MV1-2 T	364759	4906063	2	0	0	56.1	56.1	1	5214.09	3.25	0	85.34	0	1.7	0	0	12.13	0	0	0	0	0	0	-43.12	-43.12
Inverter Transformer	MV2-4 T	365590	4906628	2	0	0	56.1	56.1	1	5262.47	3.25	0	85.42	0	1.72	0	0	12.2	0	0	0	0	0	0	-43.28	-43.28
Inverter Transformer	MV3-22 T	368661	4907142	2	0	0	56.1	56.1	1	5300.95	3.25	0	85.49	0	1.73	0	0	12.24	0	0	0	0	0	0	-43.41	-43.41
Inverter Transformer	MV1-1 T	364721	4906166	2	0	0	56.1	56.1	1	5319.33	3.25	0	85.52	0	1.74	0	0	12.27	0	0	0	0	0	0	-43.47	-43.47
Inverter Transformer	MV3-21 T	368484	4907206	2	0	0	56.1	56.1	1	5341.86	3.25	0	85.55	0	1.75	0	0	12.3	0	0	0	0	0	0	-43.54	-43.54
Inverter Transformer	MV1-3 T	364435	4906039	2	0	0	56.1	56.1	1	5396.66	3.25	0	85.64	0	1.77	0	0	12.37	0	0	0	0	0	0	-43.72	-43.72
Inverter Transformer	MV3-19 T	368352	4907347	2	0	0	56.1	56.1	1	5469.39	3.25	0	85.76	0	1.79	0	0	12.46	0	0	0	0	0	0	-43.95	-43.95
Inverter Transformer	MV3-20 T	368683	4907317	2	0	0	56.1	56.1	1	5477.3	3.25	0	85.77	0	1.79	0	0	12.47	0	0	0	0	0	0	-43.97	-43.97
Inverter Transformer	MV3-18 T	367757	4907412	2	0	0	56.1	56.1	1	5516.91	3.25	0	85.83	0	1.81	0	0	12.52	0	0	0	0	0	0	-44.1	-44.1
Inverter Transformer	MV3-17 T	368183	4907472	2	0	0	56.1	56.1	1	5582.68	3.25	0	85.94	0	1.83	0	0	12.6	0	0	0	0	0	0	-44.3	-44.3
Inverter Transformer	MV3-15 T	368351	4907477	2	0	0	56.1	56.1	1	5598.87	3.25	0	85.96	0	1.83	0	0	12.62	0	0	0	0	0	0	-44.36	-44.36
Inverter Transformer	MV3-16 T	368509	4907475	2	0	0	56.1	56.1	1	5611.98	3.25	0	85.98	0	1.84	0	0	12.63	0	0	0	0	0	0	-44.4	-44.4
Inverter Transformer	MV3-14 T	368678	4907498	2	0	0	56.1	56.1	1	5655.77	3.25	0	86.05	0	1.85	0	0	12.69	0	0	0	0	0	0	-44.53	-44.53
Inverter Transformer	MV3-13 T	367958	4907577	2	0	0	56.1	56.1	1	5680.56	3.25	0	86.09	0	1.86	0	0	12.72	0	0	0	0	0	0	-44.61	-44.61
Inverter Transformer	MV3-12 T	367674	4907594	2	0	0	56.1	56.1	1	5701.45	3.25	0	86.12	0	1.87	0	0	12.74	0	0	0	0	0	0	-44.67	-44.67
Inverter Transformer	MV6-3 T	370202	4907140	2	0	0	56.1	56.1	1	5728.62	3.25	0	86.16	0	1.88	0	0	12.78	0	0	0	0	0	0	-44.76	-44.76
Inverter Transformer	MV3-10 T	368162	4907669	2	0	0	56.1	56.1	1	5778.41	3.25	0	86.24	0	1.89	0	0	12.84	0	0	0	0	0	0	-44.91	-44.91
Inverter Transformer	MV3-11 T	368340	4907662	2	0	0	56.1	56.1	1	5782.41	3.25	0	86.24	0	1.89	0	0	12.84	0	0	0	0	0	0	-44.92	-44.92
Inverter Transformer	MV3-9 T	368517	4907703	2	0	0	56.1	56.1	1	5839.51	3.25	0	86.33	0	1.91	0	0	12.91	0	0	0	0	0	0	-45.09	-45.09
Inverter Transformer	MV3-7 T	367951	4907754	2	0	0	56.1	56.1	1	5857.48	3.25	0	86.35	0	1.92	0	0	12.93	0	0	0	0	0	0	-45.15	-45.15
Inverter Transformer	MV3-8 T	368685	4907712	2	0	0	56.1	56.1	1	5868.72	3.25	0	86.37	0	1.92	0	0	12.95	0	0	0	0	0	0	-45.18	-45.18
Inverter Transformer	MV6-2 T	370091	4907339	2	0	0	56.1	56.1	1	5868.86	3.25	0	86.37	0	1.92	0	0	12.95	0	0	0	0	0	0	-45.18	-45.18
Inverter Transformer	MV3-6 T	368156	4907834	2	0	0	56.1	56.1	1	5942.97	3.25	0	86.48	0	1.95	0	0	13.04	0	0	0	0	0	0	-45.4	-45.4
Inverter Transformer	MV3-5 T	368335	4907843	2	0	0	56.1	56.1	1	5962.52	3.25	0	86.51	0	1.95	0	0	13.06	0	0	0	0	0	0	-45.46	-45.46
Inverter Transformer	MV3-3 T	367944	4907927	2	0	0	56.1	56.1	1	6030.41	3.25	0	86.61	0	1.97	0	0	13.14	0	0	0	0	0	0	-45.66	-45.66
Inverter Transformer	MV3-4 T	368507	4907925	2	0	0	56.1	56.1	1	6059.27	3.25	0	86.65	0	1.98	0	0	13.17	0	0	0	0	0	0	-45.75	-45.75
Inverter Transformer	MV3-2 T	368677	4907928	2	0	0	56.1	56.1	1	6081.79	3.25	0	86.68	0	1.99	0	0	13.2	0	0	0	0	0	0	-45.81	-45.81
Inverter Transformer	MV3-1 T	368150	4907976	2	0	0	56.1	56.1	1	6084.58	3.25	0	86.68	0	1.99	0	0	13.2	0	0	0	0	0	0	-45.82	-45.82
Inverter Transformer	MV4-15 T	369170	4908481	2	0	0	56.1	56.1	1	6706.67	3.25	0	87.53	0	2.18	0	0	13.91	0	0	0	0	0	0	-47.56	-47.56
Inverter Transformer	MV4-14 T	369182	4908507	2	0	0	56.1	56.1	1	6734.48	3.25	0	87.57	0	2.19	0	0	13.94	0	0	0	0	0	0	-47.63	-47.63
Inverter Transformer	MV4-13 T	369057	4908605	2	0	0	56.1	56.1	1	6808.23	3.25	0	87.66	0	2.21	0	0	14.02	0	0	0	0	0	0	-47.83	-47.83
Inverter Transformer	MV5-6 T	369987	4908507	2	0	0	56.1	56.1	1	6933.58	3.25	0	87.82	0	2.24	0	0	14.16	0	0	0	0	0	0	-48.16	-48.16
Inverter Transformer	MV4-12 T	369049	4908803	2	0	0	56.1	56.1	1	7002.08	3.25	0	87.9	0	2.26	0	0	14.23	0	0	0	0	0	0	-48.34	-48.34
Inverter Transformer	MV4-11 T	369269	4908855	2	0	0	56.1	56.1	1	7092.72	3.25	0	88.02	0	2.28	0	0	14.33	0	0	0	0	0	0	-48.57	-48.57

	Inverter Transformer	MV4-10 T	369307	4908858	2	0	0	56.1	56.1	1	7103.12	3.25	0	88.03	0	2.29	0	0	14.34	0	0	0	0	0	0	-48.6	-48.6
	Inverter Transformer	MV5-5 T	370021	4908690	2	0	0	56.1	56.1	1	7118.35	3.25	0	88.05	0	2.29	0	0	14.36	0	0	0	0	0	0	-48.64	-48.64
	Inverter Transformer	MV4-7 T	369040	4909001	2	0	0	56.1	56.1	1	7196.01	3.25	0	88.14	0	2.31	0	0	14.44	0	0	0	0	0	0	-48.83	-48.83
	Inverter Transformer	MV5-4 T	370330	4908707	2	0	0	56.1	56.1	1	7232.7	3.25	0	88.19	0	2.32	0	0	14.48	0	0	0	0	0	0	-48.93	-48.93
	Inverter Transformer	MV4-8 T	369262	4909001	2	0	0	56.1	56.1	1	7234.68	3.25	0	88.19	0	2.32	0	0	14.48	0	0	0	0	0	0	-48.93	-48.93
	Inverter Transformer	MV4-9 T	369284	4909001	2	0	0	56.1	56.1	1	7238.87	3.25	0	88.19	0	2.32	0	0	14.48	0	0	0	0	0	0	-48.94	-48.94
	Inverter Transformer	MV5-2 T	370011	4908853	2	0	0	56.1	56.1	1	7271.15	3.25	0	88.23	0	2.33	0	0	14.52	0	0	0	0	0	0	-49.02	-49.02
	Inverter Transformer	MV5-3 T	370237	4908851	2	0	0	56.1	56.1	1	7338.23	3.25	0	88.31	0	2.35	0	0	14.59	0	0	0	0	0	0	-49.19	-49.19
	Inverter Transformer	MV4-4 T	369033	4909199	2	0	0	56.1	56.1	1	7390.47	3.25	0	88.37	0	2.36	0	0	14.64	0	0	0	0	0	0	-49.32	-49.32
	Inverter Transformer	MV4-6 T	369249	4909192	2	0	0	56.1	56.1	1	7419.93	3.25	0	88.41	0	2.37	0	0	14.67	0	0	0	0	0	0	-49.39	-49.39
	Inverter Transformer	MV4-5 T	369283	4909199	2	0	0	56.1	56.1	1	7433.09	3.25	0	88.42	0	2.37	0	0	14.69	0	0	0	0	0	0	-49.42	-49.42
	Inverter Transformer	MV5-1 T	370015	4909142	2	0	0	56.1	56.1	1	7549.22	3.25	0	88.56	0	2.4	0	0	14.8	0	0	0	0	0	0	-49.71	-49.71
	Inverter Transformer	MV4-1 T	369017	4909397	2	0	0	56.1	56.1	1	7583.78	3.25	0	88.6	0	2.41	0	0	14.84	0	0	0	0	0	0	-49.79	-49.79
	Inverter Transformer	MV4-3 T	369234	4909397	2	0	0	56.1	56.1	1	7618.93	3.25	0	88.64	0	2.42	0	0	14.88	0	0	0	0	0	0	-49.87	-49.87
	Inverter Transformer	MV4-2 T	369267	4909397	2	0	0	56.1	56.1	1	7624.8	3.25	0	88.64	0	2.42	0	0	14.88	0	0	0	0	0	0	-49.89	-49.89
	Line Reactor	NGR	369421	4908787.5	5	0	0	45.4	45.4	1	7057.82	5.25	0	87.97	0	3.22	1.37	0.11	2.88	0	0	0	0	0	0	-50.09	-50.09
Limit. Valu	0	0																								
Level D/N:	20.1475	20.1475																								

Receiver: Vacant Lot Receptor
ID: G-V21
X: 367955.6
Y: 4901953.5
Z: 4.5
Ground: 0

ISO	Description	ID	X	Y	Z	Ground	ReflOrd	LxT	LxN	L/A	Dist.	hm	Freq	Adiv	K0b	Agr	Abar	z	Aatm	Afol	Ahous	Cmet	CmetN	Dc	RL	LtotT	LtotN
	Sol_Luce Substation	S_Substation	369426	4908792	3.5	0	0	112.1	112.1	1	6994.8	5.25	0	87.9	0	1.38	2.44	0.34	10.74	0	0	0	0	0	0	9.61	9.61
	Inverter	MV1-15	365315	4904994	2	0	0	100.3	100.3	1	4027.09	3.25	0	83.1	0	0.53	0	0	17.09	0	0	0	0	0	0	-0.41	-0.41
	Inverter	MV1-12	365038	4905386	2	0	0	100.3	100.3	1	4504.94	3.25	0	84.07	0	0.59	0	0	17.84	0	0	0	0	0	0	-2.19	-2.19
	Inverter	MV1-11	364655	4905414	2	0	0	100.3	100.3	1	4782.16	3.25	0	84.59	0	0.62	0	0	18.26	0	0	0	0	0	0	-3.16	-3.16
	Inverter	MV1-8	364788	4905647	2	0	0	100.3	100.3	1	4865.76	3.25	0	84.74	0	0.63	0	0	18.38	0	0	0	0	0	0	-3.44	-3.44
	Inverter	MV1-9	364561	4905646	2	0	0	100.3	100.3	1	5015.76	3.25	0	85.01	0	0.64	0	0	18.6	0	0	0	0	0	0	-3.94	-3.94
	Inverter	MV1-4	364815	4905918	2	0	0	100.3	100.3	1	5057.73	3.25	0	85.08	0	0.65	0	0	18.66	0	0	0	0	0	0	-4.08	-4.08
	Inverter	MV1-5	364671	4905892	2	0	0	100.3	100.3	1	5128.39	3.25	0	85.2	0	0.65	0	0	18.77	0	0	0	0	0	0	-4.31	-4.31
	Inverter	MV2-3	365820	4906641	2	0	0	100.3	100.3	1	5151.06	3.25	0	85.24	0	0.66	0	0	18.8	0	0	0	0	0	0	-4.38	-4.38
	Inverter	MV1-2	364753	4906063	2	0	0	100.3	100.3	1	5210.05	3.25	0	85.34	0	0.66	0	0	18.89	0	0	0	0	0	0	-4.57	-4.57
	Inverter	MV1-6	364477	4905835	2	0	0	100.3	100.3	1	5212.17	3.25	0	85.34	0	0.66	0	0	18.89	0	0	0	0	0	0	-4.58	-4.58
	Inverter	MV2-4	365586	4906624	2	0	0	100.3	100.3	1	5237.23	3.25	0	85.38	0	0.66	0	0	18.93	0	0	0	0	0	0	-4.66	-4.66
	Inverter	MV3-21	368478	4907206	2	0	0	100.3	100.3	1	5278.41	3.25	0	85.45	0	0.67	0	0	18.98	0	0	0	0	0	0	-4.79	-4.79
	Inverter	MV1-1	364715	4906166	2	0	0	100.3	100.3	1	5314.76	3.25	0	85.51	0	0.67	0	0	19.04	0	0	0	0	0	0	-4.9	-4.9
	Inverter	MV3-19	368357	4907347	2	0	0	100.3	100.3	1	5408.42	3.25	0	85.66	0	0.67	0	0	19.17	0	0	0	0	0	0	-5.19	-5.19
	Inverter	MV3-20	368689	4907317	2	0	0	100.3	100.3	1	5413.41	3.25	0	85.67	0	0.67	0	0	19.18	0	0	0	0	0	0	-5.21	-5.21
	Inverter	MV3-18	367752	4907412	2	0	0	100.3	100.3	1	5462.3	3.25	0	85.75	0	0.68	0	0	19.25	0	0	0	0	0	0	-5.36	-5.36
	Inverter	MV3-17	368178	4907472	2	0	0	100.3	100.3	1	5522.98	3.25	0	85.84	0	0.68	0	0	19.33	0	0	0	0	0	0	-5.55	-5.55
	Inverter	MV3-15	368357	4907477	2	0	0	100.3	100.3	1	5538.07	3.25	0	85.87	0	0.68	0	0	19.35	0	0	0	0	0	0	-5.59	-5.59
	Inverter	MV3-16	368514	4907475	2	0	0	100.3	100.3	1	5549.66	3.25	0	85.89	0	0.68	0	0	19.37	0	0	0	0	0	0	-5.63	-5.63
	Inverters	G_Inv10	366900.7	4902704.8	2	0	0	87.7	87.7	1	1295.1	3.25	0	73.25	0	2.49	0	0	1.79	0	0	0	0	0	0	10.13	10.13
	Inverter	MV3-14	368684	4907498	2	0	0	100.3	100.3	1	5592.14	3.25	0	85.95	0	0.69	0	0	19.43	0	0	0	0	0	0	-5.76	-5.76
	Inverter	MV3-13	367963	4907577	2	0	0	100.3	100.3	1	5623.51	3.25	0	86	0	0.69	0	0	19.47	0	0	0	0	0	0	-5.85	-5.85
	Inverter	MV3-12	367668	4907594	2	0	0	100.3	100.3	1	5647.83	3.25	0	86.04	0	0.69	0	0	19.51	0	0	0	0	0	0	-5.92	-5.92
	Inverter	MV6-3	370207	4907140	2	0	0	100.3	100.3	1	5654.08	3.25	0	86.05	0	0.69	0	0	19.52	0	0	0	0	0	0	-5.94	-5.94
	Inverter	MV3-10	368167	4907669	2	0	0	100.3	100.3	1	5719.41	3.25	0	86.15	0	0.69	0	0	19.61	0	0	0	0	0	0	-6.14	-6.14
	Inverter	MV3-11	368346	4907662	2	0	0	100.3	100.3	1	5721.83	3.25	0	86.15	0	0.69	0	0	19.61	0	0	0	0	0	0	-6.14	-6.14
	Inverter	MV3-9	368512	4907703	2	0	0	100.3	100.3	1	5776.36	3.25	0	86.23	0	0.7	0	0	19.69	0	0	0	0	0	0	-6.3	-6.3
	Inverter	MV6-2	370085	4907339	2	0	0	100.3	100.3	1	5791.2	3.25	0	86.26	0	0.7	0	0	19.71	0	0	0	0	0	0	-6.35	-6.35
	Inverter	MV3-7	367945	4907754	2	0	0	100.3	100.3	1	5800.51	3.25	0	86.27	0	0.7	0	0	19.72	0	0	0	0	0	0	-6.37	-6.37
	Inverter	MV3-8	368680	4907712	2	0	0	100.3	100.3	1	5803.89	3.25	0	86.27	0	0.7	0	0	19.72	0	0	0	0	0	0	-6.38	-6.38
	Gardiner Substation	G_Sub	366586.3	4903349.9	2.5	0	0	90.8	90.8	1	1955.74	3.5	0	76.83	0	-0.18	0	0	4.29	0	0	0	0	0	0	9.83	9.83
	Inverter	MV3-6	368162	4907834	2	0	0	100.3	100.3	1	5884.12	3.25	0	86.39	0	0.7	0	0	19.84	0	0	0	0	0	0	-6.62	-6.62
	Inverter	MV1-14	365163	4905049	2	0	0	97.3	97.3	1	4169.02	3.25	0	83.4	0	0.55	0	0	17.32	0	0	0	0	0	0	-3.96	-3.96
	Inverter	MV3-3	367939	4907927	2	0	0	100.3	100.3	1	5973.52	3.25	0	86.52	0	0.7	0	0	19.96	0	0	0	0	0	0	-6.87	-6.87
	Inverters	G_Inv9	366750.9	4902691.8	2	0	0	87.7	87.7	1	1412.94	3.25	0	74	0	2.51	0	0	1.94	0	0	0	0	0	0	9.21	9.21
	Inverters	G_Inv8	366844.5	4902838.5	2	0	0	87.7	87.7	1	1420.48	3.25	0	74.05	0	2.51	0	0	1.95	0	0	0	0	0	0	9.16	9.16
	Inverter	MV1-13	364731	4905241	2	0	0	97.3	97.3	1	4604.97	3.53	0	84.26	0	1.49	2.8	0	17.99	0	0	0	0	0	0	-9.23	-9.23
	Inverters	G_Inv7	366694.6	4902824.7	2	0	0	87.7	87.7	1	1532.68	3.25	0	74.71	0	2.52	0	0	2.08	0	0	0	0	0	0	8.34	8.34
	Inverter	MV1-10	365004	4905564	2	0	0	97.3	97.3	1	4663.44	3.25	0	84.37	0	0.61	0	0	18.08	0	0	0	0	0	0	-5.75	-5.75
	Inverters	G_Inv6	366788.5	4902972	2	0	0	87.7	87.7	1	1549.02	3.25	0	74.8	0	2.53	0	0	2.1	0	0	0	0	0	0	8.23	8.23
	Inverter	MV1-7	364925	4905782	2	0	0	97.3	97.3	1	4882.82	3.25	0	84.77	0	0.63	0	0	18.41	0	0	0	0	0	0	-6.5	-6.5
	Inverter	MV4-11	369264	4908855	2	0	0	100.3	100.3	1	7024.43	3.25	0	87.93	0	0.71	0	0	21.33	0	0	0	0	0	0	-9.66	-9.66
	Inverter	MV4-10	369312	4908858	2	0	0	100.3	100.3	1	7036.47	3.25	0	87.95	0	0.71	0	0	21.34	0	0	0	0	0	0	-9.69	-9.69
	Inverter	MV5-5	370015	4908690	2	0	0	100.3	100.3	1	7044.26	3.25	0	87.96	0	0.71	0	0	21.35	0	0	0	0	0	0	-9.71	-9.71
	Inverters	G_Inv5	366638.5	4902958.1	2	0	0	87.7	87.7	1	1656.5	3.25	0	75.38	0	2.54	0	0	2.23	0	0	0	0	0	0	7.51	7.51
	Inverter	MV4-7	369035	4909001	2	0	0	100.3	100.3	1	7129.68	3.25	0	88.06	0	0.71	0	0	21.46	0	0	0	0	0	0	-9.92	-9.92

Inverter	MV5-4	370324	4908707	2	0	0	100.3	100.3	1	7156.75	3.25	0	88.09	0	0.71	0	0	21.49	0	0	0	0	0	0	-9.98	-9.98
Inverter	MV4-8	369256	4909001	2	0	0	100.3	100.3	1	7166.47	3.25	0	88.11	0	0.7	0	0	21.51	0	0	0	0	0	0	-10.01	-10.01
Inverter	MV4-9	369289	4909001	2	0	0	100.3	100.3	1	7172.53	3.25	0	88.11	0	0.7	0	0	21.51	0	0	0	0	0	0	-10.02	-10.02
Inverter	MV5-2	370006	4908853	2	0	0	100.3	100.3	1	7197.73	3.25	0	88.14	0	0.7	0	0	21.55	0	0	0	0	0	0	-10.08	-10.08
Inverters	G_Inv4	366732.8	4903105	2	0	0	87.7	87.7	1	1679.64	3.25	0	75.5	0	2.54	0	0	2.26	0	0	0	0	0	0	7.35	7.35
Inverter	MV5-3	370231	4908851	2	0	0	100.3	100.3	1	7263.12	3.25	0	88.22	0	0.7	0	0	21.63	0	0	0	0	0	0	-10.24	-10.24
Inverter	MV4-4	369027	4909199	2	0	0	100.3	100.3	1	7324.29	3.25	0	88.3	0	0.7	0	0	21.7	0	0	0	0	0	0	-10.38	-10.38
Inverter	MV4-6	369243	4909192	2	0	0	100.3	100.3	1	7352.09	3.25	0	88.33	0	0.7	0	0	21.73	0	0	0	0	0	0	-10.45	-10.45
Inverter	MV4-5	369289	4909199	2	0	0	100.3	100.3	1	7367.17	3.25	0	88.35	0	0.7	0	0	21.75	0	0	0	0	0	0	-10.48	-10.48
Inverter	MV5-1	370020	4909142	2	0	0	100.3	100.3	1	7479.06	3.25	0	88.48	0	0.69	0	0	21.89	0	0	0	0	0	0	-10.74	-10.74
Inverter	MV2-1	365842	4906816	2	0	0	97.3	97.3	1	5302	3.25	0	85.49	0	0.67	0	0	19.02	0	0	0	0	0	0	-7.86	-7.86
Inverter	MV4-1	369011	4909397	2	0	0	100.3	100.3	1	7517.95	3.25	0	88.52	0	0.69	0	0	21.94	0	0	0	0	0	0	-10.83	-10.83
Inverter	MV4-3	369229	4909397	2	0	0	100.3	100.3	1	7551.64	3.25	0	88.56	0	0.69	0	0	21.98	0	0	0	0	0	0	-10.91	-10.91
Inverter	MV4-2	369272	4909397	2	0	0	100.3	100.3	1	7559.01	3.25	0	88.57	0	0.69	0	0	21.99	0	0	0	0	0	0	-10.93	-10.93
Inverters	G_Inv3	366583.7	4903091.4	2	0	0	87.7	87.7	1	1782.4	3.25	0	76.02	0	2.56	0	0	2.38	0	0	0	0	0	0	6.7	6.7
Inverters	G_Inv2	366676.9	4903239.1	2	0	0	87.7	87.7	1	1813.24	3.25	0	76.17	0	2.56	0	0	2.42	0	0	0	0	0	0	6.51	6.51
Inverters	G_Inv1	366526.4	4903225.8	2	0	0	87.7	87.7	1	1913.47	3.25	0	76.64	0	2.57	0	0	2.53	0	0	0	0	0	0	5.92	5.92
Inverter	MV6-1	370235	4907364	2	0	0	97.3	97.3	1	5871.05	3.96	0	86.37	0	1.67	2.52	0	19.82	0	0	0	0	0	0	-13.08	-13.08
DSTATCOM - 10 MVAR #2	DSAT2	369403	4908757	2.5	0	0	96.6	96.6	1	6955.76	3.5	0	87.85	0	3.83	0	0	4.29	0	0	0	0	0	0	0.66	0.66
DSTATCOM - 10 MVAR #1	DSAT1	369437	4908757	2.5	0	0	96.6	96.6	1	6962.91	3.5	0	87.86	0	3.84	0	0	4.29	0	0	0	0	0	0	0.65	0.65
SubstationTransformer	W_ST	369711.17	4906112.3	2.5	0	0	92	92	1	4514.13	3.5	0	84.09	0	0.45	0	-0.13	8.03	0	0	0	0	0	0	-0.6	-0.6
Westbrook Inverter Enclosur	W_INV3	369508	4906164	2	0	0	89.1	89.1	1	4487.57	3.25	0	84.04	0	1.51	0	0	11.77	0	0	0	0	0	0	-8.26	-8.26
Westbrook Inverter Enclosur	W_INV4	369673	4906164	2	0	0	89.1	89.1	1	4547.28	3.25	0	84.16	0	1.53	0	0	11.85	0	0	0	0	0	0	-8.47	-8.47
Westbrook Inverter Enclosur	W_INV2	369374	4906388	2	0	0	89.1	89.1	1	4655.82	3.25	0	84.36	0	1.55	0	0	12	0	0	0	0	0	0	-8.85	-8.85
Westbrook Inverter Enclosur	W_INV7	369780	4906417	2	0	0	89.1	89.1	1	4821.96	3.25	0	84.66	0	1.6	0	0	12.22	0	0	0	0	0	0	-9.43	-9.43
Westbrook Inverter Enclosur	W_INV5	369719	4906574	2	0	0	89.1	89.1	1	4945.56	3.25	0	84.88	0	1.63	0	0	12.39	0	0	0	0	0	0	-9.84	-9.84
Westbrook Inverter Enclosur	W_INV6	369875	4906578	2	0	0	89.1	89.1	1	5007.01	3.25	0	84.99	0	1.64	0	0	12.47	0	0	0	0	0	0	-10.05	-10.05
Inverter	MV2-2	365977	4906654	2	0	0	89.1	89.1	1	5099.96	3.25	0	85.15	0	1.66	0	0	12.6	0	0	0	0	0	0	-10.35	-10.35
Inverter	MV3-22	368656	4907142	2	0	0	89.1	89.1	1	5235.56	3.25	0	85.38	0	1.7	0	0	12.78	0	0	0	0	0	0	-10.8	-10.8
Inverter	MV1-3	364440	4906039	2	0	0	89.1	89.1	1	5389.88	3.25	0	85.63	0	1.74	0	0	12.98	0	0	0	0	0	0	-11.29	-11.29
Inverter	MV3-5	368340	4907843	2	0	0	89.1	89.1	1	5902.03	3.25	0	86.42	0	1.86	0	0	13.64	0	0	0	0	0	0	-12.86	-12.86
Inverter	MV3-4	368502	4907925	2	0	0	89.1	89.1	1	5996.45	3.25	0	86.56	0	1.89	0	0	13.76	0	0	0	0	0	0	-13.14	-13.14
Inverter	MV3-2	368671	4907928	2	0	0	89.1	89.1	1	6017.18	3.25	0	86.59	0	1.89	0	0	13.78	0	0	0	0	0	0	-13.2	-13.2
Inverter	MV3-1	368156	4907976	2	0	0	89.1	89.1	1	6025.83	3.25	0	86.6	0	1.89	0	0	13.79	0	0	0	0	0	0	-13.23	-13.23
Fixed Reactor Bank 1	FRB1	369378	4908755	6	0	0	89.8	89.8	1	6948.64	5.25	0	87.84	0	-0.29	0	0	10.7	0	0	0	0	0	0	-8.47	-8.47
Fixed Reactor Bank 2	FRB2	369464	4908755	6	0	0	89.8	89.8	1	6966.75	5.25	0	87.86	0	-0.29	0	0	10.72	0	0	0	0	0	0	-8.51	-8.51
Inverter	MV4-15	369176	4908481	2	0	0	89.1	89.1	1	6640.61	3.25	0	87.44	0	2.04	0	0	14.55	0	0	0	0	0	0	-14.98	-14.98
Inverter	MV4-14	369176	4908507	2	0	0	89.1	89.1	1	6666.16	3.25	0	87.48	0	2.05	0	0	14.59	0	0	0	0	0	0	-15.05	-15.05
Inverter	MV4-13	369051	4908605	2	0	0	89.1	89.1	1	6741.09	3.25	0	87.57	0	2.07	0	0	14.68	0	0	0	0	0	0	-15.26	-15.26
Westbrook Inverter Enclosur	W_INV1	369409	4906578	2	0	0	86.1	86.1	1	4847.51	3.25	0	84.71	0	1.6	0	0	12.26	0	0	0	0	0	0	-12.51	-12.51
Inverter	MV5-6	369982	4908507	2	0	0	89.1	89.1	1	6859.64	3.25	0	87.73	0	2.09	0	0	14.82	0	0	0	0	0	0	-15.58	-15.58
Inverter	MV4-12	369043	4908803	2	0	0	89.1	89.1	1	6935.28	3.25	0	87.82	0	2.11	0	0	14.91	0	0	0	0	0	0	-15.79	-15.79
Inverter	MV6-4	370250	4906966	2	0	0	86.1	86.1	1	5512.66	3.25	0	85.83	0	1.77	0	0	13.14	0	0	0	0	0	0	-14.67	-14.67
Westbrook Inverter Transfor	W_INVTR1	369403	4906578	2	0	0	78.2	78.2	1	4845.72	3.25	0	84.71	0	-3.15	0	0	2.36	0	0	0	0	0	0	-5.68	-5.68
Westbrook Inverter Transfor	W_INVTR3	369514	4906164	2	0	0	77.3	77.3	1	4489.65	3.25	0	84.04	0	-3.07	0	0	2.23	0	0	0	0	0	0	-5.87	-5.87
Westbrook Inverter Transfor	W_INVTR4	369679	4906164	2	0	0	77.3	77.3	1	4549.55	3.25	0	84.16	0	-3.08	0	0	2.26	0	0	0	0	0	0	-5.99	-5.99
Westbrook Inverter Transfor	W_INVTR2	369368	4906388	2	0	0	77.3	77.3	1	4654	3.25	0	84.36	0	-3.11	0	0	2.29	0	0	0	0	0	0	-6.2	-6.2
Westbrook Inverter Transfor	W_INVTR7	369786	4906417	2	0	0	77.3	77.3	1	4824.23	3.25	0	84.67	0	-3.14	0	0	2.35	0	0	0	0	0	0	-6.54	-6.54
Westbrook Inverter Transfor	W_INVTR5	369725	4906574	2	0	0	77.3	77.3	1	4947.71	3.25	0	84.89	0	-3.17	0	0	2.4	0	0	0	0	0	0	-6.77	-6.77
Westbrook Inverter Transfor	W_INVTR6	369881	4906578	2	0	0	77.3	77.3	1	5009.31	3.25	0	85	0	-3.18	0	0	2.42	0	0	0	0	0	0	-6.89	-6.89
Inverter Transformer	MV1-14 T	365157	4905049	2	0	0	69.4	69.4	1	4173.04	3.25	0	83.41	0	2.83	0	0	6.8	0	0	0	0	0	0	-23.69	-23.69
Inverter Transformer	MV1-13 T	364725	4905241	2	0	0	69.4	69.4	1	4609.17	3.53	0	84.27	0	3.7	0.91	0	7.12	0	0	0	0	0	0	-26.65	-26.65
Inverter Transformer	MV1-10 T	365010	4905564	2	0	0	69.4	69.4	1	4659.64	3.25	0	84.37	0	2.94	0	0	7.15	0	0	0	0	0	0	-25.11	-25.11
Inverter Transformer	MV1-7 T	364919	4905782	2	0	0	69.4	69.4	1	4886.55	3.25	0	84.78	0	2.99	0	0	7.31	0	0	0	0	0	0	-25.72	-25.72
Inverter Transformer	MV2-1 T	365836	4906816	2	0	0	69.4	69.4	1	5304.4	3.25	0	85.49	0	3.07	0	0	7.58	0	0	0	0	0	0	-26.8	-26.8
Inverter Transformer	MV6-4 T	370244	4906966	2	0	0	69.4	69.4	1	5510.17	3.25	0	85.82	0	3.11	0	0	7.71	0	0	0	0	0	0	-27.3	-27.3
Inverter Transformer	MV6-1 T	370230	4907364	2	0	0	69.4	69.4	1	5869.11	3.25	0	86.37	0	3.17	0	0	7.94	0	0	0	0	0	0	-28.13	-28.13
Inverter Transformer	MV1-15 T	365309	4904994	2	0	0	56.1	56.1	1	4031.02	3.25	0	83.11	0	1.26	0	0	10.5	0	0	0	0	0	0	-38.81	-38.81
Inverter Transformer	MV1-12 T	365044	4905386	2	0	0	56.1	56.1	1	4501.05	3.25	0	84.07	0	1.44	0	0	11.18	0	0	0	0	0	0	-40.62	-40.62
Inverter Transformer	MV1-11 T	364649	4905414	2	0	0	56.1	56.1	1	4786.3	3.25	0	84.6	0	1.55	0	0	11.57	0	0	0	0	0	0	-41.66	-41.66
Inverter Transformer	MV1-8 T	364782	4905647	2	0	0	56.1	56.1	1	4869.67	3.25	0	84.75	0	1.58	0	0	11.68	0	0	0	0	0	0	-41.95	-41.95
Inverter Transformer	MV1-9 T	364555	4905646	2	0	0	56.1	56.1	1	5019.82	3.25	0	85.01	0	1.63	0	0	11.88	0	0	0	0	0	0	-42.47	-42.47
Inverter Transformer	MV1-4 T	364821	4905918	2	0	0	56.1	56.1	1	5054.01	3.25	0	85.07	0	1.64	0	0	11.93	0	0	0	0	0	0	-42.58	-42.58
Inverter Transformer	MV2-2 T	365982	4906654	2	0	0	56.1	56.1	1	5098.02	3.25	0	85.15	0	1.66	0	0	11.98	0	0	0	0	0	0	-42.73	-42.73
Inverter Transformer	MV1-5 T	364676	4905892	2	0	0	56.1	56.1	1	5125.19	3.25	0	85.19	0	1.67	0	0	12.02	0	0	0	0	0	0	-42.82	-42.82
Inverter Transformer	MV2-3 T	365814	4906641	2	0	0	56.1	56.1	1	5153.55	3.25	0	85.24	0	1.68	0	0	12.05	0	0	0	0	0	0	-42.92	-42.92
Inverter Transformer	MV1-2 T	364759	4906063	2	0	0	56.1	56.1	1	5206.37	3.25	0	85.33	0	1.7	0	0	12.12	0	0	0	0	0	0	-43.09	-43.09
Inverter Transformer	MV1-6 T	364482	4905835	2	0	0	56.1	56.1	1	5208.83	3.25	0	85.33	0	1.7	0	0	12.13	0	0	0	0	0	0	-43.1	-43.1
Inverter Transformer	MV3-22 T	368661	4907142	2	0	0	56.1	56.1	1	5236.23	3.25	0	85.38	0	1.71	0	0	12.16	0	0	0	0	0	0	-43.19	-43.19
Inverter Transformer	MV2-4 T	365590	4906628	2	0	0	56.1	56.1	1	5238.99	3.25	0	85.38	0	1.71	0	0	12.17	0	0	0	0	0	0	-43.2	-43.2
Inverter Transformer	MV3-21 T	368484	4907206	2	0	0	56.1	56.1	1	5279.01	3.25	0	85.45	0	1.72	0	0	12.22	0	0	0	0	0	0	-43.33	-43.33
Inverter Transformer	MV1-1 T	364721	4906166	2	0	0	56.1	56.1	1	5311.1	3.25	0	85.5	0	1.74	0	0	12.26	0	0	0	0	0	0	-43.44	-43.44
Inverter Transformer	MV1-3 T	364435	4906039	2	0	0	56.1	56.1	1	5393.14	3.25	0	85.64	0	1.76	0	0	12.36	0	0	0	0	0	0	-43.7	-43.7
Inverter Transformer	MV3-19 T	368352	4907347	2	0	0	56.1	56.1	1	5408.05	3.25	0	85.66	0	1.77	0	0	12.38	0	0	0	0	0	0	-43.75	-43.75

	Inverter Transformer	MV3-20 T	368683	4907317	2	0	0	56.1	56.1	1	5412.6	3.25	0	85.67	0	1.77	0	0	12.39	0	0	0	0	0	0	-43.77	-43.77
	Inverter Transformer	MV3-18 T	367757	4907412	2	0	0	56.1	56.1	1	5462.11	3.25	0	85.75	0	1.79	0	0	12.45	0	0	0	0	0	0	-43.92	-43.92
	Inverter Transformer	MV3-17 T	368183	4907472	2	0	0	56.1	56.1	1	5523.18	3.25	0	85.84	0	1.81	0	0	12.52	0	0	0	0	0	0	-44.12	-44.12
	Inverter Transformer	MV3-15 T	368351	4907477	2	0	0	56.1	56.1	1	5537.63	3.25	0	85.87	0	1.81	0	0	12.54	0	0	0	0	0	0	-44.16	-44.16
	Inverter Transformer	MV3-16 T	368509	4907475	2	0	0	56.1	56.1	1	5549.16	3.25	0	85.88	0	1.82	0	0	12.56	0	0	0	0	0	0	-44.2	-44.2
	Inverter Transformer	MV3-14 T	368678	4907498	2	0	0	56.1	56.1	1	5591.36	3.25	0	85.95	0	1.83	0	0	12.61	0	0	0	0	0	0	-44.33	-44.33
	Inverter Transformer	MV3-13 T	367958	4907577	2	0	0	56.1	56.1	1	5623.5	3.25	0	86	0	1.84	0	0	12.65	0	0	0	0	0	0	-44.43	-44.43
	Inverter Transformer	MV3-12 T	367674	4907594	2	0	0	56.1	56.1	1	5647.53	3.25	0	86.04	0	1.85	0	0	12.68	0	0	0	0	0	0	-44.51	-44.51
	Inverter Transformer	MV6-3 T	370202	4907140	2	0	0	56.1	56.1	1	5652.09	3.25	0	86.04	0	1.85	0	0	12.68	0	0	0	0	0	0	-44.52	-44.52
	Inverter Transformer	MV3-10 T	368162	4907669	2	0	0	56.1	56.1	1	5719.23	3.25	0	86.15	0	1.87	0	0	12.77	0	0	0	0	0	0	-44.73	-44.73
	Inverter Transformer	MV3-11 T	368340	4907662	2	0	0	56.1	56.1	1	5721.43	3.25	0	86.15	0	1.87	0	0	12.77	0	0	0	0	0	0	-44.73	-44.73
	Inverter Transformer	MV3-9 T	368517	4907703	2	0	0	56.1	56.1	1	5776.84	3.25	0	86.23	0	1.89	0	0	12.84	0	0	0	0	0	0	-44.9	-44.9
	Inverter Transformer	MV6-2 T	370091	4907339	2	0	0	56.1	56.1	1	5793.41	3.25	0	86.26	0	1.9	0	0	12.86	0	0	0	0	0	0	-44.95	-44.95
	Inverter Transformer	MV3-7 T	367951	4907754	2	0	0	56.1	56.1	1	5800.5	3.25	0	86.27	0	1.9	0	0	12.86	0	0	0	0	0	0	-44.98	-44.98
	Inverter Transformer	MV3-8 T	368685	4907712	2	0	0	56.1	56.1	1	5804.51	3.25	0	86.28	0	1.9	0	0	12.87	0	0	0	0	0	0	-44.99	-44.99
	Inverter Transformer	MV3-6 T	368156	4907834	2	0	0	56.1	56.1	1	5883.91	3.25	0	86.39	0	1.93	0	0	12.96	0	0	0	0	0	0	-45.23	-45.23
	Inverter Transformer	MV3-5 T	368335	4907843	2	0	0	56.1	56.1	1	5901.71	3.25	0	86.42	0	1.93	0	0	12.99	0	0	0	0	0	0	-45.28	-45.28
	Inverter Transformer	MV3-3 T	367944	4907927	2	0	0	56.1	56.1	1	5973.51	3.25	0	86.52	0	1.96	0	0	13.07	0	0	0	0	0	0	-45.49	-45.49
	Inverter Transformer	MV3-4 T	368507	4907925	2	0	0	56.1	56.1	1	5996.9	3.25	0	86.56	0	1.96	0	0	13.1	0	0	0	0	0	0	-45.56	-45.56
	Inverter Transformer	MV3-2 T	368677	4907928	2	0	0	56.1	56.1	1	6017.9	3.25	0	86.59	0	1.97	0	0	13.12	0	0	0	0	0	0	-45.62	-45.62
	Inverter Transformer	MV3-1 T	368150	4907976	2	0	0	56.1	56.1	1	6025.64	3.25	0	86.6	0	1.97	0	0	13.13	0	0	0	0	0	0	-45.65	-45.65
	Inverter Transformer	MV4-15 T	369170	4908481	2	0	0	56.1	56.1	1	6639.51	3.25	0	87.44	0	2.16	0	0	13.84	0	0	0	0	0	0	-47.38	-47.38
	Inverter Transformer	MV4-14 T	369182	4908507	2	0	0	56.1	56.1	1	6667.27	3.25	0	87.48	0	2.17	0	0	13.87	0	0	0	0	0	0	-47.45	-47.45
	Inverter Transformer	MV4-13 T	369057	4908605	2	0	0	56.1	56.1	1	6742.07	3.25	0	87.58	0	2.19	0	0	13.95	0	0	0	0	0	0	-47.65	-47.65
	Inverter Transformer	MV5-6 T	369987	4908507	2	0	0	56.1	56.1	1	6861.12	3.25	0	87.73	0	2.22	0	0	14.08	0	0	0	0	0	0	-47.97	-47.97
	Inverter Transformer	MV4-12 T	369049	4908803	2	0	0	56.1	56.1	1	6936.22	3.25	0	87.82	0	2.24	0	0	14.16	0	0	0	0	0	0	-48.17	-48.17
	Inverter Transformer	MV4-11 T	369269	4908855	2	0	0	56.1	56.1	1	7025.36	3.25	0	87.93	0	2.27	0	0	14.26	0	0	0	0	0	0	-48.4	-48.4
	Inverter Transformer	MV4-10 T	369307	4908858	2	0	0	56.1	56.1	1	7035.51	3.25	0	87.95	0	2.27	0	0	14.27	0	0	0	0	0	0	-48.42	-48.42
	Inverter Transformer	MV5-5 T	370021	4908690	2	0	0	56.1	56.1	1	7046.01	3.25	0	87.96	0	2.27	0	0	14.28	0	0	0	0	0	0	-48.45	-48.45
	Inverter Transformer	MV4-7 T	369040	4909001	2	0	0	56.1	56.1	1	7130.44	3.25	0	88.06	0	2.29	0	0	14.37	0	0	0	0	0	0	-48.67	-48.67
	Inverter Transformer	MV5-4 T	370330	4908707	2	0	0	56.1	56.1	1	7158.74	3.25	0	88.1	0	2.3	0	0	14.4	0	0	0	0	0	0	-48.74	-48.74
	Inverter Transformer	MV4-8 T	369262	4909001	2	0	0	56.1	56.1	1	7167.56	3.25	0	88.11	0	2.3	0	0	14.41	0	0	0	0	0	0	-48.76	-48.76
	Inverter Transformer	MV4-9 T	369284	4909001	2	0	0	56.1	56.1	1	7171.6	3.25	0	88.11	0	2.31	0	0	14.41	0	0	0	0	0	0	-48.77	-48.77
	Inverter Transformer	MV5-2 T	370011	4908853	2	0	0	56.1	56.1	1	7199.15	3.25	0	88.15	0	2.31	0	0	14.44	0	0	0	0	0	0	-48.84	-48.84
	Inverter Transformer	MV5-3 T	370237	4908851	2	0	0	56.1	56.1	1	7265.01	3.25	0	88.22	0	2.33	0	0	14.51	0	0	0	0	0	0	-49.01	-49.01
	Inverter Transformer	MV4-4 T	369033	4909199	2	0	0	56.1	56.1	1	7325.17	3.25	0	88.3	0	2.35	0	0	14.57	0	0	0	0	0	0	-49.16	-49.16
	Inverter Transformer	MV4-6 T	369249	4909192	2	0	0	56.1	56.1	1	7353.15	3.25	0	88.33	0	2.35	0	0	14.6	0	0	0	0	0	0	-49.23	-49.23
	Inverter Transformer	MV4-5 T	369283	4909199	2	0	0	56.1	56.1	1	7366.09	3.25	0	88.34	0	2.36	0	0	14.62	0	0	0	0	0	0	-49.26	-49.26
	Inverter Transformer	MV5-1 T	370015	4909142	2	0	0	56.1	56.1	1	7477.68	3.25	0	88.48	0	2.38	0	0	14.73	0	0	0	0	0	0	-49.53	-49.53
	Inverter Transformer	MV4-1 T	369017	4909397	2	0	0	56.1	56.1	1	7518.79	3.25	0	88.52	0	2.39	0	0	14.77	0	0	0	0	0	0	-49.63	-49.63
	Inverter Transformer	MV4-3 T	369234	4909397	2	0	0	56.1	56.1	1	7552.48	3.25	0	88.56	0	2.4	0	0	14.81	0	0	0	0	0	0	-49.71	-49.71
	Inverter Transformer	MV4-2 T	369267	4909397	2	0	0	56.1	56.1	1	7558.14	3.25	0	88.57	0	2.4	0	0	14.81	0	0	0	0	0	0	-49.73	-49.73
	Line Reactor	NGR	369421	4908787.5	5	0	0	45.4	45.4	1	6989.35	5.25	0	87.89	0	3.22	1.37	0.12	2.86	0	0	0	0	0	0	-49.98	-49.98
Limit. Valu	0	0																								
Level D/N:	20.1224	20.1224																								

Receiver: Existing Noise Receptor
ID: W-R1
X: 368452.8
Y: 4905660.5
Z: 4.5
Ground: 0

ISO	Description	ID	X	Y	Z	Ground	ReflOrd	LxT	LxN	L/A	Dist.	hm	Freq	Adiv	K0b	Agr	Abar	z	Aatm	Afol	Ahous	Cmet	CmetN	Dc	RL	LtotT	LtotN
	Sol_Luce Substation	S_Substation	369426	4908792	3.5	0	0	112.1	112.1	1	3279.24	5.25	0	81.32	0	0.38	3.3	0.34	6.37	0	0	0	0	0	0	20.71	20.71
	Inverter	MV3-21	368478	4907206	2	0	0	100.3	100.3	1	1545.71	3.25	0	74.78	0	-0.02	0	0	12.44	0	0	0	0	0	0	13.11	13.11
	Inverter	MV3-20	368689	4907317	2	0	0	100.3	100.3	1	1673.26	3.25	0	75.47	0	0.03	0	0	12.74	0	0	0	0	0	0	12.07	12.07
	Inverter	MV3-19	368357	4907347	2	0	0	100.3	100.3	1	1689.22	3.25	0	75.55	0	0.03	0	0	12.78	0	0	0	0	0	0	11.95	11.95
	Inverter	MV3-16	368514	4907475	2	0	0	100.3	100.3	1	1815.53	3.25	0	76.18	0	0.07	0	0	13.06	0	0	0	0	0	0	10.99	10.99
	Inverter	MV3-15	368357	4907477	2	0	0	100.3	100.3	1	1819.03	3.25	0	76.2	0	0.08	0	0	13.07	0	0	0	0	0	0	10.97	10.97
	Inverter	MV3-17	368178	4907472	2	0	0	100.3	100.3	1	1832.23	3.25	0	76.26	0	0.08	0	0	13.1	0	0	0	0	0	0	10.87	10.87
	Inverter	MV3-14	368684	4907498	2	0	0	100.3	100.3	1	1851.99	3.25	0	76.35	0	0.09	0	0	13.14	0	0	0	0	0	0	10.73	10.73
	Inverter	MV3-18	367752	4907412	2	0	0	100.3	100.3	1	1886.5	3.25	0	76.51	0	0.1	0	0	13.22	0	0	0	0	0	0	10.48	10.48
	Inverter	MV3-13	367963	4907577	2	0	0	100.3	100.3	1	1978.1	3.25	0	76.92	0	0.12	0	0	13.42	0	0	0	0	0	0	9.85	9.85
	Inverter	MV3-11	368346	4907662	2	0	0	100.3	100.3	1	2004.35	3.25	0	77.04	0	0.13	0	0	13.47	0	0	0	0	0	0	9.67	9.67
	Inverter	MV3-10	368167	4907669	2	0	0	100.3	100.3	1	2028.73	3.25	0	77.14	0	0.14	0	0	13.52	0	0	0	0	0	0	9.51	9.51
	Inverter	MV3-9	368512	4907703	2	0	0	100.3	100.3	1	2043.36	3.25	0	77.21	0	0.14	0	0	13.55	0	0	0	0	0	0	9.41	9.41
	Inverter	MV3-8	368680	4907712	2	0	0	100.3	100.3	1	2064.04	3.25	0	77.29	0	0.15	0	0	13.6	0	0	0	0	0	0	9.27	9.27
	Inverter	MV3-12	367668	4907594	2	0	0	100.3	100.3	1	2086.71	3.25	0	77.39	0	0.15	0	0	13.64	0	0	0	0	0	0	9.13	9.13
	Inverter	MV3-7	367945	4907754	2	0	0	100.3	100.3	1	2154.21	3.25	0	77.67	0	0.17	0	0	13.78	0	0	0	0	0	0	8.69	8.69
	Inverter	MV3-6	368162	4907834	2	0	0	100.3	100.3	1	2192.87	3.25	0	77.82	0	0.18	0	0	13.86	0	0	0	0	0	0	8.45	8.45
	Inverter	MV6-3	370207	4907140	2	0	0	100.3	100.3	1	2294.81	3.25	0	78.21	0	0.21	0	0	14.06	0	0	0	0	0	0	7.83	7.83
	Inverter	MV3-3	367939	4907927	2	0	0	100.3	100.3	1	2324.01	3.25	0	78.32	0	0.22	0	0	14.12	0	0	0	0	0	0	7.65	7.65
	Inverter	MV6-2	370085	4907339	2	0	0	100.3	100.3	1	2341.25	3.25	0	78.39	0	0.22	0	0	14.15	0	0	0	0	0	0	7.55	7.55

Inverter	MV2-3	365820	4906641	2	0	0	100.3	100.3	1	2809.45	3.25	0	79.97	0	0.32	0	0	15.03	0	0	0	0	0	0	4.98	4.98
Inverter	MV2-4	365586	4906624	2	0	0	100.3	100.3	1	3024.38	3.25	0	80.61	0	0.37	0	0	15.42	0	0	0	0	0	0	3.92	3.92
Inverter	MV1-15	365315	4904994	2	0	0	100.3	100.3	1	3207.81	3.25	0	81.12	0	0.4	0	0	15.73	0	0	0	0	0	0	3.05	3.05
Inverter	MV4-11	369264	4908855	2	0	0	100.3	100.3	1	3295.89	3.25	0	81.36	0	0.42	0	0	15.89	0	0	0	0	0	0	2.65	2.65
Inverter	MV4-10	369312	4908858	2	0	0	100.3	100.3	1	3310.93	3.25	0	81.4	0	0.42	0	0	15.91	0	0	0	0	0	0	2.58	2.58
Inverter	MV4-7	369035	4909001	2	0	0	100.3	100.3	1	3390.86	3.25	0	81.61	0	0.43	0	0	16.05	0	0	0	0	0	0	2.23	2.23
Inverter	MV5-5	370015	4908690	2	0	0	100.3	100.3	1	3408.57	3.25	0	81.65	0	0.44	0	0	16.08	0	0	0	0	0	0	2.15	2.15
Inverter	MV1-12	365038	4905386	2	0	0	100.3	100.3	1	3425.82	3.25	0	81.7	0	0.44	0	0	16.11	0	0	0	0	0	0	2.07	2.07
Inverter	MV4-8	369256	4909001	2	0	0	100.3	100.3	1	3435.71	3.25	0	81.72	0	0.44	0	0	16.12	0	0	0	0	0	0	2.03	2.03
Inverter	MV4-9	369289	4909001	2	0	0	100.3	100.3	1	3443.57	3.25	0	81.74	0	0.44	0	0	16.14	0	0	0	0	0	0	1.99	1.99
Inverter	MV6-1	370235	4907364	2	0	0	97.3	97.3	1	2465.39	3.25	0	78.84	0	0.25	0	0	14.39	0	0	0	0	0	0	3.83	3.83
SubstationTransformer	W_ST	369711.17	4906112.3	2.5	0	0	92	92	1	1337.01	4.25	0	73.52	0	0.76	4.48	0.27	3.18	0	0	0	0	0	0	10.04	10.04
Inverter	MV5-2	370006	4908853	2	0	0	100.3	100.3	1	3550.28	3.25	0	82.01	0	0.46	0	0	16.32	0	0	0	0	0	0	1.53	1.53
Inverter	MV5-4	370324	4908707	2	0	0	100.3	100.3	1	3575.27	3.25	0	82.07	0	0.46	0	0	16.36	0	0	0	0	0	0	1.43	1.43
Inverter	MV4-4	369027	4909199	2	0	0	100.3	100.3	1	3584.79	3.25	0	82.09	0	0.46	0	0	16.37	0	0	0	0	0	0	1.39	1.39
Inverter	MV4-6	369243	4909192	2	0	0	100.3	100.3	1	3618.83	3.25	0	82.17	0	0.47	0	0	16.43	0	0	0	0	0	0	1.24	1.24
Inverter	MV4-5	369289	4909199	2	0	0	100.3	100.3	1	3635.96	3.25	0	82.21	0	0.47	0	0	16.46	0	0	0	0	0	0	1.17	1.17
Inverter	MV1-4	364815	4905918	2	0	0	100.3	100.3	1	3646.9	3.25	0	82.24	0	0.47	0	0	16.48	0	0	0	0	0	0	1.12	1.12
Inverter	MV5-3	370231	4908851	2	0	0	100.3	100.3	1	3652.57	3.25	0	82.25	0	0.48	0	0	16.48	0	0	0	0	0	0	1.1	1.1
Inverter	MV1-8	364788	4905647	2	0	0	100.3	100.3	1	3664.83	3.25	0	82.28	0	0.48	0	0	16.5	0	0	0	0	0	0	1.05	1.05
Inverter	MV1-2	364753	4906063	2	0	0	100.3	100.3	1	3721.63	3.25	0	82.41	0	0.49	0	0	16.6	0	0	0	0	0	0	0.81	0.81
Inverter	MV1-1	364715	4906166	2	0	0	100.3	100.3	1	3771.83	3.25	0	82.53	0	0.49	0	0	16.68	0	0	0	0	0	0	0.61	0.61
Inverter	MV4-1	369011	4909397	2	0	0	100.3	100.3	1	3777.97	3.25	0	82.55	0	0.49	0	0	16.69	0	0	0	0	0	0	0.58	0.58
Inverter	MV1-5	364671	4905892	2	0	0	100.3	100.3	1	3788.88	3.25	0	82.57	0	0.5	0	0	16.71	0	0	0	0	0	0	0.54	0.54
Inverter	MV1-11	364655	4905414	2	0	0	100.3	100.3	1	3805.79	3.25	0	82.61	0	0.5	0	0	16.74	0	0	0	0	0	0	0.47	0.47
Inverter	MV4-3	369229	4909397	2	0	0	100.3	100.3	1	3816.27	3.25	0	82.63	0	0.5	0	0	16.75	0	0	0	0	0	0	0.43	0.43
Inverter	MV5-1	370020	4909142	2	0	0	100.3	100.3	1	3817.98	3.25	0	82.64	0	0.5	0	0	16.76	0	0	0	0	0	0	0.42	0.42
Inverter	MV4-2	369272	4909397	2	0	0	100.3	100.3	1	3825.25	3.25	0	82.65	0	0.5	0	0	16.77	0	0	0	0	0	0	0.39	0.39
Inverter	MV1-9	364561	4905646	2	0	0	100.3	100.3	1	3891.83	3.25	0	82.8	0	0.51	0	0	16.87	0	0	0	0	0	0	0.12	0.12
Inverter	MV1-6	364477	4905835	2	0	0	100.3	100.3	1	3979.63	3.25	0	83	0	0.52	0	0	17.02	0	0	0	0	0	0	-0.22	-0.22
Inverter	MV2-1	365842	4906816	2	0	0	97.3	97.3	1	2855.08	3.25	0	80.11	0	0.33	0	0	15.11	0	0	0	0	0	0	1.75	1.75
Westbrook Inverter Enclosur	W_INV3	369508	4906164	2	0	0	89.1	89.1	1	1169.17	3.25	0	72.36	0	0.72	0	0	6.63	0	0	0	0	0	0	9.35	9.35
Westbrook Inverter Enclosur	W_INV2	369374	4906388	2	0	0	89.1	89.1	1	1173.83	3.25	0	72.39	0	0.72	0	0	6.64	0	0	0	0	0	0	9.31	9.31
Inverter	MV1-14	365163	4905049	2	0	0	97.3	97.3	1	3346.15	3.25	0	81.49	0	0.43	0	0	15.97	0	0	0	0	0	0	-0.58	-0.58
Westbrook Inverter Enclosur	W_INV4	369673	4906164	2	0	0	89.1	89.1	1	1320	3.25	0	73.41	0	0.75	0	0	6.9	0	0	0	0	0	0	8	8
Inverter	MV1-10	365004	4905564	2	0	0	97.3	97.3	1	3450.15	3.25	0	81.76	0	0.44	0	0	16.15	0	0	0	0	0	0	-1.04	-1.04
DSTATCOM - 10 MVAR #2	DSAT2	369403	4908757	2.5	0	0	96.6	96.6	1	3239.01	3.5	0	81.21	0	3.46	0	0	2.43	0	0	0	0	0	0	9.53	9.53
DSTATCOM - 10 MVAR #1	DSAT1	369437	4908757	2.5	0	0	96.6	96.6	1	3249.15	3.5	0	81.24	0	3.46	0	0	2.44	0	0	0	0	0	0	9.5	9.5
Inverter	MV1-7	364925	4905782	2	0	0	97.3	97.3	1	3529.89	3.25	0	81.96	0	0.46	0	0	16.28	0	0	0	0	0	0	-1.38	-1.38
Inverter	MV1-13	364731	4905241	2	0	0	97.3	97.3	1	3745.37	3.25	0	82.47	0	0.49	0	0	16.64	0	0	0	0	0	0	-2.28	-2.28
Inverter	MV3-22	368656	4907142	2	0	0	89.1	89.1	1	1495.37	3.25	0	74.49	0	0.79	0	0	7.2	0	0	0	0	0	0	6.57	6.57
Westbrook Inverter Enclosur	W_INV7	369780	4906417	2	0	0	89.1	89.1	1	1527.66	3.25	0	74.68	0	0.8	0	0	7.26	0	0	0	0	0	0	6.32	6.32
Westbrook Inverter Enclosur	W_INV5	369719	4906574	2	0	0	89.1	89.1	1	1561.33	3.25	0	74.87	0	0.81	0	0	7.31	0	0	0	0	0	0	6.07	6.07
Westbrook Inverter Enclosur	W_INV6	369875	4906578	2	0	0	89.1	89.1	1	1692.47	3.25	0	75.57	0	0.84	0	0	7.54	0	0	0	0	0	0	5.12	5.12
Westbrook Inverter Enclosur	W_INV1	369409	4906578	2	0	0	86.1	86.1	1	1325.19	3.25	0	73.45	0	0.75	0	0	6.9	0	0	0	0	0	0	4.95	4.95
Inverter	MV3-5	368340	4907843	2	0	0	89.1	89.1	1	2185.41	3.25	0	77.79	0	0.95	0	0	8.35	0	0	0	0	0	0	1.97	1.97
Inverter	MV3-4	368502	4907925	2	0	0	89.1	89.1	1	2265.04	3.25	0	78.1	0	0.97	0	0	8.47	0	0	0	0	0	0	1.51	1.51
Inverter	MV3-2	368671	4907928	2	0	0	89.1	89.1	1	2277.98	3.25	0	78.15	0	0.97	0	0	8.49	0	0	0	0	0	0	1.44	1.44
Inverter	MV3-1	368156	4907976	2	0	0	89.1	89.1	1	2334.45	3.25	0	78.36	0	0.99	0	0	8.58	0	0	0	0	0	0	1.12	1.12
Gardiner Substation	G_Sub	366586.3	4903349.9	2.5	0	0	90.8	90.8	1	2970.3	4.25	0	80.46	0	1.13	3.25	0.36	5.91	0	0	0	0	0	0	0.02	0.02
Inverter	MV2-2	365977	4906654	2	0	0	89.1	89.1	1	2667.7	3.25	0	79.52	0	1.07	0	0	9.11	0	0	0	0	0	0	-0.64	-0.64
Inverter	MV4-15	369176	4908481	2	0	0	89.1	89.1	1	2911.74	3.25	0	80.28	0	1.13	0	0	9.48	0	0	0	0	0	0	-1.83	-1.83
Inverter	MV4-14	369176	4908507	2	0	0	89.1	89.1	1	2936.93	3.25	0	80.36	0	1.13	0	0	9.52	0	0	0	0	0	0	-1.95	-1.95
Fixed Reactor Bank 1	FRB1	369378	4908755	6	0	0	89.8	89.8	1	3229.85	5.25	0	81.18	0	-0.84	0	0	6.3	0	0	0	0	0	0	3.14	3.14
Fixed Reactor Bank 2	FRB2	369464	4908755	6	0	0	89.8	89.8	1	3255.53	5.25	0	81.25	0	-0.84	0	0	6.33	0	0	0	0	0	0	3.03	3.03
Inverter	MV4-13	369051	4908605	2	0	0	89.1	89.1	1	3004.65	3.25	0	80.56	0	1.15	0	0	9.62	0	0	0	0	0	0	-2.27	-2.27
Inverter	MV6-4	370250	4906966	2	0	0	86.1	86.1	1	2221.32	3.25	0	77.93	0	0.96	0	0	8.4	0	0	0	0	0	0	-1.24	-1.24
Inverter	MV4-12	369043	4908803	2	0	0	89.1	89.1	1	3197.44	3.25	0	81.1	0	1.19	0	0	9.91	0	0	0	0	0	0	-3.15	-3.15
Inverter	MV5-6	369982	4908507	2	0	0	89.1	89.1	1	3231.26	3.25	0	81.19	0	1.2	0	0	9.96	0	0	0	0	0	0	-3.3	-3.3
Inverters	G_Inv2	366676.9	4903239.1	2	0	0	87.7	87.7	1	3002.83	3.25	0	80.55	0	2.7	0	0	3.78	0	0	0	0	0	0	0.63	0.63
Inverters	G_Inv4	366732.8	4903105	2	0	0	87.7	87.7	1	3080.42	3.25	0	80.77	0	2.71	0	0	3.86	0	0	0	0	0	0	0.32	0.32
Inverters	G_Inv1	366526.4	4903225.8	2	0	0	87.7	87.7	1	3104.64	3.25	0	80.84	0	2.71	0	0	3.89	0	0	0	0	0	0	0.22	0.22
Inverters	G_Inv6	366788.5	4902972	2	0	0	87.7	87.7	1	3161.95	3.25	0	81	0	2.71	0	0	3.96	0	0	0	0	0	0	-0.01	-0.01
Inverters	G_Inv3	366583.7	4903091.4	2	0	0	87.7	87.7	1	3177.08	3.25	0	81.04	0	2.72	0	0	3.97	0	0	0	0	0	0	-0.07	-0.07
Inverters	G_Inv8	366844.5	4902838.5	2	0	0	87.7	87.7	1	3248.13	3.25	0	81.23	0	2.72	0	0	4.05	0	0	0	0	0	0	-0.35	-0.35
Inverters	G_Inv5	366638.5	4902958.1	2	0	0	87.7	87.7	1	3254.94	3.25	0	81.25	0	2.72	0	0	4.06	0	0	0	0	0	0	-0.37	-0.37
Inverters	G_Inv7	366694.6	4902824.7	2	0	0	87.7	87.7	1	3336.62	3.25	0	81.47	0	2.73	0	0	4.15	0	0	0	0	0	0	-0.69	-0.69
Inverters	G_Inv10	366900.7	4902704.8	2	0	0	87.7	87.7	1	3338.44	3.25	0	81.47	0	2.73	0	0	4.15	0	0	0	0	0	0	-0.69	-0.69
Inverters	G_Inv9	366750.9	4902691.8	2	0	0	87.7	87.7	1	3421.94	3.25	0	81.69	0	2.74	0	0	4.24	0	0	0	0	0	0	-1.01	-1.01
Inverter	MV1-3	364440	4906039	2	0	0	89.1	89.1	1	4030.61	3.25	0	83.11	0	1.4	0	0	11.13	0	0	0	0	0	0	-6.58	-6.58
Westbrook Inverter Transfor	W_INVTR2	369368	4906388	2	0	0	77.3	77.3	1	1169.13	3.25	0	72.36	0	-2.03	0	0	0.77	0	0	0	0	0	0	6.24	6.24
Westbrook Inverter Transfor	W_INVTR3	369514	4906164	2	0	0	77.3	77.3	1	1174.59	3.25	0	72.4	0	-2.04	0	0	0.78	0	0	0	0	0	0	6.2	6.2
Westbrook Inverter Transfor	W_INVTR1	369403	4906578	2	0	0	78.2	78.2	1	1320.87	3.25	0	73.42	0	-2.12	0	0	0.86	0	0	0	0	0	0	6.08	6.08
Westbrook Inverter Transfor	W_INVTR4	369679	4906164	2	0	0	77.3	77.3	1	1325.55	3.25	0	73.45	0	-2.12	0	0	0.86	0	0	0	0	0	0	5.15	5.15

Westbrook Inverter Transfor	W_INVTR7	369786	4906417	2	0	0	77.3	77.3	1	1532.88	3.25	0	74.71	0	-2.22	0	0	0.97	0	0	0	0	0	0	3.88	3.88
Westbrook Inverter Transfor	W_INVTR5	369725	4906574	2	0	0	77.3	77.3	1	1566.2	3.25	0	74.9	0	-2.23	0	0	0.99	0	0	0	0	0	0	3.69	3.69
Westbrook Inverter Transfor	W_INVTR6	369881	4906578	2	0	0	77.3	77.3	1	1697.52	3.25	0	75.6	0	-2.29	0	0	1.06	0	0	0	0	0	0	2.98	2.98
Inverter Transformer	MV6-4 T	370244	4906966	2	0	0	69.4	69.4	1	2216.47	3.25	0	77.91	0	2.25	0	0	5.18	0	0	0	0	0	0	-15.99	-15.99
Inverter Transformer	MV6-1 T	370230	4907364	2	0	0	69.4	69.4	1	2461.78	3.25	0	78.82	0	2.34	0	0	5.41	0	0	0	0	0	0	-17.22	-17.22
Inverter Transformer	MV2-1 T	365836	4906816	2	0	0	69.4	69.4	1	2860.56	3.25	0	80.13	0	2.46	0	0	5.76	0	0	0	0	0	0	-19.01	-19.01
Inverter Transformer	MV1-14 T	365157	4905049	2	0	0	69.4	69.4	1	3352.05	3.25	0	81.51	0	2.61	0	0	6.17	0	0	0	0	0	0	-20.94	-20.94
Inverter Transformer	MV1-10 T	365010	4905564	2	0	0	69.4	69.4	1	3444.15	3.25	0	81.74	0	2.64	0	0	6.25	0	0	0	0	0	0	-21.28	-21.28
Inverter Transformer	MV1-7 T	364919	4905782	2	0	0	69.4	69.4	1	3535.89	3.25	0	81.97	0	2.66	0	0	6.32	0	0	0	0	0	0	-21.6	-21.6
Inverter Transformer	MV1-13 T	364725	4905241	2	0	0	69.4	69.4	1	3751.33	3.25	0	82.48	0	2.72	0	0	6.49	0	0	0	0	0	0	-22.34	-22.34
Inverter Transformer	MV3-22 T	368661	4907142	2	0	0	56.1	56.1	1	1496.06	3.25	0	74.5	0	0.2	0	0	6.01	0	0	0	0	0	0	-24.65	-24.65
Inverter Transformer	MV3-21 T	368484	4907206	2	0	0	56.1	56.1	1	1545.82	3.25	0	74.78	0	0.22	0	0	6.12	0	0	0	0	0	0	-25.06	-25.06
Inverter Transformer	MV3-20 T	368683	4907317	2	0	0	56.1	56.1	1	1672.42	3.25	0	75.47	0	0.27	0	0	6.38	0	0	0	0	0	0	-26.06	-26.06
Inverter Transformer	MV3-19 T	368352	4907347	2	0	0	56.1	56.1	1	1689.51	3.25	0	75.56	0	0.28	0	0	6.42	0	0	0	0	0	0	-26.19	-26.19
Inverter Transformer	MV3-16 T	368509	4907475	2	0	0	56.1	56.1	1	1815.37	3.25	0	76.18	0	0.33	0	0	6.67	0	0	0	0	0	0	-27.12	-27.12
Inverter Transformer	MV3-15 T	368351	4907477	2	0	0	56.1	56.1	1	1819.35	3.25	0	76.2	0	0.33	0	0	6.68	0	0	0	0	0	0	-27.15	-27.15
Inverter Transformer	MV3-17 T	368183	4907472	2	0	0	56.1	56.1	1	1831.48	3.25	0	76.26	0	0.33	0	0	6.71	0	0	0	0	0	0	-27.24	-27.24
Inverter Transformer	MV3-14 T	368678	4907498	2	0	0	56.1	56.1	1	1851.25	3.25	0	76.35	0	0.34	0	0	6.75	0	0	0	0	0	0	-27.38	-27.38
Inverter Transformer	MV3-18 T	367757	4907412	2	0	0	56.1	56.1	1	1884.65	3.25	0	76.5	0	0.36	0	0	6.81	0	0	0	0	0	0	-27.62	-27.62
Inverter Transformer	MV3-13 T	367958	4907577	2	0	0	56.1	56.1	1	1979.34	3.25	0	76.93	0	0.4	0	0	7	0	0	0	0	0	0	-28.27	-28.27
Inverter Transformer	MV3-11 T	368340	4907662	2	0	0	56.1	56.1	1	2004.68	3.25	0	77.04	0	0.41	0	0	7.05	0	0	0	0	0	0	-28.44	-28.44
Inverter Transformer	MV3-10 T	368162	4907669	2	0	0	56.1	56.1	1	2029.44	3.25	0	77.15	0	0.42	0	0	7.1	0	0	0	0	0	0	-28.61	-28.61
Inverter Transformer	MV3-9 T	368517	4907703	2	0	0	56.1	56.1	1	2043.51	3.25	0	77.21	0	0.42	0	0	7.13	0	0	0	0	0	0	-28.7	-28.7
Inverter Transformer	MV3-8 T	368685	4907712	2	0	0	56.1	56.1	1	2064.6	3.25	0	77.3	0	0.43	0	0	7.17	0	0	0	0	0	0	-28.84	-28.84
Inverter Transformer	MV3-12 T	367674	4907594	2	0	0	56.1	56.1	1	2084.46	3.25	0	77.38	0	0.44	0	0	7.21	0	0	0	0	0	0	-28.97	-28.97
Inverter Transformer	MV3-7 T	367951	4907754	2	0	0	56.1	56.1	1	2152.8	3.25	0	77.66	0	0.47	0	0	7.34	0	0	0	0	0	0	-29.41	-29.41
Inverter Transformer	MV3-5 T	368335	4907843	2	0	0	56.1	56.1	1	2185.68	3.25	0	77.79	0	0.48	0	0	7.4	0	0	0	0	0	0	-29.62	-29.62
Inverter Transformer	MV3-6 T	368156	4907834	2	0	0	56.1	56.1	1	2193.67	3.25	0	77.82	0	0.49	0	0	7.42	0	0	0	0	0	0	-29.67	-29.67
Inverter Transformer	MV3-4 T	368507	4907925	2	0	0	56.1	56.1	1	2265.15	3.25	0	78.1	0	0.52	0	0	7.55	0	0	0	0	0	0	-30.11	-30.11
Inverter Transformer	MV3-2 T	368677	4907928	2	0	0	56.1	56.1	1	2278.56	3.25	0	78.15	0	0.52	0	0	7.58	0	0	0	0	0	0	-30.2	-30.2
Inverter Transformer	MV6-3 T	370202	4907140	2	0	0	56.1	56.1	1	2290.99	3.25	0	78.2	0	0.53	0	0	7.6	0	0	0	0	0	0	-30.27	-30.27
Inverter Transformer	MV3-3 T	367944	4907927	2	0	0	56.1	56.1	1	2322.91	3.25	0	78.32	0	0.54	0	0	7.66	0	0	0	0	0	0	-30.47	-30.47
Inverter Transformer	MV3-1 T	368150	4907976	2	0	0	56.1	56.1	1	2335.22	3.25	0	78.37	0	0.55	0	0	7.69	0	0	0	0	0	0	-30.54	-30.54
Inverter Transformer	MV6-2 T	370091	4907339	2	0	0	56.1	56.1	1	2345.44	3.25	0	78.4	0	0.55	0	0	7.7	0	0	0	0	0	0	-30.6	-30.6
Inverter Transformer	MV2-2 T	365982	4906654	2	0	0	56.1	56.1	1	2663.06	3.25	0	79.51	0	0.69	0	0	8.28	0	0	0	0	0	0	-32.42	-32.42
Inverter Transformer	MV2-3 T	365814	4906641	2	0	0	56.1	56.1	1	2815.08	3.25	0	79.99	0	0.75	0	0	8.55	0	0	0	0	0	0	-33.23	-33.23
Inverter Transformer	MV4-15 T	369170	4908481	2	0	0	56.1	56.1	1	2910.26	3.25	0	80.28	0	0.79	0	0	8.71	0	0	0	0	0	0	-33.73	-33.73
Inverter Transformer	MV4-14 T	369182	4908507	2	0	0	56.1	56.1	1	2938.42	3.25	0	80.36	0	0.8	0	0	8.76	0	0	0	0	0	0	-33.87	-33.87
Inverter Transformer	MV4-13 T	369057	4908605	2	0	0	56.1	56.1	1	3005.85	3.25	0	80.56	0	0.83	0	0	8.88	0	0	0	0	0	0	-34.21	-34.21
Inverter Transformer	MV2-4 T	365590	4906628	2	0	0	56.1	56.1	1	3021.87	3.25	0	80.61	0	0.84	0	0	8.91	0	0	0	0	0	0	-34.29	-34.29
Inverter Transformer	MV4-12 T	369049	4908803	2	0	0	56.1	56.1	1	3198.56	3.25	0	81.1	0	0.91	0	0	9.2	0	0	0	0	0	0	-35.15	-35.15
Inverter Transformer	MV1-15 T	365309	4904994	2	0	0	56.1	56.1	1	3213.67	3.25	0	81.14	0	0.92	0	0	9.23	0	0	0	0	0	0	-35.23	-35.23
Inverter Transformer	MV5-6 T	369987	4908507	2	0	0	56.1	56.1	1	3233.63	3.25	0	81.19	0	0.93	0	0	9.26	0	0	0	0	0	0	-35.32	-35.32
Inverter Transformer	MV4-11 T	369269	4908855	2	0	0	56.1	56.1	1	3297.12	3.25	0	81.36	0	0.96	0	0	9.36	0	0	0	0	0	0	-35.62	-35.62
Inverter Transformer	MV4-10 T	369307	4908858	2	0	0	56.1	56.1	1	3309.63	3.25	0	81.4	0	0.96	0	0	9.38	0	0	0	0	0	0	-35.68	-35.68
Inverter Transformer	MV4-7 T	369040	4909001	2	0	0	56.1	56.1	1	3391.72	3.25	0	81.61	0	0.99	0	0	9.51	0	0	0	0	0	0	-36.06	-36.06
Inverter Transformer	MV5-5 T	370021	4908690	2	0	0	56.1	56.1	1	3411.32	3.25	0	81.66	0	1	0	0	9.55	0	0	0	0	0	0	-36.15	-36.15
Inverter Transformer	MV1-12 T	365044	4905386	2	0	0	56.1	56.1	1	3419.84	3.25	0	81.68	0	1.01	0	0	9.56	0	0	0	0	0	0	-36.19	-36.19
Inverter Transformer	MV4-8 T	369262	4909001	2	0	0	56.1	56.1	1	3437.11	3.25	0	81.72	0	1.01	0	0	9.59	0	0	0	0	0	0	-36.27	-36.27
Inverter Transformer	MV4-9 T	369284	4909001	2	0	0	56.1	56.1	1	3442.36	3.25	0	81.74	0	1.02	0	0	9.6	0	0	0	0	0	0	-36.29	-36.29
Inverter Transformer	MV5-2 T	370011	4908853	2	0	0	56.1	56.1	1	3552.47	3.25	0	82.01	0	1.06	0	0	9.77	0	0	0	0	0	0	-36.78	-36.78
Inverter Transformer	MV5-4 T	370330	4908707	2	0	0	56.1	56.1	1	3578.41	3.25	0	82.07	0	1.07	0	0	9.81	0	0	0	0	0	0	-36.9	-36.9
Inverter Transformer	MV4-4 T	369033	4909199	2	0	0	56.1	56.1	1	3585.75	3.25	0	82.09	0	1.08	0	0	9.82	0	0	0	0	0	0	-36.93	-36.93
Inverter Transformer	MV4-6 T	369249	4909192	2	0	0	56.1	56.1	1	3620.14	3.25	0	82.17	0	1.09	0	0	9.88	0	0	0	0	0	0	-37.08	-37.08
Inverter Transformer	MV4-5 T	369283	4909199	2	0	0	56.1	56.1	1	3634.59	3.25	0	82.21	0	1.1	0	0	9.9	0	0	0	0	0	0	-37.15	-37.15
Inverter Transformer	MV1-4 T	364821	4905918	2	0	0	56.1	56.1	1	3640.92	3.25	0	82.22	0	1.1	0	0	9.91	0	0	0	0	0	0	-37.17	-37.17
Inverter Transformer	MV5-3 T	370237	4908851	2	0	0	56.1	56.1	1	3655.5	3.25	0	82.26	0	1.1	0	0	9.93	0	0	0	0	0	0	-37.24	-37.24
Inverter Transformer	MV1-8 T	364782	4905647	2	0	0	56.1	56.1	1	3670.83	3.25	0	82.3	0	1.11	0	0	9.96	0	0	0	0	0	0	-37.3	-37.3
Inverter Transformer	MV1-2 T	364759	4906063	2	0	0	56.1	56.1	1	3715.67	3.25	0	82.4	0	1.13	0	0	10.02	0	0	0	0	0	0	-37.5	-37.5
Inverter Transformer	MV1-1 T	364721	4906166	2	0	0	56.1	56.1	1	3765.88	3.25	0	82.52	0	1.15	0	0	10.1	0	0	0	0	0	0	-37.71	-37.71
Inverter Transformer	MV4-1 T	369017	4909397	2	0	0	56.1	56.1	1	3778.86	3.25	0	82.55	0	1.15	0	0	10.12	0	0	0	0	0	0	-37.77	-37.77
Inverter Transformer	MV1-5 T	364676	4905892	2	0	0	56.1	56.1	1	3783.89	3.25	0	82.56	0	1.16	0	0	10.13	0	0	0	0	0	0	-37.79	-37.79
Inverter Transformer	MV1-11 T	364649	4905414	2	0	0	56.1	56.1	1	3811.78	3.25	0	82.62	0	1.17	0	0	10.17	0	0	0	0	0	0	-37.9	-37.9
Inverter Transformer	MV5-1 T	370015	4909142	2	0	0	56.1	56.1	1	3815.93	3.25	0	82.63	0	1.17	0	0	10.18	0	0	0	0	0	0	-37.92	-37.92
Inverter Transformer	MV4-3 T	369234	4909397	2	0	0	56.1	56.1	1	3817.29	3.25	0	82.64	0	1.17	0	0	10.18	0	0	0	0	0	0	-37.93	-37.93
Inverter Transformer	MV4-2 T	369267	4909397	2	0	0	56.1	56.1	1	3824.18	3.25	0	82.65	0	1.17	0	0	10.19	0	0	0	0	0	0	-37.96	-37.96
Inverter Transformer	MV1-9 T	364555	4905646	2	0	0	56.1	56.1	1	3897.83	3.25	0	82.82	0	1.2	0	0	10.3	0	0	0	0	0	0	-38.26	-38.26
Inverter Transformer	MV1-6 T	364482	4905835	2	0	0	56.1	56.1	1	3974.63	3.25	0	82.99	0	1.23	0	0	10.42	0	0	0	0	0	0	-38.58	-38.58
Inverter Transformer	MV1-3 T	364435	4906039	2	0	0	56.1	56.1	1	4035.59	3.25	0	83.12	0	1.26	0	0	10.51	0	0	0	0	0	0	-38.83	-38.83
Line Reactor	NGR	369421	4908787.5	5	0	0	45.4	45.4	1	3273.46	5.25	0	81.3	0	3.31	1.32	0.11	1.34	0	0	0	0	0	0	-41.92	-41.92
Limit. Valu 0	0																								
Level D/N: 26.829	26.829																								

Receiver: Existing Noise Receptor

ID: W-R2
X: 368445.2
Y: 4905583.4
Z: 4.5
Ground: 0

ISO	Description	ID	X	Y	Z	Ground	ReflOrd	LxT	LxN	L/A	Dist.	hm	Freq	Adiv	K0b	Agr	Abar	z	Aatm	Afol	Ahous	Cmet	CmetN	Dc	RL	LtotT	LtotN
	Sol_Luce Substation	S_Substation	369426	4908792	3.5	0	0	112.1	112.1	1	3355.16	5.25	0	81.51	0	0.4	3.28	0.34	6.48	0	0	0	0	0	0	20.4	20.4
	Inverter	MV3-21	368478	4907206	2	0	0	100.3	100.3	1	1622.93	3.25	0	75.21	0	0.01	0	0	12.62	0	0	0	0	0	0	12.47	12.47
	Inverter	MV3-20	368689	4907317	2	0	0	100.3	100.3	1	1750.66	3.25	0	75.86	0	0.05	0	0	12.92	0	0	0	0	0	0	11.48	11.48
	Inverter	MV3-19	368357	4907347	2	0	0	100.3	100.3	1	1765.81	3.25	0	75.94	0	0.06	0	0	12.95	0	0	0	0	0	0	11.36	11.36
	Inverter	MV3-16	368514	4907475	2	0	0	100.3	100.3	1	1892.85	3.25	0	76.54	0	0.1	0	0	13.23	0	0	0	0	0	0	10.44	10.44
	Inverter	MV3-15	368357	4907477	2	0	0	100.3	100.3	1	1895.65	3.25	0	76.56	0	0.1	0	0	13.24	0	0	0	0	0	0	10.42	10.42
	Inverter	MV3-17	368178	4907472	2	0	0	100.3	100.3	1	1907.41	3.25	0	76.61	0	0.1	0	0	13.26	0	0	0	0	0	0	10.34	10.34
	Inverter	MV3-14	368684	4907498	2	0	0	100.3	100.3	1	1929.44	3.25	0	76.71	0	0.11	0	0	13.31	0	0	0	0	0	0	10.18	10.18
	Inverter	MV3-18	367752	4907412	2	0	0	100.3	100.3	1	1955.58	3.25	0	76.83	0	0.12	0	0	13.37	0	0	0	0	0	0	10	10
	Inverter	MV3-13	367963	4907577	2	0	0	100.3	100.3	1	2051.09	3.25	0	77.24	0	0.14	0	0	13.57	0	0	0	0	0	0	9.36	9.36
	Inverter	MV3-11	368346	4907662	2	0	0	100.3	100.3	1	2080.97	3.25	0	77.37	0	0.15	0	0	13.63	0	0	0	0	0	0	9.16	9.16
	Inverter	MV3-10	368167	4907669	2	0	0	100.3	100.3	1	2104.07	3.25	0	77.46	0	0.16	0	0	13.68	0	0	0	0	0	0	9.01	9.01
	Inverter	MV3-9	368512	4907703	2	0	0	100.3	100.3	1	2120.65	3.25	0	77.53	0	0.16	0	0	13.71	0	0	0	0	0	0	8.91	8.91
	Inverter	MV3-8	368680	4907712	2	0	0	100.3	100.3	1	2141.51	3.25	0	77.61	0	0.17	0	0	13.75	0	0	0	0	0	0	8.77	8.77
	Inverter	MV3-12	367668	4907594	2	0	0	100.3	100.3	1	2155.59	3.25	0	77.67	0	0.17	0	0	13.78	0	0	0	0	0	0	8.69	8.69
	Inverter	MV3-7	367945	4907754	2	0	0	100.3	100.3	1	2227.49	3.25	0	77.96	0	0.19	0	0	13.93	0	0	0	0	0	0	8.24	8.24
	Inverter	MV3-6	368162	4907834	2	0	0	100.3	100.3	1	2268.35	3.25	0	78.11	0	0.2	0	0	14.01	0	0	0	0	0	0	7.99	7.99
	Inverter	MV6-3	370207	4907140	2	0	0	100.3	100.3	1	2350.95	3.25	0	78.42	0	0.22	0	0	14.17	0	0	0	0	0	0	7.49	7.49
	Inverter	MV3-3	367939	4907927	2	0	0	100.3	100.3	1	2397.65	3.25	0	78.6	0	0.23	0	0	14.26	0	0	0	0	0	0	7.22	7.22
	Inverter	MV6-2	370085	4907339	2	0	0	100.3	100.3	1	2402.31	3.25	0	78.61	0	0.23	0	0	14.27	0	0	0	0	0	0	7.19	7.19
	Inverter	MV2-3	365820	4906641	2	0	0	100.3	100.3	1	2830.23	3.25	0	80.04	0	0.33	0	0	15.07	0	0	0	0	0	0	4.88	4.88
	Inverter	MV2-4	365586	4906624	2	0	0	100.3	100.3	1	3042.68	3.25	0	80.67	0	0.37	0	0	15.45	0	0	0	0	0	0	3.83	3.83
	Inverter	MV1-15	365315	4904994	2	0	0	100.3	100.3	1	3185.21	3.25	0	81.06	0	0.4	0	0	15.7	0	0	0	0	0	0	3.16	3.16
	Inverter	MV4-11	369264	4908855	2	0	0	100.3	100.3	1	3372.51	3.25	0	81.56	0	0.43	0	0	16.02	0	0	0	0	0	0	2.31	2.31
	Inverter	MV4-10	369312	4908858	2	0	0	100.3	100.3	1	3387.38	3.25	0	81.6	0	0.43	0	0	16.04	0	0	0	0	0	0	2.24	2.24
	Inverter	MV1-12	365038	4905386	2	0	0	100.3	100.3	1	3412.91	3.25	0	81.66	0	0.44	0	0	16.08	0	0	0	0	0	0	2.13	2.13
	Inverter	MV4-7	369035	4909001	2	0	0	100.3	100.3	1	3468.12	3.25	0	81.8	0	0.45	0	0	16.18	0	0	0	0	0	0	1.89	1.89
	Inverter	MV5-5	370015	4908690	2	0	0	100.3	100.3	1	3480.7	3.25	0	81.83	0	0.45	0	0	16.2	0	0	0	0	0	0	1.83	1.83
	Inverter	MV4-8	369256	4909001	2	0	0	100.3	100.3	1	3512.46	3.25	0	81.91	0	0.45	0	0	16.25	0	0	0	0	0	0	1.69	1.69
	Inverter	MV4-9	369289	4909001	2	0	0	100.3	100.3	1	3520.23	3.25	0	81.93	0	0.45	0	0	16.27	0	0	0	0	0	0	1.66	1.66
	Inverter	MV6-1	370235	4907364	2	0	0	97.3	97.3	1	2524.66	3.25	0	79.04	0	0.26	0	0	14.5	0	0	0	0	0	0	3.5	3.5
	SubstationTransformer	W_ST	369711.17	4906112.3	2.5	0	0	92	92	1	1372	4.25	0	73.75	0	0.75	4.37	0.27	3.25	0	0	0	0	0	0	9.86	9.86
	Inverter	MV5-2	370006	4908853	2	0	0	100.3	100.3	1	3623.04	3.25	0	82.18	0	0.47	0	0	16.44	0	0	0	0	0	0	1.22	1.22
	Inverter	MV5-4	370324	4908707	2	0	0	100.3	100.3	1	3645.1	3.25	0	82.23	0	0.47	0	0	16.47	0	0	0	0	0	0	1.13	1.13
	Inverter	MV1-4	364815	4905918	2	0	0	100.3	100.3	1	3645.59	3.25	0	82.24	0	0.47	0	0	16.47	0	0	0	0	0	0	1.13	1.13
	Inverter	MV1-8	364788	4905647	2	0	0	100.3	100.3	1	3657.75	3.25	0	82.26	0	0.48	0	0	16.49	0	0	0	0	0	0	1.08	1.08
	Inverter	MV4-4	369027	4909199	2	0	0	100.3	100.3	1	3662.11	3.25	0	82.27	0	0.48	0	0	16.5	0	0	0	0	0	0	1.06	1.06
	Inverter	MV4-6	369243	4909192	2	0	0	100.3	100.3	1	3695.74	3.25	0	82.35	0	0.48	0	0	16.56	0	0	0	0	0	0	0.92	0.92
	Inverter	MV4-5	369289	4909199	2	0	0	100.3	100.3	1	3712.76	3.25	0	82.39	0	0.48	0	0	16.58	0	0	0	0	0	0	0.85	0.85
	Inverter	MV1-2	364753	4906063	2	0	0	100.3	100.3	1	3723.22	3.25	0	82.42	0	0.49	0	0	16.6	0	0	0	0	0	0	0.81	0.81
	Inverter	MV5-3	370231	4908851	2	0	0	100.3	100.3	1	3723.75	3.25	0	82.42	0	0.49	0	0	16.6	0	0	0	0	0	0	0.8	0.8
	Inverter	MV1-1	364715	4906166	2	0	0	100.3	100.3	1	3775.42	3.25	0	82.54	0	0.49	0	0	16.69	0	0	0	0	0	0	0.59	0.59
	Inverter	MV1-5	364671	4905892	2	0	0	100.3	100.3	1	3786.8	3.25	0	82.57	0	0.5	0	0	16.7	0	0	0	0	0	0	0.55	0.55
	Inverter	MV1-11	364655	4905414	2	0	0	100.3	100.3	1	3793.98	3.25	0	82.58	0	0.5	0	0	16.72	0	0	0	0	0	0	0.52	0.52
	Inverter	MV4-1	369011	4909397	2	0	0	100.3	100.3	1	3855.34	3.25	0	82.72	0	0.51	0	0	16.82	0	0	0	0	0	0	0.27	0.27
	Inverter	MV1-9	364561	4905646	2	0	0	100.3	100.3	1	3884.71	3.25	0	82.79	0	0.51	0	0	16.86	0	0	0	0	0	0	0.15	0.15
	Inverter	MV5-1	370020	4909142	2	0	0	100.3	100.3	1	3891.48	3.25	0	82.8	0	0.51	0	0	16.87	0	0	0	0	0	0	0.12	0.12
	Inverter	MV4-3	369229	4909397	2	0	0	100.3	100.3	1	3893.31	3.25	0	82.81	0	0.51	0	0	16.88	0	0	0	0	0	0	0.12	0.12
	Inverter	MV4-2	369272	4909397	2	0	0	100.3	100.3	1	3902.2	3.25	0	82.83	0	0.51	0	0	16.89	0	0	0	0	0	0	0.08	0.08
	Inverter	MV1-6	364477	4905835	2	0	0	100.3	100.3	1	3976.17	3.25	0	82.99	0	0.52	0	0	17.01	0	0	0	0	0	0	-0.21	-0.21
	Inverter	MV2-1	365842	4906816	2	0	0	97.3	97.3	1	2880.27	3.25	0	80.19	0	0.34	0	0	15.16	0	0	0	0	0	0	1.63	1.63
	Westbrook Inverter Enclosur	W_INV3	369508	4906164	2	0	0	89.1	89.1	1	1211.05	3.25	0	72.66	0	0.73	0	0	6.7	0	0	0	0	0	0	8.96	8.96
	Westbrook Inverter Enclosur	W_INV2	369374	4906388	2	0	0	89.1	89.1	1	1228.84	3.25	0	72.79	0	0.73	0	0	6.73	0	0	0	0	0	0	8.8	8.8
	Inverter	MV1-14	365163	4905049	2	0	0	97.3	97.3	1	3325.42	3.25	0	81.44	0	0.42	0	0	15.94	0	0	0	0	0	0	-0.48	-0.48
	Inverter	MV1-10	365004	4905564	2	0	0	97.3	97.3	1	3441.26	3.25	0	81.73	0	0.44	0	0	16.13	0	0	0	0	0	0	-1	-1
	Westbrook Inverter Enclosur	W_INV4	369673	4906164	2	0	0	89.1	89.1	1	1358.16	3.25	0	73.66	0	0.76	0	0	6.96	0	0	0	0	0	0	7.68	7.68
	Inverter	MV1-7	364925	4905782	2	0	0	97.3	97.3	1	3525.8	3.25	0	81.95	0	0.46	0	0	16.27	0	0	0	0	0	0	-1.36	-1.36
	DSTATCOM - 10 MVAR #2	DSAT2	369403	4908757	2.5	0	0	96.6	96.6	1	3314.98	3.5	0	81.41	0	3.47	0	0	2.47	0	0	0	0	0	0	9.28	9.28
	DSTATCOM - 10 MVAR #1	DSAT1	369437	4908757	2.5	0	0	96.6	96.6	1	3324.97	3.5	0	81.44	0	3.47	0	0	2.48	0	0	0	0	0	0	9.25	9.25
	Inverter	MV1-13	364731	4905241	2	0	0	97.3	97.3	1	3729.95	3.25	0	82.43	0	0.49	0	0	16.61	0	0	0	0	0	0	-2.22	-2.22
	Inverter	MV3-22	368656	4907142	2	0	0	89.1	89.1	1	1572.79	3.25	0	74.93	0	0.81	0	0	7.33	0	0	0	0	0	0	5.98	5.98
	Westbrook Inverter Enclosur	W_INV7	369780	4906417	2	0	0	89.1	89.1	1	1573.72	3.25	0	74.94	0	0.81	0	0	7.33	0	0	0	0	0	0	5.98	5.98
	Westbrook Inverter Enclosur	W_INV5	369719	4906574	2	0	0	89.1	89.1	1	1613.65	3.25	0	75.16	0	0.82	0	0	7.4	0	0	0	0	0	0	5.68	5.68
	Westbrook Inverter Enclosur	W_INV6	369875	4906578	2	0	0	89.1	89.1	1	1741.71	3.25	0	75.82	0	0.85	0	0	7.62	0	0	0	0	0	0	4.77	4.77
	Westbrook Inverter Enclosur	W_INV1	369409	4906578	2	0	0	86.1	86.1	1	1384.97	3.25	0	73.83	0	0.77	0	0	7.01	0	0	0	0	0	0	4.45	4.45
	Inverter	MV3-5	368340	4907843	2	0	0	89.1	89.1	1	2262.05	3.25	0	78.09	0	0.97	0	0	8.47	0	0	0	0	0	0	1.53	1.53
	Inverter	MV3-4	368502	4907925	2	0	0	89.1	89.1	1	2342.29	3.25	0	78.39	0	0.99	0	0	8.6	0	0	0	0	0	0	1.08	1.08

Inverter	MV3-2	368671	4907928	2	0	0	89.1	89.1	1	2355.45	3.25	0	78.44	0	0.99	0	0	8.62	0	0	0	0	0	0	1.01	1.01
Gardiner Substation	G_Sub	366586.3	4903349.9	2.5	0	0	90.8	90.8	1	2905.86	4.25	0	80.27	0	1.12	3.29	0.36	5.82	0	0	0	0	0	0	0.29	0.29
Inverter	MV3-1	368156	4907976	2	0	0	89.1	89.1	1	2410.02	3.25	0	78.64	0	1	0	0	8.7	0	0	0	0	0	0	0.71	0.71
Inverter	MV2-2	365977	4906654	2	0	0	89.1	89.1	1	2690.39	3.25	0	79.6	0	1.07	0	0	9.14	0	0	0	0	0	0	-0.75	-0.75
Inverter	MV4-15	369176	4908481	2	0	0	89.1	89.1	1	2988.34	3.25	0	80.51	0	1.14	0	0	9.6	0	0	0	0	0	0	-2.19	-2.19
Inverter	MV4-14	369176	4908507	2	0	0	89.1	89.1	1	3013.55	3.25	0	80.58	0	1.15	0	0	9.64	0	0	0	0	0	0	-2.31	-2.31
Fixed Reactor Bank 1	FRB1	369378	4908755	6	0	0	89.8	89.8	1	3305.93	5.25	0	81.39	0	-0.83	0	0	6.41	0	0	0	0	0	0	2.81	2.81
Fixed Reactor Bank 2	FRB2	369464	4908755	6	0	0	89.8	89.8	1	3331.22	5.25	0	81.45	0	-0.82	0	0	6.44	0	0	0	0	0	0	2.71	2.71
Inverter	MV4-13	369051	4908605	2	0	0	89.1	89.1	1	3081.73	3.25	0	80.78	0	1.17	0	0	9.74	0	0	0	0	0	0	-2.63	-2.63
Inverter	MV6-4	370250	4906966	2	0	0	86.1	86.1	1	2273.52	3.25	0	78.13	0	0.97	0	0	8.49	0	0	0	0	0	0	-1.53	-1.53
Inverter	MV4-12	369043	4908803	2	0	0	89.1	89.1	1	3274.63	3.25	0	81.3	0	1.21	0	0	10.03	0	0	0	0	0	0	-3.49	-3.49
Inverter	MV5-6	369982	4908507	2	0	0	89.1	89.1	1	3302.91	3.25	0	81.38	0	1.22	0	0	10.07	0	0	0	0	0	0	-3.61	-3.61
Inverters	G_Inv2	366676.9	4903239.1	2	0	0	87.7	87.7	1	2936.43	3.25	0	80.36	0	2.69	0	0	3.7	0	0	0	0	0	0	0.91	0.91
Inverters	G_Inv4	366732.8	4903105	2	0	0	87.7	87.7	1	3012.44	3.25	0	80.58	0	2.7	0	0	3.79	0	0	0	0	0	0	0.59	0.59
Inverters	G_Inv1	366526.4	4903225.8	2	0	0	87.7	87.7	1	3039.75	3.25	0	80.66	0	2.7	0	0	3.82	0	0	0	0	0	0	0.48	0.48
Inverters	G_Inv6	366788.5	4902972	2	0	0	87.7	87.7	1	3092.58	3.25	0	80.81	0	2.71	0	0	3.88	0	0	0	0	0	0	0.27	0.27
Inverters	G_Inv3	366583.7	4903091.4	2	0	0	87.7	87.7	1	3110.51	3.25	0	80.86	0	2.71	0	0	3.9	0	0	0	0	0	0	0.2	0.2
Inverters	G_Inv8	366844.5	4902838.5	2	0	0	87.7	87.7	1	3177.53	3.25	0	81.04	0	2.72	0	0	3.97	0	0	0	0	0	0	-0.07	-0.07
Inverters	G_Inv5	366638.5	4902958.1	2	0	0	87.7	87.7	1	3186.91	3.25	0	81.07	0	2.72	0	0	3.98	0	0	0	0	0	0	-0.11	-0.11
Inverters	G_Inv10	366900.7	4902704.8	2	0	0	87.7	87.7	1	3266.78	3.25	0	81.28	0	2.73	0	0	4.07	0	0	0	0	0	0	-0.42	-0.42
Inverters	G_Inv7	366694.6	4902824.7	2	0	0	87.7	87.7	1	3267.27	3.25	0	81.28	0	2.73	0	0	4.07	0	0	0	0	0	0	-0.42	-0.42
Inverters	G_Inv9	366750.9	4902691.8	2	0	0	87.7	87.7	1	3351.42	3.25	0	81.5	0	2.73	0	0	4.17	0	0	0	0	0	0	-0.74	-0.74
Inverter	MV1-3	364440	4906039	2	0	0	89.1	89.1	1	4031.03	3.25	0	83.11	0	1.4	0	0	11.13	0	0	0	0	0	0	-6.58	-6.58
Westbrook Inverter Transfor	W_INVTR3	369514	4906164	2	0	0	77.3	77.3	1	1216.32	3.25	0	72.7	0	-2.06	0	0	0.8	0	0	0	0	0	0	5.9	5.9
Westbrook Inverter Transfor	W_INVTR2	369368	4906388	2	0	0	77.3	77.3	1	1224.32	3.25	0	72.76	0	-2.06	0	0	0.81	0	0	0	0	0	0	5.84	5.84
Westbrook Inverter Transfor	W_INVTR1	369403	4906578	2	0	0	78.2	78.2	1	1380.8	3.25	0	73.8	0	-2.15	0	0	0.89	0	0	0	0	0	0	5.69	5.69
Westbrook Inverter Transfor	W_INVTR4	369679	4906164	2	0	0	77.3	77.3	1	1363.59	3.25	0	73.69	0	-2.14	0	0	0.88	0	0	0	0	0	0	4.9	4.9
Westbrook Inverter Transfor	W_INVTR7	369786	4906417	2	0	0	77.3	77.3	1	1578.81	3.25	0	74.97	0	-2.24	0	0	1	0	0	0	0	0	0	3.62	3.62
Westbrook Inverter Transfor	W_INVTR5	369725	4906574	2	0	0	77.3	77.3	1	1618.39	3.25	0	75.18	0	-2.25	0	0	1.02	0	0	0	0	0	0	3.4	3.4
Westbrook Inverter Transfor	W_INVTR6	369881	4906578	2	0	0	77.3	77.3	1	1746.64	3.25	0	75.84	0	-2.31	0	0	1.08	0	0	0	0	0	0	2.72	2.72
Inverter Transformer	MV6-4 T	370244	4906966	2	0	0	69.4	69.4	1	2268.76	3.25	0	78.12	0	2.27	0	0	5.23	0	0	0	0	0	0	-16.26	-16.26
Inverter Transformer	MV6-1 T	370230	4907364	2	0	0	69.4	69.4	1	2521.12	3.25	0	79.03	0	2.36	0	0	5.46	0	0	0	0	0	0	-17.5	-17.5
Inverter Transformer	MV2-1 T	365836	4906816	2	0	0	69.4	69.4	1	2885.69	3.25	0	80.21	0	2.47	0	0	5.78	0	0	0	0	0	0	-19.11	-19.11
Inverter Transformer	MV1-14 T	365157	4905049	2	0	0	69.4	69.4	1	3331.34	3.25	0	81.45	0	2.61	0	0	6.16	0	0	0	0	0	0	-20.86	-20.86
Inverter Transformer	MV1-10 T	365010	4905564	2	0	0	69.4	69.4	1	3435.26	3.25	0	81.72	0	2.63	0	0	6.24	0	0	0	0	0	0	-21.24	-21.24
Inverter Transformer	MV1-7 T	364919	4905782	2	0	0	69.4	69.4	1	3531.79	3.25	0	81.96	0	2.66	0	0	6.32	0	0	0	0	0	0	-21.59	-21.59
Inverter Transformer	MV1-13 T	364725	4905241	2	0	0	69.4	69.4	1	3735.92	3.25	0	82.45	0	2.72	0	0	6.48	0	0	0	0	0	0	-22.29	-22.29
Inverter Transformer	MV3-22 T	368661	4907142	2	0	0	56.1	56.1	1	1573.47	3.25	0	74.94	0	0.23	0	0	6.17	0	0	0	0	0	0	-25.28	-25.28
Inverter Transformer	MV3-21 T	368484	4907206	2	0	0	56.1	56.1	1	1623.07	3.25	0	75.21	0	0.25	0	0	6.28	0	0	0	0	0	0	-25.68	-25.68
Inverter Transformer	MV3-20 T	368683	4907317	2	0	0	56.1	56.1	1	1749.84	3.25	0	75.86	0	0.3	0	0	6.54	0	0	0	0	0	0	-26.64	-26.64
Inverter Transformer	MV3-19 T	368352	4907347	2	0	0	56.1	56.1	1	1766.06	3.25	0	75.94	0	0.31	0	0	6.57	0	0	0	0	0	0	-26.76	-26.76
Inverter Transformer	MV3-16 T	368509	4907475	2	0	0	56.1	56.1	1	1892.68	3.25	0	76.54	0	0.36	0	0	6.83	0	0	0	0	0	0	-27.67	-27.67
Inverter Transformer	MV3-15 T	368351	4907477	2	0	0	56.1	56.1	1	1895.94	3.25	0	76.56	0	0.36	0	0	6.84	0	0	0	0	0	0	-27.7	-27.7
Inverter Transformer	MV3-17 T	368183	4907472	2	0	0	56.1	56.1	1	1906.72	3.25	0	76.61	0	0.36	0	0	6.86	0	0	0	0	0	0	-27.77	-27.77
Inverter Transformer	MV3-14 T	368678	4907498	2	0	0	56.1	56.1	1	1928.7	3.25	0	76.71	0	0.37	0	0	6.9	0	0	0	0	0	0	-27.92	-27.92
Inverter Transformer	MV3-18 T	367757	4907412	2	0	0	56.1	56.1	1	1953.82	3.25	0	76.82	0	0.38	0	0	6.95	0	0	0	0	0	0	-28.1	-28.1
Inverter Transformer	MV3-13 T	367958	4907577	2	0	0	56.1	56.1	1	2052.27	3.25	0	77.24	0	0.43	0	0	7.15	0	0	0	0	0	0	-28.76	-28.76
Inverter Transformer	MV3-11 T	368340	4907662	2	0	0	56.1	56.1	1	2081.26	3.25	0	77.37	0	0.44	0	0	7.2	0	0	0	0	0	0	-28.95	-28.95
Inverter Transformer	MV3-10 T	368162	4907669	2	0	0	56.1	56.1	1	2104.74	3.25	0	77.46	0	0.45	0	0	7.25	0	0	0	0	0	0	-29.1	-29.1
Inverter Transformer	MV3-9 T	368517	4907703	2	0	0	56.1	56.1	1	2120.82	3.25	0	77.53	0	0.45	0	0	7.28	0	0	0	0	0	0	-29.21	-29.21
Inverter Transformer	MV3-8 T	368685	4907712	2	0	0	56.1	56.1	1	2142.07	3.25	0	77.62	0	0.46	0	0	7.32	0	0	0	0	0	0	-29.34	-29.34
Inverter Transformer	MV3-12 T	367674	4907594	2	0	0	56.1	56.1	1	2153.43	3.25	0	77.66	0	0.47	0	0	7.34	0	0	0	0	0	0	-29.41	-29.41
Inverter Transformer	MV3-7 T	367951	4907754	2	0	0	56.1	56.1	1	2226.15	3.25	0	77.95	0	0.5	0	0	7.48	0	0	0	0	0	0	-29.87	-29.87
Inverter Transformer	MV3-5 T	368335	4907843	2	0	0	56.1	56.1	1	2262.29	3.25	0	78.09	0	0.51	0	0	7.55	0	0	0	0	0	0	-30.1	-30.1
Inverter Transformer	MV3-6 T	368156	4907834	2	0	0	56.1	56.1	1	2269.11	3.25	0	78.12	0	0.52	0	0	7.56	0	0	0	0	0	0	-30.14	-30.14
Inverter Transformer	MV3-4 T	368507	4907925	2	0	0	56.1	56.1	1	2342.42	3.25	0	78.39	0	0.55	0	0	7.7	0	0	0	0	0	0	-30.58	-30.58
Inverter Transformer	MV6-3 T	370202	4907140	2	0	0	56.1	56.1	1	2347.2	3.25	0	78.41	0	0.55	0	0	7.71	0	0	0	0	0	0	-30.61	-30.61
Inverter Transformer	MV3-2 T	368677	4907928	2	0	0	56.1	56.1	1	2356.03	3.25	0	78.44	0	0.55	0	0	7.72	0	0	0	0	0	0	-30.66	-30.66
Inverter Transformer	MV3-3 T	367944	4907927	2	0	0	56.1	56.1	1	2396.6	3.25	0	78.59	0	0.57	0	0	7.8	0	0	0	0	0	0	-30.91	-30.91
Inverter Transformer	MV6-2 T	370091	4907339	2	0	0	56.1	56.1	1	2406.41	3.25	0	78.63	0	0.58	0	0	7.82	0	0	0	0	0	0	-30.96	-30.96
Inverter Transformer	MV3-1 T	368150	4907976	2	0	0	56.1	56.1	1	2410.74	3.25	0	78.64	0	0.58	0	0	7.83	0	0	0	0	0	0	-30.99	-30.99
Inverter Transformer	MV2-2 T	365982	4906654	2	0	0	56.1	56.1	1	2685.8	3.25	0	79.58	0	0.7	0	0	8.32	0	0	0	0	0	0	-32.54	-32.54
Inverter Transformer	MV2-3 T	365814	4906641	2	0	0	56.1	56.1	1	2835.8	3.25	0	80.05	0	0.76	0	0	8.59	0	0	0	0	0	0	-33.34	-33.34
Inverter Transformer	MV4-15 T	369170	4908481	2	0	0	56.1	56.1	1	2986.88	3.25	0	80.5	0	0.82	0	0	8.85	0	0	0	0	0	0	-34.12	-34.12
Inverter Transformer	MV4-14 T	369182	4908507	2	0	0	56.1	56.1	1	3015.02	3.25	0	80.59	0	0.84	0	0	8.89	0	0	0	0	0	0	-34.26	-34.26
Inverter Transformer	MV2-4 T	365590	4906628	2	0	0	56.1	56.1	1	3040.29	3.25	0	80.66	0	0.85	0	0	8.94	0	0	0	0	0	0	-34.38	-34.38
Inverter Transformer	MV4-13 T	369057	4908605	2	0	0	56.1	56.1	1	3082.92	3.25	0	80.78	0	0.87	0	0	9.01	0	0	0	0	0	0	-34.59	-34.59
Inverter Transformer	MV1-15 T	365309	4904994	2	0	0	56.1	56.1	1	3191.1	3.25	0	81.08	0	0.91	0	0	9.19	0	0	0	0	0	0	-35.12	-35.12
Inverter Transformer	MV4-12 T	369049	4908803	2	0	0	56.1	56.1	1	3275.73	3.25	0	81.31	0	0.95	0	0	9.33	0	0	0	0	0	0	-35.52	-35.52
Inverter Transformer	MV5-6 T	369987	4908507	2	0	0	56.1	56.1	1	3305.24	3.25	0	81.38	0	0.96	0	0	9.37	0	0	0	0	0	0	-35.66	-35.66
Inverter Transformer	MV4-11 T	369269	4908855	2	0	0	56.1	56.1	1	3373.72	3.25	0	81.56	0	0.99	0	0	9.49	0	0	0	0	0	0	-35.98	-35.98
Inverter Transformer	MV4-10 T	369307	4908858	2	0	0	56.1	56.1	1	3386.11	3.25	0	81.59	0	0.99	0	0	9.51	0	0	0	0	0	0	-36.03	-36.03
Inverter Transformer	MV1-12 T	365044	4905386	2	0	0	56.1	56.1	1	3406.92	3.25	0	81.65	0	1	0	0	9.54	0	0	0	0	0	0	-36.13	-36.13
Inverter Transformer	MV4-7 T	369040	4909001	2	0	0	56.1	56.1	1	3468.97	3.25	0	81.8	0	1.03	0	0	9.64	0	0	0	0	0	0	-36.41	-36.41

	Inverter Transformer	MV5-5 T	370021	4908690	2	0	0	56.1	56.1	1	3483.41	3.25	0	81.84	0	1.03	0	0	9.66	0	0	0	0	0	0	-36.48	-36.48
	Inverter Transformer	MV4-8 T	369262	4909001	2	0	0	56.1	56.1	1	3513.85	3.25	0	81.92	0	1.05	0	0	9.71	0	0	0	0	0	0	-36.61	-36.61
	Inverter Transformer	MV4-9 T	369284	4909001	2	0	0	56.1	56.1	1	3519.03	3.25	0	81.93	0	1.05	0	0	9.72	0	0	0	0	0	0	-36.64	-36.64
	Inverter Transformer	MV5-2 T	370011	4908853	2	0	0	56.1	56.1	1	3625.19	3.25	0	82.19	0	1.09	0	0	9.88	0	0	0	0	0	0	-37.1	-37.1
	Inverter Transformer	MV1-4 T	364821	4905918	2	0	0	56.1	56.1	1	3639.61	3.25	0	82.22	0	1.1	0	0	9.91	0	0	0	0	0	0	-37.17	-37.17
	Inverter Transformer	MV5-4 T	370330	4908707	2	0	0	56.1	56.1	1	3648.2	3.25	0	82.24	0	1.1	0	0	9.92	0	0	0	0	0	0	-37.2	-37.2
	Inverter Transformer	MV4-4 T	369033	4909199	2	0	0	56.1	56.1	1	3663.07	3.25	0	82.28	0	1.11	0	0	9.94	0	0	0	0	0	0	-37.27	-37.27
	Inverter Transformer	MV1-8 T	364782	4905647	2	0	0	56.1	56.1	1	3663.75	3.25	0	82.28	0	1.11	0	0	9.94	0	0	0	0	0	0	-37.27	-37.27
	Inverter Transformer	MV4-6 T	369249	4909192	2	0	0	56.1	56.1	1	3697.04	3.25	0	82.36	0	1.12	0	0	10	0	0	0	0	0	0	-37.42	-37.42
	Inverter Transformer	MV4-5 T	369283	4909199	2	0	0	56.1	56.1	1	3711.4	3.25	0	82.39	0	1.13	0	0	10.02	0	0	0	0	0	0	-37.48	-37.48
	Inverter Transformer	MV1-2 T	364759	4906063	2	0	0	56.1	56.1	1	3717.27	3.25	0	82.4	0	1.13	0	0	10.03	0	0	0	0	0	0	-37.5	-37.5
	Inverter Transformer	MV5-3 T	370237	4908851	2	0	0	56.1	56.1	1	3726.63	3.25	0	82.43	0	1.13	0	0	10.04	0	0	0	0	0	0	-37.54	-37.54
	Inverter Transformer	MV1-1 T	364721	4906166	2	0	0	56.1	56.1	1	3769.5	3.25	0	82.53	0	1.15	0	0	10.11	0	0	0	0	0	0	-37.73	-37.73
	Inverter Transformer	MV1-5 T	364676	4905892	2	0	0	56.1	56.1	1	3781.81	3.25	0	82.55	0	1.16	0	0	10.13	0	0	0	0	0	0	-37.78	-37.78
	Inverter Transformer	MV1-11 T	364649	4905414	2	0	0	56.1	56.1	1	3799.98	3.25	0	82.6	0	1.16	0	0	10.15	0	0	0	0	0	0	-37.85	-37.85
	Inverter Transformer	MV4-1 T	369017	4909397	2	0	0	56.1	56.1	1	3856.23	3.25	0	82.72	0	1.19	0	0	10.24	0	0	0	0	0	0	-38.09	-38.09
	Inverter Transformer	MV5-1 T	370015	4909142	2	0	0	56.1	56.1	1	3889.46	3.25	0	82.8	0	1.2	0	0	10.29	0	0	0	0	0	0	-38.23	-38.23
	Inverter Transformer	MV1-9 T	364555	4905646	2	0	0	56.1	56.1	1	3890.7	3.25	0	82.8	0	1.2	0	0	10.29	0	0	0	0	0	0	-38.23	-38.23
	Inverter Transformer	MV4-3 T	369234	4909397	2	0	0	56.1	56.1	1	3894.32	3.25	0	82.81	0	1.2	0	0	10.3	0	0	0	0	0	0	-38.25	-38.25
	Inverter Transformer	MV4-2 T	369267	4909397	2	0	0	56.1	56.1	1	3901.14	3.25	0	82.82	0	1.2	0	0	10.31	0	0	0	0	0	0	-38.28	-38.28
	Inverter Transformer	MV1-6 T	364482	4905835	2	0	0	56.1	56.1	1	3971.18	3.25	0	82.98	0	1.23	0	0	10.41	0	0	0	0	0	0	-38.56	-38.56
	Inverter Transformer	MV1-3 T	364435	4906039	2	0	0	56.1	56.1	1	4036	3.25	0	83.12	0	1.26	0	0	10.51	0	0	0	0	0	0	-38.83	-38.83
	Line Reactor	NGR	369421	4908787.5	5	0	0	45.4	45.4	1	3349.39	5.25	0	81.5	0	3.31	1.32	0.11	1.37	0	0	0	0	0	0	-42.15	-42.15
Limit. Valu	0	0																								
Level D/N:	26.4552	26.4552																								

Receiver: Existing Noise Receptor
ID: W-R3
X: 368759.6
Y: 4905509.6
Z: 4.5
Ground: 0

ISO	Description	ID	X	Y	Z	Ground	ReflOrd	LxT	LxN	L/A	Dist.	hm	Freq	Adiv	K0b	Agr	Abar	z	Aatm	Afol	Ahous	Cmet	CmetN	Dc	RL	LtotT	LtotN
	Sol_Luce Substation	S_Substation	369426	4908792	3.5	0	0	112.1	112.1	1	3349.36	5.25	0	81.5	0	0.4	3.29	0.35	6.47	0	0	0	0	0	0	20.42	20.42
	Inverter	MV3-21	368478	4907206	2	0	0	100.3	100.3	1	1719.62	3.25	0	75.71	0	0.04	0	0	12.85	0	0	0	0	0	0	11.71	11.71
	Inverter	MV3-20	368689	4907317	2	0	0	100.3	100.3	1	1808.78	3.25	0	76.15	0	0.07	0	0	13.05	0	0	0	0	0	0	11.04	11.04
	Inverter	MV3-19	368357	4907347	2	0	0	100.3	100.3	1	1880.99	3.25	0	76.49	0	0.09	0	0	13.21	0	0	0	0	0	0	10.52	10.52
	Inverter	MV3-16	368514	4907475	2	0	0	100.3	100.3	1	1980.69	3.25	0	76.94	0	0.12	0	0	13.42	0	0	0	0	0	0	9.83	9.83
	Inverter	MV3-14	368684	4907498	2	0	0	100.3	100.3	1	1989.84	3.25	0	76.98	0	0.13	0	0	13.44	0	0	0	0	0	0	9.77	9.77
	Inverter	MV3-15	368357	4907477	2	0	0	100.3	100.3	1	2008.17	3.25	0	77.06	0	0.13	0	0	13.48	0	0	0	0	0	0	9.65	9.65
	Inverter	MV3-17	368178	4907472	2	0	0	100.3	100.3	1	2046.77	3.25	0	77.22	0	0.14	0	0	13.56	0	0	0	0	0	0	9.39	9.39
	Inverter	MV3-18	367752	4907412	2	0	0	100.3	100.3	1	2152.76	3.25	0	77.66	0	0.17	0	0	13.78	0	0	0	0	0	0	8.7	8.7
	Inverter	MV6-3	370207	4907140	2	0	0	100.3	100.3	1	2180.18	3.25	0	77.77	0	0.18	0	0	13.83	0	0	0	0	0	0	8.53	8.53
	Inverter	MV3-11	368346	4907662	2	0	0	100.3	100.3	1	2191.78	3.25	0	77.82	0	0.18	0	0	13.86	0	0	0	0	0	0	8.46	8.46
	Inverter	MV3-8	368680	4907712	2	0	0	100.3	100.3	1	2203.84	3.25	0	77.86	0	0.18	0	0	13.88	0	0	0	0	0	0	8.38	8.38
	Inverter	MV3-9	368512	4907703	2	0	0	100.3	100.3	1	2207.33	3.25	0	77.88	0	0.19	0	0	13.89	0	0	0	0	0	0	8.36	8.36
	Inverter	MV3-13	367963	4907577	2	0	0	100.3	100.3	1	2215.56	3.25	0	77.91	0	0.19	0	0	13.9	0	0	0	0	0	0	8.31	8.31
	Inverter	MV3-10	368167	4907669	2	0	0	100.3	100.3	1	2239.24	3.25	0	78	0	0.19	0	0	13.95	0	0	0	0	0	0	8.16	8.16
	Inverter	MV6-2	370085	4907339	2	0	0	100.3	100.3	1	2259.07	3.25	0	78.08	0	0.2	0	0	13.99	0	0	0	0	0	0	8.04	8.04
	Inverter	MV3-12	367668	4907594	2	0	0	100.3	100.3	1	2352.94	3.25	0	78.43	0	0.22	0	0	14.18	0	0	0	0	0	0	7.48	7.48
	Inverter	MV3-7	367945	4907754	2	0	0	100.3	100.3	1	2387.66	3.25	0	78.56	0	0.23	0	0	14.24	0	0	0	0	0	0	7.28	7.28
	Inverter	MV3-6	368162	4907834	2	0	0	100.3	100.3	1	2399.99	3.25	0	78.6	0	0.23	0	0	14.27	0	0	0	0	0	0	7.21	7.21
	Inverter	MV3-3	367939	4907927	2	0	0	100.3	100.3	1	2552.88	3.25	0	79.14	0	0.27	0	0	14.56	0	0	0	0	0	0	6.34	6.34
	SubstationTransformer	W_ST	369711.17	4906112.3	2.5	0	0	92	92	1	1126.37	4.25	0	72.03	0	0.69	4.62	0.25	2.77	0	0	0	0	0	0	11.86	11.86
	Inverter	MV2-3	365820	4906641	2	0	0	100.3	100.3	1	3149.81	3.25	0	80.97	0	0.39	0	0	15.63	0	0	0	0	0	0	3.32	3.32
	Inverter	MV6-1	370235	4907364	2	0	0	97.3	97.3	1	2369.73	3.25	0	78.49	0	0.23	0	0	14.21	0	0	0	0	0	0	4.38	4.38
	Inverter	MV2-4	365586	4906624	2	0	0	100.3	100.3	1	3363.57	3.25	0	81.54	0	0.43	0	0	16	0	0	0	0	0	0	2.35	2.35
	Inverter	MV4-11	369264	4908855	2	0	0	100.3	100.3	1	3383.21	3.25	0	81.59	0	0.43	0	0	16.03	0	0	0	0	0	0	2.26	2.26
	Inverter	MV4-10	369312	4908858	2	0	0	100.3	100.3	1	3393.66	3.25	0	81.61	0	0.43	0	0	16.05	0	0	0	0	0	0	2.21	2.21
	Inverter	MV5-5	370015	4908690	2	0	0	100.3	100.3	1	3419.21	3.25	0	81.68	0	0.44	0	0	16.1	0	0	0	0	0	0	2.1	2.1
	Inverter	MV1-15	365315	4904994	2	0	0	100.3	100.3	1	3482.98	3.25	0	81.84	0	0.45	0	0	16.2	0	0	0	0	0	0	1.82	1.82
	Inverter	MV4-7	369035	4909001	2	0	0	100.3	100.3	1	3502.25	3.25	0	81.89	0	0.45	0	0	16.24	0	0	0	0	0	0	1.74	1.74
	Inverter	MV4-8	369256	4909001	2	0	0	100.3	100.3	1	3526.51	3.25	0	81.95	0	0.46	0	0	16.28	0	0	0	0	0	0	1.63	1.63
	Inverter	MV4-9	369289	4909001	2	0	0	100.3	100.3	1	3531.31	3.25	0	81.96	0	0.46	0	0	16.28	0	0	0	0	0	0	1.61	1.61
	Inverter	MV5-4	370324	4908707	2	0	0	100.3	100.3	1	3559.6	3.25	0	82.03	0	0.46	0	0	16.33	0	0	0	0	0	0	1.49	1.49
	Inverter	MV5-2	370006	4908853	2	0	0	100.3	100.3	1	3568.17	3.25	0	82.05	0	0.46	0	0	16.35	0	0	0	0	0	0	1.46	1.46
	Westbrook Inverter Enclosur	W_INV3	369508	4906164	2	0	0	89.1	89.1	1	994.16	3.25	0	70.95	0	0.68	0	0	6.3	0	0	0	0	0	0	11.12	11.12
	Inverter	MV5-3	370231	4908851	2	0	0	100.3	100.3	1	3651.02	3.25	0	82.25	0	0.48	0	0	16.48	0	0	0	0	0	0	1.11	1.11
	Inverter	MV4-4	369027	4909199	2	0	0	100.3	100.3	1	3699.08	3.25	0	82.36	0	0.48	0	0	16.56	0	0	0	0	0	0	0.91	0.91
	Inverter	MV4-6	369243	4909192	2	0	0	100.3	100.3	1	3713.99	3.25	0	82.4	0	0.49	0	0	16.59	0	0	0	0	0	0	0.84	0.84
	Inverter	MV1-12	365038	4905386	2	0	0	100.3	100.3	1	3723.65	3.25	0	82.42	0	0.49	0	0	16.6	0	0	0	0	0	0	0.8	0.8
	Inverter	MV4-5	369289	4909199	2	0	0	100.3	100.3	1	3727.19	3.25	0	82.43	0	0.49	0	0	16.61	0	0	0	0	0	0	0.79	0.79
	Inverter	MV5-1	370020	4909142	2	0	0	100.3	100.3	1	3844.86	3.25	0	82.7	0	0.5	0	0	16.8	0	0	0	0	0	0	0.31	0.31

Inverter	MV4-1	369011	4909397	2	0	0	100.3	100.3	1	3895.52	3.25	0	82.81	0	0.51	0	0	16.88	0	0	0	0	0	0	0.11	0.11
Inverter	MV4-3	369229	4909397	2	0	0	100.3	100.3	1	3915.64	3.25	0	82.86	0	0.52	0	0	16.91	0	0	0	0	0	0	0.03	0.03
Westbrook Inverter Enclosur	W_INV2	369374	4906388	2	0	0	89.1	89.1	1	1071.95	3.25	0	71.6	0	0.7	0	0	6.45	0	0	0	0	0	0	10.31	10.31
Inverter	MV4-2	369272	4909397	2	0	0	100.3	100.3	1	3921.03	3.25	0	82.87	0	0.52	0	0	16.92	0	0	0	0	0	0	0.01	0.01
Inverter	MV1-4	364815	4905918	2	0	0	100.3	100.3	1	3965.69	3.25	0	82.97	0	0.52	0	0	16.99	0	0	0	0	0	0	-0.17	-0.17
Inverter	MV1-8	364788	4905647	2	0	0	100.3	100.3	1	3973.98	3.25	0	82.98	0	0.52	0	0	17.01	0	0	0	0	0	0	-0.2	-0.2
Inverter	MV1-2	364753	4906063	2	0	0	100.3	100.3	1	4044.64	3.25	0	83.14	0	0.53	0	0	17.12	0	0	0	0	0	0	-0.48	-0.48
Inverter	MV1-1	364715	4906166	2	0	0	100.3	100.3	1	4097.52	3.25	0	83.25	0	0.54	0	0	17.2	0	0	0	0	0	0	-0.68	-0.68
Westbrook Inverter Enclosur	W_INV4	369673	4906164	2	0	0	89.1	89.1	1	1123.63	3.25	0	72.01	0	0.71	0	0	6.54	0	0	0	0	0	0	9.79	9.79
Inverter	MV1-11	364655	4905414	2	0	0	100.3	100.3	1	4105.71	3.25	0	83.27	0	0.54	0	0	17.22	0	0	0	0	0	0	-0.71	-0.71
Inverter	MV1-5	364671	4905892	2	0	0	100.3	100.3	1	4106.44	3.25	0	83.27	0	0.54	0	0	17.22	0	0	0	0	0	0	-0.72	-0.72
Inverter	MV1-9	364561	4905646	2	0	0	100.3	100.3	1	4200.82	3.25	0	83.47	0	0.55	0	0	17.37	0	0	0	0	0	0	-1.08	-1.08
Inverter	MV1-6	364477	4905835	2	0	0	100.3	100.3	1	4294.95	3.25	0	83.66	0	0.57	0	0	17.51	0	0	0	0	0	0	-1.43	-1.43
Inverter	MV2-1	365842	4906816	2	0	0	97.3	97.3	1	3196.73	3.25	0	81.09	0	0.4	0	0	15.72	0	0	0	0	0	0	0.1	0.1
Westbrook Inverter Enclosur	W_INV7	369780	4906417	2	0	0	89.1	89.1	1	1365.5	3.25	0	73.71	0	0.76	0	0	6.98	0	0	0	0	0	0	7.61	7.61
DSTATCOM - 10 MVAR #2	DSAT2	369403	4908757	2.5	0	0	96.6	96.6	1	3310.52	3.5	0	81.4	0	3.47	0	0	2.47	0	0	0	0	0	0	9.29	9.29
DSTATCOM - 10 MVAR #1	DSAT1	369437	4908757	2.5	0	0	96.6	96.6	1	3317.3	3.5	0	81.42	0	3.47	0	0	2.48	0	0	0	0	0	0	9.27	9.27
Inverter	MV1-14	365163	4905049	2	0	0	97.3	97.3	1	3625.97	3.25	0	82.19	0	0.47	0	0	16.44	0	0	0	0	0	0	-1.79	-1.79
Westbrook Inverter Enclosur	W_INV5	369719	4906574	2	0	0	89.1	89.1	1	1432.97	3.25	0	74.12	0	0.78	0	0	7.09	0	0	0	0	0	0	7.06	7.06
Inverter	MV1-10	365004	4905564	2	0	0	97.3	97.3	1	3755.99	3.25	0	82.49	0	0.49	0	0	16.65	0	0	0	0	0	0	-2.33	-2.33
Inverter	MV1-7	364925	4905782	2	0	0	97.3	97.3	1	3844.26	3.25	0	82.7	0	0.5	0	0	16.8	0	0	0	0	0	0	-2.69	-2.69
Westbrook Inverter Enclosur	W_INV6	369875	4906578	2	0	0	89.1	89.1	1	1544.54	3.25	0	74.78	0	0.8	0	0	7.28	0	0	0	0	0	0	6.19	6.19
Inverter	MV1-13	364731	4905241	2	0	0	97.3	97.3	1	4037.55	3.25	0	83.12	0	0.53	0	0	17.11	0	0	0	0	0	0	-3.45	-3.45
Inverter	MV3-22	368656	4907142	2	0	0	89.1	89.1	1	1635.69	3.25	0	75.27	0	0.82	0	0	7.44	0	0	0	0	0	0	5.52	5.52
Westbrook Inverter Enclosur	W_INV1	369409	4906578	2	0	0	86.1	86.1	1	1250.28	3.25	0	72.94	0	0.74	0	0	6.77	0	0	0	0	0	0	5.61	5.61
Inverter	MV3-5	368340	4907843	2	0	0	89.1	89.1	1	2370.83	3.25	0	78.5	0	0.99	0	0	8.64	0	0	0	0	0	0	0.92	0.92
Inverter	MV3-2	368671	4907928	2	0	0	89.1	89.1	1	2420.02	3.25	0	78.68	0	1.01	0	0	8.72	0	0	0	0	0	0	0.66	0.66
Inverter	MV3-4	368502	4907925	2	0	0	89.1	89.1	1	2429.1	3.25	0	78.71	0	1.01	0	0	8.73	0	0	0	0	0	0	0.61	0.61
Gardiner Substation	G_Sub	366586.3	4903349.9	2.5	0	0	90.8	90.8	1	3063.91	4.25	0	80.73	0	1.14	3.13	0.35	6.05	0	0	0	0	0	0	-0.27	-0.27
Inverter	MV3-1	368156	4907976	2	0	0	89.1	89.1	1	2539.19	3.25	0	79.09	0	1.04	0	0	8.91	0	0	0	0	0	0	0.02	0.02
Inverter	MV6-4	370250	4906966	2	0	0	86.1	86.1	1	2083.84	3.25	0	77.38	0	0.93	0	0	8.18	0	0	0	0	0	0	-0.43	-0.43
Inverter	MV4-15	369176	4908481	2	0	0	89.1	89.1	1	3000.44	3.25	0	80.54	0	1.15	0	0	9.62	0	0	0	0	0	0	-2.25	-2.25
Inverter	MV2-2	365977	4906654	2	0	0	89.1	89.1	1	3008.74	3.25	0	80.57	0	1.15	0	0	9.63	0	0	0	0	0	0	-2.29	-2.29
Inverter	MV4-14	369176	4908507	2	0	0	89.1	89.1	1	3026.19	3.25	0	80.62	0	1.15	0	0	9.66	0	0	0	0	0	0	-2.37	-2.37
Fixed Reactor Bank 1	FRB1	369378	4908755	6	0	0	89.8	89.8	1	3303.79	5.25	0	81.38	0	-0.83	0	0	6.4	0	0	0	0	0	0	2.82	2.82
Fixed Reactor Bank 2	FRB2	369464	4908755	6	0	0	89.8	89.8	1	3320.96	5.25	0	81.43	0	-0.83	0	0	6.43	0	0	0	0	0	0	2.75	2.75
Inverter	MV4-13	369051	4908605	2	0	0	89.1	89.1	1	3109.09	3.25	0	80.85	0	1.17	0	0	9.78	0	0	0	0	0	0	-2.75	-2.75
Inverter	MV5-6	369982	4908507	2	0	0	89.1	89.1	1	3237.08	3.25	0	81.2	0	1.2	0	0	9.97	0	0	0	0	0	0	-3.32	-3.32
Inverter	MV4-12	369043	4908803	2	0	0	89.1	89.1	1	3305.57	3.25	0	81.38	0	1.22	0	0	10.08	0	0	0	0	0	0	-3.62	-3.62
Inverters	G_Inv2	366676.9	4903239.1	2	0	0	87.7	87.7	1	3081.04	3.25	0	80.77	0	2.71	0	0	3.87	0	0	0	0	0	0	0.31	0.31
Inverters	G_Inv4	366732.8	4903105	2	0	0	87.7	87.7	1	3144.84	3.25	0	80.95	0	2.71	0	0	3.94	0	0	0	0	0	0	0.06	0.06
Inverters	G_Inv1	366526.4	4903225.8	2	0	0	87.7	87.7	1	3194.2	3.25	0	81.09	0	2.72	0	0	3.99	0	0	0	0	0	0	-0.14	-0.14
Inverters	G_Inv6	366788.5	4902972	2	0	0	87.7	87.7	1	3213.2	3.25	0	81.14	0	2.72	0	0	4.01	0	0	0	0	0	0	-0.21	-0.21
Inverters	G_Inv3	366583.7	4903091.4	2	0	0	87.7	87.7	1	3253.04	3.25	0	81.25	0	2.72	0	0	4.06	0	0	0	0	0	0	-0.37	-0.37
Westbrook Inverter Transfor	W_INVTR3	369514	4906164	2	0	0	77.3	77.3	1	998.68	3.25	0	70.99	0	-1.93	0	0	0.68	0	0	0	0	0	0	7.61	7.61
Inverters	G_Inv8	366844.5	4902838.5	2	0	0	87.7	87.7	1	3286.7	3.25	0	81.34	0	2.73	0	0	4.09	0	0	0	0	0	0	-0.5	-0.5
Inverters	G_Inv5	366638.5	4902958.1	2	0	0	87.7	87.7	1	3318.02	3.25	0	81.42	0	2.73	0	0	4.13	0	0	0	0	0	0	-0.62	-0.62
Inverters	G_Inv10	366900.7	4902704.8	2	0	0	87.7	87.7	1	3364.88	3.25	0	81.54	0	2.73	0	0	4.18	0	0	0	0	0	0	-0.79	-0.79
Inverters	G_Inv7	366694.6	4902824.7	2	0	0	87.7	87.7	1	3387.17	3.25	0	81.6	0	2.74	0	0	4.2	0	0	0	0	0	0	-0.88	-0.88
Inverters	G_Inv9	366750.9	4902691.8	2	0	0	87.7	87.7	1	3460.47	3.25	0	81.78	0	2.74	0	0	4.29	0	0	0	0	0	0	-1.15	-1.15
Westbrook Inverter Transfor	W_INVTR2	369368	4906388	2	0	0	77.3	77.3	1	1068.52	3.25	0	71.58	0	-1.97	0	0	0.72	0	0	0	0	0	0	7.02	7.02
Westbrook Inverter Transfor	W_INVTR1	369403	4906578	2	0	0	78.2	78.2	1	1247.18	3.25	0	72.92	0	-2.08	0	0	0.82	0	0	0	0	0	0	6.58	6.58
Westbrook Inverter Transfor	W_INVTR4	369679	4906164	2	0	0	77.3	77.3	1	1128.51	3.25	0	72.05	0	-2.01	0	0	0.75	0	0	0	0	0	0	6.55	6.55
Inverter	MV1-3	364440	4906039	2	0	0	89.1	89.1	1	4351.92	3.25	0	83.77	0	1.48	0	0	11.58	0	0	0	0	0	0	-7.77	-7.77
Westbrook Inverter Transfor	W_INVTR7	369786	4906417	2	0	0	77.3	77.3	1	1369.99	3.25	0	73.73	0	-2.14	0	0	0.89	0	0	0	0	0	0	4.86	4.86
Westbrook Inverter Transfor	W_INVTR5	369725	4906574	2	0	0	77.3	77.3	1	1436.99	3.25	0	74.15	0	-2.17	0	0	0.92	0	0	0	0	0	0	4.44	4.44
Westbrook Inverter Transfor	W_INVTR6	369881	4906578	2	0	0	77.3	77.3	1	1548.88	3.25	0	74.8	0	-2.22	0	0	0.98	0	0	0	0	0	0	3.79	3.79
Inverter Transformer	MV6-4 T	370244	4906966	2	0	0	69.4	69.4	1	2079.56	3.25	0	77.36	0	2.2	0	0	5.04	0	0	0	0	0	0	-15.26	-15.26
Inverter Transformer	MV6-1 T	370230	4907364	2	0	0	69.4	69.4	1	2366.62	3.25	0	78.48	0	2.3	0	0	5.32	0	0	0	0	0	0	-16.76	-16.76
Inverter Transformer	MV2-1 T	365836	4906816	2	0	0	69.4	69.4	1	3202.21	3.25	0	81.11	0	2.57	0	0	6.05	0	0	0	0	0	0	-20.38	-20.38
Inverter Transformer	MV1-14 T	365157	4905049	2	0	0	69.4	69.4	1	3631.93	3.25	0	82.2	0	2.69	0	0	6.4	0	0	0	0	0	0	-21.94	-21.94
Inverter Transformer	MV1-10 T	365010	4905564	2	0	0	69.4	69.4	1	3750	3.25	0	82.48	0	2.72	0	0	6.49	0	0	0	0	0	0	-22.34	-22.34
Inverter Transformer	MV1-7 T	364919	4905782	2	0	0	69.4	69.4	1	3850.25	3.25	0	82.71	0	2.75	0	0	6.56	0	0	0	0	0	0	-22.67	-22.67
Inverter Transformer	MV1-13 T	364725	4905241	2	0	0	69.4	69.4	1	4043.53	3.25	0	83.14	0	2.8	0	0	6.71	0	0	0	0	0	0	-23.29	-23.29
Inverter Transformer	MV3-22 T	368661	4907142	2	0	0	56.1	56.1	1	1635.38	3.25	0	75.27	0	0.25	0	0	6.3	0	0	0	0	0	0	-25.77	-25.77
Inverter Transformer	MV3-21 T	368484	4907206	2	0	0	56.1	56.1	1	1718.64	3.25	0	75.7	0	0.29	0	0	6.48	0	0	0	0	0	0	-26.41	-26.41
Inverter Transformer	MV3-20 T	368683	4907317	2	0	0	56.1	56.1	1	1809.02	3.25	0	76.15	0	0.32	0	0	6.66	0	0	0	0	0	0	-27.08	-27.08
Inverter Transformer	MV3-19 T	368352	4907347	2	0	0	56.1	56.1	1	1882.07	3.25	0	76.49	0	0.35	0	0	6.81	0	0	0	0	0	0	-27.6	-27.6
Inverter Transformer	MV3-16 T	368509	4907475	2	0	0	56.1	56.1	1	1981.31	3.25	0	76.94	0	0.4	0	0	7.01	0	0	0	0	0	0	-28.28	-28.28
Inverter Transformer	MV3-14 T	368678	4907498	2	0	0	56.1	56.1	1	1990.08	3.25	0	76.98	0	0.4	0	0	7.02	0	0	0	0	0	0	-28.34	-28.34
Inverter Transformer	MV3-15 T	368351	4907477	2	0	0	56.1	56.1	1	2009.38	3.25	0	77.06	0	0.41	0	0	7.06	0	0	0	0	0	0	-28.47	-28.47
Inverter Transformer	MV3-17 T	368183	4907472	2	0	0	56.1	56.1	1	2045.36	3.25	0	77.22	0	0.42	0	0	7.13	0	0	0	0	0	0	-28.71	-28.71
Inverter Transformer	MV3-18 T	367757	4907412	2	0	0	56.1	56.1	1	2150.43	3.25	0	77.65	0	0.47	0	0	7.34	0	0	0	0	0	0	-29.4	-29.4
Inverter Transformer	MV6-3 T	370202	4907140	2	0	0	56.1	56.1	1	2176.86	3.25	0	77.76	0	0.48	0	0	7.39	0	0	0	0	0	0	-29.56	-29.56

	Inverter Transformer	MV3-11 T	368340	4907662	2	0	0	56.1	56.1	1	2192.92	3.25	0	77.82	0	0.49	0	0	7.42	0	0	0	0	0	0	-29.66	-29.66
	Inverter Transformer	MV3-8 T	368685	4907712	2	0	0	56.1	56.1	1	2203.66	3.25	0	77.86	0	0.49	0	0	7.44	0	0	0	0	0	0	-29.73	-29.73
	Inverter Transformer	MV3-9 T	368517	4907703	2	0	0	56.1	56.1	1	2206.78	3.25	0	77.88	0	0.49	0	0	7.44	0	0	0	0	0	0	-29.75	-29.75
	Inverter Transformer	MV3-13 T	367958	4907577	2	0	0	56.1	56.1	1	2217.37	3.25	0	77.92	0	0.5	0	0	7.46	0	0	0	0	0	0	-29.82	-29.82
	Inverter Transformer	MV3-10 T	368162	4907669	2	0	0	56.1	56.1	1	2240.57	3.25	0	78.01	0	0.51	0	0	7.51	0	0	0	0	0	0	-29.96	-29.96
	Inverter Transformer	MV6-2 T	370091	4907339	2	0	0	56.1	56.1	1	2262.6	3.25	0	78.09	0	0.52	0	0	7.55	0	0	0	0	0	0	-30.1	-30.1
	Inverter Transformer	MV3-12 T	367674	4907594	2	0	0	56.1	56.1	1	2350.16	3.25	0	78.42	0	0.55	0	0	7.71	0	0	0	0	0	0	-30.63	-30.63
	Inverter Transformer	MV3-5 T	368335	4907843	2	0	0	56.1	56.1	1	2371.72	3.25	0	78.5	0	0.56	0	0	7.75	0	0	0	0	0	0	-30.76	-30.76
	Inverter Transformer	MV3-7 T	367951	4907754	2	0	0	56.1	56.1	1	2385.62	3.25	0	78.55	0	0.57	0	0	7.78	0	0	0	0	0	0	-30.84	-30.84
	Inverter Transformer	MV3-6 T	368156	4907834	2	0	0	56.1	56.1	1	2401.49	3.25	0	78.61	0	0.57	0	0	7.81	0	0	0	0	0	0	-30.93	-30.93
	Inverter Transformer	MV3-2 T	368677	4907928	2	0	0	56.1	56.1	1	2419.81	3.25	0	78.68	0	0.58	0	0	7.84	0	0	0	0	0	0	-31.04	-31.04
	Inverter Transformer	MV3-4 T	368507	4907925	2	0	0	56.1	56.1	1	2428.57	3.25	0	78.71	0	0.59	0	0	7.86	0	0	0	0	0	0	-31.09	-31.09
	Inverter Transformer	MV3-1 T	368150	4907976	2	0	0	56.1	56.1	1	2540.62	3.25	0	79.1	0	0.63	0	0	8.06	0	0	0	0	0	0	-31.74	-31.74
	Inverter Transformer	MV3-3 T	367944	4907927	2	0	0	56.1	56.1	1	2551.28	3.25	0	79.14	0	0.64	0	0	8.08	0	0	0	0	0	0	-31.8	-31.8
	Inverter Transformer	MV4-15 T	369170	4908481	2	0	0	56.1	56.1	1	2999.61	3.25	0	80.54	0	0.83	0	0	8.87	0	0	0	0	0	0	-34.18	-34.18
	Inverter Transformer	MV2-2 T	365982	4906654	2	0	0	56.1	56.1	1	3004.12	3.25	0	80.55	0	0.83	0	0	8.88	0	0	0	0	0	0	-34.2	-34.2
	Inverter Transformer	MV4-14 T	369182	4908507	2	0	0	56.1	56.1	1	3027.02	3.25	0	80.62	0	0.84	0	0	8.91	0	0	0	0	0	0	-34.32	-34.32
	Inverter Transformer	MV4-13 T	369057	4908605	2	0	0	56.1	56.1	1	3109.65	3.25	0	80.85	0	0.88	0	0	9.05	0	0	0	0	0	0	-34.72	-34.72
	Inverter Transformer	MV2-3 T	365814	4906641	2	0	0	56.1	56.1	1	3155.41	3.25	0	80.98	0	0.9	0	0	9.13	0	0	0	0	0	0	-34.95	-34.95
	Inverter Transformer	MV5-6 T	369987	4908507	2	0	0	56.1	56.1	1	3238.97	3.25	0	81.21	0	0.93	0	0	9.27	0	0	0	0	0	0	-35.35	-35.35
	Inverter Transformer	MV4-12 T	369049	4908803	2	0	0	56.1	56.1	1	3306.09	3.25	0	81.39	0	0.96	0	0	9.38	0	0	0	0	0	0	-35.66	-35.66
	Inverter Transformer	MV2-4 T	365590	4906628	2	0	0	56.1	56.1	1	3361.13	3.25	0	81.53	0	0.98	0	0	9.47	0	0	0	0	0	0	-35.92	-35.92
	Inverter Transformer	MV4-11 T	369269	4908855	2	0	0	56.1	56.1	1	3383.96	3.25	0	81.59	0	0.99	0	0	9.5	0	0	0	0	0	0	-36.02	-36.02
	Inverter Transformer	MV4-10 T	369307	4908858	2	0	0	56.1	56.1	1	3392.85	3.25	0	81.61	0	1	0	0	9.52	0	0	0	0	0	0	-36.06	-36.06
	Inverter Transformer	MV5-5 T	370021	4908690	2	0	0	56.1	56.1	1	3421.41	3.25	0	81.68	0	1.01	0	0	9.56	0	0	0	0	0	0	-36.2	-36.2
	Inverter Transformer	MV1-15 T	365309	4904994	2	0	0	56.1	56.1	1	3488.91	3.25	0	81.85	0	1.04	0	0	9.67	0	0	0	0	0	0	-36.5	-36.5
	Inverter Transformer	MV4-7 T	369040	4909001	2	0	0	56.1	56.1	1	3502.64	3.25	0	81.89	0	1.04	0	0	9.69	0	0	0	0	0	0	-36.56	-36.56
	Inverter Transformer	MV4-8 T	369262	4909001	2	0	0	56.1	56.1	1	3527.36	3.25	0	81.95	0	1.05	0	0	9.73	0	0	0	0	0	0	-36.67	-36.67
	Inverter Transformer	MV4-9 T	369284	4909001	2	0	0	56.1	56.1	1	3530.56	3.25	0	81.96	0	1.05	0	0	9.74	0	0	0	0	0	0	-36.69	-36.69
	Inverter Transformer	MV5-4 T	370330	4908707	2	0	0	56.1	56.1	1	3562.24	3.25	0	82.03	0	1.07	0	0	9.79	0	0	0	0	0	0	-36.83	-36.83
	Inverter Transformer	MV5-2 T	370011	4908853	2	0	0	56.1	56.1	1	3569.92	3.25	0	82.05	0	1.07	0	0	9.8	0	0	0	0	0	0	-36.86	-36.86
	Inverter Transformer	MV5-3 T	370237	4908851	2	0	0	56.1	56.1	1	3653.45	3.25	0	82.25	0	1.1	0	0	9.93	0	0	0	0	0	0	-37.23	-37.23
	Inverter Transformer	MV4-4 T	369033	4909199	2	0	0	56.1	56.1	1	3699.52	3.25	0	82.36	0	1.12	0	0	10	0	0	0	0	0	0	-37.43	-37.43
	Inverter Transformer	MV4-6 T	369249	4909192	2	0	0	56.1	56.1	1	3714.78	3.25	0	82.4	0	1.13	0	0	10.02	0	0	0	0	0	0	-37.49	-37.49
	Inverter Transformer	MV1-12 T	365044	4905386	2	0	0	56.1	56.1	1	3717.66	3.25	0	82.41	0	1.13	0	0	10.03	0	0	0	0	0	0	-37.5	-37.5
	Inverter Transformer	MV4-5 T	369283	4909199	2	0	0	56.1	56.1	1	3726.34	3.25	0	82.43	0	1.13	0	0	10.04	0	0	0	0	0	0	-37.54	-37.54
	Inverter Transformer	MV5-1 T	370015	4909142	2	0	0	56.1	56.1	1	3843.22	3.25	0	82.69	0	1.18	0	0	10.22	0	0	0	0	0	0	-38.04	-38.04
	Inverter Transformer	MV4-1 T	369017	4909397	2	0	0	56.1	56.1	1	3895.91	3.25	0	82.81	0	1.2	0	0	10.3	0	0	0	0	0	0	-38.26	-38.26
	Inverter Transformer	MV4-3 T	369234	4909397	2	0	0	56.1	56.1	1	3916.24	3.25	0	82.86	0	1.21	0	0	10.33	0	0	0	0	0	0	-38.34	-38.34
	Inverter Transformer	MV4-2 T	369267	4909397	2	0	0	56.1	56.1	1	3920.37	3.25	0	82.87	0	1.21	0	0	10.34	0	0	0	0	0	0	-38.36	-38.36
	Inverter Transformer	MV1-4 T	364821	4905918	2	0	0	56.1	56.1	1	3959.72	3.25	0	82.95	0	1.23	0	0	10.39	0	0	0	0	0	0	-38.52	-38.52
	Inverter Transformer	MV1-8 T	364782	4905647	2	0	0	56.1	56.1	1	3979.97	3.25	0	83	0	1.24	0	0	10.43	0	0	0	0	0	0	-38.6	-38.6
	Inverter Transformer	MV1-2 T	364759	4906063	2	0	0	56.1	56.1	1	4038.7	3.25	0	83.12	0	1.26	0	0	10.51	0	0	0	0	0	0	-38.84	-38.84
	Inverter Transformer	MV1-1 T	364721	4906166	2	0	0	56.1	56.1	1	4091.6	3.25	0	83.24	0	1.28	0	0	10.59	0	0	0	0	0	0	-39.05	-39.05
	Inverter Transformer	MV1-5 T	364676	4905892	2	0	0	56.1	56.1	1	4101.47	3.25	0	83.26	0	1.28	0	0	10.6	0	0	0	0	0	0	-39.09	-39.09
	Inverter Transformer	MV1-11 T	364649	4905414	2	0	0	56.1	56.1	1	4111.71	3.25	0	83.28	0	1.29	0	0	10.62	0	0	0	0	0	0	-39.13	-39.13
	Inverter Transformer	MV1-9 T	364555	4905646	2	0	0	56.1	56.1	1	4206.81	3.25	0	83.48	0	1.33	0	0	10.76	0	0	0	0	0	0	-39.5	-39.5
	Inverter Transformer	MV1-6 T	364482	4905835	2	0	0	56.1	56.1	1	4289.96	3.25	0	83.65	0	1.36	0	0	10.88	0	0	0	0	0	0	-39.83	-39.83
	Inverter Transformer	MV1-3 T	364435	4906039	2	0	0	56.1	56.1	1	4356.88	3.25	0	83.78	0	1.38	0	0	10.97	0	0	0	0	0	0	-40.08	-40.08
	Line Reactor	NGR	369421	4908787.5	5	0	0	45.4	45.4	1	3343.96	5.25	0	81.49	0	3.31	1.32	0.12	1.37	0	0	0	0	0	0	-42.13	-42.13
Limit. Valu	0	0																								
Level D/N:	26.4424	26.4424																								

Receiver: Existing Noise Receptor
ID: W-R4
X: 369205.6
Y: 4905336.6
Z: 4.5
Ground: 0

ISO	Description	ID	X	Y	Z	Ground	ReflOrd	LxT	LxN	L/A	Dist.	hm	Freq	Adiv	K0b	Agr	Abar	z	Aatm	Afol	Ahous	Cmet	CmetN	Dc	RL	LtotT	LtotN
	Sol_Luce Substation	S_Substation	369426	4908792	3.5	0	0	112.1	112.1	1	3462.42	5.25	0	81.79	0	0.44	3.26	0.35	6.63	0	0	0	0	0	0	19.97	19.97
	Inverter	MV3-21	368478	4907206	2	0	0	100.3	100.3	1	2006.01	3.25	0	77.05	0	0.13	0	0	13.47	0	0	0	0	0	0	9.66	9.66
	Inverter	MV3-20	368689	4907317	2	0	0	100.3	100.3	1	2046.67	3.25	0	77.22	0	0.14	0	0	13.56	0	0	0	0	0	0	9.39	9.39
	Inverter	MV6-3	370207	4907140	2	0	0	100.3	100.3	1	2062.78	3.25	0	77.29	0	0.15	0	0	13.59	0	0	0	0	0	0	9.28	9.28
	Inverter	MV3-19	368357	4907347	2	0	0	100.3	100.3	1	2182.16	3.25	0	77.78	0	0.18	0	0	13.84	0	0	0	0	0	0	8.52	8.52
	Inverter	MV6-2	370085	4907339	2	0	0	100.3	100.3	1	2187	3.25	0	77.8	0	0.18	0	0	13.85	0	0	0	0	0	0	8.49	8.49
	Inverter	MV3-14	368684	4907498	2	0	0	100.3	100.3	1	2223.45	3.25	0	77.94	0	0.19	0	0	13.92	0	0	0	0	0	0	8.26	8.26
	Inverter	MV3-16	368514	4907475	2	0	0	100.3	100.3	1	2247.46	3.25	0	78.03	0	0.2	0	0	13.97	0	0	0	0	0	0	8.11	8.11
	Inverter	MV3-15	368357	4907477	2	0	0	100.3	100.3	1	2302.49	3.25	0	78.24	0	0.21	0	0	14.08	0	0	0	0	0	0	7.78	7.78
	Inverter	MV3-17	368178	4907472	2	0	0	100.3	100.3	1	2369.79	3.25	0	78.49	0	0.23	0	0	14.21	0	0	0	0	0	0	7.38	7.38
	SubstationTransformer	W_ST	369711.17	4906112.3	2.5	0	0	92	92	1	925.89	3.5	0	70.33	0	-0.38	0	-0.12	2.37	0	0	0	0	0	0	19.66	19.66
	Inverter	MV3-8	368680	4907712	2	0	0	100.3	100.3	1	2432.86	3.25	0	78.72	0	0.24	0	0	14.33	0	0	0	0	0	0	7.02	7.02
	Inverter	MV3-9	368512	4907703	2	0	0	100.3	100.3	1	2465.96	3.25	0	78.84	0	0.25	0	0	14.39	0	0	0	0	0	0	6.83	6.83

Inverter	MV3-11	368346	4907662	2	0	0	100.3	100.3	1	2479.19	3.25	0	78.89	0	0.25	0	0	14.42	0	0	0	0	0	0	6.75	6.75
Inverter	MV3-18	367752	4907412	2	0	0	100.3	100.3	1	2533.82	3.25	0	79.08	0	0.26	0	0	14.52	0	0	0	0	0	0	6.45	6.45
Inverter	MV3-10	368167	4907669	2	0	0	100.3	100.3	1	2553.19	3.25	0	79.14	0	0.27	0	0	14.56	0	0	0	0	0	0	6.34	6.34
Inverter	MV3-13	367963	4907577	2	0	0	100.3	100.3	1	2561.92	3.25	0	79.17	0	0.27	0	0	14.58	0	0	0	0	0	0	6.29	6.29
Inverter	MV3-6	368162	4907834	2	0	0	100.3	100.3	1	2706.68	3.25	0	79.65	0	0.3	0	0	14.84	0	0	0	0	0	0	5.52	5.52
Inverter	MV3-7	367945	4907754	2	0	0	100.3	100.3	1	2726.34	3.25	0	79.71	0	0.31	0	0	14.88	0	0	0	0	0	0	5.41	5.41
Inverter	MV3-12	367668	4907594	2	0	0	100.3	100.3	1	2731.31	3.25	0	79.73	0	0.31	0	0	14.89	0	0	0	0	0	0	5.39	5.39
Inverter	MV3-3	367939	4907927	2	0	0	100.3	100.3	1	2883.48	3.25	0	80.2	0	0.34	0	0	15.16	0	0	0	0	0	0	4.61	4.61
Inverter	MV6-1	370235	4907364	2	0	0	97.3	97.3	1	2273.77	3.25	0	78.13	0	0.2	0	0	14.02	0	0	0	0	0	0	4.95	4.95
Westbrook Inverter Enclosur	W_INV3	369508	4906164	2	0	0	89.1	89.1	1	880.93	3.25	0	69.9	0	0.66	0	0	6.09	0	0	0	0	0	0	12.42	12.42
Inverter	MV5-5	370015	4908690	2	0	0	100.3	100.3	1	3449.7	3.25	0	81.76	0	0.44	0	0	16.15	0	0	0	0	0	0	1.97	1.97
Westbrook Inverter Enclosur	W_INV4	369673	4906164	2	0	0	89.1	89.1	1	950.29	3.25	0	70.56	0	0.67	0	0	6.22	0	0	0	0	0	0	11.61	11.61
Inverter	MV4-11	369264	4908855	2	0	0	100.3	100.3	1	3518.89	3.25	0	81.93	0	0.45	0	0	16.26	0	0	0	0	0	0	1.67	1.67
Inverter	MV4-10	369312	4908858	2	0	0	100.3	100.3	1	3523.01	3.25	0	81.94	0	0.45	0	0	16.27	0	0	0	0	0	0	1.65	1.65
Inverter	MV5-4	370324	4908707	2	0	0	100.3	100.3	1	3551.12	3.25	0	82.01	0	0.46	0	0	16.32	0	0	0	0	0	0	1.53	1.53
Inverter	MV5-2	370006	4908853	2	0	0	100.3	100.3	1	3606.34	3.25	0	82.14	0	0.47	0	0	16.41	0	0	0	0	0	0	1.29	1.29
Inverter	MV2-3	365820	4906641	2	0	0	100.3	100.3	1	3628.19	3.25	0	82.19	0	0.47	0	0	16.44	0	0	0	0	0	0	1.2	1.2
Inverter	MV5-3	370231	4908851	2	0	0	100.3	100.3	1	3660.94	3.25	0	82.27	0	0.48	0	0	16.5	0	0	0	0	0	0	1.06	1.06
Inverter	MV4-8	369256	4909001	2	0	0	100.3	100.3	1	3664.75	3.25	0	82.28	0	0.48	0	0	16.5	0	0	0	0	0	0	1.05	1.05
Inverter	MV4-9	369289	4909001	2	0	0	100.3	100.3	1	3665.35	3.25	0	82.28	0	0.48	0	0	16.51	0	0	0	0	0	0	1.05	1.05
Inverter	MV4-7	369035	4909001	2	0	0	100.3	100.3	1	3668.37	3.25	0	82.29	0	0.48	0	0	16.51	0	0	0	0	0	0	1.03	1.03
Inverter	MV2-4	365586	4906624	2	0	0	100.3	100.3	1	3841.73	3.25	0	82.69	0	0.5	0	0	16.79	0	0	0	0	0	0	0.32	0.32
Inverter	MV4-6	369243	4909192	2	0	0	100.3	100.3	1	3855.58	3.25	0	82.72	0	0.51	0	0	16.82	0	0	0	0	0	0	0.27	0.27
Inverter	MV4-5	369289	4909199	2	0	0	100.3	100.3	1	3863.3	3.25	0	82.74	0	0.51	0	0	16.83	0	0	0	0	0	0	0.24	0.24
Inverter	MV4-4	369027	4909199	2	0	0	100.3	100.3	1	3866.53	3.25	0	82.75	0	0.51	0	0	16.83	0	0	0	0	0	0	0.22	0.22
Westbrook Inverter Enclosur	W_INV2	369374	4906388	2	0	0	89.1	89.1	1	1064.8	3.25	0	71.55	0	0.7	0	0	6.44	0	0	0	0	0	0	10.38	10.38
Inverter	MV5-1	370020	4909142	2	0	0	100.3	100.3	1	3891.57	3.25	0	82.8	0	0.51	0	0	16.87	0	0	0	0	0	0	0.12	0.12
Inverter	MV1-15	365315	4904994	2	0	0	100.3	100.3	1	3905.66	3.25	0	82.83	0	0.51	0	0	16.9	0	0	0	0	0	0	0.07	0.07
Inverter	MV4-3	369229	4909397	2	0	0	100.3	100.3	1	4060.47	3.25	0	83.17	0	0.54	0	0	17.14	0	0	0	0	0	0	-0.54	-0.54
Inverter	MV4-2	369272	4909397	2	0	0	100.3	100.3	1	4060.94	3.25	0	83.17	0	0.54	0	0	17.15	0	0	0	0	0	0	-0.54	-0.54
Inverter	MV4-1	369011	4909397	2	0	0	100.3	100.3	1	4065.06	3.25	0	83.18	0	0.54	0	0	17.15	0	0	0	0	0	0	-0.56	-0.56
Inverter	MV1-12	365038	4905386	2	0	0	100.3	100.3	1	4167.89	3.25	0	83.4	0	0.55	0	0	17.31	0	0	0	0	0	0	-0.95	-0.95
Inverter	MV1-8	364788	4905647	2	0	0	100.3	100.3	1	4428.49	3.25	0	83.93	0	0.58	0	0	17.72	0	0	0	0	0	0	-1.92	-1.92
Inverter	MV1-4	364815	4905918	2	0	0	100.3	100.3	1	4428.93	3.25	0	83.93	0	0.58	0	0	17.72	0	0	0	0	0	0	-1.92	-1.92
Westbrook Inverter Enclosur	W_INV7	369780	4906417	2	0	0	89.1	89.1	1	1223.6	3.25	0	72.75	0	0.73	0	0	6.72	0	0	0	0	0	0	8.85	8.85
Inverter	MV1-2	364753	4906063	2	0	0	100.3	100.3	1	4511.46	3.25	0	84.09	0	0.59	0	0	17.85	0	0	0	0	0	0	-2.21	-2.21
Inverter	MV1-11	364655	4905414	2	0	0	100.3	100.3	1	4551.26	3.25	0	84.16	0	0.6	0	0	17.91	0	0	0	0	0	0	-2.36	-2.36
Inverter	MV1-1	364715	4906166	2	0	0	100.3	100.3	1	4566.55	3.25	0	84.19	0	0.6	0	0	17.93	0	0	0	0	0	0	-2.41	-2.41
Inverter	MV1-5	364671	4905892	2	0	0	100.3	100.3	1	4568.49	3.25	0	84.2	0	0.6	0	0	17.93	0	0	0	0	0	0	-2.42	-2.42
Inverter	MV1-9	364561	4905646	2	0	0	100.3	100.3	1	4654.89	3.25	0	84.36	0	0.61	0	0	18.07	0	0	0	0	0	0	-2.72	-2.72
Inverter	MV1-6	364477	4905835	2	0	0	100.3	100.3	1	4754.79	3.25	0	84.54	0	0.62	0	0	18.22	0	0	0	0	0	0	-3.07	-3.07
Westbrook Inverter Enclosur	W_INV5	369719	4906574	2	0	0	89.1	89.1	1	1339.68	3.25	0	73.54	0	0.76	0	0	6.93	0	0	0	0	0	0	7.83	7.83
Westbrook Inverter Enclosur	W_INV6	369875	4906578	2	0	0	89.1	89.1	1	1410.38	3.25	0	73.99	0	0.77	0	0	7.05	0	0	0	0	0	0	7.25	7.25
Inverter	MV2-1	365842	4906816	2	0	0	97.3	97.3	1	3674.57	3.25	0	82.3	0	0.48	0	0	16.52	0	0	0	0	0	0	-1.99	-1.99
DSTATCOM - 10 MVAR #2	DSAT2	369403	4908757	2.5	0	0	96.6	96.6	1	3426.09	3.5	0	81.7	0	3.49	0	0	2.53	0	0	0	0	0	0	8.91	8.91
DSTATCOM - 10 MVAR #1	DSAT1	369437	4908757	2.5	0	0	96.6	96.6	1	3428.22	3.5	0	81.7	0	3.49	0	0	2.54	0	0	0	0	0	0	8.91	8.91
Inverter	MV1-14	365163	4905049	2	0	0	97.3	97.3	1	4052.82	3.25	0	83.16	0	0.53	0	0	17.13	0	0	0	0	0	0	-3.51	-3.51
Inverter	MV1-10	365004	4905564	2	0	0	97.3	97.3	1	4207.75	3.25	0	83.48	0	0.56	0	0	17.38	0	0	0	0	0	0	-4.1	-4.1
Inverter	MV1-7	364925	4905782	2	0	0	97.3	97.3	1	4303.71	3.25	0	83.68	0	0.57	0	0	17.53	0	0	0	0	0	0	-4.46	-4.46
Inverter	MV1-13	364731	4905241	2	0	0	97.3	97.3	1	4475.62	3.25	0	84.02	0	0.59	0	0	17.79	0	0	0	0	0	0	-5.09	-5.09
Westbrook Inverter Enclosur	W_INV1	369409	4906578	2	0	0	86.1	86.1	1	1257.96	3.25	0	72.99	0	0.74	0	0	6.79	0	0	0	0	0	0	5.54	5.54
Inverter	MV3-22	368656	4907142	2	0	0	89.1	89.1	1	1887.2	3.25	0	76.52	0	0.88	0	0	7.86	0	0	0	0	0	0	3.8	3.8
Inverter	MV3-2	368671	4907928	2	0	0	89.1	89.1	1	2645.97	3.25	0	79.45	0	1.06	0	0	9.07	0	0	0	0	0	0	-0.53	-0.53
Inverter	MV3-5	368340	4907843	2	0	0	89.1	89.1	1	2651.66	3.25	0	79.47	0	1.06	0	0	9.08	0	0	0	0	0	0	-0.56	-0.56
Inverter	MV3-4	368502	4907925	2	0	0	89.1	89.1	1	2682.33	3.25	0	79.57	0	1.07	0	0	9.13	0	0	0	0	0	0	-0.71	-0.71
Gardiner Substation	G_Sub	366586.3	4903349.9	2.5	0	0	90.8	90.8	1	3287.51	4.25	0	81.34	0	1.17	2.94	0.32	6.38	0	0	0	0	0	0	-1.05	-1.05
Inverter	MV6-4	370250	4906966	2	0	0	86.1	86.1	1	1935.39	3.25	0	76.74	0	0.89	0	0	7.94	0	0	0	0	0	0	0.49	0.49
Inverter	MV3-1	368156	4907976	2	0	0	89.1	89.1	1	2840.44	3.25	0	80.07	0	1.11	0	0	9.37	0	0	0	0	0	0	-1.49	-1.49
Inverter	MV4-15	369176	4908481	2	0	0	89.1	89.1	1	3144.54	3.25	0	80.95	0	1.18	0	0	9.84	0	0	0	0	0	0	-2.91	-2.91
Fixed Reactor Bank 1	FRB1	369378	4908755	6	0	0	89.8	89.8	1	3422.74	5.25	0	81.69	0	-0.81	0	0	6.57	0	0	0	0	0	0	2.33	2.33
Fixed Reactor Bank 2	FRB2	369464	4908755	6	0	0	89.8	89.8	1	3428.15	5.25	0	81.7	0	-0.81	0	0	6.58	0	0	0	0	0	0	2.3	2.3
Inverter	MV4-14	369176	4908507	2	0	0	89.1	89.1	1	3170.54	3.25	0	81.02	0	1.19	0	0	9.87	0	0	0	0	0	0	-3.03	-3.03
Inverter	MV5-6	369982	4908507	2	0	0	89.1	89.1	1	3264.08	3.25	0	81.28	0	1.21	0	0	10.01	0	0	0	0	0	0	-3.44	-3.44
Inverter	MV4-13	369051	4908605	2	0	0	89.1	89.1	1	3272.06	3.25	0	81.3	0	1.21	0	0	10.03	0	0	0	0	0	0	-3.48	-3.48
Westbrook Inverter Transfor	W_INVTR3	369514	4906164	2	0	0	77.3	77.3	1	883.01	3.25	0	69.92	0	-1.86	0	0	0.61	0	0	0	0	0	0	8.67	8.67
Inverter	MV4-12	369043	4908803	2	0	0	89.1	89.1	1	3470.21	3.25	0	81.81	0	1.26	0	0	10.32	0	0	0	0	0	0	-4.33	-4.33
Inverter	MV2-2	365977	4906654	2	0	0	89.1	89.1	1	3487.03	3.25	0	81.85	0	1.27	0	0	10.34	0	0	0	0	0	0	-4.4	-4.4
Westbrook Inverter Transfor	W_INVTR4	369679	4906164	2	0	0	77.3	77.3	1	953.26	3.25	0	70.58	0	-1.9	0	0	0.65	0	0	0	0	0	0	8.01	8.01
Inverters	G_Inv2	366676.9	4903239.1	2	0	0	87.7	87.7	1	3285.4	3.25	0	81.33	0	2.73	0	0	4.09	0	0	0	0	0	0	-0.49	-0.49
Inverters	G_Inv4	366732.8	4903105	2	0	0	87.7	87.7	1	3330.88	3.25	0	81.45	0	2.73	0	0	4.14	0	0	0	0	0	0	-0.66	-0.66
Inverters	G_Inv6	366788.5	4902972	2	0	0	87.7	87.7	1	3381.38	3.25	0	81.58	0	2.74	0	0	4.2	0	0	0	0	0	0	-0.86	-0.86
Inverters	G_Inv1	366526.4	4903225.8	2	0	0	87.7	87.7	1	3410.81	3.25	0	81.66	0	2.74	0	0	4.23	0	0	0	0	0	0	-0.97	-0.97
Inverters	G_Inv8	366844.5	4902838.5	2	0	0	87.7	87.7	1	3437.34	3.25	0	81.72	0	2.74	0	0	4.26	0	0	0	0	0	0	-1.07	-1.07
Inverters	G_Inv3	366583.7	4903091.4	2	0	0	87.7	87.7	1	3451.85	3.25	0	81.76	0	2.74	0	0	4.28	0	0	0	0	0	0	-1.12	-1.12

Westbrook Inverter Transfor	W_INVTR2	369368	4906388	2	0	0	77.3	77.3	1	1063.87	3.25	0	71.54	0	-1.97	0	0	0.72	0	0	0	0	0	0	7.06	7.06
Inverters	G_Inv10	366900.7	4902704.8	2	0	0	87.7	87.7	1	3498.42	3.25	0	81.88	0	2.75	0	0	4.33	0	0	0	0	0	0	-1.29	-1.29
Inverters	G_Inv5	366638.5	4902958.1	2	0	0	87.7	87.7	1	3499.61	3.25	0	81.88	0	2.75	0	0	4.33	0	0	0	0	0	0	-1.3	-1.3
Inverters	G_Inv7	366694.6	4902824.7	2	0	0	87.7	87.7	1	3551.73	3.25	0	82.01	0	2.75	0	0	4.39	0	0	0	0	0	0	-1.49	-1.49
Inverters	G_Inv9	366750.9	4902691.8	2	0	0	87.7	87.7	1	3608.4	3.25	0	82.15	0	2.76	0	0	4.45	0	0	0	0	0	0	-1.69	-1.69
Westbrook Inverter Transfor	W_INVTR1	369403	4906578	2	0	0	78.2	78.2	1	1257	3.25	0	72.99	0	-2.08	0	0	0.82	0	0	0	0	0	0	6.51	6.51
Westbrook Inverter Transfor	W_INVTR7	369786	4906417	2	0	0	77.3	77.3	1	1226.43	3.25	0	72.77	0	-2.07	0	0	0.81	0	0	0	0	0	0	5.83	5.83
Inverter	MV1-3	364440	4906039	2	0	0	89.1	89.1	1	4817.09	3.25	0	84.66	0	1.59	0	0	12.22	0	0	0	0	0	0	-9.41	-9.41
Westbrook Inverter Transfor	W_INVTR5	369725	4906574	2	0	0	77.3	77.3	1	1341.99	3.25	0	73.55	0	-2.13	0	0	0.87	0	0	0	0	0	0	5.04	5.04
Westbrook Inverter Transfor	W_INVTR6	369881	4906578	2	0	0	77.3	77.3	1	1413.24	3.25	0	74	0	-2.16	0	0	0.91	0	0	0	0	0	0	4.59	4.59
Inverter Transformer	MV6-4 T	370244	4906966	2	0	0	69.4	69.4	1	1932.16	3.25	0	76.72	0	2.15	0	0	4.9	0	0	0	0	0	0	-14.42	-14.42
Inverter Transformer	MV6-1 T	370230	4907364	2	0	0	69.4	69.4	1	2271.51	3.25	0	78.13	0	2.27	0	0	5.23	0	0	0	0	0	0	-16.28	-16.28
Inverter Transformer	MV2-1 T	365836	4906816	2	0	0	69.4	69.4	1	3680.06	3.25	0	82.32	0	2.7	0	0	6.43	0	0	0	0	0	0	-22.1	-22.1
Inverter Transformer	MV1-14 T	365157	4905049	2	0	0	69.4	69.4	1	4058.8	3.25	0	83.17	0	2.8	0	0	6.72	0	0	0	0	0	0	-23.34	-23.34
Inverter Transformer	MV1-10 T	365010	4905564	2	0	0	69.4	69.4	1	4201.76	3.25	0	83.47	0	2.84	0	0	6.83	0	0	0	0	0	0	-23.78	-23.78
Inverter Transformer	MV1-7 T	364919	4905782	2	0	0	69.4	69.4	1	4309.68	3.25	0	83.69	0	2.86	0	0	6.9	0	0	0	0	0	0	-24.1	-24.1
Inverter Transformer	MV1-13 T	364725	4905241	2	0	0	69.4	69.4	1	4481.62	3.25	0	84.03	0	2.9	0	0	7.03	0	0	0	0	0	0	-24.61	-24.61
Inverter Transformer	MV3-22 T	368661	4907142	2	0	0	56.1	56.1	1	1885.75	3.25	0	76.51	0	0.36	0	0	6.82	0	0	0	0	0	0	-27.62	-27.62
Inverter Transformer	MV3-21 T	368484	4907206	2	0	0	56.1	56.1	1	2003.84	3.25	0	77.04	0	0.41	0	0	7.05	0	0	0	0	0	0	-28.44	-28.44
Inverter Transformer	MV3-20 T	368683	4907317	2	0	0	56.1	56.1	1	2048.19	3.25	0	77.23	0	0.42	0	0	7.14	0	0	0	0	0	0	-28.73	-28.73
Inverter Transformer	MV6-3 T	370202	4907140	2	0	0	56.1	56.1	1	2060.36	3.25	0	77.28	0	0.43	0	0	7.16	0	0	0	0	0	0	-28.81	-28.81
Inverter Transformer	MV3-19 T	368352	4907347	2	0	0	56.1	56.1	1	2184.11	3.25	0	77.79	0	0.48	0	0	7.4	0	0	0	0	0	0	-29.61	-29.61
Inverter Transformer	MV6-2 T	370091	4907339	2	0	0	56.1	56.1	1	2189.42	3.25	0	77.81	0	0.48	0	0	7.41	0	0	0	0	0	0	-29.64	-29.64
Inverter Transformer	MV3-14 T	368678	4907498	2	0	0	56.1	56.1	1	2224.86	3.25	0	77.95	0	0.5	0	0	7.48	0	0	0	0	0	0	-29.86	-29.86
Inverter Transformer	MV3-16 T	368509	4907475	2	0	0	56.1	56.1	1	2249	3.25	0	78.04	0	0.51	0	0	7.52	0	0	0	0	0	0	-30.01	-30.01
Inverter Transformer	MV3-15 T	368351	4907477	2	0	0	56.1	56.1	1	2304.7	3.25	0	78.25	0	0.53	0	0	7.63	0	0	0	0	0	0	-30.36	-30.36
Inverter Transformer	MV3-17 T	368183	4907472	2	0	0	56.1	56.1	1	2367.63	3.25	0	78.49	0	0.56	0	0	7.75	0	0	0	0	0	0	-30.73	-30.73
Inverter Transformer	MV3-8 T	368685	4907712	2	0	0	56.1	56.1	1	2431.78	3.25	0	78.72	0	0.59	0	0	7.86	0	0	0	0	0	0	-31.11	-31.11
Inverter Transformer	MV3-9 T	368517	4907703	2	0	0	56.1	56.1	1	2464.55	3.25	0	78.83	0	0.6	0	0	7.92	0	0	0	0	0	0	-31.3	-31.3
Inverter Transformer	MV3-11 T	368340	4907662	2	0	0	56.1	56.1	1	2481.28	3.25	0	78.89	0	0.61	0	0	7.96	0	0	0	0	0	0	-31.4	-31.4
Inverter Transformer	MV3-18 T	367757	4907412	2	0	0	56.1	56.1	1	2530.96	3.25	0	79.07	0	0.63	0	0	8.05	0	0	0	0	0	0	-31.68	-31.68
Inverter Transformer	MV3-10 T	368162	4907669	2	0	0	56.1	56.1	1	2555.23	3.25	0	79.15	0	0.64	0	0	8.09	0	0	0	0	0	0	-31.82	-31.82
Inverter Transformer	MV3-13 T	367958	4907577	2	0	0	56.1	56.1	1	2564.35	3.25	0	79.18	0	0.64	0	0	8.11	0	0	0	0	0	0	-31.87	-31.87
Inverter Transformer	MV3-2 T	368677	4907928	2	0	0	56.1	56.1	1	2644.76	3.25	0	79.45	0	0.68	0	0	8.25	0	0	0	0	0	0	-32.32	-32.32
Inverter Transformer	MV3-5 T	368335	4907843	2	0	0	56.1	56.1	1	2653.3	3.25	0	79.48	0	0.68	0	0	8.27	0	0	0	0	0	0	-32.36	-32.36
Inverter Transformer	MV3-4 T	368507	4907925	2	0	0	56.1	56.1	1	2681.02	3.25	0	79.57	0	0.69	0	0	8.31	0	0	0	0	0	0	-32.52	-32.52
Inverter Transformer	MV3-6 T	368156	4907834	2	0	0	56.1	56.1	1	2709	3.25	0	79.66	0	0.71	0	0	8.36	0	0	0	0	0	0	-32.67	-32.67
Inverter Transformer	MV3-7 T	367951	4907754	2	0	0	56.1	56.1	1	2723.57	3.25	0	79.7	0	0.71	0	0	8.39	0	0	0	0	0	0	-32.75	-32.75
Inverter Transformer	MV3-12 T	367674	4907594	2	0	0	56.1	56.1	1	2727.94	3.25	0	79.72	0	0.71	0	0	8.4	0	0	0	0	0	0	-32.77	-32.77
Inverter Transformer	MV3-1 T	368150	4907976	2	0	0	56.1	56.1	1	2842.66	3.25	0	80.07	0	0.76	0	0	8.6	0	0	0	0	0	0	-33.38	-33.38
Inverter Transformer	MV3-3 T	367944	4907927	2	0	0	56.1	56.1	1	2881.29	3.25	0	80.19	0	0.78	0	0	8.67	0	0	0	0	0	0	-33.58	-33.58
Inverter Transformer	MV4-15 T	369170	4908481	2	0	0	56.1	56.1	1	3144.6	3.25	0	80.95	0	0.89	0	0	9.11	0	0	0	0	0	0	-34.89	-34.89
Inverter Transformer	MV4-14 T	369182	4908507	2	0	0	56.1	56.1	1	3170.49	3.25	0	81.02	0	0.9	0	0	9.15	0	0	0	0	0	0	-35.02	-35.02
Inverter Transformer	MV5-6 T	369987	4908507	2	0	0	56.1	56.1	1	3265.28	3.25	0	81.28	0	0.94	0	0	9.31	0	0	0	0	0	0	-35.47	-35.47
Inverter Transformer	MV4-13 T	369057	4908605	2	0	0	56.1	56.1	1	3271.78	3.25	0	81.3	0	0.94	0	0	9.32	0	0	0	0	0	0	-35.5	-35.5
Inverter Transformer	MV5-5 T	370021	4908690	2	0	0	56.1	56.1	1	3451.11	3.25	0	81.76	0	1.02	0	0	9.61	0	0	0	0	0	0	-36.33	-36.33
Inverter Transformer	MV4-12 T	369049	4908803	2	0	0	56.1	56.1	1	3469.94	3.25	0	81.81	0	1.03	0	0	9.64	0	0	0	0	0	0	-36.42	-36.42
Inverter Transformer	MV2-2 T	365982	4906654	2	0	0	56.1	56.1	1	3482.41	3.25	0	81.84	0	1.03	0	0	9.66	0	0	0	0	0	0	-36.47	-36.47
Inverter Transformer	MV4-11 T	369269	4908855	2	0	0	56.1	56.1	1	3518.97	3.25	0	81.93	0	1.05	0	0	9.72	0	0	0	0	0	0	-36.64	-36.64
Inverter Transformer	MV4-10 T	369307	4908858	2	0	0	56.1	56.1	1	3522.86	3.25	0	81.94	0	1.05	0	0	9.72	0	0	0	0	0	0	-36.65	-36.65
Inverter Transformer	MV5-4 T	370330	4908707	2	0	0	56.1	56.1	1	3553.01	3.25	0	82.01	0	1.06	0	0	9.77	0	0	0	0	0	0	-36.79	-36.79
Inverter Transformer	MV5-2 T	370011	4908853	2	0	0	56.1	56.1	1	3607.46	3.25	0	82.14	0	1.08	0	0	9.86	0	0	0	0	0	0	-37.03	-37.03
Inverter Transformer	MV2-3 T	365814	4906641	2	0	0	56.1	56.1	1	3633.79	3.25	0	82.21	0	1.1	0	0	9.9	0	0	0	0	0	0	-37.14	-37.14
Inverter Transformer	MV5-3 T	370237	4908851	2	0	0	56.1	56.1	1	3662.62	3.25	0	82.28	0	1.11	0	0	9.94	0	0	0	0	0	0	-37.27	-37.27
Inverter Transformer	MV4-8 T	369262	4909001	2	0	0	56.1	56.1	1	3664.83	3.25	0	82.28	0	1.11	0	0	9.95	0	0	0	0	0	0	-37.28	-37.28
Inverter Transformer	MV4-9 T	369284	4909001	2	0	0	56.1	56.1	1	3665.24	3.25	0	82.28	0	1.11	0	0	9.95	0	0	0	0	0	0	-37.28	-37.28
Inverter Transformer	MV4-7 T	369040	4909001	2	0	0	56.1	56.1	1	3668.14	3.25	0	82.29	0	1.11	0	0	9.95	0	0	0	0	0	0	-37.29	-37.29
Inverter Transformer	MV2-4 T	365590	4906628	2	0	0	56.1	56.1	1	3839.31	3.25	0	82.69	0	1.18	0	0	10.21	0	0	0	0	0	0	-38.02	-38.02
Inverter Transformer	MV4-6 T	369249	4909192	2	0	0	56.1	56.1	1	3855.65	3.25	0	82.72	0	1.19	0	0	10.24	0	0	0	0	0	0	-38.09	-38.09
Inverter Transformer	MV4-5 T	369283	4909199	2	0	0	56.1	56.1	1	3863.18	3.25	0	82.74	0	1.19	0	0	10.25	0	0	0	0	0	0	-38.12	-38.12
Inverter Transformer	MV4-4 T	369033	4909199	2	0	0	56.1	56.1	1	3866.26	3.25	0	82.75	0	1.19	0	0	10.25	0	0	0	0	0	0	-38.13	-38.13
Inverter Transformer	MV5-1 T	370015	4909142	2	0	0	56.1	56.1	1	3890.53	3.25	0	82.8	0	1.2	0	0	10.29	0	0	0	0	0	0	-38.23	-38.23
Inverter Transformer	MV1-15 T	365309	4904994	2	0	0	56.1	56.1	1	3911.63	3.25	0	82.85	0	1.21	0	0	10.32	0	0	0	0	0	0	-38.32	-38.32
Inverter Transformer	MV4-3 T	369234	4909397	2	0	0	56.1	56.1	1	4060.5	3.25	0	83.17	0	1.27	0	0	10.54	0	0	0	0	0	0	-38.93	-38.93
Inverter Transformer	MV4-2 T	369267	4909397	2	0	0	56.1	56.1	1	4060.86	3.25	0	83.17	0	1.27	0	0	10.55	0	0	0	0	0	0	-38.93	-38.93
Inverter Transformer	MV4-1 T	369017	4909397	2	0	0	56.1	56.1	1	4064.78	3.25	0	83.18	0	1.27	0	0	10.55	0	0	0	0	0	0	-38.94	-38.94
Inverter Transformer	MV1-12 T	365044	4905386	2	0	0	56.1	56.1	1	4161.89	3.25	0	83.39	0	1.31	0	0	10.69	0	0	0	0	0	0	-39.33	-39.33
Inverter Transformer	MV1-4 T	364821	4905918	2	0	0	56.1	56.1	1	4422.98	3.25	0	83.91	0	1.41	0	0	11.07	0	0	0	0	0	0	-40.33	-40.33
Inverter Transformer	MV1-8 T	364782	4905647	2	0	0	56.1	56.1	1	4434.48	3.25	0	83.94	0	1.41	0	0	11.08	0	0	0	0	0	0	-40.38	-40.38
Inverter Transformer	MV1-2 T	364759	4906063	2	0	0	56.1	56.1	1	4505.54	3.25	0	84.07	0	1.44	0	0	11.18	0	0	0	0	0	0	-40.64	-40.64
Inverter Transformer	MV1-11 T	364649	4905414	2	0	0	56.1	56.1	1	4557.26	3.25	0	84.17	0	1.46	0	0	11.26	0	0	0	0	0	0	-40.83	-40.83
Inverter Transformer	MV1-1 T	364721	4906166	2	0	0	56.1	56.1	1	4560.65	3.25	0	84.18	0	1.46	0	0	11.26	0	0	0	0	0	0	-40.84	-40.84
Inverter Transformer	MV1-5 T	364676	4905892	2	0	0	56.1	56.1	1	4563.52	3.25	0	84.19	0	1.46	0	0	11.26	0	0	0	0	0	0	-40.86	-40.86
Inverter Transformer	MV1-9 T	364555	4905646	2	0	0	56.1	56.1	1	4660.88	3.25	0	84.37	0	1.5	0	0	11.4	0	0	0	0	0	0	-41.21	-41.21

	Inverter Transformer	MV1-6 T	364482	4905835	2	0	0	56.1	56.1	1	4749.82	3.25	0	84.53	0	1.53	0	0	11.52	0	0	0	0	0	0	-41.53	-41.53
	Inverter Transformer	MV1-3 T	364435	4906039	2	0	0	56.1	56.1	1	4822.03	3.25	0	84.66	0	1.56	0	0	11.62	0	0	0	0	0	0	-41.78	-41.78
	Line Reactor	NGR	369421	4908787.5	5	0	0	45.4	45.4	1	3457.62	5.25	0	81.78	0	3.3	1.33	0.12	1.42	0	0	0	0	0	0	-42.47	-42.47
Limit. Valu	0		0																							
Level D/N:	26.6936		26.6936																							

Receiver: Existing Noise Receptor
ID: W-R5
X: 369338.7
Y: 4905291.1
Z: 4.5
Ground: 0

ISO	Description	ID	X	Y	Z	Ground	ReflOrd	LxT	LxN	L/A	Dist.	hm	Freq	Adiv	K0b	Agr	Abar	z	Aatm	Afol	Ahous	Cmet	CmetN	Dc	RL	LtotT	LtotN
	Sol_Luce Substation	S_Substation	369426	4908792	3.5	0	0	112.1	112.1	1	3501.99	5.25	0	81.89	0	0.45	3.25	0.35	6.69	0	0	0	0	0	0	19.81	19.81
	Inverter	MV6-3	370207	4907140	2	0	0	100.3	100.3	1	2042.64	3.25	0	77.2	0	0.14	0	0	13.55	0	0	0	0	0	0	9.42	9.42
	Inverter	MV3-21	368478	4907206	2	0	0	100.3	100.3	1	2099.44	3.25	0	77.44	0	0.16	0	0	13.67	0	0	0	0	0	0	9.04	9.04
	Inverter	MV3-20	368689	4907317	2	0	0	100.3	100.3	1	2127.53	3.25	0	77.56	0	0.16	0	0	13.73	0	0	0	0	0	0	8.86	8.86
	Inverter	MV6-2	370085	4907339	2	0	0	100.3	100.3	1	2179.65	3.25	0	77.77	0	0.18	0	0	13.83	0	0	0	0	0	0	8.53	8.53
	Inverter	MV3-19	368357	4907347	2	0	0	100.3	100.3	1	2278.26	3.25	0	78.15	0	0.2	0	0	14.03	0	0	0	0	0	0	7.93	7.93
	Inverter	MV3-14	368684	4907498	2	0	0	100.3	100.3	1	2301.97	3.25	0	78.24	0	0.21	0	0	14.08	0	0	0	0	0	0	7.78	7.78
	Inverter	MV3-16	368514	4907475	2	0	0	100.3	100.3	1	2334.43	3.25	0	78.36	0	0.22	0	0	14.14	0	0	0	0	0	0	7.59	7.59
	SubstationTransformer	W_ST	369711.17	4906112.3	2.5	0	0	92	92	1	901.7	3.5	0	70.1	0	-0.38	0	-0.13	2.32	0	0	0	0	0	0	19.94	19.94
	Inverter	MV3-15	368357	4907477	2	0	0	100.3	100.3	1	2396.23	3.25	0	78.59	0	0.23	0	0	14.26	0	0	0	0	0	0	7.23	7.23
	Inverter	MV3-17	368178	4907472	2	0	0	100.3	100.3	1	2470.54	3.25	0	78.86	0	0.25	0	0	14.4	0	0	0	0	0	0	6.8	6.8
	Inverter	MV3-8	368680	4907712	2	0	0	100.3	100.3	1	2508.91	3.25	0	78.99	0	0.26	0	0	14.48	0	0	0	0	0	0	6.59	6.59
	Inverter	MV3-9	368512	4907703	2	0	0	100.3	100.3	1	2549.65	3.25	0	79.13	0	0.27	0	0	14.55	0	0	0	0	0	0	6.36	6.36
	Inverter	MV3-11	368346	4907662	2	0	0	100.3	100.3	1	2570.34	3.25	0	79.2	0	0.27	0	0	14.59	0	0	0	0	0	0	6.25	6.25
	Inverter	MV3-18	367752	4907412	2	0	0	100.3	100.3	1	2648.74	3.25	0	79.46	0	0.29	0	0	14.74	0	0	0	0	0	0	5.82	5.82
	Inverter	MV3-10	368167	4907669	2	0	0	100.3	100.3	1	2650.9	3.25	0	79.47	0	0.29	0	0	14.74	0	0	0	0	0	0	5.81	5.81
	Inverter	MV3-13	367963	4907577	2	0	0	100.3	100.3	1	2667.94	3.25	0	79.52	0	0.29	0	0	14.77	0	0	0	0	0	0	5.72	5.72
	Inverter	MV3-6	368162	4907834	2	0	0	100.3	100.3	1	2801.96	3.25	0	79.95	0	0.32	0	0	15.02	0	0	0	0	0	0	5.02	5.02
	Inverter	MV3-7	367945	4907754	2	0	0	100.3	100.3	1	2829.89	3.25	0	80.04	0	0.33	0	0	15.07	0	0	0	0	0	0	4.88	4.88
	Inverter	MV3-12	367668	4907594	2	0	0	100.3	100.3	1	2845.1	3.25	0	80.08	0	0.33	0	0	15.1	0	0	0	0	0	0	4.8	4.8
	Inverter	MV3-3	367939	4907927	2	0	0	100.3	100.3	1	2984.48	3.25	0	80.5	0	0.36	0	0	15.34	0	0	0	0	0	0	4.11	4.11
	Inverter	MV6-1	370235	4907364	2	0	0	97.3	97.3	1	2258.38	3.25	0	78.08	0	0.2	0	0	13.99	0	0	0	0	0	0	5.05	5.05
	Westbrook Inverter Enclosur	W_INV3	369508	4906164	2	0	0	89.1	89.1	1	889.17	3.25	0	69.98	0	0.66	0	0	6.1	0	0	0	0	0	0	12.32	12.32
	Westbrook Inverter Enclosur	W_INV4	369673	4906164	2	0	0	89.1	89.1	1	934.73	3.25	0	70.41	0	0.67	0	0	6.19	0	0	0	0	0	0	11.78	11.78
	Inverter	MV5-5	370015	4908690	2	0	0	100.3	100.3	1	3465.53	3.25	0	81.8	0	0.45	0	0	16.17	0	0	0	0	0	0	1.9	1.9
	Inverter	MV5-4	370324	4908707	2	0	0	100.3	100.3	1	3555.16	3.25	0	82.02	0	0.46	0	0	16.32	0	0	0	0	0	0	1.51	1.51
	Inverter	MV4-11	369264	4908855	2	0	0	100.3	100.3	1	3564.68	3.25	0	82.04	0	0.46	0	0	16.34	0	0	0	0	0	0	1.47	1.47
	Inverter	MV4-10	369312	4908858	2	0	0	100.3	100.3	1	3567	3.25	0	82.05	0	0.46	0	0	16.34	0	0	0	0	0	0	1.46	1.46
	Inverter	MV5-2	370006	4908853	2	0	0	100.3	100.3	1	3623.87	3.25	0	82.18	0	0.47	0	0	16.44	0	0	0	0	0	0	1.22	1.22
	Inverter	MV5-3	370231	4908851	2	0	0	100.3	100.3	1	3670.03	3.25	0	82.29	0	0.48	0	0	16.51	0	0	0	0	0	0	1.03	1.03
	Inverter	MV4-9	369289	4909001	2	0	0	100.3	100.3	1	3710.23	3.25	0	82.39	0	0.48	0	0	16.58	0	0	0	0	0	0	0.86	0.86
	Inverter	MV4-8	369256	4909001	2	0	0	100.3	100.3	1	3710.82	3.25	0	82.39	0	0.48	0	0	16.58	0	0	0	0	0	0	0.86	0.86
	Inverter	MV4-7	369035	4909001	2	0	0	100.3	100.3	1	3722.31	3.25	0	82.42	0	0.49	0	0	16.6	0	0	0	0	0	0	0.81	0.81
	Inverter	MV2-3	365820	4906641	2	0	0	100.3	100.3	1	3768.75	3.25	0	82.52	0	0.49	0	0	16.68	0	0	0	0	0	0	0.62	0.62
	Inverter	MV4-6	369243	4909192	2	0	0	100.3	100.3	1	3902.07	3.25	0	82.83	0	0.51	0	0	16.89	0	0	0	0	0	0	0.08	0.08
	Inverter	MV4-5	369289	4909199	2	0	0	100.3	100.3	1	3908.22	3.25	0	82.84	0	0.51	0	0	16.9	0	0	0	0	0	0	0.06	0.06
	Inverter	MV5-1	370020	4909142	2	0	0	100.3	100.3	1	3910.7	3.25	0	82.85	0	0.51	0	0	16.91	0	0	0	0	0	0	0.05	0.05
	Inverter	MV4-4	369027	4909199	2	0	0	100.3	100.3	1	3920.31	3.25	0	82.87	0	0.52	0	0	16.92	0	0	0	0	0	0	0.01	0.01
	Inverter	MV2-4	365586	4906624	2	0	0	100.3	100.3	1	3982.38	3.25	0	83	0	0.52	0	0	17.02	0	0	0	0	0	0	-0.24	-0.24
	Westbrook Inverter Enclosur	W_INV2	369374	4906388	2	0	0	89.1	89.1	1	1097.47	3.25	0	71.81	0	0.71	0	0	6.5	0	0	0	0	0	0	10.05	10.05
	Inverter	MV1-15	365315	4904994	2	0	0	100.3	100.3	1	4034.65	3.25	0	83.12	0	0.53	0	0	17.1	0	0	0	0	0	0	-0.44	-0.44
	Inverter	MV4-2	369272	4909397	2	0	0	100.3	100.3	1	4106.44	3.25	0	83.27	0	0.54	0	0	17.22	0	0	0	0	0	0	-0.72	-0.72
	Inverter	MV4-3	369229	4909397	2	0	0	100.3	100.3	1	4107.37	3.25	0	83.27	0	0.54	0	0	17.22	0	0	0	0	0	0	-0.72	-0.72
	Inverter	MV4-1	369011	4909397	2	0	0	100.3	100.3	1	4118.96	3.25	0	83.3	0	0.54	0	0	17.24	0	0	0	0	0	0	-0.76	-0.76
	Inverter	MV1-12	365038	4905386	2	0	0	100.3	100.3	1	4301.75	3.25	0	83.67	0	0.57	0	0	17.52	0	0	0	0	0	0	-1.45	-1.45
	Westbrook Inverter Enclosur	W_INV7	369780	4906417	2	0	0	89.1	89.1	1	1209.3	3.25	0	72.65	0	0.73	0	0	6.7	0	0	0	0	0	0	8.98	8.98
	Inverter	MV1-8	364788	4905647	2	0	0	100.3	100.3	1	4564.6	3.25	0	84.19	0	0.6	0	0	17.93	0	0	0	0	0	0	-2.4	-2.4
	Inverter	MV1-4	364815	4905918	2	0	0	100.3	100.3	1	4566.93	3.25	0	84.19	0	0.6	0	0	17.93	0	0	0	0	0	0	-2.41	-2.41
	Inverter	MV1-2	364753	4906063	2	0	0	100.3	100.3	1	4650.21	3.25	0	84.35	0	0.61	0	0	18.06	0	0	0	0	0	0	-2.7	-2.7
	Inverter	MV1-11	364655	4905414	2	0	0	100.3	100.3	1	4685.31	3.25	0	84.41	0	0.61	0	0	18.11	0	0	0	0	0	0	-2.83	-2.83
	Inverter	MV1-1	364715	4906166	2	0	0	100.3	100.3	1	4705.75	3.25	0	84.45	0	0.61	0	0	18.14	0	0	0	0	0	0	-2.9	-2.9
	Inverter	MV1-5	364671	4905892	2	0	0	100.3	100.3	1	4706.22	3.25	0	84.45	0	0.61	0	0	18.14	0	0	0	0	0	0	-2.9	-2.9
	Inverter	MV1-9	364561	4905646	2	0	0	100.3	100.3	1	4790.86	3.25	0	84.61	0	0.62	0	0	18.27	0	0	0	0	0	0	-3.19	-3.19
	Westbrook Inverter Enclosur	W_INV5	369719	4906574	2	0	0	89.1	89.1	1	1338.08	3.25	0	73.53	0	0.76	0	0	6.93	0	0	0	0	0	0	7.84	7.84
	Inverter	MV1-6	364477	4905835	2	0	0	100.3	100.3	1	4892.03	3.25	0	84.79	0	0.63	0	0	18.42	0	0	0	0	0	0	-3.53	-3.53
	Westbrook Inverter Enclosur	W_INV6	369875	4906578	2	0	0	89.1	89.1	1	1394.18	3.25	0	73.89	0	0.77	0	0	7.03	0	0	0	0	0	0	7.38	7.38
	DSTATCOM - 10 MVAR #2	DSAT2	369403	4908757	2.5	0	0	96.6	96.6	1	3466.5	3.5	0	81.8	0	3.49	0	0	2.56	0	0	0	0	0	0	8.78	8.78
	DSTATCOM - 10 MVAR #1	DSAT1	369437	4908757	2.5	0	0	96.6	96.6	1	3467.29	3.5	0	81.8	0	3.49	0	0	2.56	0	0	0	0	0	0	8.78	8.78
	Inverter	MV2-1	365842	4906816	2	0	0	97.3	97.3	1	3814.74	3.25	0	82.63	0	0.5	0	0	16.75	0	0	0	0	0	0	-2.57	-2.57
	Inverter	MV1-14	365163	4905049	2	0	0	97.3	97.3	1	4182.71	3.25	0	83.43	0	0.55	0	0	17.34	0	0	0	0	0	0	-4.01	-4.01

Inverter	MV1-10	365004	4905564	2	0	0	97.3	97.3	1	4343.28	3.25	0	83.76	0	0.57	0	0	17.59	0	0	0	0	0	0	-4.61	-4.61
Inverter	MV1-7	364925	4905782	2	0	0	97.3	97.3	1	4440.92	3.25	0	83.95	0	0.58	0	0	17.74	0	0	0	0	0	0	-4.96	-4.96
Inverter	MV1-13	364731	4905241	2	0	0	97.3	97.3	1	4607.97	3.25	0	84.27	0	0.6	0	0	17.99	0	0	0	0	0	0	-5.56	-5.56
Westbrook Inverter Enclosur	W_INV1	369409	4906578	2	0	0	86.1	86.1	1	1288.82	3.25	0	73.2	0	0.75	0	0	6.84	0	0	0	0	0	0	5.27	5.27
Inverter	MV3-22	368656	4907142	2	0	0	89.1	89.1	1	1972.79	3.25	0	76.9	0	0.9	0	0	8	0	0	0	0	0	0	3.25	3.25
Inverter	MV6-4	370250	4906966	2	0	0	86.1	86.1	1	1906.77	3.25	0	76.61	0	0.89	0	0	7.89	0	0	0	0	0	0	0.67	0.67
Inverter	MV3-2	368671	4907928	2	0	0	89.1	89.1	1	2720.12	3.25	0	79.69	0	1.08	0	0	9.19	0	0	0	0	0	0	-0.9	-0.9
Inverter	MV3-5	368340	4907843	2	0	0	89.1	89.1	1	2740.37	3.25	0	79.76	0	1.08	0	0	9.22	0	0	0	0	0	0	-1	-1
Gardiner Substation	G_Sub	366586.3	4903349.9	2.5	0	0	90.8	90.8	1	3368.08	4.25	0	81.55	0	1.19	2.88	0.31	6.5	0	0	0	0	0	0	-1.34	-1.34
Inverter	MV3-4	368502	4907925	2	0	0	89.1	89.1	1	2763.6	3.25	0	79.83	0	1.09	0	0	9.26	0	0	0	0	0	0	-1.12	-1.12
Inverter	MV3-1	368156	4907976	2	0	0	89.1	89.1	1	2933.85	3.25	0	80.35	0	1.13	0	0	9.52	0	0	0	0	0	0	-1.94	-1.94
Fixed Reactor Bank 1	FRB1	369378	4908755	6	0	0	89.8	89.8	1	3464.12	5.25	0	81.79	0	-0.8	0	0	6.63	0	0	0	0	0	0	2.16	2.16
Fixed Reactor Bank 2	FRB2	369464	4908755	6	0	0	89.8	89.8	1	3466.17	5.25	0	81.8	0	-0.8	0	0	6.63	0	0	0	0	0	0	2.15	2.15
Inverter	MV4-15	369176	4908481	2	0	0	89.1	89.1	1	3194.05	3.25	0	81.09	0	1.19	0	0	9.91	0	0	0	0	0	0	-3.13	-3.13
Inverter	MV4-14	369176	4908507	2	0	0	89.1	89.1	1	3220.01	3.25	0	81.16	0	1.2	0	0	9.95	0	0	0	0	0	0	-3.25	-3.25
Inverter	MV5-6	369982	4908507	2	0	0	89.1	89.1	1	3279.61	3.25	0	81.32	0	1.22	0	0	10.04	0	0	0	0	0	0	-3.51	-3.51
Inverter	MV4-13	369051	4908605	2	0	0	89.1	89.1	1	3326.37	3.25	0	81.44	0	1.23	0	0	10.11	0	0	0	0	0	0	-3.71	-3.71
Westbrook Inverter Transfor	W_INVTR3	369514	4906164	2	0	0	77.3	77.3	1	890.33	3.25	0	69.99	0	-1.86	0	0	0.61	0	0	0	0	0	0	8.6	8.6
Inverter	MV4-12	369043	4908803	2	0	0	89.1	89.1	1	3524.33	3.25	0	81.94	0	1.28	0	0	10.4	0	0	0	0	0	0	-4.56	-4.56
Westbrook Inverter Transfor	W_INVTR4	369679	4906164	2	0	0	77.3	77.3	1	936.89	3.25	0	70.43	0	-1.89	0	0	0.64	0	0	0	0	0	0	8.16	8.16
Inverter	MV2-2	365977	4906654	2	0	0	89.1	89.1	1	3627.47	3.25	0	82.19	0	1.3	0	0	10.55	0	0	0	0	0	0	-4.98	-4.98
Inverters	G_Inv2	366676.9	4903239.1	2	0	0	87.7	87.7	1	3360.94	3.25	0	81.53	0	2.73	0	0	4.18	0	0	0	0	0	0	-0.78	-0.78
Inverters	G_Inv4	366732.8	4903105	2	0	0	87.7	87.7	1	3401.43	3.25	0	81.63	0	2.74	0	0	4.22	0	0	0	0	0	0	-0.93	-0.93
Inverters	G_Inv6	366788.5	4902972	2	0	0	87.7	87.7	1	3446.99	3.25	0	81.75	0	2.74	0	0	4.27	0	0	0	0	0	0	-1.1	-1.1
Inverters	G_Inv1	366526.4	4903225.8	2	0	0	87.7	87.7	1	3489.2	3.25	0	81.85	0	2.75	0	0	4.32	0	0	0	0	0	0	-1.26	-1.26
Inverters	G_Inv8	366844.5	4902838.5	2	0	0	87.7	87.7	1	3498.04	3.25	0	81.88	0	2.75	0	0	4.33	0	0	0	0	0	0	-1.29	-1.29
Inverters	G_Inv3	366583.7	4903091.4	2	0	0	87.7	87.7	1	3525.44	3.25	0	81.94	0	2.75	0	0	4.36	0	0	0	0	0	0	-1.39	-1.39
Inverters	G_Inv10	366900.7	4902704.8	2	0	0	87.7	87.7	1	3554.26	3.25	0	82.01	0	2.75	0	0	4.39	0	0	0	0	0	0	-1.5	-1.5
Inverters	G_Inv5	366638.5	4902958.1	2	0	0	87.7	87.7	1	3568.47	3.25	0	82.05	0	2.75	0	0	4.4	0	0	0	0	0	0	-1.55	-1.55
Westbrook Inverter Transfor	W_INVTR2	369368	4906388	2	0	0	77.3	77.3	1	1097.29	3.25	0	71.81	0	-1.99	0	0	0.73	0	0	0	0	0	0	6.79	6.79
Inverters	G_Inv7	366694.6	4902824.7	2	0	0	87.7	87.7	1	3615.85	3.25	0	82.16	0	2.76	0	0	4.46	0	0	0	0	0	0	-1.72	-1.72
Inverters	G_Inv9	366750.9	4902691.8	2	0	0	87.7	87.7	1	3667.84	3.25	0	82.29	0	2.76	0	0	4.51	0	0	0	0	0	0	-1.9	-1.9
Westbrook Inverter Transfor	W_INVTR1	369403	4906578	2	0	0	78.2	78.2	1	1288.51	3.25	0	73.2	0	-2.1	0	0	0.84	0	0	0	0	0	0	6.3	6.3
Westbrook Inverter Transfor	W_INVTR7	369786	4906417	2	0	0	77.3	77.3	1	1211.5	3.25	0	72.67	0	-2.06	0	0	0.8	0	0	0	0	0	0	5.93	5.93
Inverter	MV1-3	364440	4906039	2	0	0	89.1	89.1	1	4955.46	3.25	0	84.9	0	1.63	0	0	12.4	0	0	0	0	0	0	-9.88	-9.88
Westbrook Inverter Transfor	W_INVTR5	369725	4906574	2	0	0	77.3	77.3	1	1339.8	3.25	0	73.54	0	-2.12	0	0	0.87	0	0	0	0	0	0	5.06	5.06
Westbrook Inverter Transfor	W_INVTR6	369881	4906578	2	0	0	77.3	77.3	1	1396.5	3.25	0	73.9	0	-2.15	0	0	0.9	0	0	0	0	0	0	4.69	4.69
Inverter Transformer	MV6-4 T	370244	4906966	2	0	0	69.4	69.4	1	1903.91	3.25	0	76.59	0	2.14	0	0	4.87	0	0	0	0	0	0	-14.25	-14.25
Inverter Transformer	MV6-1 T	370230	4907364	2	0	0	69.4	69.4	1	2256.4	3.25	0	78.07	0	2.27	0	0	5.22	0	0	0	0	0	0	-16.2	-16.2
Inverter Transformer	MV2-1 T	365836	4906816	2	0	0	69.4	69.4	1	3820.24	3.25	0	82.64	0	2.74	0	0	6.54	0	0	0	0	0	0	-22.57	-22.57
Inverter Transformer	MV1-14 T	365157	4905049	2	0	0	69.4	69.4	1	4188.7	3.25	0	83.44	0	2.83	0	0	6.82	0	0	0	0	0	0	-23.74	-23.74
Inverter Transformer	MV1-10 T	365010	4905564	2	0	0	69.4	69.4	1	4337.29	3.25	0	83.74	0	2.87	0	0	6.92	0	0	0	0	0	0	-24.19	-24.19
Inverter Transformer	MV1-7 T	364919	4905782	2	0	0	69.4	69.4	1	4446.88	3.25	0	83.96	0	2.89	0	0	7	0	0	0	0	0	0	-24.51	-24.51
Inverter Transformer	MV1-13 T	364725	4905241	2	0	0	69.4	69.4	1	4613.97	3.25	0	84.28	0	2.93	0	0	7.12	0	0	0	0	0	0	-24.98	-24.98
Inverter Transformer	MV3-22 T	368661	4907142	2	0	0	56.1	56.1	1	1971.07	3.25	0	76.89	0	0.39	0	0	6.99	0	0	0	0	0	0	-28.21	-28.21
Inverter Transformer	MV6-3 T	370202	4907140	2	0	0	56.1	56.1	1	2040.52	3.25	0	77.19	0	0.42	0	0	7.12	0	0	0	0	0	0	-28.68	-28.68
Inverter Transformer	MV3-21 T	368484	4907206	2	0	0	56.1	56.1	1	2096.99	3.25	0	77.43	0	0.44	0	0	7.23	0	0	0	0	0	0	-29.05	-29.05
Inverter Transformer	MV3-20 T	368683	4907317	2	0	0	56.1	56.1	1	2129.37	3.25	0	77.57	0	0.46	0	0	7.3	0	0	0	0	0	0	-29.26	-29.26
Inverter Transformer	MV6-2 T	370091	4907339	2	0	0	56.1	56.1	1	2181.71	3.25	0	77.78	0	0.48	0	0	7.4	0	0	0	0	0	0	-29.59	-29.59
Inverter Transformer	MV3-19 T	368352	4907347	2	0	0	56.1	56.1	1	2280.42	3.25	0	78.16	0	0.52	0	0	7.58	0	0	0	0	0	0	-30.21	-30.21
Inverter Transformer	MV3-14 T	368678	4907498	2	0	0	56.1	56.1	1	2303.68	3.25	0	78.25	0	0.53	0	0	7.63	0	0	0	0	0	0	-30.35	-30.35
Inverter Transformer	MV3-16 T	368509	4907475	2	0	0	56.1	56.1	1	2336.2	3.25	0	78.37	0	0.55	0	0	7.69	0	0	0	0	0	0	-30.55	-30.55
Inverter Transformer	MV3-15 T	368351	4907477	2	0	0	56.1	56.1	1	2398.69	3.25	0	78.6	0	0.57	0	0	7.8	0	0	0	0	0	0	-30.92	-30.92
Inverter Transformer	MV3-17 T	368183	4907472	2	0	0	56.1	56.1	1	2468.19	3.25	0	78.85	0	0.6	0	0	7.93	0	0	0	0	0	0	-31.32	-31.32
Inverter Transformer	MV3-8 T	368685	4907712	2	0	0	56.1	56.1	1	2507.61	3.25	0	78.99	0	0.62	0	0	8	0	0	0	0	0	0	-31.55	-31.55
Inverter Transformer	MV3-9 T	368517	4907703	2	0	0	56.1	56.1	1	2548.03	3.25	0	79.12	0	0.64	0	0	8.08	0	0	0	0	0	0	-31.78	-31.78
Inverter Transformer	MV3-11 T	368340	4907662	2	0	0	56.1	56.1	1	2572.66	3.25	0	79.21	0	0.65	0	0	8.12	0	0	0	0	0	0	-31.92	-31.92
Inverter Transformer	MV3-18 T	367757	4907412	2	0	0	56.1	56.1	1	2645.75	3.25	0	79.45	0	0.68	0	0	8.25	0	0	0	0	0	0	-32.32	-32.32
Inverter Transformer	MV3-10 T	368162	4907669	2	0	0	56.1	56.1	1	2653.12	3.25	0	79.48	0	0.68	0	0	8.27	0	0	0	0	0	0	-32.36	-32.36
Inverter Transformer	MV3-13 T	367958	4907577	2	0	0	56.1	56.1	1	2670.52	3.25	0	79.53	0	0.69	0	0	8.3	0	0	0	0	0	0	-32.46	-32.46
Inverter Transformer	MV3-2 T	368677	4907928	2	0	0	56.1	56.1	1	2718.66	3.25	0	79.69	0	0.71	0	0	8.38	0	0	0	0	0	0	-32.72	-32.72
Inverter Transformer	MV3-5 T	368335	4907843	2	0	0	56.1	56.1	1	2742.19	3.25	0	79.76	0	0.72	0	0	8.42	0	0	0	0	0	0	-32.85	-32.85
Inverter Transformer	MV3-4 T	368507	4907925	2	0	0	56.1	56.1	1	2762.09	3.25	0	79.82	0	0.73	0	0	8.46	0	0	0	0	0	0	-32.95	-32.95
Inverter Transformer	MV3-6 T	368156	4907834	2	0	0	56.1	56.1	1	2804.48	3.25	0	79.96	0	0.75	0	0	8.53	0	0	0	0	0	0	-33.18	-33.18
Inverter Transformer	MV3-7 T	367951	4907754	2	0	0	56.1	56.1	1	2826.94	3.25	0	80.03	0	0.76	0	0	8.57	0	0	0	0	0	0	-33.3	-33.3
Inverter Transformer	MV3-12 T	367674	4907594	2	0	0	56.1	56.1	1	2841.58	3.25	0	80.07	0	0.76	0	0	8.6	0	0	0	0	0	0	-33.37	-33.37
Inverter Transformer	MV3-1 T	368150	4907976	2	0	0	56.1	56.1	1	2936.27	3.25	0	80.36	0	0.8	0	0	8.76	0	0	0	0	0	0	-33.86	-33.86
Inverter Transformer	MV3-3 T	367944	4907927	2	0	0	56.1	56.1	1	2982.14	3.25	0	80.49	0	0.82	0	0	8.84	0	0	0	0	0	0	-34.09	-34.09
Inverter Transformer	MV4-15 T	369170	4908481	2	0	0	56.1	56.1	1	3194.36	3.25	0	81.09	0	0.91	0	0	9.19	0	0	0	0	0	0	-35.13	-35.13
Inverter Transformer	MV4-14 T	369182	4908507	2	0	0	56.1	56.1	1	3219.72	3.25	0	81.16	0	0.92	0	0	9.24	0	0	0	0	0	0	-35.26	-35.26
Inverter Transformer	MV5-6 T	369987	4908507	2	0	0	56.1	56.1	1	3280.6	3.25	0	81.32	0	0.95	0	0	9.33	0	0	0	0	0	0	-35.54	-35.54
Inverter Transformer	MV4-13 T	369057	4908605	2	0	0	56.1	56.1	1	3325.85	3.25	0	81.44	0	0.97	0	0	9.41	0	0	0	0	0	0	-35.76	-35.76
Inverter Transformer	MV5-5 T	370021	4908690	2	0	0	56.1	56.1	1	3466.71	3.25	0	81.8	0	1.03	0	0	9.63	0	0	0	0	0	0	-36.4	-36.4
Inverter Transformer	MV4-12 T	369049	4908803	2	0	0	56.1	56.1	1	3523.83	3.25	0	81.94	0	1.05	0	0	9.73	0	0	0	0	0	0	-36.66	-36.66

	Inverter Transformer	MV5-4 T	370330	4908707	2	0	0	56.1	56.1	1	3556.83	3.25	0	82.02	0	1.06	0	0	9.78	0	0	0	0	0	0	-36.8	-36.8
	Inverter Transformer	MV4-11 T	369269	4908855	2	0	0	56.1	56.1	1	3564.58	3.25	0	82.04	0	1.07	0	0	9.79	0	0	0	0	0	0	-36.84	-36.84
	Inverter Transformer	MV4-10 T	369307	4908858	2	0	0	56.1	56.1	1	3567.04	3.25	0	82.05	0	1.07	0	0	9.79	0	0	0	0	0	0	-36.85	-36.85
	Inverter Transformer	MV2-2 T	365982	4906654	2	0	0	56.1	56.1	1	3622.84	3.25	0	82.18	0	1.09	0	0	9.88	0	0	0	0	0	0	-37.09	-37.09
	Inverter Transformer	MV5-2 T	370011	4908853	2	0	0	56.1	56.1	1	3624.79	3.25	0	82.19	0	1.09	0	0	9.88	0	0	0	0	0	0	-37.1	-37.1
	Inverter Transformer	MV5-3 T	370237	4908851	2	0	0	56.1	56.1	1	3671.49	3.25	0	82.3	0	1.11	0	0	9.96	0	0	0	0	0	0	-37.31	-37.31
	Inverter Transformer	MV4-9 T	369284	4909001	2	0	0	56.1	56.1	1	3710.3	3.25	0	82.39	0	1.13	0	0	10.02	0	0	0	0	0	0	-37.47	-37.47
	Inverter Transformer	MV4-8 T	369262	4909001	2	0	0	56.1	56.1	1	3710.69	3.25	0	82.39	0	1.13	0	0	10.02	0	0	0	0	0	0	-37.47	-37.47
	Inverter Transformer	MV4-7 T	369040	4909001	2	0	0	56.1	56.1	1	3721.91	3.25	0	82.42	0	1.13	0	0	10.03	0	0	0	0	0	0	-37.52	-37.52
	Inverter Transformer	MV2-3 T	365814	4906641	2	0	0	56.1	56.1	1	3774.35	3.25	0	82.54	0	1.15	0	0	10.11	0	0	0	0	0	0	-37.75	-37.75
	Inverter Transformer	MV4-6 T	369249	4909192	2	0	0	56.1	56.1	1	3901.93	3.25	0	82.83	0	1.2	0	0	10.31	0	0	0	0	0	0	-38.28	-38.28
	Inverter Transformer	MV4-5 T	369283	4909199	2	0	0	56.1	56.1	1	3908.3	3.25	0	82.84	0	1.21	0	0	10.32	0	0	0	0	0	0	-38.31	-38.31
	Inverter Transformer	MV5-1 T	370015	4909142	2	0	0	56.1	56.1	1	3909.84	3.25	0	82.84	0	1.21	0	0	10.32	0	0	0	0	0	0	-38.31	-38.31
	Inverter Transformer	MV4-4 T	369033	4909199	2	0	0	56.1	56.1	1	3919.84	3.25	0	82.87	0	1.21	0	0	10.34	0	0	0	0	0	0	-38.35	-38.35
	Inverter Transformer	MV2-4 T	365590	4906628	2	0	0	56.1	56.1	1	3979.96	3.25	0	83	0	1.24	0	0	10.43	0	0	0	0	0	0	-38.6	-38.6
	Inverter Transformer	MV1-15 T	365309	4904994	2	0	0	56.1	56.1	1	4040.64	3.25	0	83.13	0	1.26	0	0	10.52	0	0	0	0	0	0	-38.85	-38.85
	Inverter Transformer	MV4-2 T	369267	4909397	2	0	0	56.1	56.1	1	4106.53	3.25	0	83.27	0	1.29	0	0	10.61	0	0	0	0	0	0	-39.11	-39.11
	Inverter Transformer	MV4-3 T	369234	4909397	2	0	0	56.1	56.1	1	4107.24	3.25	0	83.27	0	1.29	0	0	10.61	0	0	0	0	0	0	-39.11	-39.11
	Inverter Transformer	MV4-1 T	369017	4909397	2	0	0	56.1	56.1	1	4118.48	3.25	0	83.29	0	1.29	0	0	10.63	0	0	0	0	0	0	-39.16	-39.16
	Inverter Transformer	MV1-12 T	365044	4905386	2	0	0	56.1	56.1	1	4295.75	3.25	0	83.66	0	1.36	0	0	10.89	0	0	0	0	0	0	-39.85	-39.85
	Inverter Transformer	MV1-4 T	364821	4905918	2	0	0	56.1	56.1	1	4560.99	3.25	0	84.18	0	1.46	0	0	11.26	0	0	0	0	0	0	-40.85	-40.85
	Inverter Transformer	MV1-8 T	364782	4905647	2	0	0	56.1	56.1	1	4570.58	3.25	0	84.2	0	1.47	0	0	11.27	0	0	0	0	0	0	-40.88	-40.88
	Inverter Transformer	MV1-2 T	364759	4906063	2	0	0	56.1	56.1	1	4644.3	3.25	0	84.34	0	1.49	0	0	11.38	0	0	0	0	0	0	-41.15	-41.15
	Inverter Transformer	MV1-11 T	364649	4905414	2	0	0	56.1	56.1	1	4691.31	3.25	0	84.43	0	1.51	0	0	11.44	0	0	0	0	0	0	-41.32	-41.32
	Inverter Transformer	MV1-1 T	364721	4906166	2	0	0	56.1	56.1	1	4699.85	3.25	0	84.44	0	1.52	0	0	11.45	0	0	0	0	0	0	-41.35	-41.35
	Inverter Transformer	MV1-5 T	364676	4905892	2	0	0	56.1	56.1	1	4701.26	3.25	0	84.44	0	1.52	0	0	11.45	0	0	0	0	0	0	-41.35	-41.35
	Inverter Transformer	MV1-9 T	364555	4905646	2	0	0	56.1	56.1	1	4796.85	3.25	0	84.62	0	1.55	0	0	11.58	0	0	0	0	0	0	-41.69	-41.69
	Inverter Transformer	MV1-6 T	364482	4905835	2	0	0	56.1	56.1	1	4887.06	3.25	0	84.78	0	1.58	0	0	11.7	0	0	0	0	0	0	-42.01	-42.01
	Inverter Transformer	MV1-3 T	364435	4906039	2	0	0	56.1	56.1	1	4960.41	3.25	0	84.91	0	1.61	0	0	11.8	0	0	0	0	0	0	-42.26	-42.26
	Line Reactor	NGR	369421	4908787.5	5	0	0	45.4	45.4	1	3497.37	5.25	0	81.87	0	3.3	1.33	0.12	1.43	0	0	0	0	0	0	-42.58	-42.58
Limit. Valu	0	0																								
Level D/N:	26.5835	26.5835																								

Receiver: Existing Noise Receptor
ID: W-R6
X: 369271
Y: 4905237.8
Z: 4.5
Ground: 0

ISO	Description	ID	X	Y	Z	Ground	ReflOrd	LxT	LxN	L/A	Dist.	hm	Freq	Adiv	K0b	Agr	Abar	z	Aatm	Afol	Ahous	Cmet	CmetN	Dc	RL	LtotT	LtotN
	Sol_Luce Substation	S_Substation	369426	4908792	3.5	0	0	112.1	112.1	1	3557.58	5.25	0	82.02	0	0.47	3.23	0.35	6.76	0	0	0	0	0	0	19.59	19.59
	Inverter	MV6-3	370207	4907140	2	0	0	100.3	100.3	1	2120.02	3.25	0	77.53	0	0.16	0	0	13.71	0	0	0	0	0	0	8.91	8.91
	Inverter	MV3-21	368478	4907206	2	0	0	100.3	100.3	1	2121.95	3.25	0	77.53	0	0.16	0	0	13.71	0	0	0	0	0	0	8.9	8.9
	Inverter	MV3-20	368689	4907317	2	0	0	100.3	100.3	1	2159.12	3.25	0	77.69	0	0.17	0	0	13.79	0	0	0	0	0	0	8.66	8.66
	Inverter	MV6-2	370085	4907339	2	0	0	100.3	100.3	1	2253.36	3.25	0	78.06	0	0.2	0	0	13.98	0	0	0	0	0	0	8.08	8.08
	Inverter	MV3-19	368357	4907347	2	0	0	100.3	100.3	1	2298.72	3.25	0	78.23	0	0.21	0	0	14.07	0	0	0	0	0	0	7.8	7.8
	Inverter	MV3-14	368684	4907498	2	0	0	100.3	100.3	1	2335.18	3.25	0	78.37	0	0.22	0	0	14.14	0	0	0	0	0	0	7.59	7.59
	Inverter	MV3-16	368514	4907475	2	0	0	100.3	100.3	1	2361.8	3.25	0	78.46	0	0.22	0	0	14.19	0	0	0	0	0	0	7.43	7.43
	Inverter	MV3-15	368357	4907477	2	0	0	100.3	100.3	1	2418.56	3.25	0	78.67	0	0.24	0	0	14.3	0	0	0	0	0	0	7.1	7.1
	Inverter	MV3-17	368178	4907472	2	0	0	100.3	100.3	1	2487.23	3.25	0	78.91	0	0.25	0	0	14.43	0	0	0	0	0	0	6.71	6.71
	Inverter	MV3-8	368680	4907712	2	0	0	100.3	100.3	1	2543.81	3.25	0	79.11	0	0.27	0	0	14.54	0	0	0	0	0	0	6.39	6.39
	SubstationTransformer	W_ST	369711.17	4906112.3	2.5	0	0	92	92	1	979.01	3.5	0	70.82	0	-0.37	0	-0.13	2.48	0	0	0	0	0	0	19.06	19.06
	Inverter	MV3-9	368512	4907703	2	0	0	100.3	100.3	1	2579.4	3.25	0	79.23	0	0.28	0	0	14.61	0	0	0	0	0	0	6.2	6.2
	Inverter	MV3-11	368346	4907662	2	0	0	100.3	100.3	1	2594.68	3.25	0	79.28	0	0.28	0	0	14.64	0	0	0	0	0	0	6.12	6.12
	Inverter	MV3-18	367752	4907412	2	0	0	100.3	100.3	1	2652.27	3.25	0	79.47	0	0.29	0	0	14.74	0	0	0	0	0	0	5.81	5.81
	Inverter	MV3-10	368167	4907669	2	0	0	100.3	100.3	1	2670.12	3.25	0	79.53	0	0.29	0	0	14.78	0	0	0	0	0	0	5.71	5.71
	Inverter	MV3-13	367963	4907577	2	0	0	100.3	100.3	1	2680.06	3.25	0	79.56	0	0.3	0	0	14.79	0	0	0	0	0	0	5.66	5.66
	Inverter	MV3-6	368162	4907834	2	0	0	100.3	100.3	1	2823.14	3.25	0	80.01	0	0.33	0	0	15.06	0	0	0	0	0	0	4.91	4.91
	Inverter	MV3-7	367945	4907754	2	0	0	100.3	100.3	1	2844.21	3.25	0	80.08	0	0.33	0	0	15.09	0	0	0	0	0	0	4.81	4.81
	Inverter	MV3-12	367668	4907594	2	0	0	100.3	100.3	1	2849.79	3.25	0	80.1	0	0.33	0	0	15.1	0	0	0	0	0	0	4.78	4.78
	Inverter	MV3-3	367939	4907927	2	0	0	100.3	100.3	1	3001	3.25	0	80.55	0	0.36	0	0	15.37	0	0	0	0	0	0	4.03	4.03
	Inverter	MV6-1	370235	4907364	2	0	0	97.3	97.3	1	2334.53	3.25	0	78.36	0	0.22	0	0	14.14	0	0	0	0	0	0	4.59	4.59
	Westbrook Inverter Enclosur	W_INV3	369508	4906164	2	0	0	89.1	89.1	1	956.04	3.25	0	70.61	0	0.68	0	0	6.23	0	0	0	0	0	0	11.54	11.54
	Inverter	MV5-5	370015	4908690	2	0	0	100.3	100.3	1	3531.46	3.25	0	81.96	0	0.46	0	0	16.28	0	0	0	0	0	0	1.61	1.61
	Inverter	MV4-11	369264	4908855	2	0	0	100.3	100.3	1	3617.21	3.25	0	82.17	0	0.47	0	0	16.43	0	0	0	0	0	0	1.25	1.25
	Inverter	MV4-10	369312	4908858	2	0	0	100.3	100.3	1	3620.43	3.25	0	82.18	0	0.47	0	0	16.43	0	0	0	0	0	0	1.23	1.23
	Inverter	MV5-4	370324	4908707	2	0	0	100.3	100.3	1	3625.49	3.25	0	82.19	0	0.47	0	0	16.44	0	0	0	0	0	0	1.21	1.21
	Westbrook Inverter Enclosur	W_INV4	369673	4906164	2	0	0	89.1	89.1	1	1009.68	3.25	0	71.08	0	0.69	0	0	6.33	0	0	0	0	0	0	10.95	10.95
	Inverter	MV5-2	370006	4908853	2	0	0	100.3	100.3	1	3689.16	3.25	0	82.34	0	0.48	0	0	16.54	0	0	0	0	0	0	0.95	0.95
	Inverter	MV2-3	365820	4906641	2	0	0	100.3	100.3	1	3725.37	3.25	0	82.42	0	0.49	0	0	16.6	0	0	0	0	0	0	0.8	0.8
	Inverter	MV5-3	370231	4908851	2	0	0	100.3	100.3	1	3738.56	3.25	0	82.45	0	0.49	0	0	16.63	0	0	0	0	0	0	0.74	0.74
	Inverter	MV4-8	369256	4909001	2	0	0	100.3	100.3	1	3763.23	3.25	0	82.51	0	0.49	0	0	16.67	0	0	0	0	0	0	0.64	0.64
	Inverter	MV4-9	369289	4909001	2	0	0	100.3	100.3	1	3763.24	3.25	0	82.51	0	0.49	0	0	16.67	0	0	0	0	0	0	0.64	0.64

Inverter	MV4-7	369035	4909001	2	0	0	100.3	100.3	1	3770.59	3.25	0	82.53	0	0.49	0	0	16.68	0	0	0	0	0	0	0.61	0.61
Inverter	MV2-4	365586	4906624	2	0	0	100.3	100.3	1	3937.1	3.25	0	82.9	0	0.52	0	0	16.95	0	0	0	0	0	0	-0.06	-0.06
Inverter	MV4-6	369243	4909192	2	0	0	100.3	100.3	1	3954.3	3.25	0	82.94	0	0.52	0	0	16.98	0	0	0	0	0	0	-0.13	-0.13
Inverter	MV4-5	369289	4909199	2	0	0	100.3	100.3	1	3961.24	3.25	0	82.96	0	0.52	0	0	16.99	0	0	0	0	0	0	-0.15	-0.15
Inverter	MV1-15	365315	4904994	2	0	0	100.3	100.3	1	3963.51	3.25	0	82.96	0	0.52	0	0	16.99	0	0	0	0	0	0	-0.16	-0.16
Inverter	MV4-4	369027	4909199	2	0	0	100.3	100.3	1	3968.71	3.25	0	82.97	0	0.52	0	0	17	0	0	0	0	0	0	-0.18	-0.18
Inverter	MV5-1	370020	4909142	2	0	0	100.3	100.3	1	3975.4	3.25	0	82.99	0	0.52	0	0	17.01	0	0	0	0	0	0	-0.21	-0.21
Inverter	MV4-2	369272	4909397	2	0	0	100.3	100.3	1	4159.2	3.25	0	83.38	0	0.55	0	0	17.3	0	0	0	0	0	0	-0.92	-0.92
Inverter	MV4-3	369229	4909397	2	0	0	100.3	100.3	1	4159.41	3.25	0	83.38	0	0.55	0	0	17.3	0	0	0	0	0	0	-0.92	-0.92
Inverter	MV4-1	369011	4909397	2	0	0	100.3	100.3	1	4167.32	3.25	0	83.4	0	0.55	0	0	17.31	0	0	0	0	0	0	-0.95	-0.95
Westbrook Inverter Enclosur	W_INV2	369374	4906388	2	0	0	89.1	89.1	1	1154.81	3.25	0	72.25	0	0.72	0	0	6.6	0	0	0	0	0	0	9.49	9.49
Inverter	MV1-12	365038	4905386	2	0	0	100.3	100.3	1	4235.59	3.25	0	83.54	0	0.56	0	0	17.42	0	0	0	0	0	0	-1.21	-1.21
Inverter	MV1-8	364788	4905647	2	0	0	100.3	100.3	1	4501.64	3.25	0	84.07	0	0.59	0	0	17.83	0	0	0	0	0	0	-2.18	-2.18
Inverter	MV1-4	364815	4905918	2	0	0	100.3	100.3	1	4507.62	3.25	0	84.08	0	0.59	0	0	17.84	0	0	0	0	0	0	-2.2	-2.2
Inverter	MV1-2	364753	4906063	2	0	0	100.3	100.3	1	4592.74	3.25	0	84.24	0	0.6	0	0	17.97	0	0	0	0	0	0	-2.5	-2.5
Inverter	MV1-11	364655	4905414	2	0	0	100.3	100.3	1	4619.36	3.25	0	84.29	0	0.6	0	0	18.01	0	0	0	0	0	0	-2.6	-2.6
Inverter	MV1-5	364671	4905892	2	0	0	100.3	100.3	1	4646.29	3.25	0	84.34	0	0.61	0	0	18.05	0	0	0	0	0	0	-2.69	-2.69
Inverter	MV1-1	364715	4906166	2	0	0	100.3	100.3	1	4649.59	3.25	0	84.35	0	0.61	0	0	18.06	0	0	0	0	0	0	-2.7	-2.7
Westbrook Inverter Enclosur	W_INV7	369780	4906417	2	0	0	89.1	89.1	1	1284.37	3.25	0	73.17	0	0.75	0	0	6.83	0	0	0	0	0	0	8.31	8.31
Inverter	MV1-9	364561	4905646	2	0	0	100.3	100.3	1	4727.66	3.25	0	84.49	0	0.62	0	0	18.18	0	0	0	0	0	0	-2.97	-2.97
Inverter	MV1-6	364477	4905835	2	0	0	100.3	100.3	1	4831.05	3.25	0	84.68	0	0.63	0	0	18.33	0	0	0	0	0	0	-3.33	-3.33
Westbrook Inverter Enclosur	W_INV5	369719	4906574	2	0	0	89.1	89.1	1	1409.31	3.25	0	73.98	0	0.77	0	0	7.05	0	0	0	0	0	0	7.25	7.25
Inverter	MV2-1	365842	4906816	2	0	0	97.3	97.3	1	3774.75	3.25	0	82.54	0	0.49	0	0	16.69	0	0	0	0	0	0	-2.41	-2.41
Westbrook Inverter Enclosur	W_INV6	369875	4906578	2	0	0	89.1	89.1	1	1470.02	3.25	0	74.35	0	0.79	0	0	7.16	0	0	0	0	0	0	6.77	6.77
DSTATCOM - 10 MVAR #2	DSAT2	369403	4908757	2.5	0	0	96.6	96.6	1	3521.68	3.5	0	81.93	0	3.5	0	0	2.59	0	0	0	0	0	0	8.61	8.61
DSTATCOM - 10 MVAR #1	DSAT1	369437	4908757	2.5	0	0	96.6	96.6	1	3523.11	3.5	0	81.94	0	3.5	0	0	2.59	0	0	0	0	0	0	8.6	8.6
Inverter	MV1-14	365163	4905049	2	0	0	97.3	97.3	1	4112.34	3.25	0	83.28	0	0.54	0	0	17.23	0	0	0	0	0	0	-3.74	-3.74
Inverter	MV1-10	365004	4905564	2	0	0	97.3	97.3	1	4279.45	3.25	0	83.63	0	0.56	0	0	17.49	0	0	0	0	0	0	-4.37	-4.37
Inverter	MV1-7	364925	4905782	2	0	0	97.3	97.3	1	4379.94	3.25	0	83.83	0	0.58	0	0	17.65	0	0	0	0	0	0	-4.74	-4.74
Inverter	MV1-13	364731	4905241	2	0	0	97.3	97.3	1	4540	3.25	0	84.14	0	0.6	0	0	17.89	0	0	0	0	0	0	-5.32	-5.32
Westbrook Inverter Enclosur	W_INV1	369409	4906578	2	0	0	86.1	86.1	1	1347.29	3.25	0	73.59	0	0.76	0	0	6.94	0	0	0	0	0	0	4.77	4.77
Inverter	MV3-22	368656	4907142	2	0	0	89.1	89.1	1	2001.05	3.25	0	77.03	0	0.91	0	0	8.05	0	0	0	0	0	0	3.08	3.08
Gardiner Substation	G_Sub	366586.3	4903349.9	2.5	0	0	90.8	90.8	1	3282.04	4.25	0	81.32	0	1.17	2.92	0.31	6.37	0	0	0	0	0	0	-1.01	-1.01
Inverter	MV3-2	368671	4907928	2	0	0	89.1	89.1	1	2756.3	3.25	0	79.81	0	1.09	0	0	9.24	0	0	0	0	0	0	-1.08	-1.08
Inverter	MV3-5	368340	4907843	2	0	0	89.1	89.1	1	2766.56	3.25	0	79.84	0	1.09	0	0	9.26	0	0	0	0	0	0	-1.13	-1.13
Inverter	MV3-4	368502	4907925	2	0	0	89.1	89.1	1	2795.07	3.25	0	79.93	0	1.1	0	0	9.3	0	0	0	0	0	0	-1.27	-1.27
Inverter	MV6-4	370250	4906966	2	0	0	86.1	86.1	1	1986.23	3.25	0	76.96	0	0.9	0	0	8.02	0	0	0	0	0	0	0.17	0.17
Inverter	MV3-1	368156	4907976	2	0	0	89.1	89.1	1	2956.51	3.25	0	80.42	0	1.14	0	0	9.55	0	0	0	0	0	0	-2.04	-2.04
Fixed Reactor Bank 1	FRB1	369378	4908755	6	0	0	89.8	89.8	1	3518.83	5.25	0	81.93	0	-0.8	0	0	6.71	0	0	0	0	0	0	1.94	1.94
Fixed Reactor Bank 2	FRB2	369464	4908755	6	0	0	89.8	89.8	1	3522.49	5.25	0	81.94	0	-0.8	0	0	6.71	0	0	0	0	0	0	1.92	1.92
Inverter	MV4-15	369176	4908481	2	0	0	89.1	89.1	1	3244.59	3.25	0	81.22	0	1.21	0	0	9.98	0	0	0	0	0	0	-3.36	-3.36
Inverter	MV4-14	369176	4908507	2	0	0	89.1	89.1	1	3270.58	3.25	0	81.29	0	1.21	0	0	10.02	0	0	0	0	0	0	-3.47	-3.47
Inverter	MV5-6	369982	4908507	2	0	0	89.1	89.1	1	3345.62	3.25	0	81.49	0	1.23	0	0	10.13	0	0	0	0	0	0	-3.8	-3.8
Inverter	MV4-13	369051	4908605	2	0	0	89.1	89.1	1	3374.38	3.25	0	81.56	0	1.24	0	0	10.18	0	0	0	0	0	0	-3.92	-3.92
Inverter	MV4-12	369043	4908803	2	0	0	89.1	89.1	1	3572.48	3.25	0	82.06	0	1.29	0	0	10.47	0	0	0	0	0	0	-4.76	-4.76
Inverter	MV2-2	365977	4906654	2	0	0	89.1	89.1	1	3585.54	3.25	0	82.09	0	1.29	0	0	10.49	0	0	0	0	0	0	-4.81	-4.81
Westbrook Inverter Transfor	W_INVTR3	369514	4906164	2	0	0	77.3	77.3	1	957.55	3.25	0	70.62	0	-1.91	0	0	0.65	0	0	0	0	0	0	7.97	7.97
Inverters	G_Inv2	366676.9	4903239.1	2	0	0	87.7	87.7	1	3274.78	3.25	0	81.3	0	2.73	0	0	4.08	0	0	0	0	0	0	-0.45	-0.45
Inverters	G_Inv4	366732.8	4903105	2	0	0	87.7	87.7	1	3315.31	3.25	0	81.41	0	2.73	0	0	4.13	0	0	0	0	0	0	-0.61	-0.61
Westbrook Inverter Transfor	W_INVTR4	369679	4906164	2	0	0	77.3	77.3	1	1012.09	3.25	0	71.1	0	-1.94	0	0	0.69	0	0	0	0	0	0	7.49	7.49
Inverters	G_Inv6	366788.5	4902972	2	0	0	87.7	87.7	1	3361.05	3.25	0	81.53	0	2.73	0	0	4.18	0	0	0	0	0	0	-0.78	-0.78
Inverters	G_Inv1	366526.4	4903225.8	2	0	0	87.7	87.7	1	3403.08	3.25	0	81.64	0	2.74	0	0	4.22	0	0	0	0	0	0	-0.94	-0.94
Inverters	G_Inv8	366844.5	4902838.5	2	0	0	87.7	87.7	1	3412.41	3.25	0	81.66	0	2.74	0	0	4.23	0	0	0	0	0	0	-0.97	-0.97
Inverters	G_Inv3	366583.7	4903091.4	2	0	0	87.7	87.7	1	3439.28	3.25	0	81.73	0	2.74	0	0	4.26	0	0	0	0	0	0	-1.07	-1.07
Inverters	G_Inv10	366900.7	4902704.8	2	0	0	87.7	87.7	1	3469.07	3.25	0	81.8	0	2.74	0	0	4.29	0	0	0	0	0	0	-1.18	-1.18
Inverters	G_Inv5	366638.5	4902958.1	2	0	0	87.7	87.7	1	3482.4	3.25	0	81.84	0	2.75	0	0	4.31	0	0	0	0	0	0	-1.23	-1.23
Inverters	G_Inv7	366694.6	4902824.7	2	0	0	87.7	87.7	1	3530	3.25	0	81.96	0	2.75	0	0	4.36	0	0	0	0	0	0	-1.41	-1.41
Inverters	G_Inv9	366750.9	4902691.8	2	0	0	87.7	87.7	1	3582.32	3.25	0	82.08	0	2.76	0	0	4.42	0	0	0	0	0	0	-1.6	-1.6
Westbrook Inverter Transfor	W_INVTR2	369368	4906388	2	0	0	77.3	77.3	1	1154.29	3.25	0	72.25	0	-2.02	0	0	0.77	0	0	0	0	0	0	6.35	6.35
Westbrook Inverter Transfor	W_INVTR1	369403	4906578	2	0	0	78.2	78.2	1	1346.69	3.25	0	73.59	0	-2.13	0	0	0.87	0	0	0	0	0	0	5.91	5.91
Inverter	MV1-3	364440	4906039	2	0	0	89.1	89.1	1	4896.99	3.25	0	84.8	0	1.61	0	0	12.33	0	0	0	0	0	0	-9.68	-9.68
Westbrook Inverter Transfor	W_INVTR7	369786	4906417	2	0	0	77.3	77.3	1	1286.76	3.25	0	73.19	0	-2.1	0	0	0.84	0	0	0	0	0	0	5.41	5.41
Westbrook Inverter Transfor	W_INVTR5	369725	4906574	2	0	0	77.3	77.3	1	1411.22	3.25	0	73.99	0	-2.16	0	0	0.91	0	0	0	0	0	0	4.6	4.6
Westbrook Inverter Transfor	W_INVTR6	369881	4906578	2	0	0	77.3	77.3	1	1472.5	3.25	0	74.36	0	-2.19	0	0	0.94	0	0	0	0	0	0	4.23	4.23
Inverter Transformer	MV6-4 T	370244	4906966	2	0	0	69.4	69.4	1	1983.28	3.25	0	76.95	0	2.17	0	0	4.95	0	0	0	0	0	0	-14.71	-14.71
Inverter Transformer	MV6-1 T	370230	4907364	2	0	0	69.4	69.4	1	2332.47	3.25	0	78.36	0	2.29	0	0	5.29	0	0	0	0	0	0	-16.59	-16.59
Inverter Transformer	MV2-1 T	365836	4906816	2	0	0	69.4	69.4	1	3780.2	3.25	0	82.55	0	2.73	0	0	6.51	0	0	0	0	0	0	-22.44	-22.44
Inverter Transformer	MV1-14 T	365157	4905049	2	0	0	69.4	69.4	1	4118.33	3.25	0	83.29	0	2.82	0	0	6.76	0	0	0	0	0	0	-23.52	-23.52
Inverter Transformer	MV1-10 T	365010	4905564	2	0	0	69.4	69.4	1	4273.47	3.25	0	83.62	0	2.85	0	0	6.88	0	0	0	0	0	0	-24	-24
Inverter Transformer	MV1-7 T	364919	4905782	2	0	0	69.4	69.4	1	4385.89	3.25	0	83.84	0	2.88	0	0	6.96	0	0	0	0	0	0	-24.33	-24.33
Inverter Transformer	MV1-13 T	364725	4905241	2	0	0	69.4	69.4	1	4546	3.25	0	84.15	0	2.92	0	0	7.07	0	0	0	0	0	0	-24.79	-24.79
Inverter Transformer	MV3-22 T	368661	4907142	2	0	0	56.1	56.1	1	1999.52	3.25	0	77.02	0	0.4	0	0	7.04	0	0	0	0	0	0	-28.41	-28.41
Inverter Transformer	MV6-3 T	370202	4907140	2	0	0	56.1	56.1	1	2117.81	3.25	0	77.52	0	0.45	0	0	7.27	0	0	0	0	0	0	-29.19	-29.19
Inverter Transformer	MV3-21 T	368484	4907206	2	0	0	56.1	56.1	1	2119.71	3.25	0	77.53	0	0.45	0	0	7.28	0	0	0	0	0	0	-29.2	-29.2

	Inverter Transformer	MV3-20 T	368683	4907317	2	0	0	56.1	56.1	1	2160.75	3.25	0	77.69	0	0.47	0	0	7.36	0	0	0	0	0	0	-29.46	-29.46
	Inverter Transformer	MV6-2 T	370091	4907339	2	0	0	56.1	56.1	1	2255.54	3.25	0	78.06	0	0.51	0	0	7.54	0	0	0	0	0	0	-30.05	-30.05
	Inverter Transformer	MV3-19 T	368352	4907347	2	0	0	56.1	56.1	1	2300.72	3.25	0	78.24	0	0.53	0	0	7.62	0	0	0	0	0	0	-30.33	-30.33
	Inverter Transformer	MV3-14 T	368678	4907498	2	0	0	56.1	56.1	1	2336.7	3.25	0	78.37	0	0.55	0	0	7.69	0	0	0	0	0	0	-30.55	-30.55
	Inverter Transformer	MV3-16 T	368509	4907475	2	0	0	56.1	56.1	1	2363.41	3.25	0	78.47	0	0.56	0	0	7.74	0	0	0	0	0	0	-30.71	-30.71
	Inverter Transformer	MV3-15 T	368351	4907477	2	0	0	56.1	56.1	1	2420.83	3.25	0	78.68	0	0.58	0	0	7.84	0	0	0	0	0	0	-31.05	-31.05
	Inverter Transformer	MV3-17 T	368183	4907472	2	0	0	56.1	56.1	1	2485.04	3.25	0	78.91	0	0.61	0	0	7.96	0	0	0	0	0	0	-31.42	-31.42
	Inverter Transformer	MV3-8 T	368685	4907712	2	0	0	56.1	56.1	1	2542.65	3.25	0	79.11	0	0.63	0	0	8.07	0	0	0	0	0	0	-31.75	-31.75
	Inverter Transformer	MV3-9 T	368517	4907703	2	0	0	56.1	56.1	1	2577.93	3.25	0	79.23	0	0.65	0	0	8.13	0	0	0	0	0	0	-31.95	-31.95
	Inverter Transformer	MV3-11 T	368340	4907662	2	0	0	56.1	56.1	1	2596.83	3.25	0	79.29	0	0.66	0	0	8.16	0	0	0	0	0	0	-32.05	-32.05
	Inverter Transformer	MV3-18 T	367757	4907412	2	0	0	56.1	56.1	1	2649.41	3.25	0	79.46	0	0.68	0	0	8.26	0	0	0	0	0	0	-32.34	-32.34
	Inverter Transformer	MV3-10 T	368162	4907669	2	0	0	56.1	56.1	1	2672.19	3.25	0	79.54	0	0.69	0	0	8.3	0	0	0	0	0	0	-32.47	-32.47
	Inverter Transformer	MV3-13 T	367958	4907577	2	0	0	56.1	56.1	1	2682.5	3.25	0	79.57	0	0.69	0	0	8.32	0	0	0	0	0	0	-32.52	-32.52
	Inverter Transformer	MV3-2 T	368677	4907928	2	0	0	56.1	56.1	1	2755	3.25	0	79.8	0	0.73	0	0	8.45	0	0	0	0	0	0	-32.91	-32.91
	Inverter Transformer	MV3-5 T	368335	4907843	2	0	0	56.1	56.1	1	2768.24	3.25	0	79.84	0	0.73	0	0	8.47	0	0	0	0	0	0	-32.99	-32.99
	Inverter Transformer	MV3-4 T	368507	4907925	2	0	0	56.1	56.1	1	2793.7	3.25	0	79.92	0	0.74	0	0	8.51	0	0	0	0	0	0	-33.12	-33.12
	Inverter Transformer	MV3-6 T	368156	4907834	2	0	0	56.1	56.1	1	2825.51	3.25	0	80.02	0	0.76	0	0	8.57	0	0	0	0	0	0	-33.29	-33.29
	Inverter Transformer	MV3-7 T	367951	4907754	2	0	0	56.1	56.1	1	2841.42	3.25	0	80.07	0	0.76	0	0	8.6	0	0	0	0	0	0	-33.37	-33.37
	Inverter Transformer	MV3-12 T	367674	4907594	2	0	0	56.1	56.1	1	2846.42	3.25	0	80.09	0	0.76	0	0	8.6	0	0	0	0	0	0	-33.4	-33.4
	Inverter Transformer	MV3-1 T	368150	4907976	2	0	0	56.1	56.1	1	2958.78	3.25	0	80.42	0	0.81	0	0	8.8	0	0	0	0	0	0	-33.97	-33.97
	Inverter Transformer	MV3-3 T	367944	4907927	2	0	0	56.1	56.1	1	2998.79	3.25	0	80.54	0	0.83	0	0	8.87	0	0	0	0	0	0	-34.18	-34.18
	Inverter Transformer	MV4-15 T	369170	4908481	2	0	0	56.1	56.1	1	3244.77	3.25	0	81.22	0	0.93	0	0	9.28	0	0	0	0	0	0	-35.37	-35.37
	Inverter Transformer	MV4-14 T	369182	4908507	2	0	0	56.1	56.1	1	3270.41	3.25	0	81.29	0	0.94	0	0	9.32	0	0	0	0	0	0	-35.5	-35.5
	Inverter Transformer	MV5-6 T	369987	4908507	2	0	0	56.1	56.1	1	3346.69	3.25	0	81.49	0	0.98	0	0	9.44	0	0	0	0	0	0	-35.85	-35.85
	Inverter Transformer	MV4-13 T	369057	4908605	2	0	0	56.1	56.1	1	3373.99	3.25	0	81.56	0	0.99	0	0	9.49	0	0	0	0	0	0	-35.98	-35.98
	Inverter Transformer	MV5-5 T	370021	4908690	2	0	0	56.1	56.1	1	3532.73	3.25	0	81.96	0	1.05	0	0	9.74	0	0	0	0	0	0	-36.7	-36.7
	Inverter Transformer	MV4-12 T	369049	4908803	2	0	0	56.1	56.1	1	3572.11	3.25	0	82.06	0	1.07	0	0	9.8	0	0	0	0	0	0	-36.87	-36.87
	Inverter Transformer	MV2-2 T	365982	4906654	2	0	0	56.1	56.1	1	3580.94	3.25	0	82.08	0	1.07	0	0	9.82	0	0	0	0	0	0	-36.91	-36.91
	Inverter Transformer	MV4-11 T	369269	4908855	2	0	0	56.1	56.1	1	3617.2	3.25	0	82.17	0	1.09	0	0	9.87	0	0	0	0	0	0	-37.07	-37.07
	Inverter Transformer	MV4-10 T	369307	4908858	2	0	0	56.1	56.1	1	3620.38	3.25	0	82.18	0	1.09	0	0	9.88	0	0	0	0	0	0	-37.08	-37.08
	Inverter Transformer	MV5-4 T	370330	4908707	2	0	0	56.1	56.1	1	3627.24	3.25	0	82.19	0	1.09	0	0	9.89	0	0	0	0	0	0	-37.11	-37.11
	Inverter Transformer	MV5-2 T	370011	4908853	2	0	0	56.1	56.1	1	3690.16	3.25	0	82.34	0	1.12	0	0	9.99	0	0	0	0	0	0	-37.39	-37.39
	Inverter Transformer	MV2-3 T	365814	4906641	2	0	0	56.1	56.1	1	3730.93	3.25	0	82.44	0	1.14	0	0	10.05	0	0	0	0	0	0	-37.56	-37.56
	Inverter Transformer	MV5-3 T	370237	4908851	2	0	0	56.1	56.1	1	3740.1	3.25	0	82.46	0	1.14	0	0	10.06	0	0	0	0	0	0	-37.6	-37.6
	Inverter Transformer	MV4-8 T	369262	4909001	2	0	0	56.1	56.1	1	3763.21	3.25	0	82.51	0	1.15	0	0	10.1	0	0	0	0	0	0	-37.7	-37.7
	Inverter Transformer	MV4-9 T	369284	4909001	2	0	0	56.1	56.1	1	3763.22	3.25	0	82.51	0	1.15	0	0	10.1	0	0	0	0	0	0	-37.7	-37.7
	Inverter Transformer	MV4-7 T	369040	4909001	2	0	0	56.1	56.1	1	3770.28	3.25	0	82.53	0	1.15	0	0	10.11	0	0	0	0	0	0	-37.73	-37.73
	Inverter Transformer	MV2-4 T	365590	4906628	2	0	0	56.1	56.1	1	3934.77	3.25	0	82.9	0	1.22	0	0	10.36	0	0	0	0	0	0	-38.42	-38.42
	Inverter Transformer	MV4-6 T	369249	4909192	2	0	0	56.1	56.1	1	3954.26	3.25	0	82.94	0	1.23	0	0	10.39	0	0	0	0	0	0	-38.5	-38.5
	Inverter Transformer	MV4-5 T	369283	4909199	2	0	0	56.1	56.1	1	3961.22	3.25	0	82.96	0	1.23	0	0	10.4	0	0	0	0	0	0	-38.52	-38.52
	Inverter Transformer	MV4-4 T	369033	4909199	2	0	0	56.1	56.1	1	3968.34	3.25	0	82.97	0	1.23	0	0	10.41	0	0	0	0	0	0	-38.55	-38.55
	Inverter Transformer	MV1-15 T	365309	4904994	2	0	0	56.1	56.1	1	3969.49	3.25	0	82.97	0	1.23	0	0	10.41	0	0	0	0	0	0	-38.56	-38.56
	Inverter Transformer	MV5-1 T	370015	4909142	2	0	0	56.1	56.1	1	3974.46	3.25	0	82.99	0	1.23	0	0	10.42	0	0	0	0	0	0	-38.58	-38.58
	Inverter Transformer	MV4-2 T	369267	4909397	2	0	0	56.1	56.1	1	4159.2	3.25	0	83.38	0	1.31	0	0	10.69	0	0	0	0	0	0	-39.32	-39.32
	Inverter Transformer	MV4-3 T	369234	4909397	2	0	0	56.1	56.1	1	4159.37	3.25	0	83.38	0	1.31	0	0	10.69	0	0	0	0	0	0	-39.32	-39.32
	Inverter Transformer	MV4-1 T	369017	4909397	2	0	0	56.1	56.1	1	4166.95	3.25	0	83.4	0	1.31	0	0	10.7	0	0	0	0	0	0	-39.35	-39.35
	Inverter Transformer	MV1-12 T	365044	4905386	2	0	0	56.1	56.1	1	4229.6	3.25	0	83.53	0	1.33	0	0	10.79	0	0	0	0	0	0	-39.59	-39.59
	Inverter Transformer	MV1-4 T	364821	4905918	2	0	0	56.1	56.1	1	4501.69	3.25	0	84.07	0	1.44	0	0	11.18	0	0	0	0	0	0	-40.63	-40.63
	Inverter Transformer	MV1-8 T	364782	4905647	2	0	0	56.1	56.1	1	4507.61	3.25	0	84.08	0	1.44	0	0	11.19	0	0	0	0	0	0	-40.65	-40.65
	Inverter Transformer	MV1-2 T	364759	4906063	2	0	0	56.1	56.1	1	4586.84	3.25	0	84.23	0	1.47	0	0	11.3	0	0	0	0	0	0	-40.94	-40.94
	Inverter Transformer	MV1-11 T	364649	4905414	2	0	0	56.1	56.1	1	4625.36	3.25	0	84.3	0	1.49	0	0	11.35	0	0	0	0	0	0	-41.08	-41.08
	Inverter Transformer	MV1-5 T	364676	4905892	2	0	0	56.1	56.1	1	4641.34	3.25	0	84.33	0	1.49	0	0	11.37	0	0	0	0	0	0	-41.14	-41.14
	Inverter Transformer	MV1-1 T	364721	4906166	2	0	0	56.1	56.1	1	4643.71	3.25	0	84.34	0	1.49	0	0	11.37	0	0	0	0	0	0	-41.15	-41.15
	Inverter Transformer	MV1-9 T	364555	4905646	2	0	0	56.1	56.1	1	4733.63	3.25	0	84.5	0	1.53	0	0	11.5	0	0	0	0	0	0	-41.47	-41.47
	Inverter Transformer	MV1-6 T	364482	4905835	2	0	0	56.1	56.1	1	4826.09	3.25	0	84.67	0	1.56	0	0	11.62	0	0	0	0	0	0	-41.8	-41.8
	Inverter Transformer	MV1-3 T	364435	4906039	2	0	0	56.1	56.1	1	4901.92	3.25	0	84.81	0	1.59	0	0	11.72	0	0	0	0	0	0	-42.06	-42.06
	Line Reactor	NGR	369421	4908787.5	5	0	0	45.4	45.4	1	3552.87	5.25	0	82.01	0	3.3	1.33	0.12	1.45	0	0	0	0	0	0	-42.74	-42.74
Limit. Valu	0	0																								
Level D/N:	26.1672	26.1672																								

Receiver: Existing Noise Receptor
ID: W-R7
X: 369399.9
Y: 4905174.5
Z: 4.5
Ground: 0

ISO	Description	ID	X	Y	Z	Ground	ReflOrd	LxT	LxN	L/A	Dist.	hm	Freq	Adiv	K0b	Agr	Abar	z	Aatm	Afol	Ahous	Cmet	CmetN	Dc	RL	LtotT	LtotN
	Sol_Luce Substation	S_Substation	369426	4908792	3.5	0	0	112.1	112.1	1	3617.59	5.25	0	82.17	0	0.48	3.21	0.35	6.85	0	0	0	0	0	0	19.36	19.36
	Inverter	MV6-3	370207	4907140	2	0	0	100.3	100.3	1	2124.76	3.25	0	77.55	0	0.16	0	0	13.72	0	0	0	0	0	0	8.88	8.88
	Inverter	MV3-21	368478	4907206	2	0	0	100.3	100.3	1	2230.9	3.25	0	77.97	0	0.19	0	0	13.93	0	0	0	0	0	0	8.22	8.22
	Inverter	MV3-20	368689	4907317	2	0	0	100.3	100.3	1	2257.36	3.25	0	78.07	0	0.2	0	0	13.99	0	0	0	0	0	0	8.05	8.05
	Inverter	MV6-2	370085	4907339	2	0	0	100.3	100.3	1	2270.34	3.25	0	78.12	0	0.2	0	0	14.01	0	0	0	0	0	0	7.98	7.98
	Inverter	MV3-19	368357	4907347	2	0	0	100.3	100.3	1	2409.86	3.25	0	78.64	0	0.24	0	0	14.29	0	0	0	0	0	0	7.15	7.15

Inverter	MV3-14	368684	4907498	2	0	0	100.3	100.3	1	2431.29	3.25	0	78.72	0	0.24	0	0	14.33	0	0	0	0	0	0	7.03	7.03
Inverter	MV3-16	368514	4907475	2	0	0	100.3	100.3	1	2465.18	3.25	0	78.84	0	0.25	0	0	14.39	0	0	0	0	0	0	6.83	6.83
Inverter	MV3-15	368357	4907477	2	0	0	100.3	100.3	1	2527.68	3.25	0	79.05	0	0.26	0	0	14.51	0	0	0	0	0	0	6.48	6.48
SubstationTransformer	W_ST	369711.17	4906112.3	2.5	0	0	92	92	1	988.08	3.5	0	70.9	0	-0.37	0	-0.14	2.5	0	0	0	0	0	0	18.96	18.96
Inverter	MV3-17	368178	4907472	2	0	0	100.3	100.3	1	2602.22	3.25	0	79.31	0	0.28	0	0	14.65	0	0	0	0	0	0	6.07	6.07
Inverter	MV3-8	368680	4907712	2	0	0	100.3	100.3	1	2637.64	3.25	0	79.42	0	0.29	0	0	14.72	0	0	0	0	0	0	5.88	5.88
Inverter	MV3-9	368512	4907703	2	0	0	100.3	100.3	1	2679.87	3.25	0	79.56	0	0.3	0	0	14.79	0	0	0	0	0	0	5.66	5.66
Inverter	MV3-11	368346	4907662	2	0	0	100.3	100.3	1	2701.55	3.25	0	79.63	0	0.3	0	0	14.83	0	0	0	0	0	0	5.54	5.54
Inverter	MV3-18	367752	4907412	2	0	0	100.3	100.3	1	2778.85	3.25	0	79.88	0	0.32	0	0	14.98	0	0	0	0	0	0	5.14	5.14
Inverter	MV3-10	368167	4907669	2	0	0	100.3	100.3	1	2782.55	3.25	0	79.89	0	0.32	0	0	14.98	0	0	0	0	0	0	5.12	5.12
Inverter	MV3-13	367963	4907577	2	0	0	100.3	100.3	1	2799.41	3.25	0	79.94	0	0.32	0	0	15.01	0	0	0	0	0	0	5.04	5.04
Inverter	MV3-6	368162	4907834	2	0	0	100.3	100.3	1	2933.49	3.25	0	80.35	0	0.35	0	0	15.25	0	0	0	0	0	0	4.36	4.36
Inverter	MV3-7	367945	4907754	2	0	0	100.3	100.3	1	2961.51	3.25	0	80.43	0	0.35	0	0	15.3	0	0	0	0	0	0	4.22	4.22
Inverter	MV3-12	367668	4907594	2	0	0	100.3	100.3	1	2975.48	3.25	0	80.47	0	0.36	0	0	15.33	0	0	0	0	0	0	4.15	4.15
Inverter	MV3-3	367939	4907927	2	0	0	100.3	100.3	1	3116.17	3.25	0	80.87	0	0.38	0	0	15.58	0	0	0	0	0	0	3.48	3.48
Inverter	MV6-1	370235	4907364	2	0	0	97.3	97.3	1	2343.35	3.25	0	78.4	0	0.22	0	0	14.16	0	0	0	0	0	0	4.54	4.54
Inverter	MV5-5	370015	4908690	2	0	0	100.3	100.3	1	3568.91	3.25	0	82.05	0	0.46	0	0	16.35	0	0	0	0	0	0	1.45	1.45
Westbrook Inverter Enclosur	W_INV3	369508	4906164	2	0	0	89.1	89.1	1	995.39	3.25	0	70.96	0	0.68	0	0	6.31	0	0	0	0	0	0	11.11	11.11
Inverter	MV5-4	370324	4908707	2	0	0	100.3	100.3	1	3651.37	3.25	0	82.25	0	0.48	0	0	16.48	0	0	0	0	0	0	1.1	1.1
Inverter	MV4-11	369264	4908855	2	0	0	100.3	100.3	1	3683.01	3.25	0	82.32	0	0.48	0	0	16.53	0	0	0	0	0	0	0.97	0.97
Inverter	MV4-10	369312	4908858	2	0	0	100.3	100.3	1	3684.55	3.25	0	82.33	0	0.48	0	0	16.54	0	0	0	0	0	0	0.97	0.97
Inverter	MV5-2	370006	4908853	2	0	0	100.3	100.3	1	3728.1	3.25	0	82.43	0	0.49	0	0	16.61	0	0	0	0	0	0	0.79	0.79
Westbrook Inverter Enclosur	W_INV4	369673	4906164	2	0	0	89.1	89.1	1	1026.5	3.25	0	71.23	0	0.69	0	0	6.36	0	0	0	0	0	0	10.78	10.78
Inverter	MV5-3	370231	4908851	2	0	0	100.3	100.3	1	3769.27	3.25	0	82.53	0	0.49	0	0	16.68	0	0	0	0	0	0	0.62	0.62
Inverter	MV4-9	369289	4909001	2	0	0	100.3	100.3	1	3828.11	3.25	0	82.66	0	0.5	0	0	16.77	0	0	0	0	0	0	0.38	0.38
Inverter	MV4-8	369256	4909001	2	0	0	100.3	100.3	1	3829.21	3.25	0	82.66	0	0.5	0	0	16.77	0	0	0	0	0	0	0.37	0.37
Inverter	MV4-7	369035	4909001	2	0	0	100.3	100.3	1	3843.86	3.25	0	82.7	0	0.5	0	0	16.8	0	0	0	0	0	0	0.31	0.31
Inverter	MV2-3	365820	4906641	2	0	0	100.3	100.3	1	3868.63	3.25	0	82.75	0	0.51	0	0	16.84	0	0	0	0	0	0	0.22	0.22
Inverter	MV5-1	370020	4909142	2	0	0	100.3	100.3	1	4015.67	3.25	0	83.08	0	0.53	0	0	17.07	0	0	0	0	0	0	-0.37	-0.37
Inverter	MV4-6	369243	4909192	2	0	0	100.3	100.3	1	4020.56	3.25	0	83.09	0	0.53	0	0	17.08	0	0	0	0	0	0	-0.38	-0.38
Inverter	MV4-5	369289	4909199	2	0	0	100.3	100.3	1	4026.03	3.25	0	83.1	0	0.53	0	0	17.09	0	0	0	0	0	0	-0.41	-0.41
Inverter	MV4-4	369027	4909199	2	0	0	100.3	100.3	1	4041.74	3.25	0	83.13	0	0.53	0	0	17.12	0	0	0	0	0	0	-0.47	-0.47
Inverter	MV2-4	365586	4906624	2	0	0	100.3	100.3	1	4080.06	3.25	0	83.21	0	0.54	0	0	17.18	0	0	0	0	0	0	-0.62	-0.62
Inverter	MV1-15	365315	4904994	2	0	0	100.3	100.3	1	4088.89	3.25	0	83.23	0	0.54	0	0	17.19	0	0	0	0	0	0	-0.65	-0.65
Inverter	MV4-2	369272	4909397	2	0	0	100.3	100.3	1	4224.44	3.25	0	83.52	0	0.56	0	0	17.4	0	0	0	0	0	0	-1.16	-1.16
Inverter	MV4-3	369229	4909397	2	0	0	100.3	100.3	1	4225.96	3.25	0	83.52	0	0.56	0	0	17.41	0	0	0	0	0	0	-1.17	-1.17
Inverter	MV4-1	369011	4909397	2	0	0	100.3	100.3	1	4240.37	3.25	0	83.55	0	0.56	0	0	17.43	0	0	0	0	0	0	-1.22	-1.22
Inverter	MV1-12	365038	4905386	2	0	0	100.3	100.3	1	4367.03	3.25	0	83.8	0	0.58	0	0	17.63	0	0	0	0	0	0	-1.69	-1.69
Westbrook Inverter Enclosur	W_INV2	369374	4906388	2	0	0	89.1	89.1	1	1213.78	3.25	0	72.68	0	0.73	0	0	6.71	0	0	0	0	0	0	8.94	8.94
Inverter	MV1-8	364788	4905647	2	0	0	100.3	100.3	1	4636.04	3.25	0	84.32	0	0.61	0	0	18.04	0	0	0	0	0	0	-2.65	-2.65
Inverter	MV1-4	364815	4905918	2	0	0	100.3	100.3	1	4644.79	3.25	0	84.34	0	0.61	0	0	18.05	0	0	0	0	0	0	-2.68	-2.68
Inverter	MV1-2	364753	4906063	2	0	0	100.3	100.3	1	4731.08	3.25	0	84.5	0	0.62	0	0	18.18	0	0	0	0	0	0	-2.98	-2.98
Westbrook Inverter Enclosur	W_INV7	369780	4906417	2	0	0	89.1	89.1	1	1299.34	3.25	0	73.27	0	0.75	0	0	6.86	0	0	0	0	0	0	8.18	8.18
Inverter	MV1-11	364655	4905414	2	0	0	100.3	100.3	1	4750.94	3.25	0	84.54	0	0.62	0	0	18.21	0	0	0	0	0	0	-3.05	-3.05
Inverter	MV1-5	364671	4905892	2	0	0	100.3	100.3	1	4783.02	3.25	0	84.59	0	0.62	0	0	18.26	0	0	0	0	0	0	-3.16	-3.16
Inverter	MV1-1	364715	4906166	2	0	0	100.3	100.3	1	4788.67	3.25	0	84.6	0	0.62	0	0	18.27	0	0	0	0	0	0	-3.18	-3.18
Inverter	MV1-9	364561	4905646	2	0	0	100.3	100.3	1	4861.82	3.25	0	84.74	0	0.63	0	0	18.38	0	0	0	0	0	0	-3.43	-3.43
Inverter	MV1-6	364477	4905835	2	0	0	100.3	100.3	1	4967.01	3.25	0	84.92	0	0.64	0	0	18.53	0	0	0	0	0	0	-3.78	-3.78
Westbrook Inverter Enclosur	W_INV5	369719	4906574	2	0	0	89.1	89.1	1	1435.42	3.25	0	74.14	0	0.78	0	0	7.1	0	0	0	0	0	0	7.04	7.04
Westbrook Inverter Enclosur	W_INV6	369875	4906578	2	0	0	89.1	89.1	1	1481.73	3.25	0	74.42	0	0.79	0	0	7.18	0	0	0	0	0	0	6.68	6.68
DSTATCOM - 10 MVAR #2	DSAT2	369403	4908757	2.5	0	0	96.6	96.6	1	3582.5	3.5	0	82.08	0	3.51	0	0	2.62	0	0	0	0	0	0	8.42	8.42
DSTATCOM - 10 MVAR #1	DSAT1	369437	4908757	2.5	0	0	96.6	96.6	1	3582.69	3.5	0	82.08	0	3.51	0	0	2.62	0	0	0	0	0	0	8.42	8.42
Inverter	MV2-1	365842	4906816	2	0	0	97.3	97.3	1	3918.31	3.25	0	82.86	0	0.52	0	0	16.92	0	0	0	0	0	0	-2.98	-2.98
Inverter	MV1-14	365163	4905049	2	0	0	97.3	97.3	1	4238.76	3.25	0	83.54	0	0.56	0	0	17.43	0	0	0	0	0	0	-4.22	-4.22
Inverter	MV1-10	365004	4905564	2	0	0	97.3	97.3	1	4413.12	3.25	0	83.89	0	0.58	0	0	17.7	0	0	0	0	0	0	-4.86	-4.86
Inverter	MV1-7	364925	4905782	2	0	0	97.3	97.3	1	4515.95	3.25	0	84.09	0	0.59	0	0	17.85	0	0	0	0	0	0	-5.23	-5.23
Inverter	MV1-13	364731	4905241	2	0	0	97.3	97.3	1	4669.37	3.25	0	84.39	0	0.61	0	0	18.09	0	0	0	0	0	0	-5.77	-5.77
Westbrook Inverter Enclosur	W_INV1	369409	4906578	2	0	0	86.1	86.1	1	1403.53	3.25	0	73.94	0	0.77	0	0	7.04	0	0	0	0	0	0	4.3	4.3
Inverter	MV3-22	368656	4907142	2	0	0	89.1	89.1	1	2103.44	3.25	0	77.46	0	0.93	0	0	8.21	0	0	0	0	0	0	2.45	2.45
Gardiner Substation	G_Sub	366586.3	4903349.9	2.5	0	0	90.8	90.8	1	3353.43	4.25	0	81.51	0	1.18	2.87	0.3	6.47	0	0	0	0	0	0	-1.26	-1.26
Inverter	MV6-4	370250	4906966	2	0	0	86.1	86.1	1	1982.96	3.25	0	76.95	0	0.9	0	0	8.02	0	0	0	0	0	0	0.19	0.19
Inverter	MV3-2	368671	4907928	2	0	0	89.1	89.1	1	2848.34	3.25	0	80.09	0	1.11	0	0	9.39	0	0	0	0	0	0	-1.53	-1.53
Inverter	MV3-5	368340	4907843	2	0	0	89.1	89.1	1	2871.29	3.25	0	80.16	0	1.12	0	0	9.42	0	0	0	0	0	0	-1.64	-1.64
Inverter	MV3-4	368502	4907925	2	0	0	89.1	89.1	1	2893.35	3.25	0	80.23	0	1.12	0	0	9.45	0	0	0	0	0	0	-1.75	-1.75
Inverter	MV3-1	368156	4907976	2	0	0	89.1	89.1	1	3065.24	3.25	0	80.73	0	1.16	0	0	9.72	0	0	0	0	0	0	-2.55	-2.55
Fixed Reactor Bank 1	FRB1	369378	4908755	6	0	0	89.8	89.8	1	3580.57	5.25	0	82.08	0	-0.79	0	0	6.8	0	0	0	0	0	0	1.69	1.69
Fixed Reactor Bank 2	FRB2	369464	4908755	6	0	0	89.8	89.8	1	3581.07	5.25	0	82.08	0	-0.79	0	0	6.8	0	0	0	0	0	0	1.69	1.69
Inverter	MV4-15	369176	4908481	2	0	0	89.1	89.1	1	3314.07	3.25	0	81.41	0	1.22	0	0	10.09	0	0	0	0	0	0	-3.66	-3.66
Inverter	MV4-14	369176	4908507	2	0	0	89.1	89.1	1	3340.01	3.25	0	81.47	0	1.23	0	0	10.13	0	0	0	0	0	0	-3.77	-3.77
Inverter	MV5-6	369982	4908507	2	0	0	89.1	89.1	1	3382.96	3.25	0	81.59	0	1.24	0	0	10.19	0	0	0	0	0	0	-3.96	-3.96
Inverter	MV4-13	369051	4908605	2	0	0	89.1	89.1	1	3448.2	3.25	0	81.75	0	1.26	0	0	10.29	0	0	0	0	0	0	-4.24	-4.24
Inverter	MV4-12	369043	4908803	2	0	0	89.1	89.1	1	3646.01	3.25	0	82.24	0	1.31	0	0	10.58	0	0	0	0	0	0	-5.06	-5.06
Inverter	MV2-2	365977	4906654	2	0	0	89.1	89.1	1	3728.96	3.25	0	82.43	0	1.33	0	0	10.7	0	0	0	0	0	0	-5.4	-5.4
Westbrook Inverter Transfor	W_INVTR3	369514	4906164	2	0	0	77.3	77.3	1	996.06	3.25	0	70.97	0	-1.93	0	0	0.68	0	0	0	0	0	0	7.63	7.63

Inverters	G_Inv2	366676.9	4903239.1	2	0	0	87.7	87.7	1	3340.73	3.25	0	81.48	0	2.73	0	0	4.15	0	0	0	0	0	0	-0.7	-0.7
Westbrook Inverter Transfor	W_INVTR4	369679	4906164	2	0	0	77.3	77.3	1	1028.11	3.25	0	71.24	0	-1.95	0	0	0.69	0	0	0	0	0	0	7.36	7.36
Inverters	G_Inv4	366732.8	4903105	2	0	0	87.7	87.7	1	3375.83	3.25	0	81.57	0	2.74	0	0	4.19	0	0	0	0	0	0	-0.84	-0.84
Inverters	G_Inv6	366788.5	4902972	2	0	0	87.7	87.7	1	3416.2	3.25	0	81.67	0	2.74	0	0	4.24	0	0	0	0	0	0	-0.99	-0.99
Inverters	G_Inv8	366844.5	4902838.5	2	0	0	87.7	87.7	1	3462.22	3.25	0	81.79	0	2.74	0	0	4.29	0	0	0	0	0	0	-1.16	-1.16
Inverters	G_Inv1	366526.4	4903225.8	2	0	0	87.7	87.7	1	3471.95	3.25	0	81.81	0	2.74	0	0	4.3	0	0	0	0	0	0	-1.19	-1.19
Inverters	G_Inv3	366583.7	4903091.4	2	0	0	87.7	87.7	1	3502.9	3.25	0	81.89	0	2.75	0	0	4.33	0	0	0	0	0	0	-1.31	-1.31
Inverters	G_Inv10	366900.7	4902704.8	2	0	0	87.7	87.7	1	3513.61	3.25	0	81.92	0	2.75	0	0	4.34	0	0	0	0	0	0	-1.35	-1.35
Inverters	G_Inv5	366638.5	4902958.1	2	0	0	87.7	87.7	1	3540.87	3.25	0	81.98	0	2.75	0	0	4.37	0	0	0	0	0	0	-1.45	-1.45
Inverters	G_Inv7	366694.6	4902824.7	2	0	0	87.7	87.7	1	3583.32	3.25	0	82.09	0	2.76	0	0	4.42	0	0	0	0	0	0	-1.6	-1.6
Inverters	G_Inv9	366750.9	4902691.8	2	0	0	87.7	87.7	1	3630.57	3.25	0	82.2	0	2.76	0	0	4.47	0	0	0	0	0	0	-1.77	-1.77
Westbrook Inverter Transfor	W_INVTR2	369368	4906388	2	0	0	77.3	77.3	1	1213.92	3.25	0	72.68	0	-2.06	0	0	0.8	0	0	0	0	0	0	5.92	5.92
Westbrook Inverter Transfor	W_INVTR1	369403	4906578	2	0	0	78.2	78.2	1	1403.51	3.25	0	73.94	0	-2.16	0	0	0.9	0	0	0	0	0	0	5.55	5.55
Westbrook Inverter Transfor	W_INVTR7	369786	4906417	2	0	0	77.3	77.3	1	1301.11	3.25	0	73.29	0	-2.1	0	0	0.85	0	0	0	0	0	0	5.31	5.31
Inverter	MV1-3	364440	4906039	2	0	0	89.1	89.1	1	5034.68	3.25	0	85.04	0	1.65	0	0	12.51	0	0	0	0	0	0	-10.14	-10.14
Westbrook Inverter Transfor	W_INVTR5	369725	4906574	2	0	0	77.3	77.3	1	1436.77	3.25	0	74.15	0	-2.17	0	0	0.92	0	0	0	0	0	0	4.45	4.45
Westbrook Inverter Transfor	W_INVTR6	369881	4906578	2	0	0	77.3	77.3	1	1483.67	3.25	0	74.43	0	-2.19	0	0	0.95	0	0	0	0	0	0	4.16	4.16
Inverter Transformer	MV6-4 T	370244	4906966	2	0	0	69.4	69.4	1	1980.4	3.25	0	76.94	0	2.17	0	0	4.95	0	0	0	0	0	0	-14.7	-14.7
Inverter Transformer	MV6-1 T	370230	4907364	2	0	0	69.4	69.4	1	2341.58	3.25	0	78.39	0	2.29	0	0	5.3	0	0	0	0	0	0	-16.63	-16.63
Inverter Transformer	MV2-1 T	365836	4906816	2	0	0	69.4	69.4	1	3923.76	3.25	0	82.87	0	2.77	0	0	6.62	0	0	0	0	0	0	-22.91	-22.91
Inverter Transformer	MV1-14 T	365157	4905049	2	0	0	69.4	69.4	1	4244.76	3.25	0	83.56	0	2.85	0	0	6.86	0	0	0	0	0	0	-23.91	-23.91
Inverter Transformer	MV1-10 T	365010	4905564	2	0	0	69.4	69.4	1	4407.15	3.25	0	83.88	0	2.88	0	0	6.97	0	0	0	0	0	0	-24.39	-24.39
Inverter Transformer	MV1-7 T	364919	4905782	2	0	0	69.4	69.4	1	4521.89	3.25	0	84.11	0	2.91	0	0	7.05	0	0	0	0	0	0	-24.72	-24.72
Inverter Transformer	MV1-13 T	364725	4905241	2	0	0	69.4	69.4	1	4675.37	3.25	0	84.4	0	2.94	0	0	7.16	0	0	0	0	0	0	-25.15	-25.15
Inverter Transformer	MV3-22 T	368661	4907142	2	0	0	56.1	56.1	1	2101.67	3.25	0	77.45	0	0.45	0	0	7.24	0	0	0	0	0	0	-29.08	-29.08
Inverter Transformer	MV6-3 T	370202	4907140	2	0	0	56.1	56.1	1	2122.87	3.25	0	77.54	0	0.46	0	0	7.28	0	0	0	0	0	0	-29.22	-29.22
Inverter Transformer	MV3-21 T	368484	4907206	2	0	0	56.1	56.1	1	2228.42	3.25	0	77.96	0	0.5	0	0	7.48	0	0	0	0	0	0	-29.89	-29.89
Inverter Transformer	MV3-20 T	368683	4907317	2	0	0	56.1	56.1	1	2259.26	3.25	0	78.08	0	0.51	0	0	7.54	0	0	0	0	0	0	-30.08	-30.08
Inverter Transformer	MV6-2 T	370091	4907339	2	0	0	56.1	56.1	1	2272.15	3.25	0	78.13	0	0.52	0	0	7.57	0	0	0	0	0	0	-30.16	-30.16
Inverter Transformer	MV3-19 T	368352	4907347	2	0	0	56.1	56.1	1	2412.02	3.25	0	78.65	0	0.58	0	0	7.83	0	0	0	0	0	0	-31	-31
Inverter Transformer	MV3-14 T	368678	4907498	2	0	0	56.1	56.1	1	2433.06	3.25	0	78.72	0	0.59	0	0	7.87	0	0	0	0	0	0	-31.12	-31.12
Inverter Transformer	MV3-16 T	368509	4907475	2	0	0	56.1	56.1	1	2466.98	3.25	0	78.84	0	0.6	0	0	7.93	0	0	0	0	0	0	-31.32	-31.32
Inverter Transformer	MV3-15 T	368351	4907477	2	0	0	56.1	56.1	1	2530.16	3.25	0	79.06	0	0.63	0	0	8.04	0	0	0	0	0	0	-31.68	-31.68
Inverter Transformer	MV3-17 T	368183	4907472	2	0	0	56.1	56.1	1	2599.88	3.25	0	79.3	0	0.66	0	0	8.17	0	0	0	0	0	0	-32.07	-32.07
Inverter Transformer	MV3-8 T	368685	4907712	2	0	0	56.1	56.1	1	2636.28	3.25	0	79.42	0	0.67	0	0	8.24	0	0	0	0	0	0	-32.27	-32.27
Inverter Transformer	MV3-9 T	368517	4907703	2	0	0	56.1	56.1	1	2678.21	3.25	0	79.56	0	0.69	0	0	8.31	0	0	0	0	0	0	-32.5	-32.5
Inverter Transformer	MV3-11 T	368340	4907662	2	0	0	56.1	56.1	1	2703.9	3.25	0	79.64	0	0.7	0	0	8.36	0	0	0	0	0	0	-32.64	-32.64
Inverter Transformer	MV3-18 T	367757	4907412	2	0	0	56.1	56.1	1	2775.88	3.25	0	79.87	0	0.73	0	0	8.48	0	0	0	0	0	0	-33.03	-33.03
Inverter Transformer	MV3-10 T	368162	4907669	2	0	0	56.1	56.1	1	2784.77	3.25	0	79.9	0	0.74	0	0	8.5	0	0	0	0	0	0	-33.07	-33.07
Inverter Transformer	MV3-13 T	367958	4907577	2	0	0	56.1	56.1	1	2801.98	3.25	0	79.95	0	0.75	0	0	8.53	0	0	0	0	0	0	-33.16	-33.16
Inverter Transformer	MV3-2 T	368677	4907928	2	0	0	56.1	56.1	1	2846.81	3.25	0	80.09	0	0.76	0	0	8.61	0	0	0	0	0	0	-33.4	-33.4
Inverter Transformer	MV3-5 T	368335	4907843	2	0	0	56.1	56.1	1	2873.14	3.25	0	80.17	0	0.78	0	0	8.65	0	0	0	0	0	0	-33.54	-33.54
Inverter Transformer	MV3-4 T	368507	4907925	2	0	0	56.1	56.1	1	2891.8	3.25	0	80.22	0	0.78	0	0	8.68	0	0	0	0	0	0	-33.63	-33.63
Inverter Transformer	MV3-6 T	368156	4907834	2	0	0	56.1	56.1	1	2936.02	3.25	0	80.36	0	0.8	0	0	8.76	0	0	0	0	0	0	-33.86	-33.86
Inverter Transformer	MV3-7 T	367951	4907754	2	0	0	56.1	56.1	1	2958.57	3.25	0	80.42	0	0.81	0	0	8.8	0	0	0	0	0	0	-33.97	-33.97
Inverter Transformer	MV3-12 T	367674	4907594	2	0	0	56.1	56.1	1	2971.99	3.25	0	80.46	0	0.82	0	0	8.82	0	0	0	0	0	0	-34.04	-34.04
Inverter Transformer	MV3-1 T	368150	4907976	2	0	0	56.1	56.1	1	3067.68	3.25	0	80.74	0	0.86	0	0	8.98	0	0	0	0	0	0	-34.52	-34.52
Inverter Transformer	MV3-3 T	367944	4907927	2	0	0	56.1	56.1	1	3113.83	3.25	0	80.87	0	0.88	0	0	9.06	0	0	0	0	0	0	-34.75	-34.75
Inverter Transformer	MV4-15 T	369170	4908481	2	0	0	56.1	56.1	1	3314.48	3.25	0	81.41	0	0.96	0	0	9.39	0	0	0	0	0	0	-35.7	-35.7
Inverter Transformer	MV4-14 T	369182	4908507	2	0	0	56.1	56.1	1	3339.62	3.25	0	81.47	0	0.97	0	0	9.43	0	0	0	0	0	0	-35.82	-35.82
Inverter Transformer	MV5-6 T	369987	4908507	2	0	0	56.1	56.1	1	3383.82	3.25	0	81.59	0	0.99	0	0	9.5	0	0	0	0	0	0	-36.02	-36.02
Inverter Transformer	MV4-13 T	369057	4908605	2	0	0	56.1	56.1	1	3447.6	3.25	0	81.75	0	1.02	0	0	9.6	0	0	0	0	0	0	-36.31	-36.31
Inverter Transformer	MV5-5 T	370021	4908690	2	0	0	56.1	56.1	1	3569.95	3.25	0	82.05	0	1.07	0	0	9.8	0	0	0	0	0	0	-36.86	-36.86
Inverter Transformer	MV4-12 T	369049	4908803	2	0	0	56.1	56.1	1	3645.43	3.25	0	82.23	0	1.1	0	0	9.92	0	0	0	0	0	0	-37.19	-37.19
Inverter Transformer	MV5-4 T	370330	4908707	2	0	0	56.1	56.1	1	3652.9	3.25	0	82.25	0	1.1	0	0	9.93	0	0	0	0	0	0	-37.23	-37.23
Inverter Transformer	MV4-11 T	369269	4908855	2	0	0	56.1	56.1	1	3682.83	3.25	0	82.32	0	1.12	0	0	9.97	0	0	0	0	0	0	-37.35	-37.35
Inverter Transformer	MV4-10 T	369307	4908858	2	0	0	56.1	56.1	1	3684.67	3.25	0	82.33	0	1.12	0	0	9.98	0	0	0	0	0	0	-37.36	-37.36
Inverter Transformer	MV2-2 T	365982	4906654	2	0	0	56.1	56.1	1	3724.37	3.25	0	82.42	0	1.13	0	0	10.04	0	0	0	0	0	0	-37.53	-37.53
Inverter Transformer	MV5-2 T	370011	4908853	2	0	0	56.1	56.1	1	3728.92	3.25	0	82.43	0	1.13	0	0	10.05	0	0	0	0	0	0	-37.55	-37.55
Inverter Transformer	MV5-3 T	370237	4908851	2	0	0	56.1	56.1	1	3770.6	3.25	0	82.53	0	1.15	0	0	10.11	0	0	0	0	0	0	-37.73	-37.73
Inverter Transformer	MV4-9 T	369284	4909001	2	0	0	56.1	56.1	1	3828.26	3.25	0	82.66	0	1.17	0	0	10.2	0	0	0	0	0	0	-37.97	-37.97
Inverter Transformer	MV4-8 T	369262	4909001	2	0	0	56.1	56.1	1	3828.98	3.25	0	82.66	0	1.18	0	0	10.2	0	0	0	0	0	0	-37.98	-37.98
Inverter Transformer	MV4-7 T	369040	4909001	2	0	0	56.1	56.1	1	3843.39	3.25	0	82.69	0	1.18	0	0	10.22	0	0	0	0	0	0	-38.04	-38.04
Inverter Transformer	MV2-3 T	365814	4906641	2	0	0	56.1	56.1	1	3874.18	3.25	0	82.76	0	1.19	0	0	10.27	0	0	0	0	0	0	-38.17	-38.17
Inverter Transformer	MV5-1 T	370015	4909142	2	0	0	56.1	56.1	1	4014.9	3.25	0	83.07	0	1.25	0	0	10.48	0	0	0	0	0	0	-38.74	-38.74
Inverter Transformer	MV4-6 T	369249	4909192	2	0	0	56.1	56.1	1	4020.33	3.25	0	83.09	0	1.25	0	0	10.49	0	0	0	0	0	0	-38.76	-38.76
Inverter Transformer	MV4-5 T	369283	4909199	2	0	0	56.1	56.1	1	4026.2	3.25	0	83.1	0	1.25	0	0	10.49	0	0	0	0	0	0	-38.79	-38.79
Inverter Transformer	MV4-4 T	369033	4909199	2	0	0	56.1	56.1	1	4041.19	3.25	0	83.13	0	1.26	0	0	10.52	0	0	0	0	0	0	-38.85	-38.85
Inverter Transformer	MV2-4 T	365590	4906628	2	0	0	56.1	56.1	1	4077.75	3.25	0	83.21	0	1.27	0	0	10.57	0	0	0	0	0	0	-38.99	-38.99
Inverter Transformer	MV1-15 T	365309	4904994	2	0	0	56.1	56.1	1	4094.88	3.25	0	83.24	0	1.28	0	0	10.6	0	0	0	0	0	0	-39.06	-39.06
Inverter Transformer	MV4-2 T	369267	4909397	2	0	0	56.1	56.1	1	4224.59	3.25	0	83.52	0	1.33	0	0	10.78	0	0	0	0	0	0	-39.57	-39.57
Inverter Transformer	MV4-3 T	369234	4909397	2	0	0	56.1	56.1	1	4225.76	3.25	0	83.52	0	1.33	0	0	10.79	0	0	0	0	0	0	-39.58	-39.58
Inverter Transformer	MV4-1 T	369017	4909397	2	0	0	56.1	56.1	1	4239.83	3.25	0	83.55	0	1.34	0	0	10.81	0	0	0	0	0	0	-39.63	-39.63
Inverter Transformer	MV1-12 T	365044	4905386	2	0	0	56.1	56.1	1	4361.03	3.25	0	83.79	0	1.39	0	0	10.98	0	0	0	0	0	0	-40.1	-40.1

	Inverter Transformer	MV1-4 T	364821	4905918	2	0	0	56.1	56.1	1	4638.87	3.25	0	84.33	0	1.49	0	0	11.37	0	0	0	0	0	0	-41.13	-41.13
	Inverter Transformer	MV1-8 T	364782	4905647	2	0	0	56.1	56.1	1	4642.01	3.25	0	84.33	0	1.49	0	0	11.37	0	0	0	0	0	0	-41.14	-41.14
	Inverter Transformer	MV1-2 T	364759	4906063	2	0	0	56.1	56.1	1	4725.19	3.25	0	84.49	0	1.52	0	0	11.49	0	0	0	0	0	0	-41.44	-41.44
	Inverter Transformer	MV1-11 T	364649	4905414	2	0	0	56.1	56.1	1	4756.93	3.25	0	84.55	0	1.54	0	0	11.53	0	0	0	0	0	0	-41.55	-41.55
	Inverter Transformer	MV1-5 T	364676	4905892	2	0	0	56.1	56.1	1	4778.08	3.25	0	84.59	0	1.54	0	0	11.56	0	0	0	0	0	0	-41.63	-41.63
	Inverter Transformer	MV1-1 T	364721	4906166	2	0	0	56.1	56.1	1	4782.8	3.25	0	84.59	0	1.55	0	0	11.56	0	0	0	0	0	0	-41.65	-41.65
	Inverter Transformer	MV1-9 T	364555	4905646	2	0	0	56.1	56.1	1	4867.79	3.25	0	84.75	0	1.58	0	0	11.68	0	0	0	0	0	0	-41.94	-41.94
	Inverter Transformer	MV1-6 T	364482	4905835	2	0	0	56.1	56.1	1	4962.06	3.25	0	84.91	0	1.61	0	0	11.8	0	0	0	0	0	0	-42.27	-42.27
	Inverter Transformer	MV1-3 T	364435	4906039	2	0	0	56.1	56.1	1	5039.6	3.25	0	85.05	0	1.64	0	0	11.91	0	0	0	0	0	0	-42.54	-42.54
	Line Reactor	NGR	369421	4908787.5	5	0	0	45.4	45.4	1	3613.06	5.25	0	82.16	0	3.3	1.33	0.12	1.48	0	0	0	0	0	0	-42.91	-42.91
Limit. Valu	0	0																								
Level D/N:	25.883	25.883																								

Receiver: Existing Noise Receptor
ID: W-R8
X: 369415.8
Y: 4905153.2
Z: 4.5
Ground: 0

ISO	Description	ID	X	Y	Z	Ground	ReflOrd	LxT	LxN	L/A	Dist.	hm	Freq	Adiv	K0b	Agr	Abar	z	Aatm	Afol	Ahous	Cmet	CmetN	Dc	RL	LtotT	LtotN
	Sol_Luce Substation	S_Substation	369426	4908792	3.5	0	0	112.1	112.1	1	3638.81	5.25	0	82.22	0	0.49	3.21	0.35	6.88	0	0	0	0	0	0	19.28	19.28
	Inverter	MV6-3	370207	4907140	2	0	0	100.3	100.3	1	2138.55	3.25	0	77.6	0	0.17	0	0	13.75	0	0	0	0	0	0	8.79	8.79
	Inverter	MV3-21	368478	4907206	2	0	0	100.3	100.3	1	2256.87	3.25	0	78.07	0	0.2	0	0	13.99	0	0	0	0	0	0	8.06	8.06
	Inverter	MV3-20	368689	4907317	2	0	0	100.3	100.3	1	2282.6	3.25	0	78.17	0	0.2	0	0	14.04	0	0	0	0	0	0	7.9	7.9
	Inverter	MV6-2	370085	4907339	2	0	0	100.3	100.3	1	2285.95	3.25	0	78.18	0	0.21	0	0	14.04	0	0	0	0	0	0	7.88	7.88
	Inverter	MV3-19	368357	4907347	2	0	0	100.3	100.3	1	2435.94	3.25	0	78.73	0	0.24	0	0	14.34	0	0	0	0	0	0	7	7
	Inverter	MV3-14	368684	4907498	2	0	0	100.3	100.3	1	2456.34	3.25	0	78.81	0	0.25	0	0	14.38	0	0	0	0	0	0	6.88	6.88
	Inverter	MV3-16	368514	4907475	2	0	0	100.3	100.3	1	2490.78	3.25	0	78.93	0	0.25	0	0	14.44	0	0	0	0	0	0	6.69	6.69
	Inverter	MV3-15	368357	4907477	2	0	0	100.3	100.3	1	2553.65	3.25	0	79.14	0	0.27	0	0	14.56	0	0	0	0	0	0	6.34	6.34
	SubstationTransformer	W_ST	369711.17	4906112.3	2.5	0	0	92	92	1	1003.53	3.5	0	71.03	0	-0.37	0	-0.14	2.53	0	0	0	0	0	0	18.79	18.79
	Inverter	MV3-17	368178	4907472	2	0	0	100.3	100.3	1	2628.5	3.25	0	79.39	0	0.29	0	0	14.7	0	0	0	0	0	0	5.93	5.93
	Inverter	MV3-8	368680	4907712	2	0	0	100.3	100.3	1	2662.49	3.25	0	79.51	0	0.29	0	0	14.76	0	0	0	0	0	0	5.75	5.75
	Inverter	MV3-9	368512	4907703	2	0	0	100.3	100.3	1	2705.24	3.25	0	79.64	0	0.3	0	0	14.84	0	0	0	0	0	0	5.52	5.52
	Inverter	MV3-11	368346	4907662	2	0	0	100.3	100.3	1	2727.37	3.25	0	79.71	0	0.31	0	0	14.88	0	0	0	0	0	0	5.41	5.41
	Inverter	MV3-18	367752	4907412	2	0	0	100.3	100.3	1	2805.43	3.25	0	79.96	0	0.32	0	0	15.02	0	0	0	0	0	0	5	5
	Inverter	MV3-10	368167	4907669	2	0	0	100.3	100.3	1	2808.69	3.25	0	79.97	0	0.32	0	0	15.03	0	0	0	0	0	0	4.99	4.99
	Inverter	MV3-13	367963	4907577	2	0	0	100.3	100.3	1	2825.85	3.25	0	80.02	0	0.33	0	0	15.06	0	0	0	0	0	0	4.9	4.9
	Inverter	MV3-6	368162	4907834	2	0	0	100.3	100.3	1	2959.51	3.25	0	80.42	0	0.35	0	0	15.3	0	0	0	0	0	0	4.23	4.23
	Inverter	MV3-7	367945	4907754	2	0	0	100.3	100.3	1	2987.88	3.25	0	80.51	0	0.36	0	0	15.35	0	0	0	0	0	0	4.09	4.09
	Inverter	MV3-12	367668	4907594	2	0	0	100.3	100.3	1	3002.05	3.25	0	80.55	0	0.36	0	0	15.38	0	0	0	0	0	0	4.03	4.03
	Inverter	MV3-3	367939	4907927	2	0	0	100.3	100.3	1	3142.44	3.25	0	80.95	0	0.39	0	0	15.62	0	0	0	0	0	0	3.36	3.36
	Inverter	MV6-1	370235	4907364	2	0	0	97.3	97.3	1	2357.7	3.25	0	78.45	0	0.22	0	0	14.18	0	0	0	0	0	0	4.45	4.45
	Inverter	MV5-5	370015	4908690	2	0	0	100.3	100.3	1	3587.2	3.25	0	82.1	0	0.47	0	0	16.38	0	0	0	0	0	0	1.38	1.38
	Inverter	MV5-4	370324	4908707	2	0	0	100.3	100.3	1	3668.01	3.25	0	82.29	0	0.48	0	0	16.51	0	0	0	0	0	0	1.04	1.04
	Inverter	MV4-11	369264	4908855	2	0	0	100.3	100.3	1	3704.91	3.25	0	82.38	0	0.48	0	0	16.57	0	0	0	0	0	0	0.88	0.88
	Inverter	MV4-10	369312	4908858	2	0	0	100.3	100.3	1	3706.25	3.25	0	82.38	0	0.48	0	0	16.57	0	0	0	0	0	0	0.88	0.88
	Westbrook Inverter Enclosur	W_INV3	369508	4906164	2	0	0	89.1	89.1	1	1015	3.25	0	71.13	0	0.69	0	0	6.34	0	0	0	0	0	0	10.9	10.9
	Inverter	MV5-2	370006	4908853	2	0	0	100.3	100.3	1	3746.58	3.25	0	82.47	0	0.49	0	0	16.64	0	0	0	0	0	0	0.71	0.71
	Inverter	MV5-3	370231	4908851	2	0	0	100.3	100.3	1	3786.59	3.25	0	82.56	0	0.5	0	0	16.7	0	0	0	0	0	0	0.55	0.55
	Westbrook Inverter Enclosur	W_INV4	369673	4906164	2	0	0	89.1	89.1	1	1043.01	3.25	0	71.37	0	0.69	0	0	6.4	0	0	0	0	0	0	10.6	10.6
	Inverter	MV4-9	369289	4909001	2	0	0	100.3	100.3	1	3849.89	3.25	0	82.71	0	0.51	0	0	16.81	0	0	0	0	0	0	0.29	0.29
	Inverter	MV4-8	369256	4909001	2	0	0	100.3	100.3	1	3851.12	3.25	0	82.71	0	0.51	0	0	16.81	0	0	0	0	0	0	0.29	0.29
	Inverter	MV4-7	369035	4909001	2	0	0	100.3	100.3	1	3866.6	3.25	0	82.75	0	0.51	0	0	16.83	0	0	0	0	0	0	0.22	0.22
	Inverter	MV2-3	365820	4906641	2	0	0	100.3	100.3	1	3891.44	3.25	0	82.8	0	0.51	0	0	16.87	0	0	0	0	0	0	0.12	0.12
	Inverter	MV5-1	370020	4909142	2	0	0	100.3	100.3	1	4034.3	3.25	0	83.12	0	0.53	0	0	17.1	0	0	0	0	0	0	-0.44	-0.44
	Inverter	MV4-6	369243	4909192	2	0	0	100.3	100.3	1	4042.5	3.25	0	83.13	0	0.53	0	0	17.12	0	0	0	0	0	0	-0.47	-0.47
	Inverter	MV4-5	369289	4909199	2	0	0	100.3	100.3	1	4047.79	3.25	0	83.14	0	0.53	0	0	17.12	0	0	0	0	0	0	-0.49	-0.49
	Inverter	MV4-4	369027	4909199	2	0	0	100.3	100.3	1	4064.44	3.25	0	83.18	0	0.54	0	0	17.15	0	0	0	0	0	0	-0.56	-0.56
	Inverter	MV2-4	365586	4906624	2	0	0	100.3	100.3	1	4102.51	3.25	0	83.26	0	0.54	0	0	17.21	0	0	0	0	0	0	-0.7	-0.7
	Inverter	MV1-15	365315	4904994	2	0	0	100.3	100.3	1	4103.89	3.25	0	83.26	0	0.54	0	0	17.21	0	0	0	0	0	0	-0.71	-0.71
	Inverter	MV4-2	369272	4909397	2	0	0	100.3	100.3	1	4246.24	3.25	0	83.56	0	0.56	0	0	17.44	0	0	0	0	0	0	-1.25	-1.25
	Inverter	MV4-3	369229	4909397	2	0	0	100.3	100.3	1	4247.91	3.25	0	83.56	0	0.56	0	0	17.44	0	0	0	0	0	0	-1.25	-1.25
	Inverter	MV4-1	369011	4909397	2	0	0	100.3	100.3	1	4263.06	3.25	0	83.59	0	0.56	0	0	17.46	0	0	0	0	0	0	-1.31	-1.31
	Inverter	MV1-12	365038	4905386	2	0	0	100.3	100.3	1	4383.99	3.25	0	83.84	0	0.58	0	0	17.65	0	0	0	0	0	0	-1.75	-1.75
	Westbrook Inverter Enclosur	W_INV2	369374	4906388	2	0	0	89.1	89.1	1	1235.51	3.25	0	72.84	0	0.73	0	0	6.75	0	0	0	0	0	0	8.74	8.74
	Inverter	MV1-8	364788	4905647	2	0	0	100.3	100.3	1	4654.07	3.25	0	84.36	0	0.61	0	0	18.06	0	0	0	0	0	0	-2.72	-2.72
	Inverter	MV1-4	364815	4905918	2	0	0	100.3	100.3	1	4663.93	3.25	0	84.38	0	0.61	0	0	18.08	0	0	0	0	0	0	-2.75	-2.75
	Inverter	MV1-2	364753	4906063	2	0	0	100.3	100.3	1	4750.73	3.25	0	84.54	0	0.62	0	0	18.21	0	0	0	0	0	0	-3.05	-3.05
	Inverter	MV1-11	364655	4905414	2	0	0	100.3	100.3	1	4767.94	3.25	0	84.57	0	0.62	0	0	18.24	0	0	0	0	0	0	-3.11	-3.11
	Inverter	MV1-5	364671	4905892	2	0	0	100.3	100.3	1	4801.97	3.25	0	84.63	0	0.62	0	0	18.29	0	0	0	0	0	0	-3.23	-3.23
	Westbrook Inverter Enclosur	W_INV7	369780	4906417	2	0	0	89.1	89.1	1	1315.23	3.25	0	73.38	0	0.75	0	0	6.89	0	0	0	0	0	0	8.04	8.04
	Inverter	MV1-1	364715	4906166	2	0	0	100.3	100.3	1	4808.67	3.25	0	84.64	0	0.62	0	0	18.3	0	0	0	0	0	0	-3.25	-3.25
	Inverter	MV1-9	364561	4905646	2	0	0	100.3	100.3	1	4879.75	3.25	0	84.77	0	0.63	0	0	18.4	0	0	0	0	0	0	-3.49	-3.49

Inverter	MV1-6	364477	4905835	2	0	0	100.3	100.3	1	4985.64	3.25	0	84.95	0	0.64	0	0	18.56	0	0	0	0	0	0	-3.84	-3.84
Westbrook Inverter Enclosur	W_INV5	369719	4906574	2	0	0	89.1	89.1	1	1452.79	3.25	0	74.24	0	0.78	0	0	7.13	0	0	0	0	0	0	6.9	6.9
Westbrook Inverter Enclosur	W_INV6	369875	4906578	2	0	0	89.1	89.1	1	1496.97	3.25	0	74.5	0	0.79	0	0	7.2	0	0	0	0	0	0	6.56	6.56
DSTATCOM - 10 MVAR #2	DSAT2	369403	4908757	2.5	0	0	96.6	96.6	1	3603.82	3.5	0	82.14	0	3.51	0	0	2.63	0	0	0	0	0	0	8.35	8.35
DSTATCOM - 10 MVAR #1	DSAT1	369437	4908757	2.5	0	0	96.6	96.6	1	3603.86	3.5	0	82.14	0	3.51	0	0	2.63	0	0	0	0	0	0	8.35	8.35
Inverter	MV2-1	365842	4906816	2	0	0	97.3	97.3	1	3941.69	3.25	0	82.91	0	0.52	0	0	16.96	0	0	0	0	0	0	-3.08	-3.08
Inverter	MV1-14	365163	4905049	2	0	0	97.3	97.3	1	4254.08	3.25	0	83.58	0	0.56	0	0	17.45	0	0	0	0	0	0	-4.27	-4.27
Inverter	MV1-10	365004	4905564	2	0	0	97.3	97.3	1	4430.89	3.25	0	83.93	0	0.58	0	0	17.72	0	0	0	0	0	0	-4.92	-4.92
Inverter	MV1-7	364925	4905782	2	0	0	97.3	97.3	1	4534.61	3.25	0	84.13	0	0.59	0	0	17.88	0	0	0	0	0	0	-5.3	-5.3
Inverter	MV1-13	364731	4905241	2	0	0	97.3	97.3	1	4685.62	3.25	0	84.42	0	0.61	0	0	18.11	0	0	0	0	0	0	-5.83	-5.83
Westbrook Inverter Enclosur	W_INV1	369409	4906578	2	0	0	86.1	86.1	1	1424.82	3.25	0	74.08	0	0.78	0	0	7.08	0	0	0	0	0	0	4.13	4.13
Inverter	MV3-22	368656	4907142	2	0	0	89.1	89.1	1	2129	3.25	0	77.56	0	0.94	0	0	8.25	0	0	0	0	0	0	2.3	2.3
Gardiner Substation	G_Sub	366586.3	4903349.9	2.5	0	0	90.8	90.8	1	3355.29	4.25	0	81.51	0	1.18	2.87	0.3	6.48	0	0	0	0	0	0	-1.27	-1.27
Inverter	MV6-4	370250	4906966	2	0	0	86.1	86.1	1	1995.53	3.25	0	77	0	0.91	0	0	8.04	0	0	0	0	0	0	0.11	0.11
Inverter	MV3-2	368671	4907928	2	0	0	89.1	89.1	1	2873.02	3.25	0	80.17	0	1.12	0	0	9.42	0	0	0	0	0	0	-1.65	-1.65
Inverter	MV3-5	368340	4907843	2	0	0	89.1	89.1	1	2896.96	3.25	0	80.24	0	1.12	0	0	9.46	0	0	0	0	0	0	-1.76	-1.76
Inverter	MV3-4	368502	4907925	2	0	0	89.1	89.1	1	2918.55	3.25	0	80.3	0	1.13	0	0	9.49	0	0	0	0	0	0	-1.87	-1.87
Inverter	MV3-1	368156	4907976	2	0	0	89.1	89.1	1	3091.17	3.25	0	80.8	0	1.17	0	0	9.75	0	0	0	0	0	0	-2.67	-2.67
Fixed Reactor Bank 1	FRB1	369378	4908755	6	0	0	89.8	89.8	1	3602	5.25	0	82.13	0	-0.78	0	0	6.82	0	0	0	0	0	0	1.6	1.6
Fixed Reactor Bank 2	FRB2	369464	4908755	6	0	0	89.8	89.8	1	3602.12	5.25	0	82.13	0	-0.78	0	0	6.83	0	0	0	0	0	0	1.6	1.6
Inverter	MV4-15	369176	4908481	2	0	0	89.1	89.1	1	3336.43	3.25	0	81.47	0	1.23	0	0	10.12	0	0	0	0	0	0	-3.76	-3.76
Inverter	MV4-14	369176	4908507	2	0	0	89.1	89.1	1	3362.36	3.25	0	81.53	0	1.24	0	0	10.16	0	0	0	0	0	0	-3.87	-3.87
Inverter	MV5-6	369982	4908507	2	0	0	89.1	89.1	1	3401.26	3.25	0	81.63	0	1.24	0	0	10.22	0	0	0	0	0	0	-4.04	-4.04
Inverter	MV4-13	369051	4908605	2	0	0	89.1	89.1	1	3471.02	3.25	0	81.81	0	1.26	0	0	10.32	0	0	0	0	0	0	-4.33	-4.33
Inverter	MV4-12	369043	4908803	2	0	0	89.1	89.1	1	3668.79	3.25	0	82.29	0	1.31	0	0	10.61	0	0	0	0	0	0	-5.15	-5.15
Inverter	MV2-2	365977	4906654	2	0	0	89.1	89.1	1	3752.03	3.25	0	82.49	0	1.33	0	0	10.73	0	0	0	0	0	0	-5.49	-5.49
Westbrook Inverter Transfor	W_INVTR3	369514	4906164	2	0	0	77.3	77.3	1	1015.56	3.25	0	71.13	0	-1.94	0	0	0.69	0	0	0	0	0	0	7.46	7.46
Inverters	G_Inv2	366676.9	4903239.1	2	0	0	87.7	87.7	1	3341.46	3.25	0	81.48	0	2.73	0	0	4.15	0	0	0	0	0	0	-0.71	-0.71
Inverters	G_Inv4	366732.8	4903105	2	0	0	87.7	87.7	1	3375.44	3.25	0	81.57	0	2.74	0	0	4.19	0	0	0	0	0	0	-0.83	-0.83
Inverters	G_Inv6	366788.5	4902972	2	0	0	87.7	87.7	1	3414.72	3.25	0	81.67	0	2.74	0	0	4.23	0	0	0	0	0	0	-0.98	-0.98
Westbrook Inverter Transfor	W_INVTR4	369679	4906164	2	0	0	77.3	77.3	1	1044.51	3.25	0	71.38	0	-1.96	0	0	0.7	0	0	0	0	0	0	7.22	7.22
Inverters	G_Inv8	366844.5	4902838.5	2	0	0	87.7	87.7	1	3459.69	3.25	0	81.78	0	2.74	0	0	4.28	0	0	0	0	0	0	-1.15	-1.15
Inverters	G_Inv1	366526.4	4903225.8	2	0	0	87.7	87.7	1	3473.26	3.25	0	81.81	0	2.75	0	0	4.3	0	0	0	0	0	0	-1.2	-1.2
Inverters	G_Inv3	366583.7	4903091.4	2	0	0	87.7	87.7	1	3503.12	3.25	0	81.89	0	2.75	0	0	4.33	0	0	0	0	0	0	-1.31	-1.31
Inverters	G_Inv10	366900.7	4902704.8	2	0	0	87.7	87.7	1	3510.04	3.25	0	81.91	0	2.75	0	0	4.34	0	0	0	0	0	0	-1.33	-1.33
Inverters	G_Inv5	366638.5	4902958.1	2	0	0	87.7	87.7	1	3540.04	3.25	0	81.98	0	2.75	0	0	4.37	0	0	0	0	0	0	-1.44	-1.44
Inverters	G_Inv7	366694.6	4902824.7	2	0	0	87.7	87.7	1	3581.46	3.25	0	82.08	0	2.76	0	0	4.42	0	0	0	0	0	0	-1.59	-1.59
Inverters	G_Inv9	366750.9	4902691.8	2	0	0	87.7	87.7	1	3627.7	3.25	0	82.19	0	2.76	0	0	4.47	0	0	0	0	0	0	-1.76	-1.76
Westbrook Inverter Transfor	W_INVTR2	369368	4906388	2	0	0	77.3	77.3	1	1235.73	3.25	0	72.84	0	-2.07	0	0	0.81	0	0	0	0	0	0	5.76	5.76
Westbrook Inverter Transfor	W_INVTR1	369403	4906578	2	0	0	78.2	78.2	1	1424.86	3.25	0	74.08	0	-2.17	0	0	0.91	0	0	0	0	0	0	5.42	5.42
Inverter	MV1-3	364440	4906039	2	0	0	89.1	89.1	1	5054.03	3.25	0	85.07	0	1.65	0	0	12.54	0	0	0	0	0	0	-10.2	-10.2
Westbrook Inverter Transfor	W_INVTR7	369786	4906417	2	0	0	77.3	77.3	1	1316.91	3.25	0	73.39	0	-2.11	0	0	0.86	0	0	0	0	0	0	5.21	5.21
Westbrook Inverter Transfor	W_INVTR5	369725	4906574	2	0	0	77.3	77.3	1	1454.06	3.25	0	74.25	0	-2.18	0	0	0.93	0	0	0	0	0	0	4.34	4.34
Westbrook Inverter Transfor	W_INVTR6	369881	4906578	2	0	0	77.3	77.3	1	1498.82	3.25	0	74.52	0	-2.2	0	0	0.95	0	0	0	0	0	0	4.07	4.07
Inverter Transformer	MV6-4 T	370244	4906966	2	0	0	69.4	69.4	1	1993.03	3.25	0	76.99	0	2.17	0	0	4.96	0	0	0	0	0	0	-14.77	-14.77
Inverter Transformer	MV6-1 T	370230	4907364	2	0	0	69.4	69.4	1	2355.96	3.25	0	78.44	0	2.3	0	0	5.31	0	0	0	0	0	0	-16.7	-16.7
Inverter Transformer	MV2-1 T	365836	4906816	2	0	0	69.4	69.4	1	3947.14	3.25	0	82.93	0	2.77	0	0	6.64	0	0	0	0	0	0	-22.98	-22.98
Inverter Transformer	MV1-14 T	365157	4905049	2	0	0	69.4	69.4	1	4260.08	3.25	0	83.59	0	2.85	0	0	6.87	0	0	0	0	0	0	-23.96	-23.96
Inverter Transformer	MV1-10 T	365010	4905564	2	0	0	69.4	69.4	1	4424.91	3.25	0	83.92	0	2.89	0	0	6.99	0	0	0	0	0	0	-24.44	-24.44
Inverter Transformer	MV1-7 T	364919	4905782	2	0	0	69.4	69.4	1	4540.55	3.25	0	84.14	0	2.91	0	0	7.07	0	0	0	0	0	0	-24.77	-24.77
Inverter Transformer	MV1-13 T	364725	4905241	2	0	0	69.4	69.4	1	4691.62	3.25	0	84.43	0	2.95	0	0	7.17	0	0	0	0	0	0	-25.2	-25.2
Inverter Transformer	MV3-22 T	368661	4907142	2	0	0	56.1	56.1	1	2127.22	3.25	0	77.56	0	0.46	0	0	7.29	0	0	0	0	0	0	-29.25	-29.25
Inverter Transformer	MV6-3 T	370202	4907140	2	0	0	56.1	56.1	1	2136.7	3.25	0	77.59	0	0.46	0	0	7.31	0	0	0	0	0	0	-29.31	-29.31
Inverter Transformer	MV3-21 T	368484	4907206	2	0	0	56.1	56.1	1	2254.38	3.25	0	78.06	0	0.51	0	0	7.53	0	0	0	0	0	0	-30.05	-30.05
Inverter Transformer	MV3-20 T	368683	4907317	2	0	0	56.1	56.1	1	2284.52	3.25	0	78.18	0	0.52	0	0	7.59	0	0	0	0	0	0	-30.23	-30.23
Inverter Transformer	MV6-2 T	370091	4907339	2	0	0	56.1	56.1	1	2287.71	3.25	0	78.19	0	0.53	0	0	7.6	0	0	0	0	0	0	-30.25	-30.25
Inverter Transformer	MV3-19 T	368352	4907347	2	0	0	56.1	56.1	1	2438.12	3.25	0	78.74	0	0.59	0	0	7.88	0	0	0	0	0	0	-31.15	-31.15
Inverter Transformer	MV3-14 T	368678	4907498	2	0	0	56.1	56.1	1	2458.14	3.25	0	78.81	0	0.6	0	0	7.91	0	0	0	0	0	0	-31.27	-31.27
Inverter Transformer	MV3-16 T	368509	4907475	2	0	0	56.1	56.1	1	2492.6	3.25	0	78.93	0	0.61	0	0	7.98	0	0	0	0	0	0	-31.46	-31.46
Inverter Transformer	MV3-15 T	368351	4907477	2	0	0	56.1	56.1	1	2556.14	3.25	0	79.15	0	0.64	0	0	8.09	0	0	0	0	0	0	-31.83	-31.83
Inverter Transformer	MV3-17 T	368183	4907472	2	0	0	56.1	56.1	1	2626.14	3.25	0	79.39	0	0.67	0	0	8.22	0	0	0	0	0	0	-32.22	-32.22
Inverter Transformer	MV3-8 T	368685	4907712	2	0	0	56.1	56.1	1	2661.11	3.25	0	79.5	0	0.69	0	0	8.28	0	0	0	0	0	0	-32.41	-32.41
Inverter Transformer	MV3-9 T	368517	4907703	2	0	0	56.1	56.1	1	2703.58	3.25	0	79.64	0	0.7	0	0	8.35	0	0	0	0	0	0	-32.64	-32.64
Inverter Transformer	MV3-11 T	368340	4907662	2	0	0	56.1	56.1	1	2729.73	3.25	0	79.72	0	0.71	0	0	8.4	0	0	0	0	0	0	-32.78	-32.78
Inverter Transformer	MV3-18 T	367757	4907412	2	0	0	56.1	56.1	1	2802.46	3.25	0	79.95	0	0.75	0	0	8.53	0	0	0	0	0	0	-33.17	-33.17
Inverter Transformer	MV3-10 T	368162	4907669	2	0	0	56.1	56.1	1	2810.92	3.25	0	79.98	0	0.75	0	0	8.54	0	0	0	0	0	0	-33.21	-33.21
Inverter Transformer	MV3-13 T	367958	4907577	2	0	0	56.1	56.1	1	2828.43	3.25	0	80.03	0	0.76	0	0	8.57	0	0	0	0	0	0	-33.3	-33.3
Inverter Transformer	MV3-2 T	368677	4907928	2	0	0	56.1	56.1	1	2871.47	3.25	0	80.16	0	0.78	0	0	8.65	0	0	0	0	0	0	-33.53	-33.53
Inverter Transformer	MV3-5 T	368335	4907843	2	0	0	56.1	56.1	1	2898.82	3.25	0	80.24	0	0.79	0	0	8.7	0	0	0	0	0	0	-33.67	-33.67
Inverter Transformer	MV3-4 T	368507	4907925	2	0	0	56.1	56.1	1	2916.98	3.25	0	80.3	0	0.79	0	0	8.73	0	0	0	0	0	0	-33.76	-33.76
Inverter Transformer	MV3-6 T	368156	4907834	2	0	0	56.1	56.1	1	2962.06	3.25	0	80.43	0	0.81	0	0	8.8	0	0	0	0	0	0	-33.99	-33.99
Inverter Transformer	MV3-7 T	367951	4907754	2	0	0	56.1	56.1	1	2984.93	3.25	0	80.5	0	0.82	0	0	8.84	0	0	0	0	0	0	-34.11	-34.11
Inverter Transformer	MV3-12 T	367674	4907594	2	0	0	56.1	56.1	1	2998.56	3.25	0	80.54	0	0.83	0	0	8.87	0	0	0	0	0	0	-34.17	-34.17
Inverter Transformer	MV3-1 T	368150	4907976	2	0	0	56.1	56.1	1	3093.62	3.25	0	80.81	0	0.87	0	0	9.03	0	0	0	0	0	0	-34.65	-34.65

	Inverter Transformer	MV3-3 T	367944	4907927	2	0	0	56.1	56.1	1	3140.09	3.25	0	80.94	0	0.89	0	0	9.1	0	0	0	0	0	0	-34.87	-34.87
	Inverter Transformer	MV4-15 T	369170	4908481	2	0	0	56.1	56.1	1	3336.87	3.25	0	81.47	0	0.97	0	0	9.43	0	0	0	0	0	0	-35.81	-35.81
	Inverter Transformer	MV4-14 T	369182	4908507	2	0	0	56.1	56.1	1	3361.94	3.25	0	81.53	0	0.98	0	0	9.47	0	0	0	0	0	0	-35.92	-35.92
	Inverter Transformer	MV5-6 T	369987	4908507	2	0	0	56.1	56.1	1	3402.09	3.25	0	81.63	0	1	0	0	9.53	0	0	0	0	0	0	-36.11	-36.11
	Inverter Transformer	MV4-13 T	369057	4908605	2	0	0	56.1	56.1	1	3470.4	3.25	0	81.81	0	1.03	0	0	9.64	0	0	0	0	0	0	-36.42	-36.42
	Inverter Transformer	MV5-5 T	370021	4908690	2	0	0	56.1	56.1	1	3588.21	3.25	0	82.1	0	1.08	0	0	9.83	0	0	0	0	0	0	-36.94	-36.94
	Inverter Transformer	MV4-12 T	369049	4908803	2	0	0	56.1	56.1	1	3668.19	3.25	0	82.29	0	1.11	0	0	9.95	0	0	0	0	0	0	-37.29	-37.29
	Inverter Transformer	MV5-4 T	370330	4908707	2	0	0	56.1	56.1	1	3669.5	3.25	0	82.29	0	1.11	0	0	9.95	0	0	0	0	0	0	-37.3	-37.3
	Inverter Transformer	MV4-11 T	369269	4908855	2	0	0	56.1	56.1	1	3704.71	3.25	0	82.38	0	1.12	0	0	10.01	0	0	0	0	0	0	-37.45	-37.45
	Inverter Transformer	MV4-10 T	369307	4908858	2	0	0	56.1	56.1	1	3706.4	3.25	0	82.38	0	1.13	0	0	10.01	0	0	0	0	0	0	-37.46	-37.46
	Inverter Transformer	MV5-2 T	370011	4908853	2	0	0	56.1	56.1	1	3747.37	3.25	0	82.47	0	1.14	0	0	10.07	0	0	0	0	0	0	-37.63	-37.63
	Inverter Transformer	MV2-2 T	365982	4906654	2	0	0	56.1	56.1	1	3747.45	3.25	0	82.47	0	1.14	0	0	10.07	0	0	0	0	0	0	-37.63	-37.63
	Inverter Transformer	MV5-3 T	370237	4908851	2	0	0	56.1	56.1	1	3787.89	3.25	0	82.57	0	1.16	0	0	10.14	0	0	0	0	0	0	-37.8	-37.8
	Inverter Transformer	MV4-9 T	369284	4909001	2	0	0	56.1	56.1	1	3850.06	3.25	0	82.71	0	1.18	0	0	10.23	0	0	0	0	0	0	-38.06	-38.06
	Inverter Transformer	MV4-8 T	369262	4909001	2	0	0	56.1	56.1	1	3850.87	3.25	0	82.71	0	1.18	0	0	10.23	0	0	0	0	0	0	-38.07	-38.07
	Inverter Transformer	MV4-7 T	369040	4909001	2	0	0	56.1	56.1	1	3866.11	3.25	0	82.75	0	1.19	0	0	10.25	0	0	0	0	0	0	-38.13	-38.13
	Inverter Transformer	MV2-3 T	365814	4906641	2	0	0	56.1	56.1	1	3896.99	3.25	0	82.81	0	1.2	0	0	10.3	0	0	0	0	0	0	-38.26	-38.26
	Inverter Transformer	MV5-1 T	370015	4909142	2	0	0	56.1	56.1	1	4033.56	3.25	0	83.11	0	1.26	0	0	10.5	0	0	0	0	0	0	-38.82	-38.82
	Inverter Transformer	MV4-6 T	369249	4909192	2	0	0	56.1	56.1	1	4042.24	3.25	0	83.13	0	1.26	0	0	10.52	0	0	0	0	0	0	-38.85	-38.85
	Inverter Transformer	MV4-5 T	369283	4909199	2	0	0	56.1	56.1	1	4047.98	3.25	0	83.14	0	1.26	0	0	10.53	0	0	0	0	0	0	-38.88	-38.88
	Inverter Transformer	MV4-4 T	369033	4909199	2	0	0	56.1	56.1	1	4063.87	3.25	0	83.18	0	1.27	0	0	10.55	0	0	0	0	0	0	-38.94	-38.94
	Inverter Transformer	MV2-4 T	365590	4906628	2	0	0	56.1	56.1	1	4100.22	3.25	0	83.26	0	1.28	0	0	10.6	0	0	0	0	0	0	-39.08	-39.08
	Inverter Transformer	MV1-15 T	365309	4904994	2	0	0	56.1	56.1	1	4109.89	3.25	0	83.28	0	1.29	0	0	10.62	0	0	0	0	0	0	-39.12	-39.12
	Inverter Transformer	MV4-2 T	369267	4909397	2	0	0	56.1	56.1	1	4246.41	3.25	0	83.56	0	1.34	0	0	10.82	0	0	0	0	0	0	-39.66	-39.66
	Inverter Transformer	MV4-3 T	369234	4909397	2	0	0	56.1	56.1	1	4247.69	3.25	0	83.56	0	1.34	0	0	10.82	0	0	0	0	0	0	-39.66	-39.66
	Inverter Transformer	MV4-1 T	369017	4909397	2	0	0	56.1	56.1	1	4262.5	3.25	0	83.59	0	1.35	0	0	10.84	0	0	0	0	0	0	-39.72	-39.72
	Inverter Transformer	MV1-12 T	365044	4905386	2	0	0	56.1	56.1	1	4377.99	3.25	0	83.83	0	1.39	0	0	11	0	0	0	0	0	0	-40.16	-40.16
	Inverter Transformer	MV1-4 T	364821	4905918	2	0	0	56.1	56.1	1	4658.02	3.25	0	84.36	0	1.5	0	0	11.39	0	0	0	0	0	0	-41.2	-41.2
	Inverter Transformer	MV1-8 T	364782	4905647	2	0	0	56.1	56.1	1	4660.04	3.25	0	84.37	0	1.5	0	0	11.4	0	0	0	0	0	0	-41.21	-41.21
	Inverter Transformer	MV1-2 T	364759	4906063	2	0	0	56.1	56.1	1	4744.84	3.25	0	84.52	0	1.53	0	0	11.51	0	0	0	0	0	0	-41.51	-41.51
	Inverter Transformer	MV1-11 T	364649	4905414	2	0	0	56.1	56.1	1	4773.93	3.25	0	84.58	0	1.54	0	0	11.55	0	0	0	0	0	0	-41.61	-41.61
	Inverter Transformer	MV1-5 T	364676	4905892	2	0	0	56.1	56.1	1	4797.03	3.25	0	84.62	0	1.55	0	0	11.58	0	0	0	0	0	0	-41.7	-41.7
	Inverter Transformer	MV1-1 T	364721	4906166	2	0	0	56.1	56.1	1	4802.8	3.25	0	84.63	0	1.55	0	0	11.59	0	0	0	0	0	0	-41.72	-41.72
	Inverter Transformer	MV1-9 T	364555	4905646	2	0	0	56.1	56.1	1	4885.72	3.25	0	84.78	0	1.58	0	0	11.7	0	0	0	0	0	0	-42.01	-42.01
	Inverter Transformer	MV1-6 T	364482	4905835	2	0	0	56.1	56.1	1	4980.69	3.25	0	84.95	0	1.62	0	0	11.83	0	0	0	0	0	0	-42.33	-42.33
	Inverter Transformer	MV1-3 T	364435	4906039	2	0	0	56.1	56.1	1	5058.95	3.25	0	85.08	0	1.65	0	0	11.93	0	0	0	0	0	0	-42.6	-42.6
	Line Reactor	NGR	369421	4908787.5	5	0	0	45.4	45.4	1	3634.3	5.25	0	82.21	0	3.3	1.33	0.12	1.49	0	0	0	0	0	0	-42.97	-42.97
Limit. Valu	0	0																								
Level D/N:	25.7595	25.7595																								

Receiver: Existing Noise Receptor
ID: W-R9
X: 369352.3
Y: 4905130.9
Z: 4.5
Ground: 0

ISO	Description	ID	X	Y	Z	Ground	ReflOrd	LxT	LxN	L/A	Dist.	hm	Freq	Adiv	K0b	Agr	Abar	z	Aatm	Afol	Ahous	Cmet	CmetN	Dc	RL	LtotT	LtotN
	Sol_Luce Substation	S_Substation	369426	4908792	3.5	0	0	112.1	112.1	1	3661.84	5.25	0	82.27	0	0.5	3.2	0.35	6.91	0	0	0	0	0	0	19.19	19.19
	Inverter	MV6-3	370207	4907140	2	0	0	100.3	100.3	1	2183.35	3.25	0	77.78	0	0.18	0	0	13.84	0	0	0	0	0	0	8.51	8.51
	Inverter	MV3-21	368478	4907206	2	0	0	100.3	100.3	1	2251.77	3.25	0	78.05	0	0.2	0	0	13.98	0	0	0	0	0	0	8.09	8.09
	Inverter	MV3-20	368689	4907317	2	0	0	100.3	100.3	1	2284.51	3.25	0	78.18	0	0.21	0	0	14.04	0	0	0	0	0	0	7.89	7.89
	Inverter	MV6-2	370085	4907339	2	0	0	100.3	100.3	1	2326.49	3.25	0	78.33	0	0.22	0	0	14.12	0	0	0	0	0	0	7.64	7.64
	Inverter	MV3-19	368357	4907347	2	0	0	100.3	100.3	1	2429.35	3.25	0	78.71	0	0.24	0	0	14.32	0	0	0	0	0	0	7.04	7.04
	Inverter	MV3-14	368684	4907498	2	0	0	100.3	100.3	1	2459.63	3.25	0	78.82	0	0.25	0	0	14.38	0	0	0	0	0	0	6.87	6.87
	Inverter	MV3-16	368514	4907475	2	0	0	100.3	100.3	1	2489.49	3.25	0	78.92	0	0.25	0	0	14.44	0	0	0	0	0	0	6.7	6.7
	Inverter	MV3-15	368357	4907477	2	0	0	100.3	100.3	1	2548.49	3.25	0	79.13	0	0.27	0	0	14.55	0	0	0	0	0	0	6.37	6.37
	Inverter	MV3-17	368178	4907472	2	0	0	100.3	100.3	1	2619.11	3.25	0	79.36	0	0.28	0	0	14.68	0	0	0	0	0	0	5.98	5.98
	Inverter	MV3-8	368680	4907712	2	0	0	100.3	100.3	1	2667.22	3.25	0	79.52	0	0.29	0	0	14.77	0	0	0	0	0	0	5.73	5.73
	Inverter	MV3-9	368512	4907703	2	0	0	100.3	100.3	1	2705.88	3.25	0	79.65	0	0.3	0	0	14.84	0	0	0	0	0	0	5.52	5.52
	Inverter	MV3-11	368346	4907662	2	0	0	100.3	100.3	1	2723.8	3.25	0	79.7	0	0.31	0	0	14.88	0	0	0	0	0	0	5.43	5.43
	SubstationTransformer	W_ST	369711.17	4906112.3	2.5	0	0	92	92	1	1044.93	3.5	0	71.38	0	-0.36	0	-0.13	2.61	0	0	0	0	0	0	18.35	18.35
	Inverter	MV3-18	367752	4907412	2	0	0	100.3	100.3	1	2786.46	3.25	0	79.9	0	0.32	0	0	14.99	0	0	0	0	0	0	5.1	5.1
	Inverter	MV3-10	368167	4907669	2	0	0	100.3	100.3	1	2801.23	3.25	0	79.95	0	0.32	0	0	15.02	0	0	0	0	0	0	5.03	5.03
	Inverter	MV3-13	367963	4907577	2	0	0	100.3	100.3	1	2813.11	3.25	0	79.98	0	0.32	0	0	15.04	0	0	0	0	0	0	4.97	4.97
	Inverter	MV3-6	368162	4907834	2	0	0	100.3	100.3	1	2953.57	3.25	0	80.41	0	0.35	0	0	15.29	0	0	0	0	0	0	4.26	4.26
	Inverter	MV3-7	367945	4907754	2	0	0	100.3	100.3	1	2976.77	3.25	0	80.47	0	0.36	0	0	15.33	0	0	0	0	0	0	4.15	4.15
	Inverter	MV3-12	367668	4907594	2	0	0	100.3	100.3	1	2983.91	3.25	0	80.5	0	0.36	0	0	15.34	0	0	0	0	0	0	4.11	4.11
	Inverter	MV3-3	367939	4907927	2	0	0	100.3	100.3	1	3132.99	3.25	0	80.92	0	0.39	0	0	15.61	0	0	0	0	0	0	3.4	3.4
	Inverter	MV6-1	370235	4907364	2	0	0	97.3	97.3	1	2401.23	3.25	0	78.61	0	0.23	0	0	14.27	0	0	0	0	0	0	4.2	4.2
	Inverter	MV5-5	370015	4908690	2	0	0	100.3	100.3	1	3620.27	3.25	0	82.17	0	0.47	0	0	16.43	0	0	0	0	0	0	1.24	1.24
	Inverter	MV5-4	370324	4908707	2	0	0	100.3	100.3	1	3705.77	3.25	0	82.38	0	0.48	0	0	16.57	0	0	0	0	0	0	0.88	0.88
	Inverter	MV4-11	369264	4908855	2	0	0	100.3	100.3	1	3725.15	3.25	0	82.42	0	0.49	0	0	16.6	0	0	0	0	0	0	0.8	0.8
	Inverter	MV4-10	369312	4908858	2	0	0	100.3	100.3	1	3727.32	3.25	0	82.43	0	0.49	0	0	16.61	0	0	0	0	0	0	0.79	0.79

Inverter	MV5-2	370006	4908853	2	0	0	100.3	100.3	1	3779.07	3.25	0	82.55	0	0.49	0	0	16.69	0	0	0	0	0	0	0.58	0.58
Westbrook Inverter Enclosur	W_INV3	369508	4906164	2	0	0	89.1	89.1	1	1044.77	3.25	0	71.38	0	0.69	0	0	6.4	0	0	0	0	0	0	10.58	10.58
Inverter	MV5-3	370231	4908851	2	0	0	100.3	100.3	1	3822.47	3.25	0	82.65	0	0.5	0	0	16.76	0	0	0	0	0	0	0.4	0.4
Inverter	MV2-3	365820	4906641	2	0	0	100.3	100.3	1	3841.56	3.25	0	82.69	0	0.5	0	0	16.79	0	0	0	0	0	0	0.32	0.32
Inverter	MV4-9	369289	4909001	2	0	0	100.3	100.3	1	3870.62	3.25	0	82.76	0	0.51	0	0	16.84	0	0	0	0	0	0	0.21	0.21
Inverter	MV4-8	369256	4909001	2	0	0	100.3	100.3	1	3871.3	3.25	0	82.76	0	0.51	0	0	16.84	0	0	0	0	0	0	0.2	0.2
Inverter	MV4-7	369035	4909001	2	0	0	100.3	100.3	1	3883.09	3.25	0	82.78	0	0.51	0	0	16.86	0	0	0	0	0	0	0.16	0.16
Westbrook Inverter Enclosur	W_INV4	369673	4906164	2	0	0	89.1	89.1	1	1081.73	3.25	0	71.68	0	0.7	0	0	6.47	0	0	0	0	0	0	10.21	10.21
Inverter	MV1-15	365315	4904994	2	0	0	100.3	100.3	1	4039.62	3.25	0	83.13	0	0.53	0	0	17.11	0	0	0	0	0	0	-0.46	-0.46
Inverter	MV2-4	365586	4906624	2	0	0	100.3	100.3	1	4051.47	3.25	0	83.15	0	0.53	0	0	17.13	0	0	0	0	0	0	-0.5	-0.5
Inverter	MV4-6	369243	4909192	2	0	0	100.3	100.3	1	4062.57	3.25	0	83.18	0	0.54	0	0	17.15	0	0	0	0	0	0	-0.55	-0.55
Inverter	MV5-1	370020	4909142	2	0	0	100.3	100.3	1	4066.29	3.25	0	83.18	0	0.54	0	0	17.15	0	0	0	0	0	0	-0.56	-0.56
Inverter	MV4-5	369289	4909199	2	0	0	100.3	100.3	1	4068.59	3.25	0	83.19	0	0.54	0	0	17.16	0	0	0	0	0	0	-0.57	-0.57
Inverter	MV4-4	369027	4909199	2	0	0	100.3	100.3	1	4081.09	3.25	0	83.22	0	0.54	0	0	17.18	0	0	0	0	0	0	-0.62	-0.62
Inverter	MV4-2	369272	4909397	2	0	0	100.3	100.3	1	4266.86	3.25	0	83.6	0	0.56	0	0	17.47	0	0	0	0	0	0	-1.32	-1.32
Inverter	MV4-3	369229	4909397	2	0	0	100.3	100.3	1	4267.88	3.25	0	83.6	0	0.56	0	0	17.47	0	0	0	0	0	0	-1.33	-1.33
Inverter	MV4-1	369011	4909397	2	0	0	100.3	100.3	1	4279.73	3.25	0	83.63	0	0.56	0	0	17.49	0	0	0	0	0	0	-1.37	-1.37
Inverter	MV1-12	365038	4905386	2	0	0	100.3	100.3	1	4321.84	3.25	0	83.71	0	0.57	0	0	17.56	0	0	0	0	0	0	-1.53	-1.53
Inverter	MV1-8	364788	4905647	2	0	0	100.3	100.3	1	4593.39	3.25	0	84.24	0	0.6	0	0	17.97	0	0	0	0	0	0	-2.5	-2.5
Westbrook Inverter Enclosur	W_INV2	369374	4906388	2	0	0	89.1	89.1	1	1257.29	3.25	0	72.99	0	0.74	0	0	6.78	0	0	0	0	0	0	8.55	8.55
Inverter	MV1-4	364815	4905918	2	0	0	100.3	100.3	1	4605.07	3.25	0	84.26	0	0.6	0	0	17.99	0	0	0	0	0	0	-2.55	-2.55
Inverter	MV1-2	364753	4906063	2	0	0	100.3	100.3	1	4692.8	3.25	0	84.43	0	0.61	0	0	18.12	0	0	0	0	0	0	-2.85	-2.85
Inverter	MV1-11	364655	4905414	2	0	0	100.3	100.3	1	4705.82	3.25	0	84.45	0	0.61	0	0	18.14	0	0	0	0	0	0	-2.9	-2.9
Inverter	MV1-5	364671	4905892	2	0	0	100.3	100.3	1	4742.77	3.25	0	84.52	0	0.62	0	0	18.2	0	0	0	0	0	0	-3.02	-3.02
Inverter	MV1-1	364715	4906166	2	0	0	100.3	100.3	1	4751.42	3.25	0	84.54	0	0.62	0	0	18.21	0	0	0	0	0	0	-3.05	-3.05
Inverter	MV1-9	364561	4905646	2	0	0	100.3	100.3	1	4818.91	3.25	0	84.66	0	0.63	0	0	18.31	0	0	0	0	0	0	-3.28	-3.28
Inverter	MV1-6	364477	4905835	2	0	0	100.3	100.3	1	4925.88	3.25	0	84.85	0	0.64	0	0	18.47	0	0	0	0	0	0	-3.64	-3.64
Westbrook Inverter Enclosur	W_INV7	369780	4906417	2	0	0	89.1	89.1	1	1355.35	3.25	0	73.64	0	0.76	0	0	6.96	0	0	0	0	0	0	7.7	7.7
Westbrook Inverter Enclosur	W_INV5	369719	4906574	2	0	0	89.1	89.1	1	1488.96	3.25	0	74.46	0	0.79	0	0	7.19	0	0	0	0	0	0	6.62	6.62
Inverter	MV2-1	365842	4906816	2	0	0	97.3	97.3	1	3893.81	3.25	0	82.81	0	0.51	0	0	16.88	0	0	0	0	0	0	-2.89	-2.89
DSTATCOM - 10 MVAR #2	DSAT2	369403	4908757	2.5	0	0	96.6	96.6	1	3626.45	3.5	0	82.19	0	3.52	0	0	2.64	0	0	0	0	0	0	8.28	8.28
DSTATCOM - 10 MVAR #1	DSAT1	369437	4908757	2.5	0	0	96.6	96.6	1	3627.09	3.5	0	82.19	0	3.52	0	0	2.64	0	0	0	0	0	0	8.28	8.28
Westbrook Inverter Enclosur	W_INV6	369875	4906578	2	0	0	89.1	89.1	1	1538.61	3.85	0	74.74	0	1.57	3	0	7.27	0	0	0	0	0	0	2.48	2.48
Inverter	MV1-14	365163	4905049	2	0	0	97.3	97.3	1	4190.1	3.25	0	83.44	0	0.55	0	0	17.35	0	0	0	0	0	0	-4.03	-4.03
Inverter	MV1-10	365004	4905564	2	0	0	97.3	97.3	1	4369.82	3.25	0	83.81	0	0.58	0	0	17.63	0	0	0	0	0	0	-4.7	-4.7
Inverter	MV1-7	364925	4905782	2	0	0	97.3	97.3	1	4474.92	3.25	0	84.02	0	0.59	0	0	17.79	0	0	0	0	0	0	-5.08	-5.08
Inverter	MV1-13	364731	4905241	2	0	0	97.3	97.3	1	4622.61	3.25	0	84.3	0	0.6	0	0	18.02	0	0	0	0	0	0	-5.61	-5.61
Westbrook Inverter Enclosur	W_INV1	369409	4906578	2	0	0	86.1	86.1	1	1448.21	3.25	0	74.22	0	0.78	0	0	7.12	0	0	0	0	0	0	3.94	3.94
Inverter	MV3-22	368656	4907142	2	0	0	89.1	89.1	1	2128.23	3.25	0	77.56	0	0.94	0	0	8.25	0	0	0	0	0	0	2.31	2.31
Gardiner Substation	G_Sub	366586.3	4903349.9	2.5	0	0	90.8	90.8	1	3289.79	4.25	0	81.34	0	1.16	2.9	0.3	6.38	0	0	0	0	0	0	-1.01	-1.01
Inverter	MV3-2	368671	4907928	2	0	0	89.1	89.1	1	2878.88	3.25	0	80.18	0	1.12	0	0	9.43	0	0	0	0	0	0	-1.68	-1.68
Inverter	MV6-4	370250	4906966	2	0	0	86.1	86.1	1	2042.91	3.25	0	77.2	0	0.92	0	0	8.12	0	0	0	0	0	0	-0.18	-0.18
Inverter	MV3-5	368340	4907843	2	0	0	89.1	89.1	1	2894.87	3.25	0	80.23	0	1.12	0	0	9.46	0	0	0	0	0	0	-1.75	-1.75
Inverter	MV3-4	368502	4907925	2	0	0	89.1	89.1	1	2920.62	3.25	0	80.31	0	1.13	0	0	9.5	0	0	0	0	0	0	-1.88	-1.88
Inverter	MV3-1	368156	4907976	2	0	0	89.1	89.1	1	3086.38	3.25	0	80.79	0	1.17	0	0	9.75	0	0	0	0	0	0	-2.65	-2.65
Fixed Reactor Bank 1	FRB1	369378	4908755	6	0	0	89.8	89.8	1	3624.19	5.25	0	82.18	0	-0.78	0	0	6.86	0	0	0	0	0	0	1.52	1.52
Fixed Reactor Bank 2	FRB2	369464	4908755	6	0	0	89.8	89.8	1	3625.82	5.25	0	82.19	0	-0.78	0	0	6.86	0	0	0	0	0	0	1.51	1.51
Inverter	MV4-15	369176	4908481	2	0	0	89.1	89.1	1	3354.74	3.25	0	81.51	0	1.23	0	0	10.15	0	0	0	0	0	0	-3.84	-3.84
Inverter	MV4-14	369176	4908507	2	0	0	89.1	89.1	1	3380.7	3.25	0	81.58	0	1.24	0	0	10.19	0	0	0	0	0	0	-3.95	-3.95
Inverter	MV5-6	369982	4908507	2	0	0	89.1	89.1	1	3434.32	3.25	0	81.72	0	1.25	0	0	10.27	0	0	0	0	0	0	-4.18	-4.18
Inverter	MV4-13	369051	4908605	2	0	0	89.1	89.1	1	3487.14	3.25	0	81.85	0	1.27	0	0	10.34	0	0	0	0	0	0	-4.4	-4.4
Inverter	MV4-12	369043	4908803	2	0	0	89.1	89.1	1	3685.1	3.25	0	82.33	0	1.31	0	0	10.63	0	0	0	0	0	0	-5.22	-5.22
Inverter	MV2-2	365977	4906654	2	0	0	89.1	89.1	1	3703.04	3.25	0	82.37	0	1.32	0	0	10.66	0	0	0	0	0	0	-5.29	-5.29
Inverters	G_Inv2	366676.9	4903239.1	2	0	0	87.7	87.7	1	3276.69	3.25	0	81.31	0	2.73	0	0	4.08	0	0	0	0	0	0	-0.46	-0.46
Inverters	G_Inv4	366732.8	4903105	2	0	0	87.7	87.7	1	3311.5	3.25	0	81.4	0	2.73	0	0	4.12	0	0	0	0	0	0	-0.59	-0.59
Inverters	G_Inv6	366788.5	4902972	2	0	0	87.7	87.7	1	3351.7	3.25	0	81.51	0	2.73	0	0	4.17	0	0	0	0	0	0	-0.74	-0.74
Inverters	G_Inv8	366844.5	4902838.5	2	0	0	87.7	87.7	1	3397.67	3.25	0	81.62	0	2.74	0	0	4.22	0	0	0	0	0	0	-0.92	-0.92
Inverters	G_Inv1	366526.4	4903225.8	2	0	0	87.7	87.7	1	3408.1	3.25	0	81.65	0	2.74	0	0	4.23	0	0	0	0	0	0	-0.96	-0.96
Westbrook Inverter Transfor	W_INVTR3	369514	4906164	2	0	0	77.3	77.3	1	1045.68	3.25	0	71.39	0	-1.96	0	0	0.71	0	0	0	0	0	0	7.21	7.21
Inverters	G_Inv3	366583.7	4903091.4	2	0	0	87.7	87.7	1	3438.71	3.25	0	81.73	0	2.74	0	0	4.26	0	0	0	0	0	0	-1.07	-1.07
Inverters	G_Inv10	366900.7	4902704.8	2	0	0	87.7	87.7	1	3449.1	3.25	0	81.75	0	2.74	0	0	4.27	0	0	0	0	0	0	-1.11	-1.11
Inverters	G_Inv5	366638.5	4902958.1	2	0	0	87.7	87.7	1	3476.46	3.25	0	81.82	0	2.75	0	0	4.3	0	0	0	0	0	0	-1.21	-1.21
Inverters	G_Inv7	366694.6	4902824.7	2	0	0	87.7	87.7	1	3518.8	3.25	0	81.93	0	2.75	0	0	4.35	0	0	0	0	0	0	-1.37	-1.37
Westbrook Inverter Transfor	W_INVTR4	369679	4906164	2	0	0	77.3	77.3	1	1083.53	3.25	0	71.7	0	-1.98	0	0	0.73	0	0	0	0	0	0	6.9	6.9
Inverters	G_Inv9	366750.9	4902691.8	2	0	0	87.7	87.7	1	3566.02	3.25	0	82.04	0	2.75	0	0	4.4	0	0	0	0	0	0	-1.54	-1.54
Westbrook Inverter Transfor	W_INVTR2	369368	4906388	2	0	0	77.3	77.3	1	1257.2	3.25	0	72.99	0	-2.08	0	0	0.82	0	0	0	0	0	0	5.61	5.61
Inverter	MV1-3	364440	4906039	2	0	0	89.1	89.1	1	4995.53	3.25	0	84.97	0	1.64	0	0	12.46	0	0	0	0	0	0	-10.01	-10.01
Westbrook Inverter Transfor	W_INVTR1	369403	4906578	2	0	0	78.2	78.2	1	1447.99	3.25	0	74.22	0	-2.18	0	0	0.93	0	0	0	0	0	0	5.28	5.28
Westbrook Inverter Transfor	W_INVTR7	369786	4906417	2	0	0	77.3	77.3	1	1357.26	3.25	0	73.65	0	-2.13	0	0	0.88	0	0	0	0	0	0	4.94	4.94
Westbrook Inverter Transfor	W_INVTR5	369725	4906574	2	0	0	77.3	77.3	1	1490.45	3.25	0	74.47	0	-2.2	0	0	0.95	0	0	0	0	0	0	4.12	4.12
Westbrook Inverter Transfor	W_INVTR6	369881	4906578	2	0	0	77.3	77.3	1	1540.66	3.25	0	74.75	0	-2.22	0	0	0.98	0	0	0	0	0	0	3.83	3.83
Inverter Transformer	MV6-4 T	370244	4906966	2	0	0	69.4	69.4	1	2040.28	3.25	0	77.19	0	2.19	0	0	5.01	0	0	0	0	0	0	-15.04	-15.04
Inverter Transformer	MV6-1 T	370230	4907364	2	0	0	69.4	69.4	1	2399.4	3.25	0	78.6	0	2.31	0	0	5.35	0	0	0	0	0	0	-16.92	-16.92
Inverter Transformer	MV2-1 T	365836	4906816	2	0	0	69.4	69.4	1	3899.22	3.25	0	82.82	0	2.76	0	0	6.6	0	0	0	0	0	0	-22.83	-22.83

Inverter Transformer	MV1-14 T	365157	4905049	2	0	0	69.4	69.4	1	4196.1	3.25	0	83.46	0	2.83	0	0	6.82	0	0	0	0	0	0	-23.76	-23.76
Inverter Transformer	MV1-10 T	365010	4905564	2	0	0	69.4	69.4	1	4363.85	3.25	0	83.8	0	2.87	0	0	6.94	0	0	0	0	0	0	-24.26	-24.26
Inverter Transformer	MV1-7 T	364919	4905782	2	0	0	69.4	69.4	1	4480.86	3.25	0	84.03	0	2.9	0	0	7.03	0	0	0	0	0	0	-24.6	-24.6
Inverter Transformer	MV1-13 T	364725	4905241	2	0	0	69.4	69.4	1	4628.61	3.25	0	84.31	0	2.93	0	0	7.13	0	0	0	0	0	0	-25.02	-25.02
Inverter Transformer	MV3-22 T	368661	4907142	2	0	0	56.1	56.1	1	2126.6	3.25	0	77.55	0	0.46	0	0	7.29	0	0	0	0	0	0	-29.24	-29.24
Inverter Transformer	MV6-3 T	370202	4907140	2	0	0	56.1	56.1	1	2181.39	3.25	0	77.77	0	0.48	0	0	7.4	0	0	0	0	0	0	-29.59	-29.59
Inverter Transformer	MV3-21 T	368484	4907206	2	0	0	56.1	56.1	1	2249.44	3.25	0	78.04	0	0.51	0	0	7.52	0	0	0	0	0	0	-30.02	-30.02
Inverter Transformer	MV3-20 T	368683	4907317	2	0	0	56.1	56.1	1	2286.26	3.25	0	78.18	0	0.53	0	0	7.59	0	0	0	0	0	0	-30.24	-30.24
Inverter Transformer	MV6-2 T	370091	4907339	2	0	0	56.1	56.1	1	2328.39	3.25	0	78.34	0	0.54	0	0	7.67	0	0	0	0	0	0	-30.5	-30.5
Inverter Transformer	MV3-19 T	368352	4907347	2	0	0	56.1	56.1	1	2431.4	3.25	0	78.72	0	0.59	0	0	7.86	0	0	0	0	0	0	-31.11	-31.11
Inverter Transformer	MV3-14 T	368678	4907498	2	0	0	56.1	56.1	1	2461.27	3.25	0	78.82	0	0.6	0	0	7.92	0	0	0	0	0	0	-31.28	-31.28
Inverter Transformer	MV3-16 T	368509	4907475	2	0	0	56.1	56.1	1	2491.18	3.25	0	78.93	0	0.61	0	0	7.97	0	0	0	0	0	0	-31.46	-31.46
Inverter Transformer	MV3-15 T	368351	4907477	2	0	0	56.1	56.1	1	2550.84	3.25	0	79.13	0	0.64	0	0	8.08	0	0	0	0	0	0	-31.8	-31.8
Inverter Transformer	MV3-17 T	368183	4907472	2	0	0	56.1	56.1	1	2616.87	3.25	0	79.36	0	0.67	0	0	8.2	0	0	0	0	0	0	-32.16	-32.16
Inverter Transformer	MV3-8 T	368685	4907712	2	0	0	56.1	56.1	1	2665.97	3.25	0	79.52	0	0.69	0	0	8.29	0	0	0	0	0	0	-32.43	-32.43
Inverter Transformer	MV3-9 T	368517	4907703	2	0	0	56.1	56.1	1	2704.34	3.25	0	79.64	0	0.7	0	0	8.36	0	0	0	0	0	0	-32.64	-32.64
Inverter Transformer	MV3-11 T	368340	4907662	2	0	0	56.1	56.1	1	2726.03	3.25	0	79.71	0	0.71	0	0	8.39	0	0	0	0	0	0	-32.76	-32.76
Inverter Transformer	MV3-18 T	367757	4907412	2	0	0	56.1	56.1	1	2783.6	3.25	0	79.89	0	0.74	0	0	8.5	0	0	0	0	0	0	-33.07	-33.07
Inverter Transformer	MV3-10 T	368162	4907669	2	0	0	56.1	56.1	1	2803.35	3.25	0	79.95	0	0.75	0	0	8.53	0	0	0	0	0	0	-33.17	-33.17
Inverter Transformer	MV3-13 T	367958	4907577	2	0	0	56.1	56.1	1	2815.58	3.25	0	79.99	0	0.75	0	0	8.55	0	0	0	0	0	0	-33.24	-33.24
Inverter Transformer	MV3-2 T	368677	4907928	2	0	0	56.1	56.1	1	2877.46	3.25	0	80.18	0	0.78	0	0	8.66	0	0	0	0	0	0	-33.56	-33.56
Inverter Transformer	MV3-5 T	368335	4907843	2	0	0	56.1	56.1	1	2896.62	3.25	0	80.24	0	0.79	0	0	8.69	0	0	0	0	0	0	-33.66	-33.66
Inverter Transformer	MV3-4 T	368507	4907925	2	0	0	56.1	56.1	1	2919.17	3.25	0	80.31	0	0.8	0	0	8.73	0	0	0	0	0	0	-33.77	-33.77
Inverter Transformer	MV3-6 T	368156	4907834	2	0	0	56.1	56.1	1	2955.99	3.25	0	80.41	0	0.81	0	0	8.79	0	0	0	0	0	0	-33.96	-33.96
Inverter Transformer	MV3-7 T	367951	4907754	2	0	0	56.1	56.1	1	2973.94	3.25	0	80.47	0	0.82	0	0	8.82	0	0	0	0	0	0	-34.05	-34.05
Inverter Transformer	MV3-12 T	367674	4907594	2	0	0	56.1	56.1	1	2980.53	3.25	0	80.49	0	0.82	0	0	8.84	0	0	0	0	0	0	-34.08	-34.08
Inverter Transformer	MV3-1 T	368150	4907976	2	0	0	56.1	56.1	1	3088.71	3.25	0	80.8	0	0.87	0	0	9.02	0	0	0	0	0	0	-34.62	-34.62
Inverter Transformer	MV3-3 T	367944	4907927	2	0	0	56.1	56.1	1	3130.73	3.25	0	80.91	0	0.89	0	0	9.09	0	0	0	0	0	0	-34.83	-34.83
Inverter Transformer	MV4-15 T	369170	4908481	2	0	0	56.1	56.1	1	3355.06	3.25	0	81.51	0	0.98	0	0	9.46	0	0	0	0	0	0	-35.89	-35.89
Inverter Transformer	MV4-14 T	369182	4908507	2	0	0	56.1	56.1	1	3380.39	3.25	0	81.58	0	0.99	0	0	9.5	0	0	0	0	0	0	-36.01	-36.01
Inverter Transformer	MV5-6 T	369987	4908507	2	0	0	56.1	56.1	1	3435.24	3.25	0	81.72	0	1.01	0	0	9.58	0	0	0	0	0	0	-36.26	-36.26
Inverter Transformer	MV4-13 T	369057	4908605	2	0	0	56.1	56.1	1	3486.63	3.25	0	81.85	0	1.03	0	0	9.67	0	0	0	0	0	0	-36.49	-36.49
Inverter Transformer	MV5-5 T	370021	4908690	2	0	0	56.1	56.1	1	3621.38	3.25	0	82.18	0	1.09	0	0	9.88	0	0	0	0	0	0	-37.09	-37.09
Inverter Transformer	MV4-12 T	369049	4908803	2	0	0	56.1	56.1	1	3684.61	3.25	0	82.33	0	1.12	0	0	9.98	0	0	0	0	0	0	-37.36	-37.36
Inverter Transformer	MV2-2 T	365982	4906654	2	0	0	56.1	56.1	1	3698.48	3.25	0	82.36	0	1.12	0	0	10	0	0	0	0	0	0	-37.42	-37.42
Inverter Transformer	MV5-4 T	370330	4908707	2	0	0	56.1	56.1	1	3707.34	3.25	0	82.38	0	1.13	0	0	10.01	0	0	0	0	0	0	-37.46	-37.46
Inverter Transformer	MV4-11 T	369269	4908855	2	0	0	56.1	56.1	1	3725.03	3.25	0	82.42	0	1.13	0	0	10.04	0	0	0	0	0	0	-37.54	-37.54
Inverter Transformer	MV4-10 T	369307	4908858	2	0	0	56.1	56.1	1	3727.38	3.25	0	82.43	0	1.13	0	0	10.04	0	0	0	0	0	0	-37.55	-37.55
Inverter Transformer	MV5-2 T	370011	4908853	2	0	0	56.1	56.1	1	3779.94	3.25	0	82.55	0	1.16	0	0	10.12	0	0	0	0	0	0	-37.77	-37.77
Inverter Transformer	MV5-3 T	370237	4908851	2	0	0	56.1	56.1	1	3823.85	3.25	0	82.65	0	1.17	0	0	10.19	0	0	0	0	0	0	-37.95	-37.95
Inverter Transformer	MV2-3 T	365814	4906641	2	0	0	56.1	56.1	1	3847.07	3.25	0	82.7	0	1.18	0	0	10.23	0	0	0	0	0	0	-38.05	-38.05
Inverter Transformer	MV4-9 T	369284	4909001	2	0	0	56.1	56.1	1	3870.7	3.25	0	82.76	0	1.19	0	0	10.26	0	0	0	0	0	0	-38.15	-38.15
Inverter Transformer	MV4-8 T	369262	4909001	2	0	0	56.1	56.1	1	3871.15	3.25	0	82.76	0	1.19	0	0	10.26	0	0	0	0	0	0	-38.15	-38.15
Inverter Transformer	MV4-7 T	369040	4909001	2	0	0	56.1	56.1	1	3882.68	3.25	0	82.78	0	1.2	0	0	10.28	0	0	0	0	0	0	-38.2	-38.2
Inverter Transformer	MV1-15 T	365309	4904994	2	0	0	56.1	56.1	1	4045.62	3.25	0	83.14	0	1.26	0	0	10.52	0	0	0	0	0	0	-38.87	-38.87
Inverter Transformer	MV2-4 T	365590	4906628	2	0	0	56.1	56.1	1	4049.22	3.25	0	83.15	0	1.26	0	0	10.53	0	0	0	0	0	0	-38.88	-38.88
Inverter Transformer	MV4-6 T	369249	4909192	2	0	0	56.1	56.1	1	4062.41	3.25	0	83.18	0	1.27	0	0	10.55	0	0	0	0	0	0	-38.93	-38.93
Inverter Transformer	MV5-1 T	370015	4909142	2	0	0	56.1	56.1	1	4065.48	3.25	0	83.18	0	1.27	0	0	10.55	0	0	0	0	0	0	-38.95	-38.95
Inverter Transformer	MV4-5 T	369283	4909199	2	0	0	56.1	56.1	1	4068.69	3.25	0	83.19	0	1.27	0	0	10.56	0	0	0	0	0	0	-38.96	-38.96
Inverter Transformer	MV4-4 T	369033	4909199	2	0	0	56.1	56.1	1	4080.61	3.25	0	83.21	0	1.28	0	0	10.57	0	0	0	0	0	0	-39.01	-39.01
Inverter Transformer	MV4-2 T	369267	4909397	2	0	0	56.1	56.1	1	4266.95	3.25	0	83.6	0	1.35	0	0	10.85	0	0	0	0	0	0	-39.74	-39.74
Inverter Transformer	MV4-3 T	369234	4909397	2	0	0	56.1	56.1	1	4267.74	3.25	0	83.6	0	1.35	0	0	10.85	0	0	0	0	0	0	-39.74	-39.74
Inverter Transformer	MV4-1 T	369017	4909397	2	0	0	56.1	56.1	1	4279.26	3.25	0	83.63	0	1.35	0	0	10.86	0	0	0	0	0	0	-39.79	-39.79
Inverter Transformer	MV1-12 T	365044	4905386	2	0	0	56.1	56.1	1	4315.85	3.25	0	83.7	0	1.37	0	0	10.92	0	0	0	0	0	0	-39.93	-39.93
Inverter Transformer	MV1-4 T	364821	4905918	2	0	0	56.1	56.1	1	4599.15	3.25	0	84.25	0	1.48	0	0	11.31	0	0	0	0	0	0	-40.99	-40.99
Inverter Transformer	MV1-8 T	364782	4905647	2	0	0	56.1	56.1	1	4599.35	3.25	0	84.25	0	1.48	0	0	11.31	0	0	0	0	0	0	-40.99	-40.99
Inverter Transformer	MV1-2 T	364759	4906063	2	0	0	56.1	56.1	1	4686.92	3.25	0	84.42	0	1.51	0	0	11.43	0	0	0	0	0	0	-41.3	-41.3
Inverter Transformer	MV1-11 T	364649	4905414	2	0	0	56.1	56.1	1	4711.81	3.25	0	84.46	0	1.52	0	0	11.47	0	0	0	0	0	0	-41.39	-41.39
Inverter Transformer	MV1-5 T	364676	4905892	2	0	0	56.1	56.1	1	4737.83	3.25	0	84.51	0	1.53	0	0	11.5	0	0	0	0	0	0	-41.49	-41.49
Inverter Transformer	MV1-1 T	364721	4906166	2	0	0	56.1	56.1	1	4745.56	3.25	0	84.53	0	1.53	0	0	11.51	0	0	0	0	0	0	-41.51	-41.51
Inverter Transformer	MV1-9 T	364555	4905646	2	0	0	56.1	56.1	1	4824.88	3.25	0	84.67	0	1.56	0	0	11.62	0	0	0	0	0	0	-41.79	-41.79
Inverter Transformer	MV1-6 T	364482	4905835	2	0	0	56.1	56.1	1	4920.93	3.25	0	84.84	0	1.6	0	0	11.75	0	0	0	0	0	0	-42.13	-42.13
Inverter Transformer	MV1-3 T	364435	4906039	2	0	0	56.1	56.1	1	5000.45	3.25	0	84.98	0	1.63	0	0	11.85	0	0	0	0	0	0	-42.4	-42.4
Line Reactor	NGR	369421	4908787.5	5	0	0	45.4	45.4	1	3657.25	5.25	0	82.26	0	3.3	1.33	0.12	1.5	0	0	0	0	0	0	-43.04	-43.04
Limit. Valu 0	0																									
Level D/N: 25.5633	25.5633																									

Receiver: Existing Noise Receptor
ID: W-R10
X: 369426.1
Y: 4905126.4
Z: 4.5
Ground: 0

ISO	Description	ID	X	Y	Z	Ground	ReflOrd	LxT	LxN	L/A	Dist.	hm	Freq	Adiv	K0b	Agr	Abar	z	Aatm	Afol	Ahous	Cmet	CmetN	Dc	RL	LtotT	LtotN
	Sol_Luce Substation	S_Substation	369426	4908792	3.5	0	0	112.1	112.1	1	3665.6	5.25	0	82.28	0	0.5	3.2	0.35	6.91	0	0	0	0	0	0	19.18	19.18
	Inverter	MV6-3	370207	4907140	2	0	0	100.3	100.3	1	2159.72	3.25	0	77.69	0	0.17	0	0	13.79	0	0	0	0	0	0	8.66	8.66
	Inverter	MV3-21	368478	4907206	2	0	0	100.3	100.3	1	2285.53	3.25	0	78.18	0	0.21	0	0	14.04	0	0	0	0	0	0	7.88	7.88
	Inverter	MV6-2	370085	4907339	2	0	0	100.3	100.3	1	2308.63	3.25	0	78.27	0	0.21	0	0	14.09	0	0	0	0	0	0	7.74	7.74
	Inverter	MV3-20	368689	4907317	2	0	0	100.3	100.3	1	2311.29	3.25	0	78.28	0	0.21	0	0	14.09	0	0	0	0	0	0	7.73	7.73
	Inverter	MV3-19	368357	4907347	2	0	0	100.3	100.3	1	2464.56	3.25	0	78.83	0	0.25	0	0	14.39	0	0	0	0	0	0	6.84	6.84
	Inverter	MV3-14	368684	4907498	2	0	0	100.3	100.3	1	2485	3.25	0	78.91	0	0.25	0	0	14.43	0	0	0	0	0	0	6.72	6.72
	Inverter	MV3-16	368514	4907475	2	0	0	100.3	100.3	1	2519.49	3.25	0	79.03	0	0.26	0	0	14.5	0	0	0	0	0	0	6.53	6.53
	Inverter	MV3-15	368357	4907477	2	0	0	100.3	100.3	1	2582.31	3.25	0	79.24	0	0.28	0	0	14.61	0	0	0	0	0	0	6.18	6.18
	Inverter	MV3-17	368178	4907472	2	0	0	100.3	100.3	1	2656.99	3.25	0	79.49	0	0.29	0	0	14.75	0	0	0	0	0	0	5.78	5.78
	SubstationTransformer	W_ST	369711.17	4906112.3	2.5	0	0	92	92	1	1026.26	3.5	0	71.23	0	-0.37	0	-0.14	2.57	0	0	0	0	0	0	18.54	18.54
	Inverter	MV3-8	368680	4907712	2	0	0	100.3	100.3	1	2691.1	3.25	0	79.6	0	0.3	0	0	14.82	0	0	0	0	0	0	5.6	5.6
	Inverter	MV3-9	368512	4907703	2	0	0	100.3	100.3	1	2733.94	3.25	0	79.74	0	0.31	0	0	14.89	0	0	0	0	0	0	5.37	5.37
	Inverter	MV3-11	368346	4907662	2	0	0	100.3	100.3	1	2756.06	3.25	0	79.81	0	0.31	0	0	14.93	0	0	0	0	0	0	5.26	5.26
	Inverter	MV3-18	367752	4907412	2	0	0	100.3	100.3	1	2833.12	3.25	0	80.05	0	0.33	0	0	15.07	0	0	0	0	0	0	4.86	4.86
	Inverter	MV3-10	368167	4907669	2	0	0	100.3	100.3	1	2837.28	3.25	0	80.06	0	0.33	0	0	15.08	0	0	0	0	0	0	4.84	4.84
	Inverter	MV3-13	367963	4907577	2	0	0	100.3	100.3	1	2854.14	3.25	0	80.11	0	0.33	0	0	15.11	0	0	0	0	0	0	4.76	4.76
	Inverter	MV3-6	368162	4907834	2	0	0	100.3	100.3	1	2988.15	3.25	0	80.51	0	0.36	0	0	15.35	0	0	0	0	0	0	4.09	4.09
	Inverter	MV3-7	367945	4907754	2	0	0	100.3	100.3	1	3016.28	3.25	0	80.59	0	0.37	0	0	15.4	0	0	0	0	0	0	3.96	3.96
	Inverter	MV3-12	367668	4907594	2	0	0	100.3	100.3	1	3029.85	3.25	0	80.63	0	0.37	0	0	15.42	0	0	0	0	0	0	3.89	3.89
	Inverter	MV3-3	367939	4907927	2	0	0	100.3	100.3	1	3170.94	3.25	0	81.02	0	0.39	0	0	15.67	0	0	0	0	0	0	3.22	3.22
	Inverter	MV6-1	370235	4907364	2	0	0	97.3	97.3	1	2379.32	3.25	0	78.53	0	0.23	0	0	14.23	0	0	0	0	0	0	4.33	4.33
	Inverter	MV5-5	370015	4908690	2	0	0	100.3	100.3	1	3611.93	3.25	0	82.15	0	0.47	0	0	16.42	0	0	0	0	0	0	1.27	1.27
	Inverter	MV5-4	370324	4908707	2	0	0	100.3	100.3	1	3691.47	3.25	0	82.34	0	0.48	0	0	16.55	0	0	0	0	0	0	0.94	0.94
	Inverter	MV4-11	369264	4908855	2	0	0	100.3	100.3	1	3732.12	3.25	0	82.44	0	0.49	0	0	16.62	0	0	0	0	0	0	0.77	0.77
	Inverter	MV4-10	369312	4908858	2	0	0	100.3	100.3	1	3733.34	3.25	0	82.44	0	0.49	0	0	16.62	0	0	0	0	0	0	0.76	0.76
	Inverter	MV5-2	370006	4908853	2	0	0	100.3	100.3	1	3771.45	3.25	0	82.53	0	0.49	0	0	16.68	0	0	0	0	0	0	0.61	0.61
	Westbrook Inverter Enclosur	W_INV3	369508	4906164	2	0	0	89.1	89.1	1	1040.83	3.25	0	71.35	0	0.69	0	0	6.39	0	0	0	0	0	0	10.63	10.63
	Inverter	MV5-3	370231	4908851	2	0	0	100.3	100.3	1	3810.58	3.25	0	82.62	0	0.5	0	0	16.74	0	0	0	0	0	0	0.45	0.45
	Inverter	MV4-9	369289	4909001	2	0	0	100.3	100.3	1	3877.03	3.25	0	82.77	0	0.51	0	0	16.85	0	0	0	0	0	0	0.18	0.18
	Inverter	MV4-8	369256	4909001	2	0	0	100.3	100.3	1	3878.33	3.25	0	82.77	0	0.51	0	0	16.85	0	0	0	0	0	0	0.18	0.18
	Inverter	MV4-7	369035	4909001	2	0	0	100.3	100.3	1	3894.29	3.25	0	82.81	0	0.51	0	0	16.88	0	0	0	0	0	0	0.11	0.11
	Westbrook Inverter Enclosur	W_INV4	369673	4906164	2	0	0	89.1	89.1	1	1066.57	3.25	0	71.56	0	0.7	0	0	6.44	0	0	0	0	0	0	10.36	10.36
	Inverter	MV2-3	365820	4906641	2	0	0	100.3	100.3	1	3911.26	3.25	0	82.85	0	0.51	0	0	16.91	0	0	0	0	0	0	0.05	0.05
	Inverter	MV5-1	370020	4909142	2	0	0	100.3	100.3	1	4059.28	3.25	0	83.17	0	0.54	0	0	17.14	0	0	0	0	0	0	-0.54	-0.54
	Inverter	MV4-6	369243	4909192	2	0	0	100.3	100.3	1	4069.72	3.25	0	83.19	0	0.54	0	0	17.16	0	0	0	0	0	0	-0.58	-0.58
	Inverter	MV4-5	369289	4909199	2	0	0	100.3	100.3	1	4074.91	3.25	0	83.2	0	0.54	0	0	17.17	0	0	0	0	0	0	-0.6	-0.6
	Inverter	MV4-4	369027	4909199	2	0	0	100.3	100.3	1	4092.11	3.25	0	83.24	0	0.54	0	0	17.2	0	0	0	0	0	0	-0.66	-0.66
	Inverter	MV1-15	365315	4904994	2	0	0	100.3	100.3	1	4113.23	3.25	0	83.28	0	0.54	0	0	17.23	0	0	0	0	0	0	-0.74	-0.74
	Inverter	MV2-4	365586	4906624	2	0	0	100.3	100.3	1	4121.79	3.25	0	83.3	0	0.54	0	0	17.24	0	0	0	0	0	0	-0.78	-0.78
	Inverter	MV4-2	369272	4909397	2	0	0	100.3	100.3	1	4273.38	3.25	0	83.62	0	0.56	0	0	17.48	0	0	0	0	0	0	-1.35	-1.35
	Inverter	MV4-3	369229	4909397	2	0	0	100.3	100.3	1	4275.15	3.25	0	83.62	0	0.56	0	0	17.48	0	0	0	0	0	0	-1.35	-1.35
	Inverter	MV4-1	369011	4909397	2	0	0	100.3	100.3	1	4290.73	3.25	0	83.65	0	0.57	0	0	17.51	0	0	0	0	0	0	-1.41	-1.41
	Inverter	MV1-12	365038	4905386	2	0	0	100.3	100.3	1	4395.77	3.25	0	83.86	0	0.58	0	0	17.67	0	0	0	0	0	0	-1.8	-1.8
	Westbrook Inverter Enclosur	W_INV2	369374	4906388	2	0	0	89.1	89.1	1	1262.68	3.25	0	73.03	0	0.74	0	0	6.79	0	0	0	0	0	0	8.5	8.5
	Inverter	MV1-8	364788	4905647	2	0	0	100.3	100.3	1	4667.23	3.25	0	84.38	0	0.61	0	0	18.08	0	0	0	0	0	0	-2.76	-2.76
	Inverter	MV1-4	364815	4905918	2	0	0	100.3	100.3	1	4678.56	3.25	0	84.4	0	0.61	0	0	18.1	0	0	0	0	0	0	-2.8	-2.8
	Inverter	MV1-2	364753	4906063	2	0	0	100.3	100.3	1	4766.03	3.25	0	84.56	0	0.62	0	0	18.23	0	0	0	0	0	0	-3.1	-3.1
	Inverter	MV1-11	364655	4905414	2	0	0	100.3	100.3	1	4779.76	3.25	0	84.59	0	0.62	0	0	18.25	0	0	0	0	0	0	-3.15	-3.15
	Inverter	MV1-5	364671	4905892	2	0	0	100.3	100.3	1	4816.34	3.25	0	84.65	0	0.62	0	0	18.31	0	0	0	0	0	0	-3.28	-3.28
	Inverter	MV1-1	364715	4906166	2	0	0	100.3	100.3	1	4824.44	3.25	0	84.67	0	0.63	0	0	18.32	0	0	0	0	0	0	-3.3	-3.3
	Westbrook Inverter Enclosur	W_INV7	369780	4906417	2	0	0	89.1	89.1	1	1338.25	3.25	0	73.53	0	0.76	0	0	6.93	0	0	0	0	0	0	7.84	7.84
	Inverter	MV1-9	364561	4905646	2	0	0	100.3	100.3	1	4892.77	3.25	0	84.79	0	0.63	0	0	18.42	0	0	0	0	0	0	-3.53	-3.53
	Inverter	MV1-6	364477	4905835	2	0	0	100.3	100.3	1	4999.57	3.25	0	84.98	0	0.64	0	0	18.58	0	0	0	0	0	0	-3.89	-3.89
	Westbrook Inverter Enclosur	W_INV5	369719	4906574	2	0	0	89.1	89.1	1	1476.94	3.25	0	74.39	0	0.79	0	0	7.17	0	0	0	0	0	0	6.71	6.71
	DSTATCOM - 10 MVAR #1	DSAT1	369437	4908757	2.5	0	0	96.6	96.6	1	3630.62	3.5	0	82.2	0	3.52	0	0	2.64	0	0	0	0	0	0	8.27	8.27
	DSTATCOM - 10 MVAR #2	DSAT2	369403	4908757	2.5	0	0	96.6	96.6	1	3630.67	3.5	0	82.2	0	3.52	0	0	2.64	0	0	0	0	0	0	8.27	8.27
	Westbrook Inverter Enclosur	W_INV6	369875	4906578	2	0	0	89.1	89.1	1	1519.43	3.25	0	74.63	0	0.8	0	0	7.24	0	0	0	0	0	0	6.39	6.39
	Inverter	MV2-1	365842	4906816	2	0	0	97.3	97.3	1	3962.39	3.25	0	82.96	0	0.52	0	0	16.99	0	0	0	0	0	0	-3.16	-3.16
	Inverter	MV1-14	365163	4905049	2	0	0	97.3	97.3	1	4263.8	3.25	0	83.6	0	0.56	0	0	17.47	0	0	0	0	0	0	-4.31	-4.31
	Inverter	MV1-10	365004	4905564	2	0	0	97.3	97.3	1	4443.7	3.25	0	83.95	0	0.58	0	0	17.74	0	0	0	0	0	0	-4.97	-4.97
	Inverter	MV1-7	364925	4905782	2	0	0	97.3	97.3	1	4548.6	3.25	0	84.16	0	0.6	0	0	17.9	0	0	0	0	0	0	-5.35	-5.35
	Inverter	MV1-13	364731	4905241	2	0	0	97.3	97.3	1	4696.5	3.25	0	84.44	0	0.61	0	0	18.13	0	0	0	0	0	0	-5.86	-5.86
	Westbrook Inverter Enclosur	W_INV1	369409	4906578	2	0	0	86.1	86.1	1	1451.7	3.25	0	74.24	0	0.78	0	0	7.13	0	0	0	0	0	0	3.91	3.91
	Inverter	MV3-22	368656	4907142	2	0	0	89.1	89.1	1	2157.71	3.25	0	77.68	0	0.94	0	0	8.3	0	0	0	0	0	0	2.13	2.13
	Gardiner Substation	G_Sub	366586.3	4903349.9	2.5	0	0	90.8	90.8	1	3349.69	4.25	0	81.5	0	1.18	2.87	0.3	6.47	0	0	0	0	0	0	-1.24	-1.24
	Inverter	MV6-4	370250	4906966	2	0	0	86.1	86.1	1	2015.67	3.25	0	77.09	0	0.91	0	0	8.07	0	0	0	0	0	0	-0.01	-0.01
	Inverter	MV3-2	368671	4907928	2	0	0	89.1	89.1	1	2901.58	3.25	0	80.25	0	1.12	0	0	9.47	0	0	0	0	0	0	-1.78	-1.78
	Inverter	MV3-5	368340	4907843	2	0	0	89.1	89.1	1	2925.67	3.25	0	80.32	0	1.13	0	0	9.5	0	0	0	0	0	0	-1.9	-1.9
	Inverter	MV3-4	368502	4907925	2	0	0	89.1	89.1	1	2947.22	3.25	0	80.39	0	1.13	0	0	9.54	0	0	0	0	0	0	-2	-2
	Inverter	MV3-1	368156	4907976	2	0	0	89.1	89.1	1	3119.84	3.25	0	80.88	0	1.18	0	0	9.8	0	0	0	0	0	0	-2.8	-2.8
	Fixed Reactor Bank 2	FRB2	369464	4908755	6	0	0	89.8	89.8	1	3628.8	5.25	0	82.2	0	-0.78	0	0	6.86	0	0	0	0	0	0	1.5	1.5
	Fixed Reactor Bank 1	FRB1	369378	4908755	6	0	0	89.8	89.8	1	3628.92	5.25	0	82.2	0	-0.78	0	0	6.86	0	0	0	0	0	0	1.5	1.5

Inverter	MV4-15	369176	4908481	2	0	0	89.1	89.1	1	3363.91	3.25	0	81.54	0	1.24	0	0	10.16	0	0	0	0	0	0	-3.88	-3.88
Inverter	MV4-14	369176	4908507	2	0	0	89.1	89.1	1	3389.84	3.25	0	81.6	0	1.24	0	0	10.2	0	0	0	0	0	0	-3.99	-3.99
Inverter	MV5-6	369982	4908507	2	0	0	89.1	89.1	1	3426	3.25	0	81.7	0	1.25	0	0	10.25	0	0	0	0	0	0	-4.14	-4.14
Inverter	MV4-13	369051	4908605	2	0	0	89.1	89.1	1	3498.77	3.25	0	81.88	0	1.27	0	0	10.36	0	0	0	0	0	0	-4.45	-4.45
Inverter	MV4-12	369043	4908803	2	0	0	89.1	89.1	1	3696.51	3.25	0	82.36	0	1.32	0	0	10.65	0	0	0	0	0	0	-5.26	-5.26
Inverter	MV2-2	365977	4906654	2	0	0	89.1	89.1	1	3772.25	3.25	0	82.53	0	1.34	0	0	10.76	0	0	0	0	0	0	-5.57	-5.57
Inverters	G_Inv2	366676.9	4903239.1	2	0	0	87.7	87.7	1	3334.67	3.25	0	81.46	0	2.73	0	0	4.15	0	0	0	0	0	0	-0.68	-0.68
Inverters	G_Inv4	366732.8	4903105	2	0	0	87.7	87.7	1	3367.48	3.25	0	81.55	0	2.74	0	0	4.18	0	0	0	0	0	0	-0.8	-0.8
Inverters	G_Inv6	366788.5	4902972	2	0	0	87.7	87.7	1	3405.64	3.25	0	81.64	0	2.74	0	0	4.22	0	0	0	0	0	0	-0.95	-0.95
Westbrook Inverter Transfor	W_INVTR3	369514	4906164	2	0	0	77.3	77.3	1	1041.32	3.25	0	71.35	0	-1.96	0	0	0.7	0	0	0	0	0	0	7.25	7.25
Inverters	G_Inv8	366844.5	4902838.5	2	0	0	87.7	87.7	1	3449.51	3.25	0	81.76	0	2.74	0	0	4.27	0	0	0	0	0	0	-1.11	-1.11
Inverters	G_Inv1	366526.4	4903225.8	2	0	0	87.7	87.7	1	3467.07	3.25	0	81.8	0	2.74	0	0	4.29	0	0	0	0	0	0	-1.18	-1.18
Inverters	G_Inv3	366583.7	4903091.4	2	0	0	87.7	87.7	1	3495.78	3.25	0	81.87	0	2.75	0	0	4.32	0	0	0	0	0	0	-1.28	-1.28
Inverters	G_Inv10	366900.7	4902704.8	2	0	0	87.7	87.7	1	3498.83	3.25	0	81.88	0	2.75	0	0	4.33	0	0	0	0	0	0	-1.29	-1.29
Westbrook Inverter Transfor	W_INVTR4	369679	4906164	2	0	0	77.3	77.3	1	1067.98	3.25	0	71.57	0	-1.97	0	0	0.72	0	0	0	0	0	0	7.03	7.03
Inverters	G_Inv5	366638.5	4902958.1	2	0	0	87.7	87.7	1	3531.61	3.25	0	81.96	0	2.75	0	0	4.36	0	0	0	0	0	0	-1.41	-1.41
Inverters	G_Inv7	366694.6	4902824.7	2	0	0	87.7	87.7	1	3571.96	3.25	0	82.06	0	2.75	0	0	4.41	0	0	0	0	0	0	-1.56	-1.56
Inverters	G_Inv9	366750.9	4902691.8	2	0	0	87.7	87.7	1	3617.18	3.25	0	82.17	0	2.76	0	0	4.46	0	0	0	0	0	0	-1.72	-1.72
Westbrook Inverter Transfor	W_INVTR2	369368	4906388	2	0	0	77.3	77.3	1	1262.94	3.25	0	73.03	0	-2.08	0	0	0.83	0	0	0	0	0	0	5.57	5.57
Westbrook Inverter Transfor	W_INVTR1	369403	4906578	2	0	0	78.2	78.2	1	1451.79	3.25	0	74.24	0	-2.18	0	0	0.93	0	0	0	0	0	0	5.25	5.25
Inverter	MV1-3	364440	4906039	2	0	0	89.1	89.1	1	5068.93	3.25	0	85.1	0	1.66	0	0	12.56	0	0	0	0	0	0	-10.25	-10.25
Westbrook Inverter Transfor	W_INVTR7	369786	4906417	2	0	0	77.3	77.3	1	1339.84	3.25	0	73.54	0	-2.12	0	0	0.87	0	0	0	0	0	0	5.06	5.06
Westbrook Inverter Transfor	W_INVTR5	369725	4906574	2	0	0	77.3	77.3	1	1478.14	3.25	0	74.39	0	-2.19	0	0	0.94	0	0	0	0	0	0	4.2	4.2
Westbrook Inverter Transfor	W_INVTR6	369881	4906578	2	0	0	77.3	77.3	1	1521.21	3.25	0	74.64	0	-2.21	0	0	0.97	0	0	0	0	0	0	3.94	3.94
Inverter Transformer	MV6-4 T	370244	4906966	2	0	0	69.4	69.4	1	2013.23	3.25	0	77.08	0	2.18	0	0	4.98	0	0	0	0	0	0	-14.88	-14.88
Inverter Transformer	MV6-1 T	370230	4907364	2	0	0	69.4	69.4	1	2377.63	3.25	0	78.52	0	2.31	0	0	5.33	0	0	0	0	0	0	-16.81	-16.81
Inverter Transformer	MV2-1 T	365836	4906816	2	0	0	69.4	69.4	1	3967.82	3.25	0	82.97	0	2.78	0	0	6.65	0	0	0	0	0	0	-23.05	-23.05
Inverter Transformer	MV1-14 T	365157	4905049	2	0	0	69.4	69.4	1	4269.8	3.25	0	83.61	0	2.85	0	0	6.87	0	0	0	0	0	0	-23.98	-23.98
Inverter Transformer	MV1-10 T	365010	4905564	2	0	0	69.4	69.4	1	4437.73	3.25	0	83.94	0	2.89	0	0	6.99	0	0	0	0	0	0	-24.48	-24.48
Inverter Transformer	MV1-7 T	364919	4905782	2	0	0	69.4	69.4	1	4554.53	3.25	0	84.17	0	2.92	0	0	7.08	0	0	0	0	0	0	-24.81	-24.81
Inverter Transformer	MV1-13 T	364725	4905241	2	0	0	69.4	69.4	1	4702.5	3.25	0	84.45	0	2.95	0	0	7.18	0	0	0	0	0	0	-25.23	-25.23
Inverter Transformer	MV3-22 T	368661	4907142	2	0	0	56.1	56.1	1	2155.93	3.25	0	77.67	0	0.47	0	0	7.35	0	0	0	0	0	0	-29.43	-29.43
Inverter Transformer	MV6-3 T	370202	4907140	2	0	0	56.1	56.1	1	2157.92	3.25	0	77.68	0	0.47	0	0	7.35	0	0	0	0	0	0	-29.44	-29.44
Inverter Transformer	MV3-21 T	368484	4907206	2	0	0	56.1	56.1	1	2283.05	3.25	0	78.17	0	0.52	0	0	7.59	0	0	0	0	0	0	-30.22	-30.22
Inverter Transformer	MV6-2 T	370091	4907339	2	0	0	56.1	56.1	1	2310.35	3.25	0	78.27	0	0.54	0	0	7.64	0	0	0	0	0	0	-30.39	-30.39
Inverter Transformer	MV3-20 T	368683	4907317	2	0	0	56.1	56.1	1	2313.21	3.25	0	78.28	0	0.54	0	0	7.64	0	0	0	0	0	0	-30.41	-30.41
Inverter Transformer	MV3-19 T	368352	4907347	2	0	0	56.1	56.1	1	2466.73	3.25	0	78.84	0	0.6	0	0	7.93	0	0	0	0	0	0	-31.32	-31.32
Inverter Transformer	MV3-14 T	368678	4907498	2	0	0	56.1	56.1	1	2486.79	3.25	0	78.91	0	0.61	0	0	7.97	0	0	0	0	0	0	-31.43	-31.43
Inverter Transformer	MV3-16 T	368509	4907475	2	0	0	56.1	56.1	1	2521.31	3.25	0	79.03	0	0.63	0	0	8.03	0	0	0	0	0	0	-31.63	-31.63
Inverter Transformer	MV3-15 T	368351	4907477	2	0	0	56.1	56.1	1	2584.8	3.25	0	79.25	0	0.65	0	0	8.14	0	0	0	0	0	0	-31.99	-31.99
Inverter Transformer	MV3-17 T	368183	4907472	2	0	0	56.1	56.1	1	2654.65	3.25	0	79.48	0	0.68	0	0	8.27	0	0	0	0	0	0	-32.37	-32.37
Inverter Transformer	MV3-8 T	368685	4907712	2	0	0	56.1	56.1	1	2689.71	3.25	0	79.59	0	0.7	0	0	8.33	0	0	0	0	0	0	-32.56	-32.56
Inverter Transformer	MV3-9 T	368517	4907703	2	0	0	56.1	56.1	1	2732.28	3.25	0	79.73	0	0.72	0	0	8.41	0	0	0	0	0	0	-32.79	-32.79
Inverter Transformer	MV3-11 T	368340	4907662	2	0	0	56.1	56.1	1	2758.42	3.25	0	79.81	0	0.73	0	0	8.45	0	0	0	0	0	0	-32.93	-32.93
Inverter Transformer	MV3-18 T	367757	4907412	2	0	0	56.1	56.1	1	2830.17	3.25	0	80.04	0	0.76	0	0	8.58	0	0	0	0	0	0	-33.31	-33.31
Inverter Transformer	MV3-10 T	368162	4907669	2	0	0	56.1	56.1	1	2839.5	3.25	0	80.06	0	0.76	0	0	8.59	0	0	0	0	0	0	-33.36	-33.36
Inverter Transformer	MV3-13 T	367958	4907577	2	0	0	56.1	56.1	1	2856.71	3.25	0	80.12	0	0.77	0	0	8.62	0	0	0	0	0	0	-33.45	-33.45
Inverter Transformer	MV3-2 T	368677	4907928	2	0	0	56.1	56.1	1	2900.02	3.25	0	80.25	0	0.79	0	0	8.7	0	0	0	0	0	0	-33.67	-33.67
Inverter Transformer	MV3-5 T	368335	4907843	2	0	0	56.1	56.1	1	2927.53	3.25	0	80.33	0	0.8	0	0	8.74	0	0	0	0	0	0	-33.82	-33.82
Inverter Transformer	MV3-4 T	368507	4907925	2	0	0	56.1	56.1	1	2945.66	3.25	0	80.38	0	0.81	0	0	8.78	0	0	0	0	0	0	-33.91	-33.91
Inverter Transformer	MV3-6 T	368156	4907834	2	0	0	56.1	56.1	1	2990.7	3.25	0	80.52	0	0.83	0	0	8.85	0	0	0	0	0	0	-34.14	-34.14
Inverter Transformer	MV3-7 T	367951	4907754	2	0	0	56.1	56.1	1	3013.34	3.25	0	80.58	0	0.84	0	0	8.89	0	0	0	0	0	0	-34.25	-34.25
Inverter Transformer	MV3-12 T	367674	4907594	2	0	0	56.1	56.1	1	3026.37	3.25	0	80.62	0	0.84	0	0	8.91	0	0	0	0	0	0	-34.31	-34.31
Inverter Transformer	MV3-1 T	368150	4907976	2	0	0	56.1	56.1	1	3122.28	3.25	0	80.89	0	0.88	0	0	9.07	0	0	0	0	0	0	-34.79	-34.79
Inverter Transformer	MV3-3 T	367944	4907927	2	0	0	56.1	56.1	1	3168.59	3.25	0	81.02	0	0.9	0	0	9.15	0	0	0	0	0	0	-35.01	-35.01
Inverter Transformer	MV4-15 T	369170	4908481	2	0	0	56.1	56.1	1	3364.36	3.25	0	81.54	0	0.98	0	0	9.47	0	0	0	0	0	0	-35.93	-35.93
Inverter Transformer	MV4-14 T	369182	4908507	2	0	0	56.1	56.1	1	3389.4	3.25	0	81.6	0	0.99	0	0	9.51	0	0	0	0	0	0	-36.05	-36.05
Inverter Transformer	MV5-6 T	369987	4908507	2	0	0	56.1	56.1	1	3426.82	3.25	0	81.7	0	1.01	0	0	9.57	0	0	0	0	0	0	-36.22	-36.22
Inverter Transformer	MV4-13 T	369057	4908605	2	0	0	56.1	56.1	1	3498.13	3.25	0	81.88	0	1.04	0	0	9.68	0	0	0	0	0	0	-36.54	-36.54
Inverter Transformer	MV5-5 T	370021	4908690	2	0	0	56.1	56.1	1	3612.92	3.25	0	82.16	0	1.09	0	0	9.87	0	0	0	0	0	0	-37.05	-37.05
Inverter Transformer	MV5-4 T	370330	4908707	2	0	0	56.1	56.1	1	3692.93	3.25	0	82.35	0	1.12	0	0	9.99	0	0	0	0	0	0	-37.4	-37.4
Inverter Transformer	MV4-12 T	369049	4908803	2	0	0	56.1	56.1	1	3695.89	3.25	0	82.35	0	1.12	0	0	9.99	0	0	0	0	0	0	-37.41	-37.41
Inverter Transformer	MV4-11 T	369269	4908855	2	0	0	56.1	56.1	1	3731.91	3.25	0	82.44	0	1.14	0	0	10.05	0	0	0	0	0	0	-37.57	-37.57
Inverter Transformer	MV4-10 T	369307	4908858	2	0	0	56.1	56.1	1	3733.5	3.25	0	82.44	0	1.14	0	0	10.05	0	0	0	0	0	0	-37.57	-37.57
Inverter Transformer	MV2-2 T	365982	4906654	2	0	0	56.1	56.1	1	3767.68	3.25	0	82.52	0	1.15	0	0	10.1	0	0	0	0	0	0	-37.72	-37.72
Inverter Transformer	MV5-2 T	370011	4908853	2	0	0	56.1	56.1	1	3772.22	3.25	0	82.53	0	1.15	0	0	10.11	0	0	0	0	0	0	-37.74	-37.74
Inverter Transformer	MV5-3 T	370237	4908851	2	0	0	56.1	56.1	1	3811.85	3.25	0	82.62	0	1.17	0	0	10.17	0	0	0	0	0	0	-37.9	-37.9
Inverter Transformer	MV4-9 T	369284	4909001	2	0	0	56.1	56.1	1	3877.21	3.25	0	82.77	0	1.19	0	0	10.27	0	0	0	0	0	0	-38.18	-38.18
Inverter Transformer	MV4-8 T	369262	4909001	2	0	0	56.1	56.1	1	3878.07	3.25	0	82.77	0	1.19	0	0	10.27	0	0	0	0	0	0	-38.18	-38.18
Inverter Transformer	MV4-7 T	369040	4909001	2	0	0	56.1	56.1	1	3893.79	3.25	0	82.81	0	1.2	0	0	10.3	0	0	0	0	0	0	-38.25	-38.25
Inverter Transformer	MV2-3 T	365814	4906641	2	0	0	56.1	56.1	1	3916.8	3.25	0	82.86	0	1.21	0	0	10.33	0	0	0	0	0	0	-38.34	-38.34
Inverter Transformer	MV5-1 T	370015	4909142	2	0	0	56.1	56.1	1	4058.55	3.25	0	83.17	0	1.27	0	0	10.54	0	0	0	0	0	0	-38.92	-38.92
Inverter Transformer	MV4-6 T	369249	4909192	2	0	0	56.1	56.1	1	4069.46	3.25	0	83.19	0	1.27	0	0	10.56	0	0	0	0	0	0	-38.96	-38.96
Inverter Transformer	MV4-5 T	369283	4909199	2	0	0	56.1	56.1	1	4075.11	3.25	0	83.2	0	1.27	0	0	10.57	0	0	0	0	0	0	-38.98	-38.98

	Inverter Transformer	MV4-4 T	369033	4909199	2	0	0	56.1	56.1	1	4091.53	3.25	0	83.24	0	1.28	0	0	10.59	0	0	0	0	0	0	-39.05	-39.05
	Inverter Transformer	MV1-15 T	365309	4904994	2	0	0	56.1	56.1	1	4119.23	3.25	0	83.3	0	1.29	0	0	10.63	0	0	0	0	0	0	-39.16	-39.16
	Inverter Transformer	MV2-4 T	365590	4906628	2	0	0	56.1	56.1	1	4119.52	3.25	0	83.3	0	1.29	0	0	10.63	0	0	0	0	0	0	-39.16	-39.16
	Inverter Transformer	MV4-2 T	369267	4909397	2	0	0	56.1	56.1	1	4273.56	3.25	0	83.62	0	1.35	0	0	10.85	0	0	0	0	0	0	-39.76	-39.76
	Inverter Transformer	MV4-3 T	369234	4909397	2	0	0	56.1	56.1	1	4274.92	3.25	0	83.62	0	1.35	0	0	10.86	0	0	0	0	0	0	-39.77	-39.77
	Inverter Transformer	MV4-1 T	369017	4909397	2	0	0	56.1	56.1	1	4290.15	3.25	0	83.65	0	1.36	0	0	10.88	0	0	0	0	0	0	-39.83	-39.83
	Inverter Transformer	MV1-12 T	365044	4905386	2	0	0	56.1	56.1	1	4389.78	3.25	0	83.85	0	1.4	0	0	11.02	0	0	0	0	0	0	-40.21	-40.21
	Inverter Transformer	MV1-4 T	364821	4905918	2	0	0	56.1	56.1	1	4672.64	3.25	0	84.39	0	1.5	0	0	11.41	0	0	0	0	0	0	-41.25	-41.25
	Inverter Transformer	MV1-8 T	364782	4905647	2	0	0	56.1	56.1	1	4673.19	3.25	0	84.39	0	1.51	0	0	11.42	0	0	0	0	0	0	-41.25	-41.25
	Inverter Transformer	MV1-2 T	364759	4906063	2	0	0	56.1	56.1	1	4760.15	3.25	0	84.55	0	1.54	0	0	11.53	0	0	0	0	0	0	-41.57	-41.57
	Inverter Transformer	MV1-11 T	364649	4905414	2	0	0	56.1	56.1	1	4785.75	3.25	0	84.6	0	1.55	0	0	11.57	0	0	0	0	0	0	-41.66	-41.66
	Inverter Transformer	MV1-5 T	364676	4905892	2	0	0	56.1	56.1	1	4811.4	3.25	0	84.65	0	1.56	0	0	11.6	0	0	0	0	0	0	-41.75	-41.75
	Inverter Transformer	MV1-1 T	364721	4906166	2	0	0	56.1	56.1	1	4818.58	3.25	0	84.66	0	1.56	0	0	11.61	0	0	0	0	0	0	-41.77	-41.77
	Inverter Transformer	MV1-9 T	364555	4905646	2	0	0	56.1	56.1	1	4898.74	3.25	0	84.8	0	1.59	0	0	11.72	0	0	0	0	0	0	-42.05	-42.05
	Inverter Transformer	MV1-6 T	364482	4905835	2	0	0	56.1	56.1	1	4994.62	3.25	0	84.97	0	1.62	0	0	11.85	0	0	0	0	0	0	-42.38	-42.38
	Inverter Transformer	MV1-3 T	364435	4906039	2	0	0	56.1	56.1	1	5073.85	3.25	0	85.11	0	1.65	0	0	11.95	0	0	0	0	0	0	-42.65	-42.65
	Line Reactor	NGR	369421	4908787.5	5	0	0	45.4	45.4	1	3661.1	5.25	0	82.27	0	3.3	1.33	0.12	1.5	0	0	0	0	0	0	-43.05	-43.05
Limit. Valu	0	0																								
Level D/N:	25.6007	25.6007																								

Receiver: Existing Noise Receptor
ID: W-R11
X: 369457.7
Y: 4905117.3
Z: 4.5
Ground: 0

ISO	Description	ID	X	Y	Z	Ground	ReflOrd	LxT	LxN	L/A	Dist.	hm	Freq	Adiv	K0b	Agr	Abar	z	Aatm	Afol	Ahous	Cmet	CmetN	Dc	RL	LtotT	LtotN
	Sol_Luce Substation	S_Substation	369426	4908792	3.5	0	0	112.1	112.1	1	3674.84	5.25	0	82.3	0	0.5	3.2	0.35	6.93	0	0	0	0	0	0	19.15	19.15
	Inverter	MV6-3	370207	4907140	2	0	0	100.3	100.3	1	2157.03	3.25	0	77.68	0	0.17	0	0	13.79	0	0	0	0	0	0	8.68	8.68
	Inverter	MV3-21	368478	4907206	2	0	0	100.3	100.3	1	2307.05	3.25	0	78.26	0	0.21	0	0	14.09	0	0	0	0	0	0	7.75	7.75
	Inverter	MV6-2	370085	4907339	2	0	0	100.3	100.3	1	2308.56	3.25	0	78.27	0	0.21	0	0	14.09	0	0	0	0	0	0	7.75	7.75
	Inverter	MV3-20	368689	4907317	2	0	0	100.3	100.3	1	2330.15	3.25	0	78.35	0	0.22	0	0	14.13	0	0	0	0	0	0	7.62	7.62
	Inverter	MV3-19	368357	4907347	2	0	0	100.3	100.3	1	2486.59	3.25	0	78.91	0	0.25	0	0	14.43	0	0	0	0	0	0	6.71	6.71
	Inverter	MV3-14	368684	4907498	2	0	0	100.3	100.3	1	2503.27	3.25	0	78.97	0	0.26	0	0	14.46	0	0	0	0	0	0	6.62	6.62
	Inverter	MV3-16	368514	4907475	2	0	0	100.3	100.3	1	2539.55	3.25	0	79.1	0	0.27	0	0	14.53	0	0	0	0	0	0	6.42	6.42
	Inverter	MV3-15	368357	4907477	2	0	0	100.3	100.3	1	2603.79	3.25	0	79.31	0	0.28	0	0	14.65	0	0	0	0	0	0	6.07	6.07
	Inverter	MV3-17	368178	4907472	2	0	0	100.3	100.3	1	2679.97	3.25	0	79.56	0	0.3	0	0	14.79	0	0	0	0	0	0	5.66	5.66
	SubstationTransformer	W_ST	369711.17	4906112.3	2.5	0	0	92	92	1	1026.75	3.5	0	71.23	0	-0.37	0	-0.14	2.57	0	0	0	0	0	0	18.54	18.54
	Inverter	MV3-8	368680	4907712	2	0	0	100.3	100.3	1	2708.74	3.25	0	79.66	0	0.3	0	0	14.85	0	0	0	0	0	0	5.51	5.51
	Inverter	MV3-9	368512	4907703	2	0	0	100.3	100.3	1	2753.22	3.25	0	79.8	0	0.31	0	0	14.93	0	0	0	0	0	0	5.27	5.27
	Inverter	MV3-11	368346	4907662	2	0	0	100.3	100.3	1	2776.94	3.25	0	79.87	0	0.32	0	0	14.97	0	0	0	0	0	0	5.15	5.15
	Inverter	MV3-18	367752	4907412	2	0	0	100.3	100.3	1	2859.21	3.25	0	80.12	0	0.33	0	0	15.12	0	0	0	0	0	0	4.73	4.73
	Inverter	MV3-10	368167	4907669	2	0	0	100.3	100.3	1	2859.56	3.25	0	80.13	0	0.33	0	0	15.12	0	0	0	0	0	0	4.73	4.73
	Inverter	MV3-13	367963	4907577	2	0	0	100.3	100.3	1	2878.24	3.25	0	80.18	0	0.34	0	0	15.16	0	0	0	0	0	0	4.64	4.64
	Inverter	MV3-6	368162	4907834	2	0	0	100.3	100.3	1	3009.87	3.25	0	80.57	0	0.36	0	0	15.39	0	0	0	0	0	0	3.99	3.99
	Inverter	MV3-7	367945	4907754	2	0	0	100.3	100.3	1	3039.81	3.25	0	80.66	0	0.37	0	0	15.44	0	0	0	0	0	0	3.84	3.84
	Inverter	MV3-12	367668	4907594	2	0	0	100.3	100.3	1	3055.66	3.25	0	80.7	0	0.37	0	0	15.47	0	0	0	0	0	0	3.77	3.77
	Inverter	MV3-3	367939	4907927	2	0	0	100.3	100.3	1	3193.88	3.25	0	81.09	0	0.4	0	0	15.71	0	0	0	0	0	0	3.12	3.12
	Inverter	MV6-1	370235	4907364	2	0	0	97.3	97.3	1	2377.36	3.25	0	78.52	0	0.23	0	0	14.22	0	0	0	0	0	0	4.34	4.34
	Inverter	MV5-5	370015	4908690	2	0	0	100.3	100.3	1	3615.91	3.25	0	82.16	0	0.47	0	0	16.42	0	0	0	0	0	0	1.25	1.25
	Inverter	MV5-4	370324	4908707	2	0	0	100.3	100.3	1	3692.75	3.25	0	82.35	0	0.48	0	0	16.55	0	0	0	0	0	0	0.93	0.93
	Inverter	MV4-11	369264	4908855	2	0	0	100.3	100.3	1	3742.72	3.25	0	82.46	0	0.49	0	0	16.63	0	0	0	0	0	0	0.73	0.73
	Inverter	MV4-10	369312	4908858	2	0	0	100.3	100.3	1	3743.54	3.25	0	82.47	0	0.49	0	0	16.63	0	0	0	0	0	0	0.72	0.72
	Inverter	MV5-2	370006	4908853	2	0	0	100.3	100.3	1	3775.72	3.25	0	82.54	0	0.49	0	0	16.69	0	0	0	0	0	0	0.59	0.59
	Inverter	MV5-3	370231	4908851	2	0	0	100.3	100.3	1	3812.94	3.25	0	82.63	0	0.5	0	0	16.75	0	0	0	0	0	0	0.44	0.44
	Westbrook Inverter Enclosur	W_INV3	369508	4906164	2	0	0	89.1	89.1	1	1047.91	3.25	0	71.41	0	0.7	0	0	6.4	0	0	0	0	0	0	10.55	10.55
	Inverter	MV4-9	369289	4909001	2	0	0	100.3	100.3	1	3887.36	3.25	0	82.79	0	0.51	0	0	16.87	0	0	0	0	0	0	0.14	0.14
	Inverter	MV4-8	369256	4909001	2	0	0	100.3	100.3	1	3888.93	3.25	0	82.8	0	0.51	0	0	16.87	0	0	0	0	0	0	0.13	0.13
	Westbrook Inverter Enclosur	W_INV4	369673	4906164	2	0	0	89.1	89.1	1	1068.62	3.25	0	71.58	0	0.7	0	0	6.44	0	0	0	0	0	0	10.34	10.34
	Inverter	MV4-7	369035	4909001	2	0	0	100.3	100.3	1	3906.64	3.25	0	82.84	0	0.51	0	0	16.9	0	0	0	0	0	0	0.06	0.06
	Inverter	MV2-3	365820	4906641	2	0	0	100.3	100.3	1	3943.92	3.25	0	82.92	0	0.52	0	0	16.96	0	0	0	0	0	0	-0.08	-0.08
	Inverter	MV5-1	370020	4909142	2	0	0	100.3	100.3	1	4063.79	3.25	0	83.18	0	0.54	0	0	17.15	0	0	0	0	0	0	-0.55	-0.55
	Inverter	MV4-6	369243	4909192	2	0	0	100.3	100.3	1	4080.35	3.25	0	83.21	0	0.54	0	0	17.18	0	0	0	0	0	0	-0.62	-0.62
	Inverter	MV4-5	369289	4909199	2	0	0	100.3	100.3	1	4085.19	3.25	0	83.22	0	0.54	0	0	17.18	0	0	0	0	0	0	-0.64	-0.64
	Inverter	MV4-4	369027	4909199	2	0	0	100.3	100.3	1	4104.36	3.25	0	83.26	0	0.54	0	0	17.21	0	0	0	0	0	0	-0.71	-0.71
	Inverter	MV1-15	365315	4904994	2	0	0	100.3	100.3	1	4144.54	3.25	0	83.35	0	0.55	0	0	17.28	0	0	0	0	0	0	-0.86	-0.86
	Inverter	MV2-4	365586	4906624	2	0	0	100.3	100.3	1	4154.54	3.25	0	83.37	0	0.55	0	0	17.29	0	0	0	0	0	0	-0.9	-0.9
	Inverter	MV4-2	369272	4909397	2	0	0	100.3	100.3	1	4283.73	3.25	0	83.64	0	0.56	0	0	17.5	0	0	0	0	0	0	-1.39	-1.39
	Inverter	MV4-3	369229	4909397	2	0	0	100.3	100.3	1	4285.81	3.25	0	83.64	0	0.56	0	0	17.5	0	0	0	0	0	0	-1.39	-1.39
	Inverter	MV4-1	369011	4909397	2	0	0	100.3	100.3	1	4302.95	3.25	0	83.68	0	0.57	0	0	17.53	0	0	0	0	0	0	-1.46	-1.46
	Inverter	MV1-12	365038	4905386	2	0	0	100.3	100.3	1	4427.86	3.25	0	83.92	0	0.58	0	0	17.72	0	0	0	0	0	0	-1.91	-1.91
	Westbrook Inverter Enclosur	W_INV2	369374	4906388	2	0	0	89.1	89.1	1	1273.46	3.25	0	73.1	0	0.74	0	0	6.81	0	0	0	0	0	0	8.4	8.4
	Inverter	MV1-8	364788	4905647	2	0	0	100.3	100.3	1	4699.65	3.25	0	84.44	0	0.61	0	0	18.13	0	0	0	0	0	0	-2.88	-2.88

Inverter	MV1-4	364815	4905918	2	0	0	100.3	100.3	1	4711.24	3.25	0	84.46	0	0.61	0	0	18.15	0	0	0	0	0	0	-2.92	-2.92
Inverter	MV1-2	364753	4906063	2	0	0	100.3	100.3	1	4798.81	3.25	0	84.62	0	0.62	0	0	18.28	0	0	0	0	0	0	-3.22	-3.22
Inverter	MV1-11	364655	4905414	2	0	0	100.3	100.3	1	4811.86	3.25	0	84.65	0	0.62	0	0	18.3	0	0	0	0	0	0	-3.26	-3.26
Inverter	MV1-5	364671	4905892	2	0	0	100.3	100.3	1	4848.99	3.25	0	84.71	0	0.63	0	0	18.36	0	0	0	0	0	0	-3.39	-3.39
Inverter	MV1-1	364715	4906166	2	0	0	100.3	100.3	1	4857.26	3.25	0	84.73	0	0.63	0	0	18.37	0	0	0	0	0	0	-3.41	-3.41
Westbrook Inverter Enclosur	W_INV7	369780	4906417	2	0	0	89.1	89.1	1	1339.07	3.25	0	73.54	0	0.76	0	0	6.93	0	0	0	0	0	0	7.84	7.84
Inverter	MV1-9	364561	4905646	2	0	0	100.3	100.3	1	4925.16	3.25	0	84.85	0	0.64	0	0	18.47	0	0	0	0	0	0	-3.64	-3.64
Inverter	MV1-6	364477	4905835	2	0	0	100.3	100.3	1	5032.14	3.25	0	85.04	0	0.64	0	0	18.63	0	0	0	0	0	0	-4	-4
Westbrook Inverter Enclosur	W_INV5	369719	4906574	2	0	0	89.1	89.1	1	1479.95	3.25	0	74.4	0	0.79	0	0	7.17	0	0	0	0	0	0	6.69	6.69
Westbrook Inverter Enclosur	W_INV6	369875	4906578	2	0	0	89.1	89.1	1	1519.14	3.25	0	74.63	0	0.8	0	0	7.24	0	0	0	0	0	0	6.39	6.39
DSTATCOM - 10 MVAR #1	DSAT1	369437	4908757	2.5	0	0	96.6	96.6	1	3639.76	3.5	0	82.22	0	3.52	0	0	2.65	0	0	0	0	0	0	8.24	8.24
DSTATCOM - 10 MVAR #2	DSAT2	369403	4908757	2.5	0	0	96.6	96.6	1	3640.11	3.5	0	82.22	0	3.52	0	0	2.65	0	0	0	0	0	0	8.24	8.24
Inverter	MV2-1	365842	4906816	2	0	0	97.3	97.3	1	3994.86	3.25	0	83.03	0	0.53	0	0	17.04	0	0	0	0	0	0	-3.28	-3.28
Inverter	MV1-14	365163	4905049	2	0	0	97.3	97.3	1	4295.24	3.25	0	83.66	0	0.57	0	0	17.51	0	0	0	0	0	0	-4.43	-4.43
Inverter	MV1-10	365004	4905564	2	0	0	97.3	97.3	1	4476.05	3.25	0	84.02	0	0.59	0	0	17.79	0	0	0	0	0	0	-5.09	-5.09
Inverter	MV1-7	364925	4905782	2	0	0	97.3	97.3	1	4581.18	3.25	0	84.22	0	0.6	0	0	17.95	0	0	0	0	0	0	-5.46	-5.46
Inverter	MV1-13	364731	4905241	2	0	0	97.3	97.3	1	4728.32	3.25	0	84.49	0	0.62	0	0	18.18	0	0	0	0	0	0	-5.97	-5.97
Westbrook Inverter Enclosur	W_INV1	369409	4906578	2	0	0	86.1	86.1	1	1461.51	3.25	0	74.3	0	0.78	0	0	7.14	0	0	0	0	0	0	3.84	3.84
Inverter	MV3-22	368656	4907142	2	0	0	89.1	89.1	1	2177.65	3.25	0	77.76	0	0.95	0	0	8.33	0	0	0	0	0	0	2.02	2.02
Gardiner Substation	G_Sub	366586.3	4903349.9	2.5	0	0	90.8	90.8	1	3371.74	4.25	0	81.56	0	1.18	2.86	0.3	6.5	0	0	0	0	0	0	-1.32	-1.32
Inverter	MV6-4	370250	4906966	2	0	0	86.1	86.1	1	2011.33	3.25	0	77.07	0	0.91	0	0	8.06	0	0	0	0	0	0	0.01	0.01
Inverter	MV3-2	368671	4907928	2	0	0	89.1	89.1	1	2918.72	3.25	0	80.3	0	1.13	0	0	9.49	0	0	0	0	0	0	-1.87	-1.87
Inverter	MV3-5	368340	4907843	2	0	0	89.1	89.1	1	2945.96	3.25	0	80.38	0	1.13	0	0	9.53	0	0	0	0	0	0	-2	-2
Inverter	MV3-4	368502	4907925	2	0	0	89.1	89.1	1	2965.9	3.25	0	80.44	0	1.14	0	0	9.57	0	0	0	0	0	0	-2.09	-2.09
Inverter	MV3-1	368156	4907976	2	0	0	89.1	89.1	1	3141.11	3.25	0	80.94	0	1.18	0	0	9.83	0	0	0	0	0	0	-2.89	-2.89
Fixed Reactor Bank 2	FRB2	369464	4908755	6	0	0	89.8	89.8	1	3637.71	5.25	0	82.22	0	-0.78	0	0	6.87	0	0	0	0	0	0	1.46	1.46
Fixed Reactor Bank 1	FRB1	369378	4908755	6	0	0	89.8	89.8	1	3638.57	5.25	0	82.22	0	-0.78	0	0	6.88	0	0	0	0	0	0	1.46	1.46
Inverter	MV4-15	369176	4908481	2	0	0	89.1	89.1	1	3375.48	3.25	0	81.57	0	1.24	0	0	10.18	0	0	0	0	0	0	-3.93	-3.93
Inverter	MV4-14	369176	4908507	2	0	0	89.1	89.1	1	3401.39	3.25	0	81.63	0	1.24	0	0	10.22	0	0	0	0	0	0	-4.04	-4.04
Inverter	MV5-6	369982	4908507	2	0	0	89.1	89.1	1	3430.01	3.25	0	81.71	0	1.25	0	0	10.26	0	0	0	0	0	0	-4.16	-4.16
Inverter	MV4-13	369051	4908605	2	0	0	89.1	89.1	1	3511.33	3.25	0	81.91	0	1.27	0	0	10.38	0	0	0	0	0	0	-4.5	-4.5
Inverter	MV4-12	369043	4908803	2	0	0	89.1	89.1	1	3708.96	3.25	0	82.39	0	1.32	0	0	10.67	0	0	0	0	0	0	-5.31	-5.31
Inverter	MV2-2	365977	4906654	2	0	0	89.1	89.1	1	3804.83	3.25	0	82.61	0	1.34	0	0	10.81	0	0	0	0	0	0	-5.7	-5.7
Inverters	G_Inv2	366676.9	4903239.1	2	0	0	87.7	87.7	1	3355.67	3.25	0	81.52	0	2.73	0	0	4.17	0	0	0	0	0	0	-0.76	-0.76
Inverters	G_Inv4	366732.8	4903105	2	0	0	87.7	87.7	1	3387.39	3.25	0	81.6	0	2.74	0	0	4.2	0	0	0	0	0	0	-0.88	-0.88
Inverters	G_Inv6	366788.5	4902972	2	0	0	87.7	87.7	1	3424.46	3.25	0	81.69	0	2.74	0	0	4.25	0	0	0	0	0	0	-1.02	-1.02
Westbrook Inverter Transfor	W_INVTR3	369514	4906164	2	0	0	77.3	77.3	1	1048.22	3.25	0	71.41	0	-1.96	0	0	0.71	0	0	0	0	0	0	7.19	7.19
Inverters	G_Inv8	366844.5	4902838.5	2	0	0	87.7	87.7	1	3467.24	3.25	0	81.8	0	2.74	0	0	4.29	0	0	0	0	0	0	-1.18	-1.18
Inverters	G_Inv1	366526.4	4903225.8	2	0	0	87.7	87.7	1	3488.6	3.25	0	81.85	0	2.75	0	0	4.32	0	0	0	0	0	0	-1.26	-1.26
Westbrook Inverter Transfor	W_INVTR4	369679	4906164	2	0	0	77.3	77.3	1	1069.84	3.25	0	71.59	0	-1.98	0	0	0.72	0	0	0	0	0	0	7.01	7.01
Inverters	G_Inv10	366900.7	4902704.8	2	0	0	87.7	87.7	1	3515.45	3.25	0	81.92	0	2.75	0	0	4.35	0	0	0	0	0	0	-1.35	-1.35
Inverters	G_Inv3	366583.7	4903091.4	2	0	0	87.7	87.7	1	3516.27	3.25	0	81.92	0	2.75	0	0	4.35	0	0	0	0	0	0	-1.36	-1.36
Inverters	G_Inv5	366638.5	4902958.1	2	0	0	87.7	87.7	1	3551.06	3.25	0	82.01	0	2.75	0	0	4.38	0	0	0	0	0	0	-1.48	-1.48
Inverters	G_Inv7	366694.6	4902824.7	2	0	0	87.7	87.7	1	3590.37	3.25	0	82.1	0	2.76	0	0	4.43	0	0	0	0	0	0	-1.63	-1.63
Inverters	G_Inv9	366750.9	4902691.8	2	0	0	87.7	87.7	1	3634.53	3.25	0	82.21	0	2.76	0	0	4.48	0	0	0	0	0	0	-1.78	-1.78
Westbrook Inverter Transfor	W_INVTR2	369368	4906388	2	0	0	77.3	77.3	1	1273.86	3.25	0	73.1	0	-2.09	0	0	0.83	0	0	0	0	0	0	5.5	5.5
Westbrook Inverter Transfor	W_INVTR1	369403	4906578	2	0	0	78.2	78.2	1	1461.73	3.25	0	74.3	0	-2.18	0	0	0.93	0	0	0	0	0	0	5.19	5.19
Inverter	MV1-3	364440	4906039	2	0	0	89.1	89.1	1	5101.65	3.25	0	85.15	0	1.66	0	0	12.6	0	0	0	0	0	0	-10.36	-10.36
Westbrook Inverter Transfor	W_INVTR7	369786	4906417	2	0	0	77.3	77.3	1	1340.52	3.25	0	73.55	0	-2.13	0	0	0.87	0	0	0	0	0	0	5.05	5.05
Westbrook Inverter Transfor	W_INVTR5	369725	4906574	2	0	0	77.3	77.3	1	1481.02	3.25	0	74.41	0	-2.19	0	0	0.94	0	0	0	0	0	0	4.18	4.18
Westbrook Inverter Transfor	W_INVTR6	369881	4906578	2	0	0	77.3	77.3	1	1520.8	3.25	0	74.64	0	-2.21	0	0	0.97	0	0	0	0	0	0	3.95	3.95
Inverter Transformer	MV6-4 T	370244	4906966	2	0	0	69.4	69.4	1	2008.97	3.25	0	77.06	0	2.18	0	0	4.97	0	0	0	0	0	0	-14.86	-14.86
Inverter Transformer	MV6-1 T	370230	4907364	2	0	0	69.4	69.4	1	2375.73	3.25	0	78.52	0	2.31	0	0	5.33	0	0	0	0	0	0	-16.8	-16.8
Inverter Transformer	MV2-1 T	365836	4906816	2	0	0	69.4	69.4	1	4000.29	3.25	0	83.04	0	2.79	0	0	6.68	0	0	0	0	0	0	-23.15	-23.15
Inverter Transformer	MV1-14 T	365157	4905049	2	0	0	69.4	69.4	1	4301.24	3.25	0	83.67	0	2.86	0	0	6.9	0	0	0	0	0	0	-24.08	-24.08
Inverter Transformer	MV1-10 T	365010	4905564	2	0	0	69.4	69.4	1	4470.08	3.25	0	84.01	0	2.9	0	0	7.02	0	0	0	0	0	0	-24.57	-24.57
Inverter Transformer	MV1-7 T	364919	4905782	2	0	0	69.4	69.4	1	4587.12	3.25	0	84.23	0	2.93	0	0	7.1	0	0	0	0	0	0	-24.91	-24.91
Inverter Transformer	MV1-13 T	364725	4905241	2	0	0	69.4	69.4	1	4734.32	3.25	0	84.51	0	2.96	0	0	7.2	0	0	0	0	0	0	-25.31	-25.31
Inverter Transformer	MV6-3 T	370202	4907140	2	0	0	56.1	56.1	1	2155.3	3.25	0	77.67	0	0.47	0	0	7.35	0	0	0	0	0	0	-29.43	-29.43
Inverter Transformer	MV3-22 T	368661	4907142	2	0	0	56.1	56.1	1	2175.81	3.25	0	77.75	0	0.48	0	0	7.38	0	0	0	0	0	0	-29.56	-29.56
Inverter Transformer	MV3-21 T	368484	4907206	2	0	0	56.1	56.1	1	2304.51	3.25	0	78.25	0	0.53	0	0	7.63	0	0	0	0	0	0	-30.35	-30.35
Inverter Transformer	MV6-2 T	370091	4907339	2	0	0	56.1	56.1	1	2310.2	3.25	0	78.27	0	0.54	0	0	7.64	0	0	0	0	0	0	-30.39	-30.39
Inverter Transformer	MV3-20 T	368683	4907317	2	0	0	56.1	56.1	1	2332.13	3.25	0	78.36	0	0.54	0	0	7.68	0	0	0	0	0	0	-30.52	-30.52
Inverter Transformer	MV3-19 T	368352	4907347	2	0	0	56.1	56.1	1	2488.8	3.25	0	78.92	0	0.61	0	0	7.97	0	0	0	0	0	0	-31.44	-31.44
Inverter Transformer	MV3-14 T	368678	4907498	2	0	0	56.1	56.1	1	2505.13	3.25	0	78.98	0	0.62	0	0	8	0	0	0	0	0	0	-31.54	-31.54
Inverter Transformer	MV3-16 T	368509	4907475	2	0	0	56.1	56.1	1	2541.41	3.25	0	79.1	0	0.63	0	0	8.06	0	0	0	0	0	0	-31.74	-31.74
Inverter Transformer	MV3-15 T	368351	4907477	2	0	0	56.1	56.1	1	2606.33	3.25	0	79.32	0	0.66	0	0	8.18	0	0	0	0	0	0	-32.11	-32.11
Inverter Transformer	MV3-17 T	368183	4907472	2	0	0	56.1	56.1	1	2677.59	3.25	0	79.55	0	0.69	0	0	8.31	0	0	0	0	0	0	-32.5	-32.5
Inverter Transformer	MV3-8 T	368685	4907712	2	0	0	56.1	56.1	1	2707.31	3.25	0	79.65	0	0.71	0	0	8.36	0	0	0	0	0	0	-32.66	-32.66
Inverter Transformer	MV3-9 T	368517	4907703	2	0	0	56.1	56.1	1	2751.5	3.25	0	79.79	0	0.72	0	0	8.44	0	0	0	0	0	0	-32.9	-32.9
Inverter Transformer	MV3-11 T	368340	4907662	2	0	0	56.1	56.1	1	2779.34	3.25	0	79.88	0	0.74	0	0	8.49	0	0	0	0	0	0	-33.04	-33.04
Inverter Transformer	MV3-18 T	367757	4907412	2	0	0	56.1	56.1	1	2856.23	3.25	0	80.12	0	0.77	0	0	8.62	0	0	0	0	0	0	-33.45	-33.45
Inverter Transformer	MV3-10 T	368162	4907669	2	0	0	56.1	56.1	1	2861.82	3.25	0	80.13	0	0.77	0	0	8.63	0	0	0	0	0	0	-33.48	-33.48
Inverter Transformer	MV3-13 T	367958	4907577	2	0	0	56.1	56.1	1	2880.84	3.25	0	80.19	0	0.78	0	0	8.66	0	0	0	0	0	0	-33.58	-33.58

	Inverter Transformer	MV3-2 T	368677	4907928	2	0	0	56.1	56.1	1	2917.11	3.25	0	80.3	0	0.79	0	0	8.73	0	0	0	0	0	0	-33.76	-33.76
	Inverter Transformer	MV3-5 T	368335	4907843	2	0	0	56.1	56.1	1	2947.86	3.25	0	80.39	0	0.81	0	0	8.78	0	0	0	0	0	0	-33.92	-33.92
	Inverter Transformer	MV3-4 T	368507	4907925	2	0	0	56.1	56.1	1	2964.29	3.25	0	80.44	0	0.81	0	0	8.81	0	0	0	0	0	0	-34	-34
	Inverter Transformer	MV3-6 T	368156	4907834	2	0	0	56.1	56.1	1	3012.46	3.25	0	80.58	0	0.84	0	0	8.89	0	0	0	0	0	0	-34.24	-34.24
	Inverter Transformer	MV3-7 T	367951	4907754	2	0	0	56.1	56.1	1	3036.83	3.25	0	80.65	0	0.85	0	0	8.93	0	0	0	0	0	0	-34.37	-34.37
	Inverter Transformer	MV3-12 T	367674	4907594	2	0	0	56.1	56.1	1	3052.15	3.25	0	80.69	0	0.85	0	0	8.96	0	0	0	0	0	0	-34.44	-34.44
	Inverter Transformer	MV3-1 T	368150	4907976	2	0	0	56.1	56.1	1	3143.6	3.25	0	80.95	0	0.89	0	0	9.11	0	0	0	0	0	0	-34.89	-34.89
	Inverter Transformer	MV3-3 T	367944	4907927	2	0	0	56.1	56.1	1	3191.51	3.25	0	81.08	0	0.91	0	0	9.19	0	0	0	0	0	0	-35.12	-35.12
	Inverter Transformer	MV4-15 T	369170	4908481	2	0	0	56.1	56.1	1	3375.98	3.25	0	81.57	0	0.99	0	0	9.49	0	0	0	0	0	0	-35.99	-35.99
	Inverter Transformer	MV4-14 T	369182	4908507	2	0	0	56.1	56.1	1	3400.89	3.25	0	81.63	0	1	0	0	9.53	0	0	0	0	0	0	-36.1	-36.1
	Inverter Transformer	MV5-6 T	369987	4908507	2	0	0	56.1	56.1	1	3430.78	3.25	0	81.71	0	1.01	0	0	9.58	0	0	0	0	0	0	-36.24	-36.24
	Inverter Transformer	MV4-13 T	369057	4908605	2	0	0	56.1	56.1	1	3510.64	3.25	0	81.91	0	1.04	0	0	9.7	0	0	0	0	0	0	-36.6	-36.6
	Inverter Transformer	MV5-5 T	370021	4908690	2	0	0	56.1	56.1	1	3616.84	3.25	0	82.17	0	1.09	0	0	9.87	0	0	0	0	0	0	-37.07	-37.07
	Inverter Transformer	MV5-4 T	370330	4908707	2	0	0	56.1	56.1	1	3694.17	3.25	0	82.35	0	1.12	0	0	9.99	0	0	0	0	0	0	-37.4	-37.4
	Inverter Transformer	MV4-12 T	369049	4908803	2	0	0	56.1	56.1	1	3708.29	3.25	0	82.38	0	1.13	0	0	10.01	0	0	0	0	0	0	-37.46	-37.46
	Inverter Transformer	MV4-11 T	369269	4908855	2	0	0	56.1	56.1	1	3742.46	3.25	0	82.46	0	1.14	0	0	10.07	0	0	0	0	0	0	-37.61	-37.61
	Inverter Transformer	MV4-10 T	369307	4908858	2	0	0	56.1	56.1	1	3743.74	3.25	0	82.47	0	1.14	0	0	10.07	0	0	0	0	0	0	-37.62	-37.62
	Inverter Transformer	MV5-2 T	370011	4908853	2	0	0	56.1	56.1	1	3776.45	3.25	0	82.54	0	1.15	0	0	10.12	0	0	0	0	0	0	-37.75	-37.75
	Inverter Transformer	MV2-2 T	365982	4906654	2	0	0	56.1	56.1	1	3800.26	3.25	0	82.6	0	1.16	0	0	10.15	0	0	0	0	0	0	-37.86	-37.86
	Inverter Transformer	MV5-3 T	370237	4908851	2	0	0	56.1	56.1	1	3814.16	3.25	0	82.63	0	1.17	0	0	10.18	0	0	0	0	0	0	-37.91	-37.91
	Inverter Transformer	MV4-9 T	369284	4909001	2	0	0	56.1	56.1	1	3887.58	3.25	0	82.79	0	1.2	0	0	10.29	0	0	0	0	0	0	-38.22	-38.22
	Inverter Transformer	MV4-8 T	369262	4909001	2	0	0	56.1	56.1	1	3888.63	3.25	0	82.8	0	1.2	0	0	10.29	0	0	0	0	0	0	-38.22	-38.22
	Inverter Transformer	MV4-7 T	369040	4909001	2	0	0	56.1	56.1	1	3906.1	3.25	0	82.83	0	1.21	0	0	10.31	0	0	0	0	0	0	-38.3	-38.3
	Inverter Transformer	MV2-3 T	365814	4906641	2	0	0	56.1	56.1	1	3949.46	3.25	0	82.93	0	1.22	0	0	10.38	0	0	0	0	0	0	-38.48	-38.48
	Inverter Transformer	MV5-1 T	370015	4909142	2	0	0	56.1	56.1	1	4063.1	3.25	0	83.18	0	1.27	0	0	10.55	0	0	0	0	0	0	-38.94	-38.94
	Inverter Transformer	MV4-6 T	369249	4909192	2	0	0	56.1	56.1	1	4080.04	3.25	0	83.21	0	1.28	0	0	10.57	0	0	0	0	0	0	-39	-39
	Inverter Transformer	MV4-5 T	369283	4909199	2	0	0	56.1	56.1	1	4085.44	3.25	0	83.22	0	1.28	0	0	10.58	0	0	0	0	0	0	-39.03	-39.03
	Inverter Transformer	MV4-4 T	369033	4909199	2	0	0	56.1	56.1	1	4103.74	3.25	0	83.26	0	1.29	0	0	10.61	0	0	0	0	0	0	-39.1	-39.1
	Inverter Transformer	MV1-15 T	365309	4904994	2	0	0	56.1	56.1	1	4150.53	3.25	0	83.36	0	1.3	0	0	10.68	0	0	0	0	0	0	-39.28	-39.28
	Inverter Transformer	MV2-4 T	365590	4906628	2	0	0	56.1	56.1	1	4152.27	3.25	0	83.37	0	1.3	0	0	10.68	0	0	0	0	0	0	-39.29	-39.29
	Inverter Transformer	MV4-2 T	369267	4909397	2	0	0	56.1	56.1	1	4283.95	3.25	0	83.64	0	1.36	0	0	10.87	0	0	0	0	0	0	-39.8	-39.8
	Inverter Transformer	MV4-3 T	369234	4909397	2	0	0	56.1	56.1	1	4285.54	3.25	0	83.64	0	1.36	0	0	10.87	0	0	0	0	0	0	-39.81	-39.81
	Inverter Transformer	MV4-1 T	369017	4909397	2	0	0	56.1	56.1	1	4302.33	3.25	0	83.67	0	1.36	0	0	10.9	0	0	0	0	0	0	-39.87	-39.87
	Inverter Transformer	MV1-12 T	365044	4905386	2	0	0	56.1	56.1	1	4421.87	3.25	0	83.91	0	1.41	0	0	11.07	0	0	0	0	0	0	-40.33	-40.33
	Inverter Transformer	MV1-4 T	364821	4905918	2	0	0	56.1	56.1	1	4705.33	3.25	0	84.45	0	1.52	0	0	11.46	0	0	0	0	0	0	-41.37	-41.37
	Inverter Transformer	MV1-8 T	364782	4905647	2	0	0	56.1	56.1	1	4705.61	3.25	0	84.45	0	1.52	0	0	11.46	0	0	0	0	0	0	-41.37	-41.37
	Inverter Transformer	MV1-2 T	364759	4906063	2	0	0	56.1	56.1	1	4792.93	3.25	0	84.61	0	1.55	0	0	11.58	0	0	0	0	0	0	-41.68	-41.68
	Inverter Transformer	MV1-11 T	364649	4905414	2	0	0	56.1	56.1	1	4817.85	3.25	0	84.66	0	1.56	0	0	11.61	0	0	0	0	0	0	-41.77	-41.77
	Inverter Transformer	MV1-5 T	364676	4905892	2	0	0	56.1	56.1	1	4844.05	3.25	0	84.7	0	1.57	0	0	11.65	0	0	0	0	0	0	-41.86	-41.86
	Inverter Transformer	MV1-1 T	364721	4906166	2	0	0	56.1	56.1	1	4851.4	3.25	0	84.72	0	1.57	0	0	11.66	0	0	0	0	0	0	-41.89	-41.89
	Inverter Transformer	MV1-9 T	364555	4905646	2	0	0	56.1	56.1	1	4931.13	3.25	0	84.86	0	1.6	0	0	11.76	0	0	0	0	0	0	-42.16	-42.16
	Inverter Transformer	MV1-6 T	364482	4905835	2	0	0	56.1	56.1	1	5027.2	3.25	0	85.03	0	1.64	0	0	11.89	0	0	0	0	0	0	-42.49	-42.49
	Inverter Transformer	MV1-3 T	364435	4906039	2	0	0	56.1	56.1	1	5106.57	3.25	0	85.16	0	1.66	0	0	11.99	0	0	0	0	0	0	-42.76	-42.76
	Line Reactor	NGR	369421	4908787.5	5	0	0	45.4	45.4	1	3670.38	5.25	0	82.29	0	3.3	1.33	0.12	1.5	0	0	0	0	0	0	-43.07	-43.07
Limit. Valu	0	0																								
Level D/N:	25.5555	25.5555																								

Receiver: Existing Noise Receptor
ID: W-R12
X: 369503.2
Y: 4905129.7
Z: 4.5
Ground: 0

ISO	Description	ID	X	Y	Z	Ground	ReflOrd	LxT	LxN	L/A	Dist.	hm	Freq	Adiv	K0b	Agr	Abar	z	Aatm	Afol	Ahous	Cmet	CmetN	Dc	RL	LtotT	LtotN
	Sol_Luce Substation	S_Substation	369426	4908792	3.5	0	0	112.1	112.1	1	3663.11	5.25	0	82.28	0	0.5	3.2	0.35	6.91	0	0	0	0	0	0	19.19	19.19
	Inverter	MV6-3	370207	4907140	2	0	0	100.3	100.3	1	2129.94	3.25	0	77.57	0	0.17	0	0	13.73	0	0	0	0	0	0	8.85	8.85
	Inverter	MV6-2	370085	4907339	2	0	0	100.3	100.3	1	2284.62	3.25	0	78.18	0	0.21	0	0	14.04	0	0	0	0	0	0	7.89	7.89
	Inverter	MV3-21	368478	4907206	2	0	0	100.3	100.3	1	2315.61	3.25	0	78.29	0	0.21	0	0	14.1	0	0	0	0	0	0	7.7	7.7
	Inverter	MV3-20	368689	4907317	2	0	0	100.3	100.3	1	2333.93	3.25	0	78.36	0	0.22	0	0	14.14	0	0	0	0	0	0	7.59	7.59
	Inverter	MV3-19	368357	4907347	2	0	0	100.3	100.3	1	2496.04	3.25	0	78.95	0	0.26	0	0	14.45	0	0	0	0	0	0	6.66	6.66
	Inverter	MV3-14	368684	4907498	2	0	0	100.3	100.3	1	2505.98	3.25	0	78.98	0	0.26	0	0	14.47	0	0	0	0	0	0	6.6	6.6
	Inverter	MV3-16	368514	4907475	2	0	0	100.3	100.3	1	2545.38	3.25	0	79.12	0	0.27	0	0	14.54	0	0	0	0	0	0	6.39	6.39
	Inverter	MV3-15	368357	4907477	2	0	0	100.3	100.3	1	2612.2	3.25	0	79.34	0	0.28	0	0	14.67	0	0	0	0	0	0	6.02	6.02
	SubstationTransformer	W_ST	369711.17	4906112.3	2.5	0	0	92	92	1	1004.34	3.5	0	71.04	0	-0.37	0	-0.14	2.53	0	0	0	0	0	0	18.78	18.78
	Inverter	MV3-17	368178	4907472	2	0	0	100.3	100.3	1	2691.2	3.25	0	79.6	0	0.3	0	0	14.82	0	0	0	0	0	0	5.6	5.6
	Inverter	MV3-8	368680	4907712	2	0	0	100.3	100.3	1	2710.34	3.25	0	79.66	0	0.3	0	0	14.85	0	0	0	0	0	0	5.5	5.5
	Inverter	MV3-9	368512	4907703	2	0	0	100.3	100.3	1	2757.6	3.25	0	79.81	0	0.31	0	0	14.94	0	0	0	0	0	0	5.25	5.25
	Inverter	MV3-11	368346	4907662	2	0	0	100.3	100.3	1	2784.18	3.25	0	79.89	0	0.32	0	0	14.99	0	0	0	0	0	0	5.11	5.11
	Inverter	MV3-10	368167	4907669	2	0	0	100.3	100.3	1	2869.4	3.25	0	80.16	0	0.34	0	0	15.14	0	0	0	0	0	0	4.68	4.68
	Inverter	MV3-18	367752	4907412	2	0	0	100.3	100.3	1	2876.73	3.25	0	80.18	0	0.34	0	0	15.15	0	0	0	0	0	0	4.64	4.64
	Inverter	MV3-13	367963	4907577	2	0	0	100.3	100.3	1	2891.63	3.25	0	80.22	0	0.34	0	0	15.18	0	0	0	0	0	0	4.57	4.57
	Inverter	MV3-6	368162	4907834	2	0	0	100.3	100.3	1	3018.62	3.25	0	80.6	0	0.37	0	0	15.41	0	0	0	0	0	0	3.95	3.95
	Inverter	MV3-7	367945	4907754	2	0	0	100.3	100.3	1	3052.04	3.25	0	80.69	0	0.37	0	0	15.46	0	0	0	0	0	0	3.78	3.78

Inverter	MV3-12	367668	4907594	2	0	0	100.3	100.3	1	3072.58	3.25	0	80.75	0	0.38	0	0	15.5	0	0	0	0	0	0	3.69	3.69
Inverter	MV3-3	367939	4907927	2	0	0	100.3	100.3	1	3204.94	3.25	0	81.12	0	0.4	0	0	15.73	0	0	0	0	0	0	3.07	3.07
Inverter	MV6-1	370235	4907364	2	0	0	97.3	97.3	1	2351.09	3.25	0	78.43	0	0.22	0	0	14.17	0	0	0	0	0	0	4.49	4.49
Inverter	MV5-5	370015	4908690	2	0	0	100.3	100.3	1	3596.9	3.25	0	82.12	0	0.47	0	0	16.39	0	0	0	0	0	0	1.33	1.33
Inverter	MV5-4	370324	4908707	2	0	0	100.3	100.3	1	3670.26	3.25	0	82.29	0	0.48	0	0	16.51	0	0	0	0	0	0	1.03	1.03
Inverter	MV4-11	369264	4908855	2	0	0	100.3	100.3	1	3732.97	3.25	0	82.44	0	0.49	0	0	16.62	0	0	0	0	0	0	0.77	0.77
Inverter	MV4-10	369312	4908858	2	0	0	100.3	100.3	1	3733.2	3.25	0	82.44	0	0.49	0	0	16.62	0	0	0	0	0	0	0.77	0.77
Inverter	MV5-2	370006	4908853	2	0	0	100.3	100.3	1	3757.1	3.25	0	82.5	0	0.49	0	0	16.66	0	0	0	0	0	0	0.67	0.67
Westbrook Inverter Enclosur	W_INV3	369508	4906164	2	0	0	89.1	89.1	1	1034.31	3.25	0	71.29	0	0.69	0	0	6.38	0	0	0	0	0	0	10.69	10.69
Inverter	MV5-3	370231	4908851	2	0	0	100.3	100.3	1	3791.8	3.25	0	82.58	0	0.5	0	0	16.71	0	0	0	0	0	0	0.53	0.53
Westbrook Inverter Enclosur	W_INV4	369673	4906164	2	0	0	89.1	89.1	1	1048.15	3.25	0	71.41	0	0.7	0	0	6.41	0	0	0	0	0	0	10.55	10.55
Inverter	MV4-9	369289	4909001	2	0	0	100.3	100.3	1	3877.22	3.25	0	82.77	0	0.51	0	0	16.85	0	0	0	0	0	0	0.18	0.18
Inverter	MV4-8	369256	4909001	2	0	0	100.3	100.3	1	3879.19	3.25	0	82.77	0	0.51	0	0	16.85	0	0	0	0	0	0	0.17	0.17
Inverter	MV4-7	369035	4909001	2	0	0	100.3	100.3	1	3899.51	3.25	0	82.82	0	0.51	0	0	16.89	0	0	0	0	0	0	0.09	0.09
Inverter	MV2-3	365820	4906641	2	0	0	100.3	100.3	1	3981.21	3.25	0	83	0	0.52	0	0	17.02	0	0	0	0	0	0	-0.23	-0.23
Inverter	MV5-1	370020	4909142	2	0	0	100.3	100.3	1	4045.45	3.25	0	83.14	0	0.53	0	0	17.12	0	0	0	0	0	0	-0.48	-0.48
Inverter	MV4-6	369243	4909192	2	0	0	100.3	100.3	1	4070.63	3.25	0	83.19	0	0.54	0	0	17.16	0	0	0	0	0	0	-0.58	-0.58
Inverter	MV4-5	369289	4909199	2	0	0	100.3	100.3	1	4074.93	3.25	0	83.2	0	0.54	0	0	17.17	0	0	0	0	0	0	-0.6	-0.6
Inverter	MV4-4	369027	4909199	2	0	0	100.3	100.3	1	4097.07	3.25	0	83.25	0	0.54	0	0	17.2	0	0	0	0	0	0	-0.68	-0.68
Inverter	MV1-15	365315	4904994	2	0	0	100.3	100.3	1	4190.4	3.25	0	83.45	0	0.55	0	0	17.35	0	0	0	0	0	0	-1.04	-1.04
Inverter	MV2-4	365586	4906624	2	0	0	100.3	100.3	1	4192.54	3.25	0	83.45	0	0.55	0	0	17.35	0	0	0	0	0	0	-1.04	-1.04
Inverter	MV4-2	369272	4909397	2	0	0	100.3	100.3	1	4273.56	3.25	0	83.62	0	0.56	0	0	17.48	0	0	0	0	0	0	-1.35	-1.35
Inverter	MV4-3	369229	4909397	2	0	0	100.3	100.3	1	4276.1	3.25	0	83.62	0	0.56	0	0	17.48	0	0	0	0	0	0	-1.36	-1.36
Inverter	MV4-1	369011	4909397	2	0	0	100.3	100.3	1	4295.59	3.25	0	83.66	0	0.57	0	0	17.51	0	0	0	0	0	0	-1.43	-1.43
Inverter	MV1-12	365038	4905386	2	0	0	100.3	100.3	1	4472.55	3.25	0	84.01	0	0.59	0	0	17.79	0	0	0	0	0	0	-2.07	-2.07
Westbrook Inverter Enclosur	W_INV2	369374	4906388	2	0	0	89.1	89.1	1	1264.92	3.25	0	73.04	0	0.74	0	0	6.8	0	0	0	0	0	0	8.48	8.48
Inverter	MV1-8	364788	4905647	2	0	0	100.3	100.3	1	4743.49	3.25	0	84.52	0	0.62	0	0	18.2	0	0	0	0	0	0	-3.03	-3.03
Inverter	MV1-4	364815	4905918	2	0	0	100.3	100.3	1	4754.01	3.25	0	84.54	0	0.62	0	0	18.22	0	0	0	0	0	0	-3.06	-3.06
Westbrook Inverter Enclosur	W_INV7	369780	4906417	2	0	0	89.1	89.1	1	1316.73	3.96	0	73.39	0	1.51	3.05	0	6.89	0	0	0	0	0	0	4.22	4.22
Inverter	MV1-2	364753	4906063	2	0	0	100.3	100.3	1	4841.02	3.25	0	84.7	0	0.63	0	0	18.35	0	0	0	0	0	0	-3.36	-3.36
Inverter	MV1-11	364655	4905414	2	0	0	100.3	100.3	1	4856.53	3.25	0	84.73	0	0.63	0	0	18.37	0	0	0	0	0	0	-3.41	-3.41
Inverter	MV1-5	364671	4905892	2	0	0	100.3	100.3	1	4891.96	3.25	0	84.79	0	0.63	0	0	18.42	0	0	0	0	0	0	-3.53	-3.53
Inverter	MV1-1	364715	4906166	2	0	0	100.3	100.3	1	4899.06	3.25	0	84.8	0	0.63	0	0	18.43	0	0	0	0	0	0	-3.55	-3.55
Inverter	MV1-9	364561	4905646	2	0	0	100.3	100.3	1	4969.1	3.25	0	84.93	0	0.64	0	0	18.53	0	0	0	0	0	0	-3.79	-3.79
Inverter	MV1-6	364477	4905835	2	0	0	100.3	100.3	1	5075.44	3.25	0	85.11	0	0.65	0	0	18.69	0	0	0	0	0	0	-4.14	-4.14
Westbrook Inverter Enclosur	W_INV5	369719	4906574	2	0	0	89.1	89.1	1	1460.34	3.25	0	74.29	0	0.78	0	0	7.14	0	0	0	0	0	0	6.85	6.85
Westbrook Inverter Enclosur	W_INV6	369875	4906578	2	0	0	89.1	89.1	1	1495.26	3.25	0	74.49	0	0.79	0	0	7.2	0	0	0	0	0	0	6.57	6.57
DSTATCOM - 10 MVAR #1	DSAT1	369437	4908757	2.5	0	0	96.6	96.6	1	3627.9	3.5	0	82.19	0	3.52	0	0	2.64	0	0	0	0	0	0	8.28	8.28
DSTATCOM - 10 MVAR #2	DSAT2	369403	4908757	2.5	0	0	96.6	96.6	1	3628.68	3.5	0	82.19	0	3.52	0	0	2.64	0	0	0	0	0	0	8.28	8.28
Inverter	MV2-1	365842	4906816	2	0	0	97.3	97.3	1	4030.88	3.25	0	83.11	0	0.53	0	0	17.1	0	0	0	0	0	0	-3.43	-3.43
Inverter	MV1-14	365163	4905049	2	0	0	97.3	97.3	1	4340.95	3.25	0	83.75	0	0.57	0	0	17.59	0	0	0	0	0	0	-4.6	-4.6
Inverter	MV1-10	365004	4905564	2	0	0	97.3	97.3	1	4520.11	3.25	0	84.1	0	0.59	0	0	17.86	0	0	0	0	0	0	-5.25	-5.25
Inverter	MV1-7	364925	4905782	2	0	0	97.3	97.3	1	4624.44	3.25	0	84.3	0	0.6	0	0	18.02	0	0	0	0	0	0	-5.61	-5.61
Inverter	MV1-13	364731	4905241	2	0	0	97.3	97.3	1	4773.5	3.25	0	84.58	0	0.62	0	0	18.24	0	0	0	0	0	0	-6.13	-6.13
Westbrook Inverter Enclosur	W_INV1	369409	4906578	2	0	0	86.1	86.1	1	1451.36	3.25	0	74.24	0	0.78	0	0	7.12	0	0	0	0	0	0	3.92	3.92
Inverter	MV3-22	368656	4907142	2	0	0	89.1	89.1	1	2183.37	3.25	0	77.78	0	0.95	0	0	8.34	0	0	0	0	0	0	1.98	1.98
Inverter	MV6-4	370250	4906966	2	0	0	86.1	86.1	1	1982.35	3.25	0	76.94	0	0.9	0	0	8.02	0	0	0	0	0	0	0.2	0.2
Gardiner Substation	G_Sub	366586.3	4903349.9	2.5	0	0	90.8	90.8	1	3417.02	4.25	0	81.67	0	1.2	2.84	0.3	6.56	0	0	0	0	0	0	-1.49	-1.49
Inverter	MV3-2	368671	4907928	2	0	0	89.1	89.1	1	2919.43	3.25	0	80.31	0	1.13	0	0	9.49	0	0	0	0	0	0	-1.87	-1.87
Inverter	MV3-5	368340	4907843	2	0	0	89.1	89.1	1	2952.12	3.25	0	80.4	0	1.14	0	0	9.54	0	0	0	0	0	0	-2.02	-2.02
Inverter	MV3-4	368502	4907925	2	0	0	89.1	89.1	1	2969.19	3.25	0	80.45	0	1.14	0	0	9.57	0	0	0	0	0	0	-2.1	-2.1
Inverter	MV3-1	368156	4907976	2	0	0	89.1	89.1	1	3149.03	3.25	0	80.96	0	1.18	0	0	9.84	0	0	0	0	0	0	-2.93	-2.93
Fixed Reactor Bank 2	FRB2	369464	4908755	6	0	0	89.8	89.8	1	3625.51	5.25	0	82.19	0	-0.78	0	0	6.86	0	0	0	0	0	0	1.51	1.51
Fixed Reactor Bank 1	FRB1	369378	4908755	6	0	0	89.8	89.8	1	3627.46	5.25	0	82.19	0	-0.78	0	0	6.86	0	0	0	0	0	0	1.5	1.5
Inverter	MV4-15	369176	4908481	2	0	0	89.1	89.1	1	3367.24	3.25	0	81.55	0	1.24	0	0	10.17	0	0	0	0	0	0	-3.89	-3.89
Inverter	MV4-14	369176	4908507	2	0	0	89.1	89.1	1	3393.11	3.25	0	81.61	0	1.24	0	0	10.21	0	0	0	0	0	0	-4	-4
Inverter	MV5-6	369982	4908507	2	0	0	89.1	89.1	1	3411.07	3.25	0	81.66	0	1.25	0	0	10.23	0	0	0	0	0	0	-4.08	-4.08
Inverter	MV4-13	369051	4908605	2	0	0	89.1	89.1	1	3504.6	3.25	0	81.89	0	1.27	0	0	10.37	0	0	0	0	0	0	-4.47	-4.47
Inverter	MV4-12	369043	4908803	2	0	0	89.1	89.1	1	3702.02	3.25	0	82.37	0	1.32	0	0	10.66	0	0	0	0	0	0	-5.29	-5.29
Inverter	MV2-2	365977	4906654	2	0	0	89.1	89.1	1	3841.56	3.25	0	82.69	0	1.35	0	0	10.86	0	0	0	0	0	0	-5.84	-5.84
Westbrook Inverter Transfor	W_INVTR3	369514	4906164	2	0	0	77.3	77.3	1	1034.36	3.25	0	71.29	0	-1.95	0	0	0.7	0	0	0	0	0	0	7.3	7.3
Inverters	G_Inv2	366676.9	4903239.1	2	0	0	87.7	87.7	1	3400.35	3.25	0	81.63	0	2.74	0	0	4.22	0	0	0	0	0	0	-0.93	-0.93
Inverters	G_Inv4	366732.8	4903105	2	0	0	87.7	87.7	1	3431.4	3.25	0	81.71	0	2.74	0	0	4.25	0	0	0	0	0	0	-1.04	-1.04
Westbrook Inverter Transfor	W_INVTR4	369679	4906164	2	0	0	77.3	77.3	1	1049.14	3.25	0	71.42	0	-1.96	0	0	0.71	0	0	0	0	0	0	7.18	7.18
Inverters	G_Inv6	366788.5	4902972	2	0	0	87.7	87.7	1	3467.75	3.25	0	81.8	0	2.74	0	0	4.29	0	0	0	0	0	0	-1.18	-1.18
Inverters	G_Inv8	366844.5	4902838.5	2	0	0	87.7	87.7	1	3509.74	3.25	0	81.91	0	2.75	0	0	4.34	0	0	0	0	0	0	-1.33	-1.33
Inverters	G_Inv1	366526.4	4903225.8	2	0	0	87.7	87.7	1	3533.58	3.25	0	81.96	0	2.75	0	0	4.37	0	0	0	0	0	0	-1.42	-1.42
Inverters	G_Inv10	366900.7	4902704.8	2	0	0	87.7	87.7	1	3557.13	3.25	0	82.02	0	2.75	0	0	4.39	0	0	0	0	0	0	-1.51	-1.51
Inverters	G_Inv3	366583.7	4903091.4	2	0	0	87.7	87.7	1	3560.64	3.25	0	82.03	0	2.75	0	0	4.4	0	0	0	0	0	0	-1.52	-1.52
Inverters	G_Inv5	366638.5	4902958.1	2	0	0	87.7	87.7	1	3594.77	3.25	0	82.11	0	2.76	0	0	4.43	0	0	0	0	0	0	-1.64	-1.64
Inverters	G_Inv7	366694.6	4902824.7	2	0	0	87.7	87.7	1	3633.35	3.25	0	82.21	0	2.76	0	0	4.47	0	0	0	0	0	0	-1.78	-1.78
Inverters	G_Inv9	366750.9	4902691.8	2	0	0	87.7	87.7	1	3676.75	3.25	0	82.31	0	2.76	0	0	4.52	0	0	0	0	0	0	-1.94	-1.94
Westbrook Inverter Transfor	W_INVTR2	369368	4906388	2	0	0	77.3	77.3	1	1265.55	3.25	0	73.05	0	-2.09	0	0	0.83	0	0	0	0	0	0	5.55	5.55
Westbrook Inverter Transfor	W_INVTR1	369403	4906578	2	0	0	78.2	78.2	1	1451.76	3.25	0	74.24	0	-2.18	0	0	0.93	0	0	0	0	0	0	5.25	5.25

Westbrook Inverter Transfor	W_INVTR7	369786	4906417	2	0	0	77.3	77.3	1	1318	3.25	0	73.4	0	-2.11	0	0	0.86	0	0	0	0	0	0	5.2	5.2
Inverter	MV1-3	364440	4906039	2	0	0	89.1	89.1	1	5144.2	3.25	0	85.23	0	1.68	0	0	12.66	0	0	0	0	0	0	-10.5	-10.5
Westbrook Inverter Transfor	W_INVTR5	369725	4906574	2	0	0	77.3	77.3	1	1461.23	3.25	0	74.29	0	-2.18	0	0	0.93	0	0	0	0	0	0	4.3	4.3
Westbrook Inverter Transfor	W_INVTR6	369881	4906578	2	0	0	77.3	77.3	1	1496.77	3.25	0	74.5	0	-2.2	0	0	0.95	0	0	0	0	0	0	4.09	4.09
Inverter Transformer	MV6-4 T	370244	4906966	2	0	0	69.4	69.4	1	1980.1	3.25	0	76.93	0	2.17	0	0	4.95	0	0	0	0	0	0	-14.69	-14.69
Inverter Transformer	MV6-1 T	370230	4907364	2	0	0	69.4	69.4	1	2349.54	3.25	0	78.42	0	2.3	0	0	5.3	0	0	0	0	0	0	-16.67	-16.67
Inverter Transformer	MV2-1 T	365836	4906816	2	0	0	69.4	69.4	1	4036.33	3.25	0	83.12	0	2.79	0	0	6.7	0	0	0	0	0	0	-23.27	-23.27
Inverter Transformer	MV1-14 T	365157	4905049	2	0	0	69.4	69.4	1	4346.95	3.25	0	83.76	0	2.87	0	0	6.93	0	0	0	0	0	0	-24.21	-24.21
Inverter Transformer	MV1-10 T	365010	4905564	2	0	0	69.4	69.4	1	4514.14	3.25	0	84.09	0	2.91	0	0	7.05	0	0	0	0	0	0	-24.7	-24.7
Inverter Transformer	MV1-7 T	364919	4905782	2	0	0	69.4	69.4	1	4630.38	3.25	0	84.31	0	2.93	0	0	7.13	0	0	0	0	0	0	-25.03	-25.03
Inverter Transformer	MV1-13 T	364725	4905241	2	0	0	69.4	69.4	1	4779.5	3.25	0	84.59	0	2.97	0	0	7.23	0	0	0	0	0	0	-25.44	-25.44
Inverter Transformer	MV6-3 T	370202	4907140	2	0	0	56.1	56.1	1	2128.29	3.25	0	77.56	0	0.46	0	0	7.29	0	0	0	0	0	0	-29.25	-29.25
Inverter Transformer	MV3-22 T	368661	4907142	2	0	0	56.1	56.1	1	2181.43	3.25	0	77.77	0	0.48	0	0	7.4	0	0	0	0	0	0	-29.59	-29.59
Inverter Transformer	MV6-2 T	370091	4907339	2	0	0	56.1	56.1	1	2286.16	3.25	0	78.18	0	0.53	0	0	7.59	0	0	0	0	0	0	-30.24	-30.24
Inverter Transformer	MV3-21 T	368484	4907206	2	0	0	56.1	56.1	1	2312.96	3.25	0	78.28	0	0.54	0	0	7.64	0	0	0	0	0	0	-30.41	-30.41
Inverter Transformer	MV3-20 T	368683	4907317	2	0	0	56.1	56.1	1	2336.03	3.25	0	78.37	0	0.55	0	0	7.69	0	0	0	0	0	0	-30.54	-30.54
Inverter Transformer	MV3-19 T	368352	4907347	2	0	0	56.1	56.1	1	2498.34	3.25	0	78.95	0	0.62	0	0	7.99	0	0	0	0	0	0	-31.5	-31.5
Inverter Transformer	MV3-14 T	368678	4907498	2	0	0	56.1	56.1	1	2507.95	3.25	0	78.99	0	0.62	0	0	8	0	0	0	0	0	0	-31.55	-31.55
Inverter Transformer	MV3-16 T	368509	4907475	2	0	0	56.1	56.1	1	2547.33	3.25	0	79.12	0	0.64	0	0	8.08	0	0	0	0	0	0	-31.78	-31.78
Inverter Transformer	MV3-15 T	368351	4907477	2	0	0	56.1	56.1	1	2614.84	3.25	0	79.35	0	0.67	0	0	8.2	0	0	0	0	0	0	-32.15	-32.15
Inverter Transformer	MV3-17 T	368183	4907472	2	0	0	56.1	56.1	1	2688.74	3.25	0	79.59	0	0.7	0	0	8.33	0	0	0	0	0	0	-32.56	-32.56
Inverter Transformer	MV3-8 T	368685	4907712	2	0	0	56.1	56.1	1	2708.82	3.25	0	79.66	0	0.71	0	0	8.36	0	0	0	0	0	0	-32.67	-32.67
Inverter Transformer	MV3-9 T	368517	4907703	2	0	0	56.1	56.1	1	2755.81	3.25	0	79.8	0	0.73	0	0	8.45	0	0	0	0	0	0	-32.92	-32.92
Inverter Transformer	MV3-11 T	368340	4907662	2	0	0	56.1	56.1	1	2786.68	3.25	0	79.9	0	0.74	0	0	8.5	0	0	0	0	0	0	-33.08	-33.08
Inverter Transformer	MV3-10 T	368162	4907669	2	0	0	56.1	56.1	1	2871.74	3.25	0	80.16	0	0.78	0	0	8.65	0	0	0	0	0	0	-33.53	-33.53
Inverter Transformer	MV3-18 T	367757	4907412	2	0	0	56.1	56.1	1	2873.69	3.25	0	80.17	0	0.78	0	0	8.65	0	0	0	0	0	0	-33.54	-33.54
Inverter Transformer	MV3-13 T	367958	4907577	2	0	0	56.1	56.1	1	2894.29	3.25	0	80.23	0	0.78	0	0	8.69	0	0	0	0	0	0	-33.64	-33.64
Inverter Transformer	MV3-2 T	368677	4907928	2	0	0	56.1	56.1	1	2917.72	3.25	0	80.3	0	0.79	0	0	8.73	0	0	0	0	0	0	-33.77	-33.77
Inverter Transformer	MV3-5 T	368335	4907843	2	0	0	56.1	56.1	1	2954.1	3.25	0	80.41	0	0.81	0	0	8.79	0	0	0	0	0	0	-33.95	-33.95
Inverter Transformer	MV3-4 T	368507	4907925	2	0	0	56.1	56.1	1	2967.51	3.25	0	80.45	0	0.82	0	0	8.81	0	0	0	0	0	0	-34.02	-34.02
Inverter Transformer	MV3-6 T	368156	4907834	2	0	0	56.1	56.1	1	3021.29	3.25	0	80.6	0	0.84	0	0	8.9	0	0	0	0	0	0	-34.29	-34.29
Inverter Transformer	MV3-7 T	367951	4907754	2	0	0	56.1	56.1	1	3048.98	3.25	0	80.68	0	0.85	0	0	8.95	0	0	0	0	0	0	-34.43	-34.43
Inverter Transformer	MV3-12 T	367674	4907594	2	0	0	56.1	56.1	1	3069	3.25	0	80.74	0	0.86	0	0	8.98	0	0	0	0	0	0	-34.53	-34.53
Inverter Transformer	MV3-1 T	368150	4907976	2	0	0	56.1	56.1	1	3151.6	3.25	0	80.97	0	0.89	0	0	9.12	0	0	0	0	0	0	-34.93	-34.93
Inverter Transformer	MV3-3 T	367944	4907927	2	0	0	56.1	56.1	1	3202.5	3.25	0	81.11	0	0.92	0	0	9.21	0	0	0	0	0	0	-35.17	-35.17
Inverter Transformer	MV4-15 T	369170	4908481	2	0	0	56.1	56.1	1	3367.82	3.25	0	81.55	0	0.98	0	0	9.48	0	0	0	0	0	0	-35.95	-35.95
Inverter Transformer	MV4-14 T	369182	4908507	2	0	0	56.1	56.1	1	3392.54	3.25	0	81.61	0	1	0	0	9.52	0	0	0	0	0	0	-36.06	-36.06
Inverter Transformer	MV5-6 T	369987	4908507	2	0	0	56.1	56.1	1	3411.78	3.25	0	81.66	0	1	0	0	9.55	0	0	0	0	0	0	-36.15	-36.15
Inverter Transformer	MV4-13 T	369057	4908605	2	0	0	56.1	56.1	1	3503.83	3.25	0	81.89	0	1.04	0	0	9.69	0	0	0	0	0	0	-36.57	-36.57
Inverter Transformer	MV5-5 T	370021	4908690	2	0	0	56.1	56.1	1	3597.76	3.25	0	82.12	0	1.08	0	0	9.84	0	0	0	0	0	0	-36.98	-36.98
Inverter Transformer	MV5-4 T	370330	4908707	2	0	0	56.1	56.1	1	3671.6	3.25	0	82.3	0	1.11	0	0	9.96	0	0	0	0	0	0	-37.31	-37.31
Inverter Transformer	MV4-12 T	369049	4908803	2	0	0	56.1	56.1	1	3701.28	3.25	0	82.37	0	1.12	0	0	10	0	0	0	0	0	0	-37.43	-37.43
Inverter Transformer	MV4-11 T	369269	4908855	2	0	0	56.1	56.1	1	3732.66	3.25	0	82.44	0	1.14	0	0	10.05	0	0	0	0	0	0	-37.57	-37.57
Inverter Transformer	MV4-10 T	369307	4908858	2	0	0	56.1	56.1	1	3733.46	3.25	0	82.44	0	1.14	0	0	10.05	0	0	0	0	0	0	-37.57	-37.57
Inverter Transformer	MV5-2 T	370011	4908853	2	0	0	56.1	56.1	1	3757.77	3.25	0	82.5	0	1.15	0	0	10.09	0	0	0	0	0	0	-37.68	-37.68
Inverter Transformer	MV5-3 T	370237	4908851	2	0	0	56.1	56.1	1	3792.96	3.25	0	82.58	0	1.16	0	0	10.14	0	0	0	0	0	0	-37.82	-37.82
Inverter Transformer	MV2-2 T	365982	4906654	2	0	0	56.1	56.1	1	3836.97	3.25	0	82.68	0	1.18	0	0	10.21	0	0	0	0	0	0	-38.01	-38.01
Inverter Transformer	MV4-9 T	369284	4909001	2	0	0	56.1	56.1	1	3877.5	3.25	0	82.77	0	1.19	0	0	10.27	0	0	0	0	0	0	-38.18	-38.18
Inverter Transformer	MV4-8 T	369262	4909001	2	0	0	56.1	56.1	1	3878.81	3.25	0	82.77	0	1.2	0	0	10.27	0	0	0	0	0	0	-38.18	-38.18
Inverter Transformer	MV4-7 T	369040	4909001	2	0	0	56.1	56.1	1	3898.91	3.25	0	82.82	0	1.2	0	0	10.3	0	0	0	0	0	0	-38.27	-38.27
Inverter Transformer	MV2-3 T	365814	4906641	2	0	0	56.1	56.1	1	3986.76	3.25	0	83.01	0	1.24	0	0	10.44	0	0	0	0	0	0	-38.63	-38.63
Inverter Transformer	MV5-1 T	370015	4909142	2	0	0	56.1	56.1	1	4044.81	3.25	0	83.14	0	1.26	0	0	10.52	0	0	0	0	0	0	-38.86	-38.86
Inverter Transformer	MV4-6 T	369249	4909192	2	0	0	56.1	56.1	1	4070.25	3.25	0	83.19	0	1.27	0	0	10.56	0	0	0	0	0	0	-38.96	-38.96
Inverter Transformer	MV4-5 T	369283	4909199	2	0	0	56.1	56.1	1	4075.25	3.25	0	83.2	0	1.27	0	0	10.57	0	0	0	0	0	0	-38.98	-38.98
Inverter Transformer	MV4-4 T	369033	4909199	2	0	0	56.1	56.1	1	4096.38	3.25	0	83.25	0	1.28	0	0	10.6	0	0	0	0	0	0	-39.07	-39.07
Inverter Transformer	MV2-4 T	365590	4906628	2	0	0	56.1	56.1	1	4190.23	3.25	0	83.44	0	1.32	0	0	10.73	0	0	0	0	0	0	-39.44	-39.44
Inverter Transformer	MV1-15 T	365309	4904994	2	0	0	56.1	56.1	1	4196.4	3.25	0	83.46	0	1.32	0	0	10.74	0	0	0	0	0	0	-39.46	-39.46
Inverter Transformer	MV4-2 T	369267	4909397	2	0	0	56.1	56.1	1	4273.83	3.25	0	83.62	0	1.35	0	0	10.86	0	0	0	0	0	0	-39.77	-39.77
Inverter Transformer	MV4-3 T	369234	4909397	2	0	0	56.1	56.1	1	4275.78	3.25	0	83.62	0	1.35	0	0	10.86	0	0	0	0	0	0	-39.77	-39.77
Inverter Transformer	MV4-1 T	369017	4909397	2	0	0	56.1	56.1	1	4294.91	3.25	0	83.66	0	1.36	0	0	10.89	0	0	0	0	0	0	-39.85	-39.85
Inverter Transformer	MV1-12 T	365044	4905386	2	0	0	56.1	56.1	1	4466.56	3.25	0	84	0	1.43	0	0	11.13	0	0	0	0	0	0	-40.5	-40.5
Inverter Transformer	MV1-4 T	364821	4905918	2	0	0	56.1	56.1	1	4748.1	3.25	0	84.53	0	1.53	0	0	11.52	0	0	0	0	0	0	-41.52	-41.52
Inverter Transformer	MV1-8 T	364782	4905647	2	0	0	56.1	56.1	1	4749.46	3.25	0	84.53	0	1.53	0	0	11.52	0	0	0	0	0	0	-41.53	-41.53
Inverter Transformer	MV1-2 T	364759	4906063	2	0	0	56.1	56.1	1	4835.13	3.25	0	84.69	0	1.57	0	0	11.63	0	0	0	0	0	0	-41.83	-41.83
Inverter Transformer	MV1-11 T	364649	4905414	2	0	0	56.1	56.1	1	4862.52	3.25	0	84.74	0	1.58	0	0	11.67	0	0	0	0	0	0	-41.93	-41.93
Inverter Transformer	MV1-5 T	364676	4905892	2	0	0	56.1	56.1	1	4887.02	3.25	0	84.78	0	1.58	0	0	11.7	0	0	0	0	0	0	-42.01	-42.01
Inverter Transformer	MV1-1 T	364721	4906166	2	0	0	56.1	56.1	1	4893.2	3.25	0	84.79	0	1.59	0	0	11.71	0	0	0	0	0	0	-42.03	-42.03
Inverter Transformer	MV1-9 T	364555	4905646	2	0	0	56.1	56.1	1	4975.06	3.25	0	84.94	0	1.62	0	0	11.82	0	0	0	0	0	0	-42.32	-42.32
Inverter Transformer	MV1-6 T	364482	4905835	2	0	0	56.1	56.1	1	5070.49	3.25	0	85.1	0	1.65	0	0	11.95	0	0	0	0	0	0	-42.64	-42.64
Inverter Transformer	MV1-3 T	364435	4906039	2	0	0	56.1	56.1	1	5149.12	3.25	0	85.23	0	1.68	0	0	12.05	0	0	0	0	0	0	-42.9	-42.9
Line Reactor	NGR	369421	4908787.5	5	0	0	45.4	45.4	1	3658.72	5.25	0	82.27	0	3.3	1.33	0.12	1.5	0	0	0	0	0	0	-43.04	-43.04
Limit. Valu 0	0																								
Level D/N: 25.5959	25.5959																								

Receiver: Existing Noise Receptor
ID: W-R13
X: 369575.4
Y: 4905129.1
Z: 4.5
Ground: 0

ISO	Description	ID	X	Y	Z	Ground	ReflOrd	LxT	LxN	L/A	Dist.	hm	Freq	Adiv	K0b	Agr	Abar	z	Aatm	Afol	Ahous	Cmet	CmetN	Dc	RL	LtotT	LtotN
	Sol_Luce Substation	S_Substation	369426	4908792	3.5	0	0	112.1	112.1	1	3665.95	5.25	0	82.28	0	0.5	3.2	0.35	6.91	0	0	0	0	0	0	19.18	19.18
	Inverter	MV6-3	370207	4907140	2	0	0	100.3	100.3	1	2107.76	3.25	0	77.48	0	0.16	0	0	13.69	0	0	0	0	0	0	8.99	8.99
	Inverter	MV6-2	370085	4907339	2	0	0	100.3	100.3	1	2267.9	3.25	0	78.11	0	0.2	0	0	14.01	0	0	0	0	0	0	7.99	7.99
	Inverter	MV3-21	368478	4907206	2	0	0	100.3	100.3	1	2349	3.25	0	78.42	0	0.22	0	0	14.17	0	0	0	0	0	0	7.51	7.51
	Inverter	MV3-20	368689	4907317	2	0	0	100.3	100.3	1	2360.64	3.25	0	78.46	0	0.22	0	0	14.19	0	0	0	0	0	0	7.44	7.44
	Inverter	MV3-19	368357	4907347	2	0	0	100.3	100.3	1	2530.53	3.25	0	79.06	0	0.26	0	0	14.52	0	0	0	0	0	0	6.47	6.47
	Inverter	MV3-14	368684	4907498	2	0	0	100.3	100.3	1	2531.06	3.25	0	79.07	0	0.26	0	0	14.52	0	0	0	0	0	0	6.46	6.46
	Inverter	MV3-16	368514	4907475	2	0	0	100.3	100.3	1	2574.84	3.25	0	79.22	0	0.27	0	0	14.6	0	0	0	0	0	0	6.22	6.22
	SubstationTransformer	W_ST	369711.17	4906112.3	2.5	0	0	92	92	1	992.5	3.5	0	70.93	0	-0.37	0	-0.14	2.5	0	0	0	0	0	0	18.91	18.91
	Inverter	MV3-15	368357	4907477	2	0	0	100.3	100.3	1	2645.21	3.25	0	79.45	0	0.29	0	0	14.73	0	0	0	0	0	0	5.84	5.84
	Inverter	MV3-17	368178	4907472	2	0	0	100.3	100.3	1	2727.99	3.25	0	79.72	0	0.31	0	0	14.88	0	0	0	0	0	0	5.4	5.4
	Inverter	MV3-8	368680	4907712	2	0	0	100.3	100.3	1	2733.7	3.25	0	79.74	0	0.31	0	0	14.89	0	0	0	0	0	0	5.38	5.38
	Inverter	MV3-9	368512	4907703	2	0	0	100.3	100.3	1	2784.92	3.25	0	79.9	0	0.32	0	0	14.99	0	0	0	0	0	0	5.11	5.11
	Inverter	MV3-11	368346	4907662	2	0	0	100.3	100.3	1	2815.5	3.25	0	79.99	0	0.33	0	0	15.04	0	0	0	0	0	0	4.95	4.95
	Inverter	MV3-10	368167	4907669	2	0	0	100.3	100.3	1	2904.25	3.25	0	80.26	0	0.34	0	0	15.2	0	0	0	0	0	0	4.51	4.51
	Inverter	MV3-18	367752	4907412	2	0	0	100.3	100.3	1	2921.72	3.25	0	80.31	0	0.35	0	0	15.23	0	0	0	0	0	0	4.42	4.42
	Inverter	MV3-13	367963	4907577	2	0	0	100.3	100.3	1	2931.22	3.25	0	80.34	0	0.35	0	0	15.25	0	0	0	0	0	0	4.37	4.37
	Inverter	MV3-6	368162	4907834	2	0	0	100.3	100.3	1	3051.92	3.25	0	80.69	0	0.37	0	0	15.46	0	0	0	0	0	0	3.79	3.79
	Inverter	MV3-7	367945	4907754	2	0	0	100.3	100.3	1	3090.03	3.25	0	80.8	0	0.38	0	0	15.53	0	0	0	0	0	0	3.6	3.6
	Inverter	MV3-12	367668	4907594	2	0	0	100.3	100.3	1	3116.72	3.25	0	80.87	0	0.38	0	0	15.58	0	0	0	0	0	0	3.48	3.48
	Inverter	MV3-3	367939	4907927	2	0	0	100.3	100.3	1	3241.3	3.25	0	81.21	0	0.41	0	0	15.79	0	0	0	0	0	0	2.9	2.9
	Inverter	MV6-1	370235	4907364	2	0	0	97.3	97.3	1	2330.21	3.25	0	78.35	0	0.22	0	0	14.13	0	0	0	0	0	0	4.62	4.62
	Inverter	MV5-5	370015	4908690	2	0	0	100.3	100.3	1	3587.93	3.25	0	82.1	0	0.47	0	0	16.38	0	0	0	0	0	0	1.37	1.37
	Inverter	MV5-4	370324	4908707	2	0	0	100.3	100.3	1	3655.38	3.25	0	82.26	0	0.48	0	0	16.49	0	0	0	0	0	0	1.09	1.09
	Inverter	MV4-10	369312	4908858	2	0	0	100.3	100.3	1	3738.19	3.25	0	82.45	0	0.49	0	0	16.63	0	0	0	0	0	0	0.74	0.74
	Inverter	MV4-11	369264	4908855	2	0	0	100.3	100.3	1	3738.89	3.25	0	82.45	0	0.49	0	0	16.63	0	0	0	0	0	0	0.74	0.74
	Inverter	MV5-2	370006	4908853	2	0	0	100.3	100.3	1	3748.71	3.25	0	82.48	0	0.49	0	0	16.64	0	0	0	0	0	0	0.7	0.7
	Inverter	MV5-3	370231	4908851	2	0	0	100.3	100.3	1	3779.2	3.25	0	82.55	0	0.49	0	0	16.69	0	0	0	0	0	0	0.58	0.58
	Westbrook Inverter Enclosur	W_INV3	369508	4906164	2	0	0	89.1	89.1	1	1037.1	3.25	0	71.32	0	0.69	0	0	6.38	0	0	0	0	0	0	10.66	10.66
	Westbrook Inverter Enclosur	W_INV4	369673	4906164	2	0	0	89.1	89.1	1	1039.5	3.25	0	71.34	0	0.69	0	0	6.39	0	0	0	0	0	0	10.64	10.64
	Inverter	MV4-9	369289	4909001	2	0	0	100.3	100.3	1	3882.48	3.25	0	82.78	0	0.51	0	0	16.86	0	0	0	0	0	0	0.16	0.16
	Inverter	MV4-8	369256	4909001	2	0	0	100.3	100.3	1	3885.05	3.25	0	82.79	0	0.51	0	0	16.86	0	0	0	0	0	0	0.15	0.15
	Inverter	MV4-7	369035	4909001	2	0	0	100.3	100.3	1	3909.43	3.25	0	82.84	0	0.51	0	0	16.9	0	0	0	0	0	0	0.05	0.05
	Inverter	MV5-1	370020	4909142	2	0	0	100.3	100.3	1	4037.45	3.25	0	83.12	0	0.53	0	0	17.11	0	0	0	0	0	0	-0.45	-0.45
	Inverter	MV2-3	365820	4906641	2	0	0	100.3	100.3	1	4048.32	3.25	0	83.15	0	0.53	0	0	17.13	0	0	0	0	0	0	-0.49	-0.49
	Inverter	MV4-6	369243	4909192	2	0	0	100.3	100.3	1	4076.48	3.25	0	83.21	0	0.54	0	0	17.17	0	0	0	0	0	0	-0.6	-0.6
	Inverter	MV4-5	369289	4909199	2	0	0	100.3	100.3	1	4079.97	3.25	0	83.21	0	0.54	0	0	17.18	0	0	0	0	0	0	-0.61	-0.61
	Inverter	MV4-4	369027	4909199	2	0	0	100.3	100.3	1	4106.68	3.25	0	83.27	0	0.54	0	0	17.22	0	0	0	0	0	0	-0.72	-0.72
	Inverter	MV2-4	365586	4906624	2	0	0	100.3	100.3	1	4260.29	3.25	0	83.59	0	0.56	0	0	17.46	0	0	0	0	0	0	-1.3	-1.3
	Inverter	MV1-15	365315	4904994	2	0	0	100.3	100.3	1	4262.54	3.25	0	83.59	0	0.56	0	0	17.46	0	0	0	0	0	0	-1.31	-1.31
	Inverter	MV4-2	369272	4909397	2	0	0	100.3	100.3	1	4278.67	3.25	0	83.63	0	0.56	0	0	17.49	0	0	0	0	0	0	-1.37	-1.37
	Inverter	MV4-3	369229	4909397	2	0	0	100.3	100.3	1	4281.94	3.25	0	83.63	0	0.56	0	0	17.49	0	0	0	0	0	0	-1.38	-1.38
	Inverter	MV4-1	369011	4909397	2	0	0	100.3	100.3	1	4305.06	3.25	0	83.68	0	0.57	0	0	17.53	0	0	0	0	0	0	-1.46	-1.46
	Inverter	MV1-12	365038	4905386	2	0	0	100.3	100.3	1	4544.67	3.25	0	84.15	0	0.6	0	0	17.9	0	0	0	0	0	0	-2.33	-2.33
	Westbrook Inverter Enclosur	W_INV2	369374	4906388	2	0	0	89.1	89.1	1	1274.91	3.25	0	73.11	0	0.74	0	0	6.82	0	0	0	0	0	0	8.39	8.39
	Westbrook Inverter Enclosur	W_INV7	369780	4906417	2	0	0	89.1	89.1	1	1304.05	3.25	0	73.31	0	0.75	0	0	6.87	0	0	0	0	0	0	8.14	8.14
	Inverter	MV1-8	364788	4905647	2	0	0	100.3	100.3	1	4815.33	3.25	0	84.65	0	0.62	0	0	18.31	0	0	0	0	0	0	-3.27	-3.27
	Inverter	MV1-4	364815	4905918	2	0	0	100.3	100.3	1	4825.33	3.25	0	84.67	0	0.63	0	0	18.32	0	0	0	0	0	0	-3.31	-3.31
	Inverter	MV1-2	364753	4906063	2	0	0	100.3	100.3	1	4912	3.25	0	84.83	0	0.63	0	0	18.45	0	0	0	0	0	0	-3.6	-3.6
	Inverter	MV1-11	364655	4905414	2	0	0	100.3	100.3	1	4928.64	3.25	0	84.85	0	0.64	0	0	18.48	0	0	0	0	0	0	-3.65	-3.65
	Inverter	MV1-5	364671	4905892	2	0	0	100.3	100.3	1	4963.38	3.25	0	84.92	0	0.64	0	0	18.53	0	0	0	0	0	0	-3.77	-3.77
	Inverter	MV1-1	364715	4906166	2	0	0	100.3	100.3	1	4969.77	3.25	0	84.93	0	0.64	0	0	18.54	0	0	0	0	0	0	-3.79	-3.79
	Inverter	MV1-9	364561	4905646	2	0	0	100.3	100.3	1	5040.97	3.25	0	85.05	0	0.65	0	0	18.64	0	0	0	0	0	0	-4.02	-4.02
	Inverter	MV1-6	364477	4905835	2	0	0	100.3	100.3	1	5147.04	3.25	0	85.23	0	0.65	0	0	18.8	0	0	0	0	0	0	-4.37	-4.37
	Westbrook Inverter Enclosur	W_INV5	369719	4906574	2	0	0	89.1	89.1	1	1452.02	3.25	0	74.24	0	0.78	0	0	7.13	0	0	0	0	0	0	6.91	6.91
	Westbrook Inverter Enclosur	W_INV6	369875	4906578	2	0	0	89.1	89.1	1	1479.55	3.25	0	74.4	0	0.79	0	0	7.17	0	0	0	0	0	0	6.69	6.69
	DSTATCOM - 10 MVAR #1	DSAT1	369437	4908757	2.5	0	0	96.6	96.6	1	3630.54	3.5	0	82.2	0	3.52	0	0	2.64	0	0	0	0	0	0	8.27	8.27
	DSTATCOM - 10 MVAR #2	DSAT2	369403	4908757	2.5	0	0	96.6	96.6	1	3631.99	3.5	0	82.2	0	3.52	0	0	2.65	0	0	0	0	0	0	8.27	8.27
	Inverter	MV2-1	365842	4906816	2	0	0	97.3	97.3	1	4096.82	3.25	0	83.25	0	0.54	0	0	17.2	0	0	0	0	0	0	-3.68	-3.68
	Inverter	MV1-14	365163	4905049	2	0	0	97.3	97.3	1	4413.13	3.25	0	83.89	0	0.58	0	0	17.7	0	0	0	0	0	0	-4.86	-4.86
	Inverter	MV1-10	365004	4905564	2	0	0	97.3	97.3	1	4592.04	3.25	0	84.24	0	0.6	0	0	17.97	0	0	0	0	0	0	-5.5	-5.5
	Inverter	MV1-7	364925	4905782	2	0	0	97.3	97.3	1	4696.01	3.25	0	84.43	0	0.61	0	0	18.13	0	0	0	0	0	0	-5.86	-5.86
	Inverter	MV1-13	364731	4905241	2	0	0	97.3	97.3	1	4845.69	3.25	0	84.71	0	0.63	0	0	18.35	0	0	0	0	0	0	-6.37	-6.37
	Westbrook Inverter Enclosur	W_INV1	369409	4906578	2	0	0	86.1	86.1	1	1458.43	3.25	0	74.28	0	0.78	0	0	7.14	0	0	0	0	0	0	3.86	3.86
	Inverter	MV3-22	368656	4907142	2	0	0	89.1	89.1	1	2212.93	3.25	0	77.9	0	0.96	0	0	8.39	0	0	0	0	0	0	1.81	1.81
	Inverter	MV6-4	370250	4906966	2	0	0	86.1	86.1	1	1956.86	3.25	0	76.83	0	0.9	0	0	7.97	0	0	0	0	0	0	0.36	0.36

Gardiner Substation	G_Sub	366586.3	4903349.9	2.5	0	0	90.8	90.8	1	3478.55	4.25	0	81.83	0	1.21	2.81	0.29	6.65	0	0	0	0	0	0	-1.72	-1.72
Inverter	MV3-2	368671	4907928	2	0	0	89.1	89.1	1	2941.39	3.25	0	80.37	0	1.13	0	0	9.53	0	0	0	0	0	0	-1.97	-1.97
Inverter	MV3-5	368340	4907843	2	0	0	89.1	89.1	1	2981.86	3.25	0	80.49	0	1.14	0	0	9.59	0	0	0	0	0	0	-2.16	-2.16
Inverter	MV3-4	368502	4907925	2	0	0	89.1	89.1	1	2994.87	3.25	0	80.53	0	1.15	0	0	9.61	0	0	0	0	0	0	-2.22	-2.22
Inverter	MV3-1	368156	4907976	2	0	0	89.1	89.1	1	3181.12	3.25	0	81.05	0	1.19	0	0	9.89	0	0	0	0	0	0	-3.07	-3.07
Fixed Reactor Bank 2	FRB2	369464	4908755	6	0	0	89.8	89.8	1	3627.61	5.25	0	82.19	0	-0.78	0	0	6.86	0	0	0	0	0	0	1.5	1.5
Fixed Reactor Bank 1	FRB1	369378	4908755	6	0	0	89.8	89.8	1	3631.27	5.25	0	82.2	0	-0.78	0	0	6.87	0	0	0	0	0	0	1.49	1.49
Inverter	MV4-15	369176	4908481	2	0	0	89.1	89.1	1	3375.61	3.25	0	81.57	0	1.24	0	0	10.18	0	0	0	0	0	0	-3.93	-3.93
Inverter	MV4-14	369176	4908507	2	0	0	89.1	89.1	1	3401.43	3.25	0	81.63	0	1.24	0	0	10.22	0	0	0	0	0	0	-4.04	-4.04
Inverter	MV5-6	369982	4908507	2	0	0	89.1	89.1	1	3402.28	3.25	0	81.64	0	1.25	0	0	10.22	0	0	0	0	0	0	-4.04	-4.04
Inverter	MV4-13	369051	4908605	2	0	0	89.1	89.1	1	3515.24	3.25	0	81.92	0	1.27	0	0	10.38	0	0	0	0	0	0	-4.52	-4.52
Inverter	MV4-12	369043	4908803	2	0	0	89.1	89.1	1	3712.28	3.25	0	82.39	0	1.32	0	0	10.67	0	0	0	0	0	0	-5.33	-5.33
Inverter	MV2-2	365977	4906654	2	0	0	89.1	89.1	1	3908.17	3.25	0	82.84	0	1.37	0	0	10.95	0	0	0	0	0	0	-6.1	-6.1
Westbrook Inverter Transfor	W_INVTR3	369514	4906164	2	0	0	77.3	77.3	1	1036.72	3.25	0	71.31	0	-1.96	0	0	0.7	0	0	0	0	0	0	7.28	7.28
Westbrook Inverter Transfor	W_INVTR4	369679	4906164	2	0	0	77.3	77.3	1	1040.08	3.25	0	71.34	0	-1.96	0	0	0.7	0	0	0	0	0	0	7.26	7.26
Inverters	G_Inv2	366676.9	4903239.1	2	0	0	87.7	87.7	1	3460.26	3.25	0	81.78	0	2.74	0	0	4.29	0	0	0	0	0	0	-1.15	-1.15
Inverters	G_Inv4	366732.8	4903105	2	0	0	87.7	87.7	1	3489.61	3.25	0	81.86	0	2.75	0	0	4.32	0	0	0	0	0	0	-1.26	-1.26
Inverters	G_Inv6	366788.5	4902972	2	0	0	87.7	87.7	1	3524.19	3.25	0	81.94	0	2.75	0	0	4.36	0	0	0	0	0	0	-1.39	-1.39
Inverters	G_Inv8	366844.5	4902838.5	2	0	0	87.7	87.7	1	3564.36	3.25	0	82.04	0	2.75	0	0	4.4	0	0	0	0	0	0	-1.53	-1.53
Inverters	G_Inv1	366526.4	4903225.8	2	0	0	87.7	87.7	1	3594.3	3.25	0	82.11	0	2.76	0	0	4.43	0	0	0	0	0	0	-1.64	-1.64
Inverters	G_Inv10	366900.7	4902704.8	2	0	0	87.7	87.7	1	3609.88	3.25	0	82.15	0	2.76	0	0	4.45	0	0	0	0	0	0	-1.7	-1.7
Inverters	G_Inv3	366583.7	4903091.4	2	0	0	87.7	87.7	1	3619.74	3.25	0	82.17	0	2.76	0	0	4.46	0	0	0	0	0	0	-1.73	-1.73
Inverters	G_Inv5	366638.5	4902958.1	2	0	0	87.7	87.7	1	3652.21	3.25	0	82.25	0	2.76	0	0	4.5	0	0	0	0	0	0	-1.85	-1.85
Inverters	G_Inv7	366694.6	4902824.7	2	0	0	87.7	87.7	1	3689.07	3.25	0	82.34	0	2.77	0	0	4.54	0	0	0	0	0	0	-1.98	-1.98
Inverters	G_Inv9	366750.9	4902691.8	2	0	0	87.7	87.7	1	3730.72	3.25	0	82.44	0	2.77	0	0	4.58	0	0	0	0	0	0	-2.13	-2.13
Westbrook Inverter Transfor	W_INVTR2	369368	4906388	2	0	0	77.3	77.3	1	1275.87	3.25	0	73.12	0	-2.09	0	0	0.83	0	0	0	0	0	0	5.48	5.48
Westbrook Inverter Transfor	W_INVTR7	369786	4906417	2	0	0	77.3	77.3	1	1305.01	3.25	0	73.31	0	-2.11	0	0	0.85	0	0	0	0	0	0	5.29	5.29
Westbrook Inverter Transfor	W_INVTR1	369403	4906578	2	0	0	78.2	78.2	1	1459.12	3.25	0	74.28	0	-2.18	0	0	0.93	0	0	0	0	0	0	5.21	5.21
Inverter	MV1-3	364440	4906039	2	0	0	89.1	89.1	1	5215.39	3.25	0	85.35	0	1.69	0	0	12.75	0	0	0	0	0	0	-10.73	-10.73
Westbrook Inverter Transfor	W_INVTR5	369725	4906574	2	0	0	77.3	77.3	1	1452.63	3.25	0	74.24	0	-2.18	0	0	0.93	0	0	0	0	0	0	4.35	4.35
Westbrook Inverter Transfor	W_INVTR6	369881	4906578	2	0	0	77.3	77.3	1	1480.78	3.25	0	74.41	0	-2.19	0	0	0.94	0	0	0	0	0	0	4.18	4.18
Inverter Transformer	MV6-4 T	370244	4906966	2	0	0	69.4	69.4	1	1954.8	3.25	0	76.82	0	2.16	0	0	4.92	0	0	0	0	0	0	-14.55	-14.55
Inverter Transformer	MV6-1 T	370230	4907364	2	0	0	69.4	69.4	1	2328.79	3.25	0	78.34	0	2.29	0	0	5.28	0	0	0	0	0	0	-16.57	-16.57
Inverter Transformer	MV2-1 T	365836	4906816	2	0	0	69.4	69.4	1	4102.29	3.25	0	83.26	0	2.81	0	0	6.75	0	0	0	0	0	0	-23.47	-23.47
Inverter Transformer	MV1-14 T	365157	4905049	2	0	0	69.4	69.4	1	4419.13	3.25	0	83.91	0	2.89	0	0	6.98	0	0	0	0	0	0	-24.42	-24.42
Inverter Transformer	MV1-10 T	365010	4905564	2	0	0	69.4	69.4	1	4586.07	3.25	0	84.23	0	2.92	0	0	7.1	0	0	0	0	0	0	-24.9	-24.9
Inverter Transformer	MV1-7 T	364919	4905782	2	0	0	69.4	69.4	1	4701.95	3.25	0	84.45	0	2.95	0	0	7.18	0	0	0	0	0	0	-25.22	-25.22
Inverter Transformer	MV1-13 T	364725	4905241	2	0	0	69.4	69.4	1	4851.69	3.25	0	84.72	0	2.98	0	0	7.28	0	0	0	0	0	0	-25.63	-25.63
Inverter Transformer	MV6-3 T	370202	4907140	2	0	0	56.1	56.1	1	2106.27	3.25	0	77.47	0	0.45	0	0	7.25	0	0	0	0	0	0	-29.11	-29.11
Inverter Transformer	MV3-22 T	368661	4907142	2	0	0	56.1	56.1	1	2210.86	3.25	0	77.89	0	0.49	0	0	7.45	0	0	0	0	0	0	-29.78	-29.78
Inverter Transformer	MV6-2 T	370091	4907339	2	0	0	56.1	56.1	1	2269.25	3.25	0	78.12	0	0.52	0	0	7.56	0	0	0	0	0	0	-30.14	-30.14
Inverter Transformer	MV3-21 T	368484	4907206	2	0	0	56.1	56.1	1	2346.2	3.25	0	78.41	0	0.55	0	0	7.71	0	0	0	0	0	0	-30.61	-30.61
Inverter Transformer	MV3-20 T	368683	4907317	2	0	0	56.1	56.1	1	2362.9	3.25	0	78.47	0	0.56	0	0	7.74	0	0	0	0	0	0	-30.71	-30.71
Inverter Transformer	MV3-19 T	368352	4907347	2	0	0	56.1	56.1	1	2532.94	3.25	0	79.07	0	0.63	0	0	8.05	0	0	0	0	0	0	-31.69	-31.69
Inverter Transformer	MV3-14 T	368678	4907498	2	0	0	56.1	56.1	1	2533.18	3.25	0	79.07	0	0.63	0	0	8.05	0	0	0	0	0	0	-31.7	-31.7
Inverter Transformer	MV3-16 T	368509	4907475	2	0	0	56.1	56.1	1	2576.91	3.25	0	79.22	0	0.65	0	0	8.13	0	0	0	0	0	0	-31.94	-31.94
Inverter Transformer	MV3-15 T	368351	4907477	2	0	0	56.1	56.1	1	2647.98	3.25	0	79.46	0	0.68	0	0	8.26	0	0	0	0	0	0	-32.34	-32.34
Inverter Transformer	MV3-17 T	368183	4907472	2	0	0	56.1	56.1	1	2725.43	3.25	0	79.71	0	0.71	0	0	8.39	0	0	0	0	0	0	-32.76	-32.76
Inverter Transformer	MV3-8 T	368685	4907712	2	0	0	56.1	56.1	1	2732.07	3.25	0	79.73	0	0.72	0	0	8.41	0	0	0	0	0	0	-32.79	-32.79
Inverter Transformer	MV3-9 T	368517	4907703	2	0	0	56.1	56.1	1	2783.02	3.25	0	79.89	0	0.74	0	0	8.49	0	0	0	0	0	0	-33.06	-33.06
Inverter Transformer	MV3-11 T	368340	4907662	2	0	0	56.1	56.1	1	2818.12	3.25	0	80	0	0.75	0	0	8.56	0	0	0	0	0	0	-33.25	-33.25
Inverter Transformer	MV3-10 T	368162	4907669	2	0	0	56.1	56.1	1	2906.68	3.25	0	80.27	0	0.79	0	0	8.71	0	0	0	0	0	0	-33.71	-33.71
Inverter Transformer	MV3-18 T	367757	4907412	2	0	0	56.1	56.1	1	2918.6	3.25	0	80.3	0	0.8	0	0	8.73	0	0	0	0	0	0	-33.77	-33.77
Inverter Transformer	MV3-13 T	367958	4907577	2	0	0	56.1	56.1	1	2933.97	3.25	0	80.35	0	0.8	0	0	8.76	0	0	0	0	0	0	-33.85	-33.85
Inverter Transformer	MV3-2 T	368677	4907928	2	0	0	56.1	56.1	1	2939.55	3.25	0	80.37	0	0.8	0	0	8.77	0	0	0	0	0	0	-33.88	-33.88
Inverter Transformer	MV3-5 T	368335	4907843	2	0	0	56.1	56.1	1	2983.93	3.25	0	80.5	0	0.82	0	0	8.84	0	0	0	0	0	0	-34.1	-34.1
Inverter Transformer	MV3-4 T	368507	4907925	2	0	0	56.1	56.1	1	2993.08	3.25	0	80.52	0	0.83	0	0	8.86	0	0	0	0	0	0	-34.15	-34.15
Inverter Transformer	MV3-6 T	368156	4907834	2	0	0	56.1	56.1	1	3054.7	3.25	0	80.7	0	0.85	0	0	8.96	0	0	0	0	0	0	-34.45	-34.45
Inverter Transformer	MV3-7 T	367951	4907754	2	0	0	56.1	56.1	1	3086.87	3.25	0	80.79	0	0.87	0	0	9.01	0	0	0	0	0	0	-34.61	-34.61
Inverter Transformer	MV3-12 T	367674	4907594	2	0	0	56.1	56.1	1	3113.05	3.25	0	80.86	0	0.88	0	0	9.06	0	0	0	0	0	0	-34.74	-34.74
Inverter Transformer	MV3-1 T	368150	4907976	2	0	0	56.1	56.1	1	3183.8	3.25	0	81.06	0	0.91	0	0	9.18	0	0	0	0	0	0	-35.08	-35.08
Inverter Transformer	MV3-3 T	367944	4907927	2	0	0	56.1	56.1	1	3238.78	3.25	0	81.21	0	0.93	0	0	9.27	0	0	0	0	0	0	-35.35	-35.35
Inverter Transformer	MV4-15 T	369170	4908481	2	0	0	56.1	56.1	1	3376.33	3.25	0	81.57	0	0.99	0	0	9.49	0	0	0	0	0	0	-35.99	-35.99
Inverter Transformer	MV4-14 T	369182	4908507	2	0	0	56.1	56.1	1	3400.73	3.25	0	81.63	0	1	0	0	9.53	0	0	0	0	0	0	-36.1	-36.1
Inverter Transformer	MV5-6 T	369987	4908507	2	0	0	56.1	56.1	1	3402.89	3.25	0	81.64	0	1	0	0	9.53	0	0	0	0	0	0	-36.11	-36.11
Inverter Transformer	MV4-13 T	369057	4908605	2	0	0	56.1	56.1	1	3514.35	3.25	0	81.92	0	1.05	0	0	9.71	0	0	0	0	0	0	-36.61	-36.61
Inverter Transformer	MV5-5 T	370021	4908690	2	0	0	56.1	56.1	1	3588.67	3.25	0	82.1	0	1.08	0	0	9.83	0	0	0	0	0	0	-36.94	-36.94
Inverter Transformer	MV5-4 T	370330	4908707	2	0	0	56.1	56.1	1	3656.61	3.25	0	82.26	0	1.1	0	0	9.93	0	0	0	0	0	0	-37.24	-37.24
Inverter Transformer	MV4-12 T	369049	4908803	2	0	0	56.1	56.1	1	3711.42	3.25	0	82.39	0	1.13	0	0	10.02	0	0	0	0	0	0	-37.48	-37.48
Inverter Transformer	MV4-11 T	369269	4908855	2	0	0	56.1	56.1	1	3738.48	3.25	0	82.45	0	1.14	0	0	10.06	0	0	0	0	0	0	-37.59	-37.59
Inverter Transformer	MV4-10 T	369307	4908858	2	0	0	56.1	56.1	1	3738.55	3.25	0	82.45	0	1.14	0	0	10.06	0	0	0	0	0	0	-37.59	-37.59
Inverter Transformer	MV5-2 T	370011	4908853	2	0	0	56.1	56.1	1	3749.29	3.25	0	82.48	0	1.14	0	0	10.08	0	0	0	0	0	0	-37.64	-37.64
Inverter Transformer	MV5-3 T	370237	4908851	2	0	0	56.1	56.1	1	3780.25	3.25	0	82.55	0	1.16	0	0	10.12	0	0	0	0	0	0	-37.77	-37.77
Inverter Transformer	MV4-9 T	369284	4909001	2	0	0	56.1	56.1	1	3882.85	3.25	0	82.78	0	1.2	0	0	10.28	0	0	0	0	0	0	-38.2	-38.2

	Inverter Transformer	MV4-8 T	369262	4909001	2	0	0	56.1	56.1	1	3884.56	3.25	0	82.79	0	1.2	0	0	10.28	0	0	0	0	0	0	-38.21	-38.21
	Inverter Transformer	MV2-2 T	365982	4906654	2	0	0	56.1	56.1	1	3903.57	3.25	0	82.83	0	1.21	0	0	10.31	0	0	0	0	0	0	-38.29	-38.29
	Inverter Transformer	MV4-7 T	369040	4909001	2	0	0	56.1	56.1	1	3908.74	3.25	0	82.84	0	1.21	0	0	10.32	0	0	0	0	0	0	-38.31	-38.31
	Inverter Transformer	MV5-1 T	370015	4909142	2	0	0	56.1	56.1	1	4036.91	3.25	0	83.12	0	1.26	0	0	10.51	0	0	0	0	0	0	-38.83	-38.83
	Inverter Transformer	MV2-3 T	365814	4906641	2	0	0	56.1	56.1	1	4053.88	3.25	0	83.16	0	1.27	0	0	10.53	0	0	0	0	0	0	-38.9	-38.9
	Inverter Transformer	MV4-6 T	369249	4909192	2	0	0	56.1	56.1	1	4075.99	3.25	0	83.2	0	1.27	0	0	10.57	0	0	0	0	0	0	-38.99	-38.99
	Inverter Transformer	MV4-5 T	369283	4909199	2	0	0	56.1	56.1	1	4080.39	3.25	0	83.21	0	1.28	0	0	10.57	0	0	0	0	0	0	-39.01	-39.01
	Inverter Transformer	MV4-4 T	369033	4909199	2	0	0	56.1	56.1	1	4105.88	3.25	0	83.27	0	1.29	0	0	10.61	0	0	0	0	0	0	-39.11	-39.11
	Inverter Transformer	MV2-4 T	365590	4906628	2	0	0	56.1	56.1	1	4257.95	3.25	0	83.58	0	1.35	0	0	10.83	0	0	0	0	0	0	-39.7	-39.7
	Inverter Transformer	MV1-15 T	365309	4904994	2	0	0	56.1	56.1	1	4268.54	3.25	0	83.61	0	1.35	0	0	10.85	0	0	0	0	0	0	-39.74	-39.74
	Inverter Transformer	MV4-2 T	369267	4909397	2	0	0	56.1	56.1	1	4279.03	3.25	0	83.63	0	1.35	0	0	10.86	0	0	0	0	0	0	-39.79	-39.79
	Inverter Transformer	MV4-3 T	369234	4909397	2	0	0	56.1	56.1	1	4281.53	3.25	0	83.63	0	1.36	0	0	10.87	0	0	0	0	0	0	-39.79	-39.79
	Inverter Transformer	MV4-1 T	369017	4909397	2	0	0	56.1	56.1	1	4304.28	3.25	0	83.68	0	1.36	0	0	10.9	0	0	0	0	0	0	-39.88	-39.88
	Inverter Transformer	MV1-12 T	365044	4905386	2	0	0	56.1	56.1	1	4538.68	3.25	0	84.14	0	1.45	0	0	11.23	0	0	0	0	0	0	-40.76	-40.76
	Inverter Transformer	MV1-4 T	364821	4905918	2	0	0	56.1	56.1	1	4819.41	3.25	0	84.66	0	1.56	0	0	11.61	0	0	0	0	0	0	-41.77	-41.77
	Inverter Transformer	MV1-8 T	364782	4905647	2	0	0	56.1	56.1	1	4821.3	3.25	0	84.66	0	1.56	0	0	11.62	0	0	0	0	0	0	-41.78	-41.78
	Inverter Transformer	MV1-2 T	364759	4906063	2	0	0	56.1	56.1	1	4906.11	3.25	0	84.81	0	1.59	0	0	11.73	0	0	0	0	0	0	-42.08	-42.08
	Inverter Transformer	MV1-11 T	364649	4905414	2	0	0	56.1	56.1	1	4934.63	3.25	0	84.87	0	1.6	0	0	11.77	0	0	0	0	0	0	-42.18	-42.18
	Inverter Transformer	MV1-5 T	364676	4905892	2	0	0	56.1	56.1	1	4958.44	3.25	0	84.91	0	1.61	0	0	11.8	0	0	0	0	0	0	-42.26	-42.26
	Inverter Transformer	MV1-1 T	364721	4906166	2	0	0	56.1	56.1	1	4963.91	3.25	0	84.92	0	1.61	0	0	11.81	0	0	0	0	0	0	-42.28	-42.28
	Inverter Transformer	MV1-9 T	364555	4905646	2	0	0	56.1	56.1	1	5046.94	3.25	0	85.06	0	1.64	0	0	11.92	0	0	0	0	0	0	-42.56	-42.56
	Inverter Transformer	MV1-6 T	364482	4905835	2	0	0	56.1	56.1	1	5142.08	3.25	0	85.22	0	1.68	0	0	12.04	0	0	0	0	0	0	-42.88	-42.88
	Inverter Transformer	MV1-3 T	364435	4906039	2	0	0	56.1	56.1	1	5220.31	3.25	0	85.35	0	1.7	0	0	12.14	0	0	0	0	0	0	-43.14	-43.14
	Line Reactor	NGR	369421	4908787.5	5	0	0	45.4	45.4	1	3661.66	5.25	0	82.27	0	3.3	1.33	0.12	1.5	0	0	0	0	0	0	-43.05	-43.05
Limit. Valu	0	0																								
Level D/N:	25.6361	25.6361																								

Receiver: Existing Noise Receptor
ID: W-R14
X: 369960.6
Y: 4904911
Z: 4.5
Ground: 0

ISO	Description	ID	X	Y	Z	Ground	ReflOrd	LxT	LxN	L/A	Dist.	hm	Freq	Adiv	K0b	Agr	Abar	z	Aatm	Afol	Ahous	Cmet	CmetN	Dc	RL	LtotT	LtotN
	Sol_Luce Substation	S_Substation	369426	4908792	3.5	0	0	112.1	112.1	1	3917.65	5.25	0	82.86	0	0.58	3.13	0.35	7.26	0	0	0	0	0	0	18.25	18.25
	Inverter	MV6-3	370207	4907140	2	0	0	100.3	100.3	1	2242.58	3.25	0	78.01	0	0.19	0	0	13.96	0	0	0	0	0	0	8.14	8.14
	Inverter	MV6-2	370085	4907339	2	0	0	100.3	100.3	1	2431.19	3.25	0	78.72	0	0.24	0	0	14.33	0	0	0	0	0	0	7.03	7.03
	Inverter	MV3-20	368689	4907317	2	0	0	100.3	100.3	1	2721.36	3.25	0	79.7	0	0.31	0	0	14.87	0	0	0	0	0	0	5.44	5.44
	Inverter	MV3-21	368478	4907206	2	0	0	100.3	100.3	1	2732.24	3.25	0	79.73	0	0.31	0	0	14.89	0	0	0	0	0	0	5.38	5.38
	Inverter	MV3-14	368684	4907498	2	0	0	100.3	100.3	1	2884.84	3.25	0	80.2	0	0.34	0	0	15.17	0	0	0	0	0	0	4.6	4.6
	Inverter	MV3-19	368357	4907347	2	0	0	100.3	100.3	1	2916.44	3.25	0	80.3	0	0.35	0	0	15.22	0	0	0	0	0	0	4.45	4.45
	Inverter	MV3-16	368514	4907475	2	0	0	100.3	100.3	1	2943.94	3.25	0	80.38	0	0.35	0	0	15.27	0	0	0	0	0	0	4.31	4.31
	Inverter	MV3-15	368357	4907477	2	0	0	100.3	100.3	1	3025.87	3.25	0	80.62	0	0.37	0	0	15.42	0	0	0	0	0	0	3.91	3.91
	Inverter	MV3-8	368680	4907712	2	0	0	100.3	100.3	1	3079.86	3.25	0	80.77	0	0.38	0	0	15.51	0	0	0	0	0	0	3.65	3.65
	Inverter	MV3-17	368178	4907472	2	0	0	100.3	100.3	1	3120.32	3.25	0	80.88	0	0.38	0	0	15.58	0	0	0	0	0	0	3.46	3.46
	Inverter	MV3-9	368512	4907703	2	0	0	100.3	100.3	1	3145.43	3.25	0	80.95	0	0.39	0	0	15.63	0	0	0	0	0	0	3.34	3.34
	Inverter	MV3-11	368346	4907662	2	0	0	100.3	100.3	1	3189.82	3.25	0	81.08	0	0.4	0	0	15.7	0	0	0	0	0	0	3.14	3.14
	SubstationTransformer	W_ST	369711.17	4906112.3	2.5	0	0	92	92	1	1226.89	3.5	0	72.78	0	-0.33	0	-0.14	2.97	0	0	0	0	0	0	16.56	16.56
	Inverter	MV3-10	368167	4907669	2	0	0	100.3	100.3	1	3289.92	3.25	0	81.34	0	0.42	0	0	15.88	0	0	0	0	0	0	2.68	2.68
	Inverter	MV3-13	367963	4907577	2	0	0	100.3	100.3	1	3331.36	3.25	0	81.45	0	0.42	0	0	15.95	0	0	0	0	0	0	2.49	2.49
	Inverter	MV3-18	367752	4907412	2	0	0	100.3	100.3	1	3336.6	3.25	0	81.47	0	0.42	0	0	15.96	0	0	0	0	0	0	2.47	2.47
	Inverter	MV3-6	368162	4907834	2	0	0	100.3	100.3	1	3432.04	3.25	0	81.71	0	0.44	0	0	16.12	0	0	0	0	0	0	2.04	2.04
	Inverter	MV3-7	367945	4907754	2	0	0	100.3	100.3	1	3485.01	3.25	0	81.84	0	0.45	0	0	16.21	0	0	0	0	0	0	1.81	1.81
	Inverter	MV6-1	370235	4907364	2	0	0	97.3	97.3	1	2468.3	3.25	0	78.85	0	0.25	0	0	14.4	0	0	0	0	0	0	3.82	3.82
	Inverter	MV3-12	367668	4907594	2	0	0	100.3	100.3	1	3529.09	3.25	0	81.95	0	0.46	0	0	16.28	0	0	0	0	0	0	1.62	1.62
	Inverter	MV3-3	367939	4907927	2	0	0	100.3	100.3	1	3630.86	3.25	0	82.2	0	0.47	0	0	16.45	0	0	0	0	0	0	1.19	1.19
	Inverter	MV5-5	370015	4908690	2	0	0	100.3	100.3	1	3779.39	3.25	0	82.55	0	0.5	0	0	16.69	0	0	0	0	0	0	0.58	0.58
	Inverter	MV5-4	370324	4908707	2	0	0	100.3	100.3	1	3813.36	3.25	0	82.63	0	0.5	0	0	16.75	0	0	0	0	0	0	0.44	0.44
	Inverter	MV5-2	370006	4908853	2	0	0	100.3	100.3	1	3942.26	3.25	0	82.91	0	0.52	0	0	16.96	0	0	0	0	0	0	-0.08	-0.08
	Inverter	MV5-3	370231	4908851	2	0	0	100.3	100.3	1	3949.27	3.25	0	82.93	0	0.52	0	0	16.97	0	0	0	0	0	0	-0.11	-0.11
	Inverter	MV4-10	369312	4908858	2	0	0	100.3	100.3	1	3999.94	3.25	0	83.04	0	0.53	0	0	17.05	0	0	0	0	0	0	-0.3	-0.3
	Inverter	MV4-11	369264	4908855	2	0	0	100.3	100.3	1	4005.05	3.25	0	83.05	0	0.53	0	0	17.06	0	0	0	0	0	0	-0.32	-0.32
	Inverter	MV4-9	369289	4909001	2	0	0	100.3	100.3	1	4144.77	3.25	0	83.35	0	0.55	0	0	17.28	0	0	0	0	0	0	-0.86	-0.86
	Inverter	MV4-8	369256	4909001	2	0	0	100.3	100.3	1	4150.25	3.25	0	83.36	0	0.55	0	0	17.29	0	0	0	0	0	0	-0.88	-0.88
	Inverter	MV4-7	369035	4909001	2	0	0	100.3	100.3	1	4193.43	3.25	0	83.45	0	0.55	0	0	17.35	0	0	0	0	0	0	-1.05	-1.05
	Inverter	MV5-1	370020	4909142	2	0	0	100.3	100.3	1	4231.42	3.25	0	83.53	0	0.56	0	0	17.41	0	0	0	0	0	0	-1.19	-1.19
	Inverter	MV4-5	369289	4909199	2	0	0	100.3	100.3	1	4340.28	3.25	0	83.75	0	0.57	0	0	17.58	0	0	0	0	0	0	-1.59	-1.59
	Inverter	MV4-6	369243	4909192	2	0	0	100.3	100.3	1	4340.73	3.25	0	83.75	0	0.57	0	0	17.58	0	0	0	0	0	0	-1.6	-1.6
	Inverter	MV4-4	369027	4909199	2	0	0	100.3	100.3	1	4388.46	3.25	0	83.85	0	0.58	0	0	17.66	0	0	0	0	0	0	-1.77	-1.77
	Inverter	MV2-3	365820	4906641	2	0	0	100.3	100.3	1	4487.48	3.25	0	84.04	0	0.59	0	0	17.81	0	0	0	0	0	0	-2.13	-2.13
	Inverter	MV4-2	369272	4909397	2	0	0	100.3	100.3	1	4538.54	3.25	0	84.14	0	0.6	0	0	17.89	0	0	0	0	0	0	-2.31	-2.31
	Inverter	MV4-3	369229	4909397	2	0	0	100.3	100.3	1	4545.27	3.25	0	84.15	0	0.6	0	0	17.9	0	0	0	0	0	0	-2.33	-2.33
	Inverter	MV4-1	369011	4909397	2	0	0	100.3	100.3	1	4585.41	3.25	0	84.23	0	0.6	0	0	17.96	0	0	0	0	0	0	-2.48	-2.48

Inverter	MV1-15	365315	4904994	2	0	0	100.3	100.3	1	4646.34	3.25	0	84.34	0	0.61	0	0	18.05	0	0	0	0	0	0	-2.69	-2.69
Westbrook Inverter Enclosur	W_INV4	369673	4906164	2	0	0	89.1	89.1	1	1285.59	3.25	0	73.18	0	0.75	0	0	6.83	0	0	0	0	0	0	8.3	8.3
Inverter	MV2-4	365586	4906624	2	0	0	100.3	100.3	1	4698.03	3.25	0	84.44	0	0.61	0	0	18.13	0	0	0	0	0	0	-2.87	-2.87
Westbrook Inverter Enclosur	W_INV3	369508	4906164	2	0	0	89.1	89.1	1	1332.24	3.25	0	73.49	0	0.76	0	0	6.92	0	0	0	0	0	0	7.89	7.89
Inverter	MV1-12	365038	4905386	2	0	0	100.3	100.3	1	4945.46	3.25	0	84.88	0	0.64	0	0	18.5	0	0	0	0	0	0	-3.71	-3.71
Inverter	MV1-8	364788	4905647	2	0	0	100.3	100.3	1	5224.7	3.25	0	85.36	0	0.66	0	0	18.91	0	0	0	0	0	0	-4.62	-4.62
Inverter	MV1-4	364815	4905918	2	0	0	100.3	100.3	1	5243.21	3.25	0	85.39	0	0.66	0	0	18.93	0	0	0	0	0	0	-4.68	-4.68
Inverter	MV1-11	364655	4905414	2	0	0	100.3	100.3	1	5329.39	3.25	0	85.53	0	0.67	0	0	19.06	0	0	0	0	0	0	-4.95	-4.95
Inverter	MV1-2	364753	4906063	2	0	0	100.3	100.3	1	5333.5	3.25	0	85.54	0	0.67	0	0	19.06	0	0	0	0	0	0	-4.96	-4.96
Inverter	MV1-5	364671	4905892	2	0	0	100.3	100.3	1	5379.8	3.25	0	85.62	0	0.67	0	0	19.13	0	0	0	0	0	0	-5.11	-5.11
Inverter	MV1-1	364715	4906166	2	0	0	100.3	100.3	1	5393.64	3.25	0	85.64	0	0.67	0	0	19.15	0	0	0	0	0	0	-5.15	-5.15
Inverter	MV1-9	364561	4905646	2	0	0	100.3	100.3	1	5449.4	3.25	0	85.73	0	0.68	0	0	19.23	0	0	0	0	0	0	-5.32	-5.32
Westbrook Inverter Enclosur	W_INV7	369780	4906417	2	0	0	89.1	89.1	1	1516.79	3.25	0	74.62	0	0.8	0	0	7.24	0	0	0	0	0	0	6.41	6.41
Inverter	MV1-6	364477	4905835	2	0	0	100.3	100.3	1	5560.9	3.25	0	85.9	0	0.68	0	0	19.39	0	0	0	0	0	0	-5.66	-5.66
Westbrook Inverter Enclosur	W_INV2	369374	4906388	2	0	0	89.1	89.1	1	1589.22	3.25	0	75.02	0	0.81	0	0	7.36	0	0	0	0	0	0	5.86	5.86
DSTATCOM - 10 MVAR #1	DSAT1	369437	4908757	2.5	0	0	96.6	96.6	1	3881.48	3.5	0	82.78	0	3.55	0	0	2.78	0	0	0	0	0	0	7.52	7.52
DSTATCOM - 10 MVAR #2	DSAT2	369403	4908757	2.5	0	0	96.6	96.6	1	3886.21	3.5	0	82.79	0	3.55	0	0	2.78	0	0	0	0	0	0	7.51	7.51
Westbrook Inverter Enclosur	W_INV6	369875	4906578	2	0	0	89.1	89.1	1	1669.2	3.25	0	75.45	0	0.83	0	0	7.5	0	0	0	0	0	0	5.28	5.28
Westbrook Inverter Enclosur	W_INV5	369719	4906574	2	0	0	89.1	89.1	1	1680.46	3.25	0	75.51	0	0.83	0	0	7.52	0	0	0	0	0	0	5.2	5.2
Inverter	MV2-1	365842	4906816	2	0	0	97.3	97.3	1	4537.83	3.25	0	84.14	0	0.6	0	0	17.89	0	0	0	0	0	0	-5.31	-5.31
Inverter	MV1-14	365163	4905049	2	0	0	97.3	97.3	1	4799.58	3.25	0	84.62	0	0.62	0	0	18.28	0	0	0	0	0	0	-6.22	-6.22
Inverter	MV1-10	365004	4905564	2	0	0	97.3	97.3	1	4999.43	3.25	0	84.98	0	0.64	0	0	18.58	0	0	0	0	0	0	-6.89	-6.89
Inverter	MV1-7	364925	4905782	2	0	0	97.3	97.3	1	5110.37	3.25	0	85.17	0	0.65	0	0	18.74	0	0	0	0	0	0	-7.25	-7.25
Inverter	MV1-13	364731	4905241	2	0	0	97.3	97.3	1	5240	3.25	0	85.39	0	0.66	0	0	18.93	0	0	0	0	0	0	-7.67	-7.67
Westbrook Inverter Enclosur	W_INV1	369409	4906578	2	0	0	86.1	86.1	1	1755.89	3.25	0	75.89	0	0.85	0	0	7.64	0	0	0	0	0	0	1.68	1.68
Inverter	MV3-22	368656	4907142	2	0	0	89.1	89.1	1	2584.44	3.25	0	79.25	0	1.05	0	0	8.98	0	0	0	0	0	0	-0.21	-0.21
Inverter	MV6-4	370250	4906966	2	0	0	86.1	86.1	1	2075.28	3.25	0	77.34	0	0.92	0	0	8.17	0	0	0	0	0	0	-0.38	-0.38
Gardiner Substation	G_Sub	366586.3	4903349.9	2.5	0	0	90.8	90.8	1	3717.92	4.25	0	82.41	0	1.28	2.69	0.27	6.98	0	0	0	0	0	0	-2.58	-2.58
Inverter	MV3-2	368671	4907928	2	0	0	89.1	89.1	1	3281.06	3.25	0	81.32	0	1.22	0	0	10.04	0	0	0	0	0	0	-3.52	-3.52
Inverter	MV3-4	368502	4907925	2	0	0	89.1	89.1	1	3348.39	3.25	0	81.5	0	1.23	0	0	10.14	0	0	0	0	0	0	-3.81	-3.81
Inverter	MV3-5	368340	4907843	2	0	0	89.1	89.1	1	3350.07	3.25	0	81.5	0	1.23	0	0	10.14	0	0	0	0	0	0	-3.82	-3.82
Inverter	MV3-1	368156	4907976	2	0	0	89.1	89.1	1	3556.8	3.25	0	82.02	0	1.28	0	0	10.45	0	0	0	0	0	0	-4.69	-4.69
Fixed Reactor Bank 2	FRB2	369464	4908755	6	0	0	89.8	89.8	1	3875.95	5.25	0	82.77	0	-0.74	0	0	7.2	0	0	0	0	0	0	0.55	0.55
Fixed Reactor Bank 1	FRB1	369378	4908755	6	0	0	89.8	89.8	1	3887.9	5.25	0	82.79	0	-0.74	0	0	7.22	0	0	0	0	0	0	0.51	0.51
Inverter	MV5-6	369982	4908507	2	0	0	89.1	89.1	1	3596.06	3.25	0	82.12	0	1.29	0	0	10.5	0	0	0	0	0	0	-4.85	-4.85
Inverter	MV4-15	369176	4908481	2	0	0	89.1	89.1	1	3655.2	3.25	0	82.26	0	1.31	0	0	10.59	0	0	0	0	0	0	-5.1	-5.1
Inverter	MV4-14	369176	4908507	2	0	0	89.1	89.1	1	3680.6	3.25	0	82.32	0	1.31	0	0	10.63	0	0	0	0	0	0	-5.2	-5.2
Inverter	MV4-13	369051	4908605	2	0	0	89.1	89.1	1	3804.34	3.25	0	82.61	0	1.34	0	0	10.8	0	0	0	0	0	0	-5.7	-5.7
Inverter	MV4-12	369043	4908803	2	0	0	89.1	89.1	1	3998.71	3.25	0	83.04	0	1.39	0	0	11.08	0	0	0	0	0	0	-6.46	-6.46
Inverters	G_Inv2	366676.9	4903239.1	2	0	0	87.7	87.7	1	3684.83	3.25	0	82.33	0	2.76	0	0	4.53	0	0	0	0	0	0	-1.96	-1.96
Inverters	G_Inv4	366732.8	4903105	2	0	0	87.7	87.7	1	3698.69	3.25	0	82.36	0	2.77	0	0	4.55	0	0	0	0	0	0	-2.01	-2.01
Inverter	MV2-2	365977	4906654	2	0	0	89.1	89.1	1	4348.23	3.25	0	83.77	0	1.48	0	0	11.57	0	0	0	0	0	0	-7.76	-7.76
Inverters	G_Inv6	366788.5	4902972	2	0	0	87.7	87.7	1	3717.79	3.25	0	82.41	0	2.77	0	0	4.57	0	0	0	0	0	0	-2.08	-2.08
Inverters	G_Inv8	366844.5	4902838.5	2	0	0	87.7	87.7	1	3742.37	3.25	0	82.46	0	2.77	0	0	4.59	0	0	0	0	0	0	-2.17	-2.17
Inverters	G_Inv10	366900.7	4902704.8	2	0	0	87.7	87.7	1	3772.31	3.25	0	82.53	0	2.77	0	0	4.63	0	0	0	0	0	0	-2.27	-2.27
Inverters	G_Inv1	366526.4	4903225.8	2	0	0	87.7	87.7	1	3825.39	3.25	0	82.65	0	2.78	0	0	4.68	0	0	0	0	0	0	-2.45	-2.45
Inverters	G_Inv3	366583.7	4903091.4	2	0	0	87.7	87.7	1	3835.94	3.25	0	82.68	0	2.78	0	0	4.7	0	0	0	0	0	0	-2.49	-2.49
Inverters	G_Inv5	366638.5	4902958.1	2	0	0	87.7	87.7	1	3853.59	3.25	0	82.72	0	2.78	0	0	4.71	0	0	0	0	0	0	-2.55	-2.55
Inverters	G_Inv7	366694.6	4902824.7	2	0	0	87.7	87.7	1	3875.49	3.25	0	82.77	0	2.78	0	0	4.74	0	0	0	0	0	0	-2.63	-2.63
Inverters	G_Inv9	366750.9	4902691.8	2	0	0	87.7	87.7	1	3902.18	3.25	0	82.83	0	2.78	0	0	4.77	0	0	0	0	0	0	-2.72	-2.72
Westbrook Inverter Transfor	W_INVTR4	369679	4906164	2	0	0	77.3	77.3	1	1284.26	3.25	0	73.17	0	-2.1	0	0	0.84	0	0	0	0	0	0	5.43	5.43
Westbrook Inverter Transfor	W_INVTR3	369514	4906164	2	0	0	77.3	77.3	1	1330.21	3.25	0	73.48	0	-2.12	0	0	0.86	0	0	0	0	0	0	5.12	5.12
Inverter	MV1-3	364440	4906039	2	0	0	89.1	89.1	1	5634.66	3.25	0	86.02	0	1.8	0	0	13.3	0	0	0	0	0	0	-12.05	-12.05
Westbrook Inverter Transfor	W_INVTR7	369786	4906417	2	0	0	77.3	77.3	1	1516.09	3.25	0	74.61	0	-2.21	0	0	0.96	0	0	0	0	0	0	3.97	3.97
Westbrook Inverter Transfor	W_INVTR1	369403	4906578	2	0	0	78.2	78.2	1	1757.79	3.25	0	75.9	0	-2.31	0	0	1.09	0	0	0	0	0	0	3.57	3.57
Westbrook Inverter Transfor	W_INVTR2	369368	4906388	2	0	0	77.3	77.3	1	1591.45	3.25	0	75.04	0	-2.24	0	0	1	0	0	0	0	0	0	3.55	3.55
Westbrook Inverter Transfor	W_INVTR6	369881	4906578	2	0	0	77.3	77.3	1	1668.9	3.25	0	75.45	0	-2.28	0	0	1.04	0	0	0	0	0	0	3.13	3.13
Westbrook Inverter Transfor	W_INVTR5	369725	4906574	2	0	0	77.3	77.3	1	1679.61	3.25	0	75.5	0	-2.28	0	0	1.05	0	0	0	0	0	0	3.07	3.07
Inverter Transformer	MV6-4 T	370244	4906966	2	0	0	69.4	69.4	1	2074.45	3.25	0	77.34	0	2.2	0	0	5.04	0	0	0	0	0	0	-15.23	-15.23
Inverter Transformer	MV6-1 T	370230	4907364	2	0	0	69.4	69.4	1	2467.75	3.25	0	78.85	0	2.34	0	0	5.41	0	0	0	0	0	0	-17.25	-17.25
Inverter Transformer	MV2-1 T	365836	4906816	2	0	0	69.4	69.4	1	4543.28	3.25	0	84.15	0	2.92	0	0	7.07	0	0	0	0	0	0	-24.78	-24.78
Inverter Transformer	MV1-14 T	365157	4905049	2	0	0	69.4	69.4	1	4805.58	3.25	0	84.63	0	2.97	0	0	7.25	0	0	0	0	0	0	-25.51	-25.51
Inverter Transformer	MV1-10 T	365010	4905564	2	0	0	69.4	69.4	1	4993.48	3.25	0	84.97	0	3.01	0	0	7.38	0	0	0	0	0	0	-26.01	-26.01
Inverter Transformer	MV1-7 T	364919	4905782	2	0	0	69.4	69.4	1	5116.29	3.25	0	85.18	0	3.04	0	0	7.46	0	0	0	0	0	0	-26.32	-26.32
Inverter Transformer	MV1-13 T	364725	4905241	2	0	0	69.4	69.4	1	5245.99	3.25	0	85.4	0	3.06	0	0	7.54	0	0	0	0	0	0	-26.65	-26.65
Inverter Transformer	MV6-3 T	370202	4907140	2	0	0	56.1	56.1	1	2242.04	3.25	0	78.01	0	0.51	0	0	7.51	0	0	0	0	0	0	-29.97	-29.97
Inverter Transformer	MV6-2 T	370091	4907339	2	0	0	56.1	56.1	1	2431.5	3.25	0	78.72	0	0.59	0	0	7.86	0	0	0	0	0	0	-31.11	-31.11
Inverter Transformer	MV3-22 T	368661	4907142	2	0	0	56.1	56.1	1	2581.92	3.25	0	79.24	0	0.65	0	0	8.14	0	0	0	0	0	0	-31.97	-31.97
Inverter Transformer	MV3-20 T	368683	4907317	2	0	0	56.1	56.1	1	2724.17	3.25	0	79.7	0	0.71	0	0	8.39	0	0	0	0	0	0	-32.75	-32.75
Inverter Transformer	MV3-21 T	368484	4907206	2	0	0	56.1	56.1	1	2728.99	3.25	0	79.72	0	0.71	0	0	8.4	0	0	0	0	0	0	-32.78	-32.78
Inverter Transformer	MV3-14 T	368678	4907498	2	0	0	56.1	56.1	1	2887.5	3.25	0	80.21	0	0.78	0	0	8.68	0	0	0	0	0	0	-33.61	-33.61
Inverter Transformer	MV3-19 T	368352	4907347	2	0	0	56.1	56.1	1	2919.19	3.25	0	80.31	0	0.8	0	0	8.73	0	0	0	0	0	0	-33.77	-33.77
Inverter Transformer	MV3-16 T	368509	4907475	2	0	0	56.1	56.1	1	2946.4	3.25	0	80.39	0	0.81	0	0	8.78	0	0	0	0	0	0	-33.91	-33.91
Inverter Transformer	MV3-15 T	368351	4907477	2	0	0	56.1	56.1	1	3029.06	3.25	0	80.63	0	0.84	0	0	8.92	0	0	0	0	0	0	-34.33	-34.33

	Inverter Transformer	MV3-8 T	368685	4907712	2	0	0	56.1	56.1	1	3077.79	3.25	0	80.76	0	0.86	0	0	9	0	0	0	0	0	0	-34.57	-34.57
	Inverter Transformer	MV3-17 T	368183	4907472	2	0	0	56.1	56.1	1	3117.47	3.25	0	80.88	0	0.88	0	0	9.07	0	0	0	0	0	0	-34.76	-34.76
	Inverter Transformer	MV3-9 T	368517	4907703	2	0	0	56.1	56.1	1	3143.13	3.25	0	80.95	0	0.89	0	0	9.11	0	0	0	0	0	0	-34.89	-34.89
	Inverter Transformer	MV3-11 T	368340	4907662	2	0	0	56.1	56.1	1	3192.86	3.25	0	81.08	0	0.91	0	0	9.19	0	0	0	0	0	0	-35.13	-35.13
	Inverter Transformer	MV3-2 T	368677	4907928	2	0	0	56.1	56.1	1	3278.71	3.25	0	81.31	0	0.95	0	0	9.33	0	0	0	0	0	0	-35.54	-35.54
	Inverter Transformer	MV3-10 T	368162	4907669	2	0	0	56.1	56.1	1	3292.65	3.25	0	81.35	0	0.95	0	0	9.35	0	0	0	0	0	0	-35.6	-35.6
	Inverter Transformer	MV3-18 T	367757	4907412	2	0	0	56.1	56.1	1	3333.3	3.25	0	81.46	0	0.97	0	0	9.42	0	0	0	0	0	0	-35.79	-35.79
	Inverter Transformer	MV3-13 T	367958	4907577	2	0	0	56.1	56.1	1	3334.36	3.25	0	81.46	0	0.97	0	0	9.42	0	0	0	0	0	0	-35.8	-35.8
	Inverter Transformer	MV3-4 T	368507	4907925	2	0	0	56.1	56.1	1	3346.22	3.25	0	81.49	0	0.98	0	0	9.44	0	0	0	0	0	0	-35.85	-35.85
	Inverter Transformer	MV3-5 T	368335	4907843	2	0	0	56.1	56.1	1	3352.49	3.25	0	81.51	0	0.98	0	0	9.45	0	0	0	0	0	0	-35.88	-35.88
	Inverter Transformer	MV3-6 T	368156	4907834	2	0	0	56.1	56.1	1	3435.19	3.25	0	81.72	0	1.01	0	0	9.58	0	0	0	0	0	0	-36.26	-36.26
	Inverter Transformer	MV3-7 T	367951	4907754	2	0	0	56.1	56.1	1	3481.54	3.25	0	81.84	0	1.03	0	0	9.66	0	0	0	0	0	0	-36.47	-36.47
	Inverter Transformer	MV3-12 T	367674	4907594	2	0	0	56.1	56.1	1	3525.2	3.25	0	81.94	0	1.05	0	0	9.73	0	0	0	0	0	0	-36.66	-36.66
	Inverter Transformer	MV3-1 T	368150	4907976	2	0	0	56.1	56.1	1	3559.85	3.25	0	82.03	0	1.06	0	0	9.78	0	0	0	0	0	0	-36.82	-36.82
	Inverter Transformer	MV5-6 T	369987	4908507	2	0	0	56.1	56.1	1	3596.1	3.25	0	82.12	0	1.08	0	0	9.84	0	0	0	0	0	0	-36.98	-36.98
	Inverter Transformer	MV3-3 T	367944	4907927	2	0	0	56.1	56.1	1	3628.08	3.25	0	82.19	0	1.09	0	0	9.89	0	0	0	0	0	0	-37.12	-37.12
	Inverter Transformer	MV4-15 T	369170	4908481	2	0	0	56.1	56.1	1	3656.49	3.25	0	82.26	0	1.1	0	0	9.93	0	0	0	0	0	0	-37.24	-37.24
	Inverter Transformer	MV4-14 T	369182	4908507	2	0	0	56.1	56.1	1	3679.33	3.25	0	82.32	0	1.11	0	0	9.97	0	0	0	0	0	0	-37.34	-37.34
	Inverter Transformer	MV5-5 T	370021	4908690	2	0	0	56.1	56.1	1	3779.48	3.25	0	82.55	0	1.15	0	0	10.12	0	0	0	0	0	0	-37.77	-37.77
	Inverter Transformer	MV4-13 T	369057	4908605	2	0	0	56.1	56.1	1	3802.91	3.25	0	82.6	0	1.16	0	0	10.16	0	0	0	0	0	0	-37.87	-37.87
	Inverter Transformer	MV5-4 T	370330	4908707	2	0	0	56.1	56.1	1	3813.93	3.25	0	82.63	0	1.17	0	0	10.18	0	0	0	0	0	0	-37.91	-37.91
	Inverter Transformer	MV5-2 T	370011	4908853	2	0	0	56.1	56.1	1	3942.32	3.25	0	82.92	0	1.22	0	0	10.37	0	0	0	0	0	0	-38.45	-38.45
	Inverter Transformer	MV5-3 T	370237	4908851	2	0	0	56.1	56.1	1	3949.68	3.25	0	82.93	0	1.22	0	0	10.38	0	0	0	0	0	0	-38.48	-38.48
	Inverter Transformer	MV4-12 T	369049	4908803	2	0	0	56.1	56.1	1	3997.33	3.25	0	83.04	0	1.24	0	0	10.45	0	0	0	0	0	0	-38.67	-38.67
	Inverter Transformer	MV4-10 T	369307	4908858	2	0	0	56.1	56.1	1	4000.75	3.25	0	83.04	0	1.24	0	0	10.46	0	0	0	0	0	0	-38.68	-38.68
	Inverter Transformer	MV4-11 T	369269	4908855	2	0	0	56.1	56.1	1	4004.18	3.25	0	83.05	0	1.25	0	0	10.46	0	0	0	0	0	0	-38.7	-38.7
	Inverter Transformer	MV4-9 T	369284	4909001	2	0	0	56.1	56.1	1	4145.59	3.25	0	83.35	0	1.3	0	0	10.67	0	0	0	0	0	0	-39.26	-39.26
	Inverter Transformer	MV4-8 T	369262	4909001	2	0	0	56.1	56.1	1	4149.23	3.25	0	83.36	0	1.3	0	0	10.67	0	0	0	0	0	0	-39.28	-39.28
	Inverter Transformer	MV4-7 T	369040	4909001	2	0	0	56.1	56.1	1	4192.33	3.25	0	83.45	0	1.32	0	0	10.74	0	0	0	0	0	0	-39.45	-39.45
	Inverter Transformer	MV5-1 T	370015	4909142	2	0	0	56.1	56.1	1	4231.35	3.25	0	83.53	0	1.34	0	0	10.79	0	0	0	0	0	0	-39.6	-39.6
	Inverter Transformer	MV4-6 T	369249	4909192	2	0	0	56.1	56.1	1	4339.74	3.25	0	83.75	0	1.38	0	0	10.95	0	0	0	0	0	0	-40.02	-40.02
	Inverter Transformer	MV4-5 T	369283	4909199	2	0	0	56.1	56.1	1	4341.21	3.25	0	83.75	0	1.38	0	0	10.95	0	0	0	0	0	0	-40.02	-40.02
	Inverter Transformer	MV2-2 T	365982	4906654	2	0	0	56.1	56.1	1	4343.65	3.25	0	83.76	0	1.38	0	0	10.95	0	0	0	0	0	0	-40.03	-40.03
	Inverter Transformer	MV4-4 T	369033	4909199	2	0	0	56.1	56.1	1	4387.18	3.25	0	83.84	0	1.4	0	0	11.02	0	0	0	0	0	0	-40.2	-40.2
	Inverter Transformer	MV2-3 T	365814	4906641	2	0	0	56.1	56.1	1	4493.02	3.25	0	84.05	0	1.44	0	0	11.17	0	0	0	0	0	0	-40.59	-40.59
	Inverter Transformer	MV4-2 T	369267	4909397	2	0	0	56.1	56.1	1	4539.3	3.25	0	84.14	0	1.45	0	0	11.23	0	0	0	0	0	0	-40.77	-40.77
	Inverter Transformer	MV4-3 T	369234	4909397	2	0	0	56.1	56.1	1	4544.46	3.25	0	84.15	0	1.46	0	0	11.24	0	0	0	0	0	0	-40.79	-40.79
	Inverter Transformer	MV4-1 T	369017	4909397	2	0	0	56.1	56.1	1	4584.17	3.34	0	84.23	0	2.39	2.14	0	11.29	0	0	0	0	0	0	-43.99	-43.99
	Inverter Transformer	MV1-15 T	365309	4904994	2	0	0	56.1	56.1	1	4652.34	3.25	0	84.35	0	1.5	0	0	11.39	0	0	0	0	0	0	-41.18	-41.18
	Inverter Transformer	MV2-4 T	365590	4906628	2	0	0	56.1	56.1	1	4695.77	3.25	0	84.43	0	1.51	0	0	11.45	0	0	0	0	0	0	-41.34	-41.34
	Inverter Transformer	MV1-12 T	365044	4905386	2	0	0	56.1	56.1	1	4939.49	3.25	0	84.87	0	1.6	0	0	11.77	0	0	0	0	0	0	-42.19	-42.19
	Inverter Transformer	MV1-8 T	364782	4905647	2	0	0	56.1	56.1	1	5230.64	3.25	0	85.37	0	1.71	0	0	12.15	0	0	0	0	0	0	-43.17	-43.17
	Inverter Transformer	MV1-4 T	364821	4905918	2	0	0	56.1	56.1	1	5237.32	3.25	0	85.38	0	1.71	0	0	12.16	0	0	0	0	0	0	-43.2	-43.2
	Inverter Transformer	MV1-2 T	364759	4906063	2	0	0	56.1	56.1	1	5327.64	3.25	0	85.53	0	1.74	0	0	12.28	0	0	0	0	0	0	-43.49	-43.49
	Inverter Transformer	MV1-11 T	364649	4905414	2	0	0	56.1	56.1	1	5335.36	3.25	0	85.54	0	1.74	0	0	12.29	0	0	0	0	0	0	-43.52	-43.52
	Inverter Transformer	MV1-5 T	364676	4905892	2	0	0	56.1	56.1	1	5374.88	3.25	0	85.61	0	1.76	0	0	12.34	0	0	0	0	0	0	-43.64	-43.64
	Inverter Transformer	MV1-1 T	364721	4906166	2	0	0	56.1	56.1	1	5387.8	3.25	0	85.63	0	1.76	0	0	12.35	0	0	0	0	0	0	-43.69	-43.69
	Inverter Transformer	MV1-9 T	364555	4905646	2	0	0	56.1	56.1	1	5455.34	3.25	0	85.74	0	1.79	0	0	12.44	0	0	0	0	0	0	-43.9	-43.9
	Inverter Transformer	MV1-6 T	364482	4905835	2	0	0	56.1	56.1	1	5555.97	3.25	0	85.9	0	1.82	0	0	12.56	0	0	0	0	0	0	-44.22	-44.22
	Inverter Transformer	MV1-3 T	364435	4906039	2	0	0	56.1	56.1	1	5639.56	3.25	0	86.02	0	1.85	0	0	12.67	0	0	0	0	0	0	-44.48	-44.48
	Line Reactor	NGR	369421	4908787.5	5	0	0	45.4	45.4	1	3913.88	5.25	0	82.85	0	3.29	1.34	0.12	1.6	0	0	0	0	0	0	-43.73	-43.73
Limit. Valu	0	0																								
Level D/N:	24.0654	24.0654																								

Receiver: Existing Noise Receptor
ID: W-R15
X: 369827.3
Y: 4906078.6
Z: 4.5
Ground: 0

ISO	Description	ID	X	Y	Z	Ground	ReflOrd	LxT	LxN	L/A	Dist.	hm	Freq	Adiv	K0b	Agr	Abar	z	Aatm	Afol	Ahous	Cmet	CmetN	Dc	RL	LtotT	LtotN
	SubstationTransformer	W_ST	369711.17	4906112.3	2.5	0	0	92	92	1	120.93	4.22	0	52.65	0	0.65	6.68	0.24	0.42	0	0	0	0	0	0	31.57	31.57
	Westbrook Inverter Enclosur	W_INV4	369673	4906164	2	0	0	89.1	89.1	1	176.37	3.25	0	55.93	0	0.27	0	0	2.95	0	0	0	0	0	0	29.91	29.91
	Sol_Luce Substation	S_Substation	369426	4908792	3.5	0	0	112.1	112.1	1	2742.91	5.25	0	79.76	0	0.22	3.49	0.35	5.57	0	0	0	0	0	0	23.04	23.04
	Inverter	MV6-3	370207	4907140	2	0	0	100.3	100.3	1	1127.27	3.25	0	72.04	0	-0.19	0	0	11.31	0	0	0	0	0	0	17.15	17.15
	Westbrook Inverter Enclosur	W_INV3	369508	4906164	2	0	0	89.1	89.1	1	330.53	3.47	0	61.38	0	1.03	3.37	0	4.34	0	0	0	0	0	0	18.93	18.93
	Westbrook Inverter Enclosur	W_INV7	369780	4906417	2	0	0	89.1	89.1	1	341.7	3.25	0	61.67	0	0.41	0	0	4.41	0	0	0	0	0	0	22.57	22.57
	Inverter	MV6-2	370085	4907339	2	0	0	100.3	100.3	1	1286.48	3.25	0	73.19	0	-0.12	0	0	11.77	0	0	0	0	0	0	15.47	15.47
	Inverter	MV3-20	368689	4907317	2	0	0	100.3	100.3	1	1682.07	3.25	0	75.52	0	0.03	0	0	12.76	0	0	0	0	0	0	12	12
	Inverter	MV3-21	368478	4907206	2	0	0	100.3	100.3	1	1758.31	3.25	0	75.9	0	0.06	0	0	12.94	0	0	0	0	0	0	11.42	11.42
	Inverter	MV3-14	368684	4907498	2	0	0	100.3	100.3	1	1822.59	3.25	0	76.21	0	0.08	0	0	13.08	0	0	0	0	0	0	10.94	10.94
	Westbrook Inverter Enclosur	W_INV6	369875	4906578	2	0	0	89.1	89.1	1	501.68	3.25	0	65.01	0	0.53	0	0	5.15	0	0	0	0	0	0	18.37	18.37
	Westbrook Inverter Enclosur	W_INV5	369719	4906574	2	0	0	89.1	89.1	1	507.11	3.25	0	65.1	0	0.53	0	0	5.17	0	0	0	0	0	0	18.26	18.26

Inverter	MV6-1	370235	4907364	2	0	0	97.3	97.3	1	1348.51	3.25	0	73.6	0	-0.09	0	0	11.94	0	0	0	0	0	0	11.87	11.87
Inverter	MV3-16	368514	4907475	2	0	0	100.3	100.3	1	1916.95	3.25	0	76.65	0	0.11	0	0	13.29	0	0	0	0	0	0	10.27	10.27
Inverter	MV3-19	368357	4907347	2	0	0	100.3	100.3	1	1941.81	3.25	0	76.76	0	0.11	0	0	13.34	0	0	0	0	0	0	10.1	10.1
Inverter	MV3-8	368680	4907712	2	0	0	100.3	100.3	1	1996.07	3.25	0	77	0	0.13	0	0	13.45	0	0	0	0	0	0	9.73	9.73
Westbrook Inverter Enclosur	W_INV2	369374	4906388	2	0	0	89.1	89.1	1	548.83	3.25	0	65.79	0	0.55	0	0	5.3	0	0	0	0	0	0	17.41	17.41
Inverter	MV3-15	368357	4907477	2	0	0	100.3	100.3	1	2029.12	3.25	0	77.15	0	0.14	0	0	13.52	0	0	0	0	0	0	9.51	9.51
Inverter	MV3-9	368512	4907703	2	0	0	100.3	100.3	1	2090.14	3.25	0	77.4	0	0.15	0	0	13.65	0	0	0	0	0	0	9.1	9.1
Inverter	MV3-17	368178	4907472	2	0	0	100.3	100.3	1	2159.11	3.25	0	77.69	0	0.17	0	0	13.79	0	0	0	0	0	0	8.66	8.66
Inverter	MV3-11	368346	4907662	2	0	0	100.3	100.3	1	2168.27	3.25	0	77.72	0	0.18	0	0	13.81	0	0	0	0	0	0	8.61	8.61
Inverter	MV3-10	368167	4907669	2	0	0	100.3	100.3	1	2299.12	3.25	0	78.23	0	0.21	0	0	14.07	0	0	0	0	0	0	7.8	7.8
Inverter	MV3-13	367963	4907577	2	0	0	100.3	100.3	1	2391.82	3.25	0	78.57	0	0.23	0	0	14.25	0	0	0	0	0	0	7.25	7.25
Westbrook Inverter Transfor	W_INVTR4	369679	4906164	2	0	0	77.3	77.3	1	171.15	3.25	0	55.67	0	-0.36	0	0	0.14	0	0	0	0	0	0	21.89	21.89
Inverter	MV3-6	368162	4907834	2	0	0	100.3	100.3	1	2419.64	3.25	0	78.68	0	0.24	0	0	14.3	0	0	0	0	0	0	7.09	7.09
Inverter	MV3-18	367752	4907412	2	0	0	100.3	100.3	1	2466.75	3.25	0	78.84	0	0.25	0	0	14.39	0	0	0	0	0	0	6.83	6.83
Inverter	MV3-7	367945	4907754	2	0	0	100.3	100.3	1	2519.93	3.25	0	79.03	0	0.26	0	0	14.5	0	0	0	0	0	0	6.53	6.53
Inverter	MV5-5	370015	4908690	2	0	0	100.3	100.3	1	2618.14	3.25	0	79.36	0	0.28	0	0	14.68	0	0	0	0	0	0	5.99	5.99
Inverter	MV3-12	367668	4907594	2	0	0	100.3	100.3	1	2638	3.25	0	79.43	0	0.29	0	0	14.72	0	0	0	0	0	0	5.88	5.88
Inverter	MV3-3	367939	4907927	2	0	0	100.3	100.3	1	2642.4	3.25	0	79.44	0	0.29	0	0	14.73	0	0	0	0	0	0	5.86	5.86
Inverter	MV5-4	370324	4908707	2	0	0	100.3	100.3	1	2674.92	3.25	0	79.55	0	0.3	0	0	14.79	0	0	0	0	0	0	5.68	5.68
Inverter	MV5-2	370006	4908853	2	0	0	100.3	100.3	1	2780.15	3.25	0	79.88	0	0.32	0	0	14.98	0	0	0	0	0	0	5.13	5.13
Inverter	MV5-3	370231	4908851	2	0	0	100.3	100.3	1	2801.64	3.25	0	79.95	0	0.32	0	0	15.02	0	0	0	0	0	0	5.02	5.02
Inverter	MV4-10	369312	4908858	2	0	0	100.3	100.3	1	2826.77	3.25	0	80.03	0	0.33	0	0	15.06	0	0	0	0	0	0	4.9	4.9
Inverter	MV4-11	369264	4908855	2	0	0	100.3	100.3	1	2832.97	3.25	0	80.04	0	0.33	0	0	15.07	0	0	0	0	0	0	4.86	4.86
Inverter	MV4-9	369289	4909001	2	0	0	100.3	100.3	1	2971.56	3.25	0	80.46	0	0.36	0	0	15.32	0	0	0	0	0	0	4.17	4.17
Inverter	MV4-8	369256	4909001	2	0	0	100.3	100.3	1	2977.72	3.25	0	80.48	0	0.36	0	0	15.33	0	0	0	0	0	0	4.14	4.14
Inverter	MV4-7	369035	4909001	2	0	0	100.3	100.3	1	3027.9	3.25	0	80.62	0	0.37	0	0	15.42	0	0	0	0	0	0	3.9	3.9
Inverter	MV5-1	370020	4909142	2	0	0	100.3	100.3	1	3069.46	3.25	0	80.74	0	0.38	0	0	15.49	0	0	0	0	0	0	3.7	3.7
Inverter	MV4-5	369289	4909199	2	0	0	100.3	100.3	1	3166.49	3.25	0	81.01	0	0.39	0	0	15.66	0	0	0	0	0	0	3.24	3.24
Inverter	MV4-6	369243	4909192	2	0	0	100.3	100.3	1	3167.76	3.25	0	81.02	0	0.39	0	0	15.67	0	0	0	0	0	0	3.24	3.24
Inverter	MV4-4	369027	4909199	2	0	0	100.3	100.3	1	3221.39	3.25	0	81.16	0	0.4	0	0	15.76	0	0	0	0	0	0	2.99	2.99
Westbrook Inverter Enclosur	W_INV1	369409	4906578	2	0	0	86.1	86.1	1	651.45	3.25	0	67.28	0	0.6	0	0	5.58	0	0	0	0	0	0	12.6	12.6
Inverter	MV4-2	369272	4909397	2	0	0	100.3	100.3	1	3364.54	3.25	0	81.54	0	0.43	0	0	16	0	0	0	0	0	0	2.34	2.34
Inverter	MV4-3	369229	4909397	2	0	0	100.3	100.3	1	3371.91	3.25	0	81.56	0	0.43	0	0	16.02	0	0	0	0	0	0	2.31	2.31
Inverter	MV4-1	369011	4909397	2	0	0	100.3	100.3	1	3417.33	3.25	0	81.67	0	0.44	0	0	16.09	0	0	0	0	0	0	2.11	2.11
Inverter	MV2-3	365820	4906641	2	0	0	100.3	100.3	1	4046.57	3.25	0	83.14	0	0.53	0	0	17.12	0	0	0	0	0	0	-0.49	-0.49
DSTATCOM - 10 MVAR #1	DSAT1	369437	4908757	2.5	0	0	96.6	96.6	1	2706.69	3.5	0	79.65	0	3.36	0	0	2.13	0	0	0	0	0	0	11.49	11.49
DSTATCOM - 10 MVAR #2	DSAT2	369403	4908757	2.5	0	0	96.6	96.6	1	2711.8	3.5	0	79.67	0	3.36	0	0	2.14	0	0	0	0	0	0	11.47	11.47
Inverter	MV2-4	365586	4906624	2	0	0	100.3	100.3	1	4276.22	3.25	0	83.62	0	0.56	0	0	17.48	0	0	0	0	0	0	-1.36	-1.36
Westbrook Inverter Transfor	W_INVTR3	369514	4906164	2	0	0	77.3	77.3	1	324.74	3.48	0	61.23	0	-0.18	3.07	0	0.25	0	0	0	0	0	0	12.97	12.97
Inverter	MV1-15	365315	4904994	2	0	0	100.3	100.3	1	4640.82	3.25	0	84.33	0	0.61	0	0	18.04	0	0	0	0	0	0	-2.67	-2.67
Westbrook Inverter Transfor	W_INVTR7	369786	4906417	2	0	0	77.3	77.3	1	340.92	3.25	0	61.65	0	-1.17	0	0	0.26	0	0	0	0	0	0	16.6	16.6
Inverter	MV1-12	365038	4905386	2	0	0	100.3	100.3	1	4839.12	3.25	0	84.7	0	0.63	0	0	18.34	0	0	0	0	0	0	-3.35	-3.35
Inverter	MV1-4	364815	4905918	2	0	0	100.3	100.3	1	5014.87	3.25	0	85.01	0	0.64	0	0	18.6	0	0	0	0	0	0	-3.94	-3.94
Inverter	MV1-8	364788	4905647	2	0	0	100.3	100.3	1	5057.75	3.25	0	85.08	0	0.65	0	0	18.66	0	0	0	0	0	0	-4.08	-4.08
Inverter	MV6-4	370250	4906966	2	0	0	86.1	86.1	1	982.93	3.25	0	70.85	0	0.68	0	0	6.28	0	0	0	0	0	0	8.24	8.24
Inverter	MV1-2	364753	4906063	2	0	0	100.3	100.3	1	5074.32	3.25	0	85.11	0	0.65	0	0	18.69	0	0	0	0	0	0	-4.13	-4.13
Inverter	MV1-1	364715	4906166	2	0	0	100.3	100.3	1	5113.05	3.25	0	85.17	0	0.65	0	0	18.75	0	0	0	0	0	0	-4.26	-4.26
Inverter	MV1-5	364671	4905892	2	0	0	100.3	100.3	1	5159.68	3.25	0	85.25	0	0.66	0	0	18.81	0	0	0	0	0	0	-4.41	-4.41
Inverter	MV1-11	364655	4905414	2	0	0	100.3	100.3	1	5214.82	3.25	0	85.34	0	0.66	0	0	18.89	0	0	0	0	0	0	-4.59	-4.59
Inverter	MV1-9	364561	4905646	2	0	0	100.3	100.3	1	5284.04	3.25	0	85.46	0	0.67	0	0	18.99	0	0	0	0	0	0	-4.81	-4.81
Inverter	MV1-6	364477	4905835	2	0	0	100.3	100.3	1	5355.84	3.25	0	85.58	0	0.67	0	0	19.1	0	0	0	0	0	0	-5.03	-5.03
Inverter	MV2-1	365842	4906816	2	0	0	97.3	97.3	1	4052.95	3.25	0	83.16	0	0.53	0	0	17.13	0	0	0	0	0	0	-3.51	-3.51
Inverter	MV3-22	368656	4907142	2	0	0	89.1	89.1	1	1582.01	3.25	0	74.98	0	0.81	0	0	7.35	0	0	0	0	0	0	5.91	5.91
Inverter	MV1-14	365163	4905049	2	0	0	97.3	97.3	1	4776.59	3.25	0	84.58	0	0.62	0	0	18.25	0	0	0	0	0	0	-6.14	-6.14
Inverter	MV1-10	365004	4905564	2	0	0	97.3	97.3	1	4850.67	3.25	0	84.72	0	0.63	0	0	18.36	0	0	0	0	0	0	-6.39	-6.39
Inverter	MV1-7	364925	4905782	2	0	0	97.3	97.3	1	4911.26	3.25	0	84.82	0	0.63	0	0	18.45	0	0	0	0	0	0	-6.6	-6.6
Westbrook Inverter Transfor	W_INVTR6	369881	4906578	2	0	0	77.3	77.3	1	502.29	3.25	0	65.02	0	-1.51	0	0	0.37	0	0	0	0	0	0	13.46	13.46
Westbrook Inverter Transfor	W_INVTR5	369725	4906574	2	0	0	77.3	77.3	1	505.86	3.25	0	65.08	0	-1.52	0	0	0.38	0	0	0	0	0	0	13.4	13.4
Inverter	MV1-13	364731	4905241	2	0	0	97.3	97.3	1	5164.67	3.25	0	85.26	0	0.66	0	0	18.82	0	0	0	0	0	0	-7.43	-7.43
Westbrook Inverter Transfor	W_INVTR2	369368	4906388	2	0	0	77.3	77.3	1	553.8	3.25	0	65.87	0	-1.58	0	0	0.41	0	0	0	0	0	0	12.65	12.65
Inverter	MV3-2	368671	4907928	2	0	0	89.1	89.1	1	2181.13	3.25	0	77.77	0	0.95	0	0	8.34	0	0	0	0	0	0	2	2
Inverter	MV3-4	368502	4907925	2	0	0	89.1	89.1	1	2272.8	3.25	0	78.13	0	0.97	0	0	8.49	0	0	0	0	0	0	1.47	1.47
Westbrook Inverter Transfor	W_INVTR1	369403	4906578	2	0	0	78.2	78.2	1	655.31	3.25	0	67.33	0	-1.68	0	0	0.47	0	0	0	0	0	0	12.12	12.12
Inverter	MV3-5	368340	4907843	2	0	0	89.1	89.1	1	2307.63	3.25	0	78.26	0	0.98	0	0	8.54	0	0	0	0	0	0	1.27	1.27
Inverter	MV5-6	369982	4908507	2	0	0	89.1	89.1	1	2433.32	3.25	0	78.72	0	1.01	0	0	8.74	0	0	0	0	0	0	0.58	0.58
Fixed Reactor Bank 2	FRB2	369464	4908755	6	0	0	89.8	89.8	1	2700.95	5.25	0	79.63	0	-0.91	0	0	5.5	0	0	0	0	0	0	5.56	5.56
Inverter	MV4-15	369176	4908481	2	0	0	89.1	89.1	1	2489.12	3.25	0	78.92	0	1.02	0	0	8.83	0	0	0	0	0	0	0.29	0.29
Fixed Reactor Bank 1	FRB1	369378	4908755	6	0	0	89.8	89.8	1	2713.85	5.25	0	79.67	0	-0.91	0	0	5.52	0	0	0	0	0	0	5.49	5.49
Inverter	MV4-14	369176	4908507	2	0	0	89.1	89.1	1	2514.22	3.25	0	79.01	0	1.03	0	0	8.87	0	0	0	0	0	0	0.15	0.15
Inverter	MV3-1	368156	4907976	2	0	0	89.1	89.1	1	2528.51	3.25	0	79.06	0	1.03	0	0	8.89	0	0	0	0	0	0	0.08	0.08
Inverter	MV4-13	369051	4908605	2	0	0	89.1	89.1	1	2642.98	3.25	0	79.44	0	1.06	0	0	9.07	0	0	0	0	0	0	-0.51	-0.51
Inverter	MV4-12	369043	4908803	2	0	0	89.1	89.1	1	2835.05	3.25	0	80.05	0	1.11	0	0	9.37	0	0	0	0	0	0	-1.47	-1.47
Gardiner Substation	G_Sub	366586.3	4903349.9	2.5	0	0	90.8	90.8	1	4236.73	4.25	0	83.54	0	1.44	2.58	0.33	7.68	0	0	0	0	0	0	-4.46	-4.46
Inverter	MV2-2	365977	4906654	2	0	0	89.1	89.1	1	3893.06	3.25	0	82.81	0	1.37	0	0	10.93	0	0	0	0	0	0	-6.05	-6.05

Inverters	G_Inv2	366676.9	4903239.1	2	0	0	87.7	87.7	1	4241.2	3.25	0	83.55	0	2.81	0	0	5.13	0	0	0	0	0	0	-3.83	-3.83
Inverters	G_Inv4	366732.8	4903105	2	0	0	87.7	87.7	1	4291.65	3.25	0	83.65	0	2.82	0	0	5.19	0	0	0	0	0	0	-4	-4
Inverters	G_Inv6	366788.5	4902972	2	0	0	87.7	87.7	1	4345.72	3.25	0	83.76	0	2.82	0	0	5.25	0	0	0	0	0	0	-4.17	-4.17
Inverters	G_Inv1	366526.4	4903225.8	2	0	0	87.7	87.7	1	4362.84	3.25	0	83.8	0	2.82	0	0	5.26	0	0	0	0	0	0	-4.22	-4.22
Inverters	G_Inv8	366844.5	4902838.5	2	0	0	87.7	87.7	1	4404.02	3.25	0	83.88	0	2.82	0	0	5.31	0	0	0	0	0	0	-4.35	-4.35
Inverters	G_Inv3	366583.7	4903091.4	2	0	0	87.7	87.7	1	4409.57	3.25	0	83.89	0	2.82	0	0	5.31	0	0	0	0	0	0	-4.37	-4.37
Inverters	G_Inv5	366638.5	4902958.1	2	0	0	87.7	87.7	1	4461.61	3.25	0	83.99	0	2.83	0	0	5.37	0	0	0	0	0	0	-4.53	-4.53
Inverters	G_Inv10	366900.7	4902704.8	2	0	0	87.7	87.7	1	4466.26	3.25	0	84	0	2.83	0	0	5.37	0	0	0	0	0	0	-4.54	-4.54
Inverters	G_Inv7	366694.6	4902824.7	2	0	0	87.7	87.7	1	4516.82	3.25	0	84.1	0	2.83	0	0	5.43	0	0	0	0	0	0	-4.7	-4.7
Inverters	G_Inv9	366750.9	4902691.8	2	0	0	87.7	87.7	1	4575.44	3.25	0	84.21	0	2.84	0	0	5.49	0	0	0	0	0	0	-4.88	-4.88
Inverter	MV1-3	364440	4906039	2	0	0	89.1	89.1	1	5387.45	3.25	0	85.63	0	1.74	0	0	12.98	0	0	0	0	0	0	-11.28	-11.28
Inverter Transformer	MV6-4 T	370244	4906966	2	0	0	69.4	69.4	1	980.37	3.25	0	70.83	0	1.67	0	0	3.78	0	0	0	0	0	0	-6.93	-6.93
Inverter Transformer	MV6-1 T	370230	4907364	2	0	0	69.4	69.4	1	1347.01	3.25	0	73.59	0	1.9	0	0	4.26	0	0	0	0	0	0	-10.39	-10.39
Inverter Transformer	MV2-1 T	365836	4906816	2	0	0	69.4	69.4	1	4058.85	3.25	0	83.17	0	2.8	0	0	6.72	0	0	0	0	0	0	-23.34	-23.34
Inverter Transformer	MV1-14 T	365157	4905049	2	0	0	69.4	69.4	1	4782.45	3.25	0	84.59	0	2.97	0	0	7.23	0	0	0	0	0	0	-25.44	-25.44
Inverter Transformer	MV1-10 T	365010	4905564	2	0	0	69.4	69.4	1	4844.71	3.25	0	84.71	0	2.98	0	0	7.28	0	0	0	0	0	0	-25.61	-25.61
Inverter Transformer	MV1-7 T	364919	4905782	2	0	0	69.4	69.4	1	4917.25	3.25	0	84.83	0	3	0	0	7.33	0	0	0	0	0	0	-25.81	-25.81
Inverter Transformer	MV1-13 T	364725	4905241	2	0	0	69.4	69.4	1	5170.59	3.25	0	85.27	0	3.05	0	0	7.49	0	0	0	0	0	0	-26.46	-26.46
Inverter Transformer	MV6-3 T	370202	4907140	2	0	0	56.1	56.1	1	1125.6	3.25	0	72.03	0	0.06	0	0	5.18	0	0	0	0	0	0	-21.21	-21.21
Inverter Transformer	MV6-2 T	370091	4907339	2	0	0	56.1	56.1	1	1287.69	3.25	0	73.2	0	0.12	0	0	5.55	0	0	0	0	0	0	-22.81	-22.81
Inverter Transformer	MV3-22 T	368661	4907142	2	0	0	56.1	56.1	1	1578.32	3.25	0	74.96	0	0.23	0	0	6.18	0	0	0	0	0	0	-25.32	-25.32
Inverter Transformer	MV3-20 T	368683	4907317	2	0	0	56.1	56.1	1	1686.14	3.25	0	75.54	0	0.27	0	0	6.41	0	0	0	0	0	0	-26.16	-26.16
Inverter Transformer	MV3-21 T	368484	4907206	2	0	0	56.1	56.1	1	1753.71	3.25	0	75.88	0	0.3	0	0	6.55	0	0	0	0	0	0	-26.67	-26.67
Inverter Transformer	MV3-14 T	368678	4907498	2	0	0	56.1	56.1	1	1826.36	3.25	0	76.23	0	0.33	0	0	6.7	0	0	0	0	0	0	-27.2	-27.2
Inverter Transformer	MV3-16 T	368509	4907475	2	0	0	56.1	56.1	1	1920.38	3.25	0	76.67	0	0.37	0	0	6.89	0	0	0	0	0	0	-27.87	-27.87
Inverter Transformer	MV3-19 T	368352	4907347	2	0	0	56.1	56.1	1	1945.6	3.25	0	76.78	0	0.38	0	0	6.94	0	0	0	0	0	0	-28.04	-28.04
Inverter Transformer	MV3-8 T	368685	4907712	2	0	0	56.1	56.1	1	1993.2	3.25	0	76.99	0	0.4	0	0	7.03	0	0	0	0	0	0	-28.36	-28.36
Inverter Transformer	MV3-15 T	368351	4907477	2	0	0	56.1	56.1	1	2033.47	3.25	0	77.16	0	0.42	0	0	7.11	0	0	0	0	0	0	-28.63	-28.63
Inverter Transformer	MV3-9 T	368517	4907703	2	0	0	56.1	56.1	1	2087	3.25	0	77.39	0	0.44	0	0	7.21	0	0	0	0	0	0	-28.99	-28.99
Inverter Transformer	MV3-17 T	368183	4907472	2	0	0	56.1	56.1	1	2155.29	3.25	0	77.67	0	0.47	0	0	7.35	0	0	0	0	0	0	-29.43	-29.43
Inverter Transformer	MV3-11 T	368340	4907662	2	0	0	56.1	56.1	1	2172.38	3.25	0	77.74	0	0.48	0	0	7.38	0	0	0	0	0	0	-29.54	-29.54
Inverter Transformer	MV3-2 T	368677	4907928	2	0	0	56.1	56.1	1	2177.95	3.25	0	77.76	0	0.48	0	0	7.39	0	0	0	0	0	0	-29.57	-29.57
Inverter Transformer	MV3-4 T	368507	4907925	2	0	0	56.1	56.1	1	2269.89	3.25	0	78.12	0	0.52	0	0	7.56	0	0	0	0	0	0	-30.14	-30.14
Inverter Transformer	MV3-10 T	368162	4907669	2	0	0	56.1	56.1	1	2302.74	3.25	0	78.24	0	0.53	0	0	7.62	0	0	0	0	0	0	-30.34	-30.34
Inverter Transformer	MV3-5 T	368335	4907843	2	0	0	56.1	56.1	1	2310.86	3.25	0	78.28	0	0.54	0	0	7.64	0	0	0	0	0	0	-30.39	-30.39
Inverter Transformer	MV3-13 T	367958	4907577	2	0	0	56.1	56.1	1	2395.72	3.25	0	78.59	0	0.57	0	0	7.8	0	0	0	0	0	0	-30.9	-30.9
Inverter Transformer	MV3-6 T	368156	4907834	2	0	0	56.1	56.1	1	2423.77	3.25	0	78.69	0	0.58	0	0	7.85	0	0	0	0	0	0	-31.07	-31.07
Inverter Transformer	MV5-6 T	369987	4908507	2	0	0	56.1	56.1	1	2433.65	3.25	0	78.73	0	0.59	0	0	7.87	0	0	0	0	0	0	-31.12	-31.12
Inverter Transformer	MV3-18 T	367757	4907412	2	0	0	56.1	56.1	1	2462.54	3.25	0	78.83	0	0.6	0	0	7.92	0	0	0	0	0	0	-31.29	-31.29
Inverter Transformer	MV4-15 T	369170	4908481	2	0	0	56.1	56.1	1	2490.7	3.25	0	78.93	0	0.61	0	0	7.97	0	0	0	0	0	0	-31.45	-31.45
Inverter Transformer	MV4-14 T	369182	4908507	2	0	0	56.1	56.1	1	2512.68	3.25	0	79	0	0.62	0	0	8.01	0	0	0	0	0	0	-31.58	-31.58
Inverter Transformer	MV3-7 T	367951	4907754	2	0	0	56.1	56.1	1	2515.45	3.25	0	79.01	0	0.62	0	0	8.02	0	0	0	0	0	0	-31.59	-31.59
Inverter Transformer	MV3-1 T	368150	4907976	2	0	0	56.1	56.1	1	2532.48	3.25	0	79.07	0	0.63	0	0	8.05	0	0	0	0	0	0	-31.69	-31.69
Inverter Transformer	MV5-5 T	370021	4908690	2	0	0	56.1	56.1	1	2618.58	3.25	0	79.36	0	0.67	0	0	8.2	0	0	0	0	0	0	-32.17	-32.17
Inverter Transformer	MV3-12 T	367674	4907594	2	0	0	56.1	56.1	1	2633.09	3.25	0	79.41	0	0.67	0	0	8.23	0	0	0	0	0	0	-32.25	-32.25
Inverter Transformer	MV3-3 T	367944	4907927	2	0	0	56.1	56.1	1	2638.83	3.25	0	79.43	0	0.68	0	0	8.24	0	0	0	0	0	0	-32.29	-32.29
Inverter Transformer	MV4-13 T	369057	4908605	2	0	0	56.1	56.1	1	2641.22	3.25	0	79.44	0	0.68	0	0	8.24	0	0	0	0	0	0	-32.3	-32.3
Inverter Transformer	MV5-4 T	370330	4908707	2	0	0	56.1	56.1	1	2676.04	3.25	0	79.55	0	0.69	0	0	8.31	0	0	0	0	0	0	-32.49	-32.49
Inverter Transformer	MV5-2 T	370011	4908853	2	0	0	56.1	56.1	1	2780.48	3.25	0	79.88	0	0.74	0	0	8.49	0	0	0	0	0	0	-33.05	-33.05
Inverter Transformer	MV5-3 T	370237	4908851	2	0	0	56.1	56.1	1	2802.51	3.25	0	79.95	0	0.75	0	0	8.53	0	0	0	0	0	0	-33.17	-33.17
Inverter Transformer	MV4-10 T	369307	4908858	2	0	0	56.1	56.1	1	2827.68	3.25	0	80.03	0	0.76	0	0	8.57	0	0	0	0	0	0	-33.3	-33.3
Inverter Transformer	MV4-11 T	369269	4908855	2	0	0	56.1	56.1	1	2831.98	3.25	0	80.04	0	0.76	0	0	8.58	0	0	0	0	0	0	-33.32	-33.32
Inverter Transformer	MV4-12 T	369049	4908803	2	0	0	56.1	56.1	1	2833.39	3.25	0	80.05	0	0.76	0	0	8.58	0	0	0	0	0	0	-33.33	-33.33
Inverter Transformer	MV4-9 T	369284	4909001	2	0	0	56.1	56.1	1	2972.47	3.25	0	80.46	0	0.82	0	0	8.82	0	0	0	0	0	0	-34.04	-34.04
Inverter Transformer	MV4-8 T	369262	4909001	2	0	0	56.1	56.1	1	2976.57	3.25	0	80.47	0	0.82	0	0	8.83	0	0	0	0	0	0	-34.06	-34.06
Inverter Transformer	MV4-7 T	369040	4909001	2	0	0	56.1	56.1	1	3026.59	3.25	0	80.62	0	0.84	0	0	8.91	0	0	0	0	0	0	-34.31	-34.31
Inverter Transformer	MV5-1 T	370015	4909142	2	0	0	56.1	56.1	1	3069.15	3.25	0	80.74	0	0.86	0	0	8.98	0	0	0	0	0	0	-34.53	-34.53
Inverter Transformer	MV4-6 T	369249	4909192	2	0	0	56.1	56.1	1	3166.65	3.25	0	81.01	0	0.9	0	0	9.15	0	0	0	0	0	0	-35	-35
Inverter Transformer	MV4-5 T	369283	4909199	2	0	0	56.1	56.1	1	3167.52	3.25	0	81.01	0	0.9	0	0	9.15	0	0	0	0	0	0	-35.01	-35.01
Inverter Transformer	MV4-4 T	369033	4909199	2	0	0	56.1	56.1	1	3219.91	3.25	0	81.16	0	0.92	0	0	9.24	0	0	0	0	0	0	-35.26	-35.26
Inverter Transformer	MV4-2 T	369267	4909397	2	0	0	56.1	56.1	1	3365.37	3.25	0	81.54	0	0.98	0	0	9.47	0	0	0	0	0	0	-35.94	-35.94
Inverter Transformer	MV4-3 T	369234	4909397	2	0	0	56.1	56.1	1	3371.02	3.25	0	81.56	0	0.99	0	0	9.48	0	0	0	0	0	0	-35.96	-35.96
Inverter Transformer	MV4-1 T	369017	4909397	2	0	0	56.1	56.1	1	3415.9	3.25	0	81.67	0	1.01	0	0	9.55	0	0	0	0	0	0	-36.17	-36.17
Inverter Transformer	MV2-2 T	365982	4906654	2	0	0	56.1	56.1	1	3888.11	3.25	0	82.79	0	1.2	0	0	10.29	0	0	0	0	0	0	-38.22	-38.22
Inverter Transformer	MV2-3 T	365814	4906641	2	0	0	56.1	56.1	1	4052.51	3.25	0	83.15	0	1.26	0	0	10.53	0	0	0	0	0	0	-38.89	-38.89
Inverter Transformer	MV2-4 T	365590	4906628	2	0	0	56.1	56.1	1	4272.77	3.25	0	83.61	0	1.35	0	0	10.85	0	0	0	0	0	0	-39.76	-39.76
Inverter Transformer	MV1-15 T	365309	4904994	2	0	0	56.1	56.1	1	4646.65	3.25	0	84.34	0	1.5	0	0	11.38	0	0	0	0	0	0	-41.16	-41.16
Inverter Transformer	MV1-12 T	365044	4905386	2	0	0	56.1	56.1	1	4833.18	3.25	0	84.68	0	1.56	0	0	11.63	0	0	0	0	0	0	-41.82	-41.82
Inverter Transformer	MV1-4 T	364821	4905918	2	0	0	56.1	56.1	1	5008.88	3.25	0	84.99	0	1.63	0	0	11.87	0	0	0	0	0	0	-42.43	-42.43
Inverter Transformer	MV1-8 T	364782	4905647	2	0	0	56.1	56.1	1	5063.73	3.25	0	85.09	0	1.65	0	0	11.94	0	0	0	0	0	0	-42.62	-42.62
Inverter Transformer	MV1-2 T	364759	4906063	2	0	0	56.1	56.1	1	5068.32	3.25	0	85.1	0	1.65	0	0	11.94	0	0	0	0	0	0	-42.63	-42.63
Inverter Transformer	MV1-1 T	364721	4906166	2	0	0	56.1	56.1	1	5107.05	3.25	0	85.16	0	1.66	0	0	11.99	0	0	0	0	0	0	-42.76	-42.76
Inverter Transformer	MV1-5 T	364676	4905892	2	0	0	56.1	56.1	1	5154.68	3.25	0	85.24	0	1.68	0	0	12.06	0	0	0	0	0	0	-42.92	-42.92
Inverter Transformer	MV1-11 T	364649	4905414	2	0	0	56.1	56.1	1	5220.77	3.25	0	85.35	0	1.7	0	0	12.14	0	0	0	0	0	0	-43.14	-43.14

	Inverter Transformer	MV1-9 T	364555	4905646	2	0	0	56.1	56.1	1	5290.02	3.25	0	85.47	0	1.73	0	0	12.23	0	0	0	0	0	0	-43.37	-43.37
	Inverter Transformer	MV1-6 T	364482	4905835	2	0	0	56.1	56.1	1	5350.85	3.25	0	85.57	0	1.75	0	0	12.31	0	0	0	0	0	0	-43.57	-43.57
	Inverter Transformer	MV1-3 T	364435	4906039	2	0	0	56.1	56.1	1	5392.45	3.25	0	85.64	0	1.76	0	0	12.36	0	0	0	0	0	0	-43.7	-43.7
	Line Reactor	NGR	369421	4908787.5	5	0	0	45.4	45.4	1	2739.2	5.25	0	79.75	0	3.33	1.31	0.12	1.12	0	0	0	0	0	0	-40.16	-40.16
Limit. Valu	0	0																								
Level D/N:	35.719	35.719																								

Receiver: Existing Noise Receptor
ID: W-R16
X: 370313.5
Y: 4906429.8
Z: 4.5
Ground: 0

ISO	Description	ID	X	Y	Z	Ground	ReflOrd	LxT	LxN	L/A	Dist.	hm	Freq	Adiv	K0b	Agr	Abar	z	Aatm	Afol	Ahous	Cmet	CmetN	Dc	RL	LtotT	LtotN
	Sol_Luce Substation	S_Substation	369426	4908792	3.5	0	0	112.1	112.1	1	2523.42	5.25	0	79.04	0	0.15	3.55	0.33	5.22	0	0	0	0	0	0	24.11	24.11
	Inverter	MV6-3	370207	4907140	2	0	0	100.3	100.3	1	718.15	3.25	0	68.12	0	-0.4	0	0	9.82	0	0	0	0	0	0	22.76	22.76
	Inverter	MV6-2	370085	4907339	2	0	0	100.3	100.3	1	937.48	3.25	0	70.44	0	-0.28	0	0	10.7	0	0	0	0	0	0	19.45	19.45
	Inverter	MV6-1	370235	4907364	2	0	0	97.3	97.3	1	937.5	3.25	0	70.44	0	-0.28	0	0	10.7	0	0	0	0	0	0	16.45	16.45
	Westbrook Inverter Enclosur	W_INV6	369875	4906578	2	0	0	89.1	89.1	1	462.87	3.25	0	64.31	0	0.5	0	0	5.01	0	0	0	0	0	0	19.24	19.24
	SubstationTransformer	W_ST	369711.17	4906112.3	2.5	0	0	92	92	1	680.9	4.24	0	67.66	0	0.48	4.28	0.24	1.84	0	0	0	0	0	0	17.71	17.71
	Inverter	MV3-20	368689	4907317	2	0	0	100.3	100.3	1	1850.98	3.25	0	76.35	0	0.09	0	0	13.14	0	0	0	0	0	0	10.74	10.74
	Inverter	MV3-14	368684	4907498	2	0	0	100.3	100.3	1	1948.42	3.25	0	76.79	0	0.11	0	0	13.35	0	0	0	0	0	0	10.05	10.05
	Westbrook Inverter Enclosur	W_INV7	369780	4906417	2	0	0	89.1	89.1	1	533.66	3.25	0	65.55	0	0.54	0	0	5.26	0	0	0	0	0	0	17.71	17.71
	Inverter	MV3-21	368478	4907206	2	0	0	100.3	100.3	1	1992.88	3.25	0	76.99	0	0.13	0	0	13.45	0	0	0	0	0	0	9.75	9.75
	Inverter	MV3-8	368680	4907712	2	0	0	100.3	100.3	1	2076.62	3.25	0	77.35	0	0.15	0	0	13.62	0	0	0	0	0	0	9.19	9.19
	Inverter	MV3-16	368514	4907475	2	0	0	100.3	100.3	1	2081.02	3.25	0	77.37	0	0.15	0	0	13.63	0	0	0	0	0	0	9.16	9.16
	Inverter	MV3-19	368357	4907347	2	0	0	100.3	100.3	1	2160.82	3.25	0	77.69	0	0.17	0	0	13.79	0	0	0	0	0	0	8.65	8.65
	Inverter	MV3-9	368512	4907703	2	0	0	100.3	100.3	1	2206	3.25	0	77.87	0	0.19	0	0	13.89	0	0	0	0	0	0	8.37	8.37
	Inverter	MV3-15	368357	4907477	2	0	0	100.3	100.3	1	2219.13	3.25	0	77.92	0	0.19	0	0	13.91	0	0	0	0	0	0	8.29	8.29
	Westbrook Inverter Enclosur	W_INV5	369719	4906574	2	0	0	89.1	89.1	1	611.74	3.25	0	66.73	0	0.58	0	0	5.48	0	0	0	0	0	0	16.26	16.26
	Inverter	MV5-4	370324	4908707	2	0	0	100.3	100.3	1	2277.23	3.25	0	78.15	0	0.2	0	0	14.03	0	0	0	0	0	0	7.93	7.93
	Inverter	MV5-5	370015	4908690	2	0	0	100.3	100.3	1	2279.83	3.25	0	78.16	0	0.2	0	0	14.03	0	0	0	0	0	0	7.92	7.92
	Inverter	MV3-11	368346	4907662	2	0	0	100.3	100.3	1	2321.5	3.25	0	78.32	0	0.21	0	0	14.11	0	0	0	0	0	0	7.67	7.67
	Inverter	MV3-17	368178	4907472	2	0	0	100.3	100.3	1	2376.25	3.25	0	78.52	0	0.23	0	0	14.22	0	0	0	0	0	0	7.35	7.35
	Inverter	MV5-3	370231	4908851	2	0	0	100.3	100.3	1	2422.61	3.25	0	78.69	0	0.24	0	0	14.31	0	0	0	0	0	0	7.08	7.08
	Inverter	MV5-2	370006	4908853	2	0	0	100.3	100.3	1	2442.63	3.25	0	78.76	0	0.24	0	0	14.35	0	0	0	0	0	0	6.96	6.96
	Inverter	MV3-10	368167	4907669	2	0	0	100.3	100.3	1	2478.52	3.25	0	78.88	0	0.25	0	0	14.42	0	0	0	0	0	0	6.76	6.76
	Westbrook Inverter Enclosur	W_INV4	369673	4906164	2	0	0	89.1	89.1	1	693.47	3.25	0	67.82	0	0.61	0	0	5.69	0	0	0	0	0	0	14.94	14.94
	Inverter	MV3-6	368162	4907834	2	0	0	100.3	100.3	1	2569.19	3.25	0	79.2	0	0.27	0	0	14.59	0	0	0	0	0	0	6.25	6.25
	Inverter	MV3-13	367963	4907577	2	0	0	100.3	100.3	1	2615.52	3.25	0	79.35	0	0.28	0	0	14.68	0	0	0	0	0	0	6	6
	Inverter	MV4-10	369312	4908858	2	0	0	100.3	100.3	1	2626.63	3.25	0	79.39	0	0.29	0	0	14.7	0	0	0	0	0	0	5.94	5.94
	Inverter	MV4-11	369264	4908855	2	0	0	100.3	100.3	1	2642.55	3.25	0	79.44	0	0.29	0	0	14.73	0	0	0	0	0	0	5.86	5.86
	Inverter	MV3-7	367945	4907754	2	0	0	100.3	100.3	1	2713.54	3.25	0	79.67	0	0.3	0	0	14.86	0	0	0	0	0	0	5.48	5.48
	Inverter	MV5-1	370020	4909142	2	0	0	100.3	100.3	1	2728.04	3.25	0	79.72	0	0.31	0	0	14.88	0	0	0	0	0	0	5.4	5.4
	Inverter	MV3-18	367752	4907412	2	0	0	100.3	100.3	1	2743.36	3.25	0	79.77	0	0.31	0	0	14.91	0	0	0	0	0	0	5.32	5.32
	Inverter	MV4-9	369289	4909001	2	0	0	100.3	100.3	1	2767.79	3.25	0	79.84	0	0.32	0	0	14.96	0	0	0	0	0	0	5.2	5.2
	Inverter	MV4-8	369256	4909001	2	0	0	100.3	100.3	1	2780.18	3.25	0	79.88	0	0.32	0	0	14.98	0	0	0	0	0	0	5.13	5.13
	Inverter	MV6-4	370250	4906966	2	0	0	86.1	86.1	1	539.95	3.25	0	65.65	0	0.55	0	0	5.28	0	0	0	0	0	0	14.59	14.59
	Inverter	MV3-3	367939	4907927	2	0	0	100.3	100.3	1	2807.11	3.25	0	79.97	0	0.32	0	0	15.03	0	0	0	0	0	0	5	5
	Inverter	MV4-7	369035	4909001	2	0	0	100.3	100.3	1	2871.52	3.25	0	80.16	0	0.34	0	0	15.14	0	0	0	0	0	0	4.67	4.67
	Inverter	MV3-12	367668	4907594	2	0	0	100.3	100.3	1	2890.34	3.25	0	80.22	0	0.34	0	0	15.18	0	0	0	0	0	0	4.58	4.58
	Inverter	MV4-5	369289	4909199	2	0	0	100.3	100.3	1	2952.64	3.25	0	80.4	0	0.35	0	0	15.29	0	0	0	0	0	0	4.27	4.27
	Inverter	MV4-6	369243	4909192	2	0	0	100.3	100.3	1	2962.39	3.25	0	80.43	0	0.35	0	0	15.31	0	0	0	0	0	0	4.22	4.22
	Inverter	MV4-4	369027	4909199	2	0	0	100.3	100.3	1	3053.45	3.25	0	80.7	0	0.37	0	0	15.47	0	0	0	0	0	0	3.78	3.78
	Westbrook Inverter Enclosur	W_INV3	369508	4906164	2	0	0	89.1	89.1	1	848.23	3.25	0	69.57	0	0.65	0	0	6.02	0	0	0	0	0	0	12.82	12.82
	Inverter	MV4-2	369272	4909397	2	0	0	100.3	100.3	1	3144.68	3.25	0	80.95	0	0.39	0	0	15.63	0	0	0	0	0	0	3.35	3.35
	Inverter	MV4-3	369229	4909397	2	0	0	100.3	100.3	1	3159.18	3.25	0	80.99	0	0.39	0	0	15.65	0	0	0	0	0	0	3.28	3.28
	Inverter	MV4-1	369011	4909397	2	0	0	100.3	100.3	1	3240.49	3.25	0	81.21	0	0.41	0	0	15.79	0	0	0	0	0	0	2.9	2.9
	Westbrook Inverter Enclosur	W_INV2	369374	4906388	2	0	0	89.1	89.1	1	940.43	3.25	0	70.47	0	0.67	0	0	6.2	0	0	0	0	0	0	11.72	11.72
	DSTATCOM - 10 MVAR #1	DSAT1	369437	4908757	2.5	0	0	96.6	96.6	1	2486.79	3.5	0	78.91	0	3.32	0	0	2.01	0	0	0	0	0	0	12.39	12.39
	DSTATCOM - 10 MVAR #2	DSAT2	369403	4908757	2.5	0	0	96.6	96.6	1	2498.97	3.5	0	78.96	0	3.32	0	0	2.01	0	0	0	0	0	0	12.34	12.34
	Inverter	MV2-3	365820	4906641	2	0	0	100.3	100.3	1	4498.46	3.25	0	84.06	0	0.59	0	0	17.83	0	0	0	0	0	0	-2.17	-2.17
	Westbrook Inverter Enclosur	W_INV1	369409	4906578	2	0	0	86.1	86.1	1	916.56	3.25	0	70.24	0	0.67	0	0	6.16	0	0	0	0	0	0	8.99	8.99
	Inverter	MV2-4	365586	4906624	2	0	0	100.3	100.3	1	4731.49	3.25	0	84.5	0	0.62	0	0	18.18	0	0	0	0	0	0	-2.99	-2.99
	Inverter	MV1-15	365315	4904994	2	0	0	100.3	100.3	1	5200.63	3.25	0	85.32	0	0.66	0	0	18.87	0	0	0	0	0	0	-4.54	-4.54
	Inverter	MV1-12	365038	4905386	2	0	0	100.3	100.3	1	5377.77	3.25	0	85.61	0	0.67	0	0	19.13	0	0	0	0	0	0	-5.1	-5.1
	Inverter	MV1-4	364815	4905918	2	0	0	100.3	100.3	1	5522.27	3.25	0	85.84	0	0.68	0	0	19.33	0	0	0	0	0	0	-5.54	-5.54
	Inverter	MV1-2	364753	4906063	2	0	0	100.3	100.3	1	5572.59	3.25	0	85.92	0	0.68	0	0	19.4	0	0	0	0	0	0	-5.7	-5.7
	Inverter	MV1-8	364788	4905647	2	0	0	100.3	100.3	1	5580.67	3.25	0	85.93	0	0.69	0	0	19.41	0	0	0	0	0	0	-5.72	-5.72
	Inverter	MV1-1	364715	4906166	2	0	0	100.3	100.3	1	5604.71	3.25	0	85.97	0	0.69	0	0	19.45	0	0	0	0	0	0	-5.79	-5.79
	Inverter	MV1-5	364671	4905892	2	0	0	100.3	100.3	1	5668.07	3.25	0	86.07	0	0.69	0	0	19.54	0	0	0	0	0	0	-5.98	-5.98
	Inverter	MV1-11	364655	4905414	2	0	0	100.3	100.3	1	5748.95	3.25	0	86.19	0	0.69	0	0	19.65	0	0	0	0	0	0	-6.22	-6.22
	Inverter	MV1-9	364561	4905646	2	0	0	100.3	100.3	1	5805.65	3.25	0	86.28	0	0.7	0	0	19.73	0	0	0	0	0	0	-6.39	-6.39

Inverter	MV1-6	364477	4905835	2	0	0	100.3	100.3	1	5866.73	3.25	0	86.37	0	0.7	0	0	19.81	0	0	0	0	0	0	-6.57	-6.57
Inverter	MV2-1	365842	4906816	2	0	0	97.3	97.3	1	4488.15	3.25	0	84.04	0	0.59	0	0	17.81	0	0	0	0	0	0	-5.13	-5.13
Westbrook Inverter Transfor	W_INVTR6	369881	4906578	2	0	0	77.3	77.3	1	457.19	3.25	0	64.2	0	-1.44	0	0	0.34	0	0	0	0	0	0	14.24	14.24
Inverter	MV3-22	368656	4907142	2	0	0	89.1	89.1	1	1804.03	3.25	0	76.12	0	0.86	0	0	7.72	0	0	0	0	0	0	4.35	4.35
Westbrook Inverter Transfor	W_INVTR7	369786	4906417	2	0	0	77.3	77.3	1	527.66	3.25	0	65.45	0	-1.55	0	0	0.39	0	0	0	0	0	0	13.05	13.05
Inverter	MV1-14	365163	4905049	2	0	0	97.3	97.3	1	5332.38	3.25	0	85.54	0	0.67	0	0	19.06	0	0	0	0	0	0	-7.96	-7.96
Inverter	MV1-10	365004	4905564	2	0	0	97.3	97.3	1	5379.63	3.25	0	85.62	0	0.67	0	0	19.13	0	0	0	0	0	0	-8.11	-8.11
Inverter	MV1-7	364925	4905782	2	0	0	97.3	97.3	1	5427.3	3.25	0	85.69	0	0.68	0	0	19.2	0	0	0	0	0	0	-8.25	-8.25
Inverter	MV5-6	369982	4908507	2	0	0	89.1	89.1	1	2103.49	3.25	0	77.46	0	0.93	0	0	8.21	0	0	0	0	0	0	2.45	2.45
Inverter	MV1-13	364731	4905241	2	0	0	97.3	97.3	1	5707.68	3.25	0	86.13	0	0.69	0	0	19.59	0	0	0	0	0	0	-9.1	-9.1
Inverter	MV3-2	368671	4907928	2	0	0	89.1	89.1	1	2223.15	3.25	0	77.94	0	0.96	0	0	8.41	0	0	0	0	0	0	1.75	1.75
Fixed Reactor Bank 2	FRB2	369464	4908755	6	0	0	89.8	89.8	1	2475.52	5.25	0	78.87	0	-0.94	0	0	5.15	0	0	0	0	0	0	6.7	6.7
Fixed Reactor Bank 1	FRB1	369378	4908755	6	0	0	89.8	89.8	1	2506.34	5.25	0	78.98	0	-0.94	0	0	5.2	0	0	0	0	0	0	6.54	6.54
Westbrook Inverter Transfor	W_INVTR5	369725	4906574	2	0	0	77.3	77.3	1	605.91	3.25	0	66.65	0	-1.64	0	0	0.44	0	0	0	0	0	0	11.89	11.89
Inverter	MV4-15	369176	4908481	2	0	0	89.1	89.1	1	2345.49	3.25	0	78.4	0	0.99	0	0	8.6	0	0	0	0	0	0	1.06	1.06
Inverter	MV3-4	368502	4907925	2	0	0	89.1	89.1	1	2348.86	3.25	0	78.42	0	0.99	0	0	8.61	0	0	0	0	0	0	1.04	1.04
Inverter	MV4-14	369176	4908507	2	0	0	89.1	89.1	1	2368.26	3.25	0	78.49	0	0.99	0	0	8.64	0	0	0	0	0	0	0.94	0.94
Inverter	MV3-5	368340	4907843	2	0	0	89.1	89.1	1	2427.31	3.25	0	78.7	0	1.01	0	0	8.73	0	0	0	0	0	0	0.62	0.62
Inverter	MV4-13	369051	4908605	2	0	0	89.1	89.1	1	2515.04	3.25	0	79.01	0	1.03	0	0	8.87	0	0	0	0	0	0	0.15	0.15
Westbrook Inverter Transfor	W_INVTR4	369679	4906164	2	0	0	77.3	77.3	1	687.93	3.25	0	67.75	0	-1.71	0	0	0.49	0	0	0	0	0	0	10.81	10.81
Inverter	MV3-1	368156	4907976	2	0	0	89.1	89.1	1	2654.34	3.25	0	79.48	0	1.06	0	0	9.09	0	0	0	0	0	0	-0.57	-0.57
Inverter	MV4-12	369043	4908803	2	0	0	89.1	89.1	1	2691.89	3.25	0	79.6	0	1.07	0	0	9.15	0	0	0	0	0	0	-0.76	-0.76
Westbrook Inverter Transfor	W_INVTR1	369403	4906578	2	0	0	78.2	78.2	1	922.49	3.25	0	70.3	0	-1.88	0	0	0.63	0	0	0	0	0	0	9.19	9.19
Westbrook Inverter Transfor	W_INVTR3	369514	4906164	2	0	0	77.3	77.3	1	842.53	3.25	0	69.51	0	-1.83	0	0	0.59	0	0	0	0	0	0	9.07	9.07
Westbrook Inverter Transfor	W_INVTR2	369368	4906388	2	0	0	77.3	77.3	1	946.43	3.25	0	70.52	0	-1.9	0	0	0.65	0	0	0	0	0	0	8.07	8.07
Gardiner Substation	G_Sub	366586.3	4903349.9	2.5	0	0	90.8	90.8	1	4835.06	4.25	0	84.69	0	1.6	2.39	0.33	8.42	0	0	0	0	0	0	-6.33	-6.33
Inverter	MV2-2	365977	4906654	2	0	0	89.1	89.1	1	4342.29	3.25	0	83.75	0	1.48	0	0	11.57	0	0	0	0	0	0	-7.74	-7.74
Inverter Transformer	MV6-4 T	370244	4906966	2	0	0	69.4	69.4	1	540.69	3.25	0	65.66	0	1.12	0	0	3.05	0	0	0	0	0	0	-0.47	-0.47
Inverters	G_Inv2	366676.9	4903239.1	2	0	0	87.7	87.7	1	4837.92	3.25	0	84.69	0	2.85	0	0	5.77	0	0	0	0	0	0	-5.66	-5.66
Inverters	G_Inv4	366732.8	4903105	2	0	0	87.7	87.7	1	4886.28	3.25	0	84.78	0	2.86	0	0	5.82	0	0	0	0	0	0	-5.8	-5.8
Inverters	G_Inv6	366788.5	4902972	2	0	0	87.7	87.7	1	4937.81	3.25	0	84.87	0	2.86	0	0	5.87	0	0	0	0	0	0	-5.95	-5.95
Inverters	G_Inv1	366526.4	4903225.8	2	0	0	87.7	87.7	1	4960.62	3.25	0	84.91	0	2.86	0	0	5.9	0	0	0	0	0	0	-6.01	-6.01
Inverters	G_Inv8	366844.5	4902838.5	2	0	0	87.7	87.7	1	4993.14	3.25	0	84.97	0	2.86	0	0	5.93	0	0	0	0	0	0	-6.1	-6.1
Inverters	G_Inv3	366583.7	4903091.4	2	0	0	87.7	87.7	1	5005.63	3.25	0	84.99	0	2.87	0	0	5.95	0	0	0	0	0	0	-6.14	-6.14
Inverter	MV1-3	364440	4906039	2	0	0	89.1	89.1	1	5886.49	3.25	0	86.4	0	1.86	0	0	13.62	0	0	0	0	0	0	-12.82	-12.82
Inverters	G_Inv10	366900.7	4902704.8	2	0	0	87.7	87.7	1	5052.01	3.25	0	85.07	0	2.87	0	0	5.99	0	0	0	0	0	0	-6.27	-6.27
Inverters	G_Inv5	366638.5	4902958.1	2	0	0	87.7	87.7	1	5055.52	3.25	0	85.08	0	2.87	0	0	6	0	0	0	0	0	0	-6.28	-6.28
Inverters	G_Inv7	366694.6	4902824.7	2	0	0	87.7	87.7	1	5108.15	3.25	0	85.17	0	2.87	0	0	6.05	0	0	0	0	0	0	-6.43	-6.43
Inverters	G_Inv9	366750.9	4902691.8	2	0	0	87.7	87.7	1	5163.79	3.25	0	85.26	0	2.87	0	0	6.11	0	0	0	0	0	0	-6.59	-6.59
Inverter Transformer	MV6-1 T	370230	4907364	2	0	0	69.4	69.4	1	937.93	3.25	0	70.44	0	1.63	0	0	3.72	0	0	0	0	0	0	-6.45	-6.45
Inverter Transformer	MV6-3 T	370202	4907140	2	0	0	56.1	56.1	1	718.9	3.25	0	68.13	0	-0.08	0	0	4.18	0	0	0	0	0	0	-16.18	-16.18
Inverter Transformer	MV6-2 T	370091	4907339	2	0	0	56.1	56.1	1	936.03	3.25	0	70.43	0	-0.01	0	0	4.73	0	0	0	0	0	0	-19.09	-19.09
Inverter Transformer	MV2-1 T	365836	4906816	2	0	0	69.4	69.4	1	4494.13	3.25	0	84.05	0	2.9	0	0	7.03	0	0	0	0	0	0	-24.64	-24.64
Inverter Transformer	MV1-14 T	365157	4905049	2	0	0	69.4	69.4	1	5338.17	3.25	0	85.55	0	3.08	0	0	7.6	0	0	0	0	0	0	-26.88	-26.88
Inverter Transformer	MV1-10 T	365010	4905564	2	0	0	69.4	69.4	1	5373.71	3.25	0	85.61	0	3.08	0	0	7.63	0	0	0	0	0	0	-26.97	-26.97
Inverter Transformer	MV1-7 T	364919	4905782	2	0	0	69.4	69.4	1	5433.26	3.25	0	85.7	0	3.09	0	0	7.66	0	0	0	0	0	0	-27.11	-27.11
Inverter Transformer	MV1-13 T	364725	4905241	2	0	0	69.4	69.4	1	5713.54	3.25	0	86.14	0	3.14	0	0	7.84	0	0	0	0	0	0	-27.77	-27.77
Inverter Transformer	MV3-22 T	368661	4907142	2	0	0	56.1	56.1	1	1799.44	3.25	0	76.1	0	0.32	0	0	6.64	0	0	0	0	0	0	-27.01	-27.01
Inverter Transformer	MV3-20 T	368683	4907317	2	0	0	56.1	56.1	1	1856.25	3.25	0	76.37	0	0.34	0	0	6.76	0	0	0	0	0	0	-27.42	-27.42
Inverter Transformer	MV3-14 T	368678	4907498	2	0	0	56.1	56.1	1	1953.44	3.25	0	76.82	0	0.38	0	0	6.95	0	0	0	0	0	0	-28.09	-28.09
Inverter Transformer	MV3-21 T	368484	4907206	2	0	0	56.1	56.1	1	1987.35	3.25	0	76.97	0	0.4	0	0	7.02	0	0	0	0	0	0	-28.32	-28.32
Inverter Transformer	MV3-8 T	368685	4907712	2	0	0	56.1	56.1	1	2072.69	3.25	0	77.33	0	0.43	0	0	7.19	0	0	0	0	0	0	-28.89	-28.89
Inverter Transformer	MV3-16 T	368509	4907475	2	0	0	56.1	56.1	1	2085.35	3.25	0	77.38	0	0.44	0	0	7.21	0	0	0	0	0	0	-28.98	-28.98
Inverter Transformer	MV5-6 T	369987	4908507	2	0	0	56.1	56.1	1	2102.71	3.25	0	77.46	0	0.45	0	0	7.24	0	0	0	0	0	0	-29.09	-29.09
Inverter Transformer	MV3-19 T	368352	4907347	2	0	0	56.1	56.1	1	2165.35	3.25	0	77.71	0	0.47	0	0	7.36	0	0	0	0	0	0	-29.49	-29.49
Inverter Transformer	MV3-9 T	368517	4907703	2	0	0	56.1	56.1	1	2201.92	3.25	0	77.86	0	0.49	0	0	7.43	0	0	0	0	0	0	-29.72	-29.72
Inverter Transformer	MV3-2 T	368677	4907928	2	0	0	56.1	56.1	1	2218.73	3.25	0	77.92	0	0.5	0	0	7.47	0	0	0	0	0	0	-29.83	-29.83
Inverter Transformer	MV3-15 T	368351	4907477	2	0	0	56.1	56.1	1	2224.42	3.25	0	77.94	0	0.5	0	0	7.48	0	0	0	0	0	0	-29.86	-29.86
Inverter Transformer	MV5-4 T	370330	4908707	2	0	0	56.1	56.1	1	2277.26	3.25	0	78.15	0	0.52	0	0	7.58	0	0	0	0	0	0	-30.19	-30.19
Inverter Transformer	MV5-5 T	370021	4908690	2	0	0	56.1	56.1	1	2279.05	3.25	0	78.16	0	0.52	0	0	7.58	0	0	0	0	0	0	-30.2	-30.2
Inverter Transformer	MV3-11 T	368340	4907662	2	0	0	56.1	56.1	1	2326.59	3.25	0	78.33	0	0.54	0	0	7.67	0	0	0	0	0	0	-30.49	-30.49
Inverter Transformer	MV3-4 T	368507	4907925	2	0	0	56.1	56.1	1	2345.01	3.25	0	78.4	0	0.55	0	0	7.7	0	0	0	0	0	0	-30.6	-30.6
Inverter Transformer	MV4-15 T	369170	4908481	2	0	0	56.1	56.1	1	2348.41	3.25	0	78.42	0	0.55	0	0	7.71	0	0	0	0	0	0	-30.62	-30.62
Inverter Transformer	MV4-14 T	369182	4908507	2	0	0	56.1	56.1	1	2365.39	3.25	0	78.48	0	0.56	0	0	7.74	0	0	0	0	0	0	-30.72	-30.72
Inverter Transformer	MV3-17 T	368183	4907472	2	0	0	56.1	56.1	1	2371.75	3.25	0	78.5	0	0.56	0	0	7.75	0	0	0	0	0	0	-30.76	-30.76
Inverter Transformer	MV5-3 T	370237	4908851	2	0	0	56.1	56.1	1	2422.41	3.25	0	78.68	0	0.58	0	0	7.85	0	0	0	0	0	0	-31.06	-31.06
Inverter Transformer	MV3-5 T	368335	4907843	2	0	0	56.1	56.1	1	2431.38	3.25	0	78.72	0	0.59	0	0	7.86	0	0	0	0	0	0	-31.11	-31.11
Inverter Transformer	MV5-2 T	370011	4908853	2	0	0	56.1	56.1	1	2442.01	3.25	0	78.75	0	0.59	0	0	7.88	0	0	0	0	0	0	-31.17	-31.17
Inverter Transformer	MV3-10 T	368162	4907669	2	0	0	56.1	56.1	1	2482.86	3.25	0	78.9	0	0.61	0	0	7.96	0	0	0	0	0	0	-31.41	-31.41
Inverter Transformer	MV4-13 T	369057	4908605	2	0	0	56.1	56.1	1	2512.03	3.25	0	79	0	0.62	0	0	8.01	0	0	0	0	0	0	-31.58	-31.58
Inverter Transformer	MV3-6 T	368156	4907834	2	0	0	56.1	56.1	1	2574.22	3.25	0	79.21	0	0.65	0	0	8.12	0	0	0	0	0	0	-31.93	-31.93
Inverter Transformer	MV3-13 T	367958	4907577	2	0	0	56.1	56.1	1	2620.01	3.25	0	79.37	0	0.67	0	0	8.21	0	0	0	0	0	0	-32.18	-32.18
Inverter Transformer	MV4-10 T	369307	4908858	2	0	0	56.1	56.1	1	2628.54	3.25	0	79.39	0	0.67	0	0	8.22	0	0	0	0	0	0	-32.23	-32.23
Inverter Transformer	MV4-11 T	369269	4908855	2	0	0	56.1	56.1	1	2640.56	3.25	0	79.43	0	0.68	0	0	8.24	0	0	0	0	0	0	-32.29	-32.29

	Inverter Transformer	MV3-1 T	368150	4907976	2	0	0	56.1	56.1	1	2659.22	3.25	0	79.5	0	0.68	0	0	8.28	0	0	0	0	0	0	-32.4	-32.4
	Inverter Transformer	MV4-12 T	369049	4908803	2	0	0	56.1	56.1	1	2689.06	3.25	0	79.59	0	0.7	0	0	8.33	0	0	0	0	0	0	-32.56	-32.56
	Inverter Transformer	MV3-7 T	367951	4907754	2	0	0	56.1	56.1	1	2708.31	3.25	0	79.65	0	0.71	0	0	8.36	0	0	0	0	0	0	-32.66	-32.66
	Inverter Transformer	MV5-1 T	370015	4909142	2	0	0	56.1	56.1	1	2728.58	3.25	0	79.72	0	0.71	0	0	8.4	0	0	0	0	0	0	-32.77	-32.77
	Inverter Transformer	MV3-18 T	367757	4907412	2	0	0	56.1	56.1	1	2738.69	3.25	0	79.75	0	0.72	0	0	8.42	0	0	0	0	0	0	-32.83	-32.83
	Inverter Transformer	MV4-9 T	369284	4909001	2	0	0	56.1	56.1	1	2769.65	3.25	0	79.85	0	0.73	0	0	8.47	0	0	0	0	0	0	-32.99	-32.99
	Inverter Transformer	MV4-8 T	369262	4909001	2	0	0	56.1	56.1	1	2777.9	3.25	0	79.87	0	0.74	0	0	8.49	0	0	0	0	0	0	-33.04	-33.04
	Inverter Transformer	MV3-3 T	367944	4907927	2	0	0	56.1	56.1	1	2802.88	3.25	0	79.95	0	0.75	0	0	8.53	0	0	0	0	0	0	-33.17	-33.17
	Inverter Transformer	MV4-7 T	369040	4909001	2	0	0	56.1	56.1	1	2869.3	3.25	0	80.16	0	0.77	0	0	8.64	0	0	0	0	0	0	-33.52	-33.52
	Inverter Transformer	MV3-12 T	367674	4907594	2	0	0	56.1	56.1	1	2884.84	3.25	0	80.2	0	0.78	0	0	8.67	0	0	0	0	0	0	-33.6	-33.6
	Inverter Transformer	MV4-5 T	369283	4909199	2	0	0	56.1	56.1	1	2954.73	5.07	0	80.41	0	1.74	2.64	0.02	8.79	0	0	0	0	0	0	-37.53	-37.53
	Inverter Transformer	MV4-6 T	369249	4909192	2	0	0	56.1	56.1	1	2960.22	3.25	0	80.43	0	0.81	0	0	8.8	0	0	0	0	0	0	-33.98	-33.98
	Inverter Transformer	MV4-4 T	369033	4909199	2	0	0	56.1	56.1	1	3050.93	3.25	0	80.69	0	0.85	0	0	8.95	0	0	0	0	0	0	-34.44	-34.44
	Inverter Transformer	MV4-2 T	369267	4909397	2	0	0	56.1	56.1	1	3146.34	3.25	0	80.96	0	0.89	0	0	9.11	0	0	0	0	0	0	-34.9	-34.9
	Inverter Transformer	MV4-3 T	369234	4909397	2	0	0	56.1	56.1	1	3157.47	3.25	0	80.99	0	0.9	0	0	9.13	0	0	0	0	0	0	-34.96	-34.96
	Inverter Transformer	MV4-1 T	369017	4909397	2	0	0	56.1	56.1	1	3238.08	3.25	0	81.21	0	0.93	0	0	9.27	0	0	0	0	0	0	-35.34	-35.34
	Inverter Transformer	MV2-2 T	365982	4906654	2	0	0	56.1	56.1	1	4337.3	3.25	0	83.74	0	1.38	0	0	10.95	0	0	0	0	0	0	-40.01	-40.01
	Inverter Transformer	MV2-3 T	365814	4906641	2	0	0	56.1	56.1	1	4504.45	3.25	0	84.07	0	1.44	0	0	11.18	0	0	0	0	0	0	-40.64	-40.64
	Inverter Transformer	MV2-4 T	365590	4906628	2	0	0	56.1	56.1	1	4727.66	3.25	0	84.49	0	1.53	0	0	11.49	0	0	0	0	0	0	-41.45	-41.45
	Inverter Transformer	MV1-15 T	365309	4904994	2	0	0	56.1	56.1	1	5206.39	3.25	0	85.33	0	1.7	0	0	12.12	0	0	0	0	0	0	-43.09	-43.09
	Inverter Transformer	MV1-12 T	365044	4905386	2	0	0	56.1	56.1	1	5371.89	3.25	0	85.6	0	1.76	0	0	12.33	0	0	0	0	0	0	-43.64	-43.64
	Inverter Transformer	MV1-4 T	364821	4905918	2	0	0	56.1	56.1	1	5516.29	3.25	0	85.83	0	1.81	0	0	12.52	0	0	0	0	0	0	-44.1	-44.1
	Inverter Transformer	MV1-2 T	364759	4906063	2	0	0	56.1	56.1	1	5566.6	3.25	0	85.91	0	1.82	0	0	12.58	0	0	0	0	0	0	-44.25	-44.25
	Inverter Transformer	MV1-8 T	364782	4905647	2	0	0	56.1	56.1	1	5586.62	3.25	0	85.94	0	1.83	0	0	12.6	0	0	0	0	0	0	-44.32	-44.32
	Inverter Transformer	MV1-1 T	364721	4906166	2	0	0	56.1	56.1	1	5598.72	3.25	0	85.96	0	1.83	0	0	12.62	0	0	0	0	0	0	-44.36	-44.36
	Inverter Transformer	MV1-5 T	364676	4905892	2	0	0	56.1	56.1	1	5663.09	3.25	0	86.06	0	1.86	0	0	12.7	0	0	0	0	0	0	-44.56	-44.56
	Inverter Transformer	MV1-11 T	364649	4905414	2	0	0	56.1	56.1	1	5754.86	3.25	0	86.2	0	1.89	0	0	12.81	0	0	0	0	0	0	-44.84	-44.84
	Inverter Transformer	MV1-9 T	364555	4905646	2	0	0	56.1	56.1	1	5811.6	3.25	0	86.29	0	1.9	0	0	12.88	0	0	0	0	0	0	-45.01	-45.01
	Inverter Transformer	MV1-6 T	364482	4905835	2	0	0	56.1	56.1	1	5861.76	3.25	0	86.36	0	1.92	0	0	12.94	0	0	0	0	0	0	-45.16	-45.16
	Inverter Transformer	MV1-3 T	364435	4906039	2	0	0	56.1	56.1	1	5891.48	3.25	0	86.4	0	1.93	0	0	12.97	0	0	0	0	0	0	-45.25	-45.25
	Line Reactor	NGR	369421	4908787.5	5	0	0	45.4	45.4	1	2520.97	5.25	0	79.03	0	3.35	1.3	0.11	1.03	0	0	0	0	0	0	-39.36	-39.36
Limit. Valu	0	0																								
Level D/N:	30.9736	30.9736																								

Receiver: Existing Noise Receptor
ID: W-R17
X: 370313.5
Y: 4906490.2
Z: 4.5
Ground: 0

ISO	Description	ID	X	Y	Z	Ground	ReflOrd	LxT	LxN	L/A	Dist.	hm	Freq	Adiv	K0b	Agr	Abar	z	Aatm	Afol	Ahous	Cmet	CmetN	Dc	RL	LtotT	LtotN
	Sol_Luce Substation	S_Substation	369426	4908792	3.5	0	0	112.1	112.1	1	2466.97	5.25	0	78.84	0	0.14	3.57	0.33	5.14	0	0	0	0	0	0	24.39	24.39
	Inverter	MV6-3	370207	4907140	2	0	0	100.3	100.3	1	658.47	3.25	0	67.37	0	-0.44	0	0	9.53	0	0	0	0	0	0	23.85	23.85
	Inverter	MV6-2	370085	4907339	2	0	0	100.3	100.3	1	879.02	3.25	0	69.88	0	-0.31	0	0	10.49	0	0	0	0	0	0	20.25	20.25
	Inverter	MV6-1	370235	4907364	2	0	0	97.3	97.3	1	877.32	3.25	0	69.86	0	-0.31	0	0	10.48	0	0	0	0	0	0	17.28	17.28
	Westbrook Inverter Enclosur	W_INV6	369875	4906578	2	0	0	89.1	89.1	1	447.21	3.25	0	64.01	0	0.49	0	0	4.94	0	0	0	0	0	0	19.61	19.61
	Inverter	MV3-20	368689	4907317	2	0	0	100.3	100.3	1	1822.8	3.25	0	76.21	0	0.08	0	0	13.08	0	0	0	0	0	0	10.94	10.94
	SubstationTransformer	W_ST	369711.17	4906112.3	2.5	0	0	92	92	1	711.08	4.24	0	68.04	0	0.41	3.73	0.23	1.91	0	0	0	0	0	0	17.88	17.88
	Inverter	MV3-14	368684	4907498	2	0	0	100.3	100.3	1	1915.97	3.25	0	76.65	0	0.1	0	0	13.28	0	0	0	0	0	0	10.28	10.28
	Westbrook Inverter Enclosur	W_INV7	369780	4906417	2	0	0	89.1	89.1	1	538.5	3.25	0	65.62	0	0.55	0	0	5.27	0	0	0	0	0	0	17.62	17.62
	Inverter	MV3-21	368478	4907206	2	0	0	100.3	100.3	1	1970.14	3.25	0	76.89	0	0.12	0	0	13.4	0	0	0	0	0	0	9.9	9.9
	Inverter	MV3-8	368680	4907712	2	0	0	100.3	100.3	1	2039.88	3.25	0	77.19	0	0.14	0	0	13.55	0	0	0	0	0	0	9.43	9.43
	Inverter	MV3-16	368514	4907475	2	0	0	100.3	100.3	1	2051.35	3.25	0	77.24	0	0.14	0	0	13.57	0	0	0	0	0	0	9.36	9.36
	Inverter	MV3-19	368357	4907347	2	0	0	100.3	100.3	1	2135.89	3.25	0	77.59	0	0.17	0	0	13.74	0	0	0	0	0	0	8.81	8.81
	Inverter	MV3-9	368512	4907703	2	0	0	100.3	100.3	1	2171.7	3.25	0	77.74	0	0.18	0	0	13.82	0	0	0	0	0	0	8.58	8.58
	Inverter	MV3-15	368357	4907477	2	0	0	100.3	100.3	1	2191.27	3.25	0	77.81	0	0.18	0	0	13.86	0	0	0	0	0	0	8.46	8.46
	Westbrook Inverter Enclosur	W_INV5	369719	4906574	2	0	0	89.1	89.1	1	600.38	3.25	0	66.57	0	0.58	0	0	5.45	0	0	0	0	0	0	16.46	16.46
	Inverter	MV5-4	370324	4908707	2	0	0	100.3	100.3	1	2216.83	3.25	0	77.91	0	0.19	0	0	13.91	0	0	0	0	0	0	8.3	8.3
	Inverter	MV5-5	370015	4908690	2	0	0	100.3	100.3	1	2219.96	3.25	0	77.93	0	0.19	0	0	13.91	0	0	0	0	0	0	8.28	8.28
	Inverter	MV3-11	368346	4907662	2	0	0	100.3	100.3	1	2290.02	3.25	0	78.2	0	0.21	0	0	14.05	0	0	0	0	0	0	7.86	7.86
	Inverter	MV3-17	368178	4907472	2	0	0	100.3	100.3	1	2350.38	3.25	0	78.42	0	0.22	0	0	14.17	0	0	0	0	0	0	7.5	7.5
	Inverter	MV5-3	370231	4908851	2	0	0	100.3	100.3	1	2362.24	3.25	0	78.47	0	0.22	0	0	14.19	0	0	0	0	0	0	7.43	7.43
	Inverter	MV5-2	370006	4908853	2	0	0	100.3	100.3	1	2382.73	3.25	0	78.54	0	0.23	0	0	14.23	0	0	0	0	0	0	7.31	7.31
	Inverter	MV3-10	368167	4907669	2	0	0	100.3	100.3	1	2448.89	3.25	0	78.78	0	0.25	0	0	14.36	0	0	0	0	0	0	6.93	6.93
	Inverter	MV6-4	370250	4906966	2	0	0	86.1	86.1	1	480.03	3.25	0	64.63	0	0.51	0	0	5.07	0	0	0	0	0	0	15.85	15.85
	Inverter	MV3-6	368162	4907834	2	0	0	100.3	100.3	1	2536.68	3.25	0	79.09	0	0.27	0	0	14.53	0	0	0	0	0	0	6.43	6.43
	Inverter	MV4-10	369312	4908858	2	0	0	100.3	100.3	1	2570.89	3.25	0	79.2	0	0.27	0	0	14.59	0	0	0	0	0	0	6.25	6.25
	Inverter	MV4-11	369264	4908855	2	0	0	100.3	100.3	1	2587.23	3.25	0	79.26	0	0.28	0	0	14.62	0	0	0	0	0	0	6.16	6.16
	Inverter	MV3-13	367963	4907577	2	0	0	100.3	100.3	1	2589.59	3.25	0	79.26	0	0.28	0	0	14.63	0	0	0	0	0	0	6.14	6.14
	Westbrook Inverter Enclosur	W_INV4	369673	4906164	2	0	0	89.1	89.1	1	718.79	3.25	0	68.13	0	0.62	0	0	5.74	0	0	0	0	0	0	14.56	14.56
	Inverter	MV5-1	370020	4909142	2	0	0	100.3	100.3	1	2667.99	3.25	0	79.52	0	0.29	0	0	14.77	0	0	0	0	0	0	5.72	5.72
	Inverter	MV3-7	367945	4907754	2	0	0	100.3	100.3	1	2684.58	3.25	0	79.58	0	0.3	0	0	14.8	0	0	0	0	0	0	5.63	5.63
	Inverter	MV4-9	369289	4909001	2	0	0	100.3	100.3	1	2711.77	3.25	0	79.67	0	0.3	0	0	14.85	0	0	0	0	0	0	5.49	5.49

Inverter	MV3-18	367752	4907412	2	0	0	100.3	100.3	1	2722.32	3.25	0	79.7	0	0.31	0	0	14.87	0	0	0	0	0	0	5.43	5.43
Inverter	MV4-8	369256	4909001	2	0	0	100.3	100.3	1	2724.41	3.25	0	79.71	0	0.31	0	0	14.88	0	0	0	0	0	0	5.42	5.42
Inverter	MV3-3	367939	4907927	2	0	0	100.3	100.3	1	2775.36	3.25	0	79.87	0	0.32	0	0	14.97	0	0	0	0	0	0	5.16	5.16
Inverter	MV4-7	369035	4909001	2	0	0	100.3	100.3	1	2817.57	3.25	0	80	0	0.33	0	0	15.05	0	0	0	0	0	0	4.94	4.94
Inverter	MV3-12	367668	4907594	2	0	0	100.3	100.3	1	2866.54	3.25	0	80.15	0	0.34	0	0	15.13	0	0	0	0	0	0	4.69	4.69
Inverter	MV4-5	369289	4909199	2	0	0	100.3	100.3	1	2896.07	3.25	0	80.24	0	0.34	0	0	15.19	0	0	0	0	0	0	4.55	4.55
Inverter	MV4-6	369243	4909192	2	0	0	100.3	100.3	1	2906.15	3.25	0	80.27	0	0.34	0	0	15.21	0	0	0	0	0	0	4.5	4.5
Inverter	MV4-4	369027	4909199	2	0	0	100.3	100.3	1	2998.78	3.25	0	80.54	0	0.36	0	0	15.37	0	0	0	0	0	0	4.04	4.04
Inverter	MV4-2	369272	4909397	2	0	0	100.3	100.3	1	3087.75	3.25	0	80.79	0	0.38	0	0	15.53	0	0	0	0	0	0	3.61	3.61
Inverter	MV4-3	369229	4909397	2	0	0	100.3	100.3	1	3102.52	3.25	0	80.83	0	0.38	0	0	15.55	0	0	0	0	0	0	3.54	3.54
Westbrook Inverter Enclosur	W_INV3	369508	4906164	2	0	0	89.1	89.1	1	869.05	3.25	0	69.78	0	0.66	0	0	6.06	0	0	0	0	0	0	12.56	12.56
Inverter	MV4-1	369011	4909397	2	0	0	100.3	100.3	1	3185.28	3.25	0	81.06	0	0.4	0	0	15.7	0	0	0	0	0	0	3.16	3.16
Westbrook Inverter Enclosur	W_INV2	369374	4906388	2	0	0	89.1	89.1	1	945.05	3.25	0	70.51	0	0.67	0	0	6.21	0	0	0	0	0	0	11.67	11.67
DSTATCOM - 10 MVAR #1	DSAT1	369437	4908757	2.5	0	0	96.6	96.6	1	2430.36	3.5	0	78.71	0	3.31	0	0	1.97	0	0	0	0	0	0	12.63	12.63
DSTATCOM - 10 MVAR #2	DSAT2	369403	4908757	2.5	0	0	96.6	96.6	1	2442.83	3.5	0	78.76	0	3.31	0	0	1.98	0	0	0	0	0	0	12.58	12.58
Inverter	MV2-3	365820	4906641	2	0	0	100.3	100.3	1	4496.03	3.25	0	84.06	0	0.59	0	0	17.82	0	0	0	0	0	0	-2.16	-2.16
Westbrook Inverter Enclosur	W_INV1	369409	4906578	2	0	0	86.1	86.1	1	908.75	3.25	0	70.17	0	0.66	0	0	6.14	0	0	0	0	0	0	9.08	9.08
Inverter	MV2-4	365586	4906624	2	0	0	100.3	100.3	1	4729.39	3.25	0	84.5	0	0.62	0	0	18.18	0	0	0	0	0	0	-2.98	-2.98
Inverter	MV1-15	365315	4904994	2	0	0	100.3	100.3	1	5217.63	3.25	0	85.35	0	0.66	0	0	18.9	0	0	0	0	0	0	-4.6	-4.6
Inverter	MV1-12	365038	4905386	2	0	0	100.3	100.3	1	5389.82	3.25	0	85.63	0	0.67	0	0	19.14	0	0	0	0	0	0	-5.14	-5.14
Inverter	MV1-4	364815	4905918	2	0	0	100.3	100.3	1	5528.19	3.25	0	85.85	0	0.68	0	0	19.34	0	0	0	0	0	0	-5.56	-5.56
Inverter	MV1-2	364753	4906063	2	0	0	100.3	100.3	1	5576.89	3.25	0	85.93	0	0.69	0	0	19.41	0	0	0	0	0	0	-5.71	-5.71
Inverter	MV1-8	364788	4905647	2	0	0	100.3	100.3	1	5589.47	3.25	0	85.95	0	0.69	0	0	19.43	0	0	0	0	0	0	-5.75	-5.75
Inverter	MV1-1	364715	4906166	2	0	0	100.3	100.3	1	5607.88	3.25	0	85.98	0	0.69	0	0	19.45	0	0	0	0	0	0	-5.8	-5.8
Inverter	MV1-5	364671	4905892	2	0	0	100.3	100.3	1	5674.12	3.25	0	86.08	0	0.69	0	0	19.54	0	0	0	0	0	0	-6	-6
Inverter	MV1-11	364655	4905414	2	0	0	100.3	100.3	1	5759.93	3.25	0	86.21	0	0.69	0	0	19.66	0	0	0	0	0	0	-6.26	-6.26
Inverter	MV1-9	364561	4905646	2	0	0	100.3	100.3	1	5814.12	3.25	0	86.29	0	0.7	0	0	19.74	0	0	0	0	0	0	-6.41	-6.41
Inverter	MV1-6	364477	4905835	2	0	0	100.3	100.3	1	5873.16	3.25	0	86.38	0	0.7	0	0	19.82	0	0	0	0	0	0	-6.59	-6.59
Westbrook Inverter Transfor	W_INVTR6	369881	4906578	2	0	0	77.3	77.3	1	441.33	3.25	0	63.9	0	-1.42	0	0	0.33	0	0	0	0	0	0	14.53	14.53
Inverter	MV2-1	365842	4906816	2	0	0	97.3	97.3	1	4483.35	3.25	0	84.03	0	0.59	0	0	17.8	0	0	0	0	0	0	-5.11	-5.11
Inverter	MV3-22	368656	4907142	2	0	0	89.1	89.1	1	1781.05	3.25	0	76.01	0	0.86	0	0	7.68	0	0	0	0	0	0	4.5	4.5
Inverter	MV5-6	369982	4908507	2	0	0	89.1	89.1	1	2043.86	3.25	0	77.21	0	0.92	0	0	8.12	0	0	0	0	0	0	2.81	2.81
Westbrook Inverter Transfor	W_INVTR7	369786	4906417	2	0	0	77.3	77.3	1	532.56	3.25	0	65.53	0	-1.55	0	0	0.39	0	0	0	0	0	0	12.97	12.97
Inverter	MV1-14	365163	4905049	2	0	0	97.3	97.3	1	5348.34	3.25	0	85.56	0	0.67	0	0	19.09	0	0	0	0	0	0	-8.01	-8.01
Inverter	MV1-10	365004	4905564	2	0	0	97.3	97.3	1	5389.68	3.25	0	85.63	0	0.67	0	0	19.14	0	0	0	0	0	0	-8.14	-8.14
Inverter	MV1-7	364925	4905782	2	0	0	97.3	97.3	1	5434.84	3.25	0	85.7	0	0.68	0	0	19.21	0	0	0	0	0	0	-8.28	-8.28
Inverter	MV3-2	368671	4907928	2	0	0	89.1	89.1	1	2182.91	3.25	0	77.78	0	0.95	0	0	8.34	0	0	0	0	0	0	1.99	1.99
Inverter	MV1-13	364731	4905241	2	0	0	97.3	97.3	1	5720.56	3.25	0	86.15	0	0.69	0	0	19.61	0	0	0	0	0	0	-9.14	-9.14
Fixed Reactor Bank 2	FRB2	369464	4908755	6	0	0	89.8	89.8	1	2418.88	5.25	0	78.67	0	-0.95	0	0	5.06	0	0	0	0	0	0	6.99	6.99
Fixed Reactor Bank 1	FRB1	369378	4908755	6	0	0	89.8	89.8	1	2450.4	5.25	0	78.78	0	-0.94	0	0	5.11	0	0	0	0	0	0	6.83	6.83
Westbrook Inverter Transfor	W_INVTR5	369725	4906574	2	0	0	77.3	77.3	1	594.44	3.25	0	66.48	0	-1.62	0	0	0.43	0	0	0	0	0	0	12.05	12.05
Inverter	MV4-15	369176	4908481	2	0	0	89.1	89.1	1	2292.86	3.25	0	78.21	0	0.98	0	0	8.52	0	0	0	0	0	0	1.36	1.36
Inverter	MV3-4	368502	4907925	2	0	0	89.1	89.1	1	2310.89	3.25	0	78.28	0	0.98	0	0	8.55	0	0	0	0	0	0	1.26	1.26
Inverter	MV4-14	369176	4908507	2	0	0	89.1	89.1	1	2315.47	3.25	0	78.29	0	0.98	0	0	8.55	0	0	0	0	0	0	1.23	1.23
Inverter	MV3-5	368340	4907843	2	0	0	89.1	89.1	1	2392.65	3.25	0	78.58	0	1	0	0	8.68	0	0	0	0	0	0	0.8	0.8
Inverter	MV4-13	369051	4908605	2	0	0	89.1	89.1	1	2462.98	3.25	0	78.83	0	1.02	0	0	8.79	0	0	0	0	0	0	0.42	0.42
Inverter	MV3-1	368156	4907976	2	0	0	89.1	89.1	1	2619.62	3.25	0	79.36	0	1.05	0	0	9.03	0	0	0	0	0	0	-0.39	-0.39
Inverter	MV4-12	369043	4908803	2	0	0	89.1	89.1	1	2638.79	3.25	0	79.43	0	1.06	0	0	9.06	0	0	0	0	0	0	-0.49	-0.49
Westbrook Inverter Transfor	W_INVTR4	369679	4906164	2	0	0	77.3	77.3	1	713.44	3.25	0	68.07	0	-1.73	0	0	0.51	0	0	0	0	0	0	10.5	10.5
Westbrook Inverter Transfor	W_INVTR1	369403	4906578	2	0	0	78.2	78.2	1	914.73	3.25	0	70.23	0	-1.88	0	0	0.63	0	0	0	0	0	0	9.26	9.26
Westbrook Inverter Transfor	W_INVTR3	369514	4906164	2	0	0	77.3	77.3	1	863.49	3.25	0	69.73	0	-1.84	0	0	0.6	0	0	0	0	0	0	8.86	8.86
Westbrook Inverter Transfor	W_INVTR2	369368	4906388	2	0	0	77.3	77.3	1	951.01	3.25	0	70.56	0	-1.9	0	0	0.65	0	0	0	0	0	0	8.03	8.03
Gardiner Substation	G_Sub	366586.3	4903349.9	2.5	0	0	90.8	90.8	1	4873.76	4.25	0	84.76	0	1.61	2.38	0.33	8.47	0	0	0	0	0	0	-6.44	-6.44
Inverter	MV2-2	365977	4906654	2	0	0	89.1	89.1	1	4339.59	3.25	0	83.75	0	1.48	0	0	11.56	0	0	0	0	0	0	-7.73	-7.73
Inverter Transformer	MV6-4 T	370244	4906966	2	0	0	69.4	69.4	1	480.86	3.25	0	64.64	0	1.02	0	0	2.91	0	0	0	0	0	0	0.78	0.78
Inverters	G_Inv2	366676.9	4903239.1	2	0	0	87.7	87.7	1	4877.96	3.25	0	84.76	0	2.86	0	0	5.81	0	0	0	0	0	0	-5.77	-5.77
Inverters	G_Inv4	366732.8	4903105	2	0	0	87.7	87.7	1	4927.58	3.25	0	84.85	0	2.86	0	0	5.86	0	0	0	0	0	0	-5.92	-5.92
Inverters	G_Inv6	366788.5	4902972	2	0	0	87.7	87.7	1	4980.3	3.25	0	84.95	0	2.86	0	0	5.92	0	0	0	0	0	0	-6.07	-6.07
Inverters	G_Inv1	366526.4	4903225.8	2	0	0	87.7	87.7	1	4999.84	3.25	0	84.98	0	2.86	0	0	5.94	0	0	0	0	0	0	-6.12	-6.12
Inverter	MV1-3	364440	4906039	2	0	0	89.1	89.1	1	5890.81	3.25	0	86.4	0	1.86	0	0	13.62	0	0	0	0	0	0	-12.83	-12.83
Inverters	G_Inv8	366844.5	4902838.5	2	0	0	87.7	87.7	1	5036.75	3.25	0	85.04	0	2.87	0	0	5.98	0	0	0	0	0	0	-6.23	-6.23
Inverters	G_Inv3	366583.7	4903091.4	2	0	0	87.7	87.7	1	5046.11	3.25	0	85.06	0	2.87	0	0	5.99	0	0	0	0	0	0	-6.26	-6.26
Inverters	G_Inv10	366900.7	4902704.8	2	0	0	87.7	87.7	1	5096.71	3.25	0	85.15	0	2.87	0	0	6.04	0	0	0	0	0	0	-6.4	-6.4
Inverters	G_Inv5	366638.5	4902958.1	2	0	0	87.7	87.7	1	5097.19	3.25	0	85.15	0	2.87	0	0	6.04	0	0	0	0	0	0	-6.4	-6.4
Inverters	G_Inv7	366694.6	4902824.7	2	0	0	87.7	87.7	1	5150.95	3.25	0	85.24	0	2.87	0	0	6.1	0	0	0	0	0	0	-6.55	-6.55
Inverters	G_Inv9	366750.9	4902691.8	2	0	0	87.7	87.7	1	5207.68	3.25	0	85.33	0	2.88	0	0	6.16	0	0	0	0	0	0	-6.71	-6.71
Inverter Transformer	MV6-1 T	370230	4907364	2	0	0	69.4	69.4	1	877.78	3.25	0	69.87	0	1.57	0	0	3.63	0	0	0	0	0	0	-5.72	-5.72
Inverter Transformer	MV6-3 T	370202	4907140	2	0	0	56.1	56.1	1	659.3	3.25	0	67.38	0	-0.09	0	0	4.02	0	0	0	0	0	0	-15.25	-15.25
Inverter Transformer	MV6-2 T	370091	4907339	2	0	0	56.1	56.1	1	877.48	3.25	0	69.86	0	-0.03	0	0	4.59	0	0	0	0	0	0	-18.37	-18.37
Inverter Transformer	MV2-1 T	365836	4906816	2	0	0	69.4	69.4	1	4489.34	3.25	0	84.04	0	2.9	0	0	7.03	0	0	0	0	0	0	-24.63	-24.63
Inverter Transformer	MV1-14 T	365157	4905049	2	0	0	69.4	69.4	1	5354.12	3.25	0	85.57	0	3.08	0	0	7.61	0	0	0	0	0	0	-26.92	-26.92
Inverter Transformer	MV1-10 T	365010	4905564	2	0	0	69.4	69.4	1	5383.77	3.25	0	85.62	0	3.09	0	0	7.63	0	0	0	0	0	0	-26.99	-26.99
Inverter Transformer	MV1-7 T	364919	4905782	2	0	0	69.4	69.4	1	5440.79	3.25	0	85.71	0	3.1	0	0	7.67	0	0	0	0	0	0	-27.13	-27.13
Inverter Transformer	MV1-13 T	364725	4905241	2	0	0	69.4	69.4	1	5726.42	3.25	0	86.16	0	3.15	0	0	7.85	0	0	0	0	0	0	-27.8	-27.8

	Inverter Transformer	MV3-22 T	368661	4907142	2	0	0	56.1	56.1	1	1776.4	3.25	0	75.99	0	0.31	0	0	6.6	0	0	0	0	0	0	-26.84	-26.84
	Inverter Transformer	MV3-20 T	368683	4907317	2	0	0	56.1	56.1	1	1828.15	3.25	0	76.24	0	0.33	0	0	6.7	0	0	0	0	0	0	-27.21	-27.21
	Inverter Transformer	MV3-14 T	368678	4907498	2	0	0	56.1	56.1	1	1921.07	3.25	0	76.67	0	0.37	0	0	6.89	0	0	0	0	0	0	-27.87	-27.87
	Inverter Transformer	MV3-21 T	368484	4907206	2	0	0	56.1	56.1	1	1964.55	3.25	0	76.87	0	0.39	0	0	6.97	0	0	0	0	0	0	-28.17	-28.17
	Inverter Transformer	MV3-8 T	368685	4907712	2	0	0	56.1	56.1	1	2035.88	3.25	0	77.18	0	0.42	0	0	7.11	0	0	0	0	0	0	-28.65	-28.65
	Inverter Transformer	MV5-6 T	369987	4908507	2	0	0	56.1	56.1	1	2043.06	3.25	0	77.21	0	0.42	0	0	7.13	0	0	0	0	0	0	-28.7	-28.7
	Inverter Transformer	MV3-16 T	368509	4907475	2	0	0	56.1	56.1	1	2055.74	3.25	0	77.26	0	0.43	0	0	7.15	0	0	0	0	0	0	-28.78	-28.78
	Inverter Transformer	MV3-19 T	368352	4907347	2	0	0	56.1	56.1	1	2140.47	3.25	0	77.61	0	0.46	0	0	7.32	0	0	0	0	0	0	-29.33	-29.33
	Inverter Transformer	MV3-9 T	368517	4907703	2	0	0	56.1	56.1	1	2167.56	3.25	0	77.72	0	0.47	0	0	7.37	0	0	0	0	0	0	-29.5	-29.5
	Inverter Transformer	MV3-2 T	368677	4907928	2	0	0	56.1	56.1	1	2178.4	3.25	0	77.76	0	0.48	0	0	7.39	0	0	0	0	0	0	-29.57	-29.57
	Inverter Transformer	MV3-15 T	368351	4907477	2	0	0	56.1	56.1	1	2196.63	3.25	0	77.84	0	0.49	0	0	7.42	0	0	0	0	0	0	-29.69	-29.69
	Inverter Transformer	MV5-4 T	370330	4908707	2	0	0	56.1	56.1	1	2216.86	3.25	0	77.91	0	0.5	0	0	7.46	0	0	0	0	0	0	-29.81	-29.81
	Inverter Transformer	MV5-5 T	370021	4908690	2	0	0	56.1	56.1	1	2219.16	3.25	0	77.92	0	0.5	0	0	7.47	0	0	0	0	0	0	-29.83	-29.83
	Inverter Transformer	MV3-11 T	368340	4907662	2	0	0	56.1	56.1	1	2295.17	3.25	0	78.22	0	0.53	0	0	7.61	0	0	0	0	0	0	-30.3	-30.3
	Inverter Transformer	MV4-15 T	369170	4908481	2	0	0	56.1	56.1	1	2295.84	3.25	0	78.22	0	0.53	0	0	7.61	0	0	0	0	0	0	-30.3	-30.3
	Inverter Transformer	MV3-4 T	368507	4907925	2	0	0	56.1	56.1	1	2306.97	3.25	0	78.26	0	0.53	0	0	7.63	0	0	0	0	0	0	-30.37	-30.37
	Inverter Transformer	MV4-14 T	369182	4908507	2	0	0	56.1	56.1	1	2312.53	3.25	0	78.28	0	0.54	0	0	7.64	0	0	0	0	0	0	-30.4	-30.4
	Inverter Transformer	MV3-17 T	368183	4907472	2	0	0	56.1	56.1	1	2345.84	3.25	0	78.41	0	0.55	0	0	7.71	0	0	0	0	0	0	-30.6	-30.6
	Inverter Transformer	MV5-3 T	370237	4908851	2	0	0	56.1	56.1	1	2362.04	3.25	0	78.47	0	0.56	0	0	7.74	0	0	0	0	0	0	-30.7	-30.7
	Inverter Transformer	MV5-2 T	370011	4908853	2	0	0	56.1	56.1	1	2382.09	3.25	0	78.54	0	0.57	0	0	7.77	0	0	0	0	0	0	-30.82	-30.82
	Inverter Transformer	MV3-5 T	368335	4907843	2	0	0	56.1	56.1	1	2396.78	3.25	0	78.59	0	0.57	0	0	7.8	0	0	0	0	0	0	-30.91	-30.91
	Inverter Transformer	MV3-10 T	368162	4907669	2	0	0	56.1	56.1	1	2453.27	3.25	0	78.79	0	0.6	0	0	7.9	0	0	0	0	0	0	-31.24	-31.24
	Inverter Transformer	MV4-13 T	369057	4908605	2	0	0	56.1	56.1	1	2459.91	3.25	0	78.82	0	0.6	0	0	7.92	0	0	0	0	0	0	-31.28	-31.28
	Inverter Transformer	MV3-6 T	368156	4907834	2	0	0	56.1	56.1	1	2541.77	3.25	0	79.1	0	0.63	0	0	8.07	0	0	0	0	0	0	-31.74	-31.74
	Inverter Transformer	MV4-10 T	369307	4908858	2	0	0	56.1	56.1	1	2572.84	3.25	0	79.21	0	0.65	0	0	8.12	0	0	0	0	0	0	-31.92	-31.92
	Inverter Transformer	MV4-11 T	369269	4908855	2	0	0	56.1	56.1	1	2585.2	3.25	0	79.25	0	0.65	0	0	8.14	0	0	0	0	0	0	-31.99	-31.99
	Inverter Transformer	MV3-13 T	367958	4907577	2	0	0	56.1	56.1	1	2594.13	3.25	0	79.28	0	0.66	0	0	8.16	0	0	0	0	0	0	-32.04	-32.04
	Inverter Transformer	MV3-1 T	368150	4907976	2	0	0	56.1	56.1	1	2624.56	3.25	0	79.38	0	0.67	0	0	8.21	0	0	0	0	0	0	-32.21	-32.21
	Inverter Transformer	MV4-12 T	369049	4908803	2	0	0	56.1	56.1	1	2635.91	3.25	0	79.42	0	0.67	0	0	8.23	0	0	0	0	0	0	-32.27	-32.27
	Inverter Transformer	MV5-1 T	370015	4909142	2	0	0	56.1	56.1	1	2668.55	3.25	0	79.53	0	0.69	0	0	8.29	0	0	0	0	0	0	-32.45	-32.45
	Inverter Transformer	MV3-7 T	367951	4907754	2	0	0	56.1	56.1	1	2679.29	3.25	0	79.56	0	0.69	0	0	8.31	0	0	0	0	0	0	-32.51	-32.51
	Inverter Transformer	MV4-9 T	369284	4909001	2	0	0	56.1	56.1	1	2713.67	3.25	0	79.67	0	0.71	0	0	8.37	0	0	0	0	0	0	-32.69	-32.69
	Inverter Transformer	MV3-18 T	367757	4907412	2	0	0	56.1	56.1	1	2717.61	3.25	0	79.68	0	0.71	0	0	8.38	0	0	0	0	0	0	-32.71	-32.71
	Inverter Transformer	MV4-8 T	369262	4909001	2	0	0	56.1	56.1	1	2722.09	3.25	0	79.7	0	0.71	0	0	8.39	0	0	0	0	0	0	-32.74	-32.74
	Inverter Transformer	MV3-3 T	367944	4907927	2	0	0	56.1	56.1	1	2771.09	3.25	0	79.85	0	0.73	0	0	8.47	0	0	0	0	0	0	-33	-33
	Inverter Transformer	MV4-7 T	369040	4909001	2	0	0	56.1	56.1	1	2815.3	3.25	0	79.99	0	0.75	0	0	8.55	0	0	0	0	0	0	-33.23	-33.23
	Inverter Transformer	MV3-12 T	367674	4907594	2	0	0	56.1	56.1	1	2861	3.25	0	80.13	0	0.77	0	0	8.63	0	0	0	0	0	0	-33.47	-33.47
	Inverter Transformer	MV4-5 T	369283	4909199	2	0	0	56.1	56.1	1	2898.19	3.25	0	80.24	0	0.79	0	0	8.69	0	0	0	0	0	0	-33.66	-33.66
	Inverter Transformer	MV4-6 T	369249	4909192	2	0	0	56.1	56.1	1	2903.94	3.25	0	80.26	0	0.79	0	0	8.7	0	0	0	0	0	0	-33.69	-33.69
	Inverter Transformer	MV4-4 T	369033	4909199	2	0	0	56.1	56.1	1	2996.21	3.25	0	80.53	0	0.83	0	0	8.86	0	0	0	0	0	0	-34.16	-34.16
	Inverter Transformer	MV4-2 T	369267	4909397	2	0	0	56.1	56.1	1	3089.44	3.25	0	80.8	0	0.87	0	0	9.02	0	0	0	0	0	0	-34.63	-34.63
	Inverter Transformer	MV4-3 T	369234	4909397	2	0	0	56.1	56.1	1	3100.78	3.25	0	80.83	0	0.87	0	0	9.04	0	0	0	0	0	0	-34.68	-34.68
	Inverter Transformer	MV4-1 T	369017	4909397	2	0	0	56.1	56.1	1	3182.83	3.25	0	81.06	0	0.91	0	0	9.17	0	0	0	0	0	0	-35.08	-35.08
	Inverter Transformer	MV2-2 T	365982	4906654	2	0	0	56.1	56.1	1	4334.6	3.25	0	83.74	0	1.38	0	0	10.94	0	0	0	0	0	0	-40	-40
	Inverter Transformer	MV2-3 T	365814	4906641	2	0	0	56.1	56.1	1	4502.03	3.25	0	84.07	0	1.44	0	0	11.18	0	0	0	0	0	0	-40.63	-40.63
	Inverter Transformer	MV2-4 T	365590	4906628	2	0	0	56.1	56.1	1	4725.51	3.25	0	84.49	0	1.52	0	0	11.49	0	0	0	0	0	0	-41.44	-41.44
	Inverter Transformer	MV1-15 T	365309	4904994	2	0	0	56.1	56.1	1	5223.37	3.25	0	85.36	0	1.71	0	0	12.14	0	0	0	0	0	0	-43.15	-43.15
	Inverter Transformer	MV1-12 T	365044	4905386	2	0	0	56.1	56.1	1	5383.95	3.25	0	85.62	0	1.76	0	0	12.35	0	0	0	0	0	0	-43.67	-43.67
	Inverter Transformer	MV1-4 T	364821	4905918	2	0	0	56.1	56.1	1	5522.23	3.25	0	85.84	0	1.81	0	0	12.52	0	0	0	0	0	0	-44.12	-44.12
	Inverter Transformer	MV1-2 T	364759	4906063	2	0	0	56.1	56.1	1	5570.9	3.25	0	85.92	0	1.82	0	0	12.58	0	0	0	0	0	0	-44.27	-44.27
	Inverter Transformer	MV1-8 T	364782	4905647	2	0	0	56.1	56.1	1	5595.4	3.25	0	85.96	0	1.83	0	0	12.61	0	0	0	0	0	0	-44.34	-44.34
	Inverter Transformer	MV1-1 T	364721	4906166	2	0	0	56.1	56.1	1	5601.89	3.25	0	85.97	0	1.83	0	0	12.62	0	0	0	0	0	0	-44.37	-44.37
	Inverter Transformer	MV1-5 T	364676	4905892	2	0	0	56.1	56.1	1	5669.15	3.25	0	86.07	0	1.86	0	0	12.7	0	0	0	0	0	0	-44.57	-44.57
	Inverter Transformer	MV1-11 T	364649	4905414	2	0	0	56.1	56.1	1	5765.83	3.25	0	86.22	0	1.89	0	0	12.82	0	0	0	0	0	0	-44.87	-44.87
	Inverter Transformer	MV1-9 T	364555	4905646	2	0	0	56.1	56.1	1	5820.05	3.25	0	86.3	0	1.91	0	0	12.89	0	0	0	0	0	0	-45.03	-45.03
	Inverter Transformer	MV1-6 T	364482	4905835	2	0	0	56.1	56.1	1	5868.19	3.25	0	86.37	0	1.92	0	0	12.95	0	0	0	0	0	0	-45.18	-45.18
	Inverter Transformer	MV1-3 T	364435	4906039	2	0	0	56.1	56.1	1	5895.79	3.25	0	86.41	0	1.93	0	0	12.98	0	0	0	0	0	0	-45.26	-45.26
	Line Reactor	NGR	369421	4908787.5	5	0	0	45.4	45.4	1	2464.58	5.25	0	78.83	0	3.35	1.3	0.11	1.01	0	0	0	0	0	0	-39.14	-39.14
Limit. Valu	0	0																								
Level D/N:	31.3961	31.3961																								

Receiver: Existing Noise Receptor
ID: W-R18
X: 370804.1
Y: 4907053.9
Z: 4.5
Ground: 0

ISO	Description	ID	X	Y	Z	Ground	ReflOrd	LxT	LxN	L/A	Dist.	hm	Freq	Adiv	K0b	Agr	Abar	z	Aatm	Afol	Ahous	Cmet	CmetN	Dc	RL	LtotT	LtotN
	Sol_Luce Substation	S_Substation	369426	4908792	3.5	0	0	112.1	112.1	1	2218.14	5.25	0	77.92	0	0.06	3.63	0.3	4.73	0	0	0	0	0	0	25.73	25.73
	Inverter	MV6-3	370207	4907140	2	0	0	100.3	100.3	1	603.28	3.25	0	66.61	0	-0.48	0	0	9.22	0	0	0	0	0	0	24.95	24.95
	Inverter	MV6-2	370085	4907339	2	0	0	100.3	100.3	1	773.56	3.25	0	68.77	0	-0.37	0	0	10.07	0	0	0	0	0	0	21.84	21.84
	Inverter	MV6-1	370235	4907364	2	0	0	97.3	97.3	1	648.11	3.25	0	67.23	0	-0.45	0	0	9.47	0	0	0	0	0	0	21.05	21.05
	Inverter	MV5-4	370324	4908707	2	0	0	100.3	100.3	1	1721.41	3.25	0	75.72	0	0.04	0	0	12.85	0	0	0	0	0	0	11.7	11.7

Inverter	MV5-5	370015	4908690	2	0	0	100.3	100.3	1	1816.45	3.25	0	76.18	0	0.07	0	0	13.07	0	0	0	0	0	0	10.99	10.99
Inverter	MV5-3	370231	4908851	2	0	0	100.3	100.3	1	1886.27	3.25	0	76.51	0	0.1	0	0	13.22	0	0	0	0	0	0	10.49	10.49
Inverter	MV5-2	370006	4908853	2	0	0	100.3	100.3	1	1968.18	3.25	0	76.88	0	0.12	0	0	13.39	0	0	0	0	0	0	9.92	9.92
Inverter	MV3-20	368689	4907317	2	0	0	100.3	100.3	1	2131.4	3.25	0	77.57	0	0.17	0	0	13.73	0	0	0	0	0	0	8.84	8.84
Inverter	MV3-14	368684	4907498	2	0	0	100.3	100.3	1	2166.12	3.25	0	77.71	0	0.17	0	0	13.8	0	0	0	0	0	0	8.62	8.62
Inverter	MV3-8	368680	4907712	2	0	0	100.3	100.3	1	2223.71	3.25	0	77.94	0	0.19	0	0	13.92	0	0	0	0	0	0	8.26	8.26
Inverter	MV5-1	370020	4909142	2	0	0	100.3	100.3	1	2230.47	3.25	0	77.97	0	0.19	0	0	13.93	0	0	0	0	0	0	8.22	8.22
Inverter	MV3-16	368514	4907475	2	0	0	100.3	100.3	1	2328.5	3.25	0	78.34	0	0.22	0	0	14.13	0	0	0	0	0	0	7.63	7.63
Inverter	MV3-21	368478	4907206	2	0	0	100.3	100.3	1	2331.07	3.25	0	78.35	0	0.22	0	0	14.13	0	0	0	0	0	0	7.61	7.61
Inverter	MV4-10	369312	4908858	2	0	0	100.3	100.3	1	2341.18	3.25	0	78.39	0	0.22	0	0	14.15	0	0	0	0	0	0	7.55	7.55
Inverter	MV4-11	369264	4908855	2	0	0	100.3	100.3	1	2369.78	3.25	0	78.49	0	0.23	0	0	14.21	0	0	0	0	0	0	7.38	7.38
Inverter	MV3-9	368512	4907703	2	0	0	100.3	100.3	1	2382.24	3.25	0	78.54	0	0.23	0	0	14.23	0	0	0	0	0	0	7.31	7.31
Inverter	MV3-19	368357	4907347	2	0	0	100.3	100.3	1	2464.59	3.25	0	78.83	0	0.25	0	0	14.39	0	0	0	0	0	0	6.84	6.84
Inverter	MV4-9	369289	4909001	2	0	0	100.3	100.3	1	2467.13	3.25	0	78.84	0	0.25	0	0	14.4	0	0	0	0	0	0	6.82	6.82
Inverter	MV3-15	368357	4907477	2	0	0	100.3	100.3	1	2483.41	3.25	0	78.9	0	0.25	0	0	14.43	0	0	0	0	0	0	6.73	6.73
Inverter	MV4-8	369256	4909001	2	0	0	100.3	100.3	1	2487.53	5.13	0	78.92	0	0.98	3.32	0.03	14.43	0	0	0	0	0	0	2.66	2.66
Inverter	MV3-11	368346	4907662	2	0	0	100.3	100.3	1	2532.2	3.25	0	79.07	0	0.26	0	0	14.52	0	0	0	0	0	0	6.46	6.46
Inverter	MV4-5	369289	4909199	2	0	0	100.3	100.3	1	2626.21	3.25	0	79.39	0	0.29	0	0	14.7	0	0	0	0	0	0	5.94	5.94
Inverter	MV4-7	369035	4909001	2	0	0	100.3	100.3	1	2630.76	3.25	0	79.4	0	0.29	0	0	14.7	0	0	0	0	0	0	5.92	5.92
Inverter	MV4-6	369243	4909192	2	0	0	100.3	100.3	1	2647.36	3.25	0	79.46	0	0.29	0	0	14.73	0	0	0	0	0	0	5.83	5.83
Inverter	MV3-17	368178	4907472	2	0	0	100.3	100.3	1	2659.18	3.25	0	79.49	0	0.29	0	0	14.76	0	0	0	0	0	0	5.77	5.77
Inverter	MV3-10	368167	4907669	2	0	0	100.3	100.3	1	2707.89	3.25	0	79.65	0	0.3	0	0	14.85	0	0	0	0	0	0	5.51	5.51
Inverter	MV3-6	368162	4907834	2	0	0	100.3	100.3	1	2754.86	3.25	0	79.8	0	0.31	0	0	14.93	0	0	0	0	0	0	5.27	5.27
Inverter	MV4-4	369027	4909199	2	0	0	100.3	100.3	1	2785.6	3.25	0	79.9	0	0.32	0	0	14.99	0	0	0	0	0	0	5.11	5.11
Inverter	MV4-2	369272	4909397	2	0	0	100.3	100.3	1	2799.55	3.25	0	79.94	0	0.32	0	0	15.01	0	0	0	0	0	0	5.03	5.03
Inverter	MV4-3	369229	4909397	2	0	0	100.3	100.3	1	2823.31	3.25	0	80.02	0	0.33	0	0	15.06	0	0	0	0	0	0	4.91	4.91
Inverter	MV3-13	367963	4907577	2	0	0	100.3	100.3	1	2888.86	3.25	0	80.21	0	0.34	0	0	15.17	0	0	0	0	0	0	4.58	4.58
Inverter	MV6-4	370250	4906966	2	0	0	86.1	86.1	1	561.03	3.25	0	65.98	0	0.56	0	0	5.34	0	0	0	0	0	0	14.18	14.18
Inverter	MV3-7	367945	4907754	2	0	0	100.3	100.3	1	2943.57	3.25	0	80.38	0	0.35	0	0	15.27	0	0	0	0	0	0	4.31	4.31
Inverter	MV4-1	369011	4909397	2	0	0	100.3	100.3	1	2950.48	3.25	0	80.4	0	0.35	0	0	15.28	0	0	0	0	0	0	4.28	4.28
Inverter	MV3-3	367939	4907927	2	0	0	100.3	100.3	1	2995.18	3.25	0	80.53	0	0.36	0	0	15.36	0	0	0	0	0	0	4.06	4.06
Inverter	MV3-18	367752	4907412	2	0	0	100.3	100.3	1	3073.04	3.25	0	80.75	0	0.38	0	0	15.5	0	0	0	0	0	0	3.68	3.68
Inverter	MV3-12	367668	4907594	2	0	0	100.3	100.3	1	3182.27	3.25	0	81.05	0	0.4	0	0	15.69	0	0	0	0	0	0	3.17	3.17
DSTATCOM - 10 MVAR #1	DSAT1	369437	4908757	2.5	0	0	96.6	96.6	1	2183.92	3.5	0	77.78	0	3.26	0	0	1.83	0	0	0	0	0	0	13.76	13.76
DSTATCOM - 10 MVAR #2	DSAT2	369403	4908757	2.5	0	0	96.6	96.6	1	2205.37	3.5	0	77.87	0	3.26	0	0	1.84	0	0	0	0	0	0	13.65	13.65
SubstationTransformer	W_ST	369711.17	4906112.3	2.5	0	0	92	92	1	1442.63	4.25	0	74.18	0	0.63	3.78	0.21	3.38	0	0	0	0	0	0	10.01	10.01
Westbrook Inverter Enclosur	W_INV6	369875	4906578	2	0	0	89.1	89.1	1	1043.89	3.25	0	71.37	0	0.69	0	0	6.4	0	0	0	0	0	0	10.59	10.59
Westbrook Inverter Enclosur	W_INV5	369719	4906574	2	0	0	89.1	89.1	1	1186.49	3.25	0	72.49	0	0.72	0	0	6.66	0	0	0	0	0	0	9.19	9.19
Westbrook Inverter Enclosur	W_INV7	369780	4906417	2	0	0	89.1	89.1	1	1206	3.25	0	72.63	0	0.73	0	0	6.69	0	0	0	0	0	0	9.01	9.01
Inverter	MV2-3	365820	4906641	2	0	0	100.3	100.3	1	5001.17	3.25	0	84.98	0	0.64	0	0	18.58	0	0	0	0	0	0	-3.89	-3.89
Inverter	MV2-4	365586	4906624	2	0	0	100.3	100.3	1	5235.78	3.25	0	85.38	0	0.66	0	0	18.92	0	0	0	0	0	0	-4.65	-4.65
Westbrook Inverter Enclosur	W_INV4	369673	4906164	2	0	0	89.1	89.1	1	1439.21	3.25	0	74.16	0	0.78	0	0	7.1	0	0	0	0	0	0	7.01	7.01
Westbrook Inverter Enclosur	W_INV3	369508	4906164	2	0	0	89.1	89.1	1	1572.2	3.25	0	74.93	0	0.81	0	0	7.33	0	0	0	0	0	0	5.99	5.99
Westbrook Inverter Enclosur	W_INV2	369374	4906388	2	0	0	89.1	89.1	1	1577.53	3.25	0	74.96	0	0.81	0	0	7.34	0	0	0	0	0	0	5.95	5.95
Inverter	MV1-15	365315	4904994	2	0	0	100.3	100.3	1	5862.88	3.25	0	86.36	0	0.7	0	0	19.81	0	0	0	0	0	0	-6.56	-6.56
Inverter	MV1-12	365038	4905386	2	0	0	100.3	100.3	1	6002.48	3.25	0	86.57	0	0.7	0	0	20	0	0	0	0	0	0	-6.96	-6.96
Inverter	MV1-4	364815	4905918	2	0	0	100.3	100.3	1	6095.87	3.25	0	86.7	0	0.71	0	0	20.12	0	0	0	0	0	0	-7.22	-7.22
Inverter	MV5-6	369982	4908507	2	0	0	89.1	89.1	1	1669.54	3.25	0	75.45	0	0.83	0	0	7.5	0	0	0	0	0	0	5.28	5.28
Inverter	MV1-2	364753	4906063	2	0	0	100.3	100.3	1	6131.7	3.25	0	86.75	0	0.71	0	0	20.17	0	0	0	0	0	0	-7.32	-7.32
Inverter	MV1-1	364715	4906166	2	0	0	100.3	100.3	1	6153.5	3.25	0	86.78	0	0.71	0	0	20.2	0	0	0	0	0	0	-7.38	-7.38
Inverter	MV1-8	364788	4905647	2	0	0	100.3	100.3	1	6178.42	3.25	0	86.82	0	0.71	0	0	20.23	0	0	0	0	0	0	-7.45	-7.45
Inverter	MV1-5	364671	4905892	2	0	0	100.3	100.3	1	6242.19	3.25	0	86.91	0	0.71	0	0	20.32	0	0	0	0	0	0	-7.63	-7.63
Inverter	MV1-11	364655	4905414	2	0	0	100.3	100.3	1	6364.02	3.25	0	87.07	0	0.71	0	0	20.48	0	0	0	0	0	0	-7.96	-7.96
Inverter	MV1-9	364561	4905646	2	0	0	100.3	100.3	1	6399.88	3.25	0	87.12	0	0.71	0	0	20.53	0	0	0	0	0	0	-8.05	-8.05
Inverter	MV1-6	364477	4905835	2	0	0	100.3	100.3	1	6443.44	3.25	0	87.18	0	0.71	0	0	20.58	0	0	0	0	0	0	-8.17	-8.17
Inverter	MV2-1	365842	4906816	2	0	0	97.3	97.3	1	4967.8	3.25	0	84.92	0	0.64	0	0	18.53	0	0	0	0	0	0	-6.78	-6.78
Fixed Reactor Bank 2	FRB2	369464	4908755	6	0	0	89.8	89.8	1	2165.55	5.25	0	77.71	0	-0.98	0	0	4.64	0	0	0	0	0	0	8.4	8.4
Fixed Reactor Bank 1	FRB1	369378	4908755	6	0	0	89.8	89.8	1	2219.8	5.25	0	77.93	0	-0.97	0	0	4.73	0	0	0	0	0	0	8.09	8.09
Westbrook Inverter Enclosur	W_INV1	369409	4906578	2	0	0	86.1	86.1	1	1474.04	3.25	0	74.37	0	0.79	0	0	7.16	0	0	0	0	0	0	3.74	3.74
Inverter	MV3-22	368656	4907142	2	0	0	89.1	89.1	1	2149.91	3.25	0	77.65	0	0.94	0	0	8.29	0	0	0	0	0	0	2.18	2.18
Inverter	MV4-15	369176	4908481	2	0	0	89.1	89.1	1	2165.02	3.25	0	77.71	0	0.95	0	0	8.31	0	0	0	0	0	0	2.09	2.09
Inverter	MV4-14	369176	4908507	2	0	0	89.1	89.1	1	2182.25	3.25	0	77.78	0	0.95	0	0	8.34	0	0	0	0	0	0	1.99	1.99
Inverter	MV3-2	368671	4907928	2	0	0	89.1	89.1	1	2305.25	3.25	0	78.25	0	0.98	0	0	8.54	0	0	0	0	0	0	1.29	1.29
Inverter	MV1-14	365163	4905049	2	0	0	97.3	97.3	1	5986.79	3.25	0	86.54	0	0.7	0	0	19.98	0	0	0	0	0	0	-9.91	-9.91
Inverter	MV1-10	365004	4905564	2	0	0	97.3	97.3	1	5988.4	3.25	0	86.55	0	0.7	0	0	19.98	0	0	0	0	0	0	-9.92	-9.92
Inverter	MV1-7	364925	4905782	2	0	0	97.3	97.3	1	6015.11	3.25	0	86.58	0	0.71	0	0	20.01	0	0	0	0	0	0	-9.99	-9.99
Inverter	MV4-13	369051	4908605	2	0	0	89.1	89.1	1	2340.79	3.25	0	78.39	0	0.99	0	0	8.59	0	0	0	0	0	0	1.09	1.09
Inverter	MV1-13	364731	4905241	2	0	0	97.3	97.3	1	6337.91	3.25	0	87.04	0	0.71	0	0	20.45	0	0	0	0	0	0	-10.89	-10.89
Inverter	MV3-4	368502	4907925	2	0	0	89.1	89.1	1	2461.4	3.25	0	78.82	0	1.02	0	0	8.79	0	0	0	0	0	0	0.43	0.43
Inverter	MV4-12	369043	4908803	2	0	0	89.1	89.1	1	2482.1	3.25	0	78.9	0	1.02	0	0	8.82	0	0	0	0	0	0	0.32	0.32
Inverter	MV3-5	368340	4907843	2	0	0	89.1	89.1	1	2587.37	3.25	0	79.26	0	1.05	0	0	8.98	0	0	0	0	0	0	-0.23	-0.23
Inverter	MV3-1	368156	4907976	2	0	0	89.1	89.1	1	2804.05	3.25	0	79.96	0	1.1	0	0	9.32	0	0	0	0	0	0	-1.31	-1.31
Westbrook Inverter Transfor	W_INVTR6	369881	4906578	2	0	0	77.3	77.3	1	1038.56	3.25	0	71.33	0	-1.96	0	0	0.7	0	0	0	0	0	0	7.27	7.27
Westbrook Inverter Transfor	W_INVTR5	369725	4906574	2	0	0	77.3	77.3	1	1181	3.25	0	72.45	0	-2.04	0	0	0.78	0	0	0	0	0	0	6.15	6.15

Gardiner Substation	G_Sub	366586.3	4903349.9	2.5	0	0	90.8	90.8	1	5613.33	4.25	0	85.98	0	1.79	2.19	0.34	9.32	0	0	0	0	0	0	-8.52	-8.52
Westbrook Inverter Transfor	W_INVTR7	369786	4906417	2	0	0	77.3	77.3	1	1200.91	3.25	0	72.59	0	-2.05	0	0	0.79	0	0	0	0	0	0	6.01	6.01
Inverter	MV2-2	365977	4906654	2	0	0	89.1	89.1	1	4843.64	3.25	0	84.7	0	1.6	0	0	12.25	0	0	0	0	0	0	-9.5	-9.5
Westbrook Inverter Transfor	W_INVTR1	369403	4906578	2	0	0	78.2	78.2	1	1479.72	3.25	0	74.4	0	-2.19	0	0	0.94	0	0	0	0	0	0	5.09	5.09
Inverter Transformer	MV6-4 T	370244	4906966	2	0	0	69.4	69.4	1	566.96	3.25	0	66.07	0	1.16	0	0	3.1	0	0	0	0	0	0	-0.98	-0.98
Westbrook Inverter Transfor	W_INVTR4	369679	4906164	2	0	0	77.3	77.3	1	1434.5	3.25	0	74.13	0	-2.17	0	0	0.92	0	0	0	0	0	0	4.46	4.46
Westbrook Inverter Transfor	W_INVTR3	369514	4906164	2	0	0	77.3	77.3	1	1567.25	3.25	0	74.9	0	-2.23	0	0	0.99	0	0	0	0	0	0	3.68	3.68
Westbrook Inverter Transfor	W_INVTR2	369368	4906388	2	0	0	77.3	77.3	1	1582.98	3.25	0	74.99	0	-2.24	0	0	1	0	0	0	0	0	0	3.59	3.59
Inverter Transformer	MV6-1 T	370230	4907364	2	0	0	69.4	69.4	1	652.5	3.25	0	67.29	0	1.29	0	0	3.27	0	0	0	0	0	0	-2.5	-2.5
Inverter	MV1-3	364440	4906039	2	0	0	89.1	89.1	1	6444.52	3.25	0	87.18	0	1.99	0	0	14.32	0	0	0	0	0	0	-14.44	-14.44
Inverters	G_Inv2	366676.9	4903239.1	2	0	0	87.7	87.7	1	5620.19	3.25	0	86	0	2.9	0	0	6.59	0	0	0	0	0	0	-7.82	-7.82
Inverters	G_Inv4	366732.8	4903105	2	0	0	87.7	87.7	1	5671.8	3.25	0	86.07	0	2.9	0	0	6.64	0	0	0	0	0	0	-7.96	-7.96
Inverters	G_Inv6	366788.5	4902972	2	0	0	87.7	87.7	1	5725.99	3.25	0	86.16	0	2.9	0	0	6.7	0	0	0	0	0	0	-8.1	-8.1
Inverters	G_Inv1	366526.4	4903225.8	2	0	0	87.7	87.7	1	5740.48	3.25	0	86.18	0	2.91	0	0	6.71	0	0	0	0	0	0	-8.14	-8.14
Inverters	G_Inv8	366844.5	4902838.5	2	0	0	87.7	87.7	1	5783.43	3.25	0	86.24	0	2.91	0	0	6.76	0	0	0	0	0	0	-8.25	-8.25
Inverters	G_Inv3	366583.7	4903091.4	2	0	0	87.7	87.7	1	5789.06	3.25	0	86.25	0	2.91	0	0	6.76	0	0	0	0	0	0	-8.26	-8.26
Inverters	G_Inv5	366638.5	4902958.1	2	0	0	87.7	87.7	1	5841.9	3.25	0	86.33	0	2.91	0	0	6.82	0	0	0	0	0	0	-8.4	-8.4
Inverters	G_Inv10	366900.7	4902704.8	2	0	0	87.7	87.7	1	5843.9	3.25	0	86.33	0	2.91	0	0	6.82	0	0	0	0	0	0	-8.4	-8.4
Inverters	G_Inv7	366694.6	4902824.7	2	0	0	87.7	87.7	1	5896.96	3.25	0	86.41	0	2.91	0	0	6.87	0	0	0	0	0	0	-8.54	-8.54
Inverters	G_Inv9	366750.9	4902691.8	2	0	0	87.7	87.7	1	5954.52	3.25	0	86.5	0	2.92	0	0	6.93	0	0	0	0	0	0	-8.68	-8.68
Inverter Transformer	MV6-3 T	370202	4907140	2	0	0	56.1	56.1	1	608.23	3.25	0	66.68	0	-0.1	0	0	3.88	0	0	0	0	0	0	-14.4	-14.4
Inverter Transformer	MV6-2 T	370091	4907339	2	0	0	56.1	56.1	1	767.98	3.25	0	68.71	0	-0.06	0	0	4.31	0	0	0	0	0	0	-16.9	-16.9
Inverter Transformer	MV2-1 T	365836	4906816	2	0	0	69.4	69.4	1	4973.79	3.25	0	84.93	0	3.01	0	0	7.36	0	0	0	0	0	0	-25.95	-25.95
Inverter Transformer	MV1-10 T	365010	4905564	2	0	0	69.4	69.4	1	5982.59	3.25	0	86.54	0	3.19	0	0	8.01	0	0	0	0	0	0	-28.38	-28.38
Inverter Transformer	MV1-14 T	365157	4905049	2	0	0	69.4	69.4	1	5992.44	3.25	0	86.55	0	3.19	0	0	8.01	0	0	0	0	0	0	-28.4	-28.4
Inverter Transformer	MV1-7 T	364919	4905782	2	0	0	69.4	69.4	1	6020.97	3.25	0	86.59	0	3.19	0	0	8.03	0	0	0	0	0	0	-28.47	-28.47
Inverter Transformer	MV1-13 T	364725	4905241	2	0	0	69.4	69.4	1	6343.66	3.25	0	87.05	0	3.24	0	0	8.22	0	0	0	0	0	0	-29.16	-29.16
Inverter Transformer	MV5-6 T	369987	4908507	2	0	0	56.1	56.1	1	1667.08	3.25	0	75.44	0	0.27	0	0	6.37	0	0	0	0	0	0	-26.02	-26.02
Inverter Transformer	MV5-4 T	370330	4908707	2	0	0	56.1	56.1	1	1719.74	3.25	0	75.71	0	0.29	0	0	6.48	0	0	0	0	0	0	-26.42	-26.42
Inverter Transformer	MV5-5 T	370021	4908690	2	0	0	56.1	56.1	1	1813.86	3.25	0	76.17	0	0.33	0	0	6.67	0	0	0	0	0	0	-27.11	-27.11
Inverter Transformer	MV5-3 T	370237	4908851	2	0	0	56.1	56.1	1	1884.46	3.25	0	76.5	0	0.36	0	0	6.81	0	0	0	0	0	0	-27.62	-27.62
Inverter Transformer	MV5-2 T	370011	4908853	2	0	0	56.1	56.1	1	1966.16	3.25	0	76.87	0	0.39	0	0	6.98	0	0	0	0	0	0	-28.18	-28.18
Inverter Transformer	MV3-20 T	368683	4907317	2	0	0	56.1	56.1	1	2137.36	3.25	0	77.6	0	0.46	0	0	7.31	0	0	0	0	0	0	-29.31	-29.31
Inverter Transformer	MV3-22 T	368661	4907142	2	0	0	56.1	56.1	1	2144.91	3.25	0	77.63	0	0.47	0	0	7.33	0	0	0	0	0	0	-29.36	-29.36
Inverter Transformer	MV4-15 T	369170	4908481	2	0	0	56.1	56.1	1	2169.54	3.25	0	77.73	0	0.48	0	0	7.37	0	0	0	0	0	0	-29.52	-29.52
Inverter Transformer	MV3-14 T	368678	4907498	2	0	0	56.1	56.1	1	2171.99	3.25	0	77.74	0	0.48	0	0	7.38	0	0	0	0	0	0	-29.53	-29.53
Inverter Transformer	MV4-14 T	369182	4908507	2	0	0	56.1	56.1	1	2177.78	3.25	0	77.76	0	0.48	0	0	7.39	0	0	0	0	0	0	-29.57	-29.57
Inverter Transformer	MV3-8 T	368685	4907712	2	0	0	56.1	56.1	1	2218.94	3.25	0	77.92	0	0.5	0	0	7.47	0	0	0	0	0	0	-29.83	-29.83
Inverter Transformer	MV5-1 T	370015	4909142	2	0	0	56.1	56.1	1	2232.23	3.25	0	77.97	0	0.5	0	0	7.49	0	0	0	0	0	0	-29.91	-29.91
Inverter Transformer	MV3-2 T	368677	4907928	2	0	0	56.1	56.1	1	2299.7	3.25	0	78.23	0	0.53	0	0	7.62	0	0	0	0	0	0	-30.33	-30.33
Inverter Transformer	MV3-21 T	368484	4907206	2	0	0	56.1	56.1	1	2325.08	3.25	0	78.33	0	0.54	0	0	7.67	0	0	0	0	0	0	-30.48	-30.48
Inverter Transformer	MV3-16 T	368509	4907475	2	0	0	56.1	56.1	1	2333.41	3.25	0	78.36	0	0.55	0	0	7.68	0	0	0	0	0	0	-30.53	-30.53
Inverter Transformer	MV4-13 T	369057	4908605	2	0	0	56.1	56.1	1	2336.3	3.25	0	78.37	0	0.55	0	0	7.69	0	0	0	0	0	0	-30.55	-30.55
Inverter Transformer	MV4-10 T	369307	4908858	2	0	0	56.1	56.1	1	2344.37	3.25	0	78.4	0	0.55	0	0	7.7	0	0	0	0	0	0	-30.59	-30.59
Inverter Transformer	MV4-11 T	369269	4908855	2	0	0	56.1	56.1	1	2366.54	3.25	0	78.48	0	0.56	0	0	7.74	0	0	0	0	0	0	-30.73	-30.73
Inverter Transformer	MV3-9 T	368517	4907703	2	0	0	56.1	56.1	1	2377.43	3.25	0	78.52	0	0.56	0	0	7.76	0	0	0	0	0	0	-30.79	-30.79
Inverter Transformer	MV3-4 T	368507	4907925	2	0	0	56.1	56.1	1	2456.72	3.25	0	78.81	0	0.6	0	0	7.91	0	0	0	0	0	0	-31.26	-31.26
Inverter Transformer	MV3-19 T	368352	4907347	2	0	0	56.1	56.1	1	2469.56	3.25	0	78.85	0	0.6	0	0	7.93	0	0	0	0	0	0	-31.33	-31.33
Inverter Transformer	MV4-9 T	369284	4909001	2	0	0	56.1	56.1	1	2470.2	3.25	0	78.85	0	0.6	0	0	7.94	0	0	0	0	0	0	-31.34	-31.34
Inverter Transformer	MV4-12 T	369049	4908803	2	0	0	56.1	56.1	1	2477.85	3.25	0	78.88	0	0.61	0	0	7.95	0	0	0	0	0	0	-31.38	-31.38
Inverter Transformer	MV4-8 T	369262	4909001	2	0	0	56.1	56.1	1	2483.8	5.11	0	78.9	0	1.52	2.81	0.03	7.96	0	0	0	0	0	0	-35.13	-35.13
Inverter Transformer	MV3-15 T	368351	4907477	2	0	0	56.1	56.1	1	2489.32	3.25	0	78.92	0	0.61	0	0	7.97	0	0	0	0	0	0	-31.45	-31.45
Inverter Transformer	MV3-11 T	368340	4907662	2	0	0	56.1	56.1	1	2538.03	3.25	0	79.09	0	0.63	0	0	8.06	0	0	0	0	0	0	-31.72	-31.72
Inverter Transformer	MV3-5 T	368335	4907843	2	0	0	56.1	56.1	1	2592.13	3.25	0	79.27	0	0.66	0	0	8.16	0	0	0	0	0	0	-32.03	-32.03
Inverter Transformer	MV4-7 T	369040	4909001	2	0	0	56.1	56.1	1	2627.4	3.25	0	79.39	0	0.67	0	0	8.22	0	0	0	0	0	0	-32.22	-32.22
Inverter Transformer	MV4-5 T	369283	4909199	2	0	0	56.1	56.1	1	2629.68	3.25	0	79.4	0	0.67	0	0	8.22	0	0	0	0	0	0	-32.23	-32.23
Inverter Transformer	MV4-6 T	369249	4909192	2	0	0	56.1	56.1	1	2643.83	3.25	0	79.44	0	0.68	0	0	8.25	0	0	0	0	0	0	-32.31	-32.31
Inverter Transformer	MV3-17 T	368183	4907472	2	0	0	56.1	56.1	1	2654.24	3.25	0	79.48	0	0.68	0	0	8.27	0	0	0	0	0	0	-32.37	-32.37
Inverter Transformer	MV3-10 T	368162	4907669	2	0	0	56.1	56.1	1	2712.76	3.25	0	79.67	0	0.71	0	0	8.37	0	0	0	0	0	0	-32.69	-32.69
Inverter Transformer	MV3-6 T	368156	4907834	2	0	0	56.1	56.1	1	2760.62	3.25	0	79.82	0	0.73	0	0	8.46	0	0	0	0	0	0	-32.94	-32.94
Inverter Transformer	MV4-4 T	369033	4909199	2	0	0	56.1	56.1	1	2781.77	3.25	0	79.89	0	0.74	0	0	8.49	0	0	0	0	0	0	-33.06	-33.06
Inverter Transformer	MV4-2 T	369267	4909397	2	0	0	56.1	56.1	1	2802.28	3.25	0	79.95	0	0.75	0	0	8.53	0	0	0	0	0	0	-33.17	-33.17
Inverter Transformer	MV3-1 T	368150	4907976	2	0	0	56.1	56.1	1	2809.72	3.25	0	79.97	0	0.75	0	0	8.54	0	0	0	0	0	0	-33.2	-33.2
Inverter Transformer	MV4-3 T	369234	4909397	2	0	0	56.1	56.1	1	2820.52	3.25	0	80.01	0	0.75	0	0	8.56	0	0	0	0	0	0	-33.26	-33.26
Inverter Transformer	MV3-13 T	367958	4907577	2	0	0	56.1	56.1	1	2893.77	3.25	0	80.23	0	0.78	0	0	8.69	0	0	0	0	0	0	-33.64	-33.64
Inverter Transformer	MV3-7 T	367951	4907754	2	0	0	56.1	56.1	1	2937.74	3.25	0	80.36	0	0.8	0	0	8.76	0	0	0	0	0	0	-33.87	-33.87
Inverter Transformer	MV4-1 T	369017	4909397	2	0	0	56.1	56.1	1	2946.84	3.25	0	80.39	0	0.81	0	0	8.78	0	0	0	0	0	0	-33.91	-33.91
Inverter Transformer	MV3-3 T	367944	4907927	2	0	0	56.1	56.1	1	2990.4	3.25	0	80.51	0	0.83	0	0	8.85	0	0	0	0	0	0	-34.13	-34.13
Inverter Transformer	MV3-18 T	367757	4907412	2	0	0	56.1	56.1	1	3068.07	3.25	0	80.74	0	0.86	0	0	8.98	0	0	0	0	0	0	-34.52	-34.52
Inverter Transformer	MV3-12 T	367674	4907594	2	0	0	56.1	56.1	1	3176.36	3.25	0	81.04	0	0.9	0	0	9.16	0	0	0	0	0	0	-35.05	-35.05
Inverter Transformer	MV2-2 T	365982	4906654	2	0	0	56.1	56.1	1	4838.65	3.25	0	84.69	0	1.57	0	0	11.64	0	0	0	0	0	0	-41.84	-41.84
Inverter Transformer	MV2-3 T	365814	4906641	2	0	0	56.1	56.1	1	5007.15	3.25	0	84.99	0	1.63	0	0	11.86	0	0	0	0	0	0	-42.42	-42.42
Inverter Transformer	MV2-4 T	365590	4906628	2	0	0	56.1	56.1	1	5231.47	3.25	0	85.37	0	1.71	0	0	12.16	0	0	0	0	0	0	-43.18	-43.18
Inverter Transformer	MV1-15 T	365309	4904994	2	0	0	56.1	56.1	1	5868.5	3.25	0	86.37	0	1.92	0	0	12.95	0	0	0	0	0	0	-45.18	-45.18

	Inverter Transformer	MV1-12 T	365044	4905386	2	0	0	56.1	56.1	1	5996.72	3.25	0	86.56	0	1.96	0	0	13.1	0	0	0	0	0	0	-45.56	-45.56
	Inverter Transformer	MV1-4 T	364821	4905918	2	0	0	56.1	56.1	1	6089.97	3.25	0	86.69	0	1.99	0	0	13.21	0	0	0	0	0	0	-45.84	-45.84
	Inverter Transformer	MV1-2 T	364759	4906063	2	0	0	56.1	56.1	1	6125.78	3.25	0	86.74	0	2	0	0	13.25	0	0	0	0	0	0	-45.94	-45.94
	Inverter Transformer	MV1-1 T	364721	4906166	2	0	0	56.1	56.1	1	6147.56	3.25	0	86.77	0	2.01	0	0	13.28	0	0	0	0	0	0	-46	-46
	Inverter Transformer	MV1-8 T	364782	4905647	2	0	0	56.1	56.1	1	6184.26	3.25	0	86.83	0	2.02	0	0	13.32	0	0	0	0	0	0	-46.11	-46.11
	Inverter Transformer	MV1-5 T	364676	4905892	2	0	0	56.1	56.1	1	6237.28	3.25	0	86.9	0	2.04	0	0	13.38	0	0	0	0	0	0	-46.26	-46.26
	Inverter Transformer	MV1-11 T	364649	4905414	2	0	0	56.1	56.1	1	6369.81	3.25	0	87.08	0	2.08	0	0	13.53	0	0	0	0	0	0	-46.64	-46.64
	Inverter Transformer	MV1-9 T	364555	4905646	2	0	0	56.1	56.1	1	6405.73	3.25	0	87.13	0	2.09	0	0	13.57	0	0	0	0	0	0	-46.74	-46.74
	Inverter Transformer	MV1-6 T	364482	4905835	2	0	0	56.1	56.1	1	6438.53	3.25	0	87.18	0	2.1	0	0	13.61	0	0	0	0	0	0	-46.83	-46.83
	Inverter Transformer	MV1-3 T	364435	4906039	2	0	0	56.1	56.1	1	6449.45	3.25	0	87.19	0	2.1	0	0	13.62	0	0	0	0	0	0	-46.86	-46.86
	Line Reactor	NGR	369421	4908787.5	5	0	0	45.4	45.4	1	2217.73	5.25	0	77.92	0	3.36	1.29	0.09	0.91	0	0	0	0	0	0	-38.12	-38.12
Limit. Valu	0	0																								
Level D/N:	31.2194	31.2194																								

Receiver: Existing Noise Receptor
ID: W-R19
X: 370929.9
Y: 4907206.5
Z: 4.5
Ground: 0

ISO	Description	ID	X	Y	Z	Ground	ReflOrd	LxT	LxN	L/A	Dist.	hm	Freq	Adiv	K0b	Agr	Abar	z	Aatm	Afol	Ahous	Cmet	CmetN	Dc	RL	LtotT	LtotN
	Sol_Luce Substation	S_Substation	369426	4908792	3.5	0	0	112.1	112.1	1	2185.3	5.25	0	77.79	0	0.07	3.71	0.33	4.68	0	0	0	0	0	0	25.83	25.83
	Inverter	MV6-3	370207	4907140	2	0	0	100.3	100.3	1	725.96	3.25	0	68.22	0	-0.4	0	0	9.86	0	0	0	0	0	0	22.63	22.63
	Inverter	MV6-2	370085	4907339	2	0	0	100.3	100.3	1	855.23	3.25	0	69.64	0	-0.32	0	0	10.4	0	0	0	0	0	0	20.59	20.59
	Inverter	MV6-1	370235	4907364	2	0	0	97.3	97.3	1	712.53	3.25	0	68.06	0	-0.4	0	0	9.8	0	0	0	0	0	0	19.86	19.86
	Inverter	MV5-4	370324	4908707	2	0	0	100.3	100.3	1	1618.22	3.25	0	75.18	0	0.01	0	0	12.61	0	0	0	0	0	0	12.51	12.51
	Inverter	MV5-5	370015	4908690	2	0	0	100.3	100.3	1	1742.93	3.25	0	75.83	0	0.05	0	0	12.9	0	0	0	0	0	0	11.53	11.53
	Inverter	MV5-3	370231	4908851	2	0	0	100.3	100.3	1	1786.85	3.25	0	76.04	0	0.07	0	0	13	0	0	0	0	0	0	11.21	11.21
	Inverter	MV5-2	370006	4908853	2	0	0	100.3	100.3	1	1888	3.25	0	76.52	0	0.1	0	0	13.22	0	0	0	0	0	0	10.47	10.47
	Inverter	MV5-1	370020	4909142	2	0	0	100.3	100.3	1	2138.71	3.25	0	77.6	0	0.17	0	0	13.75	0	0	0	0	0	0	8.79	8.79
	Inverter	MV3-20	368689	4907317	2	0	0	100.3	100.3	1	2243.62	3.25	0	78.02	0	0.2	0	0	13.96	0	0	0	0	0	0	8.14	8.14
	Inverter	MV3-14	368684	4907498	2	0	0	100.3	100.3	1	2264.74	3.25	0	78.1	0	0.2	0	0	14	0	0	0	0	0	0	8.01	8.01
	Inverter	MV3-8	368680	4907712	2	0	0	100.3	100.3	1	2305.99	3.25	0	78.26	0	0.21	0	0	14.08	0	0	0	0	0	0	7.76	7.76
	Inverter	MV4-10	369312	4908858	2	0	0	100.3	100.3	1	2311.94	3.25	0	78.28	0	0.21	0	0	14.1	0	0	0	0	0	0	7.72	7.72
	Inverter	MV4-11	369264	4908855	2	0	0	100.3	100.3	1	2343.67	3.25	0	78.4	0	0.22	0	0	14.16	0	0	0	0	0	0	7.54	7.54
	Inverter	MV3-16	368514	4907475	2	0	0	100.3	100.3	1	2430.78	3.25	0	78.71	0	0.24	0	0	14.33	0	0	0	0	0	0	7.03	7.03
	Inverter	MV4-9	369289	4909001	2	0	0	100.3	100.3	1	2431.62	3.25	0	78.72	0	0.24	0	0	14.33	0	0	0	0	0	0	7.03	7.03
	Inverter	MV3-21	368478	4907206	2	0	0	100.3	100.3	1	2451.9	3.25	0	78.79	0	0.25	0	0	14.37	0	0	0	0	0	0	6.91	6.91
	Inverter	MV4-8	369256	4909001	2	0	0	100.3	100.3	1	2454.01	3.25	0	78.8	0	0.25	0	0	14.37	0	0	0	0	0	0	6.9	6.9
	Inverter	MV3-9	368512	4907703	2	0	0	100.3	100.3	1	2468.35	3.25	0	78.85	0	0.25	0	0	14.4	0	0	0	0	0	0	6.82	6.82
	Inverter	MV3-19	368357	4907347	2	0	0	100.3	100.3	1	2576.73	3.25	0	79.22	0	0.27	0	0	14.6	0	0	0	0	0	0	6.21	6.21
	Inverter	MV4-5	369289	4909199	2	0	0	100.3	100.3	1	2581.2	3.25	0	79.24	0	0.28	0	0	14.61	0	0	0	0	0	0	6.19	6.19
	Inverter	MV3-15	368357	4907477	2	0	0	100.3	100.3	1	2587.08	3.25	0	79.26	0	0.28	0	0	14.62	0	0	0	0	0	0	6.16	6.16
	Inverter	MV4-6	369243	4909192	2	0	0	100.3	100.3	1	2605.35	3.25	0	79.32	0	0.28	0	0	14.66	0	0	0	0	0	0	6.06	6.06
	Inverter	MV4-7	369035	4909001	2	0	0	100.3	100.3	1	2609.77	3.25	0	79.33	0	0.28	0	0	14.66	0	0	0	0	0	0	6.03	6.03
	Inverter	MV3-11	368346	4907662	2	0	0	100.3	100.3	1	2623.74	3.25	0	79.38	0	0.28	0	0	14.69	0	0	0	0	0	0	5.96	5.96
	Inverter	MV4-2	369272	4909397	2	0	0	100.3	100.3	1	2747.17	3.25	0	79.78	0	0.31	0	0	14.92	0	0	0	0	0	0	5.3	5.3
	Inverter	MV4-4	369027	4909199	2	0	0	100.3	100.3	1	2755.19	5	0	79.8	0	1.06	3.25	0.01	14.93	0	0	0	0	0	0	1.27	1.27
	Inverter	MV3-17	368178	4907472	2	0	0	100.3	100.3	1	2764.68	3.25	0	79.83	0	0.31	0	0	14.95	0	0	0	0	0	0	5.21	5.21
	Inverter	MV4-3	369229	4909397	2	0	0	100.3	100.3	1	2773.33	3.25	0	79.86	0	0.32	0	0	14.97	0	0	0	0	0	0	5.17	5.17
	Inverter	MV3-10	368167	4907669	2	0	0	100.3	100.3	1	2801.34	3.25	0	79.95	0	0.32	0	0	15.02	0	0	0	0	0	0	5.03	5.03
	Inverter	MV3-6	368162	4907834	2	0	0	100.3	100.3	1	2838.14	3.25	0	80.06	0	0.33	0	0	15.08	0	0	0	0	0	0	4.84	4.84
	Inverter	MV4-1	369011	4909397	2	0	0	100.3	100.3	1	2912.13	3.25	0	80.28	0	0.34	0	0	15.22	0	0	0	0	0	0	4.47	4.47
	Inverter	MV3-13	367963	4907577	2	0	0	100.3	100.3	1	2989.95	3.25	0	80.51	0	0.36	0	0	15.35	0	0	0	0	0	0	4.08	4.08
	Inverter	MV3-7	367945	4907754	2	0	0	100.3	100.3	1	3034.7	3.25	0	80.64	0	0.37	0	0	15.43	0	0	0	0	0	0	3.87	3.87
	Inverter	MV3-3	367939	4907927	2	0	0	100.3	100.3	1	3076.46	3.25	0	80.76	0	0.38	0	0	15.51	0	0	0	0	0	0	3.67	3.67
	Inverter	MV3-18	367752	4907412	2	0	0	100.3	100.3	1	3184.54	3.25	0	81.06	0	0.4	0	0	15.69	0	0	0	0	0	0	3.16	3.16
	Inverter	MV3-12	367668	4907594	2	0	0	100.3	100.3	1	3284.84	3.25	0	81.33	0	0.41	0	0	15.87	0	0	0	0	0	0	2.7	2.7
	DSTATCOM - 10 MVAR #1	DSAT1	369437	4908757	2.5	0	0	96.6	96.6	1	2152.4	3.5	0	77.66	0	3.25	0	0	1.81	0	0	0	0	0	0	13.91	13.91
	DSTATCOM - 10 MVAR #2	DSAT2	369403	4908757	2.5	0	0	96.6	96.6	1	2176.12	3.5	0	77.75	0	3.26	0	0	1.82	0	0	0	0	0	0	13.79	13.79
	Inverter	MV6-4	370250	4906966	2	0	0	86.1	86.1	1	721.19	3.25	0	68.16	0	0.62	0	0	5.75	0	0	0	0	0	0	11.53	11.53
	SubstationTransformer	W_ST	369711.17	4906112.3	2.5	0	0	92	92	1	1637.88	4.25	0	75.29	0	0.65	3.56	0.2	3.73	0	0	0	0	0	0	8.74	8.74
	Westbrook Inverter Enclosur	W_INV6	369875	4906578	2	0	0	89.1	89.1	1	1227.94	3.25	0	72.78	0	0.73	0	0	6.73	0	0	0	0	0	0	8.81	8.81
	Westbrook Inverter Enclosur	W_INV5	369719	4906574	2	0	0	89.1	89.1	1	1366.14	3.25	0	73.71	0	0.76	0	0	6.98	0	0	0	0	0	0	7.61	7.61
	Westbrook Inverter Enclosur	W_INV7	369780	4906417	2	0	0	89.1	89.1	1	1394.84	3.25	0	73.89	0	0.77	0	0	7.03	0	0	0	0	0	0	7.37	7.37
	Inverter	MV2-3	365820	4906641	2	0	0	100.3	100.3	1	5141.1	3.25	0	85.22	0	0.65	0	0	18.79	0	0	0	0	0	0	-4.35	-4.35
	Inverter	MV2-4	365586	4906624	2	0	0	100.3	100.3	1	5375.55	3.25	0	85.61	0	0.67	0	0	19.12	0	0	0	0	0	0	-5.09	-5.09
	Inverter	MV5-6	369982	4908507	2	0	0	89.1	89.1	1	1609.29	3.25	0	75.13	0	0.82	0	0	7.39	0	0	0	0	0	0	5.71	5.71
	Westbrook Inverter Enclosur	W_INV4	369673	4906164	2	0	0	89.1	89.1	1	1632.98	3.25	0	75.26	0	0.82	0	0	7.44	0	0	0	0	0	0	5.54	5.54
	Inverter	MV1-15	365315	4904994	2	0	0	100.3	100.3	1	6035.09	3.25	0	86.61	0	0.71	0	0	20.04	0	0	0	0	0	0	-7.05	-7.05
	Inverter	MV1-12	365038	4905386	2	0	0	100.3	100.3	1	6166.74	3.25	0	86.8	0	0.71	0	0	20.22	0	0	0	0	0	0	-7.42	-7.42
	Inverter	MV1-4	364815	4905918	2	0	0	100.3	100.3	1	6249.18	3.25	0	86.92	0	0.71	0	0	20.33	0	0	0	0	0	0	-7.64	-7.64
	Inverter	MV1-2	364753	4906063	2	0	0	100.3	100.3	1	6281.85	3.25	0	86.96	0	0.71	0	0	20.37	0	0	0	0	0	0	-7.73	-7.73

Inverter	MV1-1	364715	4906166	2	0	0	100.3	100.3	1	6301.4	3.25	0	86.99	0	0.71	0	0	20.4	0	0	0	0	0	0	-7.79	-7.79
Inverter	MV1-8	364788	4905647	2	0	0	100.3	100.3	1	6336.8	3.25	0	87.04	0	0.71	0	0	20.44	0	0	0	0	0	0	-7.88	-7.88
Inverter	MV1-5	364671	4905892	2	0	0	100.3	100.3	1	6395.45	3.25	0	87.12	0	0.71	0	0	20.52	0	0	0	0	0	0	-8.04	-8.04
Westbrook Inverter Enclosur	W_INV2	369374	4906388	2	0	0	89.1	89.1	1	1758.06	3.25	0	75.9	0	0.85	0	0	7.65	0	0	0	0	0	0	4.66	4.66
Westbrook Inverter Enclosur	W_INV3	369508	4906164	2	0	0	89.1	89.1	1	1763.13	3.25	0	75.93	0	0.85	0	0	7.65	0	0	0	0	0	0	4.63	4.63
Inverter	MV1-11	364655	4905414	2	0	0	100.3	100.3	1	6525.9	3.25	0	87.29	0	0.71	0	0	20.69	0	0	0	0	0	0	-8.39	-8.39
Inverter	MV1-9	364561	4905646	2	0	0	100.3	100.3	1	6557.29	3.25	0	87.33	0	0.72	0	0	20.73	0	0	0	0	0	0	-8.47	-8.47
Inverter	MV1-6	364477	4905835	2	0	0	100.3	100.3	1	6597.04	3.25	0	87.39	0	0.72	0	0	20.79	0	0	0	0	0	0	-8.58	-8.58
Fixed Reactor Bank 2	FRB2	369464	4908755	6	0	0	89.8	89.8	1	2132.3	5.25	0	77.58	0	-0.98	0	0	4.59	0	0	0	0	0	0	8.59	8.59
Inverter	MV2-1	365842	4906816	2	0	0	97.3	97.3	1	5102.86	3.25	0	85.16	0	0.65	0	0	18.73	0	0	0	0	0	0	-7.23	-7.23
Fixed Reactor Bank 1	FRB1	369378	4908755	6	0	0	89.8	89.8	1	2192.32	5.25	0	77.82	0	-0.97	0	0	4.69	0	0	0	0	0	0	8.24	8.24
Inverter	MV4-15	369176	4908481	2	0	0	89.1	89.1	1	2168.07	3.25	0	77.72	0	0.95	0	0	8.32	0	0	0	0	0	0	2.07	2.07
Inverter	MV4-14	369176	4908507	2	0	0	89.1	89.1	1	2183.45	3.25	0	77.78	0	0.95	0	0	8.34	0	0	0	0	0	0	1.98	1.98
Inverter	MV3-22	368656	4907142	2	0	0	89.1	89.1	1	2274.82	3.25	0	78.14	0	0.97	0	0	8.49	0	0	0	0	0	0	1.46	1.46
Westbrook Inverter Enclosur	W_INV1	369409	4906578	2	0	0	86.1	86.1	1	1645.65	3.25	0	75.33	0	0.83	0	0	7.46	0	0	0	0	0	0	2.45	2.45
Inverter	MV4-13	369051	4908605	2	0	0	89.1	89.1	1	2342.24	3.25	0	78.39	0	0.99	0	0	8.6	0	0	0	0	0	0	1.08	1.08
Inverter	MV3-2	368671	4907928	2	0	0	89.1	89.1	1	2371.33	3.25	0	78.5	0	0.99	0	0	8.64	0	0	0	0	0	0	0.92	0.92
Inverter	MV1-10	365004	4905564	2	0	0	97.3	97.3	1	6149.32	3.25	0	86.78	0	0.71	0	0	20.19	0	0	0	0	0	0	-10.37	-10.37
Inverter	MV1-14	365163	4905049	2	0	0	97.3	97.3	1	6157.27	3.25	0	86.79	0	0.71	0	0	20.21	0	0	0	0	0	0	-10.39	-10.39
Inverter	MV1-7	364925	4905782	2	0	0	97.3	97.3	1	6171.55	3.25	0	86.81	0	0.71	0	0	20.22	0	0	0	0	0	0	-10.43	-10.43
Inverter	MV4-12	369043	4908803	2	0	0	89.1	89.1	1	2471.68	3.25	0	78.86	0	1.02	0	0	8.8	0	0	0	0	0	0	0.38	0.38
Inverter	MV1-13	364731	4905241	2	0	0	97.3	97.3	1	6503.04	3.25	0	87.26	0	0.71	0	0	20.66	0	0	0	0	0	0	-11.33	-11.33
Inverter	MV3-4	368502	4907925	2	0	0	89.1	89.1	1	2531.98	3.25	0	79.07	0	1.03	0	0	8.9	0	0	0	0	0	0	0.06	0.06
Inverter	MV3-5	368340	4907843	2	0	0	89.1	89.1	1	2666.97	3.25	0	79.52	0	1.07	0	0	9.11	0	0	0	0	0	0	-0.63	-0.63
Inverter	MV3-1	368156	4907976	2	0	0	89.1	89.1	1	2878.66	3.25	0	80.18	0	1.12	0	0	9.43	0	0	0	0	0	0	-1.68	-1.68
Westbrook Inverter Transfor	W_INVTR6	369881	4906578	2	0	0	77.3	77.3	1	1222.79	3.25	0	72.75	0	-2.06	0	0	0.8	0	0	0	0	0	0	5.85	5.85
Gardiner Substation	G_Sub	366586.3	4903349.9	2.5	0	0	90.8	90.8	1	5808.63	4.25	0	86.28	0	1.83	2.15	0.34	9.54	0	0	0	0	0	0	-9.02	-9.02
Inverter	MV2-2	365977	4906654	2	0	0	89.1	89.1	1	4983.62	3.25	0	84.95	0	1.64	0	0	12.44	0	0	0	0	0	0	-9.97	-9.97
Westbrook Inverter Transfor	W_INVTR5	369725	4906574	2	0	0	77.3	77.3	1	1360.83	3.25	0	73.68	0	-2.14	0	0	0.88	0	0	0	0	0	0	4.92	4.92
Westbrook Inverter Transfor	W_INVTR7	369786	4906417	2	0	0	77.3	77.3	1	1389.9	3.25	0	73.86	0	-2.15	0	0	0.9	0	0	0	0	0	0	4.74	4.74
Westbrook Inverter Transfor	W_INVTR1	369403	4906578	2	0	0	78.2	78.2	1	1651.19	3.25	0	75.36	0	-2.27	0	0	1.03	0	0	0	0	0	0	4.12	4.12
Westbrook Inverter Transfor	W_INVTR4	369679	4906164	2	0	0	77.3	77.3	1	1628.36	3.25	0	75.24	0	-2.26	0	0	1.02	0	0	0	0	0	0	3.34	3.34
Inverter	MV1-3	364440	4906039	2	0	0	89.1	89.1	1	6594.08	3.25	0	87.38	0	2.03	0	0	14.5	0	0	0	0	0	0	-14.85	-14.85
Westbrook Inverter Transfor	W_INVTR3	369514	4906164	2	0	0	77.3	77.3	1	1758.29	3.25	0	75.9	0	-2.31	0	0	1.09	0	0	0	0	0	0	2.67	2.67
Westbrook Inverter Transfor	W_INVTR2	369368	4906388	2	0	0	77.3	77.3	1	1763.37	3.25	0	75.93	0	-2.32	0	0	1.09	0	0	0	0	0	0	2.64	2.64
Inverters	G_Inv2	366676.9	4903239.1	2	0	0	87.7	87.7	1	5816.21	3.25	0	86.29	0	2.91	0	0	6.79	0	0	0	0	0	0	-8.33	-8.33
Inverters	G_Inv4	366732.8	4903105	2	0	0	87.7	87.7	1	5868.39	3.25	0	86.37	0	2.91	0	0	6.84	0	0	0	0	0	0	-8.46	-8.46
Inverter Transformer	MV6-1 T	370230	4907364	2	0	0	69.4	69.4	1	717.41	3.25	0	68.12	0	1.38	0	0	3.38	0	0	0	0	0	0	-3.53	-3.53
Inverters	G_Inv6	366788.5	4902972	2	0	0	87.7	87.7	1	5923.02	3.25	0	86.45	0	2.91	0	0	6.9	0	0	0	0	0	0	-8.6	-8.6
Inverters	G_Inv1	366526.4	4903225.8	2	0	0	87.7	87.7	1	5936.06	3.25	0	86.47	0	2.91	0	0	6.91	0	0	0	0	0	0	-8.64	-8.64
Inverters	G_Inv8	366844.5	4902838.5	2	0	0	87.7	87.7	1	5980.8	3.25	0	86.54	0	2.92	0	0	6.96	0	0	0	0	0	0	-8.75	-8.75
Inverter Transformer	MV6-4 T	370244	4906966	2	0	0	69.4	69.4	1	726.85	3.25	0	68.23	0	1.4	0	0	3.4	0	0	0	0	0	0	-3.67	-3.67
Inverters	G_Inv3	366583.7	4903091.4	2	0	0	87.7	87.7	1	5985.27	3.25	0	86.54	0	2.92	0	0	6.96	0	0	0	0	0	0	-8.76	-8.76
Inverters	G_Inv5	366638.5	4902958.1	2	0	0	87.7	87.7	1	6038.63	3.25	0	86.62	0	2.92	0	0	7.02	0	0	0	0	0	0	-8.9	-8.9
Inverters	G_Inv10	366900.7	4902704.8	2	0	0	87.7	87.7	1	6041.5	3.25	0	86.62	0	2.92	0	0	7.02	0	0	0	0	0	0	-8.9	-8.9
Inverters	G_Inv7	366694.6	4902824.7	2	0	0	87.7	87.7	1	6094.09	3.25	0	86.7	0	2.92	0	0	7.07	0	0	0	0	0	0	-9.03	-9.03
Inverters	G_Inv9	366750.9	4902691.8	2	0	0	87.7	87.7	1	6151.96	3.25	0	86.78	0	2.92	0	0	7.13	0	0	0	0	0	0	-9.18	-9.18
Inverter Transformer	MV6-3 T	370202	4907140	2	0	0	56.1	56.1	1	730.94	3.25	0	68.28	0	-0.07	0	0	4.22	0	0	0	0	0	0	-16.36	-16.36
Inverter Transformer	MV6-2 T	370091	4907339	2	0	0	56.1	56.1	1	849.3	3.25	0	69.58	0	-0.04	0	0	4.52	0	0	0	0	0	0	-18.01	-18.01
Inverter Transformer	MV2-1 T	365836	4906816	2	0	0	69.4	69.4	1	5108.85	3.25	0	85.17	0	3.03	0	0	7.45	0	0	0	0	0	0	-26.3	-26.3
Inverter Transformer	MV1-10 T	365010	4905564	2	0	0	69.4	69.4	1	6143.54	3.25	0	86.77	0	3.21	0	0	8.1	0	0	0	0	0	0	-28.73	-28.73
Inverter Transformer	MV1-14 T	365157	4905049	2	0	0	69.4	69.4	1	6162.89	3.25	0	86.8	0	3.21	0	0	8.12	0	0	0	0	0	0	-28.77	-28.77
Inverter Transformer	MV1-7 T	364919	4905782	2	0	0	69.4	69.4	1	6177.39	3.25	0	86.82	0	3.21	0	0	8.13	0	0	0	0	0	0	-28.81	-28.81
Inverter Transformer	MV1-13 T	364725	4905241	2	0	0	69.4	69.4	1	6508.76	3.25	0	87.27	0	3.26	0	0	8.32	0	0	0	0	0	0	-29.5	-29.5
Inverter Transformer	MV5-6 T	369987	4908507	2	0	0	56.1	56.1	1	1606.35	3.25	0	75.12	0	0.24	0	0	6.24	0	0	0	0	0	0	-25.54	-25.54
Inverter Transformer	MV5-4 T	370330	4908707	2	0	0	56.1	56.1	1	1615.98	3.25	0	75.17	0	0.25	0	0	6.26	0	0	0	0	0	0	-25.62	-25.62
Inverter Transformer	MV5-5 T	370021	4908690	2	0	0	56.1	56.1	1	1739.79	3.25	0	75.81	0	0.3	0	0	6.52	0	0	0	0	0	0	-26.57	-26.57
Inverter Transformer	MV5-3 T	370237	4908851	2	0	0	56.1	56.1	1	1784.52	3.25	0	76.03	0	0.31	0	0	6.61	0	0	0	0	0	0	-26.9	-26.9
Inverter Transformer	MV5-2 T	370011	4908853	2	0	0	56.1	56.1	1	1885.56	3.25	0	76.51	0	0.36	0	0	6.82	0	0	0	0	0	0	-27.62	-27.62
Inverter Transformer	MV5-1 T	370015	4909142	2	0	0	56.1	56.1	1	2140.84	3.25	0	77.61	0	0.46	0	0	7.32	0	0	0	0	0	0	-29.33	-29.33
Inverter Transformer	MV4-15 T	369170	4908481	2	0	0	56.1	56.1	1	2172.93	3.25	0	77.74	0	0.48	0	0	7.38	0	0	0	0	0	0	-29.54	-29.54
Inverter Transformer	MV4-14 T	369182	4908507	2	0	0	56.1	56.1	1	2178.64	3.25	0	77.76	0	0.48	0	0	7.39	0	0	0	0	0	0	-29.57	-29.57
Inverter Transformer	MV3-20 T	368683	4907317	2	0	0	56.1	56.1	1	2249.62	3.25	0	78.04	0	0.51	0	0	7.52	0	0	0	0	0	0	-30.02	-30.02
Inverter Transformer	MV3-22 T	368661	4907142	2	0	0	56.1	56.1	1	2269.82	3.25	0	78.12	0	0.52	0	0	7.56	0	0	0	0	0	0	-30.14	-30.14
Inverter Transformer	MV3-14 T	368678	4907498	2	0	0	56.1	56.1	1	2270.69	3.25	0	78.12	0	0.52	0	0	7.56	0	0	0	0	0	0	-30.15	-30.15
Inverter Transformer	MV3-8 T	368685	4907712	2	0	0	56.1	56.1	1	2301.11	3.25	0	78.24	0	0.53	0	0	7.62	0	0	0	0	0	0	-30.33	-30.33
Inverter Transformer	MV4-10 T	369307	4908858	2	0	0	56.1	56.1	1	2315.44	3.25	0	78.29	0	0.54	0	0	7.65	0	0	0	0	0	0	-30.42	-30.42
Inverter Transformer	MV4-13 T	369057	4908605	2	0	0	56.1	56.1	1	2337.43	3.25	0	78.37	0	0.55	0	0	7.69	0	0	0	0	0	0	-30.55	-30.55
Inverter Transformer	MV4-11 T	369269	4908855	2	0	0	56.1	56.1	1	2340.12	3.25	0	78.38	0	0.55	0	0	7.69	0	0	0	0	0	0	-30.57	-30.57
Inverter Transformer	MV3-2 T	368677	4907928	2	0	0	56.1	56.1	1	2365.61	3.25	0	78.48	0	0.56	0	0	7.74	0	0	0	0	0	0	-30.72	-30.72
Inverter Transformer	MV4-9 T	369284	4909001	2	0	0	56.1	56.1	1	2435	3.25	0	78.73	0	0.59	0	0	7.87	0	0	0	0	0	0	-31.13	-31.13
Inverter Transformer	MV3-16 T	368509	4907475	2	0	0	56.1	56.1	1	2435.75	3.25	0	78.73	0	0.59	0	0	7.87	0	0	0	0	0	0	-31.14	-31.14
Inverter Transformer	MV3-21 T	368484	4907206	2	0	0	56.1	56.1	1	2445.9	3.25	0	78.77	0	0.59	0	0	7.89	0	0	0	0	0	0	-31.19	-31.19
Inverter Transformer	MV4-8 T	369262	4909001	2	0	0	56.1	56.1	1	2449.92	3.25	0	78.78	0	0.6	0	0	7.9	0	0	0	0	0	0	-31.22	-31.22

	Inverter Transformer	MV3-9 T	368517	4907703	2	0	0	56.1	56.1	1	2463.45	3.25	0	78.83	0	0.6	0	0	7.92	0	0	0	0	0	0	-31.3	-31.3
	Inverter Transformer	MV4-12 T	369049	4908803	2	0	0	56.1	56.1	1	2467.1	3.25	0	78.84	0	0.6	0	0	7.93	0	0	0	0	0	0	-31.32	-31.32
	Inverter Transformer	MV3-4 T	368507	4907925	2	0	0	56.1	56.1	1	2527.19	3.25	0	79.05	0	0.63	0	0	8.04	0	0	0	0	0	0	-31.66	-31.66
	Inverter Transformer	MV3-19 T	368352	4907347	2	0	0	56.1	56.1	1	2581.73	3.25	0	79.24	0	0.65	0	0	8.14	0	0	0	0	0	0	-31.97	-31.97
	Inverter Transformer	MV4-5 T	369283	4909199	2	0	0	56.1	56.1	1	2585.02	3.25	0	79.25	0	0.65	0	0	8.14	0	0	0	0	0	0	-31.99	-31.99
	Inverter Transformer	MV3-15 T	368351	4907477	2	0	0	56.1	56.1	1	2593.05	3.25	0	79.28	0	0.66	0	0	8.16	0	0	0	0	0	0	-32.03	-32.03
	Inverter Transformer	MV4-6 T	369249	4909192	2	0	0	56.1	56.1	1	2601.47	3.25	0	79.3	0	0.66	0	0	8.17	0	0	0	0	0	0	-32.08	-32.08
	Inverter Transformer	MV4-7 T	369040	4909001	2	0	0	56.1	56.1	1	2606.14	3.25	0	79.32	0	0.66	0	0	8.18	0	0	0	0	0	0	-32.1	-32.1
	Inverter Transformer	MV3-11 T	368340	4907662	2	0	0	56.1	56.1	1	2629.65	3.25	0	79.4	0	0.67	0	0	8.22	0	0	0	0	0	0	-32.23	-32.23
	Inverter Transformer	MV3-5 T	368335	4907843	2	0	0	56.1	56.1	1	2671.82	3.25	0	79.54	0	0.69	0	0	8.3	0	0	0	0	0	0	-32.47	-32.47
	Inverter Transformer	MV4-2 T	369267	4909397	2	0	0	56.1	56.1	1	2750.19	3.25	0	79.79	0	0.72	0	0	8.44	0	0	0	0	0	0	-32.89	-32.89
	Inverter Transformer	MV4-4 T	369033	4909199	2	0	0	56.1	56.1	1	2751.05	5	0	79.79	0	1.65	2.71	0.01	8.44	0	0	0	0	0	0	-36.53	-36.53
	Inverter Transformer	MV3-17 T	368183	4907472	2	0	0	56.1	56.1	1	2759.7	3.25	0	79.82	0	0.73	0	0	8.45	0	0	0	0	0	0	-32.94	-32.94
	Inverter Transformer	MV4-3 T	369234	4909397	2	0	0	56.1	56.1	1	2770.27	3.25	0	79.85	0	0.73	0	0	8.47	0	0	0	0	0	0	-33	-33
	Inverter Transformer	MV3-10 T	368162	4907669	2	0	0	56.1	56.1	1	2806.28	3.25	0	79.96	0	0.75	0	0	8.54	0	0	0	0	0	0	-33.19	-33.19
	Inverter Transformer	MV3-6 T	368156	4907834	2	0	0	56.1	56.1	1	2843.99	3.25	0	80.08	0	0.76	0	0	8.6	0	0	0	0	0	0	-33.38	-33.38
	Inverter Transformer	MV3-1 T	368150	4907976	2	0	0	56.1	56.1	1	2884.44	3.25	0	80.2	0	0.78	0	0	8.67	0	0	0	0	0	0	-33.59	-33.59
	Inverter Transformer	MV4-1 T	369017	4909397	2	0	0	56.1	56.1	1	2908.18	3.25	0	80.27	0	0.79	0	0	8.71	0	0	0	0	0	0	-33.72	-33.72
	Inverter Transformer	MV3-13 T	367958	4907577	2	0	0	56.1	56.1	1	2994.91	3.25	0	80.53	0	0.83	0	0	8.86	0	0	0	0	0	0	-34.16	-34.16
	Inverter Transformer	MV3-7 T	367951	4907754	2	0	0	56.1	56.1	1	3028.8	3.25	0	80.63	0	0.84	0	0	8.92	0	0	0	0	0	0	-34.33	-34.33
	Inverter Transformer	MV3-3 T	367944	4907927	2	0	0	56.1	56.1	1	3071.6	3.25	0	80.75	0	0.86	0	0	8.99	0	0	0	0	0	0	-34.54	-34.54
	Inverter Transformer	MV3-18 T	367757	4907412	2	0	0	56.1	56.1	1	3179.55	3.25	0	81.05	0	0.91	0	0	9.17	0	0	0	0	0	0	-35.06	-35.06
	Inverter Transformer	MV3-12 T	367674	4907594	2	0	0	56.1	56.1	1	3278.88	3.25	0	81.31	0	0.95	0	0	9.33	0	0	0	0	0	0	-35.54	-35.54
	Inverter Transformer	MV2-2 T	365982	4906654	2	0	0	56.1	56.1	1	4978.65	3.25	0	84.94	0	1.62	0	0	11.83	0	0	0	0	0	0	-42.33	-42.33
	Inverter Transformer	MV2-3 T	365814	4906641	2	0	0	56.1	56.1	1	5147.06	3.25	0	85.23	0	1.68	0	0	12.05	0	0	0	0	0	0	-42.9	-42.9
	Inverter Transformer	MV2-4 T	365590	4906628	2	0	0	56.1	56.1	1	5371.15	3.25	0	85.6	0	1.76	0	0	12.33	0	0	0	0	0	0	-43.63	-43.63
	Inverter Transformer	MV1-15 T	365309	4904994	2	0	0	56.1	56.1	1	6040.67	3.25	0	86.62	0	1.98	0	0	13.15	0	0	0	0	0	0	-45.69	-45.69
	Inverter Transformer	MV1-12 T	365044	4905386	2	0	0	56.1	56.1	1	6161.01	3.25	0	86.79	0	2.02	0	0	13.29	0	0	0	0	0	0	-46.04	-46.04
	Inverter Transformer	MV1-4 T	364821	4905918	2	0	0	56.1	56.1	1	6243.31	3.25	0	86.91	0	2.04	0	0	13.39	0	0	0	0	0	0	-46.28	-46.28
	Inverter Transformer	MV1-2 T	364759	4906063	2	0	0	56.1	56.1	1	6275.95	3.25	0	86.95	0	2.05	0	0	13.42	0	0	0	0	0	0	-46.37	-46.37
	Inverter Transformer	MV1-1 T	364721	4906166	2	0	0	56.1	56.1	1	6295.48	3.25	0	86.98	0	2.06	0	0	13.45	0	0	0	0	0	0	-46.43	-46.43
	Inverter Transformer	MV1-8 T	364782	4905647	2	0	0	56.1	56.1	1	6342.61	3.25	0	87.05	0	2.07	0	0	13.5	0	0	0	0	0	0	-46.56	-46.56
	Inverter Transformer	MV1-5 T	364676	4905892	2	0	0	56.1	56.1	1	6390.55	3.25	0	87.11	0	2.09	0	0	13.56	0	0	0	0	0	0	-46.69	-46.69
	Inverter Transformer	MV1-11 T	364649	4905414	2	0	0	56.1	56.1	1	6531.67	3.25	0	87.3	0	2.13	0	0	13.72	0	0	0	0	0	0	-47.08	-47.08
	Inverter Transformer	MV1-9 T	364555	4905646	2	0	0	56.1	56.1	1	6563.12	3.25	0	87.34	0	2.14	0	0	13.75	0	0	0	0	0	0	-47.17	-47.17
	Inverter Transformer	MV1-6 T	364482	4905835	2	0	0	56.1	56.1	1	6592.15	3.25	0	87.38	0	2.14	0	0	13.78	0	0	0	0	0	0	-47.25	-47.25
	Inverter Transformer	MV1-3 T	364435	4906039	2	0	0	56.1	56.1	1	6599	3.25	0	87.39	0	2.15	0	0	13.79	0	0	0	0	0	0	-47.27	-47.27
	Line Reactor	NGR	369421	4908787.5	5	0	0	45.4	45.4	1	2185.48	5.25	0	77.79	0	3.37	1.28	0.09	0.9	0	0	0	0	0	0	-37.98	-37.98
Limit. Valu	0	0																								
Level D/N:	30.4337	30.4337																								

Receiver: Existing Noise Receptor
ID: W-R20
X: 370966.9
Y: 4907225.3
Z: 4.5
Ground: 0

ISO	Description	ID	X	Y	Z	Ground	ReflOrd	LxT	LxN	L/A	Dist.	hm	Freq	Adiv	K0b	Agr	Abar	z	Aatm	Afol	Ahous	Cmet	CmetN	Dc	RL	LtotT	LtotN
	Sol_Luce Substation	S_Substation	369426	4908792	3.5	0	0	112.1	112.1	1	2197.48	5.25	0	77.84	0	0.08	3.72	0.34	4.7	0	0	0	0	0	0	25.75	25.75
	Inverter	MV6-3	370207	4907140	2	0	0	100.3	100.3	1	764.68	3.25	0	68.67	0	-0.37	0	0	10.03	0	0	0	0	0	0	21.98	21.98
	Inverter	MV6-2	370085	4907339	2	0	0	100.3	100.3	1	889.2	3.25	0	69.98	0	-0.3	0	0	10.53	0	0	0	0	0	0	20.11	20.11
	Inverter	MV6-1	370235	4907364	2	0	0	97.3	97.3	1	744.93	3.25	0	68.44	0	-0.38	0	0	9.95	0	0	0	0	0	0	19.31	19.31
	Inverter	MV5-4	370324	4908707	2	0	0	100.3	100.3	1	1615.17	3.25	0	75.16	0	0.01	0	0	12.6	0	0	0	0	0	0	12.54	12.54
	Inverter	MV5-5	370015	4908690	2	0	0	100.3	100.3	1	1746.84	3.25	0	75.85	0	0.05	0	0	12.91	0	0	0	0	0	0	11.51	11.51
	Inverter	MV5-3	370231	4908851	2	0	0	100.3	100.3	1	1784.5	3.25	0	76.03	0	0.06	0	0	12.99	0	0	0	0	0	0	11.22	11.22
	Inverter	MV5-2	370006	4908853	2	0	0	100.3	100.3	1	1890.17	3.25	0	76.53	0	0.1	0	0	13.23	0	0	0	0	0	0	10.46	10.46
	Inverter	MV5-1	370020	4909142	2	0	0	100.3	100.3	1	2137.84	3.25	0	77.6	0	0.17	0	0	13.75	0	0	0	0	0	0	8.8	8.8
	Inverter	MV3-20	368689	4907317	2	0	0	100.3	100.3	1	2279.75	3.25	0	78.16	0	0.2	0	0	14.03	0	0	0	0	0	0	7.92	7.92
	Inverter	MV3-14	368684	4907498	2	0	0	100.3	100.3	1	2299.13	3.25	0	78.23	0	0.21	0	0	14.07	0	0	0	0	0	0	7.8	7.8
	Inverter	MV4-10	369312	4908858	2	0	0	100.3	100.3	1	2324.74	3.25	0	78.33	0	0.22	0	0	14.12	0	0	0	0	0	0	7.65	7.65
	Inverter	MV3-8	368680	4907712	2	0	0	100.3	100.3	1	2338.12	3.25	0	78.38	0	0.22	0	0	14.15	0	0	0	0	0	0	7.57	7.57
	Inverter	MV4-11	369264	4908855	2	0	0	100.3	100.3	1	2357.07	3.25	0	78.45	0	0.22	0	0	14.18	0	0	0	0	0	0	7.46	7.46
	Inverter	MV4-9	369289	4909001	2	0	0	100.3	100.3	1	2443.04	3.25	0	78.76	0	0.24	0	0	14.35	0	0	0	0	0	0	6.96	6.96
	Inverter	MV3-16	368514	4907475	2	0	0	100.3	100.3	1	2465.58	3.25	0	78.84	0	0.25	0	0	14.39	0	0	0	0	0	0	6.83	6.83
	Inverter	MV4-8	369256	4909001	2	0	0	100.3	100.3	1	2465.83	3.25	0	78.84	0	0.25	0	0	14.39	0	0	0	0	0	0	6.83	6.83
	Inverter	MV3-21	368478	4907206	2	0	0	100.3	100.3	1	2488.98	3.25	0	78.92	0	0.25	0	0	14.44	0	0	0	0	0	0	6.7	6.7
	Inverter	MV3-9	368512	4907703	2	0	0	100.3	100.3	1	2500.95	3.25	0	78.96	0	0.26	0	0	14.46	0	0	0	0	0	0	6.63	6.63
	Inverter	MV4-5	369289	4909199	2	0	0	100.3	100.3	1	2590.53	3.25	0	79.27	0	0.28	0	0	14.63	0	0	0	0	0	0	6.14	6.14
	Inverter	MV3-19	368357	4907347	2	0	0	100.3	100.3	1	2612.74	3.25	0	79.34	0	0.28	0	0	14.67	0	0	0	0	0	0	6.02	6.02
	Inverter	MV4-6	369243	4909192	2	0	0	100.3	100.3	1	2615.29	3.25	0	79.35	0	0.28	0	0	14.67	0	0	0	0	0	0	6	6
	Inverter	MV3-15	368357	4907477	2	0	0	100.3	100.3	1	2622.01	3.25	0	79.37	0	0.28	0	0	14.69	0	0	0	0	0	0	5.97	5.97
	Inverter	MV4-7	369035	4909001	2	0	0	100.3	100.3	1	2624	3.25	0	79.38	0	0.28	0	0	14.69	0	0	0	0	0	0	5.96	5.96
	Inverter	MV3-11	368346	4907662	2	0	0	100.3	100.3	1	2657.03	3.25	0	79.49	0	0.29	0	0	14.75	0	0	0	0	0	0	5.78	5.78

Inverter	MV4-2	369272	4909397	2	0	0	100.3	100.3	1	2754.81	3.25	0	79.8	0	0.31	0	0	14.93	0	0	0	0	0	0	5.27	5.27
Inverter	MV4-4	369027	4909199	2	0	0	100.3	100.3	1	2767.44	4.99	0	79.84	0	1.06	3.25	0.01	14.96	0	0	0	0	0	0	1.2	1.2
Inverter	MV4-3	369229	4909397	2	0	0	100.3	100.3	1	2781.47	3.25	0	79.89	0	0.32	0	0	14.98	0	0	0	0	0	0	5.13	5.13
Inverter	MV3-17	368178	4907472	2	0	0	100.3	100.3	1	2799.79	3.25	0	79.94	0	0.32	0	0	15.01	0	0	0	0	0	0	5.03	5.03
Inverter	MV3-10	368167	4907669	2	0	0	100.3	100.3	1	2834.84	3.25	0	80.05	0	0.33	0	0	15.08	0	0	0	0	0	0	4.85	4.85
Inverter	MV3-6	368162	4907834	2	0	0	100.3	100.3	1	2870.19	3.25	0	80.16	0	0.34	0	0	15.14	0	0	0	0	0	0	4.68	4.68
Inverter	MV4-1	369011	4909397	2	0	0	100.3	100.3	1	2922.64	3.25	0	80.32	0	0.35	0	0	15.23	0	0	0	0	0	0	4.41	4.41
Inverter	MV3-13	367963	4907577	2	0	0	100.3	100.3	1	3024.42	3.25	0	80.61	0	0.37	0	0	15.42	0	0	0	0	0	0	3.92	3.92
Inverter	MV3-7	367945	4907754	2	0	0	100.3	100.3	1	3067.8	3.25	0	80.74	0	0.37	0	0	15.49	0	0	0	0	0	0	3.71	3.71
Inverter	MV3-3	367939	4907927	2	0	0	100.3	100.3	1	3108.15	3.25	0	80.85	0	0.38	0	0	15.56	0	0	0	0	0	0	3.52	3.52
Inverter	MV3-18	367752	4907412	2	0	0	100.3	100.3	1	3220.32	3.25	0	81.16	0	0.4	0	0	15.76	0	0	0	0	0	0	2.99	2.99
DSTATCOM - 10 MVAR #1	DSAT1	369437	4908757	2.5	0	0	96.6	96.6	1	2164.88	3.5	0	77.71	0	3.26	0	0	1.82	0	0	0	0	0	0	13.85	13.85
Inverter	MV3-12	367668	4907594	2	0	0	100.3	100.3	1	3319.44	3.25	0	81.42	0	0.42	0	0	15.93	0	0	0	0	0	0	2.54	2.54
DSTATCOM - 10 MVAR #2	DSAT2	369403	4908757	2.5	0	0	96.6	96.6	1	2189.04	3.5	0	77.81	0	3.26	0	0	1.83	0	0	0	0	0	0	13.73	13.73
Inverter	MV6-4	370250	4906966	2	0	0	86.1	86.1	1	762.36	3.25	0	68.64	0	0.63	0	0	5.84	0	0	0	0	0	0	10.94	10.94
SubstationTransformer	W_ST	369711.17	4906112.3	2.5	0	0	92	92	1	1678	4.25	0	75.5	0	0.66	3.53	0.2	3.81	0	0	0	0	0	0	8.48	8.48
Westbrook Inverter Enclosur	W_INV6	369875	4906578	2	0	0	89.1	89.1	1	1269.35	3.25	0	73.07	0	0.74	0	0	6.81	0	0	0	0	0	0	8.44	8.44
Westbrook Inverter Enclosur	W_INV5	369719	4906574	2	0	0	89.1	89.1	1	1407.64	3.25	0	73.97	0	0.77	0	0	7.05	0	0	0	0	0	0	7.27	7.27
Inverter	MV2-3	365820	4906641	2	0	0	100.3	100.3	1	5179.96	3.25	0	85.29	0	0.66	0	0	18.84	0	0	0	0	0	0	-4.47	-4.47
Westbrook Inverter Enclosur	W_INV7	369780	4906417	2	0	0	89.1	89.1	1	1436	3.25	0	74.14	0	0.78	0	0	7.1	0	0	0	0	0	0	7.04	7.04
Inverter	MV2-4	365586	4906624	2	0	0	100.3	100.3	1	5414.39	3.25	0	85.67	0	0.67	0	0	19.18	0	0	0	0	0	0	-5.21	-5.21
Inverter	MV5-6	369982	4908507	2	0	0	89.1	89.1	1	1616.41	3.25	0	75.17	0	0.82	0	0	7.41	0	0	0	0	0	0	5.66	5.66
Inverter	MV1-15	365315	4904994	2	0	0	100.3	100.3	1	6076.4	3.25	0	86.67	0	0.71	0	0	20.1	0	0	0	0	0	0	-7.16	-7.16
Westbrook Inverter Enclosur	W_INV4	369673	4906164	2	0	0	89.1	89.1	1	1673.48	3.25	0	75.47	0	0.83	0	0	7.5	0	0	0	0	0	0	5.25	5.25
Inverter	MV1-12	365038	4905386	2	0	0	100.3	100.3	1	6207.65	3.25	0	86.86	0	0.71	0	0	20.27	0	0	0	0	0	0	-7.53	-7.53
Inverter	MV1-4	364815	4905918	2	0	0	100.3	100.3	1	6289.27	3.25	0	86.97	0	0.71	0	0	20.38	0	0	0	0	0	0	-7.75	-7.75
Inverter	MV1-2	364753	4906063	2	0	0	100.3	100.3	1	6321.67	3.25	0	87.02	0	0.71	0	0	20.42	0	0	0	0	0	0	-7.84	-7.84
Inverter	MV1-1	364715	4906166	2	0	0	100.3	100.3	1	6341.01	3.25	0	87.04	0	0.71	0	0	20.45	0	0	0	0	0	0	-7.89	-7.89
Inverter	MV1-8	364788	4905647	2	0	0	100.3	100.3	1	6377.29	3.25	0	87.09	0	0.71	0	0	20.5	0	0	0	0	0	0	-7.99	-7.99
Inverter	MV1-5	364671	4905892	2	0	0	100.3	100.3	1	6435.53	3.25	0	87.17	0	0.71	0	0	20.57	0	0	0	0	0	0	-8.15	-8.15
Inverter	MV1-11	364655	4905414	2	0	0	100.3	100.3	1	6566.65	3.25	0	87.35	0	0.72	0	0	20.75	0	0	0	0	0	0	-8.5	-8.5
Westbrook Inverter Enclosur	W_INV2	369374	4906388	2	0	0	89.1	89.1	1	1799.56	3.25	0	76.1	0	0.86	0	0	7.71	0	0	0	0	0	0	4.38	4.38
Westbrook Inverter Enclosur	W_INV3	369508	4906164	2	0	0	89.1	89.1	1	1804.09	3.25	0	76.13	0	0.86	0	0	7.72	0	0	0	0	0	0	4.35	4.35
Inverter	MV1-9	364561	4905646	2	0	0	100.3	100.3	1	6597.71	3.25	0	87.39	0	0.72	0	0	20.79	0	0	0	0	0	0	-8.58	-8.58
Inverter	MV1-6	364477	4905835	2	0	0	100.3	100.3	1	6637.15	3.25	0	87.44	0	0.71	0	0	20.84	0	0	0	0	0	0	-8.68	-8.68
Fixed Reactor Bank 2	FRB2	369464	4908755	6	0	0	89.8	89.8	1	2144.46	5.25	0	77.63	0	-0.98	0	0	4.61	0	0	0	0	0	0	8.52	8.52
Inverter	MV2-1	365842	4906816	2	0	0	97.3	97.3	1	5141.22	3.25	0	85.22	0	0.65	0	0	18.79	0	0	0	0	0	0	-7.35	-7.35
Fixed Reactor Bank 1	FRB1	369378	4908755	6	0	0	89.8	89.8	1	2205.58	5.25	0	77.87	0	-0.97	0	0	4.71	0	0	0	0	0	0	8.17	8.17
Inverter	MV4-15	369176	4908481	2	0	0	89.1	89.1	1	2187.26	3.25	0	77.8	0	0.95	0	0	8.35	0	0	0	0	0	0	1.96	1.96
Inverter	MV4-14	369176	4908507	2	0	0	89.1	89.1	1	2202.29	3.25	0	77.86	0	0.95	0	0	8.37	0	0	0	0	0	0	1.87	1.87
Inverter	MV3-22	368656	4907142	2	0	0	89.1	89.1	1	2312.4	3.25	0	78.28	0	0.98	0	0	8.55	0	0	0	0	0	0	1.25	1.25
Inverter	MV4-13	369051	4908605	2	0	0	89.1	89.1	1	2360.99	3.25	0	78.46	0	0.99	0	0	8.63	0	0	0	0	0	0	0.98	0.98
Westbrook Inverter Enclosur	W_INV1	369409	4906578	2	0	0	86.1	86.1	1	1687.03	3.25	0	75.54	0	0.83	0	0	7.53	0	0	0	0	0	0	2.15	2.15
Inverter	MV1-10	365004	4905564	2	0	0	97.3	97.3	1	6190	3.25	0	86.83	0	0.71	0	0	20.25	0	0	0	0	0	0	-10.48	-10.48
Inverter	MV1-14	365163	4905049	2	0	0	97.3	97.3	1	6198.51	3.25	0	86.85	0	0.71	0	0	20.26	0	0	0	0	0	0	-10.5	-10.5
Inverter	MV3-2	368671	4907928	2	0	0	89.1	89.1	1	2401.03	3.25	0	78.61	0	1	0	0	8.69	0	0	0	0	0	0	0.76	0.76
Inverter	MV1-7	364925	4905782	2	0	0	97.3	97.3	1	6211.9	3.25	0	86.86	0	0.71	0	0	20.28	0	0	0	0	0	0	-10.54	-10.54
Inverter	MV4-12	369043	4908803	2	0	0	89.1	89.1	1	2488.08	3.25	0	78.92	0	1.02	0	0	8.83	0	0	0	0	0	0	0.29	0.29
Inverter	MV1-13	364731	4905241	2	0	0	97.3	97.3	1	6544	3.25	0	87.32	0	0.71	0	0	20.72	0	0	0	0	0	0	-11.44	-11.44
Inverter	MV3-4	368502	4907925	2	0	0	89.1	89.1	1	2562.29	3.25	0	79.17	0	1.04	0	0	8.94	0	0	0	0	0	0	-0.1	-0.1
Inverter	MV3-5	368340	4907843	2	0	0	89.1	89.1	1	2698.55	3.25	0	79.62	0	1.07	0	0	9.16	0	0	0	0	0	0	-0.79	-0.79
Inverter	MV3-1	368156	4907976	2	0	0	89.1	89.1	1	2909.42	3.25	0	80.28	0	1.12	0	0	9.48	0	0	0	0	0	0	-1.82	-1.82
Gardiner Substation	G_Sub	366586.3	4903349.9	2.5	0	0	90.8	90.8	1	5848.79	4.25	0	86.34	0	1.84	2.14	0.34	9.58	0	0	0	0	0	0	-9.13	-9.13
Westbrook Inverter Transfor	W_INVTR6	369881	4906578	2	0	0	77.3	77.3	1	1264.19	3.25	0	73.04	0	-2.09	0	0	0.83	0	0	0	0	0	0	5.56	5.56
Inverter	MV2-2	365977	4906654	2	0	0	89.1	89.1	1	5022.5	3.25	0	85.02	0	1.65	0	0	12.49	0	0	0	0	0	0	-10.1	-10.1
Westbrook Inverter Transfor	W_INVTR5	369725	4906574	2	0	0	77.3	77.3	1	1402.32	3.25	0	73.94	0	-2.16	0	0	0.9	0	0	0	0	0	0	4.66	4.66
Westbrook Inverter Transfor	W_INVTR7	369786	4906417	2	0	0	77.3	77.3	1	1431.04	3.25	0	74.11	0	-2.17	0	0	0.92	0	0	0	0	0	0	4.48	4.48
Westbrook Inverter Transfor	W_INVTR1	369403	4906578	2	0	0	78.2	78.2	1	1692.57	3.25	0	75.57	0	-2.29	0	0	1.05	0	0	0	0	0	0	3.9	3.9
Westbrook Inverter Transfor	W_INVTR4	369679	4906164	2	0	0	77.3	77.3	1	1668.85	3.25	0	75.45	0	-2.28	0	0	1.04	0	0	0	0	0	0	3.13	3.13
Inverter	MV1-3	364440	4906039	2	0	0	89.1	89.1	1	6633.83	3.25	0	87.44	0	2.04	0	0	14.55	0	0	0	0	0	0	-14.96	-14.96
Inverters	G_Inv2	366676.9	4903239.1	2	0	0	87.7	87.7	1	5856.1	3.25	0	86.35	0	2.91	0	0	6.83	0	0	0	0	0	0	-8.43	-8.43
Westbrook Inverter Transfor	W_INVTR3	369514	4906164	2	0	0	77.3	77.3	1	1799.24	3.25	0	76.1	0	-2.33	0	0	1.11	0	0	0	0	0	0	2.46	2.46
Inverters	G_Inv4	366732.8	4903105	2	0	0	87.7	87.7	1	5908	3.25	0	86.43	0	2.91	0	0	6.88	0	0	0	0	0	0	-8.57	-8.57
Westbrook Inverter Transfor	W_INVTR2	369368	4906388	2	0	0	77.3	77.3	1	1804.87	3.25	0	76.13	0	-2.33	0	0	1.11	0	0	0	0	0	0	2.43	2.43
Inverters	G_Inv6	366788.5	4902972	2	0	0	87.7	87.7	1	5962.35	3.25	0	86.51	0	2.92	0	0	6.94	0	0	0	0	0	0	-8.7	-8.7
Inverters	G_Inv1	366526.4	4903225.8	2	0	0	87.7	87.7	1	5976.12	3.25	0	86.53	0	2.92	0	0	6.95	0	0	0	0	0	0	-8.74	-8.74
Inverters	G_Inv8	366844.5	4902838.5	2	0	0	87.7	87.7	1	6019.82	3.25	0	86.59	0	2.92	0	0	7	0	0	0	0	0	0	-8.85	-8.85
Inverters	G_Inv3	366583.7	4903091.4	2	0	0	87.7	87.7	1	6025.08	3.25	0	86.6	0	2.92	0	0	7	0	0	0	0	0	0	-8.86	-8.86
Inverters	G_Inv5	366638.5	4902958.1	2	0	0	87.7	87.7	1	6078.16	3.25	0	86.68	0	2.92	0	0	7.06	0	0	0	0	0	0	-8.99	-8.99
Inverters	G_Inv10	366900.7	4902704.8	2	0	0	87.7	87.7	1	6080.21	3.25	0	86.68	0	2.92	0	0	7.06	0	0	0	0	0	0	-9	-9
Inverters	G_Inv7	366694.6	4902824.7	2	0	0	87.7	87.7	1	6133.34	3.25	0	86.75	0	2.92	0	0	7.11	0	0	0	0	0	0	-9.13	-9.13
Inverter Transformer	MV6-1 T	370230	4907364	2	0	0	69.4	69.4	1	749.84	3.25	0	68.5	0	1.43	0	0	3.43	0	0	0	0	0	0	-4.01	-4.01
Inverters	G_Inv9	366750.9	4902691.8	2	0	0	87.7	87.7	1	6190.9	3.25	0	86.84	0	2.93	0	0	7.17	0	0	0	0	0	0	-9.27	-9.27
Inverter Transformer	MV6-4 T	370244	4906966	2	0	0	69.4	69.4	1	768	3.25	0	68.71	0	1.45	0	0	3.46	0	0	0	0	0	0	-4.27	-4.27

Inverter Transformer	MV6-3 T	370202	4907140	2	0	0	56.1	56.1	1	769.65	3.25	0	68.73	0	-0.06	0	0	4.32	0	0	0	0	0	0	-16.92	-16.92
Inverter Transformer	MV6-2 T	370091	4907339	2	0	0	56.1	56.1	1	883.25	3.25	0	69.92	0	-0.03	0	0	4.6	0	0	0	0	0	0	-18.44	-18.44
Inverter Transformer	MV2-1 T	365836	4906816	2	0	0	69.4	69.4	1	5147.2	3.25	0	85.23	0	3.04	0	0	7.48	0	0	0	0	0	0	-26.4	-26.4
Inverter Transformer	MV1-10 T	365010	4905564	2	0	0	69.4	69.4	1	6184.22	3.25	0	86.83	0	3.22	0	0	8.13	0	0	0	0	0	0	-28.82	-28.82
Inverter Transformer	MV1-14 T	365157	4905049	2	0	0	69.4	69.4	1	6204.13	3.25	0	86.85	0	3.22	0	0	8.14	0	0	0	0	0	0	-28.86	-28.86
Inverter Transformer	MV1-7 T	364919	4905782	2	0	0	69.4	69.4	1	6217.73	3.25	0	86.87	0	3.22	0	0	8.15	0	0	0	0	0	0	-28.89	-28.89
Inverter Transformer	MV1-13 T	364725	4905241	2	0	0	69.4	69.4	1	6549.72	3.25	0	87.32	0	3.26	0	0	8.34	0	0	0	0	0	0	-29.58	-29.58
Inverter Transformer	MV5-4 T	370330	4908707	2	0	0	56.1	56.1	1	1612.79	3.25	0	75.15	0	0.24	0	0	6.26	0	0	0	0	0	0	-25.59	-25.59
Inverter Transformer	MV5-6 T	369987	4908507	2	0	0	56.1	56.1	1	1613.37	3.25	0	75.15	0	0.24	0	0	6.26	0	0	0	0	0	0	-25.6	-25.6
Inverter Transformer	MV5-5 T	370021	4908690	2	0	0	56.1	56.1	1	1743.58	3.25	0	75.83	0	0.3	0	0	6.53	0	0	0	0	0	0	-26.6	-26.6
Inverter Transformer	MV5-3 T	370237	4908851	2	0	0	56.1	56.1	1	1782.04	3.25	0	76.02	0	0.31	0	0	6.61	0	0	0	0	0	0	-26.88	-26.88
Inverter Transformer	MV5-2 T	370011	4908853	2	0	0	56.1	56.1	1	1887.63	3.25	0	76.52	0	0.36	0	0	6.82	0	0	0	0	0	0	-27.64	-27.64
Inverter Transformer	MV5-1 T	370015	4909142	2	0	0	56.1	56.1	1	2140.06	3.25	0	77.61	0	0.46	0	0	7.32	0	0	0	0	0	0	-29.33	-29.33
Inverter Transformer	MV4-15 T	369170	4908481	2	0	0	56.1	56.1	1	2192.18	3.25	0	77.82	0	0.49	0	0	7.42	0	0	0	0	0	0	-29.66	-29.66
Inverter Transformer	MV4-14 T	369182	4908507	2	0	0	56.1	56.1	1	2197.41	3.25	0	77.84	0	0.49	0	0	7.43	0	0	0	0	0	0	-29.69	-29.69
Inverter Transformer	MV3-20 T	368683	4907317	2	0	0	56.1	56.1	1	2285.74	3.25	0	78.18	0	0.52	0	0	7.59	0	0	0	0	0	0	-30.24	-30.24
Inverter Transformer	MV3-14 T	368678	4907498	2	0	0	56.1	56.1	1	2305.09	3.25	0	78.25	0	0.53	0	0	7.63	0	0	0	0	0	0	-30.36	-30.36
Inverter Transformer	MV3-22 T	368661	4907142	2	0	0	56.1	56.1	1	2307.41	3.25	0	78.26	0	0.53	0	0	7.63	0	0	0	0	0	0	-30.37	-30.37
Inverter Transformer	MV4-10 T	369307	4908858	2	0	0	56.1	56.1	1	2328.3	3.25	0	78.34	0	0.54	0	0	7.67	0	0	0	0	0	0	-30.5	-30.5
Inverter Transformer	MV3-8 T	368685	4907712	2	0	0	56.1	56.1	1	2333.23	3.25	0	78.36	0	0.55	0	0	7.68	0	0	0	0	0	0	-30.53	-30.53
Inverter Transformer	MV4-11 T	369269	4908855	2	0	0	56.1	56.1	1	2353.46	3.25	0	78.43	0	0.55	0	0	7.72	0	0	0	0	0	0	-30.65	-30.65
Inverter Transformer	MV4-13 T	369057	4908605	2	0	0	56.1	56.1	1	2356.12	3.25	0	78.44	0	0.55	0	0	7.72	0	0	0	0	0	0	-30.67	-30.67
Inverter Transformer	MV3-2 T	368677	4907928	2	0	0	56.1	56.1	1	2395.29	3.25	0	78.59	0	0.57	0	0	7.8	0	0	0	0	0	0	-30.9	-30.9
Inverter Transformer	MV4-9 T	369284	4909001	2	0	0	56.1	56.1	1	2446.48	3.25	0	78.77	0	0.59	0	0	7.89	0	0	0	0	0	0	-31.2	-31.2
Inverter Transformer	MV4-8 T	369262	4909001	2	0	0	56.1	56.1	1	2461.67	3.25	0	78.82	0	0.6	0	0	7.92	0	0	0	0	0	0	-31.29	-31.29
Inverter Transformer	MV3-16 T	368509	4907475	2	0	0	56.1	56.1	1	2470.55	3.25	0	78.86	0	0.6	0	0	7.94	0	0	0	0	0	0	-31.34	-31.34
Inverter Transformer	MV3-21 T	368484	4907206	2	0	0	56.1	56.1	1	2482.98	3.25	0	78.9	0	0.61	0	0	7.96	0	0	0	0	0	0	-31.41	-31.41
Inverter Transformer	MV4-12 T	369049	4908803	2	0	0	56.1	56.1	1	2483.44	3.25	0	78.9	0	0.61	0	0	7.96	0	0	0	0	0	0	-31.41	-31.41
Inverter Transformer	MV3-9 T	368517	4907703	2	0	0	56.1	56.1	1	2496.04	3.25	0	78.95	0	0.61	0	0	7.98	0	0	0	0	0	0	-31.48	-31.48
Inverter Transformer	MV3-4 T	368507	4907925	2	0	0	56.1	56.1	1	2557.48	3.25	0	79.16	0	0.64	0	0	8.09	0	0	0	0	0	0	-31.83	-31.83
Inverter Transformer	MV4-5 T	369283	4909199	2	0	0	56.1	56.1	1	2594.42	3.25	0	79.28	0	0.66	0	0	8.16	0	0	0	0	0	0	-32.04	-32.04
Inverter Transformer	MV4-6 T	369249	4909192	2	0	0	56.1	56.1	1	2611.34	3.25	0	79.34	0	0.66	0	0	8.19	0	0	0	0	0	0	-32.13	-32.13
Inverter Transformer	MV3-19 T	368352	4907347	2	0	0	56.1	56.1	1	2617.73	3.25	0	79.36	0	0.67	0	0	8.2	0	0	0	0	0	0	-32.17	-32.17
Inverter Transformer	MV4-7 T	369040	4909001	2	0	0	56.1	56.1	1	2620.32	3.25	0	79.37	0	0.67	0	0	8.21	0	0	0	0	0	0	-32.18	-32.18
Inverter Transformer	MV3-15 T	368351	4907477	2	0	0	56.1	56.1	1	2627.98	3.25	0	79.39	0	0.67	0	0	8.22	0	0	0	0	0	0	-32.23	-32.23
Inverter Transformer	MV3-11 T	368340	4907662	2	0	0	56.1	56.1	1	2662.95	3.25	0	79.51	0	0.69	0	0	8.28	0	0	0	0	0	0	-32.42	-32.42
Inverter Transformer	MV3-5 T	368335	4907843	2	0	0	56.1	56.1	1	2703.42	3.25	0	79.64	0	0.7	0	0	8.35	0	0	0	0	0	0	-32.64	-32.64
Inverter Transformer	MV4-2 T	369267	4909397	2	0	0	56.1	56.1	1	2757.89	3.25	0	79.81	0	0.73	0	0	8.45	0	0	0	0	0	0	-32.93	-32.93
Inverter Transformer	MV4-4 T	369033	4909199	2	0	0	56.1	56.1	1	2763.23	4.99	0	79.83	0	1.65	2.71	0.01	8.46	0	0	0	0	0	0	-36.59	-36.59
Inverter Transformer	MV4-3 T	369234	4909397	2	0	0	56.1	56.1	1	2778.35	3.25	0	79.88	0	0.74	0	0	8.49	0	0	0	0	0	0	-33.04	-33.04
Inverter Transformer	MV3-17 T	368183	4907472	2	0	0	56.1	56.1	1	2794.81	3.25	0	79.93	0	0.74	0	0	8.52	0	0	0	0	0	0	-33.13	-33.13
Inverter Transformer	MV3-10 T	368162	4907669	2	0	0	56.1	56.1	1	2839.78	3.25	0	80.07	0	0.76	0	0	8.59	0	0	0	0	0	0	-33.36	-33.36
Inverter Transformer	MV3-6 T	368156	4907834	2	0	0	56.1	56.1	1	2876.05	3.25	0	80.18	0	0.78	0	0	8.66	0	0	0	0	0	0	-33.55	-33.55
Inverter Transformer	MV3-1 T	368150	4907976	2	0	0	56.1	56.1	1	2915.22	3.25	0	80.29	0	0.79	0	0	8.72	0	0	0	0	0	0	-33.75	-33.75
Inverter Transformer	MV4-1 T	369017	4909397	2	0	0	56.1	56.1	1	2918.63	3.25	0	80.3	0	0.8	0	0	8.73	0	0	0	0	0	0	-33.77	-33.77
Inverter Transformer	MV3-13 T	367958	4907577	2	0	0	56.1	56.1	1	3029.39	3.25	0	80.63	0	0.84	0	0	8.92	0	0	0	0	0	0	-34.33	-34.33
Inverter Transformer	MV3-7 T	367951	4907754	2	0	0	56.1	56.1	1	3061.89	3.25	0	80.72	0	0.86	0	0	8.97	0	0	0	0	0	0	-34.49	-34.49
Inverter Transformer	MV3-3 T	367944	4907927	2	0	0	56.1	56.1	1	3103.27	3.25	0	80.84	0	0.87	0	0	9.04	0	0	0	0	0	0	-34.69	-34.69
Inverter Transformer	MV3-18 T	367757	4907412	2	0	0	56.1	56.1	1	3215.33	3.25	0	81.14	0	0.92	0	0	9.23	0	0	0	0	0	0	-35.23	-35.23
Inverter Transformer	MV3-12 T	367674	4907594	2	0	0	56.1	56.1	1	3313.48	3.25	0	81.41	0	0.96	0	0	9.39	0	0	0	0	0	0	-35.7	-35.7
Inverter Transformer	MV2-2 T	365982	4906654	2	0	0	56.1	56.1	1	5017.53	3.25	0	85.01	0	1.63	0	0	11.88	0	0	0	0	0	0	-42.46	-42.46
Inverter Transformer	MV2-3 T	365814	4906641	2	0	0	56.1	56.1	1	5185.92	3.25	0	85.3	0	1.69	0	0	12.1	0	0	0	0	0	0	-43.03	-43.03
Inverter Transformer	MV2-4 T	365590	4906628	2	0	0	56.1	56.1	1	5409.97	3.25	0	85.66	0	1.77	0	0	12.38	0	0	0	0	0	0	-43.76	-43.76
Inverter Transformer	MV1-15 T	365309	4904994	2	0	0	56.1	56.1	1	6081.98	3.25	0	86.68	0	1.99	0	0	13.2	0	0	0	0	0	0	-45.81	-45.81
Inverter Transformer	MV1-12 T	365044	4905386	2	0	0	56.1	56.1	1	6201.92	3.25	0	86.85	0	2.03	0	0	13.34	0	0	0	0	0	0	-46.16	-46.16
Inverter Transformer	MV1-4 T	364821	4905918	2	0	0	56.1	56.1	1	6283.4	3.25	0	86.96	0	2.05	0	0	13.43	0	0	0	0	0	0	-46.39	-46.39
Inverter Transformer	MV1-2 T	364759	4906063	2	0	0	56.1	56.1	1	6315.77	3.25	0	87.01	0	2.06	0	0	13.47	0	0	0	0	0	0	-46.48	-46.48
Inverter Transformer	MV1-1 T	364721	4906166	2	0	0	56.1	56.1	1	6335.09	3.25	0	87.04	0	2.07	0	0	13.49	0	0	0	0	0	0	-46.54	-46.54
Inverter Transformer	MV1-8 T	364782	4905647	2	0	0	56.1	56.1	1	6383.1	3.25	0	87.1	0	2.08	0	0	13.55	0	0	0	0	0	0	-46.67	-46.67
Inverter Transformer	MV1-5 T	364676	4905892	2	0	0	56.1	56.1	1	6430.64	3.25	0	87.17	0	2.1	0	0	13.6	0	0	0	0	0	0	-46.81	-46.81
Inverter Transformer	MV1-11 T	364649	4905414	2	0	0	56.1	56.1	1	6572.42	3.25	0	87.35	0	2.14	0	0	13.76	0	0	0	0	0	0	-47.2	-47.2
Inverter Transformer	MV1-9 T	364555	4905646	2	0	0	56.1	56.1	1	6603.53	3.25	0	87.4	0	2.15	0	0	13.8	0	0	0	0	0	0	-47.28	-47.28
Inverter Transformer	MV1-6 T	364482	4905835	2	0	0	56.1	56.1	1	6632.26	3.25	0	87.43	0	2.16	0	0	13.83	0	0	0	0	0	0	-47.36	-47.36
Inverter Transformer	MV1-3 T	364435	4906039	2	0	0	56.1	56.1	1	6638.75	3.25	0	87.44	0	2.16	0	0	13.84	0	0	0	0	0	0	-47.38	-47.38
Line Reactor	NGR	369421	4908787.5	5	0	0	45.4	45.4	1	2197.79	5.25	0	77.84	0	3.37	1.28	0.08	0.9	0	0	0	0	0	0	-38.03	-38.03
Limit. Valu 0	0																								
Level D/N: 30.1639	30.1639																								

Receiver: Existing Noise Receptor
ID: W-R21
X: 370825.3
Y: 4907285
Z: 4.5
Ground: 0

ISO	Description	ID	X	Y	Z	Ground	ReflOrd	LxT	LxN	L/A	Dist.	hm	Freq	Adiv	K0b	Agr	Abar	z	Aatm	Afol	Ahous	Cmet	CmetN	Dc	RL	LtotT	LtotN
	Sol_Luce Substation	S_Substation	369426	4908792	3.5	0	0	112.1	112.1	1	2056.48	5.25	0	77.26	0	0.04	3.78	0.33	4.46	0	0	0	0	0	0	26.54	26.54
	Inverter	MV6-3	370207	4907140	2	0	0	100.3	100.3	1	635.08	3.25	0	67.06	0	-0.45	0	0	9.4	0	0	0	0	0	0	24.31	24.31
	Inverter	MV6-2	370085	4907339	2	0	0	100.3	100.3	1	742.27	3.25	0	68.41	0	-0.39	0	0	9.93	0	0	0	0	0	0	22.35	22.35
	Inverter	MV6-1	370235	4907364	2	0	0	97.3	97.3	1	595.57	3.25	0	66.5	0	-0.48	0	0	9.18	0	0	0	0	0	0	22.12	22.12
	Inverter	MV5-4	370324	4908707	2	0	0	100.3	100.3	1	1507.78	3.25	0	74.57	0	-0.03	0	0	12.34	0	0	0	0	0	0	13.43	13.43
	Inverter	MV5-5	370015	4908690	2	0	0	100.3	100.3	1	1621.92	3.25	0	75.2	0	0.01	0	0	12.62	0	0	0	0	0	0	12.48	12.48
	Inverter	MV5-3	370231	4908851	2	0	0	100.3	100.3	1	1674.98	3.25	0	75.48	0	0.03	0	0	12.74	0	0	0	0	0	0	12.06	12.06
	Inverter	MV5-2	370006	4908853	2	0	0	100.3	100.3	1	1769.15	3.25	0	75.96	0	0.06	0	0	12.96	0	0	0	0	0	0	11.34	11.34
	Inverter	MV5-1	370020	4909142	2	0	0	100.3	100.3	1	2024.1	3.25	0	77.12	0	0.14	0	0	13.51	0	0	0	0	0	0	9.54	9.54
	Inverter	MV3-20	368689	4907317	2	0	0	100.3	100.3	1	2136.54	3.25	0	77.59	0	0.17	0	0	13.74	0	0	0	0	0	0	8.81	8.81
	Inverter	MV3-14	368684	4907498	2	0	0	100.3	100.3	1	2151.87	3.25	0	77.66	0	0.17	0	0	13.78	0	0	0	0	0	0	8.71	8.71
	Inverter	MV4-10	369312	4908858	2	0	0	100.3	100.3	1	2182.75	3.25	0	77.78	0	0.18	0	0	13.84	0	0	0	0	0	0	8.51	8.51
	Inverter	MV3-8	368680	4907712	2	0	0	100.3	100.3	1	2187.38	3.25	0	77.8	0	0.18	0	0	13.85	0	0	0	0	0	0	8.49	8.49
	Inverter	MV4-11	369264	4908855	2	0	0	100.3	100.3	1	2214.17	3.25	0	77.9	0	0.19	0	0	13.9	0	0	0	0	0	0	8.32	8.32
	Inverter	MV4-9	369289	4909001	2	0	0	100.3	100.3	1	2303.23	3.25	0	78.25	0	0.21	0	0	14.08	0	0	0	0	0	0	7.78	7.78
	Inverter	MV3-16	368514	4907475	2	0	0	100.3	100.3	1	2319.1	3.25	0	78.31	0	0.21	0	0	14.11	0	0	0	0	0	0	7.68	7.68
	Inverter	MV4-8	369256	4909001	2	0	0	100.3	100.3	1	2325.37	3.25	0	78.33	0	0.22	0	0	14.12	0	0	0	0	0	0	7.64	7.64
	Inverter	MV3-21	368478	4907206	2	0	0	100.3	100.3	1	2348.63	3.25	0	78.42	0	0.22	0	0	14.17	0	0	0	0	0	0	7.51	7.51
	Inverter	MV3-9	368512	4907703	2	0	0	100.3	100.3	1	2350.76	3.25	0	78.42	0	0.22	0	0	14.17	0	0	0	0	0	0	7.49	7.49
	Inverter	MV4-5	369289	4909199	2	0	0	100.3	100.3	1	2454.31	3.25	0	78.8	0	0.25	0	0	14.37	0	0	0	0	0	0	6.9	6.9
	Inverter	MV3-19	368357	4907347	2	0	0	100.3	100.3	1	2469.08	3.25	0	78.85	0	0.25	0	0	14.4	0	0	0	0	0	0	6.81	6.81
	Inverter	MV3-15	368357	4907477	2	0	0	100.3	100.3	1	2475.76	3.25	0	78.87	0	0.25	0	0	14.41	0	0	0	0	0	0	6.77	6.77
	Inverter	MV4-6	369243	4909192	2	0	0	100.3	100.3	1	2477.97	3.25	0	78.88	0	0.25	0	0	14.42	0	0	0	0	0	0	6.76	6.76
	Inverter	MV4-7	369035	4909001	2	0	0	100.3	100.3	1	2479.89	3.25	0	78.89	0	0.25	0	0	14.42	0	0	0	0	0	0	6.75	6.75
	Inverter	MV3-11	368346	4907662	2	0	0	100.3	100.3	1	2507.8	3.25	0	78.99	0	0.26	0	0	14.47	0	0	0	0	0	0	6.59	6.59
	Inverter	MV4-2	369272	4909397	2	0	0	100.3	100.3	1	2621.7	3.25	0	79.37	0	0.28	0	0	14.69	0	0	0	0	0	0	5.97	5.97
	Inverter	MV4-4	369027	4909199	2	0	0	100.3	100.3	1	2626.27	4.98	0	79.39	0	1.02	3.28	0.01	14.7	0	0	0	0	0	0	1.92	1.92
	Inverter	MV4-3	369229	4909397	2	0	0	100.3	100.3	1	2647.4	3.25	0	79.46	0	0.29	0	0	14.73	0	0	0	0	0	0	5.83	5.83
	Inverter	MV3-17	368178	4907472	2	0	0	100.3	100.3	1	2653.9	3.25	0	79.48	0	0.29	0	0	14.75	0	0	0	0	0	0	5.8	5.8
	Inverter	MV3-10	368167	4907669	2	0	0	100.3	100.3	1	2685.89	3.25	0	79.58	0	0.3	0	0	14.81	0	0	0	0	0	0	5.63	5.63
	Inverter	MV3-6	368162	4907834	2	0	0	100.3	100.3	1	2719.3	3.25	0	79.69	0	0.31	0	0	14.87	0	0	0	0	0	0	5.45	5.45
	Inverter	MV4-1	369011	4909397	2	0	0	100.3	100.3	1	2784.28	3.25	0	79.89	0	0.32	0	0	14.99	0	0	0	0	0	0	5.11	5.11
	Inverter	MV3-13	367963	4907577	2	0	0	100.3	100.3	1	2877.16	3.25	0	80.18	0	0.34	0	0	15.15	0	0	0	0	0	0	4.64	4.64
	Inverter	MV3-7	367945	4907754	2	0	0	100.3	100.3	1	2918.23	3.25	0	80.3	0	0.35	0	0	15.23	0	0	0	0	0	0	4.44	4.44
	Inverter	MV3-3	367939	4907927	2	0	0	100.3	100.3	1	2956.84	3.25	0	80.42	0	0.35	0	0	15.3	0	0	0	0	0	0	4.25	4.25
	Inverter	MV3-18	367752	4907412	2	0	0	100.3	100.3	1	3075.92	3.25	0	80.76	0	0.38	0	0	15.51	0	0	0	0	0	0	3.67	3.67
	DSTATCOM - 10 MVAR #1	DSAT1	369437	4908757	2.5	0	0	96.6	96.6	1	2023.4	3.5	0	77.12	0	3.23	0	0	1.73	0	0	0	0	0	0	14.55	14.55
	DSTATCOM - 10 MVAR #2	DSAT2	369403	4908757	2.5	0	0	96.6	96.6	1	2046.88	3.5	0	77.22	0	3.23	0	0	1.75	0	0	0	0	0	0	14.43	14.43
	Inverter	MV3-12	367668	4907594	2	0	0	100.3	100.3	1	3172.39	3.25	0	81.03	0	0.39	0	0	15.67	0	0	0	0	0	0	3.22	3.22
	Inverter	MV6-4	370250	4906966	2	0	0	86.1	86.1	1	657.83	3.25	0	67.36	0	0.6	0	0	5.6	0	0	0	0	0	0	12.5	12.5
	SubstationTransformer	W_ST	369711.17	4906112.3	2.5	0	0	92	92	1	1617.59	3.5	0	75.18	0	-0.25	0	0	3.7	0	0	0	0	0	0	13.35	13.35
	Westbrook Inverter Enclosur	W_INV6	369875	4906578	2	0	0	89.1	89.1	1	1184.45	3.25	0	72.47	0	0.72	0	0	6.65	0	0	0	0	0	0	9.21	9.21
	Westbrook Inverter Enclosur	W_INV5	369719	4906574	2	0	0	89.1	89.1	1	1315.08	3.25	0	73.38	0	0.75	0	0	6.89	0	0	0	0	0	0	8.04	8.04
	Westbrook Inverter Enclosur	W_INV7	369780	4906417	2	0	0	89.1	89.1	1	1358.71	3.25	0	73.66	0	0.76	0	0	6.96	0	0	0	0	0	0	7.67	7.67
	Inverter	MV2-3	365820	4906641	2	0	0	100.3	100.3	1	5046.56	3.25	0	85.06	0	0.65	0	0	18.65	0	0	0	0	0	0	-4.04	-4.04
	Inverter	MV2-4	365586	4906624	2	0	0	100.3	100.3	1	5280.83	3.25	0	85.45	0	0.67	0	0	18.99	0	0	0	0	0	0	-4.8	-4.8
	Inverter	MV5-6	369982	4908507	2	0	0	89.1	89.1	1	1484.74	3.25	0	74.43	0	0.79	0	0	7.18	0	0	0	0	0	0	6.65	6.65
	Westbrook Inverter Enclosur	W_INV4	369673	4906164	2	0	0	89.1	89.1	1	1607.62	3.25	0	75.12	0	0.82	0	0	7.39	0	0	0	0	0	0	5.73	5.73
	Inverter	MV1-15	365315	4904994	2	0	0	100.3	100.3	1	5967.59	3.25	0	86.52	0	0.7	0	0	19.95	0	0	0	0	0	0	-6.86	-6.86
	Inverter	MV1-12	365038	4905386	2	0	0	100.3	100.3	1	6090.9	3.25	0	86.69	0	0.71	0	0	20.12	0	0	0	0	0	0	-7.21	-7.21
	Inverter	MV1-4	364815	4905918	2	0	0	100.3	100.3	1	6163.8	3.25	0	86.8	0	0.71	0	0	20.21	0	0	0	0	0	0	-7.41	-7.41
	Inverter	MV1-2	364753	4906063	2	0	0	100.3	100.3	1	6194.04	3.25	0	86.84	0	0.71	0	0	20.25	0	0	0	0	0	0	-7.49	-7.49
	Inverter	MV1-1	364715	4906166	2	0	0	100.3	100.3	1	6211.92	3.25	0	86.86	0	0.71	0	0	20.28	0	0	0	0	0	0	-7.54	-7.54
	Westbrook Inverter Enclosur	W_INV2	369374	4906388	2	0	0	89.1	89.1	1	1706.13	3.25	0	75.64	0	0.84	0	0	7.56	0	0	0	0	0	0	5.02	5.02
	Inverter	MV1-8	364788	4905647	2	0	0	100.3	100.3	1	6255.56	3.25	0	86.93	0	0.71	0	0	20.34	0	0	0	0	0	0	-7.66	-7.66
	Inverter	MV1-5	364671	4905892	2	0	0	100.3	100.3	1	6309.98	3.25	0	87	0	0.71	0	0	20.41	0	0	0	0	0	0	-7.81	-7.81
	Westbrook Inverter Enclosur	W_INV3	369508	4906164	2	0	0	89.1	89.1	1	1729.72	3.25	0	75.76	0	0.84	0	0	7.6	0	0	0	0	0	0	4.86	4.86
	Inverter	MV1-11	364655	4905414	2	0	0	100.3	100.3	1	6447.73	3.25	0	87.19	0	0.71	0	0	20.59	0	0	0	0	0	0	-8.18	-8.18
	Inverter	MV1-9	364561	4905646	2	0	0	100.3	100.3	1	6475.17	3.25	0	87.23	0	0.71	0	0	20.63	0	0	0	0	0	0	-8.25	-8.25
	Inverter	MV1-6	364477	4905835	2	0	0	100.3	100.3	1	6511.79	3.25	0	87.27	0	0.71	0	0	20.67	0	0	0	0	0	0	-8.35	-8.35
	Fixed Reactor Bank 2	FRB2	369464	4908755	6	0	0	89.8	89.8	1	2003.51	5.25	0	77.04	0	-0.99	0	0	4.37	0	0	0	0	0	0	9.36	9.36
	Fixed Reactor Bank 1	FRB1	369378	4908755	6	0	0	89.8	89.8	1	2062.91	5.25	0	77.29	0	-0.99	0	0	4.47	0	0	0	0	0	0	9	9
	Inverter	MV2-1	365842	4906816	2	0	0	97.3	97.3	1	5005.32	3.25	0	84.99	0	0.64	0	0	18.59	0	0	0	0	0	0	-6.91	-6.91
	Inverter	MV4-15	369176	4908481	2	0	0	89.1	89.1	1	2037.31	3.25	0	77.18	0	0.92	0	0	8.11	0	0	0	0	0	0	2.85	2.85
	Inverter	MV4-14	369176	4908507	2	0	0	89.1	89.1	1	2052.68	3.25	0	77.25	0	0.92	0	0	8.13	0	0	0	0	0	0	2.76	2.76
	Inverter	MV3-22	368656	4907142	2	0	0	89.1	89.1	1	2174.01	3.25	0	77.75	0	0.95	0	0	8.33	0	0	0	0	0	0	2.04	2.04
	Inverter	MV4-13	369051	4908605	2	0	0	89.1	89.1	1	2211.46	3.25	0	77.89	0	0.96	0	0	8.39	0	0	0	0	0	0	1.82	1.82
	Westbrook Inverter Enclosur	W_INV1	369409	4906578	2	0	0	86.1	86.1	1	1582.96	3.25	0	74.99	0	0.81	0	0	7.35	0	0	0	0	0	0	2.91	2.91
	Inverter	MV3-2	368671	4907928	2	0	0	89.1	89.1	1	2248.21	3.25	0	78.04	0	0.97	0	0	8.45	0	0	0	0	0	0	1.61	1.61
	Inverter	MV4-12	369043	4908803	2	0	0	89.1	89.1	1	2341.14	3.25	0	78.39	0	0.99	0	0	8.59	0	0	0	0	0	0	1.09	1.09
	Inverter	MV1-10	365004	4905564	2	0	0	97.3	97.3	1	6070.37	3.25	0	86.66	0	0.71	0	0	20.09	0	0	0	0	0	0	-10.15	-10.15
	Inverter	MV1-14	365163	4905049	2	0	0	97.3	97.3	1	6087.8	3.25	0	86.69	0	0.71	0	0	20.11	0	0	0	0	0	0	-10.2	-10.2

Inverter	MV1-7	364925	4905782	2	0	0	97.3	97.3	1	6088.72	3.25	0	86.69	0	0.71	0	0	20.11	0	0	0	0	0	0	-10.2	-10.2
Inverter	MV3-4	368502	4907925	2	0	0	89.1	89.1	1	2409.84	3.25	0	78.64	0	1	0	0	8.7	0	0	0	0	0	0	0.71	0.71
Inverter	MV1-13	364731	4905241	2	0	0	97.3	97.3	1	6427.94	3.25	0	87.16	0	0.71	0	0	20.56	0	0	0	0	0	0	-11.13	-11.13
Inverter	MV3-5	368340	4907843	2	0	0	89.1	89.1	1	2547.17	3.25	0	79.12	0	1.04	0	0	8.92	0	0	0	0	0	0	-0.02	-0.02
Inverter	MV3-1	368156	4907976	2	0	0	89.1	89.1	1	2757.29	3.25	0	79.81	0	1.09	0	0	9.25	0	0	0	0	0	0	-1.09	-1.09
Westbrook Inverter Transfor	W_INVTR6	369881	4906578	2	0	0	77.3	77.3	1	1179.64	3.25	0	72.44	0	-2.04	0	0	0.78	0	0	0	0	0	0	6.16	6.16
Gardiner Substation	G_Sub	366586.3	4903349.9	2.5	0	0	90.8	90.8	1	5783.96	4.25	0	86.24	0	1.83	2.15	0.34	9.51	0	0	0	0	0	0	-8.96	-8.96
Inverter	MV2-2	365977	4906654	2	0	0	89.1	89.1	1	4889.19	3.25	0	84.78	0	1.61	0	0	12.31	0	0	0	0	0	0	-9.65	-9.65
Westbrook Inverter Transfor	W_INVTR5	369725	4906574	2	0	0	77.3	77.3	1	1310.03	3.25	0	73.35	0	-2.11	0	0	0.85	0	0	0	0	0	0	5.25	5.25
Westbrook Inverter Transfor	W_INVTR7	369786	4906417	2	0	0	77.3	77.3	1	1354.1	3.25	0	73.63	0	-2.13	0	0	0.88	0	0	0	0	0	0	4.96	4.96
Westbrook Inverter Transfor	W_INVTR1	369403	4906578	2	0	0	78.2	78.2	1	1588.33	3.25	0	75.02	0	-2.24	0	0	1	0	0	0	0	0	0	4.46	4.46
Inverter Transformer	MV6-1 T	370230	4907364	2	0	0	69.4	69.4	1	600.52	3.25	0	66.57	0	1.21	0	0	3.17	0	0	0	0	0	0	-1.6	-1.6
Westbrook Inverter Transfor	W_INVTR4	369679	4906164	2	0	0	77.3	77.3	1	1603.32	3.25	0	75.1	0	-2.25	0	0	1.01	0	0	0	0	0	0	3.48	3.48
Inverter Transformer	MV6-4 T	370244	4906966	2	0	0	69.4	69.4	1	663.08	3.25	0	67.43	0	1.31	0	0	3.28	0	0	0	0	0	0	-2.67	-2.67
Inverter	MV1-3	364440	4906039	2	0	0	89.1	89.1	1	6505.73	3.25	0	87.27	0	2.01	0	0	14.39	0	0	0	0	0	0	-14.61	-14.61
Westbrook Inverter Transfor	W_INVTR2	369368	4906388	2	0	0	77.3	77.3	1	1711.24	3.25	0	75.67	0	-2.29	0	0	1.06	0	0	0	0	0	0	2.91	2.91
Westbrook Inverter Transfor	W_INVTR3	369514	4906164	2	0	0	77.3	77.3	1	1725.15	3.25	0	75.74	0	-2.3	0	0	1.07	0	0	0	0	0	0	2.83	2.83
Inverters	G_Inv2	366676.9	4903239.1	2	0	0	87.7	87.7	1	5794.7	3.25	0	86.26	0	2.91	0	0	6.77	0	0	0	0	0	0	-8.28	-8.28
Inverters	G_Inv4	366732.8	4903105	2	0	0	87.7	87.7	1	5849.87	3.25	0	86.34	0	2.91	0	0	6.82	0	0	0	0	0	0	-8.42	-8.42
Inverters	G_Inv6	366788.5	4902972	2	0	0	87.7	87.7	1	5907.43	3.25	0	86.43	0	2.91	0	0	6.88	0	0	0	0	0	0	-8.56	-8.56
Inverters	G_Inv1	366526.4	4903225.8	2	0	0	87.7	87.7	1	5912.5	3.25	0	86.44	0	2.91	0	0	6.89	0	0	0	0	0	0	-8.58	-8.58
Inverters	G_Inv3	366583.7	4903091.4	2	0	0	87.7	87.7	1	5964.68	3.25	0	86.51	0	2.92	0	0	6.94	0	0	0	0	0	0	-8.71	-8.71
Inverters	G_Inv8	366844.5	4902838.5	2	0	0	87.7	87.7	1	5968.09	3.25	0	86.52	0	2.92	0	0	6.95	0	0	0	0	0	0	-8.72	-8.72
Inverters	G_Inv5	366638.5	4902958.1	2	0	0	87.7	87.7	1	6020.91	3.25	0	86.59	0	2.92	0	0	7	0	0	0	0	0	0	-8.85	-8.85
Inverters	G_Inv10	366900.7	4902704.8	2	0	0	87.7	87.7	1	6031.64	3.25	0	86.61	0	2.92	0	0	7.01	0	0	0	0	0	0	-8.88	-8.88
Inverters	G_Inv7	366694.6	4902824.7	2	0	0	87.7	87.7	1	6079.22	3.25	0	86.68	0	2.92	0	0	7.06	0	0	0	0	0	0	-9	-9
Inverters	G_Inv9	366750.9	4902691.8	2	0	0	87.7	87.7	1	6139.89	3.25	0	86.76	0	2.92	0	0	7.12	0	0	0	0	0	0	-9.15	-9.15
Inverter Transformer	MV6-3 T	370202	4907140	2	0	0	56.1	56.1	1	639.95	3.25	0	67.12	0	-0.1	0	0	3.97	0	0	0	0	0	0	-14.94	-14.94
Inverter Transformer	MV6-2 T	370091	4907339	2	0	0	56.1	56.1	1	736.29	3.25	0	68.34	0	-0.07	0	0	4.23	0	0	0	0	0	0	-16.44	-16.44
Inverter Transformer	MV2-1 T	365836	4906816	2	0	0	69.4	69.4	1	5011.3	3.25	0	85	0	3.01	0	0	7.39	0	0	0	0	0	0	-26.05	-26.05
Inverter Transformer	MV1-10 T	365010	4905564	2	0	0	69.4	69.4	1	6064.62	3.25	0	86.66	0	3.2	0	0	8.06	0	0	0	0	0	0	-28.56	-28.56
Inverter Transformer	MV1-14 T	365157	4905049	2	0	0	69.4	69.4	1	6093.38	3.25	0	86.7	0	3.2	0	0	8.07	0	0	0	0	0	0	-28.62	-28.62
Inverter Transformer	MV1-7 T	364919	4905782	2	0	0	69.4	69.4	1	6094.54	3.25	0	86.7	0	3.2	0	0	8.08	0	0	0	0	0	0	-28.63	-28.63
Inverter Transformer	MV1-13 T	364725	4905241	2	0	0	69.4	69.4	1	6433.63	3.25	0	87.17	0	3.25	0	0	8.28	0	0	0	0	0	0	-29.35	-29.35
Inverter Transformer	MV5-6 T	369987	4908507	2	0	0	56.1	56.1	1	1481.9	3.25	0	74.42	0	0.19	0	0	5.98	0	0	0	0	0	0	-24.53	-24.53
Inverter Transformer	MV5-4 T	370330	4908707	2	0	0	56.1	56.1	1	1505.79	3.25	0	74.56	0	0.2	0	0	6.03	0	0	0	0	0	0	-24.73	-24.73
Inverter Transformer	MV5-5 T	370021	4908690	2	0	0	56.1	56.1	1	1618.93	3.25	0	75.18	0	0.25	0	0	6.27	0	0	0	0	0	0	-25.64	-25.64
Inverter Transformer	MV5-3 T	370237	4908851	2	0	0	56.1	56.1	1	1672.86	3.25	0	75.47	0	0.27	0	0	6.38	0	0	0	0	0	0	-26.06	-26.06
Inverter Transformer	MV5-2 T	370011	4908853	2	0	0	56.1	56.1	1	1766.84	3.25	0	75.94	0	0.31	0	0	6.58	0	0	0	0	0	0	-26.77	-26.77
Inverter Transformer	MV5-1 T	370015	4909142	2	0	0	56.1	56.1	1	2026.09	3.25	0	77.13	0	0.41	0	0	7.09	0	0	0	0	0	0	-28.58	-28.58
Inverter Transformer	MV4-15 T	369170	4908481	2	0	0	56.1	56.1	1	2042.17	3.25	0	77.2	0	0.42	0	0	7.13	0	0	0	0	0	0	-28.69	-28.69
Inverter Transformer	MV4-14 T	369182	4908507	2	0	0	56.1	56.1	1	2047.86	3.25	0	77.23	0	0.42	0	0	7.14	0	0	0	0	0	0	-28.73	-28.73
Inverter Transformer	MV3-20 T	368683	4907317	2	0	0	56.1	56.1	1	2142.54	3.25	0	77.62	0	0.46	0	0	7.32	0	0	0	0	0	0	-29.35	-29.35
Inverter Transformer	MV3-14 T	368678	4907498	2	0	0	56.1	56.1	1	2157.84	3.25	0	77.68	0	0.47	0	0	7.35	0	0	0	0	0	0	-29.44	-29.44
Inverter Transformer	MV3-22 T	368661	4907142	2	0	0	56.1	56.1	1	2169.02	3.25	0	77.73	0	0.48	0	0	7.37	0	0	0	0	0	0	-29.51	-29.51
Inverter Transformer	MV3-8 T	368685	4907712	2	0	0	56.1	56.1	1	2182.48	3.25	0	77.78	0	0.48	0	0	7.4	0	0	0	0	0	0	-29.6	-29.6
Inverter Transformer	MV4-10 T	369307	4908858	2	0	0	56.1	56.1	1	2186.22	3.25	0	77.79	0	0.48	0	0	7.4	0	0	0	0	0	0	-29.62	-29.62
Inverter Transformer	MV4-13 T	369057	4908605	2	0	0	56.1	56.1	1	2206.65	3.25	0	77.87	0	0.49	0	0	7.44	0	0	0	0	0	0	-29.75	-29.75
Inverter Transformer	MV4-11 T	369269	4908855	2	0	0	56.1	56.1	1	2210.65	3.25	0	77.89	0	0.49	0	0	7.45	0	0	0	0	0	0	-29.78	-29.78
Inverter Transformer	MV3-2 T	368677	4907928	2	0	0	56.1	56.1	1	2242.46	3.25	0	78.01	0	0.51	0	0	7.51	0	0	0	0	0	0	-29.97	-29.97
Inverter Transformer	MV4-9 T	369284	4909001	2	0	0	56.1	56.1	1	2306.57	3.25	0	78.26	0	0.53	0	0	7.63	0	0	0	0	0	0	-30.37	-30.37
Inverter Transformer	MV4-8 T	369262	4909001	2	0	0	56.1	56.1	1	2321.33	3.25	0	78.31	0	0.54	0	0	7.66	0	0	0	0	0	0	-30.46	-30.46
Inverter Transformer	MV3-16 T	368509	4907475	2	0	0	56.1	56.1	1	2324.08	3.25	0	78.33	0	0.54	0	0	7.66	0	0	0	0	0	0	-30.47	-30.47
Inverter Transformer	MV4-12 T	369049	4908803	2	0	0	56.1	56.1	1	2336.57	3.25	0	78.37	0	0.55	0	0	7.69	0	0	0	0	0	0	-30.55	-30.55
Inverter Transformer	MV3-21 T	368484	4907206	2	0	0	56.1	56.1	1	2342.63	3.25	0	78.39	0	0.55	0	0	7.7	0	0	0	0	0	0	-30.58	-30.58
Inverter Transformer	MV3-9 T	368517	4907703	2	0	0	56.1	56.1	1	2345.84	3.25	0	78.41	0	0.55	0	0	7.71	0	0	0	0	0	0	-30.6	-30.6
Inverter Transformer	MV3-4 T	368507	4907925	2	0	0	56.1	56.1	1	2405.02	3.25	0	78.62	0	0.58	0	0	7.82	0	0	0	0	0	0	-30.96	-30.96
Inverter Transformer	MV4-5 T	369283	4909199	2	0	0	56.1	56.1	1	2458.07	3.25	0	78.81	0	0.6	0	0	7.91	0	0	0	0	0	0	-31.26	-31.26
Inverter Transformer	MV3-19 T	368352	4907347	2	0	0	56.1	56.1	1	2474.08	3.25	0	78.87	0	0.61	0	0	7.94	0	0	0	0	0	0	-31.36	-31.36
Inverter Transformer	MV4-6 T	369249	4909192	2	0	0	56.1	56.1	1	2474.14	3.25	0	78.87	0	0.61	0	0	7.94	0	0	0	0	0	0	-31.36	-31.36
Inverter Transformer	MV4-7 T	369040	4909001	2	0	0	56.1	56.1	1	2476.28	3.25	0	78.88	0	0.61	0	0	7.95	0	0	0	0	0	0	-31.37	-31.37
Inverter Transformer	MV3-15 T	368351	4907477	2	0	0	56.1	56.1	1	2481.74	3.25	0	78.9	0	0.61	0	0	7.96	0	0	0	0	0	0	-31.4	-31.4
Inverter Transformer	MV3-11 T	368340	4907662	2	0	0	56.1	56.1	1	2513.73	3.25	0	79.01	0	0.62	0	0	8.01	0	0	0	0	0	0	-31.58	-31.58
Inverter Transformer	MV3-5 T	368335	4907843	2	0	0	56.1	56.1	1	2552.05	3.25	0	79.14	0	0.64	0	0	8.08	0	0	0	0	0	0	-31.8	-31.8
Inverter Transformer	MV4-4 T	369033	4909199	2	0	0	56.1	56.1	1	2622.16	4.98	0	79.37	0	1.59	2.76	0.01	8.21	0	0	0	0	0	0	-35.87	-35.87
Inverter Transformer	MV4-2 T	369267	4909397	2	0	0	56.1	56.1	1	2624.66	3.25	0	79.38	0	0.67	0	0	8.21	0	0	0	0	0	0	-32.21	-32.21
Inverter Transformer	MV4-3 T	369234	4909397	2	0	0	56.1	56.1	1	2644.39	3.25	0	79.45	0	0.68	0	0	8.25	0	0	0	0	0	0	-32.32	-32.32
Inverter Transformer	MV3-17 T	368183	4907472	2	0	0	56.1	56.1	1	2648.91	3.25	0	79.46	0	0.68	0	0	8.26	0	0	0	0	0	0	-32.34	-32.34
Inverter Transformer	MV3-10 T	368162	4907669	2	0	0	56.1	56.1	1	2690.84	3.25	0	79.6	0	0.7	0	0	8.33	0	0	0	0	0	0	-32.57	-32.57
Inverter Transformer	MV3-6 T	368156	4907834	2	0	0	56.1	56.1	1	2725.17	3.25	0	79.71	0	0.71	0	0	8.39	0	0	0	0	0	0	-32.76	-32.76
Inverter Transformer	MV3-1 T	368150	4907976	2	0	0	56.1	56.1	1	2763.1	3.25	0	79.83	0	0.73	0	0	8.46	0	0	0	0	0	0	-32.96	-32.96
Inverter Transformer	MV4-1 T	369017	4909397	2	0	0	56.1	56.1	1	2780.38	3.25	0	79.88	0	0.74	0	0	8.49	0	0	0	0	0	0	-33.05	-33.05
Inverter Transformer	MV3-13 T	367958	4907577	2	0	0	56.1	56.1	1	2882.13	3.25	0	80.19	0	0.78	0	0	8.67	0	0	0	0	0	0	-33.58	-33.58
Inverter Transformer	MV3-7 T	367951	4907754	2	0	0	56.1	56.1	1	2912.31	3.25	0	80.28	0	0.79	0	0	8.72	0	0	0	0	0	0	-33.74	-33.74

	Inverter Transformer	MV3-3 T	367944	4907927	2	0	0	56.1	56.1	1	2951.96	3.25	0	80.4	0	0.81	0	0	8.79	0	0	0	0	0	0	-33.94	-33.94
	Inverter Transformer	MV3-18 T	367757	4907412	2	0	0	56.1	56.1	1	3070.93	3.25	0	80.75	0	0.86	0	0	8.99	0	0	0	0	0	0	-34.53	-34.53
	Inverter Transformer	MV3-12 T	367674	4907594	2	0	0	56.1	56.1	1	3166.41	3.25	0	81.01	0	0.9	0	0	9.15	0	0	0	0	0	0	-35	-35
	Inverter Transformer	MV2-2 T	365982	4906654	2	0	0	56.1	56.1	1	4884.23	3.25	0	84.78	0	1.58	0	0	11.7	0	0	0	0	0	0	-42	-42
	Inverter Transformer	MV2-3 T	365814	4906641	2	0	0	56.1	56.1	1	5052.51	3.25	0	85.07	0	1.64	0	0	11.92	0	0	0	0	0	0	-42.58	-42.58
	Inverter Transformer	MV2-4 T	365590	4906628	2	0	0	56.1	56.1	1	5276.36	3.25	0	85.45	0	1.72	0	0	12.21	0	0	0	0	0	0	-43.32	-43.32
	Inverter Transformer	MV1-15 T	365309	4904994	2	0	0	56.1	56.1	1	5973.13	3.25	0	86.52	0	1.96	0	0	13.07	0	0	0	0	0	0	-45.49	-45.49
	Inverter Transformer	MV1-12 T	365044	4905386	2	0	0	56.1	56.1	1	6085.2	3.25	0	86.69	0	1.99	0	0	13.2	0	0	0	0	0	0	-45.82	-45.82
	Inverter Transformer	MV1-4 T	364821	4905918	2	0	0	56.1	56.1	1	6157.95	3.25	0	86.79	0	2.01	0	0	13.29	0	0	0	0	0	0	-46.03	-46.03
	Inverter Transformer	MV1-2 T	364759	4906063	2	0	0	56.1	56.1	1	6188.16	3.25	0	86.83	0	2.02	0	0	13.32	0	0	0	0	0	0	-46.12	-46.12
	Inverter Transformer	MV1-1 T	364721	4906166	2	0	0	56.1	56.1	1	6206.02	3.25	0	86.86	0	2.03	0	0	13.34	0	0	0	0	0	0	-46.17	-46.17
	Inverter Transformer	MV1-8 T	364782	4905647	2	0	0	56.1	56.1	1	6261.35	3.25	0	86.93	0	2.05	0	0	13.41	0	0	0	0	0	0	-46.33	-46.33
	Inverter Transformer	MV1-5 T	364676	4905892	2	0	0	56.1	56.1	1	6305.1	3.25	0	86.99	0	2.06	0	0	13.46	0	0	0	0	0	0	-46.45	-46.45
	Inverter Transformer	MV1-11 T	364649	4905414	2	0	0	56.1	56.1	1	6453.47	3.25	0	87.2	0	2.1	0	0	13.63	0	0	0	0	0	0	-46.87	-46.87
	Inverter Transformer	MV1-9 T	364555	4905646	2	0	0	56.1	56.1	1	6480.97	3.25	0	87.23	0	2.11	0	0	13.66	0	0	0	0	0	0	-46.95	-46.95
	Inverter Transformer	MV1-6 T	364482	4905835	2	0	0	56.1	56.1	1	6506.92	3.25	0	87.27	0	2.12	0	0	13.69	0	0	0	0	0	0	-47.02	-47.02
	Inverter Transformer	MV1-3 T	364435	4906039	2	0	0	56.1	56.1	1	6510.64	3.25	0	87.27	0	2.12	0	0	13.69	0	0	0	0	0	0	-47.03	-47.03
	Line Reactor	NGR	369421	4908787.5	5	0	0	45.4	45.4	1	2056.59	5.25	0	77.26	0	3.38	1.28	0.09	0.84	0	0	0	0	0	0	-37.4	-37.4
Limit. Valu	0	0																								
Level D/N:	31.6143	31.6143																								

Receiver: Existing Noise Receptor
ID: W-R22
X: 369522.2
Y: 4905119.8
Z: 4.5
Ground: 0

ISO	Description	ID	X	Y	Z	Ground	ReflOrd	LxT	LxN	L/A	Dist.	hm	Freq	Adiv	K0b	Agr	Abar	z	Aatm	Afol	Ahous	Cmet	CmetN	Dc	RL	LtotT	LtotN
	Sol_Luce Substation	S_Substation	369426	4908792	3.5	0	0	112.1	112.1	1	3673.46	5.25	0	82.3	0	0.5	3.2	0.35	6.92	0	0	0	0	0	0	19.15	19.15
	Inverter	MV6-3	370207	4907140	2	0	0	100.3	100.3	1	2133.11	3.25	0	77.58	0	0.17	0	0	13.74	0	0	0	0	0	0	8.83	8.83
	Inverter	MV6-2	370085	4907339	2	0	0	100.3	100.3	1	2289.45	3.25	0	78.19	0	0.21	0	0	14.05	0	0	0	0	0	0	7.86	7.86
	Inverter	MV3-21	368478	4907206	2	0	0	100.3	100.3	1	2332.94	3.25	0	78.36	0	0.22	0	0	14.14	0	0	0	0	0	0	7.6	7.6
	Inverter	MV3-20	368689	4907317	2	0	0	100.3	100.3	1	2349.88	3.25	0	78.42	0	0.22	0	0	14.17	0	0	0	0	0	0	7.5	7.5
	Inverter	MV3-19	368357	4907347	2	0	0	100.3	100.3	1	2513.59	3.25	0	79.01	0	0.26	0	0	14.48	0	0	0	0	0	0	6.56	6.56
	Inverter	MV3-14	368684	4907498	2	0	0	100.3	100.3	1	2521.59	3.25	0	79.03	0	0.26	0	0	14.5	0	0	0	0	0	0	6.52	6.52
	Inverter	MV3-16	368514	4907475	2	0	0	100.3	100.3	1	2561.92	3.25	0	79.17	0	0.27	0	0	14.58	0	0	0	0	0	0	6.29	6.29
	Inverter	MV3-15	368357	4907477	2	0	0	100.3	100.3	1	2629.47	3.25	0	79.4	0	0.29	0	0	14.7	0	0	0	0	0	0	5.93	5.93
	SubstationTransformer	W_ST	369711.17	4906112.3	2.5	0	0	92	92	1	1010.3	3.5	0	71.09	0	-0.37	0	-0.14	2.54	0	0	0	0	0	0	18.72	18.72
	Inverter	MV3-17	368178	4907472	2	0	0	100.3	100.3	1	2709.19	3.25	0	79.66	0	0.3	0	0	14.85	0	0	0	0	0	0	5.5	5.5
	Inverter	MV3-8	368680	4907712	2	0	0	100.3	100.3	1	2725.58	3.25	0	79.71	0	0.31	0	0	14.88	0	0	0	0	0	0	5.42	5.42
	Inverter	MV3-9	368512	4907703	2	0	0	100.3	100.3	1	2773.7	3.25	0	79.86	0	0.32	0	0	14.97	0	0	0	0	0	0	5.17	5.17
	Inverter	MV3-11	368346	4907662	2	0	0	100.3	100.3	1	2801.11	3.25	0	79.95	0	0.32	0	0	15.02	0	0	0	0	0	0	5.03	5.03
	Inverter	MV3-10	368167	4907669	2	0	0	100.3	100.3	1	2887.04	3.25	0	80.21	0	0.34	0	0	15.17	0	0	0	0	0	0	4.59	4.59
	Inverter	MV3-18	367752	4907412	2	0	0	100.3	100.3	1	2896.17	3.25	0	80.24	0	0.34	0	0	15.19	0	0	0	0	0	0	4.55	4.55
	Inverter	MV3-13	367963	4907577	2	0	0	100.3	100.3	1	2910.14	3.25	0	80.28	0	0.34	0	0	15.21	0	0	0	0	0	0	4.48	4.48
	Inverter	MV3-6	368162	4907834	2	0	0	100.3	100.3	1	3035.96	3.25	0	80.65	0	0.37	0	0	15.44	0	0	0	0	0	0	3.86	3.86
	Inverter	MV3-7	367945	4907754	2	0	0	100.3	100.3	1	3070.27	3.25	0	80.74	0	0.38	0	0	15.5	0	0	0	0	0	0	3.7	3.7
	Inverter	MV3-12	367668	4907594	2	0	0	100.3	100.3	1	3091.88	3.25	0	80.8	0	0.38	0	0	15.53	0	0	0	0	0	0	3.59	3.59
	Inverter	MV3-3	367939	4907927	2	0	0	100.3	100.3	1	3222.87	3.25	0	81.16	0	0.4	0	0	15.76	0	0	0	0	0	0	2.98	2.98
	Inverter	MV6-1	370235	4907364	2	0	0	97.3	97.3	1	2354.68	3.25	0	78.44	0	0.22	0	0	14.18	0	0	0	0	0	0	4.47	4.47
	Inverter	MV5-5	370015	4908690	2	0	0	100.3	100.3	1	3604.05	3.25	0	82.14	0	0.47	0	0	16.4	0	0	0	0	0	0	1.3	1.3
	Inverter	MV5-4	370324	4908707	2	0	0	100.3	100.3	1	3675.72	3.25	0	82.31	0	0.48	0	0	16.52	0	0	0	0	0	0	1	1
	Inverter	MV4-10	369312	4908858	2	0	0	100.3	100.3	1	3744.11	3.25	0	82.47	0	0.49	0	0	16.64	0	0	0	0	0	0	0.72	0.72
	Inverter	MV4-11	369264	4908855	2	0	0	100.3	100.3	1	3744.11	3.25	0	82.47	0	0.49	0	0	16.64	0	0	0	0	0	0	0.72	0.72
	Inverter	MV5-2	370006	4908853	2	0	0	100.3	100.3	1	3764.42	3.25	0	82.51	0	0.49	0	0	16.67	0	0	0	0	0	0	0.64	0.64
	Inverter	MV5-3	370231	4908851	2	0	0	100.3	100.3	1	3797.93	3.25	0	82.59	0	0.5	0	0	16.72	0	0	0	0	0	0	0.5	0.5
	Westbrook Inverter Enclosur	W_INV3	369508	4906164	2	0	0	89.1	89.1	1	1044.3	3.25	0	71.38	0	0.69	0	0	6.4	0	0	0	0	0	0	10.59	10.59
	Westbrook Inverter Enclosur	W_INV4	369673	4906164	2	0	0	89.1	89.1	1	1055.04	3.25	0	71.47	0	0.7	0	0	6.42	0	0	0	0	0	0	10.48	10.48
	Inverter	MV4-9	369289	4909001	2	0	0	100.3	100.3	1	3888.2	3.25	0	82.79	0	0.51	0	0	16.87	0	0	0	0	0	0	0.14	0.14
	Inverter	MV4-8	369256	4909001	2	0	0	100.3	100.3	1	3890.32	3.25	0	82.8	0	0.51	0	0	16.87	0	0	0	0	0	0	0.13	0.13
	Inverter	MV4-7	369035	4909001	2	0	0	100.3	100.3	1	3911.66	3.25	0	82.85	0	0.51	0	0	16.91	0	0	0	0	0	0	0.04	0.04
	Inverter	MV2-3	365820	4906641	2	0	0	100.3	100.3	1	4002.54	3.25	0	83.05	0	0.53	0	0	17.05	0	0	0	0	0	0	-0.31	-0.31
	Inverter	MV5-1	370020	4909142	2	0	0	100.3	100.3	1	4052.89	3.25	0	83.16	0	0.53	0	0	17.13	0	0	0	0	0	0	-0.51	-0.51
	Inverter	MV4-6	369243	4909192	2	0	0	100.3	100.3	1	4081.76	3.25	0	83.22	0	0.54	0	0	17.18	0	0	0	0	0	0	-0.62	-0.62
	Inverter	MV4-5	369289	4909199	2	0	0	100.3	100.3	1	4085.86	3.25	0	83.23	0	0.54	0	0	17.19	0	0	0	0	0	0	-0.64	-0.64
	Inverter	MV4-4	369027	4909199	2	0	0	100.3	100.3	1	4109.15	3.25	0	83.28	0	0.54	0	0	17.22	0	0	0	0	0	0	-0.73	-0.73
	Inverter	MV1-15	365315	4904994	2	0	0	100.3	100.3	1	4209.08	3.25	0	83.48	0	0.56	0	0	17.38	0	0	0	0	0	0	-1.11	-1.11
	Inverter	MV2-4	365586	4906624	2	0	0	100.3	100.3	1	4213.82	3.25	0	83.49	0	0.56	0	0	17.39	0	0	0	0	0	0	-1.12	-1.12
	Inverter	MV4-2	369272	4909397	2	0	0	100.3	100.3	1	4284.51	3.25	0	83.64	0	0.56	0	0	17.5	0	0	0	0	0	0	-1.39	-1.39
	Inverter	MV4-3	369229	4909397	2	0	0	100.3	100.3	1	4287.24	3.25	0	83.64	0	0.57	0	0	17.5	0	0	0	0	0	0	-1.4	-1.4
	Inverter	MV4-1	369011	4909397	2	0	0	100.3	100.3	1	4307.64	3.25	0	83.68	0	0.57	0	0	17.53	0	0	0	0	0	0	-1.47	-1.47
	Inverter	MV1-12	365038	4905386	2	0	0	100.3	100.3	1	4492.1	3.25	0	84.05	0	0.59	0	0	17.82	0	0	0	0	0	0	-2.14	-2.14
	Westbrook Inverter Enclosur	W_INV2	369374	4906388	2	0	0	89.1	89.1	1	1276.83	3.25	0	73.12	0	0.74	0	0	6.82	0	0	0	0	0	0	8.37	8.37

Inverter	MV1-8	364788	4905647	2	0	0	100.3	100.3	1	4763.46	3.25	0	84.56	0	0.62	0	0	18.23	0	0	0	0	0	0	-3.1	-3.1
Inverter	MV1-4	364815	4905918	2	0	0	100.3	100.3	1	4774.4	3.25	0	84.58	0	0.62	0	0	18.25	0	0	0	0	0	0	-3.13	-3.13
Westbrook Inverter Enclosur	W_INV7	369780	4906417	2	0	0	89.1	89.1	1	1322.57	3.25	0	73.43	0	0.75	0	0	6.9	0	0	0	0	0	0	7.98	7.98
Inverter	MV1-2	364753	4906063	2	0	0	100.3	100.3	1	4861.57	3.25	0	84.74	0	0.63	0	0	18.38	0	0	0	0	0	0	-3.43	-3.43
Inverter	MV1-11	364655	4905414	2	0	0	100.3	100.3	1	4876.08	3.25	0	84.76	0	0.63	0	0	18.4	0	0	0	0	0	0	-3.48	-3.48
Inverter	MV1-5	364671	4905892	2	0	0	100.3	100.3	1	4912.27	3.25	0	84.83	0	0.63	0	0	18.45	0	0	0	0	0	0	-3.6	-3.6
Inverter	MV1-1	364715	4906166	2	0	0	100.3	100.3	1	4919.73	3.25	0	84.84	0	0.63	0	0	18.46	0	0	0	0	0	0	-3.62	-3.62
Inverter	MV1-9	364561	4905646	2	0	0	100.3	100.3	1	4989.03	3.25	0	84.96	0	0.64	0	0	18.56	0	0	0	0	0	0	-3.85	-3.85
Inverter	MV1-6	364477	4905835	2	0	0	100.3	100.3	1	5095.64	3.25	0	85.14	0	0.65	0	0	18.72	0	0	0	0	0	0	-4.2	-4.2
Westbrook Inverter Enclosur	W_INV5	369719	4906574	2	0	0	89.1	89.1	1	1467.46	3.25	0	74.33	0	0.79	0	0	7.15	0	0	0	0	0	0	6.79	6.79
Westbrook Inverter Enclosur	W_INV6	369875	4906578	2	0	0	89.1	89.1	1	1500.27	3.25	0	74.52	0	0.79	0	0	7.21	0	0	0	0	0	0	6.53	6.53
DSTATCOM - 10 MVAR #1	DSAT1	369437	4908757	2.5	0	0	96.6	96.6	1	3638.2	3.5	0	82.22	0	3.52	0	0	2.65	0	0	0	0	0	0	8.25	8.25
DSTATCOM - 10 MVAR #2	DSAT2	369403	4908757	2.5	0	0	96.6	96.6	1	3639.15	3.5	0	82.22	0	3.52	0	0	2.65	0	0	0	0	0	0	8.24	8.24
Inverter	MV2-1	365842	4906816	2	0	0	97.3	97.3	1	4052.28	3.25	0	83.15	0	0.53	0	0	17.13	0	0	0	0	0	0	-3.51	-3.51
Inverter	MV1-14	365163	4905049	2	0	0	97.3	97.3	1	4359.78	3.25	0	83.79	0	0.57	0	0	17.61	0	0	0	0	0	0	-4.67	-4.67
Inverter	MV1-10	365004	4905564	2	0	0	97.3	97.3	1	4539.98	3.25	0	84.14	0	0.6	0	0	17.89	0	0	0	0	0	0	-5.32	-5.32
Inverter	MV1-7	364925	4905782	2	0	0	97.3	97.3	1	4644.65	3.25	0	84.34	0	0.61	0	0	18.05	0	0	0	0	0	0	-5.68	-5.68
Inverter	MV1-13	364731	4905241	2	0	0	97.3	97.3	1	4792.73	3.25	0	84.61	0	0.62	0	0	18.27	0	0	0	0	0	0	-6.2	-6.2
Westbrook Inverter Enclosur	W_INV1	369409	4906578	2	0	0	86.1	86.1	1	1462.59	3.25	0	74.3	0	0.78	0	0	7.14	0	0	0	0	0	0	3.83	3.83
Inverter	MV3-22	368656	4907142	2	0	0	89.1	89.1	1	2199.91	3.25	0	77.85	0	0.95	0	0	8.37	0	0	0	0	0	0	1.89	1.89
Inverter	MV6-4	370250	4906966	2	0	0	86.1	86.1	1	1984.48	3.25	0	76.95	0	0.9	0	0	8.02	0	0	0	0	0	0	0.18	0.18
Gardiner Substation	G_Sub	366586.3	4903349.9	2.5	0	0	90.8	90.8	1	3428.13	4.25	0	81.7	0	1.2	2.83	0.3	6.58	0	0	0	0	0	0	-1.53	-1.53
Inverter	MV3-2	368671	4907928	2	0	0	89.1	89.1	1	2934.37	3.25	0	80.35	0	1.13	0	0	9.52	0	0	0	0	0	0	-1.94	-1.94
Inverter	MV3-5	368340	4907843	2	0	0	89.1	89.1	1	2968.74	3.25	0	80.45	0	1.14	0	0	9.57	0	0	0	0	0	0	-2.1	-2.1
Inverter	MV3-4	368502	4907925	2	0	0	89.1	89.1	1	2984.96	3.25	0	80.5	0	1.14	0	0	9.59	0	0	0	0	0	0	-2.18	-2.18
Inverter	MV3-1	368156	4907976	2	0	0	89.1	89.1	1	3166.13	3.25	0	81.01	0	1.19	0	0	9.87	0	0	0	0	0	0	-3.01	-3.01
Fixed Reactor Bank 2	FRB2	369464	4908755	6	0	0	89.8	89.8	1	3635.67	5.25	0	82.21	0	-0.78	0	0	6.87	0	0	0	0	0	0	1.47	1.47
Fixed Reactor Bank 1	FRB1	369378	4908755	6	0	0	89.8	89.8	1	3638.06	5.25	0	82.22	0	-0.78	0	0	6.87	0	0	0	0	0	0	1.46	1.46
Inverter	MV4-15	369176	4908481	2	0	0	89.1	89.1	1	3378.98	3.25	0	81.58	0	1.24	0	0	10.18	0	0	0	0	0	0	-3.94	-3.94
Inverter	MV4-14	369176	4908507	2	0	0	89.1	89.1	1	3404.85	3.25	0	81.64	0	1.25	0	0	10.22	0	0	0	0	0	0	-4.05	-4.05
Inverter	MV5-6	369982	4908507	2	0	0	89.1	89.1	1	3418.27	3.25	0	81.68	0	1.25	0	0	10.24	0	0	0	0	0	0	-4.11	-4.11
Inverter	MV4-13	369051	4908605	2	0	0	89.1	89.1	1	3516.91	3.25	0	81.92	0	1.27	0	0	10.39	0	0	0	0	0	0	-4.53	-4.53
Inverter	MV4-12	369043	4908803	2	0	0	89.1	89.1	1	3714.24	3.25	0	82.4	0	1.32	0	0	10.67	0	0	0	0	0	0	-5.34	-5.34
Inverter	MV2-2	365977	4906654	2	0	0	89.1	89.1	1	3862.93	3.25	0	82.74	0	1.36	0	0	10.89	0	0	0	0	0	0	-5.93	-5.93
Inverters	G_Inv2	366676.9	4903239.1	2	0	0	87.7	87.7	1	3410.68	3.25	0	81.66	0	2.74	0	0	4.23	0	0	0	0	0	0	-0.97	-0.97
Westbrook Inverter Transfor	W_INVTR3	369514	4906164	2	0	0	77.3	77.3	1	1044.24	3.25	0	71.38	0	-1.96	0	0	0.7	0	0	0	0	0	0	7.22	7.22
Inverters	G_Inv4	366732.8	4903105	2	0	0	87.7	87.7	1	3440.96	3.25	0	81.73	0	2.74	0	0	4.26	0	0	0	0	0	0	-1.08	-1.08
Westbrook Inverter Transfor	W_INVTR4	369679	4906164	2	0	0	77.3	77.3	1	1055.91	3.25	0	71.47	0	-1.97	0	0	0.71	0	0	0	0	0	0	7.13	7.13
Inverters	G_Inv6	366788.5	4902972	2	0	0	87.7	87.7	1	3476.52	3.25	0	81.82	0	2.75	0	0	4.3	0	0	0	0	0	0	-1.21	-1.21
Inverters	G_Inv8	366844.5	4902838.5	2	0	0	87.7	87.7	1	3517.73	3.25	0	81.93	0	2.75	0	0	4.35	0	0	0	0	0	0	-1.36	-1.36
Inverters	G_Inv1	366526.4	4903225.8	2	0	0	87.7	87.7	1	3544.3	3.25	0	81.99	0	2.75	0	0	4.38	0	0	0	0	0	0	-1.46	-1.46
Inverters	G_Inv10	366900.7	4902704.8	2	0	0	87.7	87.7	1	3564.34	3.25	0	82.04	0	2.75	0	0	4.4	0	0	0	0	0	0	-1.53	-1.53
Inverters	G_Inv3	366583.7	4903091.4	2	0	0	87.7	87.7	1	3570.6	3.25	0	82.05	0	2.75	0	0	4.41	0	0	0	0	0	0	-1.55	-1.55
Inverters	G_Inv5	366638.5	4902958.1	2	0	0	87.7	87.7	1	3603.98	3.25	0	82.14	0	2.76	0	0	4.44	0	0	0	0	0	0	-1.68	-1.68
Inverters	G_Inv7	366694.6	4902824.7	2	0	0	87.7	87.7	1	3641.81	3.25	0	82.23	0	2.76	0	0	4.48	0	0	0	0	0	0	-1.81	-1.81
Inverters	G_Inv9	366750.9	4902691.8	2	0	0	87.7	87.7	1	3684.47	3.25	0	82.33	0	2.76	0	0	4.53	0	0	0	0	0	0	-1.96	-1.96
Westbrook Inverter Transfor	W_INVTR2	369368	4906388	2	0	0	77.3	77.3	1	1277.54	3.25	0	73.13	0	-2.09	0	0	0.83	0	0	0	0	0	0	5.47	5.47
Westbrook Inverter Transfor	W_INVTR1	369403	4906578	2	0	0	78.2	78.2	1	1463.07	3.25	0	74.31	0	-2.18	0	0	0.93	0	0	0	0	0	0	5.19	5.19
Westbrook Inverter Transfor	W_INVTR7	369786	4906417	2	0	0	77.3	77.3	1	1323.75	3.25	0	73.44	0	-2.12	0	0	0.86	0	0	0	0	0	0	5.16	5.16
Inverter	MV1-3	364440	4906039	2	0	0	89.1	89.1	1	5164.66	3.25	0	85.26	0	1.68	0	0	12.68	0	0	0	0	0	0	-10.57	-10.57
Westbrook Inverter Transfor	W_INVTR5	369725	4906574	2	0	0	77.3	77.3	1	1468.28	3.25	0	74.34	0	-2.19	0	0	0.94	0	0	0	0	0	0	4.26	4.26
Westbrook Inverter Transfor	W_INVTR6	369881	4906578	2	0	0	77.3	77.3	1	1501.7	3.25	0	74.53	0	-2.2	0	0	0.96	0	0	0	0	0	0	4.06	4.06
Inverter Transformer	MV6-4 T	370244	4906966	2	0	0	69.4	69.4	1	1982.29	3.25	0	76.94	0	2.17	0	0	4.95	0	0	0	0	0	0	-14.71	-14.71
Inverter Transformer	MV6-1 T	370230	4907364	2	0	0	69.4	69.4	1	2353.17	3.25	0	78.43	0	2.3	0	0	5.31	0	0	0	0	0	0	-16.69	-16.69
Inverter Transformer	MV2-1 T	365836	4906816	2	0	0	69.4	69.4	1	4057.73	3.25	0	83.17	0	2.8	0	0	6.72	0	0	0	0	0	0	-23.33	-23.33
Inverter Transformer	MV1-14 T	365157	4905049	2	0	0	69.4	69.4	1	4365.77	3.25	0	83.8	0	2.87	0	0	6.94	0	0	0	0	0	0	-24.27	-24.27
Inverter Transformer	MV1-10 T	365010	4905564	2	0	0	69.4	69.4	1	4534.01	3.25	0	84.13	0	2.91	0	0	7.06	0	0	0	0	0	0	-24.76	-24.76
Inverter Transformer	MV1-7 T	364919	4905782	2	0	0	69.4	69.4	1	4650.59	3.25	0	84.35	0	2.94	0	0	7.14	0	0	0	0	0	0	-25.08	-25.08
Inverter Transformer	MV1-13 T	364725	4905241	2	0	0	69.4	69.4	1	4798.73	3.25	0	84.62	0	2.97	0	0	7.25	0	0	0	0	0	0	-25.49	-25.49
Inverter Transformer	MV6-3 T	370202	4907140	2	0	0	56.1	56.1	1	2131.51	3.25	0	77.57	0	0.46	0	0	7.3	0	0	0	0	0	0	-29.27	-29.27
Inverter Transformer	MV3-22 T	368661	4907142	2	0	0	56.1	56.1	1	2197.95	3.25	0	77.84	0	0.49	0	0	7.43	0	0	0	0	0	0	-29.7	-29.7
Inverter Transformer	MV6-2 T	370091	4907339	2	0	0	56.1	56.1	1	2290.94	3.25	0	78.2	0	0.53	0	0	7.6	0	0	0	0	0	0	-30.27	-30.27
Inverter Transformer	MV3-21 T	368484	4907206	2	0	0	56.1	56.1	1	2330.26	3.25	0	78.35	0	0.54	0	0	7.68	0	0	0	0	0	0	-30.51	-30.51
Inverter Transformer	MV3-20 T	368683	4907317	2	0	0	56.1	56.1	1	2352.01	3.25	0	78.43	0	0.55	0	0	7.72	0	0	0	0	0	0	-30.64	-30.64
Inverter Transformer	MV3-19 T	368352	4907347	2	0	0	56.1	56.1	1	2515.91	3.25	0	79.01	0	0.62	0	0	8.02	0	0	0	0	0	0	-31.6	-31.6
Inverter Transformer	MV3-14 T	368678	4907498	2	0	0	56.1	56.1	1	2523.59	3.25	0	79.04	0	0.63	0	0	8.03	0	0	0	0	0	0	-31.64	-31.64
Inverter Transformer	MV3-16 T	368509	4907475	2	0	0	56.1	56.1	1	2563.89	3.25	0	79.18	0	0.64	0	0	8.11	0	0	0	0	0	0	-31.87	-31.87
Inverter Transformer	MV3-15 T	368351	4907477	2	0	0	56.1	56.1	1	2632.13	3.25	0	79.41	0	0.67	0	0	8.23	0	0	0	0	0	0	-32.25	-32.25
Inverter Transformer	MV3-17 T	368183	4907472	2	0	0	56.1	56.1	1	2706.72	3.25	0	79.65	0	0.7	0	0	8.36	0	0	0	0	0	0	-32.66	-32.66
Inverter Transformer	MV3-8 T	368685	4907712	2	0	0	56.1	56.1	1	2724.04	3.25	0	79.7	0	0.71	0	0	8.39	0	0	0	0	0	0	-32.75	-32.75
Inverter Transformer	MV3-9 T	368517	4907703	2	0	0	56.1	56.1	1	2771.89	3.25	0	79.86	0	0.73	0	0	8.48	0	0	0	0	0	0	-33	-33
Inverter Transformer	MV3-11 T	368340	4907662	2	0	0	56.1	56.1	1	2803.64	3.25	0	79.95	0	0.75	0	0	8.53	0	0	0	0	0	0	-33.17	-33.17
Inverter Transformer	MV3-10 T	368162	4907669	2	0	0	56.1	56.1	1	2889.39	3.25	0	80.22	0	0.78	0	0	8.68	0	0	0	0	0	0	-33.62	-33.62
Inverter Transformer	MV3-18 T	367757	4907412	2	0	0	56.1	56.1	1	2893.12	3.25	0	80.23	0	0.78	0	0	8.69	0	0	0	0	0	0	-33.64	-33.64

	Inverter Transformer	MV3-13 T	367958	4907577	2	0	0	56.1	56.1	1	2912.83	3.25	0	80.29	0	0.79	0	0	8.72	0	0	0	0	0	0	-33.74	-33.74
	Inverter Transformer	MV3-2 T	368677	4907928	2	0	0	56.1	56.1	1	2932.64	3.25	0	80.35	0	0.8	0	0	8.75	0	0	0	0	0	0	-33.84	-33.84
	Inverter Transformer	MV3-5 T	368335	4907843	2	0	0	56.1	56.1	1	2970.74	3.25	0	80.46	0	0.82	0	0	8.82	0	0	0	0	0	0	-34.03	-34.03
	Inverter Transformer	MV3-4 T	368507	4907925	2	0	0	56.1	56.1	1	2983.25	3.25	0	80.49	0	0.82	0	0	8.84	0	0	0	0	0	0	-34.1	-34.1
	Inverter Transformer	MV3-6 T	368156	4907834	2	0	0	56.1	56.1	1	3038.65	3.25	0	80.65	0	0.85	0	0	8.93	0	0	0	0	0	0	-34.37	-34.37
	Inverter Transformer	MV3-7 T	367951	4907754	2	0	0	56.1	56.1	1	3067.2	3.25	0	80.73	0	0.86	0	0	8.98	0	0	0	0	0	0	-34.52	-34.52
	Inverter Transformer	MV3-12 T	367674	4907594	2	0	0	56.1	56.1	1	3088.29	3.25	0	80.79	0	0.87	0	0	9.02	0	0	0	0	0	0	-34.62	-34.62
	Inverter Transformer	MV3-1 T	368150	4907976	2	0	0	56.1	56.1	1	3168.72	3.25	0	81.02	0	0.9	0	0	9.15	0	0	0	0	0	0	-35.01	-35.01
	Inverter Transformer	MV3-3 T	367944	4907927	2	0	0	56.1	56.1	1	3220.42	3.25	0	81.16	0	0.92	0	0	9.24	0	0	0	0	0	0	-35.26	-35.26
	Inverter Transformer	MV4-15 T	369170	4908481	2	0	0	56.1	56.1	1	3379.6	3.25	0	81.58	0	0.99	0	0	9.5	0	0	0	0	0	0	-36	-36
	Inverter Transformer	MV4-14 T	369182	4908507	2	0	0	56.1	56.1	1	3404.24	3.25	0	81.64	0	1	0	0	9.53	0	0	0	0	0	0	-36.12	-36.12
	Inverter Transformer	MV5-6 T	369987	4908507	2	0	0	56.1	56.1	1	3418.94	3.25	0	81.68	0	1.01	0	0	9.56	0	0	0	0	0	0	-36.18	-36.18
	Inverter Transformer	MV4-13 T	369057	4908605	2	0	0	56.1	56.1	1	3516.11	3.25	0	81.92	0	1.05	0	0	9.71	0	0	0	0	0	0	-36.62	-36.62
	Inverter Transformer	MV5-5 T	370021	4908690	2	0	0	56.1	56.1	1	3604.88	3.25	0	82.14	0	1.08	0	0	9.85	0	0	0	0	0	0	-37.02	-37.02
	Inverter Transformer	MV5-4 T	370330	4908707	2	0	0	56.1	56.1	1	3677.03	3.25	0	82.31	0	1.11	0	0	9.97	0	0	0	0	0	0	-37.33	-37.33
	Inverter Transformer	MV4-12 T	369049	4908803	2	0	0	56.1	56.1	1	3713.47	3.25	0	82.4	0	1.13	0	0	10.02	0	0	0	0	0	0	-37.49	-37.49
	Inverter Transformer	MV4-11 T	369269	4908855	2	0	0	56.1	56.1	1	3743.77	3.25	0	82.47	0	1.14	0	0	10.07	0	0	0	0	0	0	-37.62	-37.62
	Inverter Transformer	MV4-10 T	369307	4908858	2	0	0	56.1	56.1	1	3744.39	3.25	0	82.47	0	1.14	0	0	10.07	0	0	0	0	0	0	-37.62	-37.62
	Inverter Transformer	MV5-2 T	370011	4908853	2	0	0	56.1	56.1	1	3765.06	3.25	0	82.52	0	1.15	0	0	10.1	0	0	0	0	0	0	-37.71	-37.71
	Inverter Transformer	MV5-3 T	370237	4908851	2	0	0	56.1	56.1	1	3799.05	3.25	0	82.59	0	1.16	0	0	10.15	0	0	0	0	0	0	-37.85	-37.85
	Inverter Transformer	MV2-2 T	365982	4906654	2	0	0	56.1	56.1	1	3858.34	3.25	0	82.73	0	1.19	0	0	10.24	0	0	0	0	0	0	-38.1	-38.1
	Inverter Transformer	MV4-9 T	369284	4909001	2	0	0	56.1	56.1	1	3888.5	3.25	0	82.8	0	1.2	0	0	10.29	0	0	0	0	0	0	-38.22	-38.22
	Inverter Transformer	MV4-8 T	369262	4909001	2	0	0	56.1	56.1	1	3889.91	3.25	0	82.8	0	1.2	0	0	10.29	0	0	0	0	0	0	-38.23	-38.23
	Inverter Transformer	MV4-7 T	369040	4909001	2	0	0	56.1	56.1	1	3911.04	3.25	0	82.85	0	1.21	0	0	10.32	0	0	0	0	0	0	-38.32	-38.32
	Inverter Transformer	MV2-3 T	365814	4906641	2	0	0	56.1	56.1	1	4008.09	3.25	0	83.06	0	1.25	0	0	10.47	0	0	0	0	0	0	-38.71	-38.71
	Inverter Transformer	MV5-1 T	370015	4909142	2	0	0	56.1	56.1	1	4052.28	3.25	0	83.15	0	1.26	0	0	10.53	0	0	0	0	0	0	-38.89	-38.89
	Inverter Transformer	MV4-6 T	369249	4909192	2	0	0	56.1	56.1	1	4081.35	3.25	0	83.22	0	1.28	0	0	10.58	0	0	0	0	0	0	-39.01	-39.01
	Inverter Transformer	MV4-5 T	369283	4909199	2	0	0	56.1	56.1	1	4086.21	3.25	0	83.23	0	1.28	0	0	10.58	0	0	0	0	0	0	-39.03	-39.03
	Inverter Transformer	MV4-4 T	369033	4909199	2	0	0	56.1	56.1	1	4108.43	3.25	0	83.27	0	1.29	0	0	10.61	0	0	0	0	0	0	-39.12	-39.12
	Inverter Transformer	MV2-4 T	365590	4906628	2	0	0	56.1	56.1	1	4211.52	3.25	0	83.49	0	1.33	0	0	10.77	0	0	0	0	0	0	-39.52	-39.52
	Inverter Transformer	MV1-15 T	365309	4904994	2	0	0	56.1	56.1	1	4215.08	3.25	0	83.5	0	1.33	0	0	10.77	0	0	0	0	0	0	-39.54	-39.54
	Inverter Transformer	MV4-2 T	369267	4909397	2	0	0	56.1	56.1	1	4284.81	3.25	0	83.64	0	1.36	0	0	10.87	0	0	0	0	0	0	-39.81	-39.81
	Inverter Transformer	MV4-3 T	369234	4909397	2	0	0	56.1	56.1	1	4286.9	3.25	0	83.64	0	1.36	0	0	10.87	0	0	0	0	0	0	-39.82	-39.82
	Inverter Transformer	MV4-1 T	369017	4909397	2	0	0	56.1	56.1	1	4306.93	3.25	0	83.68	0	1.37	0	0	10.9	0	0	0	0	0	0	-39.89	-39.89
	Inverter Transformer	MV1-12 T	365044	4905386	2	0	0	56.1	56.1	1	4486.11	3.25	0	84.04	0	1.43	0	0	11.16	0	0	0	0	0	0	-40.57	-40.57
	Inverter Transformer	MV1-4 T	364821	4905918	2	0	0	56.1	56.1	1	4768.48	3.25	0	84.57	0	1.54	0	0	11.54	0	0	0	0	0	0	-41.59	-41.59
	Inverter Transformer	MV1-8 T	364782	4905647	2	0	0	56.1	56.1	1	4769.43	3.25	0	84.57	0	1.54	0	0	11.55	0	0	0	0	0	0	-41.6	-41.6
	Inverter Transformer	MV1-2 T	364759	4906063	2	0	0	56.1	56.1	1	4855.69	3.25	0	84.73	0	1.57	0	0	11.66	0	0	0	0	0	0	-41.9	-41.9
	Inverter Transformer	MV1-11 T	364649	4905414	2	0	0	56.1	56.1	1	4882.07	3.25	0	84.77	0	1.58	0	0	11.7	0	0	0	0	0	0	-41.99	-41.99
	Inverter Transformer	MV1-5 T	364676	4905892	2	0	0	56.1	56.1	1	4907.34	3.25	0	84.82	0	1.59	0	0	11.73	0	0	0	0	0	0	-42.08	-42.08
	Inverter Transformer	MV1-1 T	364721	4906166	2	0	0	56.1	56.1	1	4913.86	3.25	0	84.83	0	1.59	0	0	11.74	0	0	0	0	0	0	-42.1	-42.1
	Inverter Transformer	MV1-9 T	364555	4905646	2	0	0	56.1	56.1	1	4994.99	3.25	0	84.97	0	1.62	0	0	11.85	0	0	0	0	0	0	-42.38	-42.38
	Inverter Transformer	MV1-6 T	364482	4905835	2	0	0	56.1	56.1	1	5090.69	3.25	0	85.14	0	1.66	0	0	11.97	0	0	0	0	0	0	-42.71	-42.71
	Inverter Transformer	MV1-3 T	364435	4906039	2	0	0	56.1	56.1	1	5169.58	3.25	0	85.27	0	1.69	0	0	12.08	0	0	0	0	0	0	-42.97	-42.97
	Line Reactor	NGR	369421	4908787.5	5	0	0	45.4	45.4	1	3669.1	5.25	0	82.29	0	3.3	1.33	0.12	1.5	0	0	0	0	0	0	-43.07	-43.07
Limit. Valu	0	0																								
Level D/N:	25.5804	25.5804																								

Receiver: Vacant Lot Receptor
ID: W-V1
X: 368413.9
Y: 4906049.3
Z: 4.5
Ground: 0

ISO	Description	ID	X	Y	Z	Ground	ReflOrd	LxT	LxN	L/A	Dist.	hm	Freq	Adiv	K0b	Agr	Abar	z	Aatm	Afol	Ahous	Cmet	CmetN	Dc	RL	LtotT	LtotN
	Sol_Luce Substation	S_Substation	369426	4908792	3.5	0	0	112.1	112.1	1	2923.48	5.25	0	80.32	0	0.27	3.41	0.33	5.84	0	0	0	0	0	0	22.24	22.24
	Inverter	MV3-21	368478	4907206	2	0	0	100.3	100.3	1	1158.48	3.25	0	72.28	0	-0.17	0	0	11.4	0	0	0	0	0	0	16.8	16.8
	Inverter	MV3-20	368689	4907317	2	0	0	100.3	100.3	1	1297.21	3.25	0	73.26	0	-0.11	0	0	11.8	0	0	0	0	0	0	15.37	15.37
	Inverter	MV3-19	368357	4907347	2	0	0	100.3	100.3	1	1298.95	3.25	0	73.27	0	-0.11	0	0	11.8	0	0	0	0	0	0	15.35	15.35
	Inverter	MV3-15	368357	4907477	2	0	0	100.3	100.3	1	1428.84	3.25	0	74.1	0	-0.06	0	0	12.15	0	0	0	0	0	0	14.13	14.13
	Inverter	MV3-16	368514	4907475	2	0	0	100.3	100.3	1	1429.21	3.25	0	74.1	0	-0.06	0	0	12.15	0	0	0	0	0	0	14.12	14.12
	Inverter	MV3-17	368178	4907472	2	0	0	100.3	100.3	1	1442.13	3.25	0	74.18	0	-0.06	0	0	12.18	0	0	0	0	0	0	14.01	14.01
	Inverter	MV3-14	368684	4907498	2	0	0	100.3	100.3	1	1473.67	3.25	0	74.37	0	-0.04	0	0	12.26	0	0	0	0	0	0	13.73	13.73
	Inverter	MV3-18	367752	4907412	2	0	0	100.3	100.3	1	1514.95	3.25	0	74.61	0	-0.03	0	0	12.36	0	0	0	0	0	0	13.37	13.37
	Inverter	MV3-13	367963	4907577	2	0	0	100.3	100.3	1	1592.85	3.25	0	75.04	0	0	0	0	12.55	0	0	0	0	0	0	12.72	12.72
	Inverter	MV3-11	368346	4907662	2	0	0	100.3	100.3	1	1614.13	3.25	0	75.16	0	0.01	0	0	12.6	0	0	0	0	0	0	12.54	12.54
	Inverter	MV3-10	368167	4907669	2	0	0	100.3	100.3	1	1638.41	3.25	0	75.29	0	0.02	0	0	12.66	0	0	0	0	0	0	12.35	12.35
	Inverter	MV3-9	368512	4907703	2	0	0	100.3	100.3	1	1656.61	3.25	0	75.38	0	0.02	0	0	12.7	0	0	0	0	0	0	12.2	12.2
	Inverter	MV3-8	368680	4907712	2	0	0	100.3	100.3	1	1683.86	3.25	0	75.53	0	0.03	0	0	12.77	0	0	0	0	0	0	11.99	11.99
	Inverter	MV3-12	367668	4907594	2	0	0	100.3	100.3	1	1715.36	3.25	0	75.69	0	0.04	0	0	12.84	0	0	0	0	0	0	11.75	11.75
	Inverter	MV3-7	367945	4907754	2	0	0	100.3	100.3	1	1768.01	3.25	0	75.95	0	0.06	0	0	12.96	0	0	0	0	0	0	11.35	11.35
	Inverter	MV3-6	368162	4907834	2	0	0	100.3	100.3	1	1802.39	3.25	0	76.12	0	0.07	0	0	13.03	0	0	0	0	0	0	11.09	11.09
	Inverter	MV3-3	367939	4907927	2	0	0	100.3	100.3	1	1936.83	3.25	0	76.74	0	0.11	0	0	13.33	0	0	0	0	0	0	10.13	10.13

Inverter	MV6-3	370207	4907140	2	0	0	100.3	100.3	1	2098.77	3.25	0	77.44	0	0.16	0	0	13.67	0	0	0	0	0	0	9.05	9.05
Inverter	MV6-2	370085	4907339	2	0	0	100.3	100.3	1	2110.9	3.25	0	77.49	0	0.16	0	0	13.69	0	0	0	0	0	0	8.97	8.97
Inverter	MV2-3	365820	4906641	2	0	0	100.3	100.3	1	2660.53	3.25	0	79.5	0	0.29	0	0	14.76	0	0	0	0	0	0	5.76	5.76
Inverter	MV2-4	365586	4906624	2	0	0	100.3	100.3	1	2885.71	3.25	0	80.21	0	0.34	0	0	15.17	0	0	0	0	0	0	4.6	4.6
Inverter	MV4-11	369264	4908855	2	0	0	100.3	100.3	1	2931.66	3.25	0	80.34	0	0.35	0	0	15.25	0	0	0	0	0	0	4.37	4.37
Inverter	MV4-10	369312	4908858	2	0	0	100.3	100.3	1	2948.79	3.25	0	80.39	0	0.35	0	0	15.28	0	0	0	0	0	0	4.29	4.29
Inverter	MV4-7	369035	4909001	2	0	0	100.3	100.3	1	3016.34	3.25	0	80.59	0	0.37	0	0	15.4	0	0	0	0	0	0	3.96	3.96
Inverter	MV4-8	369256	4909001	2	0	0	100.3	100.3	1	3069.47	3.25	0	80.74	0	0.38	0	0	15.49	0	0	0	0	0	0	3.7	3.7
Inverter	MV4-9	369289	4909001	2	0	0	100.3	100.3	1	3078.69	3.25	0	80.77	0	0.38	0	0	15.51	0	0	0	0	0	0	3.66	3.66
Inverter	MV5-5	370015	4908690	2	0	0	100.3	100.3	1	3088.17	3.25	0	80.79	0	0.38	0	0	15.53	0	0	0	0	0	0	3.61	3.61
Inverter	MV6-1	370235	4907364	2	0	0	97.3	97.3	1	2246.07	3.25	0	78.03	0	0.2	0	0	13.97	0	0	0	0	0	0	5.12	5.12
Inverter	MV4-4	369027	4909199	2	0	0	100.3	100.3	1	3208.82	3.25	0	81.13	0	0.4	0	0	15.74	0	0	0	0	0	0	3.05	3.05
Inverter	MV5-2	370006	4908853	2	0	0	100.3	100.3	1	3224.21	3.25	0	81.17	0	0.4	0	0	15.76	0	0	0	0	0	0	2.98	2.98
Inverter	MV4-6	369243	4909192	2	0	0	100.3	100.3	1	3250.23	3.25	0	81.24	0	0.41	0	0	15.81	0	0	0	0	0	0	2.86	2.86
Inverter	MV4-5	369289	4909199	2	0	0	100.3	100.3	1	3269.01	3.25	0	81.29	0	0.41	0	0	15.84	0	0	0	0	0	0	2.77	2.77
Inverter	MV5-4	370324	4908707	2	0	0	100.3	100.3	1	3272.9	3.25	0	81.3	0	0.41	0	0	15.85	0	0	0	0	0	0	2.75	2.75
Inverter	MV1-15	365315	4904994	2	0	0	100.3	100.3	1	3273.66	3.25	0	81.3	0	0.41	0	0	15.85	0	0	0	0	0	0	2.75	2.75
Inverter	MV5-3	370231	4908851	2	0	0	100.3	100.3	1	3339.37	3.25	0	81.47	0	0.42	0	0	15.96	0	0	0	0	0	0	2.45	2.45
SubstationTransformer	W_ST	369711.17	4906112.3	2.5	0	0	92	92	1	1298.8	4.25	0	73.27	0	0.79	4.7	0.29	3.11	0	0	0	0	0	0	10.11	10.11
Inverter	MV4-1	369011	4909397	2	0	0	100.3	100.3	1	3400.53	3.25	0	81.63	0	0.43	0	0	16.06	0	0	0	0	0	0	2.18	2.18
Inverter	MV1-12	365038	4905386	2	0	0	100.3	100.3	1	3440.45	3.25	0	81.73	0	0.44	0	0	16.13	0	0	0	0	0	0	2.01	2.01
Inverter	MV4-3	369229	4909397	2	0	0	100.3	100.3	1	3445.5	3.25	0	81.75	0	0.44	0	0	16.14	0	0	0	0	0	0	1.99	1.99
Inverter	MV4-2	369272	4909397	2	0	0	100.3	100.3	1	3455.93	3.25	0	81.77	0	0.44	0	0	16.16	0	0	0	0	0	0	1.94	1.94
Inverter	MV5-1	370020	4909142	2	0	0	100.3	100.3	1	3484.88	3.25	0	81.84	0	0.45	0	0	16.21	0	0	0	0	0	0	1.81	1.81
Inverter	MV1-4	364815	4905918	2	0	0	100.3	100.3	1	3601.3	3.25	0	82.13	0	0.47	0	0	16.4	0	0	0	0	0	0	1.32	1.32
Inverter	MV1-8	364788	4905647	2	0	0	100.3	100.3	1	3648.15	3.25	0	82.24	0	0.47	0	0	16.48	0	0	0	0	0	0	1.12	1.12
Inverter	MV1-2	364753	4906063	2	0	0	100.3	100.3	1	3660.93	3.25	0	82.27	0	0.48	0	0	16.5	0	0	0	0	0	0	1.06	1.06
Inverter	MV1-1	364715	4906166	2	0	0	100.3	100.3	1	3700.74	3.25	0	82.37	0	0.48	0	0	16.56	0	0	0	0	0	0	0.9	0.9
Westbrook Inverter Enclosur	W_INV2	369374	4906388	2	0	0	89.1	89.1	1	1018.09	3.25	0	71.16	0	0.69	0	0	6.35	0	0	0	0	0	0	10.86	10.86
Inverter	MV1-5	364671	4905892	2	0	0	100.3	100.3	1	3746.2	3.25	0	82.47	0	0.49	0	0	16.64	0	0	0	0	0	0	0.71	0.71
Inverter	MV2-1	365842	4906816	2	0	0	97.3	97.3	1	2683.75	3.25	0	79.57	0	0.3	0	0	14.8	0	0	0	0	0	0	2.64	2.64
Inverter	MV1-11	364655	4905414	2	0	0	100.3	100.3	1	3812.21	3.25	0	82.62	0	0.5	0	0	16.75	0	0	0	0	0	0	0.44	0.44
Inverter	MV1-9	364561	4905646	2	0	0	100.3	100.3	1	3873.95	3.25	0	82.76	0	0.51	0	0	16.85	0	0	0	0	0	0	0.19	0.19
Inverter	MV1-6	364477	4905835	2	0	0	100.3	100.3	1	3942.73	3.25	0	82.92	0	0.52	0	0	16.96	0	0	0	0	0	0	-0.08	-0.08
Westbrook Inverter Enclosur	W_INV3	369508	4906164	2	0	0	89.1	89.1	1	1100.1	3.25	0	71.83	0	0.71	0	0	6.5	0	0	0	0	0	0	10.02	10.02
Inverter	MV3-22	368656	4907142	2	0	0	89.1	89.1	1	1119.2	3.25	0	71.98	0	0.71	0	0	6.54	0	0	0	0	0	0	9.83	9.83
DSTATCOM - 10 MVAR #2	DSAT2	369403	4908757	2.5	0	0	96.6	96.6	1	2882.7	3.5	0	80.2	0	3.39	0	0	2.23	0	0	0	0	0	0	10.81	10.81
DSTATCOM - 10 MVAR #1	DSAT1	369437	4908757	2.5	0	0	96.6	96.6	1	2894.54	3.5	0	80.23	0	3.4	0	0	2.24	0	0	0	0	0	0	10.76	10.76
Westbrook Inverter Enclosur	W_INV4	369673	4906164	2	0	0	89.1	89.1	1	1264.32	3.25	0	73.04	0	0.74	0	0	6.8	0	0	0	0	0	0	8.48	8.48
Inverter	MV1-14	365163	4905049	2	0	0	97.3	97.3	1	3401.32	3.25	0	81.63	0	0.43	0	0	16.07	0	0	0	0	0	0	-0.82	-0.82
Inverter	MV1-10	365004	4905564	2	0	0	97.3	97.3	1	3444.26	3.25	0	81.74	0	0.44	0	0	16.14	0	0	0	0	0	0	-1.01	-1.01
Inverter	MV1-7	364925	4905782	2	0	0	97.3	97.3	1	3499.13	3.25	0	81.88	0	0.45	0	0	16.23	0	0	0	0	0	0	-1.25	-1.25
Westbrook Inverter Enclosur	W_INV5	369719	4906574	2	0	0	89.1	89.1	1	1406.63	3.25	0	73.96	0	0.77	0	0	7.05	0	0	0	0	0	0	7.28	7.28
Westbrook Inverter Enclosur	W_INV7	369780	4906417	2	0	0	89.1	89.1	1	1414.72	3.25	0	74.01	0	0.77	0	0	7.06	0	0	0	0	0	0	7.21	7.21
Inverter	MV1-13	364731	4905241	2	0	0	97.3	97.3	1	3770.56	3.25	0	82.53	0	0.49	0	0	16.68	0	0	0	0	0	0	-2.39	-2.39
Westbrook Inverter Enclosur	W_INV6	369875	4906578	2	0	0	89.1	89.1	1	1553.82	3.25	0	74.83	0	0.8	0	0	7.3	0	0	0	0	0	0	6.12	6.12
Westbrook Inverter Enclosur	W_INV1	369409	4906578	2	0	0	86.1	86.1	1	1126.83	3.25	0	72.04	0	0.71	0	0	6.55	0	0	0	0	0	0	6.76	6.76
Inverter	MV3-5	368340	4907843	2	0	0	89.1	89.1	1	1795.22	3.25	0	76.08	0	0.86	0	0	7.71	0	0	0	0	0	0	4.41	4.41
Inverter	MV3-4	368502	4907925	2	0	0	89.1	89.1	1	1877.77	3.25	0	76.47	0	0.88	0	0	7.84	0	0	0	0	0	0	3.86	3.86
Inverter	MV3-2	368671	4907928	2	0	0	89.1	89.1	1	1896.21	3.25	0	76.56	0	0.88	0	0	7.87	0	0	0	0	0	0	3.74	3.74
Inverter	MV3-1	368156	4907976	2	0	0	89.1	89.1	1	1943.89	3.25	0	76.77	0	0.89	0	0	7.95	0	0	0	0	0	0	3.44	3.44
Inverter	MV2-2	365977	4906654	2	0	0	89.1	89.1	1	2510.81	3.25	0	79	0	1.03	0	0	8.86	0	0	0	0	0	0	0.17	0.17
Inverter	MV4-15	369176	4908481	2	0	0	89.1	89.1	1	2548.33	3.25	0	79.13	0	1.04	0	0	8.92	0	0	0	0	0	0	-0.03	-0.03
Inverter	MV4-14	369176	4908507	2	0	0	89.1	89.1	1	2573.15	3.25	0	79.21	0	1.04	0	0	8.96	0	0	0	0	0	0	-0.16	-0.16
Inverter	MV4-13	369051	4908605	2	0	0	89.1	89.1	1	2633.91	3.25	0	79.41	0	1.06	0	0	9.06	0	0	0	0	0	0	-0.47	-0.47
Fixed Reactor Bank 1	FRB1	369378	4908755	6	0	0	89.8	89.8	1	2872.33	5.25	0	80.16	0	-0.89	0	0	5.77	0	0	0	0	0	0	4.74	4.74
Fixed Reactor Bank 2	FRB2	369464	4908755	6	0	0	89.8	89.8	1	2902.33	5.25	0	80.25	0	-0.89	0	0	5.81	0	0	0	0	0	0	4.6	4.6
Gardiner Substation	G_Sub	366586.3	4903349.9	2.5	0	0	90.8	90.8	1	3259.89	4.25	0	81.26	0	1.21	3.1	0.37	6.34	0	0	0	0	0	0	-1.13	-1.13
Inverter	MV4-12	369043	4908803	2	0	0	89.1	89.1	1	2824.65	3.25	0	80.02	0	1.1	0	0	9.35	0	0	0	0	0	0	-1.42	-1.42
Inverter	MV6-4	370250	4906966	2	0	0	86.1	86.1	1	2052.22	3.25	0	77.24	0	0.92	0	0	8.13	0	0	0	0	0	0	-0.24	-0.24
Inverter	MV5-6	369982	4908507	2	0	0	89.1	89.1	1	2915.34	3.25	0	80.29	0	1.13	0	0	9.49	0	0	0	0	0	0	-1.85	-1.85
Inverters	G_Inv2	366676.9	4903239.1	2	0	0	87.7	87.7	1	3303.69	3.25	0	81.38	0	2.73	0	0	4.11	0	0	0	0	0	0	-0.56	-0.56
Westbrook Inverter Transfor	W_INVTR1	369403	4906578	2	0	0	78.2	78.2	1	1121.54	3.25	0	72	0	-2.01	0	0	0.75	0	0	0	0	0	0	7.5	7.5
Westbrook Inverter Transfor	W_INVTR2	369368	4906388	2	0	0	77.3	77.3	1	1012.44	3.25	0	71.11	0	-1.94	0	0	0.69	0	0	0	0	0	0	7.49	7.49
Inverter	MV1-3	364440	4906039	2	0	0	89.1	89.1	1	3973.91	3.25	0	82.98	0	1.39	0	0	11.05	0	0	0	0	0	0	-6.36	-6.36
Inverters	G_Inv4	366732.8	4903105	2	0	0	87.7	87.7	1	3390.43	3.25	0	81.61	0	2.74	0	0	4.21	0	0	0	0	0	0	-0.89	-0.89
Inverters	G_Inv1	366526.4	4903225.8	2	0	0	87.7	87.7	1	3396.29	3.25	0	81.62	0	2.74	0	0	4.21	0	0	0	0	0	0	-0.91	-0.91
Inverters	G_Inv3	366583.7	4903091.4	2	0	0	87.7	87.7	1	3478.33	3.25	0	81.83	0	2.75	0	0	4.3	0	0	0	0	0	0	-1.22	-1.22
Inverters	G_Inv6	366788.5	4902972	2	0	0	87.7	87.7	1	3480.19	3.25	0	81.83	0	2.75	0	0	4.31	0	0	0	0	0	0	-1.22	-1.22
Inverters	G_Inv5	366638.5	4902958.1	2	0	0	87.7	87.7	1	3564.77	3.25	0	82.04	0	2.75	0	0	4.4	0	0	0	0	0	0	-1.53	-1.53
Inverters	G_Inv8	366844.5	4902838.5	2	0	0	87.7	87.7	1	3573.83	3.25	0	82.06	0	2.75	0	0	4.41	0	0	0	0	0	0	-1.57	-1.57
Westbrook Inverter Transfor	W_INVTR3	369514	4906164	2	0	0	77.3	77.3	1	1106.07	3.25	0	71.88	0	-2	0	0	0.74	0	0	0	0	0	0	6.72	6.72
Inverters	G_Inv7	366694.6	4902824.7	2	0	0	87.7	87.7	1	3654.32	3.25	0	82.26	0	2.76	0	0	4.5	0	0	0	0	0	0	-1.86	-1.86
Inverters	G_Inv10	366900.7	4902704.8	2	0	0	87.7	87.7	1	3670.89	3.25	0	82.3	0	2.76	0	0	4.52	0	0	0	0	0	0	-1.91	-1.91

Inverters	G_Inv9	366750.9	4902691.8	2	0	0	87.7	87.7	1	3746.78	3.25	0	82.47	0	2.77	0	0	4.6	0	0	0	0	0	0	-2.18	-2.18
Westbrook Inverter Transfor	W_INVTR4	369679	4906164	2	0	0	77.3	77.3	1	1270.29	3.25	0	73.08	0	-2.09	0	0	0.83	0	0	0	0	0	0	5.52	5.52
Westbrook Inverter Transfor	W_INVTR5	369725	4906574	2	0	0	77.3	77.3	1	1412.2	3.25	0	74	0	-2.16	0	0	0.91	0	0	0	0	0	0	4.6	4.6
Westbrook Inverter Transfor	W_INVTR7	369786	4906417	2	0	0	77.3	77.3	1	1420.52	3.25	0	74.05	0	-2.16	0	0	0.91	0	0	0	0	0	0	4.55	4.55
Westbrook Inverter Transfor	W_INVTR6	369881	4906578	2	0	0	77.3	77.3	1	1559.46	3.25	0	74.86	0	-2.23	0	0	0.99	0	0	0	0	0	0	3.73	3.73
Inverter Transformer	MV6-4 T	370244	4906966	2	0	0	69.4	69.4	1	2046.85	3.25	0	77.22	0	2.19	0	0	5.01	0	0	0	0	0	0	-15.07	-15.07
Inverter Transformer	MV6-1 T	370230	4907364	2	0	0	69.4	69.4	1	2242.02	3.25	0	78.01	0	2.26	0	0	5.2	0	0	0	0	0	0	-16.12	-16.12
Inverter Transformer	MV2-1 T	365836	4906816	2	0	0	69.4	69.4	1	2689.5	3.25	0	79.59	0	2.41	0	0	5.61	0	0	0	0	0	0	-18.27	-18.27
Inverter Transformer	MV1-14 T	365157	4905049	2	0	0	69.4	69.4	1	3407.05	3.25	0	81.65	0	2.63	0	0	6.22	0	0	0	0	0	0	-21.14	-21.14
Inverter Transformer	MV1-10 T	365010	4905564	2	0	0	69.4	69.4	1	3438.32	3.25	0	81.73	0	2.64	0	0	6.24	0	0	0	0	0	0	-21.26	-21.26
Inverter Transformer	MV1-7 T	364919	4905782	2	0	0	69.4	69.4	1	3505.11	3.25	0	81.89	0	2.65	0	0	6.3	0	0	0	0	0	0	-21.49	-21.49
Inverter Transformer	MV1-13 T	364725	4905241	2	0	0	69.4	69.4	1	3776.42	3.25	0	82.54	0	2.73	0	0	6.51	0	0	0	0	0	0	-22.43	-22.43
Inverter Transformer	MV3-22 T	368661	4907142	2	0	0	56.1	56.1	1	1120.29	3.25	0	71.99	0	0.05	0	0	5.17	0	0	0	0	0	0	-21.15	-21.15
Inverter Transformer	MV3-21 T	368484	4907206	2	0	0	56.1	56.1	1	1158.82	3.25	0	72.28	0	0.07	0	0	5.26	0	0	0	0	0	0	-21.55	-21.55
Inverter Transformer	MV3-20 T	368683	4907317	2	0	0	56.1	56.1	1	1295.95	3.25	0	73.25	0	0.12	0	0	5.57	0	0	0	0	0	0	-22.88	-22.88
Inverter Transformer	MV3-19 T	368352	4907347	2	0	0	56.1	56.1	1	1299.18	3.25	0	73.27	0	0.12	0	0	5.58	0	0	0	0	0	0	-22.91	-22.91
Inverter Transformer	MV3-16 T	368509	4907475	2	0	0	56.1	56.1	1	1428.87	3.25	0	74.1	0	0.17	0	0	5.86	0	0	0	0	0	0	-24.08	-24.08
Inverter Transformer	MV3-15 T	368351	4907477	2	0	0	56.1	56.1	1	1429.09	3.25	0	74.1	0	0.17	0	0	5.86	0	0	0	0	0	0	-24.08	-24.08
Inverter Transformer	MV3-17 T	368183	4907472	2	0	0	56.1	56.1	1	1441.32	3.25	0	74.18	0	0.18	0	0	5.89	0	0	0	0	0	0	-24.18	-24.18
Inverter Transformer	MV3-14 T	368678	4907498	2	0	0	56.1	56.1	1	1472.58	3.25	0	74.36	0	0.19	0	0	5.96	0	0	0	0	0	0	-24.45	-24.45
Inverter Transformer	MV3-18 T	367757	4907412	2	0	0	56.1	56.1	1	1512.77	3.25	0	74.6	0	0.2	0	0	6.05	0	0	0	0	0	0	-24.79	-24.79
Inverter Transformer	MV3-13 T	367958	4907577	2	0	0	56.1	56.1	1	1594.28	3.25	0	75.05	0	0.24	0	0	6.22	0	0	0	0	0	0	-25.45	-25.45
Inverter Transformer	MV3-11 T	368340	4907662	2	0	0	56.1	56.1	1	1614.39	3.25	0	75.16	0	0.24	0	0	6.26	0	0	0	0	0	0	-25.61	-25.61
Inverter Transformer	MV3-10 T	368162	4907669	2	0	0	56.1	56.1	1	1639.17	3.25	0	75.29	0	0.25	0	0	6.31	0	0	0	0	0	0	-25.8	-25.8
Inverter Transformer	MV3-9 T	368517	4907703	2	0	0	56.1	56.1	1	1656.91	3.25	0	75.39	0	0.26	0	0	6.35	0	0	0	0	0	0	-25.94	-25.94
Inverter Transformer	MV3-8 T	368685	4907712	2	0	0	56.1	56.1	1	1684.66	3.25	0	75.53	0	0.27	0	0	6.41	0	0	0	0	0	0	-26.15	-26.15
Inverter Transformer	MV3-12 T	367674	4907594	2	0	0	56.1	56.1	1	1712.76	3.25	0	75.67	0	0.28	0	0	6.47	0	0	0	0	0	0	-26.37	-26.37
Inverter Transformer	MV3-7 T	367951	4907754	2	0	0	56.1	56.1	1	1766.43	3.25	0	75.94	0	0.31	0	0	6.58	0	0	0	0	0	0	-26.77	-26.77
Inverter Transformer	MV3-5 T	368335	4907843	2	0	0	56.1	56.1	1	1795.44	3.25	0	76.08	0	0.32	0	0	6.63	0	0	0	0	0	0	-26.98	-26.98
Inverter Transformer	MV3-6 T	368156	4907834	2	0	0	56.1	56.1	1	1803.24	3.25	0	76.12	0	0.32	0	0	6.65	0	0	0	0	0	0	-27.03	-27.03
Inverter Transformer	MV3-4 T	368507	4907925	2	0	0	56.1	56.1	1	1878.01	3.25	0	76.47	0	0.35	0	0	6.8	0	0	0	0	0	0	-27.57	-27.57
Inverter Transformer	MV3-2 T	368677	4907928	2	0	0	56.1	56.1	1	1897.03	3.25	0	76.56	0	0.36	0	0	6.84	0	0	0	0	0	0	-27.7	-27.7
Inverter Transformer	MV3-3 T	367944	4907927	2	0	0	56.1	56.1	1	1935.61	3.25	0	76.74	0	0.38	0	0	6.92	0	0	0	0	0	0	-27.97	-27.97
Inverter Transformer	MV3-1 T	368150	4907976	2	0	0	56.1	56.1	1	1944.69	3.25	0	76.78	0	0.38	0	0	6.93	0	0	0	0	0	0	-28.03	-28.03
Inverter Transformer	MV6-3 T	370202	4907140	2	0	0	56.1	56.1	1	2094.5	3.25	0	77.42	0	0.44	0	0	7.23	0	0	0	0	0	0	-29.04	-29.04
Inverter Transformer	MV6-2 T	370091	4907339	2	0	0	56.1	56.1	1	2115.66	3.25	0	77.51	0	0.45	0	0	7.27	0	0	0	0	0	0	-29.17	-29.17
Inverter Transformer	MV2-2 T	365982	4906654	2	0	0	56.1	56.1	1	2505.95	3.25	0	78.98	0	0.62	0	0	8	0	0	0	0	0	0	-31.54	-31.54
Inverter Transformer	MV4-15 T	369170	4908481	2	0	0	56.1	56.1	1	2546.54	3.25	0	79.12	0	0.64	0	0	8.07	0	0	0	0	0	0	-31.77	-31.77
Inverter Transformer	MV4-14 T	369182	4908507	2	0	0	56.1	56.1	1	2574.93	3.25	0	79.22	0	0.65	0	0	8.13	0	0	0	0	0	0	-31.93	-31.93
Inverter Transformer	MV4-13 T	369057	4908605	2	0	0	56.1	56.1	1	2635.37	3.25	0	79.42	0	0.67	0	0	8.23	0	0	0	0	0	0	-32.27	-32.27
Inverter Transformer	MV2-3 T	365814	4906641	2	0	0	56.1	56.1	1	2666.38	3.25	0	79.52	0	0.69	0	0	8.29	0	0	0	0	0	0	-32.44	-32.44
Inverter Transformer	MV4-12 T	369049	4908803	2	0	0	56.1	56.1	1	2825.99	3.25	0	80.02	0	0.76	0	0	8.57	0	0	0	0	0	0	-33.29	-33.29
Inverter Transformer	MV2-4 T	365590	4906628	2	0	0	56.1	56.1	1	2882.59	3.25	0	80.2	0	0.78	0	0	8.67	0	0	0	0	0	0	-33.58	-33.58
Inverter Transformer	MV5-6 T	369987	4908507	2	0	0	56.1	56.1	1	2918.04	3.25	0	80.3	0	0.79	0	0	8.73	0	0	0	0	0	0	-33.77	-33.77
Inverter Transformer	MV4-11 T	369269	4908855	2	0	0	56.1	56.1	1	2933.11	3.25	0	80.35	0	0.8	0	0	8.75	0	0	0	0	0	0	-33.84	-33.84
Inverter Transformer	MV4-10 T	369307	4908858	2	0	0	56.1	56.1	1	2947.27	3.25	0	80.39	0	0.81	0	0	8.78	0	0	0	0	0	0	-33.92	-33.92
Inverter Transformer	MV4-7 T	369040	4909001	2	0	0	56.1	56.1	1	3017.37	3.25	0	80.59	0	0.84	0	0	8.9	0	0	0	0	0	0	-34.27	-34.27
Inverter Transformer	MV4-8 T	369262	4909001	2	0	0	56.1	56.1	1	3071.13	3.25	0	80.75	0	0.86	0	0	8.99	0	0	0	0	0	0	-34.54	-34.54
Inverter Transformer	MV4-9 T	369284	4909001	2	0	0	56.1	56.1	1	3077.27	3.25	0	80.76	0	0.86	0	0	9	0	0	0	0	0	0	-34.57	-34.57
Inverter Transformer	MV5-5 T	370021	4908690	2	0	0	56.1	56.1	1	3091.29	3.25	0	80.8	0	0.87	0	0	9.02	0	0	0	0	0	0	-34.63	-34.63
Inverter Transformer	MV4-4 T	369033	4909199	2	0	0	56.1	56.1	1	3209.97	3.25	0	81.13	0	0.92	0	0	9.22	0	0	0	0	0	0	-35.21	-35.21
Inverter Transformer	MV5-2 T	370011	4908853	2	0	0	56.1	56.1	1	3226.68	3.25	0	81.18	0	0.93	0	0	9.25	0	0	0	0	0	0	-35.29	-35.29
Inverter Transformer	MV4-6 T	369249	4909192	2	0	0	56.1	56.1	1	3251.76	3.25	0	81.24	0	0.94	0	0	9.29	0	0	0	0	0	0	-35.41	-35.41
Inverter Transformer	MV4-5 T	369283	4909199	2	0	0	56.1	56.1	1	3267.41	3.25	0	81.28	0	0.94	0	0	9.31	0	0	0	0	0	0	-35.48	-35.48
Inverter Transformer	MV5-4 T	370330	4908707	2	0	0	56.1	56.1	1	3276.4	3.25	0	81.31	0	0.95	0	0	9.33	0	0	0	0	0	0	-35.52	-35.52
Inverter Transformer	MV1-15 T	365309	4904994	2	0	0	56.1	56.1	1	3279.34	3.25	0	81.32	0	0.95	0	0	9.33	0	0	0	0	0	0	-35.54	-35.54
Inverter Transformer	MV5-3 T	370237	4908851	2	0	0	56.1	56.1	1	3342.64	3.25	0	81.48	0	0.97	0	0	9.44	0	0	0	0	0	0	-35.83	-35.83
Inverter Transformer	MV4-1 T	369017	4909397	2	0	0	56.1	56.1	1	3401.59	3.25	0	81.63	0	1	0	0	9.53	0	0	0	0	0	0	-36.1	-36.1
Inverter Transformer	MV1-12 T	365044	4905386	2	0	0	56.1	56.1	1	3434.56	3.25	0	81.72	0	1.01	0	0	9.58	0	0	0	0	0	0	-36.26	-36.26
Inverter Transformer	MV4-3 T	369234	4909397	2	0	0	56.1	56.1	1	3446.69	3.25	0	81.75	0	1.02	0	0	9.6	0	0	0	0	0	0	-36.31	-36.31
Inverter Transformer	MV4-2 T	369267	4909397	2	0	0	56.1	56.1	1	3454.69	3.25	0	81.77	0	1.02	0	0	9.62	0	0	0	0	0	0	-36.35	-36.35
Inverter Transformer	MV5-1 T	370015	4909142	2	0	0	56.1	56.1	1	3482.57	3.25	0	81.84	0	1.03	0	0	9.66	0	0	0	0	0	0	-36.47	-36.47
Inverter Transformer	MV1-4 T	364821	4905918	2	0	0	56.1	56.1	1	3595.3	3.25	0	82.11	0	1.08	0	0	9.84	0	0	0	0	0	0	-36.97	-36.97
Inverter Transformer	MV1-8 T	364782	4905647	2	0	0	56.1	56.1	1	3654.11	3.25	0	82.26	0	1.1	0	0	9.93	0	0	0	0	0	0	-37.23	-37.23
Inverter Transformer	MV1-2 T	364759	4906063	2	0	0	56.1	56.1	1	3654.93	3.25	0	82.26	0	1.1	0	0	9.93	0	0	0	0	0	0	-37.23	-37.23
Inverter Transformer	MV1-1 T	364721	4906166	2	0	0	56.1	56.1	1	3694.74	3.25	0	82.35	0	1.12	0	0	9.99	0	0	0	0	0	0	-37.41	-37.41
Inverter Transformer	MV1-5 T	364676	4905892	2	0	0	56.1	56.1	1	3741.21	3.25	0	82.46	0	1.14	0	0	10.06	0	0	0	0	0	0	-37.61	-37.61
Inverter Transformer	MV1-11 T	364649	4905414	2	0	0	56.1	56.1	1	3818.13	3.25	0	82.64	0	1.17	0	0	10.18	0	0	0	0	0	0	-37.93	-37.93
Inverter Transformer	MV1-9 T	364555	4905646	2	0	0	56.1	56.1	1	3879.92	3.25	0	82.78	0	1.2	0	0	10.28	0	0	0	0	0	0	-38.19	-38.19
Inverter Transformer	MV1-6 T	364482	4905835	2	0	0	56.1	56.1	1	3937.74	3.25	0	82.9	0	1.22	0	0	10.36	0	0	0	0	0	0	-38.43	-38.43
Inverter Transformer	MV1-3 T	364435	4906039	2	0	0	56.1	56.1	1	3978.91	3.25	0	83	0	1.24	0	0	10.42	0	0	0	0	0	0	-38.6	-38.6
Line Reactor	NGR	369421	4908787.5	5	0	0	45.4	45.4	1	2917.53	5.25	0	80.3	0	3.33	1.31	0.11	1.19	0	0	0	0	0	0	-40.78	-40.78
Limit. Valu 0	0																								
Level D/N: 28.8699	28.8699																								

Receiver: Vacant Lot Receptor
ID: W-V2
X: 368507.6
Y: 4906041.5
Z: 4.5
Ground: 0

ISO	Description	ID	X	Y	Z	Ground	ReflOrd	LxT	LxN	L/A	Dist.	hm	Freq	Adiv	K0b	Agr	Abar	z	Aatm	Afol	Ahous	Cmet	CmetN	Dc	RL	LtotT	LtotN
	Sol_Luce Substation	S_Substation	369426	4908792	3.5	0	0	112.1	112.1	1	2899.78	5.25	0	80.25	0	0.26	3.42	0.33	5.81	0	0	0	0	0	0	22.34	22.34
	Inverter	MV3-21	368478	4907206	2	0	0	100.3	100.3	1	1164.88	3.25	0	72.33	0	-0.17	0	0	11.42	0	0	0	0	0	0	16.73	16.73
	Inverter	MV3-20	368689	4907317	2	0	0	100.3	100.3	1	1288.34	3.25	0	73.2	0	-0.12	0	0	11.77	0	0	0	0	0	0	15.45	15.45
	Inverter	MV3-19	368357	4907347	2	0	0	100.3	100.3	1	1314.16	3.25	0	73.37	0	-0.11	0	0	11.84	0	0	0	0	0	0	15.2	15.2
	Inverter	MV3-16	368514	4907475	2	0	0	100.3	100.3	1	1433.52	3.25	0	74.13	0	-0.06	0	0	12.16	0	0	0	0	0	0	14.09	14.09
	Inverter	MV3-15	368357	4907477	2	0	0	100.3	100.3	1	1443.38	3.25	0	74.19	0	-0.05	0	0	12.18	0	0	0	0	0	0	14	14
	Inverter	MV3-14	368684	4907498	2	0	0	100.3	100.3	1	1467.15	3.25	0	74.33	0	-0.05	0	0	12.24	0	0	0	0	0	0	13.79	13.79
	Inverter	MV3-17	368178	4907472	2	0	0	100.3	100.3	1	1467.98	3.25	0	74.33	0	-0.05	0	0	12.24	0	0	0	0	0	0	13.78	13.78
	Inverter	MV3-18	367752	4907412	2	0	0	100.3	100.3	1	1564.99	3.25	0	74.89	0	-0.01	0	0	12.48	0	0	0	0	0	0	12.95	12.95
	Inverter	MV3-11	368346	4907662	2	0	0	100.3	100.3	1	1628.54	3.25	0	75.24	0	0.01	0	0	12.64	0	0	0	0	0	0	12.43	12.43
	Inverter	MV3-13	367963	4907577	2	0	0	100.3	100.3	1	1629.22	3.25	0	75.24	0	0.01	0	0	12.64	0	0	0	0	0	0	12.42	12.42
	Inverter	MV3-9	368512	4907703	2	0	0	100.3	100.3	1	1661.51	3.25	0	75.41	0	0.02	0	0	12.71	0	0	0	0	0	0	12.17	12.17
	Inverter	MV3-10	368167	4907669	2	0	0	100.3	100.3	1	1662.76	3.25	0	75.42	0	0.02	0	0	12.72	0	0	0	0	0	0	12.16	12.16
	Inverter	MV3-8	368680	4907712	2	0	0	100.3	100.3	1	1679.37	3.25	0	75.5	0	0.03	0	0	12.75	0	0	0	0	0	0	12.02	12.02
	Inverter	MV3-12	367668	4907594	2	0	0	100.3	100.3	1	1764.99	3.25	0	75.93	0	0.06	0	0	12.95	0	0	0	0	0	0	11.37	11.37
	Inverter	MV3-7	367945	4907754	2	0	0	100.3	100.3	1	1802.55	3.25	0	76.12	0	0.07	0	0	13.03	0	0	0	0	0	0	11.09	11.09
	Inverter	MV3-6	368162	4907834	2	0	0	100.3	100.3	1	1825.51	3.25	0	76.23	0	0.08	0	0	13.09	0	0	0	0	0	0	10.92	10.92
	Inverter	MV3-3	367939	4907927	2	0	0	100.3	100.3	1	1969.37	3.25	0	76.89	0	0.12	0	0	13.4	0	0	0	0	0	0	9.91	9.91
	Inverter	MV6-3	370207	4907140	2	0	0	100.3	100.3	1	2023.53	3.25	0	77.12	0	0.14	0	0	13.51	0	0	0	0	0	0	9.54	9.54
	Inverter	MV6-2	370085	4907339	2	0	0	100.3	100.3	1	2042.47	3.25	0	77.2	0	0.14	0	0	13.55	0	0	0	0	0	0	9.42	9.42
	Inverter	MV2-3	365820	4906641	2	0	0	100.3	100.3	1	2753.65	3.25	0	79.8	0	0.31	0	0	14.93	0	0	0	0	0	0	5.27	5.27
	Inverter	MV4-11	369264	4908855	2	0	0	100.3	100.3	1	2913.41	3.25	0	80.29	0	0.35	0	0	15.22	0	0	0	0	0	0	4.46	4.46
	Inverter	MV4-10	369312	4908858	2	0	0	100.3	100.3	1	2929.12	3.25	0	80.33	0	0.35	0	0	15.25	0	0	0	0	0	0	4.38	4.38
	Inverter	MV2-4	365586	4906624	2	0	0	100.3	100.3	1	2979.1	3.25	0	80.48	0	0.36	0	0	15.34	0	0	0	0	0	0	4.14	4.14
	Inverter	MV4-7	369035	4909001	2	0	0	100.3	100.3	1	3006.13	3.25	0	80.56	0	0.36	0	0	15.38	0	0	0	0	0	0	4.01	4.01
	Inverter	MV5-5	370015	4908690	2	0	0	100.3	100.3	1	3047.43	3.25	0	80.68	0	0.37	0	0	15.46	0	0	0	0	0	0	3.81	3.81
	Inverter	MV4-8	369256	4909001	2	0	0	100.3	100.3	1	3052.66	3.25	0	80.69	0	0.37	0	0	15.46	0	0	0	0	0	0	3.78	3.78
	Inverter	MV4-9	369289	4909001	2	0	0	100.3	100.3	1	3060.92	3.25	0	80.72	0	0.37	0	0	15.48	0	0	0	0	0	0	3.74	3.74
	Inverter	MV6-1	370235	4907364	2	0	0	97.3	97.3	1	2175.53	3.25	0	77.75	0	0.18	0	0	13.82	0	0	0	0	0	0	5.56	5.56
	SubstationTransformer	W_ST	369711.17	4906112.3	2.5	0	0	92	92	1	1205.65	4.25	0	72.62	0	0.79	4.88	0.29	2.93	0	0	0	0	0	0	10.75	10.75
	Inverter	MV5-2	370006	4908853	2	0	0	100.3	100.3	1	3185.87	3.25	0	81.06	0	0.4	0	0	15.7	0	0	0	0	0	0	3.15	3.15
	Inverter	MV4-4	369027	4909199	2	0	0	100.3	100.3	1	3199.94	3.25	0	81.1	0	0.4	0	0	15.72	0	0	0	0	0	0	3.09	3.09
	Inverter	MV5-4	370324	4908707	2	0	0	100.3	100.3	1	3225.56	3.25	0	81.17	0	0.4	0	0	15.77	0	0	0	0	0	0	2.97	2.97
	Inverter	MV4-6	369243	4909192	2	0	0	100.3	100.3	1	3235.19	3.25	0	81.2	0	0.41	0	0	15.78	0	0	0	0	0	0	2.93	2.93
	Inverter	MV4-5	369289	4909199	2	0	0	100.3	100.3	1	3252.75	3.25	0	81.25	0	0.41	0	0	15.81	0	0	0	0	0	0	2.85	2.85
	Inverter	MV5-3	370231	4908851	2	0	0	100.3	100.3	1	3295.97	3.25	0	81.36	0	0.42	0	0	15.89	0	0	0	0	0	0	2.65	2.65
	Inverter	MV1-15	365315	4904994	2	0	0	100.3	100.3	1	3360.05	3.25	0	81.53	0	0.43	0	0	16	0	0	0	0	0	0	2.36	2.36
	Inverter	MV4-1	369011	4909397	2	0	0	100.3	100.3	1	3393.05	3.25	0	81.61	0	0.43	0	0	16.05	0	0	0	0	0	0	2.22	2.22
	Westbrook Inverter Enclosur	W_INV2	369374	4906388	2	0	0	89.1	89.1	1	933.12	3.25	0	70.4	0	0.67	0	0	6.19	0	0	0	0	0	0	11.8	11.8
	Inverter	MV4-3	369229	4909397	2	0	0	100.3	100.3	1	3432.17	3.25	0	81.71	0	0.44	0	0	16.12	0	0	0	0	0	0	2.04	2.04
	Inverter	MV4-2	369272	4909397	2	0	0	100.3	100.3	1	3441.47	3.25	0	81.73	0	0.44	0	0	16.13	0	0	0	0	0	0	2	2
	Inverter	MV5-1	370020	4909142	2	0	0	100.3	100.3	1	3449.7	3.25	0	81.76	0	0.44	0	0	16.15	0	0	0	0	0	0	1.97	1.97
	Inverter	MV1-12	365038	4905386	2	0	0	100.3	100.3	1	3530.98	3.25	0	81.96	0	0.46	0	0	16.28	0	0	0	0	0	0	1.61	1.61
	Westbrook Inverter Enclosur	W_INV3	369508	4906164	2	0	0	89.1	89.1	1	1007.88	3.25	0	71.07	0	0.69	0	0	6.33	0	0	0	0	0	0	10.97	10.97
	Inverter	MV1-4	364815	4905918	2	0	0	100.3	100.3	1	3694.67	3.25	0	82.35	0	0.48	0	0	16.55	0	0	0	0	0	0	0.92	0.92
	Inverter	MV1-8	364788	4905647	2	0	0	100.3	100.3	1	3740.46	3.25	0	82.46	0	0.49	0	0	16.63	0	0	0	0	0	0	0.74	0.74
	Inverter	MV1-2	364753	4906063	2	0	0	100.3	100.3	1	3754.66	3.25	0	82.49	0	0.49	0	0	16.65	0	0	0	0	0	0	0.68	0.68
	Inverter	MV1-1	364715	4906166	2	0	0	100.3	100.3	1	3794.64	3.25	0	82.58	0	0.5	0	0	16.72	0	0	0	0	0	0	0.51	0.51
	Inverter	MV1-5	364671	4905892	2	0	0	100.3	100.3	1	3839.51	3.25	0	82.69	0	0.5	0	0	16.79	0	0	0	0	0	0	0.33	0.33
	Inverter	MV1-11	364655	4905414	2	0	0	100.3	100.3	1	3903.37	3.25	0	82.83	0	0.51	0	0	16.89	0	0	0	0	0	0	0.08	0.08
	Inverter	MV2-1	365842	4906816	2	0	0	97.3	97.3	1	2775.84	3.25	0	79.87	0	0.32	0	0	14.97	0	0	0	0	0	0	2.16	2.16
	Inverter	MV1-9	364561	4905646	2	0	0	100.3	100.3	1	3966.37	3.25	0	82.97	0	0.52	0	0	16.99	0	0	0	0	0	0	-0.17	-0.17
	Inverter	MV1-6	364477	4905835	2	0	0	100.3	100.3	1	4035.89	3.25	0	83.12	0	0.53	0	0	17.11	0	0	0	0	0	0	-0.44	-0.44
	Inverter	MV3-22	368656	4907142	2	0	0	89.1	89.1	1	1110.46	3.25	0	71.91	0	0.71	0	0	6.52	0	0	0	0	0	0	9.92	9.92
	Westbrook Inverter Enclosur	W_INV4	369673	4906164	2	0	0	89.1	89.1	1	1171.82	3.25	0	72.38	0	0.72	0	0	6.63	0	0	0	0	0	0	9.33	9.33
	DSTATCOM - 10 MVAR #2	DSAT2	369403	4908757	2.5	0	0	96.6	96.6	1	2859.32	3.5	0	80.13	0	3.39	0	0	2.22	0	0	0	0	0	0	10.89	10.89
	DSTATCOM - 10 MVAR #1	DSAT1	369437	4908757	2.5	0	0	96.6	96.6	1	2870.14	3.5	0	80.16	0	3.39	0	0	2.23	0	0	0	0	0	0	10.85	10.85
	Westbrook Inverter Enclosur	W_INV5	369719	4906574	2	0	0	89.1	89.1	1	1323.27	3.25	0	73.43	0	0.75	0	0	6.9	0	0	0	0	0	0	7.97	7.97
	Westbrook Inverter Enclosur	W_INV7	369780	4906417	2	0	0	89.1	89.1	1	1326.65	3.25	0	73.46	0	0.75	0	0	6.91	0	0	0	0	0	0	7.94	7.94
	Inverter	MV1-14	365163	4905049	2	0	0	97.3	97.3	1	3488.76	3.25	0	81.85	0	0.45	0	0	16.21	0	0	0	0	0	0	-1.2	-1.2
	Inverter	MV1-10	365004	4905564	2	0	0	97.3	97.3	1	3535.99	3.25	0	81.97	0	0.46	0	0	16.29	0	0	0	0	0	0	-1.41	-1.41
	Inverter	MV1-7	364925	4905782	2	0	0	97.3	97.3	1	3591.99	3.25	0	82.11	0	0.47	0	0	16.38	0	0	0	0	0	0	-1.65	-1.65
	Westbrook Inverter Enclosur	W_INV6	369875	4906578	2	0	0	89.1	89.1	1	1468.88	3.25	0	74.34	0	0.79	0	0	7.15	0	0	0	0	0	0	6.78	6.78
	Westbrook Inverter Enclosur	W_INV1	369409	4906578	2	0	0	86.1	86.1	1	1048.98	3.25	0	71.42	0	0.7	0	0	6.41	0	0	0	0	0	0	7.54	7.54
	Inverter	MV1-13	364731	4905241	2	0	0	97.3	97.3	1	3860.51	3.25	0	82.73	0	0.51	0	0	16.82	0	0	0	0	0	0	-2.75	-2.75

Inverter	MV3-5	368340	4907843	2	0	0	89.1	89.1	1	1809.28	3.25	0	76.15	0	0.86	0	0	7.73	0	0	0	0	0	0	4.31	4.31
Inverter	MV3-4	368502	4907925	2	0	0	89.1	89.1	1	1883.51	3.25	0	76.5	0	0.88	0	0	7.85	0	0	0	0	0	0	3.82	3.82
Inverter	MV3-2	368671	4907928	2	0	0	89.1	89.1	1	1893.56	3.25	0	76.55	0	0.88	0	0	7.87	0	0	0	0	0	0	3.76	3.76
Inverter	MV3-1	368156	4907976	2	0	0	89.1	89.1	1	1966.19	3.25	0	76.87	0	0.9	0	0	7.99	0	0	0	0	0	0	3.3	3.3
Inverter	MV4-15	369176	4908481	2	0	0	89.1	89.1	1	2529.41	3.25	0	79.06	0	1.03	0	0	8.89	0	0	0	0	0	0	0.07	0.07
Inverter	MV4-14	369176	4908507	2	0	0	89.1	89.1	1	2554.5	3.25	0	79.15	0	1.04	0	0	8.93	0	0	0	0	0	0	-0.06	-0.06
Inverter	MV2-2	365977	4906654	2	0	0	89.1	89.1	1	2603.67	3.25	0	79.31	0	1.05	0	0	9.01	0	0	0	0	0	0	-0.31	-0.31
Inverter	MV4-13	369051	4908605	2	0	0	89.1	89.1	1	2620.46	3.25	0	79.37	0	1.05	0	0	9.03	0	0	0	0	0	0	-0.4	-0.4
Fixed Reactor Bank 1	FRB1	369378	4908755	6	0	0	89.8	89.8	1	2849.68	5.25	0	80.1	0	-0.89	0	0	5.73	0	0	0	0	0	0	4.84	4.84
Fixed Reactor Bank 2	FRB2	369464	4908755	6	0	0	89.8	89.8	1	2877.11	5.25	0	80.18	0	-0.89	0	0	5.77	0	0	0	0	0	0	4.71	4.71
Gardiner Substation	G_Sub	366586.3	4903349.9	2.5	0	0	90.8	90.8	1	3306.98	4.25	0	81.39	0	1.22	3.06	0.37	6.41	0	0	0	0	0	0	-1.3	-1.3
Inverter	MV6-4	370250	4906966	2	0	0	86.1	86.1	1	1972.48	3.25	0	76.9	0	0.9	0	0	8	0	0	0	0	0	0	0.26	0.26
Inverter	MV4-12	369043	4908803	2	0	0	89.1	89.1	1	2812.92	3.25	0	79.98	0	1.1	0	0	9.33	0	0	0	0	0	0	-1.36	-1.36
Inverter	MV5-6	369982	4908507	2	0	0	89.1	89.1	1	2872.73	3.25	0	80.17	0	1.12	0	0	9.42	0	0	0	0	0	0	-1.65	-1.65
Westbrook Inverter Transfor	W_INVTR2	369368	4906388	2	0	0	77.3	77.3	1	927.55	3.25	0	70.35	0	-1.89	0	0	0.64	0	0	0	0	0	0	8.24	8.24
Westbrook Inverter Transfor	W_INVTR1	369403	4906578	2	0	0	78.2	78.2	1	1043.83	3.25	0	71.37	0	-1.96	0	0	0.7	0	0	0	0	0	0	8.12	8.12
Westbrook Inverter Transfor	W_INVTR3	369514	4906164	2	0	0	77.3	77.3	1	1013.83	3.25	0	71.12	0	-1.94	0	0	0.69	0	0	0	0	0	0	7.48	7.48
Inverters	G_Inv2	366676.9	4903239.1	2	0	0	87.7	87.7	1	3347.37	3.25	0	81.49	0	2.73	0	0	4.16	0	0	0	0	0	0	-0.73	-0.73
Inverters	G_Inv4	366732.8	4903105	2	0	0	87.7	87.7	1	3431.17	3.25	0	81.71	0	2.74	0	0	4.25	0	0	0	0	0	0	-1.04	-1.04
Inverters	G_Inv1	366526.4	4903225.8	2	0	0	87.7	87.7	1	3442.87	3.25	0	81.74	0	2.74	0	0	4.27	0	0	0	0	0	0	-1.09	-1.09
Inverter	MV1-3	364440	4906039	2	0	0	89.1	89.1	1	4067.6	3.25	0	83.19	0	1.41	0	0	11.18	0	0	0	0	0	0	-6.72	-6.72
Inverters	G_Inv6	366788.5	4902972	2	0	0	87.7	87.7	1	3518.12	3.25	0	81.93	0	2.75	0	0	4.35	0	0	0	0	0	0	-1.36	-1.36
Inverters	G_Inv3	366583.7	4903091.4	2	0	0	87.7	87.7	1	3522	3.25	0	81.94	0	2.75	0	0	4.35	0	0	0	0	0	0	-1.38	-1.38
Inverters	G_Inv5	366638.5	4902958.1	2	0	0	87.7	87.7	1	3605.68	3.25	0	82.14	0	2.76	0	0	4.44	0	0	0	0	0	0	-1.68	-1.68
Inverters	G_Inv8	366844.5	4902838.5	2	0	0	87.7	87.7	1	3609.03	3.25	0	82.15	0	2.76	0	0	4.45	0	0	0	0	0	0	-1.69	-1.69
Inverters	G_Inv7	366694.6	4902824.7	2	0	0	87.7	87.7	1	3692.53	3.25	0	82.35	0	2.77	0	0	4.54	0	0	0	0	0	0	-1.99	-1.99
Inverters	G_Inv10	366900.7	4902704.8	2	0	0	87.7	87.7	1	3703.47	3.25	0	82.37	0	2.77	0	0	4.55	0	0	0	0	0	0	-2.03	-2.03
Inverters	G_Inv9	366750.9	4902691.8	2	0	0	87.7	87.7	1	3782.39	3.25	0	82.56	0	2.77	0	0	4.64	0	0	0	0	0	0	-2.31	-2.31
Westbrook Inverter Transfor	W_INVTR4	369679	4906164	2	0	0	77.3	77.3	1	1177.79	3.25	0	72.42	0	-2.04	0	0	0.78	0	0	0	0	0	0	6.18	6.18
Westbrook Inverter Transfor	W_INVTR5	369725	4906574	2	0	0	77.3	77.3	1	1328.77	3.25	0	73.47	0	-2.12	0	0	0.86	0	0	0	0	0	0	5.13	5.13
Westbrook Inverter Transfor	W_INVTR7	369786	4906417	2	0	0	77.3	77.3	1	1332.41	3.25	0	73.49	0	-2.12	0	0	0.86	0	0	0	0	0	0	5.1	5.1
Westbrook Inverter Transfor	W_INVTR6	369881	4906578	2	0	0	77.3	77.3	1	1474.47	3.25	0	74.37	0	-2.19	0	0	0.94	0	0	0	0	0	0	4.22	4.22
Inverter Transformer	MV6-4 T	370244	4906966	2	0	0	69.4	69.4	1	1967.18	3.25	0	76.88	0	2.16	0	0	4.93	0	0	0	0	0	0	-14.62	-14.62
Inverter Transformer	MV6-1 T	370230	4907364	2	0	0	69.4	69.4	1	2171.56	3.25	0	77.74	0	2.24	0	0	5.13	0	0	0	0	0	0	-15.75	-15.75
Inverter Transformer	MV2-1 T	365836	4906816	2	0	0	69.4	69.4	1	2781.6	3.25	0	79.89	0	2.44	0	0	5.69	0	0	0	0	0	0	-18.67	-18.67
Inverter Transformer	MV1-14 T	365157	4905049	2	0	0	69.4	69.4	1	3494.51	3.25	0	81.87	0	2.65	0	0	6.29	0	0	0	0	0	0	-21.46	-21.46
Inverter Transformer	MV1-10 T	365010	4905564	2	0	0	69.4	69.4	1	3530.05	3.25	0	81.96	0	2.66	0	0	6.32	0	0	0	0	0	0	-21.58	-21.58
Inverter Transformer	MV1-7 T	364919	4905782	2	0	0	69.4	69.4	1	3597.97	3.25	0	82.12	0	2.68	0	0	6.37	0	0	0	0	0	0	-21.82	-21.82
Inverter Transformer	MV1-13 T	364725	4905241	2	0	0	69.4	69.4	1	3866.38	3.25	0	82.75	0	2.75	0	0	6.58	0	0	0	0	0	0	-22.72	-22.72
Inverter Transformer	MV3-22 T	368661	4907142	2	0	0	56.1	56.1	1	1111.14	3.25	0	71.92	0	0.05	0	0	5.15	0	0	0	0	0	0	-21.06	-21.06
Inverter Transformer	MV3-21 T	368484	4907206	2	0	0	56.1	56.1	1	1164.74	3.25	0	72.32	0	0.07	0	0	5.27	0	0	0	0	0	0	-21.61	-21.61
Inverter Transformer	MV3-20 T	368683	4907317	2	0	0	56.1	56.1	1	1287.51	3.25	0	73.19	0	0.12	0	0	5.55	0	0	0	0	0	0	-22.81	-22.81
Inverter Transformer	MV3-19 T	368352	4907347	2	0	0	56.1	56.1	1	1314.74	3.25	0	73.38	0	0.13	0	0	5.61	0	0	0	0	0	0	-23.06	-23.06
Inverter Transformer	MV3-16 T	368509	4907475	2	0	0	56.1	56.1	1	1433.5	3.25	0	74.13	0	0.17	0	0	5.87	0	0	0	0	0	0	-24.12	-24.12
Inverter Transformer	MV3-15 T	368351	4907477	2	0	0	56.1	56.1	1	1444.02	3.25	0	74.19	0	0.18	0	0	5.9	0	0	0	0	0	0	-24.21	-24.21
Inverter Transformer	MV3-14 T	368678	4907498	2	0	0	56.1	56.1	1	1466.44	3.25	0	74.33	0	0.19	0	0	5.95	0	0	0	0	0	0	-24.4	-24.4
Inverter Transformer	MV3-17 T	368183	4907472	2	0	0	56.1	56.1	1	1466.87	3.25	0	74.33	0	0.19	0	0	5.95	0	0	0	0	0	0	-24.4	-24.4
Inverter Transformer	MV3-18 T	367757	4907412	2	0	0	56.1	56.1	1	1562.59	3.25	0	74.88	0	0.22	0	0	6.15	0	0	0	0	0	0	-25.19	-25.19
Inverter Transformer	MV3-11 T	368340	4907662	2	0	0	56.1	56.1	1	1629.15	3.25	0	75.24	0	0.25	0	0	6.29	0	0	0	0	0	0	-25.72	-25.72
Inverter Transformer	MV3-13 T	367958	4907577	2	0	0	56.1	56.1	1	1630.9	3.25	0	75.25	0	0.25	0	0	6.3	0	0	0	0	0	0	-25.74	-25.74
Inverter Transformer	MV3-9 T	368517	4907703	2	0	0	56.1	56.1	1	1661.53	3.25	0	75.41	0	0.26	0	0	6.36	0	0	0	0	0	0	-25.97	-25.97
Inverter Transformer	MV3-10 T	368162	4907669	2	0	0	56.1	56.1	1	1663.79	3.25	0	75.42	0	0.26	0	0	6.36	0	0	0	0	0	0	-25.99	-25.99
Inverter Transformer	MV3-8 T	368685	4907712	2	0	0	56.1	56.1	1	1679.9	3.25	0	75.51	0	0.27	0	0	6.4	0	0	0	0	0	0	-26.12	-26.12
Inverter Transformer	MV3-12 T	367674	4907594	2	0	0	56.1	56.1	1	1762.14	3.25	0	75.92	0	0.3	0	0	6.57	0	0	0	0	0	0	-26.73	-26.73
Inverter Transformer	MV3-7 T	367951	4907754	2	0	0	56.1	56.1	1	1800.68	3.25	0	76.11	0	0.32	0	0	6.65	0	0	0	0	0	0	-27.02	-27.02
Inverter Transformer	MV3-5 T	368335	4907843	2	0	0	56.1	56.1	1	1809.75	3.25	0	76.15	0	0.32	0	0	6.66	0	0	0	0	0	0	-27.08	-27.08
Inverter Transformer	MV3-6 T	368156	4907834	2	0	0	56.1	56.1	1	1826.66	3.25	0	76.23	0	0.33	0	0	6.7	0	0	0	0	0	0	-27.2	-27.2
Inverter Transformer	MV3-4 T	368507	4907925	2	0	0	56.1	56.1	1	1883.5	3.25	0	76.5	0	0.36	0	0	6.81	0	0	0	0	0	0	-27.61	-27.61
Inverter Transformer	MV3-2 T	368677	4907928	2	0	0	56.1	56.1	1	1894.09	3.25	0	76.55	0	0.36	0	0	6.83	0	0	0	0	0	0	-27.68	-27.68
Inverter Transformer	MV3-1 T	368150	4907976	2	0	0	56.1	56.1	1	1967.28	3.25	0	76.88	0	0.39	0	0	6.98	0	0	0	0	0	0	-28.19	-28.19
Inverter Transformer	MV3-3 T	367944	4907927	2	0	0	56.1	56.1	1	1967.93	3.25	0	76.88	0	0.39	0	0	6.98	0	0	0	0	0	0	-28.19	-28.19
Inverter Transformer	MV6-3 T	370202	4907140	2	0	0	56.1	56.1	1	2019.33	3.25	0	77.1	0	0.41	0	0	7.08	0	0	0	0	0	0	-28.54	-28.54
Inverter Transformer	MV6-2 T	370091	4907339	2	0	0	56.1	56.1	1	2047.11	3.25	0	77.22	0	0.42	0	0	7.14	0	0	0	0	0	0	-28.72	-28.72
Inverter Transformer	MV4-15 T	369170	4908481	2	0	0	56.1	56.1	1	2527.83	3.25	0	79.05	0	0.63	0	0	8.04	0	0	0	0	0	0	-31.66	-31.66
Inverter Transformer	MV4-14 T	369182	4908507	2	0	0	56.1	56.1	1	2556.07	3.25	0	79.15	0	0.64	0	0	8.09	0	0	0	0	0	0	-31.82	-31.82
Inverter Transformer	MV2-2 T	365982	4906654	2	0	0	56.1	56.1	1	2598.81	3.25	0	79.3	0	0.66	0	0	8.17	0	0	0	0	0	0	-32.06	-32.06
Inverter Transformer	MV4-13 T	369057	4908605	2	0	0	56.1	56.1	1	2621.71	3.25	0	79.37	0	0.67	0	0	8.21	0	0	0	0	0	0	-32.19	-32.19
Inverter Transformer	MV2-3 T	365814	4906641	2	0	0	56.1	56.1	1	2759.51	3.25	0	79.82	0	0.73	0	0	8.45	0	0	0	0	0	0	-32.94	-32.94
Inverter Transformer	MV4-12 T	369049	4908803	2	0	0	56.1	56.1	1	2814.07	3.25	0	79.99	0	0.75	0	0	8.55	0	0	0	0	0	0	-33.23	-33.23
Inverter Transformer	MV5-6 T	369987	4908507	2	0	0	56.1	56.1	1	2875.29	3.25	0	80.17	0	0.78	0	0	8.65	0	0	0	0	0	0	-33.55	-33.55
Inverter Transformer	MV4-11 T	369269	4908855	2	0	0	56.1	56.1	1	2914.71	3.25	0	80.29	0	0.79	0	0	8.72	0	0	0	0	0	0	-33.75	-33.75
Inverter Transformer	MV4-10 T	369307	4908858	2	0	0	56.1	56.1	1	2927.75	3.25	0	80.33	0	0.8	0	0	8.74	0	0	0	0	0	0	-33.82	-33.82
Inverter Transformer	MV2-4 T	365590	4906628	2	0	0	56.1	56.1	1	2975.97	3.25	0	80.47	0	0.82	0	0	8.83	0	0	0	0	0	0	-34.06	-34.06
Inverter Transformer	MV4-7 T	369040	4909001	2	0	0	56.1	56.1	1	3007.01	3.25	0	80.56	0	0.83	0	0	8.88	0	0	0	0	0	0	-34.22	-34.22

	Inverter Transformer	MV5-5 T	370021	4908690	2	0	0	56.1	56.1	1	3050.4	3.25	0	80.69	0	0.85	0	0	8.95	0	0	0	0	0	0	-34.43	-34.43
	Inverter Transformer	MV4-8 T	369262	4909001	2	0	0	56.1	56.1	1	3054.14	3.25	0	80.7	0	0.85	0	0	8.96	0	0	0	0	0	0	-34.45	-34.45
	Inverter Transformer	MV4-9 T	369284	4909001	2	0	0	56.1	56.1	1	3059.65	3.25	0	80.71	0	0.86	0	0	8.97	0	0	0	0	0	0	-34.48	-34.48
	Inverter Transformer	MV5-2 T	370011	4908853	2	0	0	56.1	56.1	1	3188.22	3.25	0	81.07	0	0.91	0	0	9.18	0	0	0	0	0	0	-35.11	-35.11
	Inverter Transformer	MV4-4 T	369033	4909199	2	0	0	56.1	56.1	1	3200.92	3.25	0	81.11	0	0.91	0	0	9.2	0	0	0	0	0	0	-35.17	-35.17
	Inverter Transformer	MV5-4 T	370330	4908707	2	0	0	56.1	56.1	1	3228.94	3.25	0	81.18	0	0.93	0	0	9.25	0	0	0	0	0	0	-35.3	-35.3
	Inverter Transformer	MV4-6 T	369249	4909192	2	0	0	56.1	56.1	1	3236.56	3.25	0	81.2	0	0.93	0	0	9.26	0	0	0	0	0	0	-35.34	-35.34
	Inverter Transformer	MV4-5 T	369283	4909199	2	0	0	56.1	56.1	1	3251.32	3.25	0	81.24	0	0.94	0	0	9.29	0	0	0	0	0	0	-35.41	-35.41
	Inverter Transformer	MV5-3 T	370237	4908851	2	0	0	56.1	56.1	1	3299.11	3.25	0	81.37	0	0.96	0	0	9.37	0	0	0	0	0	0	-35.63	-35.63
	Inverter Transformer	MV1-15 T	365309	4904994	2	0	0	56.1	56.1	1	3365.75	3.25	0	81.54	0	0.98	0	0	9.47	0	0	0	0	0	0	-35.94	-35.94
	Inverter Transformer	MV4-1 T	369017	4909397	2	0	0	56.1	56.1	1	3393.95	3.25	0	81.61	0	1	0	0	9.52	0	0	0	0	0	0	-36.07	-36.07
	Inverter Transformer	MV4-3 T	369234	4909397	2	0	0	56.1	56.1	1	3433.23	3.25	0	81.71	0	1.01	0	0	9.58	0	0	0	0	0	0	-36.25	-36.25
	Inverter Transformer	MV4-2 T	369267	4909397	2	0	0	56.1	56.1	1	3440.36	3.25	0	81.73	0	1.02	0	0	9.59	0	0	0	0	0	0	-36.28	-36.28
	Inverter Transformer	MV5-1 T	370015	4909142	2	0	0	56.1	56.1	1	3447.52	3.25	0	81.75	0	1.02	0	0	9.6	0	0	0	0	0	0	-36.31	-36.31
	Inverter Transformer	MV1-12 T	365044	4905386	2	0	0	56.1	56.1	1	3525.08	3.25	0	81.94	0	1.05	0	0	9.73	0	0	0	0	0	0	-36.66	-36.66
	Inverter Transformer	MV1-4 T	364821	4905918	2	0	0	56.1	56.1	1	3688.67	3.25	0	82.34	0	1.12	0	0	9.98	0	0	0	0	0	0	-37.38	-37.38
	Inverter Transformer	MV1-8 T	364782	4905647	2	0	0	56.1	56.1	1	3746.43	3.25	0	82.47	0	1.14	0	0	10.07	0	0	0	0	0	0	-37.63	-37.63
	Inverter Transformer	MV1-2 T	364759	4906063	2	0	0	56.1	56.1	1	3748.66	3.25	0	82.48	0	1.14	0	0	10.08	0	0	0	0	0	0	-37.64	-37.64
	Inverter Transformer	MV1-1 T	364721	4906166	2	0	0	56.1	56.1	1	3788.65	3.25	0	82.57	0	1.16	0	0	10.14	0	0	0	0	0	0	-37.81	-37.81
	Inverter Transformer	MV1-5 T	364676	4905892	2	0	0	56.1	56.1	1	3834.52	3.25	0	82.67	0	1.18	0	0	10.21	0	0	0	0	0	0	-38	-38
	Inverter Transformer	MV1-11 T	364649	4905414	2	0	0	56.1	56.1	1	3909.29	3.25	0	82.84	0	1.21	0	0	10.32	0	0	0	0	0	0	-38.31	-38.31
	Inverter Transformer	MV1-9 T	364555	4905646	2	0	0	56.1	56.1	1	3972.34	3.25	0	82.98	0	1.23	0	0	10.41	0	0	0	0	0	0	-38.57	-38.57
	Inverter Transformer	MV1-6 T	364482	4905835	2	0	0	56.1	56.1	1	4030.89	3.25	0	83.11	0	1.26	0	0	10.5	0	0	0	0	0	0	-38.81	-38.81
	Inverter Transformer	MV1-3 T	364435	4906039	2	0	0	56.1	56.1	1	4072.6	3.25	0	83.2	0	1.27	0	0	10.56	0	0	0	0	0	0	-38.97	-38.97
	Line Reactor	NGR	369421	4908787.5	5	0	0	45.4	45.4	1	2893.93	5.25	0	80.23	0	3.33	1.31	0.11	1.18	0	0	0	0	0	0	-40.7	-40.7
Limit. Valu	0	0																								
Level D/N:	28.9316	28.9316																								

Receiver: Vacant Lot Receptor
ID: W-V3
X: 369878.4
Y: 4906079.3
Z: 4.5
Ground: 0

ISO	Description	ID	X	Y	Z	Ground	ReflOrd	LxT	LxN	L/A	Dist.	hm	Freq	Adiv	K0b	Agr	Abar	z	Aatm	Afol	Ahous	Cmet	CmetN	Dc	RL	LtotT	LtotN
	SubstationTransformer	W_ST	369711.17	4906112.3	2.5	0	0	92	92	1	170.46	4.23	0	55.63	0	0.82	6.72	0.25	0.57	0	0	0	0	0	0	28.23	28.23
	Sol_Luce Substation	S_Substation	369426	4908792	3.5	0	0	112.1	112.1	1	2750.17	5.25	0	79.79	0	0.22	3.48	0.35	5.58	0	0	0	0	0	0	23	23
	Westbrook Inverter Enclosur	W_INV4	369673	4906164	2	0	0	89.1	89.1	1	222.19	3.25	0	57.93	0	0.33	0	0	3.46	0	0	0	0	0	0	27.33	27.33
	Inverter	MV6-3	370207	4907140	2	0	0	100.3	100.3	1	1110.44	3.25	0	71.91	0	-0.19	0	0	11.26	0	0	0	0	0	0	17.34	17.34
	Inverter	MV6-2	370085	4907339	2	0	0	100.3	100.3	1	1276.53	3.25	0	73.12	0	-0.12	0	0	11.74	0	0	0	0	0	0	15.57	15.57
	Westbrook Inverter Enclosur	W_INV7	369780	4906417	2	0	0	89.1	89.1	1	351.75	3.25	0	61.92	0	0.41	0	0	4.47	0	0	0	0	0	0	22.25	22.25
	Westbrook Inverter Enclosur	W_INV3	369508	4906164	2	0	0	89.1	89.1	1	379.97	3.25	0	62.59	0	0.44	0	0	4.63	0	0	0	0	0	0	21.4	21.4
	Inverter	MV3-20	368689	4907317	2	0	0	100.3	100.3	1	1716.56	3.25	0	75.69	0	0.04	0	0	12.84	0	0	0	0	0	0	11.74	11.74
	Inverter	MV3-21	368478	4907206	2	0	0	100.3	100.3	1	1797.38	3.25	0	76.09	0	0.07	0	0	13.02	0	0	0	0	0	0	11.13	11.13
	Westbrook Inverter Enclosur	W_INV6	369875	4906578	2	0	0	89.1	89.1	1	498.72	3.25	0	64.96	0	0.53	0	0	5.14	0	0	0	0	0	0	18.44	18.44
	Inverter	MV3-14	368684	4907498	2	0	0	100.3	100.3	1	1854.54	3.25	0	76.36	0	0.09	0	0	13.15	0	0	0	0	0	0	10.71	10.71
	Inverter	MV6-1	370235	4907364	2	0	0	97.3	97.3	1	1333.28	3.25	0	73.5	0	-0.1	0	0	11.9	0	0	0	0	0	0	12.02	12.02
	Westbrook Inverter Enclosur	W_INV5	369719	4906574	2	0	0	89.1	89.1	1	519.75	3.25	0	65.32	0	0.54	0	0	5.21	0	0	0	0	0	0	17.99	17.99
	Inverter	MV3-16	368514	4907475	2	0	0	100.3	100.3	1	1951.81	3.25	0	76.81	0	0.12	0	0	13.36	0	0	0	0	0	0	10.03	10.03
	Inverter	MV3-19	368357	4907347	2	0	0	100.3	100.3	1	1980.34	3.25	0	76.93	0	0.12	0	0	13.42	0	0	0	0	0	0	9.83	9.83
	Inverter	MV3-8	368680	4907712	2	0	0	100.3	100.3	1	2025.31	3.25	0	77.13	0	0.14	0	0	13.52	0	0	0	0	0	0	9.53	9.53
	Inverter	MV3-15	368357	4907477	2	0	0	100.3	100.3	1	2065.97	3.25	0	77.3	0	0.15	0	0	13.6	0	0	0	0	0	0	9.26	9.26
	Inverter	MV3-9	368512	4907703	2	0	0	100.3	100.3	1	2122.13	3.25	0	77.54	0	0.16	0	0	13.72	0	0	0	0	0	0	8.9	8.9
	Westbrook Inverter Enclosur	W_INV2	369374	4906388	2	0	0	89.1	89.1	1	591.37	3.25	0	66.44	0	0.57	0	0	5.43	0	0	0	0	0	0	16.62	16.62
	Inverter	MV3-17	368178	4907472	2	0	0	100.3	100.3	1	2197.95	3.25	0	77.84	0	0.18	0	0	13.87	0	0	0	0	0	0	8.42	8.42
	Inverter	MV3-11	368346	4907662	2	0	0	100.3	100.3	1	2203	3.25	0	77.86	0	0.18	0	0	13.88	0	0	0	0	0	0	8.39	8.39
	Inverter	MV3-10	368167	4907669	2	0	0	100.3	100.3	1	2335.82	3.25	0	78.37	0	0.22	0	0	14.14	0	0	0	0	0	0	7.58	7.58
	Inverter	MV3-13	367963	4907577	2	0	0	100.3	100.3	1	2431.43	3.25	0	78.72	0	0.24	0	0	14.33	0	0	0	0	0	0	7.03	7.03
	Inverter	MV3-6	368162	4907834	2	0	0	100.3	100.3	1	2454.59	3.25	0	78.8	0	0.25	0	0	14.37	0	0	0	0	0	0	6.89	6.89
	Inverter	MV3-18	367752	4907412	2	0	0	100.3	100.3	1	2509.52	3.25	0	78.99	0	0.26	0	0	14.48	0	0	0	0	0	0	6.58	6.58
	Inverter	MV3-7	367945	4907754	2	0	0	100.3	100.3	1	2557.86	3.25	0	79.16	0	0.27	0	0	14.57	0	0	0	0	0	0	6.32	6.32
	Inverter	MV5-5	370015	4908690	2	0	0	100.3	100.3	1	2614.27	3.25	0	79.35	0	0.28	0	0	14.67	0	0	0	0	0	0	6.01	6.01
	Inverter	MV5-4	370324	4908707	2	0	0	100.3	100.3	1	2665.22	3.25	0	79.51	0	0.29	0	0	14.77	0	0	0	0	0	0	5.74	5.74
	Inverter	MV3-3	367939	4907927	2	0	0	100.3	100.3	1	2678.67	3.25	0	79.56	0	0.3	0	0	14.79	0	0	0	0	0	0	5.66	5.66
	Inverter	MV3-12	367668	4907594	2	0	0	100.3	100.3	1	2679.59	3.25	0	79.56	0	0.3	0	0	14.79	0	0	0	0	0	0	5.66	5.66
	Inverter	MV5-2	370006	4908853	2	0	0	100.3	100.3	1	2776.63	3.25	0	79.87	0	0.32	0	0	14.97	0	0	0	0	0	0	5.15	5.15
	Inverter	MV5-3	370231	4908851	2	0	0	100.3	100.3	1	2794.04	3.25	0	79.92	0	0.32	0	0	15	0	0	0	0	0	0	5.06	5.06
	Inverter	MV4-10	369312	4908858	2	0	0	100.3	100.3	1	2835.84	3.25	0	80.05	0	0.33	0	0	15.08	0	0	0	0	0	0	4.85	4.85
	Inverter	MV4-11	369264	4908855	2	0	0	100.3	100.3	1	2842.89	3.25	0	80.08	0	0.33	0	0	15.09	0	0	0	0	0	0	4.81	4.81
	Inverter	MV4-9	369289	4909001	2	0	0	100.3	100.3	1	2980.56	3.25	0	80.49	0	0.36	0	0	15.34	0	0	0	0	0	0	4.13	4.13
	Inverter	MV4-8	369256	4909001	2	0	0	100.3	100.3	1	2987.26	3.25	0	80.51	0	0.36	0	0	15.35	0	0	0	0	0	0	4.1	4.1
	Inverter	MV4-7	369035	4909001	2	0	0	100.3	100.3	1	3041	3.25	0	80.66	0	0.37	0	0	15.44	0	0	0	0	0	0	3.84	3.84
	Westbrook Inverter Transfor	W_INVTR4	369679	4906164	2	0	0	77.3	77.3	1	216.66	3.25	0	57.72	0	-0.53	0	0	0.18	0	0	0	0	0	0	19.98	19.98

Inverter	MV5-1	370020	4909142	2	0	0	100.3	100.3	1	3065.97	3.25	0	80.73	0	0.37	0	0	15.49	0	0	0	0	0	0	3.72	3.72
Inverter	MV4-5	369289	4909199	2	0	0	100.3	100.3	1	3174.89	3.25	0	81.03	0	0.39	0	0	15.68	0	0	0	0	0	0	3.2	3.2
Inverter	MV4-6	369243	4909192	2	0	0	100.3	100.3	1	3176.89	3.25	0	81.04	0	0.4	0	0	15.68	0	0	0	0	0	0	3.2	3.2
Inverter	MV4-4	369027	4909199	2	0	0	100.3	100.3	1	3233.79	3.25	0	81.19	0	0.41	0	0	15.78	0	0	0	0	0	0	2.93	2.93
Inverter	MV4-2	369272	4909397	2	0	0	100.3	100.3	1	3372.66	3.25	0	81.56	0	0.43	0	0	16.02	0	0	0	0	0	0	2.31	2.31
Inverter	MV4-3	369229	4909397	2	0	0	100.3	100.3	1	3380.66	3.25	0	81.58	0	0.43	0	0	16.03	0	0	0	0	0	0	2.27	2.27
Inverter	MV4-1	369011	4909397	2	0	0	100.3	100.3	1	3429.22	3.25	0	81.7	0	0.44	0	0	16.11	0	0	0	0	0	0	2.06	2.06
Westbrook Inverter Enclosur	W_INV1	369409	4906578	2	0	0	86.1	86.1	1	684.87	3.25	0	67.71	0	0.61	0	0	5.67	0	0	0	0	0	0	12.07	12.07
Inverter	MV2-3	365820	4906641	2	0	0	100.3	100.3	1	4097.09	3.25	0	83.25	0	0.54	0	0	17.2	0	0	0	0	0	0	-0.68	-0.68
DSTATCOM - 10 MVAR #1	DSAT1	369437	4908757	2.5	0	0	96.6	96.6	1	2713.84	3.5	0	79.67	0	3.36	0	0	2.14	0	0	0	0	0	0	11.46	11.46
DSTATCOM - 10 MVAR #2	DSAT2	369403	4908757	2.5	0	0	96.6	96.6	1	2719.57	3.5	0	79.69	0	3.36	0	0	2.14	0	0	0	0	0	0	11.43	11.43
Inverter	MV2-4	365586	4906624	2	0	0	100.3	100.3	1	4326.82	3.25	0	83.72	0	0.57	0	0	17.56	0	0	0	0	0	0	-1.54	-1.54
Inverter	MV1-15	365315	4904994	2	0	0	100.3	100.3	1	4690.68	3.25	0	84.42	0	0.61	0	0	18.12	0	0	0	0	0	0	-2.84	-2.84
Inverter	MV1-12	365038	4905386	2	0	0	100.3	100.3	1	4889.8	3.25	0	84.79	0	0.63	0	0	18.42	0	0	0	0	0	0	-3.52	-3.52
Westbrook Inverter Transfor	W_INVTR7	369786	4906417	2	0	0	77.3	77.3	1	350.12	3.25	0	61.88	0	-1.2	0	0	0.27	0	0	0	0	0	0	16.39	16.39
Inverter	MV6-4	370250	4906966	2	0	0	86.1	86.1	1	961.42	3.25	0	70.66	0	0.68	0	0	6.24	0	0	0	0	0	0	8.48	8.48
Inverter	MV1-4	364815	4905918	2	0	0	100.3	100.3	1	5065.97	3.25	0	85.09	0	0.65	0	0	18.68	0	0	0	0	0	0	-4.11	-4.11
Inverter	MV1-8	364788	4905647	2	0	0	100.3	100.3	1	5108.72	3.25	0	85.17	0	0.65	0	0	18.74	0	0	0	0	0	0	-4.25	-4.25
Inverter	MV1-2	364753	4906063	2	0	0	100.3	100.3	1	5125.43	3.25	0	85.19	0	0.65	0	0	18.76	0	0	0	0	0	0	-4.3	-4.3
Inverter	MV1-1	364715	4906166	2	0	0	100.3	100.3	1	5164.13	3.25	0	85.26	0	0.66	0	0	18.82	0	0	0	0	0	0	-4.42	-4.42
Inverter	MV1-5	364671	4905892	2	0	0	100.3	100.3	1	5210.77	3.25	0	85.34	0	0.66	0	0	18.89	0	0	0	0	0	0	-4.57	-4.57
Inverter	MV1-11	364655	4905414	2	0	0	100.3	100.3	1	5265.6	3.25	0	85.43	0	0.66	0	0	18.97	0	0	0	0	0	0	-4.75	-4.75
Westbrook Inverter Transfor	W_INVTR3	369514	4906164	2	0	0	77.3	77.3	1	374.12	3.25	0	62.46	0	-1.27	0	0	0.29	0	0	0	0	0	0	15.86	15.86
Inverter	MV1-9	364561	4905646	2	0	0	100.3	100.3	1	5335.03	3.25	0	85.54	0	0.67	0	0	19.07	0	0	0	0	0	0	-4.97	-4.97
Inverter	MV1-6	364477	4905835	2	0	0	100.3	100.3	1	5406.92	3.25	0	85.66	0	0.67	0	0	19.17	0	0	0	0	0	0	-5.19	-5.19
Inverter	MV2-1	365842	4906816	2	0	0	97.3	97.3	1	4103.08	3.25	0	83.26	0	0.54	0	0	17.21	0	0	0	0	0	0	-3.7	-3.7
Inverter	MV3-22	368656	4907142	2	0	0	89.1	89.1	1	1619.75	3.25	0	75.19	0	0.82	0	0	7.41	0	0	0	0	0	0	5.64	5.64
Inverter	MV1-14	365163	4905049	2	0	0	97.3	97.3	1	4826.65	3.25	0	84.67	0	0.63	0	0	18.32	0	0	0	0	0	0	-6.31	-6.31
Inverter	MV1-10	365004	4905564	2	0	0	97.3	97.3	1	4901.56	3.25	0	84.81	0	0.63	0	0	18.43	0	0	0	0	0	0	-6.56	-6.56
Inverter	MV1-7	364925	4905782	2	0	0	97.3	97.3	1	4962.31	3.25	0	84.91	0	0.64	0	0	18.52	0	0	0	0	0	0	-6.77	-6.77
Westbrook Inverter Transfor	W_INVTR6	369881	4906578	2	0	0	77.3	77.3	1	498.71	3.25	0	64.96	0	-1.51	0	0	0.37	0	0	0	0	0	0	13.52	13.52
Westbrook Inverter Transfor	W_INVTR5	369725	4906574	2	0	0	77.3	77.3	1	517.94	3.25	0	65.29	0	-1.53	0	0	0.38	0	0	0	0	0	0	13.21	13.21
Inverter	MV1-13	364731	4905241	2	0	0	97.3	97.3	1	5215.22	3.25	0	85.35	0	0.66	0	0	18.89	0	0	0	0	0	0	-7.59	-7.59
Inverter	MV3-2	368671	4907928	2	0	0	89.1	89.1	1	2208.06	3.25	0	77.88	0	0.96	0	0	8.38	0	0	0	0	0	0	1.84	1.84
Westbrook Inverter Transfor	W_INVTR2	369368	4906388	2	0	0	77.3	77.3	1	596.5	3.25	0	66.51	0	-1.63	0	0	0.43	0	0	0	0	0	0	12.02	12.02
Inverter	MV3-4	368502	4907925	2	0	0	89.1	89.1	1	2302.41	3.25	0	78.24	0	0.98	0	0	8.53	0	0	0	0	0	0	1.3	1.3
Inverter	MV3-5	368340	4907843	2	0	0	89.1	89.1	1	2340.37	3.25	0	78.39	0	0.99	0	0	8.59	0	0	0	0	0	0	1.09	1.09
Westbrook Inverter Transfor	W_INVTR1	369403	4906578	2	0	0	78.2	78.2	1	688.99	3.25	0	67.76	0	-1.71	0	0	0.49	0	0	0	0	0	0	11.7	11.7
Inverter	MV5-6	369982	4908507	2	0	0	89.1	89.1	1	2429.91	3.25	0	78.71	0	1.01	0	0	8.74	0	0	0	0	0	0	0.6	0.6
Fixed Reactor Bank 2	FRB2	369464	4908755	6	0	0	89.8	89.8	1	2707.6	5.25	0	79.65	0	-0.91	0	0	5.51	0	0	0	0	0	0	5.52	5.52
Inverter	MV4-15	369176	4908481	2	0	0	89.1	89.1	1	2502.31	3.25	0	78.97	0	1.03	0	0	8.85	0	0	0	0	0	0	0.22	0.22
Fixed Reactor Bank 1	FRB1	369378	4908755	6	0	0	89.8	89.8	1	2722.09	5.25	0	79.7	0	-0.91	0	0	5.54	0	0	0	0	0	0	5.45	5.45
Inverter	MV4-14	369176	4908507	2	0	0	89.1	89.1	1	2527.27	3.25	0	79.05	0	1.03	0	0	8.89	0	0	0	0	0	0	0.08	0.08
Inverter	MV3-1	368156	4907976	2	0	0	89.1	89.1	1	2562.06	3.25	0	79.17	0	1.04	0	0	8.94	0	0	0	0	0	0	-0.1	-0.1
Inverter	MV4-13	369051	4908605	2	0	0	89.1	89.1	1	2657.77	3.25	0	79.49	0	1.06	0	0	9.09	0	0	0	0	0	0	-0.59	-0.59
Inverter	MV4-12	369043	4908803	2	0	0	89.1	89.1	1	2848.94	3.25	0	80.09	0	1.11	0	0	9.39	0	0	0	0	0	0	-1.53	-1.53
Gardiner Substation	G_Sub	366586.3	4903349.9	2.5	0	0	90.8	90.8	1	4276.39	4.25	0	83.62	0	1.45	2.56	0.33	7.73	0	0	0	0	0	0	-4.58	-4.58
Inverter	MV2-2	365977	4906654	2	0	0	89.1	89.1	1	3943.5	3.25	0	82.92	0	1.38	0	0	11	0	0	0	0	0	0	-6.24	-6.24
Inverters	G_Inv2	366676.9	4903239.1	2	0	0	87.7	87.7	1	4279.76	3.25	0	83.63	0	2.81	0	0	5.18	0	0	0	0	0	0	-3.96	-3.96
Inverters	G_Inv4	366732.8	4903105	2	0	0	87.7	87.7	1	4329.12	3.25	0	83.73	0	2.82	0	0	5.23	0	0	0	0	0	0	-4.11	-4.11
Inverters	G_Inv6	366788.5	4902972	2	0	0	87.7	87.7	1	4382.1	3.25	0	83.83	0	2.82	0	0	5.28	0	0	0	0	0	0	-4.28	-4.28
Inverters	G_Inv1	366526.4	4903225.8	2	0	0	87.7	87.7	1	4402.09	3.25	0	83.87	0	2.82	0	0	5.31	0	0	0	0	0	0	-4.34	-4.34
Inverters	G_Inv8	366844.5	4902838.5	2	0	0	87.7	87.7	1	4439.3	3.25	0	83.95	0	2.83	0	0	5.35	0	0	0	0	0	0	-4.46	-4.46
Inverters	G_Inv3	366583.7	4903091.4	2	0	0	87.7	87.7	1	4447.76	3.25	0	83.96	0	2.83	0	0	5.35	0	0	0	0	0	0	-4.48	-4.48
Inverters	G_Inv5	366638.5	4902958.1	2	0	0	87.7	87.7	1	4498.76	3.25	0	84.06	0	2.83	0	0	5.41	0	0	0	0	0	0	-4.64	-4.64
Inverters	G_Inv10	366900.7	4902704.8	2	0	0	87.7	87.7	1	4500.44	3.25	0	84.07	0	2.83	0	0	5.41	0	0	0	0	0	0	-4.65	-4.65
Inverters	G_Inv7	366694.6	4902824.7	2	0	0	87.7	87.7	1	4552.91	3.25	0	84.17	0	2.83	0	0	5.47	0	0	0	0	0	0	-4.81	-4.81
Inverters	G_Inv9	366750.9	4902691.8	2	0	0	87.7	87.7	1	4610.47	3.25	0	84.27	0	2.84	0	0	5.53	0	0	0	0	0	0	-4.98	-4.98
Inverter	MV1-3	364440	4906039	2	0	0	89.1	89.1	1	5438.55	3.25	0	85.71	0	1.75	0	0	13.04	0	0	0	0	0	0	-11.44	-11.44
Inverter Transformer	MV6-4 T	370244	4906966	2	0	0	69.4	69.4	1	959.12	3.25	0	70.64	0	1.65	0	0	3.75	0	0	0	0	0	0	-6.69	-6.69
Inverter Transformer	MV6-1 T	370230	4907364	2	0	0	69.4	69.4	1	1331.95	3.25	0	73.49	0	1.89	0	0	4.24	0	0	0	0	0	0	-10.27	-10.27
Inverter Transformer	MV2-1 T	365836	4906816	2	0	0	69.4	69.4	1	4108.98	3.25	0	83.27	0	2.81	0	0	6.76	0	0	0	0	0	0	-23.49	-23.49
Inverter Transformer	MV1-14 T	365157	4905049	2	0	0	69.4	69.4	1	4832.51	3.25	0	84.68	0	2.98	0	0	7.27	0	0	0	0	0	0	-25.58	-25.58
Inverter Transformer	MV1-10 T	365010	4905564	2	0	0	69.4	69.4	1	4895.6	3.25	0	84.8	0	2.99	0	0	7.31	0	0	0	0	0	0	-25.75	-25.75
Inverter Transformer	MV1-7 T	364919	4905782	2	0	0	69.4	69.4	1	4968.3	3.25	0	84.92	0	3.01	0	0	7.36	0	0	0	0	0	0	-25.94	-25.94
Inverter Transformer	MV6-3 T	370202	4907140	2	0	0	56.1	56.1	1	1108.97	3.25	0	71.9	0	0.05	0	0	5.15	0	0	0	0	0	0	-21.04	-21.04
Inverter Transformer	MV1-13 T	364725	4905241	2	0	0	69.4	69.4	1	5221.14	3.25	0	85.36	0	3.06	0	0	7.53	0	0	0	0	0	0	-26.59	-26.59
Inverter Transformer	MV6-2 T	370091	4907339	2	0	0	56.1	56.1	1	1277.52	3.25	0	73.13	0	0.11	0	0	5.53	0	0	0	0	0	0	-22.71	-22.71
Inverter Transformer	MV3-22 T	368661	4907142	2	0	0	56.1	56.1	1	1615.98	3.25	0	75.17	0	0.25	0	0	6.26	0	0	0	0	0	0	-25.62	-25.62
Inverter Transformer	MV3-20 T	368683	4907317	2	0	0	56.1	56.1	1	1720.72	3.25	0	75.71	0	0.29	0	0	6.48	0	0	0	0	0	0	-26.43	-26.43
Inverter Transformer	MV3-21 T	368484	4907206	2	0	0	56.1	56.1	1	1792.71	3.25	0	76.07	0	0.32	0	0	6.63	0	0	0	0	0	0	-26.96	-26.96
Inverter Transformer	MV3-14 T	368678	4907498	2	0	0	56.1	56.1	1	1858.41	3.25	0	76.38	0	0.34	0	0	6.76	0	0	0	0	0	0	-27.43	-27.43
Inverter Transformer	MV3-16 T	368509	4907475	2	0	0	56.1	56.1	1	1955.31	3.25	0	76.82	0	0.39	0	0	6.96	0	0	0	0	0	0	-28.11	-28.11
Inverter Transformer	MV3-19 T	368352	4907347	2	0	0	56.1	56.1	1	1984.18	3.25	0	76.95	0	0.4	0	0	7.01	0	0	0	0	0	0	-28.3	-28.3

	Inverter Transformer	MV3-8 T	368685	4907712	2	0	0	56.1	56.1	1	2022.35	3.25	0	77.12	0	0.41	0	0	7.09	0	0	0	0	0	0	-28.56	-28.56
	Inverter Transformer	MV3-15 T	368351	4907477	2	0	0	56.1	56.1	1	2070.39	3.25	0	77.32	0	0.43	0	0	7.18	0	0	0	0	0	0	-28.88	-28.88
	Inverter Transformer	MV3-9 T	368517	4907703	2	0	0	56.1	56.1	1	2118.92	3.25	0	77.52	0	0.45	0	0	7.28	0	0	0	0	0	0	-29.19	-29.19
	Inverter Transformer	MV3-17 T	368183	4907472	2	0	0	56.1	56.1	1	2194.08	3.25	0	77.83	0	0.49	0	0	7.42	0	0	0	0	0	0	-29.67	-29.67
	Inverter Transformer	MV3-2 T	368677	4907928	2	0	0	56.1	56.1	1	2204.78	3.25	0	77.87	0	0.49	0	0	7.44	0	0	0	0	0	0	-29.74	-29.74
	Inverter Transformer	MV3-11 T	368340	4907662	2	0	0	56.1	56.1	1	2207.17	3.25	0	77.88	0	0.49	0	0	7.44	0	0	0	0	0	0	-29.75	-29.75
	Inverter Transformer	MV3-4 T	368507	4907925	2	0	0	56.1	56.1	1	2299.42	3.25	0	78.23	0	0.53	0	0	7.62	0	0	0	0	0	0	-30.32	-30.32
	Inverter Transformer	MV3-10 T	368162	4907669	2	0	0	56.1	56.1	1	2339.48	3.25	0	78.38	0	0.55	0	0	7.69	0	0	0	0	0	0	-30.57	-30.57
	Inverter Transformer	MV3-5 T	368335	4907843	2	0	0	56.1	56.1	1	2343.66	3.25	0	78.4	0	0.55	0	0	7.7	0	0	0	0	0	0	-30.59	-30.59
	Inverter Transformer	MV5-6 T	369987	4908507	2	0	0	56.1	56.1	1	2430.13	3.25	0	78.71	0	0.59	0	0	7.86	0	0	0	0	0	0	-31.1	-31.1
	Inverter Transformer	MV3-13 T	367958	4907577	2	0	0	56.1	56.1	1	2435.37	3.25	0	78.73	0	0.59	0	0	7.87	0	0	0	0	0	0	-31.13	-31.13
	Inverter Transformer	MV3-6 T	368156	4907834	2	0	0	56.1	56.1	1	2458.79	3.25	0	78.81	0	0.6	0	0	7.91	0	0	0	0	0	0	-31.27	-31.27
	Inverter Transformer	MV4-15 T	369170	4908481	2	0	0	56.1	56.1	1	2504	3.25	0	78.97	0	0.62	0	0	8	0	0	0	0	0	0	-31.53	-31.53
	Inverter Transformer	MV3-18 T	367757	4907412	2	0	0	56.1	56.1	1	2505.28	3.25	0	78.98	0	0.62	0	0	8	0	0	0	0	0	0	-31.54	-31.54
	Inverter Transformer	MV4-14 T	369182	4908507	2	0	0	56.1	56.1	1	2525.61	3.25	0	79.05	0	0.63	0	0	8.04	0	0	0	0	0	0	-31.65	-31.65
	Inverter Transformer	MV3-7 T	367951	4907754	2	0	0	56.1	56.1	1	2553.33	3.25	0	79.14	0	0.64	0	0	8.09	0	0	0	0	0	0	-31.81	-31.81
	Inverter Transformer	MV3-1 T	368150	4907976	2	0	0	56.1	56.1	1	2566.1	3.25	0	79.19	0	0.64	0	0	8.11	0	0	0	0	0	0	-31.88	-31.88
	Inverter Transformer	MV5-5 T	370021	4908690	2	0	0	56.1	56.1	1	2614.59	3.25	0	79.35	0	0.67	0	0	8.2	0	0	0	0	0	0	-32.15	-32.15
	Inverter Transformer	MV4-13 T	369057	4908605	2	0	0	56.1	56.1	1	2655.91	3.25	0	79.48	0	0.68	0	0	8.27	0	0	0	0	0	0	-32.38	-32.38
	Inverter Transformer	MV5-4 T	370330	4908707	2	0	0	56.1	56.1	1	2666.23	3.25	0	79.52	0	0.69	0	0	8.29	0	0	0	0	0	0	-32.44	-32.44
	Inverter Transformer	MV3-12 T	367674	4907594	2	0	0	56.1	56.1	1	2674.64	3.25	0	79.55	0	0.69	0	0	8.3	0	0	0	0	0	0	-32.48	-32.48
	Inverter Transformer	MV3-3 T	367944	4907927	2	0	0	56.1	56.1	1	2675.05	3.25	0	79.55	0	0.69	0	0	8.3	0	0	0	0	0	0	-32.48	-32.48
	Inverter Transformer	MV5-2 T	370011	4908853	2	0	0	56.1	56.1	1	2776.87	3.25	0	79.87	0	0.73	0	0	8.48	0	0	0	0	0	0	-33.03	-33.03
	Inverter Transformer	MV5-3 T	370237	4908851	2	0	0	56.1	56.1	1	2794.8	3.25	0	79.93	0	0.74	0	0	8.52	0	0	0	0	0	0	-33.13	-33.13
	Inverter Transformer	MV4-10 T	369307	4908858	2	0	0	56.1	56.1	1	2836.84	3.25	0	80.06	0	0.76	0	0	8.59	0	0	0	0	0	0	-33.35	-33.35
	Inverter Transformer	MV4-11 T	369269	4908855	2	0	0	56.1	56.1	1	2841.81	3.25	0	80.07	0	0.76	0	0	8.6	0	0	0	0	0	0	-33.37	-33.37
	Inverter Transformer	MV4-12 T	369049	4908803	2	0	0	56.1	56.1	1	2847.18	3.25	0	80.09	0	0.76	0	0	8.61	0	0	0	0	0	0	-33.4	-33.4
	Inverter Transformer	MV4-9 T	369284	4909001	2	0	0	56.1	56.1	1	2981.55	3.25	0	80.49	0	0.82	0	0	8.84	0	0	0	0	0	0	-34.09	-34.09
	Inverter Transformer	MV4-8 T	369262	4909001	2	0	0	56.1	56.1	1	2986.02	3.25	0	80.5	0	0.82	0	0	8.84	0	0	0	0	0	0	-34.11	-34.11
	Inverter Transformer	MV4-7 T	369040	4909001	2	0	0	56.1	56.1	1	3039.61	3.25	0	80.66	0	0.85	0	0	8.94	0	0	0	0	0	0	-34.38	-34.38
	Inverter Transformer	MV5-1 T	370015	4909142	2	0	0	56.1	56.1	1	3065.75	3.25	0	80.73	0	0.86	0	0	8.98	0	0	0	0	0	0	-34.51	-34.51
	Inverter Transformer	MV4-6 T	369249	4909192	2	0	0	56.1	56.1	1	3175.7	3.25	0	81.04	0	0.9	0	0	9.16	0	0	0	0	0	0	-35.05	-35.05
	Inverter Transformer	MV4-5 T	369283	4909199	2	0	0	56.1	56.1	1	3176.01	3.25	0	81.04	0	0.9	0	0	9.16	0	0	0	0	0	0	-35.05	-35.05
	Inverter Transformer	MV4-4 T	369033	4909199	2	0	0	56.1	56.1	1	3232.22	3.25	0	81.19	0	0.93	0	0	9.26	0	0	0	0	0	0	-35.32	-35.32
	Inverter Transformer	MV4-2 T	369267	4909397	2	0	0	56.1	56.1	1	3373.57	3.25	0	81.56	0	0.99	0	0	9.49	0	0	0	0	0	0	-35.98	-35.98
	Inverter Transformer	MV4-3 T	369234	4909397	2	0	0	56.1	56.1	1	3379.7	3.25	0	81.58	0	0.99	0	0	9.5	0	0	0	0	0	0	-36	-36
	Inverter Transformer	MV4-1 T	369017	4909397	2	0	0	56.1	56.1	1	3427.7	3.25	0	81.7	0	1.01	0	0	9.57	0	0	0	0	0	0	-36.22	-36.22
	Inverter Transformer	MV2-2 T	365982	4906654	2	0	0	56.1	56.1	1	3938.56	3.25	0	82.91	0	1.22	0	0	10.36	0	0	0	0	0	0	-38.43	-38.43
	Inverter Transformer	MV2-3 T	365814	4906641	2	0	0	56.1	56.1	1	4103.03	3.25	0	83.26	0	1.28	0	0	10.61	0	0	0	0	0	0	-39.1	-39.1
	Inverter Transformer	MV2-4 T	365590	4906628	2	0	0	56.1	56.1	1	4323.36	3.25	0	83.72	0	1.37	0	0	10.93	0	0	0	0	0	0	-39.96	-39.96
	Inverter Transformer	MV1-15 T	365309	4904994	2	0	0	56.1	56.1	1	4696.52	3.25	0	84.44	0	1.51	0	0	11.45	0	0	0	0	0	0	-41.34	-41.34
	Inverter Transformer	MV1-12 T	365044	4905386	2	0	0	56.1	56.1	1	4883.86	3.25	0	84.78	0	1.58	0	0	11.7	0	0	0	0	0	0	-42	-42
	Inverter Transformer	MV1-4 T	364821	4905918	2	0	0	56.1	56.1	1	5059.97	3.25	0	85.08	0	1.65	0	0	11.93	0	0	0	0	0	0	-42.6	-42.6
	Inverter Transformer	MV1-8 T	364782	4905647	2	0	0	56.1	56.1	1	5114.7	3.25	0	85.18	0	1.67	0	0	12	0	0	0	0	0	0	-42.79	-42.79
	Inverter Transformer	MV1-2 T	364759	4906063	2	0	0	56.1	56.1	1	5119.43	3.25	0	85.18	0	1.67	0	0	12.01	0	0	0	0	0	0	-42.8	-42.8
	Inverter Transformer	MV1-1 T	364721	4906166	2	0	0	56.1	56.1	1	5158.13	3.25	0	85.25	0	1.68	0	0	12.06	0	0	0	0	0	0	-42.93	-42.93
	Inverter Transformer	MV1-5 T	364676	4905892	2	0	0	56.1	56.1	1	5205.77	3.25	0	85.33	0	1.7	0	0	12.12	0	0	0	0	0	0	-43.09	-43.09
	Inverter Transformer	MV1-11 T	364649	4905414	2	0	0	56.1	56.1	1	5271.55	3.25	0	85.44	0	1.72	0	0	12.21	0	0	0	0	0	0	-43.31	-43.31
	Inverter Transformer	MV1-9 T	364555	4905646	2	0	0	56.1	56.1	1	5341.01	3.25	0	85.55	0	1.75	0	0	12.3	0	0	0	0	0	0	-43.54	-43.54
	Inverter Transformer	MV1-6 T	364482	4905835	2	0	0	56.1	56.1	1	5401.93	3.25	0	85.65	0	1.77	0	0	12.37	0	0	0	0	0	0	-43.73	-43.73
	Inverter Transformer	MV1-3 T	364435	4906039	2	0	0	56.1	56.1	1	5443.55	3.25	0	85.72	0	1.78	0	0	12.42	0	0	0	0	0	0	-43.87	-43.87
	Line Reactor	NGR	369421	4908787.5	5	0	0	45.4	45.4	1	2746.55	5.25	0	79.78	0	3.33	1.31	0.12	1.12	0	0	0	0	0	0	-40.19	-40.19
Limit. Valu	0	0																								
Level D/N:	33.991	33.991																								

Receiver: Vacant Lot Receptor
ID: W-V4
X: 370317.9
Y: 4906715.7
Z: 4.5
Ground: 0

ISO	Description	ID	X	Y	Z	Ground	ReflOrd	LxT	LxN	L/A	Dist.	hm	Freq	Adiv	K0b	Agr	Abar	z	Aatm	Afol	Ahous	Cmet	CmetN	Dc	RL	LtotT	LtotN
	Inverter	MV6-3	370207	4907140	2	0	0	100.3	100.3	1	438.56	3.25	0	63.84	0	-0.59	0	0	8	0	0	0	0	0	0	29.06	29.06
	Sol_Luce Substation	S_Substation	369426	4908792	3.5	0	0	112.1	112.1	1	2259.76	5.25	0	78.08	0	0.08	3.66	0.32	4.8	0	0	0	0	0	0	25.45	25.45
	Inverter	MV6-2	370085	4907339	2	0	0	100.3	100.3	1	665.4	3.25	0	67.46	0	-0.43	0	0	9.57	0	0	0	0	0	0	23.72	23.72
	Inverter	MV6-1	370235	4907364	2	0	0	97.3	97.3	1	653.58	3.25	0	67.31	0	-0.44	0	0	9.5	0	0	0	0	0	0	20.94	20.94
	Inverter	MV6-4	370250	4906966	2	0	0	86.1	86.1	1	259.36	3.25	0	59.28	0	0.34	0	0	3.81	0	0	0	0	0	0	22.63	22.63
	Westbrook Inverter Enclosur	W_INV6	369875	4906578	2	0	0	89.1	89.1	1	463.82	3.25	0	64.33	0	0.5	0	0	5.01	0	0	0	0	0	0	19.22	19.22
	Inverter	MV3-20	368689	4907317	2	0	0	100.3	100.3	1	1736.34	3.25	0	75.79	0	0.05	0	0	12.89	0	0	0	0	0	0	11.59	11.59
	Inverter	MV3-14	368684	4907498	2	0	0	100.3	100.3	1	1811.53	3.25	0	76.16	0	0.07	0	0	13.05	0	0	0	0	0	0	11.02	11.02
	Inverter	MV3-21	368478	4907206	2	0	0	100.3	100.3	1	1904.11	3.25	0	76.59	0	0.1	0	0	13.26	0	0	0	0	0	0	10.36	10.36
	Inverter	MV3-8	368680	4907712	2	0	0	100.3	100.3	1	1917.12	3.25	0	76.65	0	0.11	0	0	13.29	0	0	0	0	0	0	10.27	10.27
	Inverter	MV3-16	368514	4907475	2	0	0	100.3	100.3	1	1957.19	3.25	0	76.83	0	0.12	0	0	13.37	0	0	0	0	0	0	9.99	9.99

Inverter	MV5-4	370324	4908707	2	0	0	100.3	100.3	1	1991.31	3.25	0	76.98	0	0.13	0	0	13.44	0	0	0	0	0	0	9.76	9.76
Inverter	MV5-5	370015	4908690	2	0	0	100.3	100.3	1	1997.4	3.25	0	77.01	0	0.13	0	0	13.46	0	0	0	0	0	0	9.72	9.72
Inverter	MV3-9	368512	4907703	2	0	0	100.3	100.3	1	2058.16	3.25	0	77.27	0	0.15	0	0	13.58	0	0	0	0	0	0	9.31	9.31
Inverter	MV3-19	368357	4907347	2	0	0	100.3	100.3	1	2060.02	3.25	0	77.28	0	0.15	0	0	13.59	0	0	0	0	0	0	9.3	9.3
Inverter	MV3-15	368357	4907477	2	0	0	100.3	100.3	1	2103.5	3.25	0	77.46	0	0.16	0	0	13.68	0	0	0	0	0	0	9.02	9.02
Inverter	MV5-3	370231	4908851	2	0	0	100.3	100.3	1	2137.07	3.25	0	77.6	0	0.17	0	0	13.75	0	0	0	0	0	0	8.8	8.8
Inverter	MV5-2	370006	4908853	2	0	0	100.3	100.3	1	2159.94	3.25	0	77.69	0	0.17	0	0	13.79	0	0	0	0	0	0	8.66	8.66
Inverter	MV3-11	368346	4907662	2	0	0	100.3	100.3	1	2187.21	3.25	0	77.8	0	0.18	0	0	13.85	0	0	0	0	0	0	8.49	8.49
SubstationTransformer	W_ST	369711.17	4906112.3	2.5	0	0	92	92	1	855.72	4.24	0	69.65	0	0.01	1.77	0.19	2.22	0	0	0	0	0	0	18.33	18.33
Westbrook Inverter Enclosur	W_INV7	369780	4906417	2	0	0	89.1	89.1	1	615.28	3.25	0	66.78	0	0.58	0	0	5.49	0	0	0	0	0	0	16.2	16.2
Westbrook Inverter Enclosur	W_INV5	369719	4906574	2	0	0	89.1	89.1	1	615.44	3.25	0	66.78	0	0.58	0	0	5.49	0	0	0	0	0	0	16.2	16.2
Inverter	MV3-17	368178	4907472	2	0	0	100.3	100.3	1	2269.62	3.25	0	78.12	0	0.2	0	0	14.01	0	0	0	0	0	0	7.98	7.98
Inverter	MV3-10	368167	4907669	2	0	0	100.3	100.3	1	2352.69	3.25	0	78.43	0	0.22	0	0	14.18	0	0	0	0	0	0	7.48	7.48
Inverter	MV4-10	369312	4908858	2	0	0	100.3	100.3	1	2366.7	3.25	0	78.48	0	0.23	0	0	14.2	0	0	0	0	0	0	7.4	7.4
Inverter	MV4-11	369264	4908855	2	0	0	100.3	100.3	1	2384.81	3.25	0	78.55	0	0.23	0	0	14.24	0	0	0	0	0	0	7.3	7.3
Inverter	MV3-6	368162	4907834	2	0	0	100.3	100.3	1	2428.68	3.25	0	78.71	0	0.24	0	0	14.32	0	0	0	0	0	0	7.04	7.04
Inverter	MV5-1	370020	4909142	2	0	0	100.3	100.3	1	2444.52	3.25	0	78.76	0	0.24	0	0	14.35	0	0	0	0	0	0	6.95	6.95
Inverter	MV4-9	369289	4909001	2	0	0	100.3	100.3	1	2506.24	3.25	0	78.98	0	0.26	0	0	14.47	0	0	0	0	0	0	6.6	6.6
Inverter	MV3-13	367963	4907577	2	0	0	100.3	100.3	1	2507.47	3.25	0	78.98	0	0.26	0	0	14.47	0	0	0	0	0	0	6.6	6.6
Inverter	MV4-8	369256	4909001	2	0	0	100.3	100.3	1	2519.97	3.25	0	79.03	0	0.26	0	0	14.5	0	0	0	0	0	0	6.53	6.53
Inverter	MV3-7	367945	4907754	2	0	0	100.3	100.3	1	2590.12	3.25	0	79.27	0	0.28	0	0	14.63	0	0	0	0	0	0	6.14	6.14
Inverter	MV4-7	369035	4909001	2	0	0	100.3	100.3	1	2620.77	3.25	0	79.37	0	0.28	0	0	14.69	0	0	0	0	0	0	5.97	5.97
Inverter	MV3-18	367752	4907412	2	0	0	100.3	100.3	1	2658.7	3.25	0	79.49	0	0.29	0	0	14.76	0	0	0	0	0	0	5.77	5.77
Inverter	MV3-3	367939	4907927	2	0	0	100.3	100.3	1	2669.54	3.25	0	79.53	0	0.29	0	0	14.78	0	0	0	0	0	0	5.71	5.71
Inverter	MV4-5	369289	4909199	2	0	0	100.3	100.3	1	2688.01	3.25	0	79.59	0	0.3	0	0	14.81	0	0	0	0	0	0	5.62	5.62
Inverter	MV4-6	369243	4909192	2	0	0	100.3	100.3	1	2699.53	5.05	0	79.63	0	1.04	3.26	0.02	14.83	0	0	0	0	0	0	1.55	1.55
Inverter	MV3-12	367668	4907594	2	0	0	100.3	100.3	1	2791.66	3.25	0	79.92	0	0.32	0	0	15	0	0	0	0	0	0	5.08	5.08
Inverter	MV4-4	369027	4909199	2	0	0	100.3	100.3	1	2798.79	3.25	0	79.94	0	0.32	0	0	15.01	0	0	0	0	0	0	5.04	5.04
Inverter	MV4-2	369272	4909397	2	0	0	100.3	100.3	1	2878.07	3.25	0	80.18	0	0.34	0	0	15.16	0	0	0	0	0	0	4.64	4.64
Inverter	MV4-3	369229	4909397	2	0	0	100.3	100.3	1	2893.97	3.25	0	80.23	0	0.34	0	0	15.18	0	0	0	0	0	0	4.56	4.56
Inverter	MV4-1	369011	4909397	2	0	0	100.3	100.3	1	2982.84	3.25	0	80.49	0	0.36	0	0	15.34	0	0	0	0	0	0	4.12	4.12
Westbrook Inverter Enclosur	W_INV4	369673	4906164	2	0	0	89.1	89.1	1	848.69	3.25	0	69.57	0	0.65	0	0	6.02	0	0	0	0	0	0	12.81	12.81
DSTATCOM - 10 MVAR #1	DSAT1	369437	4908757	2.5	0	0	96.6	96.6	1	2223.26	3.5	0	77.94	0	3.27	0	0	1.85	0	0	0	0	0	0	13.57	13.57
DSTATCOM - 10 MVAR #2	DSAT2	369403	4908757	2.5	0	0	96.6	96.6	1	2236.95	3.5	0	77.99	0	3.27	0	0	1.86	0	0	0	0	0	0	13.51	13.51
Westbrook Inverter Enclosur	W_INV3	369508	4906164	2	0	0	89.1	89.1	1	979.96	3.25	0	70.82	0	0.68	0	0	6.28	0	0	0	0	0	0	11.28	11.28
Westbrook Inverter Enclosur	W_INV2	369374	4906388	2	0	0	89.1	89.1	1	999.17	3.25	0	70.99	0	0.68	0	0	6.31	0	0	0	0	0	0	11.07	11.07
Inverter	MV2-3	365820	4906641	2	0	0	100.3	100.3	1	4498.52	3.25	0	84.06	0	0.59	0	0	17.83	0	0	0	0	0	0	-2.17	-2.17
Inverter	MV2-4	365586	4906624	2	0	0	100.3	100.3	1	4732.79	3.25	0	84.5	0	0.62	0	0	18.18	0	0	0	0	0	0	-2.99	-2.99
Westbrook Inverter Enclosur	W_INV1	369409	4906578	2	0	0	86.1	86.1	1	919.28	3.25	0	70.27	0	0.67	0	0	6.16	0	0	0	0	0	0	8.96	8.96
Inverter	MV1-15	365315	4904994	2	0	0	100.3	100.3	1	5290.87	3.25	0	85.47	0	0.67	0	0	19	0	0	0	0	0	0	-4.83	-4.83
Inverter	MV1-12	365038	4905386	2	0	0	100.3	100.3	1	5444.76	3.25	0	85.72	0	0.68	0	0	19.22	0	0	0	0	0	0	-5.31	-5.31
Inverter	MV1-4	364815	4905918	2	0	0	100.3	100.3	1	5560.42	3.25	0	85.9	0	0.68	0	0	19.39	0	0	0	0	0	0	-5.66	-5.66
Inverter	MV1-2	364753	4906063	2	0	0	100.3	100.3	1	5603.05	3.25	0	85.97	0	0.69	0	0	19.45	0	0	0	0	0	0	-5.79	-5.79
Inverter	MV1-1	364715	4906166	2	0	0	100.3	100.3	1	5629.8	3.25	0	86.01	0	0.69	0	0	19.48	0	0	0	0	0	0	-5.87	-5.87
Inverter	MV1-8	364788	4905647	2	0	0	100.3	100.3	1	5632.22	3.25	0	86.01	0	0.69	0	0	19.49	0	0	0	0	0	0	-5.88	-5.88
Inverter	MV1-5	364671	4905892	2	0	0	100.3	100.3	1	5706.66	3.25	0	86.13	0	0.69	0	0	19.59	0	0	0	0	0	0	-6.1	-6.1
Inverter	MV1-11	364655	4905414	2	0	0	100.3	100.3	1	5810.58	3.25	0	86.28	0	0.7	0	0	19.73	0	0	0	0	0	0	-6.4	-6.4
Inverter	MV1-9	364561	4905646	2	0	0	100.3	100.3	1	5855.44	3.25	0	86.35	0	0.7	0	0	19.8	0	0	0	0	0	0	-6.53	-6.53
Inverter	MV1-6	364477	4905835	2	0	0	100.3	100.3	1	5906.92	3.25	0	86.43	0	0.7	0	0	19.87	0	0	0	0	0	0	-6.68	-6.68
Inverter	MV3-22	368656	4907142	2	0	0	89.1	89.1	1	1715.71	3.25	0	75.69	0	0.84	0	0	7.57	0	0	0	0	0	0	4.95	4.95
Inverter	MV2-1	365842	4906816	2	0	0	97.3	97.3	1	4477.02	3.25	0	84.02	0	0.59	0	0	17.8	0	0	0	0	0	0	-5.09	-5.09
Westbrook Inverter Transfor	W_INVTR6	369881	4906578	2	0	0	77.3	77.3	1	458.09	3.25	0	64.22	0	-1.44	0	0	0.34	0	0	0	0	0	0	14.22	14.22
Inverter	MV5-6	369982	4908507	2	0	0	89.1	89.1	1	1822.52	3.25	0	76.21	0	0.87	0	0	7.75	0	0	0	0	0	0	4.23	4.23
Fixed Reactor Bank 2	FRB2	369464	4908755	6	0	0	89.8	89.8	1	2210.86	5.25	0	77.89	0	-0.97	0	0	4.72	0	0	0	0	0	0	8.14	8.14
Inverter	MV3-2	368671	4907928	2	0	0	89.1	89.1	1	2044.98	3.25	0	77.21	0	0.92	0	0	8.12	0	0	0	0	0	0	2.81	2.81
Fixed Reactor Bank 1	FRB1	369378	4908755	6	0	0	89.8	89.8	1	2245.48	5.25	0	78.03	0	-0.97	0	0	4.78	0	0	0	0	0	0	7.94	7.94
Inverter	MV1-14	365163	4905049	2	0	0	97.3	97.3	1	5417.65	3.25	0	85.68	0	0.67	0	0	19.18	0	0	0	0	0	0	-8.22	-8.22
Inverter	MV1-10	365004	4905564	2	0	0	97.3	97.3	1	5437.27	3.25	0	85.71	0	0.68	0	0	19.21	0	0	0	0	0	0	-8.28	-8.28
Inverter	MV4-15	369176	4908481	2	0	0	89.1	89.1	1	2102.43	3.25	0	77.45	0	0.93	0	0	8.21	0	0	0	0	0	0	2.46	2.46
Inverter	MV1-7	364925	4905782	2	0	0	97.3	97.3	1	5473.13	3.25	0	85.76	0	0.68	0	0	19.26	0	0	0	0	0	0	-8.39	-8.39
Inverter	MV4-14	369176	4908507	2	0	0	89.1	89.1	1	2124.31	3.25	0	77.54	0	0.94	0	0	8.25	0	0	0	0	0	0	2.33	2.33
Inverter	MV3-4	368502	4907925	2	0	0	89.1	89.1	1	2181.72	3.25	0	77.78	0	0.95	0	0	8.34	0	0	0	0	0	0	1.99	1.99
Inverter	MV1-13	364731	4905241	2	0	0	97.3	97.3	1	5778.25	3.25	0	86.24	0	0.7	0	0	19.69	0	0	0	0	0	0	-9.31	-9.31
Inverter	MV4-13	369051	4908605	2	0	0	89.1	89.1	1	2274.75	3.25	0	78.14	0	0.97	0	0	8.49	0	0	0	0	0	0	1.46	1.46
Inverter	MV3-5	368340	4907843	2	0	0	89.1	89.1	1	2276.6	3.25	0	78.15	0	0.97	0	0	8.49	0	0	0	0	0	0	1.45	1.45
Westbrook Inverter Transfor	W_INVTR5	369725	4906574	2	0	0	77.3	77.3	1	609.6	3.25	0	66.7	0	-1.64	0	0	0.44	0	0	0	0	0	0	11.84	11.84
Westbrook Inverter Transfor	W_INVTR7	369786	4906417	2	0	0	77.3	77.3	1	610.04	3.25	0	66.71	0	-1.64	0	0	0.44	0	0	0	0	0	0	11.83	11.83
Inverter	MV4-12	369043	4908803	2	0	0	89.1	89.1	1	2445.85	3.25	0	78.77	0	1.01	0	0	8.76	0	0	0	0	0	0	0.52	0.52
Inverter	MV3-1	368156	4907976	2	0	0	89.1	89.1	1	2502.43	3.25	0	78.97	0	1.03	0	0	8.85	0	0	0	0	0	0	0.21	0.21
Inverter Transformer	MV6-4 T	370244	4906966	2	0	0	69.4	69.4	1	260.99	3.25	0	59.33	0	0.73	0	0	2.22	0	0	0	0	0	0	7.07	7.07
Westbrook Inverter Transfor	W_INVTR1	369403	4906578	2	0	0	78.2	78.2	1	925.21	3.25	0	70.32	0	-1.88	0	0	0.64	0	0	0	0	0	0	9.17	9.17
Westbrook Inverter Transfor	W_INVTR4	369679	4906164	2	0	0	77.3	77.3	1	844.14	3.25	0	69.53	0	-1.83	0	0	0.59	0	0	0	0	0	0	9.06	9.06
Westbrook Inverter Transfor	W_INVTR3	369514	4906164	2	0	0	77.3	77.3	1	975	3.25	0	70.78	0	-1.92	0	0	0.66	0	0	0	0	0	0	7.81	7.81
Westbrook Inverter Transfor	W_INVTR2	369368	4906388	2	0	0	77.3	77.3	1	1004.84	3.25	0	71.04	0	-1.94	0	0	0.68	0	0	0	0	0	0	7.55	7.55

Gardiner Substation	G_Sub	366586.3	4903349.9	2.5	0	0	90.8	90.8	1	5025.28	4.25	0	85.02	0	1.65	2.34	0.34	8.65	0	0	0	0	0	0	-6.89	-6.89
Inverter	MV2-2	365977	4906654	2	0	0	89.1	89.1	1	4341.34	3.25	0	83.75	0	1.48	0	0	11.56	0	0	0	0	0	0	-7.74	-7.74
Inverters	G_Inv2	366676.9	4903239.1	2	0	0	87.7	87.7	1	5034.25	3.25	0	85.04	0	2.87	0	0	5.98	0	0	0	0	0	0	-6.22	-6.22
Inverter	MV1-3	364440	4906039	2	0	0	89.1	89.1	1	5916.73	3.25	0	86.44	0	1.87	0	0	13.66	0	0	0	0	0	0	-12.91	-12.91
Inverters	G_Inv4	366732.8	4903105	2	0	0	87.7	87.7	1	5088.23	3.25	0	85.13	0	2.87	0	0	6.03	0	0	0	0	0	0	-6.37	-6.37
Inverters	G_Inv6	366788.5	4902972	2	0	0	87.7	87.7	1	5145.09	3.25	0	85.23	0	2.87	0	0	6.09	0	0	0	0	0	0	-6.53	-6.53
Inverters	G_Inv1	366526.4	4903225.8	2	0	0	87.7	87.7	1	5153.14	3.25	0	85.24	0	2.87	0	0	6.1	0	0	0	0	0	0	-6.56	-6.56
Inverters	G_Inv3	366583.7	4903091.4	2	0	0	87.7	87.7	1	5203.83	3.25	0	85.33	0	2.88	0	0	6.15	0	0	0	0	0	0	-6.7	-6.7
Inverters	G_Inv8	366844.5	4902838.5	2	0	0	87.7	87.7	1	5205.5	3.25	0	85.33	0	2.88	0	0	6.16	0	0	0	0	0	0	-6.7	-6.7
Inverters	G_Inv5	366638.5	4902958.1	2	0	0	87.7	87.7	1	5259.04	3.25	0	85.42	0	2.88	0	0	6.21	0	0	0	0	0	0	-6.85	-6.85
Inverters	G_Inv10	366900.7	4902704.8	2	0	0	87.7	87.7	1	5269.21	3.25	0	85.43	0	2.88	0	0	6.22	0	0	0	0	0	0	-6.88	-6.88
Inverters	G_Inv7	366694.6	4902824.7	2	0	0	87.7	87.7	1	5316.78	3.25	0	85.51	0	2.88	0	0	6.27	0	0	0	0	0	0	-7.01	-7.01
Inverters	G_Inv9	366750.9	4902691.8	2	0	0	87.7	87.7	1	5377.29	3.25	0	85.61	0	2.89	0	0	6.33	0	0	0	0	0	0	-7.17	-7.17
Inverter Transformer	MV6-1 T	370230	4907364	2	0	0	69.4	69.4	1	654.24	3.25	0	67.31	0	1.29	0	0	3.27	0	0	0	0	0	0	-2.53	-2.53
Inverter Transformer	MV6-3 T	370202	4907140	2	0	0	56.1	56.1	1	439.85	3.25	0	63.87	0	-0.12	0	0	3.35	0	0	0	0	0	0	-11.04	-11.04
Inverter Transformer	MV6-2 T	370091	4907339	2	0	0	56.1	56.1	1	663.32	3.25	0	67.43	0	-0.09	0	0	4.03	0	0	0	0	0	0	-15.32	-15.32
Inverter Transformer	MV2-1 T	365836	4906816	2	0	0	69.4	69.4	1	4483.02	3.25	0	84.03	0	2.9	0	0	7.03	0	0	0	0	0	0	-24.61	-24.61
Inverter Transformer	MV1-14 T	365157	4905049	2	0	0	69.4	69.4	1	5423.36	3.25	0	85.69	0	3.09	0	0	7.66	0	0	0	0	0	0	-27.09	-27.09
Inverter Transformer	MV1-10 T	365010	4905564	2	0	0	69.4	69.4	1	5431.41	3.25	0	85.7	0	3.09	0	0	7.66	0	0	0	0	0	0	-27.11	-27.11
Inverter Transformer	MV1-7 T	364919	4905782	2	0	0	69.4	69.4	1	5479.04	3.25	0	85.77	0	3.1	0	0	7.69	0	0	0	0	0	0	-27.22	-27.22
Inverter Transformer	MV1-13 T	364725	4905241	2	0	0	69.4	69.4	1	5784.05	3.25	0	86.24	0	3.15	0	0	7.89	0	0	0	0	0	0	-27.93	-27.93
Inverter Transformer	MV3-22 T	368661	4907142	2	0	0	56.1	56.1	1	1710.86	3.25	0	75.66	0	0.28	0	0	6.46	0	0	0	0	0	0	-26.35	-26.35
Inverter Transformer	MV3-20 T	368683	4907317	2	0	0	56.1	56.1	1	1741.97	3.25	0	75.82	0	0.3	0	0	6.53	0	0	0	0	0	0	-26.58	-26.58
Inverter Transformer	MV3-14 T	368678	4907498	2	0	0	56.1	56.1	1	1816.94	3.25	0	76.19	0	0.33	0	0	6.68	0	0	0	0	0	0	-27.13	-27.13
Inverter Transformer	MV5-6 T	369987	4908507	2	0	0	56.1	56.1	1	1821.61	3.25	0	76.21	0	0.33	0	0	6.69	0	0	0	0	0	0	-27.17	-27.17
Inverter Transformer	MV3-21 T	368484	4907206	2	0	0	56.1	56.1	1	1898.31	3.25	0	76.57	0	0.36	0	0	6.84	0	0	0	0	0	0	-27.71	-27.71
Inverter Transformer	MV3-8 T	368685	4907712	2	0	0	56.1	56.1	1	1912.85	3.25	0	76.63	0	0.37	0	0	6.87	0	0	0	0	0	0	-27.81	-27.81
Inverter Transformer	MV3-16 T	368509	4907475	2	0	0	56.1	56.1	1	1961.8	3.25	0	76.85	0	0.39	0	0	6.97	0	0	0	0	0	0	-28.15	-28.15
Inverter Transformer	MV5-4 T	370330	4908707	2	0	0	56.1	56.1	1	1991.34	3.25	0	76.98	0	0.4	0	0	7.03	0	0	0	0	0	0	-28.35	-28.35
Inverter Transformer	MV5-5 T	370021	4908690	2	0	0	56.1	56.1	1	1996.5	3.25	0	77.01	0	0.4	0	0	7.04	0	0	0	0	0	0	-28.39	-28.39
Inverter Transformer	MV3-2 T	368677	4907928	2	0	0	56.1	56.1	1	2040.15	3.25	0	77.19	0	0.42	0	0	7.12	0	0	0	0	0	0	-28.68	-28.68
Inverter Transformer	MV3-9 T	368517	4907703	2	0	0	56.1	56.1	1	2053.78	3.25	0	77.25	0	0.43	0	0	7.15	0	0	0	0	0	0	-28.77	-28.77
Inverter Transformer	MV3-19 T	368352	4907347	2	0	0	56.1	56.1	1	2064.78	3.25	0	77.3	0	0.43	0	0	7.17	0	0	0	0	0	0	-28.84	-28.84
Inverter Transformer	MV4-15 T	369170	4908481	2	0	0	56.1	56.1	1	2105.7	3.25	0	77.47	0	0.45	0	0	7.25	0	0	0	0	0	0	-29.11	-29.11
Inverter Transformer	MV3-15 T	368351	4907477	2	0	0	56.1	56.1	1	2109.09	3.25	0	77.48	0	0.45	0	0	7.26	0	0	0	0	0	0	-29.13	-29.13
Inverter Transformer	MV4-14 T	369182	4908507	2	0	0	56.1	56.1	1	2121.09	3.25	0	77.53	0	0.46	0	0	7.28	0	0	0	0	0	0	-29.21	-29.21
Inverter Transformer	MV5-3 T	370237	4908851	2	0	0	56.1	56.1	1	2136.83	3.25	0	77.6	0	0.46	0	0	7.31	0	0	0	0	0	0	-29.31	-29.31
Inverter Transformer	MV5-2 T	370011	4908853	2	0	0	56.1	56.1	1	2159.22	3.25	0	77.69	0	0.47	0	0	7.35	0	0	0	0	0	0	-29.45	-29.45
Inverter Transformer	MV3-4 T	368507	4907925	2	0	0	56.1	56.1	1	2177.56	3.25	0	77.76	0	0.48	0	0	7.39	0	0	0	0	0	0	-29.57	-29.57
Inverter Transformer	MV3-11 T	368340	4907662	2	0	0	56.1	56.1	1	2192.62	3.25	0	77.82	0	0.49	0	0	7.42	0	0	0	0	0	0	-29.66	-29.66
Inverter Transformer	MV3-17 T	368183	4907472	2	0	0	56.1	56.1	1	2264.9	3.25	0	78.1	0	0.52	0	0	7.55	0	0	0	0	0	0	-30.11	-30.11
Inverter Transformer	MV4-13 T	369057	4908605	2	0	0	56.1	56.1	1	2271.42	3.25	0	78.13	0	0.52	0	0	7.57	0	0	0	0	0	0	-30.15	-30.15
Inverter Transformer	MV3-5 T	368335	4907843	2	0	0	56.1	56.1	1	2280.94	3.25	0	78.16	0	0.52	0	0	7.58	0	0	0	0	0	0	-30.21	-30.21
Inverter Transformer	MV3-10 T	368162	4907669	2	0	0	56.1	56.1	1	2357.26	3.25	0	78.45	0	0.56	0	0	7.73	0	0	0	0	0	0	-30.67	-30.67
Inverter Transformer	MV4-10 T	369307	4908858	2	0	0	56.1	56.1	1	2368.83	3.25	0	78.49	0	0.56	0	0	7.75	0	0	0	0	0	0	-30.74	-30.74
Inverter Transformer	MV4-11 T	369269	4908855	2	0	0	56.1	56.1	1	2382.6	3.25	0	78.54	0	0.57	0	0	7.77	0	0	0	0	0	0	-30.82	-30.82
Inverter Transformer	MV3-6 T	368156	4907834	2	0	0	56.1	56.1	1	2434.01	3.25	0	78.73	0	0.59	0	0	7.87	0	0	0	0	0	0	-31.13	-31.13
Inverter Transformer	MV4-12 T	369049	4908803	2	0	0	56.1	56.1	1	2442.73	3.25	0	78.76	0	0.59	0	0	7.88	0	0	0	0	0	0	-31.18	-31.18
Inverter Transformer	MV5-1 T	370015	4909142	2	0	0	56.1	56.1	1	2445.14	3.25	0	78.77	0	0.59	0	0	7.89	0	0	0	0	0	0	-31.19	-31.19
Inverter Transformer	MV3-1 T	368150	4907976	2	0	0	56.1	56.1	1	2507.62	3.25	0	78.99	0	0.62	0	0	8	0	0	0	0	0	0	-31.55	-31.55
Inverter Transformer	MV4-9 T	369284	4909001	2	0	0	56.1	56.1	1	2508.3	3.25	0	78.99	0	0.62	0	0	8	0	0	0	0	0	0	-31.55	-31.55
Inverter Transformer	MV3-13 T	367958	4907577	2	0	0	56.1	56.1	1	2512.16	3.25	0	79	0	0.62	0	0	8.01	0	0	0	0	0	0	-31.58	-31.58
Inverter Transformer	MV4-8 T	369262	4909001	2	0	0	56.1	56.1	1	2517.44	3.25	0	79.02	0	0.62	0	0	8.02	0	0	0	0	0	0	-31.61	-31.61
Inverter Transformer	MV3-7 T	367951	4907754	2	0	0	56.1	56.1	1	2584.63	3.25	0	79.25	0	0.65	0	0	8.14	0	0	0	0	0	0	-31.98	-31.98
Inverter Transformer	MV4-7 T	369040	4909001	2	0	0	56.1	56.1	1	2618.33	3.25	0	79.36	0	0.67	0	0	8.2	0	0	0	0	0	0	-32.17	-32.17
Inverter Transformer	MV3-18 T	367757	4907412	2	0	0	56.1	56.1	1	2653.87	3.25	0	79.48	0	0.68	0	0	8.27	0	0	0	0	0	0	-32.37	-32.37
Inverter Transformer	MV3-3 T	367944	4907927	2	0	0	56.1	56.1	1	2665.08	3.25	0	79.51	0	0.69	0	0	8.29	0	0	0	0	0	0	-32.43	-32.43
Inverter Transformer	MV4-5 T	369283	4909199	2	0	0	56.1	56.1	1	2690.32	3.25	0	79.6	0	0.7	0	0	8.33	0	0	0	0	0	0	-32.57	-32.57
Inverter Transformer	MV4-6 T	369249	4909192	2	0	0	56.1	56.1	1	2697.15	5.04	0	79.62	0	1.62	2.73	0.02	8.34	0	0	0	0	0	0	-36.26	-36.26
Inverter Transformer	MV3-12 T	367674	4907594	2	0	0	56.1	56.1	1	2785.97	3.25	0	79.9	0	0.74	0	0	8.5	0	0	0	0	0	0	-33.08	-33.08
Inverter Transformer	MV4-4 T	369033	4909199	2	0	0	56.1	56.1	1	2796.02	3.25	0	79.93	0	0.74	0	0	8.52	0	0	0	0	0	0	-33.13	-33.13
Inverter Transformer	MV4-2 T	369267	4909397	2	0	0	56.1	56.1	1	2879.89	3.25	0	80.19	0	0.78	0	0	8.66	0	0	0	0	0	0	-33.57	-33.57
Inverter Transformer	MV4-3 T	369234	4909397	2	0	0	56.1	56.1	1	2892.1	3.25	0	80.22	0	0.78	0	0	8.68	0	0	0	0	0	0	-33.63	-33.63
Inverter Transformer	MV4-1 T	369017	4909397	2	0	0	56.1	56.1	1	2980.22	3.25	0	80.48	0	0.82	0	0	8.83	0	0	0	0	0	0	-34.08	-34.08
Inverter Transformer	MV2-2 T	365982	4906654	2	0	0	56.1	56.1	1	4336.34	3.25	0	83.74	0	1.38	0	0	10.94	0	0	0	0	0	0	-40.01	-40.01
Inverter Transformer	MV2-3 T	365814	4906641	2	0	0	56.1	56.1	1	4504.52	3.25	0	84.07	0	1.44	0	0	11.18	0	0	0	0	0	0	-40.64	-40.64
Inverter Transformer	MV2-4 T	365590	4906628	2	0	0	56.1	56.1	1	4728.71	3.25	0	84.49	0	1.53	0	0	11.49	0	0	0	0	0	0	-41.45	-41.45
Inverter Transformer	MV1-15 T	365309	4904994	2	0	0	56.1	56.1	1	5296.54	3.25	0	85.48	0	1.73	0	0	12.24	0	0	0	0	0	0	-43.39	-43.39
Inverter Transformer	MV1-12 T	365044	4905386	2	0	0	56.1	56.1	1	5438.95	3.25	0	85.71	0	1.78	0	0	12.42	0	0	0	0	0	0	-43.85	-43.85
Inverter Transformer	MV1-4 T	364821	4905918	2	0	0	56.1	56.1	1	5554.48	3.25	0	85.89	0	1.82	0	0	12.56	0	0	0	0	0	0	-44.22	-44.22
Inverter Transformer	MV1-2 T	364759	4906063	2	0	0	56.1	56.1	1	5597.09	3.25	0	85.96	0	1.83	0	0	12.62	0	0	0	0	0	0	-44.35	-44.35
Inverter Transformer	MV1-1 T	364721	4906166	2	0	0	56.1	56.1	1	5623.83	3.25	0	86	0	1.84	0	0	12.65	0	0	0	0	0	0	-44.43	-44.43
Inverter Transformer	MV1-8 T	364782	4905647	2	0	0	56.1	56.1	1	5638.11	3.25	0	86.02	0	1.85	0	0	12.67	0	0	0	0	0	0	-44.48	-44.48
Inverter Transformer	MV1-5 T	364676	4905892	2	0	0	56.1	56.1	1	5701.71	3.25	0	86.12	0	1.87	0	0	12.74	0	0	0	0	0	0	-44.67	-44.67

	Inverter Transformer	MV1-11 T	364649	4905414	2	0	0	56.1	56.1	1	5816.43	3.25	0	86.29	0	1.91	0	0	12.88	0	0	0	0	0	0	-45.02	-45.02
	Inverter Transformer	MV1-9 T	364555	4905646	2	0	0	56.1	56.1	1	5861.34	3.25	0	86.36	0	1.92	0	0	12.94	0	0	0	0	0	0	-45.16	-45.16
	Inverter Transformer	MV1-6 T	364482	4905835	2	0	0	56.1	56.1	1	5901.98	3.25	0	86.42	0	1.93	0	0	12.99	0	0	0	0	0	0	-45.28	-45.28
	Inverter Transformer	MV1-3 T	364435	4906039	2	0	0	56.1	56.1	1	5921.69	3.25	0	86.45	0	1.94	0	0	13.01	0	0	0	0	0	0	-45.34	-45.34
	Line Reactor	NGR	369421	4908787.5	5	0	0	45.4	45.4	1	2257.61	5.25	0	78.07	0	3.36	1.29	0.11	0.92	0	0	0	0	0	0	-38.3	-38.3
Limit. Valu	0	0																								
Level D/N:	33.7433	33.7433																								

Receiver: Vacant Lot Receptor
ID: W-V7
X: 370468
Y: 4906873.6
Z: 4.5
Ground: 0

ISO	Description	ID	X	Y	Z	Ground	ReflOrd	LxT	LxN	L/A	Dist.	hm	Freq	Adiv	K0b	Agr	Abar	z	Aatm	Afol	Ahous	Cmet	CmetN	Dc	RL	LtotT	LtotN
	Inverter	MV6-3	370207	4907140	2	0	0	100.3	100.3	1	372.96	3.25	0	62.43	0	-0.63	0	0	7.33	0	0	0	0	0	0	31.19	31.19
	Sol_Luce Substation	S_Substation	369426	4908792	3.5	0	0	112.1	112.1	1	2183.12	5.25	0	77.78	0	0.06	3.67	0.31	4.67	0	0	0	0	0	0	25.89	25.89
	Inverter	MV6-2	370085	4907339	2	0	0	100.3	100.3	1	602.74	3.25	0	66.6	0	-0.48	0	0	9.22	0	0	0	0	0	0	24.97	24.97
	Inverter	MV6-1	370235	4907364	2	0	0	97.3	97.3	1	542.94	3.25	0	65.7	0	-0.52	0	0	8.84	0	0	0	0	0	0	23.3	23.3
	Inverter	MV6-4	370250	4906966	2	0	0	86.1	86.1	1	236.79	3.25	0	58.49	0	0.33	0	0	3.6	0	0	0	0	0	0	23.63	23.63
	Inverter	MV3-20	368689	4907317	2	0	0	100.3	100.3	1	1833.43	3.25	0	76.27	0	0.08	0	0	13.1	0	0	0	0	0	0	10.86	10.86
	Inverter	MV5-4	370324	4908707	2	0	0	100.3	100.3	1	1839.05	3.25	0	76.29	0	0.08	0	0	13.12	0	0	0	0	0	0	10.82	10.82
	Inverter	MV5-5	370015	4908690	2	0	0	100.3	100.3	1	1872.04	3.25	0	76.45	0	0.09	0	0	13.19	0	0	0	0	0	0	10.59	10.59
	Inverter	MV3-14	368684	4907498	2	0	0	100.3	100.3	1	1890.12	3.25	0	76.53	0	0.1	0	0	13.23	0	0	0	0	0	0	10.46	10.46
	Inverter	MV3-8	368680	4907712	2	0	0	100.3	100.3	1	1974.81	3.25	0	76.91	0	0.12	0	0	13.41	0	0	0	0	0	0	9.87	9.87
	Inverter	MV5-3	370231	4908851	2	0	0	100.3	100.3	1	1991.55	3.25	0	76.98	0	0.13	0	0	13.44	0	0	0	0	0	0	9.76	9.76
	Inverter	MV3-21	368478	4907206	2	0	0	100.3	100.3	1	2017.57	3.25	0	77.1	0	0.13	0	0	13.5	0	0	0	0	0	0	9.58	9.58
	Inverter	MV5-2	370006	4908853	2	0	0	100.3	100.3	1	2032.6	3.25	0	77.16	0	0.14	0	0	13.53	0	0	0	0	0	0	9.48	9.48
	Inverter	MV3-16	368514	4907475	2	0	0	100.3	100.3	1	2044.46	3.25	0	77.21	0	0.14	0	0	13.55	0	0	0	0	0	0	9.4	9.4
	Inverter	MV3-9	368512	4907703	2	0	0	100.3	100.3	1	2124.58	3.25	0	77.55	0	0.16	0	0	13.72	0	0	0	0	0	0	8.88	8.88
	Inverter	MV3-19	368357	4907347	2	0	0	100.3	100.3	1	2163.43	3.25	0	77.7	0	0.17	0	0	13.8	0	0	0	0	0	0	8.64	8.64
	Inverter	MV3-15	368357	4907477	2	0	0	100.3	100.3	1	2195.55	3.25	0	77.83	0	0.18	0	0	13.86	0	0	0	0	0	0	8.43	8.43
	Inverter	MV3-11	368346	4907662	2	0	0	100.3	100.3	1	2263.73	3.25	0	78.1	0	0.2	0	0	14	0	0	0	0	0	0	8.02	8.02
	Inverter	MV4-10	369312	4908858	2	0	0	100.3	100.3	1	2296.56	3.25	0	78.22	0	0.21	0	0	14.07	0	0	0	0	0	0	7.82	7.82
	Inverter	MV5-1	370020	4909142	2	0	0	100.3	100.3	1	2312.22	3.25	0	78.28	0	0.21	0	0	14.1	0	0	0	0	0	0	7.72	7.72
	Inverter	MV4-11	369264	4908855	2	0	0	100.3	100.3	1	2318.53	3.25	0	78.3	0	0.21	0	0	14.11	0	0	0	0	0	0	7.69	7.69
	Inverter	MV3-17	368178	4907472	2	0	0	100.3	100.3	1	2366.89	3.25	0	78.48	0	0.23	0	0	14.2	0	0	0	0	0	0	7.4	7.4
	Westbrook Inverter Enclosur	W_INV6	369875	4906578	2	0	0	89.1	89.1	1	662.6	3.25	0	67.42	0	0.6	0	0	5.61	0	0	0	0	0	0	15.42	15.42
	Inverter	MV4-9	369289	4909001	2	0	0	100.3	100.3	1	2432.26	3.25	0	78.72	0	0.24	0	0	14.33	0	0	0	0	0	0	7.02	7.02
	Inverter	MV3-10	368167	4907669	2	0	0	100.3	100.3	1	2434.6	3.25	0	78.73	0	0.24	0	0	14.33	0	0	0	0	0	0	7.01	7.01
	Inverter	MV4-8	369256	4909001	2	0	0	100.3	100.3	1	2448.42	3.25	0	78.78	0	0.25	0	0	14.36	0	0	0	0	0	0	6.93	6.93
	Inverter	MV3-6	368162	4907834	2	0	0	100.3	100.3	1	2498	3.25	0	78.95	0	0.26	0	0	14.45	0	0	0	0	0	0	6.65	6.65
	Inverter	MV4-7	369035	4909001	2	0	0	100.3	100.3	1	2565.02	3.25	0	79.18	0	0.27	0	0	14.58	0	0	0	0	0	0	6.28	6.28
	Inverter	MV3-13	367963	4907577	2	0	0	100.3	100.3	1	2601.88	3.25	0	79.31	0	0.28	0	0	14.65	0	0	0	0	0	0	6.08	6.08
	Inverter	MV4-5	369289	4909199	2	0	0	100.3	100.3	1	2607.21	3.25	0	79.32	0	0.28	0	0	14.66	0	0	0	0	0	0	6.05	6.05
	Inverter	MV4-6	369243	4909192	2	0	0	100.3	100.3	1	2622.14	3.25	0	79.37	0	0.28	0	0	14.69	0	0	0	0	0	0	5.97	5.97
	Inverter	MV3-7	367945	4907754	2	0	0	100.3	100.3	1	2672.2	3.25	0	79.54	0	0.3	0	0	14.78	0	0	0	0	0	0	5.7	5.7
	Inverter	MV4-4	369027	4909199	2	0	0	100.3	100.3	1	2735.68	3.25	0	79.74	0	0.31	0	0	14.9	0	0	0	0	0	0	5.36	5.36
	Inverter	MV3-3	367939	4907927	2	0	0	100.3	100.3	1	2739.62	3.25	0	79.75	0	0.31	0	0	14.9	0	0	0	0	0	0	5.34	5.34
	Inverter	MV3-18	367752	4907412	2	0	0	100.3	100.3	1	2768.85	3.25	0	79.85	0	0.32	0	0	14.96	0	0	0	0	0	0	5.19	5.19
	Inverter	MV4-2	369272	4909397	2	0	0	100.3	100.3	1	2792.48	3.25	0	79.92	0	0.32	0	0	15	0	0	0	0	0	0	5.07	5.07
	SubstationTransformer	W_ST	369711.17	4906112.3	2.5	0	0	92	92	1	1073.51	4.24	0	71.62	0	0.56	4.18	0.19	2.67	0	0	0	0	0	0	12.95	12.95
	Inverter	MV4-3	369229	4909397	2	0	0	100.3	100.3	1	2811.17	3.25	0	79.98	0	0.32	0	0	15.03	0	0	0	0	0	0	4.98	4.98
	Inverter	MV3-12	367668	4907594	2	0	0	100.3	100.3	1	2891.19	3.25	0	80.22	0	0.34	0	0	15.18	0	0	0	0	0	0	4.57	4.57
	Inverter	MV4-1	369011	4909397	2	0	0	100.3	100.3	1	2913.83	3.25	0	80.29	0	0.35	0	0	15.22	0	0	0	0	0	0	4.46	4.46
	Westbrook Inverter Enclosur	W_INV5	369719	4906574	2	0	0	89.1	89.1	1	806.7	3.25	0	69.13	0	0.64	0	0	5.93	0	0	0	0	0	0	13.35	13.35
	Westbrook Inverter Enclosur	W_INV7	369780	4906417	2	0	0	89.1	89.1	1	825.73	3.25	0	69.34	0	0.65	0	0	5.97	0	0	0	0	0	0	13.1	13.1
	DSTATCOM - 10 MVAR #1	DSAT1	369437	4908757	2.5	0	0	96.6	96.6	1	2147.13	3.5	0	77.64	0	3.25	0	0	1.81	0	0	0	0	0	0	13.93	13.93
	DSTATCOM - 10 MVAR #2	DSAT2	369403	4908757	2.5	0	0	96.6	96.6	1	2163.66	3.5	0	77.7	0	3.26	0	0	1.82	0	0	0	0	0	0	13.85	13.85
	Westbrook Inverter Enclosur	W_INV4	369673	4906164	2	0	0	89.1	89.1	1	1065.63	3.25	0	71.55	0	0.7	0	0	6.44	0	0	0	0	0	0	10.37	10.37
	Westbrook Inverter Enclosur	W_INV3	369508	4906164	2	0	0	89.1	89.1	1	1193.79	3.25	0	72.54	0	0.73	0	0	6.67	0	0	0	0	0	0	9.12	9.12
	Westbrook Inverter Enclosur	W_INV2	369374	4906388	2	0	0	89.1	89.1	1	1196.93	3.25	0	72.56	0	0.73	0	0	6.68	0	0	0	0	0	0	9.09	9.09
	Inverter	MV2-3	365820	4906641	2	0	0	100.3	100.3	1	4653.82	3.25	0	84.36	0	0.61	0	0	18.06	0	0	0	0	0	0	-2.72	-2.72
	Inverter	MV2-4	365586	4906624	2	0	0	100.3	100.3	1	4888.38	3.25	0	84.78	0	0.63	0	0	18.42	0	0	0	0	0	0	-3.52	-3.52
	Inverter	MV1-15	365315	4904994	2	0	0	100.3	100.3	1	5485.1	3.25	0	85.78	0	0.68	0	0	19.28	0	0	0	0	0	0	-5.43	-5.43
	Inverter	MV1-12	365038	4905386	2	0	0	100.3	100.3	1	5630.09	3.25	0	86.01	0	0.69	0	0	19.48	0	0	0	0	0	0	-5.87	-5.87
	Westbrook Inverter Enclosur	W_INV1	369409	4906578	2	0	0	86.1	86.1	1	1099.48	3.25	0	71.82	0	0.71	0	0	6.5	0	0	0	0	0	0	7.03	7.03
	Inverter	MV1-4	364815	4905918	2	0	0	100.3	100.3	1	5733.2	3.25	0	86.17	0	0.69	0	0	19.63	0	0	0	0	0	0	-6.18	-6.18
	Inverter	MV1-2	364753	4906063	2	0	0	100.3	100.3	1	5772.2	3.25	0	86.23	0	0.7	0	0	19.68	0	0	0	0	0	0	-6.29	-6.29
	Inverter	MV1-1	364715	4906166	2	0	0	100.3	100.3	1	5796.35	3.25	0	86.26	0	0.7	0	0	19.71	0	0	0	0	0	0	-6.36	-6.36
	Inverter	MV1-8	364788	4905647	2	0	0	100.3	100.3	1	5810.93	3.25	0	86.28	0	0.7	0	0	19.73	0	0	0	0	0	0	-6.4	-6.4
	Inverter	MV1-5	364671	4905892	2	0	0	100.3	100.3	1	5879.52	3.25	0	86.39	0	0.7	0	0	19.83	0	0	0	0	0	0	-6.6	-6.6
	Inverter	MV1-11	364655	4905414	2	0	0	100.3	100.3	1	5993.45	3.25	0	86.55	0	0.7	0	0	19.98	0	0	0	0	0	0	-6.93	-6.93

Inverter	MV1-9	364561	4905646	2	0	0	100.3	100.3	1	6033.21	3.25	0	86.61	0	0.71	0	0	20.04	0	0	0	0	0	0	-7.04	-7.04
Inverter	MV1-6	364477	4905835	2	0	0	100.3	100.3	1	6080.36	3.25	0	86.68	0	0.71	0	0	20.1	0	0	0	0	0	0	-7.18	-7.18
Inverter	MV5-6	369982	4908507	2	0	0	89.1	89.1	1	1704.17	3.25	0	75.63	0	0.84	0	0	7.56	0	0	0	0	0	0	5.03	5.03
Inverter	MV2-1	365842	4906816	2	0	0	97.3	97.3	1	4626.36	3.25	0	84.3	0	0.6	0	0	18.02	0	0	0	0	0	0	-5.62	-5.62
Inverter	MV3-22	368656	4907142	2	0	0	89.1	89.1	1	1831.77	3.25	0	76.26	0	0.87	0	0	7.77	0	0	0	0	0	0	4.16	4.16
Fixed Reactor Bank 2	FRB2	369464	4908755	6	0	0	89.8	89.8	1	2132.53	5.25	0	77.58	0	-0.98	0	0	4.59	0	0	0	0	0	0	8.59	8.59
Fixed Reactor Bank 1	FRB1	369378	4908755	6	0	0	89.8	89.8	1	2174.34	5.25	0	77.75	0	-0.98	0	0	4.66	0	0	0	0	0	0	8.35	8.35
Inverter	MV4-15	369176	4908481	2	0	0	89.1	89.1	1	2062.28	3.25	0	77.29	0	0.92	0	0	8.15	0	0	0	0	0	0	2.7	2.7
Inverter	MV4-14	369176	4908507	2	0	0	89.1	89.1	1	2082.61	3.25	0	77.37	0	0.93	0	0	8.18	0	0	0	0	0	0	2.58	2.58
Inverter	MV3-2	368671	4907928	2	0	0	89.1	89.1	1	2083.5	3.25	0	77.38	0	0.93	0	0	8.18	0	0	0	0	0	0	2.57	2.57
Inverter	MV1-14	365163	4905049	2	0	0	97.3	97.3	1	5610.01	3.25	0	85.98	0	0.69	0	0	19.46	0	0	0	0	0	0	-8.81	-8.81
Inverter	MV1-10	365004	4905564	2	0	0	97.3	97.3	1	5618.75	3.25	0	85.99	0	0.69	0	0	19.47	0	0	0	0	0	0	-8.84	-8.84
Inverter	MV1-7	364925	4905782	2	0	0	97.3	97.3	1	5649.46	3.25	0	86.04	0	0.69	0	0	19.51	0	0	0	0	0	0	-8.93	-8.93
Inverter	MV3-4	368502	4907925	2	0	0	89.1	89.1	1	2229.49	3.25	0	77.96	0	0.96	0	0	8.42	0	0	0	0	0	0	1.72	1.72
Inverter	MV4-13	369051	4908605	2	0	0	89.1	89.1	1	2237.33	3.25	0	77.99	0	0.96	0	0	8.43	0	0	0	0	0	0	1.67	1.67
Inverter	MV1-13	364731	4905241	2	0	0	97.3	97.3	1	5964.78	3.25	0	86.51	0	0.7	0	0	19.95	0	0	0	0	0	0	-9.85	-9.85
Inverter	MV3-5	368340	4907843	2	0	0	89.1	89.1	1	2338.4	3.25	0	78.38	0	0.99	0	0	8.59	0	0	0	0	0	0	1.1	1.1
Inverter Transformer	MV6-4 T	370244	4906966	2	0	0	69.4	69.4	1	242.32	3.25	0	58.69	0	0.73	0	0	2.13	0	0	0	0	0	0	7.8	7.8
Inverter	MV4-12	369043	4908803	2	0	0	89.1	89.1	1	2398.59	3.25	0	78.6	0	1	0	0	8.69	0	0	0	0	0	0	0.77	0.77
Westbrook Inverter Transfor	W_INVTR6	369881	4906578	2	0	0	77.3	77.3	1	657.23	3.25	0	67.35	0	-1.68	0	0	0.47	0	0	0	0	0	0	11.2	11.2
Inverter	MV3-1	368156	4907976	2	0	0	89.1	89.1	1	2561.37	3.25	0	79.17	0	1.04	0	0	8.94	0	0	0	0	0	0	-0.09	-0.09
Westbrook Inverter Transfor	W_INVTR5	369725	4906574	2	0	0	77.3	77.3	1	801.13	3.25	0	69.07	0	-1.8	0	0	0.56	0	0	0	0	0	0	9.51	9.51
Westbrook Inverter Transfor	W_INVTR7	369786	4906417	2	0	0	77.3	77.3	1	820.74	3.25	0	69.28	0	-1.81	0	0	0.57	0	0	0	0	0	0	9.3	9.3
Westbrook Inverter Transfor	W_INVTR1	369403	4906578	2	0	0	78.2	78.2	1	1105.26	3.25	0	71.87	0	-2	0	0	0.74	0	0	0	0	0	0	7.63	7.63
Westbrook Inverter Transfor	W_INVTR4	369679	4906164	2	0	0	77.3	77.3	1	1061.16	3.25	0	71.52	0	-1.97	0	0	0.71	0	0	0	0	0	0	7.08	7.08
Gardiner Substation	G_Sub	366586.3	4903349.9	2.5	0	0	90.8	90.8	1	5242.52	4.25	0	85.39	0	1.7	2.29	0.34	8.9	0	0	0	0	0	0	-7.51	-7.51
Inverter	MV2-2	365977	4906654	2	0	0	89.1	89.1	1	4496.37	3.25	0	84.06	0	1.52	0	0	11.78	0	0	0	0	0	0	-8.29	-8.29
Westbrook Inverter Transfor	W_INVTR3	369514	4906164	2	0	0	77.3	77.3	1	1188.97	3.25	0	72.5	0	-2.04	0	0	0.79	0	0	0	0	0	0	6.1	6.1
Westbrook Inverter Transfor	W_INVTR2	369368	4906388	2	0	0	77.3	77.3	1	1202.42	3.25	0	72.6	0	-2.05	0	0	0.79	0	0	0	0	0	0	6	6
Inverter Transformer	MV6-1 T	370230	4907364	2	0	0	69.4	69.4	1	545.11	3.25	0	65.73	0	1.12	0	0	3.06	0	0	0	0	0	0	-0.56	-0.56
Inverter	MV1-3	364440	4906039	2	0	0	89.1	89.1	1	6085.5	3.25	0	86.69	0	1.91	0	0	13.87	0	0	0	0	0	0	-13.4	-13.4
Inverters	G_Inv2	366676.9	4903239.1	2	0	0	87.7	87.7	1	5251.86	3.25	0	85.41	0	2.88	0	0	6.2	0	0	0	0	0	0	-6.83	-6.83
Inverters	G_Inv4	366732.8	4903105	2	0	0	87.7	87.7	1	5306.04	3.25	0	85.5	0	3.23	1.45	0	6.26	0	0	0	0	0	0	-8.77	-8.77
Inverters	G_Inv6	366788.5	4902972	2	0	0	87.7	87.7	1	5362.95	3.25	0	85.59	0	2.89	0	0	6.32	0	0	0	0	0	0	-7.13	-7.13
Inverters	G_Inv1	366526.4	4903225.8	2	0	0	87.7	87.7	1	5370.54	3.25	0	85.6	0	2.89	0	0	6.33	0	0	0	0	0	0	-7.15	-7.15
Inverters	G_Inv3	366583.7	4903091.4	2	0	0	87.7	87.7	1	5421.52	3.25	0	85.68	0	2.89	0	0	6.38	0	0	0	0	0	0	-7.29	-7.29
Inverters	G_Inv8	366844.5	4902838.5	2	0	0	87.7	87.7	1	5423.26	3.25	0	85.69	0	2.89	0	0	6.38	0	0	0	0	0	0	-7.3	-7.3
Inverters	G_Inv5	366638.5	4902958.1	2	0	0	87.7	87.7	1	5476.88	3.25	0	85.77	0	2.89	0	0	6.44	0	0	0	0	0	0	-7.44	-7.44
Inverters	G_Inv10	366900.7	4902704.8	2	0	0	87.7	87.7	1	5486.76	3.25	0	85.79	0	2.89	0	0	6.45	0	0	0	0	0	0	-7.47	-7.47
Inverters	G_Inv7	366694.6	4902824.7	2	0	0	87.7	87.7	1	5534.63	3.25	0	85.86	0	2.9	0	0	6.5	0	0	0	0	0	0	-7.6	-7.6
Inverters	G_Inv9	366750.9	4902691.8	2	0	0	87.7	87.7	1	5595.02	3.25	0	85.96	0	2.9	0	0	6.56	0	0	0	0	0	0	-7.76	-7.76
Inverter Transformer	MV6-3 T	370202	4907140	2	0	0	56.1	56.1	1	376.47	3.25	0	62.51	0	-0.11	0	0	3.11	0	0	0	0	0	0	-9.46	-9.46
Inverter Transformer	MV6-2 T	370091	4907339	2	0	0	56.1	56.1	1	598.94	3.25	0	66.55	0	-0.1	0	0	3.85	0	0	0	0	0	0	-14.24	-14.24
Inverter Transformer	MV2-1 T	365836	4906816	2	0	0	69.4	69.4	1	4632.36	3.25	0	84.32	0	2.94	0	0	7.13	0	0	0	0	0	0	-25.03	-25.03
Inverter Transformer	MV1-10 T	365010	4905564	2	0	0	69.4	69.4	1	5612.92	3.25	0	85.98	0	3.13	0	0	7.78	0	0	0	0	0	0	-27.54	-27.54
Inverter Transformer	MV1-14 T	365157	4905049	2	0	0	69.4	69.4	1	5615.68	3.25	0	85.99	0	3.13	0	0	7.78	0	0	0	0	0	0	-27.54	-27.54
Inverter Transformer	MV1-7 T	364919	4905782	2	0	0	69.4	69.4	1	5655.35	3.25	0	86.05	0	3.13	0	0	7.81	0	0	0	0	0	0	-27.64	-27.64
Inverter Transformer	MV1-13 T	364725	4905241	2	0	0	69.4	69.4	1	5970.55	3.25	0	86.52	0	3.18	0	0	8	0	0	0	0	0	0	-28.35	-28.35
Inverter Transformer	MV5-6 T	369987	4908507	2	0	0	56.1	56.1	1	1702.75	3.25	0	75.62	0	0.28	0	0	6.44	0	0	0	0	0	0	-26.29	-26.29
Inverter Transformer	MV3-22 T	368661	4907142	2	0	0	56.1	56.1	1	1826.83	3.25	0	76.23	0	0.33	0	0	6.7	0	0	0	0	0	0	-27.21	-27.21
Inverter Transformer	MV5-4 T	370330	4908707	2	0	0	56.1	56.1	1	1838.59	3.25	0	76.29	0	0.34	0	0	6.72	0	0	0	0	0	0	-27.29	-27.29
Inverter Transformer	MV3-20 T	368683	4907317	2	0	0	56.1	56.1	1	1839.25	3.25	0	76.29	0	0.34	0	0	6.72	0	0	0	0	0	0	-27.29	-27.29
Inverter Transformer	MV5-5 T	370021	4908690	2	0	0	56.1	56.1	1	1870.59	3.25	0	76.44	0	0.35	0	0	6.79	0	0	0	0	0	0	-27.52	-27.52
Inverter Transformer	MV3-14 T	368678	4907498	2	0	0	56.1	56.1	1	1895.78	3.25	0	76.56	0	0.36	0	0	6.84	0	0	0	0	0	0	-27.69	-27.69
Inverter Transformer	MV3-8 T	368685	4907712	2	0	0	56.1	56.1	1	1970.28	3.25	0	76.89	0	0.39	0	0	6.99	0	0	0	0	0	0	-28.21	-28.21
Inverter Transformer	MV5-3 T	370237	4908851	2	0	0	56.1	56.1	1	1990.85	3.25	0	76.98	0	0.4	0	0	7.03	0	0	0	0	0	0	-28.35	-28.35
Inverter Transformer	MV3-21 T	368484	4907206	2	0	0	56.1	56.1	1	2011.65	3.25	0	77.07	0	0.41	0	0	7.07	0	0	0	0	0	0	-28.49	-28.49
Inverter Transformer	MV5-2 T	370011	4908853	2	0	0	56.1	56.1	1	2031.47	3.25	0	77.16	0	0.42	0	0	7.11	0	0	0	0	0	0	-28.62	-28.62
Inverter Transformer	MV3-16 T	368509	4907475	2	0	0	56.1	56.1	1	2049.24	3.25	0	77.23	0	0.42	0	0	7.14	0	0	0	0	0	0	-28.74	-28.74
Inverter Transformer	MV4-15 T	369170	4908481	2	0	0	56.1	56.1	1	2066.05	3.25	0	77.3	0	0.43	0	0	7.17	0	0	0	0	0	0	-28.85	-28.85
Inverter Transformer	MV3-2 T	368677	4907928	2	0	0	56.1	56.1	1	2078.33	3.25	0	77.35	0	0.44	0	0	7.2	0	0	0	0	0	0	-28.93	-28.93
Inverter Transformer	MV4-14 T	369182	4908507	2	0	0	56.1	56.1	1	2078.89	3.25	0	77.36	0	0.44	0	0	7.2	0	0	0	0	0	0	-28.93	-28.93
Inverter Transformer	MV3-9 T	368517	4907703	2	0	0	56.1	56.1	1	2119.98	3.25	0	77.53	0	0.45	0	0	7.28	0	0	0	0	0	0	-29.2	-29.2
Inverter Transformer	MV3-19 T	368352	4907347	2	0	0	56.1	56.1	1	2168.31	3.25	0	77.72	0	0.48	0	0	7.37	0	0	0	0	0	0	-29.51	-29.51
Inverter Transformer	MV3-15 T	368351	4907477	2	0	0	56.1	56.1	1	2201.31	3.25	0	77.85	0	0.49	0	0	7.43	0	0	0	0	0	0	-29.72	-29.72
Inverter Transformer	MV3-4 T	368507	4907925	2	0	0	56.1	56.1	1	2225.08	3.25	0	77.95	0	0.5	0	0	7.48	0	0	0	0	0	0	-29.87	-29.87
Inverter Transformer	MV4-13 T	369057	4908605	2	0	0	56.1	56.1	1	2233.53	3.25	0	77.98	0	0.5	0	0	7.49	0	0	0	0	0	0	-29.92	-29.92
Inverter Transformer	MV3-11 T	368340	4907662	2	0	0	56.1	56.1	1	2269.35	3.25	0	78.12	0	0.52	0	0	7.56	0	0	0	0	0	0	-30.14	-30.14
Inverter Transformer	MV4-10 T	369307	4908858	2	0	0	56.1	56.1	1	2299.08	3.25	0	78.23	0	0.53	0	0	7.62	0	0	0	0	0	0	-30.32	-30.32
Inverter Transformer	MV5-1 T	370015	4909142	2	0	0	56.1	56.1	1	2313.19	3.25	0	78.28	0	0.54	0	0	7.64	0	0	0	0	0	0	-30.41	-30.41
Inverter Transformer	MV4-11 T	369269	4908855	2	0	0	56.1	56.1	1	2315.93	3.25	0	78.29	0	0.54	0	0	7.65	0	0	0	0	0	0	-30.42	-30.42
Inverter Transformer	MV3-5 T	368335	4907843	2	0	0	56.1	56.1	1	2342.95	3.25	0	78.4	0	0.55	0	0	7.7	0	0	0	0	0	0	-30.59	-30.59
Inverter Transformer	MV3-17 T	368183	4907472	2	0	0	56.1	56.1	1	2362.06	3.25	0	78.47	0	0.56	0	0	7.74	0	0	0	0	0	0	-30.7	-30.7
Inverter Transformer	MV4-12 T	369049	4908803	2	0	0	56.1	56.1	1	2395.03	3.25	0	78.59	0	0.57	0	0	7.8	0	0	0	0	0	0	-30.9	-30.9

	Inverter Transformer	MV4-9 T	369284	4909001	2	0	0	56.1	56.1	1	2434.69	3.25	0	78.73	0	0.59	0	0	7.87	0	0	0	0	0	0	-31.13	-31.13
	Inverter Transformer	MV3-10 T	368162	4907669	2	0	0	56.1	56.1	1	2439.32	3.25	0	78.75	0	0.59	0	0	7.88	0	0	0	0	0	0	-31.16	-31.16
	Inverter Transformer	MV4-8 T	369262	4909001	2	0	0	56.1	56.1	1	2445.46	3.25	0	78.77	0	0.59	0	0	7.89	0	0	0	0	0	0	-31.19	-31.19
	Inverter Transformer	MV3-6 T	368156	4907834	2	0	0	56.1	56.1	1	2503.54	3.25	0	78.97	0	0.62	0	0	8	0	0	0	0	0	0	-31.53	-31.53
	Inverter Transformer	MV4-7 T	369040	4909001	2	0	0	56.1	56.1	1	2562.23	3.25	0	79.17	0	0.64	0	0	8.1	0	0	0	0	0	0	-31.86	-31.86
	Inverter Transformer	MV3-1 T	368150	4907976	2	0	0	56.1	56.1	1	2566.79	3.25	0	79.19	0	0.65	0	0	8.11	0	0	0	0	0	0	-31.88	-31.88
	Inverter Transformer	MV3-13 T	367958	4907577	2	0	0	56.1	56.1	1	2606.7	3.25	0	79.32	0	0.66	0	0	8.18	0	0	0	0	0	0	-32.11	-32.11
	Inverter Transformer	MV4-5 T	369283	4909199	2	0	0	56.1	56.1	1	2609.93	3.25	0	79.33	0	0.66	0	0	8.19	0	0	0	0	0	0	-32.13	-32.13
	Inverter Transformer	MV4-6 T	369249	4909192	2	0	0	56.1	56.1	1	2619.34	3.25	0	79.36	0	0.67	0	0	8.2	0	0	0	0	0	0	-32.18	-32.18
	Inverter Transformer	MV3-7 T	367951	4907754	2	0	0	56.1	56.1	1	2666.53	3.25	0	79.52	0	0.69	0	0	8.29	0	0	0	0	0	0	-32.44	-32.44
	Inverter Transformer	MV4-4 T	369033	4909199	2	0	0	56.1	56.1	1	2732.53	3.25	0	79.73	0	0.72	0	0	8.41	0	0	0	0	0	0	-32.79	-32.79
	Inverter Transformer	MV3-3 T	367944	4907927	2	0	0	56.1	56.1	1	2735	3.25	0	79.74	0	0.72	0	0	8.41	0	0	0	0	0	0	-32.81	-32.81
	Inverter Transformer	MV3-18 T	367757	4907412	2	0	0	56.1	56.1	1	2763.95	3.25	0	79.83	0	0.73	0	0	8.46	0	0	0	0	0	0	-32.96	-32.96
	Inverter Transformer	MV4-2 T	369267	4909397	2	0	0	56.1	56.1	1	2794.63	3.25	0	79.93	0	0.74	0	0	8.51	0	0	0	0	0	0	-33.13	-33.13
	Inverter Transformer	MV4-3 T	369234	4909397	2	0	0	56.1	56.1	1	2808.97	3.25	0	79.97	0	0.75	0	0	8.54	0	0	0	0	0	0	-33.2	-33.2
	Inverter Transformer	MV3-12 T	367674	4907594	2	0	0	56.1	56.1	1	2885.38	3.25	0	80.2	0	0.78	0	0	8.67	0	0	0	0	0	0	-33.6	-33.6
	Inverter Transformer	MV4-1 T	369017	4909397	2	0	0	56.1	56.1	1	2910.83	3.25	0	80.28	0	0.79	0	0	8.72	0	0	0	0	0	0	-33.73	-33.73
	Inverter Transformer	MV2-2 T	365982	4906654	2	0	0	56.1	56.1	1	4491.37	3.25	0	84.05	0	1.44	0	0	11.16	0	0	0	0	0	0	-40.59	-40.59
	Inverter Transformer	MV2-3 T	365814	4906641	2	0	0	56.1	56.1	1	4659.81	3.25	0	84.37	0	1.5	0	0	11.4	0	0	0	0	0	0	-41.21	-41.21
	Inverter Transformer	MV2-4 T	365590	4906628	2	0	0	56.1	56.1	1	4884.18	3.25	0	84.78	0	1.58	0	0	11.7	0	0	0	0	0	0	-42	-42
	Inverter Transformer	MV1-15 T	365309	4904994	2	0	0	56.1	56.1	1	5490.74	3.25	0	85.79	0	1.8	0	0	12.48	0	0	0	0	0	0	-44.02	-44.02
	Inverter Transformer	MV1-12 T	365044	4905386	2	0	0	56.1	56.1	1	5624.3	3.25	0	86	0	1.84	0	0	12.65	0	0	0	0	0	0	-44.43	-44.43
	Inverter Transformer	MV1-4 T	364821	4905918	2	0	0	56.1	56.1	1	5727.28	3.25	0	86.16	0	1.88	0	0	12.78	0	0	0	0	0	0	-44.75	-44.75
	Inverter Transformer	MV1-2 T	364759	4906063	2	0	0	56.1	56.1	1	5766.26	3.25	0	86.22	0	1.89	0	0	12.82	0	0	0	0	0	0	-44.87	-44.87
	Inverter Transformer	MV1-1 T	364721	4906166	2	0	0	56.1	56.1	1	5790.4	3.25	0	86.25	0	1.9	0	0	12.85	0	0	0	0	0	0	-44.95	-44.95
	Inverter Transformer	MV1-8 T	364782	4905647	2	0	0	56.1	56.1	1	5816.8	3.25	0	86.29	0	1.91	0	0	12.88	0	0	0	0	0	0	-45.03	-45.03
	Inverter Transformer	MV1-5 T	364676	4905892	2	0	0	56.1	56.1	1	5874.59	3.25	0	86.38	0	1.92	0	0	12.95	0	0	0	0	0	0	-45.2	-45.2
	Inverter Transformer	MV1-11 T	364649	4905414	2	0	0	56.1	56.1	1	5999.27	3.25	0	86.56	0	1.96	0	0	13.1	0	0	0	0	0	0	-45.57	-45.57
	Inverter Transformer	MV1-9 T	364555	4905646	2	0	0	56.1	56.1	1	6039.09	3.25	0	86.62	0	1.98	0	0	13.15	0	0	0	0	0	0	-45.69	-45.69
	Inverter Transformer	MV1-6 T	364482	4905835	2	0	0	56.1	56.1	1	6075.43	3.25	0	86.67	0	1.99	0	0	13.19	0	0	0	0	0	0	-45.79	-45.79
	Inverter Transformer	MV1-3 T	364435	4906039	2	0	0	56.1	56.1	1	6090.46	3.25	0	86.69	0	1.99	0	0	13.21	0	0	0	0	0	0	-45.84	-45.84
	Line Reactor	NGR	369421	4908787.5	5	0	0	45.4	45.4	1	2181.56	5.25	0	77.78	0	3.37	1.29	0.1	0.89	0	0	0	0	0	0	-37.97	-37.97
Limit. Valu	0	0																								
Level D/N:	34.6825	34.6825																								

Receiver: Vacant Lot Receptor
ID: W-V8
X: 370669.6
Y: 4906951.8
Z: 4.5
Ground: 0

ISO	Description	ID	X	Y	Z	Ground	ReflOrd	LxT	LxN	L/A	Dist.	hm	Freq	Adiv	K0b	Agr	Abar	z	Aatm	Afol	Ahous	Cmet	CmetN	Dc	RL	LtotT	LtotN
	Inverter	MV6-3	370207	4907140	2	0	0	100.3	100.3	1	499.42	3.25	0	64.97	0	-0.55	0	0	8.52	0	0	0	0	0	0	27.37	27.37
	Sol_Luce Substation	S_Substation	369426	4908792	3.5	0	0	112.1	112.1	1	2221.01	5.25	0	77.93	0	0.06	3.62	0.29	4.74	0	0	0	0	0	0	25.72	25.72
	Inverter	MV6-2	370085	4907339	2	0	0	100.3	100.3	1	701.2	3.25	0	67.92	0	-0.41	0	0	9.74	0	0	0	0	0	0	23.06	23.06
	Inverter	MV6-1	370235	4907364	2	0	0	97.3	97.3	1	598.99	3.25	0	66.55	0	-0.48	0	0	9.2	0	0	0	0	0	0	22.05	22.05
	Inverter	MV5-4	370324	4908707	2	0	0	100.3	100.3	1	1788.9	3.25	0	76.05	0	0.07	0	0	13	0	0	0	0	0	0	11.19	11.19
	Inverter	MV5-5	370015	4908690	2	0	0	100.3	100.3	1	1857.38	3.25	0	76.38	0	0.09	0	0	13.16	0	0	0	0	0	0	10.69	10.69
	Inverter	MV5-3	370231	4908851	2	0	0	100.3	100.3	1	1949.19	3.25	0	76.8	0	0.11	0	0	13.35	0	0	0	0	0	0	10.05	10.05
	Inverter	MV5-2	370006	4908853	2	0	0	100.3	100.3	1	2013.69	3.25	0	77.08	0	0.13	0	0	13.49	0	0	0	0	0	0	9.61	9.61
	Inverter	MV3-20	368689	4907317	2	0	0	100.3	100.3	1	2013.99	3.25	0	77.08	0	0.13	0	0	13.49	0	0	0	0	0	0	9.61	9.61
	Inverter	MV3-14	368684	4907498	2	0	0	100.3	100.3	1	2059.36	3.25	0	77.27	0	0.15	0	0	13.59	0	0	0	0	0	0	9.31	9.31
	Inverter	MV3-8	368680	4907712	2	0	0	100.3	100.3	1	2129.89	3.25	0	77.57	0	0.17	0	0	13.73	0	0	0	0	0	0	8.85	8.85
	Inverter	MV6-4	370250	4906966	2	0	0	86.1	86.1	1	419.85	3.25	0	63.46	0	0.47	0	0	4.82	0	0	0	0	0	0	17.3	17.3
	Inverter	MV3-21	368478	4907206	2	0	0	100.3	100.3	1	2206.29	3.25	0	77.87	0	0.19	0	0	13.89	0	0	0	0	0	0	8.37	8.37
	Inverter	MV3-16	368514	4907475	2	0	0	100.3	100.3	1	2218.19	3.25	0	77.92	0	0.19	0	0	13.91	0	0	0	0	0	0	8.29	8.29
	Inverter	MV5-1	370020	4909142	2	0	0	100.3	100.3	1	2284.5	3.25	0	78.18	0	0.21	0	0	14.04	0	0	0	0	0	0	7.89	7.89
	Inverter	MV3-9	368512	4907703	2	0	0	100.3	100.3	1	2284.63	3.25	0	78.18	0	0.21	0	0	14.04	0	0	0	0	0	0	7.89	7.89
	Inverter	MV4-10	369312	4908858	2	0	0	100.3	100.3	1	2340.23	3.25	0	78.39	0	0.22	0	0	14.15	0	0	0	0	0	0	7.56	7.56
	Inverter	MV3-19	368357	4907347	2	0	0	100.3	100.3	1	2346.13	3.25	0	78.41	0	0.22	0	0	14.16	0	0	0	0	0	0	7.52	7.52
	Inverter	MV4-11	369264	4908855	2	0	0	100.3	100.3	1	2365.99	3.25	0	78.48	0	0.23	0	0	14.2	0	0	0	0	0	0	7.41	7.41
	Inverter	MV3-15	368357	4907477	2	0	0	100.3	100.3	1	2371.49	3.25	0	78.5	0	0.23	0	0	14.21	0	0	0	0	0	0	7.37	7.37
	Inverter	MV3-11	368346	4907662	2	0	0	100.3	100.3	1	2429.71	3.25	0	78.71	0	0.24	0	0	14.32	0	0	0	0	0	0	7.04	7.04
	Inverter	MV4-9	369289	4909001	2	0	0	100.3	100.3	1	2470.89	5.12	0	78.86	0	0.97	3.33	0.03	14.4	0	0	0	0	0	0	2.75	2.75
	Inverter	MV4-8	369256	4909001	2	0	0	100.3	100.3	1	2489.48	3.25	0	78.92	0	0.25	0	0	14.44	0	0	0	0	0	0	6.7	6.7
	Inverter	MV3-17	368178	4907472	2	0	0	100.3	100.3	1	2545.33	3.25	0	79.11	0	0.27	0	0	14.54	0	0	0	0	0	0	6.39	6.39
	Inverter	MV3-10	368167	4907669	2	0	0	100.3	100.3	1	2603.34	3.25	0	79.31	0	0.28	0	0	14.65	0	0	0	0	0	0	6.07	6.07
	Inverter	MV4-7	369035	4909001	2	0	0	100.3	100.3	1	2621.29	3.25	0	79.37	0	0.28	0	0	14.69	0	0	0	0	0	0	5.97	5.97
	Inverter	MV4-5	369289	4909199	2	0	0	100.3	100.3	1	2637.42	3.25	0	79.42	0	0.29	0	0	14.72	0	0	0	0	0	0	5.88	5.88
	Inverter	MV4-6	369243	4909192	2	0	0	100.3	100.3	1	2655.88	3.25	0	79.48	0	0.29	0	0	14.75	0	0	0	0	0	0	5.79	5.79
	Inverter	MV3-6	368162	4907834	2	0	0	100.3	100.3	1	2658.26	3.25	0	79.49	0	0.29	0	0	14.75	0	0	0	0	0	0	5.77	5.77
	Inverter	MV3-13	367963	4907577	2	0	0	100.3	100.3	1	2777.87	3.25	0	79.87	0	0.32	0	0	14.97	0	0	0	0	0	0	5.15	5.15
	Inverter	MV4-4	369027	4909199	2	0	0	100.3	100.3	1	2783.53	3.25	0	79.89	0	0.32	0	0	14.98	0	0	0	0	0	0	5.12	5.12

Inverter	MV4-2	369272	4909397	2	0	0	100.3	100.3	1	2816.43	3.25	0	79.99	0	0.33	0	0	15.04	0	0	0	0	0	0	4.95	4.95
Inverter	MV4-3	369229	4909397	2	0	0	100.3	100.3	1	2838.02	3.25	0	80.06	0	0.33	0	0	15.08	0	0	0	0	0	0	4.84	4.84
Inverter	MV3-7	367945	4907754	2	0	0	100.3	100.3	1	2840.24	3.25	0	80.07	0	0.33	0	0	15.09	0	0	0	0	0	0	4.83	4.83
Inverter	MV3-3	367939	4907927	2	0	0	100.3	100.3	1	2899.52	3.25	0	80.25	0	0.34	0	0	15.19	0	0	0	0	0	0	4.53	4.53
Inverter	MV3-18	367752	4907412	2	0	0	100.3	100.3	1	2953.67	3.25	0	80.41	0	0.35	0	0	15.29	0	0	0	0	0	0	4.26	4.26
Inverter	MV4-1	369011	4909397	2	0	0	100.3	100.3	1	2954.65	4.95	0	80.41	0	1.12	3.2	0.01	15.29	0	0	0	0	0	0	0.29	0.29
Inverter	MV3-12	367668	4907594	2	0	0	100.3	100.3	1	3069.53	3.25	0	80.74	0	0.38	0	0	15.49	0	0	0	0	0	0	3.7	3.7
Westbrook Inverter Enclosur	W_INV6	369875	4906578	2	0	0	89.1	89.1	1	878.14	3.25	0	69.87	0	0.66	0	0	6.08	0	0	0	0	0	0	12.45	12.45
SubstationTransformer	W_ST	369711.17	4906112.3	2.5	0	0	92	92	1	1274.13	4.25	0	73.1	0	0.61	3.98	0.21	3.06	0	0	0	0	0	0	11.23	11.23
DSTATCOM - 10 MVAR #1	DSAT1	369437	4908757	2.5	0	0	96.6	96.6	1	2185.88	3.5	0	77.79	0	3.26	0	0	1.83	0	0	0	0	0	0	13.75	13.75
DSTATCOM - 10 MVAR #2	DSAT2	369403	4908757	2.5	0	0	96.6	96.6	1	2205.23	3.5	0	77.87	0	3.26	0	0	1.84	0	0	0	0	0	0	13.66	13.66
Westbrook Inverter Enclosur	W_INV5	369719	4906574	2	0	0	89.1	89.1	1	1022.93	3.25	0	71.2	0	0.69	0	0	6.36	0	0	0	0	0	0	10.81	10.81
Westbrook Inverter Enclosur	W_INV7	369780	4906417	2	0	0	89.1	89.1	1	1037.98	3.25	0	71.32	0	0.69	0	0	6.39	0	0	0	0	0	0	10.65	10.65
Westbrook Inverter Enclosur	W_INV4	369673	4906164	2	0	0	89.1	89.1	1	1270.37	3.25	0	73.08	0	0.74	0	0	6.81	0	0	0	0	0	0	8.43	8.43
Inverter	MV2-3	365820	4906641	2	0	0	100.3	100.3	1	4859.55	3.25	0	84.73	0	0.63	0	0	18.37	0	0	0	0	0	0	-3.42	-3.42
Inverter	MV2-4	365586	4906624	2	0	0	100.3	100.3	1	5094.16	3.25	0	85.14	0	0.65	0	0	18.72	0	0	0	0	0	0	-4.2	-4.2
Westbrook Inverter Enclosur	W_INV3	369508	4906164	2	0	0	89.1	89.1	1	1403.55	3.25	0	73.94	0	0.77	0	0	7.04	0	0	0	0	0	0	7.3	7.3
Westbrook Inverter Enclosur	W_INV2	369374	4906388	2	0	0	89.1	89.1	1	1412.96	3.25	0	74	0	0.77	0	0	7.06	0	0	0	0	0	0	7.22	7.22
Inverter	MV1-15	365315	4904994	2	0	0	100.3	100.3	1	5701.29	3.25	0	86.12	0	0.69	0	0	19.58	0	0	0	0	0	0	-6.08	-6.08
Inverter	MV1-12	365038	4905386	2	0	0	100.3	100.3	1	5845.22	3.25	0	86.34	0	0.7	0	0	19.78	0	0	0	0	0	0	-6.5	-6.5
Inverter	MV1-4	364815	4905918	2	0	0	100.3	100.3	1	5945.17	3.25	0	86.48	0	0.7	0	0	19.92	0	0	0	0	0	0	-6.79	-6.79
Inverter	MV1-2	364753	4906063	2	0	0	100.3	100.3	1	5982.99	3.25	0	86.54	0	0.7	0	0	19.97	0	0	0	0	0	0	-6.9	-6.9
Inverter	MV1-1	364715	4906166	2	0	0	100.3	100.3	1	6006.23	3.25	0	86.57	0	0.71	0	0	20	0	0	0	0	0	0	-6.97	-6.97
Inverter	MV1-8	364788	4905647	2	0	0	100.3	100.3	1	6024.59	3.25	0	86.6	0	0.71	0	0	20.03	0	0	0	0	0	0	-7.02	-7.02
Inverter	MV1-5	364671	4905892	2	0	0	100.3	100.3	1	6091.5	3.25	0	86.69	0	0.71	0	0	20.12	0	0	0	0	0	0	-7.21	-7.21
Inverter	MV1-11	364655	4905414	2	0	0	100.3	100.3	1	6208.08	3.25	0	86.86	0	0.71	0	0	20.27	0	0	0	0	0	0	-7.53	-7.53
Inverter	MV5-6	369982	4908507	2	0	0	89.1	89.1	1	1700.43	3.25	0	75.61	0	0.84	0	0	7.55	0	0	0	0	0	0	5.06	5.06
Inverter	MV1-9	364561	4905646	2	0	0	100.3	100.3	1	6246.61	3.25	0	86.91	0	0.71	0	0	20.32	0	0	0	0	0	0	-7.64	-7.64
Inverter	MV1-6	364477	4905835	2	0	0	100.3	100.3	1	6292.5	3.25	0	86.98	0	0.71	0	0	20.39	0	0	0	0	0	0	-7.76	-7.76
Westbrook Inverter Enclosur	W_INV1	369409	4906578	2	0	0	86.1	86.1	1	1314.86	3.25	0	73.38	0	0.75	0	0	6.89	0	0	0	0	0	0	5.04	5.04
Inverter	MV2-1	365842	4906816	2	0	0	97.3	97.3	1	4829.51	3.25	0	84.68	0	0.63	0	0	18.33	0	0	0	0	0	0	-6.32	-6.32
Fixed Reactor Bank 2	FRB2	369464	4908755	6	0	0	89.8	89.8	1	2169.1	5.25	0	77.73	0	-0.98	0	0	4.65	0	0	0	0	0	0	8.38	8.38
Inverter	MV3-22	368656	4907142	2	0	0	89.1	89.1	1	2022.56	3.25	0	77.12	0	0.91	0	0	8.08	0	0	0	0	0	0	2.95	2.95
Fixed Reactor Bank 1	FRB1	369378	4908755	6	0	0	89.8	89.8	1	2218.05	5.25	0	77.92	0	-0.97	0	0	4.73	0	0	0	0	0	0	8.1	8.1
Inverter	MV4-15	369176	4908481	2	0	0	89.1	89.1	1	2137.59	3.25	0	77.6	0	0.94	0	0	8.27	0	0	0	0	0	0	2.25	2.25
Inverter	MV4-14	369176	4908507	2	0	0	89.1	89.1	1	2156.27	3.25	0	77.67	0	0.94	0	0	8.3	0	0	0	0	0	0	2.14	2.14
Inverter	MV3-2	368671	4907928	2	0	0	89.1	89.1	1	2224.27	3.25	0	77.94	0	0.96	0	0	8.41	0	0	0	0	0	0	1.75	1.75
Inverter	MV1-14	365163	4905049	2	0	0	97.3	97.3	1	5826.09	3.25	0	86.31	0	0.7	0	0	19.76	0	0	0	0	0	0	-9.45	-9.45
Inverter	MV1-10	365004	4905564	2	0	0	97.3	97.3	1	5833.1	3.25	0	86.32	0	0.7	0	0	19.76	0	0	0	0	0	0	-9.47	-9.47
Inverter	MV1-7	364925	4905782	2	0	0	97.3	97.3	1	5862.5	3.25	0	86.36	0	0.7	0	0	19.81	0	0	0	0	0	0	-9.55	-9.55
Inverter	MV4-13	369051	4908605	2	0	0	89.1	89.1	1	2313.64	3.25	0	78.29	0	0.98	0	0	8.55	0	0	0	0	0	0	1.24	1.24
Inverter	MV3-4	368502	4907925	2	0	0	89.1	89.1	1	2376.05	3.25	0	78.52	0	1	0	0	8.65	0	0	0	0	0	0	0.89	0.89
Inverter	MV1-13	364731	4905241	2	0	0	97.3	97.3	1	6180.11	3.25	0	86.82	0	0.71	0	0	20.24	0	0	0	0	0	0	-10.45	-10.45
Inverter	MV4-12	369043	4908803	2	0	0	89.1	89.1	1	2464.3	3.25	0	78.83	0	1.02	0	0	8.79	0	0	0	0	0	0	0.42	0.42
Inverter	MV3-5	368340	4907843	2	0	0	89.1	89.1	1	2494.25	3.25	0	78.94	0	1.02	0	0	8.84	0	0	0	0	0	0	0.26	0.26
Inverter	MV3-1	368156	4907976	2	0	0	89.1	89.1	1	2714.25	3.25	0	79.67	0	1.08	0	0	9.18	0	0	0	0	0	0	-0.87	-0.87
Westbrook Inverter Transfor	W_INVTR6	369881	4906578	2	0	0	77.3	77.3	1	872.71	3.25	0	69.82	0	-1.85	0	0	0.6	0	0	0	0	0	0	8.77	8.77
Westbrook Inverter Transfor	W_INVTR5	369725	4906574	2	0	0	77.3	77.3	1	1017.35	3.25	0	71.15	0	-1.94	0	0	0.69	0	0	0	0	0	0	7.45	7.45
Westbrook Inverter Transfor	W_INVTR7	369786	4906417	2	0	0	77.3	77.3	1	1032.84	3.25	0	71.28	0	-1.95	0	0	0.7	0	0	0	0	0	0	7.32	7.32
Inverter Transformer	MV6-4 T	370244	4906966	2	0	0	69.4	69.4	1	425.84	3.25	0	63.59	0	0.93	0	0	2.77	0	0	0	0	0	0	2.06	2.06
Gardiner Substation	G_Sub	366586.3	4903349.9	2.5	0	0	90.8	90.8	1	5444.91	4.25	0	85.72	0	1.75	2.24	0.34	9.13	0	0	0	0	0	0	-8.06	-8.06
Westbrook Inverter Transfor	W_INVTR1	369403	4906578	2	0	0	78.2	78.2	1	1320.61	3.25	0	73.42	0	-2.11	0	0	0.86	0	0	0	0	0	0	6.08	6.08
Inverter	MV2-2	365977	4906654	2	0	0	89.1	89.1	1	4702.04	3.25	0	84.45	0	1.57	0	0	12.06	0	0	0	0	0	0	-9.02	-9.02
Westbrook Inverter Transfor	W_INVTR4	369679	4906164	2	0	0	77.3	77.3	1	1265.67	3.25	0	73.05	0	-2.09	0	0	0.83	0	0	0	0	0	0	5.55	5.55
Westbrook Inverter Transfor	W_INVTR3	369514	4906164	2	0	0	77.3	77.3	1	1398.59	3.25	0	73.91	0	-2.15	0	0	0.9	0	0	0	0	0	0	4.68	4.68
Westbrook Inverter Transfor	W_INVTR2	369368	4906388	2	0	0	77.3	77.3	1	1418.46	3.25	0	74.04	0	-2.16	0	0	0.91	0	0	0	0	0	0	4.56	4.56
Inverter Transformer	MV6-1 T	370230	4907364	2	0	0	69.4	69.4	1	602.63	3.25	0	66.6	0	1.22	0	0	3.17	0	0	0	0	0	0	-1.64	-1.64
Inverter	MV1-3	364440	4906039	2	0	0	89.1	89.1	1	6296.12	3.25	0	86.98	0	1.96	0	0	14.13	0	0	0	0	0	0	-14.01	-14.01
Inverters	G_Inv2	366676.9	4903239.1	2	0	0	87.7	87.7	1	5452.14	3.25	0	85.73	0	2.89	0	0	6.41	0	0	0	0	0	0	-7.37	-7.37
Inverters	G_Inv4	366732.8	4903105	2	0	0	87.7	87.7	1	5504.2	3.25	0	85.81	0	2.89	0	0	6.47	0	0	0	0	0	0	-7.51	-7.51
Inverters	G_Inv6	366788.5	4902972	2	0	0	87.7	87.7	1	5558.93	3.25	0	85.9	0	2.9	0	0	6.52	0	0	0	0	0	0	-7.66	-7.66
Inverters	G_Inv1	366526.4	4903225.8	2	0	0	87.7	87.7	1	5572.18	3.25	0	85.92	0	2.9	0	0	6.54	0	0	0	0	0	0	-7.69	-7.69
Inverters	G_Inv8	366844.5	4902838.5	2	0	0	87.7	87.7	1	5617	3.25	0	85.99	0	2.9	0	0	6.58	0	0	0	0	0	0	-7.81	-7.81
Inverters	G_Inv3	366583.7	4903091.4	2	0	0	87.7	87.7	1	5621.15	3.25	0	86	0	2.9	0	0	6.59	0	0	0	0	0	0	-7.82	-7.82
Inverters	G_Inv5	366638.5	4902958.1	2	0	0	87.7	87.7	1	5674.45	3.25	0	86.08	0	2.9	0	0	6.64	0	0	0	0	0	0	-7.96	-7.96
Inverters	G_Inv10	366900.7	4902704.8	2	0	0	87.7	87.7	1	5678.17	3.25	0	86.08	0	2.9	0	0	6.65	0	0	0	0	0	0	-7.97	-7.97
Inverters	G_Inv7	366694.6	4902824.7	2	0	0	87.7	87.7	1	5730.06	3.25	0	86.16	0	2.91	0	0	6.7	0	0	0	0	0	0	-8.11	-8.11
Inverters	G_Inv9	366750.9	4902691.8	2	0	0	87.7	87.7	1	5788.25	3.25	0	86.25	0	2.91	0	0	6.76	0	0	0	0	0	0	-8.26	-8.26
Inverter Transformer	MV6-3 T	370202	4907140	2	0	0	56.1	56.1	1	504.06	3.25	0	65.05	0	-0.12	0	0	3.56	0	0	0	0	0	0	-12.44	-12.44
Inverter Transformer	MV6-2 T	370091	4907339	2	0	0	56.1	56.1	1	696.21	3.25	0	67.85	0	-0.08	0	0	4.12	0	0	0	0	0	0	-15.84	-15.84
Inverter Transformer	MV2-1 T	365836	4906816	2	0	0	69.4	69.4	1	4835.51	3.25	0	84.69	0	2.98	0	0	7.27	0	0	0	0	0	0	-25.59	-25.59
Inverter Transformer	MV1-10 T	365010	4905564	2	0	0	69.4	69.4	1	5827.27	3.25	0	86.31	0	3.16	0	0	7.91	0	0	0	0	0	0	-28.03	-28.03
Inverter Transformer	MV1-14 T	365157	4905049	2	0	0	69.4	69.4	1	5831.76	3.25	0	86.32	0	3.16	0	0	7.92	0	0	0	0	0	0	-28.04	-28.04
Inverter Transformer	MV1-7 T	364919	4905782	2	0	0	69.4	69.4	1	5868.38	3.25	0	86.37	0	3.17	0	0	7.94	0	0	0	0	0	0	-28.13	-28.13

	Inverter Transformer	MV1-13 T	364725	4905241	2	0	0	69.4	69.4	1	6185.88	3.25	0	86.83	0	3.22	0	0	8.13	0	0	0	0	0	0	-28.82	-28.82
	Inverter Transformer	MV5-6 T	369987	4908507	2	0	0	56.1	56.1	1	1698.41	3.25	0	75.6	0	0.28	0	0	6.44	0	0	0	0	0	0	-26.26	-26.26
	Inverter Transformer	MV5-4 T	370330	4908707	2	0	0	56.1	56.1	1	1787.75	3.25	0	76.05	0	0.32	0	0	6.62	0	0	0	0	0	0	-26.92	-26.92
	Inverter Transformer	MV5-5 T	370021	4908690	2	0	0	56.1	56.1	1	1855.27	3.25	0	76.37	0	0.34	0	0	6.76	0	0	0	0	0	0	-27.41	-27.41
	Inverter Transformer	MV5-3 T	370237	4908851	2	0	0	56.1	56.1	1	1947.85	3.25	0	76.79	0	0.38	0	0	6.94	0	0	0	0	0	0	-28.06	-28.06
	Inverter Transformer	MV5-2 T	370011	4908853	2	0	0	56.1	56.1	1	2012.04	3.25	0	77.07	0	0.41	0	0	7.07	0	0	0	0	0	0	-28.49	-28.49
	Inverter Transformer	MV3-22 T	368661	4907142	2	0	0	56.1	56.1	1	2017.59	3.25	0	77.1	0	0.41	0	0	7.08	0	0	0	0	0	0	-28.53	-28.53
	Inverter Transformer	MV3-20 T	368683	4907317	2	0	0	56.1	56.1	1	2019.89	3.25	0	77.11	0	0.41	0	0	7.08	0	0	0	0	0	0	-28.54	-28.54
	Inverter Transformer	MV3-14 T	368678	4907498	2	0	0	56.1	56.1	1	2065.14	3.25	0	77.3	0	0.43	0	0	7.17	0	0	0	0	0	0	-28.84	-28.84
	Inverter Transformer	MV3-8 T	368685	4907712	2	0	0	56.1	56.1	1	2125.22	3.25	0	77.55	0	0.46	0	0	7.29	0	0	0	0	0	0	-29.23	-29.23
	Inverter Transformer	MV4-15 T	369170	4908481	2	0	0	56.1	56.1	1	2141.79	3.25	0	77.62	0	0.46	0	0	7.32	0	0	0	0	0	0	-29.34	-29.34
	Inverter Transformer	MV4-14 T	369182	4908507	2	0	0	56.1	56.1	1	2152.12	3.25	0	77.66	0	0.47	0	0	7.34	0	0	0	0	0	0	-29.41	-29.41
	Inverter Transformer	MV3-21 T	368484	4907206	2	0	0	56.1	56.1	1	2200.33	3.25	0	77.85	0	0.49	0	0	7.43	0	0	0	0	0	0	-29.71	-29.71
	Inverter Transformer	MV3-2 T	368677	4907928	2	0	0	56.1	56.1	1	2218.88	3.25	0	77.92	0	0.5	0	0	7.47	0	0	0	0	0	0	-29.83	-29.83
	Inverter Transformer	MV3-16 T	368509	4907475	2	0	0	56.1	56.1	1	2223.05	3.25	0	77.94	0	0.5	0	0	7.47	0	0	0	0	0	0	-29.85	-29.85
	Inverter Transformer	MV3-9 T	368517	4907703	2	0	0	56.1	56.1	1	2279.91	3.25	0	78.16	0	0.52	0	0	7.58	0	0	0	0	0	0	-30.2	-30.2
	Inverter Transformer	MV5-1 T	370015	4909142	2	0	0	56.1	56.1	1	2285.93	3.25	0	78.18	0	0.53	0	0	7.59	0	0	0	0	0	0	-30.24	-30.24
	Inverter Transformer	MV4-13 T	369057	4908605	2	0	0	56.1	56.1	1	2309.45	3.25	0	78.27	0	0.54	0	0	7.64	0	0	0	0	0	0	-30.38	-30.38
	Inverter Transformer	MV4-10 T	369307	4908858	2	0	0	56.1	56.1	1	2343.14	3.25	0	78.4	0	0.55	0	0	7.7	0	0	0	0	0	0	-30.59	-30.59
	Inverter Transformer	MV3-19 T	368352	4907347	2	0	0	56.1	56.1	1	2351.05	3.25	0	78.43	0	0.55	0	0	7.72	0	0	0	0	0	0	-30.63	-30.63
	Inverter Transformer	MV4-11 T	369269	4908855	2	0	0	56.1	56.1	1	2363.02	3.25	0	78.47	0	0.56	0	0	7.74	0	0	0	0	0	0	-30.71	-30.71
	Inverter Transformer	MV3-4 T	368507	4907925	2	0	0	56.1	56.1	1	2371.49	3.25	0	78.5	0	0.56	0	0	7.75	0	0	0	0	0	0	-30.76	-30.76
	Inverter Transformer	MV3-15 T	368351	4907477	2	0	0	56.1	56.1	1	2377.34	3.25	0	78.52	0	0.56	0	0	7.76	0	0	0	0	0	0	-30.79	-30.79
	Inverter Transformer	MV3-11 T	368340	4907662	2	0	0	56.1	56.1	1	2435.45	3.25	0	78.73	0	0.59	0	0	7.87	0	0	0	0	0	0	-31.13	-31.13
	Inverter Transformer	MV4-12 T	369049	4908803	2	0	0	56.1	56.1	1	2460.34	3.25	0	78.82	0	0.6	0	0	7.92	0	0	0	0	0	0	-31.28	-31.28
	Inverter Transformer	MV4-9 T	369284	4909001	2	0	0	56.1	56.1	1	2473.68	5.12	0	78.87	0	1.51	2.81	0.03	7.94	0	0	0	0	0	0	-35.08	-35.08
	Inverter Transformer	MV4-8 T	369262	4909001	2	0	0	56.1	56.1	1	2486.07	3.25	0	78.91	0	0.61	0	0	7.96	0	0	0	0	0	0	-31.43	-31.43
	Inverter Transformer	MV3-5 T	368335	4907843	2	0	0	56.1	56.1	1	2498.92	3.25	0	78.96	0	0.62	0	0	7.99	0	0	0	0	0	0	-31.5	-31.5
	Inverter Transformer	MV3-17 T	368183	4907472	2	0	0	56.1	56.1	1	2540.43	3.25	0	79.1	0	0.63	0	0	8.06	0	0	0	0	0	0	-31.74	-31.74
	Inverter Transformer	MV3-10 T	368162	4907669	2	0	0	56.1	56.1	1	2608.15	3.25	0	79.33	0	0.66	0	0	8.18	0	0	0	0	0	0	-32.12	-32.12
	Inverter Transformer	MV4-7 T	369040	4909001	2	0	0	56.1	56.1	1	2618.17	3.25	0	79.36	0	0.67	0	0	8.2	0	0	0	0	0	0	-32.17	-32.17
	Inverter Transformer	MV4-5 T	369283	4909199	2	0	0	56.1	56.1	1	2640.56	3.25	0	79.43	0	0.68	0	0	8.24	0	0	0	0	0	0	-32.29	-32.29
	Inverter Transformer	MV4-6 T	369249	4909192	2	0	0	56.1	56.1	1	2652.66	3.25	0	79.47	0	0.68	0	0	8.26	0	0	0	0	0	0	-32.36	-32.36
	Inverter Transformer	MV3-6 T	368156	4907834	2	0	0	56.1	56.1	1	2663.92	3.25	0	79.51	0	0.69	0	0	8.28	0	0	0	0	0	0	-32.42	-32.42
	Inverter Transformer	MV3-1 T	368150	4907976	2	0	0	56.1	56.1	1	2719.81	3.25	0	79.69	0	0.71	0	0	8.38	0	0	0	0	0	0	-32.73	-32.73
	Inverter Transformer	MV4-4 T	369033	4909199	2	0	0	56.1	56.1	1	2780	3.25	0	79.88	0	0.74	0	0	8.49	0	0	0	0	0	0	-33.05	-33.05
	Inverter Transformer	MV3-13 T	367958	4907577	2	0	0	56.1	56.1	1	2782.74	3.25	0	79.89	0	0.74	0	0	8.49	0	0	0	0	0	0	-33.06	-33.06
	Inverter Transformer	MV4-2 T	369267	4909397	2	0	0	56.1	56.1	1	2818.92	3.25	0	80	0	0.75	0	0	8.56	0	0	0	0	0	0	-33.25	-33.25
	Inverter Transformer	MV3-7 T	367951	4907754	2	0	0	56.1	56.1	1	2834.49	3.25	0	80.05	0	0.76	0	0	8.58	0	0	0	0	0	0	-33.33	-33.33
	Inverter Transformer	MV4-3 T	369234	4909397	2	0	0	56.1	56.1	1	2835.48	3.25	0	80.05	0	0.76	0	0	8.59	0	0	0	0	0	0	-33.34	-33.34
	Inverter Transformer	MV3-3 T	367944	4907927	2	0	0	56.1	56.1	1	2894.81	3.25	0	80.23	0	0.79	0	0	8.69	0	0	0	0	0	0	-33.65	-33.65
	Inverter Transformer	MV3-18 T	367757	4907412	2	0	0	56.1	56.1	1	2948.73	3.25	0	80.39	0	0.81	0	0	8.78	0	0	0	0	0	0	-33.92	-33.92
	Inverter Transformer	MV4-1 T	369017	4909397	2	0	0	56.1	56.1	1	2951.29	4.94	0	80.4	0	1.74	2.65	0.01	8.79	0	0	0	0	0	0	-37.51	-37.51
	Inverter Transformer	MV3-12 T	367674	4907594	2	0	0	56.1	56.1	1	3063.67	3.25	0	80.72	0	0.86	0	0	8.98	0	0	0	0	0	0	-34.5	-34.5
	Inverter Transformer	MV2-2 T	365982	4906654	2	0	0	56.1	56.1	1	4697.05	3.25	0	84.44	0	1.51	0	0	11.45	0	0	0	0	0	0	-41.34	-41.34
	Inverter Transformer	MV2-3 T	365814	4906641	2	0	0	56.1	56.1	1	4865.54	3.25	0	84.74	0	1.58	0	0	11.68	0	0	0	0	0	0	-41.94	-41.94
	Inverter Transformer	MV2-4 T	365590	4906628	2	0	0	56.1	56.1	1	5089.91	3.25	0	85.13	0	1.66	0	0	11.97	0	0	0	0	0	0	-42.71	-42.71
	Inverter Transformer	MV1-15 T	365309	4904994	2	0	0	56.1	56.1	1	5706.93	3.25	0	86.13	0	1.87	0	0	12.75	0	0	0	0	0	0	-44.69	-44.69
	Inverter Transformer	MV1-12 T	365044	4905386	2	0	0	56.1	56.1	1	5839.44	3.25	0	86.33	0	1.91	0	0	12.91	0	0	0	0	0	0	-45.09	-45.09
	Inverter Transformer	MV1-4 T	364821	4905918	2	0	0	56.1	56.1	1	5939.27	3.25	0	86.47	0	1.95	0	0	13.03	0	0	0	0	0	0	-45.39	-45.39
	Inverter Transformer	MV1-2 T	364759	4906063	2	0	0	56.1	56.1	1	5977.05	3.25	0	86.53	0	1.96	0	0	13.08	0	0	0	0	0	0	-45.5	-45.5
	Inverter Transformer	MV1-1 T	364721	4906166	2	0	0	56.1	56.1	1	6000.28	3.25	0	86.56	0	1.96	0	0	13.1	0	0	0	0	0	0	-45.57	-45.57
	Inverter Transformer	MV1-8 T	364782	4905647	2	0	0	56.1	56.1	1	6030.45	3.25	0	86.61	0	1.97	0	0	13.14	0	0	0	0	0	0	-45.66	-45.66
	Inverter Transformer	MV1-5 T	364676	4905892	2	0	0	56.1	56.1	1	6086.58	3.25	0	86.69	0	1.99	0	0	13.2	0	0	0	0	0	0	-45.83	-45.83
	Inverter Transformer	MV1-11 T	364649	4905414	2	0	0	56.1	56.1	1	6213.89	3.25	0	86.87	0	2.03	0	0	13.35	0	0	0	0	0	0	-46.19	-46.19
	Inverter Transformer	MV1-9 T	364555	4905646	2	0	0	56.1	56.1	1	6252.48	3.25	0	86.92	0	2.04	0	0	13.4	0	0	0	0	0	0	-46.3	-46.3
	Inverter Transformer	MV1-6 T	364482	4905835	2	0	0	56.1	56.1	1	6287.58	3.25	0	86.97	0	2.05	0	0	13.44	0	0	0	0	0	0	-46.4	-46.4
	Inverter Transformer	MV1-3 T	364435	4906039	2	0	0	56.1	56.1	1	6301.07	3.25	0	86.99	0	2.06	0	0	13.45	0	0	0	0	0	0	-46.44	-46.44
	Line Reactor	NGR	369421	4908787.5	5	0	0	45.4	45.4	1	2220.09	5.25	0	77.93	0	3.36	1.29	0.1	0.91	0	0	0	0	0	0	-38.13	-38.13
Limit. Valu	0	0																								
Level D/N:	32.3164	32.3164																								

Receiver: Vacant Lot Receptor
ID: W-V11
X: 369215.2
Y: 4908086.1
Z: 4.5
Ground: 0

ISO	Description	ID	X	Y	Z	Ground	ReflOrd	LxT	LxN	L/A	Dist.	hm	Freq	Adiv	K0b	Agr	Abar	z	Aatm	Afol	Ahous	Cmet	CmetN	Dc	RL	LtotT	LtotN
	Sol_Luce Substation	S_Substation	369426	4908792	3.5	0	0	112.1	112.1	1	736.7	5.24	0	68.35	0	0.04	6.13	0.34	1.97	0	0	0	0	0	0	35.6	35.6
	Inverter	MV3-8	368680	4907712	2	0	0	100.3	100.3	1	652.99	3.25	0	67.3	0	-0.44	0	0	9.5	0	0	0	0	0	0	23.96	23.96
	Inverter	MV4-11	369264	4908855	2	0	0	100.3	100.3	1	770.45	3.25	0	68.73	0	-0.37	0	0	10.06	0	0	0	0	0	0	21.89	21.89
	Inverter	MV4-10	369312	4908858	2	0	0	100.3	100.3	1	777.95	3.25	0	68.82	0	-0.36	0	0	10.09	0	0	0	0	0	0	21.77	21.77

Inverter	MV3-14	368684	4907498	2	0	0	100.3	100.3	1	792.49	3.25	0	68.98	0	-0.36	0	0	10.15	0	0	0	0	0	0	21.54	21.54
Inverter	MV3-9	368512	4907703	2	0	0	100.3	100.3	1	800.79	3.25	0	69.07	0	-0.35	0	0	10.18	0	0	0	0	0	0	21.41	21.41
Inverter	MV4-8	369256	4909001	2	0	0	100.3	100.3	1	915.81	3.25	0	70.24	0	-0.29	0	0	10.62	0	0	0	0	0	0	19.74	19.74
Inverter	MV4-9	369289	4909001	2	0	0	100.3	100.3	1	917.88	3.25	0	70.26	0	-0.29	0	0	10.63	0	0	0	0	0	0	19.71	19.71
Inverter	MV3-16	368514	4907475	2	0	0	100.3	100.3	1	930.12	3.25	0	70.37	0	-0.28	0	0	10.67	0	0	0	0	0	0	19.55	19.55
Inverter	MV3-20	368689	4907317	2	0	0	100.3	100.3	1	931.88	3.25	0	70.39	0	-0.28	0	0	10.68	0	0	0	0	0	0	19.53	19.53
Inverter	MV4-7	369035	4909001	2	0	0	100.3	100.3	1	932.48	3.25	0	70.39	0	-0.28	0	0	10.68	0	0	0	0	0	0	19.52	19.52
Inverter	MV3-11	368346	4907662	2	0	0	100.3	100.3	1	967.15	3.25	0	70.71	0	-0.26	0	0	10.8	0	0	0	0	0	0	19.06	19.06
Inverter	MV5-5	370015	4908690	2	0	0	100.3	100.3	1	1002.19	3.25	0	71.02	0	-0.25	0	0	10.92	0	0	0	0	0	0	18.62	18.62
Inverter	MV3-15	368357	4907477	2	0	0	100.3	100.3	1	1052.39	3.25	0	71.44	0	-0.22	0	0	11.08	0	0	0	0	0	0	18.01	18.01
DSTATCOM - 10 MVAR #2	DSAT2	369403	4908757	2.5	0	0	96.6	96.6	1	696.69	3.5	0	67.86	0	2.56	0	0	0.86	0	0	0	0	0	0	25.35	25.35
DSTATCOM - 10 MVAR #1	DSAT1	369437	4908757	2.5	0	0	96.6	96.6	1	706.62	3.5	0	67.98	0	2.58	0	0	0.87	0	0	0	0	0	0	25.2	25.2
Inverter	MV3-6	368162	4907834	2	0	0	100.3	100.3	1	1082.95	3.25	0	71.69	0	-0.21	0	0	11.18	0	0	0	0	0	0	17.65	17.65
Inverter	MV5-2	370006	4908853	2	0	0	100.3	100.3	1	1101.59	3.25	0	71.84	0	-0.2	0	0	11.23	0	0	0	0	0	0	17.44	17.44
Inverter	MV4-6	369243	4909192	2	0	0	100.3	100.3	1	1106.25	3.25	0	71.88	0	-0.2	0	0	11.25	0	0	0	0	0	0	17.38	17.38
Inverter	MV4-5	369289	4909199	2	0	0	100.3	100.3	1	1115.35	3.25	0	71.95	0	-0.19	0	0	11.28	0	0	0	0	0	0	17.28	17.28
Inverter	MV3-10	368167	4907669	2	0	0	100.3	100.3	1	1128.14	3.25	0	72.05	0	-0.19	0	0	11.31	0	0	0	0	0	0	17.14	17.14
Inverter	MV4-4	369027	4909199	2	0	0	100.3	100.3	1	1128.7	3.25	0	72.05	0	-0.19	0	0	11.32	0	0	0	0	0	0	17.13	17.13
Inverter	MV3-19	368357	4907347	2	0	0	100.3	100.3	1	1132.6	3.25	0	72.08	0	-0.18	0	0	11.33	0	0	0	0	0	0	17.09	17.09
Inverter	MV6-2	370085	4907339	2	0	0	100.3	100.3	1	1146.61	3.25	0	72.19	0	-0.18	0	0	11.37	0	0	0	0	0	0	16.93	16.93
Inverter	MV3-21	368478	4907206	2	0	0	100.3	100.3	1	1148.06	3.25	0	72.2	0	-0.18	0	0	11.37	0	0	0	0	0	0	16.92	16.92
Inverter	MV3-17	368178	4907472	2	0	0	100.3	100.3	1	1205.37	3.25	0	72.62	0	-0.15	0	0	11.54	0	0	0	0	0	0	16.3	16.3
Inverter	MV5-4	370324	4908707	2	0	0	100.3	100.3	1	1270.81	3.25	0	73.08	0	-0.12	0	0	11.73	0	0	0	0	0	0	15.63	15.63
Inverter	MV5-3	370231	4908851	2	0	0	100.3	100.3	1	1271.58	3.25	0	73.09	0	-0.12	0	0	11.73	0	0	0	0	0	0	15.62	15.62
Inverter	MV3-3	367939	4907927	2	0	0	100.3	100.3	1	1286.08	3.25	0	73.19	0	-0.12	0	0	11.77	0	0	0	0	0	0	15.48	15.48
Inverter	MV4-3	369229	4909397	2	0	0	100.3	100.3	1	1310.98	3.25	0	73.35	0	-0.11	0	0	11.84	0	0	0	0	0	0	15.23	15.23
Inverter	MV4-2	369272	4909397	2	0	0	100.3	100.3	1	1312.13	3.25	0	73.36	0	-0.11	0	0	11.84	0	0	0	0	0	0	15.22	15.22
Inverter	MV3-7	367945	4907754	2	0	0	100.3	100.3	1	1312.9	3.25	0	73.36	0	-0.11	0	0	11.84	0	0	0	0	0	0	15.21	15.21
Inverter	MV4-1	369011	4909397	2	0	0	100.3	100.3	1	1326.71	3.25	0	73.46	0	-0.1	0	0	11.88	0	0	0	0	0	0	15.08	15.08
Inverter	MV5-1	370020	4909142	2	0	0	100.3	100.3	1	1327.64	3.25	0	73.46	0	-0.1	0	0	11.88	0	0	0	0	0	0	15.07	15.07
Inverter	MV3-13	367963	4907577	2	0	0	100.3	100.3	1	1351.74	3.25	0	73.62	0	-0.09	0	0	11.94	0	0	0	0	0	0	14.84	14.84
Inverter	MV6-3	370207	4907140	2	0	0	100.3	100.3	1	1370.69	3.25	0	73.74	0	-0.08	0	0	11.99	0	0	0	0	0	0	14.66	14.66
Inverter	MV4-15	369176	4908481	2	0	0	89.1	89.1	1	396.85	3.25	0	62.97	0	0.45	0	0	4.72	0	0	0	0	0	0	20.92	20.92
Inverter	MV4-14	369176	4908507	2	0	0	89.1	89.1	1	422.73	3.25	0	63.52	0	0.47	0	0	4.84	0	0	0	0	0	0	20.23	20.23
Inverter	MV3-18	367752	4907412	2	0	0	100.3	100.3	1	1611.02	3.25	0	75.14	0	0.01	0	0	12.59	0	0	0	0	0	0	12.57	12.57
Inverter	MV3-12	367668	4907594	2	0	0	100.3	100.3	1	1623.58	3.25	0	75.21	0	0.01	0	0	12.62	0	0	0	0	0	0	12.47	12.47
Inverter	MV6-1	370235	4907364	2	0	0	97.3	97.3	1	1249.57	3.25	0	72.94	0	-0.13	0	0	11.67	0	0	0	0	0	0	12.84	12.84
Inverter	MV4-13	369051	4908605	2	0	0	89.1	89.1	1	544.27	3.25	0	65.72	0	0.55	0	0	5.29	0	0	0	0	0	0	17.5	17.5
Inverter	MV3-2	368671	4907928	2	0	0	89.1	89.1	1	566.71	3.25	0	66.07	0	0.56	0	0	5.36	0	0	0	0	0	0	17.07	17.07
Fixed Reactor Bank 1	FRB1	369378	4908755	6	0	0	89.8	89.8	1	688.43	5.25	0	67.76	0	-0.94	0	0	1.86	0	0	0	0	0	0	21.1	21.1
Fixed Reactor Bank 2	FRB2	369464	4908755	6	0	0	89.8	89.8	1	713.67	5.25	0	68.07	0	-0.95	0	0	1.92	0	0	0	0	0	0	20.74	20.74
Inverter	MV3-4	368502	4907925	2	0	0	89.1	89.1	1	731.17	3.25	0	68.28	0	0.62	0	0	5.77	0	0	0	0	0	0	14.38	14.38
Inverter	MV4-12	369043	4908803	2	0	0	89.1	89.1	1	737.3	3.25	0	68.35	0	0.62	0	0	5.79	0	0	0	0	0	0	14.3	14.3
Inverter	MV5-6	369982	4908507	2	0	0	89.1	89.1	1	874.73	3.25	0	69.84	0	0.66	0	0	6.07	0	0	0	0	0	0	12.49	12.49
Inverter	MV3-5	368340	4907843	2	0	0	89.1	89.1	1	908.34	3.25	0	70.16	0	0.66	0	0	6.14	0	0	0	0	0	0	12.09	12.09
Inverter	MV2-3	365820	4906641	2	0	0	100.3	100.3	1	3689.95	3.25	0	82.34	0	0.48	0	0	16.55	0	0	0	0	0	0	0.94	0.94
Inverter	MV3-1	368156	4907976	2	0	0	89.1	89.1	1	1064.91	3.25	0	71.55	0	0.7	0	0	6.44	0	0	0	0	0	0	10.38	10.38
Inverter	MV2-4	365586	4906624	2	0	0	100.3	100.3	1	3912.65	3.25	0	82.85	0	0.51	0	0	16.91	0	0	0	0	0	0	0.04	0.04
Inverter	MV3-22	368656	4907142	2	0	0	89.1	89.1	1	1097.29	3.25	0	71.81	0	0.71	0	0	6.5	0	0	0	0	0	0	10.05	10.05
Inverter	MV1-1	364715	4906166	2	0	0	100.3	100.3	1	4892.71	3.25	0	84.79	0	0.63	0	0	18.42	0	0	0	0	0	0	-3.53	-3.53
Inverter	MV1-2	364753	4906063	2	0	0	100.3	100.3	1	4899.4	3.25	0	84.8	0	0.63	0	0	18.43	0	0	0	0	0	0	-3.56	-3.56
Inverter	MV1-4	364815	4905918	2	0	0	100.3	100.3	1	4905.35	3.25	0	84.81	0	0.63	0	0	18.44	0	0	0	0	0	0	-3.58	-3.58
Inverter	MV1-12	365038	4905386	2	0	0	100.3	100.3	1	4973.89	3.25	0	84.93	0	0.64	0	0	18.54	0	0	0	0	0	0	-3.8	-3.8
Inverter	MV1-15	365315	4904994	2	0	0	100.3	100.3	1	4977.21	3.25	0	84.94	0	0.64	0	0	18.55	0	0	0	0	0	0	-3.81	-3.81
Inverter	MV1-5	364671	4905892	2	0	0	100.3	100.3	1	5046.17	3.25	0	85.06	0	0.65	0	0	18.65	0	0	0	0	0	0	-4.04	-4.04
Inverter	MV1-8	364788	4905647	2	0	0	100.3	100.3	1	5054.63	3.25	0	85.07	0	0.65	0	0	18.66	0	0	0	0	0	0	-4.07	-4.07
Inverter	MV2-1	365842	4906816	2	0	0	97.3	97.3	1	3604.39	3.25	0	82.14	0	0.47	0	0	16.41	0	0	0	0	0	0	-1.7	-1.7
Inverter	MV1-6	364477	4905835	2	0	0	100.3	100.3	1	5245.76	3.25	0	85.4	0	0.66	0	0	18.94	0	0	0	0	0	0	-4.68	-4.68
Inverter	MV1-9	364561	4905646	2	0	0	100.3	100.3	1	5255.06	3.25	0	85.41	0	0.66	0	0	18.95	0	0	0	0	0	0	-4.71	-4.71
Inverter	MV1-11	364655	4905414	2	0	0	100.3	100.3	1	5285.41	3.25	0	85.46	0	0.67	0	0	18.99	0	0	0	0	0	0	-4.81	-4.81
SubstationTransformer	W_ST	369711.17	4906112.3	2.5	0	0	92	92	1	2035.19	3.5	0	77.17	0	-0.16	0	0	4.43	0	0	0	0	0	0	10.53	10.53
Westbrook Inverter Enclosur	W_INV5	369719	4906574	2	0	0	89.1	89.1	1	1593.82	3.25	0	75.05	0	0.81	0	0	7.37	0	0	0	0	0	0	5.83	5.83
Westbrook Inverter Enclosur	W_INV6	369875	4906578	2	0	0	89.1	89.1	1	1646.12	3.25	0	75.33	0	0.83	0	0	7.46	0	0	0	0	0	0	5.45	5.45
Westbrook Inverter Enclosur	W_INV2	369374	4906388	2	0	0	89.1	89.1	1	1705.51	3.25	0	75.64	0	0.84	0	0	7.56	0	0	0	0	0	0	5.02	5.02
Westbrook Inverter Enclosur	W_INV7	369780	4906417	2	0	0	89.1	89.1	1	1762.07	3.25	0	75.92	0	0.85	0	0	7.65	0	0	0	0	0	0	4.63	4.63
Inverter	MV1-7	364925	4905782	2	0	0	97.3	97.3	1	4869.77	3.25	0	84.75	0	0.63	0	0	18.39	0	0	0	0	0	0	-6.46	-6.46
Inverter	MV1-10	365004	4905564	2	0	0	97.3	97.3	1	4908.69	3.25	0	84.82	0	0.63	0	0	18.45	0	0	0	0	0	0	-6.59	-6.59
Westbrook Inverter Enclosur	W_INV3	369508	4906164	2	0	0	89.1	89.1	1	1944.28	3.25	0	76.78	0	0.89	0	0	7.95	0	0	0	0	0	0	3.43	3.43
Inverter	MV1-14	365163	4905049	2	0	0	97.3	97.3	1	5064.02	3.25	0	85.09	0	0.65	0	0	18.67	0	0	0	0	0	0	-7.1	-7.1
Westbrook Inverter Enclosur	W_INV4	369673	4906164	2	0	0	89.1	89.1	1	1975.87	3.25	0	76.92	0	0.9	0	0	8.01	0	0	0	0	0	0	3.24	3.24
Inverter	MV1-13	364731	4905241	2	0	0	97.3	97.3	1	5310.62	3.25	0	85.5	0	0.67	0	0	19.03	0	0	0	0	0	0	-7.89	-7.89
Westbrook Inverter Enclosur	W_INV1	369409	4906578	2	0	0	86.1	86.1	1	1520.5	3.25	0	74.64	0	0.8	0	0	7.24	0	0	0	0	0	0	3.38	3.38
Inverter	MV6-4	370250	4906966	2	0	0	86.1	86.1	1	1524.94	3.25	0	74.67	0	0.8	0	0	7.25	0	0	0	0	0	0	3.34	3.34
Inverter	MV2-2	365977	4906654	2	0	0	89.1	89.1	1	3540.74	3.25	0	81.98	0	1.28	0	0	10.42	0	0	0	0	0	0	-4.63	-4.63

Gardiner Substation	G_Sub	366586.3	4903349.9	2.5	0	0	90.8	90.8	1	5416.89	4.25	0	85.68	0	1.75	2.26	0.38	9.1	0	0	0	0	0	0	-8.01	-8.01
Inverter	MV1-3	364440	4906039	2	0	0	89.1	89.1	1	5195.49	3.25	0	85.31	0	1.69	0	0	12.72	0	0	0	0	0	0	-10.67	-10.67
Westbrook Inverter Transfor	W_INVTR1	369403	4906578	2	0	0	78.2	78.2	1	1519.75	3.25	0	74.64	0	-2.21	0	0	0.96	0	0	0	0	0	0	4.85	4.85
Westbrook Inverter Transfor	W_INVTR5	369725	4906574	2	0	0	77.3	77.3	1	1595.73	3.25	0	75.06	0	-2.25	0	0	1	0	0	0	0	0	0	3.52	3.52
Westbrook Inverter Transfor	W_INVTR6	369881	4906578	2	0	0	77.3	77.3	1	1648.53	3.25	0	75.34	0	-2.27	0	0	1.03	0	0	0	0	0	0	3.24	3.24
Inverters	G_Inv2	366676.9	4903239.1	2	0	0	87.7	87.7	1	5471.42	3.25	0	85.76	0	2.89	0	0	6.43	0	0	0	0	0	0	-7.43	-7.43
Inverters	G_Inv1	366526.4	4903225.8	2	0	0	87.7	87.7	1	5554.47	3.25	0	85.89	0	2.9	0	0	6.52	0	0	0	0	0	0	-7.65	-7.65
Inverters	G_Inv4	366732.8	4903105	2	0	0	87.7	87.7	1	5565.4	3.25	0	85.91	0	2.9	0	0	6.53	0	0	0	0	0	0	-7.68	-7.68
Westbrook Inverter Transfor	W_INVTR2	369368	4906388	2	0	0	77.3	77.3	1	1704.96	3.25	0	75.63	0	-2.29	0	0	1.06	0	0	0	0	0	0	2.94	2.94
Inverters	G_Inv3	366583.7	4903091.4	2	0	0	87.7	87.7	1	5645.51	3.25	0	86.03	0	2.9	0	0	6.61	0	0	0	0	0	0	-7.89	-7.89
Inverters	G_Inv6	366788.5	4902972	2	0	0	87.7	87.7	1	5660.64	3.25	0	86.06	0	2.9	0	0	6.63	0	0	0	0	0	0	-7.93	-7.93
Inverters	G_Inv5	366638.5	4902958.1	2	0	0	87.7	87.7	1	5738.97	3.25	0	86.18	0	2.91	0	0	6.71	0	0	0	0	0	0	-8.13	-8.13
Inverters	G_Inv8	366844.5	4902838.5	2	0	0	87.7	87.7	1	5758.26	3.25	0	86.21	0	2.91	0	0	6.73	0	0	0	0	0	0	-8.18	-8.18
Westbrook Inverter Transfor	W_INVTR7	369786	4906417	2	0	0	77.3	77.3	1	1764.01	3.25	0	75.93	0	-2.32	0	0	1.09	0	0	0	0	0	0	2.64	2.64
Inverters	G_Inv7	366694.6	4902824.7	2	0	0	87.7	87.7	1	5834.02	3.25	0	86.32	0	2.91	0	0	6.81	0	0	0	0	0	0	-8.38	-8.38
Inverters	G_Inv10	366900.7	4902704.8	2	0	0	87.7	87.7	1	5857.93	3.25	0	86.35	0	2.91	0	0	6.83	0	0	0	0	0	0	-8.44	-8.44
Inverters	G_Inv9	366750.9	4902691.8	2	0	0	87.7	87.7	1	5930.54	3.25	0	86.46	0	2.91	0	0	6.91	0	0	0	0	0	0	-8.62	-8.62
Westbrook Inverter Transfor	W_INVTR3	369514	4906164	2	0	0	77.3	77.3	1	1945.19	3.25	0	76.78	0	-2.38	0	0	1.18	0	0	0	0	0	0	1.77	1.77
Westbrook Inverter Transfor	W_INVTR4	369679	4906164	2	0	0	77.3	77.3	1	1977.27	3.25	0	76.92	0	-2.4	0	0	1.19	0	0	0	0	0	0	1.62	1.62
Inverter Transformer	MV6-1 T	370230	4907364	2	0	0	69.4	69.4	1	1245.49	3.25	0	72.91	0	1.85	0	0	4.13	0	0	0	0	0	0	-9.54	-9.54
Inverter Transformer	MV6-4 T	370244	4906966	2	0	0	69.4	69.4	1	1520.87	3.25	0	74.64	0	1.98	0	0	4.46	0	0	0	0	0	0	-11.73	-11.73
Inverter Transformer	MV4-15 T	369170	4908481	2	0	0	56.1	56.1	1	397.49	3.25	0	62.99	0	-0.11	0	0	3.2	0	0	0	0	0	0	-10.01	-10.01
Inverter Transformer	MV4-14 T	369182	4908507	2	0	0	56.1	56.1	1	422.21	3.25	0	63.51	0	-0.12	0	0	3.29	0	0	0	0	0	0	-10.62	-10.62
Inverter Transformer	MV4-13 T	369057	4908605	2	0	0	56.1	56.1	1	542.49	3.25	0	65.69	0	-0.11	0	0	3.68	0	0	0	0	0	0	-13.2	-13.2
Inverter Transformer	MV3-2 T	368677	4907928	2	0	0	56.1	56.1	1	560.95	3.25	0	65.98	0	-0.11	0	0	3.74	0	0	0	0	0	0	-13.55	-13.55
Inverter Transformer	MV3-8 T	368685	4907712	2	0	0	56.1	56.1	1	648.9	3.25	0	67.24	0	-0.09	0	0	3.99	0	0	0	0	0	0	-15.09	-15.09
Inverter Transformer	MV3-4 T	368507	4907925	2	0	0	56.1	56.1	1	726.3	3.25	0	68.22	0	-0.07	0	0	4.2	0	0	0	0	0	0	-16.29	-16.29
Inverter Transformer	MV4-12 T	369049	4908803	2	0	0	56.1	56.1	1	735.92	3.25	0	68.34	0	-0.07	0	0	4.23	0	0	0	0	0	0	-16.44	-16.44
Inverter Transformer	MV4-11 T	369269	4908855	2	0	0	56.1	56.1	1	770.78	3.25	0	68.74	0	-0.06	0	0	4.32	0	0	0	0	0	0	-16.94	-16.94
Inverter Transformer	MV4-10 T	369307	4908858	2	0	0	56.1	56.1	1	777.34	3.25	0	68.81	0	-0.06	0	0	4.34	0	0	0	0	0	0	-17.03	-17.03
Inverter Transformer	MV2-1 T	365836	4906816	2	0	0	69.4	69.4	1	3610.01	3.25	0	82.15	0	2.68	0	0	6.38	0	0	0	0	0	0	-21.86	-21.86
Inverter Transformer	MV3-9 T	368517	4907703	2	0	0	56.1	56.1	1	796.4	3.25	0	69.02	0	-0.05	0	0	4.39	0	0	0	0	0	0	-17.3	-17.3
Inverter Transformer	MV3-14 T	368678	4907498	2	0	0	56.1	56.1	1	796.52	3.25	0	69.02	0	-0.05	0	0	4.39	0	0	0	0	0	0	-17.3	-17.3
Inverter Transformer	MV5-6 T	369987	4908507	2	0	0	56.1	56.1	1	879.11	3.25	0	69.88	0	-0.03	0	0	4.59	0	0	0	0	0	0	-18.39	-18.39
Inverter Transformer	MV3-5 T	368335	4907843	2	0	0	56.1	56.1	1	913.16	3.25	0	70.21	0	-0.02	0	0	4.68	0	0	0	0	0	0	-18.81	-18.81
Inverter Transformer	MV4-8 T	369262	4909001	2	0	0	56.1	56.1	1	916.1	3.25	0	70.24	0	-0.02	0	0	4.69	0	0	0	0	0	0	-18.85	-18.85
Inverter Transformer	MV4-9 T	369284	4909001	2	0	0	56.1	56.1	1	917.49	3.25	0	70.25	0	-0.02	0	0	4.69	0	0	0	0	0	0	-18.87	-18.87
Inverter Transformer	MV4-7 T	369040	4909001	2	0	0	56.1	56.1	1	931.53	3.25	0	70.38	0	-0.01	0	0	4.72	0	0	0	0	0	0	-19.04	-19.04
Inverter Transformer	MV3-16 T	368509	4907475	2	0	0	56.1	56.1	1	933.9	3.25	0	70.41	0	-0.01	0	0	4.73	0	0	0	0	0	0	-19.07	-19.07
Inverter Transformer	MV3-20 T	368683	4907317	2	0	0	56.1	56.1	1	935.28	3.25	0	70.42	0	-0.01	0	0	4.73	0	0	0	0	0	0	-19.08	-19.08
Inverter Transformer	MV3-11 T	368340	4907662	2	0	0	56.1	56.1	1	972.54	3.25	0	70.76	0	0	0	0	4.82	0	0	0	0	0	0	-19.53	-19.53
Inverter Transformer	MV5-5 T	370021	4908690	2	0	0	56.1	56.1	1	1006.98	3.25	0	71.06	0	0.01	0	0	4.91	0	0	0	0	0	0	-19.92	-19.92
Inverter Transformer	MV1-7 T	364919	4905782	2	0	0	69.4	69.4	1	4875.06	3.25	0	84.76	0	2.99	0	0	7.3	0	0	0	0	0	0	-25.69	-25.69
Inverter Transformer	MV3-15 T	368351	4907477	2	0	0	56.1	56.1	1	1057.28	3.25	0	71.48	0	0.03	0	0	5.02	0	0	0	0	0	0	-20.48	-20.48
Inverter Transformer	MV1-10 T	365010	4905564	2	0	0	69.4	69.4	1	4903.54	3.25	0	84.81	0	2.99	0	0	7.32	0	0	0	0	0	0	-25.77	-25.77
Inverter Transformer	MV3-1 T	368150	4907976	2	0	0	56.1	56.1	1	1070.88	3.25	0	71.59	0	0.04	0	0	5.06	0	0	0	0	0	0	-20.63	-20.63
Inverter Transformer	MV3-6 T	368156	4907834	2	0	0	56.1	56.1	1	1088.79	3.25	0	71.74	0	0.04	0	0	5.1	0	0	0	0	0	0	-20.82	-20.82
Inverter Transformer	MV3-22 T	368661	4907142	2	0	0	56.1	56.1	1	1094.75	3.25	0	71.79	0	0.05	0	0	5.11	0	0	0	0	0	0	-20.89	-20.89
Inverter Transformer	MV1-14 T	365157	4905049	2	0	0	69.4	69.4	1	5068.82	3.25	0	85.1	0	3.03	0	0	7.43	0	0	0	0	0	0	-26.2	-26.2
Inverter Transformer	MV5-2 T	370011	4908853	2	0	0	56.1	56.1	1	1105.19	3.25	0	71.87	0	0.05	0	0	5.14	0	0	0	0	0	0	-21	-21
Inverter Transformer	MV4-6 T	369249	4909192	2	0	0	56.1	56.1	1	1106.42	3.25	0	71.88	0	0.05	0	0	5.14	0	0	0	0	0	0	-21.01	-21.01
Inverter Transformer	MV4-5 T	369283	4909199	2	0	0	56.1	56.1	1	1114.97	3.25	0	71.95	0	0.05	0	0	5.16	0	0	0	0	0	0	-21.1	-21.1
Inverter Transformer	MV4-4 T	369033	4909199	2	0	0	56.1	56.1	1	1127.72	3.25	0	72.04	0	0.06	0	0	5.19	0	0	0	0	0	0	-21.23	-21.23
Inverter Transformer	MV3-10 T	368162	4907669	2	0	0	56.1	56.1	1	1132.79	3.25	0	72.08	0	0.06	0	0	5.2	0	0	0	0	0	0	-21.28	-21.28
Inverter Transformer	MV3-19 T	368352	4907347	2	0	0	56.1	56.1	1	1136.39	3.25	0	72.11	0	0.06	0	0	5.21	0	0	0	0	0	0	-21.32	-21.32
Inverter Transformer	MV3-21 T	368484	4907206	2	0	0	56.1	56.1	1	1144.22	3.25	0	72.17	0	0.06	0	0	5.23	0	0	0	0	0	0	-21.4	-21.4
Inverter Transformer	MV1-13 T	364725	4905241	2	0	0	69.4	69.4	1	5315.68	3.25	0	85.51	0	3.07	0	0	7.59	0	0	0	0	0	0	-26.82	-26.82
Inverter Transformer	MV6-2 T	370091	4907339	2	0	0	56.1	56.1	1	1151.17	3.25	0	72.22	0	0.07	0	0	5.24	0	0	0	0	0	0	-21.47	-21.47
Inverter Transformer	MV3-17 T	368183	4907472	2	0	0	56.1	56.1	1	1201.07	3.25	0	72.59	0	0.08	0	0	5.36	0	0	0	0	0	0	-21.97	-21.97
Inverter Transformer	MV5-4 T	370330	4908707	2	0	0	56.1	56.1	1	1276.05	3.25	0	73.12	0	0.11	0	0	5.53	0	0	0	0	0	0	-22.7	-22.7
Inverter Transformer	MV5-3 T	370237	4908851	2	0	0	56.1	56.1	1	1276.38	3.25	0	73.12	0	0.11	0	0	5.53	0	0	0	0	0	0	-22.7	-22.7
Inverter Transformer	MV3-3 T	367944	4907927	2	0	0	56.1	56.1	1	1281.12	3.25	0	73.15	0	0.11	0	0	5.54	0	0	0	0	0	0	-22.75	-22.75
Inverter Transformer	MV3-7 T	367951	4907754	2	0	0	56.1	56.1	1	1307.1	3.25	0	73.33	0	0.12	0	0	5.6	0	0	0	0	0	0	-22.99	-22.99
Inverter Transformer	MV4-3 T	369234	4909397	2	0	0	56.1	56.1	1	1311.04	3.25	0	73.35	0	0.13	0	0	5.61	0	0	0	0	0	0	-23.02	-23.02
Inverter Transformer	MV4-2 T	369267	4909397	2	0	0	56.1	56.1	1	1311.93	3.25	0	73.36	0	0.13	0	0	5.61	0	0	0	0	0	0	-23.03	-23.03
Inverter Transformer	MV5-1 T	370015	4909142	2	0	0	56.1	56.1	1	1324.62	3.25	0	73.44	0	0.13	0	0	5.64	0	0	0	0	0	0	-23.15	-23.15
Inverter Transformer	MV4-1 T	369017	4909397	2	0	0	56.1	56.1	1	1325.8	3.25	0	73.45	0	0.13	0	0	5.64	0	0	0	0	0	0	-23.16	-23.16
Inverter Transformer	MV3-13 T	367958	4907577	2	0	0	56.1	56.1	1	1356.37	3.25	0	73.65	0	0.14	0	0	5.71	0	0	0	0	0	0	-23.44	-23.44
Inverter Transformer	MV6-3 T	370202	4907140	2	0	0	56.1	56.1	1	1367.07	3.25	0	73.72	0	0.15	0	0	5.73	0	0	0	0	0	0	-23.53	-23.53
Inverter Transformer	MV3-18 T	367757	4907412	2	0	0	56.1	56.1	1	1606.48	3.25	0	75.12	0	0.24	0	0	6.24	0	0	0	0	0	0	-25.54	-25.54
Inverter Transformer	MV3-12 T	367674	4907594	2	0	0	56.1	56.1	1	1617.86	3.25	0	75.18	0	0.25	0	0	6.27	0	0	0	0	0	0	-25.63	-25.63
Line Reactor	NGR	369421	4908787.5	5	0	0	45.4	45.4	1	730.97	5.25	0	68.28	0	3.4	1.52	0.11	0.3	0	0	0	0	0	0	-28.14	-28.14
Inverter Transformer	MV2-2 T	365982	4906654	2	0	0	56.1	56.1	1	3536.17	3.25	0	81.97	0	1.05	0	0	9.74	0	0	0	0	0	0	-36.71	-36.71
Inverter Transformer	MV2-3 T	365814	4906641	2	0	0	56.1	56.1	1	3695.47	3.25	0	82.35	0	1.12	0	0	9.99	0	0	0	0	0	0	-37.41	-37.41

	Inverter Transformer	MV2-4 T	365590	4906628	2	0	0	56.1	56.1	1	3907.45	3.25	0	82.84	0	1.21	0	0	10.32	0	0	0	0	0	0	-38.3	-38.3
	Inverter Transformer	MV1-1 T	364721	4906166	2	0	0	56.1	56.1	1	4887.19	3.25	0	84.78	0	1.58	0	0	11.7	0	0	0	0	0	0	-42.01	-42.01
	Inverter Transformer	MV1-2 T	364759	4906063	2	0	0	56.1	56.1	1	4893.94	3.25	0	84.79	0	1.59	0	0	11.71	0	0	0	0	0	0	-42.04	-42.04
	Inverter Transformer	MV1-4 T	364821	4905918	2	0	0	56.1	56.1	1	4899.97	3.25	0	84.8	0	1.59	0	0	11.72	0	0	0	0	0	0	-42.06	-42.06
	Inverter Transformer	MV1-12 T	365044	4905386	2	0	0	56.1	56.1	1	4968.85	3.25	0	84.93	0	1.61	0	0	11.81	0	0	0	0	0	0	-42.29	-42.29
	Inverter Transformer	MV1-15 T	365309	4904994	2	0	0	56.1	56.1	1	4981.92	3.25	0	84.95	0	1.62	0	0	11.83	0	0	0	0	0	0	-42.34	-42.34
	Inverter Transformer	MV1-5 T	364676	4905892	2	0	0	56.1	56.1	1	5041.67	3.25	0	85.05	0	1.64	0	0	11.91	0	0	0	0	0	0	-42.54	-42.54
	Inverter Transformer	MV1-8 T	364782	4905647	2	0	0	56.1	56.1	1	5059.89	3.25	0	85.08	0	1.65	0	0	11.93	0	0	0	0	0	0	-42.6	-42.6
	Inverter Transformer	MV1-3 T	364435	4906039	2	0	0	56.1	56.1	1	5200.09	3.25	0	85.32	0	1.7	0	0	12.12	0	0	0	0	0	0	-43.07	-43.07
	Inverter Transformer	MV1-6 T	364482	4905835	2	0	0	56.1	56.1	1	5241.24	3.25	0	85.39	0	1.71	0	0	12.17	0	0	0	0	0	0	-43.21	-43.21
	Inverter Transformer	MV1-9 T	364555	4905646	2	0	0	56.1	56.1	1	5260.38	3.25	0	85.42	0	1.72	0	0	12.19	0	0	0	0	0	0	-43.27	-43.27
	Inverter Transformer	MV1-11 T	364649	4905414	2	0	0	56.1	56.1	1	5290.59	3.25	0	85.47	0	1.73	0	0	12.23	0	0	0	0	0	0	-43.37	-43.37
Limit. Valu	0	0																								
Level D/N:	38.7298	38.7298																								

Receiver: Vacant Lot Receptor
ID: W-V13
X: 369146.5
Y: 4905545.7
Z: 4.5
Ground: 0

ISO	Description	ID	X	Y	Z	Ground	ReflOrd	LxT	LxN	L/A	Dist.	hm	Freq	Adiv	K0b	Agr	Abar	z	Aatm	Afol	Ahous	Cmet	CmetN	Dc	RL	LtotT	LtotN
	Sol_Luce Substation	S_Substation	369426	4908792	3.5	0	0	112.1	112.1	1	3258.31	5.25	0	81.26	0	0.37	3.32	0.35	6.34	0	0	0	0	0	0	20.79	20.79
	Inverter	MV3-21	368478	4907206	2	0	0	100.3	100.3	1	1789.83	3.25	0	76.06	0	0.07	0	0	13.01	0	0	0	0	0	0	11.18	11.18
	Inverter	MV3-20	368689	4907317	2	0	0	100.3	100.3	1	1829.43	3.25	0	76.25	0	0.08	0	0	13.09	0	0	0	0	0	0	10.89	10.89
	Inverter	MV6-3	370207	4907140	2	0	0	100.3	100.3	1	1914.8	3.25	0	76.64	0	0.1	0	0	13.28	0	0	0	0	0	0	10.28	10.28
	Inverter	MV3-19	368357	4907347	2	0	0	100.3	100.3	1	1966.72	3.25	0	76.87	0	0.12	0	0	13.39	0	0	0	0	0	0	9.93	9.93
	Inverter	MV3-14	368684	4907498	2	0	0	100.3	100.3	1	2006.34	3.25	0	77.05	0	0.13	0	0	13.48	0	0	0	0	0	0	9.66	9.66
	Inverter	MV6-2	370085	4907339	2	0	0	100.3	100.3	1	2024.03	3.25	0	77.12	0	0.14	0	0	13.51	0	0	0	0	0	0	9.54	9.54
	Inverter	MV3-16	368514	4907475	2	0	0	100.3	100.3	1	2030.34	3.25	0	77.15	0	0.14	0	0	13.53	0	0	0	0	0	0	9.5	9.5
	Inverter	MV3-15	368357	4907477	2	0	0	100.3	100.3	1	2086.44	3.25	0	77.39	0	0.15	0	0	13.64	0	0	0	0	0	0	9.13	9.13
	SubstationTransformer	W_ST	369711.17	4906112.3	2.5	0	0	92	92	1	799.91	3.5	0	69.06	0	-0.4	0	-0.1	2.1	0	0	0	0	0	0	21.21	21.21
	Inverter	MV3-17	368178	4907472	2	0	0	100.3	100.3	1	2156.07	3.25	0	77.67	0	0.17	0	0	13.78	0	0	0	0	0	0	8.68	8.68
	Inverter	MV3-8	368680	4907712	2	0	0	100.3	100.3	1	2215.96	3.25	0	77.91	0	0.19	0	0	13.91	0	0	0	0	0	0	8.31	8.31
	Inverter	MV3-9	368512	4907703	2	0	0	100.3	100.3	1	2248.68	3.25	0	78.04	0	0.2	0	0	13.97	0	0	0	0	0	0	8.11	8.11
	Inverter	MV3-11	368346	4907662	2	0	0	100.3	100.3	1	2262.64	3.25	0	78.09	0	0.2	0	0	14	0	0	0	0	0	0	8.02	8.02
	Inverter	MV3-18	367752	4907412	2	0	0	100.3	100.3	1	2329.75	3.25	0	78.35	0	0.22	0	0	14.13	0	0	0	0	0	0	7.62	7.62
	Inverter	MV3-10	368167	4907669	2	0	0	100.3	100.3	1	2338.34	3.25	0	78.38	0	0.22	0	0	14.15	0	0	0	0	0	0	7.57	7.57
	Inverter	MV3-13	367963	4907577	2	0	0	100.3	100.3	1	2350.93	3.25	0	78.42	0	0.22	0	0	14.17	0	0	0	0	0	0	7.49	7.49
	Inverter	MV3-6	368162	4907834	2	0	0	100.3	100.3	1	2491.1	3.25	0	78.93	0	0.26	0	0	14.44	0	0	0	0	0	0	6.69	6.69
	Inverter	MV3-7	367945	4907754	2	0	0	100.3	100.3	1	2514	3.25	0	79.01	0	0.26	0	0	14.48	0	0	0	0	0	0	6.56	6.56
	Inverter	MV3-12	367668	4907594	2	0	0	100.3	100.3	1	2526.16	3.25	0	79.05	0	0.26	0	0	14.51	0	0	0	0	0	0	6.49	6.49
	Westbrook Inverter Enclosur	W_INV3	369508	4906164	2	0	0	89.1	89.1	1	716.23	3.25	0	68.1	0	0.62	0	0	5.74	0	0	0	0	0	0	14.6	14.6
	Inverter	MV3-3	367939	4907927	2	0	0	100.3	100.3	1	2669.95	3.25	0	79.53	0	0.29	0	0	14.78	0	0	0	0	0	0	5.71	5.71
	Westbrook Inverter Enclosur	W_INV4	369673	4906164	2	0	0	89.1	89.1	1	812.1	3.25	0	69.19	0	0.64	0	0	5.95	0	0	0	0	0	0	13.28	13.28
	Inverter	MV6-1	370235	4907364	2	0	0	97.3	97.3	1	2119.21	3.25	0	77.52	0	0.16	0	0	13.71	0	0	0	0	0	0	5.92	5.92
	Westbrook Inverter Enclosur	W_INV2	369374	4906388	2	0	0	89.1	89.1	1	872.49	3.25	0	69.82	0	0.66	0	0	6.07	0	0	0	0	0	0	12.52	12.52
	Inverter	MV5-5	370015	4908690	2	0	0	100.3	100.3	1	3262.04	3.25	0	81.27	0	0.41	0	0	15.83	0	0	0	0	0	0	2.8	2.8
	Inverter	MV4-11	369264	4908855	2	0	0	100.3	100.3	1	3311.39	3.25	0	81.4	0	0.42	0	0	15.91	0	0	0	0	0	0	2.58	2.58
	Inverter	MV4-10	369312	4908858	2	0	0	100.3	100.3	1	3316.43	3.25	0	81.41	0	0.42	0	0	15.92	0	0	0	0	0	0	2.56	2.56
	Inverter	MV5-4	370324	4908707	2	0	0	100.3	100.3	1	3373.47	3.25	0	81.56	0	0.43	0	0	16.02	0	0	0	0	0	0	2.3	2.3
	Inverter	MV5-2	370006	4908853	2	0	0	100.3	100.3	1	3417.16	3.25	0	81.67	0	0.44	0	0	16.09	0	0	0	0	0	0	2.11	2.11
	Inverter	MV4-8	369256	4909001	2	0	0	100.3	100.3	1	3457.04	3.25	0	81.77	0	0.44	0	0	16.16	0	0	0	0	0	0	1.93	1.93
	Inverter	MV4-7	369035	4909001	2	0	0	100.3	100.3	1	3457.1	3.25	0	81.77	0	0.44	0	0	16.16	0	0	0	0	0	0	1.93	1.93
	Inverter	MV4-9	369289	4909001	2	0	0	100.3	100.3	1	3458.24	3.25	0	81.78	0	0.44	0	0	16.16	0	0	0	0	0	0	1.93	1.93
	Inverter	MV5-3	370231	4908851	2	0	0	100.3	100.3	1	3478.67	3.25	0	81.83	0	0.45	0	0	16.2	0	0	0	0	0	0	1.84	1.84
	Inverter	MV2-3	365820	4906641	2	0	0	100.3	100.3	1	3502.18	3.25	0	81.89	0	0.45	0	0	16.23	0	0	0	0	0	0	1.74	1.74
	Inverter	MV4-6	369243	4909192	2	0	0	100.3	100.3	1	3647.58	3.25	0	82.24	0	0.47	0	0	16.48	0	0	0	0	0	0	1.12	1.12
	Inverter	MV4-4	369027	4909199	2	0	0	100.3	100.3	1	3655.25	3.25	0	82.26	0	0.48	0	0	16.49	0	0	0	0	0	0	1.09	1.09
	Inverter	MV4-5	369289	4909199	2	0	0	100.3	100.3	1	3656.08	3.25	0	82.26	0	0.48	0	0	16.49	0	0	0	0	0	0	1.09	1.09
	Inverter	MV5-1	370020	4909142	2	0	0	100.3	100.3	1	3700.86	3.25	0	82.37	0	0.48	0	0	16.56	0	0	0	0	0	0	0.9	0.9
	Inverter	MV2-4	365586	4906624	2	0	0	100.3	100.3	1	3720.2	3.25	0	82.41	0	0.49	0	0	16.6	0	0	0	0	0	0	0.82	0.82
	Inverter	MV4-3	369229	4909397	2	0	0	100.3	100.3	1	3852.18	3.25	0	82.71	0	0.51	0	0	16.81	0	0	0	0	0	0	0.28	0.28
	Inverter	MV4-2	369272	4909397	2	0	0	100.3	100.3	1	3853.35	3.25	0	82.72	0	0.51	0	0	16.81	0	0	0	0	0	0	0.28	0.28
	Inverter	MV4-1	369011	4909397	2	0	0	100.3	100.3	1	3853.68	3.25	0	82.72	0	0.51	0	0	16.81	0	0	0	0	0	0	0.28	0.28
	Inverter	MV1-15	365315	4904994	2	0	0	100.3	100.3	1	3871.02	3.25	0	82.76	0	0.51	0	0	16.84	0	0	0	0	0	0	0.21	0.21
	Westbrook Inverter Enclosur	W_INV7	369780	4906417	2	0	0	89.1	89.1	1	1077.26	3.25	0	71.65	0	0.7	0	0	6.46	0	0	0	0	0	0	10.25	10.25
	Inverter	MV1-12	365038	4905386	2	0	0	100.3	100.3	1	4111.6	3.25	0	83.28	0	0.54	0	0	17.23	0	0	0	0	0	0	-0.74	-0.74
	Westbrook Inverter Enclosur	W_INV5	369719	4906574	2	0	0	89.1	89.1	1	1176.93	3.25	0	72.42	0	0.72	0	0	6.64	0	0	0	0	0	0	9.28	9.28
	Inverter	MV1-4	364815	4905918	2	0	0	100.3	100.3	1	4347.47	3.25	0	83.76	0	0.57	0	0	17.6	0	0	0	0	0	0	-1.62	-1.62
	Inverter	MV1-8	364788	4905647	2	0	0	100.3	100.3	1	4359.68	3.25	0	83.79	0	0.57	0	0	17.61	0	0	0	0	0	0	-1.67	-1.67
	Inverter	MV1-2	364753	4906063	2	0	0	100.3	100.3	1	4423.85	3.25	0	83.92	0	0.58	0	0	17.71	0	0	0	0	0	0	-1.9	-1.9
	Inverter	MV1-1	364715	4906166	2	0	0	100.3	100.3	1	4474.7	3.25	0	84.02	0	0.59	0	0	17.79	0	0	0	0	0	0	-2.08	-2.08

Inverter	MV1-5	364671	4905892	2	0	0	100.3	100.3	1	4488.88	3.25	0	84.04	0	0.59	0	0	17.81	0	0	0	0	0	0	-2.13	-2.13
Inverter	MV1-11	364655	4905414	2	0	0	100.3	100.3	1	4493.43	3.25	0	84.05	0	0.59	0	0	17.82	0	0	0	0	0	0	-2.15	-2.15
Inverter	MV1-9	364561	4905646	2	0	0	100.3	100.3	1	4586.6	3.25	0	84.23	0	0.6	0	0	17.96	0	0	0	0	0	0	-2.48	-2.48
Westbrook Inverter Enclosur	W_INV6	369875	4906578	2	0	0	89.1	89.1	1	1263.47	3.25	0	73.03	0	0.74	0	0	6.8	0	0	0	0	0	0	8.49	8.49
Inverter	MV1-6	364477	4905835	2	0	0	100.3	100.3	1	4678.45	3.25	0	84.4	0	0.61	0	0	18.1	0	0	0	0	0	0	-2.8	-2.8
DSTATCOM - 10 MVAR #2	DSAT2	369403	4908757	2.5	0	0	96.6	96.6	1	3221.53	3.5	0	81.16	0	3.45	0	0	2.42	0	0	0	0	0	0	9.59	9.59
DSTATCOM - 10 MVAR #1	DSAT1	369437	4908757	2.5	0	0	96.6	96.6	1	3224.41	3.5	0	81.17	0	3.45	0	0	2.42	0	0	0	0	0	0	9.58	9.58
Inverter	MV2-1	365842	4906816	2	0	0	97.3	97.3	1	3540.25	3.25	0	81.98	0	0.46	0	0	16.3	0	0	0	0	0	0	-1.42	-1.42
Westbrook Inverter Enclosur	W_INV1	369409	4906578	2	0	0	86.1	86.1	1	1065.16	3.25	0	71.55	0	0.7	0	0	6.44	0	0	0	0	0	0	7.37	7.37
Inverter	MV1-14	365163	4905049	2	0	0	97.3	97.3	1	4014.35	3.25	0	83.07	0	0.53	0	0	17.07	0	0	0	0	0	0	-3.36	-3.36
Inverter	MV1-10	365004	4905564	2	0	0	97.3	97.3	1	4142.54	3.25	0	83.35	0	0.55	0	0	17.27	0	0	0	0	0	0	-3.85	-3.85
Inverter	MV1-7	364925	4905782	2	0	0	97.3	97.3	1	4228.11	3.25	0	83.52	0	0.56	0	0	17.41	0	0	0	0	0	0	-4.18	-4.18
Inverter	MV3-22	368656	4907142	2	0	0	89.1	89.1	1	1669.96	3.25	0	75.45	0	0.83	0	0	7.5	0	0	0	0	0	0	5.28	5.28
Inverter	MV1-13	364731	4905241	2	0	0	97.3	97.3	1	4426	3.25	0	83.92	0	0.58	0	0	17.72	0	0	0	0	0	0	-4.91	-4.91
Inverter	MV3-2	368671	4907928	2	0	0	89.1	89.1	1	2429.29	3.25	0	78.71	0	1.01	0	0	8.73	0	0	0	0	0	0	0.61	0.61
Inverter	MV3-5	368340	4907843	2	0	0	89.1	89.1	1	2434.76	3.25	0	78.73	0	1.01	0	0	8.74	0	0	0	0	0	0	0.58	0.58
Inverter	MV3-4	368502	4907925	2	0	0	89.1	89.1	1	2465.05	3.25	0	78.84	0	1.02	0	0	8.79	0	0	0	0	0	0	0.41	0.41
Inverter	MV6-4	370250	4906966	2	0	0	86.1	86.1	1	1798.6	3.25	0	76.1	0	0.86	0	0	7.71	0	0	0	0	0	0	1.39	1.39
Inverter	MV3-1	368156	4907976	2	0	0	89.1	89.1	1	2624.4	3.25	0	79.38	0	1.06	0	0	9.04	0	0	0	0	0	0	-0.42	-0.42
Gardiner Substation	G_Sub	366586.3	4903349.9	2.5	0	0	90.8	90.8	1	3372.86	4.25	0	81.56	0	1.2	2.92	0.33	6.5	0	0	0	0	0	0	-1.41	-1.41
Westbrook Inverter Transfor	W_INVTR3	369514	4906164	2	0	0	77.3	77.3	1	719.28	3.25	0	68.14	0	-1.74	0	0	0.51	0	0	0	0	0	0	10.43	10.43
Inverter	MV4-15	369176	4908481	2	0	0	89.1	89.1	1	2935.45	3.25	0	80.35	0	1.13	0	0	9.52	0	0	0	0	0	0	-1.95	-1.95
Inverter	MV4-14	369176	4908507	2	0	0	89.1	89.1	1	2961.45	3.25	0	80.43	0	1.14	0	0	9.56	0	0	0	0	0	0	-2.07	-2.07
Fixed Reactor Bank 1	FRB1	369378	4908755	6	0	0	89.8	89.8	1	3217.64	5.25	0	81.15	0	-0.84	0	0	6.28	0	0	0	0	0	0	3.19	3.19
Fixed Reactor Bank 2	FRB2	369464	4908755	6	0	0	89.8	89.8	1	3224.97	5.25	0	81.17	0	-0.84	0	0	6.29	0	0	0	0	0	0	3.16	3.16
Inverter	MV4-13	369051	4908605	2	0	0	89.1	89.1	1	3060.79	3.25	0	80.72	0	1.16	0	0	9.71	0	0	0	0	0	0	-2.53	-2.53
Inverter	MV5-6	369982	4908507	2	0	0	89.1	89.1	1	3076.91	3.25	0	80.76	0	1.17	0	0	9.73	0	0	0	0	0	0	-2.6	-2.6
Westbrook Inverter Transfor	W_INVTR4	369679	4906164	2	0	0	77.3	77.3	1	816	3.25	0	69.23	0	-1.81	0	0	0.57	0	0	0	0	0	0	9.35	9.35
Inverter	MV4-12	369043	4908803	2	0	0	89.1	89.1	1	3258.94	3.25	0	81.26	0	1.21	0	0	10.01	0	0	0	0	0	0	-3.42	-3.42
Westbrook Inverter Transfor	W_INVTR2	369368	4906388	2	0	0	77.3	77.3	1	870.94	3.25	0	69.8	0	-1.85	0	0	0.6	0	0	0	0	0	0	8.79	8.79
Inverter	MV2-2	365977	4906654	2	0	0	89.1	89.1	1	3357.69	3.25	0	81.52	0	1.23	0	0	10.15	0	0	0	0	0	0	-3.85	-3.85
Westbrook Inverter Transfor	W_INVTR1	369403	4906578	2	0	0	78.2	78.2	1	1063.69	3.25	0	71.54	0	-1.97	0	0	0.72	0	0	0	0	0	0	7.96	7.96
Inverters	G_Inv2	366676.9	4903239.1	2	0	0	87.7	87.7	1	3379.25	3.25	0	81.58	0	2.74	0	0	4.2	0	0	0	0	0	0	-0.85	-0.85
Inverters	G_Inv4	366732.8	4903105	2	0	0	87.7	87.7	1	3432.63	3.25	0	81.71	0	2.74	0	0	4.25	0	0	0	0	0	0	-1.05	-1.05
Inverters	G_Inv6	366788.5	4902972	2	0	0	87.7	87.7	1	3490.57	3.25	0	81.86	0	2.75	0	0	4.32	0	0	0	0	0	0	-1.26	-1.26
Inverters	G_Inv1	366526.4	4903225.8	2	0	0	87.7	87.7	1	3499.55	3.25	0	81.88	0	2.75	0	0	4.33	0	0	0	0	0	0	-1.3	-1.3
Westbrook Inverter Transfor	W_INVTR7	369786	4906417	2	0	0	77.3	77.3	1	1080.8	3.25	0	71.67	0	-1.98	0	0	0.73	0	0	0	0	0	0	6.92	6.92
Inverters	G_Inv3	366583.7	4903091.4	2	0	0	87.7	87.7	1	3548.46	3.25	0	82	0	2.75	0	0	4.38	0	0	0	0	0	0	-1.47	-1.47
Inverters	G_Inv8	366844.5	4902838.5	2	0	0	87.7	87.7	1	3553.61	3.25	0	82.01	0	2.75	0	0	4.39	0	0	0	0	0	0	-1.49	-1.49
Inverters	G_Inv5	366638.5	4902958.1	2	0	0	87.7	87.7	1	3603.57	3.25	0	82.13	0	2.76	0	0	4.44	0	0	0	0	0	0	-1.67	-1.67
Inverters	G_Inv10	366900.7	4902704.8	2	0	0	87.7	87.7	1	3621.37	3.25	0	82.18	0	2.76	0	0	4.46	0	0	0	0	0	0	-1.74	-1.74
Inverters	G_Inv7	366694.6	4902824.7	2	0	0	87.7	87.7	1	3662.74	3.25	0	82.28	0	2.76	0	0	4.51	0	0	0	0	0	0	-1.89	-1.89
Inverters	G_Inv9	366750.9	4902691.8	2	0	0	87.7	87.7	1	3726.08	3.25	0	82.43	0	2.77	0	0	4.58	0	0	0	0	0	0	-2.11	-2.11
Westbrook Inverter Transfor	W_INVTR5	369725	4906574	2	0	0	77.3	77.3	1	1179.86	3.25	0	72.44	0	-2.04	0	0	0.78	0	0	0	0	0	0	6.16	6.16
Inverter	MV1-3	364440	4906039	2	0	0	89.1	89.1	1	4732.28	3.25	0	84.5	0	1.57	0	0	12.1	0	0	0	0	0	0	-9.12	-9.12
Westbrook Inverter Transfor	W_INVTR6	369881	4906578	2	0	0	77.3	77.3	1	1266.94	3.25	0	73.06	0	-2.09	0	0	0.83	0	0	0	0	0	0	5.54	5.54
Inverter Transformer	MV6-4 T	370244	4906966	2	0	0	69.4	69.4	1	1794.93	3.25	0	76.08	0	2.1	0	0	4.76	0	0	0	0	0	0	-13.58	-13.58
Inverter Transformer	MV6-1 T	370230	4907364	2	0	0	69.4	69.4	1	2116.65	3.25	0	77.51	0	2.22	0	0	5.08	0	0	0	0	0	0	-15.46	-15.46
Inverter Transformer	MV2-1 T	365836	4906816	2	0	0	69.4	69.4	1	3545.85	3.25	0	81.99	0	2.67	0	0	6.33	0	0	0	0	0	0	-21.64	-21.64
Inverter Transformer	MV1-14 T	365157	4905049	2	0	0	69.4	69.4	1	4020.3	3.25	0	83.09	0	2.79	0	0	6.69	0	0	0	0	0	0	-23.22	-23.22
Inverter Transformer	MV1-10 T	365010	4905564	2	0	0	69.4	69.4	1	4136.54	3.25	0	83.33	0	2.82	0	0	6.78	0	0	0	0	0	0	-23.58	-23.58
Inverter Transformer	MV1-7 T	364919	4905782	2	0	0	69.4	69.4	1	4234.1	3.25	0	83.54	0	2.84	0	0	6.85	0	0	0	0	0	0	-23.88	-23.88
Inverter Transformer	MV1-13 T	364725	4905241	2	0	0	69.4	69.4	1	4431.99	3.25	0	83.93	0	2.89	0	0	6.99	0	0	0	0	0	0	-24.46	-24.46
Inverter Transformer	MV3-22 T	368661	4907142	2	0	0	56.1	56.1	1	1668.5	3.25	0	75.45	0	0.27	0	0	6.37	0	0	0	0	0	0	-26.03	-26.03
Inverter Transformer	MV3-21 T	368484	4907206	2	0	0	56.1	56.1	1	1787.6	3.25	0	76.05	0	0.32	0	0	6.62	0	0	0	0	0	0	-26.92	-26.92
Inverter Transformer	MV3-20 T	368683	4907317	2	0	0	56.1	56.1	1	1830.94	3.25	0	76.25	0	0.33	0	0	6.71	0	0	0	0	0	0	-27.23	-27.23
Inverter Transformer	MV6-3 T	370202	4907140	2	0	0	56.1	56.1	1	1912.04	3.25	0	76.63	0	0.37	0	0	6.87	0	0	0	0	0	0	-27.81	-27.81
Inverter Transformer	MV3-19 T	368352	4907347	2	0	0	56.1	56.1	1	1968.74	3.25	0	76.88	0	0.39	0	0	6.98	0	0	0	0	0	0	-28.2	-28.2
Inverter Transformer	MV3-14 T	368678	4907498	2	0	0	56.1	56.1	1	2007.73	3.25	0	77.05	0	0.41	0	0	7.06	0	0	0	0	0	0	-28.46	-28.46
Inverter Transformer	MV6-2 T	370091	4907339	2	0	0	56.1	56.1	1	2026.82	3.25	0	77.14	0	0.42	0	0	7.1	0	0	0	0	0	0	-28.59	-28.59
Inverter Transformer	MV3-16 T	368509	4907475	2	0	0	56.1	56.1	1	2031.9	3.25	0	77.16	0	0.42	0	0	7.11	0	0	0	0	0	0	-28.62	-28.62
Inverter Transformer	MV3-15 T	368351	4907477	2	0	0	56.1	56.1	1	2088.72	3.25	0	77.4	0	0.44	0	0	7.22	0	0	0	0	0	0	-29	-29
Inverter Transformer	MV3-17 T	368183	4907472	2	0	0	56.1	56.1	1	2153.83	3.25	0	77.66	0	0.47	0	0	7.34	0	0	0	0	0	0	-29.42	-29.42
Inverter Transformer	MV3-8 T	368685	4907712	2	0	0	56.1	56.1	1	2214.91	3.25	0	77.91	0	0.49	0	0	7.46	0	0	0	0	0	0	-29.8	-29.8
Inverter Transformer	MV3-9 T	368517	4907703	2	0	0	56.1	56.1	1	2247.27	3.25	0	78.03	0	0.51	0	0	7.52	0	0	0	0	0	0	-30	-30
Inverter Transformer	MV3-11 T	368340	4907662	2	0	0	56.1	56.1	1	2264.77	3.25	0	78.1	0	0.52	0	0	7.55	0	0	0	0	0	0	-30.11	-30.11
Inverter Transformer	MV3-18 T	367757	4907412	2	0	0	56.1	56.1	1	2326.76	3.25	0	78.34	0	0.54	0	0	7.67	0	0	0	0	0	0	-30.49	-30.49
Inverter Transformer	MV3-10 T	368162	4907669	2	0	0	56.1	56.1	1	2340.44	3.25	0	78.39	0	0.55	0	0	7.7	0	0	0	0	0	0	-30.57	-30.57
Inverter Transformer	MV3-13 T	367958	4907577	2	0	0	56.1	56.1	1	2353.45	3.25	0	78.43	0	0.55	0	0	7.72	0	0	0	0	0	0	-30.65	-30.65
Inverter Transformer	MV3-2 T	368677	4907928	2	0	0	56.1	56.1	1	2428.12	3.25	0	78.71	0	0.59	0	0	7.86	0	0	0	0	0	0	-31.09	-31.09
Inverter Transformer	MV3-5 T	368335	4907843	2	0	0	56.1	56.1	1	2436.42	3.25	0	78.74	0	0.59	0	0	7.87	0	0	0	0	0	0	-31.14	-31.14
Inverter Transformer	MV3-4 T	368507	4907925	2	0	0	56.1	56.1	1	2463.74	3.25	0	78.83	0	0.6	0	0	7.92	0	0	0	0	0	0	-31.3	-31.3
Inverter Transformer	MV3-6 T	368156	4907834	2	0	0	56.1	56.1	1	2493.47	3.25	0	78.94	0	0.61	0	0	7.98	0	0	0	0	0	0	-31.47	-31.47
Inverter Transformer	MV3-7 T	367951	4907754	2	0	0	56.1	56.1	1	2511.14	3.25	0	79	0	0.62	0	0	8.01	0	0	0	0	0	0	-31.57	-31.57

	Inverter Transformer	MV3-12 T	367674	4907594	2	0	0	56.1	56.1	1	2522.66	3.25	0	79.04	0	0.63	0	0	8.03	0	0	0	0	0	0	-31.64	-31.64
	Inverter Transformer	MV3-1 T	368150	4907976	2	0	0	56.1	56.1	1	2626.67	3.25	0	79.39	0	0.67	0	0	8.22	0	0	0	0	0	0	-32.22	-32.22
	Inverter Transformer	MV3-3 T	367944	4907927	2	0	0	56.1	56.1	1	2667.7	3.25	0	79.52	0	0.69	0	0	8.29	0	0	0	0	0	0	-32.44	-32.44
	Inverter Transformer	MV4-15 T	369170	4908481	2	0	0	56.1	56.1	1	2935.4	3.25	0	80.35	0	0.8	0	0	8.76	0	0	0	0	0	0	-33.86	-33.86
	Inverter Transformer	MV4-14 T	369182	4908507	2	0	0	56.1	56.1	1	2961.51	3.25	0	80.43	0	0.81	0	0	8.8	0	0	0	0	0	0	-33.99	-33.99
	Inverter Transformer	MV4-13 T	369057	4908605	2	0	0	56.1	56.1	1	3060.61	3.25	0	80.72	0	0.86	0	0	8.97	0	0	0	0	0	0	-34.48	-34.48
	Inverter Transformer	MV5-6 T	369987	4908507	2	0	0	56.1	56.1	1	3078.27	3.25	0	80.77	0	0.86	0	0	9	0	0	0	0	0	0	-34.57	-34.57
	Inverter Transformer	MV4-12 T	369049	4908803	2	0	0	56.1	56.1	1	3258.76	3.25	0	81.26	0	0.94	0	0	9.3	0	0	0	0	0	0	-35.44	-35.44
	Inverter Transformer	MV5-5 T	370021	4908690	2	0	0	56.1	56.1	1	3263.65	3.25	0	81.27	0	0.94	0	0	9.31	0	0	0	0	0	0	-35.46	-35.46
	Inverter Transformer	MV4-11 T	369269	4908855	2	0	0	56.1	56.1	1	3311.57	3.25	0	81.4	0	0.96	0	0	9.39	0	0	0	0	0	0	-35.69	-35.69
	Inverter Transformer	MV4-10 T	369307	4908858	2	0	0	56.1	56.1	1	3316.19	3.25	0	81.41	0	0.96	0	0	9.39	0	0	0	0	0	0	-35.71	-35.71
	Inverter Transformer	MV2-2 T	365982	4906654	2	0	0	56.1	56.1	1	3352.97	3.25	0	81.51	0	0.98	0	0	9.45	0	0	0	0	0	0	-35.88	-35.88
	Inverter Transformer	MV5-4 T	370330	4908707	2	0	0	56.1	56.1	1	3375.57	3.25	0	81.57	0	0.99	0	0	9.49	0	0	0	0	0	0	-35.99	-35.99
	Inverter Transformer	MV5-2 T	370011	4908853	2	0	0	56.1	56.1	1	3418.42	3.25	0	81.68	0	1.01	0	0	9.56	0	0	0	0	0	0	-36.18	-36.18
	Inverter Transformer	MV4-7 T	369040	4909001	2	0	0	56.1	56.1	1	3456.94	3.25	0	81.77	0	1.02	0	0	9.62	0	0	0	0	0	0	-36.36	-36.36
	Inverter Transformer	MV4-8 T	369262	4909001	2	0	0	56.1	56.1	1	3457.23	3.25	0	81.77	0	1.02	0	0	9.62	0	0	0	0	0	0	-36.36	-36.36
	Inverter Transformer	MV4-9 T	369284	4909001	2	0	0	56.1	56.1	1	3458.04	3.25	0	81.78	0	1.02	0	0	9.62	0	0	0	0	0	0	-36.36	-36.36
	Inverter Transformer	MV5-3 T	370237	4908851	2	0	0	56.1	56.1	1	3480.55	3.25	0	81.83	0	1.03	0	0	9.66	0	0	0	0	0	0	-36.46	-36.46
	Inverter Transformer	MV2-3 T	365814	4906641	2	0	0	56.1	56.1	1	3507.88	3.25	0	81.9	0	1.04	0	0	9.7	0	0	0	0	0	0	-36.59	-36.59
	Inverter Transformer	MV4-6 T	369249	4909192	2	0	0	56.1	56.1	1	3647.74	3.25	0	82.24	0	1.1	0	0	9.92	0	0	0	0	0	0	-37.2	-37.2
	Inverter Transformer	MV4-4 T	369033	4909199	2	0	0	56.1	56.1	1	3655.06	3.25	0	82.26	0	1.1	0	0	9.93	0	0	0	0	0	0	-37.23	-37.23
	Inverter Transformer	MV4-5 T	369283	4909199	2	0	0	56.1	56.1	1	3655.85	3.25	0	82.26	0	1.1	0	0	9.93	0	0	0	0	0	0	-37.24	-37.24
	Inverter Transformer	MV5-1 T	370015	4909142	2	0	0	56.1	56.1	1	3699.69	3.25	0	82.36	0	1.12	0	0	10	0	0	0	0	0	0	-37.43	-37.43
	Inverter Transformer	MV2-4 T	365590	4906628	2	0	0	56.1	56.1	1	3717.54	3.25	0	82.41	0	1.13	0	0	10.03	0	0	0	0	0	0	-37.5	-37.5
	Inverter Transformer	MV4-3 T	369234	4909397	2	0	0	56.1	56.1	1	3852.29	3.25	0	82.71	0	1.18	0	0	10.23	0	0	0	0	0	0	-38.07	-38.07
	Inverter Transformer	MV4-2 T	369267	4909397	2	0	0	56.1	56.1	1	3853.19	3.25	0	82.72	0	1.18	0	0	10.23	0	0	0	0	0	0	-38.08	-38.08
	Inverter Transformer	MV4-1 T	369017	4909397	2	0	0	56.1	56.1	1	3853.48	3.25	0	82.72	0	1.18	0	0	10.24	0	0	0	0	0	0	-38.08	-38.08
	Inverter Transformer	MV1-15 T	365309	4904994	2	0	0	56.1	56.1	1	3876.96	3.25	0	82.77	0	1.19	0	0	10.27	0	0	0	0	0	0	-38.18	-38.18
	Inverter Transformer	MV1-12 T	365044	4905386	2	0	0	56.1	56.1	1	4105.61	3.25	0	83.27	0	1.29	0	0	10.61	0	0	0	0	0	0	-39.11	-39.11
	Inverter Transformer	MV1-4 T	364821	4905918	2	0	0	56.1	56.1	1	4341.49	3.25	0	83.75	0	1.38	0	0	10.95	0	0	0	0	0	0	-40.02	-40.02
	Inverter Transformer	MV1-8 T	364782	4905647	2	0	0	56.1	56.1	1	4365.68	3.25	0	83.8	0	1.39	0	0	10.99	0	0	0	0	0	0	-40.12	-40.12
	Inverter Transformer	MV1-2 T	364759	4906063	2	0	0	56.1	56.1	1	4417.89	3.25	0	83.9	0	1.41	0	0	11.06	0	0	0	0	0	0	-40.31	-40.31
	Inverter Transformer	MV1-1 T	364721	4906166	2	0	0	56.1	56.1	1	4468.76	3.25	0	84	0	1.43	0	0	11.13	0	0	0	0	0	0	-40.5	-40.5
	Inverter Transformer	MV1-5 T	364676	4905892	2	0	0	56.1	56.1	1	4483.89	3.25	0	84.03	0	1.43	0	0	11.15	0	0	0	0	0	0	-40.56	-40.56
	Inverter Transformer	MV1-11 T	364649	4905414	2	0	0	56.1	56.1	1	4499.43	3.25	0	84.06	0	1.44	0	0	11.17	0	0	0	0	0	0	-40.62	-40.62
	Inverter Transformer	MV1-9 T	364555	4905646	2	0	0	56.1	56.1	1	4592.6	3.25	0	84.24	0	1.47	0	0	11.3	0	0	0	0	0	0	-40.96	-40.96
	Inverter Transformer	MV1-6 T	364482	4905835	2	0	0	56.1	56.1	1	4673.46	3.25	0	84.39	0	1.51	0	0	11.42	0	0	0	0	0	0	-41.25	-41.25
	Inverter Transformer	MV1-3 T	364435	4906039	2	0	0	56.1	56.1	1	4737.25	3.25	0	84.51	0	1.53	0	0	11.5	0	0	0	0	0	0	-41.48	-41.48
	Line Reactor	NGR	369421	4908787.5	5	0	0	45.4	45.4	1	3253.4	5.25	0	81.25	0	3.31	1.32	0.12	1.33	0	0	0	0	0	0	-41.86	-41.86
Limit. Valu	0	0																								
Level D/N:	27.9393	27.9393																								

Receiver: Vacant Lot Receptor
ID: W-V14
X: 369793.6
Y: 4908128.9
Z: 4.5
Ground: 0

ISO	Description	ID	X	Y	Z	Ground	ReflOrd	LxT	LxN	L/A	Dist.	hm	Freq	Adiv	K0b	Agr	Abar	z	Aatm	Afol	Ahous	Cmet	CmetN	Dc	RL	LtotT	LtotN
	Sol_Luce Substation	S_Substation	369426	4908792	3.5	0	0	112.1	112.1	1	758.18	5.24	0	68.6	0	-0.01	5.74	0.31	2.01	0	0	0	0	0	0	35.74	35.74
	Inverter	MV5-5	370015	4908690	2	0	0	100.3	100.3	1	603.21	3.25	0	66.61	0	-0.48	0	0	9.22	0	0	0	0	0	0	24.96	24.96
	Inverter	MV5-2	370006	4908853	2	0	0	100.3	100.3	1	754.61	3.25	0	68.55	0	-0.38	0	0	9.99	0	0	0	0	0	0	22.15	22.15
	Inverter	MV5-4	370324	4908707	2	0	0	100.3	100.3	1	784.56	3.25	0	68.89	0	-0.36	0	0	10.12	0	0	0	0	0	0	21.66	21.66
	Inverter	MV6-2	370085	4907339	2	0	0	100.3	100.3	1	841.94	3.25	0	69.51	0	-0.33	0	0	10.35	0	0	0	0	0	0	20.79	20.79
	Inverter	MV5-3	370231	4908851	2	0	0	100.3	100.3	1	844.25	3.25	0	69.53	0	-0.33	0	0	10.36	0	0	0	0	0	0	20.75	20.75
	Inverter	MV4-10	369312	4908858	2	0	0	100.3	100.3	1	873.8	3.25	0	69.83	0	-0.31	0	0	10.47	0	0	0	0	0	0	20.33	20.33
	Inverter	MV4-11	369264	4908855	2	0	0	100.3	100.3	1	898.72	3.25	0	70.07	0	-0.3	0	0	10.56	0	0	0	0	0	0	19.98	19.98
	Inverter	MV4-9	369289	4909001	2	0	0	100.3	100.3	1	1007.56	3.25	0	71.07	0	-0.24	0	0	10.94	0	0	0	0	0	0	18.55	18.55
	Inverter	MV4-8	369256	4909001	2	0	0	100.3	100.3	1	1024.49	3.25	0	71.21	0	-0.23	0	0	10.99	0	0	0	0	0	0	18.35	18.35
	Inverter	MV5-1	370020	4909142	2	0	0	100.3	100.3	1	1038.09	3.25	0	71.32	0	-0.23	0	0	11.03	0	0	0	0	0	0	18.18	18.18
	Inverter	MV6-3	370207	4907140	2	0	0	100.3	100.3	1	1071.83	3.25	0	71.6	0	-0.21	0	0	11.14	0	0	0	0	0	0	17.78	17.78
	DSTATCOM - 10 MVAR #1	DSAT1	369437	4908757	2.5	0	0	96.6	96.6	1	722.27	3.5	0	68.17	0	2.6	0	0	0.88	0	0	0	0	0	0	24.97	24.97
	DSTATCOM - 10 MVAR #2	DSAT2	369403	4908757	2.5	0	0	96.6	96.6	1	739.65	3.5	0	68.38	0	2.63	0	0	0.89	0	0	0	0	0	0	24.73	24.73
	Inverter	MV4-7	369035	4909001	2	0	0	100.3	100.3	1	1155.87	3.25	0	72.26	0	-0.17	0	0	11.4	0	0	0	0	0	0	16.83	16.83
	Inverter	MV4-5	369289	4909199	2	0	0	100.3	100.3	1	1183.11	3.25	0	72.46	0	-0.16	0	0	11.48	0	0	0	0	0	0	16.54	16.54
	Inverter	MV3-8	368680	4907712	2	0	0	100.3	100.3	1	1189.08	3.25	0	72.5	0	-0.16	0	0	11.49	0	0	0	0	0	0	16.47	16.47
	Inverter	MV4-6	369243	4909192	2	0	0	100.3	100.3	1	1197.23	3.25	0	72.56	0	-0.16	0	0	11.52	0	0	0	0	0	0	16.39	16.39
	Inverter	MV6-1	370235	4907364	2	0	0	97.3	97.3	1	883.13	3.25	0	69.92	0	-0.31	0	0	10.5	0	0	0	0	0	0	17.19	17.19
	Inverter	MV3-14	368684	4907498	2	0	0	100.3	100.3	1	1276.42	3.25	0	73.12	0	-0.12	0	0	11.74	0	0	0	0	0	0	15.57	15.57
	Inverter	MV4-4	369027	4909199	2	0	0	100.3	100.3	1	1316.36	3.25	0	73.39	0	-0.11	0	0	11.85	0	0	0	0	0	0	15.18	15.18
	Inverter	MV3-9	368512	4907703	2	0	0	100.3	100.3	1	1350.52	3.25	0	73.61	0	-0.09	0	0	11.94	0	0	0	0	0	0	14.85	14.85
	Inverter	MV3-20	368689	4907317	2	0	0	100.3	100.3	1	1370.89	3.25	0	73.74	0	-0.08	0	0	11.99	0	0	0	0	0	0	14.66	14.66
	Inverter	MV4-2	369272	4909397	2	0	0	100.3	100.3	1	1371.19	3.25	0	73.74	0	-0.08	0	0	12	0	0	0	0	0	0	14.66	14.66

Inverter	MV4-3	369229	4909397	2	0	0	100.3	100.3	1	1388.11	3.25	0	73.85	0	-0.08	0	0	12.04	0	0	0	0	0	0	14.5	14.5
Inverter	MV3-16	368514	4907475	2	0	0	100.3	100.3	1	1437	3.25	0	74.15	0	-0.06	0	0	12.17	0	0	0	0	0	0	14.05	14.05
Inverter	MV4-1	369011	4909397	2	0	0	100.3	100.3	1	1490.15	3.25	0	74.46	0	-0.04	0	0	12.3	0	0	0	0	0	0	13.58	13.58
Inverter	MV3-11	368346	4907662	2	0	0	100.3	100.3	1	1521.04	3.25	0	74.64	0	-0.03	0	0	12.38	0	0	0	0	0	0	13.32	13.32
Inverter	MV5-6	369982	4908507	2	0	0	89.1	89.1	1	422.45	3.25	0	63.52	0	0.47	0	0	4.84	0	0	0	0	0	0	20.23	20.23
Inverter	MV3-15	368357	4907477	2	0	0	100.3	100.3	1	1577.59	3.25	0	74.96	0	-0.01	0	0	12.51	0	0	0	0	0	0	12.84	12.84
Inverter	MV3-21	368478	4907206	2	0	0	100.3	100.3	1	1607.03	3.25	0	75.12	0	0.01	0	0	12.58	0	0	0	0	0	0	12.6	12.6
Inverter	MV3-19	368357	4907347	2	0	0	100.3	100.3	1	1635.6	3.25	0	75.27	0	0.01	0	0	12.65	0	0	0	0	0	0	12.37	12.37
Inverter	MV3-6	368162	4907834	2	0	0	100.3	100.3	1	1658.04	3.25	0	75.39	0	0.02	0	0	12.71	0	0	0	0	0	0	12.19	12.19
Inverter	MV3-10	368167	4907669	2	0	0	100.3	100.3	1	1690.37	3.25	0	75.56	0	0.03	0	0	12.78	0	0	0	0	0	0	11.94	11.94
Inverter	MV3-17	368178	4907472	2	0	0	100.3	100.3	1	1744.04	3.25	0	75.83	0	0.05	0	0	12.9	0	0	0	0	0	0	11.53	11.53
Inverter	MV3-3	367939	4907927	2	0	0	100.3	100.3	1	1865.56	3.25	0	76.42	0	0.09	0	0	13.17	0	0	0	0	0	0	10.63	10.63
Inverter	MV3-7	367945	4907754	2	0	0	100.3	100.3	1	1886.23	3.25	0	76.51	0	0.1	0	0	13.22	0	0	0	0	0	0	10.49	10.49
Inverter	MV3-13	367963	4907577	2	0	0	100.3	100.3	1	1911.99	3.25	0	76.63	0	0.1	0	0	13.27	0	0	0	0	0	0	10.3	10.3
Inverter	MV3-18	367752	4907412	2	0	0	100.3	100.3	1	2163.81	3.25	0	77.7	0	0.17	0	0	13.8	0	0	0	0	0	0	8.63	8.63
Inverter	MV3-12	367668	4907594	2	0	0	100.3	100.3	1	2191.87	3.25	0	77.82	0	0.18	0	0	13.86	0	0	0	0	0	0	8.46	8.46
Fixed Reactor Bank 2	FRB2	369464	4908755	6	0	0	89.8	89.8	1	707.56	5.25	0	68	0	-0.94	0	0	1.9	0	0	0	0	0	0	20.82	20.82
Fixed Reactor Bank 1	FRB1	369378	4908755	6	0	0	89.8	89.8	1	751.48	5.25	0	68.52	0	-0.96	0	0	2	0	0	0	0	0	0	20.22	20.22
Inverter	MV4-15	369176	4908481	2	0	0	89.1	89.1	1	710.92	3.25	0	68.04	0	0.62	0	0	5.73	0	0	0	0	0	0	14.68	14.68
Inverter	MV4-14	369176	4908507	2	0	0	89.1	89.1	1	724.15	3.25	0	68.2	0	0.62	0	0	5.76	0	0	0	0	0	0	14.49	14.49
Inverter	MV4-13	369051	4908605	2	0	0	89.1	89.1	1	882.12	3.25	0	69.91	0	0.66	0	0	6.09	0	0	0	0	0	0	12.4	12.4
Inverter	MV4-12	369043	4908803	2	0	0	89.1	89.1	1	1008.87	3.25	0	71.08	0	0.69	0	0	6.33	0	0	0	0	0	0	10.96	10.96
Inverter	MV3-2	368671	4907928	2	0	0	89.1	89.1	1	1140.44	3.25	0	72.14	0	0.71	0	0	6.57	0	0	0	0	0	0	9.63	9.63
Inverter	MV2-3	365820	4906641	2	0	0	100.3	100.3	1	4243.04	3.25	0	83.55	0	0.56	0	0	17.43	0	0	0	0	0	0	-1.23	-1.23
Inverter	MV2-4	365586	4906624	2	0	0	100.3	100.3	1	4468.63	3.25	0	84	0	0.59	0	0	17.78	0	0	0	0	0	0	-2.06	-2.06
Inverter	MV3-4	368502	4907925	2	0	0	89.1	89.1	1	1307.6	3.25	0	73.33	0	0.75	0	0	6.87	0	0	0	0	0	0	8.1	8.1
SubstationTransformer	W_ST	369711.17	4906112.3	2.5	0	0	92	92	1	2018.31	3.5	0	77.1	0	-0.16	0	0	4.4	0	0	0	0	0	0	10.64	10.64
Inverter	MV3-5	368340	4907843	2	0	0	89.1	89.1	1	1481.45	3.25	0	74.41	0	0.79	0	0	7.18	0	0	0	0	0	0	6.68	6.68
Inverter	MV1-1	364715	4906166	2	0	0	100.3	100.3	1	5444.74	3.25	0	85.72	0	0.68	0	0	19.22	0	0	0	0	0	0	-5.31	-5.31
Inverter	MV1-4	364815	4905918	2	0	0	100.3	100.3	1	5447.43	3.25	0	85.72	0	0.68	0	0	19.23	0	0	0	0	0	0	-5.31	-5.31
Inverter	MV1-2	364753	4906063	2	0	0	100.3	100.3	1	5447.53	3.25	0	85.72	0	0.68	0	0	19.23	0	0	0	0	0	0	-5.32	-5.32
Inverter	MV1-15	365315	4904994	2	0	0	100.3	100.3	1	5466.76	3.25	0	85.75	0	0.68	0	0	19.25	0	0	0	0	0	0	-5.37	-5.37
Inverter	MV1-12	365038	4905386	2	0	0	100.3	100.3	1	5489.92	3.25	0	85.79	0	0.68	0	0	19.29	0	0	0	0	0	0	-5.45	-5.45
Inverter	MV3-22	368656	4907142	2	0	0	89.1	89.1	1	1506.03	3.25	0	74.56	0	0.79	0	0	7.22	0	0	0	0	0	0	6.49	6.49
Inverter	MV1-8	364788	4905647	2	0	0	100.3	100.3	1	5587.12	3.25	0	85.94	0	0.69	0	0	19.42	0	0	0	0	0	0	-5.74	-5.74
Inverter	MV1-5	364671	4905892	2	0	0	100.3	100.3	1	5589.7	3.25	0	85.95	0	0.69	0	0	19.43	0	0	0	0	0	0	-5.75	-5.75
Westbrook Inverter Enclosur	W_INV6	369875	4906578	2	0	0	89.1	89.1	1	1553.04	3.25	0	74.82	0	0.8	0	0	7.3	0	0	0	0	0	0	6.13	6.13
Westbrook Inverter Enclosur	W_INV5	369719	4906574	2	0	0	89.1	89.1	1	1556.69	3.25	0	74.84	0	0.81	0	0	7.31	0	0	0	0	0	0	6.1	6.1
Inverter	MV1-6	364477	4905835	2	0	0	100.3	100.3	1	5790.36	3.25	0	86.25	0	0.7	0	0	19.71	0	0	0	0	0	0	-6.34	-6.34
Inverter	MV1-9	364561	4905646	2	0	0	100.3	100.3	1	5791.8	3.25	0	86.26	0	0.7	0	0	19.71	0	0	0	0	0	0	-6.35	-6.35
Inverter	MV1-11	364655	4905414	2	0	0	100.3	100.3	1	5811.7	3.25	0	86.29	0	0.7	0	0	19.74	0	0	0	0	0	0	-6.41	-6.41
Inverter	MV2-1	365842	4906816	2	0	0	97.3	97.3	1	4164	3.25	0	83.39	0	0.55	0	0	17.31	0	0	0	0	0	0	-3.94	-3.94
Inverter	MV3-1	368156	4907976	2	0	0	89.1	89.1	1	1644.72	3.25	0	75.32	0	0.82	0	0	7.46	0	0	0	0	0	0	5.46	5.46
Westbrook Inverter Enclosur	W_INV7	369780	4906417	2	0	0	89.1	89.1	1	1711.96	3.25	0	75.67	0	0.84	0	0	7.57	0	0	0	0	0	0	4.98	4.98
Inverter	MV6-4	370250	4906966	2	0	0	86.1	86.1	1	1249.26	3.25	0	72.93	0	0.74	0	0	6.77	0	0	0	0	0	0	5.62	5.62
Westbrook Inverter Enclosur	W_INV2	369374	4906388	2	0	0	89.1	89.1	1	1790.75	3.25	0	76.06	0	0.86	0	0	7.7	0	0	0	0	0	0	4.44	4.44
Westbrook Inverter Enclosur	W_INV4	369673	4906164	2	0	0	89.1	89.1	1	1968.6	3.25	0	76.88	0	0.9	0	0	7.99	0	0	0	0	0	0	3.28	3.28
Westbrook Inverter Enclosur	W_INV3	369508	4906164	2	0	0	89.1	89.1	1	1985.55	3.25	0	76.96	0	0.9	0	0	8.02	0	0	0	0	0	0	3.18	3.18
Inverter	MV1-7	364925	4905782	2	0	0	97.3	97.3	1	5404.74	3.25	0	85.66	0	0.67	0	0	19.17	0	0	0	0	0	0	-8.18	-8.18
Inverter	MV1-10	365004	4905564	2	0	0	97.3	97.3	1	5433.14	3.25	0	85.7	0	0.68	0	0	19.21	0	0	0	0	0	0	-8.27	-8.27
Inverter	MV1-14	365163	4905049	2	0	0	97.3	97.3	1	5561.32	3.25	0	85.9	0	0.68	0	0	19.39	0	0	0	0	0	0	-8.66	-8.66
Inverter	MV1-13	364731	4905241	2	0	0	97.3	97.3	1	5828.37	3.25	0	86.31	0	0.7	0	0	19.76	0	0	0	0	0	0	-9.46	-9.46
Westbrook Inverter Enclosur	W_INV1	369409	4906578	2	0	0	86.1	86.1	1	1597.88	3.25	0	75.07	0	0.81	0	0	7.38	0	0	0	0	0	0	2.8	2.8
Inverter	MV2-2	365977	4906654	2	0	0	89.1	89.1	1	4091.67	3.25	0	83.24	0	1.41	0	0	11.21	0	0	0	0	0	0	-6.81	-6.81
Gardiner Substation	G_Sub	366586.3	4903349.9	2.5	0	0	90.8	90.8	1	5755.49	4.25	0	86.2	0	1.82	2.17	0.37	9.48	0	0	0	0	0	0	-8.9	-8.9
Westbrook Inverter Transfor	W_INVTR1	369403	4906578	2	0	0	78.2	78.2	1	1599.33	3.25	0	75.08	0	-2.25	0	0	1.01	0	0	0	0	0	0	4.4	4.4
Inverter	MV1-3	364440	4906039	2	0	0	89.1	89.1	1	5747.06	3.25	0	86.19	0	1.82	0	0	13.44	0	0	0	0	0	0	-12.4	-12.4
Westbrook Inverter Transfor	W_INVTR6	369881	4906578	2	0	0	77.3	77.3	1	1553.36	3.25	0	74.83	0	-2.23	0	0	0.98	0	0	0	0	0	0	3.76	3.76
Westbrook Inverter Transfor	W_INVTR5	369725	4906574	2	0	0	77.3	77.3	1	1556.41	3.25	0	74.84	0	-2.23	0	0	0.98	0	0	0	0	0	0	3.74	3.74
Westbrook Inverter Transfor	W_INVTR7	369786	4906417	2	0	0	77.3	77.3	1	1711.92	3.25	0	75.67	0	-2.29	0	0	1.06	0	0	0	0	0	0	2.9	2.9
Inverters	G_Inv2	366676.9	4903239.1	2	0	0	87.7	87.7	1	5798.62	3.25	0	86.27	0	2.91	0	0	6.77	0	0	0	0	0	0	-8.29	-8.29
Westbrook Inverter Transfor	W_INVTR2	369368	4906388	2	0	0	77.3	77.3	1	1792.17	3.25	0	76.07	0	-2.33	0	0	1.1	0	0	0	0	0	0	2.5	2.5
Inverters	G_Inv4	366732.8	4903105	2	0	0	87.7	87.7	1	5882.86	3.25	0	86.39	0	2.91	0	0	6.86	0	0	0	0	0	0	-8.5	-8.5
Inverters	G_Inv1	366526.4	4903225.8	2	0	0	87.7	87.7	1	5891.94	3.25	0	86.41	0	2.91	0	0	6.87	0	0	0	0	0	0	-8.52	-8.52
Inverters	G_Inv6	366788.5	4902972	2	0	0	87.7	87.7	1	5968.61	3.25	0	86.52	0	2.92	0	0	6.95	0	0	0	0	0	0	-8.72	-8.72
Inverters	G_Inv3	366583.7	4903091.4	2	0	0	87.7	87.7	1	5973.26	3.25	0	86.52	0	2.92	0	0	6.95	0	0	0	0	0	0	-8.73	-8.73
Inverters	G_Inv8	366844.5	4902838.5	2	0	0	87.7	87.7	1	6056.86	3.25	0	86.64	0	2.92	0	0	7.04	0	0	0	0	0	0	-8.94	-8.94
Inverters	G_Inv5	366638.5	4902958.1	2	0	0	87.7	87.7	1	6057.38	3.25	0	86.65	0	2.92	0	0	7.04	0	0	0	0	0	0	-8.94	-8.94
Inverters	G_Inv7	366694.6	4902824.7	2	0	0	87.7	87.7	1	6143.15	3.25	0	86.77	0	2.92	0	0	7.12	0	0	0	0	0	0	-9.16	-9.16
Inverters	G_Inv10	366900.7	4902704.8	2	0	0	87.7	87.7	1	6147.34	3.25	0	86.77	0	2.92	0	0	7.13	0	0	0	0	0	0	-9.17	-9.17
Inverters	G_Inv9	366750.9	4902691.8	2	0	0	87.7	87.7	1	6230.58	3.25	0	86.89	0	2.93	0	0	7.21	0	0	0	0	0	0	-9.37	-9.37
Westbrook Inverter Transfor	W_INVTR4	369679	4906164	2	0	0	77.3	77.3	1	1968.24	3.25	0	76.88	0	-2.39	0	0	1.19	0	0	0	0	0	0	1.66	1.66
Westbrook Inverter Transfor	W_INVTR3	369514	4906164	2	0	0	77.3	77.3	1	1984.7	3.25	0	76.95	0	-2.4	0	0	1.2	0	0	0	0	0	0	1.59	1.59
Inverter Transformer	MV6-1 T	370230	4907364	2	0	0	69.4	69.4	1	880.64	3.25	0	69.9	0	1.58	0	0	3.64	0	0	0	0	0	0	-5.76	-5.76

Inverter Transformer	MV6-4 T	370244	4906966	2	0	0	69.4	69.4	1	1247.08	3.25	0	72.92	0	1.85	0	0	4.13	0	0	0	0	0	0	-9.55	-9.55
Inverter Transformer	MV5-6 T	369987	4908507	2	0	0	56.1	56.1	1	424.7	3.25	0	63.56	0	-0.12	0	0	3.3	0	0	0	0	0	0	-10.68	-10.68
Inverter Transformer	MV5-5 T	370021	4908690	2	0	0	56.1	56.1	1	605.43	3.25	0	66.64	0	-0.1	0	0	3.87	0	0	0	0	0	0	-14.35	-14.35
Inverter Transformer	MV4-15 T	369170	4908481	2	0	0	56.1	56.1	1	716.14	3.25	0	68.1	0	-0.08	0	0	4.18	0	0	0	0	0	0	-16.14	-16.14
Inverter Transformer	MV4-14 T	369182	4908507	2	0	0	56.1	56.1	1	719.04	3.25	0	68.14	0	-0.08	0	0	4.18	0	0	0	0	0	0	-16.19	-16.19
Inverter Transformer	MV5-2 T	370011	4908853	2	0	0	56.1	56.1	1	756.04	3.25	0	68.57	0	-0.07	0	0	4.28	0	0	0	0	0	0	-16.73	-16.73
Inverter Transformer	MV5-4 T	370330	4908707	2	0	0	56.1	56.1	1	788.63	3.25	0	68.94	0	-0.06	0	0	4.37	0	0	0	0	0	0	-17.19	-17.19
Inverter Transformer	MV6-2 T	370091	4907339	2	0	0	56.1	56.1	1	844.03	3.25	0	69.53	0	-0.04	0	0	4.51	0	0	0	0	0	0	-17.94	-17.94
Inverter Transformer	MV5-3 T	370237	4908851	2	0	0	56.1	56.1	1	847.37	3.25	0	69.56	0	-0.04	0	0	4.52	0	0	0	0	0	0	-17.98	-17.98
Inverter Transformer	MV4-10 T	369307	4908858	2	0	0	56.1	56.1	1	876.57	3.25	0	69.86	0	-0.03	0	0	4.59	0	0	0	0	0	0	-18.36	-18.36
Inverter Transformer	MV4-13 T	369057	4908605	2	0	0	56.1	56.1	1	877.07	3.25	0	69.86	0	-0.03	0	0	4.59	0	0	0	0	0	0	-18.36	-18.36
Inverter Transformer	MV4-11 T	369269	4908855	2	0	0	56.1	56.1	1	895.79	3.25	0	70.04	0	-0.02	0	0	4.64	0	0	0	0	0	0	-18.6	-18.6
Inverter Transformer	MV2-1 T	365836	4906816	2	0	0	69.4	69.4	1	4169.69	3.25	0	83.4	0	2.83	0	0	6.8	0	0	0	0	0	0	-23.68	-23.68
Inverter Transformer	MV4-12 T	369049	4908803	2	0	0	56.1	56.1	1	1004.41	3.25	0	71.04	0	0.01	0	0	4.9	0	0	0	0	0	0	-19.89	-19.89
Inverter Transformer	MV4-9 T	369284	4909001	2	0	0	56.1	56.1	1	1010.08	3.25	0	71.09	0	0.02	0	0	4.91	0	0	0	0	0	0	-19.96	-19.96
Inverter Transformer	MV4-8 T	369262	4909001	2	0	0	56.1	56.1	1	1021.35	3.25	0	71.18	0	0.02	0	0	4.94	0	0	0	0	0	0	-20.08	-20.08
Inverter Transformer	MV5-1 T	370015	4909142	2	0	0	56.1	56.1	1	1037.01	3.25	0	71.32	0	0.02	0	0	4.98	0	0	0	0	0	0	-20.26	-20.26
Inverter Transformer	MV6-3 T	370202	4907140	2	0	0	56.1	56.1	1	1069.92	3.25	0	71.59	0	0.04	0	0	5.05	0	0	0	0	0	0	-20.62	-20.62
Inverter Transformer	MV3-2 T	368677	4907928	2	0	0	56.1	56.1	1	1134.53	3.25	0	72.1	0	0.06	0	0	5.21	0	0	0	0	0	0	-21.3	-21.3
Inverter Transformer	MV4-7 T	369040	4909001	2	0	0	56.1	56.1	1	1152.6	3.25	0	72.23	0	0.07	0	0	5.25	0	0	0	0	0	0	-21.49	-21.49
Inverter Transformer	MV1-7 T	364919	4905782	2	0	0	69.4	69.4	1	5410.15	3.25	0	85.66	0	3.09	0	0	7.65	0	0	0	0	0	0	-27.05	-27.05
Inverter Transformer	MV1-10 T	365010	4905564	2	0	0	69.4	69.4	1	5427.85	3.25	0	85.69	0	3.09	0	0	7.66	0	0	0	0	0	0	-27.1	-27.1
Inverter Transformer	MV3-8 T	368685	4907712	2	0	0	56.1	56.1	1	1184.4	3.25	0	72.47	0	0.08	0	0	5.32	0	0	0	0	0	0	-21.81	-21.81
Inverter Transformer	MV4-5 T	369283	4909199	2	0	0	56.1	56.1	1	1185.68	3.25	0	72.48	0	0.08	0	0	5.32	0	0	0	0	0	0	-21.82	-21.82
Inverter Transformer	MV4-6 T	369249	4909192	2	0	0	56.1	56.1	1	1194.48	3.25	0	72.54	0	0.08	0	0	5.34	0	0	0	0	0	0	-21.91	-21.91
Inverter Transformer	MV1-14 T	365157	4905049	2	0	0	69.4	69.4	1	5566.31	3.25	0	85.91	0	3.12	0	0	7.75	0	0	0	0	0	0	-27.43	-27.43
Inverter Transformer	MV1-13 T	364725	4905241	2	0	0	69.4	69.4	1	5833.58	3.25	0	86.32	0	3.16	0	0	7.92	0	0	0	0	0	0	-28.05	-28.05
Inverter Transformer	MV3-14 T	368678	4907498	2	0	0	56.1	56.1	1	1281.64	3.25	0	73.16	0	0.11	0	0	5.54	0	0	0	0	0	0	-22.75	-22.75
Inverter Transformer	MV3-4 T	368507	4907925	2	0	0	56.1	56.1	1	1302.66	3.25	0	73.3	0	0.12	0	0	5.59	0	0	0	0	0	0	-22.95	-22.95
Inverter Transformer	MV4-4 T	369033	4909199	2	0	0	56.1	56.1	1	1312.87	3.25	0	73.36	0	0.13	0	0	5.61	0	0	0	0	0	0	-23.04	-23.04
Inverter Transformer	MV3-9 T	368517	4907703	2	0	0	56.1	56.1	1	1345.77	3.25	0	73.58	0	0.14	0	0	5.68	0	0	0	0	0	0	-23.34	-23.34
Inverter Transformer	MV4-2 T	369267	4909397	2	0	0	56.1	56.1	1	1373.1	3.25	0	73.75	0	0.15	0	0	5.74	0	0	0	0	0	0	-23.59	-23.59
Inverter Transformer	MV3-20 T	368683	4907317	2	0	0	56.1	56.1	1	1375.73	3.25	0	73.77	0	0.15	0	0	5.75	0	0	0	0	0	0	-23.61	-23.61
Inverter Transformer	MV4-3 T	369234	4909397	2	0	0	56.1	56.1	1	1386.09	3.25	0	73.84	0	0.15	0	0	5.77	0	0	0	0	0	0	-23.7	-23.7
Inverter Transformer	MV3-16 T	368509	4907475	2	0	0	56.1	56.1	1	1441.45	3.25	0	74.18	0	0.18	0	0	5.89	0	0	0	0	0	0	-24.18	-24.18
Inverter Transformer	MV3-5 T	368335	4907843	2	0	0	56.1	56.1	1	1486.36	3.25	0	74.44	0	0.19	0	0	5.99	0	0	0	0	0	0	-24.57	-24.57
Inverter Transformer	MV4-1 T	369017	4909397	2	0	0	56.1	56.1	1	1487.01	3.25	0	74.45	0	0.19	0	0	5.99	0	0	0	0	0	0	-24.57	-24.57
Inverter Transformer	MV3-22 T	368661	4907142	2	0	0	56.1	56.1	1	1502.25	3.25	0	74.53	0	0.2	0	0	6.02	0	0	0	0	0	0	-24.7	-24.7
Inverter Transformer	MV3-11 T	368340	4907662	2	0	0	56.1	56.1	1	1526.75	3.25	0	74.68	0	0.21	0	0	6.08	0	0	0	0	0	0	-24.9	-24.9
Inverter Transformer	MV3-15 T	368351	4907477	2	0	0	56.1	56.1	1	1583.06	3.25	0	74.99	0	0.23	0	0	6.19	0	0	0	0	0	0	-25.36	-25.36
Inverter Transformer	MV3-21 T	368484	4907206	2	0	0	56.1	56.1	1	1602.12	3.25	0	75.09	0	0.24	0	0	6.23	0	0	0	0	0	0	-25.51	-25.51
Inverter Transformer	MV3-19 T	368352	4907347	2	0	0	56.1	56.1	1	1640	3.25	0	75.3	0	0.25	0	0	6.31	0	0	0	0	0	0	-25.81	-25.81
Inverter Transformer	MV3-1 T	368150	4907976	2	0	0	56.1	56.1	1	1650.7	3.25	0	75.35	0	0.26	0	0	6.34	0	0	0	0	0	0	-25.89	-25.89
Inverter Transformer	MV3-6 T	368156	4907834	2	0	0	56.1	56.1	1	1663.94	3.25	0	75.42	0	0.26	0	0	6.36	0	0	0	0	0	0	-25.99	-25.99
Inverter Transformer	MV3-10 T	368162	4907669	2	0	0	56.1	56.1	1	1695.18	3.25	0	75.58	0	0.28	0	0	6.43	0	0	0	0	0	0	-26.23	-26.23
Inverter Transformer	MV3-17 T	368183	4907472	2	0	0	56.1	56.1	1	1739.41	3.25	0	75.81	0	0.3	0	0	6.52	0	0	0	0	0	0	-26.57	-26.57
Inverter Transformer	MV3-3 T	367944	4907927	2	0	0	56.1	56.1	1	1860.59	3.25	0	76.39	0	0.35	0	0	6.77	0	0	0	0	0	0	-27.45	-27.45
Inverter Transformer	MV3-7 T	367951	4907754	2	0	0	56.1	56.1	1	1880.35	3.25	0	76.48	0	0.35	0	0	6.81	0	0	0	0	0	0	-27.59	-27.59
Inverter Transformer	MV3-13 T	367958	4907577	2	0	0	56.1	56.1	1	1916.78	3.25	0	76.65	0	0.37	0	0	6.88	0	0	0	0	0	0	-27.84	-27.84
Inverter Transformer	MV3-18 T	367757	4907412	2	0	0	56.1	56.1	1	2159.1	3.25	0	77.69	0	0.47	0	0	7.35	0	0	0	0	0	0	-29.45	-29.45
Inverter Transformer	MV3-12 T	367674	4907594	2	0	0	56.1	56.1	1	2186.05	3.25	0	77.79	0	0.48	0	0	7.4	0	0	0	0	0	0	-29.62	-29.62
Line Reactor	NGR	369421	4908787.5	5	0	0	45.4	45.4	1	756.69	5.25	0	68.58	0	3.41	1.42	0.1	0.31	0	0	0	0	0	0	-28.36	-28.36
Inverter Transformer	MV2-2 T	365982	4906654	2	0	0	56.1	56.1	1	4087.01	3.25	0	83.23	0	1.28	0	0	10.58	0	0	0	0	0	0	-39.03	-39.03
Inverter Transformer	MV2-3 T	365814	4906641	2	0	0	56.1	56.1	1	4248.65	3.25	0	83.57	0	1.34	0	0	10.82	0	0	0	0	0	0	-39.67	-39.67
Inverter Transformer	MV2-4 T	365590	4906628	2	0	0	56.1	56.1	1	4463.51	3.25	0	83.99	0	1.43	0	0	11.12	0	0	0	0	0	0	-40.49	-40.49
Inverter Transformer	MV1-1 T	364721	4906166	2	0	0	56.1	56.1	1	5439.14	3.25	0	85.71	0	1.78	0	0	12.42	0	0	0	0	0	0	-43.85	-43.85
Inverter Transformer	MV1-4 T	364821	4905918	2	0	0	56.1	56.1	1	5441.95	3.25	0	85.72	0	1.78	0	0	12.42	0	0	0	0	0	0	-43.86	-43.86
Inverter Transformer	MV1-2 T	364759	4906063	2	0	0	56.1	56.1	1	5441.98	3.25	0	85.72	0	1.78	0	0	12.42	0	0	0	0	0	0	-43.86	-43.86
Inverter Transformer	MV1-15 T	365309	4904994	2	0	0	56.1	56.1	1	5471.68	3.25	0	85.76	0	1.79	0	0	12.46	0	0	0	0	0	0	-43.95	-43.95
Inverter Transformer	MV1-12 T	365044	4905386	2	0	0	56.1	56.1	1	5484.72	3.25	0	85.78	0	1.8	0	0	12.48	0	0	0	0	0	0	-44	-44
Inverter Transformer	MV1-5 T	364676	4905892	2	0	0	56.1	56.1	1	5585.12	3.25	0	85.94	0	1.83	0	0	12.6	0	0	0	0	0	0	-44.31	-44.31
Inverter Transformer	MV1-8 T	364782	4905647	2	0	0	56.1	56.1	1	5592.49	3.25	0	85.95	0	1.83	0	0	12.61	0	0	0	0	0	0	-44.34	-44.34
Inverter Transformer	MV1-3 T	364435	4906039	2	0	0	56.1	56.1	1	5751.72	3.25	0	86.2	0	1.88	0	0	12.81	0	0	0	0	0	0	-44.83	-44.83
Inverter Transformer	MV1-6 T	364482	4905835	2	0	0	56.1	56.1	1	5785.77	3.25	0	86.25	0	1.9	0	0	12.85	0	0	0	0	0	0	-44.93	-44.93
Inverter Transformer	MV1-9 T	364555	4905646	2	0	0	56.1	56.1	1	5797.22	3.25	0	86.26	0	1.9	0	0	12.86	0	0	0	0	0	0	-44.97	-44.97
Inverter Transformer	MV1-11 T	364649	4905414	2	0	0	56.1	56.1	1	5817.01	3.25	0	86.29	0	1.91	0	0	12.88	0	0	0	0	0	0	-45.03	-45.03
Limit. Valu 0		0																								
Level D/N: 38.3484		38.3484																								

Receiver: Vacant Lot Receptor
ID: W-V15
X: 369215
Y: 4905469.1
Z: 4.5

Ground: 0

ISO	Description	ID	X	Y	Z	Ground	ReflOrd	LxT	LxN	L/A	Dist.	hm	Freq	Adiv	K0b	Agr	Abar	z	Aatm	Afol	Ahous	Cmet	CmetN	Dc	RL	LtotT	LtotN
	Sol_Luce Substation	S_Substation	369426	4908792	3.5	0	0	112.1	112.1	1	3329.59	5.25	0	81.45	0	0.4	3.3	0.35	6.44	0	0	0	0	0	0	20.5	20.5
	Inverter	MV3-21	368478	4907206	2	0	0	100.3	100.3	1	1886.8	3.25	0	76.51	0	0.1	0	0	13.22	0	0	0	0	0	0	10.48	10.48
	Inverter	MV3-20	368689	4907317	2	0	0	100.3	100.3	1	1921.31	3.25	0	76.67	0	0.11	0	0	13.29	0	0	0	0	0	0	10.24	10.24
	Inverter	MV6-3	370207	4907140	2	0	0	100.3	100.3	1	1943.19	3.25	0	76.77	0	0.11	0	0	13.34	0	0	0	0	0	0	10.09	10.09
	Inverter	MV6-2	370085	4907339	2	0	0	100.3	100.3	1	2062.39	3.25	0	77.29	0	0.15	0	0	13.59	0	0	0	0	0	0	9.29	9.29
	Inverter	MV3-19	368357	4907347	2	0	0	100.3	100.3	1	2064.63	3.25	0	77.3	0	0.15	0	0	13.6	0	0	0	0	0	0	9.27	9.27
	Inverter	MV3-14	368684	4907498	2	0	0	100.3	100.3	1	2097.24	3.25	0	77.43	0	0.16	0	0	13.66	0	0	0	0	0	0	9.06	9.06
	SubstationTransformer	W_ST	369711.17	4906112.3	2.5	0	0	92	92	1	812.32	3.5	0	69.19	0	-0.4	0	-0.12	2.13	0	0	0	0	0	0	21.05	21.05
	Inverter	MV3-16	368514	4907475	2	0	0	100.3	100.3	1	2124.86	3.25	0	77.55	0	0.16	0	0	13.72	0	0	0	0	0	0	8.88	8.88
	Inverter	MV3-15	368357	4907477	2	0	0	100.3	100.3	1	2183.54	3.25	0	77.78	0	0.18	0	0	13.84	0	0	0	0	0	0	8.51	8.51
	Inverter	MV3-17	368178	4907472	2	0	0	100.3	100.3	1	2255.43	3.25	0	78.06	0	0.2	0	0	13.98	0	0	0	0	0	0	8.07	8.07
	Inverter	MV3-8	368680	4907712	2	0	0	100.3	100.3	1	2305.83	3.25	0	78.26	0	0.21	0	0	14.08	0	0	0	0	0	0	7.76	7.76
	Inverter	MV3-9	368512	4907703	2	0	0	100.3	100.3	1	2341.91	3.25	0	78.39	0	0.22	0	0	14.15	0	0	0	0	0	0	7.55	7.55
	Inverter	MV3-11	368346	4907662	2	0	0	100.3	100.3	1	2358.81	3.25	0	78.45	0	0.22	0	0	14.19	0	0	0	0	0	0	7.45	7.45
	Inverter	MV3-18	367752	4907412	2	0	0	100.3	100.3	1	2432.13	3.25	0	78.72	0	0.24	0	0	14.33	0	0	0	0	0	0	7.02	7.02
	Inverter	MV3-10	368167	4907669	2	0	0	100.3	100.3	1	2436.77	3.25	0	78.74	0	0.24	0	0	14.34	0	0	0	0	0	0	7	7
	Inverter	MV3-13	367963	4907577	2	0	0	100.3	100.3	1	2451.68	3.25	0	78.79	0	0.25	0	0	14.37	0	0	0	0	0	0	6.91	6.91
	Inverter	MV3-6	368162	4907834	2	0	0	100.3	100.3	1	2588.74	3.25	0	79.26	0	0.28	0	0	14.63	0	0	0	0	0	0	6.15	6.15
	Inverter	MV3-7	367945	4907754	2	0	0	100.3	100.3	1	2614.13	3.25	0	79.35	0	0.28	0	0	14.67	0	0	0	0	0	0	6.01	6.01
	Inverter	MV3-12	367668	4907594	2	0	0	100.3	100.3	1	2628.39	3.25	0	79.39	0	0.29	0	0	14.7	0	0	0	0	0	0	5.93	5.93
	Westbrook Inverter Enclosur	W_INV3	369508	4906164	2	0	0	89.1	89.1	1	754.15	3.25	0	68.55	0	0.63	0	0	5.82	0	0	0	0	0	0	14.06	14.06
	Inverter	MV3-3	367939	4907927	2	0	0	100.3	100.3	1	2769.38	3.25	0	79.85	0	0.32	0	0	14.96	0	0	0	0	0	0	5.19	5.19
	Inverter	MV6-1	370235	4907364	2	0	0	97.3	97.3	1	2151.99	3.25	0	77.66	0	0.17	0	0	13.78	0	0	0	0	0	0	5.71	5.71
	Westbrook Inverter Enclosur	W_INV4	369673	4906164	2	0	0	89.1	89.1	1	832.26	3.25	0	69.41	0	0.65	0	0	5.99	0	0	0	0	0	0	13.02	13.02
	Inverter	MV5-5	370015	4908690	2	0	0	100.3	100.3	1	3318.77	3.25	0	81.42	0	0.42	0	0	15.93	0	0	0	0	0	0	2.55	2.55
	Inverter	MV4-11	369264	4908855	2	0	0	100.3	100.3	1	3386.26	3.25	0	81.59	0	0.43	0	0	16.04	0	0	0	0	0	0	2.25	2.25
	Inverter	MV4-10	369312	4908858	2	0	0	100.3	100.3	1	3390.29	3.25	0	81.6	0	0.43	0	0	16.05	0	0	0	0	0	0	2.23	2.23
	Westbrook Inverter Enclosur	W_INV2	369374	4906388	2	0	0	89.1	89.1	1	932.56	3.25	0	70.39	0	0.67	0	0	6.19	0	0	0	0	0	0	11.81	11.81
	Inverter	MV5-4	370324	4908707	2	0	0	100.3	100.3	1	3422.56	3.25	0	81.69	0	0.44	0	0	16.1	0	0	0	0	0	0	2.09	2.09
	Inverter	MV5-2	370006	4908853	2	0	0	100.3	100.3	1	3475.12	3.25	0	81.82	0	0.45	0	0	16.19	0	0	0	0	0	0	1.86	1.86
	Inverter	MV5-3	370231	4908851	2	0	0	100.3	100.3	1	3531.22	3.25	0	81.96	0	0.46	0	0	16.28	0	0	0	0	0	0	1.61	1.61
	Inverter	MV4-8	369256	4909001	2	0	0	100.3	100.3	1	3532.14	3.25	0	81.96	0	0.46	0	0	16.29	0	0	0	0	0	0	1.61	1.61
	Inverter	MV4-9	369289	4909001	2	0	0	100.3	100.3	1	3532.68	3.25	0	81.96	0	0.46	0	0	16.29	0	0	0	0	0	0	1.61	1.61
	Inverter	MV4-7	369035	4909001	2	0	0	100.3	100.3	1	3536.48	3.25	0	81.97	0	0.46	0	0	16.29	0	0	0	0	0	0	1.59	1.59
	Inverter	MV2-3	365820	4906641	2	0	0	100.3	100.3	1	3591.57	3.25	0	82.11	0	0.47	0	0	16.38	0	0	0	0	0	0	1.36	1.36
	Inverter	MV4-6	369243	4909192	2	0	0	100.3	100.3	1	3723.01	3.25	0	82.42	0	0.49	0	0	16.6	0	0	0	0	0	0	0.81	0.81
	Inverter	MV4-5	369289	4909199	2	0	0	100.3	100.3	1	3730.63	3.25	0	82.44	0	0.49	0	0	16.61	0	0	0	0	0	0	0.78	0.78
	Inverter	MV4-4	369027	4909199	2	0	0	100.3	100.3	1	3734.64	3.25	0	82.44	0	0.49	0	0	16.62	0	0	0	0	0	0	0.76	0.76
	Inverter	MV5-1	370020	4909142	2	0	0	100.3	100.3	1	3760.08	3.25	0	82.5	0	0.49	0	0	16.66	0	0	0	0	0	0	0.65	0.65
	Inverter	MV2-4	365586	4906624	2	0	0	100.3	100.3	1	3808.34	3.25	0	82.61	0	0.5	0	0	16.74	0	0	0	0	0	0	0.46	0.46
	Inverter	MV4-3	369229	4909397	2	0	0	100.3	100.3	1	3927.93	3.25	0	82.88	0	0.52	0	0	16.93	0	0	0	0	0	0	-0.02	-0.02
	Inverter	MV4-2	369272	4909397	2	0	0	100.3	100.3	1	3928.31	3.25	0	82.88	0	0.52	0	0	16.93	0	0	0	0	0	0	-0.02	-0.02
	Inverter	MV1-15	365315	4904994	2	0	0	100.3	100.3	1	3928.83	3.25	0	82.89	0	0.52	0	0	16.93	0	0	0	0	0	0	-0.02	-0.02
	Inverter	MV4-1	369011	4909397	2	0	0	100.3	100.3	1	3933.19	3.25	0	82.89	0	0.52	0	0	16.94	0	0	0	0	0	0	-0.04	-0.04
	Westbrook Inverter Enclosur	W_INV7	369780	4906417	2	0	0	89.1	89.1	1	1103.52	3.25	0	71.86	0	0.71	0	0	6.51	0	0	0	0	0	0	9.99	9.99
	Inverter	MV1-12	365038	4905386	2	0	0	100.3	100.3	1	4177.83	3.25	0	83.42	0	0.55	0	0	17.33	0	0	0	0	0	0	-0.99	-0.99
	Inverter	MV1-4	364815	4905918	2	0	0	100.3	100.3	1	4422.84	3.25	0	83.91	0	0.58	0	0	17.71	0	0	0	0	0	0	-1.9	-1.9
	Inverter	MV1-8	364788	4905647	2	0	0	100.3	100.3	1	4430.57	3.25	0	83.93	0	0.58	0	0	17.72	0	0	0	0	0	0	-1.92	-1.92
	Westbrook Inverter Enclosur	W_INV5	369719	4906574	2	0	0	89.1	89.1	1	1214.42	3.25	0	72.69	0	0.73	0	0	6.71	0	0	0	0	0	0	8.93	8.93
	Inverter	MV1-2	364753	4906063	2	0	0	100.3	100.3	1	4501.35	3.25	0	84.07	0	0.59	0	0	17.83	0	0	0	0	0	0	-2.18	-2.18
	Inverter	MV1-1	364715	4906166	2	0	0	100.3	100.3	1	4553.64	3.25	0	84.17	0	0.6	0	0	17.91	0	0	0	0	0	0	-2.36	-2.36
	Inverter	MV1-11	364655	4905414	2	0	0	100.3	100.3	1	4560.33	3.25	0	84.18	0	0.6	0	0	17.92	0	0	0	0	0	0	-2.39	-2.39
	Inverter	MV1-5	364671	4905892	2	0	0	100.3	100.3	1	4563.64	3.25	0	84.19	0	0.6	0	0	17.93	0	0	0	0	0	0	-2.4	-2.4
	Inverter	MV1-9	364561	4905646	2	0	0	100.3	100.3	1	4657.36	3.25	0	84.36	0	0.61	0	0	18.07	0	0	0	0	0	0	-2.73	-2.73
	Westbrook Inverter Enclosur	W_INV6	369875	4906578	2	0	0	89.1	89.1	1	1290.45	3.25	0	73.21	0	0.75	0	0	6.84	0	0	0	0	0	0	8.25	8.25
	Inverter	MV1-6	364477	4905835	2	0	0	100.3	100.3	1	4752.11	3.25	0	84.54	0	0.62	0	0	18.21	0	0	0	0	0	0	-3.06	-3.06
	DSTATCOM - 10 MVAR #2	DSAT2	369403	4908757	2.5	0	0	96.6	96.6	1	3293.27	3.5	0	81.35	0	3.46	0	0	2.46	0	0	0	0	0	0	9.35	9.35
	DSTATCOM - 10 MVAR #1	DSAT1	369437	4908757	2.5	0	0	96.6	96.6	1	3295.39	3.5	0	81.36	0	3.46	0	0	2.46	0	0	0	0	0	0	9.34	9.34
	Inverter	MV2-1	365842	4906816	2	0	0	97.3	97.3	1	3631.98	3.25	0	82.2	0	0.47	0	0	16.45	0	0	0	0	0	0	-1.81	-1.81
	Inverter	MV1-14	365163	4905049	2	0	0	97.3	97.3	1	4073.72	3.25	0	83.2	0	0.54	0	0	17.17	0	0	0	0	0	0	-3.59	-3.59
	Westbrook Inverter Enclosur	W_INV1	369409	4906578	2	0	0	86.1	86.1	1	1125.74	3.25	0	72.03	0	0.71	0	0	6.55	0	0	0	0	0	0	6.77	6.77
	Inverter	MV1-10	365004	4905564	2	0	0	97.3	97.3	1	4212.07	3.25	0	83.49	0	0.56	0	0	17.38	0	0	0	0	0	0	-4.12	-4.12
	Inverter	MV1-7	364925	4905782	2	0	0	97.3	97.3	1	4301.4	3.25	0	83.67	0	0.57	0	0	17.52	0	0	0	0	0	0	-4.45	-4.45
	Inverter	MV1-13	364731	4905241	2	0	0	97.3	97.3	1	4489.8	3.25	0	84.04	0	0.59	0	0	17.81	0	0	0	0	0	0	-5.14	-5.14
	Inverter	MV3-22	368656	4907142	2	0	0	89.1	89.1	1	1763.83	3.25	0	75.93	0	0.85	0	0	7.66	0	0	0	0	0	0	4.62	4.62
	Inverter	MV3-2	368671	4907928	2	0	0	89.1	89.1	1	2518.36	3.25	0	79.02	0	1.03	0	0	8.87	0	0	0	0	0	0	0.13	0.13
	Inverter	MV3-5	368340	4907843	2	0	0	89.1	89.1	1	2530.03	3.25	0	79.06	0	1.03	0	0	8.89	0	0	0	0	0	0	0.07	0.07
	Inverter	MV3-4	368502	4907925	2	0	0	89.1	89.1	1	2557.31	3.25	0	79.16	0	1.04	0	0	8.94	0	0	0	0	0	0	-0.07	-0.07
	Inverter	MV6-4	370250	4906966	2	0	0	86.1	86.1	1	1819.87	3.25	0	76.2	0	0.87	0	0	7.75	0	0	0	0	0	0	1.24	1.24
	Inverter	MV3-1	368156	4907976	2	0	0	89.1	89.1	1	2721.4	3.25	0	79.7	0	1.08	0	0	9.19	0	0	0	0	0	0	-0.91	-0.91
	Gardiner Substation	G_Sub	366586.3	4903349.9	2.5	0	0	90.8	90.8	1	3376.55	4.25	0	81.57	0	1.2	2.91	0.33	6.51	0	0	0	0	0	0	-1.41	-1.41

Westbrook Inverter Transfor	W_INVTR3	369514	4906164	2	0	0	77.3	77.3	1	756.5	3.25	0	68.58	0	-1.77	0	0	0.53	0	0	0	0	0	0	10	10
Inverter	MV4-15	369176	4908481	2	0	0	89.1	89.1	1	3012.15	3.25	0	80.58	0	1.15	0	0	9.64	0	0	0	0	0	0	-2.3	-2.3
Fixed Reactor Bank 1	FRB1	369378	4908755	6	0	0	89.8	89.8	1	3289.94	5.25	0	81.34	0	-0.83	0	0	6.38	0	0	0	0	0	0	2.88	2.88
Fixed Reactor Bank 2	FRB2	369464	4908755	6	0	0	89.8	89.8	1	3295.32	5.25	0	81.36	0	-0.83	0	0	6.39	0	0	0	0	0	0	2.86	2.86
Inverter	MV4-14	369176	4908507	2	0	0	89.1	89.1	1	3038.15	3.25	0	80.65	0	1.16	0	0	9.67	0	0	0	0	0	0	-2.43	-2.43
Inverter	MV5-6	369982	4908507	2	0	0	89.1	89.1	1	3133.23	3.25	0	80.92	0	1.18	0	0	9.82	0	0	0	0	0	0	-2.86	-2.86
Inverter	MV4-13	369051	4908605	2	0	0	89.1	89.1	1	3140.19	3.25	0	80.94	0	1.18	0	0	9.83	0	0	0	0	0	0	-2.89	-2.89
Westbrook Inverter Transfor	W_INVTR4	369679	4906164	2	0	0	77.3	77.3	1	835.58	3.25	0	69.44	0	-1.82	0	0	0.58	0	0	0	0	0	0	9.14	9.14
Inverter	MV4-12	369043	4908803	2	0	0	89.1	89.1	1	3338.33	3.25	0	81.47	0	1.23	0	0	10.12	0	0	0	0	0	0	-3.77	-3.77
Inverter	MV2-2	365977	4906654	2	0	0	89.1	89.1	1	3447.99	3.25	0	81.75	0	1.26	0	0	10.29	0	0	0	0	0	0	-4.24	-4.24
Westbrook Inverter Transfor	W_INVTR2	369368	4906388	2	0	0	77.3	77.3	1	931.55	3.25	0	70.38	0	-1.89	0	0	0.64	0	0	0	0	0	0	8.21	8.21
Westbrook Inverter Transfor	W_INVTR1	369403	4906578	2	0	0	78.2	78.2	1	1124.73	3.25	0	72.02	0	-2.01	0	0	0.75	0	0	0	0	0	0	7.48	7.48
Inverters	G_Inv2	366676.9	4903239.1	2	0	0	87.7	87.7	1	3378.59	3.25	0	81.57	0	2.74	0	0	4.2	0	0	0	0	0	0	-0.85	-0.85
Inverters	G_Inv4	366732.8	4903105	2	0	0	87.7	87.7	1	3427.87	3.25	0	81.7	0	2.74	0	0	4.25	0	0	0	0	0	0	-1.03	-1.03
Inverters	G_Inv6	366788.5	4902972	2	0	0	87.7	87.7	1	3481.87	3.25	0	81.84	0	2.75	0	0	4.31	0	0	0	0	0	0	-1.23	-1.23
Inverters	G_Inv1	366526.4	4903225.8	2	0	0	87.7	87.7	1	3501.57	3.25	0	81.89	0	2.75	0	0	4.33	0	0	0	0	0	0	-1.3	-1.3
Inverters	G_Inv8	366844.5	4902838.5	2	0	0	87.7	87.7	1	3541.09	3.25	0	81.98	0	2.75	0	0	4.37	0	0	0	0	0	0	-1.45	-1.45
Inverters	G_Inv3	366583.7	4903091.4	2	0	0	87.7	87.7	1	3546.44	3.25	0	82	0	2.75	0	0	4.38	0	0	0	0	0	0	-1.47	-1.47
Inverters	G_Inv5	366638.5	4902958.1	2	0	0	87.7	87.7	1	3597.7	3.25	0	82.12	0	2.76	0	0	4.44	0	0	0	0	0	0	-1.65	-1.65
Inverters	G_Inv10	366900.7	4902704.8	2	0	0	87.7	87.7	1	3605.18	3.25	0	82.14	0	2.76	0	0	4.44	0	0	0	0	0	0	-1.68	-1.68
Westbrook Inverter Transfor	W_INVTR7	369786	4906417	2	0	0	77.3	77.3	1	1106.6	3.25	0	71.88	0	-2	0	0	0.74	0	0	0	0	0	0	6.72	6.72
Inverters	G_Inv7	366694.6	4902824.7	2	0	0	87.7	87.7	1	3653.12	3.25	0	82.25	0	2.76	0	0	4.5	0	0	0	0	0	0	-1.85	-1.85
Inverters	G_Inv9	366750.9	4902691.8	2	0	0	87.7	87.7	1	3712.84	3.25	0	82.39	0	2.77	0	0	4.56	0	0	0	0	0	0	-2.06	-2.06
Westbrook Inverter Transfor	W_INVTR5	369725	4906574	2	0	0	77.3	77.3	1	1216.93	3.25	0	72.71	0	-2.06	0	0	0.8	0	0	0	0	0	0	5.89	5.89
Inverter	MV1-3	364440	4906039	2	0	0	89.1	89.1	1	4808.89	3.25	0	84.64	0	1.59	0	0	12.21	0	0	0	0	0	0	-9.38	-9.38
Westbrook Inverter Transfor	W_INVTR6	369881	4906578	2	0	0	77.3	77.3	1	1293.53	3.25	0	73.24	0	-2.1	0	0	0.84	0	0	0	0	0	0	5.36	5.36
Inverter Transformer	MV6-4 T	370244	4906966	2	0	0	69.4	69.4	1	1816.47	3.25	0	76.18	0	2.1	0	0	4.78	0	0	0	0	0	0	-13.72	-13.72
Inverter Transformer	MV6-1 T	370230	4907364	2	0	0	69.4	69.4	1	2149.62	3.25	0	77.65	0	2.23	0	0	5.11	0	0	0	0	0	0	-15.64	-15.64
Inverter Transformer	MV2-1 T	365836	4906816	2	0	0	69.4	69.4	1	3637.55	3.25	0	82.22	0	2.69	0	0	6.4	0	0	0	0	0	0	-21.96	-21.96
Inverter Transformer	MV1-14 T	365157	4905049	2	0	0	69.4	69.4	1	4079.69	3.25	0	83.21	0	2.81	0	0	6.74	0	0	0	0	0	0	-23.4	-23.4
Inverter Transformer	MV1-10 T	365010	4905564	2	0	0	69.4	69.4	1	4206.07	3.25	0	83.48	0	2.84	0	0	6.83	0	0	0	0	0	0	-23.79	-23.79
Inverter Transformer	MV1-7 T	364919	4905782	2	0	0	69.4	69.4	1	4307.38	3.25	0	83.68	0	2.86	0	0	6.9	0	0	0	0	0	0	-24.1	-24.1
Inverter Transformer	MV1-13 T	364725	4905241	2	0	0	69.4	69.4	1	4495.79	3.25	0	84.06	0	2.9	0	0	7.04	0	0	0	0	0	0	-24.65	-24.65
Inverter Transformer	MV3-22 T	368661	4907142	2	0	0	56.1	56.1	1	1762.25	3.25	0	75.92	0	0.3	0	0	6.57	0	0	0	0	0	0	-26.73	-26.73
Inverter Transformer	MV3-21 T	368484	4907206	2	0	0	56.1	56.1	1	1884.46	3.25	0	76.5	0	0.36	0	0	6.81	0	0	0	0	0	0	-27.62	-27.62
Inverter Transformer	MV3-20 T	368683	4907317	2	0	0	56.1	56.1	1	1922.96	3.25	0	76.68	0	0.37	0	0	6.89	0	0	0	0	0	0	-27.88	-27.88
Inverter Transformer	MV6-3 T	370202	4907140	2	0	0	56.1	56.1	1	1940.64	3.25	0	76.76	0	0.38	0	0	6.93	0	0	0	0	0	0	-28.01	-28.01
Inverter Transformer	MV6-2 T	370091	4907339	2	0	0	56.1	56.1	1	2064.92	3.25	0	77.3	0	0.43	0	0	7.17	0	0	0	0	0	0	-28.84	-28.84
Inverter Transformer	MV3-19 T	368352	4907347	2	0	0	56.1	56.1	1	2066.71	3.25	0	77.31	0	0.43	0	0	7.17	0	0	0	0	0	0	-28.85	-28.85
Inverter Transformer	MV3-14 T	368678	4907498	2	0	0	56.1	56.1	1	2098.76	3.25	0	77.44	0	0.45	0	0	7.24	0	0	0	0	0	0	-29.06	-29.06
Inverter Transformer	MV3-16 T	368509	4907475	2	0	0	56.1	56.1	1	2126.52	3.25	0	77.55	0	0.46	0	0	7.29	0	0	0	0	0	0	-29.24	-29.24
Inverter Transformer	MV3-15 T	368351	4907477	2	0	0	56.1	56.1	1	2185.9	3.25	0	77.79	0	0.48	0	0	7.4	0	0	0	0	0	0	-29.62	-29.62
Inverter Transformer	MV3-17 T	368183	4907472	2	0	0	56.1	56.1	1	2253.14	3.25	0	78.06	0	0.51	0	0	7.53	0	0	0	0	0	0	-30.04	-30.04
Inverter Transformer	MV3-8 T	368685	4907712	2	0	0	56.1	56.1	1	2304.67	3.25	0	78.25	0	0.53	0	0	7.63	0	0	0	0	0	0	-30.36	-30.36
Inverter Transformer	MV3-9 T	368517	4907703	2	0	0	56.1	56.1	1	2340.41	3.25	0	78.39	0	0.55	0	0	7.7	0	0	0	0	0	0	-30.57	-30.57
Inverter Transformer	MV3-11 T	368340	4907662	2	0	0	56.1	56.1	1	2361.03	3.25	0	78.46	0	0.56	0	0	7.73	0	0	0	0	0	0	-30.69	-30.69
Inverter Transformer	MV3-18 T	367757	4907412	2	0	0	56.1	56.1	1	2429.12	3.25	0	78.71	0	0.59	0	0	7.86	0	0	0	0	0	0	-31.1	-31.1
Inverter Transformer	MV3-10 T	368162	4907669	2	0	0	56.1	56.1	1	2438.93	3.25	0	78.74	0	0.59	0	0	7.88	0	0	0	0	0	0	-31.15	-31.15
Inverter Transformer	MV3-13 T	367958	4907577	2	0	0	56.1	56.1	1	2454.24	3.25	0	78.8	0	0.6	0	0	7.91	0	0	0	0	0	0	-31.24	-31.24
Inverter Transformer	MV3-2 T	368677	4907928	2	0	0	56.1	56.1	1	2517.07	3.25	0	79.02	0	0.62	0	0	8.02	0	0	0	0	0	0	-31.6	-31.6
Inverter Transformer	MV3-5 T	368335	4907843	2	0	0	56.1	56.1	1	2531.76	3.25	0	79.07	0	0.63	0	0	8.05	0	0	0	0	0	0	-31.69	-31.69
Inverter Transformer	MV3-4 T	368507	4907925	2	0	0	56.1	56.1	1	2555.92	3.25	0	79.15	0	0.64	0	0	8.09	0	0	0	0	0	0	-31.82	-31.82
Inverter Transformer	MV3-6 T	368156	4907834	2	0	0	56.1	56.1	1	2591.18	3.25	0	79.27	0	0.66	0	0	8.15	0	0	0	0	0	0	-32.02	-32.02
Inverter Transformer	MV3-7 T	367951	4907754	2	0	0	56.1	56.1	1	2611.22	3.25	0	79.34	0	0.66	0	0	8.19	0	0	0	0	0	0	-32.13	-32.13
Inverter Transformer	MV3-12 T	367674	4907594	2	0	0	56.1	56.1	1	2624.86	3.25	0	79.38	0	0.67	0	0	8.21	0	0	0	0	0	0	-32.21	-32.21
Inverter Transformer	MV3-1 T	368150	4907976	2	0	0	56.1	56.1	1	2723.74	3.25	0	79.7	0	0.71	0	0	8.39	0	0	0	0	0	0	-32.75	-32.75
Inverter Transformer	MV3-3 T	367944	4907927	2	0	0	56.1	56.1	1	2767.08	3.25	0	79.84	0	0.73	0	0	8.47	0	0	0	0	0	0	-32.98	-32.98
Inverter Transformer	MV4-15 T	369170	4908481	2	0	0	56.1	56.1	1	3012.24	3.25	0	80.58	0	0.84	0	0	8.89	0	0	0	0	0	0	-34.24	-34.24
Inverter Transformer	MV4-14 T	369182	4908507	2	0	0	56.1	56.1	1	3038.08	3.25	0	80.65	0	0.85	0	0	8.93	0	0	0	0	0	0	-34.37	-34.37
Inverter Transformer	MV5-6 T	369987	4908507	2	0	0	56.1	56.1	1	3134.46	3.25	0	80.92	0	0.89	0	0	9.09	0	0	0	0	0	0	-34.85	-34.85
Inverter Transformer	MV4-13 T	369057	4908605	2	0	0	56.1	56.1	1	3139.88	3.25	0	80.94	0	0.89	0	0	9.1	0	0	0	0	0	0	-34.87	-34.87
Inverter Transformer	MV5-5 T	370021	4908690	2	0	0	56.1	56.1	1	3320.22	3.25	0	81.42	0	0.97	0	0	9.4	0	0	0	0	0	0	-35.73	-35.73
Inverter Transformer	MV4-12 T	369049	4908803	2	0	0	56.1	56.1	1	3338.03	3.25	0	81.47	0	0.97	0	0	9.43	0	0	0	0	0	0	-35.81	-35.81
Inverter Transformer	MV4-11 T	369269	4908855	2	0	0	56.1	56.1	1	3386.33	3.25	0	81.59	0	0.99	0	0	9.51	0	0	0	0	0	0	-36.04	-36.04
Inverter Transformer	MV4-10 T	369307	4908858	2	0	0	56.1	56.1	1	3390.15	3.25	0	81.6	0	0.99	0	0	9.51	0	0	0	0	0	0	-36.05	-36.05
Inverter Transformer	MV5-4 T	370330	4908707	2	0	0	56.1	56.1	1	3424.5	3.25	0	81.69	0	1.01	0	0	9.57	0	0	0	0	0	0	-36.21	-36.21
Inverter Transformer	MV2-2 T	365982	4906654	2	0	0	56.1	56.1	1	3443.3	3.25	0	81.74	0	1.02	0	0	9.6	0	0	0	0	0	0	-36.29	-36.29
Inverter Transformer	MV5-2 T	370011	4908853	2	0	0	56.1	56.1	1	3476.26	3.25	0	81.82	0	1.03	0	0	9.65	0	0	0	0	0	0	-36.44	-36.44
Inverter Transformer	MV4-8 T	369262	4909001	2	0	0	56.1	56.1	1	3532.21	3.25	0	81.96	0	1.05	0	0	9.74	0	0	0	0	0	0	-36.69	-36.69
Inverter Transformer	MV4-9 T	369284	4909001	2	0	0	56.1	56.1	1	3532.57	3.25	0	81.96	0	1.05	0	0	9.74	0	0	0	0	0	0	-36.7	-36.7
Inverter Transformer	MV5-3 T	370237	4908851	2	0	0	56.1	56.1	1	3532.95	3.25	0	81.96	0	1.05	0	0	9.74	0	0	0	0	0	0	-36.7	-36.7
Inverter Transformer	MV4-7 T	369040	4909001	2	0	0	56.1	56.1	1	3536.23	3.25	0	81.97	0	1.06	0	0	9.74	0	0	0	0	0	0	-36.71	-36.71
Inverter Transformer	MV2-3 T	365814	4906641	2	0	0	56.1	56.1	1	3597.24	3.25	0	82.12	0	1.08	0	0	9.84	0	0	0	0	0	0	-36.98	-36.98
Inverter Transformer	MV4-6 T	369249	4909192	2	0	0	56.1	56.1	1	3723.06	3.25	0	82.42	0	1.13	0	0	10.04	0	0	0	0	0	0	-37.53	-37.53

	Inverter Transformer	MV4-5 T	369283	4909199	2	0	0	56.1	56.1	1	3730.52	3.25	0	82.44	0	1.13	0	0	10.05	0	0	0	0	0	0	-37.56	-37.56
	Inverter Transformer	MV4-4 T	369033	4909199	2	0	0	56.1	56.1	1	3734.34	3.25	0	82.44	0	1.14	0	0	10.05	0	0	0	0	0	0	-37.58	-37.58
	Inverter Transformer	MV5-1 T	370015	4909142	2	0	0	56.1	56.1	1	3759.02	3.25	0	82.5	0	1.15	0	0	10.09	0	0	0	0	0	0	-37.68	-37.68
	Inverter Transformer	MV2-4 T	365590	4906628	2	0	0	56.1	56.1	1	3805.74	3.25	0	82.61	0	1.17	0	0	10.16	0	0	0	0	0	0	-37.88	-37.88
	Inverter Transformer	MV4-3 T	369234	4909397	2	0	0	56.1	56.1	1	3927.95	3.25	0	82.88	0	1.22	0	0	10.35	0	0	0	0	0	0	-38.39	-38.39
	Inverter Transformer	MV4-2 T	369267	4909397	2	0	0	56.1	56.1	1	3928.24	3.25	0	82.88	0	1.22	0	0	10.35	0	0	0	0	0	0	-38.39	-38.39
	Inverter Transformer	MV4-1 T	369017	4909397	2	0	0	56.1	56.1	1	3932.89	3.25	0	82.89	0	1.22	0	0	10.35	0	0	0	0	0	0	-38.41	-38.41
	Inverter Transformer	MV1-15 T	365309	4904994	2	0	0	56.1	56.1	1	3934.79	3.25	0	82.9	0	1.22	0	0	10.36	0	0	0	0	0	0	-38.42	-38.42
	Inverter Transformer	MV1-12 T	365044	4905386	2	0	0	56.1	56.1	1	4171.83	3.25	0	83.41	0	1.31	0	0	10.71	0	0	0	0	0	0	-39.37	-39.37
	Inverter Transformer	MV1-4 T	364821	4905918	2	0	0	56.1	56.1	1	4416.87	3.25	0	83.9	0	1.41	0	0	11.06	0	0	0	0	0	0	-40.31	-40.31
	Inverter Transformer	MV1-8 T	364782	4905647	2	0	0	56.1	56.1	1	4436.57	3.25	0	83.94	0	1.42	0	0	11.09	0	0	0	0	0	0	-40.38	-40.38
	Inverter Transformer	MV1-2 T	364759	4906063	2	0	0	56.1	56.1	1	4495.4	3.25	0	84.06	0	1.44	0	0	11.17	0	0	0	0	0	0	-40.6	-40.6
	Inverter Transformer	MV1-1 T	364721	4906166	2	0	0	56.1	56.1	1	4547.72	3.25	0	84.16	0	1.46	0	0	11.24	0	0	0	0	0	0	-40.8	-40.8
	Inverter Transformer	MV1-5 T	364676	4905892	2	0	0	56.1	56.1	1	4558.66	3.25	0	84.18	0	1.46	0	0	11.26	0	0	0	0	0	0	-40.84	-40.84
	Inverter Transformer	MV1-11 T	364649	4905414	2	0	0	56.1	56.1	1	4566.33	3.25	0	84.19	0	1.46	0	0	11.27	0	0	0	0	0	0	-40.87	-40.87
	Inverter Transformer	MV1-9 T	364555	4905646	2	0	0	56.1	56.1	1	4663.36	3.25	0	84.37	0	1.5	0	0	11.4	0	0	0	0	0	0	-41.22	-41.22
	Inverter Transformer	MV1-6 T	364482	4905835	2	0	0	56.1	56.1	1	4747.12	3.25	0	84.53	0	1.53	0	0	11.52	0	0	0	0	0	0	-41.52	-41.52
	Inverter Transformer	MV1-3 T	364435	4906039	2	0	0	56.1	56.1	1	4813.85	3.25	0	84.65	0	1.56	0	0	11.61	0	0	0	0	0	0	-41.75	-41.75
	Line Reactor	NGR	369421	4908787.5	5	0	0	45.4	45.4	1	3324.79	5.25	0	81.44	0	3.31	1.32	0.12	1.36	0	0	0	0	0	0	-42.08	-42.08
Limit. Valu	0	0																								
Level D/N:	27.5914	27.5914																								

Receiver: Vacant Lot Receptor
ID: W-V16
X: 369990.6
Y: 4905253
Z: 4.5
Ground: 0

ISO	Description	ID	X	Y	Z	Ground	ReflOrd	LxT	LxN	L/A	Dist.	hm	Freq	Adiv	K0b	Agr	Abar	z	Aatm	Afol	Ahous	Cmet	CmetN	Dc	RL	LtotT	LtotN
	Sol_Luce Substation	S_Substation	369426	4908792	3.5	0	0	112.1	112.1	1	3583.75	5.25	0	82.09	0	0.47	3.22	0.35	6.8	0	0	0	0	0	0	19.49	19.49
	Inverter	MV6-3	370207	4907140	2	0	0	100.3	100.3	1	1899.37	3.25	0	76.57	0	0.1	0	0	13.25	0	0	0	0	0	0	10.39	10.39
	Inverter	MV6-2	370085	4907339	2	0	0	100.3	100.3	1	2088.14	3.25	0	77.4	0	0.15	0	0	13.65	0	0	0	0	0	0	9.12	9.12
	SubstationTransformer	W_ST	369711.17	4906112.3	2.5	0	0	92	92	1	903.57	3.5	0	70.12	0	-0.38	0	-0.14	2.32	0	0	0	0	0	0	19.92	19.92
	Inverter	MV3-20	368689	4907317	2	0	0	100.3	100.3	1	2440.14	3.25	0	78.75	0	0.24	0	0	14.34	0	0	0	0	0	0	6.98	6.98
	Inverter	MV3-21	368478	4907206	2	0	0	100.3	100.3	1	2470.26	3.25	0	78.85	0	0.25	0	0	14.4	0	0	0	0	0	0	6.81	6.81
	Inverter	MV3-14	368684	4907498	2	0	0	100.3	100.3	1	2597.54	3.25	0	79.29	0	0.28	0	0	14.64	0	0	0	0	0	0	6.1	6.1
	Inverter	MV3-19	368357	4907347	2	0	0	100.3	100.3	1	2655.84	3.25	0	79.48	0	0.29	0	0	14.75	0	0	0	0	0	0	5.79	5.79
	Inverter	MV3-16	368514	4907475	2	0	0	100.3	100.3	1	2667.89	3.25	0	79.52	0	0.29	0	0	14.77	0	0	0	0	0	0	5.72	5.72
	Inverter	MV3-15	368357	4907477	2	0	0	100.3	100.3	1	2759.5	3.25	0	79.82	0	0.31	0	0	14.94	0	0	0	0	0	0	5.24	5.24
	Inverter	MV3-8	368680	4907712	2	0	0	100.3	100.3	1	2786.46	3.25	0	79.9	0	0.32	0	0	14.99	0	0	0	0	0	0	5.1	5.1
	Inverter	MV3-9	368512	4907703	2	0	0	100.3	100.3	1	2861.6	3.25	0	80.13	0	0.33	0	0	15.13	0	0	0	0	0	0	4.72	4.72
	Inverter	MV3-17	368178	4907472	2	0	0	100.3	100.3	1	2865.22	3.25	0	80.14	0	0.34	0	0	15.13	0	0	0	0	0	0	4.7	4.7
	Inverter	MV3-11	368346	4907662	2	0	0	100.3	100.3	1	2916.85	3.25	0	80.3	0	0.35	0	0	15.22	0	0	0	0	0	0	4.44	4.44
	Inverter	MV6-1	370235	4907364	2	0	0	97.3	97.3	1	2125.1	3.25	0	77.55	0	0.16	0	0	13.72	0	0	0	0	0	0	5.88	5.88
	Inverter	MV3-10	368167	4907669	2	0	0	100.3	100.3	1	3026.98	3.25	0	80.62	0	0.37	0	0	15.42	0	0	0	0	0	0	3.9	3.9
	Inverter	MV3-13	367963	4907577	2	0	0	100.3	100.3	1	3084.18	3.25	0	80.78	0	0.38	0	0	15.52	0	0	0	0	0	0	3.63	3.63
	Inverter	MV3-18	367752	4907412	2	0	0	100.3	100.3	1	3110.08	3.25	0	80.86	0	0.38	0	0	15.57	0	0	0	0	0	0	3.51	3.51
	Inverter	MV3-6	368162	4907834	2	0	0	100.3	100.3	1	3163.12	3.25	0	81	0	0.39	0	0	15.66	0	0	0	0	0	0	3.26	3.26
	Inverter	MV3-7	367945	4907754	2	0	0	100.3	100.3	1	3231.02	3.25	0	81.19	0	0.4	0	0	15.77	0	0	0	0	0	0	2.95	2.95
	Inverter	MV3-12	367668	4907594	2	0	0	100.3	100.3	1	3297.69	3.25	0	81.36	0	0.42	0	0	15.89	0	0	0	0	0	0	2.64	2.64
	Inverter	MV3-3	367939	4907927	2	0	0	100.3	100.3	1	3370.36	3.25	0	81.55	0	0.43	0	0	16.01	0	0	0	0	0	0	2.32	2.32
	Inverter	MV5-5	370015	4908690	2	0	0	100.3	100.3	1	3437.09	3.25	0	81.72	0	0.44	0	0	16.13	0	0	0	0	0	0	2.02	2.02
	Inverter	MV5-4	370324	4908707	2	0	0	100.3	100.3	1	3470.05	3.25	0	81.81	0	0.45	0	0	16.18	0	0	0	0	0	0	1.88	1.88
	Westbrook Inverter Enclosur	W_INV4	369673	4906164	2	0	0	89.1	89.1	1	964.78	3.25	0	70.69	0	0.68	0	0	6.25	0	0	0	0	0	0	11.44	11.44
	Inverter	MV5-2	370006	4908853	2	0	0	100.3	100.3	1	3600.03	3.25	0	82.13	0	0.47	0	0	16.4	0	0	0	0	0	0	1.32	1.32
	Inverter	MV5-3	370231	4908851	2	0	0	100.3	100.3	1	3606.02	3.25	0	82.14	0	0.47	0	0	16.41	0	0	0	0	0	0	1.3	1.3
	Inverter	MV4-10	369312	4908858	2	0	0	100.3	100.3	1	3668.31	3.25	0	82.29	0	0.48	0	0	16.51	0	0	0	0	0	0	1.03	1.03
	Inverter	MV4-11	369264	4908855	2	0	0	100.3	100.3	1	3674.56	3.25	0	82.3	0	0.48	0	0	16.52	0	0	0	0	0	0	1.01	1.01
	Westbrook Inverter Enclosur	W_INV3	369508	4906164	2	0	0	89.1	89.1	1	1030.94	3.25	0	71.26	0	0.69	0	0	6.37	0	0	0	0	0	0	10.73	10.73
	Inverter	MV4-9	369289	4909001	2	0	0	100.3	100.3	1	3813.1	3.25	0	82.63	0	0.5	0	0	16.75	0	0	0	0	0	0	0.44	0.44
	Inverter	MV4-8	369256	4909001	2	0	0	100.3	100.3	1	3819.31	3.25	0	82.64	0	0.5	0	0	16.76	0	0	0	0	0	0	0.41	0.41
	Inverter	MV4-7	369035	4909001	2	0	0	100.3	100.3	1	3867.9	3.25	0	82.75	0	0.51	0	0	16.84	0	0	0	0	0	0	0.22	0.22
	Inverter	MV5-1	370020	4909142	2	0	0	100.3	100.3	1	3889.11	3.25	0	82.8	0	0.51	0	0	16.87	0	0	0	0	0	0	0.13	0.13
	Inverter	MV4-5	369289	4909199	2	0	0	100.3	100.3	1	4007.89	3.25	0	83.06	0	0.53	0	0	17.06	0	0	0	0	0	0	-0.34	-0.34
	Inverter	MV4-6	369243	4909192	2	0	0	100.3	100.3	1	4009.32	3.25	0	83.06	0	0.53	0	0	17.06	0	0	0	0	0	0	-0.34	-0.34
	Inverter	MV4-4	369027	4909199	2	0	0	100.3	100.3	1	4061.95	3.25	0	83.17	0	0.54	0	0	17.15	0	0	0	0	0	0	-0.55	-0.55
	Inverter	MV4-2	369272	4909397	2	0	0	100.3	100.3	1	4205.84	3.25	0	83.48	0	0.55	0	0	17.37	0	0	0	0	0	0	-1.09	-1.09
	Inverter	MV4-3	369229	4909397	2	0	0	100.3	100.3	1	4213.4	3.25	0	83.49	0	0.56	0	0	17.39	0	0	0	0	0	0	-1.12	-1.12
	Inverter	MV4-1	369011	4909397	2	0	0	100.3	100.3	1	4258.21	3.25	0	83.58	0	0.56	0	0	17.46	0	0	0	0	0	0	-1.29	-1.29
	Westbrook Inverter Enclosur	W_INV7	369780	4906417	2	0	0	89.1	89.1	1	1182.9	3.25	0	72.46	0	0.72	0	0	6.65	0	0	0	0	0	0	9.22	9.22
	Inverter	MV2-3	365820	4906641	2	0	0	100.3	100.3	1	4395.5	3.25	0	83.86	0	0.58	0	0	17.67	0	0	0	0	0	0	-1.8	-1.8
	Inverter	MV2-4	365586	4906624	2	0	0	100.3	100.3	1	4613.04	3.25	0	84.28	0	0.6	0	0	18	0	0	0	0	0	0	-2.57	-2.57
	Inverter	MV1-15	365315	4904994	2	0	0	100.3	100.3	1	4682.77	3.25	0	84.41	0	0.61	0	0	18.11	0	0	0	0	0	0	-2.82	-2.82

Westbrook Inverter Enclosur	W_INV2	369374	4906388	2	0	0	89.1	89.1	1	1291.68	3.25	0	73.22	0	0.75	0	0	6.85	0	0	0	0	0	0	8.24	8.24
Westbrook Inverter Enclosur	W_INV6	369875	4906578	2	0	0	89.1	89.1	1	1330.04	3.25	0	73.48	0	0.76	0	0	6.91	0	0	0	0	0	0	7.91	7.91
Westbrook Inverter Enclosur	W_INV5	369719	4906574	2	0	0	89.1	89.1	1	1348.63	3.25	0	73.6	0	0.76	0	0	6.95	0	0	0	0	0	0	7.76	7.76
Inverter	MV1-12	365038	4905386	2	0	0	100.3	100.3	1	4954.39	3.25	0	84.9	0	0.64	0	0	18.51	0	0	0	0	0	0	-3.74	-3.74
Inverter	MV1-8	364788	4905647	2	0	0	100.3	100.3	1	5217.5	3.25	0	85.35	0	0.66	0	0	18.9	0	0	0	0	0	0	-4.59	-4.59
Inverter	MV1-4	364815	4905918	2	0	0	100.3	100.3	1	5218.15	3.25	0	85.35	0	0.66	0	0	18.9	0	0	0	0	0	0	-4.6	-4.6
Inverter	MV1-2	364753	4906063	2	0	0	100.3	100.3	1	5299.86	3.25	0	85.49	0	0.67	0	0	19.02	0	0	0	0	0	0	-4.86	-4.86
Inverter	MV1-11	364655	4905414	2	0	0	100.3	100.3	1	5338.03	3.25	0	85.55	0	0.67	0	0	19.07	0	0	0	0	0	0	-4.98	-4.98
Inverter	MV1-1	364715	4906166	2	0	0	100.3	100.3	1	5354.02	3.25	0	85.57	0	0.67	0	0	19.09	0	0	0	0	0	0	-5.03	-5.03
Inverter	MV1-5	364671	4905892	2	0	0	100.3	100.3	1	5357.84	3.25	0	85.58	0	0.67	0	0	19.1	0	0	0	0	0	0	-5.04	-5.04
DSTATCOM - 10 MVAR #1	DSAT1	369437	4908757	2.5	0	0	96.6	96.6	1	3547.46	3.5	0	82	0	3.5	0	0	2.6	0	0	0	0	0	0	8.53	8.53
DSTATCOM - 10 MVAR #2	DSAT2	369403	4908757	2.5	0	0	96.6	96.6	1	3552.93	3.5	0	82.01	0	3.5	0	0	2.6	0	0	0	0	0	0	8.51	8.51
Inverter	MV1-9	364561	4905646	2	0	0	100.3	100.3	1	5443.8	3.25	0	85.72	0	0.68	0	0	19.22	0	0	0	0	0	0	-5.3	-5.3
Inverter	MV1-6	364477	4905835	2	0	0	100.3	100.3	1	5544.23	3.25	0	85.88	0	0.68	0	0	19.36	0	0	0	0	0	0	-5.61	-5.61
Inverter	MV2-1	365842	4906816	2	0	0	97.3	97.3	1	4433.27	3.25	0	83.93	0	0.58	0	0	17.73	0	0	0	0	0	0	-4.93	-4.93
Inverter	MV1-14	365163	4905049	2	0	0	97.3	97.3	1	4831.91	3.25	0	84.68	0	0.63	0	0	18.33	0	0	0	0	0	0	-6.33	-6.33
Inverter	MV1-10	365004	4905564	2	0	0	97.3	97.3	1	4996.29	3.25	0	84.97	0	0.64	0	0	18.57	0	0	0	0	0	0	-6.88	-6.88
Inverter	MV1-7	364925	4905782	2	0	0	97.3	97.3	1	5093.15	3.25	0	85.14	0	0.65	0	0	18.72	0	0	0	0	0	0	-7.19	-7.19
Inverter	MV1-13	364731	4905241	2	0	0	97.3	97.3	1	5259.61	3.25	0	85.42	0	0.66	0	0	18.96	0	0	0	0	0	0	-7.73	-7.73
Westbrook Inverter Enclosur	W_INV1	369409	4906578	2	0	0	86.1	86.1	1	1447.03	3.25	0	74.21	0	0.78	0	0	7.12	0	0	0	0	0	0	3.95	3.95
Inverter	MV3-22	368656	4907142	2	0	0	89.1	89.1	1	2312.9	3.25	0	78.28	0	0.98	0	0	8.55	0	0	0	0	0	0	1.24	1.24
Inverter	MV6-4	370250	4906966	2	0	0	86.1	86.1	1	1732.53	3.25	0	75.77	0	0.84	0	0	7.6	0	0	0	0	0	0	1.84	1.84
Inverter	MV3-2	368671	4907928	2	0	0	89.1	89.1	1	2982.78	3.25	0	80.49	0	1.14	0	0	9.59	0	0	0	0	0	0	-2.17	-2.17
Inverter	MV3-4	368502	4907925	2	0	0	89.1	89.1	1	3058.68	3.25	0	80.71	0	1.16	0	0	9.71	0	0	0	0	0	0	-2.52	-2.52
Inverter	MV3-5	368340	4907843	2	0	0	89.1	89.1	1	3071.25	3.25	0	80.75	0	1.16	0	0	9.72	0	0	0	0	0	0	-2.58	-2.58
Gardiner Substation	G_Sub	366586.3	4903349.9	2.5	0	0	90.8	90.8	1	3900.13	4.25	0	82.82	0	1.33	2.65	0.29	7.23	0	0	0	0	0	0	-3.26	-3.26
Inverter	MV5-6	369982	4908507	2	0	0	89.1	89.1	1	3254.01	3.25	0	81.25	0	1.21	0	0	10	0	0	0	0	0	0	-3.4	-3.4
Fixed Reactor Bank 2	FRB2	369464	4908755	6	0	0	89.8	89.8	1	3541.37	5.25	0	81.98	0	-0.79	0	0	6.74	0	0	0	0	0	0	1.85	1.85
Fixed Reactor Bank 1	FRB1	369378	4908755	6	0	0	89.8	89.8	1	3555.18	5.25	0	82.02	0	-0.79	0	0	6.76	0	0	0	0	0	0	1.79	1.79
Inverter	MV3-1	368156	4907976	2	0	0	89.1	89.1	1	3283.37	3.25	0	81.33	0	1.22	0	0	10.04	0	0	0	0	0	0	-3.53	-3.53
Inverter	MV4-15	369176	4908481	2	0	0	89.1	89.1	1	3329.2	3.25	0	81.45	0	1.23	0	0	10.11	0	0	0	0	0	0	-3.73	-3.73
Inverter	MV4-14	369176	4908507	2	0	0	89.1	89.1	1	3354.41	3.25	0	81.51	0	1.23	0	0	10.15	0	0	0	0	0	0	-3.84	-3.84
Inverter	MV4-13	369051	4908605	2	0	0	89.1	89.1	1	3481.2	3.25	0	81.83	0	1.26	0	0	10.34	0	0	0	0	0	0	-4.38	-4.38
Inverter	MV4-12	369043	4908803	2	0	0	89.1	89.1	1	3674.3	3.25	0	82.3	0	1.31	0	0	10.62	0	0	0	0	0	0	-5.17	-5.17
Westbrook Inverter Transfor	W_INVTR4	369679	4906164	2	0	0	77.3	77.3	1	962.82	3.25	0	70.67	0	-1.91	0	0	0.66	0	0	0	0	0	0	7.92	7.92
Westbrook Inverter Transfor	W_INVTR3	369514	4906164	2	0	0	77.3	77.3	1	1028.14	3.25	0	71.24	0	-1.95	0	0	0.69	0	0	0	0	0	0	7.36	7.36
Inverter	MV2-2	365977	4906654	2	0	0	89.1	89.1	1	4251.09	3.25	0	83.57	0	1.45	0	0	11.44	0	0	0	0	0	0	-7.41	-7.41
Westbrook Inverter Transfor	W_INVTR7	369786	4906417	2	0	0	77.3	77.3	1	1181.85	3.25	0	72.45	0	-2.04	0	0	0.78	0	0	0	0	0	0	6.15	6.15
Inverters	G_Inv2	366676.9	4903239.1	2	0	0	87.7	87.7	1	3877.68	3.25	0	82.77	0	2.78	0	0	4.74	0	0	0	0	0	0	-2.63	-2.63
Inverters	G_Inv4	366732.8	4903105	2	0	0	87.7	87.7	1	3902.2	3.25	0	82.83	0	2.78	0	0	4.77	0	0	0	0	0	0	-2.72	-2.72
Inverters	G_Inv6	366788.5	4902972	2	0	0	87.7	87.7	1	3931.46	3.25	0	82.89	0	2.79	0	0	4.8	0	0	0	0	0	0	-2.82	-2.82
Inverters	G_Inv8	366844.5	4902838.5	2	0	0	87.7	87.7	1	3965.82	3.25	0	82.97	0	2.79	0	0	4.84	0	0	0	0	0	0	-2.93	-2.93
Inverters	G_Inv10	366900.7	4902704.8	2	0	0	87.7	87.7	1	4005.1	3.25	0	83.05	0	2.79	0	0	4.88	0	0	0	0	0	0	-3.06	-3.06
Inverters	G_Inv1	366526.4	4903225.8	2	0	0	87.7	87.7	1	4013.75	3.25	0	83.07	0	2.79	0	0	4.89	0	0	0	0	0	0	-3.09	-3.09
Inverters	G_Inv3	366583.7	4903091.4	2	0	0	87.7	87.7	1	4034.78	3.25	0	83.12	0	2.79	0	0	4.91	0	0	0	0	0	0	-3.16	-3.16
Inverters	G_Inv5	366638.5	4902958.1	2	0	0	87.7	87.7	1	4062.41	3.25	0	83.18	0	2.8	0	0	4.94	0	0	0	0	0	0	-3.25	-3.25
Inverters	G_Inv7	366694.6	4902824.7	2	0	0	87.7	87.7	1	4093.93	3.25	0	83.24	0	2.8	0	0	4.98	0	0	0	0	0	0	-3.36	-3.36
Inverters	G_Inv9	366750.9	4902691.8	2	0	0	87.7	87.7	1	4129.82	3.25	0	83.32	0	2.8	0	0	5.01	0	0	0	0	0	0	-3.47	-3.47
Westbrook Inverter Transfor	W_INVTR2	369368	4906388	2	0	0	77.3	77.3	1	1294.55	3.25	0	73.24	0	-2.1	0	0	0.84	0	0	0	0	0	0	5.36	5.36
Westbrook Inverter Transfor	W_INVTR1	369403	4906578	2	0	0	78.2	78.2	1	1449.45	3.25	0	74.22	0	-2.18	0	0	0.93	0	0	0	0	0	0	5.27	5.27
Westbrook Inverter Transfor	W_INVTR6	369881	4906578	2	0	0	77.3	77.3	1	1329.53	3.25	0	73.47	0	-2.12	0	0	0.86	0	0	0	0	0	0	5.12	5.12
Westbrook Inverter Transfor	W_INVTR5	369725	4906574	2	0	0	77.3	77.3	1	1347.44	3.25	0	73.59	0	-2.13	0	0	0.87	0	0	0	0	0	0	5.01	5.01
Inverter	MV1-3	364440	4906039	2	0	0	89.1	89.1	1	5605.98	3.25	0	85.97	0	1.79	0	0	13.26	0	0	0	0	0	0	-11.96	-11.96
Inverter Transformer	MV6-4 T	370244	4906966	2	0	0	69.4	69.4	1	1731.64	3.25	0	75.77	0	2.07	0	0	4.69	0	0	0	0	0	0	-13.18	-13.18
Inverter Transformer	MV6-1 T	370230	4907364	2	0	0	69.4	69.4	1	2124.53	3.25	0	77.55	0	2.22	0	0	5.09	0	0	0	0	0	0	-15.5	-15.5
Inverter Transformer	MV2-1 T	365836	4906816	2	0	0	69.4	69.4	1	4438.88	3.25	0	83.95	0	2.89	0	0	7	0	0	0	0	0	0	-24.48	-24.48
Inverter Transformer	MV1-14 T	365157	4905049	2	0	0	69.4	69.4	1	4837.9	3.25	0	84.69	0	2.98	0	0	7.27	0	0	0	0	0	0	-25.59	-25.59
Inverter Transformer	MV1-10 T	365010	4905564	2	0	0	69.4	69.4	1	4990.3	3.25	0	84.96	0	3.01	0	0	7.38	0	0	0	0	0	0	-26	-26
Inverter Transformer	MV1-7 T	364919	4905782	2	0	0	69.4	69.4	1	5099.12	3.25	0	85.15	0	3.03	0	0	7.45	0	0	0	0	0	0	-26.28	-26.28
Inverter Transformer	MV1-13 T	364725	4905241	2	0	0	69.4	69.4	1	5265.61	3.25	0	85.43	0	3.06	0	0	7.56	0	0	0	0	0	0	-26.7	-26.7
Inverter Transformer	MV6-3 T	370202	4907140	2	0	0	56.1	56.1	1	1898.81	3.25	0	76.57	0	0.36	0	0	6.84	0	0	0	0	0	0	-27.72	-27.72
Inverter Transformer	MV6-2 T	370091	4907339	2	0	0	56.1	56.1	1	2088.42	3.25	0	77.4	0	0.44	0	0	7.22	0	0	0	0	0	0	-29	-29
Inverter Transformer	MV3-22 T	368661	4907142	2	0	0	56.1	56.1	1	2310.01	3.25	0	78.27	0	0.54	0	0	7.64	0	0	0	0	0	0	-30.39	-30.39
Inverter Transformer	MV3-20 T	368683	4907317	2	0	0	56.1	56.1	1	2443.34	3.25	0	78.76	0	0.59	0	0	7.89	0	0	0	0	0	0	-31.18	-31.18
Inverter Transformer	MV3-21 T	368484	4907206	2	0	0	56.1	56.1	1	2466.59	3.25	0	78.84	0	0.6	0	0	7.93	0	0	0	0	0	0	-31.31	-31.31
Inverter Transformer	MV3-14 T	368678	4907498	2	0	0	56.1	56.1	1	2600.57	3.25	0	79.3	0	0.66	0	0	8.17	0	0	0	0	0	0	-32.07	-32.07
Inverter Transformer	MV3-19 T	368352	4907347	2	0	0	56.1	56.1	1	2658.92	3.25	0	79.49	0	0.68	0	0	8.28	0	0	0	0	0	0	-32.4	-32.4
Inverter Transformer	MV3-16 T	368509	4907475	2	0	0	56.1	56.1	1	2670.66	3.25	0	79.53	0	0.69	0	0	8.3	0	0	0	0	0	0	-32.46	-32.46
Inverter Transformer	MV3-15 T	368351	4907477	2	0	0	56.1	56.1	1	2763.05	3.25	0	79.83	0	0.73	0	0	8.46	0	0	0	0	0	0	-32.96	-32.96
Inverter Transformer	MV3-8 T	368685	4907712	2	0	0	56.1	56.1	1	2784.11	3.25	0	79.89	0	0.74	0	0	8.5	0	0	0	0	0	0	-33.07	-33.07
Inverter Transformer	MV3-9 T	368517	4907703	2	0	0	56.1	56.1	1	2859.02	3.25	0	80.12	0	0.77	0	0	8.63	0	0	0	0	0	0	-33.46	-33.46
Inverter Transformer	MV3-17 T	368183	4907472	2	0	0	56.1	56.1	1	2862.06	3.25	0	80.13	0	0.77	0	0	8.63	0	0	0	0	0	0	-33.48	-33.48
Inverter Transformer	MV3-11 T	368340	4907662	2	0	0	56.1	56.1	1	2920.23	3.25	0	80.31	0	0.8	0	0	8.73	0	0	0	0	0	0	-33.78	-33.78
Inverter Transformer	MV3-2 T	368677	4907928	2	0	0	56.1	56.1	1	2980.13	3.25	0	80.48	0	0.82	0	0	8.83	0	0	0	0	0	0	-34.08	-34.08

Inverter Transformer	MV3-10 T	368162	4907669	2	0	0	56.1	56.1	1	3029.99	3.25	0	80.63	0	0.84	0	0	8.92	0	0	0	0	0	0	-34.33	-34.33
Inverter Transformer	MV3-4 T	368507	4907925	2	0	0	56.1	56.1	1	3056.25	3.25	0	80.7	0	0.85	0	0	8.96	0	0	0	0	0	0	-34.46	-34.46
Inverter Transformer	MV3-5 T	368335	4907843	2	0	0	56.1	56.1	1	3073.94	3.25	0	80.75	0	0.86	0	0	8.99	0	0	0	0	0	0	-34.55	-34.55
Inverter Transformer	MV3-13 T	367958	4907577	2	0	0	56.1	56.1	1	3087.47	3.25	0	80.79	0	0.87	0	0	9.02	0	0	0	0	0	0	-34.62	-34.62
Inverter Transformer	MV3-18 T	367757	4907412	2	0	0	56.1	56.1	1	3106.49	3.25	0	80.85	0	0.87	0	0	9.05	0	0	0	0	0	0	-34.71	-34.71
Inverter Transformer	MV3-6 T	368156	4907834	2	0	0	56.1	56.1	1	3166.6	3.25	0	81.01	0	0.9	0	0	9.15	0	0	0	0	0	0	-35	-35
Inverter Transformer	MV3-7 T	367951	4907754	2	0	0	56.1	56.1	1	3227.22	3.25	0	81.18	0	0.93	0	0	9.25	0	0	0	0	0	0	-35.29	-35.29
Inverter Transformer	MV5-6 T	369987	4908507	2	0	0	56.1	56.1	1	3254	3.25	0	81.25	0	0.94	0	0	9.29	0	0	0	0	0	0	-35.42	-35.42
Inverter Transformer	MV3-1 T	368150	4907976	2	0	0	56.1	56.1	1	3286.72	3.25	0	81.34	0	0.95	0	0	9.34	0	0	0	0	0	0	-35.57	-35.57
Inverter Transformer	MV3-12 T	367674	4907594	2	0	0	56.1	56.1	1	3293.47	3.25	0	81.35	0	0.95	0	0	9.36	0	0	0	0	0	0	-35.6	-35.6
Inverter Transformer	MV4-15 T	369170	4908481	2	0	0	56.1	56.1	1	3330.67	3.25	0	81.45	0	0.97	0	0	9.42	0	0	0	0	0	0	-35.78	-35.78
Inverter Transformer	MV4-14 T	369182	4908507	2	0	0	56.1	56.1	1	3352.96	3.25	0	81.51	0	0.98	0	0	9.45	0	0	0	0	0	0	-35.88	-35.88
Inverter Transformer	MV3-3 T	367944	4907927	2	0	0	56.1	56.1	1	3367.32	3.25	0	81.55	0	0.98	0	0	9.48	0	0	0	0	0	0	-35.95	-35.95
Inverter Transformer	MV5-5 T	370021	4908690	2	0	0	56.1	56.1	1	3437.14	3.25	0	81.72	0	1.01	0	0	9.59	0	0	0	0	0	0	-36.27	-36.27
Inverter Transformer	MV5-4 T	370330	4908707	2	0	0	56.1	56.1	1	3470.64	3.25	0	81.81	0	1.03	0	0	9.64	0	0	0	0	0	0	-36.42	-36.42
Inverter Transformer	MV4-13 T	369057	4908605	2	0	0	56.1	56.1	1	3479.59	3.25	0	81.83	0	1.03	0	0	9.66	0	0	0	0	0	0	-36.46	-36.46
Inverter Transformer	MV5-2 T	370011	4908853	2	0	0	56.1	56.1	1	3600.06	3.25	0	82.13	0	1.08	0	0	9.85	0	0	0	0	0	0	-36.99	-36.99
Inverter Transformer	MV5-3 T	370237	4908851	2	0	0	56.1	56.1	1	3606.43	3.25	0	82.14	0	1.08	0	0	9.86	0	0	0	0	0	0	-37.02	-37.02
Inverter Transformer	MV4-10 T	369307	4908858	2	0	0	56.1	56.1	1	3669.24	3.25	0	82.29	0	1.11	0	0	9.95	0	0	0	0	0	0	-37.3	-37.3
Inverter Transformer	MV4-12 T	369049	4908803	2	0	0	56.1	56.1	1	3672.75	3.25	0	82.3	0	1.11	0	0	9.96	0	0	0	0	0	0	-37.31	-37.31
Inverter Transformer	MV4-11 T	369269	4908855	2	0	0	56.1	56.1	1	3673.57	3.25	0	82.3	0	1.11	0	0	9.96	0	0	0	0	0	0	-37.31	-37.31
Inverter Transformer	MV4-9 T	369284	4909001	2	0	0	56.1	56.1	1	3814.03	3.25	0	82.63	0	1.17	0	0	10.18	0	0	0	0	0	0	-37.91	-37.91
Inverter Transformer	MV4-8 T	369262	4909001	2	0	0	56.1	56.1	1	3818.16	3.25	0	82.64	0	1.17	0	0	10.18	0	0	0	0	0	0	-37.93	-37.93
Inverter Transformer	MV4-7 T	369040	4909001	2	0	0	56.1	56.1	1	3866.67	3.25	0	82.75	0	1.19	0	0	10.26	0	0	0	0	0	0	-38.13	-38.13
Inverter Transformer	MV5-1 T	370015	4909142	2	0	0	56.1	56.1	1	3889.08	3.25	0	82.8	0	1.2	0	0	10.29	0	0	0	0	0	0	-38.23	-38.23
Inverter Transformer	MV4-6 T	369249	4909192	2	0	0	56.1	56.1	1	4008.2	3.25	0	83.06	0	1.25	0	0	10.47	0	0	0	0	0	0	-38.71	-38.71
Inverter Transformer	MV4-5 T	369283	4909199	2	0	0	56.1	56.1	1	4008.94	3.25	0	83.06	0	1.25	0	0	10.47	0	0	0	0	0	0	-38.72	-38.72
Inverter Transformer	MV4-4 T	369033	4909199	2	0	0	56.1	56.1	1	4060.53	3.25	0	83.17	0	1.27	0	0	10.54	0	0	0	0	0	0	-38.93	-38.93
Inverter Transformer	MV4-2 T	369267	4909397	2	0	0	56.1	56.1	1	4206.7	3.25	0	83.48	0	1.33	0	0	10.76	0	0	0	0	0	0	-39.5	-39.5
Inverter Transformer	MV4-3 T	369234	4909397	2	0	0	56.1	56.1	1	4212.5	3.25	0	83.49	0	1.33	0	0	10.77	0	0	0	0	0	0	-39.53	-39.53
Inverter Transformer	MV2-2 T	365982	4906654	2	0	0	56.1	56.1	1	4246.37	3.25	0	83.56	0	1.34	0	0	10.82	0	0	0	0	0	0	-39.66	-39.66
Inverter Transformer	MV4-1 T	369017	4909397	2	0	0	56.1	56.1	1	4256.83	3.25	0	83.58	0	1.35	0	0	10.83	0	0	0	0	0	0	-39.7	-39.7
Inverter Transformer	MV2-3 T	365814	4906641	2	0	0	56.1	56.1	1	4401.2	3.25	0	83.87	0	1.4	0	0	11.04	0	0	0	0	0	0	-40.25	-40.25
Inverter Transformer	MV2-4 T	365590	4906628	2	0	0	56.1	56.1	1	4610.41	3.25	0	84.27	0	1.48	0	0	11.33	0	0	0	0	0	0	-41.03	-41.03
Inverter Transformer	MV1-15 T	365309	4904994	2	0	0	56.1	56.1	1	4688.76	3.25	0	84.42	0	1.51	0	0	11.44	0	0	0	0	0	0	-41.31	-41.31
Inverter Transformer	MV1-12 T	365044	4905386	2	0	0	56.1	56.1	1	4948.39	3.25	0	84.89	0	1.61	0	0	11.79	0	0	0	0	0	0	-42.22	-42.22
Inverter Transformer	MV1-4 T	364821	4905918	2	0	0	56.1	56.1	1	5212.2	3.25	0	85.34	0	1.7	0	0	12.13	0	0	0	0	0	0	-43.11	-43.11
Inverter Transformer	MV1-8 T	364782	4905647	2	0	0	56.1	56.1	1	5223.48	3.25	0	85.36	0	1.71	0	0	12.15	0	0	0	0	0	0	-43.15	-43.15
Inverter Transformer	MV1-2 T	364759	4906063	2	0	0	56.1	56.1	1	5293.93	3.25	0	85.48	0	1.73	0	0	12.24	0	0	0	0	0	0	-43.38	-43.38
Inverter Transformer	MV1-11 T	364649	4905414	2	0	0	56.1	56.1	1	5344.03	3.25	0	85.56	0	1.75	0	0	12.3	0	0	0	0	0	0	-43.55	-43.55
Inverter Transformer	MV1-1 T	364721	4906166	2	0	0	56.1	56.1	1	5348.11	3.25	0	85.56	0	1.75	0	0	12.3	0	0	0	0	0	0	-43.56	-43.56
Inverter Transformer	MV1-5 T	364676	4905892	2	0	0	56.1	56.1	1	5352.88	3.25	0	85.57	0	1.75	0	0	12.31	0	0	0	0	0	0	-43.57	-43.57
Inverter Transformer	MV1-9 T	364555	4905646	2	0	0	56.1	56.1	1	5449.79	3.25	0	85.73	0	1.78	0	0	12.43	0	0	0	0	0	0	-43.89	-43.89
Inverter Transformer	MV1-6 T	364482	4905835	2	0	0	56.1	56.1	1	5539.26	3.25	0	85.87	0	1.81	0	0	12.54	0	0	0	0	0	0	-44.17	-44.17
Inverter Transformer	MV1-3 T	364435	4906039	2	0	0	56.1	56.1	1	5610.93	3.25	0	85.98	0	1.84	0	0	12.63	0	0	0	0	0	0	-44.39	-44.39
Line Reactor	NGR	369421	4908787.5	5	0	0	45.4	45.4	1	3580.1	5.25	0	82.08	0	3.3	1.33	0.12	1.47	0	0	0	0	0	0	-42.82	-42.82
Limit. Valu 0	0																								
Level D/N: 26.0141	26.0141																								

Receiver: Vacant Lot Receptor
ID: W-V17
X: 370902
Y: 4907096
Z: 4.5
Ground: 0

ISO	Description	ID	X	Y	Z	Ground	ReflOrd	LxT	LxN	L/A	Dist.	hm	Freq	Adiv	K0b	Agr	Abar	z	Aatm	Afol	Ahous	Cmet	CmetN	Dc	RL	LtotT	LtotN
	Sol_Luce Substation	S_Substation	369426	4908792	3.5	0	0	112.1	112.1	1	2248.33	5.25	0	78.04	0	0.08	3.65	0.32	4.78	0	0	0	0	0	0	25.53	25.53
	Inverter	MV6-3	370207	4907140	2	0	0	100.3	100.3	1	696.4	3.25	0	67.86	0	-0.41	0	0	9.72	0	0	0	0	0	0	23.15	23.15
	Inverter	MV6-2	370085	4907339	2	0	0	100.3	100.3	1	852.38	3.25	0	69.61	0	-0.32	0	0	10.39	0	0	0	0	0	0	20.63	20.63
	Inverter	MV6-1	370235	4907364	2	0	0	97.3	97.3	1	718.83	3.25	0	68.13	0	-0.4	0	0	9.83	0	0	0	0	0	0	19.75	19.75
	Inverter	MV5-4	370324	4908707	2	0	0	100.3	100.3	1	1711.55	3.25	0	75.67	0	0.04	0	0	12.83	0	0	0	0	0	0	11.77	11.77
	Inverter	MV5-5	370015	4908690	2	0	0	100.3	100.3	1	1824.17	3.25	0	76.22	0	0.08	0	0	13.08	0	0	0	0	0	0	10.93	10.93
	Inverter	MV5-3	370231	4908851	2	0	0	100.3	100.3	1	1878.9	3.25	0	76.48	0	0.09	0	0	13.2	0	0	0	0	0	0	10.54	10.54
	Inverter	MV5-2	370006	4908853	2	0	0	100.3	100.3	1	1972.28	3.25	0	76.9	0	0.12	0	0	13.4	0	0	0	0	0	0	9.89	9.89
	Inverter	MV3-20	368689	4907317	2	0	0	100.3	100.3	1	2224.01	3.25	0	77.94	0	0.19	0	0	13.92	0	0	0	0	0	0	8.26	8.26
	Inverter	MV5-1	370020	4909142	2	0	0	100.3	100.3	1	2228.01	3.25	0	77.96	0	0.19	0	0	13.93	0	0	0	0	0	0	8.23	8.23
	Inverter	MV3-14	368684	4907498	2	0	0	100.3	100.3	1	2254.14	3.25	0	78.06	0	0.2	0	0	13.98	0	0	0	0	0	0	8.07	8.07
	Inverter	MV3-8	368680	4907712	2	0	0	100.3	100.3	1	2305.81	3.25	0	78.26	0	0.21	0	0	14.08	0	0	0	0	0	0	7.76	7.76
	Inverter	MV4-10	369312	4908858	2	0	0	100.3	100.3	1	2373.34	3.25	0	78.51	0	0.23	0	0	14.22	0	0	0	0	0	0	7.36	7.36
	Inverter	MV4-11	369264	4908855	2	0	0	100.3	100.3	1	2403.57	3.25	0	78.62	0	0.23	0	0	14.27	0	0	0	0	0	0	7.19	7.19
	Inverter	MV3-16	368514	4907475	2	0	0	100.3	100.3	1	2417.89	3.25	0	78.67	0	0.24	0	0	14.3	0	0	0	0	0	0	7.1	7.1
	Inverter	MV3-21	368478	4907206	2	0	0	100.3	100.3	1	2426.5	3.25	0	78.7	0	0.24	0	0	14.32	0	0	0	0	0	0	7.05	7.05
	Inverter	MV3-9	368512	4907703	2	0	0	100.3	100.3	1	2465.88	3.25	0	78.84	0	0.25	0	0	14.39	0	0	0	0	0	0	6.83	6.83

Inverter	MV4-9	369289	4909001	2	0	0	100.3	100.3	1	2496.16	3.25	0	78.95	0	0.26	0	0	14.45	0	0	0	0	0	0	6.66	6.66
Inverter	MV4-8	369256	4909001	2	0	0	100.3	100.3	1	2517.61	5.12	0	79.02	0	0.99	3.31	0.03	14.49	0	0	0	0	0	0	2.5	2.5
Inverter	MV3-19	368357	4907347	2	0	0	100.3	100.3	1	2557.35	3.25	0	79.16	0	0.27	0	0	14.57	0	0	0	0	0	0	6.32	6.32
Inverter	MV3-15	368357	4907477	2	0	0	100.3	100.3	1	2573.36	3.25	0	79.21	0	0.27	0	0	14.6	0	0	0	0	0	0	6.23	6.23
Inverter	MV3-11	368346	4907662	2	0	0	100.3	100.3	1	2617.92	3.25	0	79.36	0	0.28	0	0	14.68	0	0	0	0	0	0	5.99	5.99
Inverter	MV4-5	369289	4909199	2	0	0	100.3	100.3	1	2650.36	3.25	0	79.47	0	0.29	0	0	14.74	0	0	0	0	0	0	5.82	5.82
Inverter	MV4-7	369035	4909001	2	0	0	100.3	100.3	1	2667.34	3.25	0	79.52	0	0.29	0	0	14.77	0	0	0	0	0	0	5.72	5.72
Inverter	MV4-6	369243	4909192	2	0	0	100.3	100.3	1	2673.11	3.25	0	79.54	0	0.3	0	0	14.78	0	0	0	0	0	0	5.69	5.69
Inverter	MV3-17	368178	4907472	2	0	0	100.3	100.3	1	2749.83	3.25	0	79.79	0	0.31	0	0	14.92	0	0	0	0	0	0	5.29	5.29
Inverter	MV3-10	368167	4907669	2	0	0	100.3	100.3	1	2794.38	3.25	0	79.93	0	0.32	0	0	15	0	0	0	0	0	0	5.06	5.06
Inverter	MV4-4	369027	4909199	2	0	0	100.3	100.3	1	2817.49	3.25	0	80	0	0.33	0	0	15.05	0	0	0	0	0	0	4.94	4.94
Inverter	MV4-2	369272	4909397	2	0	0	100.3	100.3	1	2819.84	3.25	0	80	0	0.33	0	0	15.05	0	0	0	0	0	0	4.93	4.93
Inverter	MV3-6	368162	4907834	2	0	0	100.3	100.3	1	2837.65	3.25	0	80.06	0	0.33	0	0	15.08	0	0	0	0	0	0	4.84	4.84
Inverter	MV4-3	369229	4909397	2	0	0	100.3	100.3	1	2844.91	3.25	0	80.08	0	0.33	0	0	15.1	0	0	0	0	0	0	4.8	4.8
Inverter	MV3-13	367963	4907577	2	0	0	100.3	100.3	1	2978.1	3.25	0	80.48	0	0.36	0	0	15.33	0	0	0	0	0	0	4.14	4.14
Inverter	MV4-1	369011	4909397	2	0	0	100.3	100.3	1	2978.34	3.25	0	80.48	0	0.36	0	0	15.33	0	0	0	0	0	0	4.14	4.14
Inverter	MV3-7	367945	4907754	2	0	0	100.3	100.3	1	3029.33	3.25	0	80.63	0	0.37	0	0	15.42	0	0	0	0	0	0	3.89	3.89
Inverter	MV3-3	367939	4907927	2	0	0	100.3	100.3	1	3077.33	3.25	0	80.76	0	0.38	0	0	15.51	0	0	0	0	0	0	3.66	3.66
Inverter	MV3-18	367752	4907412	2	0	0	100.3	100.3	1	3165.81	3.25	0	81.01	0	0.39	0	0	15.66	0	0	0	0	0	0	3.25	3.25
Inverter	MV3-12	367668	4907594	2	0	0	100.3	100.3	1	3272.12	3.25	0	81.3	0	0.41	0	0	15.85	0	0	0	0	0	0	2.76	2.76
DSTATCOM - 10 MVAR #1	DSAT1	369437	4908757	2.5	0	0	96.6	96.6	1	2214.76	3.5	0	77.91	0	3.27	0	0	1.85	0	0	0	0	0	0	13.61	13.61
DSTATCOM - 10 MVAR #2	DSAT2	369403	4908757	2.5	0	0	96.6	96.6	1	2237.39	3.5	0	77.99	0	3.27	0	0	1.86	0	0	0	0	0	0	13.5	13.5
Inverter	MV6-4	370250	4906966	2	0	0	86.1	86.1	1	664.84	3.25	0	67.45	0	0.6	0	0	5.62	0	0	0	0	0	0	12.39	12.39
SubstationTransformer	W_ST	369711.17	4906112.3	2.5	0	0	92	92	1	1544.61	4.25	0	74.78	0	0.65	3.69	0.21	3.57	0	0	0	0	0	0	9.3	9.3
Westbrook Inverter Enclosur	W_INV6	369875	4906578	2	0	0	89.1	89.1	1	1150.24	3.25	0	72.22	0	0.72	0	0	6.59	0	0	0	0	0	0	9.53	9.53
Westbrook Inverter Enclosur	W_INV5	369719	4906574	2	0	0	89.1	89.1	1	1293.05	3.25	0	73.23	0	0.75	0	0	6.85	0	0	0	0	0	0	8.23	8.23
Westbrook Inverter Enclosur	W_INV7	369780	4906417	2	0	0	89.1	89.1	1	1311.46	3.25	0	73.36	0	0.75	0	0	6.88	0	0	0	0	0	0	8.07	8.07
Inverter	MV2-3	365820	4906641	2	0	0	100.3	100.3	1	5102.33	3.25	0	85.16	0	0.65	0	0	18.73	0	0	0	0	0	0	-4.22	-4.22
Inverter	MV2-4	365586	4906624	2	0	0	100.3	100.3	1	5336.91	3.25	0	85.55	0	0.67	0	0	19.07	0	0	0	0	0	0	-4.97	-4.97
Westbrook Inverter Enclosur	W_INV4	369673	4906164	2	0	0	89.1	89.1	1	1542.42	3.25	0	74.76	0	0.8	0	0	7.28	0	0	0	0	0	0	6.21	6.21
Inverter	MV1-15	365315	4904994	2	0	0	100.3	100.3	1	5969.34	3.25	0	86.52	0	0.7	0	0	19.95	0	0	0	0	0	0	-6.86	-6.86
Inverter	MV1-12	365038	4905386	2	0	0	100.3	100.3	1	6108.24	3.25	0	86.72	0	0.71	0	0	20.14	0	0	0	0	0	0	-7.25	-7.25
Westbrook Inverter Enclosur	W_INV3	369508	4906164	2	0	0	89.1	89.1	1	1676.86	3.25	0	75.49	0	0.83	0	0	7.51	0	0	0	0	0	0	5.23	5.23
Westbrook Inverter Enclosur	W_INV2	369374	4906388	2	0	0	89.1	89.1	1	1684.06	3.25	0	75.53	0	0.83	0	0	7.52	0	0	0	0	0	0	5.18	5.18
Inverter	MV5-6	369982	4908507	2	0	0	89.1	89.1	1	1684.44	3.25	0	75.53	0	0.83	0	0	7.52	0	0	0	0	0	0	5.17	5.17
Inverter	MV1-4	364815	4905918	2	0	0	100.3	100.3	1	6199.94	3.25	0	86.85	0	0.71	0	0	20.26	0	0	0	0	0	0	-7.51	-7.51
Inverter	MV1-2	364753	4906063	2	0	0	100.3	100.3	1	6235.17	3.25	0	86.9	0	0.71	0	0	20.31	0	0	0	0	0	0	-7.61	-7.61
Inverter	MV1-1	364715	4906166	2	0	0	100.3	100.3	1	6256.51	3.25	0	86.93	0	0.71	0	0	20.34	0	0	0	0	0	0	-7.66	-7.66
Inverter	MV1-8	364788	4905647	2	0	0	100.3	100.3	1	6283.36	3.25	0	86.96	0	0.71	0	0	20.37	0	0	0	0	0	0	-7.74	-7.74
Inverter	MV1-5	364671	4905892	2	0	0	100.3	100.3	1	6346.26	3.25	0	87.05	0	0.71	0	0	20.46	0	0	0	0	0	0	-7.91	-7.91
Inverter	MV1-11	364655	4905414	2	0	0	100.3	100.3	1	6469.48	3.25	0	87.22	0	0.71	0	0	20.62	0	0	0	0	0	0	-8.24	-8.24
Inverter	MV1-9	364561	4905646	2	0	0	100.3	100.3	1	6504.67	3.25	0	87.26	0	0.71	0	0	20.67	0	0	0	0	0	0	-8.33	-8.33
Inverter	MV1-6	364477	4905835	2	0	0	100.3	100.3	1	6547.58	3.25	0	87.32	0	0.71	0	0	20.72	0	0	0	0	0	0	-8.45	-8.45
Inverter	MV2-1	365842	4906816	2	0	0	97.3	97.3	1	5067.74	3.25	0	85.1	0	0.65	0	0	18.68	0	0	0	0	0	0	-7.11	-7.11
Fixed Reactor Bank 2	FRB2	369464	4908755	6	0	0	89.8	89.8	1	2195.48	5.25	0	77.83	0	-0.97	0	0	4.69	0	0	0	0	0	0	8.22	8.22
Fixed Reactor Bank 1	FRB1	369378	4908755	6	0	0	89.8	89.8	1	2252.74	5.25	0	78.05	0	-0.97	0	0	4.79	0	0	0	0	0	0	7.9	7.9
Inverter	MV4-15	369176	4908481	2	0	0	89.1	89.1	1	2212.99	3.25	0	77.9	0	0.96	0	0	8.39	0	0	0	0	0	0	1.81	1.81
Inverter	MV4-14	369176	4908507	2	0	0	89.1	89.1	1	2229.35	3.25	0	77.96	0	0.96	0	0	8.42	0	0	0	0	0	0	1.72	1.72
Westbrook Inverter Enclosur	W_INV1	369409	4906578	2	0	0	86.1	86.1	1	1580.31	3.25	0	74.97	0	0.81	0	0	7.35	0	0	0	0	0	0	2.93	2.93
Inverter	MV3-22	368656	4907142	2	0	0	89.1	89.1	1	2246.47	3.25	0	78.03	0	0.97	0	0	8.44	0	0	0	0	0	0	1.62	1.62
Inverter	MV1-14	365163	4905049	2	0	0	97.3	97.3	1	6093.14	3.25	0	86.7	0	0.71	0	0	20.12	0	0	0	0	0	0	-10.21	-10.21
Inverter	MV1-10	365004	4905564	2	0	0	97.3	97.3	1	6093.72	3.25	0	86.7	0	0.71	0	0	20.12	0	0	0	0	0	0	-10.21	-10.21
Inverter	MV1-7	364925	4905782	2	0	0	97.3	97.3	1	6119.73	3.25	0	86.73	0	0.71	0	0	20.15	0	0	0	0	0	0	-10.29	-10.29
Inverter	MV3-2	368671	4907928	2	0	0	89.1	89.1	1	2381.09	3.25	0	78.54	0	1	0	0	8.66	0	0	0	0	0	0	0.87	0.87
Inverter	MV4-13	369051	4908605	2	0	0	89.1	89.1	1	2388.16	3.25	0	78.56	0	1	0	0	8.67	0	0	0	0	0	0	0.83	0.83
Inverter	MV1-13	364731	4905241	2	0	0	97.3	97.3	1	6443.78	3.25	0	87.18	0	0.71	0	0	20.59	0	0	0	0	0	0	-11.17	-11.17
Inverter	MV4-12	369043	4908803	2	0	0	89.1	89.1	1	2523.83	3.25	0	79.04	0	1.03	0	0	8.88	0	0	0	0	0	0	0.1	0.1
Inverter	MV3-4	368502	4907925	2	0	0	89.1	89.1	1	2539.14	3.25	0	79.09	0	1.04	0	0	8.91	0	0	0	0	0	0	0.02	0.02
Inverter	MV3-5	368340	4907843	2	0	0	89.1	89.1	1	2668.68	3.25	0	79.53	0	1.07	0	0	9.11	0	0	0	0	0	0	-0.64	-0.64
Inverter	MV3-1	368156	4907976	2	0	0	89.1	89.1	1	2883.56	3.25	0	80.2	0	1.12	0	0	9.44	0	0	0	0	0	0	-1.7	-1.7
Westbrook Inverter Transfor	W_INVTR6	369881	4906578	2	0	0	77.3	77.3	1	1144.89	3.25	0	72.18	0	-2.02	0	0	0.76	0	0	0	0	0	0	6.42	6.42
Gardiner Substation	G_Sub	366586.3	4903349.9	2.5	0	0	90.8	90.8	1	5714.76	4.25	0	86.14	0	1.81	2.17	0.33	9.43	0	0	0	0	0	0	-8.78	-8.78
Inverter	MV2-2	365977	4906654	2	0	0	89.1	89.1	1	4944.79	3.25	0	84.88	0	1.63	0	0	12.39	0	0	0	0	0	0	-9.84	-9.84
Westbrook Inverter Transfor	W_INVTR5	369725	4906574	2	0	0	77.3	77.3	1	1287.56	3.25	0	73.2	0	-2.1	0	0	0.84	0	0	0	0	0	0	5.4	5.4
Westbrook Inverter Transfor	W_INVTR7	369786	4906417	2	0	0	77.3	77.3	1	1306.33	3.25	0	73.32	0	-2.11	0	0	0.85	0	0	0	0	0	0	5.28	5.28
Westbrook Inverter Transfor	W_INVTR1	369403	4906578	2	0	0	78.2	78.2	1	1585.98	3.25	0	75.01	0	-2.24	0	0	1	0	0	0	0	0	0	4.48	4.48
Westbrook Inverter Transfor	W_INVTR4	369679	4906164	2	0	0	77.3	77.3	1	1537.65	3.25	0	74.74	0	-2.22	0	0	0.97	0	0	0	0	0	0	3.85	3.85
Westbrook Inverter Transfor	W_INVTR3	369514	4906164	2	0	0	77.3	77.3	1	1671.88	3.25	0	75.46	0	-2.28	0	0	1.04	0	0	0	0	0	0	3.11	3.11
Inverter Transformer	MV6-4 T	370244	4906966	2	0	0	69.4	69.4	1	670.72	3.25	0	67.53	0	1.32	0	0	3.3	0	0	0	0	0	0	-2.8	-2.8
Westbrook Inverter Transfor	W_INVTR2	369368	4906388	2	0	0	77.3	77.3	1	1689.5	3.25	0	75.56	0	-2.29	0	0	1.05	0	0	0	0	0	0	3.02	3.02
Inverter	MV1-3	364440	4906039	2	0	0	89.1	89.1	1	6547.88	3.25	0	87.32	0	2.02	0	0	14.44	0	0	0	0	0	0	-14.73	-14.73
Inverters	G_Inv2	366676.9	4903239.1	2	0	0	87.7	87.7	1	5720.77	3.25	0	86.15	0	2.9	0	0	6.69	0	0	0	0	0	0	-8.08	-8.08
Inverters	G_Inv4	366732.8	4903105	2	0	0	87.7	87.7	1	5771.51	3.25	0	86.23	0	2.91	0	0	6.74	0	0	0	0	0	0	-8.22	-8.22
Inverters	G_Inv6	366788.5	4902972	2	0	0	87.7	87.7	1	5824.8	3.25	0	86.31	0	2.91	0	0	6.8	0	0	0	0	0	0	-8.35	-8.35

Inverters	G_Inv1	366526.4	4903225.8	2	0	0	87.7	87.7	1	5841.6	3.25	0	86.33	0	2.91	0	0	6.82	0	0	0	0	0	0	-8.4	-8.4
Inverters	G_Inv8	366844.5	4902838.5	2	0	0	87.7	87.7	1	5881.29	3.25	0	86.39	0	2.91	0	0	6.86	0	0	0	0	0	0	-8.5	-8.5
Inverters	G_Inv3	366583.7	4903091.4	2	0	0	87.7	87.7	1	5889.36	3.25	0	86.4	0	2.91	0	0	6.86	0	0	0	0	0	0	-8.52	-8.52
Inverters	G_Inv10	366900.7	4902704.8	2	0	0	87.7	87.7	1	5940.8	3.25	0	86.48	0	2.91	0	0	6.92	0	0	0	0	0	0	-8.65	-8.65
Inverters	G_Inv5	366638.5	4902958.1	2	0	0	87.7	87.7	1	5941.35	3.25	0	86.48	0	2.91	0	0	6.92	0	0	0	0	0	0	-8.65	-8.65
Inverter Transformer	MV6-1 T	370230	4907364	2	0	0	69.4	69.4	1	723.47	3.25	0	68.19	0	1.39	0	0	3.39	0	0	0	0	0	0	-3.62	-3.62
Inverters	G_Inv7	366694.6	4902824.7	2	0	0	87.7	87.7	1	5995.52	3.25	0	86.56	0	2.92	0	0	6.97	0	0	0	0	0	0	-8.79	-8.79
Inverters	G_Inv9	366750.9	4902691.8	2	0	0	87.7	87.7	1	6052.16	3.25	0	86.64	0	2.92	0	0	7.03	0	0	0	0	0	0	-8.93	-8.93
Inverter Transformer	MV6-3 T	370202	4907140	2	0	0	56.1	56.1	1	701.39	3.25	0	67.92	0	-0.08	0	0	4.14	0	0	0	0	0	0	-15.92	-15.92
Inverter Transformer	MV6-2 T	370091	4907339	2	0	0	56.1	56.1	1	846.63	3.25	0	69.55	0	-0.04	0	0	4.51	0	0	0	0	0	0	-17.97	-17.97
Inverter Transformer	MV2-1 T	365836	4906816	2	0	0	69.4	69.4	1	5073.73	3.25	0	85.11	0	3.03	0	0	7.43	0	0	0	0	0	0	-26.21	-26.21
Inverter Transformer	MV1-10 T	365010	4905564	2	0	0	69.4	69.4	1	6087.91	3.25	0	86.69	0	3.2	0	0	8.07	0	0	0	0	0	0	-28.61	-28.61
Inverter Transformer	MV1-14 T	365157	4905049	2	0	0	69.4	69.4	1	6098.79	3.25	0	86.7	0	3.2	0	0	8.08	0	0	0	0	0	0	-28.64	-28.64
Inverter Transformer	MV1-7 T	364919	4905782	2	0	0	69.4	69.4	1	6125.59	3.25	0	86.74	0	3.21	0	0	8.09	0	0	0	0	0	0	-28.69	-28.69
Inverter Transformer	MV1-13 T	364725	4905241	2	0	0	69.4	69.4	1	6449.52	3.25	0	87.19	0	3.25	0	0	8.29	0	0	0	0	0	0	-29.38	-29.38
Inverter Transformer	MV5-6 T	369987	4908507	2	0	0	56.1	56.1	1	1681.71	3.25	0	75.52	0	0.27	0	0	6.4	0	0	0	0	0	0	-26.13	-26.13
Inverter Transformer	MV5-4 T	370330	4908707	2	0	0	56.1	56.1	1	1709.54	3.25	0	75.66	0	0.28	0	0	6.46	0	0	0	0	0	0	-26.34	-26.34
Inverter Transformer	MV5-5 T	370021	4908690	2	0	0	56.1	56.1	1	1821.26	3.25	0	76.21	0	0.33	0	0	6.69	0	0	0	0	0	0	-27.17	-27.17
Inverter Transformer	MV5-3 T	370237	4908851	2	0	0	56.1	56.1	1	1876.77	3.25	0	76.47	0	0.35	0	0	6.8	0	0	0	0	0	0	-27.56	-27.56
Inverter Transformer	MV5-2 T	370011	4908853	2	0	0	56.1	56.1	1	1970.01	3.25	0	76.89	0	0.39	0	0	6.98	0	0	0	0	0	0	-28.21	-28.21
Inverter Transformer	MV4-15 T	369170	4908481	2	0	0	56.1	56.1	1	2217.67	3.25	0	77.92	0	0.5	0	0	7.46	0	0	0	0	0	0	-29.82	-29.82
Inverter Transformer	MV4-14 T	369182	4908507	2	0	0	56.1	56.1	1	2224.71	3.25	0	77.95	0	0.5	0	0	7.48	0	0	0	0	0	0	-29.86	-29.86
Inverter Transformer	MV3-20 T	368683	4907317	2	0	0	56.1	56.1	1	2229.98	3.25	0	77.97	0	0.5	0	0	7.49	0	0	0	0	0	0	-29.9	-29.9
Inverter Transformer	MV5-1 T	370015	4909142	2	0	0	56.1	56.1	1	2230	3.25	0	77.97	0	0.5	0	0	7.49	0	0	0	0	0	0	-29.9	-29.9
Inverter Transformer	MV3-22 T	368661	4907142	2	0	0	56.1	56.1	1	2241.47	3.25	0	78.01	0	0.51	0	0	7.51	0	0	0	0	0	0	-29.97	-29.97
Inverter Transformer	MV3-14 T	368678	4907498	2	0	0	56.1	56.1	1	2260.04	3.25	0	78.08	0	0.51	0	0	7.54	0	0	0	0	0	0	-30.08	-30.08
Inverter Transformer	MV3-8 T	368685	4907712	2	0	0	56.1	56.1	1	2300.99	3.25	0	78.24	0	0.53	0	0	7.62	0	0	0	0	0	0	-30.33	-30.33
Inverter Transformer	MV3-2 T	368677	4907928	2	0	0	56.1	56.1	1	2375.47	3.25	0	78.51	0	0.56	0	0	7.76	0	0	0	0	0	0	-30.78	-30.78
Inverter Transformer	MV4-10 T	369307	4908858	2	0	0	56.1	56.1	1	2376.69	3.25	0	78.52	0	0.56	0	0	7.76	0	0	0	0	0	0	-30.79	-30.79
Inverter Transformer	MV4-13 T	369057	4908605	2	0	0	56.1	56.1	1	2383.51	3.25	0	78.54	0	0.57	0	0	7.78	0	0	0	0	0	0	-30.83	-30.83
Inverter Transformer	MV4-11 T	369269	4908855	2	0	0	56.1	56.1	1	2400.16	3.25	0	78.6	0	0.57	0	0	7.81	0	0	0	0	0	0	-30.93	-30.93
Inverter Transformer	MV3-21 T	368484	4907206	2	0	0	56.1	56.1	1	2420.5	3.25	0	78.68	0	0.58	0	0	7.84	0	0	0	0	0	0	-31.05	-31.05
Inverter Transformer	MV3-16 T	368509	4907475	2	0	0	56.1	56.1	1	2422.83	3.25	0	78.69	0	0.58	0	0	7.85	0	0	0	0	0	0	-31.06	-31.06
Inverter Transformer	MV3-9 T	368517	4907703	2	0	0	56.1	56.1	1	2461.03	3.25	0	78.82	0	0.6	0	0	7.92	0	0	0	0	0	0	-31.28	-31.28
Inverter Transformer	MV4-9 T	369284	4909001	2	0	0	56.1	56.1	1	2499.39	3.25	0	78.96	0	0.62	0	0	7.99	0	0	0	0	0	0	-31.5	-31.5
Inverter Transformer	MV4-8 T	369262	4909001	2	0	0	56.1	56.1	1	2513.69	3.25	0	79.01	0	0.62	0	0	8.01	0	0	0	0	0	0	-31.58	-31.58
Inverter Transformer	MV4-12 T	369049	4908803	2	0	0	56.1	56.1	1	2519.42	3.25	0	79.03	0	0.62	0	0	8.02	0	0	0	0	0	0	-31.62	-31.62
Inverter Transformer	MV3-4 T	368507	4907925	2	0	0	56.1	56.1	1	2534.42	3.25	0	79.08	0	0.63	0	0	8.05	0	0	0	0	0	0	-31.7	-31.7
Inverter Transformer	MV3-19 T	368352	4907347	2	0	0	56.1	56.1	1	2562.32	3.25	0	79.17	0	0.64	0	0	8.1	0	0	0	0	0	0	-31.86	-31.86
Inverter Transformer	MV3-15 T	368351	4907477	2	0	0	56.1	56.1	1	2579.3	3.25	0	79.23	0	0.65	0	0	8.13	0	0	0	0	0	0	-31.96	-31.96
Inverter Transformer	MV3-11 T	368340	4907662	2	0	0	56.1	56.1	1	2623.78	3.25	0	79.38	0	0.67	0	0	8.21	0	0	0	0	0	0	-32.2	-32.2
Inverter Transformer	MV4-5 T	369283	4909199	2	0	0	56.1	56.1	1	2654.01	3.25	0	79.48	0	0.68	0	0	8.27	0	0	0	0	0	0	-32.37	-32.37
Inverter Transformer	MV4-7 T	369040	4909001	2	0	0	56.1	56.1	1	2663.85	3.25	0	79.51	0	0.69	0	0	8.28	0	0	0	0	0	0	-32.42	-32.42
Inverter Transformer	MV4-6 T	369249	4909192	2	0	0	56.1	56.1	1	2669.39	3.25	0	79.53	0	0.69	0	0	8.29	0	0	0	0	0	0	-32.45	-32.45
Inverter Transformer	MV3-5 T	368335	4907843	2	0	0	56.1	56.1	1	2673.48	3.25	0	79.54	0	0.69	0	0	8.3	0	0	0	0	0	0	-32.48	-32.48
Inverter Transformer	MV3-17 T	368183	4907472	2	0	0	56.1	56.1	1	2744.88	3.25	0	79.77	0	0.72	0	0	8.43	0	0	0	0	0	0	-32.86	-32.86
Inverter Transformer	MV3-10 T	368162	4907669	2	0	0	56.1	56.1	1	2799.27	3.25	0	79.94	0	0.74	0	0	8.52	0	0	0	0	0	0	-33.15	-33.15
Inverter Transformer	MV4-4 T	369033	4909199	2	0	0	56.1	56.1	1	2813.5	3.25	0	79.98	0	0.75	0	0	8.55	0	0	0	0	0	0	-33.22	-33.22
Inverter Transformer	MV4-2 T	369267	4909397	2	0	0	56.1	56.1	1	2822.73	3.25	0	80.01	0	0.75	0	0	8.56	0	0	0	0	0	0	-33.27	-33.27
Inverter Transformer	MV4-3 T	369234	4909397	2	0	0	56.1	56.1	1	2841.98	3.25	0	80.07	0	0.76	0	0	8.6	0	0	0	0	0	0	-33.37	-33.37
Inverter Transformer	MV3-6 T	368156	4907834	2	0	0	56.1	56.1	1	2843.44	3.25	0	80.08	0	0.76	0	0	8.6	0	0	0	0	0	0	-33.38	-33.38
Inverter Transformer	MV3-1 T	368150	4907976	2	0	0	56.1	56.1	1	2889.28	3.25	0	80.22	0	0.78	0	0	8.68	0	0	0	0	0	0	-33.62	-33.62
Inverter Transformer	MV4-1 T	369017	4909397	2	0	0	56.1	56.1	1	2974.53	3.25	0	80.47	0	0.82	0	0	8.82	0	0	0	0	0	0	-34.05	-34.05
Inverter Transformer	MV3-13 T	367958	4907577	2	0	0	56.1	56.1	1	2983.04	3.25	0	80.49	0	0.82	0	0	8.84	0	0	0	0	0	0	-34.1	-34.1
Inverter Transformer	MV3-7 T	367951	4907754	2	0	0	56.1	56.1	1	3023.47	3.25	0	80.61	0	0.84	0	0	8.91	0	0	0	0	0	0	-34.3	-34.3
Inverter Transformer	MV3-3 T	367944	4907927	2	0	0	56.1	56.1	1	3072.51	3.25	0	80.75	0	0.86	0	0	8.99	0	0	0	0	0	0	-34.54	-34.54
Inverter Transformer	MV3-18 T	367757	4907412	2	0	0	56.1	56.1	1	3160.84	3.25	0	81	0	0.9	0	0	9.14	0	0	0	0	0	0	-34.97	-34.97
Inverter Transformer	MV3-12 T	367674	4907594	2	0	0	56.1	56.1	1	3266.19	3.25	0	81.28	0	0.94	0	0	9.31	0	0	0	0	0	0	-35.48	-35.48
Inverter Transformer	MV2-2 T	365982	4906654	2	0	0	56.1	56.1	1	4939.81	3.25	0	84.87	0	1.6	0	0	11.77	0	0	0	0	0	0	-42.19	-42.19
Inverter Transformer	MV2-3 T	365814	4906641	2	0	0	56.1	56.1	1	5108.3	3.25	0	85.17	0	1.66	0	0	12	0	0	0	0	0	0	-42.77	-42.77
Inverter Transformer	MV2-4 T	365590	4906628	2	0	0	56.1	56.1	1	5332.58	3.25	0	85.54	0	1.74	0	0	12.28	0	0	0	0	0	0	-43.51	-43.51
Inverter Transformer	MV1-15 T	365309	4904994	2	0	0	56.1	56.1	1	5974.95	3.25	0	86.53	0	1.96	0	0	13.07	0	0	0	0	0	0	-45.5	-45.5
Inverter Transformer	MV1-12 T	365044	4905386	2	0	0	56.1	56.1	1	6102.48	3.25	0	86.71	0	2	0	0	13.22	0	0	0	0	0	0	-45.87	-45.87
Inverter Transformer	MV1-4 T	364821	4905918	2	0	0	56.1	56.1	1	6194.05	3.25	0	86.84	0	2.03	0	0	13.33	0	0	0	0	0	0	-46.14	-46.14
Inverter Transformer	MV1-2 T	364759	4906063	2	0	0	56.1	56.1	1	6229.25	3.25	0	86.89	0	2.04	0	0	13.37	0	0	0	0	0	0	-46.24	-46.24
Inverter Transformer	MV1-1 T	364721	4906166	2	0	0	56.1	56.1	1	6250.57	3.25	0	86.92	0	2.04	0	0	13.4	0	0	0	0	0	0	-46.3	-46.3
Inverter Transformer	MV1-8 T	364782	4905647	2	0	0	56.1	56.1	1	6289.2	3.25	0	86.97	0	2.05	0	0	13.44	0	0	0	0	0	0	-46.41	-46.41
Inverter Transformer	MV1-5 T	364676	4905892	2	0	0	56.1	56.1	1	6341.35	3.25	0	87.04	0	2.07	0	0	13.5	0	0	0	0	0	0	-46.56	-46.56
Inverter Transformer	MV1-11 T	364649	4905414	2	0	0	56.1	56.1	1	6475.27	3.25	0	87.23	0	2.11	0	0	13.65	0	0	0	0	0	0	-46.93	-46.93
Inverter Transformer	MV1-9 T	364555	4905646	2	0	0	56.1	56.1	1	6510.52	3.25	0	87.27	0	2.12	0	0	13.69	0	0	0	0	0	0	-47.03	-47.03
Inverter Transformer	MV1-6 T	364482	4905835	2	0	0	56.1	56.1	1	6542.67	3.25	0	87.32	0	2.13	0	0	13.73	0	0	0	0	0	0	-47.11	-47.11
Inverter Transformer	MV1-3 T	364435	4906039	2	0	0	56.1	56.1	1	6552.81	3.25	0	87.33	0	2.13	0	0	13.74	0	0	0	0	0	0	-47.14	-47.14
Line Reactor	NGR	369421	4908787.5	5	0	0	45.4	45.4	1	2248.23	5.25	0	78.04	0	3.36	1.29	0.09	0.92	0	0	0	0	0	0	-38.25	-38.25
Limit. Valu 0	0																									

Level D/N: 30.3975 30.3975

Receiver: Vacant Lot Receptor
ID: W-V18
X: 369098.4
Y: 4908093.3
Z: 4.5
Ground: 0

ISO	Description	ID	X	Y	Z	Ground	ReflOrd	LxT	LxN	L/A	Dist.	hm	Freq	Adiv	K0b	Agr	Abar	z	Aatm	Afol	Ahous	Cmet	CmetN	Dc	RL	LtotT	LtotN
	Sol_Luce Substation	S_Substation	369426	4908792	3.5	0	0	112.1	112.1	1	771.69	5.24	0	68.75	0	0	5.81	0.32	2.04	0	0	0	0	0	0	35.47	35.47
	Inverter	MV3-8	368680	4907712	2	0	0	100.3	100.3	1	566.09	3.25	0	66.06	0	-0.5	0	0	8.99	0	0	0	0	0	0	25.76	25.76
	Inverter	MV3-9	368512	4907703	2	0	0	100.3	100.3	1	704.42	3.25	0	67.96	0	-0.41	0	0	9.76	0	0	0	0	0	0	23.01	23.01
	Inverter	MV3-14	368684	4907498	2	0	0	100.3	100.3	1	725.34	3.25	0	68.21	0	-0.4	0	0	9.86	0	0	0	0	0	0	22.64	22.64
	Inverter	MV4-11	369264	4908855	2	0	0	100.3	100.3	1	779.5	3.25	0	68.84	0	-0.36	0	0	10.1	0	0	0	0	0	0	21.74	21.74
	Inverter	MV4-10	369312	4908858	2	0	0	100.3	100.3	1	793.98	3.25	0	69	0	-0.35	0	0	10.16	0	0	0	0	0	0	21.52	21.52
	Inverter	MV3-16	368514	4907475	2	0	0	100.3	100.3	1	850.78	3.25	0	69.6	0	-0.32	0	0	10.38	0	0	0	0	0	0	20.66	20.66
	Inverter	MV3-11	368346	4907662	2	0	0	100.3	100.3	1	867.26	3.25	0	69.76	0	-0.31	0	0	10.44	0	0	0	0	0	0	20.42	20.42
	Inverter	MV3-20	368689	4907317	2	0	0	100.3	100.3	1	877.64	3.25	0	69.87	0	-0.31	0	0	10.48	0	0	0	0	0	0	20.27	20.27
	Inverter	MV4-7	369035	4909001	2	0	0	100.3	100.3	1	909.91	3.25	0	70.18	0	-0.29	0	0	10.6	0	0	0	0	0	0	19.82	19.82
	Inverter	MV4-8	369256	4909001	2	0	0	100.3	100.3	1	921.28	3.25	0	70.29	0	-0.29	0	0	10.64	0	0	0	0	0	0	19.67	19.67
	Inverter	MV4-9	369289	4909001	2	0	0	100.3	100.3	1	927.5	3.25	0	70.35	0	-0.28	0	0	10.66	0	0	0	0	0	0	19.58	19.58
	Inverter	MV3-15	368357	4907477	2	0	0	100.3	100.3	1	964.11	3.25	0	70.68	0	-0.26	0	0	10.79	0	0	0	0	0	0	19.1	19.1
	Inverter	MV3-6	368162	4907834	2	0	0	100.3	100.3	1	971.64	3.25	0	70.75	0	-0.26	0	0	10.82	0	0	0	0	0	0	19.01	19.01
	Inverter	MV3-10	368167	4907669	2	0	0	100.3	100.3	1	1023.5	3.25	0	71.2	0	-0.23	0	0	10.99	0	0	0	0	0	0	18.36	18.36
	Inverter	MV3-19	368357	4907347	2	0	0	100.3	100.3	1	1051.97	3.25	0	71.44	0	-0.22	0	0	11.08	0	0	0	0	0	0	18.01	18.01
	Inverter	MV3-21	368478	4907206	2	0	0	100.3	100.3	1	1082.68	3.25	0	71.69	0	-0.21	0	0	11.18	0	0	0	0	0	0	17.65	17.65
	Inverter	MV5-5	370015	4908690	2	0	0	100.3	100.3	1	1093.72	3.25	0	71.78	0	-0.2	0	0	11.21	0	0	0	0	0	0	17.53	17.53
	Inverter	MV4-4	369027	4909199	2	0	0	100.3	100.3	1	1108.01	3.25	0	71.89	0	-0.2	0	0	11.25	0	0	0	0	0	0	17.36	17.36
	Inverter	MV4-6	369243	4909192	2	0	0	100.3	100.3	1	1108.18	3.25	0	71.89	0	-0.2	0	0	11.25	0	0	0	0	0	0	17.36	17.36
	Inverter	MV3-17	368178	4907472	2	0	0	100.3	100.3	1	1110.48	3.25	0	71.91	0	-0.19	0	0	11.26	0	0	0	0	0	0	17.34	17.34
	DSTATCOM - 10 MVAR #2	DSAT2	369403	4908757	2.5	0	0	96.6	96.6	1	730.26	3.5	0	68.27	0	2.61	0	0	0.89	0	0	0	0	0	0	24.86	24.86
	Inverter	MV4-5	369289	4909199	2	0	0	100.3	100.3	1	1122.01	3.25	0	72	0	-0.19	0	0	11.3	0	0	0	0	0	0	17.21	17.21
	DSTATCOM - 10 MVAR #1	DSAT1	369437	4908757	2.5	0	0	96.6	96.6	1	745.08	3.5	0	68.44	0	2.64	0	0	0.9	0	0	0	0	0	0	24.65	24.65
	Inverter	MV3-3	367939	4907927	2	0	0	100.3	100.3	1	1171.27	3.25	0	72.37	0	-0.17	0	0	11.44	0	0	0	0	0	0	16.66	16.66
	Inverter	MV5-2	370006	4908853	2	0	0	100.3	100.3	1	1183.59	3.25	0	72.46	0	-0.16	0	0	11.48	0	0	0	0	0	0	16.53	16.53
	Inverter	MV3-7	367945	4907754	2	0	0	100.3	100.3	1	1202.27	3.25	0	72.6	0	-0.15	0	0	11.53	0	0	0	0	0	0	16.33	16.33
	Inverter	MV6-2	370085	4907339	2	0	0	100.3	100.3	1	1241.92	3.25	0	72.88	0	-0.14	0	0	11.64	0	0	0	0	0	0	15.92	15.92
	Inverter	MV3-13	367963	4907577	2	0	0	100.3	100.3	1	1247.28	3.25	0	72.92	0	-0.13	0	0	11.66	0	0	0	0	0	0	15.87	15.87
	Inverter	MV4-1	369011	4909397	2	0	0	100.3	100.3	1	1306.63	3.25	0	73.32	0	-0.11	0	0	11.82	0	0	0	0	0	0	15.27	15.27
	Inverter	MV4-3	369229	4909397	2	0	0	100.3	100.3	1	1310.23	3.25	0	73.35	0	-0.11	0	0	11.83	0	0	0	0	0	0	15.24	15.24
	Inverter	MV4-2	369272	4909397	2	0	0	100.3	100.3	1	1315.21	3.25	0	73.38	0	-0.11	0	0	11.85	0	0	0	0	0	0	15.19	15.19
	Inverter	MV5-3	370231	4908851	2	0	0	100.3	100.3	1	1362.68	3.25	0	73.69	0	-0.09	0	0	11.97	0	0	0	0	0	0	14.74	14.74
	Inverter	MV5-4	370324	4908707	2	0	0	100.3	100.3	1	1370.67	3.25	0	73.74	0	-0.08	0	0	11.99	0	0	0	0	0	0	14.66	14.66
	Inverter	MV5-1	370020	4909142	2	0	0	100.3	100.3	1	1396.11	3.25	0	73.9	0	-0.07	0	0	12.06	0	0	0	0	0	0	14.43	14.43
	Inverter	MV4-15	369176	4908481	2	0	0	89.1	89.1	1	395.4	3.25	0	62.94	0	0.45	0	0	4.71	0	0	0	0	0	0	20.96	20.96
	Inverter	MV6-3	370207	4907140	2	0	0	100.3	100.3	1	1462.12	3.25	0	74.3	0	-0.05	0	0	12.23	0	0	0	0	0	0	13.83	13.83
	Inverter	MV3-18	367752	4907412	2	0	0	100.3	100.3	1	1508.96	3.25	0	74.57	0	-0.03	0	0	12.35	0	0	0	0	0	0	13.42	13.42
	Inverter	MV3-12	367668	4907594	2	0	0	100.3	100.3	1	1515.04	3.25	0	74.61	0	-0.03	0	0	12.36	0	0	0	0	0	0	13.37	13.37
	Inverter	MV4-14	369176	4908507	2	0	0	89.1	89.1	1	420.92	3.25	0	63.48	0	0.47	0	0	4.83	0	0	0	0	0	0	20.27	20.27
	Inverter	MV3-2	368671	4907928	2	0	0	89.1	89.1	1	458.26	3.25	0	64.22	0	0.5	0	0	4.99	0	0	0	0	0	0	19.35	19.35
	Inverter	MV4-13	369051	4908605	2	0	0	89.1	89.1	1	513.9	3.25	0	65.22	0	0.53	0	0	5.19	0	0	0	0	0	0	18.12	18.12
	Inverter	MV6-1	370235	4907364	2	0	0	97.3	97.3	1	1350.46	3.25	0	73.61	0	-0.09	0	0	11.94	0	0	0	0	0	0	11.85	11.85
	Inverter	MV3-4	368502	4907925	2	0	0	89.1	89.1	1	619.7	3.25	0	66.84	0	0.58	0	0	5.5	0	0	0	0	0	0	16.13	16.13
	Fixed Reactor Bank 1	FRB1	369378	4908755	6	0	0	89.8	89.8	1	718.35	5.25	0	68.13	0	-0.95	0	0	1.93	0	0	0	0	0	0	20.67	20.67
	Fixed Reactor Bank 2	FRB2	369464	4908755	6	0	0	89.8	89.8	1	755.98	5.25	0	68.57	0	-0.96	0	0	2.01	0	0	0	0	0	0	20.16	20.16
	Inverter	MV4-12	369043	4908803	2	0	0	89.1	89.1	1	711.86	3.25	0	68.05	0	0.62	0	0	5.73	0	0	0	0	0	0	14.67	14.67
	Inverter	MV3-5	368340	4907843	2	0	0	89.1	89.1	1	798.64	3.25	0	69.05	0	0.64	0	0	5.92	0	0	0	0	0	0	13.45	13.45
	Inverter	MV3-1	368156	4907976	2	0	0	89.1	89.1	1	949.68	3.25	0	70.55	0	0.67	0	0	6.22	0	0	0	0	0	0	11.61	11.61
	Inverter	MV5-6	369982	4908507	2	0	0	89.1	89.1	1	975.66	3.25	0	70.79	0	0.68	0	0	6.27	0	0	0	0	0	0	11.32	11.32
	Inverter	MV2-3	365820	4906641	2	0	0	100.3	100.3	1	3585.68	3.25	0	82.09	0	0.46	0	0	16.37	0	0	0	0	0	0	1.38	1.38
	Inverter	MV2-4	365586	4906624	2	0	0	100.3	100.3	1	3807.34	3.25	0	82.61	0	0.5	0	0	16.74	0	0	0	0	0	0	0.46	0.46
	Inverter	MV3-22	368656	4907142	2	0	0	89.1	89.1	1	1049.14	3.25	0	71.42	0	0.7	0	0	6.41	0	0	0	0	0	0	10.54	10.54
	Inverter	MV1-1	364715	4906166	2	0	0	100.3	100.3	1	4788.39	3.25	0	84.6	0	0.62	0	0	18.27	0	0	0	0	0	0	-3.18	-3.18
	Inverter	MV1-2	364753	4906063	2	0	0	100.3	100.3	1	4796.31	3.25	0	84.62	0	0.62	0	0	18.28	0	0	0	0	0	0	-3.21	-3.21
	Inverter	MV1-4	364815	4905918	2	0	0	100.3	100.3	1	4804.11	3.25	0	84.63	0	0.62	0	0	18.29	0	0	0	0	0	0	-3.23	-3.23
	Inverter	MV1-12	365038	4905386	2	0	0	100.3	100.3	1	4880.2	3.25	0	84.77	0	0.63	0	0	18.4	0	0	0	0	0	0	-3.49	-3.49
	Inverter	MV1-15	365315	4904994	2	0	0	100.3	100.3	1	4890.79	3.25	0	84.79	0	0.63	0	0	18.42	0	0	0	0	0	0	-3.53	-3.53
	Inverter	MV2-1	365842	4906816	2	0	0	97.3	97.3	1	3497.95	3.25	0	81.88	0	0.45	0	0	16.23	0	0	0	0	0	0	-1.24	-1.24
	Inverter	MV1-5	364671	4905892	2	0	0	100.3	100.3	1	4944.45	3.25	0	84.88	0	0.64	0	0	18.5	0	0	0	0	0	0	-3.71	-3.71
	Inverter	MV1-8	364788	4905647	2	0	0	100.3	100.3	1	4956.2	3.25	0	84.9	0	0.64	0	0	18.52	0	0	0	0	0	0	-3.74	-3.74
	Inverter	MV1-6	364477	4905835	2	0	0	100.3	100.3	1	5143.66	3.25	0	85.23	0	0.65	0	0	18.79	0	0	0	0	0	0	-4.36	-4.36
	Inverter	MV1-9	364561	4905646	2	0	0	100.3	100.3	1	5155.32	3.25	0	85.25	0	0.66	0	0	18.81	0	0	0	0	0	0	-4.4	-4.4
	Inverter	MV1-11	364655	4905414	2	0	0	100.3	100.3	1	5188.69	3.25	0	85.3	0	0.66	0	0	18.86	0	0	0	0	0	0	-4.5	-4.5

SubstationTransformer	W_ST	369711.17	4906112.3	2.5	0	0	92	92	1	2073.64	3.5	0	77.33	0	-0.15	0	0	4.49	0	0	0	0	0	0	10.3	10.3
Westbrook Inverter Enclosur	W_INV5	369719	4906574	2	0	0	89.1	89.1	1	1641.17	3.25	0	75.3	0	0.82	0	0	7.45	0	0	0	0	0	0	5.48	5.48
Westbrook Inverter Enclosur	W_INV6	369875	4906578	2	0	0	89.1	89.1	1	1702.72	3.25	0	75.62	0	0.84	0	0	7.55	0	0	0	0	0	0	5.04	5.04
Westbrook Inverter Enclosur	W_INV2	369374	4906388	2	0	0	89.1	89.1	1	1727.43	3.25	0	75.75	0	0.84	0	0	7.59	0	0	0	0	0	0	4.87	4.87
Westbrook Inverter Enclosur	W_INV7	369780	4906417	2	0	0	89.1	89.1	1	1809.58	3.25	0	76.15	0	0.86	0	0	7.73	0	0	0	0	0	0	4.31	4.31
Inverter	MV1-7	364925	4905782	2	0	0	97.3	97.3	1	4770.68	3.25	0	84.57	0	0.62	0	0	18.24	0	0	0	0	0	0	-6.12	-6.12
Inverter	MV1-10	365004	4905564	2	0	0	97.3	97.3	1	4812.64	3.25	0	84.65	0	0.62	0	0	18.3	0	0	0	0	0	0	-6.26	-6.26
Inverter	MV1-14	365163	4905049	2	0	0	97.3	97.3	1	4975.45	3.25	0	84.94	0	0.64	0	0	18.54	0	0	0	0	0	0	-6.81	-6.81
Westbrook Inverter Enclosur	W_INV3	369508	4906164	2	0	0	89.1	89.1	1	1972.3	3.25	0	76.9	0	0.9	0	0	8	0	0	0	0	0	0	3.26	3.26
Westbrook Inverter Enclosur	W_INV4	369673	4906164	2	0	0	89.1	89.1	1	2013.05	3.25	0	77.08	0	0.91	0	0	8.07	0	0	0	0	0	0	3	3
Inverter	MV1-13	364731	4905241	2	0	0	97.3	97.3	1	5216.3	3.25	0	85.35	0	0.66	0	0	18.9	0	0	0	0	0	0	-7.59	-7.59
Westbrook Inverter Enclosur	W_INV1	369409	4906578	2	0	0	86.1	86.1	1	1546.81	3.25	0	74.79	0	0.8	0	0	7.29	0	0	0	0	0	0	3.18	3.18
Inverter	MV6-4	370250	4906966	2	0	0	86.1	86.1	1	1611.52	3.25	0	75.14	0	0.82	0	0	7.4	0	0	0	0	0	0	2.7	2.7
Inverter	MV2-2	365977	4906654	2	0	0	89.1	89.1	1	3437.26	3.25	0	81.72	0	1.25	0	0	10.27	0	0	0	0	0	0	-4.19	-4.19
Gardiner Substation	G_Sub	366586.3	4903349.9	2.5	0	0	90.8	90.8	1	5367.54	4.25	0	85.6	0	1.74	2.27	0.38	9.05	0	0	0	0	0	0	-7.88	-7.88
Inverter	MV1-3	364440	4906039	2	0	0	89.1	89.1	1	5091.25	3.25	0	85.14	0	1.66	0	0	12.59	0	0	0	0	0	0	-10.33	-10.33
Westbrook Inverter Transfor	W_INVTR1	369403	4906578	2	0	0	78.2	78.2	1	1545.61	3.25	0	74.78	0	-2.22	0	0	0.98	0	0	0	0	0	0	4.7	4.7
Westbrook Inverter Transfor	W_INVTR5	369725	4906574	2	0	0	77.3	77.3	1	1643.44	3.25	0	75.32	0	-2.27	0	0	1.03	0	0	0	0	0	0	3.26	3.26
Inverters	G_Inv2	366676.9	4903239.1	2	0	0	87.7	87.7	1	5424.66	3.25	0	85.69	0	2.89	0	0	6.38	0	0	0	0	0	0	-7.3	-7.3
Inverters	G_Inv1	366526.4	4903225.8	2	0	0	87.7	87.7	1	5505.25	3.25	0	85.82	0	2.89	0	0	6.47	0	0	0	0	0	0	-7.52	-7.52
Inverters	G_Inv4	366732.8	4903105	2	0	0	87.7	87.7	1	5520.8	3.25	0	85.84	0	2.89	0	0	6.48	0	0	0	0	0	0	-7.56	-7.56
Westbrook Inverter Transfor	W_INVTR6	369881	4906578	2	0	0	77.3	77.3	1	1705.46	3.25	0	75.64	0	-2.29	0	0	1.06	0	0	0	0	0	0	2.94	2.94
Inverters	G_Inv3	366583.7	4903091.4	2	0	0	87.7	87.7	1	5598.46	3.25	0	85.96	0	2.9	0	0	6.56	0	0	0	0	0	0	-7.76	-7.76
Inverters	G_Inv6	366788.5	4902972	2	0	0	87.7	87.7	1	5618.13	3.25	0	85.99	0	2.9	0	0	6.58	0	0	0	0	0	0	-7.82	-7.82
Westbrook Inverter Transfor	W_INVTR2	369368	4906388	2	0	0	77.3	77.3	1	1726.48	3.25	0	75.74	0	-2.3	0	0	1.07	0	0	0	0	0	0	2.83	2.83
Inverters	G_Inv5	366638.5	4902958.1	2	0	0	87.7	87.7	1	5693.98	3.25	0	86.11	0	2.9	0	0	6.66	0	0	0	0	0	0	-8.01	-8.01
Inverters	G_Inv8	366844.5	4902838.5	2	0	0	87.7	87.7	1	5717.78	3.25	0	86.14	0	2.9	0	0	6.69	0	0	0	0	0	0	-8.08	-8.08
Inverters	G_Inv7	366694.6	4902824.7	2	0	0	87.7	87.7	1	5791.06	3.25	0	86.26	0	2.91	0	0	6.76	0	0	0	0	0	0	-8.27	-8.27
Inverters	G_Inv10	366900.7	4902704.8	2	0	0	87.7	87.7	1	5819.44	3.25	0	86.3	0	2.91	0	0	6.79	0	0	0	0	0	0	-8.34	-8.34
Inverters	G_Inv9	366750.9	4902691.8	2	0	0	87.7	87.7	1	5889.56	3.25	0	86.4	0	2.91	0	0	6.86	0	0	0	0	0	0	-8.52	-8.52
Westbrook Inverter Transfor	W_INVTR7	369786	4906417	2	0	0	77.3	77.3	1	1811.84	3.25	0	76.16	0	-2.33	0	0	1.11	0	0	0	0	0	0	2.4	2.4
Westbrook Inverter Transfor	W_INVTR3	369514	4906164	2	0	0	77.3	77.3	1	1973.56	3.25	0	76.9	0	-2.4	0	0	1.19	0	0	0	0	0	0	1.64	1.64
Westbrook Inverter Transfor	W_INVTR4	369679	4906164	2	0	0	77.3	77.3	1	2014.77	3.25	0	77.08	0	-2.41	0	0	1.21	0	0	0	0	0	0	1.45	1.45
Inverter Transformer	MV6-1 T	370230	4907364	2	0	0	69.4	69.4	1	1346.26	3.25	0	73.58	0	1.9	0	0	4.26	0	0	0	0	0	0	-10.39	-10.39
Inverter Transformer	MV6-4 T	370244	4906966	2	0	0	69.4	69.4	1	1607.24	3.25	0	75.12	0	2.02	0	0	4.55	0	0	0	0	0	0	-12.34	-12.34
Inverter Transformer	MV4-15 T	369170	4908481	2	0	0	56.1	56.1	1	394.26	3.25	0	62.92	0	-0.11	0	0	3.18	0	0	0	0	0	0	-9.93	-9.93
Inverter Transformer	MV4-14 T	369182	4908507	2	0	0	56.1	56.1	1	422.07	3.25	0	63.51	0	-0.12	0	0	3.29	0	0	0	0	0	0	-10.62	-10.62
Inverter Transformer	MV3-2 T	368677	4907928	2	0	0	56.1	56.1	1	452.67	3.25	0	64.12	0	-0.12	0	0	3.39	0	0	0	0	0	0	-11.33	-11.33
Inverter Transformer	MV4-13 T	369057	4908605	2	0	0	56.1	56.1	1	513.38	3.25	0	65.21	0	-0.12	0	0	3.59	0	0	0	0	0	0	-12.63	-12.63
Inverter Transformer	MV3-8 T	368685	4907712	2	0	0	56.1	56.1	1	562.4	3.25	0	66	0	-0.11	0	0	3.74	0	0	0	0	0	0	-13.58	-13.58
Inverter Transformer	MV3-4 T	368507	4907925	2	0	0	56.1	56.1	1	614.89	3.25	0	66.78	0	-0.1	0	0	3.9	0	0	0	0	0	0	-14.51	-14.51
Inverter Transformer	MV3-9 T	368517	4907703	2	0	0	56.1	56.1	1	700.26	3.25	0	67.91	0	-0.08	0	0	4.13	0	0	0	0	0	0	-15.9	-15.9
Inverter Transformer	MV4-12 T	369049	4908803	2	0	0	56.1	56.1	1	711.42	3.25	0	68.04	0	-0.08	0	0	4.16	0	0	0	0	0	0	-16.07	-16.07
Inverter Transformer	MV3-14 T	368678	4907498	2	0	0	56.1	56.1	1	728.78	3.25	0	68.25	0	-0.07	0	0	4.21	0	0	0	0	0	0	-16.33	-16.33
Inverter Transformer	MV2-1 T	365836	4906816	2	0	0	69.4	69.4	1	3503.53	3.25	0	81.89	0	2.65	0	0	6.29	0	0	0	0	0	0	-21.49	-21.49
Inverter Transformer	MV4-11 T	369269	4908855	2	0	0	56.1	56.1	1	780.58	3.25	0	68.85	0	-0.06	0	0	4.35	0	0	0	0	0	0	-17.08	-17.08
Inverter Transformer	MV4-10 T	369307	4908858	2	0	0	56.1	56.1	1	792.65	3.25	0	68.98	0	-0.05	0	0	4.38	0	0	0	0	0	0	-17.24	-17.24
Inverter Transformer	MV3-5 T	368335	4907843	2	0	0	56.1	56.1	1	803.39	3.25	0	69.1	0	-0.05	0	0	4.4	0	0	0	0	0	0	-17.39	-17.39
Inverter Transformer	MV3-16 T	368509	4907475	2	0	0	56.1	56.1	1	854.22	3.25	0	69.63	0	-0.04	0	0	4.53	0	0	0	0	0	0	-18.07	-18.07
Inverter Transformer	MV3-11 T	368340	4907662	2	0	0	56.1	56.1	1	872.47	3.25	0	69.81	0	-0.03	0	0	4.58	0	0	0	0	0	0	-18.3	-18.3
Inverter Transformer	MV3-20 T	368683	4907317	2	0	0	56.1	56.1	1	880.46	3.25	0	69.89	0	-0.03	0	0	4.6	0	0	0	0	0	0	-18.41	-18.41
Inverter Transformer	MV4-7 T	369040	4909001	2	0	0	56.1	56.1	1	909.58	3.25	0	70.18	0	-0.02	0	0	4.67	0	0	0	0	0	0	-18.77	-18.77
Inverter Transformer	MV4-8 T	369262	4909001	2	0	0	56.1	56.1	1	922.33	3.25	0	70.3	0	-0.01	0	0	4.7	0	0	0	0	0	0	-18.93	-18.93
Inverter Transformer	MV4-9 T	369284	4909001	2	0	0	56.1	56.1	1	926.48	3.25	0	70.34	0	-0.01	0	0	4.71	0	0	0	0	0	0	-18.98	-18.98
Inverter Transformer	MV3-1 T	368150	4907976	2	0	0	56.1	56.1	1	955.63	3.25	0	70.61	0	0	0	0	4.78	0	0	0	0	0	0	-19.33	-19.33
Inverter Transformer	MV3-15 T	368351	4907477	2	0	0	56.1	56.1	1	968.73	3.25	0	70.72	0	0	0	0	4.81	0	0	0	0	0	0	-19.48	-19.48
Inverter Transformer	MV3-6 T	368156	4907834	2	0	0	56.1	56.1	1	977.43	3.25	0	70.8	0	0	0	0	4.83	0	0	0	0	0	0	-19.58	-19.58
Inverter Transformer	MV5-6 T	369987	4908507	2	0	0	56.1	56.1	1	980.19	3.25	0	70.83	0	0.01	0	0	4.84	0	0	0	0	0	0	-19.61	-19.61
Inverter Transformer	MV3-10 T	368162	4907669	2	0	0	56.1	56.1	1	1028.05	3.25	0	71.24	0	0.02	0	0	4.96	0	0	0	0	0	0	-20.16	-20.16
Inverter Transformer	MV1-7 T	364919	4905782	2	0	0	69.4	69.4	1	4775.93	3.25	0	84.58	0	2.97	0	0	7.23	0	0	0	0	0	0	-25.43	-25.43
Inverter Transformer	MV1-10 T	365010	4905564	2	0	0	69.4	69.4	1	4807.53	3.25	0	84.64	0	2.97	0	0	7.25	0	0	0	0	0	0	-25.51	-25.51
Inverter Transformer	MV3-22 T	368661	4907142	2	0	0	56.1	56.1	1	1047.04	3.25	0	71.4	0	0.03	0	0	5	0	0	0	0	0	0	-20.37	-20.37
Inverter Transformer	MV3-19 T	368352	4907347	2	0	0	56.1	56.1	1	1055.5	3.25	0	71.47	0	0.03	0	0	5.02	0	0	0	0	0	0	-20.46	-20.46
Inverter Transformer	MV1-14 T	365157	4905049	2	0	0	69.4	69.4	1	4980.2	3.25	0	84.94	0	3.01	0	0	7.37	0	0	0	0	0	0	-25.97	-25.97
Inverter Transformer	MV3-21 T	368484	4907206	2	0	0	56.1	56.1	1	1079.26	3.25	0	71.66	0	0.04	0	0	5.08	0	0	0	0	0	0	-20.72	-20.72
Inverter Transformer	MV5-5 T	370021	4908690	2	0	0	56.1	56.1	1	1098.75	3.25	0	71.82	0	0.05	0	0	5.12	0	0	0	0	0	0	-20.93	-20.93
Inverter Transformer	MV3-17 T	368183	4907472	2	0	0	56.1	56.1	1	1106.33	3.25	0	71.88	0	0.05	0	0	5.14	0	0	0	0	0	0	-21.01	-21.01
Inverter Transformer	MV4-4 T	369033	4909199	2	0	0	56.1	56.1	1	1107.64	3.25	0	71.89	0	0.05	0	0	5.14	0	0	0	0	0	0	-21.02	-21.02
Inverter Transformer	MV4-6 T	369249	4909192	2	0	0	56.1	56.1	1	1108.98	3.25	0	71.9	0	0.05	0	0	5.15	0	0	0	0	0	0	-21.04	-21.04
Inverter Transformer	MV4-5 T	369283	4909199	2	0	0	56.1	56.1	1	1121.01	3.25	0	71.99	0	0.05	0	0	5.17	0	0	0	0	0	0	-21.16	-21.16
Inverter Transformer	MV1-13 T	364725	4905241	2	0	0	69.4	69.4	1	5221.33	3.25	0	85.36	0	3.06	0	0	7.53	0	0	0	0	0	0	-26.59	-26.59
Inverter Transformer	MV3-3 T	367944	4907927	2	0	0	56.1	56.1	1	1166.32	3.25	0	72.34	0	0.07	0	0	5.28	0	0	0	0	0	0	-21.63	-21.63
Inverter Transformer	MV5-2 T	370011	4908853	2	0	0	56.1	56.1	1	1187.43	3.25	0	72.49	0	0.08	0	0	5.33	0	0	0	0	0	0	-21.84	-21.84
Inverter Transformer	MV3-7 T	367951	4907754	2	0	0	56.1	56.1	1	1196.52	3.25	0	72.56	0	0.08	0	0	5.35	0	0	0	0	0	0	-21.93	-21.93

	Inverter Transformer	MV6-2 T	370091	4907339	2	0	0	56.1	56.1	1	1246.69	3.25	0	72.92	0	0.1	0	0	5.46	0	0	0	0	0	0	-22.42	-22.42
	Inverter Transformer	MV3-13 T	367958	4907577	2	0	0	56.1	56.1	1	1251.83	3.25	0	72.95	0	0.1	0	0	5.47	0	0	0	0	0	0	-22.47	-22.47
	Inverter Transformer	MV4-1 T	369017	4909397	2	0	0	56.1	56.1	1	1306.24	3.25	0	73.32	0	0.12	0	0	5.59	0	0	0	0	0	0	-22.98	-22.98
	Inverter Transformer	MV4-3 T	369234	4909397	2	0	0	56.1	56.1	1	1310.74	3.25	0	73.35	0	0.13	0	0	5.6	0	0	0	0	0	0	-23.02	-23.02
	Inverter Transformer	MV4-2 T	369267	4909397	2	0	0	56.1	56.1	1	1314.56	3.25	0	73.38	0	0.13	0	0	5.61	0	0	0	0	0	0	-23.06	-23.06
	Inverter Transformer	MV5-3 T	370237	4908851	2	0	0	56.1	56.1	1	1367.67	3.25	0	73.72	0	0.15	0	0	5.73	0	0	0	0	0	0	-23.54	-23.54
	Inverter Transformer	MV5-4 T	370330	4908707	2	0	0	56.1	56.1	1	1376.04	3.25	0	73.77	0	0.15	0	0	5.75	0	0	0	0	0	0	-23.61	-23.61
	Inverter Transformer	MV5-1 T	370015	4909142	2	0	0	56.1	56.1	1	1392.81	3.25	0	73.88	0	0.16	0	0	5.79	0	0	0	0	0	0	-23.76	-23.76
	Inverter Transformer	MV6-3 T	370202	4907140	2	0	0	56.1	56.1	1	1458.33	3.25	0	74.28	0	0.18	0	0	5.93	0	0	0	0	0	0	-24.33	-24.33
	Inverter Transformer	MV3-18 T	367757	4907412	2	0	0	56.1	56.1	1	1504.5	3.25	0	74.55	0	0.2	0	0	6.03	0	0	0	0	0	0	-24.72	-24.72
	Inverter Transformer	MV3-12 T	367674	4907594	2	0	0	56.1	56.1	1	1509.38	3.25	0	74.58	0	0.2	0	0	6.04	0	0	0	0	0	0	-24.76	-24.76
	Line Reactor	NGR	369421	4908787.5	5	0	0	45.4	45.4	1	765.5	5.25	0	68.68	0	3.41	1.46	0.11	0.31	0	0	0	0	0	0	-28.51	-28.51
	Inverter Transformer	MV2-2 T	365982	4906654	2	0	0	56.1	56.1	1	3432.72	3.25	0	81.71	0	1.01	0	0	9.58	0	0	0	0	0	0	-36.25	-36.25
	Inverter Transformer	MV2-3 T	365814	4906641	2	0	0	56.1	56.1	1	3591.16	3.25	0	82.1	0	1.08	0	0	9.83	0	0	0	0	0	0	-36.96	-36.96
	Inverter Transformer	MV2-4 T	365590	4906628	2	0	0	56.1	56.1	1	3802.1	3.25	0	82.6	0	1.16	0	0	10.16	0	0	0	0	0	0	-37.86	-37.86
	Inverter Transformer	MV1-1 T	364721	4906166	2	0	0	56.1	56.1	1	4782.9	3.25	0	84.59	0	1.55	0	0	11.56	0	0	0	0	0	0	-41.65	-41.65
	Inverter Transformer	MV1-2 T	364759	4906063	2	0	0	56.1	56.1	1	4790.88	3.25	0	84.61	0	1.55	0	0	11.58	0	0	0	0	0	0	-41.67	-41.67
	Inverter Transformer	MV1-4 T	364821	4905918	2	0	0	56.1	56.1	1	4798.76	3.25	0	84.62	0	1.55	0	0	11.59	0	0	0	0	0	0	-41.7	-41.7
	Inverter Transformer	MV1-12 T	365044	4905386	2	0	0	56.1	56.1	1	4875.21	3.25	0	84.76	0	1.58	0	0	11.69	0	0	0	0	0	0	-41.97	-41.97
	Inverter Transformer	MV1-15 T	365309	4904994	2	0	0	56.1	56.1	1	4895.43	3.25	0	84.8	0	1.59	0	0	11.72	0	0	0	0	0	0	-42.04	-42.04
	Inverter Transformer	MV1-5 T	364676	4905892	2	0	0	56.1	56.1	1	4939.97	3.25	0	84.87	0	1.6	0	0	11.77	0	0	0	0	0	0	-42.19	-42.19
	Inverter Transformer	MV1-8 T	364782	4905647	2	0	0	56.1	56.1	1	4961.42	3.25	0	84.91	0	1.61	0	0	11.8	0	0	0	0	0	0	-42.27	-42.27
	Inverter Transformer	MV1-3 T	364435	4906039	2	0	0	56.1	56.1	1	5095.83	3.25	0	85.14	0	1.66	0	0	11.98	0	0	0	0	0	0	-42.73	-42.73
	Inverter Transformer	MV1-6 T	364482	4905835	2	0	0	56.1	56.1	1	5139.17	3.25	0	85.22	0	1.68	0	0	12.04	0	0	0	0	0	0	-42.87	-42.87
	Inverter Transformer	MV1-9 T	364555	4905646	2	0	0	56.1	56.1	1	5160.6	3.25	0	85.25	0	1.68	0	0	12.06	0	0	0	0	0	0	-42.94	-42.94
	Inverter Transformer	MV1-11 T	364649	4905414	2	0	0	56.1	56.1	1	5193.82	3.25	0	85.31	0	1.69	0	0	12.11	0	0	0	0	0	0	-43.05	-43.05
Limit. Valu	0	0																								
Level D/N:	38.8563	38.8563																								

Receiver: Vacant Lot Receptor
ID: W-V19
X: 369899
Y: 4908141.7
Z: 4.5
Ground: 0

ISO	Description	ID	X	Y	Z	Ground	ReflOrd	LxT	LxN	L/A	Dist.	hm	Freq	Adiv	K0b	Agr	Abar	z	Aatm	Afol	Ahous	Cmet	CmetN	Dc	RL	LtotT	LtotN
	Sol_Luce Substation	S_Substation	369426	4908792	3.5	0	0	112.1	112.1	1	804.13	5.24	0	69.11	0	-0.06	5.34	0.29	2.11	0	0	0	0	0	0	35.58	35.58
	Inverter	MV5-5	370015	4908690	2	0	0	100.3	100.3	1	560.44	3.25	0	65.97	0	-0.51	0	0	8.96	0	0	0	0	0	0	25.89	25.89
	Inverter	MV5-4	370324	4908707	2	0	0	100.3	100.3	1	707.24	3.25	0	67.99	0	-0.41	0	0	9.77	0	0	0	0	0	0	22.96	22.96
	Inverter	MV5-2	370006	4908853	2	0	0	100.3	100.3	1	719.31	3.25	0	68.14	0	-0.4	0	0	9.83	0	0	0	0	0	0	22.74	22.74
	Inverter	MV5-3	370231	4908851	2	0	0	100.3	100.3	1	783.16	3.25	0	68.88	0	-0.36	0	0	10.11	0	0	0	0	0	0	21.69	21.69
	Inverter	MV6-2	370085	4907339	2	0	0	100.3	100.3	1	823.97	3.25	0	69.32	0	-0.34	0	0	10.28	0	0	0	0	0	0	21.05	21.05
	Inverter	MV4-10	369312	4908858	2	0	0	100.3	100.3	1	926.1	3.25	0	70.33	0	-0.28	0	0	10.66	0	0	0	0	0	0	19.6	19.6
	Inverter	MV4-11	369264	4908855	2	0	0	100.3	100.3	1	955	3.25	0	70.6	0	-0.27	0	0	10.76	0	0	0	0	0	0	19.22	19.22
	Inverter	MV5-1	370020	4909142	2	0	0	100.3	100.3	1	1007.59	3.25	0	71.07	0	-0.24	0	0	10.94	0	0	0	0	0	0	18.55	18.55
	Inverter	MV6-3	370207	4907140	2	0	0	100.3	100.3	1	1047.99	3.25	0	71.41	0	-0.22	0	0	11.07	0	0	0	0	0	0	18.06	18.06
	Inverter	MV4-9	369289	4909001	2	0	0	100.3	100.3	1	1053.8	4.96	0	71.46	0	0.34	3.78	0.03	11.08	0	0	0	0	0	0	13.65	13.65
	Inverter	MV4-8	369256	4909001	2	0	0	100.3	100.3	1	1073.24	4.94	0	71.61	0	0.35	3.77	0.03	11.15	0	0	0	0	0	0	13.43	13.43
	DSTATCOM - 10 MVAR #1	DSAT1	369437	4908757	2.5	0	0	96.6	96.6	1	769.44	3.5	0	68.72	0	2.67	0	0	0.92	0	0	0	0	0	0	24.32	24.32
	Inverter	MV6-1	370235	4907364	2	0	0	97.3	97.3	1	847.18	3.25	0	69.56	0	-0.33	0	0	10.37	0	0	0	0	0	0	17.71	17.71
	DSTATCOM - 10 MVAR #2	DSAT2	369403	4908757	2.5	0	0	96.6	96.6	1	790.33	3.5	0	68.96	0	2.7	0	0	0.93	0	0	0	0	0	0	24.04	24.04
	Inverter	MV4-7	369035	4909001	2	0	0	100.3	100.3	1	1218.56	3.25	0	72.72	0	-0.15	0	0	11.58	0	0	0	0	0	0	16.16	16.16
	Inverter	MV4-5	369289	4909199	2	0	0	100.3	100.3	1	1220.65	3.25	0	72.73	0	-0.15	0	0	11.58	0	0	0	0	0	0	16.14	16.14
	Inverter	MV4-6	369243	4909192	2	0	0	100.3	100.3	1	1238.33	3.25	0	72.86	0	-0.14	0	0	11.63	0	0	0	0	0	0	15.96	15.96
	Inverter	MV3-8	368680	4907712	2	0	0	100.3	100.3	1	1292.52	3.25	0	73.23	0	-0.11	0	0	11.78	0	0	0	0	0	0	15.41	15.41
	Inverter	MV5-6	369982	4908507	2	0	0	89.1	89.1	1	374.62	3.25	0	62.47	0	0.43	0	0	4.6	0	0	0	0	0	0	21.55	21.55
	Inverter	MV4-4	369027	4909199	2	0	0	100.3	100.3	1	1370.5	3.25	0	73.74	0	-0.08	0	0	11.99	0	0	0	0	0	0	14.66	14.66
	Inverter	MV3-14	368684	4907498	2	0	0	100.3	100.3	1	1374.98	3.25	0	73.77	0	-0.08	0	0	12.01	0	0	0	0	0	0	14.62	14.62
	Inverter	MV4-2	369272	4909397	2	0	0	100.3	100.3	1	1403.18	3.25	0	73.94	0	-0.07	0	0	12.08	0	0	0	0	0	0	14.36	14.36
	Inverter	MV4-3	369229	4909397	2	0	0	100.3	100.3	1	1422.91	3.25	0	74.06	0	-0.06	0	0	12.13	0	0	0	0	0	0	14.18	14.18
	Inverter	MV3-9	368512	4907703	2	0	0	100.3	100.3	1	1454.73	3.25	0	74.26	0	-0.05	0	0	12.21	0	0	0	0	0	0	13.9	13.9
	Inverter	MV3-20	368689	4907317	2	0	0	100.3	100.3	1	1464.32	3.25	0	74.31	0	-0.05	0	0	12.24	0	0	0	0	0	0	13.81	13.81
	Inverter	MV3-16	368514	4907475	2	0	0	100.3	100.3	1	1537.11	3.25	0	74.73	0	-0.02	0	0	12.42	0	0	0	0	0	0	13.18	13.18
	Inverter	MV4-1	369011	4909397	2	0	0	100.3	100.3	1	1537.64	4.66	0	74.74	0	0.61	3.6	0.01	12.42	0	0	0	0	0	0	8.95	8.95
	Inverter	MV3-11	368346	4907662	2	0	0	100.3	100.3	1	1625.4	3.25	0	75.22	0	0.01	0	0	12.63	0	0	0	0	0	0	12.45	12.45
	Inverter	MV3-15	368357	4907477	2	0	0	100.3	100.3	1	1679.17	3.25	0	75.5	0	0.03	0	0	12.75	0	0	0	0	0	0	12.03	12.03
	Inverter	MV3-21	368478	4907206	2	0	0	100.3	100.3	1	1701.41	3.25	0	75.62	0	0.04	0	0	12.81	0	0	0	0	0	0	11.85	11.85
	Inverter	MV3-19	368357	4907347	2	0	0	100.3	100.3	1	1734.74	3.25	0	75.78	0	0.05	0	0	12.88	0	0	0	0	0	0	11.6	11.6
	Inverter	MV3-6	368162	4907834	2	0	0	100.3	100.3	1	1764.04	3.25	0	75.93	0	0.06	0	0	12.95	0	0	0	0	0	0	11.38	11.38
	Inverter	MV3-10	368167	4907669	2	0	0	100.3	100.3	1	1795.35	3.25	0	76.08	0	0.07	0	0	13.02	0	0	0	0	0	0	11.14	11.14
	Inverter	MV3-17	368178	4907472	2	0	0	100.3	100.3	1	1846.71	3.25	0	76.33	0	0.08	0	0	13.13	0	0	0	0	0	0	10.77	10.77
	Inverter	MV3-3	367939	4907927	2	0	0	100.3	100.3	1	1971.73	3.25	0	76.9	0	0.12	0	0	13.4	0	0	0	0	0	0	9.89	9.89
	Inverter	MV3-7	367945	4907754	2	0	0	100.3	100.3	1	1992.09	3.25	0	76.99	0	0.13	0	0	13.45	0	0	0	0	0	0	9.75	9.75

Inverter	MV3-13	367963	4907577	2	0	0	100.3	100.3	1	2016.68	3.25	0	77.09	0	0.13	0	0	13.5	0	0	0	0	0	0	9.59	9.59
Inverter	MV3-18	367752	4907412	2	0	0	100.3	100.3	1	2267.61	3.25	0	78.11	0	0.2	0	0	14.01	0	0	0	0	0	0	7.99	7.99
Inverter	MV3-12	367668	4907594	2	0	0	100.3	100.3	1	2297.25	3.25	0	78.22	0	0.21	0	0	14.07	0	0	0	0	0	0	7.81	7.81
Fixed Reactor Bank 2	FRB2	369464	4908755	6	0	0	89.8	89.8	1	751.91	5.25	0	68.52	0	-0.96	0	0	2	0	0	0	0	0	0	20.21	20.21
Fixed Reactor Bank 1	FRB1	369378	4908755	6	0	0	89.8	89.8	1	804.72	5.25	0	69.11	0	-0.98	0	0	2.11	0	0	0	0	0	0	19.53	19.53
Inverter	MV4-15	369176	4908481	2	0	0	89.1	89.1	1	798.66	3.25	0	69.05	0	0.64	0	0	5.92	0	0	0	0	0	0	13.45	13.45
Inverter	MV4-14	369176	4908507	2	0	0	89.1	89.1	1	810.05	3.25	0	69.17	0	0.64	0	0	5.94	0	0	0	0	0	0	13.3	13.3
Inverter	MV4-13	369051	4908605	2	0	0	89.1	89.1	1	966.31	3.25	0	70.7	0	0.68	0	0	6.25	0	0	0	0	0	0	11.43	11.43
Inverter	MV4-12	369043	4908803	2	0	0	89.1	89.1	1	1081.69	3.25	0	71.68	0	0.7	0	0	6.47	0	0	0	0	0	0	10.21	10.21
Inverter	MV2-3	365820	4906641	2	0	0	100.3	100.3	1	4346.3	3.25	0	83.76	0	0.57	0	0	17.59	0	0	0	0	0	0	-1.62	-1.62
Inverter	MV3-2	368671	4907928	2	0	0	89.1	89.1	1	1246.46	3.25	0	72.91	0	0.74	0	0	6.77	0	0	0	0	0	0	8.64	8.64
Inverter	MV2-4	365586	4906624	2	0	0	100.3	100.3	1	4572.24	3.25	0	84.2	0	0.6	0	0	17.94	0	0	0	0	0	0	-2.43	-2.43
Inverter	MV3-4	368502	4907925	2	0	0	89.1	89.1	1	1413.71	3.25	0	74.01	0	0.77	0	0	7.06	0	0	0	0	0	0	7.22	7.22
SubstationTransformer	W_ST	369711.17	4906112.3	2.5	0	0	92	92	1	2038.1	3.5	0	77.18	0	-0.16	0	0	4.43	0	0	0	0	0	0	10.52	10.52
Inverter	MV1-1	364715	4906166	2	0	0	100.3	100.3	1	5547.73	3.25	0	85.88	0	0.68	0	0	19.37	0	0	0	0	0	0	-5.62	-5.62
Inverter	MV1-4	364815	4905918	2	0	0	100.3	100.3	1	5549.05	3.25	0	85.88	0	0.68	0	0	19.37	0	0	0	0	0	0	-5.63	-5.63
Inverter	MV1-2	364753	4906063	2	0	0	100.3	100.3	1	5549.98	3.25	0	85.89	0	0.68	0	0	19.37	0	0	0	0	0	0	-5.63	-5.63
Inverter	MV1-15	365315	4904994	2	0	0	100.3	100.3	1	5560.67	3.25	0	85.9	0	0.68	0	0	19.39	0	0	0	0	0	0	-5.66	-5.66
Inverter	MV1-12	365038	4905386	2	0	0	100.3	100.3	1	5587.77	3.25	0	85.94	0	0.69	0	0	19.42	0	0	0	0	0	0	-5.74	-5.74
Inverter	MV1-8	364788	4905647	2	0	0	100.3	100.3	1	5687.34	3.25	0	86.1	0	0.69	0	0	19.56	0	0	0	0	0	0	-6.04	-6.04
Inverter	MV1-5	364671	4905892	2	0	0	100.3	100.3	1	5691.5	3.25	0	86.1	0	0.69	0	0	19.57	0	0	0	0	0	0	-6.05	-6.05
Westbrook Inverter Enclosur	W_INV6	369875	4906578	2	0	0	89.1	89.1	1	1563.89	3.25	0	74.88	0	0.81	0	0	7.32	0	0	0	0	0	0	6.05	6.05
Westbrook Inverter Enclosur	W_INV5	369719	4906574	2	0	0	89.1	89.1	1	1578	3.25	0	74.96	0	0.81	0	0	7.34	0	0	0	0	0	0	5.94	5.94
Inverter	MV3-5	368340	4907843	2	0	0	89.1	89.1	1	1587.36	3.25	0	75.01	0	0.81	0	0	7.36	0	0	0	0	0	0	5.87	5.87
Inverter	MV3-22	368656	4907142	2	0	0	89.1	89.1	1	1595.13	3.25	0	75.06	0	0.81	0	0	7.37	0	0	0	0	0	0	5.82	5.82
Inverter	MV1-6	364477	4905835	2	0	0	100.3	100.3	1	5892.28	3.25	0	86.41	0	0.7	0	0	19.85	0	0	0	0	0	0	-6.64	-6.64
Inverter	MV1-9	364561	4905646	2	0	0	100.3	100.3	1	5892.6	3.25	0	86.41	0	0.7	0	0	19.85	0	0	0	0	0	0	-6.64	-6.64
Inverter	MV1-11	364655	4905414	2	0	0	100.3	100.3	1	5911	3.25	0	86.43	0	0.7	0	0	19.87	0	0	0	0	0	0	-6.69	-6.69
Inverter	MV2-1	365842	4906816	2	0	0	97.3	97.3	1	4268.11	3.25	0	83.6	0	0.56	0	0	17.47	0	0	0	0	0	0	-4.33	-4.33
Westbrook Inverter Enclosur	W_INV7	369780	4906417	2	0	0	89.1	89.1	1	1728.8	3.25	0	75.75	0	0.84	0	0	7.6	0	0	0	0	0	0	4.86	4.86
Inverter	MV6-4	370250	4906966	2	0	0	86.1	86.1	1	1226.98	3.25	0	72.78	0	0.73	0	0	6.73	0	0	0	0	0	0	5.82	5.82
Inverter	MV3-1	368156	4907976	2	0	0	89.1	89.1	1	1750.86	3.25	0	75.87	0	0.85	0	0	7.63	0	0	0	0	0	0	4.71	4.71
Westbrook Inverter Enclosur	W_INV2	369374	4906388	2	0	0	89.1	89.1	1	1830.6	3.25	0	76.25	0	0.87	0	0	7.77	0	0	0	0	0	0	4.17	4.17
Westbrook Inverter Enclosur	W_INV4	369673	4906164	2	0	0	89.1	89.1	1	1990.57	3.25	0	76.98	0	0.9	0	0	8.03	0	0	0	0	0	0	3.14	3.14
Westbrook Inverter Enclosur	W_INV3	369508	4906164	2	0	0	89.1	89.1	1	2015.98	3.25	0	77.09	0	0.91	0	0	8.07	0	0	0	0	0	0	2.99	2.99
Inverter	MV1-7	364925	4905782	2	0	0	97.3	97.3	1	5505.35	3.25	0	85.82	0	0.68	0	0	19.31	0	0	0	0	0	0	-8.49	-8.49
Inverter	MV1-10	365004	4905564	2	0	0	97.3	97.3	1	5532.23	3.25	0	85.86	0	0.68	0	0	19.35	0	0	0	0	0	0	-8.57	-8.57
Inverter	MV1-14	365163	4905049	2	0	0	97.3	97.3	1	5656.37	3.25	0	86.05	0	0.69	0	0	19.52	0	0	0	0	0	0	-8.95	-8.95
Inverter	MV1-13	364731	4905241	2	0	0	97.3	97.3	1	5926.41	3.25	0	86.46	0	0.7	0	0	19.89	0	0	0	0	0	0	-9.74	-9.74
Westbrook Inverter Enclosur	W_INV1	369409	4906578	2	0	0	86.1	86.1	1	1638.68	3.25	0	75.29	0	0.82	0	0	7.44	0	0	0	0	0	0	2.5	2.5
Inverter	MV2-2	365977	4906654	2	0	0	89.1	89.1	1	4194.68	3.25	0	83.45	0	1.44	0	0	11.36	0	0	0	0	0	0	-7.2	-7.2
Gardiner Substation	G_Sub	366586.3	4903349.9	2.5	0	0	90.8	90.8	1	5825.4	4.25	0	86.31	0	1.84	2.15	0.37	9.56	0	0	0	0	0	0	-9.08	-9.08
Westbrook Inverter Transfor	W_INVTR1	369403	4906578	2	0	0	78.2	78.2	1	1640.48	3.25	0	75.3	0	-2.26	0	0	1.03	0	0	0	0	0	0	4.18	4.18
Inverter	MV1-3	364440	4906039	2	0	0	89.1	89.1	1	5849.96	3.25	0	86.34	0	1.85	0	0	13.57	0	0	0	0	0	0	-12.71	-12.71
Westbrook Inverter Transfor	W_INVTR6	369881	4906578	2	0	0	77.3	77.3	1	1563.81	3.25	0	74.88	0	-2.23	0	0	0.99	0	0	0	0	0	0	3.7	3.7
Westbrook Inverter Transfor	W_INVTR5	369725	4906574	2	0	0	77.3	77.3	1	1577.33	3.25	0	74.96	0	-2.24	0	0	0.99	0	0	0	0	0	0	3.63	3.63
Westbrook Inverter Transfor	W_INVTR7	369786	4906417	2	0	0	77.3	77.3	1	1728.4	3.25	0	75.75	0	-2.3	0	0	1.07	0	0	0	0	0	0	2.82	2.82
Inverters	G_Inv2	366676.9	4903239.1	2	0	0	87.7	87.7	1	5866.64	3.25	0	86.37	0	2.91	0	0	6.84	0	0	0	0	0	0	-8.46	-8.46
Inverters	G_Inv4	366732.8	4903105	2	0	0	87.7	87.7	1	5949.22	3.25	0	86.49	0	2.92	0	0	6.93	0	0	0	0	0	0	-8.67	-8.67
Inverters	G_Inv1	366526.4	4903225.8	2	0	0	87.7	87.7	1	5961.59	3.25	0	86.51	0	2.92	0	0	6.94	0	0	0	0	0	0	-8.7	-8.7
Westbrook Inverter Transfor	W_INVTR2	369368	4906388	2	0	0	77.3	77.3	1	1832.33	3.25	0	76.26	0	-2.34	0	0	1.12	0	0	0	0	0	0	2.3	2.3
Inverters	G_Inv6	366788.5	4902972	2	0	0	87.7	87.7	1	6033.33	3.25	0	86.61	0	2.92	0	0	7.01	0	0	0	0	0	0	-8.88	-8.88
Inverters	G_Inv3	366583.7	4903091.4	2	0	0	87.7	87.7	1	6041.25	3.25	0	86.62	0	2.92	0	0	7.02	0	0	0	0	0	0	-8.9	-8.9
Inverters	G_Inv8	366844.5	4902838.5	2	0	0	87.7	87.7	1	6119.96	3.25	0	86.73	0	2.92	0	0	7.1	0	0	0	0	0	0	-9.1	-9.1
Inverters	G_Inv5	366638.5	4902958.1	2	0	0	87.7	87.7	1	6123.77	3.25	0	86.74	0	2.92	0	0	7.1	0	0	0	0	0	0	-9.11	-9.11
Inverters	G_Inv7	366694.6	4902824.7	2	0	0	87.7	87.7	1	6207.95	3.25	0	86.86	0	2.93	0	0	7.19	0	0	0	0	0	0	-9.32	-9.32
Inverters	G_Inv10	366900.7	4902704.8	2	0	0	87.7	87.7	1	6208.84	3.25	0	86.86	0	2.93	0	0	7.19	0	0	0	0	0	0	-9.32	-9.32
Inverters	G_Inv9	366750.9	4902691.8	2	0	0	87.7	87.7	1	6293.8	3.25	0	86.98	0	2.93	0	0	7.28	0	0	0	0	0	0	-9.52	-9.52
Westbrook Inverter Transfor	W_INVTR4	369679	4906164	2	0	0	77.3	77.3	1	1989.9	3.25	0	76.98	0	-2.4	0	0	1.2	0	0	0	0	0	0	1.56	1.56
Westbrook Inverter Transfor	W_INVTR3	369514	4906164	2	0	0	77.3	77.3	1	2014.83	3.25	0	77.08	0	-2.41	0	0	1.21	0	0	0	0	0	0	1.45	1.45
Inverter Transformer	MV6-1 T	370230	4907364	2	0	0	69.4	69.4	1	845.21	3.25	0	69.54	0	1.54	0	0	3.59	0	0	0	0	0	0	-5.31	-5.31
Inverter Transformer	MV6-4 T	370244	4906966	2	0	0	69.4	69.4	1	1225.28	3.25	0	72.76	0	1.84	0	0	4.11	0	0	0	0	0	0	-9.36	-9.36
Inverter Transformer	MV5-6 T	369987	4908507	2	0	0	56.1	56.1	1	375.76	3.25	0	62.5	0	-0.11	0	0	3.11	0	0	0	0	0	0	-9.44	-9.44
Inverter Transformer	MV5-5 T	370021	4908690	2	0	0	56.1	56.1	1	561.71	3.25	0	65.99	0	-0.11	0	0	3.74	0	0	0	0	0	0	-13.56	-13.56
Inverter Transformer	MV5-4 T	370330	4908707	2	0	0	56.1	56.1	1	710.87	3.25	0	68.04	0	-0.08	0	0	4.16	0	0	0	0	0	0	-16.06	-16.06
Inverter Transformer	MV5-2 T	370011	4908853	2	0	0	56.1	56.1	1	720.07	3.25	0	68.15	0	-0.08	0	0	4.19	0	0	0	0	0	0	-16.2	-16.2
Inverter Transformer	MV5-3 T	370237	4908851	2	0	0	56.1	56.1	1	785.72	3.25	0	68.91	0	-0.06	0	0	4.36	0	0	0	0	0	0	-17.15	-17.15
Inverter Transformer	MV4-15 T	369170	4908481	2	0	0	56.1	56.1	1	804.1	3.25	0	69.11	0	-0.05	0	0	4.41	0	0	0	0	0	0	-17.4	-17.4
Inverter Transformer	MV4-14 T	369182	4908507	2	0	0	56.1	56.1	1	804.7	3.25	0	69.11	0	-0.05	0	0	4.41	0	0	0	0	0	0	-17.41	-17.41
Inverter Transformer	MV6-2 T	370091	4907339	2	0	0	56.1	56.1	1	825.35	3.25	0	69.33	0	-0.05	0	0	4.46	0	0	0	0	0	0	-17.69	-17.69
Inverter Transformer	MV2-1 T	365836	4906816	2	0	0	69.4	69.4	1	4273.81	3.25	0	83.62	0	2.85	0	0	6.88	0	0	0	0	0	0	-24	-24
Inverter Transformer	MV4-10 T	369307	4908858	2	0	0	56.1	56.1	1	929.28	3.25	0	70.36	0	-0.01	0	0	4.72	0	0	0	0	0	0	-19.01	-19.01
Inverter Transformer	MV4-11 T	369269	4908855	2	0	0	56.1	56.1	1	951.68	3.25	0	70.57	0	0	0	0	4.77	0	0	0	0	0	0	-19.28	-19.28
Inverter Transformer	MV4-13 T	369057	4908605	2	0	0	56.1	56.1	1	961.05	3.25	0	70.65	0	0	0	0	4.8	0	0	0	0	0	0	-19.39	-19.39

Inverter Transformer	MV5-1 T	370015	4909142	2	0	0	56.1	56.1	1	1007.01	3.25	0	71.06	0	0.01	0	0	4.91	0	0	0	0	0	0	-19.92	-19.92
Inverter Transformer	MV6-3 T	370202	4907140	2	0	0	56.1	56.1	1	1046.53	3.25	0	71.4	0	0.03	0	0	5	0	0	0	0	0	0	-20.36	-20.36
Inverter Transformer	MV4-9 T	369284	4909001	2	0	0	56.1	56.1	1	1056.71	4.95	0	71.48	0	0.8	3.34	0.03	5.02	0	0	0	0	0	0	-24.59	-24.59
Inverter Transformer	MV4-8 T	369262	4909001	2	0	0	56.1	56.1	1	1069.66	4.95	0	71.58	0	0.81	3.34	0.03	5.05	0	0	0	0	0	0	-24.73	-24.73
Inverter Transformer	MV4-12 T	369049	4908803	2	0	0	56.1	56.1	1	1076.95	3.25	0	71.64	0	0.04	0	0	5.07	0	0	0	0	0	0	-20.7	-20.7
Inverter Transformer	MV1-7 T	364919	4905782	2	0	0	69.4	69.4	1	5510.77	3.25	0	85.82	0	3.11	0	0	7.71	0	0	0	0	0	0	-27.3	-27.3
Inverter Transformer	MV1-10 T	365010	4905564	2	0	0	69.4	69.4	1	5526.92	3.25	0	85.85	0	3.11	0	0	7.72	0	0	0	0	0	0	-27.34	-27.34
Inverter Transformer	MV4-7 T	369040	4909001	2	0	0	56.1	56.1	1	1215.02	3.25	0	72.69	0	0.09	0	0	5.39	0	0	0	0	0	0	-22.11	-22.11
Inverter Transformer	MV4-5 T	369283	4909199	2	0	0	56.1	56.1	1	1223.66	3.25	0	72.75	0	0.09	0	0	5.41	0	0	0	0	0	0	-22.2	-22.2
Inverter Transformer	MV1-14 T	365157	4905049	2	0	0	69.4	69.4	1	5661.39	3.25	0	86.06	0	3.13	0	0	7.81	0	0	0	0	0	0	-27.65	-27.65
Inverter Transformer	MV4-6 T	369249	4909192	2	0	0	56.1	56.1	1	1235.17	3.25	0	72.83	0	0.1	0	0	5.44	0	0	0	0	0	0	-22.31	-22.31
Inverter Transformer	MV3-2 T	368677	4907928	2	0	0	56.1	56.1	1	1240.55	3.25	0	72.87	0	0.1	0	0	5.45	0	0	0	0	0	0	-22.36	-22.36
Inverter Transformer	MV1-13 T	364725	4905241	2	0	0	69.4	69.4	1	5931.64	3.25	0	86.46	0	3.18	0	0	7.98	0	0	0	0	0	0	-28.27	-28.27
Inverter Transformer	MV3-8 T	368685	4907712	2	0	0	56.1	56.1	1	1287.81	3.25	0	73.2	0	0.12	0	0	5.55	0	0	0	0	0	0	-22.81	-22.81
Inverter Transformer	MV4-4 T	369033	4909199	2	0	0	56.1	56.1	1	1366.69	3.25	0	73.71	0	0.15	0	0	5.73	0	0	0	0	0	0	-23.53	-23.53
Inverter Transformer	MV3-14 T	368678	4907498	2	0	0	56.1	56.1	1	1380.29	3.25	0	73.8	0	0.15	0	0	5.76	0	0	0	0	0	0	-23.65	-23.65
Inverter Transformer	MV4-2 T	369267	4909397	2	0	0	56.1	56.1	1	1405.42	3.25	0	73.96	0	0.16	0	0	5.81	0	0	0	0	0	0	-23.87	-23.87
Inverter Transformer	MV3-4 T	368507	4907925	2	0	0	56.1	56.1	1	1408.77	3.25	0	73.98	0	0.16	0	0	5.82	0	0	0	0	0	0	-23.9	-23.9
Inverter Transformer	MV4-3 T	369234	4909397	2	0	0	56.1	56.1	1	1420.57	3.25	0	74.05	0	0.17	0	0	5.85	0	0	0	0	0	0	-24	-24
Inverter Transformer	MV3-9 T	368517	4907703	2	0	0	56.1	56.1	1	1449.96	3.25	0	74.23	0	0.18	0	0	5.91	0	0	0	0	0	0	-24.26	-24.26
Inverter Transformer	MV3-20 T	368683	4907317	2	0	0	56.1	56.1	1	1469.28	3.25	0	74.34	0	0.19	0	0	5.95	0	0	0	0	0	0	-24.42	-24.42
Inverter Transformer	MV4-1 T	369017	4909397	2	0	0	56.1	56.1	1	1534.18	3.25	0	74.72	0	0.21	0	0	6.09	0	0	0	0	0	0	-24.96	-24.96
Inverter Transformer	MV3-16 T	368509	4907475	2	0	0	56.1	56.1	1	1541.62	3.25	0	74.76	0	0.22	0	0	6.11	0	0	0	0	0	0	-25.02	-25.02
Inverter Transformer	MV3-22 T	368661	4907142	2	0	0	56.1	56.1	1	1591.24	3.25	0	75.03	0	0.24	0	0	6.21	0	0	0	0	0	0	-25.42	-25.42
Inverter Transformer	MV3-5 T	368335	4907843	2	0	0	56.1	56.1	1	1592.27	3.25	0	75.04	0	0.24	0	0	6.21	0	0	0	0	0	0	-25.43	-25.43
Inverter Transformer	MV3-11 T	368340	4907662	2	0	0	56.1	56.1	1	1631.13	3.25	0	75.25	0	0.25	0	0	6.3	0	0	0	0	0	0	-25.74	-25.74
Inverter Transformer	MV3-15 T	368351	4907477	2	0	0	56.1	56.1	1	1684.68	3.25	0	75.53	0	0.27	0	0	6.41	0	0	0	0	0	0	-26.15	-26.15
Inverter Transformer	MV3-21 T	368484	4907206	2	0	0	56.1	56.1	1	1696.4	3.25	0	75.59	0	0.28	0	0	6.43	0	0	0	0	0	0	-26.24	-26.24
Inverter Transformer	MV3-19 T	368352	4907347	2	0	0	56.1	56.1	1	1739.18	3.25	0	75.81	0	0.3	0	0	6.52	0	0	0	0	0	0	-26.56	-26.56
Inverter Transformer	MV3-1 T	368150	4907976	2	0	0	56.1	56.1	1	1756.83	3.25	0	75.89	0	0.3	0	0	6.56	0	0	0	0	0	0	-26.69	-26.69
Inverter Transformer	MV3-6 T	368156	4907834	2	0	0	56.1	56.1	1	1769.95	3.25	0	75.96	0	0.31	0	0	6.58	0	0	0	0	0	0	-26.79	-26.79
Inverter Transformer	MV3-10 T	368162	4907669	2	0	0	56.1	56.1	1	1800.17	3.25	0	76.11	0	0.32	0	0	6.64	0	0	0	0	0	0	-27.01	-27.01
Inverter Transformer	MV3-17 T	368183	4907472	2	0	0	56.1	56.1	1	1842.05	3.25	0	76.31	0	0.34	0	0	6.73	0	0	0	0	0	0	-27.31	-27.31
Inverter Transformer	MV3-3 T	367944	4907927	2	0	0	56.1	56.1	1	1966.76	3.25	0	76.88	0	0.39	0	0	6.98	0	0	0	0	0	0	-28.18	-28.18
Inverter Transformer	MV3-7 T	367951	4907754	2	0	0	56.1	56.1	1	1986.21	3.25	0	76.96	0	0.4	0	0	7.02	0	0	0	0	0	0	-28.32	-28.32
Inverter Transformer	MV3-13 T	367958	4907577	2	0	0	56.1	56.1	1	2021.48	3.25	0	77.11	0	0.41	0	0	7.09	0	0	0	0	0	0	-28.55	-28.55
Inverter Transformer	MV3-18 T	367757	4907412	2	0	0	56.1	56.1	1	2262.88	3.25	0	78.09	0	0.52	0	0	7.55	0	0	0	0	0	0	-30.1	-30.1
Inverter Transformer	MV3-12 T	367674	4907594	2	0	0	56.1	56.1	1	2291.42	3.25	0	78.2	0	0.53	0	0	7.6	0	0	0	0	0	0	-30.27	-30.27
Line Reactor	NGR	369421	4908787.5	5	0	0	45.4	45.4	1	803.46	5.25	0	69.1	0	3.42	1.35	0.1	0.33	0	0	0	0	0	0	-28.85	-28.85
Inverter Transformer	MV2-2 T	365982	4906654	2	0	0	56.1	56.1	1	4190.01	3.25	0	83.44	0	1.32	0	0	10.73	0	0	0	0	0	0	-39.44	-39.44
Inverter Transformer	MV2-3 T	365814	4906641	2	0	0	56.1	56.1	1	4351.93	3.25	0	83.77	0	1.38	0	0	10.97	0	0	0	0	0	0	-40.06	-40.06
Inverter Transformer	MV2-4 T	365590	4906628	2	0	0	56.1	56.1	1	4567.14	3.25	0	84.19	0	1.47	0	0	11.27	0	0	0	0	0	0	-40.87	-40.87
Inverter Transformer	MV1-1 T	364721	4906166	2	0	0	56.1	56.1	1	5542.12	3.25	0	85.87	0	1.81	0	0	12.55	0	0	0	0	0	0	-44.18	-44.18
Inverter Transformer	MV1-4 T	364821	4905918	2	0	0	56.1	56.1	1	5543.55	3.25	0	85.88	0	1.82	0	0	12.55	0	0	0	0	0	0	-44.18	-44.18
Inverter Transformer	MV1-2 T	364759	4906063	2	0	0	56.1	56.1	1	5544.42	3.25	0	85.88	0	1.82	0	0	12.55	0	0	0	0	0	0	-44.18	-44.18
Inverter Transformer	MV1-15 T	365309	4904994	2	0	0	56.1	56.1	1	5565.62	3.25	0	85.91	0	1.82	0	0	12.58	0	0	0	0	0	0	-44.25	-44.25
Inverter Transformer	MV1-12 T	365044	4905386	2	0	0	56.1	56.1	1	5582.55	3.25	0	85.94	0	1.83	0	0	12.6	0	0	0	0	0	0	-44.3	-44.3
Inverter Transformer	MV1-5 T	364676	4905892	2	0	0	56.1	56.1	1	5686.9	3.25	0	86.1	0	1.86	0	0	12.73	0	0	0	0	0	0	-44.63	-44.63
Inverter Transformer	MV1-8 T	364782	4905647	2	0	0	56.1	56.1	1	5692.73	3.25	0	86.11	0	1.87	0	0	12.73	0	0	0	0	0	0	-44.65	-44.65
Inverter Transformer	MV1-3 T	364435	4906039	2	0	0	56.1	56.1	1	5854.63	3.25	0	86.35	0	1.92	0	0	12.93	0	0	0	0	0	0	-45.14	-45.14
Inverter Transformer	MV1-6 T	364482	4905835	2	0	0	56.1	56.1	1	5887.68	3.25	0	86.4	0	1.93	0	0	12.97	0	0	0	0	0	0	-45.24	-45.24
Inverter Transformer	MV1-9 T	364555	4905646	2	0	0	56.1	56.1	1	5898.04	3.25	0	86.41	0	1.93	0	0	12.98	0	0	0	0	0	0	-45.27	-45.27
Inverter Transformer	MV1-11 T	364649	4905414	2	0	0	56.1	56.1	1	5916.32	3.25	0	86.44	0	1.94	0	0	13	0	0	0	0	0	0	-45.32	-45.32
Limit. Valu 0	0																									
Level D/N: 38.1764	38.1764																									

Receiver:	Vacant Lot Receptor
ID:	S-VLR17
X:	368821
Y:	4908037
Z:	4.5
Ground:	0

Octave Spectra for most impacted Point of Reception: S-VLR17

ISO	Description	ID	X	Y	Z	Ground	ReflOrd	LxT	LxN	L/A	Dist.	hm	Freq	Adiv	K0b	Agr	Abar	z	Aatm	Afol	Ahous	Cmet	CmetN	Dc	RL	LtotT	LtotN
	Sol_Luce Substation	S_Substation	369426	4908792	3.5	0	0	69.3	69.3	1	967.5	5.24	32	70.71	0	-5.26	4.27	0.28	0.03	0	0	0	0	0	0	-0.46	-0.46
	Sol_Luce Substation	S_Substation	369426	4908792	3.5	0	0	88.5	88.5	1	967.5	5.24	63	70.71	0	-5.26	4.62	0.28	0.12	0	0	0	0	0	0	18.31	18.31
	Sol_Luce Substation	S_Substation	369426	4908792	3.5	0	0	100.6	100.6	1	967.5	5.24	125	70.71	0	3.89	1.13	0.28	0.4	0	0	0	0	0	0	24.47	24.47
	Sol_Luce Substation	S_Substation	369426	4908792	3.5	0	0	103.1	103.1	1	967.5	5.24	250	70.71	0	1.4	3.93	0.28	1.01	0	0	0	0	0	0	26.06	26.06
	Sol_Luce Substation	S_Substation	369426	4908792	3.5	0	0	108.5	108.5	1	967.5	5.24	500	70.71	0	-1.54	5.88	0.28	1.87	0	0	0	0	0	0	31.58	31.58
	Sol_Luce Substation	S_Substation	369426	4908792	3.5	0	0	105.7	105.7	1	967.5	5.24	1000	70.71	0	-1.58	6.82	0.28	3.54	0	0	0	0	0	0	26.21	26.21
	Sol_Luce Substation	S_Substation	369426	4908792	3.5	0	0	101.9	101.9	1	967.5	5.24	2000	70.71	0	-1.58	8.23	0.28	9.35	0	0	0	0	0	0	15.19	15.19
	Sol_Luce Substation	S_Substation	369426	4908792	3.5	0	0	96.7	96.7	1	967.5	5.24	4000	70.71	0	-1.58	10.14	0.28	31.7	0	0	0	0	0	0	-14.28	-14.28
	Sol_Luce Substation	S_Substation	369426	4908792	3.5	0	0	87.6	87.6	1	967.5	5.24	8000	70.71	0	-1.58	12.47	0.28	113.08	0	0	0	0	0	0	-107.1	-107.1
	Inverter	MV3-8	368680	4907712	2	0	0	59.8	59.8	1	354.28	3.25	32	61.99	0	-4.35	0	0	0.01	0	0	0	0	0	0	2.15	2.15
	Inverter	MV3-8	368680	4907712	2	0	0	65.9	65.9	1	354.28	3.25	63	61.99	0	-4.35	0	0	0.04	0	0	0	0	0	0	8.22	8.22
	Inverter	MV3-8	368680	4907712	2	0	0	73.6	73.6	1	354.28	3.25	125	61.99	0	2.46	0	0	0.15	0	0	0	0	0	0	9.01	9.01
	Inverter	MV3-8	368680	4907712	2	0	0	82.6	82.6	1	354.28	3.25	250	61.99	0	3.86	0	0	0.37	0	0	0	0	0	0	16.38	16.38
	Inverter	MV3-8	368680	4907712	2	0	0	88.1	88.1	1	354.28	3.25	500	61.99	0	0.25	0	0	0.68	0	0	0	0	0	0	25.18	25.18
	Inverter	MV3-8	368680	4907712	2	0	0	85.7	85.7	1	354.28	3.25	1000	61.99	0	-1.21	0	0	1.3	0	0	0	0	0	0	23.63	23.63
	Inverter	MV3-8	368680	4907712	2	0	0	90.6	90.6	1	354.28	3.25	2000	61.99	0	-1.3	0	0	3.42	0	0	0	0	0	0	26.49	26.49
	Inverter	MV3-8	368680	4907712	2	0	0	99	99	1	354.28	3.25	4000	61.99	0	-1.3	0	0	11.61	0	0	0	0	0	0	26.71	26.71
	Inverter	MV3-8	368680	4907712	2	0	0	86.3	86.3	1	354.28	3.25	8000	61.99	0	-1.3	0	0	41.41	0	0	0	0	0	0	-15.79	-15.79
	Inverter	MV3-9	368512	4907703	2	0	0	59.8	59.8	1	455.02	3.25	32	64.16	0	-4.71	0	0	0.01	0	0	0	0	0	0	0.34	0.34
	Inverter	MV3-9	368512	4907703	2	0	0	65.9	65.9	1	455.02	3.25	63	64.16	0	-4.71	0	0	0.06	0	0	0	0	0	0	6.4	6.4
	Inverter	MV3-9	368512	4907703	2	0	0	73.6	73.6	1	455.02	3.25	125	64.16	0	2.84	0	0	0.19	0	0	0	0	0	0	6.41	6.41
	Inverter	MV3-9	368512	4907703	2	0	0	82.6	82.6	1	455.02	3.25	250	64.16	0	3.76	0	0	0.47	0	0	0	0	0	0	14.21	14.21
	Inverter	MV3-9	368512	4907703	2	0	0	88.1	88.1	1	455.02	3.25	500	64.16	0	0.14	0	0	0.88	0	0	0	0	0	0	22.92	22.92
	Inverter	MV3-9	368512	4907703	2	0	0	85.7	85.7	1	455.02	3.25	1000	64.16	0	-1.32	0	0	1.66	0	0	0	0	0	0	21.19	21.19
	Inverter	MV3-9	368512	4907703	2	0	0	90.6	90.6	1	455.02	3.25	2000	64.16	0	-1.41	0	0	4.4	0	0	0	0	0	0	23.46	23.46
	Inverter	MV3-9	368512	4907703	2	0	0	99	99	1	455.02	3.25	4000	64.16	0	-1.41	0	0	14.91	0	0	0	0	0	0	21.34	21.34
	Inverter	MV3-9	368512	4907703	2	0	0	86.3	86.3	1	455.02	3.25	8000	64.16	0	-1.41	0	0	53.18	0	0	0	0	0	0	-29.63	-29.63
	Inverter	MV3-14	368684	4907498	2	0	0	59.8	59.8	1	556.14	3.25	32	65.9	0	-4.95	0	0	0.02	0	0	0	0	0	0	-1.17	-1.17
	Inverter	MV3-14	368684	4907498	2	0	0	65.9	65.9	1	556.14	3.25	63	65.9	0	-4.95	0	0	0.07	0	0	0	0	0	0	4.88	4.88
	Inverter	MV3-14	368684	4907498	2	0	0	73.6	73.6	1	556.14	3.25	125	65.9	0	3.25	0	0	0.23	0	0	0	0	0	0	4.21	4.21
	Inverter	MV3-14	368684	4907498	2	0	0	82.6	82.6	1	556.14	3.25	250	65.9	0	3.69	0	0	0.58	0	0	0	0	0	0	12.43	12.43
	Inverter	MV3-14	368684	4907498	2	0	0	88.1	88.1	1	556.14	3.25	500	65.9	0	0.07	0	0	1.07	0	0	0	0	0	0	21.05	21.05
	Inverter	MV3-14	368684	4907498	2	0	0	85.7	85.7	1	556.14	3.25	1000	65.9	0	-1.39	0	0	2.03	0	0	0	0	0	0	19.15	19.15
	Inverter	MV3-14	368684	4907498	2	0	0	90.6	90.6	1	556.14	3.25	2000	65.9	0	-1.48	0	0	5.37	0	0	0	0	0	0	20.81	20.81
	Inverter	MV3-14	368684	4907498	2	0	0	99	99	1	556.14	3.25	4000	65.9	0	-1.48	0	0	18.22	0	0	0	0	0	0	16.36	16.36
	Inverter	MV3-14	368684	4907498	2	0	0	86.3	86.3	1	556.14	3.25	8000	65.9	0	-1.48	0	0	65	0	0	0	0	0	0	-43.12	-43.12
	Inverter	MV3-11	368346	4907662	2	0	0	59.8	59.8	1	605.19	3.25	32	66.64	0	-5.03	0	0	0.02	0	0	0	0	0	0	-1.82	-1.82
	Inverter	MV3-11	368346	4907662	2	0	0	65.9	65.9	1	605.19	3.25	63	66.64	0	-5.03	0	0	0.07	0	0	0	0	0	0	4.22	4.22
	Inverter	MV3-11	368346	4907662	2	0	0	73.6	73.6	1	605.19	3.25	125	66.64	0	3.44	0	0	0.25	0	0	0	0	0	0	3.27	3.27
	Inverter	MV3-11	368346	4907662	2	0	0	82.6	82.6	1	605.19	3.25	250	66.64	0	3.66	0	0	0.63	0	0	0	0	0	0	11.67	11.67
	Inverter	MV3-11	368346	4907662	2	0	0	88.1	88.1	1	605.19	3.25	500	66.64	0	0.05	0	0	1.17	0	0	0	0	0	0	20.25	20.25
	Inverter	MV3-11	368346	4907662	2	0	0	85.7	85.7	1	605.19	3.25	1000	66.64	0	-1.41	0	0	2.21	0	0	0	0	0	0	18.26	18.26
	Inverter	MV3-11	368346	4907662	2	0	0	90.6	90.6	1	605.19	3.25	2000	66.64	0	-1.51	0	0	5.85	0	0	0	0	0	0	19.62	19.62
	Inverter	MV3-11	368346	4907662	2	0	0	99	99	1	605.19	3.25	4000	66.64	0	-1.51	0	0	19.83	0	0	0	0	0	0	14.04	14.04
	Inverter	MV3-11	368346	4907662	2	0	0	86.3	86.3	1	605.19	3.25	8000	66.64	0	-1.51	0	0	70.74	0	0	0	0	0	0	-49.56	-49.56
	Inverter	MV3-16	368514	4907475	2	0	0	59.8	59.8	1	640.39	3.25	32	67.13	0	-5.09	0	0	0.02	0	0	0	0	0	0	-2.26	-2.26
	Inverter	MV3-16	368514	4907475	2	0	0	65.9	65.9	1	640.39	3.25	63	67.13	0	-5.09	0	0	0.08	0	0	0	0	0	0	3.78	3.78
	Inverter	MV3-16	368514	4907475	2	0	0	73.6	73.6	1	640.39	3.25	125	67.13	0	3.57	0	0	0.26	0	0	0	0	0	0	2.64	2.64
	Inverter	MV3-16	368514	4907475	2	0	0	82.6	82.6	1	640.39	3.25	250	67.13	0	3.65	0	0	0.67	0	0	0	0	0	0	11.16	11.16
	Inverter	MV3-16	368514	4907475	2	0	0	88.1	88.1	1	640.39	3.25	500	67.13	0	0.03	0	0	1.23	0	0	0	0	0	0	19.71	19.71
	Inverter	MV3-16	368514	4907475	2	0	0	85.7	85.7	1	640.39	3.25	1000	67.13	0	-1.43	0	0	2.34	0	0	0	0	0	0	17.66	17.66
	Inverter	MV3-16	368514	4907475	2	0	0	90.6	90.6	1	640.39	3.25	2000	67.13	0	-1.53	0	0	6.19	0	0	0	0	0	0	18.81	18.81
	Inverter	MV3-16	368514	4907475	2	0	0	99	99	1	640.39	3.25	4000	67.13	0	-1.53	0	0	20.99	0	0	0	0	0	0	12.41	12.41
	Inverter	MV3-16	368514	4907475	2	0	0	86.3	86.3	1	640.39	3.25	8000	67.13	0	-1.53	0	0	74.85	0	0	0	0	0	0	-54.15	-54.15
	Inverter	MV3-2	368671	4907928	2	0	0	69.6	69.6	1	185.44	3.25	125	56.36	0	2.1	0	0	0.08	0	0	0	0	0	0	11.06	11.06
	Inverter	MV3-2	368671	4907928	2	0	0	78.6	78.6	1	185.44	3.25	250	56.36	0	4.15	0	0	0.19	0	0	0	0	0	0	17.9	17.9
	Inverter	MV3-2	368671	4907928	2	0	0	82.1	82.1	1	185.44	3.25	500	56.36	0	0.62	0	0	0.36	0	0	0	0	0	0	24.76	24.76
	Inverter	MV3-2	368671	4907928	2	0	0	75.7	75.7	1	185.44	3.25	1000	56.36	0	-0.81	0	0	0.68	0	0	0	0	0	0	19.46	19.46
	Inverter	MV3-2	368671	4907928	2	0	0	73.6	73.6	1	185.44	3.25	2000	56.36	0	-0.9	0	0	1.79	0	0	0	0	0	0	16.34	16.34

Inverter	MV3-2	368671	4907928	2	0	0	87	87	1	185.44	3.25	4000	56.36	0	-0.9	0	0	6.08	0	0	0	0	0	0	25.46	25.46
Inverter	MV3-6	368162	4907834	2	0	0	59.8	59.8	1	689.56	3.25	32	67.77	0	-5.15	0	0	0.02	0	0	0	0	0	0	-2.84	-2.84
Inverter	MV3-6	368162	4907834	2	0	0	65.9	65.9	1	689.56	3.25	63	67.77	0	-5.15	0	0	0.08	0	0	0	0	0	0	3.2	3.2
Inverter	MV3-6	368162	4907834	2	0	0	73.6	73.6	1	689.56	3.25	125	67.77	0	3.73	0	0	0.28	0	0	0	0	0	0	1.82	1.82
Inverter	MV3-6	368162	4907834	2	0	0	82.6	82.6	1	689.56	3.25	250	67.77	0	3.63	0	0	0.72	0	0	0	0	0	0	10.48	10.48
Inverter	MV3-6	368162	4907834	2	0	0	88.1	88.1	1	689.56	3.25	500	67.77	0	0.01	0	0	1.33	0	0	0	0	0	0	18.99	18.99
Inverter	MV3-6	368162	4907834	2	0	0	85.7	85.7	1	689.56	3.25	1000	67.77	0	-1.45	0	0	2.52	0	0	0	0	0	0	16.86	16.86
Inverter	MV3-6	368162	4907834	2	0	0	90.6	90.6	1	689.56	3.25	2000	67.77	0	-1.55	0	0	6.66	0	0	0	0	0	0	17.71	17.71
Inverter	MV3-6	368162	4907834	2	0	0	99	99	1	689.56	3.25	4000	67.77	0	-1.55	0	0	22.6	0	0	0	0	0	0	10.18	10.18
Inverter	MV3-6	368162	4907834	2	0	0	86.3	86.3	1	689.56	3.25	8000	67.77	0	-1.55	0	0	80.6	0	0	0	0	0	0	-60.52	-60.52
Inverter	MV3-15	368357	4907477	2	0	0	59.8	59.8	1	727.26	3.25	32	68.23	0	-5.2	0	0	0.02	0	0	0	0	0	0	-3.26	-3.26
Inverter	MV3-15	368357	4907477	2	0	0	65.9	65.9	1	727.26	3.25	63	68.23	0	-5.2	0	0	0.09	0	0	0	0	0	0	2.77	2.77
Inverter	MV3-15	368357	4907477	2	0	0	73.6	73.6	1	727.26	3.25	125	68.23	0	3.84	0	0	0.3	0	0	0	0	0	0	1.23	1.23
Inverter	MV3-15	368357	4907477	2	0	0	82.6	82.6	1	727.26	3.25	250	68.23	0	3.61	0	0	0.76	0	0	0	0	0	0	9.99	9.99
Inverter	MV3-15	368357	4907477	2	0	0	88.1	88.1	1	727.26	3.25	500	68.23	0	0	0	0	1.4	0	0	0	0	0	0	18.47	18.47
Inverter	MV3-15	368357	4907477	2	0	0	85.7	85.7	1	727.26	3.25	1000	68.23	0	-1.46	0	0	2.66	0	0	0	0	0	0	16.27	16.27
Inverter	MV3-15	368357	4907477	2	0	0	90.6	90.6	1	727.26	3.25	2000	68.23	0	-1.56	0	0	7.03	0	0	0	0	0	0	16.9	16.9
Inverter	MV3-15	368357	4907477	2	0	0	99	99	1	727.26	3.25	4000	68.23	0	-1.56	0	0	23.83	0	0	0	0	0	0	8.49	8.49
Inverter	MV3-15	368357	4907477	2	0	0	86.3	86.3	1	727.26	3.25	8000	68.23	0	-1.56	0	0	85	0	0	0	0	0	0	-65.38	-65.38
Inverter	MV3-20	368689	4907317	2	0	0	59.8	59.8	1	732	3.25	32	68.29	0	-5.2	0	0	0.02	0	0	0	0	0	0	-3.31	-3.31
Inverter	MV3-20	368689	4907317	2	0	0	65.9	65.9	1	732	3.25	63	68.29	0	-5.2	0	0	0.09	0	0	0	0	0	0	2.72	2.72
Inverter	MV3-20	368689	4907317	2	0	0	73.6	73.6	1	732	3.25	125	68.29	0	3.85	0	0	0.3	0	0	0	0	0	0	1.15	1.15
Inverter	MV3-20	368689	4907317	2	0	0	82.6	82.6	1	732	3.25	250	68.29	0	3.61	0	0	0.76	0	0	0	0	0	0	9.93	9.93
Inverter	MV3-20	368689	4907317	2	0	0	88.1	88.1	1	732	3.25	500	68.29	0	0	0	0	1.41	0	0	0	0	0	0	18.4	18.4
Inverter	MV3-20	368689	4907317	2	0	0	85.7	85.7	1	732	3.25	1000	68.29	0	-1.46	0	0	2.68	0	0	0	0	0	0	16.2	16.2
Inverter	MV3-20	368689	4907317	2	0	0	90.6	90.6	1	732	3.25	2000	68.29	0	-1.56	0	0	7.07	0	0	0	0	0	0	16.8	16.8
Inverter	MV3-20	368689	4907317	2	0	0	99	99	1	732	3.25	4000	68.29	0	-1.56	0	0	23.99	0	0	0	0	0	0	8.28	8.28
Inverter	MV3-20	368689	4907317	2	0	0	86.3	86.3	1	732	3.25	8000	68.29	0	-1.56	0	0	85.56	0	0	0	0	0	0	-65.99	-65.99
Inverter	MV3-10	368167	4907669	2	0	0	59.8	59.8	1	750.43	3.25	32	68.51	0	-5.22	0	0	0.02	0	0	0	0	0	0	-3.51	-3.51
Inverter	MV3-10	368167	4907669	2	0	0	65.9	65.9	1	750.43	3.25	63	68.51	0	-5.22	0	0	0.09	0	0	0	0	0	0	2.52	2.52
Inverter	MV3-10	368167	4907669	2	0	0	73.6	73.6	1	750.43	3.25	125	68.51	0	3.91	0	0	0.31	0	0	0	0	0	0	0.88	0.88
Inverter	MV3-10	368167	4907669	2	0	0	82.6	82.6	1	750.43	3.25	250	68.51	0	3.61	0	0	0.78	0	0	0	0	0	0	9.7	9.7
Inverter	MV3-10	368167	4907669	2	0	0	88.1	88.1	1	750.43	3.25	500	68.51	0	-0.01	0	0	1.45	0	0	0	0	0	0	18.16	18.16
Inverter	MV3-10	368167	4907669	2	0	0	85.7	85.7	1	750.43	3.25	1000	68.51	0	-1.47	0	0	2.74	0	0	0	0	0	0	15.92	15.92
Inverter	MV3-10	368167	4907669	2	0	0	90.6	90.6	1	750.43	3.25	2000	68.51	0	-1.57	0	0	7.25	0	0	0	0	0	0	16.41	16.41
Inverter	MV3-10	368167	4907669	2	0	0	99	99	1	750.43	3.25	4000	68.51	0	-1.57	0	0	24.59	0	0	0	0	0	0	7.47	7.47
Inverter	MV3-10	368167	4907669	2	0	0	86.3	86.3	1	750.43	3.25	8000	68.51	0	-1.57	0	0	87.71	0	0	0	0	0	0	-68.35	-68.35
Inverter	MV3-19	368357	4907347	2	0	0	59.8	59.8	1	831.51	3.25	32	69.4	0	-5.3	0	0	0.03	0	0	0	0	0	0	-4.33	-4.33
Inverter	MV3-19	368357	4907347	2	0	0	65.9	65.9	1	831.51	3.25	63	69.4	0	-5.3	0	0	0.1	0	0	0	0	0	0	1.7	1.7
Inverter	MV3-19	368357	4907347	2	0	0	73.6	73.6	1	831.51	3.25	125	69.4	0	4.1	0	0	0.34	0	0	0	0	0	0	-0.24	-0.24
Inverter	MV3-19	368357	4907347	2	0	0	82.6	82.6	1	831.51	3.25	250	69.4	0	3.58	0	0	0.87	0	0	0	0	0	0	8.75	8.75
Inverter	MV3-19	368357	4907347	2	0	0	88.1	88.1	1	831.51	3.25	500	69.4	0	-0.03	0	0	1.6	0	0	0	0	0	0	17.13	17.13
Inverter	MV3-19	368357	4907347	2	0	0	85.7	85.7	1	831.51	3.25	1000	69.4	0	-1.49	0	0	3.04	0	0	0	0	0	0	14.75	14.75
Inverter	MV3-19	368357	4907347	2	0	0	90.6	90.6	1	831.51	3.25	2000	69.4	0	-1.59	0	0	8.04	0	0	0	0	0	0	14.76	14.76
Inverter	MV3-19	368357	4907347	2	0	0	99	99	1	831.51	3.25	4000	69.4	0	-1.59	0	0	27.25	0	0	0	0	0	0	3.94	3.94
Inverter	MV3-19	368357	4907347	2	0	0	86.3	86.3	1	831.51	3.25	8000	69.4	0	-1.59	0	0	97.19	0	0	0	0	0	0	-78.7	-78.7
Inverter	MV3-17	368178	4907472	2	0	0	59.8	59.8	1	855.97	3.25	32	69.65	0	-5.32	0	0	0.03	0	0	0	0	0	0	-4.56	-4.56
Inverter	MV3-17	368178	4907472	2	0	0	65.9	65.9	1	855.97	3.25	63	69.65	0	-5.32	0	0	0.1	0	0	0	0	0	0	1.46	1.46
Inverter	MV3-17	368178	4907472	2	0	0	73.6	73.6	1	855.97	3.25	125	69.65	0	4.14	0	0	0.35	0	0	0	0	0	0	-0.54	-0.54
Inverter	MV3-17	368178	4907472	2	0	0	82.6	82.6	1	855.97	3.25	250	69.65	0	3.58	0	0	0.89	0	0	0	0	0	0	8.48	8.48
Inverter	MV3-17	368178	4907472	2	0	0	88.1	88.1	1	855.97	3.25	500	69.65	0	-0.04	0	0	1.65	0	0	0	0	0	0	16.84	16.84
Inverter	MV3-17	368178	4907472	2	0	0	85.7	85.7	1	855.97	3.25	1000	69.65	0	-1.5	0	0	3.13	0	0	0	0	0	0	14.42	14.42
Inverter	MV3-17	368178	4907472	2	0	0	90.6	90.6	1	855.97	3.25	2000	69.65	0	-1.59	0	0	8.27	0	0	0	0	0	0	14.27	14.27
Inverter	MV3-17	368178	4907472	2	0	0	99	99	1	855.97	3.25	4000	69.65	0	-1.59	0	0	28.05	0	0	0	0	0	0	2.9	2.9
Inverter	MV3-17	368178	4907472	2	0	0	86.3	86.3	1	855.97	3.25	8000	69.65	0	-1.59	0	0	100.05	0	0	0	0	0	0	-81.8	-81.8
Inverter	MV3-3	367939	4907927	2	0	0	59.8	59.8	1	888.84	3.25	32	69.98	0	-5.34	0	0	0.03	0	0	0	0	0	0	-4.86	-4.86
Inverter	MV3-3	367939	4907927	2	0	0	65.9	65.9	1	888.84	3.25	63	69.98	0	-5.34	0	0	0.11	0	0	0	0	0	0	1.16	1.16
Inverter	MV3-3	367939	4907927	2	0	0	73.6	73.6	1	888.84	3.25	125	69.98	0	4.2	0	0	0.37	0	0	0	0	0	0	-0.94	-0.94
Inverter	MV3-3	367939	4907927	2	0	0	82.6	82.6	1	888.84	3.25	250	69.98	0	3.57	0	0	0.93	0	0	0	0	0	0	8.13	8.13
Inverter	MV3-3	367939	4907927	2	0	0	88.1	88.1	1	888.84	3.25	500	69.98	0	-0.05	0	0	1.71	0	0	0	0	0	0	16.46	16.46
Inverter	MV3-3	367939	4907927	2	0	0	85.7	85.7	1	888.84	3.25	1000	69.98	0	-1.51	0	0	3.25	0	0	0	0	0	0	13.98	13.98
Inverter	MV3-3	367939	4907927	2	0	0	90.6	90.6	1	888.84	3.25	2000	69.98	0	-1.6	0	0	8.59	0	0	0	0	0	0	13.64	13.64
Inverter	MV3-3	367939	4907927	2	0	0	99	99	1	888.84	3.25	4000	69.98	0	-1.6	0	0	29.13	0	0	0	0	0	0	1.5	1.5
Inverter	MV3-3	367939	4907927	2	0	0	86.3	86.3	1	888.84	3.25	8000	69.98	0	-1.6	0	0	103.89	0	0	0	0	0	0	-85.96	-85.96
Inverter	MV3-21	368478	4907206	2	0	0	59.8	59.8	1	899.01	3.25	32	70.08	0	-5.35	0	0	0.03	0	0	0	0	0	0	-4.95	-4.95
Inverter	MV3-21	368478	4907206	2	0	0	65.9	65.9	1	899.01	3.25	63	70.08	0	-5.35	0	0	0.11	0	0	0	0	0	0	1.06	1.06
Inverter	MV3-21	368478	4907206	2	0	0	73.6	73.6	1	899.01	3.25	125	70.08	0	4.22	0	0	0.37	0	0	0	0	0	0	-1.06	-1.06
Inverter	MV3-21	368478	4907206	2	0	0	82.6	82.6	1	899.01	3.25	250	70.08	0	3.57	0	0	0.94	0	0	0	0	0	0	8.02	8.02
Inverter	MV3-21	368478	4907206	2	0	0	88.1	88.1	1	899.01	3.25	500	70.08	0	-0.05	0	0	1.73	0	0	0	0	0	0	16.34	16.34

Inverter	MV3-21	368478	4907206	2	0	0	85.7	85.7	1	899.01	3.25	1000	70.08	0	-1.51	0	0	3.29	0	0	0	0	0	0	13.85	13.85
Inverter	MV3-21	368478	4907206	2	0	0	90.6	90.6	1	899.01	3.25	2000	70.08	0	-1.6	0	0	8.69	0	0	0	0	0	0	13.44	13.44
Inverter	MV3-21	368478	4907206	2	0	0	99	99	1	899.01	3.25	4000	70.08	0	-1.6	0	0	29.46	0	0	0	0	0	0	1.07	1.07
Inverter	MV3-21	368478	4907206	2	0	0	86.3	86.3	1	899.01	3.25	8000	70.08	0	-1.6	0	0	105.08	0	0	0	0	0	0	-87.25	-87.25
Inverter	MV3-7	367945	4907754	2	0	0	59.8	59.8	1	920.58	3.25	32	70.28	0	-5.36	0	0	0.03	0	0	0	0	0	0	-5.15	-5.15
Inverter	MV3-7	367945	4907754	2	0	0	65.9	65.9	1	920.58	3.25	63	70.28	0	-5.36	0	0	0.11	0	0	0	0	0	0	0.87	0.87
Inverter	MV3-7	367945	4907754	2	0	0	73.6	73.6	1	920.58	3.25	125	70.28	0	4.25	0	0	0.38	0	0	0	0	0	0	-1.31	-1.31
Inverter	MV3-7	367945	4907754	2	0	0	82.6	82.6	1	920.58	3.25	250	70.28	0	3.56	0	0	0.96	0	0	0	0	0	0	7.79	7.79
Inverter	MV3-7	367945	4907754	2	0	0	88.1	88.1	1	920.58	3.25	500	70.28	0	-0.05	0	0	1.77	0	0	0	0	0	0	16.1	16.1
Inverter	MV3-7	367945	4907754	2	0	0	85.7	85.7	1	920.58	3.25	1000	70.28	0	-1.51	0	0	3.37	0	0	0	0	0	0	13.57	13.57
Inverter	MV3-7	367945	4907754	2	0	0	90.6	90.6	1	920.58	3.25	2000	70.28	0	-1.61	0	0	8.9	0	0	0	0	0	0	13.03	13.03
Inverter	MV3-7	367945	4907754	2	0	0	99	99	1	920.58	3.25	4000	70.28	0	-1.61	0	0	30.17	0	0	0	0	0	0	0.16	0.16
Inverter	MV3-7	367945	4907754	2	0	0	86.3	86.3	1	920.58	3.25	8000	70.28	0	-1.61	0	0	107.6	0	0	0	0	0	0	-89.97	-89.97
Inverter	MV4-11	369264	4908855	2	0	0	59.8	59.8	1	930.26	3.25	32	70.37	0	-5.37	0	0	0.03	0	0	0	0	0	0	-5.23	-5.23
Inverter	MV4-11	369264	4908855	2	0	0	65.9	65.9	1	930.26	3.25	63	70.37	0	-5.37	0	0	0.11	0	0	0	0	0	0	0.79	0.79
Inverter	MV4-11	369264	4908855	2	0	0	73.6	73.6	1	930.26	3.25	125	70.37	0	4.26	0	0	0.38	0	0	0	0	0	0	-1.42	-1.42
Inverter	MV4-11	369264	4908855	2	0	0	82.6	82.6	1	930.26	3.25	250	70.37	0	3.56	0	0	0.97	0	0	0	0	0	0	7.7	7.7
Inverter	MV4-11	369264	4908855	2	0	0	88.1	88.1	1	930.26	3.25	500	70.37	0	-0.05	0	0	1.79	0	0	0	0	0	0	15.99	15.99
Inverter	MV4-11	369264	4908855	2	0	0	85.7	85.7	1	930.26	3.25	1000	70.37	0	-1.52	0	0	3.4	0	0	0	0	0	0	13.44	13.44
Inverter	MV4-11	369264	4908855	2	0	0	90.6	90.6	1	930.26	3.25	2000	70.37	0	-1.61	0	0	8.99	0	0	0	0	0	0	12.85	12.85
Inverter	MV4-11	369264	4908855	2	0	0	99	99	1	930.26	3.25	4000	70.37	0	-1.61	0	0	30.48	0	0	0	0	0	0	-0.25	-0.25
Inverter	MV4-11	369264	4908855	2	0	0	86.3	86.3	1	930.26	3.25	8000	70.37	0	-1.61	0	0	108.73	0	0	0	0	0	0	-91.19	-91.19
Inverter	MV4-10	369312	4908858	2	0	0	59.8	59.8	1	956.62	3.25	32	70.61	0	-5.39	0	0	0.03	0	0	0	0	0	0	-5.46	-5.46
Inverter	MV4-10	369312	4908858	2	0	0	65.9	65.9	1	956.62	3.25	63	70.61	0	-5.39	0	0	0.12	0	0	0	0	0	0	0.56	0.56
Inverter	MV4-10	369312	4908858	2	0	0	73.6	73.6	1	956.62	3.25	125	70.61	0	4.3	0	0	0.39	0	0	0	0	0	0	-1.71	-1.71
Inverter	MV4-10	369312	4908858	2	0	0	82.6	82.6	1	956.62	3.25	250	70.61	0	3.56	0	0	1	0	0	0	0	0	0	7.43	7.43
Inverter	MV4-10	369312	4908858	2	0	0	88.1	88.1	1	956.62	3.25	500	70.61	0	-0.06	0	0	1.84	0	0	0	0	0	0	15.7	15.7
Inverter	MV4-10	369312	4908858	2	0	0	85.7	85.7	1	956.62	3.25	1000	70.61	0	-1.52	0	0	3.5	0	0	0	0	0	0	13.11	13.11
Inverter	MV4-10	369312	4908858	2	0	0	90.6	90.6	1	956.62	3.25	2000	70.61	0	-1.62	0	0	9.24	0	0	0	0	0	0	12.36	12.36
Inverter	MV4-10	369312	4908858	2	0	0	99	99	1	956.62	3.25	4000	70.61	0	-1.62	0	0	31.35	0	0	0	0	0	0	-1.35	-1.35
Inverter	MV4-10	369312	4908858	2	0	0	86.3	86.3	1	956.62	3.25	8000	70.61	0	-1.62	0	0	111.81	0	0	0	0	0	0	-94.51	-94.51
Inverter	MV3-13	367963	4907577	2	0	0	59.8	59.8	1	973.53	3.25	32	70.77	0	-5.4	0	0	0.03	0	0	0	0	0	0	-5.6	-5.6
Inverter	MV3-13	367963	4907577	2	0	0	65.9	65.9	1	973.53	3.25	63	70.77	0	-5.4	0	0	0.12	0	0	0	0	0	0	0.41	0.41
Inverter	MV3-13	367963	4907577	2	0	0	73.6	73.6	1	973.53	3.25	125	70.77	0	4.32	0	0	0.4	0	0	0	0	0	0	-1.89	-1.89
Inverter	MV3-13	367963	4907577	2	0	0	82.6	82.6	1	973.53	3.25	250	70.77	0	3.55	0	0	1.02	0	0	0	0	0	0	7.26	7.26
Inverter	MV3-13	367963	4907577	2	0	0	88.1	88.1	1	973.53	3.25	500	70.77	0	-0.06	0	0	1.88	0	0	0	0	0	0	15.52	15.52
Inverter	MV3-13	367963	4907577	2	0	0	85.7	85.7	1	973.53	3.25	1000	70.77	0	-1.52	0	0	3.56	0	0	0	0	0	0	12.9	12.9
Inverter	MV3-13	367963	4907577	2	0	0	90.6	90.6	1	973.53	3.25	2000	70.77	0	-1.62	0	0	9.41	0	0	0	0	0	0	12.04	12.04
Inverter	MV3-13	367963	4907577	2	0	0	99	99	1	973.53	3.25	4000	70.77	0	-1.62	0	0	31.9	0	0	0	0	0	0	-2.05	-2.05
Inverter	MV3-13	367963	4907577	2	0	0	86.3	86.3	1	973.53	3.25	8000	70.77	0	-1.62	0	0	113.79	0	0	0	0	0	0	-96.64	-96.64
Inverter	MV4-7	369035	4909001	2	0	0	59.8	59.8	1	987.47	3.25	32	70.89	0	-5.41	0	0	0.03	0	0	0	0	0	0	-5.71	-5.71
Inverter	MV4-7	369035	4909001	2	0	0	65.9	65.9	1	987.47	3.25	63	70.89	0	-5.41	0	0	0.12	0	0	0	0	0	0	0.3	0.3
Inverter	MV4-7	369035	4909001	2	0	0	73.6	73.6	1	987.47	3.25	125	70.89	0	4.33	0	0	0.41	0	0	0	0	0	0	-2.03	-2.03
Inverter	MV4-7	369035	4909001	2	0	0	82.6	82.6	1	987.47	3.25	250	70.89	0	3.55	0	0	1.03	0	0	0	0	0	0	7.13	7.13
Inverter	MV4-7	369035	4909001	2	0	0	88.1	88.1	1	987.47	3.25	500	70.89	0	-0.06	0	0	1.9	0	0	0	0	0	0	15.37	15.37
Inverter	MV4-7	369035	4909001	2	0	0	85.7	85.7	1	987.47	3.25	1000	70.89	0	-1.53	0	0	3.61	0	0	0	0	0	0	12.72	12.72
Inverter	MV4-7	369035	4909001	2	0	0	90.6	90.6	1	987.47	3.25	2000	70.89	0	-1.62	0	0	9.54	0	0	0	0	0	0	11.79	11.79
Inverter	MV4-7	369035	4909001	2	0	0	99	99	1	987.47	3.25	4000	70.89	0	-1.62	0	0	32.36	0	0	0	0	0	0	-2.63	-2.63
Inverter	MV4-7	369035	4909001	2	0	0	86.3	86.3	1	987.47	3.25	8000	70.89	0	-1.62	0	0	115.42	0	0	0	0	0	0	-98.39	-98.39
Inverter	MV4-8	369256	4909001	2	0	0	59.8	59.8	1	1057.6	3.25	32	71.49	0	-5.45	0	0	0.03	0	0	0	0	0	0	-6.27	-6.27
Inverter	MV4-8	369256	4909001	2	0	0	65.9	65.9	1	1057.6	3.25	63	71.49	0	-5.45	0	0	0.13	0	0	0	0	0	0	-0.27	-0.27
Inverter	MV4-8	369256	4909001	2	0	0	73.6	73.6	1	1057.6	3.25	125	71.49	0	4.4	0	0	0.43	0	0	0	0	0	0	-2.72	-2.72
Inverter	MV4-8	369256	4909001	2	0	0	82.6	82.6	1	1057.6	3.25	250	71.49	0	3.54	0	0	1.1	0	0	0	0	0	0	6.47	6.47
Inverter	MV4-8	369256	4909001	2	0	0	88.1	88.1	1	1057.6	3.25	500	71.49	0	-0.08	0	0	2.04	0	0	0	0	0	0	14.65	14.65
Inverter	MV4-8	369256	4909001	2	0	0	85.7	85.7	1	1057.6	3.25	1000	71.49	0	-1.54	0	0	3.87	0	0	0	0	0	0	11.88	11.88
Inverter	MV4-8	369256	4909001	2	0	0	90.6	90.6	1	1057.6	3.25	2000	71.49	0	-1.63	0	0	10.22	0	0	0	0	0	0	10.53	10.53
Inverter	MV4-8	369256	4909001	2	0	0	99	99	1	1057.6	3.25	4000	71.49	0	-1.63	0	0	34.66	0	0	0	0	0	0	-5.51	-5.51
Inverter	MV4-8	369256	4909001	2	0	0	86.3	86.3	1	1057.6	3.25	8000	71.49	0	-1.63	0	0	123.61	0	0	0	0	0	0	-107.2	-107.2
Inverter	MV4-9	369289	4909001	2	0	0	59.8	59.8	1	1071.6	3.25	32	71.6	0	-5.45	0	0	0.03	0	0	0	0	0	0	-6.38	-6.38
Inverter	MV4-9	369289	4909001	2	0	0	65.9	65.9	1	1071.6	3.25	63	71.6	0	-5.45	0	0	0.13	0	0	0	0	0	0	-0.38	-0.38
Inverter	MV4-9	369289	4909001	2	0	0	73.6	73.6	1	1071.6	3.25	125	71.6	0	4.41	0	0	0.44	0	0	0	0	0	0	-2.85	-2.85
Inverter	MV4-9	369289	4909001	2	0	0	82.6	82.6	1	1071.6	3.25	250	71.6	0	3.54	0	0	1.12	0	0	0	0	0	0	6.34	6.34
Inverter	MV4-9	369289	4909001	2	0	0	88.1	88.1	1	1071.6	3.25	500	71.6	0	-0.08	0	0	2.07	0	0	0	0	0	0	14.51	14.51
Inverter	MV4-9	369289	4909001	2	0	0	85.7	85.7	1	1071.6	3.25	1000	71.6	0	-1.54	0	0	3.92	0	0	0	0	0	0	11.72	11.72
Inverter	MV4-9	369289	4909001	2	0	0	90.6	90.6	1	1071.6	3.25	2000	71.6	0	-1.64	0	0	10.36	0	0	0	0	0	0	10.28	10.28
Inverter	MV4-9	369289	4909001	2	0	0	99	99	1	1071.6	3.25	4000	71.6	0	-1.64	0	0	35.12	0	0	0	0	0	0	-6.08	-6.08
Inverter	MV4-9	369289	4909001	2	0	0	86.3	86.3	1	1071.6	3.25	8000	71.6	0	-1.64	0	0	125.25	0	0	0	0	0	0	-108.9	-108.9
Inverter	MV4-4	369027	4909199	2	0	0	59.8	59.8	1	1180.1	3.25	32	72.44	0	-5.5	0	0	0.04	0	0	0	0	0	0	-7.17	-7.17
Inverter	MV4-4	369027	4909199	2	0	0	65.9	65.9	1	1180.1	3.25	63	72.44	0	-5.5	0	0	0.14	0	0	0	0	0	0	-1.18	-1.18

Inverter	MV4-4	369027	4909199	2	0	0	73.6	73.6	1	1180.1	3.25	125	72.44	0	4.46	0	0	0.48	0	0	0	0	0	0	-3.78	-3.78
Inverter	MV4-4	369027	4909199	2	0	0	82.6	82.6	1	1180.1	3.25	250	72.44	0	3.52	0	0	1.23	0	0	0	0	0	0	5.41	5.41
Inverter	MV4-4	369027	4909199	2	0	0	88.1	88.1	1	1180.1	3.25	500	72.44	0	-0.09	0	0	2.28	0	0	0	0	0	0	13.48	13.48
Inverter	MV4-4	369027	4909199	2	0	0	85.7	85.7	1	1180.1	3.25	1000	72.44	0	-1.56	0	0	4.32	0	0	0	0	0	0	10.5	10.5
Inverter	MV4-4	369027	4909199	2	0	0	90.6	90.6	1	1180.1	3.25	2000	72.44	0	-1.65	0	0	11.4	0	0	0	0	0	0	8.41	8.41
Inverter	MV4-4	369027	4909199	2	0	0	99	99	1	1180.1	3.25	4000	72.44	0	-1.65	0	0	38.67	0	0	0	0	0	0	-10.46	-10.46
Inverter	MV4-4	369027	4909199	2	0	0	86.3	86.3	1	1180.1	3.25	8000	72.44	0	-1.65	0	0	137.93	0	0	0	0	0	0	-122.4	-122.4
Inverter	MV4-6	369243	4909192	2	0	0	59.8	59.8	1	1229.7	3.25	32	72.8	0	-5.52	0	0	0.04	0	0	0	0	0	0	-7.51	-7.51
Inverter	MV4-6	369243	4909192	2	0	0	65.9	65.9	1	1229.7	3.25	63	72.8	0	-5.52	0	0	0.15	0	0	0	0	0	0	-1.52	-1.52
Inverter	MV4-6	369243	4909192	2	0	0	73.6	73.6	1	1229.7	3.25	125	72.8	0	4.47	0	0	0.51	0	0	0	0	0	0	-4.17	-4.17
Inverter	MV4-6	369243	4909192	2	0	0	82.6	82.6	1	1229.7	3.25	250	72.8	0	3.52	0	0	1.28	0	0	0	0	0	0	5.01	5.01
Inverter	MV4-6	369243	4909192	2	0	0	88.1	88.1	1	1229.7	3.25	500	72.8	0	-0.1	0	0	2.37	0	0	0	0	0	0	13.03	13.03
Inverter	MV4-6	369243	4909192	2	0	0	85.7	85.7	1	1229.7	3.25	1000	72.8	0	-1.56	0	0	4.5	0	0	0	0	0	0	9.97	9.97
Inverter	MV4-6	369243	4909192	2	0	0	90.6	90.6	1	1229.7	3.25	2000	72.8	0	-1.66	0	0	11.88	0	0	0	0	0	0	7.58	7.58
Inverter	MV4-6	369243	4909192	2	0	0	99	99	1	1229.7	3.25	4000	72.8	0	-1.66	0	0	40.3	0	0	0	0	0	0	-12.44	-12.44
Inverter	MV4-6	369243	4909192	2	0	0	86.3	86.3	1	1229.7	3.25	8000	72.8	0	-1.66	0	0	143.73	0	0	0	0	0	0	-128.6	-128.6
Inverter	MV3-12	367668	4907594	2	0	0	59.8	59.8	1	1235.2	3.25	32	72.83	0	-5.53	0	0	0.04	0	0	0	0	0	0	-7.55	-7.55
Inverter	MV3-12	367668	4907594	2	0	0	65.9	65.9	1	1235.2	3.25	63	72.83	0	-5.53	0	0	0.15	0	0	0	0	0	0	-1.56	-1.56
Inverter	MV3-12	367668	4907594	2	0	0	73.6	73.6	1	1235.2	3.25	125	72.83	0	4.47	0	0	0.51	0	0	0	0	0	0	-4.22	-4.22
Inverter	MV3-12	367668	4907594	2	0	0	82.6	82.6	1	1235.2	3.25	250	72.83	0	3.52	0	0	1.29	0	0	0	0	0	0	4.96	4.96
Inverter	MV3-12	367668	4907594	2	0	0	88.1	88.1	1	1235.2	3.25	500	72.83	0	-0.1	0	0	2.38	0	0	0	0	0	0	12.98	12.98
Inverter	MV3-12	367668	4907594	2	0	0	85.7	85.7	1	1235.2	3.25	1000	72.83	0	-1.56	0	0	4.52	0	0	0	0	0	0	9.91	9.91
Inverter	MV3-12	367668	4907594	2	0	0	90.6	90.6	1	1235.2	3.25	2000	72.83	0	-1.66	0	0	11.94	0	0	0	0	0	0	7.49	7.49
Inverter	MV3-12	367668	4907594	2	0	0	99	99	1	1235.2	3.25	4000	72.83	0	-1.66	0	0	40.48	0	0	0	0	0	0	-12.65	-12.65
Inverter	MV3-12	367668	4907594	2	0	0	86.3	86.3	1	1235.2	3.25	8000	72.83	0	-1.66	0	0	144.37	0	0	0	0	0	0	-129.3	-129.3
Inverter	MV3-4	368502	4907925	2	0	0	69.6	69.6	1	338.1	3.25	125	61.58	0	2.41	0	0	0.14	0	0	0	0	0	0	5.47	5.47
Inverter	MV3-4	368502	4907925	2	0	0	78.6	78.6	1	338.1	3.25	250	61.58	0	3.89	0	0	0.35	0	0	0	0	0	0	12.78	12.78
Inverter	MV3-4	368502	4907925	2	0	0	82.1	82.1	1	338.1	3.25	500	61.58	0	0.27	0	0	0.65	0	0	0	0	0	0	19.59	19.59
Inverter	MV3-4	368502	4907925	2	0	0	75.7	75.7	1	338.1	3.25	1000	61.58	0	-1.19	0	0	1.24	0	0	0	0	0	0	14.07	14.07
Inverter	MV3-4	368502	4907925	2	0	0	73.6	73.6	1	338.1	3.25	2000	61.58	0	-1.28	0	0	3.27	0	0	0	0	0	0	10.03	10.03
Inverter	MV3-4	368502	4907925	2	0	0	87	87	1	338.1	3.25	4000	61.58	0	-1.28	0	0	11.08	0	0	0	0	0	0	15.62	15.62
Inverter	MV3-18	367752	4907412	2	0	0	59.8	59.8	1	1238.3	3.25	32	72.86	0	-5.53	0	0	0.04	0	0	0	0	0	0	-7.57	-7.57
Inverter	MV3-18	367752	4907412	2	0	0	65.9	65.9	1	1238.3	3.25	63	72.86	0	-5.53	0	0	0.15	0	0	0	0	0	0	-1.58	-1.58
Inverter	MV3-18	367752	4907412	2	0	0	73.6	73.6	1	1238.3	3.25	125	72.86	0	4.47	0	0	0.51	0	0	0	0	0	0	-4.24	-4.24
Inverter	MV3-18	367752	4907412	2	0	0	82.6	82.6	1	1238.3	3.25	250	72.86	0	3.51	0	0	1.29	0	0	0	0	0	0	4.94	4.94
Inverter	MV3-18	367752	4907412	2	0	0	88.1	88.1	1	1238.3	3.25	500	72.86	0	-0.1	0	0	2.39	0	0	0	0	0	0	12.96	12.96
Inverter	MV3-18	367752	4907412	2	0	0	85.7	85.7	1	1238.3	3.25	1000	72.86	0	-1.56	0	0	4.53	0	0	0	0	0	0	9.88	9.88
Inverter	MV3-18	367752	4907412	2	0	0	90.6	90.6	1	1238.3	3.25	2000	72.86	0	-1.66	0	0	11.97	0	0	0	0	0	0	7.43	7.43
Inverter	MV3-18	367752	4907412	2	0	0	99	99	1	1238.3	3.25	4000	72.86	0	-1.66	0	0	40.58	0	0	0	0	0	0	-12.78	-12.78
Inverter	MV3-18	367752	4907412	2	0	0	86.3	86.3	1	1238.3	3.25	8000	72.86	0	-1.66	0	0	144.74	0	0	0	0	0	0	-129.6	-129.6
Inverter	MV4-5	369289	4909199	2	0	0	59.8	59.8	1	1252.7	3.25	32	72.96	0	-5.53	0	0	0.04	0	0	0	0	0	0	-7.66	-7.66
Inverter	MV4-5	369289	4909199	2	0	0	65.9	65.9	1	1252.7	3.25	63	72.96	0	-5.53	0	0	0.15	0	0	0	0	0	0	-1.68	-1.68
Inverter	MV4-5	369289	4909199	2	0	0	73.6	73.6	1	1252.7	3.25	125	72.96	0	4.48	0	0	0.51	0	0	0	0	0	0	-4.35	-4.35
Inverter	MV4-5	369289	4909199	2	0	0	82.6	82.6	1	1252.7	3.25	250	72.96	0	3.51	0	0	1.31	0	0	0	0	0	0	4.82	4.82
Inverter	MV4-5	369289	4909199	2	0	0	88.1	88.1	1	1252.7	3.25	500	72.96	0	-0.1	0	0	2.42	0	0	0	0	0	0	12.83	12.83
Inverter	MV4-5	369289	4909199	2	0	0	85.7	85.7	1	1252.7	3.25	1000	72.96	0	-1.56	0	0	4.58	0	0	0	0	0	0	9.73	9.73
Inverter	MV4-5	369289	4909199	2	0	0	90.6	90.6	1	1252.7	3.25	2000	72.96	0	-1.66	0	0	12.11	0	0	0	0	0	0	7.2	7.2
Inverter	MV4-5	369289	4909199	2	0	0	99	99	1	1252.7	3.25	4000	72.96	0	-1.66	0	0	41.05	0	0	0	0	0	0	-13.35	-13.35
Inverter	MV4-5	369289	4909199	2	0	0	86.3	86.3	1	1252.7	3.25	8000	72.96	0	-1.66	0	0	146.42	0	0	0	0	0	0	-131.4	-131.4
Inverter	MV5-5	370015	4908690	2	0	0	59.8	59.8	1	1360.9	3.25	32	73.68	0	-5.57	0	0	0.04	0	0	0	0	0	0	-8.35	-8.35
Inverter	MV5-5	370015	4908690	2	0	0	65.9	65.9	1	1360.9	3.25	63	73.68	0	-5.57	0	0	0.17	0	0	0	0	0	0	-2.37	-2.37
Inverter	MV5-5	370015	4908690	2	0	0	73.6	73.6	1	1360.9	3.25	125	73.68	0	4.49	0	0	0.56	0	0	0	0	0	0	-5.13	-5.13
Inverter	MV5-5	370015	4908690	2	0	0	82.6	82.6	1	1360.9	3.25	250	73.68	0	3.5	0	0	1.42	0	0	0	0	0	0	4	4
Inverter	MV5-5	370015	4908690	2	0	0	88.1	88.1	1	1360.9	3.25	500	73.68	0	-0.11	0	0	2.62	0	0	0	0	0	0	11.91	11.91
Inverter	MV5-5	370015	4908690	2	0	0	85.7	85.7	1	1360.9	3.25	1000	73.68	0	-1.58	0	0	4.98	0	0	0	0	0	0	8.62	8.62
Inverter	MV5-5	370015	4908690	2	0	0	90.6	90.6	1	1360.9	3.25	2000	73.68	0	-1.67	0	0	13.15	0	0	0	0	0	0	5.44	5.44
Inverter	MV5-5	370015	4908690	2	0	0	99	99	1	1360.9	3.25	4000	73.68	0	-1.67	0	0	44.6	0	0	0	0	0	0	-17.6	-17.6
Inverter	MV5-5	370015	4908690	2	0	0	86.3	86.3	1	1360.9	3.25	8000	73.68	0	-1.67	0	0	159.06	0	0	0	0	0	0	-144.8	-144.8
Inverter	MV4-1	369011	4909397	2	0	0	59.8	59.8	1	1373.2	3.25	32	73.75	0	-5.57	0	0	0.04	0	0	0	0	0	0	-8.42	-8.42
Inverter	MV4-1	369011	4909397	2	0	0	65.9	65.9	1	1373.2	3.25	63	73.75	0	-5.57	0	0	0.17	0	0	0	0	0	0	-2.45	-2.45
Inverter	MV4-1	369011	4909397	2	0	0	73.6	73.6	1	1373.2	3.25	125	73.75	0	4.49	0	0	0.56	0	0	0	0	0	0	-5.21	-5.21
Inverter	MV4-1	369011	4909397	2	0	0	82.6	82.6	1	1373.2	3.25	250	73.75	0	3.5	0	0	1.43	0	0	0	0	0	0	3.91	3.91
Inverter	MV4-1	369011	4909397	2	0	0	88.1	88.1	1	1373.2	3.25	500	73.75	0	-0.11	0	0	2.65	0	0	0	0	0	0	11.81	11.81
Inverter	MV4-1	369011	4909397	2	0	0	85.7	85.7	1	1373.2	3.25	1000	73.75	0	-1.58	0	0	5.02	0	0	0	0	0	0	8.5	8.5
Inverter	MV4-1	369011	4909397	2	0	0	90.6	90.6	1	1373.2	3.25	2000	73.75	0	-1.67	0	0	13.27	0	0	0	0	0	0	5.25	5.25
Inverter	MV4-1	369011	4909397	2	0	0	99	99	1	1373.2	3.25	4000	73.75	0	-1.67	0	0	45	0	0	0	0	0	0	-18.08	-18.08
Inverter	MV4-1	369011	4909397	2	0	0	86.3	86.3	1	1373.2	3.25	8000	73.75	0	-1.67	0	0	160.5	0	0	0	0	0	0	-146.3	-146.3
DSTATCOM - 10 MVAR #2	DSAT2	369403	4908757	2.5	0	0	66.8	66.8	1	925.81	3.5	63	70.33	0	-5.32	0	0	0.11	0	0	0	0	0	0	1.68	1.68
DSTATCOM - 10 MVAR #2	DSAT2	369403	4908757	2.5	0	0	94.9	94.9	1	925.81	3.5	125	70.33	0	4.09	0	0	0.38	0	0	0	0	0	0	20.1	20.1

DSTATCOM - 10 MVAR #2	DSAT2	369403	4908757	2.5	0	0	86.4	86.4	1	925.81	3.5	250	70.33	0	2.81	0	0	0.97	0	0	0	0	0	0	12.3	12.3
DSTATCOM - 10 MVAR #2	DSAT2	369403	4908757	2.5	0	0	87.8	87.8	1	925.81	3.5	500	70.33	0	-1.04	0	0	1.78	0	0	0	0	0	0	16.73	16.73
DSTATCOM - 10 MVAR #2	DSAT2	369403	4908757	2.5	0	0	80	80	1	925.81	3.5	1000	70.33	0	-1.58	0	0	3.39	0	0	0	0	0	0	7.87	7.87
DSTATCOM - 10 MVAR #2	DSAT2	369403	4908757	2.5	0	0	75.2	75.2	1	925.81	3.5	2000	70.33	0	-1.6	0	0	8.95	0	0	0	0	0	0	-2.48	-2.48
DSTATCOM - 10 MVAR #2	DSAT2	369403	4908757	2.5	0	0	85	85	1	925.81	3.5	4000	70.33	0	-1.6	0	0	30.34	0	0	0	0	0	0	-14.07	-14.07
DSTATCOM - 10 MVAR #2	DSAT2	369403	4908757	2.5	0	0	72.9	72.9	1	925.81	3.5	8000	70.33	0	-1.6	0	0	108.21	0	0	0	0	0	0	-104.1	-104.1
Inverter	MV4-3	369229	4909397	2	0	0	59.8	59.8	1	1419.9	3.25	32	74.05	0	-5.59	0	0	0.05	0	0	0	0	0	0	-8.7	-8.7
Inverter	MV4-3	369229	4909397	2	0	0	65.9	65.9	1	1419.9	3.25	63	74.05	0	-5.59	0	0	0.17	0	0	0	0	0	0	-2.73	-2.73
Inverter	MV4-3	369229	4909397	2	0	0	73.6	73.6	1	1419.9	3.25	125	74.05	0	4.49	0	0	0.58	0	0	0	0	0	0	-5.52	-5.52
Inverter	MV4-3	369229	4909397	2	0	0	82.6	82.6	1	1419.9	3.25	250	74.05	0	3.5	0	0	1.48	0	0	0	0	0	0	3.58	3.58
Inverter	MV4-3	369229	4909397	2	0	0	88.1	88.1	1	1419.9	3.25	500	74.05	0	-0.12	0	0	2.74	0	0	0	0	0	0	11.44	11.44
Inverter	MV4-3	369229	4909397	2	0	0	85.7	85.7	1	1419.9	3.25	1000	74.05	0	-1.58	0	0	5.19	0	0	0	0	0	0	8.04	8.04
Inverter	MV4-3	369229	4909397	2	0	0	90.6	90.6	1	1419.9	3.25	2000	74.05	0	-1.68	0	0	13.72	0	0	0	0	0	0	4.51	4.51
Inverter	MV4-3	369229	4909397	2	0	0	99	99	1	1419.9	3.25	4000	74.05	0	-1.68	0	0	46.53	0	0	0	0	0	0	-19.9	-19.9
Inverter	MV4-3	369229	4909397	2	0	0	86.3	86.3	1	1419.9	3.25	8000	74.05	0	-1.68	0	0	165.96	0	0	0	0	0	0	-152	-152
Inverter	MV4-2	369272	4909397	2	0	0	59.8	59.8	1	1432.8	3.25	32	74.12	0	-5.59	0	0	0.05	0	0	0	0	0	0	-8.78	-8.78
Inverter	MV4-2	369272	4909397	2	0	0	65.9	65.9	1	1432.8	3.25	63	74.12	0	-5.59	0	0	0.17	0	0	0	0	0	0	-2.81	-2.81
Inverter	MV4-2	369272	4909397	2	0	0	73.6	73.6	1	1432.8	3.25	125	74.12	0	4.49	0	0	0.59	0	0	0	0	0	0	-5.6	-5.6
Inverter	MV4-2	369272	4909397	2	0	0	82.6	82.6	1	1432.8	3.25	250	74.12	0	3.5	0	0	1.49	0	0	0	0	0	0	3.49	3.49
Inverter	MV4-2	369272	4909397	2	0	0	88.1	88.1	1	1432.8	3.25	500	74.12	0	-0.12	0	0	2.76	0	0	0	0	0	0	11.33	11.33
Inverter	MV4-2	369272	4909397	2	0	0	85.7	85.7	1	1432.8	3.25	1000	74.12	0	-1.58	0	0	5.24	0	0	0	0	0	0	7.92	7.92
Inverter	MV4-2	369272	4909397	2	0	0	90.6	90.6	1	1432.8	3.25	2000	74.12	0	-1.68	0	0	13.85	0	0	0	0	0	0	4.31	4.31
Inverter	MV4-2	369272	4909397	2	0	0	99	99	1	1432.8	3.25	4000	74.12	0	-1.68	0	0	46.95	0	0	0	0	0	0	-20.4	-20.4
Inverter	MV4-2	369272	4909397	2	0	0	86.3	86.3	1	1432.8	3.25	8000	74.12	0	-1.68	0	0	167.47	0	0	0	0	0	0	-153.6	-153.6
Inverter	MV5-2	370006	4908853	2	0	0	59.8	59.8	1	1438.8	3.25	32	74.16	0	-5.59	0	0	0.05	0	0	0	0	0	0	-8.81	-8.81
Inverter	MV5-2	370006	4908853	2	0	0	65.9	65.9	1	1438.8	3.25	63	74.16	0	-5.59	0	0	0.18	0	0	0	0	0	0	-2.84	-2.84
Inverter	MV5-2	370006	4908853	2	0	0	73.6	73.6	1	1438.8	3.25	125	74.16	0	4.49	0	0	0.59	0	0	0	0	0	0	-5.64	-5.64
Inverter	MV5-2	370006	4908853	2	0	0	82.6	82.6	1	1438.8	3.25	250	74.16	0	3.49	0	0	1.5	0	0	0	0	0	0	3.44	3.44
Inverter	MV5-2	370006	4908853	2	0	0	88.1	88.1	1	1438.8	3.25	500	74.16	0	-0.12	0	0	2.77	0	0	0	0	0	0	11.29	11.29
Inverter	MV5-2	370006	4908853	2	0	0	85.7	85.7	1	1438.8	3.25	1000	74.16	0	-1.58	0	0	5.26	0	0	0	0	0	0	7.86	7.86
Inverter	MV5-2	370006	4908853	2	0	0	90.6	90.6	1	1438.8	3.25	2000	74.16	0	-1.68	0	0	13.9	0	0	0	0	0	0	4.21	4.21
Inverter	MV5-2	370006	4908853	2	0	0	99	99	1	1438.8	3.25	4000	74.16	0	-1.68	0	0	47.15	0	0	0	0	0	0	-20.63	-20.63
Inverter	MV5-2	370006	4908853	2	0	0	86.3	86.3	1	1438.8	3.25	8000	74.16	0	-1.68	0	0	168.17	0	0	0	0	0	0	-154.4	-154.4
Inverter	MV6-2	370085	4907339	2	0	0	59.8	59.8	1	1443.9	3.25	32	74.19	0	-5.59	0	0	0.05	0	0	0	0	0	0	-8.84	-8.84
Inverter	MV6-2	370085	4907339	2	0	0	65.9	65.9	1	1443.9	3.25	63	74.19	0	-5.59	0	0	0.18	0	0	0	0	0	0	-2.87	-2.87
Inverter	MV6-2	370085	4907339	2	0	0	73.6	73.6	1	1443.9	3.25	125	74.19	0	4.49	0	0	0.59	0	0	0	0	0	0	-5.68	-5.68
Inverter	MV6-2	370085	4907339	2	0	0	82.6	82.6	1	1443.9	3.25	250	74.19	0	3.49	0	0	1.51	0	0	0	0	0	0	3.41	3.41
Inverter	MV6-2	370085	4907339	2	0	0	88.1	88.1	1	1443.9	3.25	500	74.19	0	-0.12	0	0	2.78	0	0	0	0	0	0	11.25	11.25
Inverter	MV6-2	370085	4907339	2	0	0	85.7	85.7	1	1443.9	3.25	1000	74.19	0	-1.58	0	0	5.28	0	0	0	0	0	0	7.81	7.81
Inverter	MV6-2	370085	4907339	2	0	0	90.6	90.6	1	1443.9	3.25	2000	74.19	0	-1.68	0	0	13.95	0	0	0	0	0	0	4.13	4.13
Inverter	MV6-2	370085	4907339	2	0	0	99	99	1	1443.9	3.25	4000	74.19	0	-1.68	0	0	47.32	0	0	0	0	0	0	-20.83	-20.83
Inverter	MV6-2	370085	4907339	2	0	0	86.3	86.3	1	1443.9	3.25	8000	74.19	0	-1.68	0	0	168.77	0	0	0	0	0	0	-155	-155
DSTATCOM - 10 MVAR #1	DSAT1	369437	4908757	2.5	0	0	66.8	66.8	1	947.55	3.5	63	70.53	0	-5.34	0	0	0.12	0	0	0	0	0	0	1.49	1.49
DSTATCOM - 10 MVAR #1	DSAT1	369437	4908757	2.5	0	0	94.9	94.9	1	947.55	3.5	125	70.53	0	4.11	0	0	0.39	0	0	0	0	0	0	19.87	19.87
DSTATCOM - 10 MVAR #1	DSAT1	369437	4908757	2.5	0	0	86.4	86.4	1	947.55	3.5	250	70.53	0	2.8	0	0	0.99	0	0	0	0	0	0	12.08	12.08
DSTATCOM - 10 MVAR #1	DSAT1	369437	4908757	2.5	0	0	87.8	87.8	1	947.55	3.5	500	70.53	0	-1.05	0	0	1.83	0	0	0	0	0	0	16.49	16.49
DSTATCOM - 10 MVAR #1	DSAT1	369437	4908757	2.5	0	0	80	80	1	947.55	3.5	1000	70.53	0	-1.59	0	0	3.47	0	0	0	0	0	0	7.59	7.59
DSTATCOM - 10 MVAR #1	DSAT1	369437	4908757	2.5	0	0	75.2	75.2	1	947.55	3.5	2000	70.53	0	-1.6	0	0	9.16	0	0	0	0	0	0	-2.89	-2.89
DSTATCOM - 10 MVAR #1	DSAT1	369437	4908757	2.5	0	0	85	85	1	947.55	3.5	4000	70.53	0	-1.6	0	0	31.05	0	0	0	0	0	0	-14.98	-14.98
DSTATCOM - 10 MVAR #1	DSAT1	369437	4908757	2.5	0	0	72.9	72.9	1	947.55	3.5	8000	70.53	0	-1.6	0	0	110.75	0	0	0	0	0	0	-106.8	-106.8
Inverter	MV5-3	370231	4908851	2	0	0	59.8	59.8	1	1628.1	3.25	32	75.23	0	-5.64	0	0	0.05	0	0	0	0	0	0	-9.85	-9.85
Inverter	MV5-3	370231	4908851	2	0	0	65.9	65.9	1	1628.1	3.25	63	75.23	0	-5.64	0	0	0.2	0	0	0	0	0	0	-3.89	-3.89
Inverter	MV5-3	370231	4908851	2	0	0	73.6	73.6	1	1628.1	3.25	125	75.23	0	4.49	0	0	0.67	0	0	0	0	0	0	-6.79	-6.79
Inverter	MV5-3	370231	4908851	2	0	0	82.6	82.6	1	1628.1	3.25	250	75.23	0	3.48	0	0	1.7	0	0	0	0	0	0	2.19	2.19
Inverter	MV5-3	370231	4908851	2	0	0	88.1	88.1	1	1628.1	3.25	500	75.23	0	-0.13	0	0	3.14	0	0	0	0	0	0	9.86	9.86
Inverter	MV5-3	370231	4908851	2	0	0	85.7	85.7	1	1628.1	3.25	1000	75.23	0	-1.6	0	0	5.96	0	0	0	0	0	0	6.11	6.11
Inverter	MV5-3	370231	4908851	2	0	0	90.6	90.6	1	1628.1	3.25	2000	75.23	0	-1.69	0	0	15.73	0	0	0	0	0	0	1.32	1.32
Inverter	MV5-3	370231	4908851	2	0	0	99	99	1	1628.1	3.25	4000	75.23	0	-1.69	0	0	53.35	0	0	0	0	0	0	-27.89	-27.89
Inverter	MV5-3	370231	4908851	2	0	0	86.3	86.3	1	1628.1	3.25	8000	75.23	0	-1.69	0	0	190.3	0	0	0	0	0	0	-177.5	-177.5
Inverter	MV5-1	370020	4909142	2	0	0	59.8	59.8	1	1630.5	3.25	32	75.25	0	-5.64	0	0	0.05	0	0	0	0	0	0	-9.86	-9.86
Inverter	MV5-1	370020	4909142	2	0	0	65.9	65.9	1	1630.5	3.25	63	75.25	0	-5.64	0	0	0.2	0	0	0	0	0	0	-3.9	-3.9
Inverter	MV5-1	370020	4909142	2	0	0	73.6	73.6	1	1630.5	3.25	125	75.25	0	4.49	0	0	0.67	0	0	0	0	0	0	-6.8	-6.8
Inverter	MV5-1	370020	4909142	2	0	0	82.6	82.6	1	1630.5	3.25	250	75.25	0	3.48	0	0	1.7	0	0	0	0	0	0	2.17	2.17
Inverter	MV5-1	370020	4909142	2	0	0	88.1	88.1	1	1630.5	3.25	500	75.25	0	-0.14	0	0	3.14	0	0	0	0	0	0	9.85	9.85
Inverter	MV5-1	370020	4909142	2	0	0	85.7	85.7	1	1630.5	3.25	1000	75.25	0	-1.6	0	0	5.96	0	0	0	0	0	0	6.09	6.09
Inverter	MV5-1	370020	4909142	2	0	0	90.6	90.6	1	1630.5	3.25	2000	75.25	0	-1.69	0	0	15.76	0	0	0	0	0	0	1.29	1.29
Inverter	MV5-1	370020	4909142	2	0	0	99	99	1	1630.5	3.25	4000	75.25	0	-1.69	0	0	53.43	0	0	0	0	0	0	-27.99	-27.99
Inverter	MV5-1	370020	4909142	2	0	0	86.3	86.3	1	1630.5	3.25	8000	75.25	0	-1.69	0	0	190.58	0	0	0	0	0	0	-177.8	-177.8
Inverter	MV5-4	370324	4908707	2	0	0	59.8	59.8	1	1645.6	3.25	32	75.33	0	-5.64	0	0	0.05	0	0	0	0	0	0	-9.93	-9.93

Inverter	MV5-4	370324	4908707	2	0	0	65.9	65.9	1	1645.6	3.25	63	75.33	0	-5.64	0	0	0.2	0	0	0	0	0	0	-3.98	-3.98
Inverter	MV5-4	370324	4908707	2	0	0	73.6	73.6	1	1645.6	3.25	125	75.33	0	4.48	0	0	0.68	0	0	0	0	0	0	-6.89	-6.89
Inverter	MV5-4	370324	4908707	2	0	0	82.6	82.6	1	1645.6	3.25	250	75.33	0	3.48	0	0	1.72	0	0	0	0	0	0	2.08	2.08
Inverter	MV5-4	370324	4908707	2	0	0	88.1	88.1	1	1645.6	3.25	500	75.33	0	-0.14	0	0	3.17	0	0	0	0	0	0	9.74	9.74
Inverter	MV5-4	370324	4908707	2	0	0	85.7	85.7	1	1645.6	3.25	1000	75.33	0	-1.6	0	0	6.02	0	0	0	0	0	0	5.95	5.95
Inverter	MV5-4	370324	4908707	2	0	0	90.6	90.6	1	1645.6	3.25	2000	75.33	0	-1.69	0	0	15.9	0	0	0	0	0	0	1.06	1.06
Inverter	MV5-4	370324	4908707	2	0	0	99	99	1	1645.6	3.25	4000	75.33	0	-1.69	0	0	53.93	0	0	0	0	0	0	-28.56	-28.56
Inverter	MV5-4	370324	4908707	2	0	0	86.3	86.3	1	1645.6	3.25	8000	75.33	0	-1.69	0	0	192.34	0	0	0	0	0	0	-179.7	-179.7
Inverter	MV6-3	370207	4907140	2	0	0	59.8	59.8	1	1650.9	3.25	32	75.35	0	-5.65	0	0	0.05	0	0	0	0	0	0	-9.96	-9.96
Inverter	MV6-3	370207	4907140	2	0	0	65.9	65.9	1	1650.9	3.25	63	75.35	0	-5.65	0	0	0.2	0	0	0	0	0	0	-4.01	-4.01
Inverter	MV6-3	370207	4907140	2	0	0	73.6	73.6	1	1650.9	3.25	125	75.35	0	4.48	0	0	0.68	0	0	0	0	0	0	-6.92	-6.92
Inverter	MV6-3	370207	4907140	2	0	0	82.6	82.6	1	1650.9	3.25	250	75.35	0	3.48	0	0	1.72	0	0	0	0	0	0	2.04	2.04
Inverter	MV6-3	370207	4907140	2	0	0	88.1	88.1	1	1650.9	3.25	500	75.35	0	-0.14	0	0	3.18	0	0	0	0	0	0	9.7	9.7
Inverter	MV6-3	370207	4907140	2	0	0	85.7	85.7	1	1650.9	3.25	1000	75.35	0	-1.6	0	0	6.04	0	0	0	0	0	0	5.9	5.9
Inverter	MV6-3	370207	4907140	2	0	0	90.6	90.6	1	1650.9	3.25	2000	75.35	0	-1.69	0	0	15.95	0	0	0	0	0	0	0.98	0.98
Inverter	MV6-3	370207	4907140	2	0	0	99	99	1	1650.9	3.25	4000	75.35	0	-1.69	0	0	54.1	0	0	0	0	0	0	-28.76	-28.76
Inverter	MV6-3	370207	4907140	2	0	0	86.3	86.3	1	1650.9	3.25	8000	75.35	0	-1.69	0	0	192.97	0	0	0	0	0	0	-180.3	-180.3
Inverter	MV3-5	368340	4907843	2	0	0	69.6	69.6	1	518.66	3.25	125	65.3	0	3.1	0	0	0.21	0	0	0	0	0	0	0.99	0.99
Inverter	MV3-5	368340	4907843	2	0	0	78.6	78.6	1	518.66	3.25	250	65.3	0	3.71	0	0	0.54	0	0	0	0	0	0	9.05	9.05
Inverter	MV3-5	368340	4907843	2	0	0	82.1	82.1	1	518.66	3.25	500	65.3	0	0.1	0	0	1	0	0	0	0	0	0	15.71	15.71
Inverter	MV3-5	368340	4907843	2	0	0	75.7	75.7	1	518.66	3.25	1000	65.3	0	-1.37	0	0	1.9	0	0	0	0	0	0	9.87	9.87
Inverter	MV3-5	368340	4907843	2	0	0	73.6	73.6	1	518.66	3.25	2000	65.3	0	-1.46	0	0	5.01	0	0	0	0	0	0	4.75	4.75
Inverter	MV3-5	368340	4907843	2	0	0	87	87	1	518.66	3.25	4000	65.3	0	-1.46	0	0	17	0	0	0	0	0	0	6.17	6.17
Inverter	MV4-15	369176	4908481	2	0	0	69.6	69.6	1	568.48	3.25	125	66.09	0	3.3	0	0	0.23	0	0	0	0	0	0	-0.03	-0.03
Inverter	MV4-15	369176	4908481	2	0	0	78.6	78.6	1	568.48	3.25	250	66.09	0	3.68	0	0	0.59	0	0	0	0	0	0	8.23	8.23
Inverter	MV4-15	369176	4908481	2	0	0	82.1	82.1	1	568.48	3.25	500	66.09	0	0.07	0	0	1.1	0	0	0	0	0	0	14.84	14.84
Inverter	MV4-15	369176	4908481	2	0	0	75.7	75.7	1	568.48	3.25	1000	66.09	0	-1.4	0	0	2.08	0	0	0	0	0	0	8.92	8.92
Inverter	MV4-15	369176	4908481	2	0	0	73.6	73.6	1	568.48	3.25	2000	66.09	0	-1.49	0	0	5.49	0	0	0	0	0	0	3.5	3.5
Inverter	MV4-15	369176	4908481	2	0	0	87	87	1	568.48	3.25	4000	66.09	0	-1.49	0	0	18.63	0	0	0	0	0	0	3.77	3.77
Inverter	MV4-14	369176	4908507	2	0	0	69.6	69.6	1	589.01	3.25	125	66.4	0	3.38	0	0	0.24	0	0	0	0	0	0	-0.42	-0.42
Inverter	MV4-14	369176	4908507	2	0	0	78.6	78.6	1	589.01	3.25	250	66.4	0	3.67	0	0	0.61	0	0	0	0	0	0	7.91	7.91
Inverter	MV4-14	369176	4908507	2	0	0	82.1	82.1	1	589.01	3.25	500	66.4	0	0.06	0	0	1.14	0	0	0	0	0	0	14.51	14.51
Inverter	MV4-14	369176	4908507	2	0	0	75.7	75.7	1	589.01	3.25	1000	66.4	0	-1.41	0	0	2.15	0	0	0	0	0	0	8.55	8.55
Inverter	MV4-14	369176	4908507	2	0	0	73.6	73.6	1	589.01	3.25	2000	66.4	0	-1.5	0	0	5.69	0	0	0	0	0	0	3.01	3.01
Inverter	MV4-14	369176	4908507	2	0	0	87	87	1	589.01	3.25	4000	66.4	0	-1.5	0	0	19.3	0	0	0	0	0	0	2.8	2.8
Inverter	MV6-1	370235	4907364	2	0	0	56.8	56.8	1	1566	3.25	32	74.9	0	-5.63	0	0	0.05	0	0	0	0	0	0	-12.52	-12.52
Inverter	MV6-1	370235	4907364	2	0	0	62.9	62.9	1	1566	3.25	63	74.9	0	-5.63	0	0	0.19	0	0	0	0	0	0	-6.56	-6.56
Inverter	MV6-1	370235	4907364	2	0	0	70.6	70.6	1	1566	3.25	125	74.9	0	4.49	0	0	0.64	0	0	0	0	0	0	-9.43	-9.43
Inverter	MV6-1	370235	4907364	2	0	0	79.6	79.6	1	1566	3.25	250	74.9	0	3.49	0	0	1.63	0	0	0	0	0	0	-0.41	-0.41
Inverter	MV6-1	370235	4907364	2	0	0	85.1	85.1	1	1566	3.25	500	74.9	0	-0.13	0	0	3.02	0	0	0	0	0	0	7.32	7.32
Inverter	MV6-1	370235	4907364	2	0	0	82.7	82.7	1	1566	3.25	1000	74.9	0	-1.59	0	0	5.73	0	0	0	0	0	0	3.67	3.67
Inverter	MV6-1	370235	4907364	2	0	0	87.6	87.6	1	1566	3.25	2000	74.9	0	-1.69	0	0	15.13	0	0	0	0	0	0	-0.74	-0.74
Inverter	MV6-1	370235	4907364	2	0	0	96	96	1	1566	3.25	4000	74.9	0	-1.69	0	0	51.32	0	0	0	0	0	0	-28.53	-28.53
Inverter	MV6-1	370235	4907364	2	0	0	83.3	83.3	1	1566	3.25	8000	74.9	0	-1.69	0	0	183.04	0	0	0	0	0	0	-172.9	-172.9
Inverter	MV4-13	369051	4908605	2	0	0	69.6	69.6	1	612.81	3.25	125	66.75	0	3.47	0	0	0.25	0	0	0	0	0	0	-0.87	-0.87
Inverter	MV4-13	369051	4908605	2	0	0	78.6	78.6	1	612.81	3.25	250	66.75	0	3.66	0	0	0.64	0	0	0	0	0	0	7.55	7.55
Inverter	MV4-13	369051	4908605	2	0	0	82.1	82.1	1	612.81	3.25	500	66.75	0	0.04	0	0	1.18	0	0	0	0	0	0	14.13	14.13
Inverter	MV4-13	369051	4908605	2	0	0	75.7	75.7	1	612.81	3.25	1000	66.75	0	-1.42	0	0	2.24	0	0	0	0	0	0	8.13	8.13
Inverter	MV4-13	369051	4908605	2	0	0	73.6	73.6	1	612.81	3.25	2000	66.75	0	-1.51	0	0	5.92	0	0	0	0	0	0	2.45	2.45
Inverter	MV4-13	369051	4908605	2	0	0	87	87	1	612.81	3.25	4000	66.75	0	-1.51	0	0	20.08	0	0	0	0	0	0	1.69	1.69
Inverter	MV3-1	368156	4907976	2	0	0	69.6	69.6	1	667.8	3.25	125	67.49	0	3.66	0	0	0.27	0	0	0	0	0	0	-1.83	-1.83
Inverter	MV3-1	368156	4907976	2	0	0	78.6	78.6	1	667.8	3.25	250	67.49	0	3.64	0	0	0.7	0	0	0	0	0	0	6.77	6.77
Inverter	MV3-1	368156	4907976	2	0	0	82.1	82.1	1	667.8	3.25	500	67.49	0	0.02	0	0	1.29	0	0	0	0	0	0	13.3	13.3
Inverter	MV3-1	368156	4907976	2	0	0	75.7	75.7	1	667.8	3.25	1000	67.49	0	-1.44	0	0	2.44	0	0	0	0	0	0	7.21	7.21
Inverter	MV3-1	368156	4907976	2	0	0	73.6	73.6	1	667.8	3.25	2000	67.49	0	-1.54	0	0	6.45	0	0	0	0	0	0	1.19	1.19
Inverter	MV3-1	368156	4907976	2	0	0	87	87	1	667.8	3.25	4000	67.49	0	-1.54	0	0	21.88	0	0	0	0	0	0	-0.84	-0.84
Inverter	MV4-12	369043	4908803	2	0	0	69.6	69.6	1	797.53	3.25	125	69.03	0	4.02	0	0	0.33	0	0	0	0	0	0	-3.78	-3.78
Inverter	MV4-12	369043	4908803	2	0	0	78.6	78.6	1	797.53	3.25	250	69.03	0	3.59	0	0	0.83	0	0	0	0	0	0	5.14	5.14
Inverter	MV4-12	369043	4908803	2	0	0	82.1	82.1	1	797.53	3.25	500	69.03	0	-0.02	0	0	1.54	0	0	0	0	0	0	11.55	11.55
Inverter	MV4-12	369043	4908803	2	0	0	75.7	75.7	1	797.53	3.25	1000	69.03	0	-1.48	0	0	2.92	0	0	0	0	0	0	5.23	5.23
Inverter	MV4-12	369043	4908803	2	0	0	73.6	73.6	1	797.53	3.25	2000	69.03	0	-1.58	0	0	7.71	0	0	0	0	0	0	-1.56	-1.56
Inverter	MV4-12	369043	4908803	2	0	0	87	87	1	797.53	3.25	4000	69.03	0	-1.58	0	0	26.13	0	0	0	0	0	0	-6.59	-6.59
Fixed Reactor Bank 1	FRB1	369378	4908755	6	0	0	47	47	1	908.72	5.25	32	70.17	0	-4.96	0	0	0.03	0	0	0	0	0	0	-18.24	-18.24
Fixed Reactor Bank 1	FRB1	369378	4908755	6	0	0	66.2	66.2	1	908.72	5.25	63	70.17	0	-4.96	0	0	0.11	0	0	0	0	0	0	0.88	0.88
Fixed Reactor Bank 1	FRB1	369378	4908755	6	0	0	78.3	78.3	1	908.72	5.25	125	70.17	0	3.13	0	0	0.37	0	0	0	0	0	0	4.62	4.62
Fixed Reactor Bank 1	FRB1	369378	4908755	6	0	0	80.8	80.8	1	908.72	5.25	250	70.17	0	-0.28	0	0	0.95	0	0	0	0	0	0	9.96	9.96
Fixed Reactor Bank 1	FRB1	369378	4908755	6	0	0	86.2	86.2	1	908.72	5.25	500	70.17	0	-1.49	0	0	1.75	0	0	0	0	0	0	15.77	15.77
Fixed Reactor Bank 1	FRB1	369378	4908755	6	0	0	83.4	83.4	1	908.72	5.25	1000	70.17	0	-1.49	0	0	3.32	0	0	0	0	0	0	11.4	11.4
Fixed Reactor Bank 1	FRB1	369378	4908755	6	0	0	79.6	79.6	1	908.72	5.25	2000	70.17	0	-1.49	0	0	8.78	0	0	0	0	0	0	2.14	2.14

Fixed Reactor Bank 1	FRB1	369378	4908755	6	0	0	74.4	74.4	1	908.72	5.25	4000	70.17	0	-1.49	0	0	29.78	0	0	0	0	0	0	-24.06	-24.06
Fixed Reactor Bank 1	FRB1	369378	4908755	6	0	0	65.3	65.3	1	908.72	5.25	8000	70.17	0	-1.49	0	0	106.21	0	0	0	0	0	0	-109.6	-109.6
Fixed Reactor Bank 2	FRB2	369464	4908755	6	0	0	47	47	1	963.83	5.25	32	70.68	0	-5.02	0	0	0.03	0	0	0	0	0	0	-18.69	-18.69
Fixed Reactor Bank 2	FRB2	369464	4908755	6	0	0	66.2	66.2	1	963.83	5.25	63	70.68	0	-5.02	0	0	0.12	0	0	0	0	0	0	0.42	0.42
Fixed Reactor Bank 2	FRB2	369464	4908755	6	0	0	78.3	78.3	1	963.83	5.25	125	70.68	0	3.14	0	0	0.4	0	0	0	0	0	0	4.09	4.09
Fixed Reactor Bank 2	FRB2	369464	4908755	6	0	0	80.8	80.8	1	963.83	5.25	250	70.68	0	-0.3	0	0	1.01	0	0	0	0	0	0	9.41	9.41
Fixed Reactor Bank 2	FRB2	369464	4908755	6	0	0	86.2	86.2	1	963.83	5.25	500	70.68	0	-1.5	0	0	1.86	0	0	0	0	0	0	15.17	15.17
Fixed Reactor Bank 2	FRB2	369464	4908755	6	0	0	83.4	83.4	1	963.83	5.25	1000	70.68	0	-1.51	0	0	3.53	0	0	0	0	0	0	10.7	10.7
Fixed Reactor Bank 2	FRB2	369464	4908755	6	0	0	79.6	79.6	1	963.83	5.25	2000	70.68	0	-1.51	0	0	9.31	0	0	0	0	0	0	1.11	1.11
Fixed Reactor Bank 2	FRB2	369464	4908755	6	0	0	74.4	74.4	1	963.83	5.25	4000	70.68	0	-1.51	0	0	31.58	0	0	0	0	0	0	-26.36	-26.36
Fixed Reactor Bank 2	FRB2	369464	4908755	6	0	0	65.3	65.3	1	963.83	5.25	8000	70.68	0	-1.51	0	0	112.65	0	0	0	0	0	0	-116.5	-116.5
Inverter	MV2-3	365820	4906641	2	0	0	59.8	59.8	1	3309.8	3.25	32	81.4	0	-5.82	0	0	0.11	0	0	0	0	0	0	-15.88	-15.88
Inverter	MV2-3	365820	4906641	2	0	0	65.9	65.9	1	3309.8	3.25	63	81.4	0	-5.82	0	0	0.4	0	0	0	0	0	0	-10.08	-10.08
Inverter	MV2-3	365820	4906641	2	0	0	73.6	73.6	1	3309.8	3.25	125	81.4	0	4.43	0	0	1.36	0	0	0	0	0	0	-13.59	-13.59
Inverter	MV2-3	365820	4906641	2	0	0	82.6	82.6	1	3309.8	3.25	250	81.4	0	3.43	0	0	3.45	0	0	0	0	0	0	-5.68	-5.68
Inverter	MV2-3	365820	4906641	2	0	0	88.1	88.1	1	3309.8	3.25	500	81.4	0	-0.19	0	0	6.38	0	0	0	0	0	0	0.51	0.51
Inverter	MV2-3	365820	4906641	2	0	0	85.7	85.7	1	3309.8	3.25	1000	81.4	0	-1.65	0	0	12.11	0	0	0	0	0	0	-6.15	-6.15
Inverter	MV2-3	365820	4906641	2	0	0	90.6	90.6	1	3309.8	3.25	2000	81.4	0	-1.75	0	0	31.99	0	0	0	0	0	0	-21.03	-21.03
Inverter	MV2-3	365820	4906641	2	0	0	99	99	1	3309.8	3.25	4000	81.4	0	-1.75	0	0	108.46	0	0	0	0	0	0	-89.11	-89.11
Inverter	MV2-3	365820	4906641	2	0	0	86.3	86.3	1	3309.8	3.25	8000	81.4	0	-1.75	0	0	386.86	0	0	0	0	0	0	-380.2	-380.2
Inverter	MV3-22	368656	4907142	2	0	0	69.6	69.6	1	910.09	3.25	125	70.18	0	4.24	0	0	0.37	0	0	0	0	0	0	-5.19	-5.19
Inverter	MV3-22	368656	4907142	2	0	0	78.6	78.6	1	910.09	3.25	250	70.18	0	3.57	0	0	0.95	0	0	0	0	0	0	3.9	3.9
Inverter	MV3-22	368656	4907142	2	0	0	82.1	82.1	1	910.09	3.25	500	70.18	0	-0.05	0	0	1.75	0	0	0	0	0	0	10.21	10.21
Inverter	MV3-22	368656	4907142	2	0	0	75.7	75.7	1	910.09	3.25	1000	70.18	0	-1.51	0	0	3.33	0	0	0	0	0	0	3.7	3.7
Inverter	MV3-22	368656	4907142	2	0	0	73.6	73.6	1	910.09	3.25	2000	70.18	0	-1.61	0	0	8.8	0	0	0	0	0	0	-3.77	-3.77
Inverter	MV3-22	368656	4907142	2	0	0	87	87	1	910.09	3.25	4000	70.18	0	-1.61	0	0	29.82	0	0	0	0	0	0	-11.4	-11.4
Inverter	MV2-4	365586	4906624	2	0	0	59.8	59.8	1	3530.1	3.25	32	81.96	0	-5.83	0	0	0.11	0	0	0	0	0	0	-16.43	-16.43
Inverter	MV2-4	365586	4906624	2	0	0	65.9	65.9	1	3530.1	3.25	63	81.96	0	-5.83	0	0	0.43	0	0	0	0	0	0	-10.65	-10.65
Inverter	MV2-4	365586	4906624	2	0	0	73.6	73.6	1	3530.1	3.25	125	81.96	0	4.43	0	0	1.45	0	0	0	0	0	0	-14.24	-14.24
Inverter	MV2-4	365586	4906624	2	0	0	82.6	82.6	1	3530.1	3.25	250	81.96	0	3.42	0	0	3.68	0	0	0	0	0	0	-6.46	-6.46
Inverter	MV2-4	365586	4906624	2	0	0	88.1	88.1	1	3530.1	3.25	500	81.96	0	-0.19	0	0	6.81	0	0	0	0	0	0	-0.47	-0.47
Inverter	MV2-4	365586	4906624	2	0	0	85.7	85.7	1	3530.1	3.25	1000	81.96	0	-1.65	0	0	12.91	0	0	0	0	0	0	-7.51	-7.51
Inverter	MV2-4	365586	4906624	2	0	0	90.6	90.6	1	3530.1	3.25	2000	81.96	0	-1.75	0	0	34.11	0	0	0	0	0	0	-23.72	-23.72
Inverter	MV2-4	365586	4906624	2	0	0	99	99	1	3530.1	3.25	4000	81.96	0	-1.75	0	0	115.68	0	0	0	0	0	0	-96.89	-96.89
Inverter	MV2-4	365586	4906624	2	0	0	86.3	86.3	1	3530.1	3.25	8000	81.96	0	-1.75	0	0	412.61	0	0	0	0	0	0	-406.5	-406.5
Inverter	MV1-1	364715	4906166	2	0	0	59.8	59.8	1	4512.2	3.25	32	84.09	0	-5.87	0	0	0.14	0	0	0	0	0	0	-18.56	-18.56
Inverter	MV1-1	364715	4906166	2	0	0	65.9	65.9	1	4512.2	3.25	63	84.09	0	-5.87	0	0	0.55	0	0	0	0	0	0	-12.87	-12.87
Inverter	MV1-1	364715	4906166	2	0	0	73.6	73.6	1	4512.2	3.25	125	84.09	0	4.42	0	0	1.85	0	0	0	0	0	0	-16.76	-16.76
Inverter	MV1-1	364715	4906166	2	0	0	82.6	82.6	1	4512.2	3.25	250	84.09	0	3.41	0	0	4.71	0	0	0	0	0	0	-9.61	-9.61
Inverter	MV1-1	364715	4906166	2	0	0	88.1	88.1	1	4512.2	3.25	500	84.09	0	-0.2	0	0	8.7	0	0	0	0	0	0	-4.48	-4.48
Inverter	MV1-1	364715	4906166	2	0	0	85.7	85.7	1	4512.2	3.25	1000	84.09	0	-1.67	0	0	16.5	0	0	0	0	0	0	-13.23	-13.23
Inverter	MV1-1	364715	4906166	2	0	0	90.6	90.6	1	4512.2	3.25	2000	84.09	0	-1.76	0	0	43.61	0	0	0	0	0	0	-35.33	-35.33
Inverter	MV1-1	364715	4906166	2	0	0	99	99	1	4512.2	3.25	4000	84.09	0	-1.76	0	0	147.87	0	0	0	0	0	0	-131.2	-131.2
Inverter	MV1-1	364715	4906166	2	0	0	86.3	86.3	1	4512.2	3.25	8000	84.09	0	-1.76	0	0	527.39	0	0	0	0	0	0	-523.4	-523.4
Inverter	MV1-2	364753	4906063	2	0	0	59.8	59.8	1	4521.7	3.25	32	84.11	0	-5.87	0	0	0.14	0	0	0	0	0	0	-18.58	-18.58
Inverter	MV1-2	364753	4906063	2	0	0	65.9	65.9	1	4521.7	3.25	63	84.11	0	-5.87	0	0	0.55	0	0	0	0	0	0	-12.89	-12.89
Inverter	MV1-2	364753	4906063	2	0	0	73.6	73.6	1	4521.7	3.25	125	84.11	0	4.42	0	0	1.86	0	0	0	0	0	0	-16.78	-16.78
Inverter	MV1-2	364753	4906063	2	0	0	82.6	82.6	1	4521.7	3.25	250	84.11	0	3.41	0	0	4.72	0	0	0	0	0	0	-9.64	-9.64
Inverter	MV1-2	364753	4906063	2	0	0	88.1	88.1	1	4521.7	3.25	500	84.11	0	-0.2	0	0	8.72	0	0	0	0	0	0	-4.52	-4.52
Inverter	MV1-2	364753	4906063	2	0	0	85.7	85.7	1	4521.7	3.25	1000	84.11	0	-1.67	0	0	16.54	0	0	0	0	0	0	-13.28	-13.28
Inverter	MV1-2	364753	4906063	2	0	0	90.6	90.6	1	4521.7	3.25	2000	84.11	0	-1.76	0	0	43.7	0	0	0	0	0	0	-35.44	-35.44
Inverter	MV1-2	364753	4906063	2	0	0	99	99	1	4521.7	3.25	4000	84.11	0	-1.76	0	0	148.17	0	0	0	0	0	0	-131.5	-131.5
Inverter	MV1-2	364753	4906063	2	0	0	86.3	86.3	1	4521.7	3.25	8000	84.11	0	-1.76	0	0	528.5	0	0	0	0	0	0	-524.5	-524.5
Inverter	MV1-4	364815	4905918	2	0	0	59.8	59.8	1	4531.9	3.25	32	84.13	0	-5.87	0	0	0.15	0	0	0	0	0	0	-18.6	-18.6
Inverter	MV1-4	364815	4905918	2	0	0	65.9	65.9	1	4531.9	3.25	63	84.13	0	-5.87	0	0	0.55	0	0	0	0	0	0	-12.91	-12.91
Inverter	MV1-4	364815	4905918	2	0	0	73.6	73.6	1	4531.9	3.25	125	84.13	0	4.42	0	0	1.86	0	0	0	0	0	0	-16.81	-16.81
Inverter	MV1-4	364815	4905918	2	0	0	82.6	82.6	1	4531.9	3.25	250	84.13	0	3.41	0	0	4.73	0	0	0	0	0	0	-9.67	-9.67
Inverter	MV1-4	364815	4905918	2	0	0	88.1	88.1	1	4531.9	3.25	500	84.13	0	-0.2	0	0	8.74	0	0	0	0	0	0	-4.56	-4.56
Inverter	MV1-4	364815	4905918	2	0	0	85.7	85.7	1	4531.9	3.25	1000	84.13	0	-1.67	0	0	16.58	0	0	0	0	0	0	-13.34	-13.34
Inverter	MV1-4	364815	4905918	2	0	0	90.6	90.6	1	4531.9	3.25	2000	84.13	0	-1.76	0	0	43.8	0	0	0	0	0	0	-35.56	-35.56
Inverter	MV1-4	364815	4905918	2	0	0	99	99	1	4531.9	3.25	4000	84.13	0	-1.76	0	0	148.51	0	0	0	0	0	0	-131.9	-131.9
Inverter	MV1-4	364815	4905918	2	0	0	86.3	86.3	1	4531.9	3.25	8000	84.13	0	-1.76	0	0	529.7	0	0	0	0	0	0	-525.8	-525.8
Inverter	MV2-1	365842	4906816	2	0	0	56.8	56.8	1	3219.5	3.25	32	81.16	0	-5.82	0	0	0.1	0	0	0	0	0	0	-18.64	-18.64
Inverter	MV2-1	365842	4906816	2	0	0	62.9	62.9	1	3219.5	3.25	63	81.16	0	-5.82	0	0	0.39	0	0	0	0	0	0	-12.83	-12.83
Inverter	MV2-1	365842	4906816	2	0	0	70.6	70.6	1	3219.5	3.25	125	81.16	0	4.43	0	0	1.32	0	0	0	0	0	0	-16.31	-16.31
Inverter	MV2-1	365842	4906816	2	0	0	79.6	79.6	1	3219.5	3.25	250	81.16	0	3.43	0	0	3.36	0	0	0	0	0	0	-8.34	-8.34
Inverter	MV2-1	365842	4906816	2	0	0	85.1	85.1	1	3219.5	3.25	500	81.16	0	-0.19	0	0	6.21	0	0	0	0	0	0	-2.07	-2.07
Inverter	MV2-1	365842	4906816	2	0	0	82.7	82.7	1	3219.5	3.25	1000	81.16	0	-1.65	0	0	11.78	0	0	0	0	0	0	-8.58	-8.58
Inverter	MV2-1	365842	4906816	2	0	0	87.6	87.6	1	3219.5	3.25	2000	81.16	0	-1.75	0	0	31.11	0	0	0	0	0	0	-22.92	-22.92

Inverter	MV2-1	365842	4906816	2	0	0	96	96	1	3219.5	3.25	4000	81.16	0	-1.75	0	0	105.5	0	0	0	0	0	0	-88.91	-88.91
Inverter	MV2-1	365842	4906816	2	0	0	83.3	83.3	1	3219.5	3.25	8000	81.16	0	-1.75	0	0	376.3	0	0	0	0	0	0	-372.4	-372.4
Inverter	MV5-6	369982	4908507	2	0	0	69.6	69.6	1	1252.5	3.25	125	72.96	0	4.48	0	0	0.51	0	0	0	0	0	0	-8.35	-8.35
Inverter	MV5-6	369982	4908507	2	0	0	78.6	78.6	1	1252.5	3.25	250	72.96	0	3.51	0	0	1.31	0	0	0	0	0	0	0.82	0.82
Inverter	MV5-6	369982	4908507	2	0	0	82.1	82.1	1	1252.5	3.25	500	72.96	0	-0.1	0	0	2.41	0	0	0	0	0	0	6.83	6.83
Inverter	MV5-6	369982	4908507	2	0	0	75.7	75.7	1	1252.5	3.25	1000	72.96	0	-1.56	0	0	4.58	0	0	0	0	0	0	-0.27	-0.27
Inverter	MV5-6	369982	4908507	2	0	0	73.6	73.6	1	1252.5	3.25	2000	72.96	0	-1.66	0	0	12.1	0	0	0	0	0	0	-9.8	-9.8
Inverter	MV5-6	369982	4908507	2	0	0	87	87	1	1252.5	3.25	4000	72.96	0	-1.66	0	0	41.05	0	0	0	0	0	0	-25.34	-25.34
Inverter	MV1-12	365038	4905386	2	0	0	59.8	59.8	1	4619.4	3.25	32	84.29	0	-5.87	0	0	0.15	0	0	0	0	0	0	-18.77	-18.77
Inverter	MV1-12	365038	4905386	2	0	0	65.9	65.9	1	4619.4	3.25	63	84.29	0	-5.87	0	0	0.56	0	0	0	0	0	0	-13.08	-13.08
Inverter	MV1-12	365038	4905386	2	0	0	73.6	73.6	1	4619.4	3.25	125	84.29	0	4.42	0	0	1.9	0	0	0	0	0	0	-17.01	-17.01
Inverter	MV1-12	365038	4905386	2	0	0	82.6	82.6	1	4619.4	3.25	250	84.29	0	3.41	0	0	4.82	0	0	0	0	0	0	-9.92	-9.92
Inverter	MV1-12	365038	4905386	2	0	0	88.1	88.1	1	4619.4	3.25	500	84.29	0	-0.2	0	0	8.91	0	0	0	0	0	0	-4.89	-4.89
Inverter	MV1-12	365038	4905386	2	0	0	85.7	85.7	1	4619.4	3.25	1000	84.29	0	-1.67	0	0	16.9	0	0	0	0	0	0	-13.82	-13.82
Inverter	MV1-12	365038	4905386	2	0	0	90.6	90.6	1	4619.4	3.25	2000	84.29	0	-1.76	0	0	44.64	0	0	0	0	0	0	-36.57	-36.57
Inverter	MV1-12	365038	4905386	2	0	0	99	99	1	4619.4	3.25	4000	84.29	0	-1.76	0	0	151.38	0	0	0	0	0	0	-134.9	-134.9
Inverter	MV1-12	365038	4905386	2	0	0	86.3	86.3	1	4619.4	3.25	8000	84.29	0	-1.76	0	0	539.93	0	0	0	0	0	0	-536.2	-536.2
Inverter	MV1-15	365315	4904994	2	0	0	59.8	59.8	1	4642.4	3.25	32	84.33	0	-5.87	0	0	0.15	0	0	0	0	0	0	-18.81	-18.81
Inverter	MV1-15	365315	4904994	2	0	0	65.9	65.9	1	4642.4	3.25	63	84.33	0	-5.87	0	0	0.57	0	0	0	0	0	0	-13.13	-13.13
Inverter	MV1-15	365315	4904994	2	0	0	73.6	73.6	1	4642.4	3.25	125	84.33	0	4.42	0	0	1.91	0	0	0	0	0	0	-17.06	-17.06
Inverter	MV1-15	365315	4904994	2	0	0	82.6	82.6	1	4642.4	3.25	250	84.33	0	3.41	0	0	4.84	0	0	0	0	0	0	-9.99	-9.99
Inverter	MV1-15	365315	4904994	2	0	0	88.1	88.1	1	4642.4	3.25	500	84.33	0	-0.2	0	0	8.95	0	0	0	0	0	0	-4.98	-4.98
Inverter	MV1-15	365315	4904994	2	0	0	85.7	85.7	1	4642.4	3.25	1000	84.33	0	-1.67	0	0	16.98	0	0	0	0	0	0	-13.95	-13.95
Inverter	MV1-15	365315	4904994	2	0	0	90.6	90.6	1	4642.4	3.25	2000	84.33	0	-1.76	0	0	44.86	0	0	0	0	0	0	-36.84	-36.84
Inverter	MV1-15	365315	4904994	2	0	0	99	99	1	4642.4	3.25	4000	84.33	0	-1.76	0	0	152.13	0	0	0	0	0	0	-135.7	-135.7
Inverter	MV1-15	365315	4904994	2	0	0	86.3	86.3	1	4642.4	3.25	8000	84.33	0	-1.76	0	0	542.61	0	0	0	0	0	0	-538.9	-538.9
Inverter	MV1-5	364671	4905892	2	0	0	59.8	59.8	1	4671.6	3.25	32	84.39	0	-5.87	0	0	0.15	0	0	0	0	0	0	-18.86	-18.86
Inverter	MV1-5	364671	4905892	2	0	0	65.9	65.9	1	4671.6	3.25	63	84.39	0	-5.87	0	0	0.57	0	0	0	0	0	0	-13.18	-13.18
Inverter	MV1-5	364671	4905892	2	0	0	73.6	73.6	1	4671.6	3.25	125	84.39	0	4.42	0	0	1.92	0	0	0	0	0	0	-17.13	-17.13
Inverter	MV1-5	364671	4905892	2	0	0	82.6	82.6	1	4671.6	3.25	250	84.39	0	3.41	0	0	4.87	0	0	0	0	0	0	-10.07	-10.07
Inverter	MV1-5	364671	4905892	2	0	0	88.1	88.1	1	4671.6	3.25	500	84.39	0	-0.21	0	0	9.01	0	0	0	0	0	0	-5.09	-5.09
Inverter	MV1-5	364671	4905892	2	0	0	85.7	85.7	1	4671.6	3.25	1000	84.39	0	-1.67	0	0	17.09	0	0	0	0	0	0	-14.11	-14.11
Inverter	MV1-5	364671	4905892	2	0	0	90.6	90.6	1	4671.6	3.25	2000	84.39	0	-1.76	0	0	45.15	0	0	0	0	0	0	-37.17	-37.17
Inverter	MV1-5	364671	4905892	2	0	0	99	99	1	4671.6	3.25	4000	84.39	0	-1.76	0	0	153.09	0	0	0	0	0	0	-136.7	-136.7
Inverter	MV1-5	364671	4905892	2	0	0	86.3	86.3	1	4671.6	3.25	8000	84.39	0	-1.76	0	0	546.02	0	0	0	0	0	0	-542.4	-542.4
Inverter	MV1-8	364788	4905647	2	0	0	59.8	59.8	1	4688	3.25	32	84.42	0	-5.88	0	0	0.15	0	0	0	0	0	0	-18.89	-18.89
Inverter	MV1-8	364788	4905647	2	0	0	65.9	65.9	1	4688	3.25	63	84.42	0	-5.88	0	0	0.57	0	0	0	0	0	0	-13.22	-13.22
Inverter	MV1-8	364788	4905647	2	0	0	73.6	73.6	1	4688	3.25	125	84.42	0	4.42	0	0	1.93	0	0	0	0	0	0	-17.16	-17.16
Inverter	MV1-8	364788	4905647	2	0	0	82.6	82.6	1	4688	3.25	250	84.42	0	3.41	0	0	4.89	0	0	0	0	0	0	-10.12	-10.12
Inverter	MV1-8	364788	4905647	2	0	0	88.1	88.1	1	4688	3.25	500	84.42	0	-0.21	0	0	9.04	0	0	0	0	0	0	-5.15	-5.15
Inverter	MV1-8	364788	4905647	2	0	0	85.7	85.7	1	4688	3.25	1000	84.42	0	-1.67	0	0	17.15	0	0	0	0	0	0	-14.2	-14.2
Inverter	MV1-8	364788	4905647	2	0	0	90.6	90.6	1	4688	3.25	2000	84.42	0	-1.76	0	0	45.3	0	0	0	0	0	0	-37.36	-37.36
Inverter	MV1-8	364788	4905647	2	0	0	99	99	1	4688	3.25	4000	84.42	0	-1.76	0	0	153.63	0	0	0	0	0	0	-137.3	-137.3
Inverter	MV1-8	364788	4905647	2	0	0	86.3	86.3	1	4688	3.25	8000	84.42	0	-1.76	0	0	547.94	0	0	0	0	0	0	-544.3	-544.3
Inverter	MV1-6	364477	4905835	2	0	0	59.8	59.8	1	4870.2	3.25	32	84.75	0	-5.88	0	0	0.16	0	0	0	0	0	0	-19.23	-19.23
Inverter	MV1-6	364477	4905835	2	0	0	65.9	65.9	1	4870.2	3.25	63	84.75	0	-5.88	0	0	0.59	0	0	0	0	0	0	-13.56	-13.56
Inverter	MV1-6	364477	4905835	2	0	0	73.6	73.6	1	4870.2	3.25	125	84.75	0	4.42	0	0	2	0	0	0	0	0	0	-17.57	-17.57
Inverter	MV1-6	364477	4905835	2	0	0	82.6	82.6	1	4870.2	3.25	250	84.75	0	3.41	0	0	5.08	0	0	0	0	0	0	-10.64	-10.64
Inverter	MV1-6	364477	4905835	2	0	0	88.1	88.1	1	4870.2	3.25	500	84.75	0	-0.21	0	0	9.39	0	0	0	0	0	0	-5.83	-5.83
Inverter	MV1-6	364477	4905835	2	0	0	85.7	85.7	1	4870.2	3.25	1000	84.75	0	-1.67	0	0	17.81	0	0	0	0	0	0	-15.2	-15.2
Inverter	MV1-6	364477	4905835	2	0	0	90.6	90.6	1	4870.2	3.25	2000	84.75	0	-1.76	0	0	47.07	0	0	0	0	0	0	-39.45	-39.45
Inverter	MV1-6	364477	4905835	2	0	0	99	99	1	4870.2	3.25	4000	84.75	0	-1.76	0	0	159.6	0	0	0	0	0	0	-143.6	-143.6
Inverter	MV1-6	364477	4905835	2	0	0	86.3	86.3	1	4870.2	3.25	8000	84.75	0	-1.76	0	0	569.24	0	0	0	0	0	0	-565.9	-565.9
Inverter	MV1-9	364561	4905646	2	0	0	59.8	59.8	1	4885.1	3.25	32	84.78	0	-5.88	0	0	0.16	0	0	0	0	0	0	-19.25	-19.25
Inverter	MV1-9	364561	4905646	2	0	0	65.9	65.9	1	4885.1	3.25	63	84.78	0	-5.88	0	0	0.59	0	0	0	0	0	0	-13.59	-13.59
Inverter	MV1-9	364561	4905646	2	0	0	73.6	73.6	1	4885.1	3.25	125	84.78	0	4.42	0	0	2.01	0	0	0	0	0	0	-17.6	-17.6
Inverter	MV1-9	364561	4905646	2	0	0	82.6	82.6	1	4885.1	3.25	250	84.78	0	3.41	0	0	5.1	0	0	0	0	0	0	-10.68	-10.68
Inverter	MV1-9	364561	4905646	2	0	0	88.1	88.1	1	4885.1	3.25	500	84.78	0	-0.21	0	0	9.42	0	0	0	0	0	0	-5.89	-5.89
Inverter	MV1-9	364561	4905646	2	0	0	85.7	85.7	1	4885.1	3.25	1000	84.78	0	-1.67	0	0	17.87	0	0	0	0	0	0	-15.28	-15.28
Inverter	MV1-9	364561	4905646	2	0	0	90.6	90.6	1	4885.1	3.25	2000	84.78	0	-1.76	0	0	47.21	0	0	0	0	0	0	-39.62	-39.62
Inverter	MV1-9	364561	4905646	2	0	0	99	99	1	4885.1	3.25	4000	84.78	0	-1.76	0	0	160.09	0	0	0	0	0	0	-144.1	-144.1
Inverter	MV1-9	364561	4905646	2	0	0	86.3	86.3	1	4885.1	3.25	8000	84.78	0	-1.76	0	0	570.98	0	0	0	0	0	0	-567.7	-567.7
Inverter	MV1-11	364655	4905414	2	0	0	59.8	59.8	1	4923	3.25	32	84.84	0	-5.88	0	0	0.16	0	0	0	0	0	0	-19.32	-19.32
Inverter	MV1-11	364655	4905414	2	0	0	65.9	65.9	1	4923	3.25	63	84.84	0	-5.88	0	0	0.6	0	0	0	0	0	0	-13.66	-13.66
Inverter	MV1-11	364655	4905414	2	0	0	73.6	73.6	1	4923	3.25	125	84.84	0	4.42	0	0	2.02	0	0	0	0	0	0	-17.68	-17.68
Inverter	MV1-11	364655	4905414	2	0	0	82.6	82.6	1	4923	3.25	250	84.84	0	3.41	0	0	5.14	0	0	0	0	0	0	-10.79	-10.79
Inverter	MV1-11	364655	4905414	2	0	0	88.1	88.1	1	4923	3.25	500	84.84	0	-0.21	0	0	9.49	0	0	0	0	0	0	-6.03	-6.03
Inverter	MV1-11	364655	4905414	2	0	0	85.7	85.7	1	4923	3.25	1000	84.84	0	-1.67	0	0	18.01	0	0	0	0	0	0	-15.48	-15.48
Inverter	MV1-11	364655	4905414	2	0	0	90.6	90.6	1	4923	3.25	2000	84.84	0	-1.76	0	0	47.58	0	0	0	0	0	0	-40.06	-40.06

Inverter	MV1-11	364655	4905414	2	0	0	99	99	1	4923	3.25	4000	84.84	0	-1.76	0	0	161.33	0	0	0	0	0	0	-145.4	-145.4
Inverter	MV1-11	364655	4905414	2	0	0	86.3	86.3	1	4923	3.25	8000	84.84	0	-1.76	0	0	575.41	0	0	0	0	0	0	-572.2	-572.2
SubstationTransformer	W_ST	369711.2	4906112	2.5	0	0	49.2	49.2	1	2120.6	3.5	32	77.53	0	-5.7	0	0	0.07	0	0	0	0	0	0	-22.69	-22.69
SubstationTransformer	W_ST	369711.2	4906112	2.5	0	0	68.4	68.4	1	2120.6	3.5	63	77.53	0	-5.7	0	0	0.26	0	0	0	0	0	0	-3.68	-3.68
SubstationTransformer	W_ST	369711.2	4906112	2.5	0	0	80.5	80.5	1	2120.6	3.5	125	77.53	0	4.24	0	0	0.87	0	0	0	0	0	0	-2.14	-2.14
SubstationTransformer	W_ST	369711.2	4906112	2.5	0	0	83	83	1	2120.6	3.5	250	77.53	0	2.69	0	0	2.21	0	0	0	0	0	0	0.57	0.57
SubstationTransformer	W_ST	369711.2	4906112	2.5	0	0	88.4	88.4	1	2120.6	3.5	500	77.53	0	-1.16	0	0	4.09	0	0	0	0	0	0	7.94	7.94
SubstationTransformer	W_ST	369711.2	4906112	2.5	0	0	85.6	85.6	1	2120.6	3.5	1000	77.53	0	-1.7	0	0	7.76	0	0	0	0	0	0	2.01	2.01
SubstationTransformer	W_ST	369711.2	4906112	2.5	0	0	81.8	81.8	1	2120.6	3.5	2000	77.53	0	-1.71	0	0	20.49	0	0	0	0	0	0	-14.51	-14.51
SubstationTransformer	W_ST	369711.2	4906112	2.5	0	0	76.6	76.6	1	2120.6	3.5	4000	77.53	0	-1.71	0	0	69.49	0	0	0	0	0	0	-68.71	-68.71
SubstationTransformer	W_ST	369711.2	4906112	2.5	0	0	67.5	67.5	1	2120.6	3.5	8000	77.53	0	-1.71	0	0	247.86	0	0	0	0	0	0	-256.2	-256.2
Westbrook Inverter Enclosure 5	W_INV5	369719	4906574	2	0	0	69.6	69.6	1	1716.6	3.25	125	75.69	0	4.48	0	0	0.71	0	0	0	0	0	0	-11.28	-11.28
Westbrook Inverter Enclosure 5	W_INV5	369719	4906574	2	0	0	78.6	78.6	1	1716.6	3.25	250	75.69	0	3.48	0	0	1.79	0	0	0	0	0	0	-2.36	-2.36
Westbrook Inverter Enclosure 5	W_INV5	369719	4906574	2	0	0	82.1	82.1	1	1716.6	3.25	500	75.69	0	-0.14	0	0	3.31	0	0	0	0	0	0	3.24	3.24
Westbrook Inverter Enclosure 5	W_INV5	369719	4906574	2	0	0	75.7	75.7	1	1716.6	3.25	1000	75.69	0	-1.6	0	0	6.28	0	0	0	0	0	0	-4.67	-4.67
Westbrook Inverter Enclosure 5	W_INV5	369719	4906574	2	0	0	73.6	73.6	1	1716.6	3.25	2000	75.69	0	-1.7	0	0	16.59	0	0	0	0	0	0	-16.98	-16.98
Westbrook Inverter Enclosure 5	W_INV5	369719	4906574	2	0	0	87	87	1	1716.6	3.25	4000	75.69	0	-1.7	0	0	56.25	0	0	0	0	0	0	-43.25	-43.25
Westbrook Inverter Enclosure 2	W_INV2	369374	4906388	2	0	0	69.6	69.6	1	1739.3	3.25	125	75.81	0	4.48	0	0	0.71	0	0	0	0	0	0	-11.4	-11.4
Westbrook Inverter Enclosure 2	W_INV2	369374	4906388	2	0	0	78.6	78.6	1	1739.3	3.25	250	75.81	0	3.47	0	0	1.81	0	0	0	0	0	0	-2.5	-2.5
Westbrook Inverter Enclosure 2	W_INV2	369374	4906388	2	0	0	82.1	82.1	1	1739.3	3.25	500	75.81	0	-0.14	0	0	3.35	0	0	0	0	0	0	3.08	3.08
Westbrook Inverter Enclosure 2	W_INV2	369374	4906388	2	0	0	75.7	75.7	1	1739.3	3.25	1000	75.81	0	-1.6	0	0	6.36	0	0	0	0	0	0	-4.87	-4.87
Westbrook Inverter Enclosure 2	W_INV2	369374	4906388	2	0	0	73.6	73.6	1	1739.3	3.25	2000	75.81	0	-1.7	0	0	16.81	0	0	0	0	0	0	-17.32	-17.32
Westbrook Inverter Enclosure 2	W_INV2	369374	4906388	2	0	0	87	87	1	1739.3	3.25	4000	75.81	0	-1.7	0	0	57	0	0	0	0	0	0	-44.1	-44.1
Inverter	MV1-7	364925	4905782	2	0	0	56.8	56.8	1	4501.5	3.25	32	84.07	0	-5.87	0	0	0.14	0	0	0	0	0	0	-21.54	-21.54
Inverter	MV1-7	364925	4905782	2	0	0	62.9	62.9	1	4501.5	3.25	63	84.07	0	-5.87	0	0	0.55	0	0	0	0	0	0	-15.85	-15.85
Inverter	MV1-7	364925	4905782	2	0	0	70.6	70.6	1	4501.5	3.25	125	84.07	0	4.42	0	0	1.85	0	0	0	0	0	0	-19.74	-19.74
Inverter	MV1-7	364925	4905782	2	0	0	79.6	79.6	1	4501.5	3.25	250	84.07	0	3.41	0	0	4.7	0	0	0	0	0	0	-12.58	-12.58
Inverter	MV1-7	364925	4905782	2	0	0	85.1	85.1	1	4501.5	3.25	500	84.07	0	-0.2	0	0	8.68	0	0	0	0	0	0	-7.44	-7.44
Inverter	MV1-7	364925	4905782	2	0	0	82.7	82.7	1	4501.5	3.25	1000	84.07	0	-1.67	0	0	16.47	0	0	0	0	0	0	-16.17	-16.17
Inverter	MV1-7	364925	4905782	2	0	0	87.6	87.6	1	4501.5	3.25	2000	84.07	0	-1.76	0	0	43.5	0	0	0	0	0	0	-38.21	-38.21
Inverter	MV1-7	364925	4905782	2	0	0	96	96	1	4501.5	3.25	4000	84.07	0	-1.76	0	0	147.52	0	0	0	0	0	0	-133.8	-133.8
Inverter	MV1-7	364925	4905782	2	0	0	83.3	83.3	1	4501.5	3.25	8000	84.07	0	-1.76	0	0	526.15	0	0	0	0	0	0	-525.2	-525.2
Inverter	MV1-10	365004	4905564	2	0	0	56.8	56.8	1	4548.1	3.25	32	84.16	0	-5.87	0	0	0.15	0	0	0	0	0	0	-21.63	-21.63
Inverter	MV1-10	365004	4905564	2	0	0	62.9	62.9	1	4548.1	3.25	63	84.16	0	-5.87	0	0	0.55	0	0	0	0	0	0	-15.94	-15.94
Inverter	MV1-10	365004	4905564	2	0	0	70.6	70.6	1	4548.1	3.25	125	84.16	0	4.42	0	0	1.87	0	0	0	0	0	0	-19.84	-19.84
Inverter	MV1-10	365004	4905564	2	0	0	79.6	79.6	1	4548.1	3.25	250	84.16	0	3.41	0	0	4.75	0	0	0	0	0	0	-12.71	-12.71
Inverter	MV1-10	365004	4905564	2	0	0	85.1	85.1	1	4548.1	3.25	500	84.16	0	-0.2	0	0	8.77	0	0	0	0	0	0	-7.62	-7.62
Inverter	MV1-10	365004	4905564	2	0	0	82.7	82.7	1	4548.1	3.25	1000	84.16	0	-1.67	0	0	16.64	0	0	0	0	0	0	-16.43	-16.43
Inverter	MV1-10	365004	4905564	2	0	0	87.6	87.6	1	4548.1	3.25	2000	84.16	0	-1.76	0	0	43.95	0	0	0	0	0	0	-38.75	-38.75
Inverter	MV1-10	365004	4905564	2	0	0	96	96	1	4548.1	3.25	4000	84.16	0	-1.76	0	0	149.04	0	0	0	0	0	0	-135.4	-135.4
Inverter	MV1-10	365004	4905564	2	0	0	83.3	83.3	1	4548.1	3.25	8000	84.16	0	-1.76	0	0	531.59	0	0	0	0	0	0	-530.7	-530.7
Westbrook Inverter Enclosure 6	W_INV6	369875	4906578	2	0	0	69.6	69.6	1	1799.9	3.25	125	76.1	0	4.48	0	0	0.74	0	0	0	0	0	0	-11.72	-11.72
Westbrook Inverter Enclosure 6	W_INV6	369875	4906578	2	0	0	78.6	78.6	1	1799.9	3.25	250	76.1	0	3.47	0	0	1.88	0	0	0	0	0	0	-2.85	-2.85
Westbrook Inverter Enclosure 6	W_INV6	369875	4906578	2	0	0	82.1	82.1	1	1799.9	3.25	500	76.1	0	-0.15	0	0	3.47	0	0	0	0	0	0	2.67	2.67
Westbrook Inverter Enclosure 6	W_INV6	369875	4906578	2	0	0	75.7	75.7	1	1799.9	3.25	1000	76.1	0	-1.61	0	0	6.58	0	0	0	0	0	0	-5.38	-5.38
Westbrook Inverter Enclosure 6	W_INV6	369875	4906578	2	0	0	73.6	73.6	1	1799.9	3.25	2000	76.1	0	-1.7	0	0	17.39	0	0	0	0	0	0	-18.2	-18.2
Westbrook Inverter Enclosure 6	W_INV6	369875	4906578	2	0	0	87	87	1	1799.9	3.25	4000	76.1	0	-1.7	0	0	58.98	0	0	0	0	0	0	-46.38	-46.38
Inverter	MV1-14	365163	4905049	2	0	0	56.8	56.8	1	4723.3	3.25	32	84.48	0	-5.88	0	0	0.15	0	0	0	0	0	0	-21.96	-21.96
Inverter	MV1-14	365163	4905049	2	0	0	62.9	62.9	1	4723.3	3.25	63	84.48	0	-5.88	0	0	0.57	0	0	0	0	0	0	-16.28	-16.28
Inverter	MV1-14	365163	4905049	2	0	0	70.6	70.6	1	4723.3	3.25	125	84.48	0	4.42	0	0	1.94	0	0	0	0	0	0	-20.24	-20.24
Inverter	MV1-14	365163	4905049	2	0	0	79.6	79.6	1	4723.3	3.25	250	84.48	0	3.41	0	0	4.93	0	0	0	0	0	0	-13.22	-13.22
Inverter	MV1-14	365163	4905049	2	0	0	85.1	85.1	1	4723.3	3.25	500	84.48	0	-0.21	0	0	9.11	0	0	0	0	0	0	-8.29	-8.29
Inverter	MV1-14	365163	4905049	2	0	0	82.7	82.7	1	4723.3	3.25	1000	84.48	0	-1.67	0	0	17.28	0	0	0	0	0	0	-17.39	-17.39
Inverter	MV1-14	365163	4905049	2	0	0	87.6	87.6	1	4723.3	3.25	2000	84.48	0	-1.76	0	0	45.65	0	0	0	0	0	0	-40.77	-40.77
Inverter	MV1-14	365163	4905049	2	0	0	96	96	1	4723.3	3.25	4000	84.48	0	-1.76	0	0	154.78	0	0	0	0	0	0	-141.5	-141.5
Inverter	MV1-14	365163	4905049	2	0	0	83.3	83.3	1	4723.3	3.25	8000	84.48	0	-1.76	0	0	552.06	0	0	0	0	0	0	-551.5	-551.5
Westbrook Inverter Enclosure 7	W_INV7	369780	4906417	2	0	0	69.6	69.6	1	1882.6	3.25	125	76.5	0	4.47	0	0	0.77	0	0	0	0	0	0	-12.14	-12.14
Westbrook Inverter Enclosure 7	W_INV7	369780	4906417	2	0	0	78.6	78.6	1	1882.6	3.25	250	76.5	0	3.47	0	0	1.96	0	0	0	0	0	0	-3.33	-3.33
Westbrook Inverter Enclosure 7	W_INV7	369780	4906417	2	0	0	82.1	82.1	1	1882.6	3.25	500	76.5	0	-0.15	0	0	3.63	0	0	0	0	0	0	2.13	2.13
Westbrook Inverter Enclosure 7	W_INV7	369780	4906417	2	0	0	75.7	75.7	1	1882.6	3.25	1000	76.5	0	-1.61	0	0	6.89	0	0	0	0	0	0	-6.07	-6.07
Westbrook Inverter Enclosure 7	W_INV7	369780	4906417	2	0	0	73.6	73.6	1	1882.6	3.25	2000	76.5	0	-1.71	0	0	18.19	0	0	0	0	0	0	-19.38	-19.38
Westbrook Inverter Enclosure 7	W_INV7	369780	4906417	2	0	0	87	87	1	1882.6	3.25	4000	76.5	0	-1.71	0	0	61.69	0	0	0	0	0	0	-49.48	-49.48
Inverter	MV1-13	364731	4905241	2	0	0	56.8	56.8	1	4954.4	3.25	32	84.9	0	-5.88	0	0	0.16	0	0	0	0	0	0	-22.38	-22.38
Inverter	MV1-13	364731	4905241	2	0	0	62.9	62.9	1	4954.4	3.25	63	84.9	0	-5.88	0	0	0.6	0	0	0	0	0	0	-16.72	-16.72
Inverter	MV1-13	364731	4905241	2	0	0	70.6	70.6	1	4954.4	3.25	125	84.9	0	4.42	0	0	2.04	0	0	0	0	0	0	-20.75	-20.75
Inverter	MV1-13	364731	4905241	2	0	0	79.6	79.6	1	4954.4	3.25	250	84.9	0	3.41	0	0	5.17	0	0	0	0	0	0	-13.88	-13.88
Inverter	MV1-13	364731	4905241	2	0	0	85.1	85.1	1	4954.4	3.25	500	84.9	0	-0.21	0	0	9.55	0	0	0	0	0	0	-9.14	-9.14
Inverter	MV1-13	364731	4905241	2	0	0	82.7	82.7	1	4954.4	3.25	1000	84.9	0	-1.67	0	0	18.12	0	0	0	0	0	0	-18.65	-18.65
Inverter	MV1-13	364731	4905241	2	0	0	87.6	87.6	1	4954.4	3.25	2000	84.9	0	-1.76	0	0	47.88	0	0	0	0	0	0	-43.41	-43.41

Inverter	MV1-13	364731	4905241	2	0	0	96	96	1	4954.4	3.25	4000	84.9	0	-1.76	0	0	162.36	0	0	0	0	0	0	-149.5	-149.5
Inverter	MV1-13	364731	4905241	2	0	0	83.3	83.3	1	4954.4	3.25	8000	84.9	0	-1.76	0	0	579.08	0	0	0	0	0	0	-578.9	-578.9
Westbrook Inverter Enclosure 3	W_INV3	369508	4906164	2	0	0	69.6	69.6	1	1995	3.25	125	77	0	4.47	0	0	0.82	0	0	0	0	0	0	-12.69	-12.69
Westbrook Inverter Enclosure 3	W_INV3	369508	4906164	2	0	0	78.6	78.6	1	1995	3.25	250	77	0	3.46	0	0	2.08	0	0	0	0	0	0	-3.94	-3.94
Westbrook Inverter Enclosure 3	W_INV3	369508	4906164	2	0	0	82.1	82.1	1	1995	3.25	500	77	0	-0.15	0	0	3.85	0	0	0	0	0	0	1.41	1.41
Westbrook Inverter Enclosure 3	W_INV3	369508	4906164	2	0	0	75.7	75.7	1	1995	3.25	1000	77	0	-1.62	0	0	7.3	0	0	0	0	0	0	-6.98	-6.98
Westbrook Inverter Enclosure 3	W_INV3	369508	4906164	2	0	0	73.6	73.6	1	1995	3.25	2000	77	0	-1.71	0	0	19.28	0	0	0	0	0	0	-20.97	-20.97
Westbrook Inverter Enclosure 3	W_INV3	369508	4906164	2	0	0	87	87	1	1995	3.25	4000	77	0	-1.71	0	0	65.38	0	0	0	0	0	0	-53.66	-53.66
Westbrook Inverter Enclosure 4	W_INV4	369673	4906164	2	0	0	69.6	69.6	1	2057.7	3.25	125	77.27	0	4.46	0	0	0.85	0	0	0	0	0	0	-12.98	-12.98
Westbrook Inverter Enclosure 4	W_INV4	369673	4906164	2	0	0	78.6	78.6	1	2057.7	3.25	250	77.27	0	3.46	0	0	2.15	0	0	0	0	0	0	-4.27	-4.27
Westbrook Inverter Enclosure 4	W_INV4	369673	4906164	2	0	0	82.1	82.1	1	2057.7	3.25	500	77.27	0	-0.16	0	0	3.97	0	0	0	0	0	0	1.02	1.02
Westbrook Inverter Enclosure 4	W_INV4	369673	4906164	2	0	0	75.7	75.7	1	2057.7	3.25	1000	77.27	0	-1.62	0	0	7.53	0	0	0	0	0	0	-7.47	-7.47
Westbrook Inverter Enclosure 4	W_INV4	369673	4906164	2	0	0	73.6	73.6	1	2057.7	3.25	2000	77.27	0	-1.71	0	0	19.89	0	0	0	0	0	0	-21.84	-21.84
Westbrook Inverter Enclosure 4	W_INV4	369673	4906164	2	0	0	87	87	1	2057.7	3.25	4000	77.27	0	-1.71	0	0	67.43	0	0	0	0	0	0	-55.98	-55.98
Westbrook Inverter Enclosure 1	W_INV1	369409	4906578	2	0	0	66.6	66.6	1	1573	3.25	125	74.93	0	4.49	0	0	0.65	0	0	0	0	0	0	-13.47	-13.47
Westbrook Inverter Enclosure 1	W_INV1	369409	4906578	2	0	0	75.6	75.6	1	1573	3.25	250	74.93	0	3.48	0	0	1.64	0	0	0	0	0	0	-4.46	-4.46
Westbrook Inverter Enclosure 1	W_INV1	369409	4906578	2	0	0	79.1	79.1	1	1573	3.25	500	74.93	0	-0.13	0	0	3.03	0	0	0	0	0	0	1.26	1.26
Westbrook Inverter Enclosure 1	W_INV1	369409	4906578	2	0	0	72.7	72.7	1	1573	3.25	1000	74.93	0	-1.59	0	0	5.75	0	0	0	0	0	0	-6.4	-6.4
Westbrook Inverter Enclosure 1	W_INV1	369409	4906578	2	0	0	70.6	70.6	1	1573	3.25	2000	74.93	0	-1.69	0	0	15.2	0	0	0	0	0	0	-17.85	-17.85
Westbrook Inverter Enclosure 1	W_INV1	369409	4906578	2	0	0	84	84	1	1573	3.25	4000	74.93	0	-1.69	0	0	51.55	0	0	0	0	0	0	-40.79	-40.79
Inverter	MV6-4	370250	4906966	2	0	0	66.6	66.6	1	1785.8	3.25	125	76.04	0	4.48	0	0	0.73	0	0	0	0	0	0	-14.65	-14.65
Inverter	MV6-4	370250	4906966	2	0	0	75.6	75.6	1	1785.8	3.25	250	76.04	0	3.47	0	0	1.86	0	0	0	0	0	0	-5.77	-5.77
Inverter	MV6-4	370250	4906966	2	0	0	79.1	79.1	1	1785.8	3.25	500	76.04	0	-0.14	0	0	3.44	0	0	0	0	0	0	-0.24	-0.24
Inverter	MV6-4	370250	4906966	2	0	0	72.7	72.7	1	1785.8	3.25	1000	76.04	0	-1.61	0	0	6.53	0	0	0	0	0	0	-8.26	-8.26
Inverter	MV6-4	370250	4906966	2	0	0	70.6	70.6	1	1785.8	3.25	2000	76.04	0	-1.7	0	0	17.26	0	0	0	0	0	0	-20.99	-20.99
Inverter	MV6-4	370250	4906966	2	0	0	84	84	1	1785.8	3.25	4000	76.04	0	-1.7	0	0	58.52	0	0	0	0	0	0	-48.86	-48.86
Inverter	MV2-2	365977	4906654	2	0	0	69.6	69.6	1	3162.4	3.25	125	81	0	4.44	0	0	1.3	0	0	0	0	0	0	-17.14	-17.14
Inverter	MV2-2	365977	4906654	2	0	0	78.6	78.6	1	3162.4	3.25	250	81	0	3.43	0	0	3.3	0	0	0	0	0	0	-9.13	-9.13
Inverter	MV2-2	365977	4906654	2	0	0	82.1	82.1	1	3162.4	3.25	500	81	0	-0.19	0	0	6.1	0	0	0	0	0	0	-4.81	-4.81
Inverter	MV2-2	365977	4906654	2	0	0	75.7	75.7	1	3162.4	3.25	1000	81	0	-1.65	0	0	11.57	0	0	0	0	0	0	-15.22	-15.22
Inverter	MV2-2	365977	4906654	2	0	0	73.6	73.6	1	3162.4	3.25	2000	81	0	-1.74	0	0	30.56	0	0	0	0	0	0	-36.22	-36.22
Inverter	MV2-2	365977	4906654	2	0	0	87	87	1	3162.4	3.25	4000	81	0	-1.74	0	0	103.63	0	0	0	0	0	0	-95.89	-95.89
Gardiner Substation	G_Sub	366586.3	4903350	2.5	0	0	48	48	1	5192.6	4.25	32	85.31	0	-5.88	4.78	0.39	0.17	0	0	0	0	0	0	-36.37	-36.37
Gardiner Substation	G_Sub	366586.3	4903350	2.5	0	0	67.2	67.2	1	5192.6	4.25	63	85.31	0	-5.88	4.78	0.39	0.63	0	0	0	0	0	0	-17.64	-17.64
Gardiner Substation	G_Sub	366586.3	4903350	2.5	0	0	79.3	79.3	1	5192.6	4.25	125	85.31	0	4.18	0.61	0.39	2.13	0	0	0	0	0	0	-12.94	-12.94
Gardiner Substation	G_Sub	366586.3	4903350	2.5	0	0	81.8	81.8	1	5192.6	4.25	250	85.31	0	2.64	2.18	0.39	5.42	0	0	0	0	0	0	-13.74	-13.74
Gardiner Substation	G_Sub	366586.3	4903350	2.5	0	0	87.2	87.2	1	5192.6	4.25	500	85.31	0	-1.21	4.86	0.39	10.01	0	0	0	0	0	0	-11.77	-11.77
Gardiner Substation	G_Sub	366586.3	4903350	2.5	0	0	84.4	84.4	1	5192.6	4.25	1000	85.31	0	-1.75	4.95	0.39	18.99	0	0	0	0	0	0	-23.1	-23.1
Gardiner Substation	G_Sub	366586.3	4903350	2.5	0	0	80.6	80.6	1	5192.6	4.25	2000	85.31	0	-1.76	5.12	0.39	50.18	0	0	0	0	0	0	-58.24	-58.24
Gardiner Substation	G_Sub	366586.3	4903350	2.5	0	0	75.4	75.4	1	5192.6	4.25	4000	85.31	0	-1.76	5.43	0.39	170.16	0	0	0	0	0	0	-183.7	-183.7
Gardiner Substation	G_Sub	366586.3	4903350	2.5	0	0	66.3	66.3	1	5192.6	4.25	8000	85.31	0	-1.76	6.01	0.39	606.92	0	0	0	0	0	0	-630.2	-630.2
Inverter	MV1-3	364440	4906039	2	0	0	69.6	69.6	1	4815.1	3.25	125	84.65	0	4.42	0	0	1.98	0	0	0	0	0	0	-21.45	-21.45
Inverter	MV1-3	364440	4906039	2	0	0	78.6	78.6	1	4815.1	3.25	250	84.65	0	3.41	0	0	5.02	0	0	0	0	0	0	-14.49	-14.49
Inverter	MV1-3	364440	4906039	2	0	0	82.1	82.1	1	4815.1	3.25	500	84.65	0	-0.21	0	0	9.28	0	0	0	0	0	0	-11.63	-11.63
Inverter	MV1-3	364440	4906039	2	0	0	75.7	75.7	1	4815.1	3.25	1000	84.65	0	-1.67	0	0	17.61	0	0	0	0	0	0	-24.9	-24.9
Inverter	MV1-3	364440	4906039	2	0	0	73.6	73.6	1	4815.1	3.25	2000	84.65	0	-1.76	0	0	46.53	0	0	0	0	0	0	-55.82	-55.82
Inverter	MV1-3	364440	4906039	2	0	0	87	87	1	4815.1	3.25	4000	84.65	0	-1.76	0	0	157.79	0	0	0	0	0	0	-153.7	-153.7
Westbrook Inverter Transformer	W_INVTR1	369403	4906578	2	0	0	66.2	66.2	1	1570.8	3.25	32	74.92	0	-5.63	0	0	0.05	0	0	0	0	0	0	-3.15	-3.15
Westbrook Inverter Transformer	W_INVTR1	369403	4906578	2	0	0	72.2	72.2	1	1570.8	3.25	63	74.92	0	-5.63	0	0	0.19	0	0	0	0	0	0	2.71	2.71
Westbrook Inverter Transformer	W_INVTR1	369403	4906578	2	0	0	74.2	74.2	1	1570.8	3.25	125	74.92	0	4.49	0	0	0.65	0	0	0	0	0	0	-5.86	-5.86
Westbrook Inverter Transformer	W_INVTR1	369403	4906578	2	0	0	69.2	69.2	1	1570.8	3.25	250	74.92	0	3.48	0	0	1.64	0	0	0	0	0	0	-10.85	-10.85
Westbrook Inverter Transformer	W_INVTR1	369403	4906578	2	0	0	69.2	69.2	1	1570.8	3.25	500	74.92	0	-0.13	0	0	3.03	0	0	0	0	0	0	-8.62	-8.62
Westbrook Inverter Transformer	W_INVTR1	369403	4906578	2	0	0	63.2	63.2	1	1570.8	3.25	1000	74.92	0	-1.59	0	0	5.75	0	0	0	0	0	0	-15.88	-15.88
Westbrook Inverter Transformer	W_INVTR1	369403	4906578	2	0	0	58.2	58.2	1	1570.8	3.25	2000	74.92	0	-1.69	0	0	15.18	0	0	0	0	0	0	-30.21	-30.21
Westbrook Inverter Transformer	W_INVTR1	369403	4906578	2	0	0	53.2	53.2	1	1570.8	3.25	4000	74.92	0	-1.69	0	0	51.48	0	0	0	0	0	0	-71.51	-71.51
Westbrook Inverter Transformer	W_INVTR1	369403	4906578	2	0	0	46.2	46.2	1	1570.8	3.25	8000	74.92	0	-1.69	0	0	183.6	0	0	0	0	0	0	-210.6	-210.6
Inverters	G_Inv2	366676.9	4903239	2	0	0	59.8	59.8	1	5255.2	3.25	63	85.41	0	-5.89	0	0	0.64	0	0	0	0	0	0	-20.36	-20.36
Inverters	G_Inv2	366676.9	4903239	2	0	0	73.9	73.9	1	5255.2	3.25	125	85.41	0	4.41	0	0	2.16	0	0	0	0	0	0	-18.08	-18.08
Inverters	G_Inv2	366676.9	4903239	2	0	0	86	86	1	5255.2	3.25	250	85.41	0	3.41	0	0	5.48	0	0	0	0	0	0	-8.3	-8.3
Inverters	G_Inv2	366676.9	4903239	2	0	0	80.6	80.6	1	5255.2	3.25	500	85.41	0	-0.21	0	0	10.13	0	0	0	0	0	0	-14.73	-14.73
Inverters	G_Inv2	366676.9	4903239	2	0	0	72.1	72.1	1	5255.2	3.25	1000	85.41	0	-1.67	0	0	19.22	0	0	0	0	0	0	-30.86	-30.86
Inverters	G_Inv2	366676.9	4903239	2	0	0	74.6	74.6	1	5255.2	3.25	2000	85.41	0	-1.77	0	0	50.79	0	0	0	0	0	0	-59.83	-59.83
Inverters	G_Inv1	366526.4	4903226	2	0	0	59.8	59.8	1	5330.4	4.22	63	85.54	0	-5.89	4.77	0.01	0.65	0	0	0	0	0	0	-25.26	-25.26
Inverters	G_Inv1	366526.4	4903226	2	0	0	73.9	73.9	1	5330.4	4.22	125	85.54	0	4.41	0.36	0.01	2.19	0	0	0	0	0	0	-18.6	-18.6
Inverters	G_Inv1	366526.4	4903226	2	0	0	86	86	1	5330.4	4.22	250	85.54	0	3.41	1.37	0.01	5.56	0	0	0	0	0	0	-9.87	-9.87
Inverters	G_Inv1	366526.4	4903226	2	0	0	80.6	80.6	1	5330.4	4.22	500	85.54	0	-0.21	4.77	0.01	10.28	0	0	0	0	0	0	-19.77	-19.77
Inverters	G_Inv1	366526.4	4903226	2	0	0	72.1	72.1	1	5330.4	4.22	1000	85.54	0	-1.67	4.77	0.01	19.5	0	0	0	0	0	0	-36.03	-36.03
Inverters	G_Inv1	366526.4	4903226	2	0	0	74.6	74.6	1	5330.4	4.22	2000	85.54	0	-1.77	4.77	0.01	51.51	0	0	0	0	0	0	-65.45	-65.45
Inverters	G_Inv4	366732.8	4903105	2	0	0	59.8	59.8	1	5355.9	3.25	63	85.58	0	-5.89	0	0	0.65	0	0	0	0	0	0	-20.54	-20.54

Inverters	G_Inv4	366732.8	4903105	2	0	0	73.9	73.9	1	5355.9	3.25	125	85.58	0	4.41	0	0	2.2	0	0	0	0	0	0	-18.29	-18.29
Inverters	G_Inv4	366732.8	4903105	2	0	0	86	86	1	5355.9	3.25	250	85.58	0	3.41	0	0	5.59	0	0	0	0	0	0	-8.57	-8.57
Inverters	G_Inv4	366732.8	4903105	2	0	0	80.6	80.6	1	5355.9	3.25	500	85.58	0	-0.21	0	0	10.33	0	0	0	0	0	0	-15.09	-15.09
Inverters	G_Inv4	366732.8	4903105	2	0	0	72.1	72.1	1	5355.9	3.25	1000	85.58	0	-1.67	0	0	19.59	0	0	0	0	0	0	-31.4	-31.4
Inverters	G_Inv4	366732.8	4903105	2	0	0	74.6	74.6	1	5355.9	3.25	2000	85.58	0	-1.77	0	0	51.76	0	0	0	0	0	0	-60.97	-60.97
Inverters	G_Inv3	366583.7	4903091	2	0	0	59.8	59.8	1	5428.1	3.25	63	85.69	0	-5.89	0	0	0.66	0	0	0	0	0	0	-20.66	-20.66
Inverters	G_Inv3	366583.7	4903091	2	0	0	73.9	73.9	1	5428.1	3.25	125	85.69	0	4.41	0	0	2.23	0	0	0	0	0	0	-18.44	-18.44
Inverters	G_Inv3	366583.7	4903091	2	0	0	86	86	1	5428.1	3.25	250	85.69	0	3.41	0	0	5.66	0	0	0	0	0	0	-8.76	-8.76
Inverters	G_Inv3	366583.7	4903091	2	0	0	80.6	80.6	1	5428.1	3.25	500	85.69	0	-0.21	0	0	10.46	0	0	0	0	0	0	-15.35	-15.35
Inverters	G_Inv3	366583.7	4903091	2	0	0	72.1	72.1	1	5428.1	3.25	1000	85.69	0	-1.67	0	0	19.85	0	0	0	0	0	0	-31.78	-31.78
Inverters	G_Inv3	366583.7	4903091	2	0	0	74.6	74.6	1	5428.1	3.25	2000	85.69	0	-1.77	0	0	52.46	0	0	0	0	0	0	-61.78	-61.78
Inverters	G_Inv6	366788.5	4902972	2	0	0	59.8	59.8	1	5457.6	3.25	63	85.74	0	-5.89	0	0	0.66	0	0	0	0	0	0	-20.71	-20.71
Inverters	G_Inv6	366788.5	4902972	2	0	0	73.9	73.9	1	5457.6	3.25	125	85.74	0	4.41	0	0	2.24	0	0	0	0	0	0	-18.49	-18.49
Inverters	G_Inv6	366788.5	4902972	2	0	0	86	86	1	5457.6	3.25	250	85.74	0	3.41	0	0	5.69	0	0	0	0	0	0	-8.84	-8.84
Inverters	G_Inv6	366788.5	4902972	2	0	0	80.6	80.6	1	5457.6	3.25	500	85.74	0	-0.21	0	0	10.52	0	0	0	0	0	0	-15.45	-15.45
Inverters	G_Inv6	366788.5	4902972	2	0	0	72.1	72.1	1	5457.6	3.25	1000	85.74	0	-1.67	0	0	19.96	0	0	0	0	0	0	-31.93	-31.93
Inverters	G_Inv6	366788.5	4902972	2	0	0	74.6	74.6	1	5457.6	3.25	2000	85.74	0	-1.77	0	0	52.74	0	0	0	0	0	0	-62.11	-62.11
Inverters	G_Inv5	366638.5	4902958	2	0	0	59.8	59.8	1	5528	3.25	63	85.85	0	-5.89	0	0	0.67	0	0	0	0	0	0	-20.83	-20.83
Inverters	G_Inv5	366638.5	4902958	2	0	0	73.9	73.9	1	5528	3.25	125	85.85	0	4.41	0	0	2.27	0	0	0	0	0	0	-18.63	-18.63
Inverters	G_Inv5	366638.5	4902958	2	0	0	86	86	1	5528	3.25	250	85.85	0	3.4	0	0	5.77	0	0	0	0	0	0	-9.02	-9.02
Inverters	G_Inv5	366638.5	4902958	2	0	0	80.6	80.6	1	5528	3.25	500	85.85	0	-0.21	0	0	10.66	0	0	0	0	0	0	-15.7	-15.7
Inverters	G_Inv5	366638.5	4902958	2	0	0	72.1	72.1	1	5528	3.25	1000	85.85	0	-1.67	0	0	20.22	0	0	0	0	0	0	-32.3	-32.3
Inverters	G_Inv5	366638.5	4902958	2	0	0	74.6	74.6	1	5528	3.25	2000	85.85	0	-1.77	0	0	53.42	0	0	0	0	0	0	-62.91	-62.91
Inverters	G_Inv8	366844.5	4902839	2	0	0	59.8	59.8	1	5561.6	3.25	63	85.9	0	-5.89	0	0	0.68	0	0	0	0	0	0	-20.89	-20.89
Inverters	G_Inv8	366844.5	4902839	2	0	0	73.9	73.9	1	5561.6	3.25	125	85.9	0	4.41	0	0	2.29	0	0	0	0	0	0	-18.7	-18.7
Inverters	G_Inv8	366844.5	4902839	2	0	0	86	86	1	5561.6	3.25	250	85.9	0	3.4	0	0	5.8	0	0	0	0	0	0	-9.11	-9.11
Inverters	G_Inv8	366844.5	4902839	2	0	0	80.6	80.6	1	5561.6	3.25	500	85.9	0	-0.21	0	0	10.72	0	0	0	0	0	0	-15.81	-15.81
Inverters	G_Inv8	366844.5	4902839	2	0	0	72.1	72.1	1	5561.6	3.25	1000	85.9	0	-1.67	0	0	20.34	0	0	0	0	0	0	-32.47	-32.47
Inverters	G_Inv8	366844.5	4902839	2	0	0	74.6	74.6	1	5561.6	3.25	2000	85.9	0	-1.77	0	0	53.75	0	0	0	0	0	0	-63.28	-63.28
Inverters	G_Inv7	366694.6	4902825	2	0	0	59.8	59.8	1	5629.4	3.25	63	86.01	0	-5.9	0	0	0.69	0	0	0	0	0	0	-21	-21
Inverters	G_Inv7	366694.6	4902825	2	0	0	73.9	73.9	1	5629.4	3.25	125	86.01	0	4.41	0	0	2.31	0	0	0	0	0	0	-18.83	-18.83
Inverters	G_Inv7	366694.6	4902825	2	0	0	86	86	1	5629.4	3.25	250	86.01	0	3.4	0	0	5.87	0	0	0	0	0	0	-9.29	-9.29
Inverters	G_Inv7	366694.6	4902825	2	0	0	80.6	80.6	1	5629.4	3.25	500	86.01	0	-0.21	0	0	10.85	0	0	0	0	0	0	-16.05	-16.05
Inverters	G_Inv7	366694.6	4902825	2	0	0	72.1	72.1	1	5629.4	3.25	1000	86.01	0	-1.67	0	0	20.59	0	0	0	0	0	0	-32.83	-32.83
Inverters	G_Inv7	366694.6	4902825	2	0	0	74.6	74.6	1	5629.4	3.25	2000	86.01	0	-1.77	0	0	54.4	0	0	0	0	0	0	-64.04	-64.04
Westbrook Inverter Transformer	W_INVTR5	369725	4906574	2	0	0	65.3	65.3	1	1719.8	3.25	32	75.71	0	-5.66	0	0	0.06	0	0	0	0	0	0	-4.8	-4.8
Westbrook Inverter Transformer	W_INVTR5	369725	4906574	2	0	0	71.3	71.3	1	1719.8	3.25	63	75.71	0	-5.66	0	0	0.21	0	0	0	0	0	0	1.04	1.04
Westbrook Inverter Transformer	W_INVTR5	369725	4906574	2	0	0	73.3	73.3	1	1719.8	3.25	125	75.71	0	4.48	0	0	0.71	0	0	0	0	0	0	-7.6	-7.6
Westbrook Inverter Transformer	W_INVTR5	369725	4906574	2	0	0	68.3	68.3	1	1719.8	3.25	250	75.71	0	3.48	0	0	1.79	0	0	0	0	0	0	-12.68	-12.68
Westbrook Inverter Transformer	W_INVTR5	369725	4906574	2	0	0	68.3	68.3	1	1719.8	3.25	500	75.71	0	-0.14	0	0	3.32	0	0	0	0	0	0	-10.58	-10.58
Westbrook Inverter Transformer	W_INVTR5	369725	4906574	2	0	0	62.3	62.3	1	1719.8	3.25	1000	75.71	0	-1.6	0	0	6.29	0	0	0	0	0	0	-18.1	-18.1
Westbrook Inverter Transformer	W_INVTR5	369725	4906574	2	0	0	57.3	57.3	1	1719.8	3.25	2000	75.71	0	-1.7	0	0	16.62	0	0	0	0	0	0	-33.33	-33.33
Westbrook Inverter Transformer	W_INVTR5	369725	4906574	2	0	0	52.3	52.3	1	1719.8	3.25	4000	75.71	0	-1.7	0	0	56.36	0	0	0	0	0	0	-78.07	-78.07
Westbrook Inverter Transformer	W_INVTR5	369725	4906574	2	0	0	45.3	45.3	1	1719.8	3.25	8000	75.71	0	-1.7	0	0	201.01	0	0	0	0	0	0	-229.7	-229.7
Inverters	G_Inv10	366900.7	4902705	2	0	0	59.8	59.8	1	5667.4	3.25	63	86.07	0	-5.9	0	0	0.69	0	0	0	0	0	0	-21.06	-21.06
Inverters	G_Inv10	366900.7	4902705	2	0	0	73.9	73.9	1	5667.4	3.25	125	86.07	0	4.41	0	0	2.33	0	0	0	0	0	0	-18.91	-18.91
Inverters	G_Inv10	366900.7	4902705	2	0	0	86	86	1	5667.4	3.25	250	86.07	0	3.4	0	0	5.91	0	0	0	0	0	0	-9.38	-9.38
Inverters	G_Inv10	366900.7	4902705	2	0	0	80.6	80.6	1	5667.4	3.25	500	86.07	0	-0.21	0	0	10.93	0	0	0	0	0	0	-16.18	-16.18
Inverters	G_Inv10	366900.7	4902705	2	0	0	72.1	72.1	1	5667.4	3.25	1000	86.07	0	-1.67	0	0	20.73	0	0	0	0	0	0	-33.02	-33.02
Inverters	G_Inv10	366900.7	4902705	2	0	0	74.6	74.6	1	5667.4	3.25	2000	86.07	0	-1.77	0	0	54.77	0	0	0	0	0	0	-64.47	-64.47
Westbrook Inverter Transformer	W_INVTR2	369368	4906388	2	0	0	65.3	65.3	1	1737.4	3.25	32	75.8	0	-5.66	0	0	0.06	0	0	0	0	0	0	-4.89	-4.89
Westbrook Inverter Transformer	W_INVTR2	369368	4906388	2	0	0	71.3	71.3	1	1737.4	3.25	63	75.8	0	-5.66	0	0	0.21	0	0	0	0	0	0	0.95	0.95
Westbrook Inverter Transformer	W_INVTR2	369368	4906388	2	0	0	73.3	73.3	1	1737.4	3.25	125	75.8	0	4.48	0	0	0.71	0	0	0	0	0	0	-7.69	-7.69
Westbrook Inverter Transformer	W_INVTR2	369368	4906388	2	0	0	68.3	68.3	1	1737.4	3.25	250	75.8	0	3.47	0	0	1.81	0	0	0	0	0	0	-12.78	-12.78
Westbrook Inverter Transformer	W_INVTR2	369368	4906388	2	0	0	68.3	68.3	1	1737.4	3.25	500	75.8	0	-0.14	0	0	3.35	0	0	0	0	0	0	-10.71	-10.71
Westbrook Inverter Transformer	W_INVTR2	369368	4906388	2	0	0	62.3	62.3	1	1737.4	3.25	1000	75.8	0	-1.6	0	0	6.35	0	0	0	0	0	0	-18.25	-18.25
Westbrook Inverter Transformer	W_INVTR2	369368	4906388	2	0	0	57.3	57.3	1	1737.4	3.25	2000	75.8	0	-1.7	0	0	16.79	0	0	0	0	0	0	-33.59	-33.59
Westbrook Inverter Transformer	W_INVTR2	369368	4906388	2	0	0	52.3	52.3	1	1737.4	3.25	4000	75.8	0	-1.7	0	0	56.93	0	0	0	0	0	0	-78.73	-78.73
Westbrook Inverter Transformer	W_INVTR2	369368	4906388	2	0	0	45.3	45.3	1	1737.4	3.25	8000	75.8	0	-1.7	0	0	203.07	0	0	0	0	0	0	-231.9	-231.9
Inverters	G_Inv9	366750.9	4902692	2	0	0	59.8	59.8	1	5732.1	3.25	63	86.17	0	-5.9	0	0	0.7	0	0	0	0	0	0	-21.17	-21.17
Inverters	G_Inv9	366750.9	4902692	2	0	0	73.9	73.9	1	5732.1	3.25	125	86.17	0	4.41	0	0	2.36	0	0	0	0	0	0	-19.03	-19.03
Inverters	G_Inv9	366750.9	4902692	2	0	0	86	86	1	5732.1	3.25	250	86.17	0	3.4	0	0	5.98	0	0	0	0	0	0	-9.55	-9.55
Inverters	G_Inv9	366750.9	4902692	2	0	0	80.6	80.6	1	5732.1	3.25	500	86.17	0	-0.21	0	0	11.05	0	0	0	0	0	0	-16.4	-16.4
Inverters	G_Inv9	366750.9	4902692	2	0	0	72.1	72.1	1	5732.1	3.25	1000	86.17	0	-1.67	0	0	20.97	0	0	0	0	0	0	-33.36	-33.36
Inverters	G_Inv9	366750.9	4902692	2	0	0	74.6	74.6	1	5732.1	3.25	2000	86.17	0	-1.77	0	0	55.39	0	0	0	0	0	0	-65.19	-65.19
Westbrook Inverter Transformer	W_INVTR6	369881	4906578	2	0	0	65.3	65.3	1	1803.4	3.25	32	76.12	0	-5.68	0	0	0.06	0	0	0	0	0	0	-5.2	-5.2
Westbrook Inverter Transformer	W_INVTR6	369881	4906578	2	0	0	71.3	71.3	1	1803.4	3.25	63	76.12	0	-5.68	0	0	0.22	0	0	0	0	0	0	0.63	0.63
Westbrook Inverter Transformer	W_INVTR6	369881	4906578	2	0	0	73.3	73.3	1	1803.4	3.25	125	76.12	0	4.48	0	0	0.74	0	0	0	0	0	0	-8.04	-8.04
Westbrook Inverter Transformer	W_INVTR6	369881	4906578	2	0	0	68.3	68.3	1	1803.4	3.25	250	76.12	0	3.47	0	0	1.88	0	0	0	0	0	0	-13.17	-13.17

Westbrook Inverter Transformer	W_INVTR6	369881	4906578	2	0	0	68.3	68.3	1	1803.4	3.25	500	76.12	0	-0.15	0	0	3.48	0	0	0	0	0	0	-11.15	-11.15
Westbrook Inverter Transformer	W_INVTR6	369881	4906578	2	0	0	62.3	62.3	1	1803.4	3.25	1000	76.12	0	-1.61	0	0	6.6	0	0	0	0	0	0	-18.81	-18.81
Westbrook Inverter Transformer	W_INVTR6	369881	4906578	2	0	0	57.3	57.3	1	1803.4	3.25	2000	76.12	0	-1.7	0	0	17.43	0	0	0	0	0	0	-34.55	-34.55
Westbrook Inverter Transformer	W_INVTR6	369881	4906578	2	0	0	52.3	52.3	1	1803.4	3.25	4000	76.12	0	-1.7	0	0	59.1	0	0	0	0	0	0	-81.22	-81.22
Westbrook Inverter Transformer	W_INVTR6	369881	4906578	2	0	0	45.3	45.3	1	1803.4	3.25	8000	76.12	0	-1.7	0	0	210.79	0	0	0	0	0	0	-239.9	-239.9
Westbrook Inverter Transformer	W_INVTR7	369786	4906417	2	0	0	65.3	65.3	1	1885.6	3.25	32	76.51	0	-5.69	0	0	0.06	0	0	0	0	0	0	-5.58	-5.58
Westbrook Inverter Transformer	W_INVTR7	369786	4906417	2	0	0	71.3	71.3	1	1885.6	3.25	63	76.51	0	-5.69	0	0	0.23	0	0	0	0	0	0	0.25	0.25
Westbrook Inverter Transformer	W_INVTR7	369786	4906417	2	0	0	73.3	73.3	1	1885.6	3.25	125	76.51	0	4.47	0	0	0.77	0	0	0	0	0	0	-8.46	-8.46
Westbrook Inverter Transformer	W_INVTR7	369786	4906417	2	0	0	68.3	68.3	1	1885.6	3.25	250	76.51	0	3.47	0	0	1.97	0	0	0	0	0	0	-13.64	-13.64
Westbrook Inverter Transformer	W_INVTR7	369786	4906417	2	0	0	68.3	68.3	1	1885.6	3.25	500	76.51	0	-0.15	0	0	3.64	0	0	0	0	0	0	-11.69	-11.69
Westbrook Inverter Transformer	W_INVTR7	369786	4906417	2	0	0	62.3	62.3	1	1885.6	3.25	1000	76.51	0	-1.61	0	0	6.9	0	0	0	0	0	0	-19.49	-19.49
Westbrook Inverter Transformer	W_INVTR7	369786	4906417	2	0	0	57.3	57.3	1	1885.6	3.25	2000	76.51	0	-1.71	0	0	18.22	0	0	0	0	0	0	-35.72	-35.72
Westbrook Inverter Transformer	W_INVTR7	369786	4906417	2	0	0	52.3	52.3	1	1885.6	3.25	4000	76.51	0	-1.71	0	0	61.79	0	0	0	0	0	0	-84.29	-84.29
Westbrook Inverter Transformer	W_INVTR7	369786	4906417	2	0	0	45.3	45.3	1	1885.6	3.25	8000	76.51	0	-1.71	0	0	220.4	0	0	0	0	0	0	-249.9	-249.9
Westbrook Inverter Transformer	W_INVTR3	369514	4906164	2	0	0	65.3	65.3	1	1997.1	3.25	32	77.01	0	-5.71	0	0	0.06	0	0	0	0	0	0	-6.06	-6.06
Westbrook Inverter Transformer	W_INVTR3	369514	4906164	2	0	0	71.3	71.3	1	1997.1	3.25	63	77.01	0	-5.71	0	0	0.24	0	0	0	0	0	0	-0.24	-0.24
Westbrook Inverter Transformer	W_INVTR3	369514	4906164	2	0	0	73.3	73.3	1	1997.1	3.25	125	77.01	0	4.47	0	0	0.82	0	0	0	0	0	0	-9	-9
Westbrook Inverter Transformer	W_INVTR3	369514	4906164	2	0	0	68.3	68.3	1	1997.1	3.25	250	77.01	0	3.46	0	0	2.08	0	0	0	0	0	0	-14.25	-14.25
Westbrook Inverter Transformer	W_INVTR3	369514	4906164	2	0	0	68.3	68.3	1	1997.1	3.25	500	77.01	0	-0.15	0	0	3.85	0	0	0	0	0	0	-12.4	-12.4
Westbrook Inverter Transformer	W_INVTR3	369514	4906164	2	0	0	62.3	62.3	1	1997.1	3.25	1000	77.01	0	-1.62	0	0	7.3	0	0	0	0	0	0	-20.4	-20.4
Westbrook Inverter Transformer	W_INVTR3	369514	4906164	2	0	0	57.3	57.3	1	1997.1	3.25	2000	77.01	0	-1.71	0	0	19.3	0	0	0	0	0	0	-37.3	-37.3
Westbrook Inverter Transformer	W_INVTR3	369514	4906164	2	0	0	52.3	52.3	1	1997.1	3.25	4000	77.01	0	-1.71	0	0	65.44	0	0	0	0	0	0	-88.44	-88.44
Westbrook Inverter Transformer	W_INVTR3	369514	4906164	2	0	0	45.3	45.3	1	1997.1	3.25	8000	77.01	0	-1.71	0	0	233.42	0	0	0	0	0	0	-263.4	-263.4
Westbrook Inverter Transformer	W_INVTR4	369679	4906164	2	0	0	65.3	65.3	1	2060.2	3.25	32	77.28	0	-5.72	0	0	0.07	0	0	0	0	0	0	-6.33	-6.33
Westbrook Inverter Transformer	W_INVTR4	369679	4906164	2	0	0	71.3	71.3	1	2060.2	3.25	63	77.28	0	-5.72	0	0	0.25	0	0	0	0	0	0	-0.51	-0.51
Westbrook Inverter Transformer	W_INVTR4	369679	4906164	2	0	0	73.3	73.3	1	2060.2	3.25	125	77.28	0	4.46	0	0	0.85	0	0	0	0	0	0	-9.29	-9.29
Westbrook Inverter Transformer	W_INVTR4	369679	4906164	2	0	0	68.3	68.3	1	2060.2	3.25	250	77.28	0	3.46	0	0	2.15	0	0	0	0	0	0	-14.59	-14.59
Westbrook Inverter Transformer	W_INVTR4	369679	4906164	2	0	0	68.3	68.3	1	2060.2	3.25	500	77.28	0	-0.16	0	0	3.97	0	0	0	0	0	0	-12.79	-12.79
Westbrook Inverter Transformer	W_INVTR4	369679	4906164	2	0	0	62.3	62.3	1	2060.2	3.25	1000	77.28	0	-1.62	0	0	7.54	0	0	0	0	0	0	-20.89	-20.89
Westbrook Inverter Transformer	W_INVTR4	369679	4906164	2	0	0	57.3	57.3	1	2060.2	3.25	2000	77.28	0	-1.71	0	0	19.91	0	0	0	0	0	0	-38.17	-38.17
Westbrook Inverter Transformer	W_INVTR4	369679	4906164	2	0	0	52.3	52.3	1	2060.2	3.25	4000	77.28	0	-1.71	0	0	67.51	0	0	0	0	0	0	-90.78	-90.78
Westbrook Inverter Transformer	W_INVTR4	369679	4906164	2	0	0	45.3	45.3	1	2060.2	3.25	8000	77.28	0	-1.71	0	0	240.8	0	0	0	0	0	0	-271.1	-271.1
Inverter Transformer	MV3-2 T	368677	4907928	2	0	0	19.8	19.8	1	180.62	3.25	63	56.14	0	-3	0	0	0.02	0	0	0	0	0	0	-33.36	-33.36
Inverter Transformer	MV3-2 T	368677	4907928	2	0	0	39.9	39.9	1	180.62	3.25	125	56.14	0	2.08	0	0	0.07	0	0	0	0	0	0	-18.39	-18.39
Inverter Transformer	MV3-2 T	368677	4907928	2	0	0	45.4	45.4	1	180.62	3.25	250	56.14	0	4.13	0	0	0.19	0	0	0	0	0	0	-15.06	-15.06
Inverter Transformer	MV3-2 T	368677	4907928	2	0	0	48.8	48.8	1	180.62	3.25	500	56.14	0	0.62	0	0	0.35	0	0	0	0	0	0	-8.3	-8.3
Inverter Transformer	MV3-2 T	368677	4907928	2	0	0	50	50	1	180.62	3.25	1000	56.14	0	-0.81	0	0	0.66	0	0	0	0	0	0	-5.99	-5.99
Inverter Transformer	MV3-2 T	368677	4907928	2	0	0	44.2	44.2	1	180.62	3.25	2000	56.14	0	-0.9	0	0	1.75	0	0	0	0	0	0	-12.78	-12.78
Inverter Transformer	MV3-2 T	368677	4907928	2	0	0	51	51	1	180.62	3.25	4000	56.14	0	-0.9	0	0	5.92	0	0	0	0	0	0	-10.15	-10.15
Inverter Transformer	MV3-2 T	368677	4907928	2	0	0	44.9	44.9	1	180.62	3.25	8000	56.14	0	-0.9	0	0	21.11	0	0	0	0	0	0	-31.45	-31.45
Inverter Transformer	MV3-4 T	368507	4907925	2	0	0	19.8	19.8	1	333.39	3.25	63	61.46	0	-4.25	0	0	0.04	0	0	0	0	0	0	-37.45	-37.45
Inverter Transformer	MV3-4 T	368507	4907925	2	0	0	39.9	39.9	1	333.39	3.25	125	61.46	0	2.39	0	0	0.14	0	0	0	0	0	0	-24.09	-24.09
Inverter Transformer	MV3-4 T	368507	4907925	2	0	0	45.4	45.4	1	333.39	3.25	250	61.46	0	3.89	0	0	0.35	0	0	0	0	0	0	-20.3	-20.3
Inverter Transformer	MV3-4 T	368507	4907925	2	0	0	48.8	48.8	1	333.39	3.25	500	61.46	0	0.28	0	0	0.64	0	0	0	0	0	0	-13.58	-13.58
Inverter Transformer	MV3-4 T	368507	4907925	2	0	0	50	50	1	333.39	3.25	1000	61.46	0	-1.18	0	0	1.22	0	0	0	0	0	0	-11.5	-11.5
Inverter Transformer	MV3-4 T	368507	4907925	2	0	0	44.2	44.2	1	333.39	3.25	2000	61.46	0	-1.27	0	0	3.22	0	0	0	0	0	0	-19.21	-19.21
Inverter Transformer	MV3-4 T	368507	4907925	2	0	0	51	51	1	333.39	3.25	4000	61.46	0	-1.27	0	0	10.93	0	0	0	0	0	0	-20.11	-20.11
Inverter Transformer	MV3-4 T	368507	4907925	2	0	0	44.9	44.9	1	333.39	3.25	8000	61.46	0	-1.27	0	0	38.97	0	0	0	0	0	0	-54.25	-54.25
Inverter Transformer	MV6-1 T	370230	4907364	2	0	0	42.8	42.8	1	1561.5	3.25	63	74.87	0	-5.63	0	0	0.19	0	0	0	0	0	0	-26.64	-26.64
Inverter Transformer	MV6-1 T	370230	4907364	2	0	0	62.9	62.9	1	1561.5	3.25	125	74.87	0	4.49	0	0	0.64	0	0	0	0	0	0	-17.1	-17.1
Inverter Transformer	MV6-1 T	370230	4907364	2	0	0	56.4	56.4	1	1561.5	3.25	250	74.87	0	3.49	0	0	1.63	0	0	0	0	0	0	-23.59	-23.59
Inverter Transformer	MV6-1 T	370230	4907364	2	0	0	62.8	62.8	1	1561.5	3.25	500	74.87	0	-0.13	0	0	3.01	0	0	0	0	0	0	-14.95	-14.95
Inverter Transformer	MV6-1 T	370230	4907364	2	0	0	54	54	1	1561.5	3.25	1000	74.87	0	-1.59	0	0	5.71	0	0	0	0	0	0	-24.99	-24.99
Inverter Transformer	MV6-1 T	370230	4907364	2	0	0	60.2	60.2	1	1561.5	3.25	2000	74.87	0	-1.69	0	0	15.09	0	0	0	0	0	0	-28.07	-28.07
Inverter Transformer	MV6-1 T	370230	4907364	2	0	0	64	64	1	1561.5	3.25	4000	74.87	0	-1.69	0	0	51.17	0	0	0	0	0	0	-60.35	-60.35
Inverter Transformer	MV6-1 T	370230	4907364	2	0	0	56.9	56.9	1	1561.5	3.25	8000	74.87	0	-1.69	0	0	182.51	0	0	0	0	0	0	-198.8	-198.8
Inverter Transformer	MV3-8 T	368685	4907712	2	0	0	19.8	19.8	1	352.32	3.25	63	61.94	0	-4.34	0	0	0.04	0	0	0	0	0	0	-37.84	-37.84
Inverter Transformer	MV3-8 T	368685	4907712	2	0	0	39.9	39.9	1	352.32	3.25	125	61.94	0	2.45	0	0	0.14	0	0	0	0	0	0	-24.64	-24.64
Inverter Transformer	MV3-8 T	368685	4907712	2	0	0	45.4	45.4	1	352.32	3.25	250	61.94	0	3.87	0	0	0.37	0	0	0	0	0	0	-20.77	-20.77
Inverter Transformer	MV3-8 T	368685	4907712	2	0	0	48.8	48.8	1	352.32	3.25	500	61.94	0	0.25	0	0	0.68	0	0	0	0	0	0	-14.07	-14.07
Inverter Transformer	MV3-8 T	368685	4907712	2	0	0	50	50	1	352.32	3.25	1000	61.94	0	-1.21	0	0	1.29	0	0	0	0	0	0	-12.02	-12.02
Inverter Transformer	MV3-8 T	368685	4907712	2	0	0	44.2	44.2	1	352.32	3.25	2000	61.94	0	-1.3	0	0	3.4	0	0	0	0	0	0	-19.84	-19.84
Inverter Transformer	MV3-8 T	368685	4907712	2	0	0	51	51	1	352.32	3.25	4000	61.94	0	-1.3	0	0	11.55	0	0	0	0	0	0	-21.18	-21.18
Inverter Transformer	MV3-8 T	368685	4907712	2	0	0	44.9	44.9	1	352.32	3.25	8000	61.94	0	-1.3	0	0	41.18	0	0	0	0	0	0	-56.92	-56.92
Inverter Transformer	MV6-4 T	370244	4906966	2	0	0	42.8	42.8	1	1781	3.25	63	76.01	0	-5.67	0	0	0.22	0	0	0	0	0	0	-27.76	-27.76
Inverter Transformer	MV6-4 T	370244	4906966	2	0	0	62.9	62.9	1	1781	3.25	125	76.01	0	4.48	0	0	0.73	0	0	0	0	0	0	-18.32	-18.32
Inverter Transformer	MV6-4 T	370244	4906966	2	0	0	56.4	56.4	1	1781	3.25	250	76.01	0	3.47	0	0	1.86	0	0	0	0	0	0	-24.94	-24.94
Inverter Transformer	MV6-4 T	370244	4906966	2	0	0	62.8	62.8	1	1781	3.25	500	76.01	0	-0.14	0	0	3.43	0	0	0	0	0	0	-16.5	-16.5
Inverter Transformer	MV6-4 T	370244	4906966	2	0	0	54	54	1	1781	3.25	1000	76.01	0	-1.61	0	0	6.51	0	0	0	0	0	0	-26.92	-26.92

Inverter Transformer	MV6-4 T	370244	4906966	2	0	0	60.2	60.2	1	1781	3.25	2000	76.01	0	-1.7	0	0	17.21	0	0	0	0	0	0	-31.32	-31.32
Inverter Transformer	MV6-4 T	370244	4906966	2	0	0	64	64	1	1781	3.25	4000	76.01	0	-1.7	0	0	58.36	0	0	0	0	0	0	-68.68	-68.68
Inverter Transformer	MV6-4 T	370244	4906966	2	0	0	56.9	56.9	1	1781	3.25	8000	76.01	0	-1.7	0	0	208.17	0	0	0	0	0	0	-225.6	-225.6
Inverter Transformer	MV3-9 T	368517	4907703	2	0	0	19.8	19.8	1	451.64	3.25	63	64.1	0	-4.7	0	0	0.05	0	0	0	0	0	0	-39.65	-39.65
Inverter Transformer	MV3-9 T	368517	4907703	2	0	0	39.9	39.9	1	451.64	3.25	125	64.1	0	2.83	0	0	0.19	0	0	0	0	0	0	-27.21	-27.21
Inverter Transformer	MV3-9 T	368517	4907703	2	0	0	45.4	45.4	1	451.64	3.25	250	64.1	0	3.76	0	0	0.47	0	0	0	0	0	0	-22.93	-22.93
Inverter Transformer	MV3-9 T	368517	4907703	2	0	0	48.8	48.8	1	451.64	3.25	500	64.1	0	0.15	0	0	0.87	0	0	0	0	0	0	-16.31	-16.31
Inverter Transformer	MV3-9 T	368517	4907703	2	0	0	50	50	1	451.64	3.25	1000	64.1	0	-1.32	0	0	1.65	0	0	0	0	0	0	-14.43	-14.43
Inverter Transformer	MV3-9 T	368517	4907703	2	0	0	44.2	44.2	1	451.64	3.25	2000	64.1	0	-1.41	0	0	4.36	0	0	0	0	0	0	-22.85	-22.85
Inverter Transformer	MV3-9 T	368517	4907703	2	0	0	51	51	1	451.64	3.25	4000	64.1	0	-1.41	0	0	14.8	0	0	0	0	0	0	-26.48	-26.48
Inverter Transformer	MV3-9 T	368517	4907703	2	0	0	44.9	44.9	1	451.64	3.25	8000	64.1	0	-1.41	0	0	52.79	0	0	0	0	0	0	-70.57	-70.57
Inverter Transformer	MV3-5 T	368335	4907843	2	0	0	19.8	19.8	1	523.3	3.25	63	65.37	0	-4.88	0	0	0.06	0	0	0	0	0	0	-40.76	-40.76
Inverter Transformer	MV3-5 T	368335	4907843	2	0	0	39.9	39.9	1	523.3	3.25	125	65.37	0	3.12	0	0	0.22	0	0	0	0	0	0	-28.81	-28.81
Inverter Transformer	MV3-5 T	368335	4907843	2	0	0	45.4	45.4	1	523.3	3.25	250	65.37	0	3.71	0	0	0.55	0	0	0	0	0	0	-24.23	-24.23
Inverter Transformer	MV3-5 T	368335	4907843	2	0	0	48.8	48.8	1	523.3	3.25	500	65.37	0	0.09	0	0	1.01	0	0	0	0	0	0	-17.68	-17.68
Inverter Transformer	MV3-5 T	368335	4907843	2	0	0	50	50	1	523.3	3.25	1000	65.37	0	-1.37	0	0	1.91	0	0	0	0	0	0	-15.92	-15.92
Inverter Transformer	MV3-5 T	368335	4907843	2	0	0	44.2	44.2	1	523.3	3.25	2000	65.37	0	-1.46	0	0	5.06	0	0	0	0	0	0	-24.77	-24.77
Inverter Transformer	MV3-5 T	368335	4907843	2	0	0	51	51	1	523.3	3.25	4000	65.37	0	-1.46	0	0	17.15	0	0	0	0	0	0	-30.06	-30.06
Inverter Transformer	MV3-5 T	368335	4907843	2	0	0	44.9	44.9	1	523.3	3.25	8000	65.37	0	-1.46	0	0	61.16	0	0	0	0	0	0	-80.17	-80.17
Inverter Transformer	MV3-14 T	368678	4907498	2	0	0	19.8	19.8	1	557.65	3.25	63	65.93	0	-4.95	0	0	0.07	0	0	0	0	0	0	-41.24	-41.24
Inverter Transformer	MV3-14 T	368678	4907498	2	0	0	39.9	39.9	1	557.65	3.25	125	65.93	0	3.26	0	0	0.23	0	0	0	0	0	0	-29.52	-29.52
Inverter Transformer	MV3-14 T	368678	4907498	2	0	0	45.4	45.4	1	557.65	3.25	250	65.93	0	3.69	0	0	0.58	0	0	0	0	0	0	-24.8	-24.8
Inverter Transformer	MV3-14 T	368678	4907498	2	0	0	48.8	48.8	1	557.65	3.25	500	65.93	0	0.07	0	0	1.08	0	0	0	0	0	0	-18.27	-18.27
Inverter Transformer	MV3-14 T	368678	4907498	2	0	0	50	50	1	557.65	3.25	1000	65.93	0	-1.39	0	0	2.04	0	0	0	0	0	0	-16.58	-16.58
Inverter Transformer	MV3-14 T	368678	4907498	2	0	0	44.2	44.2	1	557.65	3.25	2000	65.93	0	-1.49	0	0	5.39	0	0	0	0	0	0	-25.63	-25.63
Inverter Transformer	MV3-14 T	368678	4907498	2	0	0	51	51	1	557.65	3.25	4000	65.93	0	-1.49	0	0	18.27	0	0	0	0	0	0	-31.72	-31.72
Inverter Transformer	MV3-14 T	368678	4907498	2	0	0	44.9	44.9	1	557.65	3.25	8000	65.93	0	-1.49	0	0	65.18	0	0	0	0	0	0	-84.72	-84.72
Inverter Transformer	MV4-15 T	369170	4908481	2	0	0	19.8	19.8	1	564.75	3.25	63	66.04	0	-4.96	0	0	0.07	0	0	0	0	0	0	-41.34	-41.34
Inverter Transformer	MV4-15 T	369170	4908481	2	0	0	39.9	39.9	1	564.75	3.25	125	66.04	0	3.29	0	0	0.23	0	0	0	0	0	0	-29.66	-29.66
Inverter Transformer	MV4-15 T	369170	4908481	2	0	0	45.4	45.4	1	564.75	3.25	250	66.04	0	3.68	0	0	0.59	0	0	0	0	0	0	-24.91	-24.91
Inverter Transformer	MV4-15 T	369170	4908481	2	0	0	48.8	48.8	1	564.75	3.25	500	66.04	0	0.07	0	0	1.09	0	0	0	0	0	0	-18.39	-18.39
Inverter Transformer	MV4-15 T	369170	4908481	2	0	0	50	50	1	564.75	3.25	1000	66.04	0	-1.39	0	0	2.07	0	0	0	0	0	0	-16.71	-16.71
Inverter Transformer	MV4-15 T	369170	4908481	2	0	0	44.2	44.2	1	564.75	3.25	2000	66.04	0	-1.49	0	0	5.46	0	0	0	0	0	0	-25.81	-25.81
Inverter Transformer	MV4-15 T	369170	4908481	2	0	0	51	51	1	564.75	3.25	4000	66.04	0	-1.49	0	0	18.51	0	0	0	0	0	0	-32.05	-32.05
Inverter Transformer	MV4-15 T	369170	4908481	2	0	0	44.9	44.9	1	564.75	3.25	8000	66.04	0	-1.49	0	0	66.01	0	0	0	0	0	0	-85.66	-85.66
Inverter Transformer	MV4-14 T	369182	4908507	2	0	0	19.8	19.8	1	592.64	3.25	63	66.46	0	-5.01	0	0	0.07	0	0	0	0	0	0	-41.72	-41.72
Inverter Transformer	MV4-14 T	369182	4908507	2	0	0	39.9	39.9	1	592.64	3.25	125	66.46	0	3.39	0	0	0.24	0	0	0	0	0	0	-30.19	-30.19
Inverter Transformer	MV4-14 T	369182	4908507	2	0	0	45.4	45.4	1	592.64	3.25	250	66.46	0	3.67	0	0	0.62	0	0	0	0	0	0	-25.34	-25.34
Inverter Transformer	MV4-14 T	369182	4908507	2	0	0	48.8	48.8	1	592.64	3.25	500	66.46	0	0.05	0	0	1.14	0	0	0	0	0	0	-18.85	-18.85
Inverter Transformer	MV4-14 T	369182	4908507	2	0	0	50	50	1	592.64	3.25	1000	66.46	0	-1.41	0	0	2.17	0	0	0	0	0	0	-17.22	-17.22
Inverter Transformer	MV4-14 T	369182	4908507	2	0	0	44.2	44.2	1	592.64	3.25	2000	66.46	0	-1.5	0	0	5.73	0	0	0	0	0	0	-26.48	-26.48
Inverter Transformer	MV4-14 T	369182	4908507	2	0	0	51	51	1	592.64	3.25	4000	66.46	0	-1.5	0	0	19.42	0	0	0	0	0	0	-33.37	-33.37
Inverter Transformer	MV4-14 T	369182	4908507	2	0	0	44.9	44.9	1	592.64	3.25	8000	66.46	0	-1.5	0	0	69.27	0	0	0	0	0	0	-89.32	-89.32
Inverter Transformer	MV3-11 T	368340	4907662	2	0	0	19.8	19.8	1	609.91	3.25	63	66.71	0	-5.04	0	0	0.07	0	0	0	0	0	0	-41.94	-41.94
Inverter Transformer	MV3-11 T	368340	4907662	2	0	0	39.9	39.9	1	609.91	3.25	125	66.71	0	3.46	0	0	0.25	0	0	0	0	0	0	-30.51	-30.51
Inverter Transformer	MV3-11 T	368340	4907662	2	0	0	45.4	45.4	1	609.91	3.25	250	66.71	0	3.66	0	0	0.64	0	0	0	0	0	0	-25.6	-25.6
Inverter Transformer	MV3-11 T	368340	4907662	2	0	0	48.8	48.8	1	609.91	3.25	500	66.71	0	0.05	0	0	1.18	0	0	0	0	0	0	-19.13	-19.13
Inverter Transformer	MV3-11 T	368340	4907662	2	0	0	50	50	1	609.91	3.25	1000	66.71	0	-1.42	0	0	2.23	0	0	0	0	0	0	-17.52	-17.52
Inverter Transformer	MV3-11 T	368340	4907662	2	0	0	44.2	44.2	1	609.91	3.25	2000	66.71	0	-1.51	0	0	5.89	0	0	0	0	0	0	-26.89	-26.89
Inverter Transformer	MV3-11 T	368340	4907662	2	0	0	51	51	1	609.91	3.25	4000	66.71	0	-1.51	0	0	19.99	0	0	0	0	0	0	-34.18	-34.18
Inverter Transformer	MV3-11 T	368340	4907662	2	0	0	44.9	44.9	1	609.91	3.25	8000	66.71	0	-1.51	0	0	71.29	0	0	0	0	0	0	-91.58	-91.58
Inverter Transformer	MV4-13 T	369057	4908605	2	0	0	19.8	19.8	1	615.08	3.25	63	66.78	0	-5.05	0	0	0.07	0	0	0	0	0	0	-42	-42
Inverter Transformer	MV4-13 T	369057	4908605	2	0	0	39.9	39.9	1	615.08	3.25	125	66.78	0	3.48	0	0	0.25	0	0	0	0	0	0	-30.61	-30.61
Inverter Transformer	MV4-13 T	369057	4908605	2	0	0	45.4	45.4	1	615.08	3.25	250	66.78	0	3.66	0	0	0.64	0	0	0	0	0	0	-25.68	-25.68
Inverter Transformer	MV4-13 T	369057	4908605	2	0	0	48.8	48.8	1	615.08	3.25	500	66.78	0	0.04	0	0	1.19	0	0	0	0	0	0	-19.21	-19.21
Inverter Transformer	MV4-13 T	369057	4908605	2	0	0	50	50	1	615.08	3.25	1000	66.78	0	-1.42	0	0	2.25	0	0	0	0	0	0	-17.61	-17.61
Inverter Transformer	MV4-13 T	369057	4908605	2	0	0	44.2	44.2	1	615.08	3.25	2000	66.78	0	-1.51	0	0	5.94	0	0	0	0	0	0	-27.01	-27.01
Inverter Transformer	MV4-13 T	369057	4908605	2	0	0	51	51	1	615.08	3.25	4000	66.78	0	-1.51	0	0	20.16	0	0	0	0	0	0	-34.42	-34.42
Inverter Transformer	MV4-13 T	369057	4908605	2	0	0	44.9	44.9	1	615.08	3.25	8000	66.78	0	-1.51	0	0	71.89	0	0	0	0	0	0	-92.26	-92.26
Inverter Transformer	MV3-16 T	368509	4907475	2	0	0	19.8	19.8	1	642.8	3.25	63	67.16	0	-5.09	0	0	0.08	0	0	0	0	0	0	-42.35	-42.35
Inverter Transformer	MV3-16 T	368509	4907475	2	0	0	39.9	39.9	1	642.8	3.25	125	67.16	0	3.57	0	0	0.26	0	0	0	0	0	0	-31.1	-31.1
Inverter Transformer	MV3-16 T	368509	4907475	2	0	0	45.4	45.4	1	642.8	3.25	250	67.16	0	3.65	0	0	0.67	0	0	0	0	0	0	-26.08	-26.08
Inverter Transformer	MV3-16 T	368509	4907475	2	0	0	48.8	48.8	1	642.8	3.25	500	67.16	0	0.03	0	0	1.24	0	0	0	0	0	0	-19.63	-19.63
Inverter Transformer	MV3-16 T	368509	4907475	2	0	0	50	50	1	642.8	3.25	1000	67.16	0	-1.43	0	0	2.35	0	0	0	0	0	0	-18.08	-18.08
Inverter Transformer	MV3-16 T	368509	4907475	2	0	0	44.2	44.2	1	642.8	3.25	2000	67.16	0	-1.53	0	0	6.21	0	0	0	0	0	0	-27.65	-27.65
Inverter Transformer	MV3-16 T	368509	4907475	2	0	0	51	51	1	642.8	3.25	4000	67.16	0	-1.53	0	0	21.06	0	0	0	0	0	0	-35.7	-35.7
Inverter Transformer	MV3-16 T	368509	4907475	2	0	0	44.9	44.9	1	642.8	3.25	8000	67.16	0	-1.53	0	0	75.13	0	0	0	0	0	0	-95.87	-95.87
Inverter Transformer	MV3-1 T	368150	4907976	2	0	0	19.8	19.8	1	673.77	3.25	63	67.57	0	-5.13	0	0	0.08	0	0	0	0	0	0	-42.72	-42.72
Inverter Transformer	MV3-1 T	368150	4907976	2	0	0	39.9	39.9	1	673.77	3.25	125	67.57	0	3.68	0	0	0.28	0	0	0	0	0	0	-31.63	-31.63

Inverter Transformer	MV3-1 T	368150	4907976	2	0	0	45.4	45.4	1	673.77	3.25	250	67.57	0	3.63	0	0	0.7	0	0	0	0	0	0	-26.51	-26.51
Inverter Transformer	MV3-1 T	368150	4907976	2	0	0	48.8	48.8	1	673.77	3.25	500	67.57	0	0.02	0	0	1.3	0	0	0	0	0	0	-20.09	-20.09
Inverter Transformer	MV3-1 T	368150	4907976	2	0	0	50	50	1	673.77	3.25	1000	67.57	0	-1.44	0	0	2.46	0	0	0	0	0	0	-18.59	-18.59
Inverter Transformer	MV3-1 T	368150	4907976	2	0	0	44.2	44.2	1	673.77	3.25	2000	67.57	0	-1.54	0	0	6.51	0	0	0	0	0	0	-28.34	-28.34
Inverter Transformer	MV3-1 T	368150	4907976	2	0	0	51	51	1	673.77	3.25	4000	67.57	0	-1.54	0	0	22.08	0	0	0	0	0	0	-37.11	-37.11
Inverter Transformer	MV3-1 T	368150	4907976	2	0	0	44.9	44.9	1	673.77	3.25	8000	67.57	0	-1.54	0	0	78.75	0	0	0	0	0	0	-99.88	-99.88
Inverter Transformer	MV3-6 T	368156	4907834	2	0	0	19.8	19.8	1	695.3	3.25	63	67.84	0	-5.16	0	0	0.08	0	0	0	0	0	0	-42.97	-42.97
Inverter Transformer	MV3-6 T	368156	4907834	2	0	0	39.9	39.9	1	695.3	3.25	125	67.84	0	3.75	0	0	0.29	0	0	0	0	0	0	-31.98	-31.98
Inverter Transformer	MV3-6 T	368156	4907834	2	0	0	45.4	45.4	1	695.3	3.25	250	67.84	0	3.63	0	0	0.73	0	0	0	0	0	0	-26.79	-26.79
Inverter Transformer	MV3-6 T	368156	4907834	2	0	0	48.8	48.8	1	695.3	3.25	500	67.84	0	0.01	0	0	1.34	0	0	0	0	0	0	-20.39	-20.39
Inverter Transformer	MV3-6 T	368156	4907834	2	0	0	50	50	1	695.3	3.25	1000	67.84	0	-1.45	0	0	2.54	0	0	0	0	0	0	-18.93	-18.93
Inverter Transformer	MV3-6 T	368156	4907834	2	0	0	44.2	44.2	1	695.3	3.25	2000	67.84	0	-1.55	0	0	6.72	0	0	0	0	0	0	-28.82	-28.82
Inverter Transformer	MV3-6 T	368156	4907834	2	0	0	51	51	1	695.3	3.25	4000	67.84	0	-1.55	0	0	22.79	0	0	0	0	0	0	-38.08	-38.08
Inverter Transformer	MV3-6 T	368156	4907834	2	0	0	44.9	44.9	1	695.3	3.25	8000	67.84	0	-1.55	0	0	81.27	0	0	0	0	0	0	-102.7	-102.7
Inverter Transformer	MV2-1 T	365836	4906816	2	0	0	42.8	42.8	1	3225.1	3.25	63	81.17	0	-5.82	0	0	0.39	0	0	0	0	0	0	-32.94	-32.94
Inverter Transformer	MV2-1 T	365836	4906816	2	0	0	62.9	62.9	1	3225.1	3.25	125	81.17	0	4.43	0	0	1.33	0	0	0	0	0	0	-24.03	-24.03
Inverter Transformer	MV2-1 T	365836	4906816	2	0	0	56.4	56.4	1	3225.1	3.25	250	81.17	0	3.43	0	0	3.36	0	0	0	0	0	0	-31.56	-31.56
Inverter Transformer	MV2-1 T	365836	4906816	2	0	0	62.8	62.8	1	3225.1	3.25	500	81.17	0	-0.19	0	0	6.22	0	0	0	0	0	0	-24.4	-24.4
Inverter Transformer	MV2-1 T	365836	4906816	2	0	0	54	54	1	3225.1	3.25	1000	81.17	0	-1.65	0	0	11.8	0	0	0	0	0	0	-37.32	-37.32
Inverter Transformer	MV2-1 T	365836	4906816	2	0	0	60.2	60.2	1	3225.1	3.25	2000	81.17	0	-1.75	0	0	31.17	0	0	0	0	0	0	-50.39	-50.39
Inverter Transformer	MV2-1 T	365836	4906816	2	0	0	64	64	1	3225.1	3.25	4000	81.17	0	-1.75	0	0	105.69	0	0	0	0	0	0	-121.1	-121.1
Inverter Transformer	MV2-1 T	365836	4906816	2	0	0	56.9	56.9	1	3225.1	3.25	8000	81.17	0	-1.75	0	0	376.95	0	0	0	0	0	0	-399.5	-399.5
Inverter Transformer	MV3-15 T	368351	4907477	2	0	0	19.8	19.8	1	731.1	3.25	63	68.28	0	-5.2	0	0	0.09	0	0	0	0	0	0	-43.37	-43.37
Inverter Transformer	MV3-15 T	368351	4907477	2	0	0	39.9	39.9	1	731.1	3.25	125	68.28	0	3.85	0	0	0.3	0	0	0	0	0	0	-32.53	-32.53
Inverter Transformer	MV3-15 T	368351	4907477	2	0	0	45.4	45.4	1	731.1	3.25	250	68.28	0	3.61	0	0	0.76	0	0	0	0	0	0	-27.26	-27.26
Inverter Transformer	MV3-15 T	368351	4907477	2	0	0	48.8	48.8	1	731.1	3.25	500	68.28	0	0	0	0	1.41	0	0	0	0	0	0	-20.89	-20.89
Inverter Transformer	MV3-15 T	368351	4907477	2	0	0	50	50	1	731.1	3.25	1000	68.28	0	-1.46	0	0	2.67	0	0	0	0	0	0	-19.49	-19.49
Inverter Transformer	MV3-15 T	368351	4907477	2	0	0	44.2	44.2	1	731.1	3.25	2000	68.28	0	-1.56	0	0	7.07	0	0	0	0	0	0	-29.58	-29.58
Inverter Transformer	MV3-15 T	368351	4907477	2	0	0	51	51	1	731.1	3.25	4000	68.28	0	-1.56	0	0	23.96	0	0	0	0	0	0	-39.68	-39.68
Inverter Transformer	MV3-15 T	368351	4907477	2	0	0	44.9	44.9	1	731.1	3.25	8000	68.28	0	-1.56	0	0	85.45	0	0	0	0	0	0	-107.3	-107.3
Inverter Transformer	MV3-20 T	368683	4907317	2	0	0	19.8	19.8	1	733.11	3.25	63	68.3	0	-5.2	0	0	0.09	0	0	0	0	0	0	-43.39	-43.39
Inverter Transformer	MV3-20 T	368683	4907317	2	0	0	39.9	39.9	1	733.11	3.25	125	68.3	0	3.86	0	0	0.3	0	0	0	0	0	0	-32.56	-32.56
Inverter Transformer	MV3-20 T	368683	4907317	2	0	0	45.4	45.4	1	733.11	3.25	250	68.3	0	3.61	0	0	0.76	0	0	0	0	0	0	-27.28	-27.28
Inverter Transformer	MV3-20 T	368683	4907317	2	0	0	48.8	48.8	1	733.11	3.25	500	68.3	0	0	0	0	1.41	0	0	0	0	0	0	-20.91	-20.91
Inverter Transformer	MV3-20 T	368683	4907317	2	0	0	50	50	1	733.11	3.25	1000	68.3	0	-1.46	0	0	2.68	0	0	0	0	0	0	-19.52	-19.52
Inverter Transformer	MV3-20 T	368683	4907317	2	0	0	44.2	44.2	1	733.11	3.25	2000	68.3	0	-1.56	0	0	7.08	0	0	0	0	0	0	-29.63	-29.63
Inverter Transformer	MV3-20 T	368683	4907317	2	0	0	51	51	1	733.11	3.25	4000	68.3	0	-1.56	0	0	24.02	0	0	0	0	0	0	-39.77	-39.77
Inverter Transformer	MV3-20 T	368683	4907317	2	0	0	44.9	44.9	1	733.11	3.25	8000	68.3	0	-1.56	0	0	85.69	0	0	0	0	0	0	-107.5	-107.5
Inverter Transformer	MV3-10 T	368162	4907669	2	0	0	19.8	19.8	1	754.79	3.25	63	68.56	0	-5.22	0	0	0.09	0	0	0	0	0	0	-43.62	-43.62
Inverter Transformer	MV3-10 T	368162	4907669	2	0	0	39.9	39.9	1	754.79	3.25	125	68.56	0	3.92	0	0	0.31	0	0	0	0	0	0	-32.88	-32.88
Inverter Transformer	MV3-10 T	368162	4907669	2	0	0	45.4	45.4	1	754.79	3.25	250	68.56	0	3.61	0	0	0.79	0	0	0	0	0	0	-27.55	-27.55
Inverter Transformer	MV3-10 T	368162	4907669	2	0	0	48.8	48.8	1	754.79	3.25	500	68.56	0	-0.01	0	0	1.46	0	0	0	0	0	0	-21.2	-21.2
Inverter Transformer	MV3-10 T	368162	4907669	2	0	0	50	50	1	754.79	3.25	1000	68.56	0	-1.47	0	0	2.76	0	0	0	0	0	0	-19.85	-19.85
Inverter Transformer	MV3-10 T	368162	4907669	2	0	0	44.2	44.2	1	754.79	3.25	2000	68.56	0	-1.57	0	0	7.29	0	0	0	0	0	0	-30.08	-30.08
Inverter Transformer	MV3-10 T	368162	4907669	2	0	0	51	51	1	754.79	3.25	4000	68.56	0	-1.57	0	0	24.73	0	0	0	0	0	0	-40.72	-40.72
Inverter Transformer	MV3-10 T	368162	4907669	2	0	0	44.9	44.9	1	754.79	3.25	8000	68.56	0	-1.57	0	0	88.22	0	0	0	0	0	0	-110.3	-110.3
Inverter Transformer	MV4-12 T	369049	4908803	2	0	0	19.8	19.8	1	799.22	3.25	63	69.05	0	-5.27	0	0	0.1	0	0	0	0	0	0	-44.08	-44.08
Inverter Transformer	MV4-12 T	369049	4908803	2	0	0	39.9	39.9	1	799.22	3.25	125	69.05	0	4.03	0	0	0.33	0	0	0	0	0	0	-33.51	-33.51
Inverter Transformer	MV4-12 T	369049	4908803	2	0	0	45.4	45.4	1	799.22	3.25	250	69.05	0	3.59	0	0	0.83	0	0	0	0	0	0	-28.08	-28.08
Inverter Transformer	MV4-12 T	369049	4908803	2	0	0	48.8	48.8	1	799.22	3.25	500	69.05	0	-0.02	0	0	1.54	0	0	0	0	0	0	-21.77	-21.77
Inverter Transformer	MV4-12 T	369049	4908803	2	0	0	50	50	1	799.22	3.25	1000	69.05	0	-1.48	0	0	2.92	0	0	0	0	0	0	-20.49	-20.49
Inverter Transformer	MV4-12 T	369049	4908803	2	0	0	44.2	44.2	1	799.22	3.25	2000	69.05	0	-1.58	0	0	7.72	0	0	0	0	0	0	-31	-31
Inverter Transformer	MV4-12 T	369049	4908803	2	0	0	51	51	1	799.22	3.25	4000	69.05	0	-1.58	0	0	26.19	0	0	0	0	0	0	-42.66	-42.66
Inverter Transformer	MV4-12 T	369049	4908803	2	0	0	44.9	44.9	1	799.22	3.25	8000	69.05	0	-1.58	0	0	93.41	0	0	0	0	0	0	-116	-116
Inverter Transformer	MV3-19 T	368352	4907347	2	0	0	19.8	19.8	1	834.31	3.25	63	69.43	0	-5.3	0	0	0.1	0	0	0	0	0	0	-44.43	-44.43
Inverter Transformer	MV3-19 T	368352	4907347	2	0	0	39.9	39.9	1	834.31	3.25	125	69.43	0	4.1	0	0	0.34	0	0	0	0	0	0	-33.97	-33.97
Inverter Transformer	MV3-19 T	368352	4907347	2	0	0	45.4	45.4	1	834.31	3.25	250	69.43	0	3.58	0	0	0.87	0	0	0	0	0	0	-28.48	-28.48
Inverter Transformer	MV3-19 T	368352	4907347	2	0	0	48.8	48.8	1	834.31	3.25	500	69.43	0	-0.03	0	0	1.61	0	0	0	0	0	0	-22.2	-22.2
Inverter Transformer	MV3-19 T	368352	4907347	2	0	0	50	50	1	834.31	3.25	1000	69.43	0	-1.49	0	0	3.05	0	0	0	0	0	0	-20.98	-20.98
Inverter Transformer	MV3-19 T	368352	4907347	2	0	0	44.2	44.2	1	834.31	3.25	2000	69.43	0	-1.59	0	0	8.06	0	0	0	0	0	0	-31.7	-31.7
Inverter Transformer	MV3-19 T	368352	4907347	2	0	0	51	51	1	834.31	3.25	4000	69.43	0	-1.59	0	0	27.34	0	0	0	0	0	0	-44.18	-44.18
Inverter Transformer	MV3-19 T	368352	4907347	2	0	0	44.9	44.9	1	834.31	3.25	8000	69.43	0	-1.59	0	0	97.52	0	0	0	0	0	0	-120.5	-120.5
Inverter Transformer	MV3-17 T	368183	4907472	2	0	0	19.8	19.8	1	852.22	3.25	63	69.61	0	-5.31	0	0	0.1	0	0	0	0	0	0	-44.6	-44.6
Inverter Transformer	MV3-17 T	368183	4907472	2	0	0	39.9	39.9	1	852.22	3.25	125	69.61	0	4.14	0	0	0.35	0	0	0	0	0	0	-34.2	-34.2
Inverter Transformer	MV3-17 T	368183	4907472	2	0	0	45.4	45.4	1	852.22	3.25	250	69.61	0	3.58	0	0	0.89	0	0	0	0	0	0	-28.68	-28.68
Inverter Transformer	MV3-17 T	368183	4907472	2	0	0	48.8	48.8	1	852.22	3.25	500	69.61	0	-0.04	0	0	1.64	0	0	0	0	0	0	-22.42	-22.42
Inverter Transformer	MV3-17 T	368183	4907472	2	0	0	50	50	1	852.22	3.25	1000	69.61	0	-1.5	0	0	3.12	0	0	0	0	0	0	-21.23	-21.23
Inverter Transformer	MV3-17 T	368183	4907472	2	0	0	44.2	44.2	1	852.22	3.25	2000	69.61	0	-1.59	0	0	8.24	0	0	0	0	0	0	-32.05	-32.05
Inverter Transformer	MV3-17 T	368183	4907472	2	0	0	51	51	1	852.22	3.25	4000	69.61	0	-1.59	0	0	27.93	0	0	0	0	0	0	-44.94	-44.94

Inverter Transformer	MV3-17 T	368183	4907472	2	0	0	44.9	44.9	1	852.22	3.25	8000	69.61	0	-1.59	0	0	99.61	0	0	0	0	0	0	-122.7	-122.7
Inverter Transformer	MV3-3 T	367944	4907927	2	0	0	19.8	19.8	1	883.88	3.25	63	69.93	0	-5.34	0	0	0.11	0	0	0	0	0	0	-44.9	-44.9
Inverter Transformer	MV3-3 T	367944	4907927	2	0	0	39.9	39.9	1	883.88	3.25	125	69.93	0	4.19	0	0	0.36	0	0	0	0	0	0	-34.58	-34.58
Inverter Transformer	MV3-3 T	367944	4907927	2	0	0	45.4	45.4	1	883.88	3.25	250	69.93	0	3.57	0	0	0.92	0	0	0	0	0	0	-29.02	-29.02
Inverter Transformer	MV3-3 T	367944	4907927	2	0	0	48.8	48.8	1	883.88	3.25	500	69.93	0	-0.04	0	0	1.7	0	0	0	0	0	0	-22.79	-22.79
Inverter Transformer	MV3-3 T	367944	4907927	2	0	0	50	50	1	883.88	3.25	1000	69.93	0	-1.51	0	0	3.23	0	0	0	0	0	0	-21.65	-21.65
Inverter Transformer	MV3-3 T	367944	4907927	2	0	0	44.2	44.2	1	883.88	3.25	2000	69.93	0	-1.6	0	0	8.54	0	0	0	0	0	0	-32.67	-32.67
Inverter Transformer	MV3-3 T	367944	4907927	2	0	0	51	51	1	883.88	3.25	4000	69.93	0	-1.6	0	0	28.96	0	0	0	0	0	0	-46.29	-46.29
Inverter Transformer	MV3-3 T	367944	4907927	2	0	0	44.9	44.9	1	883.88	3.25	8000	69.93	0	-1.6	0	0	103.31	0	0	0	0	0	0	-126.7	-126.7
Inverter Transformer	MV3-21 T	368484	4907206	2	0	0	19.8	19.8	1	896.74	3.25	63	70.05	0	-5.35	0	0	0.11	0	0	0	0	0	0	-45.01	-45.01
Inverter Transformer	MV3-21 T	368484	4907206	2	0	0	39.9	39.9	1	896.74	3.25	125	70.05	0	4.21	0	0	0.37	0	0	0	0	0	0	-34.74	-34.74
Inverter Transformer	MV3-21 T	368484	4907206	2	0	0	45.4	45.4	1	896.74	3.25	250	70.05	0	3.57	0	0	0.94	0	0	0	0	0	0	-29.16	-29.16
Inverter Transformer	MV3-21 T	368484	4907206	2	0	0	48.8	48.8	1	896.74	3.25	500	70.05	0	-0.05	0	0	1.73	0	0	0	0	0	0	-22.94	-22.94
Inverter Transformer	MV3-21 T	368484	4907206	2	0	0	50	50	1	896.74	3.25	1000	70.05	0	-1.51	0	0	3.28	0	0	0	0	0	0	-21.82	-21.82
Inverter Transformer	MV3-21 T	368484	4907206	2	0	0	44.2	44.2	1	896.74	3.25	2000	70.05	0	-1.6	0	0	8.67	0	0	0	0	0	0	-32.92	-32.92
Inverter Transformer	MV3-21 T	368484	4907206	2	0	0	51	51	1	896.74	3.25	4000	70.05	0	-1.6	0	0	29.39	0	0	0	0	0	0	-46.84	-46.84
Inverter Transformer	MV3-21 T	368484	4907206	2	0	0	44.9	44.9	1	896.74	3.25	8000	70.05	0	-1.6	0	0	104.81	0	0	0	0	0	0	-128.4	-128.4
Inverter Transformer	MV3-22 T	368661	4907142	2	0	0	19.8	19.8	1	909.19	3.25	63	70.17	0	-5.36	0	0	0.11	0	0	0	0	0	0	-45.13	-45.13
Inverter Transformer	MV3-22 T	368661	4907142	2	0	0	39.9	39.9	1	909.19	3.25	125	70.17	0	4.23	0	0	0.37	0	0	0	0	0	0	-34.88	-34.88
Inverter Transformer	MV3-22 T	368661	4907142	2	0	0	45.4	45.4	1	909.19	3.25	250	70.17	0	3.57	0	0	0.95	0	0	0	0	0	0	-29.29	-29.29
Inverter Transformer	MV3-22 T	368661	4907142	2	0	0	48.8	48.8	1	909.19	3.25	500	70.17	0	-0.05	0	0	1.75	0	0	0	0	0	0	-23.08	-23.08
Inverter Transformer	MV3-22 T	368661	4907142	2	0	0	50	50	1	909.19	3.25	1000	70.17	0	-1.51	0	0	3.33	0	0	0	0	0	0	-21.99	-21.99
Inverter Transformer	MV3-22 T	368661	4907142	2	0	0	44.2	44.2	1	909.19	3.25	2000	70.17	0	-1.61	0	0	8.79	0	0	0	0	0	0	-33.15	-33.15
Inverter Transformer	MV3-22 T	368661	4907142	2	0	0	51	51	1	909.19	3.25	4000	70.17	0	-1.61	0	0	29.79	0	0	0	0	0	0	-47.36	-47.36
Inverter Transformer	MV3-22 T	368661	4907142	2	0	0	44.9	44.9	1	909.19	3.25	8000	70.17	0	-1.61	0	0	106.27	0	0	0	0	0	0	-129.9	-129.9
Inverter Transformer	MV3-7 T	367951	4907754	2	0	0	19.8	19.8	1	914.87	3.25	63	70.23	0	-5.36	0	0	0.11	0	0	0	0	0	0	-45.18	-45.18
Inverter Transformer	MV3-7 T	367951	4907754	2	0	0	39.9	39.9	1	914.87	3.25	125	70.23	0	4.24	0	0	0.38	0	0	0	0	0	0	-34.95	-34.95
Inverter Transformer	MV3-7 T	367951	4907754	2	0	0	45.4	45.4	1	914.87	3.25	250	70.23	0	3.56	0	0	0.95	0	0	0	0	0	0	-29.35	-29.35
Inverter Transformer	MV3-7 T	367951	4907754	2	0	0	48.8	48.8	1	914.87	3.25	500	70.23	0	-0.05	0	0	1.76	0	0	0	0	0	0	-23.14	-23.14
Inverter Transformer	MV3-7 T	367951	4907754	2	0	0	50	50	1	914.87	3.25	1000	70.23	0	-1.51	0	0	3.35	0	0	0	0	0	0	-22.06	-22.06
Inverter Transformer	MV3-7 T	367951	4907754	2	0	0	44.2	44.2	1	914.87	3.25	2000	70.23	0	-1.61	0	0	8.84	0	0	0	0	0	0	-33.26	-33.26
Inverter Transformer	MV3-7 T	367951	4907754	2	0	0	51	51	1	914.87	3.25	4000	70.23	0	-1.61	0	0	29.98	0	0	0	0	0	0	-47.6	-47.6
Inverter Transformer	MV3-7 T	367951	4907754	2	0	0	44.9	44.9	1	914.87	3.25	8000	70.23	0	-1.61	0	0	106.93	0	0	0	0	0	0	-130.7	-130.7
Inverter Transformer	MV4-11 T	369269	4908855	2	0	0	19.8	19.8	1	932.65	3.25	63	70.39	0	-5.37	0	0	0.11	0	0	0	0	0	0	-45.34	-45.34
Inverter Transformer	MV4-11 T	369269	4908855	2	0	0	39.9	39.9	1	932.65	3.25	125	70.39	0	4.27	0	0	0.38	0	0	0	0	0	0	-35.15	-35.15
Inverter Transformer	MV4-11 T	369269	4908855	2	0	0	45.4	45.4	1	932.65	3.25	250	70.39	0	3.56	0	0	0.97	0	0	0	0	0	0	-29.53	-29.53
Inverter Transformer	MV4-11 T	369269	4908855	2	0	0	48.8	48.8	1	932.65	3.25	500	70.39	0	-0.05	0	0	1.8	0	0	0	0	0	0	-23.34	-23.34
Inverter Transformer	MV4-11 T	369269	4908855	2	0	0	50	50	1	932.65	3.25	1000	70.39	0	-1.52	0	0	3.41	0	0	0	0	0	0	-22.29	-22.29
Inverter Transformer	MV4-11 T	369269	4908855	2	0	0	44.2	44.2	1	932.65	3.25	2000	70.39	0	-1.61	0	0	9.01	0	0	0	0	0	0	-33.6	-33.6
Inverter Transformer	MV4-11 T	369269	4908855	2	0	0	51	51	1	932.65	3.25	4000	70.39	0	-1.61	0	0	30.56	0	0	0	0	0	0	-48.35	-48.35
Inverter Transformer	MV4-11 T	369269	4908855	2	0	0	44.9	44.9	1	932.65	3.25	8000	70.39	0	-1.61	0	0	109.01	0	0	0	0	0	0	-132.9	-132.9
Inverter Transformer	MV4-10 T	369307	4908858	2	0	0	19.8	19.8	1	954.07	3.25	63	70.59	0	-5.39	0	0	0.12	0	0	0	0	0	0	-45.52	-45.52
Inverter Transformer	MV4-10 T	369307	4908858	2	0	0	39.9	39.9	1	954.07	3.25	125	70.59	0	4.3	0	0	0.39	0	0	0	0	0	0	-35.38	-35.38
Inverter Transformer	MV4-10 T	369307	4908858	2	0	0	45.4	45.4	1	954.07	3.25	250	70.59	0	3.56	0	0	1	0	0	0	0	0	0	-29.74	-29.74
Inverter Transformer	MV4-10 T	369307	4908858	2	0	0	48.8	48.8	1	954.07	3.25	500	70.59	0	-0.06	0	0	1.84	0	0	0	0	0	0	-23.57	-23.57
Inverter Transformer	MV4-10 T	369307	4908858	2	0	0	50	50	1	954.07	3.25	1000	70.59	0	-1.52	0	0	3.49	0	0	0	0	0	0	-22.56	-22.56
Inverter Transformer	MV4-10 T	369307	4908858	2	0	0	44.2	44.2	1	954.07	3.25	2000	70.59	0	-1.62	0	0	9.22	0	0	0	0	0	0	-34	-34
Inverter Transformer	MV4-10 T	369307	4908858	2	0	0	51	51	1	954.07	3.25	4000	70.59	0	-1.62	0	0	31.26	0	0	0	0	0	0	-49.24	-49.24
Inverter Transformer	MV4-10 T	369307	4908858	2	0	0	44.9	44.9	1	954.07	3.25	8000	70.59	0	-1.62	0	0	111.51	0	0	0	0	0	0	-135.6	-135.6
Inverter Transformer	MV1-7 T	364919	4905782	2	0	0	42.8	42.8	1	4506.7	3.25	63	84.08	0	-5.87	0	0	0.55	0	0	0	0	0	0	-35.96	-35.96
Inverter Transformer	MV1-7 T	364919	4905782	2	0	0	62.9	62.9	1	4506.7	3.25	125	84.08	0	4.42	0	0	1.85	0	0	0	0	0	0	-27.45	-27.45
Inverter Transformer	MV1-7 T	364919	4905782	2	0	0	56.4	56.4	1	4506.7	3.25	250	84.08	0	3.41	0	0	4.7	0	0	0	0	0	0	-35.79	-35.79
Inverter Transformer	MV1-7 T	364919	4905782	2	0	0	62.8	62.8	1	4506.7	3.25	500	84.08	0	-0.2	0	0	8.69	0	0	0	0	0	0	-29.76	-29.76
Inverter Transformer	MV1-7 T	364919	4905782	2	0	0	54	54	1	4506.7	3.25	1000	84.08	0	-1.67	0	0	16.48	0	0	0	0	0	0	-44.9	-44.9
Inverter Transformer	MV1-7 T	364919	4905782	2	0	0	60.2	60.2	1	4506.7	3.25	2000	84.08	0	-1.76	0	0	43.55	0	0	0	0	0	0	-65.67	-65.67
Inverter Transformer	MV1-7 T	364919	4905782	2	0	0	64	64	1	4506.7	3.25	4000	84.08	0	-1.76	0	0	147.69	0	0	0	0	0	0	-166	-166
Inverter Transformer	MV1-7 T	364919	4905782	2	0	0	56.9	56.9	1	4506.7	3.25	8000	84.08	0	-1.76	0	0	526.76	0	0	0	0	0	0	-552.2	-552.2
Inverter Transformer	MV3-13 T	367958	4907577	2	0	0	19.8	19.8	1	977.94	3.25	63	70.81	0	-5.4	0	0	0.12	0	0	0	0	0	0	-45.72	-45.72
Inverter Transformer	MV3-13 T	367958	4907577	2	0	0	39.9	39.9	1	977.94	3.25	125	70.81	0	4.32	0	0	0.4	0	0	0	0	0	0	-35.63	-35.63
Inverter Transformer	MV3-13 T	367958	4907577	2	0	0	45.4	45.4	1	977.94	3.25	250	70.81	0	3.55	0	0	1.02	0	0	0	0	0	0	-29.98	-29.98
Inverter Transformer	MV3-13 T	367958	4907577	2	0	0	48.8	48.8	1	977.94	3.25	500	70.81	0	-0.06	0	0	1.89	0	0	0	0	0	0	-23.83	-23.83
Inverter Transformer	MV3-13 T	367958	4907577	2	0	0	50	50	1	977.94	3.25	1000	70.81	0	-1.52	0	0	3.58	0	0	0	0	0	0	-22.86	-22.86
Inverter Transformer	MV3-13 T	367958	4907577	2	0	0	44.2	44.2	1	977.94	3.25	2000	70.81	0	-1.62	0	0	9.45	0	0	0	0	0	0	-34.44	-34.44
Inverter Transformer	MV3-13 T	367958	4907577	2	0	0	51	51	1	977.94	3.25	4000	70.81	0	-1.62	0	0	32.05	0	0	0	0	0	0	-50.23	-50.23
Inverter Transformer	MV3-13 T	367958	4907577	2	0	0	44.9	44.9	1	977.94	3.25	8000	70.81	0	-1.62	0	0	114.3	0	0	0	0	0	0	-138.6	-138.6
Inverter Transformer	MV1-10 T	365010	4905564	2	0	0	42.8	42.8	1	4543.1	3.25	63	84.15	0	-5.87	0	0	0.55	0	0	0	0	0	0	-36.03	-36.03
Inverter Transformer	MV1-10 T	365010	4905564	2	0	0	62.9	62.9	1	4543.1	3.25	125	84.15	0	4.42	0	0	1.87	0	0	0	0	0	0	-27.53	-27.53
Inverter Transformer	MV1-10 T	365010	4905564	2	0	0	56.4	56.4	1	4543.1	3.25	250	84.15	0	3.41	0	0	4.74	0	0	0	0	0	0	-35.9	-35.9
Inverter Transformer	MV1-10 T	365010	4905564	2	0	0	62.8	62.8	1	4543.1	3.25	500	84.15	0	-0.2	0	0	8.76	0	0	0	0	0	0	-29.9	-29.9

Inverter Transformer	MV1-10 T	365010	4905564	2	0	0	54	54	1	4543.1	3.25	1000	84.15	0	-1.67	0	0	16.62	0	0	0	0	0	0	-45.1	-45.1
Inverter Transformer	MV1-10 T	365010	4905564	2	0	0	60.2	60.2	1	4543.1	3.25	2000	84.15	0	-1.76	0	0	43.9	0	0	0	0	0	0	-66.09	-66.09
Inverter Transformer	MV1-10 T	365010	4905564	2	0	0	64	64	1	4543.1	3.25	4000	84.15	0	-1.76	0	0	148.88	0	0	0	0	0	0	-167.3	-167.3
Inverter Transformer	MV1-10 T	365010	4905564	2	0	0	56.9	56.9	1	4543.1	3.25	8000	84.15	0	-1.76	0	0	531	0	0	0	0	0	0	-556.5	-556.5
Inverter Transformer	MV4-7 T	369040	4909001	2	0	0	19.8	19.8	1	988.57	3.25	63	70.9	0	-5.41	0	0	0.12	0	0	0	0	0	0	-45.81	-45.81
Inverter Transformer	MV4-7 T	369040	4909001	2	0	0	39.9	39.9	1	988.57	3.25	125	70.9	0	4.34	0	0	0.41	0	0	0	0	0	0	-35.74	-35.74
Inverter Transformer	MV4-7 T	369040	4909001	2	0	0	45.4	45.4	1	988.57	3.25	250	70.9	0	3.55	0	0	1.03	0	0	0	0	0	0	-30.08	-30.08
Inverter Transformer	MV4-7 T	369040	4909001	2	0	0	48.8	48.8	1	988.57	3.25	500	70.9	0	-0.07	0	0	1.91	0	0	0	0	0	0	-23.94	-23.94
Inverter Transformer	MV4-7 T	369040	4909001	2	0	0	50	50	1	988.57	3.25	1000	70.9	0	-1.53	0	0	3.62	0	0	0	0	0	0	-22.99	-22.99
Inverter Transformer	MV4-7 T	369040	4909001	2	0	0	44.2	44.2	1	988.57	3.25	2000	70.9	0	-1.62	0	0	9.55	0	0	0	0	0	0	-34.63	-34.63
Inverter Transformer	MV4-7 T	369040	4909001	2	0	0	51	51	1	988.57	3.25	4000	70.9	0	-1.62	0	0	32.4	0	0	0	0	0	0	-50.67	-50.67
Inverter Transformer	MV4-7 T	369040	4909001	2	0	0	44.9	44.9	1	988.57	3.25	8000	70.9	0	-1.62	0	0	115.55	0	0	0	0	0	0	-139.9	-139.9
Inverter Transformer	MV1-14 T	365157	4905049	2	0	0	42.8	42.8	1	4727.9	3.25	63	84.49	0	-5.88	0	0	0.58	0	0	0	0	0	0	-36.39	-36.39
Inverter Transformer	MV1-14 T	365157	4905049	2	0	0	62.9	62.9	1	4727.9	3.25	125	84.49	0	4.42	0	0	1.94	0	0	0	0	0	0	-27.95	-27.95
Inverter Transformer	MV1-14 T	365157	4905049	2	0	0	56.4	56.4	1	4727.9	3.25	250	84.49	0	3.41	0	0	4.93	0	0	0	0	0	0	-36.44	-36.44
Inverter Transformer	MV1-14 T	365157	4905049	2	0	0	62.8	62.8	1	4727.9	3.25	500	84.49	0	-0.21	0	0	9.11	0	0	0	0	0	0	-30.6	-30.6
Inverter Transformer	MV1-14 T	365157	4905049	2	0	0	54	54	1	4727.9	3.25	1000	84.49	0	-1.67	0	0	17.29	0	0	0	0	0	0	-46.12	-46.12
Inverter Transformer	MV1-14 T	365157	4905049	2	0	0	60.2	60.2	1	4727.9	3.25	2000	84.49	0	-1.76	0	0	45.69	0	0	0	0	0	0	-68.22	-68.22
Inverter Transformer	MV1-14 T	365157	4905049	2	0	0	64	64	1	4727.9	3.25	4000	84.49	0	-1.76	0	0	154.93	0	0	0	0	0	0	-173.7	-173.7
Inverter Transformer	MV1-14 T	365157	4905049	2	0	0	56.9	56.9	1	4727.9	3.25	8000	84.49	0	-1.76	0	0	552.61	0	0	0	0	0	0	-578.4	-578.4
Inverter Transformer	MV4-8 T	369262	4909001	2	0	0	19.8	19.8	1	1060.1	3.25	63	71.51	0	-5.45	0	0	0.13	0	0	0	0	0	0	-46.39	-46.39
Inverter Transformer	MV4-8 T	369262	4909001	2	0	0	39.9	39.9	1	1060.1	3.25	125	71.51	0	4.4	0	0	0.44	0	0	0	0	0	0	-36.44	-36.44
Inverter Transformer	MV4-8 T	369262	4909001	2	0	0	45.4	45.4	1	1060.1	3.25	250	71.51	0	3.54	0	0	1.11	0	0	0	0	0	0	-30.75	-30.75
Inverter Transformer	MV4-8 T	369262	4909001	2	0	0	48.8	48.8	1	1060.1	3.25	500	71.51	0	-0.08	0	0	2.04	0	0	0	0	0	0	-24.67	-24.67
Inverter Transformer	MV4-8 T	369262	4909001	2	0	0	50	50	1	1060.1	3.25	1000	71.51	0	-1.54	0	0	3.88	0	0	0	0	0	0	-23.85	-23.85
Inverter Transformer	MV4-8 T	369262	4909001	2	0	0	44.2	44.2	1	1060.1	3.25	2000	71.51	0	-1.63	0	0	10.24	0	0	0	0	0	0	-35.92	-35.92
Inverter Transformer	MV4-8 T	369262	4909001	2	0	0	51	51	1	1060.1	3.25	4000	71.51	0	-1.63	0	0	34.74	0	0	0	0	0	0	-53.61	-53.61
Inverter Transformer	MV4-8 T	369262	4909001	2	0	0	44.9	44.9	1	1060.1	3.25	8000	71.51	0	-1.63	0	0	123.91	0	0	0	0	0	0	-148.9	-148.9
Inverter Transformer	MV4-9 T	369284	4909001	2	0	0	19.8	19.8	1	1069.4	3.25	63	71.58	0	-5.45	0	0	0.13	0	0	0	0	0	0	-46.46	-46.46
Inverter Transformer	MV4-9 T	369284	4909001	2	0	0	39.9	39.9	1	1069.4	3.25	125	71.58	0	4.4	0	0	0.44	0	0	0	0	0	0	-36.53	-36.53
Inverter Transformer	MV4-9 T	369284	4909001	2	0	0	45.4	45.4	1	1069.4	3.25	250	71.58	0	3.54	0	0	1.12	0	0	0	0	0	0	-30.84	-30.84
Inverter Transformer	MV4-9 T	369284	4909001	2	0	0	48.8	48.8	1	1069.4	3.25	500	71.58	0	-0.08	0	0	2.06	0	0	0	0	0	0	-24.77	-24.77
Inverter Transformer	MV4-9 T	369284	4909001	2	0	0	50	50	1	1069.4	3.25	1000	71.58	0	-1.54	0	0	3.91	0	0	0	0	0	0	-23.95	-23.95
Inverter Transformer	MV4-9 T	369284	4909001	2	0	0	44.2	44.2	1	1069.4	3.25	2000	71.58	0	-1.64	0	0	10.33	0	0	0	0	0	0	-36.08	-36.08
Inverter Transformer	MV4-9 T	369284	4909001	2	0	0	51	51	1	1069.4	3.25	4000	71.58	0	-1.64	0	0	35.05	0	0	0	0	0	0	-53.99	-53.99
Inverter Transformer	MV4-9 T	369284	4909001	2	0	0	44.9	44.9	1	1069.4	3.25	8000	71.58	0	-1.64	0	0	125	0	0	0	0	0	0	-150	-150
Inverter Transformer	MV1-13 T	364725	4905241	2	0	0	42.8	42.8	1	4959.3	3.25	63	84.91	0	-5.88	0	0	0.6	0	0	0	0	0	0	-36.83	-36.83
Inverter Transformer	MV1-13 T	364725	4905241	2	0	0	62.9	62.9	1	4959.3	3.25	125	84.91	0	4.42	0	0	2.04	0	0	0	0	0	0	-28.46	-28.46
Inverter Transformer	MV1-13 T	364725	4905241	2	0	0	56.4	56.4	1	4959.3	3.25	250	84.91	0	3.41	0	0	5.17	0	0	0	0	0	0	-37.09	-37.09
Inverter Transformer	MV1-13 T	364725	4905241	2	0	0	62.8	62.8	1	4959.3	3.25	500	84.91	0	-0.21	0	0	9.56	0	0	0	0	0	0	-31.46	-31.46
Inverter Transformer	MV1-13 T	364725	4905241	2	0	0	54	54	1	4959.3	3.25	1000	84.91	0	-1.67	0	0	18.14	0	0	0	0	0	0	-47.38	-47.38
Inverter Transformer	MV1-13 T	364725	4905241	2	0	0	60.2	60.2	1	4959.3	3.25	2000	84.91	0	-1.76	0	0	47.93	0	0	0	0	0	0	-70.87	-70.87
Inverter Transformer	MV1-13 T	364725	4905241	2	0	0	64	64	1	4959.3	3.25	4000	84.91	0	-1.76	0	0	162.52	0	0	0	0	0	0	-181.7	-181.7
Inverter Transformer	MV1-13 T	364725	4905241	2	0	0	56.9	56.9	1	4959.3	3.25	8000	84.91	0	-1.76	0	0	579.65	0	0	0	0	0	0	-605.9	-605.9
Inverter Transformer	MV4-4 T	369033	4909199	2	0	0	19.8	19.8	1	1181.2	3.25	63	72.45	0	-5.5	0	0	0.14	0	0	0	0	0	0	-47.29	-47.29
Inverter Transformer	MV4-4 T	369033	4909199	2	0	0	39.9	39.9	1	1181.2	3.25	125	72.45	0	4.46	0	0	0.49	0	0	0	0	0	0	-37.49	-37.49
Inverter Transformer	MV4-4 T	369033	4909199	2	0	0	45.4	45.4	1	1181.2	3.25	250	72.45	0	3.52	0	0	1.23	0	0	0	0	0	0	-31.8	-31.8
Inverter Transformer	MV4-4 T	369033	4909199	2	0	0	48.8	48.8	1	1181.2	3.25	500	72.45	0	-0.09	0	0	2.28	0	0	0	0	0	0	-25.83	-25.83
Inverter Transformer	MV4-4 T	369033	4909199	2	0	0	50	50	1	1181.2	3.25	1000	72.45	0	-1.56	0	0	4.32	0	0	0	0	0	0	-25.21	-25.21
Inverter Transformer	MV4-4 T	369033	4909199	2	0	0	44.2	44.2	1	1181.2	3.25	2000	72.45	0	-1.65	0	0	11.41	0	0	0	0	0	0	-38.01	-38.01
Inverter Transformer	MV4-4 T	369033	4909199	2	0	0	51	51	1	1181.2	3.25	4000	72.45	0	-1.65	0	0	38.71	0	0	0	0	0	0	-58.5	-58.5
Inverter Transformer	MV4-4 T	369033	4909199	2	0	0	44.9	44.9	1	1181.2	3.25	8000	72.45	0	-1.65	0	0	138.06	0	0	0	0	0	0	-164	-164
Inverter Transformer	MV3-12 T	367674	4907594	2	0	0	19.8	19.8	1	1229.6	3.25	63	72.8	0	-5.52	0	0	0.15	0	0	0	0	0	0	-47.62	-47.62
Inverter Transformer	MV3-12 T	367674	4907594	2	0	0	39.9	39.9	1	1229.6	3.25	125	72.8	0	4.47	0	0	0.51	0	0	0	0	0	0	-37.87	-37.87
Inverter Transformer	MV3-12 T	367674	4907594	2	0	0	45.4	45.4	1	1229.6	3.25	250	72.8	0	3.52	0	0	1.28	0	0	0	0	0	0	-32.19	-32.19
Inverter Transformer	MV3-12 T	367674	4907594	2	0	0	48.8	48.8	1	1229.6	3.25	500	72.8	0	-0.1	0	0	2.37	0	0	0	0	0	0	-26.27	-26.27
Inverter Transformer	MV3-12 T	367674	4907594	2	0	0	50	50	1	1229.6	3.25	1000	72.8	0	-1.56	0	0	4.5	0	0	0	0	0	0	-25.73	-25.73
Inverter Transformer	MV3-12 T	367674	4907594	2	0	0	44.2	44.2	1	1229.6	3.25	2000	72.8	0	-1.66	0	0	11.88	0	0	0	0	0	0	-38.82	-38.82
Inverter Transformer	MV3-12 T	367674	4907594	2	0	0	51	51	1	1229.6	3.25	4000	72.8	0	-1.66	0	0	40.29	0	0	0	0	0	0	-60.43	-60.43
Inverter Transformer	MV3-12 T	367674	4907594	2	0	0	44.9	44.9	1	1229.6	3.25	8000	72.8	0	-1.66	0	0	143.72	0	0	0	0	0	0	-170	-170
Inverter Transformer	MV4-6 T	369249	4909192	2	0	0	19.8	19.8	1	1231.8	3.25	63	72.81	0	-5.53	0	0	0.15	0	0	0	0	0	0	-47.64	-47.64
Inverter Transformer	MV4-6 T	369249	4909192	2	0	0	39.9	39.9	1	1231.8	3.25	125	72.81	0	4.47	0	0	0.51	0	0	0	0	0	0	-37.89	-37.89
Inverter Transformer	MV4-6 T	369249	4909192	2	0	0	45.4	45.4	1	1231.8	3.25	250	72.81	0	3.52	0	0	1.29	0	0	0	0	0	0	-32.21	-32.21
Inverter Transformer	MV4-6 T	369249	4909192	2	0	0	48.8	48.8	1	1231.8	3.25	500	72.81	0	-0.1	0	0	2.37	0	0	0	0	0	0	-26.28	-26.28
Inverter Transformer	MV4-6 T	369249	4909192	2	0	0	50	50	1	1231.8	3.25	1000	72.81	0	-1.56	0	0	4.51	0	0	0	0	0	0	-25.75	-25.75
Inverter Transformer	MV4-6 T	369249	4909192	2	0	0	44.2	44.2	1	1231.8	3.25	2000	72.81	0	-1.66	0	0	11.9	0	0	0	0	0	0	-38.86	-38.86
Inverter Transformer	MV4-6 T	369249	4909192	2	0	0	51	51	1	1231.8	3.25	4000	72.81	0	-1.66	0	0	40.36	0	0	0	0	0	0	-60.52	-60.52
Inverter Transformer	MV4-6 T	369249	4909192	2	0	0	44.9	44.9	1	1231.8	3.25	8000	72.81	0	-1.66	0	0	143.97	0	0	0	0	0	0	-170.2	-170.2
Inverter Transformer	MV3-18 T	367757	4907412	2	0	0	19.8	19.8	1	1234	3.25	63	72.83	0	-5.53	0	0	0.15	0	0	0	0	0	0	-47.65	-47.65

Inverter Transformer	MV3-18 T	367757	4907412	2	0	0	39.9	39.9	1	1234	3.25	125	72.83	0	4.47	0	0	0.51	0	0	0	0	0	0	-37.91	-37.91
Inverter Transformer	MV3-18 T	367757	4907412	2	0	0	45.4	45.4	1	1234	3.25	250	72.83	0	3.52	0	0	1.29	0	0	0	0	0	0	-32.23	-32.23
Inverter Transformer	MV3-18 T	367757	4907412	2	0	0	48.8	48.8	1	1234	3.25	500	72.83	0	-0.1	0	0	2.38	0	0	0	0	0	0	-26.3	-26.3
Inverter Transformer	MV3-18 T	367757	4907412	2	0	0	50	50	1	1234	3.25	1000	72.83	0	-1.56	0	0	4.51	0	0	0	0	0	0	-25.78	-25.78
Inverter Transformer	MV3-18 T	367757	4907412	2	0	0	44.2	44.2	1	1234	3.25	2000	72.83	0	-1.66	0	0	11.93	0	0	0	0	0	0	-38.89	-38.89
Inverter Transformer	MV3-18 T	367757	4907412	2	0	0	51	51	1	1234	3.25	4000	72.83	0	-1.66	0	0	40.44	0	0	0	0	0	0	-60.61	-60.61
Inverter Transformer	MV3-18 T	367757	4907412	2	0	0	44.9	44.9	1	1234	3.25	8000	72.83	0	-1.66	0	0	144.23	0	0	0	0	0	0	-170.5	-170.5
Inverter Transformer	MV4-5 T	369283	4909199	2	0	0	19.8	19.8	1	1250.5	3.25	63	72.94	0	-5.53	0	0	0.15	0	0	0	0	0	0	-47.76	-47.76
Inverter Transformer	MV4-5 T	369283	4909199	2	0	0	39.9	39.9	1	1250.5	3.25	125	72.94	0	4.48	0	0	0.51	0	0	0	0	0	0	-38.03	-38.03
Inverter Transformer	MV4-5 T	369283	4909199	2	0	0	45.4	45.4	1	1250.5	3.25	250	72.94	0	3.51	0	0	1.3	0	0	0	0	0	0	-32.36	-32.36
Inverter Transformer	MV4-5 T	369283	4909199	2	0	0	48.8	48.8	1	1250.5	3.25	500	72.94	0	-0.1	0	0	2.41	0	0	0	0	0	0	-26.45	-26.45
Inverter Transformer	MV4-5 T	369283	4909199	2	0	0	50	50	1	1250.5	3.25	1000	72.94	0	-1.56	0	0	4.57	0	0	0	0	0	0	-25.95	-25.95
Inverter Transformer	MV4-5 T	369283	4909199	2	0	0	44.2	44.2	1	1250.5	3.25	2000	72.94	0	-1.66	0	0	12.08	0	0	0	0	0	0	-39.17	-39.17
Inverter Transformer	MV4-5 T	369283	4909199	2	0	0	51	51	1	1250.5	3.25	4000	72.94	0	-1.66	0	0	40.98	0	0	0	0	0	0	-61.26	-61.26
Inverter Transformer	MV4-5 T	369283	4909199	2	0	0	44.9	44.9	1	1250.5	3.25	8000	72.94	0	-1.66	0	0	146.16	0	0	0	0	0	0	-172.5	-172.5
Inverter Transformer	MV5-6 T	369987	4908507	2	0	0	19.8	19.8	1	1257.2	3.25	63	72.99	0	-5.53	0	0	0.15	0	0	0	0	0	0	-47.81	-47.81
Inverter Transformer	MV5-6 T	369987	4908507	2	0	0	39.9	39.9	1	1257.2	3.25	125	72.99	0	4.48	0	0	0.52	0	0	0	0	0	0	-38.08	-38.08
Inverter Transformer	MV5-6 T	369987	4908507	2	0	0	45.4	45.4	1	1257.2	3.25	250	72.99	0	3.51	0	0	1.31	0	0	0	0	0	0	-32.41	-32.41
Inverter Transformer	MV5-6 T	369987	4908507	2	0	0	48.8	48.8	1	1257.2	3.25	500	72.99	0	-0.1	0	0	2.42	0	0	0	0	0	0	-26.51	-26.51
Inverter Transformer	MV5-6 T	369987	4908507	2	0	0	50	50	1	1257.2	3.25	1000	72.99	0	-1.56	0	0	4.6	0	0	0	0	0	0	-26.02	-26.02
Inverter Transformer	MV5-6 T	369987	4908507	2	0	0	44.2	44.2	1	1257.2	3.25	2000	72.99	0	-1.66	0	0	12.15	0	0	0	0	0	0	-39.28	-39.28
Inverter Transformer	MV5-6 T	369987	4908507	2	0	0	51	51	1	1257.2	3.25	4000	72.99	0	-1.66	0	0	41.2	0	0	0	0	0	0	-61.52	-61.52
Inverter Transformer	MV5-6 T	369987	4908507	2	0	0	44.9	44.9	1	1257.2	3.25	8000	72.99	0	-1.66	0	0	146.94	0	0	0	0	0	0	-173.4	-173.4
Inverter Transformer	MV5-5 T	370021	4908690	2	0	0	19.8	19.8	1	1366.2	3.25	63	73.71	0	-5.57	0	0	0.17	0	0	0	0	0	0	-48.5	-48.5
Inverter Transformer	MV5-5 T	370021	4908690	2	0	0	39.9	39.9	1	1366.2	3.25	125	73.71	0	4.49	0	0	0.56	0	0	0	0	0	0	-38.86	-38.86
Inverter Transformer	MV5-5 T	370021	4908690	2	0	0	45.4	45.4	1	1366.2	3.25	250	73.71	0	3.5	0	0	1.43	0	0	0	0	0	0	-33.24	-33.24
Inverter Transformer	MV5-5 T	370021	4908690	2	0	0	48.8	48.8	1	1366.2	3.25	500	73.71	0	-0.11	0	0	2.63	0	0	0	0	0	0	-27.43	-27.43
Inverter Transformer	MV5-5 T	370021	4908690	2	0	0	50	50	1	1366.2	3.25	1000	73.71	0	-1.58	0	0	5	0	0	0	0	0	0	-27.13	-27.13
Inverter Transformer	MV5-5 T	370021	4908690	2	0	0	44.2	44.2	1	1366.2	3.25	2000	73.71	0	-1.67	0	0	13.2	0	0	0	0	0	0	-41.04	-41.04
Inverter Transformer	MV5-5 T	370021	4908690	2	0	0	51	51	1	1366.2	3.25	4000	73.71	0	-1.67	0	0	44.77	0	0	0	0	0	0	-65.81	-65.81
Inverter Transformer	MV5-5 T	370021	4908690	2	0	0	44.9	44.9	1	1366.2	3.25	8000	73.71	0	-1.67	0	0	159.68	0	0	0	0	0	0	-186.8	-186.8
Inverter Transformer	MV4-1 T	369017	4909397	2	0	0	19.8	19.8	1	1374.1	3.25	63	73.76	0	-5.57	0	0	0.17	0	0	0	0	0	0	-48.55	-48.55
Inverter Transformer	MV4-1 T	369017	4909397	2	0	0	39.9	39.9	1	1374.1	3.25	125	73.76	0	4.49	0	0	0.56	0	0	0	0	0	0	-38.91	-38.91
Inverter Transformer	MV4-1 T	369017	4909397	2	0	0	45.4	45.4	1	1374.1	3.25	250	73.76	0	3.5	0	0	1.43	0	0	0	0	0	0	-33.29	-33.29
Inverter Transformer	MV4-1 T	369017	4909397	2	0	0	48.8	48.8	1	1374.1	3.25	500	73.76	0	-0.11	0	0	2.65	0	0	0	0	0	0	-27.49	-27.49
Inverter Transformer	MV4-1 T	369017	4909397	2	0	0	50	50	1	1374.1	3.25	1000	73.76	0	-1.58	0	0	5.03	0	0	0	0	0	0	-27.21	-27.21
Inverter Transformer	MV4-1 T	369017	4909397	2	0	0	44.2	44.2	1	1374.1	3.25	2000	73.76	0	-1.67	0	0	13.28	0	0	0	0	0	0	-41.17	-41.17
Inverter Transformer	MV4-1 T	369017	4909397	2	0	0	51	51	1	1374.1	3.25	4000	73.76	0	-1.67	0	0	45.03	0	0	0	0	0	0	-66.12	-66.12
Inverter Transformer	MV4-1 T	369017	4909397	2	0	0	44.9	44.9	1	1374.1	3.25	8000	73.76	0	-1.67	0	0	160.6	0	0	0	0	0	0	-187.8	-187.8
Inverter Transformer	MV4-3 T	369234	4909397	2	0	0	19.8	19.8	1	1421.3	3.25	63	74.05	0	-5.59	0	0	0.17	0	0	0	0	0	0	-48.84	-48.84
Inverter Transformer	MV4-3 T	369234	4909397	2	0	0	39.9	39.9	1	1421.3	3.25	125	74.05	0	4.49	0	0	0.58	0	0	0	0	0	0	-39.23	-39.23
Inverter Transformer	MV4-3 T	369234	4909397	2	0	0	45.4	45.4	1	1421.3	3.25	250	74.05	0	3.5	0	0	1.48	0	0	0	0	0	0	-33.63	-33.63
Inverter Transformer	MV4-3 T	369234	4909397	2	0	0	48.8	48.8	1	1421.3	3.25	500	74.05	0	-0.12	0	0	2.74	0	0	0	0	0	0	-27.87	-27.87
Inverter Transformer	MV4-3 T	369234	4909397	2	0	0	50	50	1	1421.3	3.25	1000	74.05	0	-1.58	0	0	5.2	0	0	0	0	0	0	-27.67	-27.67
Inverter Transformer	MV4-3 T	369234	4909397	2	0	0	44.2	44.2	1	1421.3	3.25	2000	74.05	0	-1.68	0	0	13.74	0	0	0	0	0	0	-41.91	-41.91
Inverter Transformer	MV4-3 T	369234	4909397	2	0	0	51	51	1	1421.3	3.25	4000	74.05	0	-1.68	0	0	46.58	0	0	0	0	0	0	-67.95	-67.95
Inverter Transformer	MV4-3 T	369234	4909397	2	0	0	44.9	44.9	1	1421.3	3.25	8000	74.05	0	-1.68	0	0	166.13	0	0	0	0	0	0	-193.6	-193.6
Inverter Transformer	MV4-2 T	369267	4909397	2	0	0	19.8	19.8	1	1431.3	3.25	63	74.11	0	-5.59	0	0	0.17	0	0	0	0	0	0	-48.9	-48.9
Inverter Transformer	MV4-2 T	369267	4909397	2	0	0	39.9	39.9	1	1431.3	3.25	125	74.11	0	4.49	0	0	0.59	0	0	0	0	0	0	-39.29	-39.29
Inverter Transformer	MV4-2 T	369267	4909397	2	0	0	45.4	45.4	1	1431.3	3.25	250	74.11	0	3.5	0	0	1.49	0	0	0	0	0	0	-33.7	-33.7
Inverter Transformer	MV4-2 T	369267	4909397	2	0	0	48.8	48.8	1	1431.3	3.25	500	74.11	0	-0.12	0	0	2.76	0	0	0	0	0	0	-27.95	-27.95
Inverter Transformer	MV4-2 T	369267	4909397	2	0	0	50	50	1	1431.3	3.25	1000	74.11	0	-1.58	0	0	5.24	0	0	0	0	0	0	-27.77	-27.77
Inverter Transformer	MV4-2 T	369267	4909397	2	0	0	44.2	44.2	1	1431.3	3.25	2000	74.11	0	-1.68	0	0	13.83	0	0	0	0	0	0	-42.07	-42.07
Inverter Transformer	MV4-2 T	369267	4909397	2	0	0	51	51	1	1431.3	3.25	4000	74.11	0	-1.68	0	0	46.9	0	0	0	0	0	0	-68.34	-68.34
Inverter Transformer	MV4-2 T	369267	4909397	2	0	0	44.9	44.9	1	1431.3	3.25	8000	74.11	0	-1.68	0	0	167.29	0	0	0	0	0	0	-194.8	-194.8
Inverter Transformer	MV5-2 T	370011	4908853	2	0	0	19.8	19.8	1	1442.9	3.25	63	74.18	0	-5.59	0	0	0.18	0	0	0	0	0	0	-48.97	-48.97
Inverter Transformer	MV5-2 T	370011	4908853	2	0	0	39.9	39.9	1	1442.9	3.25	125	74.18	0	4.49	0	0	0.59	0	0	0	0	0	0	-39.37	-39.37
Inverter Transformer	MV5-2 T	370011	4908853	2	0	0	45.4	45.4	1	1442.9	3.25	250	74.18	0	3.49	0	0	1.51	0	0	0	0	0	0	-33.78	-33.78
Inverter Transformer	MV5-2 T	370011	4908853	2	0	0	48.8	48.8	1	1442.9	3.25	500	74.18	0	-0.12	0	0	2.78	0	0	0	0	0	0	-28.05	-28.05
Inverter Transformer	MV5-2 T	370011	4908853	2	0	0	50	50	1	1442.9	3.25	1000	74.18	0	-1.58	0	0	5.28	0	0	0	0	0	0	-27.88	-27.88
Inverter Transformer	MV5-2 T	370011	4908853	2	0	0	44.2	44.2	1	1442.9	3.25	2000	74.18	0	-1.68	0	0	13.94	0	0	0	0	0	0	-42.25	-42.25
Inverter Transformer	MV5-2 T	370011	4908853	2	0	0	51	51	1	1442.9	3.25	4000	74.18	0	-1.68	0	0	47.28	0	0	0	0	0	0	-68.79	-68.79
Inverter Transformer	MV5-2 T	370011	4908853	2	0	0	44.9	44.9	1	1442.9	3.25	8000	74.18	0	-1.68	0	0	168.65	0	0	0	0	0	0	-196.3	-196.3
Inverter Transformer	MV6-2 T	370091	4907339	2	0	0	19.8	19.8	1	1449.2	3.25	63	74.22	0	-5.6	0	0	0.18	0	0	0	0	0	0	-49	-49
Inverter Transformer	MV6-2 T	370091	4907339	2	0	0	39.9	39.9	1	1449.2	3.25	125	74.22	0	4.49	0	0	0.6	0	0	0	0	0	0	-39.41	-39.41
Inverter Transformer	MV6-2 T	370091	4907339	2	0	0	45.4	45.4	1	1449.2	3.25	250	74.22	0	3.49	0	0	1.51	0	0	0	0	0	0	-33.83	-33.83
Inverter Transformer	MV6-2 T	370091	4907339	2	0	0	48.8	48.8	1	1449.2	3.25	500	74.22	0	-0.12	0	0	2.79	0	0	0	0	0	0	-28.09	-28.09
Inverter Transformer	MV6-2 T	370091	4907339	2	0	0	50	50	1	1449.2	3.25	1000	74.22	0	-1.58	0	0	5.3	0	0	0	0	0	0	-27.94	-27.94
Inverter Transformer	MV6-2 T	370091	4907339	2	0	0	44.2	44.2	1	1449.2	3.25	2000	74.22	0	-1.68	0	0	14	0	0	0	0	0	0	-42.35	-42.35

Inverter Transformer	MV6-2 T	370091	4907339	2	0	0	51	51	1	1449.2	3.25	4000	74.22	0	-1.68	0	0	47.49	0	0	0	0	0	0	-69.03	-69.03
Inverter Transformer	MV6-2 T	370091	4907339	2	0	0	44.9	44.9	1	1449.2	3.25	8000	74.22	0	-1.68	0	0	169.38	0	0	0	0	0	0	-197	-197
Inverter Transformer	MV5-1 T	370015	4909142	2	0	0	19.8	19.8	1	1626.9	3.25	63	75.23	0	-5.64	0	0	0.2	0	0	0	0	0	0	-49.98	-49.98
Inverter Transformer	MV5-1 T	370015	4909142	2	0	0	39.9	39.9	1	1626.9	3.25	125	75.23	0	4.49	0	0	0.67	0	0	0	0	0	0	-40.48	-40.48
Inverter Transformer	MV5-1 T	370015	4909142	2	0	0	45.4	45.4	1	1626.9	3.25	250	75.23	0	3.48	0	0	1.7	0	0	0	0	0	0	-35.01	-35.01
Inverter Transformer	MV5-1 T	370015	4909142	2	0	0	48.8	48.8	1	1626.9	3.25	500	75.23	0	-0.13	0	0	3.14	0	0	0	0	0	0	-29.43	-29.43
Inverter Transformer	MV5-1 T	370015	4909142	2	0	0	50	50	1	1626.9	3.25	1000	75.23	0	-1.6	0	0	5.95	0	0	0	0	0	0	-29.58	-29.58
Inverter Transformer	MV5-1 T	370015	4909142	2	0	0	44.2	44.2	1	1626.9	3.25	2000	75.23	0	-1.69	0	0	15.72	0	0	0	0	0	0	-45.06	-45.06
Inverter Transformer	MV5-1 T	370015	4909142	2	0	0	51	51	1	1626.9	3.25	4000	75.23	0	-1.69	0	0	53.31	0	0	0	0	0	0	-75.85	-75.85
Inverter Transformer	MV5-1 T	370015	4909142	2	0	0	44.9	44.9	1	1626.9	3.25	8000	75.23	0	-1.69	0	0	190.15	0	0	0	0	0	0	-218.8	-218.8
Inverter Transformer	MV5-3 T	370237	4908851	2	0	0	19.8	19.8	1	1633.3	3.25	63	75.26	0	-5.64	0	0	0.2	0	0	0	0	0	0	-50.02	-50.02
Inverter Transformer	MV5-3 T	370237	4908851	2	0	0	39.9	39.9	1	1633.3	3.25	125	75.26	0	4.49	0	0	0.67	0	0	0	0	0	0	-40.52	-40.52
Inverter Transformer	MV5-3 T	370237	4908851	2	0	0	45.4	45.4	1	1633.3	3.25	250	75.26	0	3.48	0	0	1.7	0	0	0	0	0	0	-35.05	-35.05
Inverter Transformer	MV5-3 T	370237	4908851	2	0	0	48.8	48.8	1	1633.3	3.25	500	75.26	0	-0.14	0	0	3.15	0	0	0	0	0	0	-29.47	-29.47
Inverter Transformer	MV5-3 T	370237	4908851	2	0	0	50	50	1	1633.3	3.25	1000	75.26	0	-1.6	0	0	5.97	0	0	0	0	0	0	-29.64	-29.64
Inverter Transformer	MV5-3 T	370237	4908851	2	0	0	44.2	44.2	1	1633.3	3.25	2000	75.26	0	-1.69	0	0	15.78	0	0	0	0	0	0	-45.15	-45.15
Inverter Transformer	MV5-3 T	370237	4908851	2	0	0	51	51	1	1633.3	3.25	4000	75.26	0	-1.69	0	0	53.52	0	0	0	0	0	0	-76.09	-76.09
Inverter Transformer	MV5-3 T	370237	4908851	2	0	0	44.9	44.9	1	1633.3	3.25	8000	75.26	0	-1.69	0	0	190.9	0	0	0	0	0	0	-219.6	-219.6
Inverter Transformer	MV6-3 T	370202	4907140	2	0	0	19.8	19.8	1	1646.8	3.25	63	75.33	0	-5.64	0	0	0.2	0	0	0	0	0	0	-50.09	-50.09
Inverter Transformer	MV6-3 T	370202	4907140	2	0	0	39.9	39.9	1	1646.8	3.25	125	75.33	0	4.48	0	0	0.68	0	0	0	0	0	0	-40.59	-40.59
Inverter Transformer	MV6-3 T	370202	4907140	2	0	0	45.4	45.4	1	1646.8	3.25	250	75.33	0	3.48	0	0	1.72	0	0	0	0	0	0	-35.13	-35.13
Inverter Transformer	MV6-3 T	370202	4907140	2	0	0	48.8	48.8	1	1646.8	3.25	500	75.33	0	-0.14	0	0	3.17	0	0	0	0	0	0	-29.57	-29.57
Inverter Transformer	MV6-3 T	370202	4907140	2	0	0	50	50	1	1646.8	3.25	1000	75.33	0	-1.6	0	0	6.02	0	0	0	0	0	0	-29.76	-29.76
Inverter Transformer	MV6-3 T	370202	4907140	2	0	0	44.2	44.2	1	1646.8	3.25	2000	75.33	0	-1.69	0	0	15.91	0	0	0	0	0	0	-45.35	-45.35
Inverter Transformer	MV6-3 T	370202	4907140	2	0	0	51	51	1	1646.8	3.25	4000	75.33	0	-1.69	0	0	53.96	0	0	0	0	0	0	-76.6	-76.6
Inverter Transformer	MV6-3 T	370202	4907140	2	0	0	44.9	44.9	1	1646.8	3.25	8000	75.33	0	-1.69	0	0	192.48	0	0	0	0	0	0	-221.2	-221.2
Inverter Transformer	MV5-4 T	370330	4908707	2	0	0	19.8	19.8	1	1651.1	3.25	63	75.36	0	-5.65	0	0	0.2	0	0	0	0	0	0	-50.11	-50.11
Inverter Transformer	MV5-4 T	370330	4908707	2	0	0	39.9	39.9	1	1651.1	3.25	125	75.36	0	4.48	0	0	0.68	0	0	0	0	0	0	-40.62	-40.62
Inverter Transformer	MV5-4 T	370330	4908707	2	0	0	45.4	45.4	1	1651.1	3.25	250	75.36	0	3.48	0	0	1.72	0	0	0	0	0	0	-35.16	-35.16
Inverter Transformer	MV5-4 T	370330	4908707	2	0	0	48.8	48.8	1	1651.1	3.25	500	75.36	0	-0.14	0	0	3.18	0	0	0	0	0	0	-29.6	-29.6
Inverter Transformer	MV5-4 T	370330	4908707	2	0	0	50	50	1	1651.1	3.25	1000	75.36	0	-1.6	0	0	6.04	0	0	0	0	0	0	-29.8	-29.8
Inverter Transformer	MV5-4 T	370330	4908707	2	0	0	44.2	44.2	1	1651.1	3.25	2000	75.36	0	-1.69	0	0	15.96	0	0	0	0	0	0	-45.42	-45.42
Inverter Transformer	MV5-4 T	370330	4908707	2	0	0	51	51	1	1651.1	3.25	4000	75.36	0	-1.69	0	0	54.11	0	0	0	0	0	0	-76.77	-76.77
Inverter Transformer	MV5-4 T	370330	4908707	2	0	0	44.9	44.9	1	1651.1	3.25	8000	75.36	0	-1.69	0	0	192.98	0	0	0	0	0	0	-221.7	-221.7
Inverter Transformer	MV2-2 T	365982	4906654	2	0	0	19.8	19.8	1	3157.9	3.25	63	80.99	0	-5.81	0	0	0.38	0	0	0	0	0	0	-55.76	-55.76
Inverter Transformer	MV2-2 T	365982	4906654	2	0	0	39.9	39.9	1	3157.9	3.25	125	80.99	0	4.44	0	0	1.3	0	0	0	0	0	0	-46.82	-46.82
Inverter Transformer	MV2-2 T	365982	4906654	2	0	0	45.4	45.4	1	3157.9	3.25	250	80.99	0	3.43	0	0	3.29	0	0	0	0	0	0	-42.31	-42.31
Inverter Transformer	MV2-2 T	365982	4906654	2	0	0	48.8	48.8	1	3157.9	3.25	500	80.99	0	-0.19	0	0	6.09	0	0	0	0	0	0	-38.09	-38.09
Inverter Transformer	MV2-2 T	365982	4906654	2	0	0	50	50	1	3157.9	3.25	1000	80.99	0	-1.65	0	0	11.55	0	0	0	0	0	0	-40.89	-40.89
Inverter Transformer	MV2-2 T	365982	4906654	2	0	0	44.2	44.2	1	3157.9	3.25	2000	80.99	0	-1.74	0	0	30.52	0	0	0	0	0	0	-65.56	-65.56
Inverter Transformer	MV2-2 T	365982	4906654	2	0	0	51	51	1	3157.9	3.25	4000	80.99	0	-1.74	0	0	103.49	0	0	0	0	0	0	-131.7	-131.7
Inverter Transformer	MV2-2 T	365982	4906654	2	0	0	44.9	44.9	1	3157.9	3.25	8000	80.99	0	-1.74	0	0	369.11	0	0	0	0	0	0	-403.5	-403.5
Line Reactor	NGR	369421	4908788	5	0	0	25.1	25.1	1	960.86	5.25	63	70.65	0	-5.11	4.81	0.09	0.12	0	0	0	0	0	0	-45.37	-45.37
Line Reactor	NGR	369421	4908788	5	0	0	45.3	45.3	1	960.86	5.25	125	70.65	0	3.59	1.25	0.09	0.39	0	0	0	0	0	0	-30.59	-30.59
Line Reactor	NGR	369421	4908788	5	0	0	20	20	1	960.86	5.25	250	70.65	0	0.07	4.84	0.09	1	0	0	0	0	0	0	-56.57	-56.57
Inverter Transformer	MV2-3 T	365814	4906641	2	0	0	19.8	19.8	1	3315.3	3.25	63	81.41	0	-5.82	0	0	0.4	0	0	0	0	0	0	-56.19	-56.19
Inverter Transformer	MV2-3 T	365814	4906641	2	0	0	39.9	39.9	1	3315.3	3.25	125	81.41	0	4.43	0	0	1.36	0	0	0	0	0	0	-47.31	-47.31
Inverter Transformer	MV2-3 T	365814	4906641	2	0	0	45.4	45.4	1	3315.3	3.25	250	81.41	0	3.43	0	0	3.46	0	0	0	0	0	0	-42.9	-42.9
Inverter Transformer	MV2-3 T	365814	4906641	2	0	0	48.8	48.8	1	3315.3	3.25	500	81.41	0	-0.19	0	0	6.39	0	0	0	0	0	0	-38.81	-38.81
Inverter Transformer	MV2-3 T	365814	4906641	2	0	0	50	50	1	3315.3	3.25	1000	81.41	0	-1.65	0	0	12.13	0	0	0	0	0	0	-41.89	-41.89
Inverter Transformer	MV2-3 T	365814	4906641	2	0	0	44.2	44.2	1	3315.3	3.25	2000	81.41	0	-1.75	0	0	32.04	0	0	0	0	0	0	-67.5	-67.5
Inverter Transformer	MV2-3 T	365814	4906641	2	0	0	51	51	1	3315.3	3.25	4000	81.41	0	-1.75	0	0	108.64	0	0	0	0	0	0	-137.3	-137.3
Inverter Transformer	MV2-3 T	365814	4906641	2	0	0	44.9	44.9	1	3315.3	3.25	8000	81.41	0	-1.75	0	0	387.49	0	0	0	0	0	0	-422.3	-422.3
Inverter Transformer	MV2-4 T	365590	4906628	2	0	0	19.8	19.8	1	3524.9	3.25	63	81.94	0	-5.83	0	0	0.43	0	0	0	0	0	0	-56.74	-56.74
Inverter Transformer	MV2-4 T	365590	4906628	2	0	0	39.9	39.9	1	3524.9	3.25	125	81.94	0	4.43	0	0	1.45	0	0	0	0	0	0	-47.92	-47.92
Inverter Transformer	MV2-4 T	365590	4906628	2	0	0	45.4	45.4	1	3524.9	3.25	250	81.94	0	3.42	0	0	3.68	0	0	0	0	0	0	-43.64	-43.64
Inverter Transformer	MV2-4 T	365590	4906628	2	0	0	48.8	48.8	1	3524.9	3.25	500	81.94	0	-0.19	0	0	6.8	0	0	0	0	0	0	-39.75	-39.75
Inverter Transformer	MV2-4 T	365590	4906628	2	0	0	50	50	1	3524.9	3.25	1000	81.94	0	-1.65	0	0	12.89	0	0	0	0	0	0	-43.18	-43.18
Inverter Transformer	MV2-4 T	365590	4906628	2	0	0	44.2	44.2	1	3524.9	3.25	2000	81.94	0	-1.75	0	0	34.06	0	0	0	0	0	0	-70.06	-70.06
Inverter Transformer	MV2-4 T	365590	4906628	2	0	0	51	51	1	3524.9	3.25	4000	81.94	0	-1.75	0	0	115.51	0	0	0	0	0	0	-144.7	-144.7
Inverter Transformer	MV2-4 T	365590	4906628	2	0	0	44.9	44.9	1	3524.9	3.25	8000	81.94	0	-1.75	0	0	411.99	0	0	0	0	0	0	-447.3	-447.3
Inverter Transformer	MV1-1 T	364721	4906166	2	0	0	19.8	19.8	1	4506.7	3.25	63	84.08	0	-5.87	0	0	0.55	0	0	0	0	0	0	-58.96	-58.96
Inverter Transformer	MV1-1 T	364721	4906166	2	0	0	39.9	39.9	1	4506.7	3.25	125	84.08	0	4.42	0	0	1.85	0	0	0	0	0	0	-50.45	-50.45
Inverter Transformer	MV1-1 T	364721	4906166	2	0	0	45.4	45.4	1	4506.7	3.25	250	84.08	0	3.41	0	0	4.7	0	0	0	0	0	0	-46.79	-46.79
Inverter Transformer	MV1-1 T	364721	4906166	2	0	0	48.8	48.8	1	4506.7	3.25	500	84.08	0	-0.2	0	0	8.69	0	0	0	0	0	0	-43.76	-43.76
Inverter Transformer	MV1-1 T	364721	4906166	2	0	0	50	50	1	4506.7	3.25	1000	84.08	0	-1.67	0	0	16.48	0	0	0	0	0	0	-48.9	-48.9
Inverter Transformer	MV1-1 T	364721	4906166	2	0	0	44.2	44.2	1	4506.7	3.25	2000	84.08	0	-1.76	0	0	43.55	0	0	0	0	0	0	-81.67	-81.67
Inverter Transformer	MV1-1 T	364721	4906166	2	0	0	51	51	1	4506.7	3.25	4000	84.08	0	-1.76	0	0	147.69	0	0	0	0	0	0	-179	-179
Inverter Transformer	MV1-1 T	364721	4906166	2	0	0	44.9	44.9	1	4506.7	3.25	8000	84.08	0	-1.76	0	0	526.76	0	0	0	0	0	0	-564.2	-564.2

Inverter Transformer	MV1-2 T	364759	4906063	2	0	0	19.8	19.8	1	4516.3	3.25	63	84.1	0	-5.87	0	0	0.55	0	0	0	0	0	0	-58.97	-58.97
Inverter Transformer	MV1-2 T	364759	4906063	2	0	0	39.9	39.9	1	4516.3	3.25	125	84.1	0	4.42	0	0	1.86	0	0	0	0	0	0	-50.47	-50.47
Inverter Transformer	MV1-2 T	364759	4906063	2	0	0	45.4	45.4	1	4516.3	3.25	250	84.1	0	3.41	0	0	4.71	0	0	0	0	0	0	-46.82	-46.82
Inverter Transformer	MV1-2 T	364759	4906063	2	0	0	48.8	48.8	1	4516.3	3.25	500	84.1	0	-0.2	0	0	8.71	0	0	0	0	0	0	-43.8	-43.8
Inverter Transformer	MV1-2 T	364759	4906063	2	0	0	50	50	1	4516.3	3.25	1000	84.1	0	-1.67	0	0	16.52	0	0	0	0	0	0	-48.95	-48.95
Inverter Transformer	MV1-2 T	364759	4906063	2	0	0	44.2	44.2	1	4516.3	3.25	2000	84.1	0	-1.76	0	0	43.64	0	0	0	0	0	0	-81.78	-81.78
Inverter Transformer	MV1-2 T	364759	4906063	2	0	0	51	51	1	4516.3	3.25	4000	84.1	0	-1.76	0	0	148	0	0	0	0	0	0	-179.3	-179.3
Inverter Transformer	MV1-2 T	364759	4906063	2	0	0	44.9	44.9	1	4516.3	3.25	8000	84.1	0	-1.76	0	0	527.87	0	0	0	0	0	0	-565.3	-565.3
Inverter Transformer	MV1-4 T	364821	4905918	2	0	0	19.8	19.8	1	4526.6	3.25	63	84.12	0	-5.87	0	0	0.55	0	0	0	0	0	0	-59	-59
Inverter Transformer	MV1-4 T	364821	4905918	2	0	0	39.9	39.9	1	4526.6	3.25	125	84.12	0	4.42	0	0	1.86	0	0	0	0	0	0	-50.49	-50.49
Inverter Transformer	MV1-4 T	364821	4905918	2	0	0	45.4	45.4	1	4526.6	3.25	250	84.12	0	3.41	0	0	4.72	0	0	0	0	0	0	-46.85	-46.85
Inverter Transformer	MV1-4 T	364821	4905918	2	0	0	48.8	48.8	1	4526.6	3.25	500	84.12	0	-0.2	0	0	8.73	0	0	0	0	0	0	-43.84	-43.84
Inverter Transformer	MV1-4 T	364821	4905918	2	0	0	50	50	1	4526.6	3.25	1000	84.12	0	-1.67	0	0	16.56	0	0	0	0	0	0	-49.01	-49.01
Inverter Transformer	MV1-4 T	364821	4905918	2	0	0	44.2	44.2	1	4526.6	3.25	2000	84.12	0	-1.76	0	0	43.74	0	0	0	0	0	0	-81.9	-81.9
Inverter Transformer	MV1-4 T	364821	4905918	2	0	0	51	51	1	4526.6	3.25	4000	84.12	0	-1.76	0	0	148.34	0	0	0	0	0	0	-179.7	-179.7
Inverter Transformer	MV1-4 T	364821	4905918	2	0	0	44.9	44.9	1	4526.6	3.25	8000	84.12	0	-1.76	0	0	529.08	0	0	0	0	0	0	-566.5	-566.5
Inverter Transformer	MV1-12 T	365044	4905386	2	0	0	19.8	19.8	1	4614.5	3.25	63	84.28	0	-5.87	0	0	0.56	0	0	0	0	0	0	-59.17	-59.17
Inverter Transformer	MV1-12 T	365044	4905386	2	0	0	39.9	39.9	1	4614.5	3.25	125	84.28	0	4.42	0	0	1.9	0	0	0	0	0	0	-50.7	-50.7
Inverter Transformer	MV1-12 T	365044	4905386	2	0	0	45.4	45.4	1	4614.5	3.25	250	84.28	0	3.41	0	0	4.81	0	0	0	0	0	0	-47.11	-47.11
Inverter Transformer	MV1-12 T	365044	4905386	2	0	0	48.8	48.8	1	4614.5	3.25	500	84.28	0	-0.2	0	0	8.9	0	0	0	0	0	0	-44.17	-44.17
Inverter Transformer	MV1-12 T	365044	4905386	2	0	0	50	50	1	4614.5	3.25	1000	84.28	0	-1.67	0	0	16.88	0	0	0	0	0	0	-49.49	-49.49
Inverter Transformer	MV1-12 T	365044	4905386	2	0	0	44.2	44.2	1	4614.5	3.25	2000	84.28	0	-1.76	0	0	44.59	0	0	0	0	0	0	-82.91	-82.91
Inverter Transformer	MV1-12 T	365044	4905386	2	0	0	51	51	1	4614.5	3.25	4000	84.28	0	-1.76	0	0	151.22	0	0	0	0	0	0	-182.7	-182.7
Inverter Transformer	MV1-12 T	365044	4905386	2	0	0	44.9	44.9	1	4614.5	3.25	8000	84.28	0	-1.76	0	0	539.35	0	0	0	0	0	0	-577	-577
Inverter Transformer	MV1-15 T	365309	4904994	2	0	0	19.8	19.8	1	4646.9	3.25	63	84.34	0	-5.87	0	0	0.57	0	0	0	0	0	0	-59.23	-59.23
Inverter Transformer	MV1-15 T	365309	4904994	2	0	0	39.9	39.9	1	4646.9	3.25	125	84.34	0	4.42	0	0	1.91	0	0	0	0	0	0	-50.77	-50.77
Inverter Transformer	MV1-15 T	365309	4904994	2	0	0	45.4	45.4	1	4646.9	3.25	250	84.34	0	3.41	0	0	4.85	0	0	0	0	0	0	-47.2	-47.2
Inverter Transformer	MV1-15 T	365309	4904994	2	0	0	48.8	48.8	1	4646.9	3.25	500	84.34	0	-0.2	0	0	8.96	0	0	0	0	0	0	-44.3	-44.3
Inverter Transformer	MV1-15 T	365309	4904994	2	0	0	50	50	1	4646.9	3.25	1000	84.34	0	-1.67	0	0	17	0	0	0	0	0	0	-49.67	-49.67
Inverter Transformer	MV1-15 T	365309	4904994	2	0	0	44.2	44.2	1	4646.9	3.25	2000	84.34	0	-1.76	0	0	44.91	0	0	0	0	0	0	-83.29	-83.29
Inverter Transformer	MV1-15 T	365309	4904994	2	0	0	51	51	1	4646.9	3.25	4000	84.34	0	-1.76	0	0	152.28	0	0	0	0	0	0	-183.9	-183.9
Inverter Transformer	MV1-15 T	365309	4904994	2	0	0	44.9	44.9	1	4646.9	3.25	8000	84.34	0	-1.76	0	0	543.14	0	0	0	0	0	0	-580.8	-580.8
Inverter Transformer	MV1-5 T	364676	4905892	2	0	0	19.8	19.8	1	4667.1	3.25	63	84.38	0	-5.87	0	0	0.57	0	0	0	0	0	0	-59.27	-59.27
Inverter Transformer	MV1-5 T	364676	4905892	2	0	0	39.9	39.9	1	4667.1	3.25	125	84.38	0	4.42	0	0	1.92	0	0	0	0	0	0	-50.82	-50.82
Inverter Transformer	MV1-5 T	364676	4905892	2	0	0	45.4	45.4	1	4667.1	3.25	250	84.38	0	3.41	0	0	4.87	0	0	0	0	0	0	-47.26	-47.26
Inverter Transformer	MV1-5 T	364676	4905892	2	0	0	48.8	48.8	1	4667.1	3.25	500	84.38	0	-0.21	0	0	9	0	0	0	0	0	0	-44.37	-44.37
Inverter Transformer	MV1-5 T	364676	4905892	2	0	0	50	50	1	4667.1	3.25	1000	84.38	0	-1.67	0	0	17.07	0	0	0	0	0	0	-49.79	-49.79
Inverter Transformer	MV1-5 T	364676	4905892	2	0	0	44.2	44.2	1	4667.1	3.25	2000	84.38	0	-1.76	0	0	45.1	0	0	0	0	0	0	-83.52	-83.52
Inverter Transformer	MV1-5 T	364676	4905892	2	0	0	51	51	1	4667.1	3.25	4000	84.38	0	-1.76	0	0	152.94	0	0	0	0	0	0	-184.6	-184.6
Inverter Transformer	MV1-5 T	364676	4905892	2	0	0	44.9	44.9	1	4667.1	3.25	8000	84.38	0	-1.76	0	0	545.5	0	0	0	0	0	0	-583.2	-583.2
Inverter Transformer	MV1-8 T	364782	4905647	2	0	0	19.8	19.8	1	4693.2	3.25	63	84.43	0	-5.88	0	0	0.57	0	0	0	0	0	0	-59.33	-59.33
Inverter Transformer	MV1-8 T	364782	4905647	2	0	0	39.9	39.9	1	4693.2	3.25	125	84.43	0	4.42	0	0	1.93	0	0	0	0	0	0	-50.87	-50.87
Inverter Transformer	MV1-8 T	364782	4905647	2	0	0	45.4	45.4	1	4693.2	3.25	250	84.43	0	3.41	0	0	4.9	0	0	0	0	0	0	-47.34	-47.34
Inverter Transformer	MV1-8 T	364782	4905647	2	0	0	48.8	48.8	1	4693.2	3.25	500	84.43	0	-0.21	0	0	9.05	0	0	0	0	0	0	-44.47	-44.47
Inverter Transformer	MV1-8 T	364782	4905647	2	0	0	50	50	1	4693.2	3.25	1000	84.43	0	-1.67	0	0	17.17	0	0	0	0	0	0	-49.93	-49.93
Inverter Transformer	MV1-8 T	364782	4905647	2	0	0	44.2	44.2	1	4693.2	3.25	2000	84.43	0	-1.76	0	0	45.35	0	0	0	0	0	0	-83.82	-83.82
Inverter Transformer	MV1-8 T	364782	4905647	2	0	0	51	51	1	4693.2	3.25	4000	84.43	0	-1.76	0	0	153.79	0	0	0	0	0	0	-185.5	-185.5
Inverter Transformer	MV1-8 T	364782	4905647	2	0	0	44.9	44.9	1	4693.2	3.25	8000	84.43	0	-1.76	0	0	548.54	0	0	0	0	0	0	-586.3	-586.3
Inverter Transformer	MV1-3 T	364435	4906039	2	0	0	19.8	19.8	1	4819.7	3.25	63	84.66	0	-5.88	0	0	0.59	0	0	0	0	0	0	-59.57	-59.57
Inverter Transformer	MV1-3 T	364435	4906039	2	0	0	39.9	39.9	1	4819.7	3.25	125	84.66	0	4.42	0	0	1.98	0	0	0	0	0	0	-51.16	-51.16
Inverter Transformer	MV1-3 T	364435	4906039	2	0	0	45.4	45.4	1	4819.7	3.25	250	84.66	0	3.41	0	0	5.03	0	0	0	0	0	0	-47.7	-47.7
Inverter Transformer	MV1-3 T	364435	4906039	2	0	0	48.8	48.8	1	4819.7	3.25	500	84.66	0	-0.21	0	0	9.29	0	0	0	0	0	0	-44.95	-44.95
Inverter Transformer	MV1-3 T	364435	4906039	2	0	0	50	50	1	4819.7	3.25	1000	84.66	0	-1.67	0	0	17.63	0	0	0	0	0	0	-50.62	-50.62
Inverter Transformer	MV1-3 T	364435	4906039	2	0	0	44.2	44.2	1	4819.7	3.25	2000	84.66	0	-1.76	0	0	46.58	0	0	0	0	0	0	-85.27	-85.27
Inverter Transformer	MV1-3 T	364435	4906039	2	0	0	51	51	1	4819.7	3.25	4000	84.66	0	-1.76	0	0	157.94	0	0	0	0	0	0	-189.8	-189.8
Inverter Transformer	MV1-3 T	364435	4906039	2	0	0	44.9	44.9	1	4819.7	3.25	8000	84.66	0	-1.76	0	0	563.33	0	0	0	0	0	0	-601.3	-601.3
Inverter Transformer	MV1-6 T	364482	4905835	2	0	0	19.8	19.8	1	4865.8	3.25	63	84.74	0	-5.88	0	0	0.59	0	0	0	0	0	0	-59.66	-59.66
Inverter Transformer	MV1-6 T	364482	4905835	2	0	0	39.9	39.9	1	4865.8	3.25	125	84.74	0	4.42	0	0	2	0	0	0	0	0	0	-51.26	-51.26
Inverter Transformer	MV1-6 T	364482	4905835	2	0	0	45.4	45.4	1	4865.8	3.25	250	84.74	0	3.41	0	0	5.08	0	0	0	0	0	0	-47.83	-47.83
Inverter Transformer	MV1-6 T	364482	4905835	2	0	0	48.8	48.8	1	4865.8	3.25	500	84.74	0	-0.21	0	0	9.38	0	0	0	0	0	0	-45.12	-45.12
Inverter Transformer	MV1-6 T	364482	4905835	2	0	0	50	50	1	4865.8	3.25	1000	84.74	0	-1.67	0	0	17.8	0	0	0	0	0	0	-50.87	-50.87
Inverter Transformer	MV1-6 T	364482	4905835	2	0	0	44.2	44.2	1	4865.8	3.25	2000	84.74	0	-1.76	0	0	47.02	0	0	0	0	0	0	-85.8	-85.8
Inverter Transformer	MV1-6 T	364482	4905835	2	0	0	51	51	1	4865.8	3.25	4000	84.74	0	-1.76	0	0	159.45	0	0	0	0	0	0	-191.4	-191.4
Inverter Transformer	MV1-6 T	364482	4905835	2	0	0	44.9	44.9	1	4865.8	3.25	8000	84.74	0	-1.76	0	0	568.72	0	0	0	0	0	0	-606.8	-606.8
Inverter Transformer	MV1-9 T	364555	4905646	2	0	0	19.8	19.8	1	4890.4	3.25	63	84.79	0	-5.88	0	0	0.6	0	0	0	0	0	0	-59.7	-59.7
Inverter Transformer	MV1-9 T	364555	4905646	2	0	0	39.9	39.9	1	4890.4	3.25	125	84.79	0	4.42	0	0	2.01	0	0	0	0	0	0	-51.31	-51.31
Inverter Transformer	MV1-9 T	364555	4905646	2	0	0	45.4	45.4	1	4890.4	3.25	250	84.79	0	3.41	0	0	5.1	0	0	0	0	0	0	-47.9	-47.9
Inverter Transformer	MV1-9 T	364555	4905646	2	0	0	48.8	48.8	1	4890.4	3.25	500	84.79	0	-0.21	0	0	9.43	0	0	0	0	0	0	-45.21	-45.21
Inverter Transformer	MV1-9 T	364555	4905646	2	0	0	50	50	1	4890.4	3.25	1000	84.79	0	-1.67	0	0	17.89	0	0	0	0	0	0	-51.01	-51.01

	Inverter Transformer	MV1-9 T	364555	4905646	2	0	0	44.2	44.2	1	4890.4	3.25	2000	84.79	0	-1.76	0	0	47.26	0	0	0	0	0	0	-86.08	-86.08
	Inverter Transformer	MV1-9 T	364555	4905646	2	0	0	51	51	1	4890.4	3.25	4000	84.79	0	-1.76	0	0	160.26	0	0	0	0	0	0	-192.3	-192.3
	Inverter Transformer	MV1-9 T	364555	4905646	2	0	0	44.9	44.9	1	4890.4	3.25	8000	84.79	0	-1.76	0	0	571.6	0	0	0	0	0	0	-609.7	-609.7
	Inverter Transformer	MV1-11 T	364649	4905414	2	0	0	19.8	19.8	1	4928.1	3.25	63	84.85	0	-5.88	0	0	0.6	0	0	0	0	0	0	-59.77	-59.77
	Inverter Transformer	MV1-11 T	364649	4905414	2	0	0	39.9	39.9	1	4928.1	3.25	125	84.85	0	4.42	0	0	2.03	0	0	0	0	0	0	-51.39	-51.39
	Inverter Transformer	MV1-11 T	364649	4905414	2	0	0	45.4	45.4	1	4928.1	3.25	250	84.85	0	3.41	0	0	5.14	0	0	0	0	0	0	-48	-48
	Inverter Transformer	MV1-11 T	364649	4905414	2	0	0	48.8	48.8	1	4928.1	3.25	500	84.85	0	-0.21	0	0	9.5	0	0	0	0	0	0	-45.35	-45.35
	Inverter Transformer	MV1-11 T	364649	4905414	2	0	0	50	50	1	4928.1	3.25	1000	84.85	0	-1.67	0	0	18.03	0	0	0	0	0	0	-51.21	-51.21
	Inverter Transformer	MV1-11 T	364649	4905414	2	0	0	44.2	44.2	1	4928.1	3.25	2000	84.85	0	-1.76	0	0	47.62	0	0	0	0	0	0	-86.51	-86.51
	Inverter Transformer	MV1-11 T	364649	4905414	2	0	0	51	51	1	4928.1	3.25	4000	84.85	0	-1.76	0	0	161.49	0	0	0	0	0	0	-193.6	-193.6
	Inverter Transformer	MV1-11 T	364649	4905414	2	0	0	44.9	44.9	1	4928.1	3.25	8000	84.85	0	-1.76	0	0	576	0	0	0	0	0	0	-614.2	-614.2
Limit. Value D/I	0																										
Level D/N:	39.9483	39.9483																									
	Inverter Transformer	MV2-1 T	365836	4906816	2	0	0	46	46	1	3225.1	3.25	63	81.17	0	-5.82	0	0	0.39	0	0	0	0	0	0	-29.74	-29.74
	Inverter Transformer	MV2-1 T	365836	4906816	2	0	0	58.1	58.1	1	3225.1	3.25	125	81.17	0	4.43	0	0	1.33	0	0	0	0	0	0	-28.83	-28.83
	Inverter Transformer	MV2-1 T	365836	4906816	2	0	0	60.6	60.6	1	3225.1	3.25	250	81.17	0	3.43	0	0	3.36	0	0	0	0	0	0	-27.36	-27.36
	Inverter Transformer	MV2-1 T	365836	4906816	2	0	0	66	66	1	3225.1	3.25	500	81.17	0	-0.19	0	0	6.22	0	0	0	0	0	0	-21.2	-21.2
	Inverter Transformer	MV2-1 T	365836	4906816	2	0	0	63.2	63.2	1	3225.1	3.25	1000	81.17	0	-1.65	0	0	11.8	0	0	0	0	0	0	-28.12	-28.12
	Inverter Transformer	MV2-1 T	365836	4906816	2	0	0	59.4	59.4	1	3225.1	3.25	2000	81.17	0	-1.75	0	0	31.17	0	0	0	0	0	0	-51.19	-51.19
	Inverter Transformer	MV2-1 T	365836	4906816	2	0	0	54.2	54.2	1	3225.1	3.25	4000	81.17	0	-1.75	0	0	105.69	0	0	0	0	0	0	-130.9	-130.9
	Inverter Transformer	MV2-1 T	365836	4906816	2	0	0	45.1	45.1	1	3225.1	3.25	8000	81.17	0	-1.75	0	0	376.95	0	0	0	0	0	0	-411.3	-411.3
	Inverter Transformer	MV2-2 T	365982	4906654	2	0	0	25.9	25.9	1	3157.9	3.25	32	80.99	0	-5.81	0	0	0.1	0	0	0	0	0	0	-49.37	-49.37
	Inverter Transformer	MV2-2 T	365982	4906654	2	0	0	45.1	45.1	1	3157.9	3.25	63	80.99	0	-5.81	0	0	0.38	0	0	0	0	0	0	-30.46	-30.46
	Inverter Transformer	MV2-2 T	365982	4906654	2	0	0	57.2	57.2	1	3157.9	3.25	125	80.99	0	4.44	0	0	1.3	0	0	0	0	0	0	-29.52	-29.52
	Inverter Transformer	MV2-2 T	365982	4906654	2	0	0	59.7	59.7	1	3157.9	3.25	250	80.99	0	3.43	0	0	3.29	0	0	0	0	0	0	-28.01	-28.01
	Inverter Transformer	MV2-2 T	365982	4906654	2	0	0	65.1	65.1	1	3157.9	3.25	500	80.99	0	-0.19	0	0	6.09	0	0	0	0	0	0	-21.79	-21.79
	Inverter Transformer	MV2-2 T	365982	4906654	2	0	0	62.3	62.3	1	3157.9	3.25	1000	80.99	0	-1.65	0	0	11.55	0	0	0	0	0	0	-28.59	-28.59
	Inverter Transformer	MV2-2 T	365982	4906654	2	0	0	58.5	58.5	1	3157.9	3.25	2000	80.99	0	-1.74	0	0	30.52	0	0	0	0	0	0	-51.26	-51.26
	Inverter Transformer	MV2-2 T	365982	4906654	2	0	0	53.3	53.3	1	3157.9	3.25	4000	80.99	0	-1.74	0	0	103.49	0	0	0	0	0	0	-129.4	-129.4
	Inverter Transformer	MV2-2 T	365982	4906654	2	0	0	44.2	44.2	1	3157.9	3.25	8000	80.99	0	-1.74	0	0	369.11	0	0	0	0	0	0	-404.2	-404.2
	Inverter Transformer	MV2-3 T	365814	4906641	2	0	0	25.9	25.9	1	3315.3	3.25	32	81.41	0	-5.82	0	0	0.11	0	0	0	0	0	0	-49.79	-49.79
	Inverter Transformer	MV2-3 T	365814	4906641	2	0	0	45.1	45.1	1	3315.3	3.25	63	81.41	0	-5.82	0	0	0.4	0	0	0	0	0	0	-30.89	-30.89
	Inverter Transformer	MV2-3 T	365814	4906641	2	0	0	57.2	57.2	1	3315.3	3.25	125	81.41	0	4.43	0	0	1.36	0	0	0	0	0	0	-30.01	-30.01
	Inverter Transformer	MV2-3 T	365814	4906641	2	0	0	59.7	59.7	1	3315.3	3.25	250	81.41	0	3.43	0	0	3.46	0	0	0	0	0	0	-28.6	-28.6
	Inverter Transformer	MV2-3 T	365814	4906641	2	0	0	65.1	65.1	1	3315.3	3.25	500	81.41	0	-0.19	0	0	6.39	0	0	0	0	0	0	-22.51	-22.51
	Inverter Transformer	MV2-3 T	365814	4906641	2	0	0	62.3	62.3	1	3315.3	3.25	1000	81.41	0	-1.65	0	0	12.13	0	0	0	0	0	0	-29.59	-29.59
	Inverter Transformer	MV2-3 T	365814	4906641	2	0	0	58.5	58.5	1	3315.3	3.25	2000	81.41	0	-1.75	0	0	32.04	0	0	0	0	0	0	-53.2	-53.2
	Inverter Transformer	MV2-3 T	365814	4906641	2	0	0	53.3	53.3	1	3315.3	3.25	4000	81.41	0	-1.75	0	0	108.64	0	0	0	0	0	0	-135	-135
	Inverter Transformer	MV2-3 T	365814	4906641	2	0	0	44.2	44.2	1	3315.3	3.25	8000	81.41	0	-1.75	0	0	387.49	0	0	0	0	0	0	-423	-423
	Inverter Transformer	MV2-4 T	365590	4906628	2	0	0	25.9	25.9	1	3524.9	3.25	32	81.94	0	-5.83	0	0	0.11	0	0	0	0	0	0	-50.32	-50.32
	Inverter Transformer	MV2-4 T	365590	4906628	2	0	0	45.1	45.1	1	3524.9	3.25	63	81.94	0	-5.83	0	0	0.43	0	0	0	0	0	0	-31.44	-31.44
	Inverter Transformer	MV2-4 T	365590	4906628	2	0	0	57.2	57.2	1	3524.9	3.25	125	81.94	0	4.43	0	0	1.45	0	0	0	0	0	0	-30.62	-30.62
	Inverter Transformer	MV2-4 T	365590	4906628	2	0	0	59.7	59.7	1	3524.9	3.25	250	81.94	0	3.42	0	0	3.68	0	0	0	0	0	0	-29.34	-29.34
	Inverter Transformer	MV2-4 T	365590	4906628	2	0	0	65.1	65.1	1	3524.9	3.25	500	81.94	0	-0.19	0	0	6.8	0	0	0	0	0	0	-23.45	-23.45
	Inverter Transformer	MV2-4 T	365590	4906628	2	0	0	62.3	62.3	1	3524.9	3.25	1000	81.94	0	-1.65	0	0	12.89	0	0	0	0	0	0	-30.88	-30.88
	Inverter Transformer	MV2-4 T	365590	4906628	2	0	0	58.5	58.5	1	3524.9	3.25	2000	81.94	0	-1.75	0	0	34.06	0	0	0	0	0	0	-55.76	-55.76
	Inverter Transformer	MV2-4 T	365590	4906628	2	0	0	53.3	53.3	1	3524.9	3.25	4000	81.94	0	-1.75	0	0	115.51	0	0	0	0	0	0	-142.4	-142.4
	Inverter Transformer	MV2-4 T	365590	4906628	2	0	0	44.2	44.2	1	3524.9	3.25	8000	81.94	0	-1.75	0	0	411.99	0	0	0	0	0	0	-448	-448
	Inverter Transformer	MV1-7 T	364919	4905782	2	0	0	26.8	26.8	1	4506.7	3.25	32	84.08	0	-5.87	0	0	0.14	0	0	0	0	0	0	-51.55	-51.55
	Inverter Transformer	MV1-7 T	364919	4905782	2	0	0	46	46	1	4506.7	3.25	63	84.08	0	-5.87	0	0	0.55	0	0	0	0	0	0	-32.76	-32.76
	Inverter Transformer	MV1-7 T	364919	4905782	2	0	0	58.1	58.1	1	4506.7	3.25	125	84.08	0	4.42	0	0	1.85	0	0	0	0	0	0	-32.25	-32.25
	Inverter Transformer	MV1-7 T	364919	4905782	2	0	0	60.6	60.6	1	4506.7	3.25	250	84.08	0	3.41	0	0	4.7	0	0	0	0	0	0	-31.59	-31.59
	Inverter Transformer	MV1-7 T	364919	4905782	2	0	0	66	66	1	4506.7	3.25	500	84.08	0	-0.2	0	0	8.69	0	0	0	0	0	0	-26.56	-26.56
	Inverter Transformer	MV1-7 T	364919	4905782	2	0	0	63.2	63.2	1	4506.7	3.25	1000	84.08	0	-1.67	0	0	16.48	0	0	0	0	0	0	-35.7	-35.7
	Inverter Transformer	MV1-7 T	364919	4905782	2	0	0	59.4	59.4	1	4506.7	3.25	2000	84.08	0	-1.76	0	0	43.55	0	0	0	0	0	0	-66.47	-66.47
	Inverter Transformer	MV1-7 T	364919	4905782	2	0	0	54.2	54.2	1	4506.7	3.25	4000	84.08	0	-1.76	0	0	147.69	0	0	0	0	0	0	-175.8	-175.8
	Inverter Transformer	MV1-7 T	364919	4905782	2	0	0	45.1	45.1	1	4506.7	3.25	8000	84.08	0	-1.76	0	0	526.76	0	0	0	0	0	0	-564	-564
	Inverter Transformer	MV1-10 T	365010	4905564	2	0	0	26.8	26.8	1	4543.1	3.25	32	84.15	0	-5.87	0	0	0.15	0	0	0	0	0	0	-51.62	-51.62
	Inverter Transformer	MV1-10 T	365010	4905564	2	0	0	46	46	1	4543.1	3.25	63	84.15	0	-5.87	0	0	0.55	0	0	0	0	0	0	-32.83	-32.83
	Inverter Transformer	MV1-10 T	365010	4905564	2	0	0	58.1	58.1	1	4543.1	3.25	125	84.15	0	4.42	0	0	1.87	0	0	0	0	0	0	-32.33	-32.33
	Inverter Transformer	MV1-10 T	365010	4905564	2	0	0	60.6	60.6	1	4543.1	3.25	250	84.15	0	3.41	0	0	4.74	0	0	0	0	0	0	-31.7	-31.7
	Inverter Transformer	MV1-10 T	365010	4905564	2	0	0	66	66	1	4543.1	3.25	500	84.15	0	-0.2	0	0	8.76	0	0	0	0	0	0	-26.7	-26.7
	Inverter Transformer	MV1-10 T	365010	4905564	2	0	0	63.2	63.2	1	4543.1	3.25	1000	84.15	0	-1.67	0	0	16.62	0	0	0	0	0	0	-35.9	-35.9
	Inverter Transformer	MV1-10 T	365010	4905564	2	0	0	59.4	59.4	1	4543.1	3.25	2000	84.15	0	-1.76	0	0	43.9	0	0	0	0	0	0	-66.89	-66.89
	Inverter Transformer	MV1-10 T	365010	4905564	2	0	0	54.2	54.2	1	4543.1	3.25	4000	84.15	0	-1.76	0	0	148.88	0	0	0	0	0	0	-177.1	-177.1
	Inverter Transformer	MV1-10 T	365010	4905564	2	0	0	45.1	45.1	1	4543.1	3.25	8000	84.15	0	-1.76	0	0	531	0	0	0	0	0	0	-568.3	-568.3
	Inverter Transformer	MV1-14 T	365157	4905049	2	0	0	26.8	26.8	1	4727.9	3.25	32	84.49	0	-5.88	0	0	0.15	0	0	0	0	0	0	-51.97	-51.97
	Inverter Transformer	MV1-14 T	365157	4905049	2	0	0	46	46	1	4727.9	3.25	63	84.49	0	-5.88	0	0	0.58	0	0	0	0	0	0	-33.19	-33.19
	Inverter Transformer	MV1-14 T	365157	4905049	2	0	0	58.1	58.1	1	4727.9	3.25	125	84.49	0	4.42	0	0	1.94	0	0	0	0	0	0	-32.75	-32.75

Inverter Transformer	MV1-14 T	365157	4905049	2	0	0	60.6	60.6	1	4727.9	3.25	250	84.49	0	3.41	0	0	4.93	0	0	0	0	0	0	-32.24	-32.24
Inverter Transformer	MV1-14 T	365157	4905049	2	0	0	66	66	1	4727.9	3.25	500	84.49	0	-0.21	0	0	9.11	0	0	0	0	0	0	-27.4	-27.4
Inverter Transformer	MV1-14 T	365157	4905049	2	0	0	63.2	63.2	1	4727.9	3.25	1000	84.49	0	-1.67	0	0	17.29	0	0	0	0	0	0	-36.92	-36.92
Inverter Transformer	MV1-14 T	365157	4905049	2	0	0	59.4	59.4	1	4727.9	3.25	2000	84.49	0	-1.76	0	0	45.69	0	0	0	0	0	0	-69.02	-69.02
Inverter Transformer	MV1-14 T	365157	4905049	2	0	0	54.2	54.2	1	4727.9	3.25	4000	84.49	0	-1.76	0	0	154.93	0	0	0	0	0	0	-183.5	-183.5
Inverter Transformer	MV1-14 T	365157	4905049	2	0	0	45.1	45.1	1	4727.9	3.25	8000	84.49	0	-1.76	0	0	552.61	0	0	0	0	0	0	-590.2	-590.2
Inverter Transformer	MV1-13 T	364725	4905241	2	0	0	26.8	26.8	1	4959.3	3.25	32	84.91	0	-5.88	0	0	0.16	0	0	0	0	0	0	-52.39	-52.39
Inverter Transformer	MV1-13 T	364725	4905241	2	0	0	46	46	1	4959.3	3.25	63	84.91	0	-5.88	0	0	0.6	0	0	0	0	0	0	-33.63	-33.63
Inverter Transformer	MV1-13 T	364725	4905241	2	0	0	58.1	58.1	1	4959.3	3.25	125	84.91	0	4.42	0	0	2.04	0	0	0	0	0	0	-33.26	-33.26
Inverter Transformer	MV1-13 T	364725	4905241	2	0	0	60.6	60.6	1	4959.3	3.25	250	84.91	0	3.41	0	0	5.17	0	0	0	0	0	0	-32.89	-32.89
Inverter Transformer	MV1-13 T	364725	4905241	2	0	0	66	66	1	4959.3	3.25	500	84.91	0	-0.21	0	0	9.56	0	0	0	0	0	0	-28.26	-28.26
Inverter Transformer	MV1-13 T	364725	4905241	2	0	0	63.2	63.2	1	4959.3	3.25	1000	84.91	0	-1.67	0	0	18.14	0	0	0	0	0	0	-38.18	-38.18
Inverter Transformer	MV1-13 T	364725	4905241	2	0	0	59.4	59.4	1	4959.3	3.25	2000	84.91	0	-1.76	0	0	47.93	0	0	0	0	0	0	-71.67	-71.67
Inverter Transformer	MV1-13 T	364725	4905241	2	0	0	54.2	54.2	1	4959.3	3.25	4000	84.91	0	-1.76	0	0	162.52	0	0	0	0	0	0	-191.5	-191.5
Inverter Transformer	MV1-13 T	364725	4905241	2	0	0	45.1	45.1	1	4959.3	3.25	8000	84.91	0	-1.76	0	0	579.65	0	0	0	0	0	0	-617.7	-617.7
Inverter Transformer	MV1-1 T	364721	4906166	2	0	0	25.9	25.9	1	4506.7	3.25	32	84.08	0	-5.87	0	0	0.14	0	0	0	0	0	0	-52.45	-52.45
Inverter Transformer	MV1-1 T	364721	4906166	2	0	0	45.1	45.1	1	4506.7	3.25	63	84.08	0	-5.87	0	0	0.55	0	0	0	0	0	0	-33.66	-33.66
Inverter Transformer	MV1-1 T	364721	4906166	2	0	0	57.2	57.2	1	4506.7	3.25	125	84.08	0	4.42	0	0	1.85	0	0	0	0	0	0	-33.15	-33.15
Inverter Transformer	MV1-1 T	364721	4906166	2	0	0	59.7	59.7	1	4506.7	3.25	250	84.08	0	3.41	0	0	4.7	0	0	0	0	0	0	-32.49	-32.49
Inverter Transformer	MV1-1 T	364721	4906166	2	0	0	65.1	65.1	1	4506.7	3.25	500	84.08	0	-0.2	0	0	8.69	0	0	0	0	0	0	-27.46	-27.46
Inverter Transformer	MV1-1 T	364721	4906166	2	0	0	62.3	62.3	1	4506.7	3.25	1000	84.08	0	-1.67	0	0	16.48	0	0	0	0	0	0	-36.6	-36.6
Inverter Transformer	MV1-1 T	364721	4906166	2	0	0	58.5	58.5	1	4506.7	3.25	2000	84.08	0	-1.76	0	0	43.55	0	0	0	0	0	0	-67.37	-67.37
Inverter Transformer	MV1-1 T	364721	4906166	2	0	0	53.3	53.3	1	4506.7	3.25	4000	84.08	0	-1.76	0	0	147.69	0	0	0	0	0	0	-176.7	-176.7
Inverter Transformer	MV1-1 T	364721	4906166	2	0	0	44.2	44.2	1	4506.7	3.25	8000	84.08	0	-1.76	0	0	526.76	0	0	0	0	0	0	-564.9	-564.9
Inverter Transformer	MV1-2 T	364759	4906063	2	0	0	25.9	25.9	1	4516.3	3.25	32	84.1	0	-5.87	0	0	0.14	0	0	0	0	0	0	-52.47	-52.47
Inverter Transformer	MV1-2 T	364759	4906063	2	0	0	45.1	45.1	1	4516.3	3.25	63	84.1	0	-5.87	0	0	0.55	0	0	0	0	0	0	-33.67	-33.67
Inverter Transformer	MV1-2 T	364759	4906063	2	0	0	57.2	57.2	1	4516.3	3.25	125	84.1	0	4.42	0	0	1.86	0	0	0	0	0	0	-33.17	-33.17
Inverter Transformer	MV1-2 T	364759	4906063	2	0	0	59.7	59.7	1	4516.3	3.25	250	84.1	0	3.41	0	0	4.71	0	0	0	0	0	0	-32.52	-32.52
Inverter Transformer	MV1-2 T	364759	4906063	2	0	0	65.1	65.1	1	4516.3	3.25	500	84.1	0	-0.2	0	0	8.71	0	0	0	0	0	0	-27.5	-27.5
Inverter Transformer	MV1-2 T	364759	4906063	2	0	0	62.3	62.3	1	4516.3	3.25	1000	84.1	0	-1.67	0	0	16.52	0	0	0	0	0	0	-36.65	-36.65
Inverter Transformer	MV1-2 T	364759	4906063	2	0	0	58.5	58.5	1	4516.3	3.25	2000	84.1	0	-1.76	0	0	43.64	0	0	0	0	0	0	-67.48	-67.48
Inverter Transformer	MV1-2 T	364759	4906063	2	0	0	53.3	53.3	1	4516.3	3.25	4000	84.1	0	-1.76	0	0	148	0	0	0	0	0	0	-177	-177
Inverter Transformer	MV1-2 T	364759	4906063	2	0	0	44.2	44.2	1	4516.3	3.25	8000	84.1	0	-1.76	0	0	527.87	0	0	0	0	0	0	-566	-566
Inverter Transformer	MV1-4 T	364821	4905918	2	0	0	25.9	25.9	1	4526.6	3.25	32	84.12	0	-5.87	0	0	0.14	0	0	0	0	0	0	-52.49	-52.49
Inverter Transformer	MV1-4 T	364821	4905918	2	0	0	45.1	45.1	1	4526.6	3.25	63	84.12	0	-5.87	0	0	0.55	0	0	0	0	0	0	-33.7	-33.7
Inverter Transformer	MV1-4 T	364821	4905918	2	0	0	57.2	57.2	1	4526.6	3.25	125	84.12	0	4.42	0	0	1.86	0	0	0	0	0	0	-33.19	-33.19
Inverter Transformer	MV1-4 T	364821	4905918	2	0	0	59.7	59.7	1	4526.6	3.25	250	84.12	0	3.41	0	0	4.72	0	0	0	0	0	0	-32.55	-32.55
Inverter Transformer	MV1-4 T	364821	4905918	2	0	0	65.1	65.1	1	4526.6	3.25	500	84.12	0	-0.2	0	0	8.73	0	0	0	0	0	0	-27.54	-27.54
Inverter Transformer	MV1-4 T	364821	4905918	2	0	0	62.3	62.3	1	4526.6	3.25	1000	84.12	0	-1.67	0	0	16.56	0	0	0	0	0	0	-36.71	-36.71
Inverter Transformer	MV1-4 T	364821	4905918	2	0	0	58.5	58.5	1	4526.6	3.25	2000	84.12	0	-1.76	0	0	43.74	0	0	0	0	0	0	-67.6	-67.6
Inverter Transformer	MV1-4 T	364821	4905918	2	0	0	53.3	53.3	1	4526.6	3.25	4000	84.12	0	-1.76	0	0	148.34	0	0	0	0	0	0	-177.4	-177.4
Inverter Transformer	MV1-4 T	364821	4905918	2	0	0	44.2	44.2	1	4526.6	3.25	8000	84.12	0	-1.76	0	0	529.08	0	0	0	0	0	0	-567.2	-567.2
Inverter Transformer	MV1-12 T	365044	4905386	2	0	0	25.9	25.9	1	4614.5	3.25	32	84.28	0	-5.87	0	0	0.15	0	0	0	0	0	0	-52.66	-52.66
Inverter Transformer	MV1-12 T	365044	4905386	2	0	0	45.1	45.1	1	4614.5	3.25	63	84.28	0	-5.87	0	0	0.56	0	0	0	0	0	0	-33.87	-33.87
Inverter Transformer	MV1-12 T	365044	4905386	2	0	0	57.2	57.2	1	4614.5	3.25	125	84.28	0	4.42	0	0	1.9	0	0	0	0	0	0	-33.4	-33.4
Inverter Transformer	MV1-12 T	365044	4905386	2	0	0	59.7	59.7	1	4614.5	3.25	250	84.28	0	3.41	0	0	4.81	0	0	0	0	0	0	-32.81	-32.81
Inverter Transformer	MV1-12 T	365044	4905386	2	0	0	65.1	65.1	1	4614.5	3.25	500	84.28	0	-0.2	0	0	8.9	0	0	0	0	0	0	-27.87	-27.87
Inverter Transformer	MV1-12 T	365044	4905386	2	0	0	62.3	62.3	1	4614.5	3.25	1000	84.28	0	-1.67	0	0	16.88	0	0	0	0	0	0	-37.19	-37.19
Inverter Transformer	MV1-12 T	365044	4905386	2	0	0	58.5	58.5	1	4614.5	3.25	2000	84.28	0	-1.76	0	0	44.59	0	0	0	0	0	0	-68.61	-68.61
Inverter Transformer	MV1-12 T	365044	4905386	2	0	0	53.3	53.3	1	4614.5	3.25	4000	84.28	0	-1.76	0	0	151.22	0	0	0	0	0	0	-180.4	-180.4
Inverter Transformer	MV1-12 T	365044	4905386	2	0	0	44.2	44.2	1	4614.5	3.25	8000	84.28	0	-1.76	0	0	539.35	0	0	0	0	0	0	-577.7	-577.7
Inverter Transformer	MV1-15 T	365309	4904994	2	0	0	25.9	25.9	1	4646.9	3.25	32	84.34	0	-5.87	0	0	0.15	0	0	0	0	0	0	-52.72	-52.72
Inverter Transformer	MV1-15 T	365309	4904994	2	0	0	45.1	45.1	1	4646.9	3.25	63	84.34	0	-5.87	0	0	0.57	0	0	0	0	0	0	-33.93	-33.93
Inverter Transformer	MV1-15 T	365309	4904994	2	0	0	57.2	57.2	1	4646.9	3.25	125	84.34	0	4.42	0	0	1.91	0	0	0	0	0	0	-33.47	-33.47
Inverter Transformer	MV1-15 T	365309	4904994	2	0	0	59.7	59.7	1	4646.9	3.25	250	84.34	0	3.41	0	0	4.85	0	0	0	0	0	0	-32.9	-32.9
Inverter Transformer	MV1-15 T	365309	4904994	2	0	0	65.1	65.1	1	4646.9	3.25	500	84.34	0	-0.2	0	0	8.96	0	0	0	0	0	0	-28	-28
Inverter Transformer	MV1-15 T	365309	4904994	2	0	0	62.3	62.3	1	4646.9	3.25	1000	84.34	0	-1.67	0	0	17	0	0	0	0	0	0	-37.37	-37.37
Inverter Transformer	MV1-15 T	365309	4904994	2	0	0	58.5	58.5	1	4646.9	3.25	2000	84.34	0	-1.76	0	0	44.91	0	0	0	0	0	0	-68.99	-68.99
Inverter Transformer	MV1-15 T	365309	4904994	2	0	0	53.3	53.3	1	4646.9	3.25	4000	84.34	0	-1.76	0	0	152.28	0	0	0	0	0	0	-181.6	-181.6
Inverter Transformer	MV1-15 T	365309	4904994	2	0	0	44.2	44.2	1	4646.9	3.25	8000	84.34	0	-1.76	0	0	543.14	0	0	0	0	0	0	-581.5	-581.5
Inverter Transformer	MV1-5 T	364676	4905892	2	0	0	25.9	25.9	1	4667.1	3.25	32	84.38	0	-5.87	0	0	0.15	0	0	0	0	0	0	-52.76	-52.76
Inverter Transformer	MV1-5 T	364676	4905892	2	0	0	45.1	45.1	1	4667.1	3.25	63	84.38	0	-5.87	0	0	0.57	0	0	0	0	0	0	-33.97	-33.97
Inverter Transformer	MV1-5 T	364676	4905892	2	0	0	57.2	57.2	1	4667.1	3.25	125	84.38	0	4.42	0	0	1.92	0	0	0	0	0	0	-33.52	-33.52
Inverter Transformer	MV1-5 T	364676	4905892	2	0	0	59.7	59.7	1	4667.1	3.25	250	84.38	0	3.41	0	0	4.87	0	0	0	0	0	0	-32.96	-32.96
Inverter Transformer	MV1-5 T	364676	4905892	2	0	0	65.1	65.1	1	4667.1	3.25	500	84.38	0	-0.21	0	0	9	0	0	0	0	0	0	-28.07	-28.07
Inverter Transformer	MV1-5 T	364676	4905892	2	0	0	62.3	62.3	1	4667.1	3.25	1000	84.38	0	-1.67	0	0	17.07	0	0	0	0	0	0	-37.49	-37.49
Inverter Transformer	MV1-5 T	364676	4905892	2	0	0	58.5	58.5	1	4667.1	3.25	2000	84.38	0	-1.76	0	0	45.1	0	0	0	0	0	0	-69.22	-69.22
Inverter Transformer	MV1-5 T	364676	4905892	2	0	0	53.3	53.3	1	4667.1	3.25	4000	84.38	0	-1.76	0	0	152.94	0	0	0	0	0	0	-182.3	-182.3
Inverter Transformer	MV1-5 T	364676	4905892	2	0	0	44.2	44.2	1	4667.1	3.25	8000	84.38	0	-1.76	0	0	545.5	0	0	0	0	0	0	-583.9	-583.9

Inverter Transformer	MV1-8 T	364782	4905647	2	0	0	25.9	25.9	1	4693.2	3.25	32	84.43	0	-5.88	0	0	0.15	0	0	0	0	0	0	-52.8	-52.8
Inverter Transformer	MV1-8 T	364782	4905647	2	0	0	45.1	45.1	1	4693.2	3.25	63	84.43	0	-5.88	0	0	0.57	0	0	0	0	0	0	-34.03	-34.03
Inverter Transformer	MV1-8 T	364782	4905647	2	0	0	57.2	57.2	1	4693.2	3.25	125	84.43	0	4.42	0	0	1.93	0	0	0	0	0	0	-33.57	-33.57
Inverter Transformer	MV1-8 T	364782	4905647	2	0	0	59.7	59.7	1	4693.2	3.25	250	84.43	0	3.41	0	0	4.9	0	0	0	0	0	0	-33.04	-33.04
Inverter Transformer	MV1-8 T	364782	4905647	2	0	0	65.1	65.1	1	4693.2	3.25	500	84.43	0	-0.21	0	0	9.05	0	0	0	0	0	0	-28.17	-28.17
Inverter Transformer	MV1-8 T	364782	4905647	2	0	0	62.3	62.3	1	4693.2	3.25	1000	84.43	0	-1.67	0	0	17.17	0	0	0	0	0	0	-37.63	-37.63
Inverter Transformer	MV1-8 T	364782	4905647	2	0	0	58.5	58.5	1	4693.2	3.25	2000	84.43	0	-1.76	0	0	45.35	0	0	0	0	0	0	-69.52	-69.52
Inverter Transformer	MV1-8 T	364782	4905647	2	0	0	53.3	53.3	1	4693.2	3.25	4000	84.43	0	-1.76	0	0	153.79	0	0	0	0	0	0	-183.2	-183.2
Inverter Transformer	MV1-8 T	364782	4905647	2	0	0	44.2	44.2	1	4693.2	3.25	8000	84.43	0	-1.76	0	0	548.54	0	0	0	0	0	0	-587	-587
Inverter Transformer	MV1-3 T	364435	4906039	2	0	0	25.9	25.9	1	4819.7	3.25	32	84.66	0	-5.88	0	0	0.15	0	0	0	0	0	0	-53.04	-53.04
Inverter Transformer	MV1-3 T	364435	4906039	2	0	0	45.1	45.1	1	4819.7	3.25	63	84.66	0	-5.88	0	0	0.59	0	0	0	0	0	0	-34.27	-34.27
Inverter Transformer	MV1-3 T	364435	4906039	2	0	0	57.2	57.2	1	4819.7	3.25	125	84.66	0	4.42	0	0	1.98	0	0	0	0	0	0	-33.86	-33.86
Inverter Transformer	MV1-3 T	364435	4906039	2	0	0	59.7	59.7	1	4819.7	3.25	250	84.66	0	3.41	0	0	5.03	0	0	0	0	0	0	-33.4	-33.4
Inverter Transformer	MV1-3 T	364435	4906039	2	0	0	65.1	65.1	1	4819.7	3.25	500	84.66	0	-0.21	0	0	9.29	0	0	0	0	0	0	-28.65	-28.65
Inverter Transformer	MV1-3 T	364435	4906039	2	0	0	62.3	62.3	1	4819.7	3.25	1000	84.66	0	-1.67	0	0	17.63	0	0	0	0	0	0	-38.32	-38.32
Inverter Transformer	MV1-3 T	364435	4906039	2	0	0	58.5	58.5	1	4819.7	3.25	2000	84.66	0	-1.76	0	0	46.58	0	0	0	0	0	0	-70.97	-70.97
Inverter Transformer	MV1-3 T	364435	4906039	2	0	0	53.3	53.3	1	4819.7	3.25	4000	84.66	0	-1.76	0	0	157.94	0	0	0	0	0	0	-187.5	-187.5
Inverter Transformer	MV1-3 T	364435	4906039	2	0	0	44.2	44.2	1	4819.7	3.25	8000	84.66	0	-1.76	0	0	563.33	0	0	0	0	0	0	-602	-602
Inverter Transformer	MV1-6 T	364482	4905835	2	0	0	25.9	25.9	1	4865.8	3.25	32	84.74	0	-5.88	0	0	0.16	0	0	0	0	0	0	-53.12	-53.12
Inverter Transformer	MV1-6 T	364482	4905835	2	0	0	45.1	45.1	1	4865.8	3.25	63	84.74	0	-5.88	0	0	0.59	0	0	0	0	0	0	-34.36	-34.36
Inverter Transformer	MV1-6 T	364482	4905835	2	0	0	57.2	57.2	1	4865.8	3.25	125	84.74	0	4.42	0	0	2	0	0	0	0	0	0	-33.96	-33.96
Inverter Transformer	MV1-6 T	364482	4905835	2	0	0	59.7	59.7	1	4865.8	3.25	250	84.74	0	3.41	0	0	5.08	0	0	0	0	0	0	-33.53	-33.53
Inverter Transformer	MV1-6 T	364482	4905835	2	0	0	65.1	65.1	1	4865.8	3.25	500	84.74	0	-0.21	0	0	9.38	0	0	0	0	0	0	-28.82	-28.82
Inverter Transformer	MV1-6 T	364482	4905835	2	0	0	62.3	62.3	1	4865.8	3.25	1000	84.74	0	-1.67	0	0	17.8	0	0	0	0	0	0	-38.57	-38.57
Inverter Transformer	MV1-6 T	364482	4905835	2	0	0	58.5	58.5	1	4865.8	3.25	2000	84.74	0	-1.76	0	0	47.02	0	0	0	0	0	0	-71.5	-71.5
Inverter Transformer	MV1-6 T	364482	4905835	2	0	0	53.3	53.3	1	4865.8	3.25	4000	84.74	0	-1.76	0	0	159.45	0	0	0	0	0	0	-189.1	-189.1
Inverter Transformer	MV1-6 T	364482	4905835	2	0	0	44.2	44.2	1	4865.8	3.25	8000	84.74	0	-1.76	0	0	568.72	0	0	0	0	0	0	-607.5	-607.5
Inverter Transformer	MV1-9 T	364555	4905646	2	0	0	25.9	25.9	1	4890.4	3.25	32	84.79	0	-5.88	0	0	0.16	0	0	0	0	0	0	-53.16	-53.16
Inverter Transformer	MV1-9 T	364555	4905646	2	0	0	45.1	45.1	1	4890.4	3.25	63	84.79	0	-5.88	0	0	0.6	0	0	0	0	0	0	-34.4	-34.4
Inverter Transformer	MV1-9 T	364555	4905646	2	0	0	57.2	57.2	1	4890.4	3.25	125	84.79	0	4.42	0	0	2.01	0	0	0	0	0	0	-34.01	-34.01
Inverter Transformer	MV1-9 T	364555	4905646	2	0	0	59.7	59.7	1	4890.4	3.25	250	84.79	0	3.41	0	0	5.1	0	0	0	0	0	0	-33.6	-33.6
Inverter Transformer	MV1-9 T	364555	4905646	2	0	0	65.1	65.1	1	4890.4	3.25	500	84.79	0	-0.21	0	0	9.43	0	0	0	0	0	0	-28.91	-28.91
Inverter Transformer	MV1-9 T	364555	4905646	2	0	0	62.3	62.3	1	4890.4	3.25	1000	84.79	0	-1.67	0	0	17.89	0	0	0	0	0	0	-38.71	-38.71
Inverter Transformer	MV1-9 T	364555	4905646	2	0	0	58.5	58.5	1	4890.4	3.25	2000	84.79	0	-1.76	0	0	47.26	0	0	0	0	0	0	-71.78	-71.78
Inverter Transformer	MV1-9 T	364555	4905646	2	0	0	53.3	53.3	1	4890.4	3.25	4000	84.79	0	-1.76	0	0	160.26	0	0	0	0	0	0	-190	-190
Inverter Transformer	MV1-9 T	364555	4905646	2	0	0	44.2	44.2	1	4890.4	3.25	8000	84.79	0	-1.76	0	0	571.6	0	0	0	0	0	0	-610.4	-610.4
Inverter Transformer	MV1-11 T	364649	4905414	2	0	0	25.9	25.9	1	4928.1	3.25	32	84.85	0	-5.88	0	0	0.16	0	0	0	0	0	0	-53.23	-53.23
Inverter Transformer	MV1-11 T	364649	4905414	2	0	0	45.1	45.1	1	4928.1	3.25	63	84.85	0	-5.88	0	0	0.6	0	0	0	0	0	0	-34.47	-34.47
Inverter Transformer	MV1-11 T	364649	4905414	2	0	0	57.2	57.2	1	4928.1	3.25	125	84.85	0	4.42	0	0	2.03	0	0	0	0	0	0	-34.09	-34.09
Inverter Transformer	MV1-11 T	364649	4905414	2	0	0	59.7	59.7	1	4928.1	3.25	250	84.85	0	3.41	0	0	5.14	0	0	0	0	0	0	-33.7	-33.7
Inverter Transformer	MV1-11 T	364649	4905414	2	0	0	65.1	65.1	1	4928.1	3.25	500	84.85	0	-0.21	0	0	9.5	0	0	0	0	0	0	-29.05	-29.05
Inverter Transformer	MV1-11 T	364649	4905414	2	0	0	62.3	62.3	1	4928.1	3.25	1000	84.85	0	-1.67	0	0	18.03	0	0	0	0	0	0	-38.91	-38.91
Inverter Transformer	MV1-11 T	364649	4905414	2	0	0	58.5	58.5	1	4928.1	3.25	2000	84.85	0	-1.76	0	0	47.62	0	0	0	0	0	0	-72.21	-72.21
Inverter Transformer	MV1-11 T	364649	4905414	2	0	0	53.3	53.3	1	4928.1	3.25	4000	84.85	0	-1.76	0	0	161.49	0	0	0	0	0	0	-191.3	-191.3
Inverter Transformer	MV1-11 T	364649	4905414	2	0	0	44.2	44.2	1	4928.1	3.25	8000	84.85	0	-1.76	0	0	576	0	0	0	0	0	0	-614.9	-614.9
Line Reactor	NGR	369421	4908788	5	0	0	25.1	25.1	1	960.86	5.25	63	70.65	0	-5.11	4.81	0.09	0.12	0	0	0	0	0	0	-45.37	-45.37
Line Reactor	NGR	369421	4908788	5	0	0	45.3	45.3	1	960.86	5.25	125	70.65	0	3.59	1.25	0.09	0.39	0	0	0	0	0	0	-30.59	-30.59
Line Reactor	NGR	369421	4908788	5	0	0	20	20	1	960.86	5.25	250	70.65	0	0.07	4.84	0.09	1	0	0	0	0	0	0	-56.57	-56.57
mit. Value D/N:	0	0																									
Level D/N:	39.8944	39.8944																									

Appendix E: Revised Stormwater Management Report

WHIT
H.B. White Ca
an IEA cor

OWNER PROJECT DOCUMENT REVIEW CanadianSolar

REVIEWER: Muraffe Erzurgit **DATE:** 30/01/2015

Review of this Detailed Engineering Design was performed in order to identify general conformance with the specifications of the Project and for Owner comment. General review and comment by the Owner shall not in any way constitute approval of the applicable document, or supersede or displace obligations of the party submitting the document for review. Review by Owner of any Detailed Engineering Designs is for general review and comment only, and shall not relieve Contractor of the sole risk and responsibility for any and all errors or omissions in such Detailed Engineering Designs or the consequences thereof, or for complying with all requirements of the EPC Agreement, Applicable Laws, and Applicable Permits. All capitalized terms herein shall have the meanings ascribed to them in the Engineering, Procurement and Construction Agreement between Kingston Solar LP (as "Owner") and Canadian Solar Solutions Inc. (as "Contractor") dated June 20, 2014 as amended.

GENRAL COMMENTS:

OWNER SIGNATURE:

☑ REVIEWED

(KSL OWNER Stamp Rev1)

Stormwater Management Report

Kingston Solar Project

November 24, 2014

REVISION	DATE	BY
AR-0	August 5, 2014	J.O.
AR-1	October 13, 2014	J.O.
CD-0	November 24, 2014	J.O.

Stormwater Management Report

Kingston Solar Project

November 24, 2014

Prepared For
Canadian Solar

Patrick J. Ringler

© 2014 IEA.
All Rights Reserved

Table of Contents

Section 1 Introduction 1-1

Section 2 Site Description 2-1

Section 3 Proposed Construction Conditions 3-1

Section 4 Stormwater Runoff Modeling 4-1

Section 5 Stormwater Management Plan 5-1

Section 6 Erosion and Sediment Control 6-1

Section 7 Stormwater Facility Maintenance 7-1

List of Tables

Table 1. Kingston Pumping Station Rainfall Depths 4-1
Table 2. Site Runoff Coefficients and Curve Numbers 4-3
Table 3. Drainage Area Summary (Zone 1) 4-4
Table 4. Drainage Area Flow Path Summary (Zone 1) 4-5
Table 5. Drainage Area Summary (Zones 2-6) 4-6
Table 6. Drainage Area Flow Path Summary (Zones 2-6) 4-7
Table 7. Runoff Summary 12-hour SCS Type II Storm (Zone 1) 4-8
Table 8. Runoff Summary 24-hour SCS Type II Storm (Zone 1) 4-9
Table 9. Runoff Summary 12-hour SCS Type II Storm (Zones 2-6) 4-10
Table 10. Runoff Summary 24-hour SCS Type II Storm (Zones 2-6) 4-12
Table 11. Project Culverts 5-2
Table 12. Flow Spreader Sizing 5-4

List of Figures and Appendices

Kingston Solar Project Civil Construction Drawings:

- Title Sheet (G001)
- Site Layout (C101)
- Pre-Construction Drainage Plans (C200, 5 sheets)
- Post-Construction Drainage Plans (C201, 5 sheets)
- Site Grading Plans (C401.01-C406.01, 20 sheets)
- MV Station Grading Plans (C421s, 13 sheets)
- Details (C500-C503)
- Substation Grading Plan (C821)

Appendix A – Stormwater Modeling Output
Appendix B – Culvert Sizing Reports
Appendix C – Stormwater Site Inspection Log
Appendix D – Swale Sizing

Section 1
Introduction

H.B. White Canada has been retained by Canadian Solar to provide Engineering, Procurement, and Construction services for a 100 MWac solar energy generating facility near the City of Kingston, in Southeastern Ontario. The proposed project is divided into six zones along Unity Road, and is generally bounded by Highway 38 to the east, Mud Lake Road/County Road 19 to the West, Quabbin Road to the north, and Highway 401 to the south. The proposed project falls within two municipalities; the City of Kingston to the east and the Loyalist Township to the west.

This report has been completed to address the stormwater management requirements for the proposed project.

The following documents were reviewed prior to completing this report:

- Cataraqui Region Conservation Authority (CRCA) comments on draft documents, August 17, 2012
- Stormwater Management Plan, AMEC, September 2012
- Stormwater Management Report Loyalist Township, Dillon Consulting, December 2013
- Stormwater Management Report City of Kingston, Dillon Consulting, December 2013
- CRCA comments on the aforementioned December 2013, Stormwater Management Reports, February 5, 2014
- Stormwater Management Plan Comments from City of Kingston, February 12, 2014
- Stormwater Management Plan Comments from Township of Loyalist, February 24, 2014
- CRCA comments on Flood Plain Delineation, March 5, 2014
- CRCA comments on H.B. White Canada Corp. Stormwater Management Report, September 3, 2014
- CRCA comment letter, September 25, 2014

Section 2
Site Description

The proposed project involves multiple properties in the City of Kingston and Loyalist Township. The existing properties are composed of a mixture of vacant pastureland, cultivated farmland, wooded area, and impervious features such as building and roads. Soils at the site encountered during the geotechnical investigation were mostly silty clay or clay overlaying shallow limestone bedrock. The Ministry of Natural Resources (MNR) land information database classified the majority of site soils as Hydrologic Soil Group B.

The project area is composed of six zones, each of which are described in more detail below and can be seen on an overall site map on Sheet C101. Existing drainage area boundaries are shown on the Pre-Construction Drainage Plans (C200s, 5 sheets).

Zone 1 is the westernmost portion of the project and is composed of properties 21, 22, 23, and 24. The zone is bounded by County Road 19 to the north and Highway 401 to the south. Surface water runoff generally flows from east to west with offsite area draining through the site. This zone contains two watercourses running through the site, and a third watercourse at the southern extent of the zone. The northern portion of the zone flows towards County Road 19, while the southern portion of the zone flows towards Highway 401.

Zone 2 is located on the western portion of the entire project, and is composed of properties 19 and 20. The area is bounded by County Road 19 to the north, Howes Road to the east, and a pipeline easement to the south. Surface water runoff generally flows to the north. An existing ditch flows northwesterly through the site, carrying offsite flow through the zone. The ditch routes southwesterly before existing the zone on the west side.

Zone 3 is located central to the overall project and is composed of properties 14A, 14B, and 14C. The zone is bounded by Unity Road to the north and Smith Road to the east. Surface water runoff generally flows to the south. Offsite flow contributes to surface water runoff on the properties via cross culverts on Unity Road. This zone contains a watercourse which bisects the area. Several dugout drainage ditches and depressions are present within this area.

Zone 4 is the relative northeast portion of the project and is composed of properties 4 and 25. The zone is bounded by Unity Road to the south. Surface water runoff generally flows to the south towards Unity Road. This zone includes existing structures, dugout ponds, and drainage ditches.

Zone 5 is the northeastern most portion of the project and is composed of properties 2 and 3. The zone is bounded by Unity Road to the south. Surface water runoff generally flows to the southeast towards Rock Road. An excavated drainage feature is located near the east boundary of zone 5.

Zone 6 is the southeast portion of the project and is composed of property 12. The zone is bounded by Glenvale Creek to the north and Westbrook road at the southeast corner. Surface water runoff generally flows to the west towards Glenvale Creek. The zone is bisected by a utility easement.

All six zones of the project are generally flat, with over 25 percent of the project area between 0.0 to 0.25 percent grade, and almost 60 percent of the project area has existing ground slopes of less than 1.0 percent. Based on low infiltration rates, flat terrain, and closed depressions, areas of the site are subject to localized ponding and flooding.

Due to the site flatness, the site is at a low risk for sediment transport and erosion as runoff velocities and soil shear stresses will be low.

Section 3
Proposed Construction Conditions

As shown on the site layout sheets, the site will be constructed as a number of array blocks consisting of photovoltaic modules, racks, gravel access roads, I-houses (inverters and transformers), substation, and related electrical collection systems. The access roads are designed to provide maintenance and emergency vehicles access to the I-houses, combiner boxes, and substation. Roads will typically have swales running alongside them to convey stormwater runoff. Culverts or rock crossings will be installed as needed to convey stormwater runoff across site access roads. Gravel laydown areas will be constructed near the site substation to provide room for construction trailers and parking, and to store the modules, racks, and other solar components during construction.

Trees and brush will be removed from the site within the fence line to make room for the solar project components and reduce shading on the modules. Typical grading activities will be limited to minor smoothing of existing ground as needed for rack installation. The southeast corner of Zone 1, near MV1-13, requires grading of a hill to reduce shadows on racks. Zone 3 includes grading at two proposed locations to promote stormwater runoff; one near the watercourse to build up a low area and route stormwater runoff around access roads and I-house pads, and one located at the southeast corner to promote drainage off the site. Depressions will also be filled to help minimize ponding onsite and promote positive drainage toward site outlets.

At the completion of construction, the entire solar project area will be seeded with low-maintenance vegetation, with the exception of the gravel access roads, I-house pads, and substation pad. Swales will be grass-lined as indicated on the construction drawing details. The swales will outlet to flow spreaders to dissipate energy and diffuse concentrated flow.

Minimal alteration of existing drainage patterns will occur. Stormwater runoff will be routed as closely as possible to the existing site outlets. The anticipated post-development drainage areas are shown on the Post-Construction Drainage Plans (C201s, 5 sheets). All six zones of the project will remain generally flat, with over 25 percent of the project area having ground slopes of equal to or less than 0.25 percent, and almost 60 percent of the project area having ground slopes of less than 1.0 percent. Existing closed depressions within the project limits are planned to be filled, however, due to the existing flat terrain and the feasible accuracy of grading activities with heavy construction equipment, areas of the site will remain subject to potential localized ponding after construction.

Section 4
Stormwater Runoff Modeling

A conceptual Stormwater Management Report (SWMR) was completed by Dillon Consulting in December 2013 and submitted to the Cataraqui Region Conservation Authority (CRCA), City of Kingston, and Loyalist Township. The CRCA provided comments on the report in February 2014. In general, the methodologies of this report follow what was previously completed in the December 2013 SWMR.

Stormwater runoff was modeled by the United States Natural Resource Conservation Service's (NRCS's) Unit Hydrograph Method (SCS Method) for each drainage area using HydroCAD, a computer-aided design program for modeling hydrology and hydraulics. See Appendix A for model output.

Existing information on the physical characteristics of the site was determined and incorporated into the rainfall-runoff model to calculate the peak flow of stormwater runoff. The MOE Stormwater Management Planning and Design Manual (March 2003), herein referred to as the MOE Design Manual, and the MTO Drainage Management Manual were used as guidance for hydrologic and hydraulic design. The following inputs/assumptions were used for the stormwater runoff model:

- Drainage areas, slopes, and flow paths were determined using contour data created from LiDAR survey data, inspection of aerial photography, publically available topographic data, and guidance from the December 2013 SWMR.
- Rainfall depths (Table 1) were determined from the best fit line of the Kingston Pumping Station Short Duration Rainfall Intensity-Duration-Frequency (IDF) curve from the Atmospheric Environment Services.

Table 1. Kingston Pumping Station Rainfall Depths

Recurrence Interval	12-Hour (mm)	24-Hour (mm)
2-Year Storm	42	55
5-Year Storm	55	70
100-Year Storm	93	120

- Time of Concentration (Tc) values were calculated using the FAA Airport Method for overland flow and Manning's equation for channel flow, as described below.
  - Airport Method (Overland Flow)

    $T_{c1} = (3.26 * (1.1 - C) * L^{0.5})/S_w^{0.33}$ Where: C = Runoff Coefficient
    L = Watershed Length (m)
    S_w = Watershed Slope (%)
  - Manning's equation (Channel flow)

    $T_{c2} = L/(60*V)$, where $V = (R^{2/3} * s^{1/2}) / n$ V = Average Velocity (m/s)
    Where: n = Manning's roughness coefficient (0.030 for grass-lined swales)
    R = Hydraulic Radius (m)
  - Total time of concentration

    $T_c = T_{c1} + T_{c2}$
- The antecedent moisture constant (AMC) was assumed to be 2, normal conditions.
- Hydrologic Soil Group B (loamy soils overlaying bedrock or clay subsoil) was selected based on the MNR land information database and onsite geotechnical investigation boring logs from AMEC's October 2011 Geotechnical Investigation Report.
- The curve number (CN) (Table 2) is a primary input for the SCS Method and the values were obtained from Design Chart 1.09 of the MTO Drainage Management Manual. Weighted CN values were calculated to represent the land cover makeup of each drainage area and are included as part of Tables 3 and 5.
- Runoff coefficients (C) (Table 2) were used to calculate Time of Concentration and were obtained from MTO Design Chart 1.07. Weighted runoff coefficients were calculated to characterize the land cover of each drainage basin and are included as part of Tables 3 and 5. Per the MTO Manual, the 100-year storm runoff coefficients were increased by 25%, up to 1.00, for each land cover type.
- PV modules are not considered impervious area because they will be suspended above the ground, allowing vegetation to grow beneath them and water to infiltrate. Stormwater will flow from the modules onto the grassed areas below, allowing these areas to remain available for runoff infiltration and conveyance. The foundation posts for the racking system, consisting of a total of 51,616 posts equaling 654m^2, are negligible in terms of area of imperviousness. Based on a total project area of 288.8 hectares, the foundation posts account for 0.018% of project area, and do not influence the post-development curve number conditions.

Table 2. Site Runoff Coefficients and Curve Numbers

Land Use or Surface	Project Property Component	CN	2- and 5-Year C	100-Year C
Paved	Buildings, inverter stations	98	0.95	1.00
Gravel	New access roads, substation pad	89	0.60	0.75
Agricultural	Existing agricultural areas	74	0.35	0.44
Woodlots, Forest	Existing wooded areas, heavily covered shrub areas	58	0.25	0.31
Waterbodies	Existing open water/wetlands	98	0.95	1.00
Pasture	Existing grassed land, Post-construction solar array area	65	0.28	0.35

Tables 3 and 5 provide a summary of the drainage areas for the pre- and post-development weighted runoff coefficients and curve numbers. Tables 4 and 6 provide a summary of the flow paths for the pre- and post-development conditions. Tables 7-10 provide a summary of the peak flows for each recurrence interval and design storm. Refer to Appendix A for detailed modeling results.

The land cover alteration resulting from the conversion of existing cultivated farmland and woodland into grassed area results in a design curve number change. In general, the conversion of cultivated farmland offset the removal of woodlands and the addition of gravel access roads and I-house structures. Overall, post-construction peak flow rates decreased or resulted in a negligible increase that would not cause negative downstream impacts. As a result, quantity control is not required for the developed site.

Table 3. Drainage Area Summary (Zone 1)

Drainage Area ID	Drainage Area (ha)	Weighted 2-Year and 5-Year C	Weighted 100-Year C	Weighted CN
Pre-Development				
Z1-B1	22.50	0.31	0.38	68
Z1-B2	10.21	0.32	0.40	69
Z1-B3	27.63	0.32	0.40	70
Z1-B4	16.21	0.31	0.38	67
Z1-B5	10.99	0.29	0.36	65
Z1-B6	7.54	0.32	0.40	69
Z1-B7	3.33	0.26	0.32	60
Z1-B8	47.89	0.39	0.47	71
Z1-B9	3.87	0.32	0.40	69
Z1-B10	9.25	0.25	0.32	59
Z1-B11	17.24	0.26	0.33	60
Z1-B12	5.23	0.29	0.36	66
Z1-B13	44.29	0.37	0.43	68
Post-Development				
Z1-B1.1	23.06	0.31	0.39	69
Z1-B2.1	6.84	0.31	0.38	67
Z1-B3.1	27.62	0.32	0.40	70
Z1-B4.1	19.02	0.30	0.38	67
Z1-B5.1	10.23	0.30	0.37	66
Z1-B6.1	7.84	0.29	0.36	65
Z1-B7.1	3.66	0.30	0.38	65
Z1-B8.1	47.89	0.39	0.47	71
Z1-B9.1	4.34	0.29	0.36	66
Z1-B10.1	8.90	0.27	0.33	61
Z1-B11.1	17.58	0.27	0.34	61
Z1-B12.1	4.92	0.29	0.37	67
Z1-B13.1	44.28	0.37	0.43	68

Table 4. Drainage Area Flow Path Summary (Zone 1)

Drainage Area ID	Overland Flow		Channel Flow		2- and 5-Year Tc (min)	100-Year Tc (min)
	Slope (%)	Flow Length (m)	Slope (%)	Flow Length (m)		
Pre-Development						
Z1-B1	0.30	508.0	0.19	496.0	107.7	99.4
Z1-B2	0.50	597.9	NA	0	78.4	70.4
Z1-B3	0.50	542.1	0.25	227.5	82.7	75.0
Z1-B4	0.41	783.4	NA	0	97.2	87.9
Z1-B5	0.24	545.3	0.42	99.4	101.7	92.9
Z1-B6	0.55	500.2	NA	0	69.6	62.6
Z1-B7	2.47	223.4	NA	0	30.5	28.1
Z1-B8	0.94	575.4	0.22	510.4	76.3	70.4
Z1-B9	0.89	298.1	NA	0	45.8	41.2
Z1-B10	2.71	240.3	0.18	414.2	48.7	46.3
Z1-B11	0.59	765.1	0.13	143.7	97.4	90.4
Z1-B12	0.90	311.5	NA	0	48.2	43.9
Z1-B13	0.29	671.0	0.27	386.9	106.9	98.2
Post-Development						
Z1-B1.1	0.23	665.4	0.28	338.6	119.4	108.9
Z1-B2.1	0.48	161.0	0.25	467.9	57.5	53.5
Z1-B3.1	0.50	542.1	0.25	227.5	82.7	75.0
Z1-B4.1	0.62	281.0	0.10	516.3	78.3	73.4
Z1-B5.1	0.27	561.0	0.15	85.3	99.2	90.3
Z1-B6.1	0.55	500.2	NA	0	72.2	65.8
Z1-B7.1	1.93	129.1	2.53	144.1	25.5	23.3
Z1-B8.1	0.94	575.4	0.22	510.4	76.3	70.4
Z1-B9.1	0.83	290.8	0.85	35.4	48.4	44.2
Z1-B10.1	2.71	240.3	0.18	414.2	46.6	44.2
Z1-B11.1	0.38	590.0	0.39	182.1	95.5	88.2
Z1-B12.1	0.90	311.5	NA	0	47.9	43.5
Z1-B13.1	0.29	671.0	0.27	386.9	106.8	98.2

Table 5. Drainage Area Summary (Zones 2-6)

Drainage Area ID	Drainage Area (ha)	Weighted 2- and 5-Year C	Weighted 100-Year C	Weighted CN
Pre-Development				
Z2-B1	34.62	0.31	0.39	68
Z2-B2	1.87	0.35	0.44	74
Z2-B3	3.01	0.35	0.44	74
Z3-B1	18.01	0.29	0.36	66
Z3-B2	79.05	0.31	0.39	69
Z3-B3	40.52	0.29	0.36	65
Z3-B4	380.63	0.28	0.35	64
Z4-B1	33.03	0.28	0.35	64
Z4-B2	14.96	0.31	0.39	69
Z4-B3	9.85	0.35	0.44	74
Z4-B4	14.92	0.34	0.43	73
Z4-B5	20.40	0.35	0.43	73
Z5-B1	32.73	0.29	0.36	65
Z6-B1	54.20	0.30	0.38	66
Post-Development				
Z2-B1.1	34.49	0.30	0.37	66
Z2-B2.1	1.86	0.31	0.39	68
Z2-B3.1	3.15	0.31	0.38	67
Z3-B1.1	18.30	0.29	0.36	66
Z3-B2.1	78.76	0.30	0.37	66
Z3-B3.1	40.52	0.29	0.36	65
Z3-B4.1	380.63	0.28	0.35	64
Z4-B1.1	33.08	0.28	0.35	64
Z4-B2.1	15.61	0.28	0.35	64
Z4-B3.1	9.38	0.29	0.36	66
Z4-B4.1	15.18	0.30	0.37	66
Z4-B5.1	19.91	0.32	0.40	69
Z5-B1.1	32.73	0.29	0.36	66
Z6-B1.1	54.20	0.29	0.37	65

Table 6. Drainage Area Flow Path Summary (Zones 2-6)

Drainage Area ID	Overland Flow		Channel Flow		2- and 5-Year Tc (min)	100-Year Tc (min)
	Slope (%)	Flow Length (m)	Slope (%)	Flow Length (m)		
Pre-Development						
Z2-B1	1.50	149.4	0.21	956.1	65.8	63.1
Z2-B2	0.73	148.9	NA	0	33.1	29.2
Z2-B3	1.44	163.8	NA	0	27.7	24.5
Z3-B1	0.73	808.7	NA	0	83.2	75.7
Z3-B2	0.49	1073.5	NA	0	106.2	95.6
Z3-B3	0.33	908.7	0.90	125.9	117.1	107.8
Z3-B4	0.76	1144.4	0.30	2132.0	170.7	162.3
Z4-B1	0.81	894.7	NA	0	86.1	78.8
Z4-B2	0.57	981.6	NA	0	96.9	87.3
Z4-B3	0.75	398.6	NA	0	53.7	47.5
Z4-B4	0.78	421.7	NA	0	54.9	48.8
Z4-B5	0.39	518.1	NA	0	76.1	67.5
Z5-B1	0.75	775.9	0.69	218.3	85.9	78.7
Z6-B1	0.93	698.6	NA	0	70.2	63.6
Post-Development						
Z2-B1.1	1.50	88.1	0.17	1023.6	62.2	60.3
Z2-B2.1	0.76	133.4	0.18	120.7	37.2	33.9
Z2-B3.1	1.44	163.8	NA	0	29.3	26.5
Z3-B1.1	1.02	549.1	.040	311.0	69.6	64.1
Z3-B2.1	0.47	723.0	0.12	244.0	100.2	91.9
Z3-B3.1	0.33	908.7	0.90	125.9	117.7	107.8
Z3-B4.1	0.76	1144.4	0.30	2132.0	170.7	162.3
Z4-B1.1	0.81	894.7	NA	0	86.1	78.9
Z4-B2.1	0.55	973.2	0.43	58.0	103.0	94.3
Z4-B3.1	0.68	181.0	0.49	365.0	49.1	45.5
Z4-B4.1	0.78	421.7	NA	0	58.4	53.0
Z4-B5.1	0.36	509.2	NA	0	80.3	72.3
Z5-B1.1	0.51	574.6	1.14	417.0	84.9	77.8
Z6-B1.1	0.93	698.8	NA	0	71.1	64.7

Table 7. Runoff Summary 12-hour SCS Type II Storm (Zone 1)

Drainage Area ID	2-Year 12 Hour (m^3/s)		
	Pre	Post	% Increase
Z1-North Total	0.0992	0.0981	-1.1%
Z1-Central Total	0.1029	0.1077	4.7%
Z1-South Total	0.0692	0.0697	0.7%

Drainage Area ID	5-Year 12 Hour (m^3/s)		
	Pre	Post	% Increase
Z1-North Total	0.3300	0.3264	-1.1%
Z1-Central Total	0.3477	0.3617	4.0%
Z1-South Total	0.2352	0.2359	0.3%

Drainage Area ID	100-Year 12 Hour (m^3/s)		
	Pre	Post	% Increase
Z1-North Total	2.0248	1.9446	-4.0%
Z1-Central Total	1.9285	1.9794	2.6%
Z1-South Total	1.2373	1.2351	-0.2%

Table 8. Runoff Summary 24-hour SCS Type II Storm (Zone 1)

Drainage Area ID	2-Year 24 Hour (m^3/s)		
	Pre	Post	% Increase
Z1-North Total	0.2487	0.2375	-4.5%
Z1-Central Total	0.2637	0.2744	4.1%
Z1-South Total	0.1822	0.1829	0.4%

Drainage Area ID	5-Year 24 Hour (m^3/s)		
	Pre	Post	% Increase
Z1-North Total	0.6274	0.6152	-1.9%
Z1-Central Total	0.6524	0.6743	3.4%
Z1-South Total	0.4365	0.4369	0.1%

Drainage Area ID	100-Year 24 Hour (m^3/s)		
	Pre	Post	% Increase
Z1-North Total	3.2954	3.1433	-4.6%
Z1-Central Total	3.0495	3.1086	1.9%
Z1-South Total	1.9277	1.9236	-0.2%

Table 9. Runoff Summary 12-hour SCS Type II Storm (Zones 2-6)

Drainage Area ID	2-Year 12 Hour (m^3/s)		
	Pre	Post	% Increase
Z2-B1	0.0595	0.037	-37.8%
Z2-B2	0.0159	0.0041	-74.2%
Z2-B3	0.0288	0.0056	-80.6%
Z3-Total	0.3042	0.2746	-9.7%
Z4 Northwest Total	0.0449	0.0290	-35.4%
Z4-B3	0.0615	0.0106	-82.8%
Z4-B4	0.0779	0.0166	-78.7%
Z4-B5	0.0871	0.040	-54.1%
Z5-B1	0.0322	0.0322	0.0%
Z6-B1	0.0563	0.0436	-22.6%

Drainage Area ID	5-Year 12 Hour (m^3/s)		
	Pre	Post	% Increase
Z2-B1	0.2313	0.1765	-23.7%
Z2-B2	0.0423	0.0179	-57.7%
Z2-B3	0.0767	0.0299	-61.0%
Z3-Total	1.1765	1.0869	-7.6%
Z4 Northwest Total	0.1911	0.1433	-25.0%
Z4-B3	0.1581	0.0546	-65.5%
Z4-B4	0.2112	0.0807	-61.8%
Z4-B5	0.2299	0.1345	-41.5%
Z5-B1	0.1393	0.1403	0.7%
Z6-B1	0.2584	0.2163	-16.3%

Drainage Area ID	100-Year 12 Hour (m^3/s)		
	Pre	Post	% Increase
Z2-B1	1.2597	1.1228	-10.9%
Z2-B2	0.1719	0.1064	-38.1%
Z2-B3	0.3096	0.1986	-35.9%
Z3-Total	7.2776	6.9837	-4.0%
Z4 Northwest Total	1.2142	1.0584	-12.8%
Z4-B3	0.6499	0.3745	-42.4%
Z4-B4	0.9047	0.5433	-39.9%
Z4-B5	0.9756	0.7034	-27.9%
Z5-B1	0.8757	0.8862	1.2%
Z6-B1	1.6992	1.5498	-8.8%

Table 10. Runoff Summary 24-hour SCS Type II Storm (Zones 2-6)

Drainage Area ID	2-Year 24 Hour (m^3/s)		
	Pre	Post	% Increase
Z2-B1	0.1785	0.1311	-26.6%
Z2-B2	0.0355	0.0138	-61.1%
Z2-B3	0.0649	0.0227	-65.0%
Z3-Total	0.8484	0.7742	-8.7%
Z4-Northwest Total	0.1421	0.1013	-28.7%
Z4-B3	0.1314	0.0407	-69.0%
Z4-B4	0.1746	0.0592	-66.1%
Z4-B5	0.1898	0.1045	-44.9%
Z5-B1	0.1031	0.1046	1.5%
Z6-B1	0.1920	0.1571	-18.2%

Drainage Area ID	5-Year 24 Hour (m^3/s)		
	Pre	Post	% Increase
Z2-B1	0.4474	0.3724	-16.8%
Z2-B2	0.0641	0.0353	-44.9%
Z2-B3	0.1124	0.0615	-45.3
Z3-Total	2.3104	2.1642	-6.3%
Z4-Northwest Total	0.3869	0.3146	-18.7%
Z4-B3	0.2516	0.1193	-52.6%
Z4-B4	0.3473	0.1708	-50.8%
Z4-B5	0.3789	0.2479	-34.6%
Z5-B1	0.2833	0.2849	0.6%
Z6-B1	0.5378	0.4731	-12.0%

Drainage Area ID	100-Year 24 Hour (m^3/s)		
	Pre	Post	% Increase
Z2-B1	1.9691	1.8172	-7.7%
Z2-B2	0.2437	0.1661	-31.8%
Z2-B3	0.4391	0.3153	-28.2%
Z3-Total	11.6657	11.1745	-4.2%
Z4-Northwest Total	1.9517	1.7533	-10.2%
Z4-B3	0.9160	0.6075	-33.7%
Z4-B4	1.3026	0.8807	-32.4%
Z4-B5	1.4033	1.0746	-23.4%
Z5-B1	1.4065	1.4224	1.1%
Z6-B1	2.7405	2.5532	-6.8%

Section 5
Stormwater Management Plan

The site stormwater runoff will be managed through the use of drainage swales, rock crossings, and culverts to route stormwater through the site. Areas of concentrated flow will be dispersed with flow spreaders to facilitate sheet flow characteristics prior to leaving the project boundary. Final grading and restoration of the site will be performed such that the ground will be sloped away from buildings, roads, substation, and I-houses.

Swales

Swales will convey stormwater runoff through the site along the access roads and through the solar panel racks. Refer to the Site Grading Plans (C400s) for swale locations. Swales were sized using Manning's equation (as described in Section 4) to convey the SCS Type II 5-year, 24-hour peak flow rate without overtopping site access roads. Swale sizes vary throughout the site due to varying natural topography, but typical swales are 0.3m bottom width, 0.3m deep with 3:1 side slopes. Refer to Appendix D for swale sizing calculations. To convey offsite flows and larger onsite flows, some non-typical sized swales were designed. The swale in the Northwest corner of Zone 2 (Drainage Area Z2-B1.1) was sized with a 0.5m bottom width, 0.35m depth and 5:1 side slopes. Similarly, to convey larger design flows, Zone 3 swales vary in size from 0.3m to 0.75m bottom width, 0.3m to 0.4m deep, and either 3:1 or 5:1 side slopes. Zone 5 swales range in depth from 0.3-0.35m, with a 0.3m bottom width, and 3:1 side slopes. Refer to the Site Grading Plans for specific swale locations.

Culverts

Culverts will convey stormwater runoff under site access roads. Refer to the Site Grading Plans (C400s) for culvert locations. Culvert sizing calculations were performed using HY-8 software developed by the United States Federal Highway Administration (FHWA). Culverts are made of corrugated steel pipe (CSP). Culverts at CRCA regulated crossing locations were evaluated for the SCS Type II 2- and 100-year, 24-hour peak flow rates. Access road entrance culverts and interior culverts were sized to pass the 5-year, 24-hour storm event without overtopping site access roads, with the exception of culverts C2.1 and C2.3 in Zone 2 which were sized similar to the CRCA crossing culverts. See Appendix B for detailed output. Culvert sizes and lengths are provided below in Table 11.

Table 11. Project Culverts

Culvert ID	Design Flow (m^3/s)	Pipe Diameter (mm)	Number of Barrels	Length (m)
C1.1	0.15	300	3	10
C1.2	0.15	300	3	10
C1.3	0.37	300	3	10
C1.4	0.06	300	1	10
C1.5	0.06	300	1	20
C1.6	0.03	300	1	10
C1.7	0.14	300	2	10
C2.1	0.07	300	3	10
C2.2	0.01	300	1	20
C2.3	0.07	300	3	10
C3.1	0.05	600	1	15
C3.2	0.59	500	3	12
C3.3	0.06	600	1	15
C3.4	0.11	300	2	20
C3.5	0.24	450	2	18
C3.6	0.24	450	2	15
C3.7	0.02	300	1	15
C3.8	0.02	300	1	15
C3.9	0.04	300	1	10
C3.10	0.02	300	1	10
C3.11	0.03	300	1	10
C3.12	0.06	300	1	15
C3.13	0.05	300	1	10
C3.14	0.01	300	1	8
C3.15	0.25	450	2	8
C3.16	0.02	300	1	8
C4.1	0.11	600	1	15
C4.2	0.04	300	1	20
C4.3	0.04	300	1	10
C4.4	0.05	300	1	10
C5.1	0.11	600	1	15

Table 11. Project Culverts (Continued)

Culvert ID	Design Flow (m^3/s)	Pipe Diameter (mm)	Number of Barrels	Length (m)
C6.1	0.07	600	1	20
C6.2	0.05	300	1	10
C6.3	0.01	300	1	8
C6.4	0.05	300	1	10

Rock Crossings

In locations where it is impractical to install culverts, rock crossings will be installed to convey stormwater across site access roads. The rock crossings are depressed, reinforced road sections designed to allow flow over the access road. Proposed rock crossing locations are shown on the Site Grading Plans. Typical rock crossing sizing is provided on Detail Sheet C500. Rock crossings were sized for the 5-year storm using Manning's equation (as described in Section 4). Rock crossings were checked for both conveyance capacity and erosion potential. Rock crossings have conveyance capacity for a minimum 0.1% slope, and design shear stresses are under permissible levels for the specified lining material.

Outlet Protection

Riprap apron flow spreaders will be installed at the outlets of culverts, rock crossings, and where concentrated flow exits the site, as shown on the Site Grading Plans. The flow spreaders will dissipate energy and reduce velocity to help minimize erosion. They will also disperse the concentrated flow to emulate pre-development sheet/shallow concentrated flow conditions.

Flow spreaders were designed using guidance from the US Department of Transportation Federal Highway Administration document, "Hydraulic Design of Energy Dissipaters for Culverts and Channels". Sizing was completed for the SCS 5-year, 24-hour peak flow rate. Riprap D50 for all flow spreaders is 150 mm. Refer to Table 12 for flow spreader sizing.

Table 12. Flow Spreader Sizing

Culvert Diameter D (mm)	Design Flow (m^3/s)	Tailwater Depth (m)	Outlet Velocity (m/s)	Apron Length L (m)	Apron Top Width W1 (m)	Apron Bottom Width W2 (m)	Apron Depth D1 (m)
300	0.06	0.21	1.21	3.0	1.0	3.0	0.5
600	0.11	0.18	1.24	3.0	2.0	4.0	0.5
Double 300	0.14	0.18	0.99	3.0	2.0	4.0	0.5
Double 450	0.25	0.32	1.05	3.0	2.0	4.0	0.5
Triple 300	0.37	0.13	1.60	3.0	2.5	4.5	0.5
Triple 500	0.59	0.17	1.59	3.0	3.5	5.5	0.5
Swale/Rock Crossing Outlets	0.17	0.18	0.66	3.0	Match swale width	Top width + 2.0m	0.5

Buffer Strips

The project maintains a 30m offset from adjacent watercourses, wetlands, and woodlands. This offset will provide a natural buffer strip between the proposed development and natural features. The buffer strips are gently sloping, heavily vegetated areas that will assist in treating runoff from the site.

Section 6
Erosion and Sediment Control

To control stormwater runoff quality during construction, best management practices (BMPs) shall be used to minimize soil erosion and to provide a means for trapping sediment leaving the site. Installation of temporary measures for control of erosion and sediment shall be completed prior to the commencement of construction activities. Refer to the construction schedule on Sheet C500. The specific controls for each construction activity are based on expected construction conditions and methods.

It is understood that changes occur throughout the duration of a construction project. Therefore, the BMP locations are intended as guidelines and the location and installation of alternative BMPs should be considered as construction progresses. Weekly inspections shall be conducted and documented on the Stormwater Site Inspection Log (Appendix C). Site BMPs are detailed on Sheets C500 and C501, and are further discussed below.

Temporary (Construction Phase) Control Measures

- Temporary silt fence (heavy duty per OPSD 219.130) shall be placed at the downslope side of grading activities, stockpile areas, and the site limits, as needed.
- An additional row of silt fence may be installed at the site outlets and rock crossings.
- If necessary, an additional row of silt fence shall be installed during grading and clearing activities to provide an extra layer of protection to the adjacent watercourses and waterbodies.
- A temporary construction entrance (mud mat) shall be installed at all vehicle access points adjacent to paved roads to reduce the amount of materials that may be transported off the site.
- Phase construction, where possible, to limit the amount of time soils are exposed.
- If groundwater is encountered during excavating, divert water into a dewatering trap on well vegetated land a minimum of 30 meters from any sensitive receiving body with a silt sock on the discharge of the hose and in accordance with local guidelines and regulations. If dewatering is necessary, pumping will be limited to less than 50,000 liters per day.
- Culverts, where possible, shall be installed during dry conditions. If there is flow during the installation period, flow isolation measures, such as coffer dams, shall be implemented to allow for the area to be dewatered. If dust conditions are prevalent, use water on exposed earth areas, access roads, and work/laydown areas as necessary to reduce the movement of wind-born sediment.

- All disturbed areas left inactive for 30 days shall be adequately stabilized by seeding, mulching or other equivalent control measures.
- Built up sediment shall be removed and disposed off-site or to an approved location onsite once sediment accumulates to one-half the height of the structure, or more frequently as directed by the engineer or as recommended based on the weekly inspection.
- During construction, BMPs shall be inspected at least once per week, in advance of predicated large precipitation events, and after each precipitation event of 10 mm or greater, with repairs being made as necessary. Refer to Appendix C for the inspection log form.

Permanent Control Measures

- Riprap outlet protection shall be installed at all culverts and rock crossings as shown on the design drawings.
- Flow spreaders shall be installed where swale flows exit the site, as shown on the design drawings.
- All disturbed areas shall be stabilized with gravel or permanent seeding upon completion of the work.

Water Quality

The site will employ BMPs to reduce erosion and control sediment runoff. Site swales commonly have slopes under one percent, which results in low potential for sediment transport. Riprap or erosion control matting will be installed in areas prone to erosion. Flow spreaders are planned at culvert outlets and at locations where concentrated flows leave the site.

Silt fence will be installed as perimeter control on all downslope sides of disturbed areas. A 30 meter buffer is also maintained from adjacent wetlands and watercourses and provides a natural vegetated buffer.

Section 7
Stormwater Facility Maintenance

During construction, the site shall be maintained in good working condition. Vehicle refueling shall occur in designated locations in the laydown area. Construction waste and deleterious material shall be stored in designated locations in the laydown area.

The operation and maintenance of stormwater facilities is critical to the successful containment of sediment and stormwater. Inspections shall be performed after every significant storm event during the first two years and twice a year thereafter if there are no reoccurring problems. Specific items to be included in these inspections are as follows:

- Culvert components shall be inspected for clogging and excessive debris and sediment accumulation. Such components include pipes, riprap aprons, and inflow and outflow openings. Sediment removal shall take place when the area is thoroughly dry. Disposal of debris, trash, sediment, and other waste material shall be done at suitable disposal/recycling sites and in compliance with all applicable local, provincial, and federal waste regulations.
- Mowing and/or trimming of the vegetation in the swales shall be performed as needed to ensure it does not impede channel flow. It is recommended that grasses be cut to a minimum height of 75 mm, and not be allowed to grow higher than 600 mm. Clippings will be disposed of upland and not within 3 meters of the swales themselves.
- All structural components shall be inspected for cracking, erosion, and deterioration at least annually.

Drawings

Kingston Solar Project Civil Construction Drawings

Appendix A

Stormwater Modeling Output

Appendix B

Culvert Sizing Reports

Appendix C

Stormwater Site Inspection Log

Appendix D

Swale Sizing

Appendix F: Notice of REA Amendment

KINGSTON
SOLAR LP

Kingston Solar LP
181 University Ave Suite 300
Toronto, Ontario M5H 3M7
Canada

RE: SOL-LUCE KINGSTON SOLAR PV ENERGY PROJECT REA AMENDMENT

Dear Resident:

As you may be aware, Kingston Solar LP is proposing to develop, construct and operate the Sol-Luce Kingston Solar PV Energy Project, with a nameplate capacity of 100 MW AC. A Renewable Energy Approval (REA) application was submitted for this project in September 2012. The REA application was subsequently amended during the MOECC's technical review to accommodate visual and landscape setback requirements from the City of Kingston and Loyalist Township. The application was re-submitted to the MOECC in January of 2014.

A REA was granted by the Ministry of the Environment (MOE) on April 2, 2014 (REA Number: **1016-97YHC7**).

This letter provides an overview of technical changes proposed for the Sol-Luce Kingston Solar PV Energy Project. The basis for this technical change amendment comes from a requirement from Hydro One Networks Inc. (HONI) to include two DSTATCOM units, two fixed reactor banks and one neutral ground reactor. In addition, the availability of more efficient equipment has allowed for the reduction of the number of MV Stations and a decrease in the size of the project location. As a consequence, Kingston Solar LP has proposed some technical changes to the REA.

The project modifications incorporated in this amendment include: the addition of two (2) DSTATCOM units and two (2) supporting fixed reactor banks, the addition of one (1) Neutral Ground Reactor (NGR), and changes to the site layout, including the elimination of 12 Medium Voltage Power Platforms (MVPP), for a total reduction from 78 MV Stations to 66. As a result of engineering improvements there is a reduction in the number of MVPPs and the overall footprint of the project location has decreased. For clarity, all project components remain within the originally permitted REA boundary.

The report titled *Modifications Document to REA#1016-97YHC7* describes the amendments proposed by Kingston Solar LP. The report concludes that the proposed amendments represent improvements for neighbouring residents and the environment. The report is available for public viewing at http://www.samsungrenewableenergy.ca/kingston.

Kingston Solar LP is committed to ongoing consultation. If you have any questions or concerns about the project or the attached notice, please do not hesitate to contact me.

Sincerely,

David Oxtoby

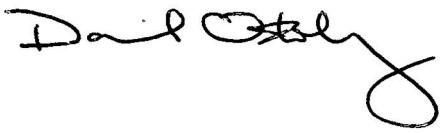

Kingston Solar LP
181 University Ave, Suite 300
Toronto, Ontario M5H 3M7
Phone: 416-975-8800 x601
Fax: 416-975-8900
doxtoby@carbonfree.com

Attachments: Notice of REA Amendment

NOTICE OF A PROPOSED CHANGE TO AN APPROVED RENEWABLE ENERGY PROJECT

OPA Reference Number: F-002455-SPV-KC1-506

Project Name: Sol-Luce Kingston Solar PV Energy Project
Project Location: City of Kingston / Loyalist Township, Ontario
Dated at: 4th day of June, 2015

Kingston Solar LP was issued a Renewable Energy Approval on April 2, 2014 in respect of the Sol-Luce Kingston Solar PV Energy Project. Information with respect to the decision on this project can be viewed on the Environmental Registry by searching 011-8260. Kingston Solar LP is proposing to make a change to the project and the project itself is subject to the provisions of the *Environmental Protection Act*, Part V.0.1 and Ontario Regulation 359/09. This notice is being distributed to make the public aware of a proposed change to the project.

Project Description and Proposed Change:

Kingston Solar LP is seeking a technical change amendment to the REA issued for the Sol-Luce Kingston Solar PV Energy Project (REA # 1016-97YHC7). An application has been made to the Ministry of the Environment and Climate Change to change the project and alter the terms and conditions of the existing Renewable Energy Approval. The proposed changes consist of technical changes that have been required by the Independent Electricity System Operator (IESO) and Hydro One Networks Inc. (HONI). The proposed changes also reflect the final design of the facility. The changes specifically include the addition of two (2) DSTATCOM units (a 10 MVAR and a 8.75 MVAR), addition of a Neutral Grounding Reactor (NGR), and a reduction in the total number of Medium Voltage Power Platforms (MVPPs) from 78 to 66. As a result of the reduction of MVPPs, the footprint of the project location has decreased. For clarity, all project components remain within the permitted REA boundary. If approved with this change, this facility would have a total nameplate capacity of 100 MW. The project location, taking the proposed changes into account, is described in the map provided.

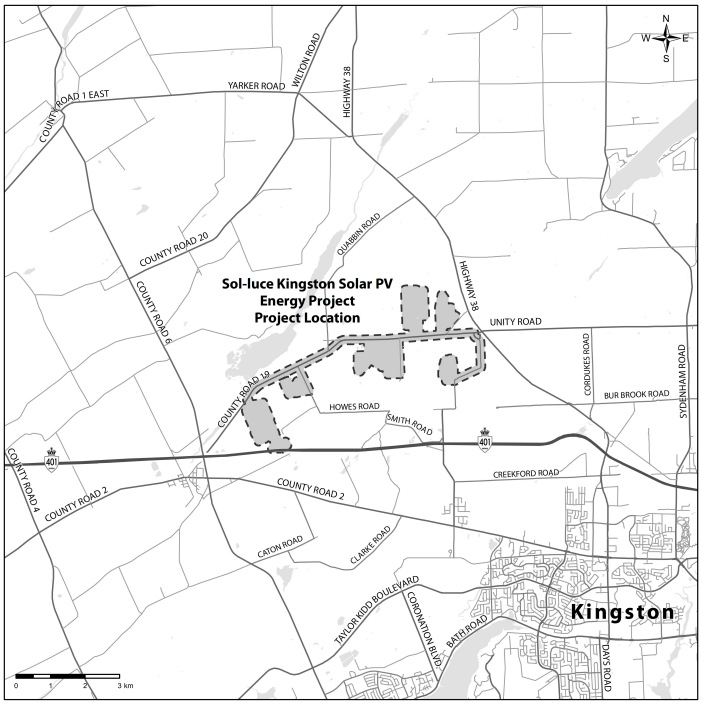

Documents for Public Inspection:

These changes are described in the Modifications Document for this project. The Modifications Document is titled *Sol-Luce Kingston Solar PV Energy Project Final Design Amendment Report*, and it describes in detail the technical changes proposed. The report concludes that the amendments represent improvements to the project design in terms of its interaction with the electricity grid, and will not cause any adverse environmental effects not previously considered and mitigated as part of the original REA application. This report is available for viewing online at: http://www.samsungrenewableenergy.ca/kingston.

Project Contacts and Information:

To learn more about the project proposal, or to communicate concerns, please contact:

Kingston Solar Hotline: (343) 333-5911
Email: info@kingston-solar.com

Kingston Solar LP
181 University Ave., Suite 300
Toronto, ON M5H 3M7